Appendix 51

Meadowbank and Whale Tail Management Plans

Table of Contents

- MEADOWBANK GOLD PROJECT
  - Baker Lake Bulk Fuel Storage Facility: Environmental Performance Monitoring Plan, Version 4
  - Dewatering Dikes - Operation, Maintenance and Surveillance Manual, Version 8
  - Incinerator Waste Management Plan, Version 8
  - Landfill Design and Management Plan, Version 4
  - Meadowbank Interim Closure and Reclamation Plan (ICRP) - Update 2018
  - Tailings Storage Facility - Operation, Maintenance and Surveillance Manual, Version 9
  - Oil Handling Facility: oil Pollution Emergency Plan, Version 9
  - Landfarm Design and Management Plan, Version 4
- WHALE TAIL PROJECT
  - Core Receiving Environment Monitoring Program (CREMP): 2015 Plan Update – Whale Tail Pit Addendum
  - CREMP Addendum - Appendix A: Mercury Monitoring Plan for Whale Tail South Area, Version 2
  - Erosion Management Plan, Version 1
  - Fish Habitat Offset Monitoring Plan, Version 1
  - Fish Habitat Offsetting Plan, Version 1
  - Greenhouse Gas Reduction Plan, Version 1
  - Groundwater Monitoring Plan, Version 2.1
  - Haul Road Management Plan, Version 2
  - Operational ARD-ML Sampling and Testing Plan – Whale Tail Pit, Version 4
  - Operation & Maintenance Manual - Sewage Treatment Plant (STP), Version 2
  - Operation and Maintenance Manuel - Arsenic Water Treatment Plant, Version 2
  - Operation and Maintenance Manuel – Construction Water Treatment Plant, Version 1
  - Shipping Management Plan, Version 2
  - Thermal Monitoring Plan, Version 2
  - Water Management Infrastructures - Operation, Maintenance and Surveillance Manual, Version 1
  - Water Quality and Flow Monitoring Plan, Version 6
  - Waste Rock Management Plan, Version 4
  - Water Management Plan, Version 3
  - Blasting Activities – Whale Tail Dike construction, Version 1
  - Freshet Action Plan, Version 1
- MEADOWBANK GOLD PROJECT & WHALE TAIL PROJECT (COMBINED)

Air Quality and Dustfall Monitoring Plan, Version 4

Blast Monitoring Plan, Version 3

Bulk Fuel Storage Facility: Environmental Performance Monitoring Plan, Version 4

Hazardous Materials Management Plan, Version 4

Noise Monitoring and Abatement Plan, Version 3

Occupational Health and Safety Plan, Version 2

Quality Assurance / Quality Control (QA/QC) Plan, Version 4

Spill Contingency Plan, Version 7

Terrestrial Ecosystem Management Plan (TEMP), Version 6

MEADOWBANK GOLD PROJECT

Baker Lake Bulk Fuel Storage Facility: Environmental Performance Monitoring Plan, Version 4

MEADOWBANK GOLD PROJECT

Baker Lake Bulk Fuel Storage Facility: Environmental Performance Monitoring Plan

In Accordance with Water License 2AM-MEA1526

Prepared by:
Agnico Eagle Mines Limited – Meadowbank Division

Version 4
August 2018

EXECUTIVE SUMMARY

Agnico Eagle Mines Limited – Meadowbank Division (Agnico Eagle) is currently operating the Meadowbank Gold Project approximately 70 km north of the Hamlet of Baker Lake. As part of the project, six 10 million litres fuel storage tanks for diesel and twenty (20) 100,000L fuel storage tank for Jet-A were constructed at the Baker Lake Marshalling Area to receive and store bulk shipments of fuel for the Meadowbank Project. It is currently proposed to add two (2) 10 million litres diesel fuel storage tanks similar to the existing ones.

To adequately assess the environmental performance of the bulk fuel storage tank at Meadowbank this report provides: a summary of the design, installation, operation and maintenance that follows the CCME (2003) Environmental Code of Practice for Aboveground Storage Tank Systems Containing Petroleum and Allied Petroleum Products; a summary of the location and environmental setting; a summary of the NWB Type A water license requirements; and an environmental assessment to support the recommended environmental monitoring for the ongoing evaluation of the secondary containment.

IMPLEMENTATION SCHEDULE

As required by Water License 2AM-MEA1526, Part B, Item 11, the proposed implementation schedule for this Plan is outlined below.

This Plan will be immediately implemented (August 2018) subject to any modifications proposed by the NWB as a result of the review and approval process**.**

DISTRIBUTION LIST

Agnico Eagle – General Mine Manager

Agnico Eagle – Environment Superintendent

Agnico Eagle – Environmental Coordinator

Agnico Eagle – Environmental Technician

Agnico Eagle – Energy and Infrastructures Superintendent

Agnico Eagle – Field Services Supervisor

DOCUMENT CONTROL

Version	Date (YMD)	Section	Page	Revision
1	09/12/22			Comprehensive plan for Baker Lake Bulk Fuel Storage Facility
2	11/12/13			Update all items related to the Baker Lake Fuel Storage Installations: Final Report of Phase 3 (2010)
3	30/06/2014			Add Jet-A Tank information and 2014 comprehensive review
4	2018/08/16			Text updated to reflect proposal to add 2 diesel fuel tanks.

Prepared By: 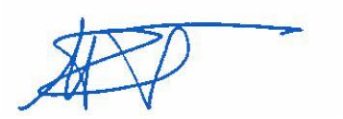

Environmental Compliance Counselor

Table of Contents

SECTION 1. INTRODUCTION 1
SECTION 2. SITE LOCATION, CONSTRUCTION AND OPERATION 2
2.1 SITE LOCATION 2
2.2 DESIGN AND INSTALLATION SUMMARY 2
2.3 OPERATION AND MAINTENANCE SUMMARY 2
SECTION 3. ENVIRONMENTAL SETTING 6
3.1 TOPOGRAPHY 6
3.2 GEOLOGY 6
3.3 FLORA AND FAUNA 6
3.4 SUBSURFACE CONDITIONS 6
3.5 WATER QUALITY 7
SECTION 4. NWB TYPE A WATER LICenSE CONDITIONS 8
SECTION 5. ENVIRONMENTAL PERFORMANCE ASSESSMEnT 10
5.1 DESK-TOP REPORT REVIEW 10
5.2 SECONDARY CONTAINMENT VISUAL INSPECTION 11
5.3 ENVIRONMENTAL ASSESSMENT 11
5.3.1 Terrestrial Environment 11
5.3.2 Surface Water 11
5.3.3 Groundwater 11
SECTION 6. PERFORMANCE MONITORING PLAN 13
6.1 VISUAL AND OPERATIONAL INSPECTIONS 13
6.2 ROUTINE CONTACT WATER MONITORING 13
6.3 EVENT MONITORING 14
6.3.1 Soil Sampling 14
6.3.2 Water Sampling 14
6.3.3 Assessment of the Need for Groundwater Well Installation 14
SECTION 7. REFERENCES 15

LIST OF FIGURES

Figure 2-1: General Location of Baker Lake Bulk Fuel Storage Facilities 4
Figure 2-2: Baker Lake Bulk Fuel Storage Facility Site Layout and proposed location for Tank #7 and #8 5

LIST OF APPENDICES

Appendix A1: Baker Lake Fuel Storage Installations: Interim Report Following Construction of Phase 1 (2007) and Phase 2-A (2008)

Appendix A2: Baker Lake Fuel Storage Installations: Final Report Following Construction of Phase 2- B (2009)

Appendix A3: Baker Lake Fuel Storage Installations tank #5 and #6: Final Report following the construction of Phase 3 (2010)

Appendix A4: Baker Lake Fuel Storage Installations: As-built Report (AEM 2013)

SECTION 1. INTRODUCTION

Agnico Eagle Mines Ltd. (Agnico Eagle) is currently operating the Meadowbank Gold Project approximately 70 km north of the Hamlet of Baker Lake. As part of the project, six 10 million liters diesel fuel storage tanks and twenty (20) Jet-A bulk fuel storage tanks were constructed at the Baker Lake Marshalling Area to receive and store bulk shipments of fuel for the Meadowbank Project. In 2007-2008, four (4) 10 million diesel tank were constructed. Following the amendment No.1 - Marshalling Area Bulk Fuel Storage Facility Expansion Water Licence 2AM-MEA0815 Type A, 2 more ten million liters bulk fuel storage tank (#5 and #6) were constructed in 2010. This amendment also permitted the construction of twenty (20) Jet A Fuel tanks installed in 2013 in a new containment area located northwest of Tanks 5 and 6. Theses tank supply fuel for the aircrafts flying into the Meadowbank mine site. Agnico Eagle is currently proposing to add two (2) 10 million liters diesel fuel storage tanks.

To adequately assess the environmental performance of the bulk fuel storage tank at Meadowbank this report provides: a summary of the design, installation, operation and maintenance that follows the CCME (2003) Environmental Code of Practice for Aboveground Storage Tank Systems Containing Petroleum and Allied Petroleum Products; a summary of the location and environmental setting; a summary of the NWB Type A water license requirements; and an environmental assessment to support the recommended environmental monitoring for the ongoing evaluation of the secondary containment.

SECTION 2. SITE LOCATION, CONSTRUCTION AND OPERATION

2.1 SITE LOCATION

The Baker Lake Bulk Fuel Storage Tank Facility is located east of the hamlet of Baker Lake, on the north shore of Baker Lake. There are six (6) above ground diesel storage tanks, each with a capacity of 10 million liters, and twenty (20) above grounds Jet-A storage tanks, each with a capacity of 100,000 liters. The GPS coordinates of these facilities is NAD 83 15W E 356874 N 7134486. A general site location is provided in Figure 2.1. A site layout of the infrastructure and tanks is provided in Figure 2.2. Agnico Eagle is proposing to add two (2) 10 million liters diesel fuel tanks to the north of existing ones. The proposed tank location is shown on Figure 2.2

2.2 DESIGN AND INSTALLATION SUMMARY

Following regulatory approval, during the summer of 2007, Agnico Eagle built bulk fuel tanks #1 and #2. The construction of the secondary containment enclosure and installation of the HDPE liner in accordance with CCME (2003) specifications was also completed in 2007 (Agnico Eagle, 2009a). Bulk fuel storage tanks #3 and #4 were completed in October 2008; the secondary containment enclosure and installation of the HDPE liner was completed for these tanks in July 2009 (AEM, 2009b). Following amendment of the Water License Type A, Agnico Eagle built bulk fuel tank #5 and #6: the secondary containment enclosure and installation of the HDPE line was completed for these tanks in October 2010 (Agnico Eagle, 2010). In 2013, the twenty (20) Jet-A tanks, the construction of the secondary containment enclosure and installation of the HDPE liner in accordance with CCME (2003) specifications was completed.

All of the aboveground storage tanks were field erected. For the diesel tank, construction activity was supervised by Hatch Engineering and Stavibel Engineering and included qualified steel fabricators and installers. For the Jet-A tank, Stavibel Engineering provided the design, planning and construction oversight related to the installation of infrastructure of Agnico Eagle's new Jet A Fuel Storage facility which consists of 100,000 liters double walled tanks, associated piping and pumping systems and secondary requirement. Stavibel had supervised the construction of the secondary containment and SM Construction had installed the new Jet-A tanks.

Tanks #7 and #8 will be built upon regulatory approvals.

2.3 OPERATION AND MAINTENANCE SUMMARY

Inventory control of transfer and weekly volume inspections using manual or electronic dip reconciliation are conducted by Meadowbank mine operations staff. Weekly inspections are logged and reported by the Environmental Department. Weekly visual inspections and inventory reconciliation are used to evaluate and determine bulk fuel tank leakage.

The bulk fuel storage facility is maintained in accordance with best management practices.

The bulk fuel tanks are filled during barge season on an annual basis. During the period of re-filling there is the greatest risk of over-filling. Through regular visual inspections, inventory control and monitored fuel

transfer, the risk of over-filling is significantly reduced. In the case of a spill, the spill contingency plan will be implemented (Agnico Eagle, 2013).

Figure 2-1: General Location of Baker Lake Bulk Fuel Storage Facilities

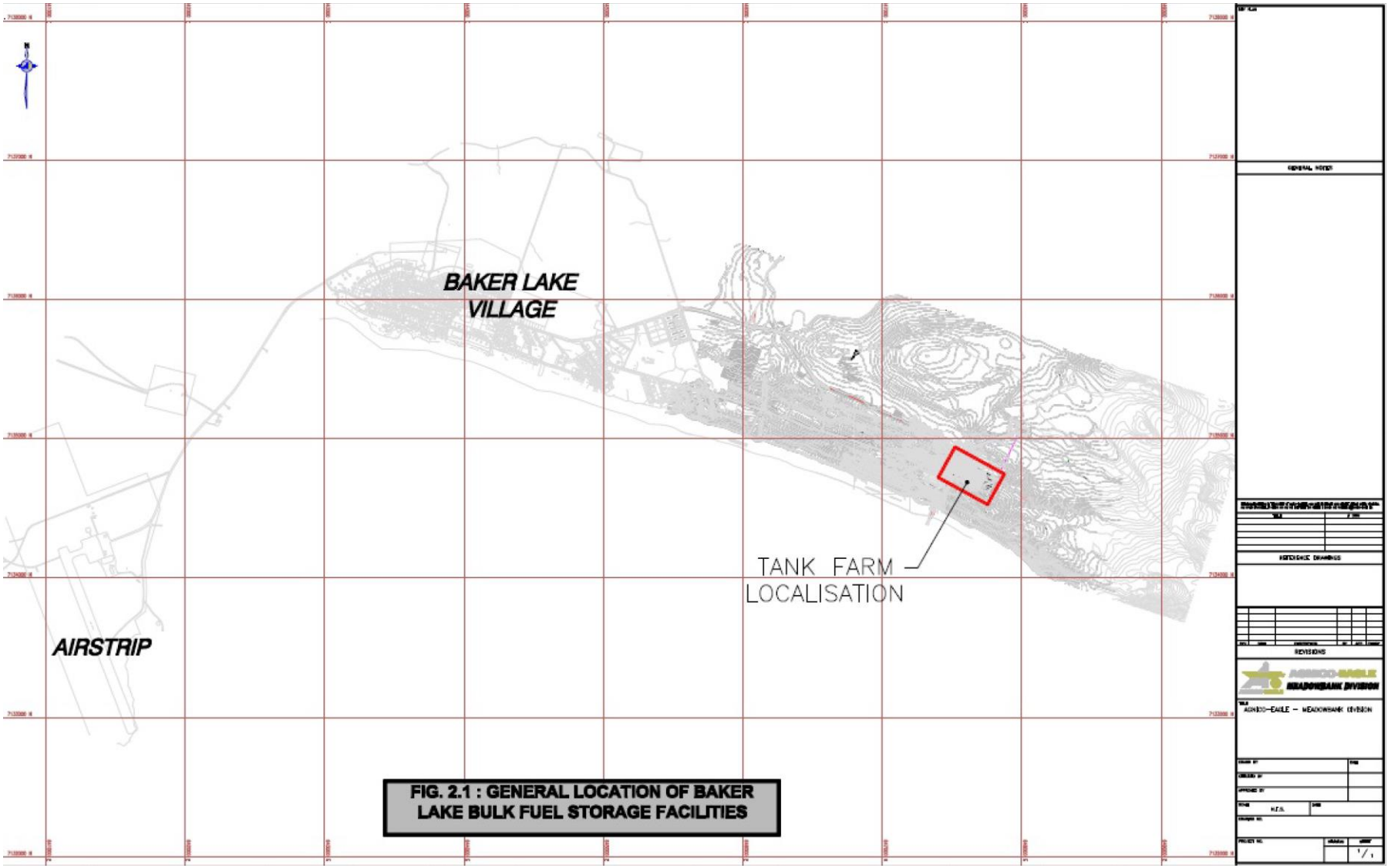

Figure 2-2: Baker Lake Bulk Fuel Storage Facility Site Layout and proposed location for Tank #7 and #8

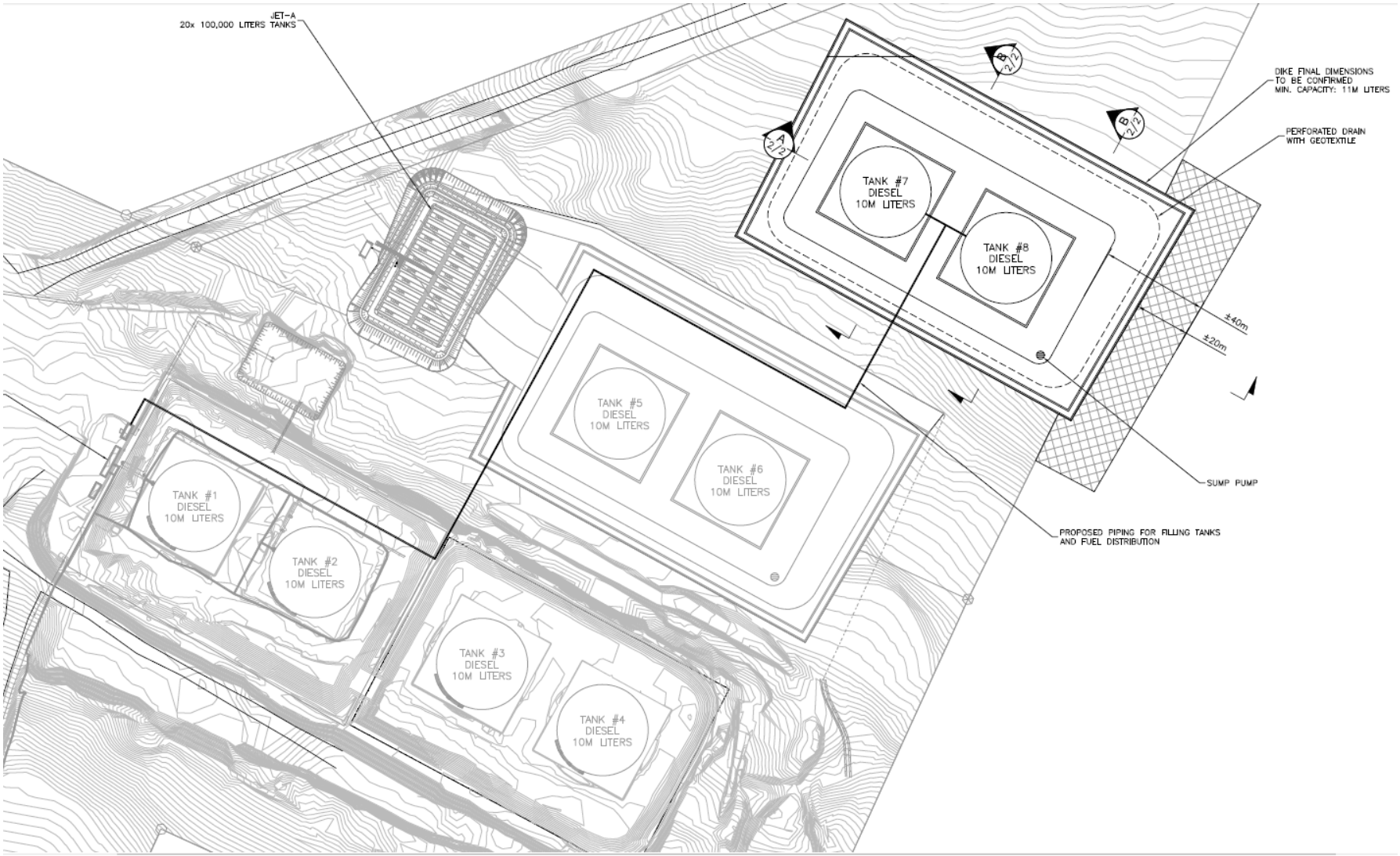

SECTION 3. ENVIRONMENTAL SETTING

3.1 TOPOGRAPHY

The bulk fuel storage area is located east of the Hamlet of Baker Lake, approximately 350 m north of Baker Lake. The storage facility sits on a low terrace parallel with the shoreline of the lake. There is a gradual slope (5 to 10% grade) toward Baker Lake with an approximate elevation change of 35 m from the bulk fuel storage facility to the Baker Lake shoreline.

The Baker Lake shoreline is gently sloping, well-drained and is lined with marine gravels, sands and boulders.

3.2 GEOLOGY

The regional surficial geology is characterized by sandy till, bedrock outcrops, felsenmeer (ice-shattered bedrock) and shallow lakes (Golder, 2007). The most common soil type in this region is glacial till. Marine beach deposits are found along the north shore of Baker Lake.

The soil near the bulk fuel storage facility is comprised of silts, sands, gravels, cobble and boulders and frost-susceptible glacial till overlying weathered bedrock (Golder, 2007). The soil thickness is typically less than 1.4 m with permafrost or bedrock encountered at less than 2 m. Approximately 60% of the surface area surrounding the bulk fuel storage facility is comprised of bedrock outcrop.

3.3 FLORA AND FAUNA

There are no trees and few shrubs in the area surrounding the bulk fuel storage facility. The site is covered by low-lying vegetation; predominated by grassy hummocks, dwarf willow, sedge, green moss and lichen.

Arctic ground squirrels, ptarmigan and songbirds are inhabitants in the area surrounding the bulk fuel storage facility. Lake cisco, lake trout, arctic char, lake whitefish, round whitefish, slimy sculpin and stickleback are predominant species found in Baker Lake.

3.4 SUBSURFACE CONDITIONS

Test pits excavated in 2005 near the bulk fuel storage facility and between the tanks and the shoreline indicate a saturated top layer (0.2 m) of organic material (primarily green moss) (Golder, 2005; 2007). A layer of grey to black medium sand is present up to 0.7 m thickness throughout the area, below which a saturated, grey brown, sand and silt layer is found.

Bedrock is exposed at shallow depths throughout the site in locations where topsoil or till soils are present (Golder, 2005). Bedrock is encountered at a maximum depth of 1.4 m. As predicted by the soil conditions, seepage flows in test pits indicate high site drainage.

3.5 WATER QUALITY

Baker Lake water quality closely resembles distilled water as many conventional water chemistry parameters are at or below detection limits (BAER, 2005). The water column is generally well mixed and the water chemistry homogenous. During the open water season there is limited vertical stratification in temperature and dissolved oxygen, with observed higher salinity in the bottom strata.

SECTION 4. NWB TYPE A WATER LICENSE CONDITIONS

The Nunavut Water Board (NWB) Type A Water License 2AM-MEA1526 requirements related to the bulk fuel storage facility in Baker Lake are provided below. Agnico Eagle is committed to achieving all of these requirements.

Part F: Conditions Applying to Waste Disposal and Management

8.The Discharge of Effluent to land from fuel containment facilities at the Baker Lake Bulk Fuel Storage Facility and Meadowbank Fuel Storage Facility (ST-37 through ST-40), shall not exceed the following Effluent quality limits:

Parameter	Maximum Average Concentration (MAC)	Maximum Concentration of any single Grab sample
pH	6.0 to 9.5	6.0 to 9.5
Total Arsenic (mg/L)	**0.5	1.0
Total Copper (mg/L)	**0.3	0.6
Total Nickel (mg/L)	**0.5	1.0
Total Zinc (mg/L)	*0.5	1.0
Total Suspended Solids (mg/L)	*15	30
Ammonia (mg/L)	6.0	6.0
Benzene (µg/L)	370	370
Toluene (µg/L)	2	2
Ethylbenzene (µg/L)	90	90
Lead (mg/L)	0.1	0.1
Oil and Grease (mg/L)	5 and no visible sheen	5 and no visible sheen

* Environmental Guideline for Industrial Waste Discharges in the NWT, 2004
** Metal Mines Effluent Regulations (MMER)

9. The Licensee shall, under Part F, Item 8, discharge Effluent in such a manner as to minimize surface erosion at a distance of at least thirty-one (31) metres above the ordinary High Water Mark of any Water body, where direct flow into a Water body is not possible and no additional impacts are created, or as otherwise approved by the Board in writing.

11. The Licensee shall confirm compliance with Effluent quality limits in Part F, Items 3, 4 and 8 prior to Discharge.

12. The Licensee shall provide at least ten (10) days' notice to the Inspector prior to any planned Discharges from any facilities. The notice shall include an estimated volume proposed for Discharge and the receiving location.

Part H: Conditions Applying to Emergency Response and Contingency Planning

2. The License shall prevent any chemicals, petroleum product or unauthorized Wastes associated

with the project from entering Water.

3. The License shall provide secondary containment for fuel and chemical storage as required by applicable standards and acceptable industry practice

4. The License shall perform weekly inspections of fuel containment facilities for leaks and settlement and shall keep a written log of inspections to be made to an Inspector upon request.

SECTION 5. ENVIRONMENTAL PERFORMANCE ASSESSMENT

To adequately assess the environmental performance of the bulk fuel storage tanks and facilities, a desk-top review of the design and installation reports (Agnico Eagle, 2009a, b) were completed. In addition, a consultant performed a geotechnical inspection to annually evaluate the site drainage, secondary containment and performed an environmental assessment of the bulk fuel storage facility. The latest inspection was performed in 2017 by Golder Associates.

5.1 DESK-TOP REPORT REVIEW

The Baker Lake bulk fuel storage facility was commissioned in 2007 (for tanks #1 and #2,) July 2009 (for tanks #3 and #4), 2010 (for tanks #5 and #6) and 2013 for Jet-A Tank. The installation reports (Agnico Eagle, 2009a, b; Agnico Eagle, 2010; and Agnico Eagle 2011 for diesel tank and Agnico Eagle, 2013 for Jet-A tanks; attached in Appendix A) indicated the use of best management practices during the installation of the aboveground fuel storage tanks. Following the diesel tank construction, X-Ray testing of horizontal and vertical welds was completed. All of the welds met the specifications outlined in the API Standard 650 (Agnico Eagle, 2009a, b). For the Jet-A tank, after construction all tanks were cleaned and washed inside and pressure tested was performed as per specifications.

Under the supervision of Hatch Engineering, the construction of the secondary containment berms for tanks #1 and #2 was completed. Enviroline Services Inc. was hired in October 2007 to install the HDPE membrane liner in accordance with CCME (2003) specifications; this liner was subsequently covered with a surface layer of crushed stone. Under the supervision of Stavibel Engineering the secondary containment berms were constructed and the HDPE membrane liner was designed and installed for bulk fuel storage tanks #3, #4 under the supervision of Luc Croisetière and Agnico Eagle. Under the supervision of Stavibel Engineering, the construction of the secondary containment berms for tanks #5 and #6 was completed. Enviroline Services Inc. was hired in May 2010 to install the HDPE membrane liner (Agnico Eagle, 2010). Under the supervision of Stavibel Engineering, the construction of the secondary containment berms for Jet-A Tank was completed. Texcel was hired in July 2013 to install the HDPE membrane liner (Agnico Eagle, 2013).

A secondary containment volume calculation using Autocad Civil 3D was completed to provide verification on the liquid storage capacity of the storage tank system. The CCME Environmental Code of Practice for Aboveground Storage Tanks (2003) states:

> *a storage tank system that consists of more than one storage tank which should have a volumetric capacity of not less than the sum of the capacity of the largest storage tank located in the contained space and 10% of the capacity of the largest tank or the aggregate capacity of all other storage tanks located in the contained space*.

In accordance with the CCME (2003) code of practice, the Baker Lake bulk fuel storage tanks meet the volumetric requirements for a storage tank system (Agnico Eagle, 2009a,b; Agnico Eagle, 2010; and Agnico Eagle, 2011).

Upon Tanks #7 and #8 construction completion, this environmental performance monitoring plan will be

revised to include construction details.

5.2 SECONDARY CONTAINMENT VISUAL INSPECTION

A consultant performs a geotechnical inspection annually and inspects the bulk fuel secondary containment structures, the report is sent to NWB annually. The last inspection was performed in 2017 by Golder Associates (Golder Associates, 2018).

5.3 ENVIRONMENTAL ASSESSMENT

The management of site drainage, surface water collection and water/fuel removal within the secondary containment area is an important measure in the protection of the terrestrial environment, surface water and ground water from potential sources of contamination. The environmental protection objectives, strategy and an evaluation of the potential of leaks or seepage to contaminate the terrestrial environment, surface water and ground water are provided in the following sections. Much of the environmental protection strategies focus on the control of contact water. In this report contact water is defined as any water that may be physically or chemically affected by the nearby operational activities.

5.3.1 Terrestrial Environment

The primary objective of the terrestrial management plan is to minimize any adverse impacts to the terrestrial (soil, flora and fauna) environment. To meet this objective, bulk fuel storage facility structures have been constructed to minimize the operational footprint and control contact run-off water within the secondary containment area. Due to the site grading, all water that comes into contact with the bulk fuel storage facility is intercepted and directed into the impermeable HDPE lined secondary containment area.

The ground beneath the secondary containment area has been adequately graded to ensure berm stability.

5.3.2 Surface Water

The objective of water management around the bulk fuel storage facility is to minimize impacts on the quantity and quality of surface water and groundwater. To meet this objective, the bulk fuel storage facility structures have been constructed to intercept and direct contact run-off water to the impermeable HDPE lined secondary containment area. As there is a high volume of fuel transfer and activity around the modular fuel dispenser, the pad below the modular fuel dispenser and refueling station is lined and sloped toward the secondary containment berm.

Seepage flows in test pits indicate high site drainage due to the high soil porosity. Therefore, should contact water reach the natural environment, the ultimate fate of the contaminants is likely to be in shallow groundwater or surface water (Golder, 2007).

5.3.3 Groundwater

It is not expected that groundwater would be impacted as there is no direct pathway for contaminated water to seep from the bulk fuel storage facility. Due to the site grading, all contact water from the bulk fuel storage facility is directed inside the HDPE lined secondary containment area. Should the integrity of the liner become compromised, there could be leakage into the below grade soil; this would likely present the

greatest source of hydrocarbon contamination to impact groundwater and receiving water.

SECTION 6. PERFORMANCE MONITORING PLAN

The environmental performance monitoring plan is a tiered approach with an emphasis on visual and operational inspections; routine surface water sampling to control and monitor the quality of the contact water; and event monitoring (in the case of a spill emergency or occurrence). Management of the bulk fuel storage facility will be guided by the monitoring results.

6.1 VISUAL AND OPERATIONAL INSPECTIONS

Visual and operational inspections are a central component of the environmental performance monitoring plan. Visual inspections of the secondary containment structure are important because if the integrity of the berm walls or liner is compromised this presents the greatest potential for leaks or seepage into groundwater and ultimately the receiving environment.

Weekly visual inspections are conducted by the environmental department and weekly manual or electronic dip tests are conducted for inventory reconciliation by the operation staff. The environmental department inspect the facilities for: tank and piping condition, secondary containment berm structure and integrity, indicators of liner damage, precipitation/ run-off accumulation, evidence of tampering or misuse, any structural abnormalities and visible sheens on contact water pools and crush material inside the secondary containment.

Environmental staff follow-up with operations staff and advise the supervisor if any non-conformity is observed. A weekly written log is completed and available upon request.

6.2 ROUTINE CONTACT WATER MONITORING

Due to snow accumulation, melting and precipitation, contact water will unavoidably collect inside the secondary containment area. Contact water from inside the secondary containment area will be sampled as described below prior to its release into the terrestrial environment. During water discharge, piping will be directed onto the nearby tundra at least 30 m from the high tide mark, to allow for natural attenuation and drainage (i.e. surface water will never be pumped directly into Baker Lake).

During visual inspections the quantity of contact water collected inside the secondary containment area will be evaluated. If there is a visible sheen on the contact water or if water withdrawal is deemed necessary, water samples will be collected and analyzed for the following parameters: pH, Total Arsenic, Total Copper, Total Lead, Total Nickel, Total Zinc, Total Suspended Solids, Ammonia, Total Cyanide, Benzene, Toluene, Ethylbenzene, Lead, and Oil and Grease. If the contact water exceeds the licensed limits, the portable oil-water separator will be used to treat the water. Prior to withdrawal, samples will be analyzed at a certified laboratory.

In addition, water samples from Baker Lake are collected as part of the Core Receiving Environment Management Program (CREMP, 2015). The results of these analyzes are included in the annual report. These samples are used to evaluate the performance of the overall water management plan for the Baker Lake Marshalling Area.

6.3 EVENT MONITORING

In the event of a spill occurrence at the bulk fuel storage facility, the spill contingency plan will be followed (Agnico Eagle, 2016). As a follow-up to the spill response, the environmental staff will conduct an environmental assessment to determine the extent of impacts of the spill occurrence on the nearby environment. This will include the identification of the potential environmental pathways of concern that may result in impacts to surface water (i.e. Baker Lake near-shore surface water), soil or groundwater.

6.3.1 Soil Sampling

Following the unlikely event where a spill is not contained within the secondary containment area, soil sampling may be required to locate and prevent further impact to the terrestrial and aquatic receiving environment. Depending on the quantity of the spill, the organic surface soils and silt-containing till below the surface are a likely sink for hydrocarbons, thus soil samples will be taken at selected locations to horizontally and vertically delineate the impacted areas. Furthermore, the soil samples will provide valuable information used to determine the necessity of installing groundwater wells (see Section 6.3.3 below).

6.3.2 Water Sampling

Following a spill event, an environmental assessment will be conducted. Similar to routine contact water sampling (inside the secondary containment area), if there is a visible sheen on the contact water or if water withdrawal is deemed necessary, water samples will be collected and analyzed for the following parameters: pH, Total Arsenic, Total Copper, Total Lead, Total Nickel, Total Zinc, Total Suspended Solids, Ammonia, Total Cyanide, Benzene, Toluene, Ethylbenzene, Lead, and Oil and Grease. If the contact water exceeds the licensed limits, the portable oil-water separator will be used to treat the water. Prior to withdrawal, samples will be analyzed at a certified laboratory.

As part of the CREMP (CREMP, 2015), receiving environment surface and at- depth water samples will be taken in Baker Lake and analyzed for the same parameters as listed above.

6.3.3 Assessment of the Need for Groundwater Well Installation

Following a spill event, if soil sample results identify elevated concentrations of contaminants (i.e. exceeding the CCME Canada-Wide Standard (CWS) for Petroleum Hydrocarbons (PHC) in Soil, 2008) and/or if water samples identify elevated receiving environment water samples (i.e. exceeding licensed limits caused as a result of the spill event), an assessment of the need for groundwater wells will be conducted. The assessment, and if required, design for installation, monitoring and maintenance of vertical ground water monitoring wells will be in accordance with CCME (2003) procedures.

SECTION 7. REFERENCES

Agnico Eagle (2009a). Baker Lake Fuel Storage Installations: Interim Report of Phase 1 (2007) and Phase 2- A (2008). April 2009.

Agnico Eagle (2009b). Baker Lake Fuel Storage Installations: Final Report of Phase 2-B (2009). December 2009.

Agnico Eagle (2010). Baker Lake Fuel Storage Installations: Final Report of Phase 3 (2010). January 2011. AEM (2011). Meadowbank Gold Project: Spill Contingency Plan. December 2011.

Agnico Eagle (2015). Core-Receiving Environment Monitoring Program: Meadowbank Gold Project. November 2015.

BAER (2005). Meadowbank Gold Project Baseline Aquatic Ecosystem Report. October 2005.

CCME (2008). Canadian Council of Ministers of the Environment: Canada Wide Standards for Petroleum Hydrocarbons in Soil. PN 1398. January 2008.

CCME (2003). Canadian Council of Ministers of the Environment: Environmental Code of Practice for Aboveground and Underground Storage Tank Systems Containing Petroleum and Allied Petroleum Products. PN 1326

Golder Associates Ltd. (2007). Water Use and Management Plan: Baker Lake Marshalling Area Meadowbank Gold Project. March 2007.

Golder Associates Ltd (2005). Field Geotechnical Investigations Baker Lake Staging Area, Meadowbank Gold Project. Report N. 05-1413-040.

Golder Associates Ltd (2018). 2017 Annual Geotechnical Inspection Meadowbank Gold Mine, Nunavut. Report 1784282-1574-RPT-Rev0

Appendix A1

Baker Lake Diesel Fuel Storage Installations: Interim Report Following Construction of Phase 1 (2007) and Phase 2-A (2008)

AGNICO-EAGLE MINES LTD
MEADOWBANK DIVISION

BAKER LAKE FUEL STORAGE INSTALLATIONS

INTERIM REPORT

FOLLOWING THE CONSTRUCTION

OF

PHASE 1 (2007)
PHASE 2-A (2008)

AGNICO-EAGLE MINES LTD
MEADOWBANK DIVISION

BAKER LAKE FUEL STORAGE INSTALLATIONS

INTERIM REPORT

FOLLOWING THE CONSTRUCTION

OF

PHASE 1 (2007)
PHASE 2-A (2008)

PREPARED BY :



Patrick Giard, P.Eng., CCE
Supervisor, Construction Department
AGNICO-EAGLE MINES LTD, *Meadowbank Division*

AGNICO-EAGLE MINES LTD
MEADOWBANK DIVISION

BAKER LAKE FUEL STORAGE INSTALLATIONS

INTERIM REPORT
FOLLOWING THE CONSTRUCTION
OF PHASE 1 (2007) AND PHASE 2-A (2008)

TABLE OF CONTENTS

EXECUTIVE SUMMARY

DESCRIPTION OF THE MANDATE

A DOCUMENTATION READILY AVAILABLE

B ADDITIONAL COLLECTION OF INFORMATION

C REVISION OF CONSTRUCTION DRAWINGS

D VERIFICATIONS TO STORAGE CAPACITY WITHIN BERMS

APPENDIX 1 : DRAWINGS

VD2259-BKL-001	VD2259-BKL-002	VD2259-BKL-003	VD2259-BKL-004
VD2259-BKL-005	VD2259-BKL-006	VD2259-BKL-007	VD2259-BKL-008
VD2259-BKL-009	VD2259-BKL-010	VD2259-BKL-011	VD2259-BKL-012

VENDOR DRAWINGS FROM CHAMCO INDUSTRIES LTD

APPENDIX 2

SAFE FILL LEVEL FOR ALL FUEL TANKS

EXECUTIVE SUMMARY

Agnico-Eagle Mines Limited is currently in the process of building a gold mining project in the Kivalliq region of Nunavut, about 70 km north of Baker Lake.

The yearly operations of this mining operation requires the storage of a minimum of forty million (40 000 000) liters of diesel fuel, which represents four (4) bulk fuel storage tanks, each with a nominal capacity of ten million (10 000 000) liters.

PHASE 1

During the summer of 2007, Agnico-Eagle Mines Limited has built the first two (2) bulk fuel tanks, with a combined capacity twenty million (20 000 000) liters of diesel fuel. An impervious enclosure was built around it in order to provide secondary containment around the fuel tanks. These first two (2) bulk fuel tanks were then in condition to be filled.

PHASE 2-A

During the summer of 2008, Agnico-Eagle Mines Limited has built another two (2) bulk fuel tanks, for a total combined capacity of forty million (40 000 000) liters of diesel fuel. Only a portion of the enclosure was built around it, with the final purpose being to provide secondary containment around the fuel tanks. These other two (2) bulk fuel tanks were completed in late October 2008, and they remain empty as of April 2009.

PHASE 2-B

During 2009, Agnico-Eagle Mines Limited plans to complete the installation of an impermeable HDPE membrane, which will provide adequate secondary containment around the fuel tanks. This will allow to fill up all four (4) bulk fuel tanks in the summer of 2009, once the piping installation has been completed

DESCRIPTION OF THE MANDATE

Agnico-Eagle Mines has given a mandate to the undersigned in order to verify the compliance with applicable regulations of its fuel storage installations in Baker Lake, Nunavut.

According to the terms of reference, the mandate consists summarily in the following activities.

A. Review and compilation of the available documentation ;

B. Collection of any information that may be missing ;

C. REVISION OF CONSTRUCTION DRAWINGS

   a. Preparation of *AS BUILT* drawings of the construction of PHASE 1 ;

   b. Preparation of *AS BUILT* drawings of the construction of PHASE 2-A ;

   c. Preparation of *IFC* drawings for the construction of PHASE 2-B ;

D. Verifications to the storage capacity within the existing containment berms of PHASE 1 and verifications for PHASE 2 in regards to the applicable regulations.

A. DOCUMENTATION READILY AVAILABLE

GOLDER ASSOCIATES - Vancouver Office

For the Baker Lake bulk fuel storage facilities, this firm has produced some construction specifications on 2006-04-28, which were given reference SP-GAL-03 under their project number 06-1413-009.

NISHI-KHON / SNC-LAVALIN LTD - Vancouver Office

For the Baker Lake bulk fuel storage facilities, this firm has produced a set of drawings issued **for construction** on 2007-08-03, under their project number 017202. Some specifications for fuel piping and valves were also issued.

EARTHWORK DRAWINGS	017202-1000-41D1-0006	17202-1000-46ES-1001A	017202-8000-46DC-9150
017202-1000-41D1-0001	**FUEL PIPING DRAWINGS**	17202-1000-46ES-1001B	017202-8000-46DC-9152
017202-1000-41D1-0002	017202-1000-41D1-0007	**ELECTRICAL DRAWINGS**	017202-8000-46DC-9153
017202-1000-41D1-0003	017202-1000-46D4-1004	017202-1000-46D6-1001	017202-8000-46DC-9156
017202-1000-41D1-0004	017202-1000-46D4-1005	017202-1000-47D2-2001	017202-8000-46DC-9157
017202-1000-41D1-0005	017202-1000-46D4-1006	017202-8000-47DA-9004	017202-8000-46DC-9166

GEM STEEL EDMONTON LTD

This vendor has submitted a set of drawings issued **for review**, which consist in four (4) structural drawings showing the details of a fuel tank of 10 million liters nominal capacity. The original design of this fuel tank is shown on revision A of drawings BL-2007-1, BL-2007-2, BL-2007-3, and BL-2007-4.

CHAMCO INDUSTRIES LTD

This vendor has submitted a set of preliminary drawings issued **for approval** under their project number 1014938ABS, consisting of the following drawings .These documents have all been reviewed by HATCH.

DRAWING NUMBER	H325174-M268-VD-0040	H325174-M268-VD-0041	H325174-M268-VD-0010
H325174-M268-VD-0011	H325174-M268-VD-0012	**H325174-M268-VD-0013**	H325174-M268-VD-0014
H325174-M268-VD-0015	H325174-M268-VD-0016	H325174-M268-VD-0017	H325174-M268-VD-0019
H325174-M268-VD-0020	H325174-M268-VD-0021	H325174-M268-VD-0029	H325174-M268-VD-0030
H325174-M268-VD-0031	H325174-M268-VD-0032	H325174-M268-VD-0033	H325174-M268-VD-0034
H325174-M268-VD-0035	H325174-M268-VD-0036	H325174-M268-VD-0037	H325174-M268-VD-0039

B. ADDITIONAL COLLECTION OF INFORMATION

HATCH - Vancouver Office

Role during construction phase : Field Supervision during construction of PHASE 1 (2007).

Mr. Marlon Coakley and Jim Bonia, which were HATCH employees at the time, have supervised the construction of the fuel containment area around tanks #1 and #2, in phase 1 of this project. A specialized crew coming from Saskatoon (Enviroline Service inc.) was hired in October 2007 to install an HDPE membrane over the berms. This HDPE membrane has been covered with a layer of about 150 mm thickness of crushed stone. During August 2008, some additional HDPE membrane was installed under the tanks #3 and #4, but the final installation of the impermeable enclosure for phase 2-B remains to be done in 2009.

GEM STEEL EDMONTON LTD

Role during construction phase : Fabrication and field assembly of 10 M liters fuel tanks

Construction of phase 1 (tanks #1 and #2) took place from September to November 2007, with a crew of about 16 workers. During this time, a crew has welded a pipeline towards a booster pump and installed flanged connections and gate valves between fuel tank #1 and the fuel dispensing module manufactured by CHAMCO. The connection of the booster pump to the barge, using hoses, allowed for fuel tank #1 to be filled up in 2007. During August 2008, tanks #1 and #2 were also filled up with fuel by barge delivery.

Construction of phase 2-A (tanks #3 and #4) took place from August to October 2008. Following each phase of this field work, a crew from ACUREN has proceeded to X-RAY testing of horizontal and vertical welds according to specifications described in the latest edition of API Standard 650. According to the report made by ACUREN, no repairs of defective welds were required, either on the tank shell or nozzles.

MOSHER ENGINEERING LTD

Role during construction phase : Welding of pipelines and support brackets between the 10 M liters tanks and the sea hose connection.

In September 2008, a crew of four (4) workers has extended a pipeline towards the barge landing and installed pipes with flanged connections and gate valves between fuel tank #2 and the fuel dispensing module manufactured by CHAMCO. They have also installed check valves on both the inlet and outlet nozzles of tank #2, as well as a pressure relief valve set at 75 psi to bypass the gate valve on the outlet of tank #2.

This safety feature against thermal expansion of fuel inside the pipeline towards the fuel dispensing module remains to be installed on tank #1. The grade of material that was used for this pipeline was A333 cold temperature rated steel.

CHAMCO INDUSTRIES LTD

Role during construction phase : Manufacturing of the fuel dispensing module.

This fuel dispensing module was manufactured in 2006 and sent to the Meadowbank site. A representative from CHAMCO was present during the commissioning. Possibly due to vibrations during transport, there were many flanged connections that needed tightening.

C. REVISION OF CONSTRUCTION DRAWINGS

AEM has hired STAVIBEL Engineering Services, a firm based in Val-d'Or, in order to complete the drawings that were used in producing this report. Those twelve (12) drawings are enclosed in **Appendix 1** of this report.

Drawing VD2259-BKL-001 shows the general layout of fuel storage area. It has been compiled using surveying data collected by a crew from NUNA.

Drawing VD2259-BKL-002 shows the fuel storage area and existing piping for PHASE 1. It has been compiled using surveying data collected by NUNA.

Drawing VD2259-BKL-003 shows the fuel storage area and location of a sump for collection of surface water, to be built in PHASE 2-B. It shows the limits of the HDPE membrane that has been installed in 2008 under the fuel tanks.

Drawings VD2259-BKL-004, 005, and 006 show cross-sections of the containment area in PHASE 2 (to be completed in 2009). These cross-sections are derived from surfaces that were generated using the *Autocad Civil 3D* software, and are also based on information collected from existing land surveys. This drawing file was also used to verify containment volumes, as it is described further in section D.

Drawing VD2259-BKL-007 is an as-built version of structural drawing BL2007-1, which was designed and issued by Gem Steel Edmonton Limited. This drawing has been updated to reflect nozzle orientations that were noted during a visit. No significant changes were noted, except those made to the nozzle schedule.

Drawing VD2259-BKL-008 shows the proposed piping for PHASE 2. It contains a schedule of valves and fittings that remain to be installed.

Drawing VD2259-BKL-009 shows the location of the existing pipeline and sea hose connection with the barge for fuel unloading. Also, a spill containment sump is proposed on this drawing.

Drawing VD2259-BKL-010 is a process and instrumentation diagram. It shows the details of the existing and proposed piping, along with further details for the fuel dispensing module.

Drawing VD2259-BKL-011 is a general layout that shows the location of existing grounding wire and proposed layout to extend this grounding into PHASE 2.

Drawing VD2259-BKL-012 shows the details of the barge and laydown areas, along with the details of a ditch and culvert for diversion of surface water run-off.

Also enclosed are two (2) vendor drawings from CHAMCO INDUSTRIES LTD, which shows the piping details inside the fuel dispensing module.

D. VERIFICATIONS TO STORAGE CAPACITY WITHIN BERMS

STAVIBEL Engineering Services has completed verifications on the liquid storage capacity inside the containment berms, which create an impermeable enclosure around tank #1 and #2.

The method used was a volume calculation using *Autocad CIVIL 3D* software.

The maximum storage capacity of fuel tank #1 is 10 515 000 litres of diesel fuel at a standard temperature of fifteen degrees Celcius (15 °C).

The maximum storage capacity of fuel tank #2 is 10 480 000 litres of diesel fuel at a standard temperature of fifteen degrees Celcius (15 °C).

It has been verified using the above software that the impermeable enclosure built in PHASE 1 will effectively hold one hundred percent (100 %) of the maximum storage capacity of the biggest tank, plus ten percent (10 %) of the maximum storage capacity of the other tank. This calculation has been summarized in a worksheet that is shown on PAGE 8, hereunder.

The containment volume for tanks #1 and #2 is 11 586 cubic meters, of which 367 cubic meters were occupied by accumulation of surface water as of 2008-10-31.

Thus, the lowest point of the HDPE membrane that sits atop the containment area is sufficiently high (at elevation 33.86 m) to meet the above criteria.

A worst case scenario has been simulated, and consists in either a rupture of the first course of side plates in the tank shell, or a failure in the outlet piping, when either one of fuel tanks is 100% full.

This simulation shows that, in such a worst case scenario, the hydraulic balancing level inside the containment area would not exceed the point with the lowest elevation on the surrounding berms, providing that there is no substantial accumulation of surface water inside. There is a no additional safety margin.

However, with the upcoming completion in phase 2-B (summer 2009) of the impermeable enclosure around tanks #3 and #4, a breach will be made into the berm dividing the two containment areas. This is also shown on a sketch, hereby.

When phase 2-b is completed in summer of 2009, the containment volume for tanks #3 and #4 will be 10 855 cubic meters As a result, the new containment requirement of 130% of the biggest tank volume (or 13 647 cubic meters), expressed while considering all four (4) tanks as a whole, will then be exceeded.

DESIGN REVIEW - FOR FUEL SPILL CONTAINMENT BERMS AT BAKER LAKE

EQUIPMENT #	diam (ft)	rim el. (m)	radius (m)	surface (m2)	top el. (m)	height (m)	volume (m3)
740-TK-044 **TANK # 1**	110	32.99	16.764	882.89	44.90	11.910	**10 515**
740-TK-044 **TANK # 2**	110	33.03	16.764	882.89	44.90	11.870	**10 480**

Let's say berms are 5' 3" higher than the average tank floor (so 1.60 m total height) with variable slopes and that the tanks are sitting on cones made of crushed stone of 20 m diameter x 1.0 m height.

	Volume
Secondary Containment Requirement	**11 563 m3**
according to ref. PN-1326, Section 3.9.1(1) 2-b-ii	110%

DESIGN OF BERM DIMENSIONS

elevation	height (m)	width (m)	length (m)	surface (m2)			cumulative volume (m3)
32.00	0.00	**64.0**	**104.0**	6656.00	**slope ratio N-S**		0
32.66	0.66	69.3	107.6	7452.03	horizontal	vertical	4656
32.76	0.76	70.1	108.1	7575.93	4.0	1	5407
32.86	0.86	70.9	108.6	7700.69			6171
32.96	0.96	71.7	109.2	7826.31	**slope ratio E-W**		6947
33.06	1.06	72.5	109.7	7952.80	horizontal	vertical	7736
33.16	1.16	73.3	110.3	8080.15	2.7	1	8538
33.26	1.26	74.1	110.8	8208.36			9352
33.36	1.36	74.9	111.3	8337.44			10 180
33.46	1.46	75.7	111.9	8467.38			11 020
33.56	1.56	76.5	112.4	8598.19			11 873
33.66	1.66	77.3	113.0	8729.86			12 739
33.76	1.76	78.1	113.5	8862.39			13 619
33.86	1.86	78.9	114.0	8995.79		**GROSS CONTAINMENT**	**14 512**
34.00							**CUBIC METERS**

containment volume to be substracted for the two (2) cones made of crushed stone

	perimeter (m)	number	radius (m)	surface (m2)	height (m)	**volume (m3)**
CONES	126.0	2	20.05	1262.93	1.01	**-2680**
RAMP		1			variable	**-246**

containment volume to be substracted for accumulation of surface water

	elevation	**volume (m3)**
water level as of November 2008	**31.70**	**-367.0**

	Volume
NET CONTAINMENT	**11 219 m3**
	or **107%**

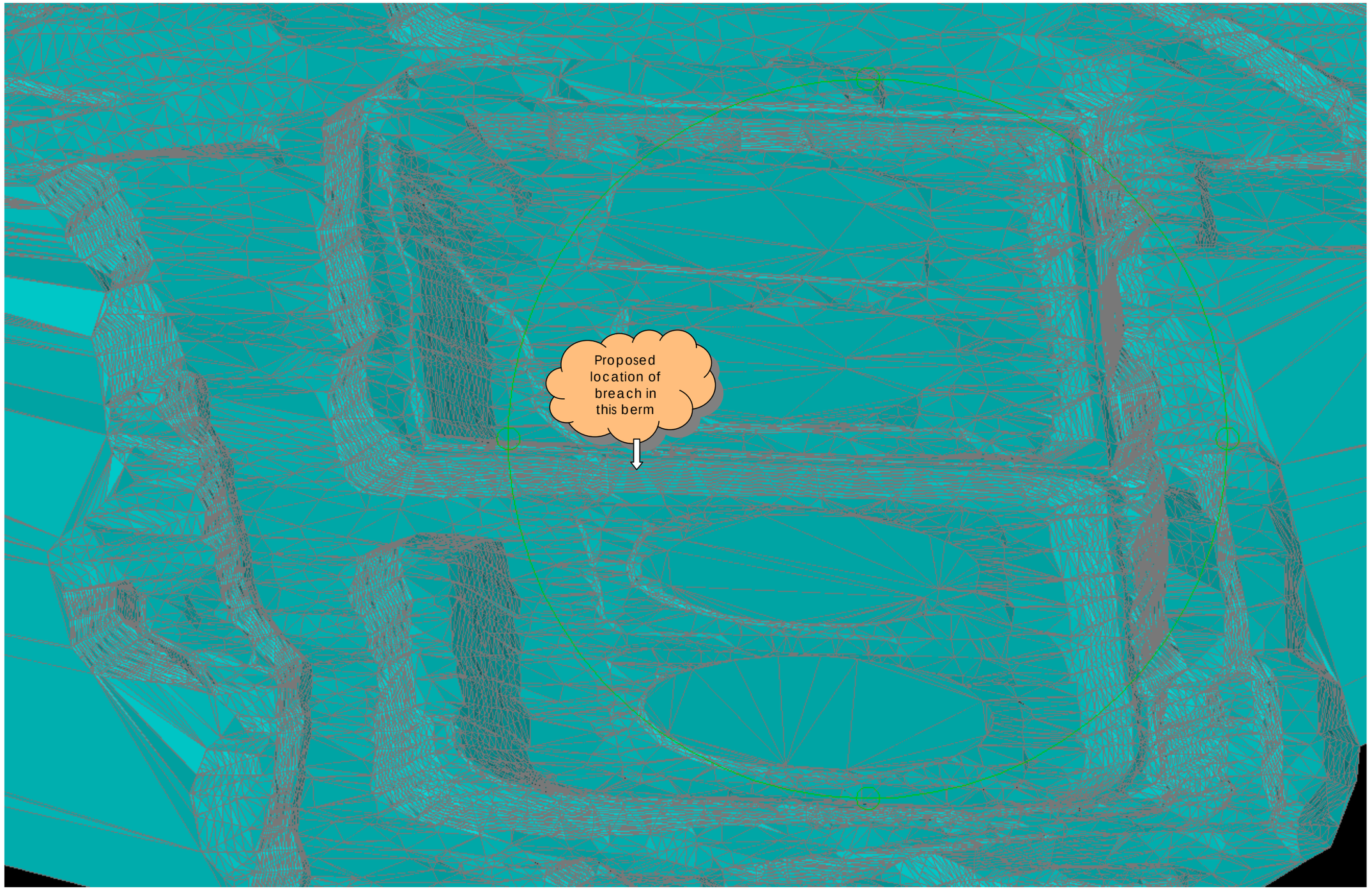
Proposed
location of
breach in
this berm

APPENDIX 1

AS BUILT DRAWINGS for PHASE 2-A

IFC DRAWINGS (10) for PHASE 2-B

VD2259-BKL-001	VD2259-BKL-002	VD2259-BKL-003	VD2259-BKL-004
VD2259-BKL-005	VD2259-BKL-006	VD2259-BKL-007	VD2259-BKL-008
VD2259-BKL-009	VD2259-BKL-010	VD2259-BKL-011	VD2259-BKL-012

Plus two (2) drawings from CHAMCO INDUSTRIES LTD

Vendor ref. # CUP1014938-22
CUP1014938-25

DRAWING NO.

FORMAT ARCH-LANDSCAPE

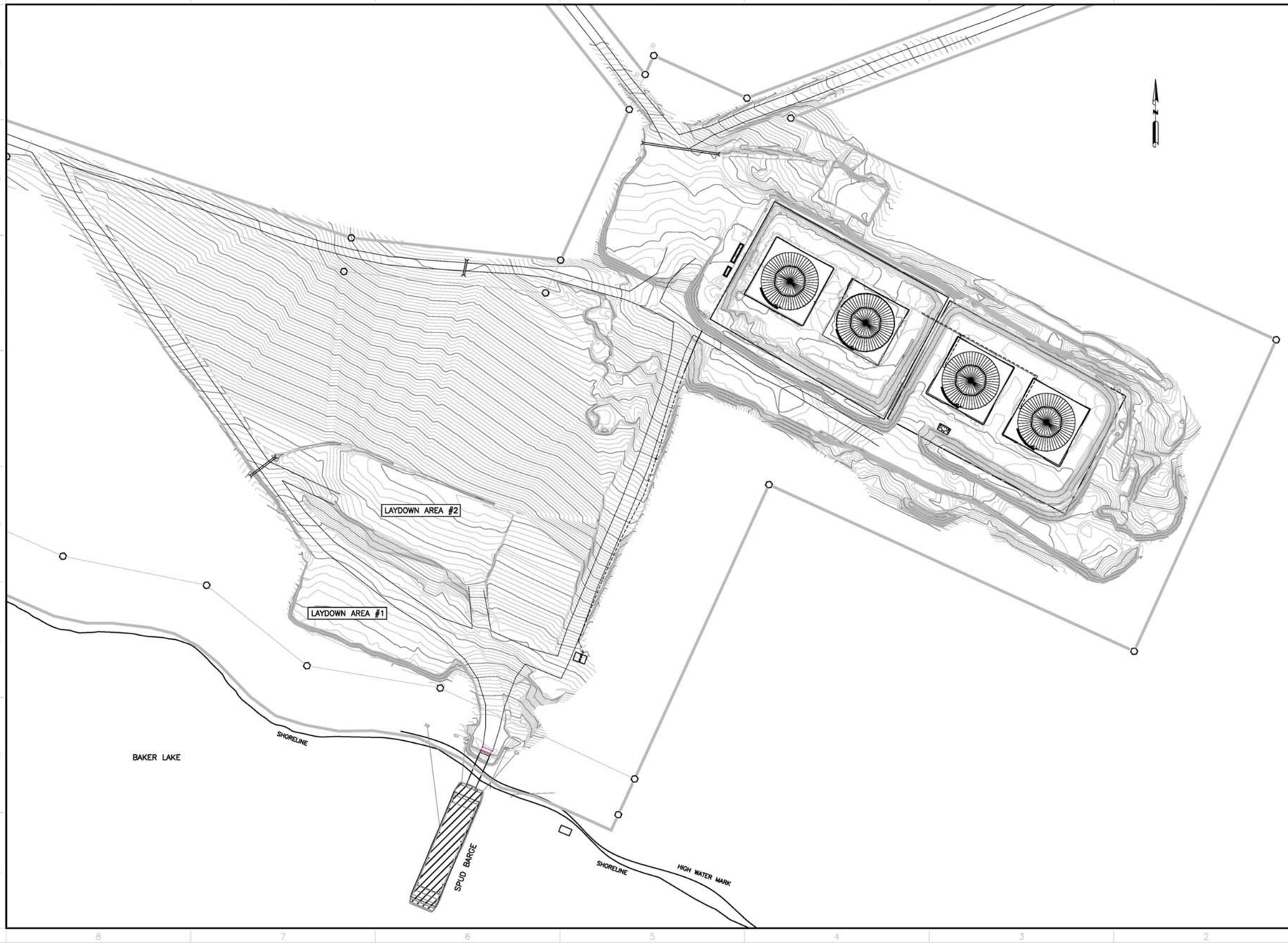

KEY PLAN

GENERAL NOTES

Groupe STAVIBEL
Consultants en Ingénierie
1271, 7e Rue
Val-d'Or (Québec) J9P 3S1
Tél: (819) 825-2233 Télécopieur: (819) 825-1322
Courriel : stavibel-val@stavibel.qc.ca
Site Internet : www.stavibel.qc.ca

REFERENCE DRAWINGS

TITLE	# DWG

REVISIONS

REV.	DATE	DESCRIPTION	BY	APP.	CLIENT
1	09-03-27	FOR CONSTRUCTION	F.R.	P.G.	

AGNICO-EAGLE
MEADOWBANK DIVISION

TITLE
AGNICO-EAGLE – MEADOWBANK DIVISION
BAKER LAKE AREA 740

GENERAL LAYOUT

DRAWN BY	FRANCIS ROSE, TECH	DATE 2009-03-27
CHECKED BY	PATRICK GIARD, P.ENG	
APPROVED BY	PATRICK GIARD, P.ENG	
SCALE 1:1000	DATE 2009-03-27	

DRAWING NO.
VD2259-BKL-001

PROJECT NO.	REVISION	SHEET
VD2259-2	1	1/12

DRAWING NO.

FORMAT ARCH0-LANDSCAPE

740-TK-044

TANK #1

740-TK-045

TANK #2

SEE DETAIL 1

SEE DETAIL 2

FUEL DISPENSING MODULE

GENSET

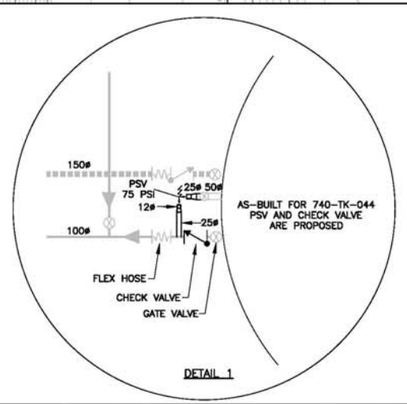

DETAIL 1

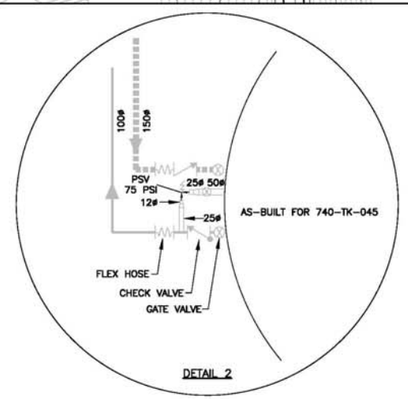

DETAIL 2

KEY PLAN

GENERAL NOTES

Groupe STAVIBEL
Consultants en ingénierie
1271, 7e Rue
Val-d'Or (Québec) J9P 3S1
Tél: (819) 825-2233 Télec: (819) 825-1322
Courriel : stavibel-vd@stavibel.qc.ca
Site Internet : www.stavibel.qc.ca

ISSUED FOR CONSTRUCTION
2009/03/27
PATRICK GUARD, P.ENG

TITLE | # DWG

REFERENCE DRAWINGS

REV.	DATE	DESCRIPTION	BY	APP.	CLIENT
1	09-03-27	FOR CONSTRUCTION	F.R.	P.G.	

REVISIONS

AGNICO-EAGLE
MEADOWBANK DIVISION

TITLE
AGNICO-EAGLE – MEADOWBANK DIVISION
BAKER LAKE AREA 740

GENERAL LAYOUT
PHASE 1

DRAWN BY	FRANCIS ROSE, TECH	DATE 2009-03-27
CHECKED BY	PATRICK GUARD, P.ENG	
APPROVED BY	PATRICK GUARD, P.ENG	
SCALE 1:200	DATE 2009-03-27	

DRAWING NO.
VD2259-BKL-002

PROJECT NO.	REVISION	SHEET
VD2259-2	1	2/12

DRAWING NO.

FORMAT ARCH0-LANDSCAPE

740-TK-046

TANK #3

740-TK-047

TANK #4

LIMIT OF EXISTING HDPE LINER

LIMIT OF EXISTING HDPE LINER

LIMIT OF EXISTING HDPE LINER

LIMIT OF EXISTING HDPE LINER

PROPOSED SUMP

05 006

06 006

03 005

02 004

04 005

01 004

KEY PLAN

GENERAL NOTES

Groupe STAVIBEL
Consultants en ingénierie
1271, 7e Rue
Val-d'Or (Québec) J9P 3S1
Tél: (819) 825-2233 Télec: (819) 825-1322
Courriel : stavibel-val@stavibel.qc.ca
Site Internet : www.stavibel.qc.ca

ISSUED FOR CONSTRUCTION
2009/03/27
PATRICK GIARD, P.ENG

TITLE	# DWG

REFERENCE DRAWINGS

REV.	DATE	DESCRIPTION	BY	APP.	CLIENT
1	09-03-27	FOR CONSTRUCTION	F.R.	P.G.	

REVISIONS

AGNICO-EAGLE
MEADOWBANK DIVISION

TITLE
AGNICO-EAGLE – MEADOWBANK DIVISION
BAKER LAKE AREA 740

GENERAL LAYOUT
PHASE 2-A (2008)

DRAWN BY	FRANCIS ROSE, TECH	DATE 2009-03-27
CHECKED BY	PATRICK GIARD, P.ENG	
APPROVED BY	PATRICK GIARD, P.ENG	
SCALE 1:200	DATE 2009-03-27	

DRAWING NO.
VD2259-BKL-003

PROJECT NO.	REVISION	SHEET
VD2259-2	1	3/12

DRAWING NO.

FORMAT ARCH-LANDSCAPE

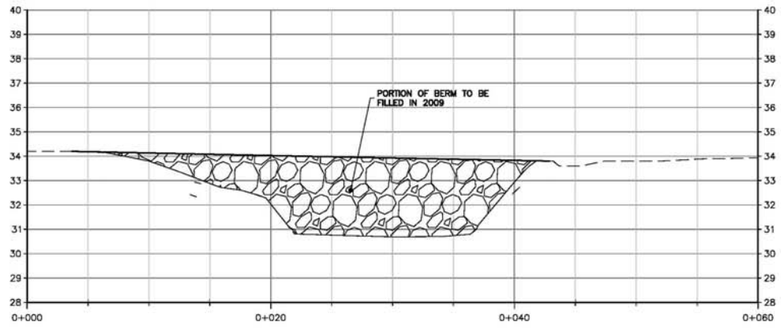

CROSS-SECTION 01/003

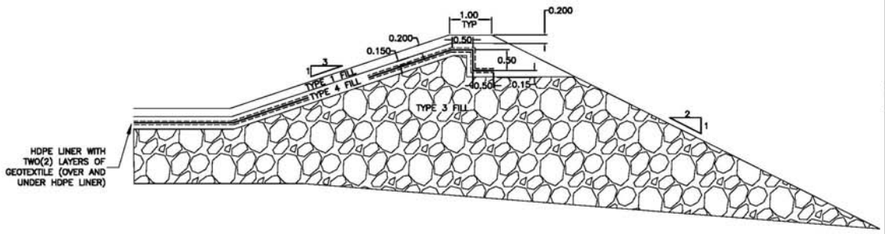

TYPE 1 FILL: MINUS 20mm CRUSHED
TYPE 2 FILL: MINUS 150mm ROCK
TYPE 3 FILL: BLASTED ROCK 0-200mm
TYPE 4 FILL: SCREENED SAND

TYPICAL CROSS-SECTION

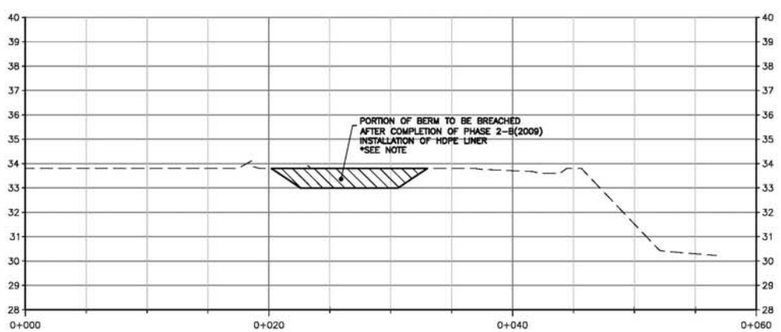

CROSS-SECTION 02/003

*NOTE:
HDPE LINER MUST BE WELDED BACK ON TOP OF EXISTING LINER ON BERM ONCE BREACH HAS BEEN EXCAVATED TO ENSURE IMPERMEABLE LINK BETWEEN BOTH BERM ENCLOSURES

KEY PLAN

GENERAL NOTES

Groupe STAVIBEL
Consultants en Ingénierie
1271, 7e Rue
Val-d'Or (Québec) J9P 3S1
Tél: (819) 825-2233 Télécopieur: (819) 825-1322
Courriel : stavibel-vd@stavibel.qc.ca
Site Internet : www.stavibel.qc.ca

ISSUED FOR CONSTRUCTION
PATRICK GIARD, P.ENG 2009/03/27

REFERENCE DRAWINGS

REV.	DATE	DESCRIPTION	BY	APP.	CLIENT
1	09-03-27	FOR CONSTRUCTION	F.R.	P.G.	

REVISIONS

AGNICO-EAGLE MEADOWBANK DIVISION

TITLE
AGNICO-EAGLE – MEADOWBANK DIVISION
BAKER LAKE AREA 740

CROSS-SECTIONS OF HDPE MEMBRANE
PHASE 2-B (2009)

DRAWN BY	FRANCIS ROSE, TECH	DATE 2009-03-27
CHECKED BY	PATRICK GIARD, P.ENG	
APPROVED BY	PATRICK GIARD, P.ENG	
SCALE HOR:1:200 VER:1:100	DATE 2009-03-27	

DRAWING NO.
VD2259-BKL-004

PROJECT NO.	REVISION	SHEET
VD2259-2	1	4/12

DRAWING NO.

FORMAT ARCH-LANDSCAPE

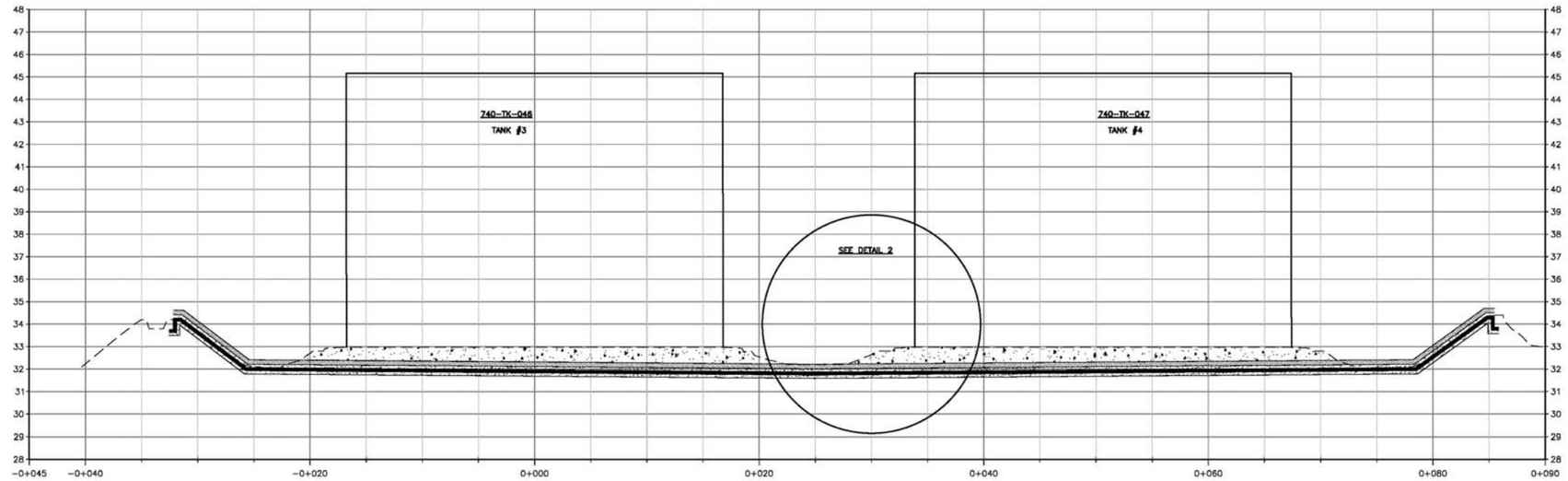

CROSS-SECTION 03/003

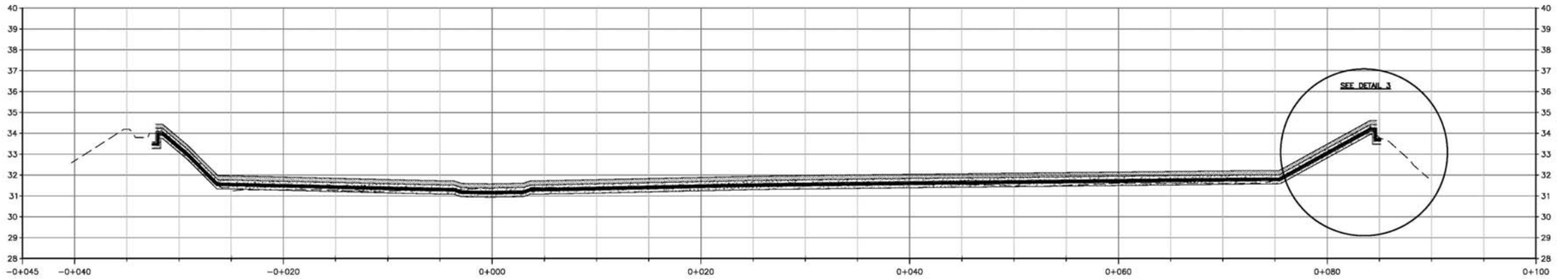

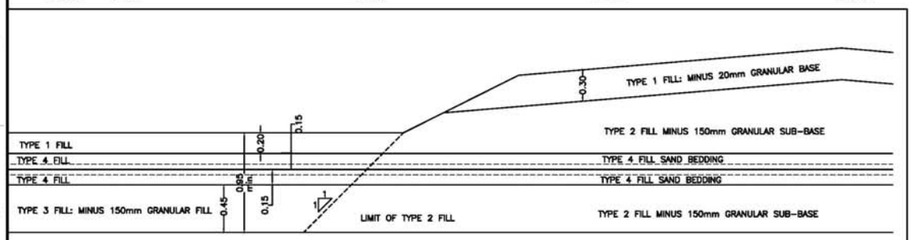

DETAIL 2

CROSS-SECTION 04/003

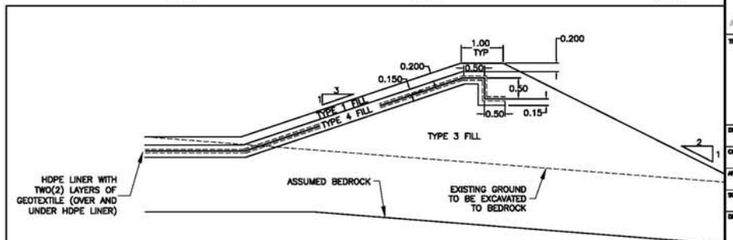

DETAIL 3

KEY PLAN

GENERAL NOTES

Groupe STAVIBEL
Consultants en Ingénierie
1271, 7e Rue
Val-d'Or (Québec) J9P 3S1
Tél: (819) 825-2233 Téléc: (819) 825-1322
Courriel : stavibel-val@stavibel.qc.ca
Site internet : www.stavibel.qc.ca

ISSUED FOR CONSTRUCTION
PATRICK GUARD, P.ENG. 2009/03/27

REFERENCE DRAWINGS

REV.	DATE	DESCRIPTION	BY	APP. CLIENT
1	09-03-27	FOR CONSTRUCTION	F.R.	P.G.

REVISIONS

AGNICO-EAGLE
MEADOWBANK DIVISION

TITLE
AGNICO-EAGLE – MEADOWBANK DIVISION
BAKER LAKE AREA 740

CROSS-SECTIONS
PHASE 2-B (2009)

DRAWN BY	FRANCIS ROSE, TECH	DATE 2009-03-27
CHECKED BY	PATRICK GUARD, P.ENG	
APPROVED BY	PATRICK GUARD, P.ENG	
SCALE HOR:1:200 VER:1:100	DATE 2009-03-27	

DRAWING NO.
VD2259-BKL-005

PROJECT NO.	REVISION	SHEET
VD2259-2	1	5/12

DRAWING NO.

FORMAT ARCH-LANDSCAPE

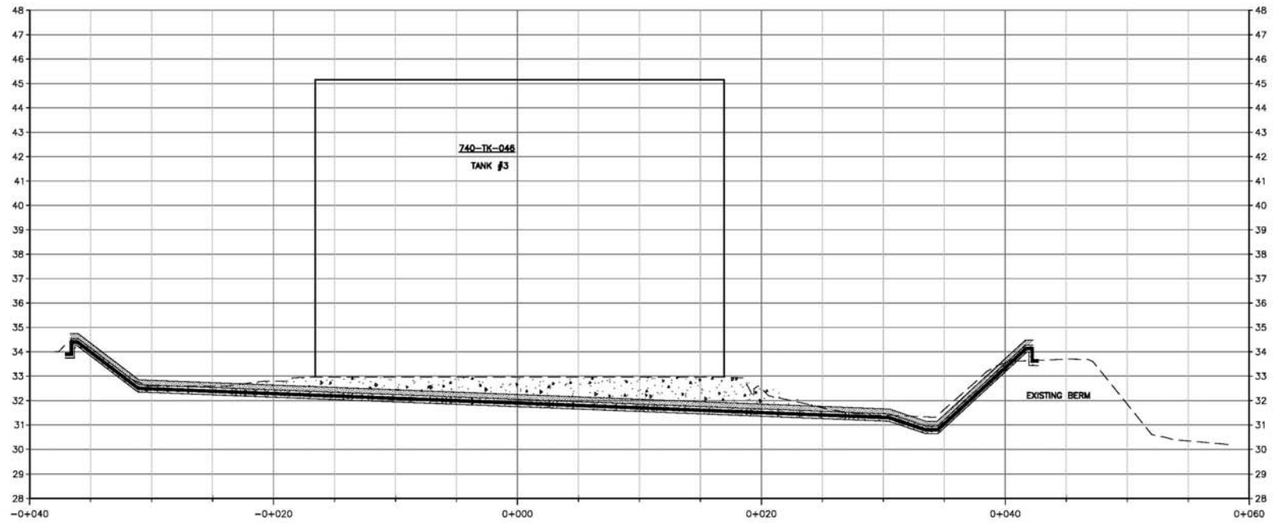

CROSS-SECTION 05/003

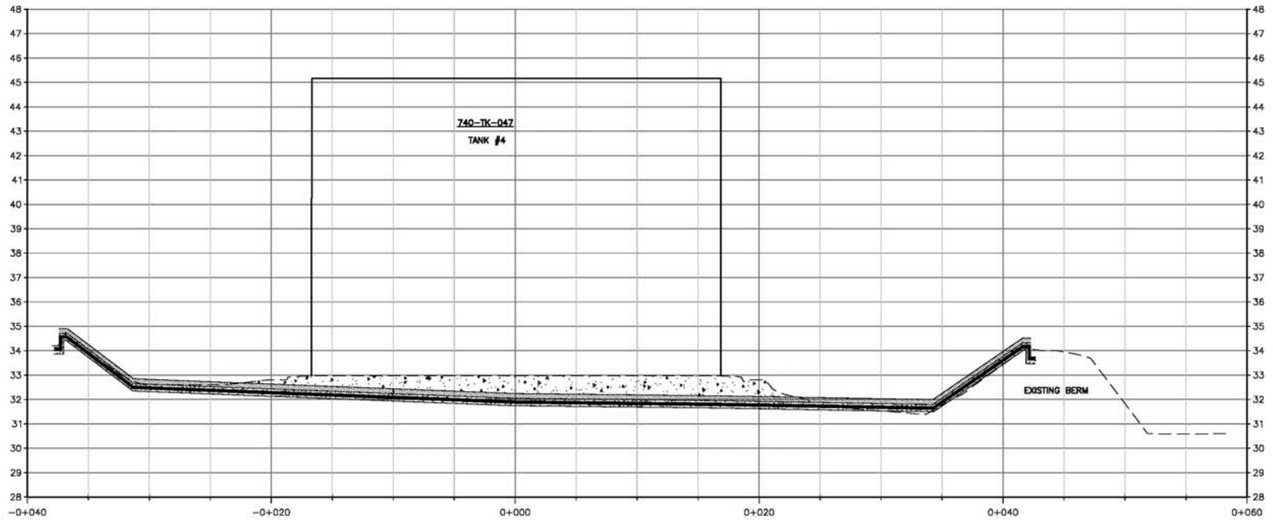

CROSS-SECTION 06/003

KEY PLAN

GENERAL NOTES

Groupe STAVIBEL
Consultants en ingénierie
1271, 7e Rue
Val-d'Or (Québec) J9P 3S1
Tél: (819) 825-2233 Télec: (819) 825-1322
Courriel : stavibel-val@stavibel.qc.ca
Site Internet : www.stavibel.qc.ca

ISSUED FOR CONSTRUCTION
PATRICK GUARD, P.ENG 2009/03/27

TITLE	# DWG

REFERENCE DRAWINGS

REV.	DATE	DESCRIPTION	BY	F.S. APP.	P.G. CLIENT
1	09-03-27	FOR CONSTRUCTION			

REVISIONS

AGNICO-EAGLE
MEADOWBANK DIVISION

TITLE
AGNICO-EAGLE – MEADOWBANK DIVISION
BAKER LAKE AREA 740

CROSS-SECTIONS
PHASE 2-B (2009)

DRAWN BY	FRANCIS ROSE, TECH	DATE 2009-03-27
CHECKED BY	PATRICK GUARD, P.ENG	
APPROVED BY	PATRICK GUARD, P.ENG	
SCALE HOR:1:200 VER:1:100	DATE 2009-03-27	

DRAWING NO.
VD2259-BKL-006

PROJECT NO.	REVISION	SHEET
VD2259-2	1	5/12

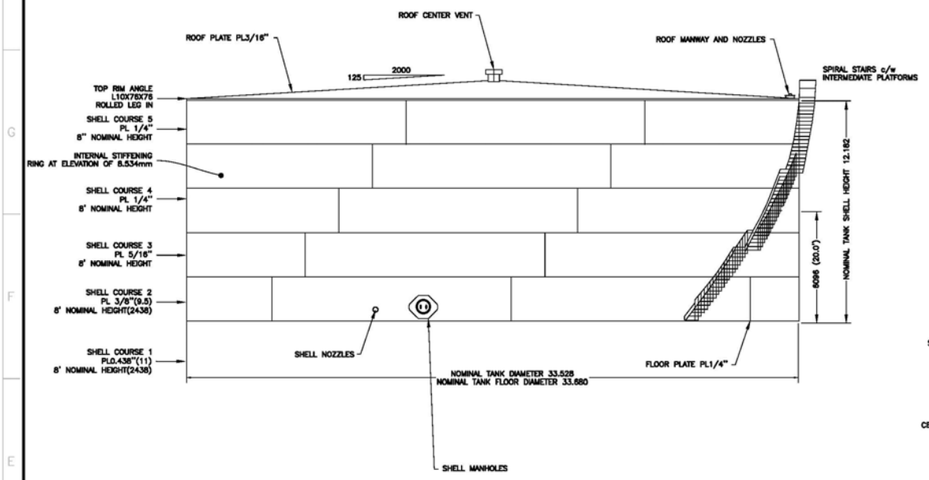

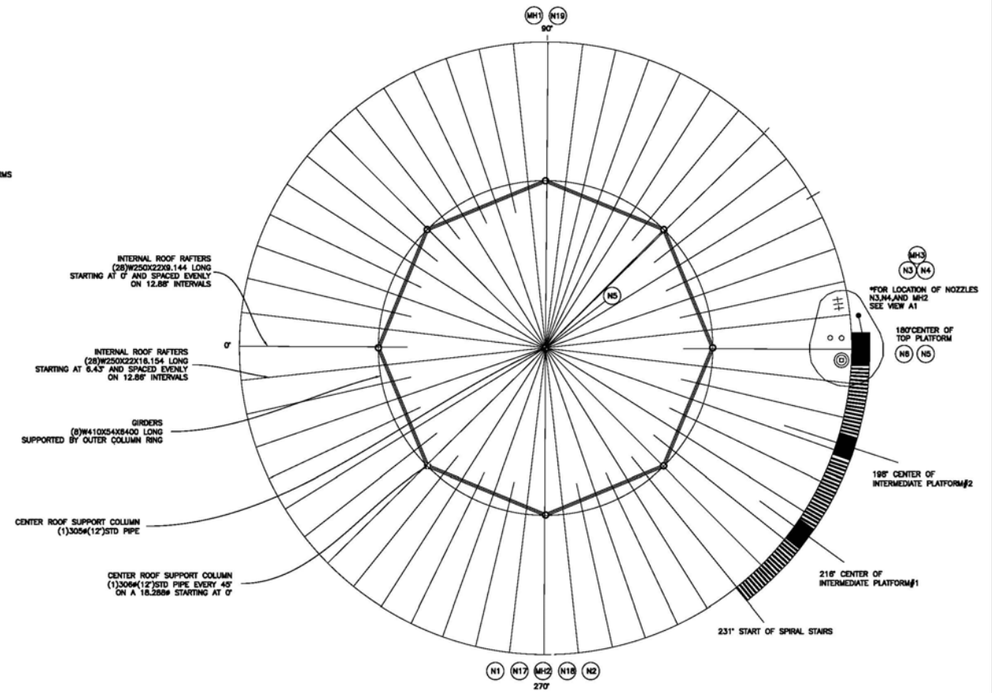

FOUR(4) TANKS WERE BUILT WITH IDENTICAL NOZZLE SPECS : 740-TK-045
740-TK-046
740-TK-047
740-TK-048

API STANDARD 650 STORAGE TANKS								
CONNECTIONS								
SHELL NOZZLES								
MARK	NO REQ'D	SIZE	FLANGED	THREADED	REINFORCEMENT	ORIENTATION N=0	HEIGHT FROM BOTTOM (mm)	NAME/SERVICE
N1	1	6"	SFL 150RF		API 650 Fig 3-5	270°(OFFSET 450mm)	305	INLET FROM BARGE PIPELINE
N2	1	4"	SFL 150RF		API 650 Fig 3-5	270°(OFFSET 450mm)	305	OUTLET TO FUEL DISPENSING
N5	1	4"	SFL 150RF		API 650 Fig 3-5	180°	810	DRAIN PUMPOUT
MH1	2	24"			API 650 Fig 3-5	90°	762	SHELL MANHOLES
MH2	2	24"			API 650 Fig 3-5	270°	762	SHELL MANHOLES
N6	1	3"	SFL 150RF		API 650 Fig 3-5	180°	305	WATER DRAWOFF
N17	1	2"	SFL 150RF		API 650 Fig 3-5	270°(OFFSET 155mm)	1000	PSV DISCHARGE
N18	1	2"	SFL 150RF		API 650 Fig 3-5	270°(OFFSET 155mm)	1000	(SPARE) INTENDED PSV
N19	1	2"	SFL 150RF		API 650 Fig 3-5	90°	1000	(SPARE) INTENDED PSV
MARK	NO REQ'D	SIZE	FLANGED	THREADED	REINFORCEMENT	ORIENTATION N=0	HEIGHT FROM BOTTOM (mm)	NAME/SERVICE
N3	1	3"	SFL 150RF*		API 650 Fig 3-5	175°	15,656	SPARE
N4	1	256X480			API 650 Fig 3-5	175°	15,636	INSPECTION-HATCH**
MH3	1	24"	SFL 150RF		API 2000	185°	15,048	EMERGENCY VENT/MANHOLE*
N5	1	24"	SFL 150RF		API 2000	0	0	CENTRE ROOF VENT*
C1	1							VAREC 2500 LEVEL INDICATOR

GENERAL NOTES

DESIGN

1. CODE OF CONSTRUCTION: API-650, LATEST EDITION
2. ALL DIMENSIONS ARE IN mm UNLESS NOTED OTHERWISE
3. PRODUCT STORED: DIESEL FUEL
4. DIAMETER 33.528mmø
5. HEIGHT: 12.192
6. NOMINAL CAPACITY: 10,780,000 LITRES
7. WORKING CAPACITY: 10,000,000 LITRES
8. DESIGN METAL TEMP: -40°C
9. PRODUCT SPECIFIC GRAVITY: 0.9@15°C

INSPECTION

1. VACUUM TESTING: FLOOR
2. RADIOGRAPHY: VERTICAL SHELL WELDS-SPOT AS PER API 650
3. AIR TEST: NOZZLES
4. VACUUM OR DIESEL TEST: SHELL WELDS

MATERIALS

1. BOLTS: A-325
2. PIPE NOZZLES: A333 Gr.6
3. FORGED FLANGES AND COUPLINGS:A350M, Gr.LF2 AND ANSI 816.5 LF2 CLASS D
4. PIPE FITTINGS: A420 Gr.WPG-6
5. STRUCTURAL STEEL: G40.21 300W
6. SHELL STEEL PLATE: G40.21M-260WT, KILLED AND FINE-GRAIN PRACTICE, IMPACT ENERGY 15ft/lbs(20J@-40°C)
7. FLOOR AND ROOF STEEL PLATE: G40.21M-250WT
8. TANK MANWAYS: STRUCTURAL GRADE PIPE OR BETTER

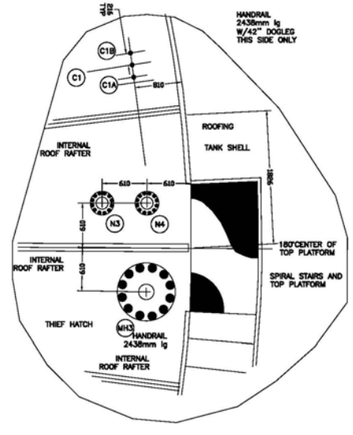

KEY PLAN

GENERAL NOTES

GEM STEEL

9060-24 STREET
EDMONTON, ALBERTA
CANADA T6P 1X8
PH. (780) 449-0000
FAX. (780) 449-0001

TITLE	# (REV)
GENERAL TANK ELEVATION	BL2007-1
ROOF AND NOZZLE PLAN	BL2007-2
GENERAL TANK DETAILS	BL2007-3
GENERAL TANK DETAILS	BL2007-4

REFERENCE DRAWINGS

REV.	DATE	DESCRIPTION	BY	APP'D. CLIENT
1	09-03-30	AS-BUILT	F.R.	P.S.
0	07-06-17	FOR DISCUSSION	J.D.C.	B.K.E.

REVISIONS

AGNICO-EAGLE MEADOWBANK DIVISION

TITLE
AGNICO-EAGLE - MEADOWBANK DIVISION
BAKER LAKE AREA 740

STRUCTURE

DRAWN BY	FRANCIS ROSE, TECH	DATE 2009-03-30
CHECKED BY	PATRICK GIARD, P.ENG	
APPROVED BY	GEM STEEL EDMONTON LTD	
SCALE	N.T.S.	DATE 2009-03-27

DRAWING NO.
VD2259-BKL-007

PROJECT NO.	REVISION	SHEET
VD2259-2	1	7/12

DRAWING NO.

FORMAT ARCH-D-LANDSCAPE

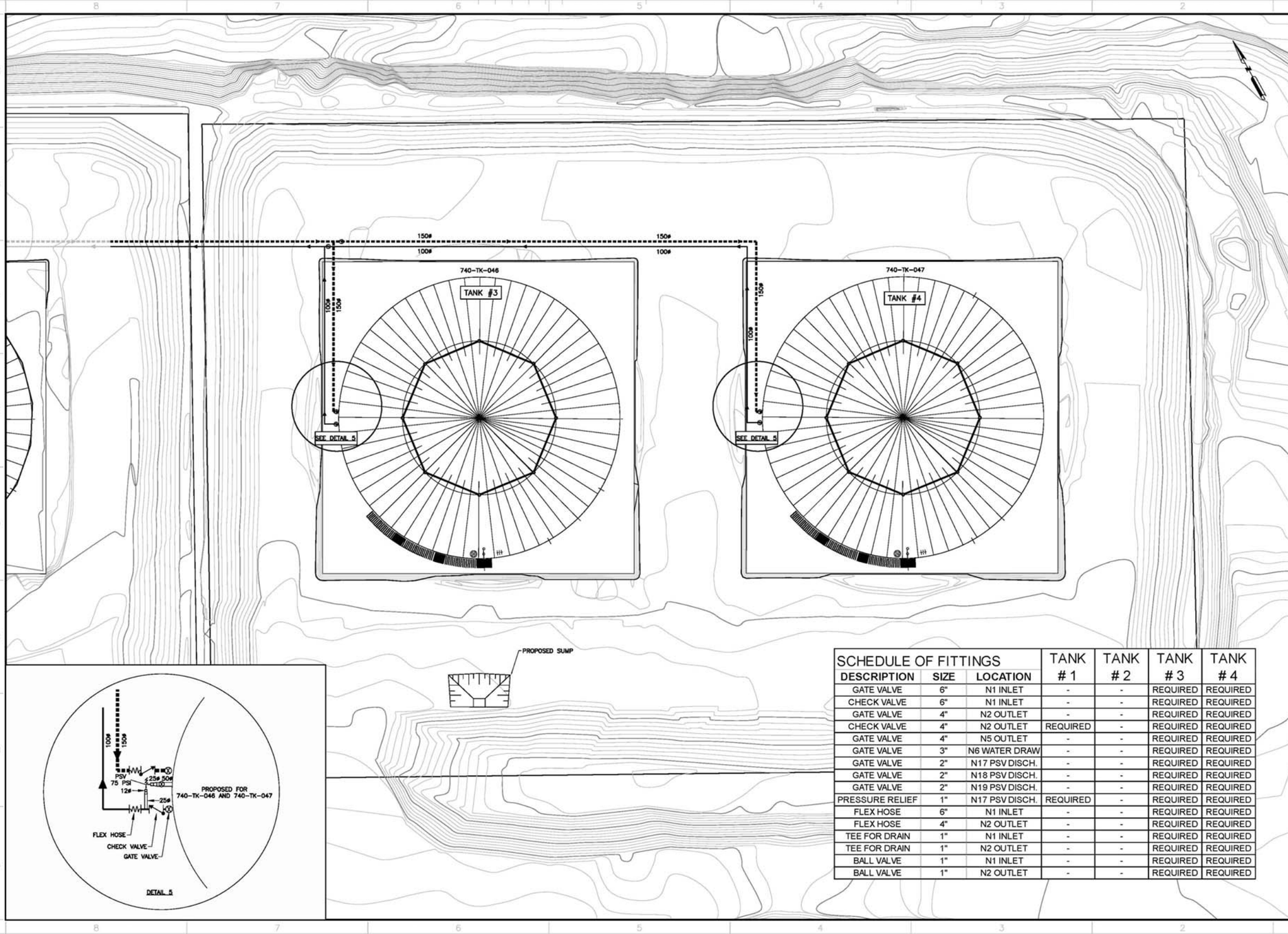

DETAIL 5

SCHEDULE OF FITTINGS			TANK	TANK	TANK	TANK
DESCRIPTION	SIZE	LOCATION	# 1	# 2	# 3	# 4
GATE VALVE	6"	N1 INLET	-	-	REQUIRED	REQUIRED
CHECK VALVE	6"	N1 INLET	-	-	REQUIRED	REQUIRED
GATE VALVE	4"	N2 OUTLET	-	-	REQUIRED	REQUIRED
CHECK VALVE	4"	N2 OUTLET	REQUIRED	-	REQUIRED	REQUIRED
GATE VALVE	4"	N5 OUTLET	-	-	REQUIRED	REQUIRED
GATE VALVE	3"	N6 WATER DRAW	-	-	REQUIRED	REQUIRED
GATE VALVE	2"	N17 PSV DISCH.	-	-	REQUIRED	REQUIRED
GATE VALVE	2"	N18 PSV DISCH.	-	-	REQUIRED	REQUIRED
GATE VALVE	2"	N19 PSV DISCH.	-	-	REQUIRED	REQUIRED
PRESSURE RELIEF	1"	N17 PSV DISCH.	REQUIRED	-	REQUIRED	REQUIRED
FLEX HOSE	6"	N1 INLET	-	-	REQUIRED	REQUIRED
FLEX HOSE	4"	N2 OUTLET	-	-	REQUIRED	REQUIRED
TEE FOR DRAIN	1"	N1 INLET	-	-	REQUIRED	REQUIRED
TEE FOR DRAIN	1"	N2 OUTLET	-	-	REQUIRED	REQUIRED
BALL VALVE	1"	N1 INLET	-	-	REQUIRED	REQUIRED
BALL VALVE	1"	N2 OUTLET	-	-	REQUIRED	REQUIRED

KEY PLAN

GENERAL NOTES

Groupe STAVIBEL
Consultants en Ingénierie
1271, 7e Rue
Val-d'Or (Québec) J9P 3S1
Tél: (819) 825-2233 Télécopieur: (819) 825-1322
Courriel : stavibel-val@stavibel.qc.ca
Site Internet : www.stavibel.qc.ca

ISSUED FOR CONSTRUCTION
PATRICK GIARD, P.ENG 2009/03/27

TITLE	# DWG

REFERENCE DRAWINGS

REV.	DATE	DESCRIPTION	BY	APP.	CLIENT
1	2009-03-27	FOR CONSTRUCTION	F.R.	P.G.	

REVISIONS

AGNICO-EAGLE
MEADOWBANK DIVISION

TITLE
AGNICO-EAGLE – MEADOWBANK DIVISION
BAKER LAKE AREA 740

PIPING LAYOUT
FOR PHASE 2-B (2009)

DRAWN BY	FRANCIS ROSE, TECH	DATE 2009-03-27
CHECKED BY	PATRICK GIARD, P.ENG	
APPROVED BY	PATRICK GIARD, P.ENG	
SCALE	1:200	DATE 2009-03-27

DRAWING NO.
VD2259-BKL-008

PROJECT NO.	REVISION	SHEET
VD2259-2	1	5/12

DRAWING NO.

FORMAT ARCH-D-LANDSCAPE

6" GATE VALVE

EXISTING PIPING

SEE DETAIL 4

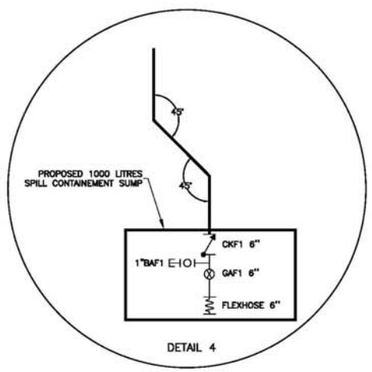

DETAIL 4

KEY PLAN

GENERAL NOTES

Groupe
STAVIBEL
Consultants en ingénierie
1271, 7e Rue
Val-d'Or (Québec) J9P 3S1
Tél: (819) 825-2233 Télec: (819) 825-1322
Courriel : stavibel-vd@stavibel.qc.ca
Site internet : www.stavibel.qc.ca

ISSUED FOR CONSTRUCTION

PATRICK GIARD, P.ENG 2009/03/27

TITLE | # DWG

REFERENCE DRAWINGS

REV.	DATE	DESCRIPTION	BY	APP.	CLIENT
1	09-03-27	FOR CONSTRUCTION	F.R.	P.G.	

REVISIONS

AGNICO-EAGLE
MEADOWBANK DIVISION

TITLE
AGNICO-EAGLE – MEADOWBANK DIVISION
BAKER LAKE AREA 740

PIPING LAYOUT

DRAWN BY	FRANCIS ROSE, TECH	DATE 2009-03-27
CHECKED BY	PATRICK GIARD, P.ENG	
APPROVED BY	PATRICK GIARD, P.ENG	
SCALE 1:500	DATE 2009-03-27	

DRAWING NO.
VD2259-BKL-009

PROJECT NO.	REVISION	SHEET
VD2259-2	1	9/12

DRAWING NO.

FORMAT ARCH-LANDSCAPE

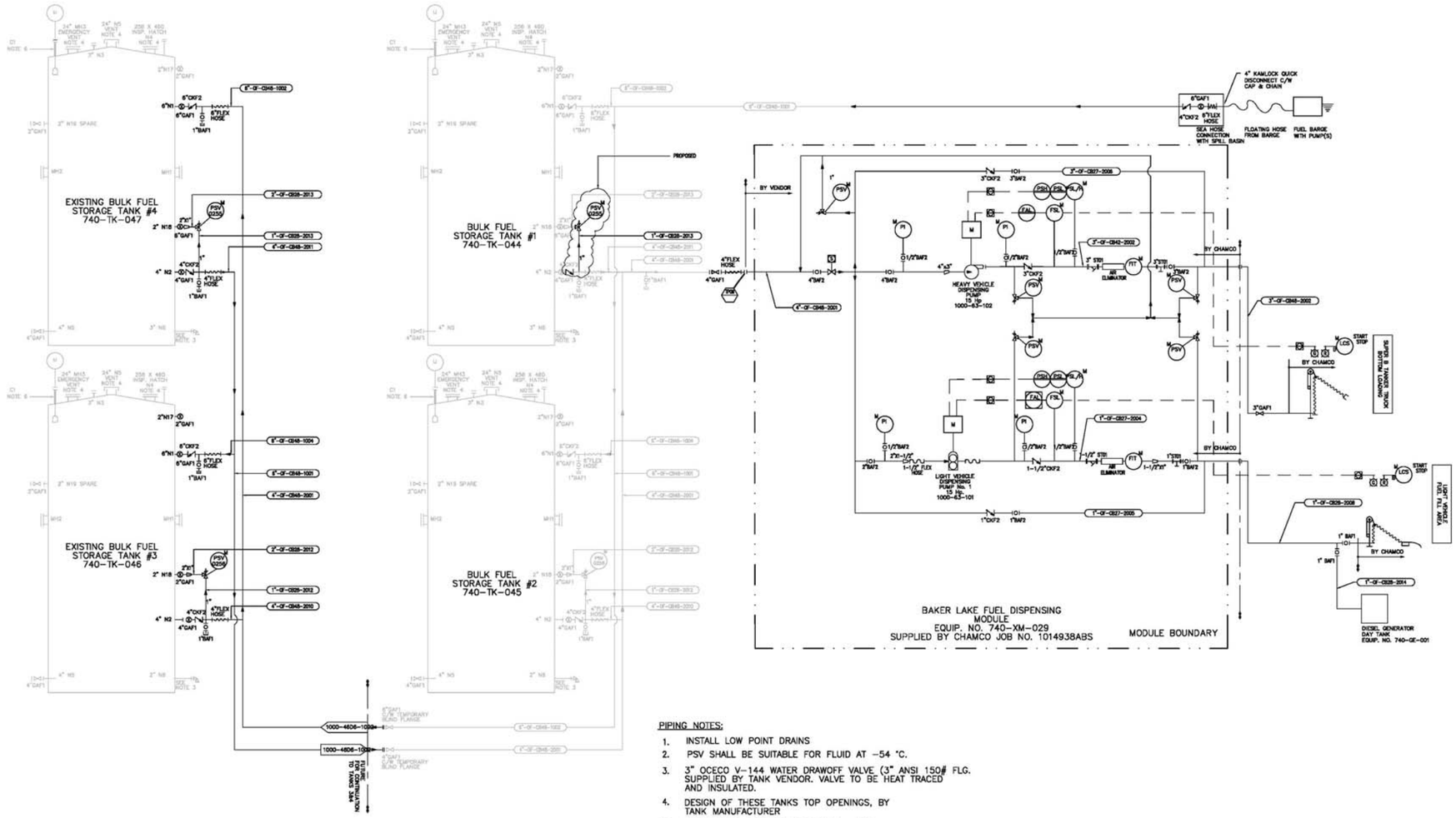

PIPING NOTES:

1. INSTALL LOW POINT DRAINS
2. PSV SHALL BE SUITABLE FOR FLUID AT -54 °C.
3. 3" OCECO V-144 WATER DRAWOFF VALVE (3" ANSI 150# FLG. SUPPLIED BY TANK VENDOR. VALVE TO BE HEAT TRACED AND INSULATED.
4. DESIGN OF THESE TANKS TOP OPENINGS, BY TANK MANUFACTURER
5. FLEXIBLE SS BRAIDED HOSE, 750mm LG. (FLEXONIC SENIOR, OR EQUAL)
6. VAREC 2500 LEVEL INDICATOR BY TANK MANUFACTURER

*SEE PLAN 008 FOR SCHEDULE OF FITTINGS

KEY PLAN

GENERAL NOTES

Groupe STAVIBEL
Consultants en Ingénierie
1271, 7e Rue
Val-d'Or (Québec) J9P 3S1
Tél: (819) 825-2233 Télec: (819) 825-1322
Courriel : stavibel-vd@stavibel.qc.ca
Site Internet : www.stavibel.qc.ca

ISSUED FOR CONSTRUCTION
PATRICK GUARD, P.ENG 2009/03/27

TITLE # DWG

REFERENCE DRAWINGS

REV.	DATE	DESCRIPTION	BY	APP.	CLIENT
1	09-03-27	FOR CONSTRUCTION	F.R.	P.G.	

REVISIONS

AGNICO-EAGLE MEADOWBANK DIVISION

TITLE
AGNICO-EAGLE - MEADOWBANK DIVISION
BAKER LAKE AREA 740

PROCESS AND INSTRUMENTATION DIAGRAM

DESIGN BY	FRANCIS ROSE, TECH	DATE 2009-03-27
CHECKED BY	PATRICK GUARD, P.ENG	
APPROVED BY	PATRICK GUARD, P.ENG	
SCALE N.T.S	DATE 2009-03-27	

DRAWING NO.
VD2259-BKL-010

PROJECT NO.	REVISION	SHEET
VD2259-2	1	10/12

DRAWING NO.

FORMAT ARCH-LANDSCAPE

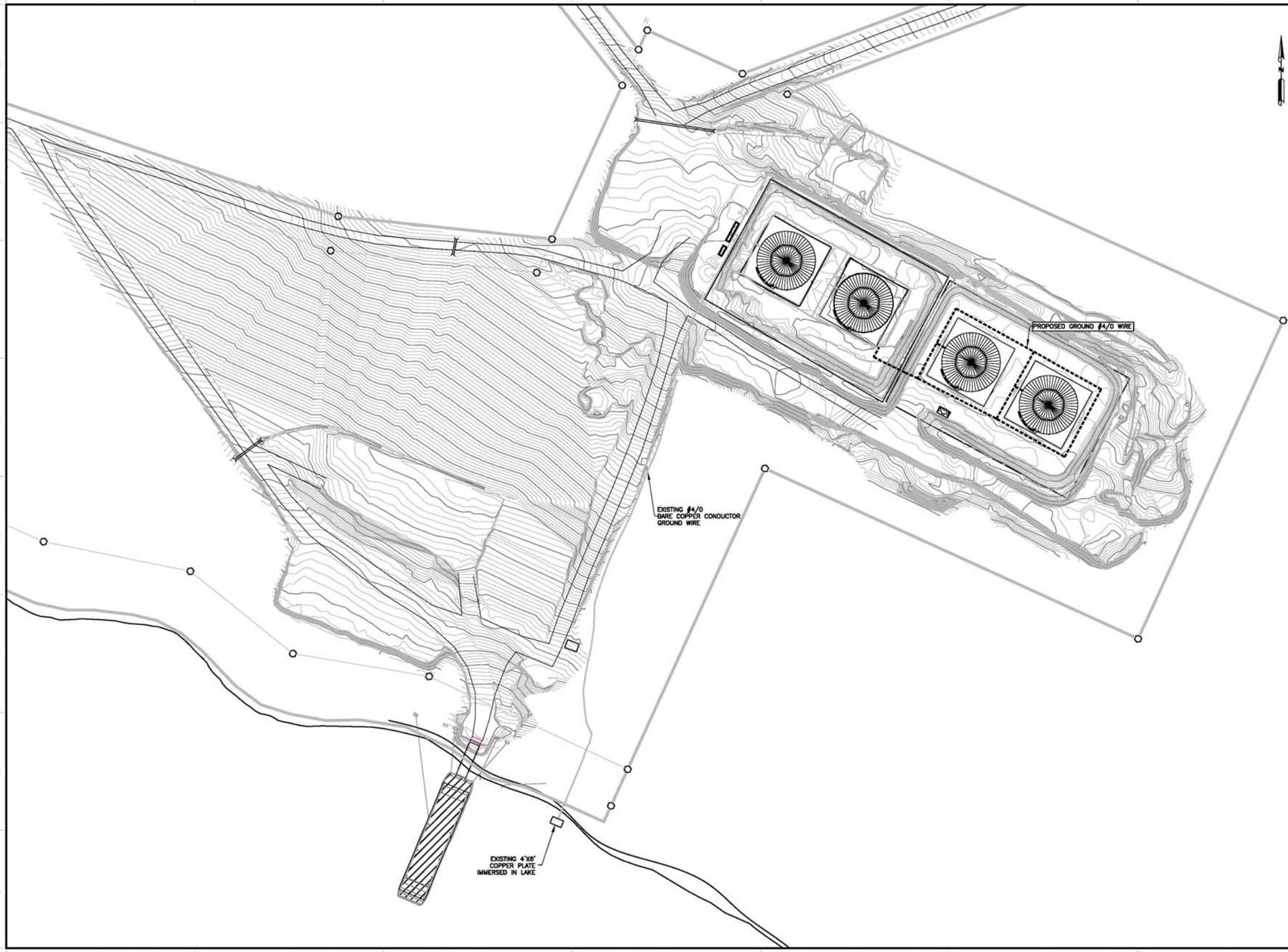

KEY PLAN

GENERAL NOTES

Groupe STAVIBEL
Consultants en Ingénierie
1271, 7e Rue
Val-d'Or (Québec) J9P 7S1
Tél: (819) 825-2333 Télec: (819) 825-1322
Courriel : stavibel-vd@stavibel.qc.ca
Site internet : www.stavibel.qc.ca

ISSUED FOR CONSTRUCTION
2009/03/27
PATRICK GUARD, P.ENG

TITLE | # DWG

REFERENCE DRAWINGS

REV.	DATE	DESCRIPTION	BY	APP.	CLIENT
1	09-03-27	FOR CONSTRUCTION	F.R.	P.G.	

REVISIONS

AGNICO-EAGLE
MEADOWBANK DIVISION

TITLE
AGNICO-EAGLE – MEADOWBANK DIVISION
BAKER LAKE AREA 740

GENERAL LAYOUT
ELECTRICAL GROUND

DRAWN BY	FRANCIS ROSE, TECH	DATE 2009-03-27
CHECKED BY	PATRICK GUARD, P.ENG	
APPROVED BY	PATRICK GUARD, P.ENG	
SCALE 1:1000	DATE 2009-03-27	

DRAWING NO.
VD2259-BKL-011

PROJECT NO.	REVISION	SHEET
VD2259-2	1	11/12

DRAWING NO.

0 50 100 150 200 250 300mm

FORMAT ARCH-LANDSCAPE

18mX600ø EXISTING CULVERT

DITCH FOR DIVERSION OF SURFACE WATER

LAYDOWN AREA #2

LAYDOWN AREA #1

PIPING

HIGH WATER MARK

SHORELINE

SPUD BARGE

KEY PLAN

GENERAL NOTES

Groupe STAVIBEL
Consultants en Ingénierie
1271, 7e Rue
Val-d'Or (Québec) J9P 3S1
Tél: (819) 825-2233 Télec: (819) 825-1322
Courriel : stavibel-vd@stavibel.qc.ca
Site Internet : www.stavibel.qc.ca

REFERENCE DRAWINGS

REV.	DATE	DESCRIPTION	BY	APP.	CLIENT
1	09-03-27	AS-BUILT	F.R.	P.G.	

REVISIONS

AGNICO-EAGLE
MEADOWBANK DIVISION

TITLE
AGNICO-EAGLE – MEADOWBANK DIVISION
BAKER LAKE AREA 740

GENERAL LAYOUT

DRAWN BY	FRANCIS ROSE, TECH	DATE 2009-03-27
CHECKED BY	PATRICK GIARD, P.ENG	
APPROVED BY	PATRICK GIARD, P.ENG	
SCALE 1:500	DATE 2009-03-27	

DRAWING NO.
VD2259-BKL-012

PROJECT NO.	REVISION	SHEET
VD2259-2	1	12/12

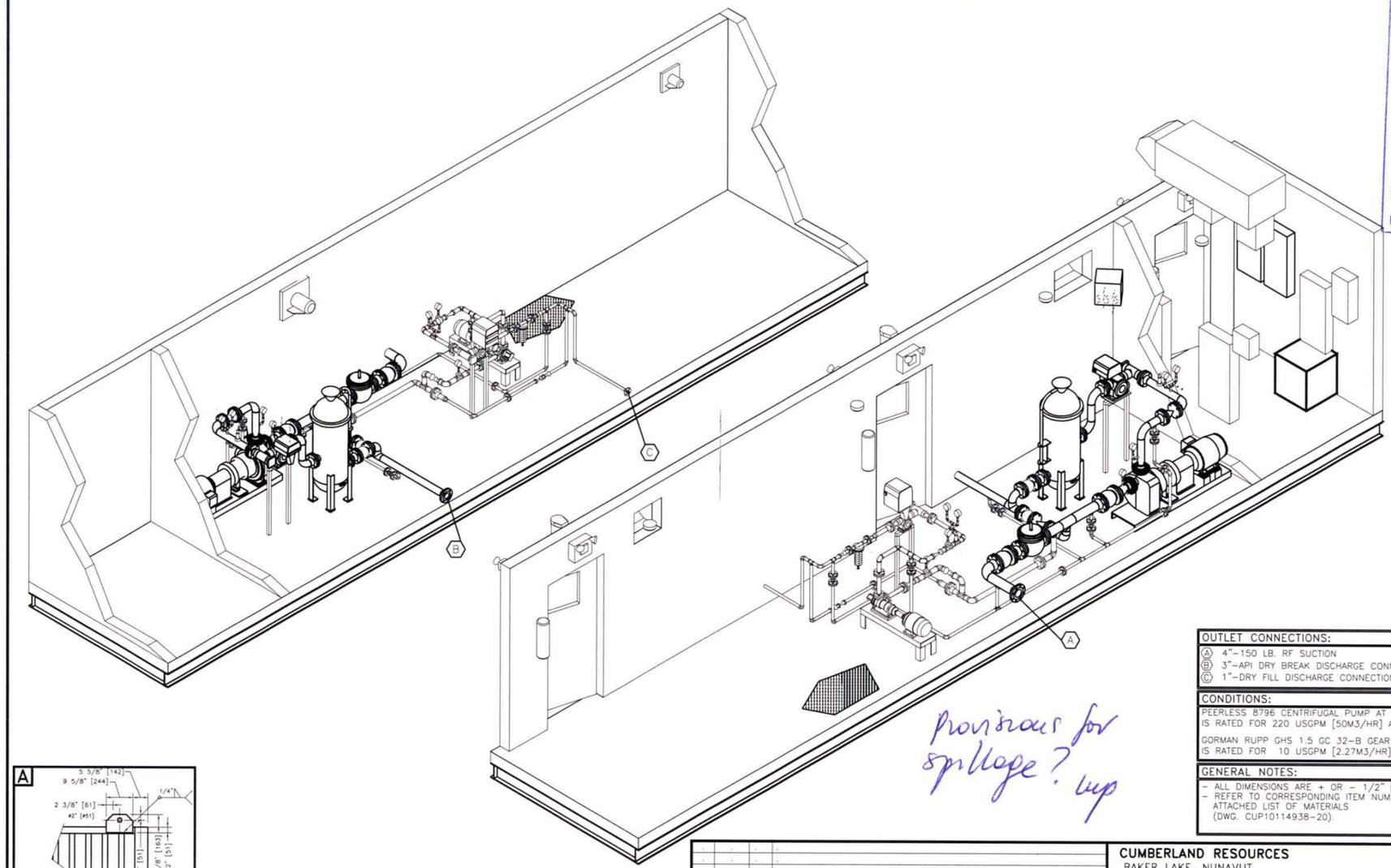

HATCH

☐ Code 1" Proceed, No Exception Taken"
☐ Code 2 "Proceed, with Exceptions as Noted and Re-submit"
☐ Code 3 "Do not Proceed, Revise as Noted and Re-submit"
☐ Code 4 "Information Only"

Reviewed only for general conformity with the drawings and specifications. The Consulting Engineer does not warrant or represent that the information contained on this drawing is either accurate or complete. Sole responsibility for correct design, details and dimensions shall remain with the party submitting the drawing.

HATCH

By _____

Date _____

RECEIVED
JUL 18 2007
DRAWING CONTROL
HATCH

OUTLET CONNECTIONS:
(A) 4"–150 LB. RF SUCTION
(B) 3"–API DRY BREAK DISCHARGE CONNECTION (HEAVY FILL)
(C) 1"–DRY FILL DISCHARGE CONNECTION (LIGHT FILL)

CONDITIONS:
PEERLESS 8796 CENTRIFUGAL PUMP AT DISCHARGE HEAD IS RATED FOR 220 USGPM [50M3/HR] AT 100' [30M] TDH.
GORMAN RUPP GHS 1.5 GC 32–B GEAR PUMP AT DISCHARGE HEAD IS RATED FOR 10 USGPM [2.27M3/HR] AT 110' [33.53M] TDH.

GENERAL NOTES:
– ALL DIMENSIONS ARE + OR – 1/2" [13 mm].
– REFER TO CORRESPONDING ITEM NUMBER ON THE ATTACHED LIST OF MATERIALS (DWG. CUP10114938–20).

Provisions for spillage? Yup

A

LOW TEMP
LIFTING LUGS
ONE LOCATED ON EACH CORNER OF PKG.

PRELIMINARY
FOR APPROVAL
CHAMCO INDUSTRIES LTD.

REV.	DATE	BY	DESCRIPTION

THIS PRINT IS THE PROPERTY OF CHAMCO INDUSTRIES LTD., IS CONFIDENTIAL, IS LENT ONLY FOR REFERENCE IN EQUIPMENT MAINTENANCE OR IN DEALING WITH CHAMCO INDUSTRIES LTD. AND IS NOT TO BE COPIED OR REPRODUCED WITHOUT OUR EXPRESS WRITTEN PERMISSION

CHAMCO
CHAMCO INDUSTRIES LTD.
VANCOUVER – CALGARY – EDMONTON – PRINCE GEORGE

CUMBERLAND RESOURCES
BAKER LAKE, NUNAVUT
.
P.O. No. M268

BAKER LAKE DISPENSING FUEL TRANSFER MODULE
PEERLESS 8796, 3x3x13MTP CENTRIFUGAL PUMP (1)
GORMAN RUPP GHS 1.5 GC 32–B GEAR PUMP (1)
ISOMETRIC VIEW GENERAL ARRANGEMENT

DESIGNED BY	D.J.C.
DRAWN BY	G.R.M.
CHECKED BY	.
JOB No.	1014938ABS

DATE	SCALE	DWG No.	REV.
25–APRIL–07	N.T.S.	CUP1014938–22	0

ITN-M268-VD-0012

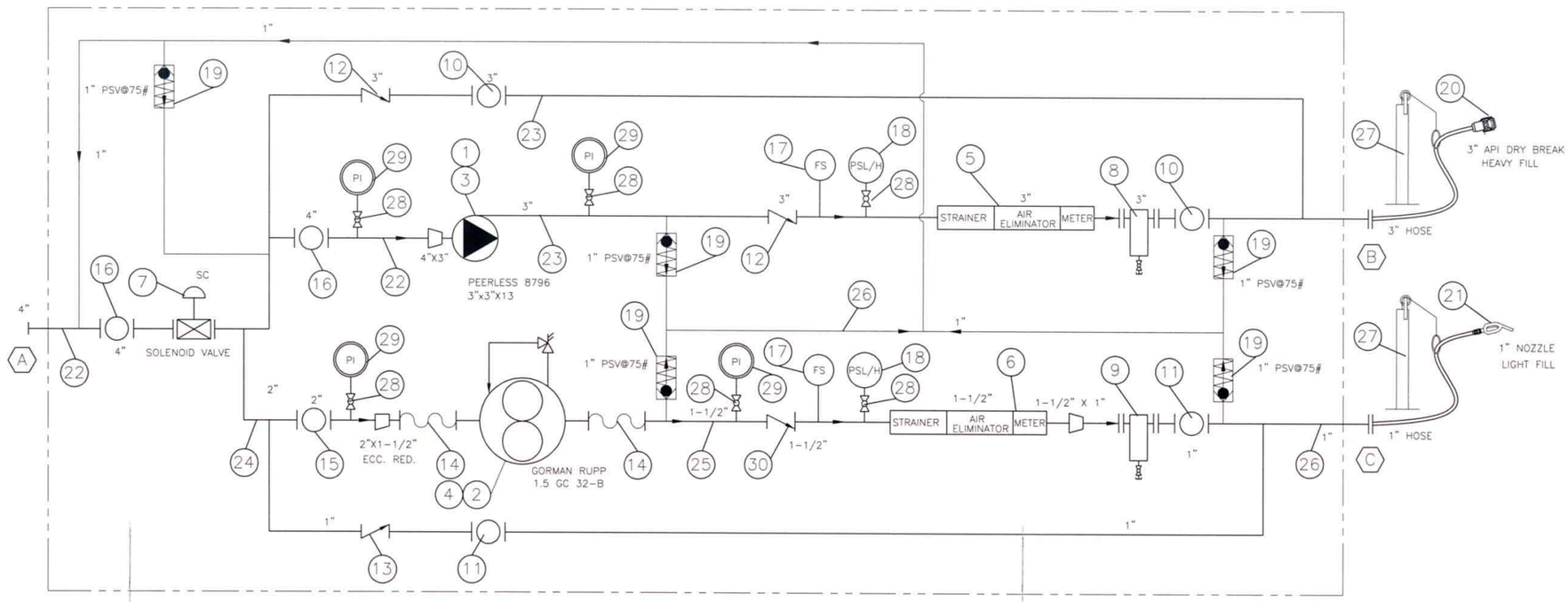

BAKER LAKE
DISPENSING MODULE

LEGEND

1. PEERLESS – 3" X 3" – 13 MTP 8796 HEAVY FILL PUMP RATED AT 220 USGPM (1)
2. GORMAN RUPP GHS 1.5 GC 32-B PUMP RATED AT 10 USGPM – LIGHT FILL (1)
3. ELECTRIC MOTOR (15HP, 1800 RPM, 254T, 3/60/575V) – NOT SHOWN
4. ELECTRIC MOTOR (1.5HP, 1200 RPM, 182T, 3/60/575V) – NOT SHOWN
5. TCS 700-30 3" AIR ELLIMINATOR, DISCHARGE STRAINER AND FLOW METER
6. TCS 700-15 1-1/2" ELLIMINATOR, DISCHARGE STRAINER AND FLOW METER
7. 4" 120VAC SOLENOID FIRE SAFE VALVE
8. 3" BASKET FILTER
9. 1" BASKET FILTER
10. 3" BALL VALVE
11. 1" BALL VALVE
12. 3" CHECK VALVE
13. 1" CHECK VALVE
14. 1-1/2" FLEX HOSE
15. 2" BALL VALVE
16. 4" BALL VALVE
17. FLOW SWITCH
18. PRESSURE SWITCH HIGH/LO DISCHARGE PRESSURE ALARM
19. 1" PSV SET AT 75PSI
20. 3" API DRY BREAK (HEAVY FILL)
21. 1" NOZZLE (LIGHT FILL)
22. 4" LOW TEMP PIPE AND FITTINGS
23. 3" LOW TEMP PIPE AND FITTINGS
24. 2" LOW TEMP PIPE AND FITTINGS
25. 1-1/2" LOW TEMP PIPE AND FITTINGS
26. 1" LOW TEMP PIPE AND FITTINGS
27. HIGH HOSE RETRIEVER AND BUN
28. 1/2" BALL VALVE
29. PRESSURE GAUGE
30. 1-1/2" CHECK VALVE

HATCH

- ☐ Code 1" Proceed, No Exception Taken"
- ☐ Code 2 "Proceed, with Exceptions as Noted and Re-submit"
- ☐ Code 3 "Do not Proceed, Revise as Noted and Re-submit"
- ☐ Code 4 "Information Only"

Reviewed only for general conformity with the drawings and specifications. The Consulting Engineer does not warrant or represent that the information contained on this drawing is either accurate or complete. Sole responsibility for correct design, details and dimensions shall remain with the part submitting the drawing.

HATCH

By _____

Date _____

RECEIVED
JUL 1 8 2007
DRAWING CONTROL
HATCH

H325174-M268-[illegible] D013

OUTLET CONNECTIONS:

- (A) 4"-150# RFWN FLANGE
- (B) 3"-API DRY BREAK- HEAVY FILL
- (C) 1"-DISCHARGE NOZZLE-LIGHT FILL

CONDITIONS:

EACH PEERLESS 8796 CENTRIFUGAL PUMP AT DISCHARGE HEAD IS RATED FOR 220 USgpm [50M3/HR] AT 100' [30M] TDH.
EACH GORMANN RUPP GHS 1.5 GC 32-B GEAR PUMP AT DISCHARGE HEAD IS RATED FOR 10 USgpm[2.27M3/HR] AT 110'[33.53M] TDH.

GENERAL NOTES:

- ALL DIMENSIONS ARE + OR – 1/2" [13 mm].

PRELIMINARY
FOR APPROVAL
CHAMCO INDUSTRIES LTD.

REV.	DATE	BY	DESCRIPTION

THIS PRINT IS THE PROPERTY OF CHAMCO INDUSTRIES LTD., IS CONFIDENTIAL, IS LENT ONLY FOR REFERENCE IN EQUIPMENT MAINTENANCE OR IN DEALING WITH CHAMCO INDUSTRIES LTD. AND IS NOT TO BE COPIED OR REPRODUCED WITHOUT OUR EXPRESS WRITTEN PERMISSION

CHAMCO
CHAMCO INDUSTRIES LTD.
VANCOUVER – CALGARY – EDMONTON – PRINCE GEORGE

CUMBERLAND RESOURCES
BAKER LAKE, NUNAVUT
P.O. No. M268

BAKER LAKE DISPENSING FUEL TRANSFER MODULE
PEERLESS 8796, 3x3x13MTP CENTRIFUGAL PUMP (1)
GORMAN RUPP GHS 1.5 GC 32-B GEAR PUMP (1)
FLOW DIAGRAM

DESIGNED BY	D.J.C.
DRAWN BY	G.R.M.
CHECKED BY	.
JOB No.	1014938ABS

DATE	SCALE	DWG No.	REV.
25-APRIL-07	N.T.S.	CUP1014938-25	0

APPENDIX 2

SAFE FILL LEVELS FOR ALL FUEL TANKS

TEMPERATURE OF FUEL in the barge at discharge	MAXIMUM FUEL LEVEL to be read on the VAREC float level			
	TANK #1	**TANK #2**	**TANK #3**	**TANK #4**
0°C	11.68 m	11.64 m	11.70 m	11.70 m
+ 5°C	11.73 m	11.69 m	11.75 m	11.75 m
+10°C	11.79 m	11.75 m	11.81 m	11.81 m
+15°C	11.84 m	11.80 m	11.86 m	11.86 m

NOTE : EACH TANK HAS A SLIGHTLY DIFFERENT ELEVATION, SO CARE MUST BE TAKEN DURING HYDRAULIC BALANCING OF TANKS, ESPECIALLY WHEN THOSE ARE FULL.

Appendix A2

Baker Lake Diesel Fuel Storage Installations: Final Report Following Construction of Phase 2-B (2009)



AGNICO-EAGLE MINES LTD
MEADOWBANK DIVISION

BAKER LAKE FUEL STORAGE INSTALLATIONS

FINAL REPORT

FOLLOWING THE CONSTRUCTION

OF

PHASE 2-B (2009)

AGNICO-EAGLE MINES LTD
MEADOWBANK DIVISION

BAKER LAKE FUEL STORAGE INSTALLATIONS

FINAL REPORT

FOLLOWING THE CONSTRUCTION

OF

PHASE 2-B (2009)

PREPARED BY :

Patrick Giard, P.Eng., CCE

2009-12-07

REGISTERED PROFESSIONAL ENGINEER
B.A.P. GIARD
LICENSEE
NWT/NU

AGNICO-EAGLE MINES LTD

MEADOWBANK DIVISION

BAKER LAKE FUEL STORAGE INSTALLATIONS

FINAL REPORT

FOLLOWING THE CONSTRUCTION

TABLE OF CONTENTS

1.0 EXECUTIVE SUMMARY 2

2.0 SECONDARY CONTAINMENT BERMS 3

2.1 Final completion of berm enclosure 3

2.2 Breach in middle berm 3

3.0 HDPE MEMBRANE WELDING 3

4.0 GEOTEXTILE INSTALLATION 4

5.0 SCREENED SAND COVER 4

6.0 WELDING OF PIPELINE 4

7.0 PRESSURE TESTING OF PIPELINE 5

7.1 Selection of test method and suitable air pressure for testing 5

7.2 Results of air pressure testing of fuel piping 6

APPENDIX 1 : AS-BUILT DRAWINGS

VD2259-BKL-001 (revision 2), VD2259-BKL-008 (revision 3)

APPENDIX 2

QUALITY CONTROL DOCS : HDPE welding log and instrument qualification

1.0 EXECUTIVE SUMMARY

Agnico-Eagle Mines Limited has undertaken construction of a gold mining project in the Kivalliq region of Nunavut, about 70 km north of Baker Lake.

The yearly operations of this mining operation requires the storage of a minimum of forty million (40 000 000) liters of diesel fuel, which represents four (4) bulk fuel storage tanks, each with a nominal capacity of ten million (10 000 000) liters.

PHASE 1 (2007)

During the summer of 2007, Agnico-Eagle Mines Limited has built the first two (2) bulk fuel tanks, with a combined capacity twenty million (20 000 000) liters of diesel fuel. An impervious enclosure was built around it in order to provide secondary containment around the fuel tanks. These first two (2) bulk fuel tanks were then in condition to be filled.

PHASE 2-A (2008)

During the summer of 2008, Agnico-Eagle Mines Limited has built another two (2) bulk fuel tanks, for a total combined capacity of forty million (40 000 000) liters of diesel fuel. Only a portion of the enclosure was built around it, with the final purpose being to provide secondary containment around the fuel tanks. These other two (2) bulk fuel tanks were completed in late October 2008, and they have remained empty during the winter of 2008-09.

PHASE 2-B (2009)

During 2009, Agnico-Eagle Mines Limited has completed the installation of an impermeable HDPE membrane, which provides adequate secondary containment around the fuel tanks. This has allowed to fill up all four (4) bulk fuel tanks in the summer of 2009, with the piping installation towards tanks 3 and 4 being completed.

PHASE 3

Consideration is currently being given to an expansion project for the fuel storage facilities in Baker Lake. The scale of the project has been defined in a set of drawings and technical specifications, which will be used for the permitting process.

2.0 SECONDARY CONTAINMENT BERMS

2.1 Final completion of berm enclosure

During the construction of fuel tanks 3 and 4 there was a small part of the secondary containment enclosure built in 2008 had been left open to provide easy access.

The granular material and rock fill that was used for civil works was taken from an approved quarry, which has been demonstrated not to produce Acid Rock Drainage and to be non-Metal Leaching.

Given that theses fuel tanks were to be filled up in August 2009, the berm enclosure was fully completed in July 2009, exactly as shown on the construction drawings and at a minimal crest elevation of 34.20 m.

2.2 Breach in middle berm

Once the berm enclosure was fully completed, a breach was made in the middle berm between fuel tanks 2 and 3. At that moment, fuel tanks 1 and 2 had been fully drawn with truck tankers, and were totally empty. Meanwhile, the mine operations relied on the fuels tanks located at the Meadowbank site.

The breach section in this midside berm was capped with an HDPE membrane at the 33.00 m elevation mark, which is the same as the tank rim elevation. This HDPE membrane was welded to the existing ones on the berm crests, thus ensuring an impermeable transition from one side to the other of both secondary containment areas. An access ramp was built over this breach to provide vehicle access inside the secondary containment area around fuel tanks 3 and 4.

3.0 HDPE MEMBRANE WELDING

A specialized crew from Saskatchewan was mobilized to Baker Lake for the completion of the HDPE membrane installation. The contractor was Enviroline Services inc.

During July 2008, or prior to the construction of fuel tanks 3 and 4, some HDPE panels were laid out under the fuel tanks. The edges of this HDPE membrane had been protected with plywood sheets and covered with a layer of screened sand.

The work that took place in 2009 was to weld some HDPE membrane rolls to those existing panels, and extend all those HDPE membrane rolls right up to the berm crest. The membrane was anchored into a trench, as indicated on the construction drawings.

Detailed reports of wedge welder seam logs and qualification tests, as well as logs for extrusion welder and qualification tests are enclosed herein, in Appendix 1.

4.0 GEOTEXTILE INSTALLATION

As indicated on the construction drawings, a geotextile was placed directly under and over the HDPE membrane, as a means to reduce the risk of puncturing this membrane.

5.0 SCREENED SAND COVER

As indicated on the construction drawings, a layer of screened sand was placed directly under and over the geotextile, as an additional means to reduce the risk of puncturing the HDPE membrane. This sand was screened at the Blueberry Hill pit and hauled to the worksite by local truckers.

6.0 WELDING OF PIPELINE

A crew from the ABF Mines contractor, composed of a qualified welder and a pipefitter, have completed the extension of the barge discharge pipeline towards tanks 3 and 4.

Also, some additional piping was installed from the tank 3 and 4 towards the fuel dispensing module, thus allowing to draw fuel from these tanks, after barge delivery.

Some pressure release valves were installed on each of these pipelines, with a discharge pressure set at 75 psi and piped back into the fuel tanks. This constitutes a protection feature against the effects of thermal expansion of fuel which was indicated on the construction drawings.

Another feature of the modifications implemented in 2009 is the installation of some swing check valves at the N2 nipple outlets of all fuel tanks. This will most likely help the fuel dispensing pump keeps its prime when the fuel levels get low in the tanks.

The only exception to the complete compliance of these installations with the piping drawings is that the containment sump for the fuel sea hose connection shown on section A of drawing 017202-1000-46D4-1004 from SNC-Lavalin has not been installed.

The flanges and gaskets that were use for mechanical joints are rated for 150 psi.

7.0 PRESSURE TESTING OF PIPELINE

7.1 Selection of test method and suitable air pressure for testing

The purpose of the leak detection program is to proof the fuel delivery system in a non-destructive manner. Fuel pipelines were pressure tested with a non-inert gas, given that no petroleum product had ever entered the pipelines prior to testing.

Section 6.2 of CCME PN_1326 states that the testing pressure must be greater than 350 kPa (50.8 psi), but without exceeding the manufacturer specifications for flanges and gaskets of 1034 kPa (150 psi). For that purpose, an evaluation was made of the maximum operating pressure at the fuel sea hose connection of the barge discharge pipeline. The results are as follows :

Expected discharge flow rate : 0.090 m^3/s

Maximum operating pressure = static pressure + velocity pressure + friction loss

Maximum operating pressure = 29.64 m + 1.24 m + 35.80 m = **94.7 psi**

Whereas static pressure = elevation of (tank overflow - pump intake) x 0.8396
static pressure = (44.90 m - 9.60 m) x diesel fuel density @ 2°C

Whereas friction loss was evaluated to be :
Pressure Loss (psi): 50.95 psi **Head Loss (ft):** 139.83 ft of diesel fuel
for the barge discharge pipeline **Fluid:** diesel fuel **Pipe/Tubing ID (in):** 6" or 150 mm **Flow Rate (USGPM):** 1426.5 USGPM or 0.090 m^3/s **Dynamic Viscosity of diesel fuel (cP):** 5.0 cP **Specific Gravity (water=1):** 0.8396 at 35°F **Temperature (F):** 35°F or 2°C **Pipe Roughness (ft):** 0.00015 **Fluid Velocity (ft/sec):** 16.19 ft/s or 4.93 m/s **Friction Factor:** 0.019 **Piping Length (ft):** 900 **Pressure Loss (psi):** 50.84 psi **Head Loss (ft):** 139.88 ft or 42.64 m of diesel fuel @ 0.8396

7.2 Results of air pressure testing of fuel piping

The test pressure has been set at 690 kPa (100 psi), and the stabilization of pressure due to ambient temperature was noted after pressurization at 100 psi was achieved for testing. The piping system was not considered to be leaking due to a pressure variation occurrence of less than 2% within at least two (2) hours, after noted stabilization of air pressure. Detailed results are stated hereunder.

TESTING DAY ONE

Section of piping tested	100 mm pipe	from TANK 3 to TANK 4	
DATE OF TESTING :	2009-07-24	Air temperature :	N/A
TEST STARTED AT :	07:55 AM	TEST WAS ENDED AT :	02:57 PM
INITIAL PRESSURE	**99 PSI**	FINAL PRESSURE READING	**102 PSI**

Section of piping tested	150 mm pipe	from TANK 3 to TANK 4	
DATE OF TESTING :	2009-07-24	Air temperature :	N/A
TEST STARTED AT :	10:25 AM	TEST WAS ENDED AT :	02:55 PM
INITIAL PRESSURE	**99 PSI**	FINAL PRESSURE READING	**102 PSI**

TESTING DAY TWO

Section of piping tested	100 mm pipe	from TANK 2 to TANK 3	
DATE OF TESTING :	2009-07-25	Air temperature :	18°C
TEST STARTED AT :	01:08 PM	TEST WAS ENDED AT :	VOID TEST
INITIAL PRESSURE	**100 PSI**	FINAL PRESSURE READING	**NIL**

The cause of air pressure drop was located (missing gasket) and testing resumed.

Section of piping tested	100 mm pipe	from TANK 2 to TANK 3	
DATE OF TESTING :	2009-07-25	Air temperature :	18°C
TEST STARTED AT :	02:12 PM	TEST WAS ENDED AT :	06:15 PM
INITIAL PRESSURE	**100 PSI**	FINAL PRESSURE READING	**100 PSI**

TESTING DAY THREE

Section of piping tested	150 mm pipe	from TANK 2 to TANK 3	
DATE OF TESTING :	2009-07-26	Air temperature :	15°C
TEST STARTED AT :	09:30 AM	TEST WAS ENDED AT :	VOID TEST
INITIAL PRESSURE	**100 PSI**	FINAL PRESSURE READING	**80 PSI**

The cause of air pressure drop was located (tightening bolts) and testing resumed.

Section of piping tested	100 mm pipe	from TANK 2 to TANK 3	
DATE OF TESTING :	2009-07-26	Air temperature :	18°C
TEST STARTED AT :	11:45 AM	TEST WAS ENDED AT :	04:25 PM
INITIAL PRESSURE	**100 PSI**	FINAL PRESSURE READING	**101 PSI**

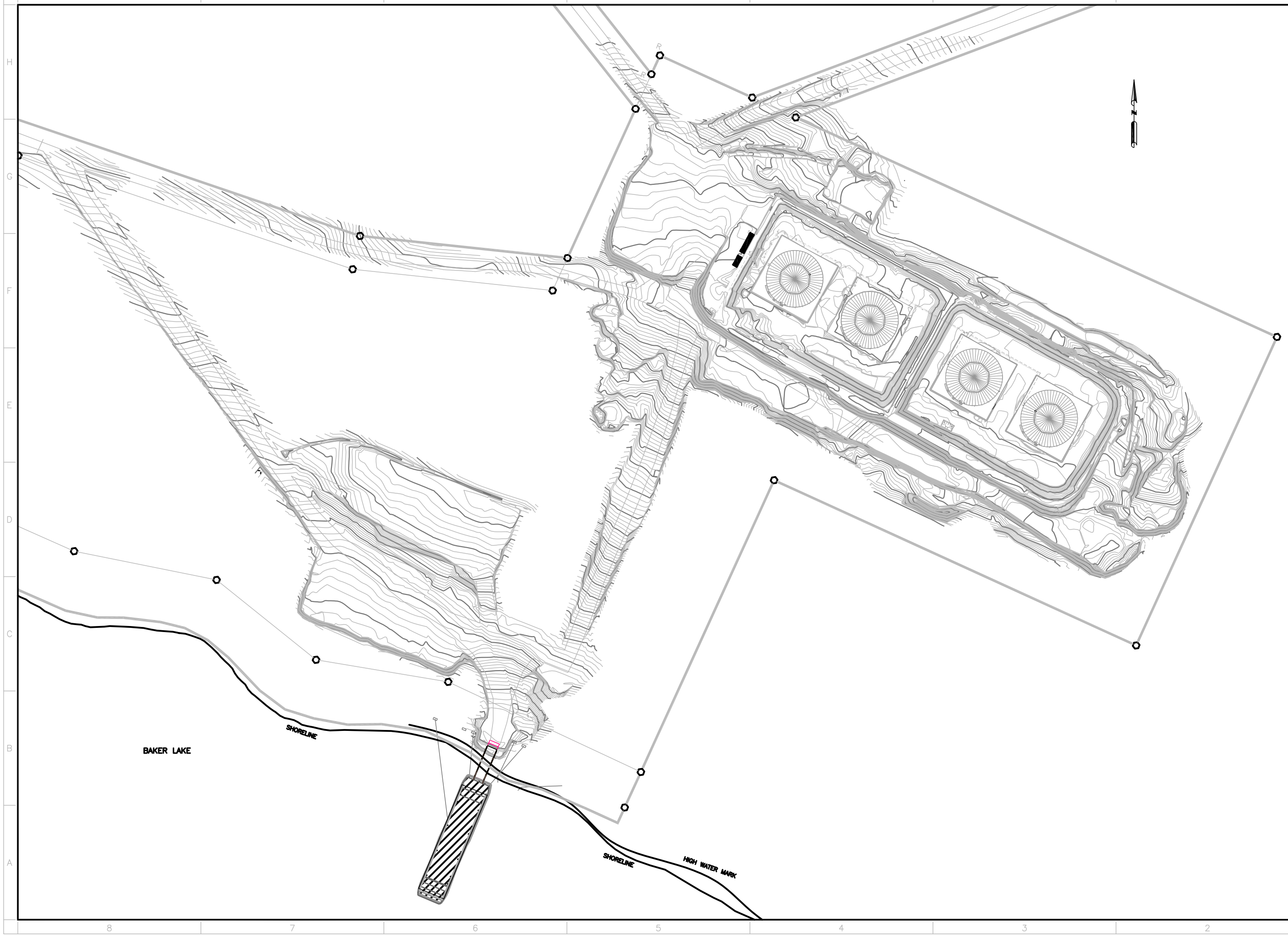

KEY PLAN

GENERAL NOTES

Groupe STAVIBEL
Consultants en Ingénierie
1271, 7e Rue
Val-d'Or (Québec) J9P 3S1
Tél: (819) 825-2233 Téléc: (819) 825-1322
Courriel : stavibel-vd@stavibel.qc.ca
Site Internet : www.stavibel.qc.ca

AS BUILT
Groupe STAVIBEL
2009-12-07
PATRICK GIARD, P.ENG

TITLE	# DWG

REFERENCE DRAWINGS

REV.	DATE	DESCRIPTION	BY	APP.	CLIENT
2		AS BUILT	J.L.		P.G.

REVISIONS

AGNICO-EAGLE
MEADOWBANK DIVISION

TITLE
AGNICO-EAGLE – MEADOWBANK DIVISION
BAKER LAKE AREA 740

GENERAL LAYOUT

DRAWN BY	FRANCIS ROSE, TECH	DATE
CHECKED BY	PATRICK GIARD, P.ENG	
APPROVED BY	PATRICK GIARD, P.ENG	
SCALE	1:1000	DATE
DRAWING NO.	VD2259-BKL-001	
PROJECT NO.	VD2259-2	REVISION 2 / SHEET 1/10

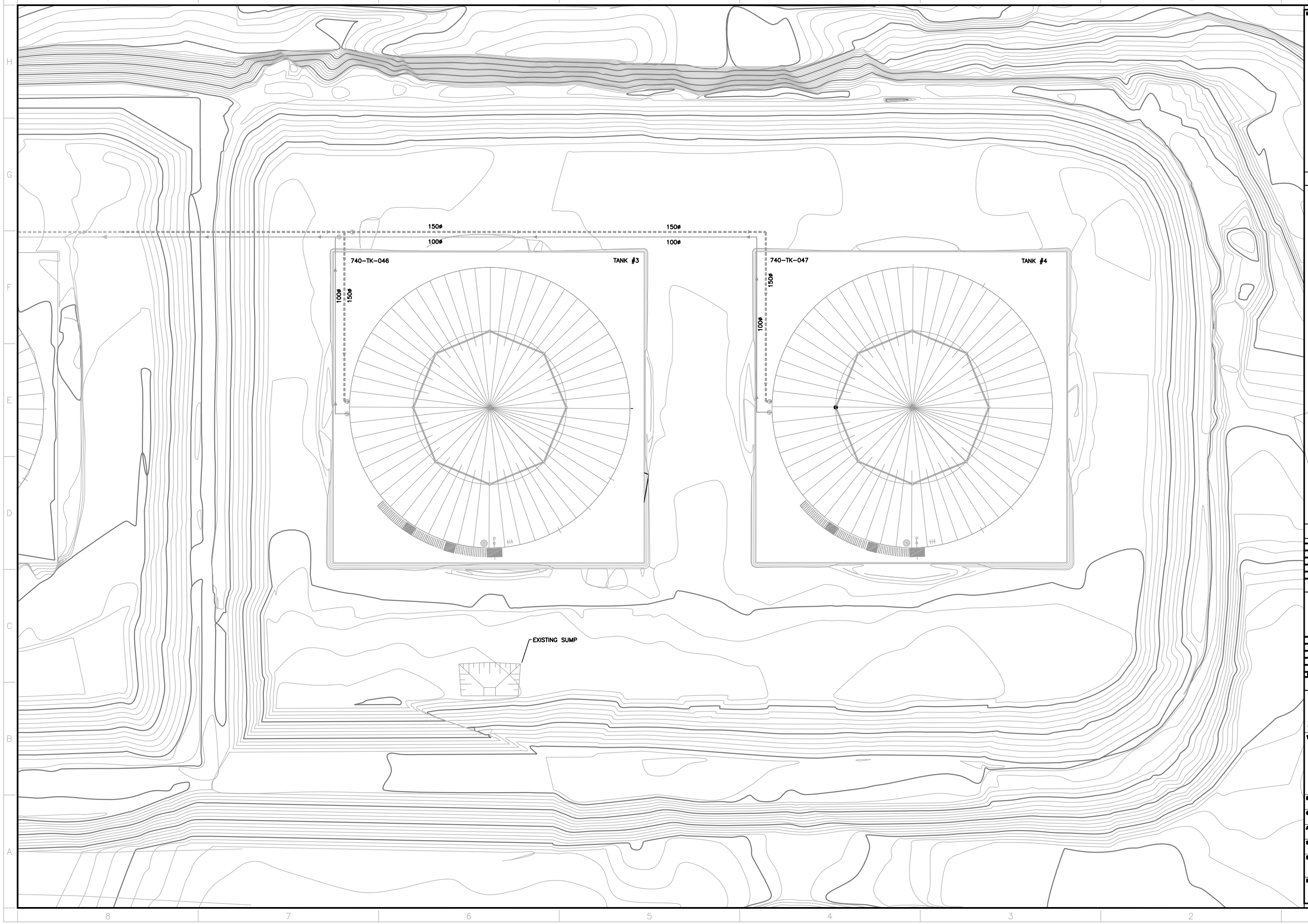

REF PLAN

GENERAL NOTES

Groupe STAVIBEL
Consultants en ingénierie
1271, 7e Rue
Val-d'Or (Québec) J9P 3S1
Tél: (819) 825-2233 Télécopieur: (819) 825-1322
Courriel : stavibel-vd@stavibel.qc.ca
Site internet : www.stavibel.qc.ca

AS BUILT
Groupe STAVIBEL
2009-12-07
PATRICK GIARD, P.ENG.

REFERENCE DRAWINGS

NO.	DESCRIPTION	BY	APP.	DATE
2	AS BUILT	J.L.		P.G.
1	FOR CONSTRUCTION	F.R.		P.G.

REVISIONS

AGNICO-EAGLE
MEADOWBANK DIVISION

TITLE
AGNICO-EAGLE – MEADOWBANK DIVISION
BAKER LAKE AREA 740

PIPING LAYOUT
FOR PHASE 2-B (2008)

DRAWN BY	FRANCIS ROSE, TECH	DATE
CHECKED BY	PATRICK GIARD, P.ENG	
APPROVED BY	PATRICK GIARD, P.ENG	
SCALE	1:1000	DATE

DRAWING NO.
VD2259-BKL-002

PROJECT NO.	REVISION	SHEET
VD2259-2	2	9/10

AGNICO EAGLE MINES LTD
MEADOWBANK DIVISION
PROJECT REF. VD2415-000

BAKER LAKE: TANK FARM

IMPERMEABLE ENCLOSURE AROUND TANKS #3 AND #4

CONTRACTOR: ENVIROLINE SERVICES INC.

Contents

1) AS BUILT
2) WEDGE WELDER SEAM LOG
3) WEDGE WELDER QUALIFICATIONS
4) EXTRUSION LOG
5) EXTRUSION WELDER QUALIFICATIONS

JULY 08, 2009
ENVIROLINE

Enviroline Services Supervisor

DEREK PROVOST

2009/07/08

PATRICK GIARD, P.Eng.

July 1 - 8 2009

BAKER LAKE : TANK FARM

N

ENVIROLINE
08/07/09
60 mil / geotextile x2
400°C @ 35%
DAP C4
ATP @ 60 psi / MP

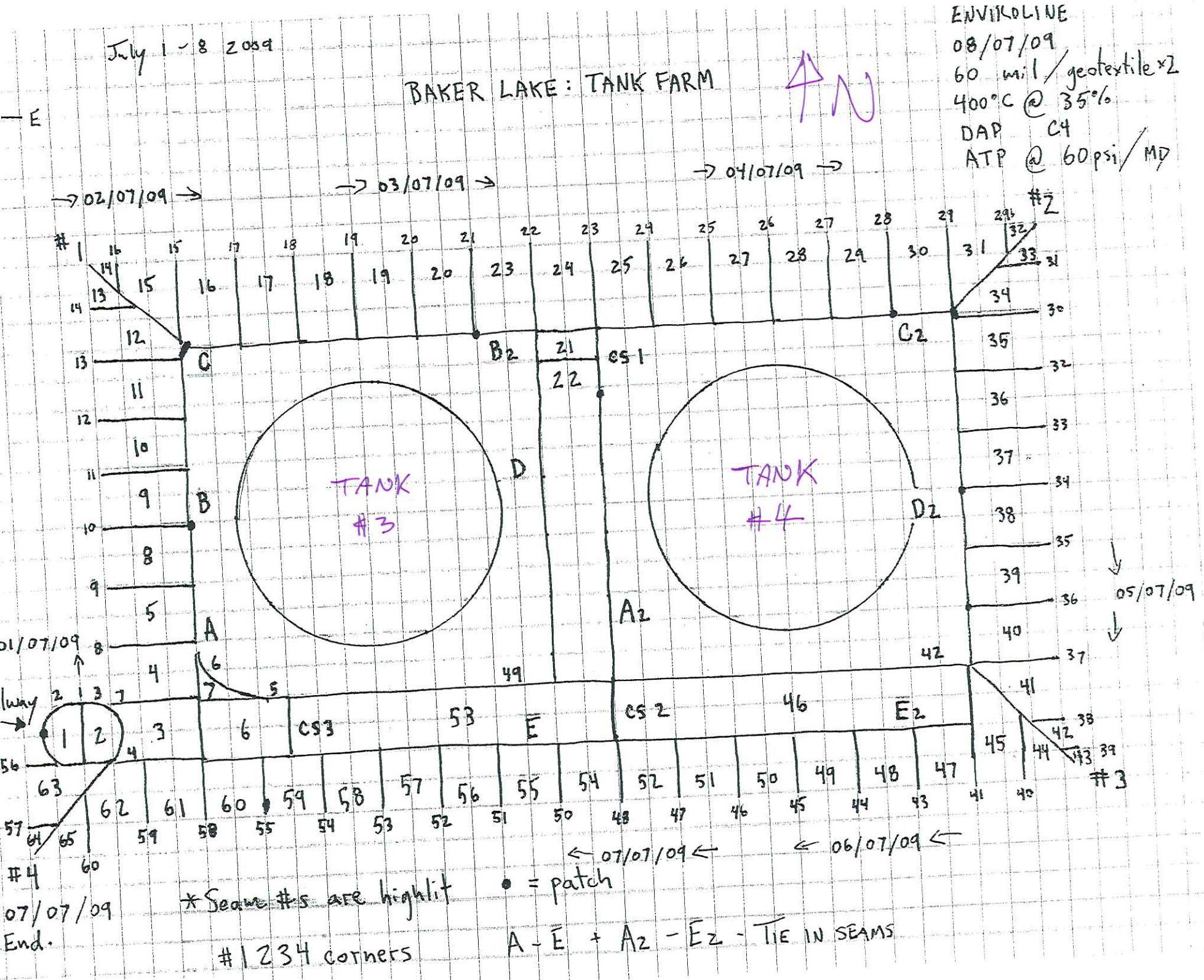

07/07/09
End.

* Seam #s are highlit • = patch

#1234 corners A - E + A2 - E2 - TIE IN SEAMS

nviroline services inc.
ox 7539 Saskatoon, SK. S7K 4J4 Tel. 306 242 8836 Fax 306 249 6721 Email: dvbarnes@home.com

dge Welder Seam Log

ect	TANK FARM	QC Tech. MD	Drive Pressure 60
tion	BAKER LAKE	Wedge Temp. 400°C	Dwell Pressure
erial	60 mil	Wedge Gap	Comments

Fusion Information					Testing Information								
	HDPE Weld				Peel Test		Air Test		60 psi 60		Date 7/07/09	Date	
m #	Tech.	Temp	Speed	Vise Grip	Inside	Outside	Start	Finish	Start	Finish	Welded	Tested	Comments
	DAP	400	35%	✓	121	114	6:35	6:40	60	60	01	02	July 2009
2				✓	109	115	5:30?	5:35?			01	02	
3				✓	115	117	5:55	6:00			01	02	
4				✓	117	116	6:40	6:45			01	02	
5				✓	118	119	6:29	6:34			01	02	
6				✓	119	112	1:05	1:11			01	02	
7				✓	119	114	1:12	1:17			01	02	
8				✓	112	112	11:42	11:47			02	03	
9				✓	120	113	11:49	11:54			02	03	
10				✓	113	114	11:56	12:01			02	03	
11				✓	117	116	10:00	10:05			02	03	
12				✓	118	114	10:06	10:11			02	03	
13				✓	114	115	10:12	10:17			02	03	
14				✓	121	112	10:18	10:23			02	03	
15				✓	122	112	10:24	10:29			03	04	
16				✓	109	121	8:45	8:50			03	04	
17				✓	118	116	8:51	8:56			03	04	
18				✓	114	117	8:57	9:02			03	04	
19				✓	116	119	9:30	9:35			03	04	
20	↓	↓	↓	✓	120	118	9:03	9:08	↓	↓	03	04	

nviroline services inc.
ox 7539 Saskatoon, SK. S7K 4L4 Tel. 306 242 8836 Fax 306 249 6721 Email: dvbarnes@home.com

dge Welder Seam Log

ect	TANK FARM	QC Tech. MD	Drive Pressure 60
tion	BAKER LAKE	Wedge Temp. 400°C	Dwell Pressure
erial	60 mil	Wedge Gap	Comments

Fusion Information					Testing Information								
	HDPE Weld				Peel Test		Air Test		60 psi	60	Date 07/09	Date	
m #	Tech.	Temp	Speed	Vise Grip	Inside	Outside	Start	Finish	Start	Finish	Welded	Tested	Comments
1	DAP	400	35%	✓	116	121	8:16	8:21	60	60	04	05	July 2009
2				✓	117	123	8:22	8:27			05	05	
3				✓	112	119	2:25	2:30			05	05	
4				✓	108	117	2:31	2:36			05	05	
5				✓	114	119	2:37	2:42			05	05	
6				✓	115	121	2:49	2:54			05	05	
27				✓	118	120	2:55	3:00			05	06	
28				✓	113	118	6:10	6:15			05	06	
29				✓	117	114	6:16	6:21			05	06	
30				✓	117	113	6:22	6:27			05	06	
31				✓	116	117	6:28	6:33			05	06	
32				✓	112	119	6:15	6:20			06	06	
33				✓	113	121	6:21	6:26			06	06	
34				✓	115	120	6:27	6:32			06	06	
35				✓	117	116	6:33	6:38			06	06	
36				✓	114	115	6:39	6:44			06	06	
37				✓	112	117	6:45	6:50			06	06	
38				✓	118	120	6:51	6:56			06	07	
39				✓	113	114	6:57	7:02			06	07	
40	↓	↓	↓	✓	113	118	7:03	7:08	↓	↓	06	07	

V..oline services inc.
539 Saskatoon, SK S7K 4L4 Tel. 306 242 8838 Fax 306 249 6721 Email: dvbarnes@home.com

ge Welder Seam Log

	TANK FARM	QC Tech. MJ	Drive Pressure 60
a	BAKER LAKE	Wedge Temp. 400°C	Dwell Pressure
l	60 mil	Wedge Gap	Comments

on Information	Testing Information

HDPE Weld | Peel Test | Air Test 60 psi 60 | Date | Date – /07/09

Tech.	Temp	Speed	Vise Grip	Inside	Outside	Start	Finish	Start	Finish	Welded	Tested	Comments
DAP	400	35%	✓	109	114	6:07	7:14	60	60	06	06	July 2009
			✓	114	118	2:30	2:35			06	06	
			✓	115	116	2:36	2:41			06	06	
			✓	114	118	2:42	2:47			06	06	
			✓	113	112	2:48	2:53			06	06	
			✓	112	111	3:00	3:05			06	06	
			✓	113	113	3:06	3:11			06	06	
			✓	110	115	3:12	3:17			06	06	
			✓	116	117	6:20	6:25			06	08	
			✓	118	118	6:26	6:31			06	08	
			✓	112	116	6:32	6:37			07	08	
			✓	114	117	6:38	6:43			07	08	
			✓	119	118	6:44	6:49			07	08	
			✓	117	116	6:50	6:55			07	08	
			✓	115	118	6:56	7:01			07	08	
			✓	114	115	7:06	7:11			07	08	
			✓	112	118	7:12	7:17			07	08	
			✓	109	119	7:18	7:23			07	08	
			✓	111	114	7:24	7:29			07	08	
↓	↓	↓	✓	115	117	7:30	7:35	↓	↓	07	08	

...oline services inc.
...539 Saskatoon, SK. S7K 4L4 Tel. 306 242 8836 Fax 306 249 6721 Email: drbarnes@home.com

...ge Welder Seam Log

	TANK FARM	QC Tech. MP	Drive Pressure 60
n	BAKER LAKE	Wedge Temp. 400°C	Dwell Pressure
l	60 mil	Wedge Gap	Comments

...on Information					Testing Information								
HDPE Weld					Peel Test		Air Test		psi		Date	Date	
Tech.	Temp	Speed	Vise Grip		Inside	Outside	Start	Finish	Start	Finish	Welded	Tested	Comments
DAP	400°C	35%	✓		116	117	11:30	11:35	60	60	02	02	July 2009
			✓		114	112	11:36	11:41			02	02	
			✓		119	114	11:42	11:47			02	02	
			✓		117	116	1:24	1:29			03	04	
			✓		113	119	1:30	1:35			04	04	
			✓		109	121	6:55	7:00			04	04	
			✓		111	109	7:00	7:05			05	05	
			✓		112	112	7:12	7:17			05	05	
			✓		118	117	7:18	7:23			05	05	
			✓		115	121	2:24	7:29			05	05	
			✓		112	119	11:42	11:47			02	02	
			✓		118	117	11:00	11:05			03	03	
			✓		116	112	1:10	1:15			06	07	
			✓		117	119	1:25	1:30			07	07	
			✓		116	114	2:31	2:36			03	03	
l			✓		112	121	1:30	1:35			07	07	
2			✓		119	117	8:00	8:05	↓	↓	07	08	
3	↓	↓	↓	✓									
				✓									

enviroline Services Inc.

P O Box 7539 Saskatoon, SK. S7K 4L4 Tel 306 242 8836 Fax 306 249 6721 Email: dybarnes@home.com

Wedge Welder Qualifiication Data

Date	July 1, 2009	Wedge Welder #	C4
Project	Tank Farm	Travel Speed	35%
Work Area	Baker Lake	Drive Pressure	* 60
Material	60 mil	Dwell Pressure	*
QC tech.	MD	Wedge Setting	*
Welder/Operator	DAP	Wedge Temp.	400°C
Test Identification	A.M.	Sheet Temp.	*
Test Location	ON SITE	Testing Temp.	14° C

Destructive Testing Results

Vice Grip Peel

Outside Track	Inside Track
✓	✓
✓	✓

Tensometer Peel

Outside Track		Inside Track		
Lb/Inch	%Separation	Lb/Inch	% Separation	Comments
118	0	117	0	P
104	0	107	0	P
116	0	116	0	P
102	0	122	0	P
107	0	104	0	P

Seam Tensile

Lb/Inch	% Enlongation	Comments
181	*	P
172	*	P

enviroline Services Inc.

P O Box 7539 Saskatoon, SK. S7K 4J4 Tel.306 242 8836 Fax 306 249 6721 Email: dvbarnes@home.com

Wedge Welder Qualifiication Data

Date	July 2, 2009	Wedge Welder #	C4
Project	Baker Lake	Travel Speed	40%
Work Area	Tank Farm	Drive Pressure	60
Material	60 mil	Dwell Pressure	
QC tech.	MD	Wedge Setting	
Welder/Operator	DAP	Wedge Temp.	400°C
Test Identification	R.M.	Sheet Temp.	
Test Location	ON SITE	Testing Temp.	13°C

Destructive Testing Results

Vice Grip Peel

Outside Track	Inside Track
✓	✓
✓	✓

Tensometer Peel

Outside Track		Inside Track		
Lb/Inch	%Separation	Lb/Inch	% Separation	Comments
114	0	107	0	P
116	0	109	0	P
111	0	112	0	P
114	0	114	0	P
115	0	114	0	P

107 - 117

Seam Tensile

Lb/Inch	% Enlongation	Comments
179		P
188		P

enviroline Services Inc.

P O Box 7539 Saskatoon, SK. S7K 4L4 Tel.306 242 8836 Fax 306 249 6721 Email: dybarnes@home.com

Wedge Welder Qualifiication Data

Date	July 02, 2009	Wedge Welder #	C4
Project	Baker Lake	Travel Speed	35%
Work Area	Tank Farm	Drive Pressure	60
Material	60 mil	Dwell Pressure	
QC tech.	MD	Wedge Setting	
Welder/Operator	DAP	Wedge Temp.	400°C
Test Identification	P.M.	Sheet Temp.	
Test Location	ON SITE	Testing Temp.	18° C

Destructive Testing Results

Vice Grip Peel

Outside Track	Inside Track
✓	✓
/	/

Tensometer Peel

Outside Track		Inside Track		
Lb/Inch	%Separation	Lb/Inch	% Separation	Comments
113	0	116	0	P
112	0	115	0	P
114	0	114	0	P
110	0	111	0	P
119	0	113	0	P

Seam Tensile

Lb/Inch	% Enlongation	Comments
181		P
185		P

enviroline Services Inc.

P O Box 7539 Saskatoon, SK. S7K 4L4 Tel.306 242 8836 Fax 306 249 6721 Email: dybarnes@home.com

Wedge Welder Qualifiication Data

Date	July 03, 2009	Wedge Welder #	C4
Project	Baker Lake	Travel Speed	35%
Work Area	Tank Farm	Drive Pressure	60
Material	60 mil	Dwell Pressure	
QC tech.	MD	Wedge Setting	
Welder/Operator	DAP	Wedge Temp.	400°C
Test Identification	A.M.	Sheet Temp.	
Test Location	ON SITE	Testing Temp.	13°C

Destructive Testing Results

Vice Grip Peel

Outside Track	Inside Track
✓	✓
✓	✓

Tensometer Peel

Outside Track		Inside Track		
Lb/Inch	%Separation	Lb/Inch	% Separation	Comments
112	0	109	0	P
114	0	111	0	P
115	0	107	0	P
113	0	109	0	P
114	0	110	0	P

Seam Tensile

Lb/Inch	% Enlongation	Comments
183		P
185		P

enviroline Services Inc.

P O Box 7539 Saskatoon, SK. S7K 4L4 Tel.306 242 8836 Fax 306 249 6721 Email: dybarnes@home.com

Wedge Welder Qualifiication Data

Date	July 04, 2009	Wedge Welder #	C4
Project	Baker Lake	Travel Speed	35%
Work Area	Tank Farm	Drive Pressure	60
Material	60 mil	Dwell Pressure	
QC tech.	MD	Wedge Setting	
Welder/Operator	DAP	Wedge Temp.	400°C
Test Identification	A.M	Sheet Temp.	
Test Location	ON SITE	Testing Temp.	12°C

Destructive Testing Results

Vice Grip Peel

Outside Track	Inside Track
✓	✓
✓	

Tensometer Peel

Outside Track		Inside Track		
Lb/Inch	%Separation	Lb/Inch	% Separation	Comments
116	0	118	0	P
120	0	117	0	P
121	0	119	0	P
114	0	112	0	P
114	0	119	0	P

Seam Tensile

Lb/Inch	% Enlongation	Comments
191		P
188		P

enviroline Services Inc.

P O Box 7539 Saskatoon, SK. S7K 4L4 Tel.306 242 8836 Fax 306 249 6721 Email: dybarnes@home.com

Wedge Welder Qualifiication Data

Date	July 02, 2009	Wedge Welder #	C4
Project	Baker Lake	Travel Speed	35%
Work Area	Tank Farm	Drive Pressure	60
Material	60 mil	Dwell Pressure	
QC tech.	MD	Wedge Setting	
Welder/Operator	DAP	Wedge Temp.	400°C
Test Identification	P.M.	Sheet Temp.	
Test Location	ON SITE	Testing Temp.	18°C

Destructive Testing Results

Vice Grip Peel

Outside Track	Inside Track
✓	✓
✓	✓

Tensometer Peel

Outside Track		Inside Track		
Lb/Inch	%Separation	Lb/Inch	% Separation	Comments
119	0	113	0	P
116	0	119	0	P
118	0	115	0	P
112	0	114	0	P
113	0	116	0	P

Seam Tensile

Lb/Inch	% Enlongation	Comments
177	200	P
181	200	P

enviroline Services Inc.

P O Box 7539 Saskatoon, SK. S7K 4L4 Tel.306 242 8836 Fax 306 249 6721 Email: dybarnes@home.com

Wedge Welder Qualifiication Data

Date	July 07, 2009	Wedge Welder #	C4
Project	Baker Lake	Travel Speed	35%
Work Area	Tank Farm	Drive Pressure	60
Material	60 mil	Dwell Pressure	
QC tech.	MP	Wedge Setting	
Welder/Operator	DAP	Wedge Temp.	400°C
Test Identification	A.M.	Sheet Temp.	
Test Location	ON SITE	Testing Temp.	14°C

Destructive Testing Results

Vice Grip Peel

Outside Track	Inside Track
✓	✓
✓	✓

Tensometer Peel

Outside Track		Inside Track		
Lb/Inch	%Separation	Lb/Inch	% Separation	Comments
116	0	118	0	P
113	0	112	0	P
117	0	110	0	P
119	0	116	0	P
118	0	115	0	P

Seam Tensile

Lb/Inch	% Enlongation	Comments
184	200	P
180	200	P

enviroline Services Inc.

P O Box 7539 Saskatoon, SK. S7K 4L4 Tel.306 242 8836 Fax 306 249 6721 Email: dybarnes@home.com

Wedge Welder Qualifiication Data

Date	July 06, 2009	Wedge Welder #	C4
Project	Baker Lake	Travel Speed	35%
Work Area	Tank Farm	Drive Pressure	60
Material	60 mil	Dwell Pressure	
QC tech.	MD	Wedge Setting	
Welder/Operator	DAP	Wedge Temp.	400°C
Test Identification	A.M.	Sheet Temp.	
Test Location	ON SITE	Testing Temp.	14°C

Destructive Testing Results

Vice Grip Peel

Outside Track	Inside Track
✓	✓
✓	✓

Tensometer Peel

Outside Track		Inside Track		
Lb/Inch	%Separation	Lb/Inch	% Separation	Comments
116	0	115	0	P
113	0	115	0	P
112	0	119	0	P
119	0	121	0	P
117	0	113	0	P

Seam Tensile

Lb/Inch	% Enlongation	Comments
185	200	P
189	200	P

enviroline Services Inc.

P O Box 7539 Saskatoon, SK. S7K 4L4 Tel.306 242 8836 Fax 306 249 6721 Email: dvbarnes@home.com

Wedge Welder Qualifiication Data

Date	July 07, 2009	Wedge Welder #	C4
Project	Baker Lake	Travel Speed	35%
Work Area	Tank Farm	Drive Pressure	60
Material	60 mil	Dwell Pressure	
QC tech.	MD	Wedge Setting	
Welder/Operator	DAP	Wedge Temp.	400°C
Test Identification	A.M.	Sheet Temp.	
Test Location	ON SITE	Testing Temp.	12°C

Destructive Testing Results

Vice Grip Peel

Outside Track	Inside Track
✓	✓
✓	✓

Tensometer Peel

Outside Track		Inside Track		
Lb/Inch	%Separation	Lb/Inch	% Separation	Comments
112	0	119	0	P
119	0	116	0	P
116	0	111	0	P
117	0	117	0	P
114	0	113	0	

Seam Tensile

Lb/Inch	% Enlongation	Comments
180	200	P
184	200	P

enviroline Services Inc.

P O Box 7539 Saskatoon, SK. S7K 4L4 Tel.306 242 8836 Fax 306 249 6721 Email: dvbarnes@home.com

Wedge Welder Qualifiication Data

Date	July 07, 2009	Wedge Welder #	C4
Project	Baker Lake	Travel Speed	35%
Work Area	Tank Farm	Drive Pressure	60
Material	60 mil	Dwell Pressure	
QC tech.	MP	Wedge Setting	
Welder/Operator	DAP	Wedge Temp.	400°C
Test Identification	P.M	Sheet Temp.	
Test Location	ON SITE	Testing Temp.	16°C

Destructive Testing Results

Vice Grip Peel

Outside Track	Inside Track
✓	✓
✓	✓

Tensometer Peel

Outside Track		Inside Track		
Lb/Inch	%Separation	Lb/Inch	% Separation	Comments
112	0	112	0	P
117	0	111	0	P
114	0	116	0	P
116	0	121	0	P
115	0	112	0	P

Seam Tensile

Lb/Inch	% Enlongation	Comments
181	200	P
182	200	P

enviroline services Inc.
PO box 7539 Saskatoon SK. S7K 4L4 Tel 306 242 8836 Fax 306 249 6721 email:enviroline@sasktel.net

Extrusion Welding Log

Project: BAKER LAKE	QC Tech. MD
Work Area: TANK FARM	Material: 60 mil mil HDPE

Extrusion #	Type	Location	Weld Date	Operator	Test Date	Vac Test	Pik Test	QC	Comments
1	Patch	S 2	01/07/09	DAP	01/07	✓		MD	
2	↓	S 10	02/07/09	↓	02/07	✓			
3		Corner #1	02/07/09		02/07	✓			
4		S 21	03/07/09		03/07	✓			
5		S 23	03/07/09		03/07	✓			
6		S 28	04/07/09		04/07	✓			
7		Corner #2	04/07/09		05/07		✓		
8		S 34	05/07/09		05/07	✓			
9		S 36	05/07/09		05/07	✓	✓		
10		S 55	07/07/09		07/07	✓			
11	↓	Corner #4	07/07/09	↓	07/07	✓			

enviroline Services Inc.
PO Box 7539 Saskatoon SK. S7K 4L4
1 306 242 8836 Fax 306 249 6721 email enviroline@ sasktel.net

Extrusion Welding Qualification Data

Date	July 1, 09	Extruder#	X2 - 2
Project	Baker Lake	Operator	DAP
QC Tech:	MP	Preheat Temp.	280°C
Material	60 mil	Barrel Temp.	245°C
Test Identification	P.M.	Shoe Height	1/4"
Temp.	20	Weld Type	Flat

Destructive Testing Results

Vice Grip Peel

Type of failure	Comments

Tensometer Peel

Lb/Inch	% Separation	Comments
106	0	P
115	0	P
115	0	P
107	0	P
114	0	P

Seam Tensile

Lb/inch	% Enlongation	Comments
181	200	P
172	200	P

enviroline Services Inc.
PO Box 7539 Saskatoon SK. S7K 4L4
) 306 242 8836 Fax 306 249 6721 email enviroline@ sasktel.net

Extrusion Welding Qualification Data

Date	July 2, 2009	Extruder#	X2-2
Project	Baker Lake	Operator	DAP
QC Tech:	MP	Preheat Temp.	280°C
Material	60 mil	Barrel Temp.	245°C
Test Identification	A.M.	Shoe Height	1/4"
Temp.	8°C	Weld Type	Flat

Destructive Testing Results

Vice Grip Peel

Type of failure	Comments

Tensometer Peel

Lb/Inch	% Separation	Comments
113	0	P
117	0	P
116	0	P
115	0	P
116	0	P

Seam Tensile

Lb/inch	% Enlongation	Comments
179	200	P
178	200	P

enviroline Services Inc.
PO Box 7539 Saskatoon SK. S7K 4L4
) 306 242 8836 Fax 306 249 6721 email enviroline@ sasktel.net

Extrusion Welding Qualification Data

Date	July 03, 2009	Extruder#	X2-2
Project	Baker Lake	Operator	PAP
QC Tech:	MD	Preheat Temp.	280°C
Material	60 mil	Barrel Temp.	230°C
Test Identification	A.M.	Shoe Height	1/4"
Temp.	10°	Weld Type	Flat

Destructive Testing Results

Vice Grip Peel

Type of failure	Comments

Tensometer Peel

Lb/Inch	% Separation	Comments
117	0	P
114	0	P
112	0	P
112	0	P
118	0	P

Seam Tensile

Lb/inch	% Enlongation	Comments
183	200	P
177	200	P

enviroline Services Inc.
PO Box 7539 Saskatoon SK. S7K 4L4
306 242 8836 Fax 306 249 6721 email enviroline@ sasktel.net

Extrusion Welding Qualification Data

Date	July 4 2009	Extruder#	X2-2
Project	Baker Lake	Operator	DAP
QC Tech:	MD	Preheat Temp.	280°C
Material	60 mil	Barrel Temp.	245°C
Test Identification	AM	Shoe Height	1/4"
Temp.	14°C	Weld Type	flat

Destructive Testing Results

Vice Grip Peel

Type of failure	Comments

Tensometer Peel

Lb/Inch	% Separation	Comments
117	0	P
114	0	P
116	0	P
112	0	P
113	0	P

Seam Tensile

Lb/inch	% Enlongation	Comments
183	200	P
177	200	P

enviroline Services Inc.
PO Box 7539 Saskatoon SK. S7K 4L4
) 306 242 8836 Fax 306 249 6721 email enviroline@ sasktel.net

Extrusion Welding Qualification Data

Date	July 5 2009	Extruder#	X2-2
Project	Baker Lake	Operator	DAP
QC Tech:	MP	Preheat Temp.	270°C
Material	60 mil	Barrel Temp.	235°C
Test Identification	A.M.	Shoe Height	1/4"
Temp.	7°	Weld Type	flat

Destructive Testing Results

Vice Grip Peel

Type of failure	Comments

Tensometer Peel

Lb/Inch	% Separation	Comments
110	0	P
117	0	P
109	0	P
111	0	P
118	0	P

Seam Tensile

Lb/inch	% Enlongation	Comments
178	200	P
173	200	P

enviroline Services Inc.
PO Box 7539 Saskatoon SK. S7K 4L4
) 306 242 8836 Fax 306 249 6721 email enviroline@ sasktel.net

Extrusion Welding Qualification Data

Date	July 6, 2009	Extruder#	X2-2
Project	Baker Lake	Operator	DAP
QC Tech:	MD	Preheat Temp.	272°C
Material	60 mil	Barrel Temp.	238°C
Test Identification	A.M.	Shoe Height	1/4"
Temp.	11°C	Weld Type	Flat

Destructive Testing Results

Vice Grip Peel

Type of failure	Comments

Tensometer Peel

Lb/Inch	% Separation	Comments
114	0	P
115	0	P
118	0	P
112	0	P
117	0	P

Seam Tensile

Lb/inch	% Enlongation	Comments
181	200	P
176	200	P

enviroline Services Inc.
PO Box 7539 Saskatoon SK. S7K 4L4
1 306 242 8836 Fax 306 249 6721 email enviroline@ sasktel.net

Extrusion Welding Qualification Data

Date	July 2, 09	Extruder#	XZ-2
Project	Baker Lake	Operator	DAP
QC Tech:	MP	Preheat Temp.	270°C
Material	60 mil	Barrel Temp.	239°C
Test Identification	A.M.	Shoe Height	1/4"
Temp.	7°C	Weld Type	Flat

Destructive Testing Results

Vice Grip Peel

Type of failure	Comments

Tensometer Peel

Lb/Inch	% Separation	Comments
114	0	P
115	0	P
115	0	P
119	0	P
114	0	P

Seam Tensile

Lb/inch	% Enlongation	Comments
183	200	P
188	200	P

Appendix A3

Baker Lake Diesel Fuel Storage Installations: Final Report Following Construction of Phase 3 (2010)

AEM

AGNICO-EAGLE MINES LTD
MEADOWBANK DIVISION

BAKER LAKE FUEL STORAGE INSTALLATIONS
TANK # 5 AND # 6

2010

FINAL REPORT

FOLLOWING THE CONSTRUCTION

OF

PHASE 3 (2010)

JANUARY 2011

AEM

AGNICO-EAGLE MINES LTD
MEADOWBANK DIVISION

BAKER LAKE FUEL STORAGE INSTALLATIONS

FINAL REPORT

FOLLOWING THE CONSTRUCTION

OF

PHASE 3 (2010)

PREPARED BY :

France Bérubé,Eng..Jr
Civil
STAVIBEL

REGISTERED PROFESSIONAL ENGINEER
S.M. BEAULE
LICENSEE
NWT/NU

2011-02-23

Serge Beaulé, Eng. associate
Head Department Civil
STAVIBEL

JANUARY 2011

AGNICO-EAGLE MINES LTD
MEADOWBANK DIVISION

BAKER LAKE FUEL STORAGE INSTALLATIONS TANK # 5 AND # 6

FINAL REPORT

FOLLOWING THE CONSTRUCTION
PHASE 3 (2010)

TABLE OF CONTENTS

A.	**DESCRIPTION OF MANDATE**	**1**
B.	**DOCUMENTATION READILY AVAILABLE**	**2**
GOLDER ASSOCIATES – Vancouver office (phase 1, 2, 3)		**2**
NISHI-KHON/SNC LAVALIN LTD – Vancouver office (phase 1, 2)		**2**
GEM STEEL EDMONTON LTD (phase 1, 2, 3)		**2**
CHAMCO INDUSTRIES LTD (phase 1, 2)		**2**
C.	**STAVIBEL, ROUYN-NORANDA OFFICE (PHASE 3)**	**3**
D.	**ADDITIONAL COLLECTION OF INFORMATION**	**4**
E.	**REVISION OF CONSTRUCTION DRAWINGS**	**5**
F.	**VERIFICATION TO STORAGE CAPACITY WITHIN BERMS**	**6**
DESIGN REVIEW – FOR FUEL SPILL CONTAINMENT BERMS AT BAKER LAKE		**7**

APPENDIX 1 : DRAWINGS
APPENDIX 2 : SAFE FILL LEVEL FOR ALL FUEL TANK

A. DESCRIPTION OF MANDATE

Agnico-Eagle Mines has given a mandate to Stavibel, engineering services in order to verify the compliance with applicable regulations of its fuel storage installations in Baker Lake, Nunavut.

Accord to the terms of reference, the mandate consists summarily in the following activities.

A. Review and compilation of the available documentation;

B. Collection of any information that may be missing;

C. REVISION OF CONSTRUCTION DRAWINGS

- Preparation of « *AS BUILT* » drawing of the construction tank #5 and #6, of phase 3.

D. Verifications to the storage capacity within the existing containment berms of phase 3.

B. DOCUMENTATION READILY AVAILABLE

GOLDER ASSOCIATES – Vancouver office (phase 1, 2, 3)

For the Baker Lake bulk fuel storage facilities, this firm has produced some construction specifications on 2006-04-25, which were given reference SP-GAL-03 under their project number 06-1413-009.

NISHI-KHON/SNC LAVALIN LTD – Vancouver office (phase 1, 2)

For the Baker Lake bulk fuel facilities, this firm has produced a set of drawings issued **for construction** on 2007-08-03, under their project number 017202. Some specifications for fuel piping and valves were also issued.

EARTHWORK DRAWINGS	017202-1000-41D1-0006	17202-1000-46ES-1001A	017202-8000-46DC-9150
017202-1000-41D1-0001	**FUEL PIPING DRAWINGS**	17202-1000-46ES-1001B	017202-8000-46DC-9152
017202-1000-41D1-0002	017202-1000-41D1-0007	**ELECTRICAL DRAWINGS**	017202-8000-46DC-9153
017202-1000-41D1-0003	017202-1000-46D4-1004	017202-1000-46D6-1001	017202-8000-46DC-9156
017202-1000-41D1-0004	017202-1000-46D4-1005	017202-1000-47D2-2001	017202-8000-46DC-9157
017202-1000-41D1-0005	017202-1000-46D4-1006	017202-8000-47DA-9004	017202-8000-46DC-9166

GEM STEEL EDMONTON LTD (phase 1, 2, 3)

This vendor has submitted a set of « *AS BUILT* »drawings issued for the completion and permitting, which consist in four (4) structural drawings showing the details of a fuel tank of 10 million liters nominal capacity. These fuel tanks are shown on revision 1 of drawings BL-2010-1, BL210-2, BL-2010-3 and BL-2010-4.

CHAMCO INDUSTRIES LTD (phase 1, 2)

This vendor has submitted a set of drawings issued **for construction** under their project number 1014938ABS, consisting of the following drawings. These documents have all been received by HATCH and approved.

DRAWING NUMBER	H325174-M268-VD-0040	H325174-M268-VD-0041	H325174-M268-VD-0010
H325174-M268-VD-0011	H325174-M268-VD-0012	H325174-M268-VD-0013	H325174-M268-VD-0014
H325174-M268-VD-0015	H325174-M268-VD-0016	H325174-M268-VD-0017	H325174-M268-VD-0019
H325174-M268-VD-0020	H325174-M268-VD-0021	H325174-M268-VD-0029	H325174-M268-VD-0030
H325174-M268-VD-0031	H325174-M268-VD-0032	H325174-M268-VD-0033	H325174-M268-VD-0034
H325174-M268-VD-0035	H325174-M268-VD-0036	H325174-M268-VD-0037	H325174-M268-VD-0039

C. STAVIBEL, ROUYN-NORANDA OFFICE (phase 3)

This firm has produced a set of construction and has built drawings consisting of the following drawings.

Fuel tanks of phase 3 are shown on these drawing as well as the earthwork, the piping and electrical grounding details.

Earthwork drawings

DRAWING NUMBER
740-C-0123
740-C-0124
740-C-0125

Fuel piping drawings

DRAWING NUMBER
740-M-0100

Electrical drawings

DRAWING NUMBER
740-E-0120

D. ADDITIONAL COLLECTION OF INFORMATION

TECHNIC EXPERT INC.
Role during construction phase #3 : Field supervision during construction of phase 3 (2010)

Mr. Luc Croisetière, which is a civil consultant at the time and Julie Bacon (AEM employee), have supervised the construction of the fuel containment area around tank #5 and #6, in phase 3 of this project. A specialized crew coming from Saskatoon (Enviroline Service inc.) was hired in May 2010 to install an HDPE membrane over the berms. This HDPE membrane has been covered with a minimum layer of about 150 mm thickness of crushed stone.

The installation of the liners has been done and completed on October 5th 2010 before the blizzard and show arrival. Also, before any fuel fill in these new set of tank.

QAMANITTUAP, SANA, GILBERT GOUP.
Role during construction phase #3

In early May 2010, and considering a short window of time for the 2010 tanks construction, (2) diamond drills and (1) crew of blasters were required 24 hr/day considering an estimated ± 125 000 tons of rock to blast, excavate and haul to a dump area. The bottom final floor was cutted at the elevation ± 35.5 and completely on slip rock.

GEM STEEL EDMONTON LTD
Role during construction phase #3 : Fabrication and field assembly of 10 M liters fuel tanks

Construction of phase 3 (tanks #5 and #6) took place from July to September 2010, with a crew of about 16 workers.

Following phase 3 of this field word, a crew from ACUREN has proceeded to X-RAY testing of horizontal and vertical welds according to specifications described in the latest edition of API Standard 650. According to the report made by ACUREN, minor repairs of defective welds were required, either on the tank shell or nozzles.

SM CONSTRUCTION INC.
Role during construction phase #3

As the connection and pipe were already built in 2009 for the phase 3 futur development a crew of 4 welders have installed pipeline from existing tank #4 to reach tank #5 and #6. This work have been completed on September 30th 2010. The tank fuel filling planned in mid-october 2010.

E. REVISION OF CONSTRUCTION DRAWINGS

AEM has hired Stavibel Engineering Services, a firm based in Rouyn-Noranda, in order to complete the drawings that were used in producing this report. Those drawings are enclosed in Appendix 1 of this report.

Drawing 740-C-0123 shows the general layout of fuel storage area. It has been compiled using surveying data by a crew from NUNA and Agnico Eagle.

Drawing 740-C-0124 shows the cross sections of the containment area of phase 3. They are generated using AutoCad CIVIL 3D software and based on the informations collected by Agnico Eagle.

Drawing 740-C-0125 shows the details of the HDPE membrane, its limits and the components of the phase3.

Drawing 740-M-0100 G shows the general of the piping layout and also the specification of the main equipment (valves, check valves, etc.)

Drawing 740-E-0120 shows the layout and the details of the electrical grounding of fuel storage area. It's based on the informations collected by Agnico Eagle.

Drawing BL2010-01 shows the general tank elevation of the fuel storage tanks.

Drawing BL2010-02 shows the roof and the nozzle plan of the fuel storage tanks.

Drawing BL2010-03 shows the details of the assembly of the fuel storage tanks.

Drawing BL2010-04 shows also the details of the assembly of the fuel storage tanks.

F. VERIFICATION TO STORAGE CAPACITY WITHIN BERMS

Stavibel Engineering Services has completed verifications on the liquid storage capacity inside the containment berms, which create an impermeable enclosure around tank #5 and #6.

The method used was volume calculation using AutoCad CIVIL 3D software.

The maximum storage capacity of fuel tanks #5 and #6 is 15 500 m^3 of diesel fuel at a standard temperature of fifteen degrees Celcius (15 ^oC).

It has been verified using the above software that the impermeable enclosure built in phase 3 will effectively hold 100% of the maximum storage capacity of the biggest tank, plus 10% of the maximum storage of the other tank. This calculation has been summarized in a worksheet that is shown on page 7, here under.

The containment volume for tanks #3 and #4 is 15 500 m^3.

Thus, the lowest point of the HDPE membrane that sits atop the containment area is sufficiently high (at elevation 39.3 m) to meet the above criteria.

A worst case scenario has been simulated, and consists in either a rupture of the first course of side plates in the tank shell, or a failure in the outlet piping, when either one of fuel tank is 100% full.

This simulation shows that, in such a worst case scenario, the hydraulic balancing level inside the containment area would not exceed the point with the lowest elevation (39.3 m) on the surrounding berms, which is located on the south-west side. On north-east side, the berm gives more elevation at an elevation of approximative ±45 m.

The containment volume for tanks #5 and #6 is 15 500 m^3 as a result, this new containment requirement of 110% of the biggest tank volume (or 11 843 m^3), expressed while considering all two (2) tanks as a whole, will then be exceeded by 45%.

DESIGN REVIEW – FOR FUEL SPILL CONTAINMENT BERMS AT BAKER LAKE

ÉQUIPEMENTS	DIAM (ft)	RIM EL. (m)	Radius (m)	Surface (m^2)	TOP EL. (m)	Height (m)	Volume (m^3)
740-TK-044-**TANK** #5	110	***37.846**	16.764	882.89	50.04	12.195	10.767
740-TK-044-**TANK** #5	110	***37.831**	16.764	882.89	50.03	12.195	10.767

Let's say berms are 5' 3" higher than the average tank floor (so 1.60 m total height) with variable slopes and that the tanks are sitting on cones made of crushed stone of 20 m diameter x 1.0 m height.

***Average tank #5 = (37.839 + 37.846 + 37.848 + 37.852)/4 = 37.846
***Average tank #6 = (37.835 + 37.825 + 37.830 + 37.833)/4 = 37.831

Volume

Secondary Containment Requirement → 11 843 **m^3**
according to ref. PN-1326, Section 3.9.1 (1) 2-b-ii → 110%

Containment volume to be substracted for the two (2) cones made of crushed stone: already reducted from AutoCad 3D

Volume
NET CONTAINMENT 15 500 m^3
or 144% > 110%

APPENDIX 1

AS BUILT DRAWINGS FOR PHASE 3

DRAWINGS NUMBER			
Earthwork drawings	**Fuel piping drawing**	**GEM Steel drawings**	BL2010-4
740-C-0123	740-M-0100	BL2010-1	
740-C-0124	**Electrical drawings**	BL2010-2	
740-C-0125	740-E-0120	BL2010-3	

IFC DRAWING FOR PHASE 3

DRAWINGS NUMBER			
Earthwork drawings	**Fuel piping drawing**	**GEM Steel drawings**	BL2010-4
740-C-0123	740-M-0100	BL2010-1	
740-C-0124	**Electrical drawings**	BL2010-2	
740-C-0125	740-E-0120	BL2010-3	

NO. DESSIN
DRAWING NO. 740-C-0123-0125 TQC

FORMAT ARCHD

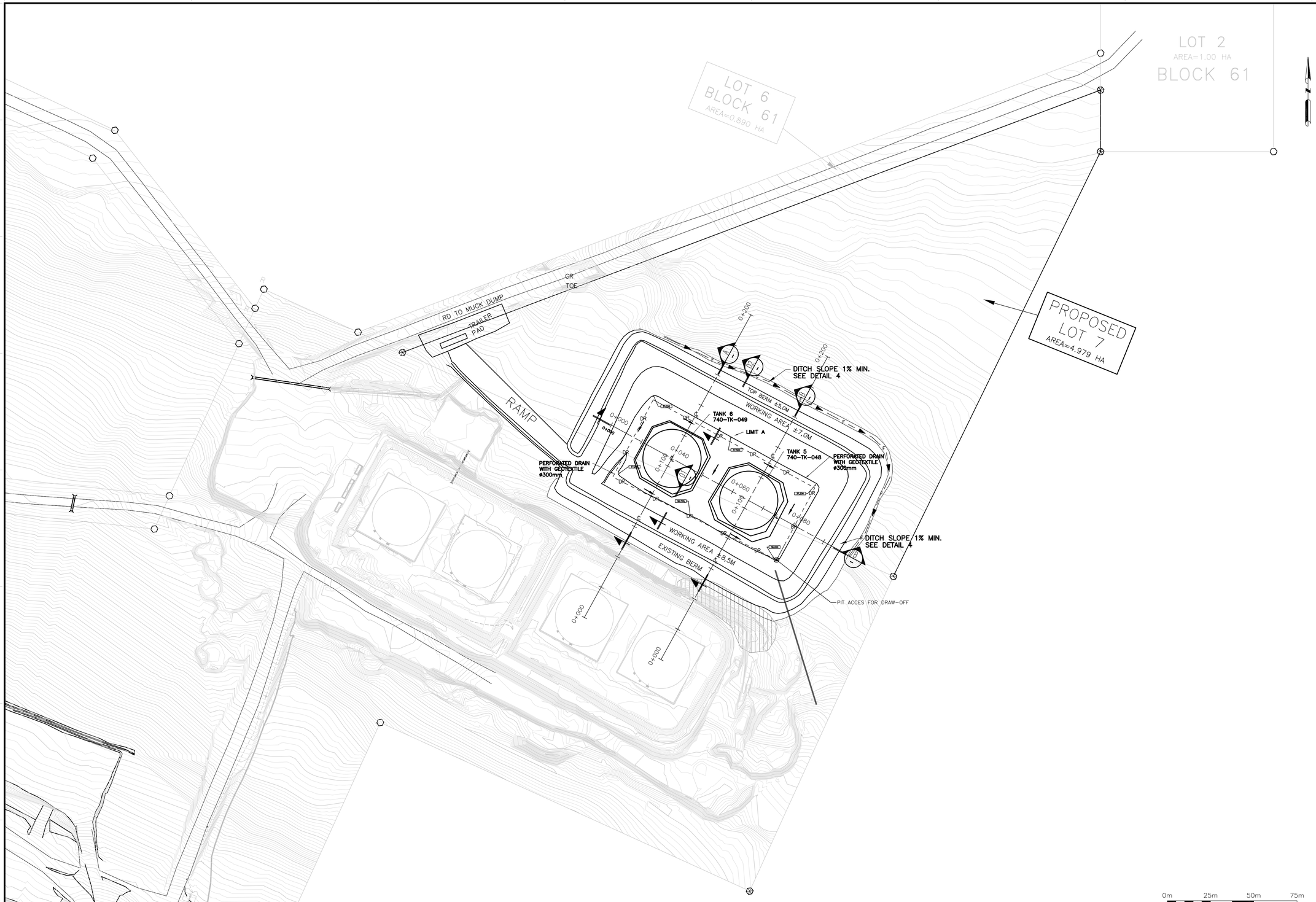

PLAN CLÉ
KEY PLAN

NOTES GÉNÉRAL / GENERAL NOTES

TEL QUE CONSTRUIT
AS BUILT
DATE : 21/01-2011

L'INFORMATION CI-CONTENUE EST LA PROPRIÉTÉ DE AGNICO-EAGLE LTÉE ET DOIT ÊTRE RETOURNÉE SUR DEMANDE, SANS AUTORISATION ÉCRITE PRÉALABLE, TOUTE TRANSMISSION OU COPIE(S) À AUTRUI ET TOUTE UTILISATION AUTRE QUE CELLE POUR LAQUELLE L'INFORMATION EST MISE SONT INTERDITES. © AGNICO-EAGLE LTÉE.

THE INFORMATION HERE ON IS THE PROPERTY OF AGNICO-EAGLE LTD, AND MUST BE RETURNED UPON REQUEST, WITHOUT WRITTEN PERMISSION, ANY COPYING, TRANSMITTAL TO OTHERS AND ANY USE EXCEPT THAT FOR WHICH IT IS LOANED ARE PROHIBITED.
© AGNICO-EAGLE LTD.

DESSINS EN RÉFÉRENCE / REFERENCE DRAWINGS

TITRE / TITLE	# DWG
–	–
–	–
–	–
–	–
–	–
–	–

AGNICO-EAGLE

REV.	DATE	DESCRIPTION	PAR/BY	APP.	CLIENT
C	21-01-2011	AS BUILT	J-F.S.	S.B.	
B	20-07-2010	APPROVAL	J-F.S.	S.B.	
A	16-07-2010	APPROVAL	J-F.S.	S.B.	

REVISIONS

Stavibel Inc.
150, rue Gamble Ouest
Rouyn-Noranda (Québec) J9X 2R7
Tél. : 819 764-5181 Téléc. : 819 797-0158
Courriel : stavibel-rn@stavibel.qc.ca
www.stavibel.qc.ca

Projet No. : - -

TITRE / TITLE
AGNICO-EAGLE – MEADOWBANK DIVISION
BAKER LAKE AREA 740
TANK #5 AND #6
GENERAL LAYOUT

DESSINÉ PAR / DRAWN BY	J-F SYLVESTRE, TECH.	DATE 2010-07-20
VERIFIÉ PAR / CHECKED BY	FRANCE BÉRUBÉ, ING. JR.	2010-07-20
APPROUVÉ PAR / APPROVED BY	SERGE BEAULÉ, ING.	2010-07-20
ÉCHELLE / SCALE	1:1000	DATE 30-06-2010

NO. DESSIN / DRAWING NO. 740-C-0123

NO. PROJET / PROJECT NO.	REVISION	FEUILLE / SHT
MEAD-I-400	C	1 / 3

AE-CART-ARCH D

P:\VD2622\001\Dessins maitres\30-Civ\740-C-0123-0125 TQC.dwg, 25 Jan 2011

FILE NO. 740-C-0123-0125 TQC.dwg

NO. DESSIN
DRAWING NO. 740-C-0123-0125 TQC

FORMAT ARCHD

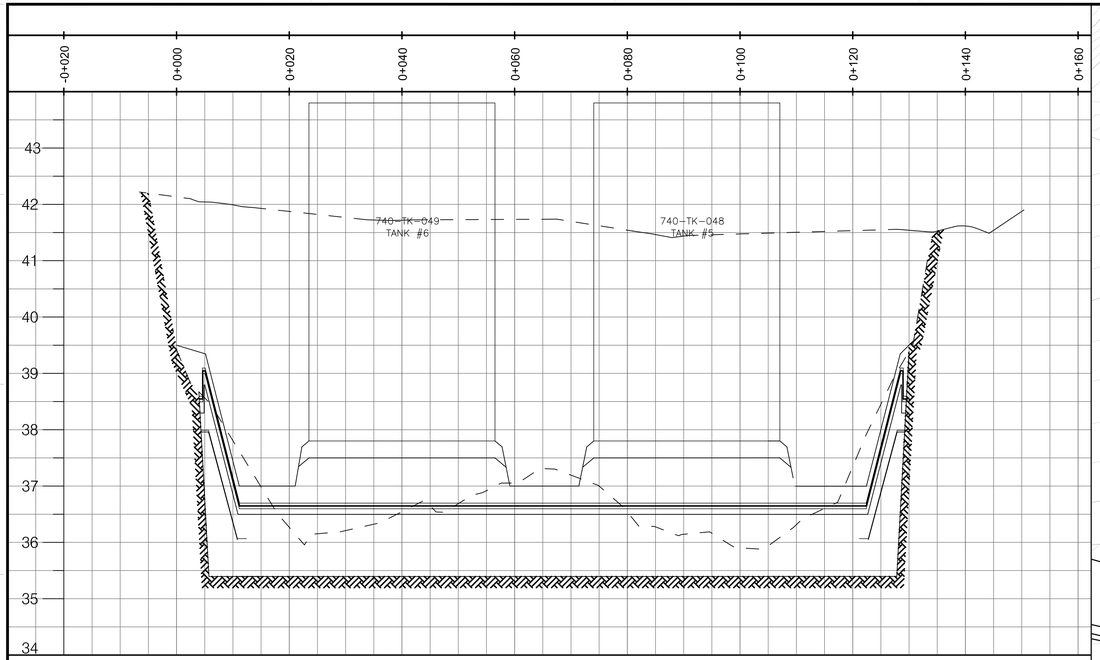

PROFIL TANK 5 & 6

CROSS SECTION C

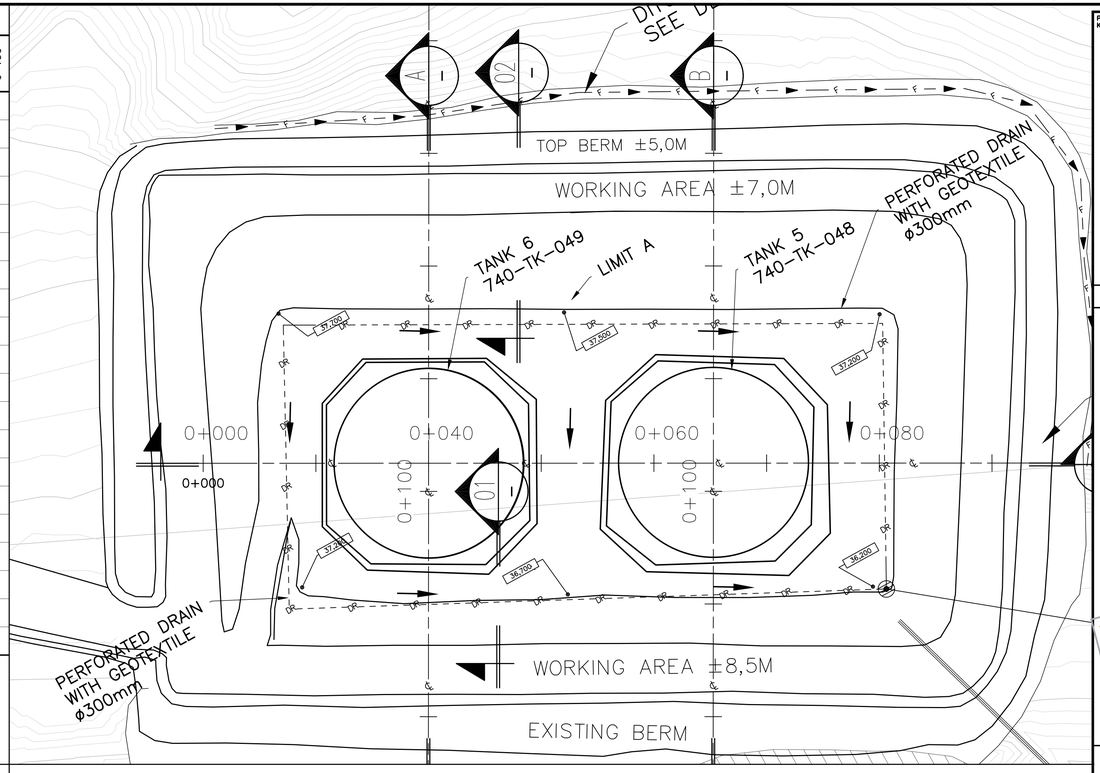

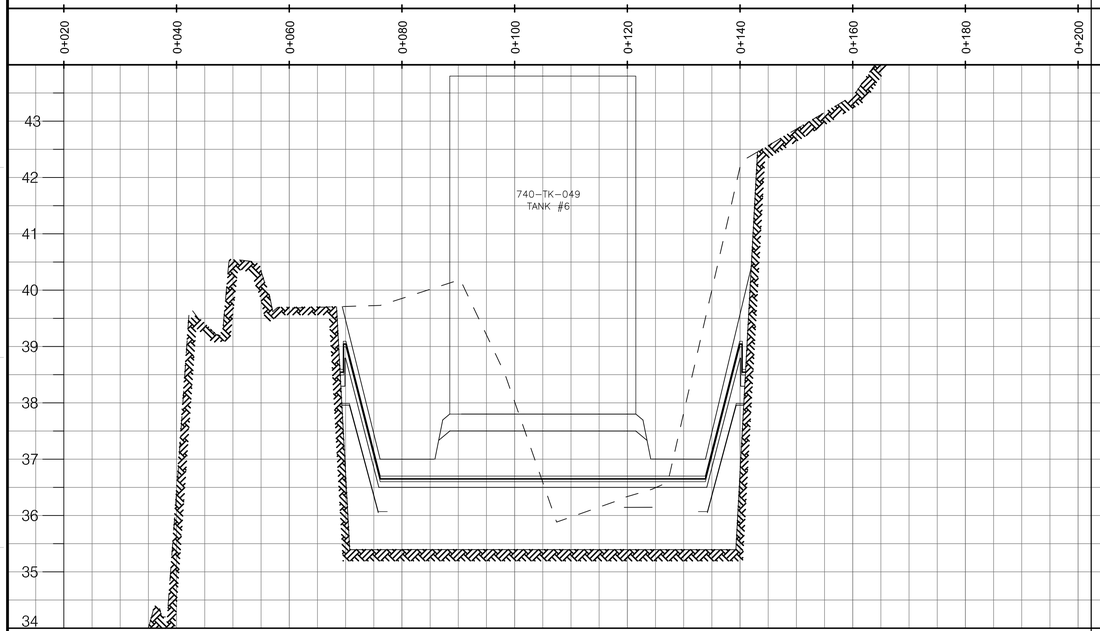

PROFIL TANK 6

CROSS SECTION A

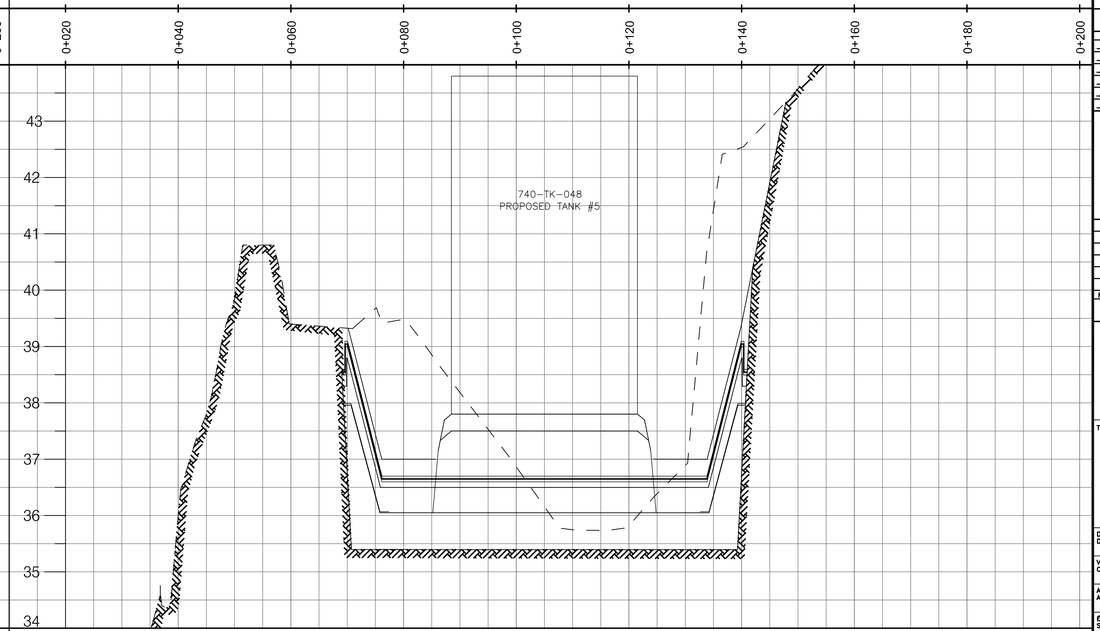

PROFIL TANK 5

CROSS SECTION B

PLAN CLÉ
KEY PLAN

NOTES GÉNÉRAL / GENERAL NOTES

TEL QUE CONSTRUIT
AS BUILT
DATE : 21/01-2011

L'INFORMATION CI-CONTENUE EST LA PROPRIÉTÉ DE AGNICO-EAGLE LTÉE ET DOIT ÊTRE RETOURNÉE SUR DEMANDE, SANS AUTORISATION ÉCRITE PRÉALABLE, TOUTE REPRODUCTION DE COPIE(S) À AUTRUI ET TOUTE UTILISATION AUTRE QUE CELLE POUR LAQUELLE L'INFORMATION EST PRÊTÉE SONT INTERDITES. © AGNICO-EAGLE LTÉE

THE INFORMATION HERE ON IS THE PROPERTY OF AGNICO-EAGLE LTD, AND MUST BE RETURNED UPON REQUEST, WITHOUT WRITTEN PERMISSION, ANY COPYING FORBIDDEN, TO OTHERS AND ANY USE EXCEPT THAT FOR WHICH IT IS LOANED ARE PROHIBITED.
© AGNICO-EAGLE LTD.

DESSINS EN RÉFÉRENCE / REFERENCE DRAWINGS

TITRE / TITLE	# DWG
–	–
–	–
–	–
–	–
–	–
–	–

AGNICO-EAGLE

REV.	DATE	DESCRIPTION	PAR/BY	APP.	CLIENT
C	21-01-2011	AS BUILT	J-F.S.	S.B.	
B	20-07-2010	APPROVAL	J-F.S.	S.B.	
A	16-07-2010	APPROVAL	J-F.S.	S.B.	

REVISIONS

STAVIBEL
Stavibel inc.
150, rue Gamble Ouest
Rouyn-Noranda (Québec) J9X 2R7
Tél.: 819 764-5181 Télécc.: 819 797-0158
Courriel : stavibel-rn@stavibel.qc.ca
www.stavibel.qc.ca

Projet No.: - -

TITRE / TITLE
AGNICO-EAGLE – MEADOWBANK DIVISION
BAKER LAKE AREA 740
TANK #5 AND #6
PLAN VIEW AND CROSS SECTION

DESSINÉ PAR / DRAWN BY	J-F SYLVESTRE, TECH.	DATE 2010-07-20
VÉRIFIÉ PAR / CHECKED BY	FRANCE BÉRUBÉ, ING. JR.	2010-07-20
APPROUVÉ PAR / APPROVED BY	SERGE BEAULÉ, ING.	2010-07-20
ÉCHELLE / SCALE	N/A	DATE 30-06-2010

NO. DESSIN / DRAWING NO. 740-C-0124

NO. PROJET / PROJECT NO.	REVISION	FEUILLE / SHT
MEAD-I-400	C	2 / 3

AE-CART-ARCH D

P:\02822\001\Dessins maitres\30-Civ\740-C-0123-0125 TQC.dwg, 25 Jan 2011

FILE NO. 740-C-0123-0125 TQC.dwg

NO. DESSIN
DRAWING NO. 740-C-0123-0125 TQC

FORMAT ARCHD

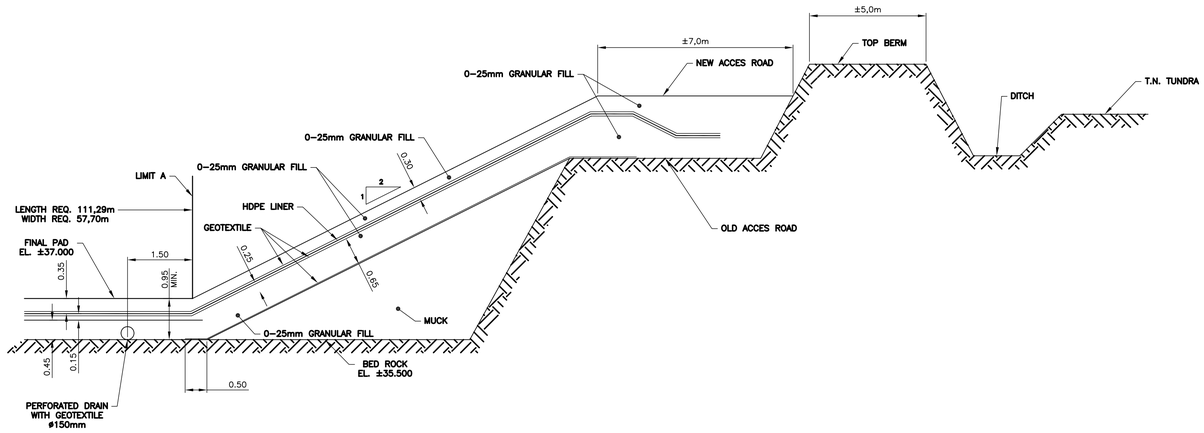

TYPICAL SECTION – DAM

SCALE : NONE
DETAIL 2

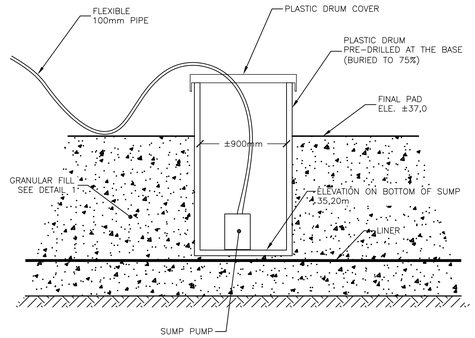

NOTES :

- **THE WATER WILL BE REJECTED TO THE INFERIOR BASIN WHERE IT WILL BE TREATED WITH AN OIL SEPARATOR.**

ACCESS WELL FOR DRAINING

SCALE : NONE
DETAIL 3

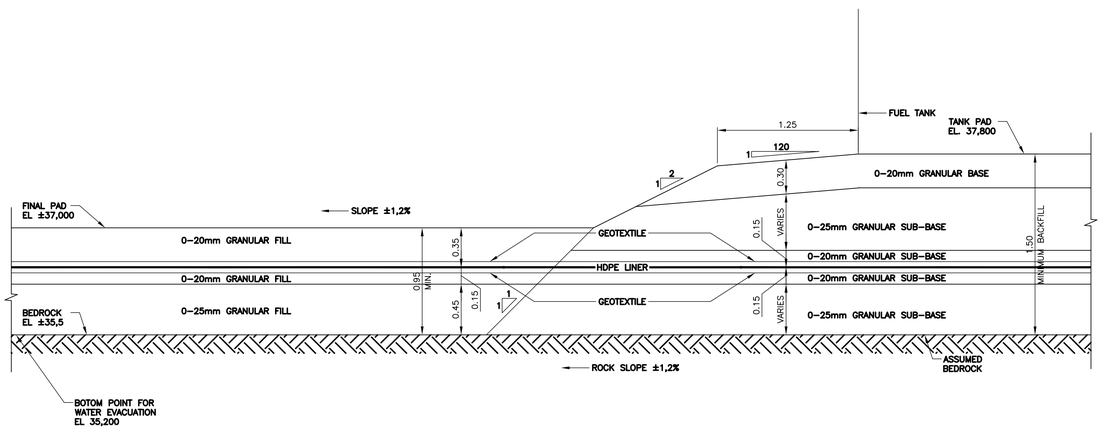

TYPICAL SECTION – PAD

SCALE : NONE
DETAIL 1

PLAN CLÉ
KEY PLAN

NOTES GÉNÉRAL / GENERAL NOTES

TEL QUE CONSTRUIT
AS BUILT
AGNICO-EAGLE
DATE : 21/01-2011

L'INFORMATION CI-CONTENUE EST LA PROPRIÉTÉ DE AGNICO-EAGLE LTÉE ET DOIT ÊTRE RETOURNÉE SUR DEMANDE, SANS AUTORISATION ÉCRITE PRÉALABLE, TOUTE REPRODUCTION DE COPIE(S) À AUTRE ET TOUTE UTILISATION AUTRE QUE CELLE POUR LAQUELLE L'INFORMATION EST PRÊTÉE SONT INTERDITES. © AGNICO-EAGLE LTÉE

THE INFORMATION HERE ON IS THE PROPERTY OF AGNICO-EAGLE LTD, AND MUST BE RETURNED UPON REQUEST, WITHOUT WRITTEN PERMISSION, ANY COPYING THEREOF, OR OTHERS AND ANY USE EXCEPT THAT FOR WHICH IT IS LOANED ARE PROHIBITED.
© AGNICO-EAGLE LTD.

DESSINS EN RÉFÉRENCE / REFERENCE DRAWINGS

TITRE / TITLE	# DWG
–	–
–	–
–	–
–	–
–	–
–	–

AGNICO-EAGLE

REV.	DATE	DESCRIPTION	PAR/BY	APP.	CLIENT
C	21-01-2011	AS BUILT	J-F.S.	S.B.	
B	20-07-2010	APPROVAL	J-F.S.	S.B.	
A	16-07-2010	APPROVAL	J-F.S.	S.B.	

REVISIONS

STAVIBEL
BÂTISSEURS D'INGÉNIERIE
Stavibel inc.
150, rue Gamble Ouest
Rouyn-Noranda (Québec) J9X 2R7
Tél.: 819 764-5181 Téléc.: 819 797-0158
Courriel : stavibel-rn@stavibel.qc.ca
www.stavibel.qc.ca

Projet No.: - -

TITRE / TITLE
AGNICO-EAGLE – MEADOWBANK DIVISION
BAKER LAKE AREA 740
TANK #5 AND #6
DETAILS

DESSINÉ PAR / DRAWN BY	J-F SYLVESTRE, TECH.	DATE 2010-07-20
VERIFIÉ PAR / CHECKED BY	FRANCE BÉRUBÉ, ING. JR.	2010-07-20
APPROUVÉ PAR / APPROVED BY	SERGE BEAULÉ, ING.	2010-07-20
ÉCHELLE / SCALE	N/A	DATE 30-06-2010
NO. DESSIN / DRAWING NO.	740-C-0125	
NO. PROJET / PROJECT NO.	MEAD-I-400	REVISION C
		FEUILLE / SHT 3 / 3

AE-CART-ARCH D

P:\02822\001\Dessins maitrise\30-CH\740-C-0123-0125 TQC.dwg, 25 Jan 2011

FILE NO. 740-C-0123-0125 TQC.dwg

NO. DESSIN DRAWING NO. VD2622–001(MEAD–I–400)00

FORMAT ARCHD

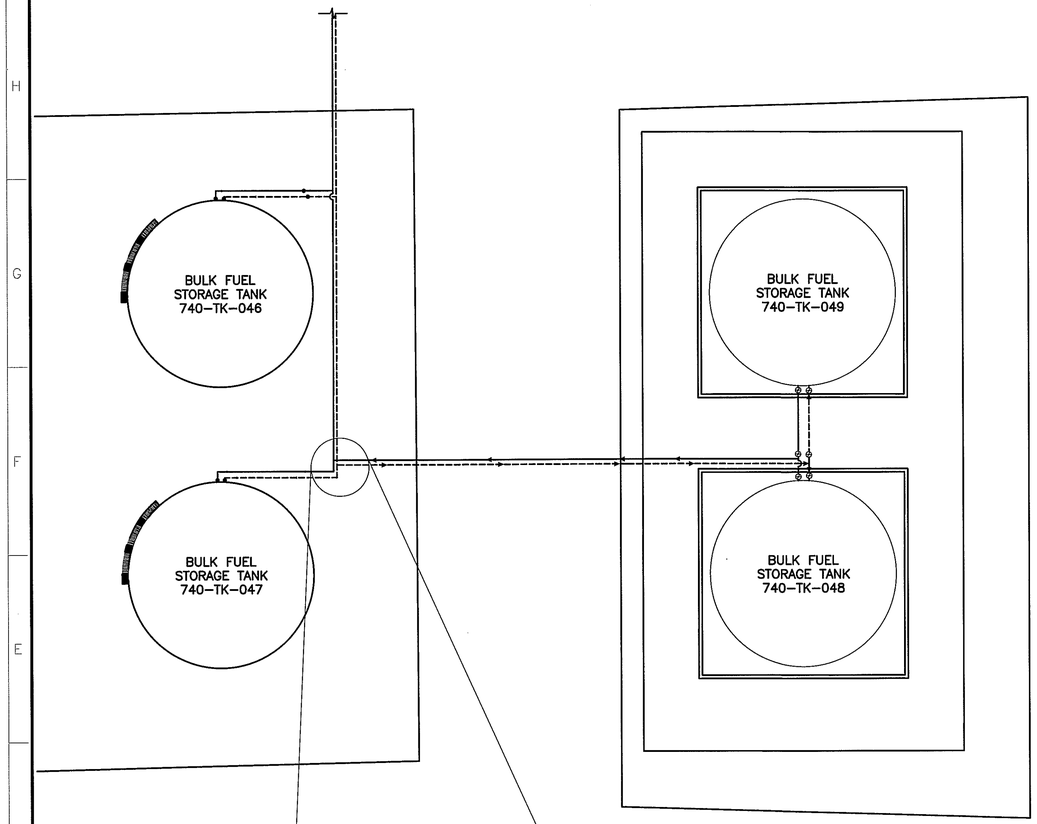

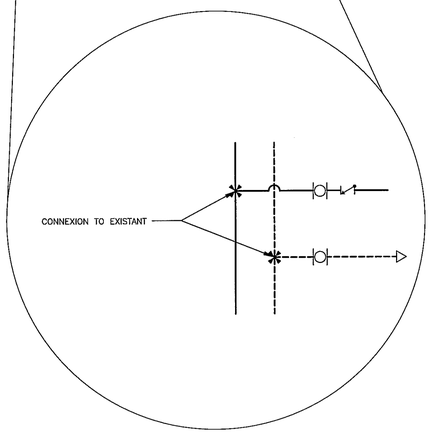

Piping	Symbol	Equipment	Details	Type	Models	Diameter	Quantity
Filling of Tank 740-TK-048 Tank 740-TK-049		Gate Valve	Integrally reinforced extended body gate, female socket weld outboard end; API STD 602; forged carbon steel; ASTM A 105/A 105M; OS&Y; welded bonnet or bolted bonnet with flexible graphite-filled spiral wound gasket; trim #8; flexible graphite packing; metal tagged V903; Class 800	NA	Velan W-DD-2-17-4W-02-TY (1") or equivalent	1"	2
		Gate Valve	Class 150; flanged, raised-face; API STD 600; carbon steel body, ASTM A 105/A 105M or ASTM A 216/A 216M Grade WCB; OS&Y; solid or flexible wedge; bolted bonnet with stainless steel reinforced flexible graphite bonnet gasket; trim #8; flexible graphite packing; metal tagged VGA01; full port.	NA	Velan F-DD-0-06-4C-02-TY (6") or equivalent	6"	7
		Flanged Mettallc flexible tube	- Flanges: Class 150, raised face and ANSI B16.5; - Metallic flexible tube: 18" length in Stainless Steel	NA	CONNECTALL AA1-096-0180 or equivalent	6"	4
	M	Motorized Valve	- 6" direct mount split body ball valve; - Body materieal: Carbon Steel Body; - SS 316 Trim, Seat Reinforced TFE Seats ; - Flanges: Class 150 raised face and ANSI B16.5; C/W: Actuator Electric Serie XE (XE-6900) ATEX certified for Flame Proof Eexd IIB T4 + Heater	NA	Matheson valves D9C-F1-600-XHE1-XX 6.00	6"	2
		Gasket	Composition: Aramid fibers with a nitril binder Tickness: 1/8"	NA	Garlock Blue guard Style 3000	1" 6"	as required
		Piping	Carbon steel piping sch. 40 ASTM A53 gr.B seamless	NA	NA	1" 6"	as required
Distribution from Tank 740-TK-048 Tank 740-TK-049		Gate Valve	Class 150; flanged, raised-face; API STD 600; carbon steel body, ASTM A 105/A 105M or ASTM A 216/A 216M Grade WCB; OS&Y; solid or flexible wedge; bolted bonnet with stainless steel reinforced flexible graphite bonnet gasket; trim #8; flexible graphite packing; metal tagged VGA01; full port.	NA	Velan F-DD-0-06-4C-02-TY (4") or equivalent	4"	7
		Gate Valve	Integrally reinforced extended body gate, female socket weld outboard end; API STD 602; forged carbon steel; ASTM A 105/A 105M; OS&Y; welded bonnet or bolted bonnet with flexible graphite-filled spiral wound gasket; trim #8; flexible graphite packing; metal tagged V903; Class 800	NA	Velan W-DD-2-17-4W-02-TY (1") or equivalent	1"	2
		Flanged Mettallc flexible tube	- Flanges: Class 150, raised face and ANSI B16.5; - Metallic flexible tube: 18" length in Stainless Steel	NA	CONNECTALL AA1-054-0150 or equivalent	4"	4
		Check valve	- Cast steel flanged check valve ; - Body material: Low temperature cast carbon steel to ASTM A352, grade LCB; - Trim material: Disc - Stainless steel, 13% Cr Seat - Stainless steel, 13% Cr; - Valve: Face to face dimensions to ANSI B16.10; - Flanges: Class 150, raised face and ANSI B16.5.	CKF1 [1]	Kitz 150 SCOBL or equivalent	4"	3
	M	Motorized Valve	- 4" direct mount split body ball valve; - Body materieal: Carbon Steel Body; - SS 316 Trim, Seat Reinforced TFE Seats ; - Flanges: Class 150 raised face and ANSI B16.5; C/W: Actuator Electric Serie XE (XE-2640) ATEX certified for Flame Proof Eexd IIB T4 + Heater	NA	Matheson valves D9C-F1-400-XEE-1-XX 4.00	4"	2
		Gasket	Composition: Aramid fibers with a nitril binder Tickness: 1/8"	NA	Garlock Blue guard Style 3000	1" 4"	as required
		Piping	Carbon steel piping sch. 40 ASTM A53 gr.B seamless	NA	NA	1" 4"	as required
Overpressure line filling tank 740-TK-048 filling tank 740-TK-049		Gate Valve	Integrally reinforced extended body gate, female socket weld outboard end; API STD 602; forged carbon steel; ASTM A 105/A 105M; OS&Y; welded bonnet or bolted bonnet with flexible graphite-filled spiral wound gasket; trim #8; flexible graphite packing; metal tagged V903; Class 800	NA	Velan W-DD-2-17-4W-02-TY (¾") or equivalent	¾"	8
		Flanged Mettallc flexible tube	- Flanges: Class 150, raised face and ANSI B16.5; - Metallic flexible tube: 18" length in Stainless Steel	NA	CONNECTALL AA-B1B1-HHH-0180-0150 or equivalent	¾"	4
		Pressure safety valve	- Stainless steel; - Set pressure at 75 PSI	NA	Swagelok SS-RL4M8F8-BU	¾"	2
		Gasket	Composition: Aramid fibers with a nitril binder Tickness: 1/8"	NA	Garlock Blue guard Style 3000	¾"	as required
		Piping	Carbon steel piping sch. 40 ASTM A53 gr.B seamless	NA	NA	¾"	as required

[1] Reference to "PIPE AND VALVE SPECIFICATION" #0 17202-0000-46ES-1001 by SNC Lavalin 15th august 2007

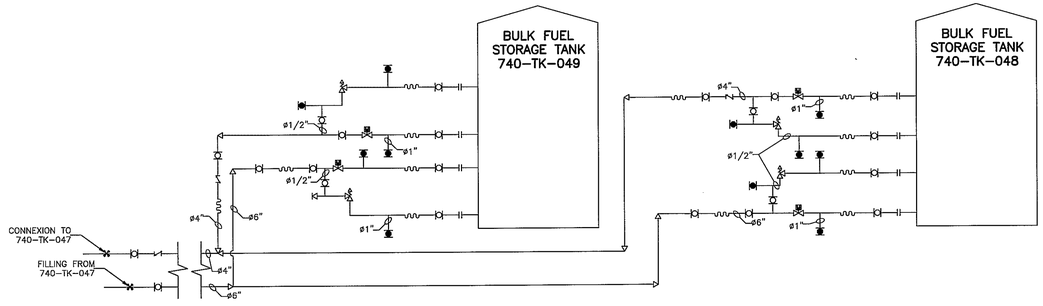

PIPING DETAILS

PLAN CLÉ
KEY PLAN

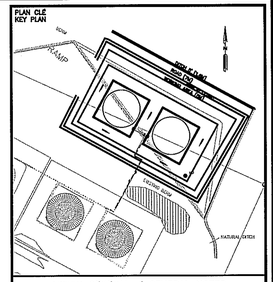

NOTES GÉNÉRAL / GENERAL NOTES

1–ALL THE PIPING CONNECTION MUST BE AT THE BOTTOM OF THE TANK

POUR CONSTRUCTION
FOR CONSTRUCTION
DATE : 12/08/2010
AGNICO-EAGLE

L'INFORMATION CI-CONTENUE EST LA PROPRIÉTÉ DE AGNICO-EAGLE LTÉE ET NE PEUT ÊTRE REPRODUITE SOUS AUCUNE FORME QUELCONQUE, TOTALE OU PARTIELLE, SANS L'AUTORISATION ÉCRITE DE AGNICO-EAGLE LTÉE.
THE INFORMATION HERE-ON IS THE PROPERTY OF AGNICO-EAGLE LTD. AND MUST BE RETURNED UPON REQUEST. SHOULD WRITTEN PERMISSION, AND COPYING THEREOF, BE OBTAINED AND ANY USE EXCEPT THAT FOR WHICH IT IS LOANED ARE PROHIBITED.
© AGNICO-EAGLE LTD.

DESSINS EN RÉFÉRENCE / REFERENCE DRAWINGS

TITRE / TITLE	# DWG
–	–
–	–
–	–
–	–
–	–
–	–

AGNICO-EAGLE

REV.	DATE	DESCRIPTION	DES./DR.	APP.	CLIENT
0	2010-08-12	FOR CONSTRUCTION	MA.BÉD	JM.C	
B	2010-07-20	FOR APPROVAL	V.Crè.	JM.C	
A	2010-07-16	FOR APPROVAL	V.Crè.	JM.C	

REVISIONS

L-2198
2010-08-12

TITRE / TITLE

AGNICO–EAGLE – MEADOWBANK DIVISION
BAKER LAKE AREA 740
TANK #5 AND #6
FUEL DISTRIBUTION PIPING
LAYOUT AND DETAILS

DESSINÉ PAR DRAWN BY	VICKY CRÈTE, TECH.	DATE 2010-07-16
VERIFIÉ PAR CHECKED BY	J–M CHARRON, Ing.	
APPROUVÉ PAR APPROVED BY	J–M CHARRON, Ing.	
ÉCHELLE SCALE	N/A	DATE

NO. DESSIN DRAWING NO. 740–M–0100

NO. PROJET PROJECT NO.	REVISION	FEUILLE / SHT
MEAD–I–400	0	1 / 1

AE–CART–ARCH D

\\groupe\stanbet\Projet\300–INI\VD2622\001\Dessins maitres\75–PEF\VD2622–001(MEAD–I–400)00.dwg, 12 Aoû 2010

FILE NO. VD2622–001(MEAD–I–400)00.dwg

NO. DESSIN / DRAWING NO. 740-E-0120

FORMAT ANSI B-11x17

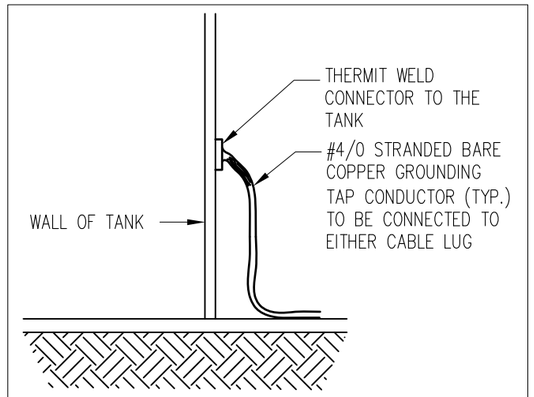

BONDING CONNECTION TO EXTERIOR TANK

DETAIL 1 / –

SCALE : N.T.S.

NOTES :
1. ALL CABLES CONNECTION ARE THERMIT WELD.

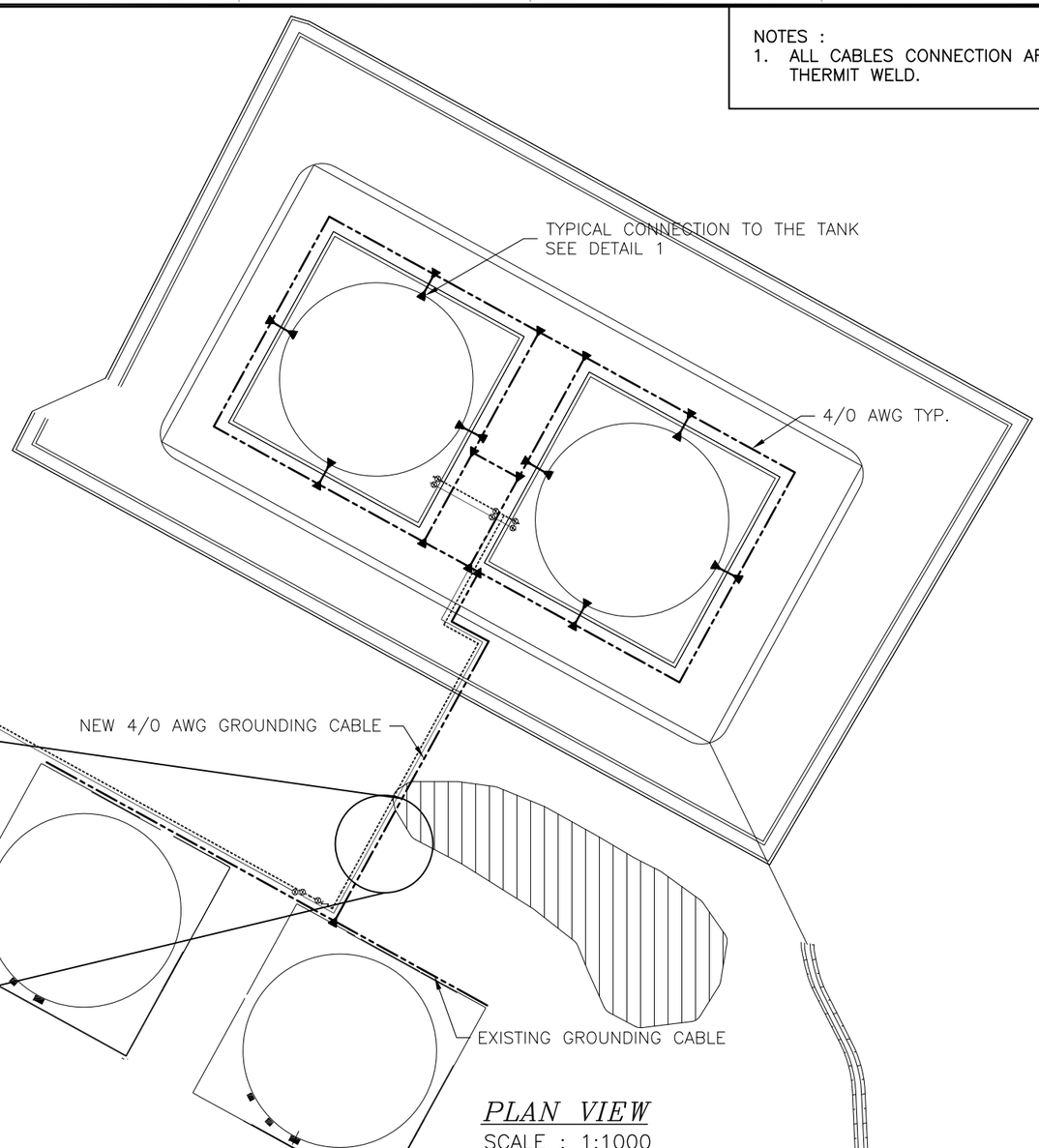

PLAN VIEW

SCALE : 1:1000

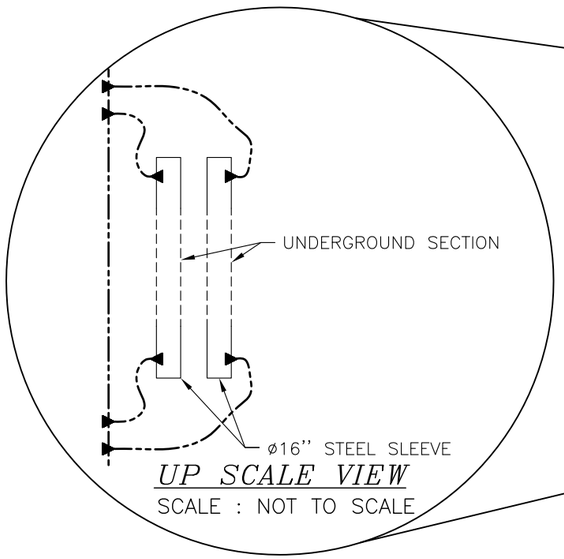

UP SCALE VIEW

SCALE : NOT TO SCALE

TITRE / TITLE	# DWG	REV	DESCRIPTION	DATE	PAR BY
–	–				
–	–				
–	–				
–	–				
–	–	0	AS BUILD	14-01-2011	M.O.

DESSINS EN RÉFÉRENCE / REFERENCE DRAWINGS

REVISIONS

AGNICO-EAGLE

DESSINÉ PAR / DRAWN BY	M.MATTEAU, T.P.	DATE 2011-01-12
VÉRIFIÉ PAR / CHECKED BY	M. OUELLETTE (AEM)	
APPROUVÉ PAR / APPROVED BY		
No. PROJET / PROJECT NO.	VD2622-001	
DATE	2011-01-12	

L'INFORMATION CI-CONTENUE EST LA PROPRIÉTÉ DE AGNICO-EAGLE LTÉE ET DOIT ÊTRE RETOURNÉE SUR DEMANDE, SANS AUTORISATION ÉCRITE PRÉALABLE, TOUTE TRANSMISSION DE COPIE(S) À AUTRUI ET TOUTE UTILISATION AUTRE QUE CELLE POUR LAQUELLE L'INFORMATION EST PRÊTÉE SONT INTERDITES.
© AGNICO-EAGLE LTÉE

THE INFORMATION HERE ON IS THE PROPERTY OF AGNICO-EAGLE LTD. AND MUST BE RETURNED UPON REQUEST. WITHOUT WRITTEN PERMISSION, ANY COPYING TRANSMITTAL TO OTHERS AND ANY USE EXCEPT THAT FOR WHICH IT IS LOANED ARE PROHIBITED.
© AGNICO-EAGLE LTD.

TITRE / TITLE

AGNICO-EAGLE – MEADOWBANK
AREA 740 BAKER LAKE
ELECTRICAL
GROUNDING PLAN

ÉCHELLE / SCALE	FICHIER / FILE	REVISION	FEUILLE/SHT
INDICATED	740-E-0120.DWG		
No. DESSIN / DRAWING NO. 740-E-0120		0	1 / 1

AE-CART-ANSI B

P:\VD2622\001\P200\Dessins emis\D_Cons\50-ELE\2011-01-14 – Tel que construit\740-E-0120.dwg, 14 Jan 2011

NO. DESSIN
DRAWING NO. VD2622-001(MEAD-I-400)00

FORMAT ARCHD

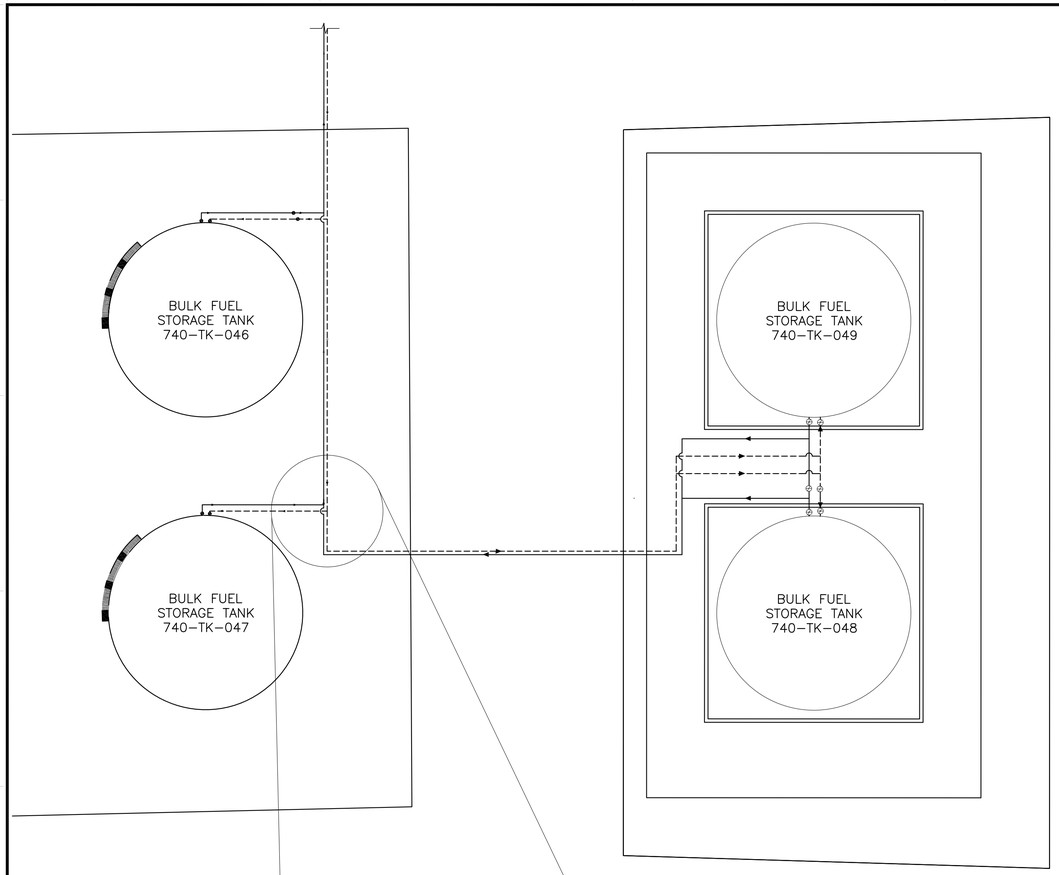

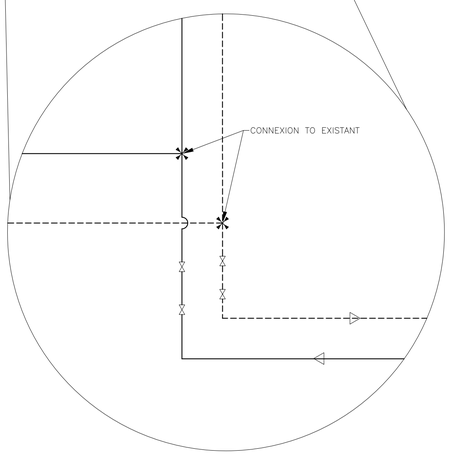

Piping	Symbol	Equipment	Details	Type	Models	Diameter	Quantity
Filling of Tank 740-TK-048 Tank 740-TK-049		Gate Valve	Class 150; flanged, face to face dimension ANSI B16.10, End flange dimension ANSI B16.5, API STD 600; carbon steel body, ASTM A 352-LCC	NA	Beric Class 150	1"	2
		Gate Valve	Class 150; flanged, face to face dimension ANSI B16.10, End flange dimension ANSI B16.5, API STD 600; carbon steel body, ASTM A 352-LCC	NA	Beric Class 150	6"	4
		Flanged Mettalic flexible tube	- Flanges: Class 150, raised face and ANSI B16.5, carbon steel; - Metallic flexible tube: 18" length in Stainless Steel	NA	CONNECTALL AAB1B1LLL0240	6"	2
		Gasket	Composition: Aramid fibers with a nitril binder Tickness: 1/8"	NA	Garlock Blue guard Style 3000	1" 6"	as required
		Piping	Carbon steel piping sch. 40 ASTM A53 gr.B seamless	NA	NA	1" 6"	as required
Distribution from Tank 740-TK-048 Tank 740-TK-049		Gate Valve	Class 150; flanged, face to face dimension ANSI B16.10, End flange dimension ANSI B16.5, API STD 600; carbon steel body, ASTM A 352-LCC	NA	Beric Class 150	4"	4
		Gate Valve	Class 150; flanged, face to face dimension ANSI B16.10, End flange dimension ANSI B16.5, API STD 600; carbon steel body, ASTM A 352-LCC	NA	Beric Class 150	1"	4
		Flanged Mettalic flexible tube	- Flanges: Class 150, raised face and ANSI B16.5, carbon steel; - Metallic flexible tube: 18" length in Stainless Steel	NA	CONNECTALL AAB1B1WWW0240	4"	2
		Check valve	Class 150; flanged, face to face dimension ANSI B16.10, End flange dimension ANSI B16.5, ANSI B16.34 (CONFORMS TO THE APPLICABLE REQUIREMENTS OF API 600), carbon steel body, ASTM A 352-LCC	NA	Beric Class 150	4"	2
	M	Motorized Valve	- Ball valve class 150; - Body materieal: Carbon Steel Body; - Reinforced TFE Seats ; - Flanges: Class 150 raised face and ANSI B16.5; C/W: Actuator Electric Serie XE (XE-2640) ATEX certified for Flame Proof Eexd IIB T4 + Heater	NA	TRIAC Actuator electric XE-2640 C/W Ball valve classe 150	4"	1
		Gasket	Composition: Aramid fibers with a nitril binder Tickness: 1/8"	NA	Garlock Blue guard Style 3000	1" 4"	as required
		Piping	Carbon steel piping sch. 40 ASTM A53 gr.B seamless	NA	NA	1" 4"	as required
Overpressure line filling tank 740-TK-048 filling tank 740-TK-049		Gate Valve	Class 150; flanged, face to face dimension ANSI B16.10, End flange dimension ANSI B16.5, API STD 600; carbon steel body, ASTM A 352-LCC	NA	Beric Class 150	2"	4
		Gate Valve	Class 150; flanged, face to face dimension ANSI B16.10, End flange dimension ANSI B16.5, API STD 600; carbon steel body, ASTM A 352-LCC	NA	Beric Class 150	1"	2
		Check valve	-Carbon steel; - Set pressure at 25 PSI;	NA	Check All UN-3 (U3)	1"	1
		Pressure safety valve	-Carbon steel; - Set pressure at 80 PSI; - 16 USGPM capacity; - Temperature range: -50 to 750F	NA	FARRIS Serie 2700	1"	1
		Gasket	Composition: Aramid fibers with a nitril binder Tickness: 1/8"	NA	Garlock Blue guard Style 3000	½"	as required
		Piping	Carbon steel piping sch. 40 ASTM A53 gr.B seamless	NA	NA	½"	as required
		Gasket	Composition: Aramid fibers with a nitril binder Tickness: 1/8"	NA	Garlock Blue guard Style 3000	½"	as required
		Piping	Carbon steel piping sch. 40 ASTM A53 gr.B seamless	NA	NA	½"	as required

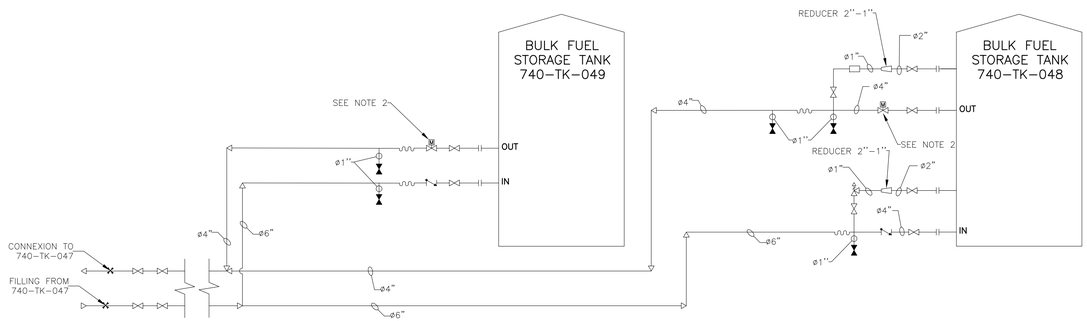

PIPING DETAILS

PLAN CLÉ
KEY PLAN

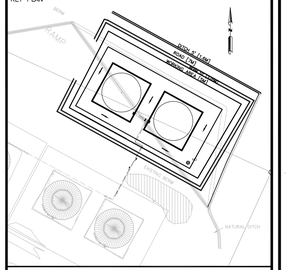

NOTES GÉNÉRAL / GENERAL NOTES

1-ALL THE PIPING CONNECTION MUST BE AT THE BOTTOM OF THE TANK

2-MOTORIZED VALVES ARE INSTALLED BUT NOT RECORDED. THEY ARE IN OPEN POSITION.

L'INFORMATION CI-CONTENUE EST LA PROPRIÉTÉ DE AGNICO-EAGLE LTÉE ET DOIT ÊTRE RETOURNÉE SUR DEMANDE. SANS AUTORISATION ÉCRITE PRÉALABLE, TOUTE TRANSMISSION DE COPIE(S) À AUTRUI ET TOUTE UTILISATION AUTRE QUE CELLE POUR LAQUELLE L'INFORMATION EST PRÊTE SONT INTERDITES. © AGNICO-EAGLE LTÉE

THE INFORMATION HERE ON IS THE PROPERTY OF AGNICO-EAGLE LTD. AND MUST BE RETURNED UPON REQUEST. WITHOUT WRITTEN PERMISSION, ANY COPYING TRANSMITTAL TO OTHERS AND ANY USE EXCEPT THAT FOR WHICH IT IS LOANED ARE PROHIBITED. © AGNICO-EAGLE LTD.

DESSINS EN RÉFÉRENCE / REFERENCE DRAWINGS

TITRE / TITLE	# DWG
_	_
_	_
_	_
_	_
_	_
_	_

AGNICO-EAGLE

REV.	DATE	DESCRIPTION	PAR/BY	APP.	CLIENT
1	31-01-2011	AS FIELD	K.F	JM.C	
0	2010-08-12	FOR CONSTRUCTION	MA.BÉD	JM.C	
B	2010-07-20	FOR APPROVAL	V.Cre.	JM.C	
A	2010-07-16	FOR APPROVAL	V.Cre.	JM.C	

REVISIONS

TITRE / TITLE

AGNICO-EAGLE - MEADOWBANK DIVISION
BAKER LAKE AREA 740
TANK #5 AND #6
FUEL DISTRIBUTION PIPING
LAYOUT AND DETAILS

DESSINÉ PAR DRAWN BY	VICKY CRÊTE, TECH.	DATE 2010-07-16
VÉRIFIÉ PAR CHECKED BY	J-M CHARRON, Ing.	2010-08-20
APPROUVÉ PAR APPROVED BY	J-M CHARRON, Ing.	2010-08-20
ÉCHELLE SCALE	N/A	DATE

NO. DESSIN
DRAWING NO. 740-M-0100

NO. PROJET PROJECT NO.	REVISION	FEUILLE / SHT
MEAD-I-400	1	1 / 1

AE-CART-ARCH D

P:\VD2622\001\Dessins maitres\75-PID\VD2622-001(MEAD-I-400)01.dwg, 28 Jan 2011

FILE NO. VD2622-001(MEAD-I-400)01.dwg

NO. DESSIN DRAWING NO. VD2622–001(MEAD–I–400)00

FORMAT ARCHD

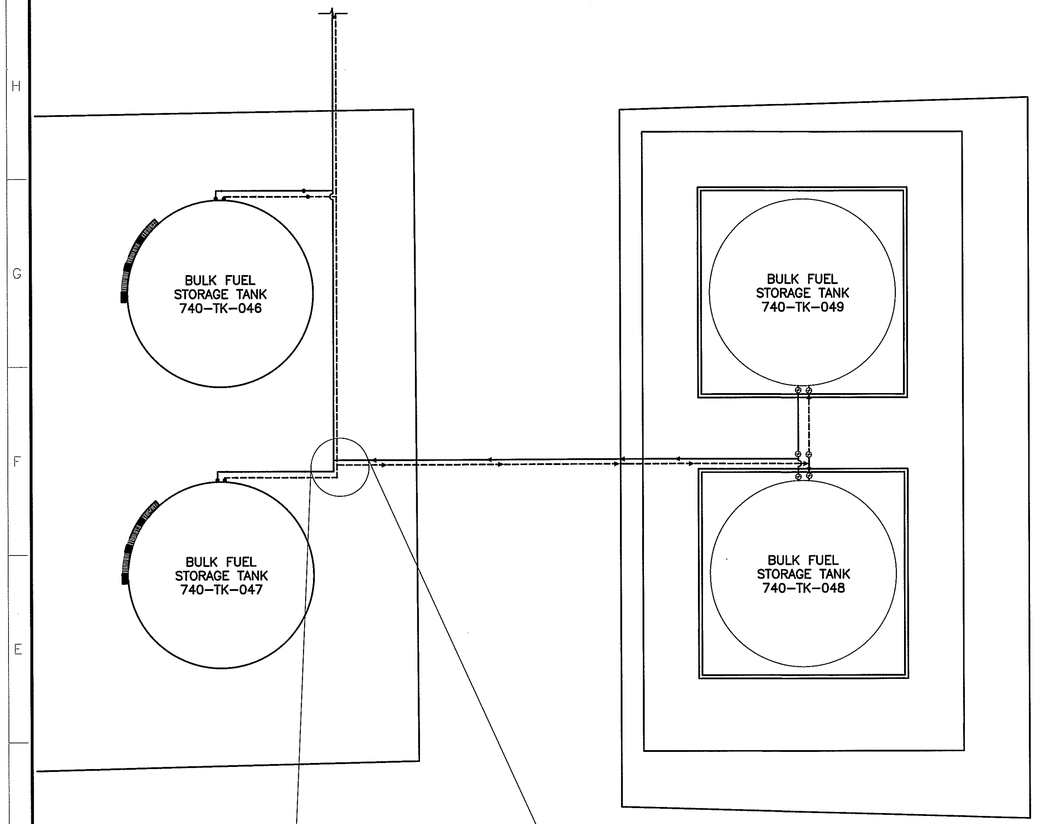

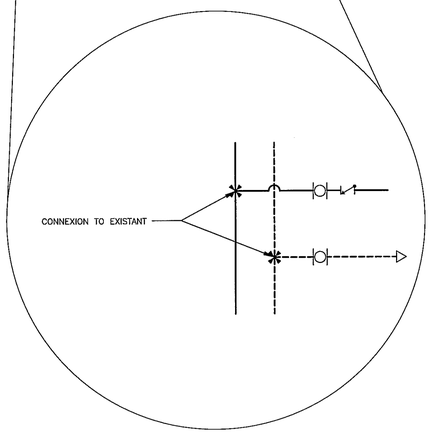

Piping	Symbol	Equipment	Details	Type	Models	Diameter	Quantity
Filling of Tank 740-TK-048 Tank 740-TK-049		Gate Valve	Integrally reinforced extended body gate, female socket weld outboard end; API STD 602; forged carbon steel; ASTM A 105/A 105M; OS&Y; welded bonnet or bolted bonnet with flexible graphite-filled spiral wound gasket; trim #8; flexible graphite packing; metal tagged V903; Class 800	NA	Velan W-DD-2-17-4W-02-TY (1") or equivalent	1"	2
		Gate Valve	Class 150; flanged, raised-face; API STD 600; carbon steel body, ASTM A 105/A 105M or ASTM A 216/A 216M Grade WCB; OS&Y; solid or flexible wedge; bolted bonnet with stainless steel reinforced flexible graphite bonnet gasket; trim #8; flexible graphite packing; metal tagged VGA01; full port.	NA	Velan F-DD-0-06-4C-02-TY (6") or equivalent	6"	7
		Flanged Mettallc flexible tube	- Flanges: Class 150, raised face and ANSI B16.5; - Metallic flexible tube: 18" length in Stainless Steel	NA	CONNECTALL AA1-096-0180 or equivalent	6"	4
	M	Motorized Valve	- 6" direct mount split body ball valve; - Body materieal: Carbon Steel Body; - SS 316 Trim, Seat Reinforced TFE Seats ; - Flanges: Class 150 raised face and ANSI B16.5; C/W: Actuator Electric Serie XE (XE-6900) ATEX certified for Flame Proof Eexd IIB T4 + Heater	NA	Matheson valves D9C-F1-600-XHE1-XX 6.00	6"	2
		Gasket	Composition: Aramid fibers with a nitril binder Tickness: 1/8"	NA	Garlock Blue guard Style 3000	1" 6"	as required
		Piping	Carbon steel piping sch. 40 ASTM A53 gr.B seamless	NA	NA	1" 6"	as required
Distribution from Tank 740-TK-048 Tank 740-TK-049		Gate Valve	Class 150; flanged, raised-face; API STD 600; carbon steel body, ASTM A 105/A 105M or ASTM A 216/A 216M Grade WCB; OS&Y; solid or flexible wedge; bolted bonnet with stainless steel reinforced flexible graphite bonnet gasket; trim #8; flexible graphite packing; metal tagged VGA01; full port.	NA	Velan F-DD-0-06-4C-02-TY (4") or equivalent	4"	7
		Gate Valve	Integrally reinforced extended body gate, female socket weld outboard end; API STD 602; forged carbon steel; ASTM A 105/A 105M; OS&Y; welded bonnet or bolted bonnet with flexible graphite-filled spiral wound gasket; trim #8; flexible graphite packing; metal tagged V903; Class 800	NA	Velan W-DD-2-17-4W-02-TY (1") or equivalent	1"	2
		Flanged Mettallc flexible tube	- Flanges: Class 150, raised face and ANSI B16.5; - Metallic flexible tube: 18" length in Stainless Steel	NA	CONNECTALL AA1-054-0150 or equivalent	4"	4
		Check valve	- Cast steel flanged check valve ; - Body material: Low temperature cast carbon steel to ASTM A352, grade LCB; - Trim material: Disc - Stainless steel, 13% Cr Seat - Stainless steel, 13% Cr; - Valve: Face to face dimensions to ANSI B16.10; - Flanges: Class 150, raised face and ANSI B16.5.	CKF1 [1]	Kitz 150 SCOBL or equivalent	4"	3
	M	Motorized Valve	- 4" direct mount split body ball valve; - Body materieal: Carbon Steel Body; - SS 316 Trim, Seat Reinforced TFE Seats ; - Flanges: Class 150 raised face and ANSI B16.5; C/W: Actuator Electric Serie XE (XE-2640) ATEX certified for Flame Proof Eexd IIB T4 + Heater	NA	Matheson valves D9C-F1-400-XEE-1-XX 4.00	4"	2
		Gasket	Composition: Aramid fibers with a nitril binder Tickness: 1/8"	NA	Garlock Blue guard Style 3000	1" 4"	as required
		Piping	Carbon steel piping sch. 40 ASTM A53 gr.B seamless	NA	NA	1" 4"	as required
Overpressure line filling tank 740-TK-048 filling tank 740-TK-049		Gate Valve	Integrally reinforced extended body gate, female socket weld outboard end; API STD 602; forged carbon steel; ASTM A 105/A 105M; OS&Y; welded bonnet or bolted bonnet with flexible graphite-filled spiral wound gasket; trim #8; flexible graphite packing; metal tagged V903; Class 800	NA	Velan W-DD-2-17-4W-02-TY (¾") or equivalent	¾"	8
		Flanged Mettallc flexible tube	- Flanges: Class 150, raised face and ANSI B16.5; - Metallic flexible tube: 18" length in Stainless Steel	NA	CONNECTALL AA-B1B1-HHH-0180-0150 or equivalent	¾"	4
		Pressure safety valve	- Stainless steel; - Set pressure at 75 PSI	NA	Swagelok SS-RL4M8F8-BU	¾"	2
		Gasket	Composition: Aramid fibers with a nitril binder Tickness: 1/8"	NA	Garlock Blue guard Style 3000	¾"	as required
		Piping	Carbon steel piping sch. 40 ASTM A53 gr.B seamless	NA	NA	¾"	as required

[1] Reference to "PIPE AND VALVE SPECIFICATION" #0 17202-0000-46ES-1001 by SNC Lavalin 15th august 2007

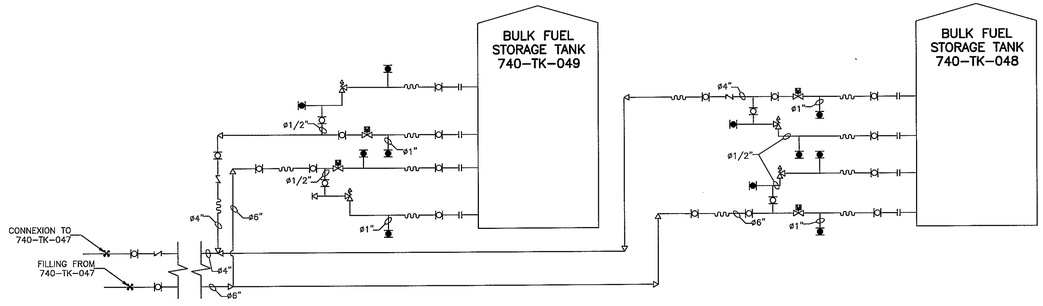

PIPING DETAILS

PLAN CLÉ
KEY PLAN

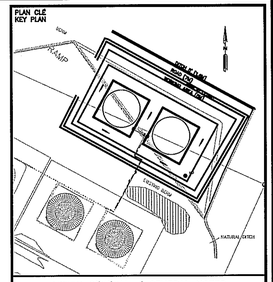

NOTES GÉNÉRAL / GENERAL NOTES

1–ALL THE PIPING CONNECTION MUST BE AT THE BOTTOM OF THE TANK

POUR CONSTRUCTION
FOR CONSTRUCTION
DATE : 12/08/2010
AGNICO-EAGLE

L'INFORMATION CI-CONTENUE EST LA PROPRIÉTÉ DE AGNICO-EAGLE LTÉE ET NE PEUT ÊTRE REPRODUITE SOUS AUCUNE FORME QUELCONQUE, TOTALE OU PARTIELLE, SANS L'AUTORISATION ÉCRITE DE AGNICO-EAGLE LTÉE.
THE INFORMATION HERE-ON IS THE PROPERTY OF AGNICO-EAGLE LTD. AND MUST BE RETURNED UPON REQUEST. SHOULD WRITTEN PERMISSION, AND COPYING THEREOF, BE OBTAINED AND ANY USE EXCEPT THAT FOR WHICH IT IS LOANED ARE PROHIBITED.
© AGNICO-EAGLE LTD.

DESSINS EN RÉFÉRENCE / REFERENCE DRAWINGS

TITRE / TITLE	# DWG
–	–
–	–
–	–
–	–
–	–
–	–

AGNICO-EAGLE

REV.	DATE	DESCRIPTION	DES./DR.	APP.	CLIENT
0	2010-08-12	FOR CONSTRUCTION	MA.BÉD	JM.C	
B	2010-07-20	FOR APPROVAL	V.Crè.	JM.C	
A	2010-07-16	FOR APPROVAL	V.Crè.	JM.C	

REVISIONS

L-2198
2010-08-12

TITRE / TITLE

AGNICO–EAGLE – MEADOWBANK DIVISION
BAKER LAKE AREA 740
TANK #5 AND #6
FUEL DISTRIBUTION PIPING
LAYOUT AND DETAILS

DESSINÉ PAR DRAWN BY	VICKY CRÈTE, TECH.	DATE 2010-07-16
VERIFIÉ PAR CHECKED BY	J–M CHARRON, Ing.	
APPROUVÉ PAR APPROVED BY	J–M CHARRON, Ing.	
ÉCHELLE SCALE	N/A	DATE

NO. DESSIN DRAWING NO. 740–M–0100

NO. PROJET PROJECT NO.	REVISION	FEUILLE / SHT
MEAD–I–400	0	1 / 1

AE–CART–ARCH D

\\groupe\stanbet\Projet\300–INI\VD2622\001\Dessins maitres\75–PEF\VD2622–001(MEAD–I–400)00.dwg, 12 Aoû 2010

FILE NO. VD2622–001(MEAD–I–400)00.dwg

APPENDIX 2

SAFE FILL LEVELS FOR ALL FUEL TANKS

TEMPERATUE OF FUEL in the barge at discharge	MAXIMUM FUEL LEVEL To be read on the VAREC float level	
	TANK # 5	TANK #6
0 °C	9,63	9,63
+ 5 °C	9,67	9,67
+ 10 °C	9,72	9,72
+ 15 °C	9,76	9,76

NOTE: EACH TANK HAS A SLIGHTLY DIFFERENT ELEVATION, SO CARE MUST BE TAKEN DURING HYDRAULIC BALANCING OF TANKS, ESPECIALLY WHEN THOSE ARE FULL

Appendix A4

Baker Lake Jet-A Fuel Storage Installations: As-built Report (Agnico Eagle (2013)

AGNICO EAGLE
MEADOWBANK

AGNICO EAGLE MINES LTD

MEADOWBANK DIVISION

BAKER LAKE JET A FUEL STORAGE INSTALLATIONS

2013

AS BUILT CONSTRUCTION REPORT

PREPARED BY:

Yanick Simard

Project General Foreman

AEM.

APPROVED BY:

REGISTERED PROFESSIONAL ENGINEER
R. MARCOUX
LICENSEE
NT/NU

AGNICO EAGLE MINES LTD

MEADOWBANK DIVISION

BAKER LAKE JET A FUEL STORAGE INSTALLATIONS

2013

AS BUILT CONSTRUCTION REPORT

TABLE OF CONTENTS

1. DESCRIPTION OF CONSTRUCTION ACTIVITIES 1
2. DESCRIPTION OF THE FUEL CONTAINEMENT PAD CONSTRUCTION STEPS 2

2.1 Excavation of the existing area 2

2.2 Construction of the pad Phase 1 2

2.3 Installation of the bituminous liner 3

2.4 Construction of the pad Phase 2 3

3. DESCRIPTION OF THE FACILITIES AND MECHANICAL PARTS ASSEMBLING 4

3.1 New tanks placement and installation of the pump house 4

3.2 Piping connection and electrical assembling phase 1 4

3.2 Piping connection and electrical assembling Phase 2 5

APPENDIX 1: DRAWINGS

APPENDIX 2: STAVIBEL'S CONSTRUCTION DAILY REPORTS

APPENDIX 3: SM'S TECHNICAL DATA SHEETS & DRAWINGS DOCUMENT

1- DESCRIPTION OF CONSTRUCTION ACTIVITIES

Agnico Eagle mines has contracted Stavibel Engineering Services to design the Jet A fuel storage facilities located in Baker Lake, Nunavut, complying with specifications required by environmental and governmental regulations, namely Environment Canada's Fuel Tank Storage Regulations and the CCME Environmental Code of Practice for Aboveground and Underground Storage Tank Systems Containing Petroleum and Allied Petroleum Products.

Stavibel provided the design, planning and construction oversight related to the installation of infrastructure of AEM's new Jet A Fuel Storage facility which consists of 20 – 100,000L double walled tanks, associated piping and pumping systems and secondary requirement. AEM prepared a site survey to ensure proper measurements and elevation of the existing area.

The main activities related to the construction were scheduled as follow:

I: AEM sent surveyed data of the existing area to Stavibel

II: Stavibel sent first design plans for comments

III: AEM moved the existing tanks and prepared the field for the construction

IV: Construction of the infrastructure pad

V: Assembling of all the installation of tanks and mechanical infrastructure.

2- DESCRIPTION OF THE FUEL CONTAINEMENT PAD CONSTRUCTION STEPS

2.1 EXCAVATION OF THE EXISTING AREA. July 14th 2013.

Quality control and quality approval: Stavibel

Construction contractor: Quamanittuap-Sana (FGL)

General supervision and foreman: AEM

Starting with test pits, the presence of water was observed in the excavation area. It was then decided to increase the elevation of the pad by +300mm. Presence of contaminated soil was found as well; it was removed, analyzed by environmental department and sent to the soil landfarm at Meadowbank. The total amount was 128m3. All non-contaminated soil and rock that was removed and was placed aside to be used during the backfilling of the pad. (1) 365 CAT excavator, (1) D6 CAT dozer, (1) operator and (1) surveyor were necessary for the initial phase.

2.2 CONSTRUCTION OF THE PAD PHASE 1. July 15th – July 25th 2013.

Quality control and quality approval: Stavibel

Construction contractor: Quamanittuap-Sana (FGL)

Material transportation: BLCS

General supervision and foreman: AEM

During this phase of the project, a (1) 365 CAT excavator, (1) 320 CAT excavator, (1)Komatsu 39PX dozer, (1) Hamm 3625 compactor and (1) 740 CAT haul truck were utilized. In addition, staff included were (1) operator plus (1) surveyor. The first step was to backfill the pad up to the determined level with 0-200mm NPAG rock, and then enlarge the road south of the pad. Excess water (clean) was drained in order to construct the containment berms around the pad as showed in appendix 1 B. Once the rock pad was at the determined elevation, crushed 0-20mm NPAG material was placed on top of the berms. Correctives measures around the pad were undertaken due to some instability in the area where the fuel cabinet would be installed. Crushed 0-20mm NPAG material was placed on the top of the pad, compacted to prepare for the installation of the bituminous liner. Excavation in the surrounding ditches was completed in accordance with design specifications. A total amount of 1217m3 of NPAG 0-200mm and 455m3 of NPAG 0-20mm was used to complete this phase of the construction.

2.3 INSTALATION OF THE BITOUMINOUS LINER. July 25th – July 27th 2013

Quality control and quality approval: Stavibel

Construction contractor: Quamanittuap-Sana (FGL)

Liner crew: Texcel

General supervision and foreman: AEM

Equipment and manpower used included (1) 365 CAT excavator to unroll the liner and we had (1) operator, (1) surveyor, (2) liner installers and (3) laborers from Baker Lake. The liner was installed over a two day period. After installation, any holes that resulted were repaired and conformity tests were undertaken (pressure and tension). In addition, soft geotextile was placed under and over the liner to prevent puncturing that could occur while walking on the liner or during placement of the covering granular material. It was calculated that 2400m2 of bituminous liner and 2625m2 of soft geotextile was placed.

2.4 **CONSTRUCTION OF THE TANK PAD PHASE 2.** July 27th- July 31st 2013

Quality control and quality approval: Stavibel

Construction contractor: Quamanittuap-Sana (FGL)

Material transportation: BLCS

General supervision and foreman: AEM

Phase 2 of construction of the pad was to place crushed 0-20mm NPAG over the bituminous liner (previously covered with geotextile). The following equipment and manpower were used, (1) 365 CAT excavator, (1) 307 Cat excavator, (1) 39 PX Komatsu bulldozer, (1) 740 CAT haul truck, (1) Hamm 3625 compactor, (1) operator and (1) surveyor. During this phase the contractor's (BLCS) was out of service due to mechanical issues so the 0-20mm NPAG layer was screened to maintain quality. Any materials that screened larger than 0-20mm were removed by hand. A total of 728m3 of 0-20mm NPAG granular material were used to build the 300mm thick layer of liner protection. A slopped trench was excavated (1000mm up to ground level) to place an 8 inches steel conduit for electrical cable necessary to operate the pump house.

- FURTHER INFORMATION, PICTURES AND PLANS FOR THOSE STEPS CAN BE FOUND IN THE APPENDIX 1 AND 2

3- DESCRIPTION OF THE FACILITIES AND MECHANICAL PARTS ASSEMBLING.

3.1 NEW TANKS PLACEMENT AND INSTALATION OF THE PUMP HOUSE. Aug 5th –Aug 12th 2013

Installation crew: SM Construction

Field supervisor: Quamanittuap-Sana (FGL)

Crane and operator: J.M Francoeur

General supervision and foreman: AEM

20, double walled, 100,000L fuel storage tanks meeting CCME ULC requirements were placed on the pad described in Sec 2 above. Equipment and manpower used during this phase included (1) 35tns MCR crane, (6) technicians, (1) welder and (1) electrician. The tanks were placed according to the design specifications, ie level. Once the tanks placement was completed, foot bridges were installed as well as the pump house. * See figure at page 523 in SM'S manual, appendix 3

3.2 PIPING CONNECTION AND ELECTRICAL ASSEMBLING PHASE 1. Aug 12th – Aug 19th 2013

Installation crew: SM Construction

Field supervisor: Quamanittuap-Sana (FGL)

General supervision and foreman: AEM

During this phase (6) technicians and (1) welder assembled the 4 inch pipe and connections between the tanks and pump house. Also (1) electrician started the installation of electrical cables and control panels for the facility. All piping, pumps, electrical connections, etc. conformed to all applicable codes, specifications and regulations. * See SM'S manual under the technical data section, Pp. 3 to 512, APPENDIX 3.

3.3 PIPING CONNECTION AND ELECTRICAL ASSEMBLING PHASE 2. Aug 29th – Sept 17th

Installation crew: SM Construction

Field supervisor: Quamanittuap-Sana (FGL)

General supervision and foreman: AEM

For the final phase of the project, (6) technicians and (1) welder completed assembling and installation of the pipe connections between the tanks and inside the pump house. An (1) electrician connected all of the main cables, the panels and computers inside the pump hose. Hi-level alarms were also placed on all tanks and were tested as per specifications. All alarms were noted to be functional. After installation, all tanks were cleaned and washed inside and pressure tested as per specifications. During the pressure test, one tank indicated a loss of pressure. A small crack was found between the inside two layers of the tank. This might have occurred during the placement of this tank. It was decided not to add fuel to this tank this year. Repairs will be undertaken prior to re-fueling. At this point the tanks were ready to use for fuel storage.

- FURTHER INFORMATIONS, PARTS DESCRIPTIONS, PHOTOGRAPH, INSTALLATION AND ELECTRICAL PLANS CAN BE FOUND IN APPENDIX 3.

APPENDIX 1.

DRAWINGS.

A. DESIGN PLAN FOR COMMENTS:

Drawing number: 61-740-230-211_A

B. AS BUILT DRAWINGS:

Drawing number:	BAKER FF 1	PLANIMETRICAL VIEW
	BAKER FF 2	SECTION VIEW

NO. DESSIN DRAWING 61-740-230-211-A

FORMAT ARCHD

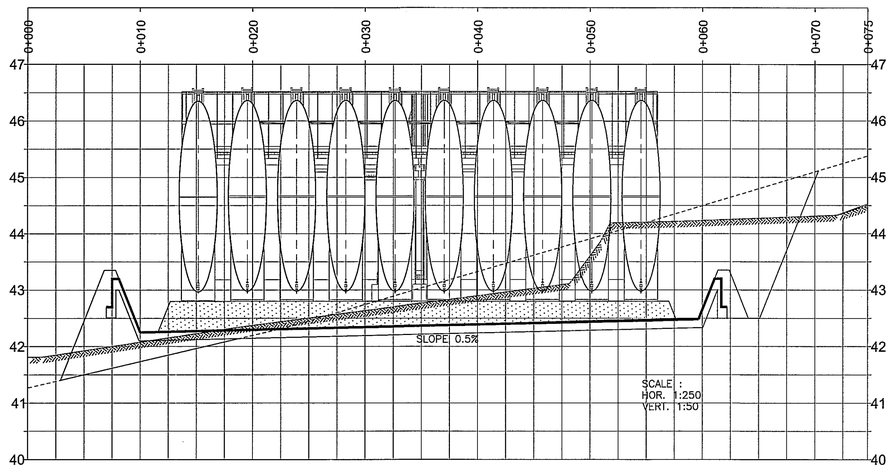

SECTION - A

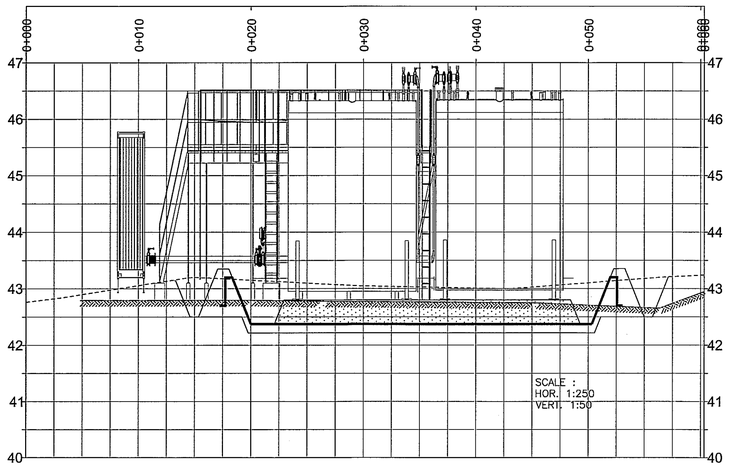

SECTION - B

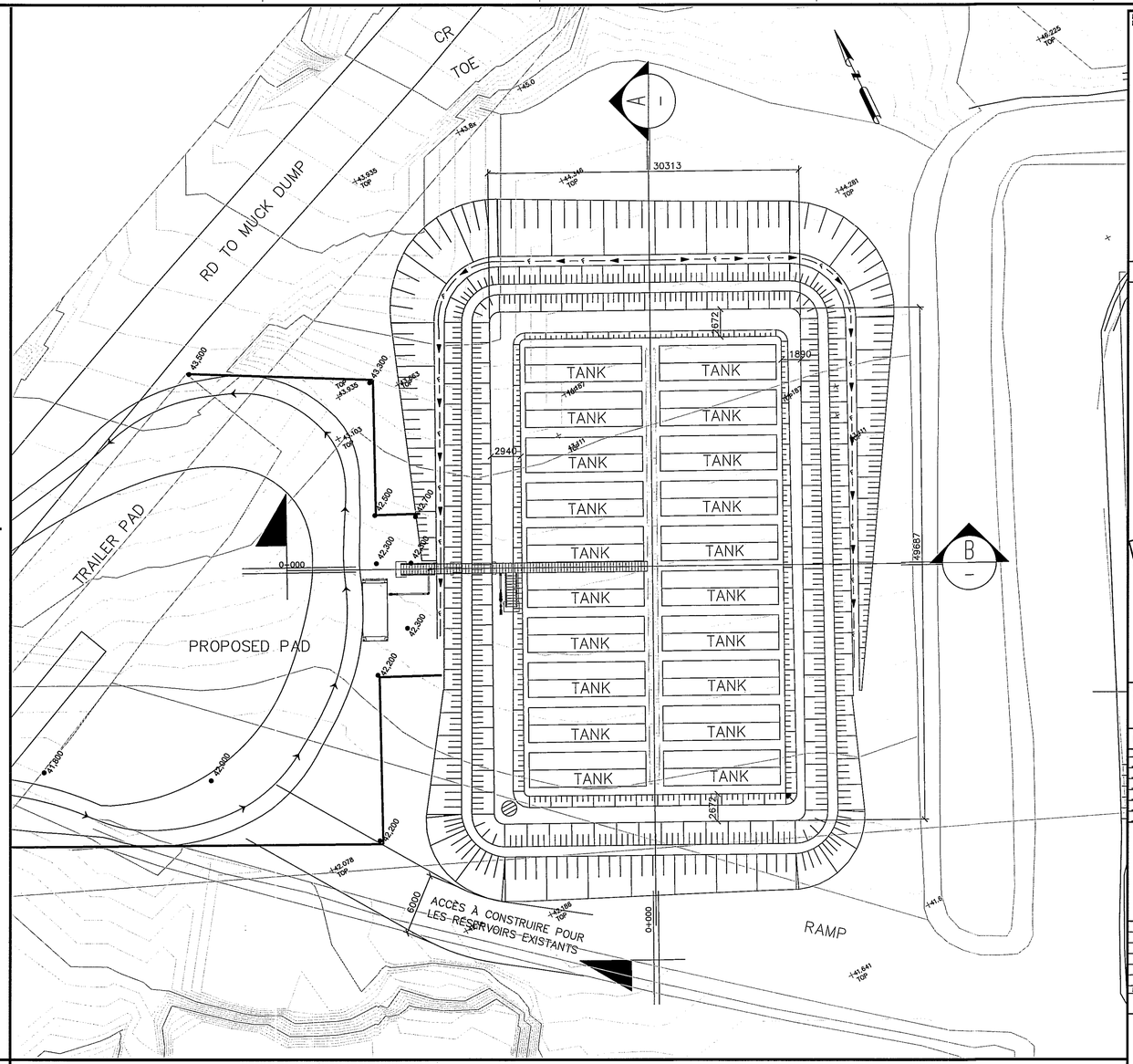

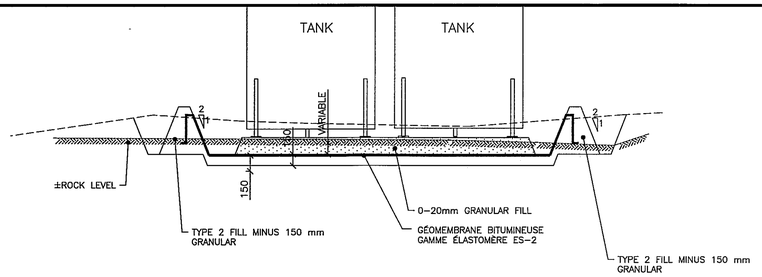

TYPICAL SECTION WITH OPTION COLETANCHE

SCALE : NONE

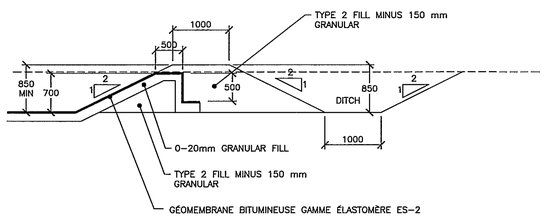

TYPICAL SECTION – DAM

SCALE : NONE

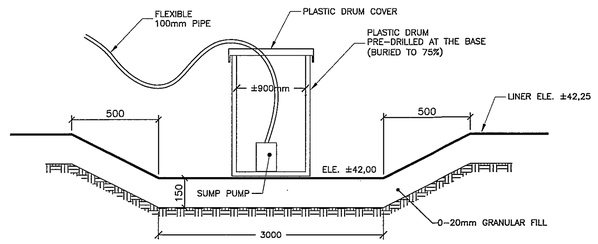

NOTES :

- THE WATER WILL BE REJECTED TO THE INFERIOR BASIN WHERE IT WILL BE TREATED WITH AN OIL SEPARATOR.

ACCESS WELL FOR DRAINING

SCALE : NONE

PLAN CLÉ
KEY PLAN

NOTES GÉNÉRAL / GENERAL NOTES

POUR COMMENTAIRES
FOR COMMENTS
AGNICO EAGLE
DATE : 2013-06-14

L'INFORMATION CI-CONTENUE EST LA PROPRIÉTÉ DE AGNICO EAGLE LTÉE ET DOIT ÊTRE RETOURNÉE SUR DEMANDE. SANS AUTORISATION ÉCRITE PRÉALABLE, TOUTE TRANSMISSION DE COPIE(S) À AUTRUI ET TOUTE UTILISATION AUTRE QUE CELLE POUR LAQUELLE L'INFORMATION EST PRÊTÉE SONT INTERDITES. © AGNICO EAGLE LTÉE

THE INFORMATION HERE ON IS THE PROPERTY OF AGNICO EAGLE LTD. AND MUST BE RETURNED UPON REQUEST. WITHOUT WRITTEN PERMISSION, ANY COPYING, TRANSMITTAL TO OTHERS AND ANY USE EXCEPT THAT FOR WHICH IT IS LOANED ARE PROHIBITED. © AGNICO EAGLE LTD.

DESSINS EN RÉFÉRENCE / REFERENCE DRAWINGS

TITRE / TITLE	# DWG
-	-
-	-
-	-
-	-
-	-

AGNICO EAGLE

REV.	DATE	DESCRIPTION	PAR/BY	APP.	CLIENT
A	2013-06-14	FOR COMMENTS	R.M.	R.M.	A.H.

REVISIONS

REGISTERED PROFESSIONAL ENGINEER
R. MARCOUX
LICENSEE
NT/NU

TITRE / TITLE
AGNICO-EAGLE – MEADOWBANK
740 FUEL STORAGE LAYDOWN AREA
230 GENERAL CIVIL WORKS
PLAN VIEW AND CROSS SECTION
TANKS

DESSINÉ PAR DRAWN BY	YVES BOISVERT, T.P.	DATE 2013-06-14
VÉRIFIÉ PAR CHECKED BY	RICHARD MARCOUX, Ing.	2013-06-14
APPROUVÉ PAR APPROVED BY	ALAIN HAMEL	2013-06-14
ÉCHELLE SCALE	AS SHOWN	DATE 2013-06-14
NO. DESSIN DRAWING NO.	61-740-230-211_A	
NO. PROJET PROJECT NO.	OP-84541-J	REVISION A / FEUILLE / SHT 1/1

AE-CART-ARCH D

P:\200-VD\VD3356\001\Dessins maîtres\30-Civ\61-740-230-211_A.dwg-2013-06-14 11:34:14

FILE NO. 61-740-230-211_A

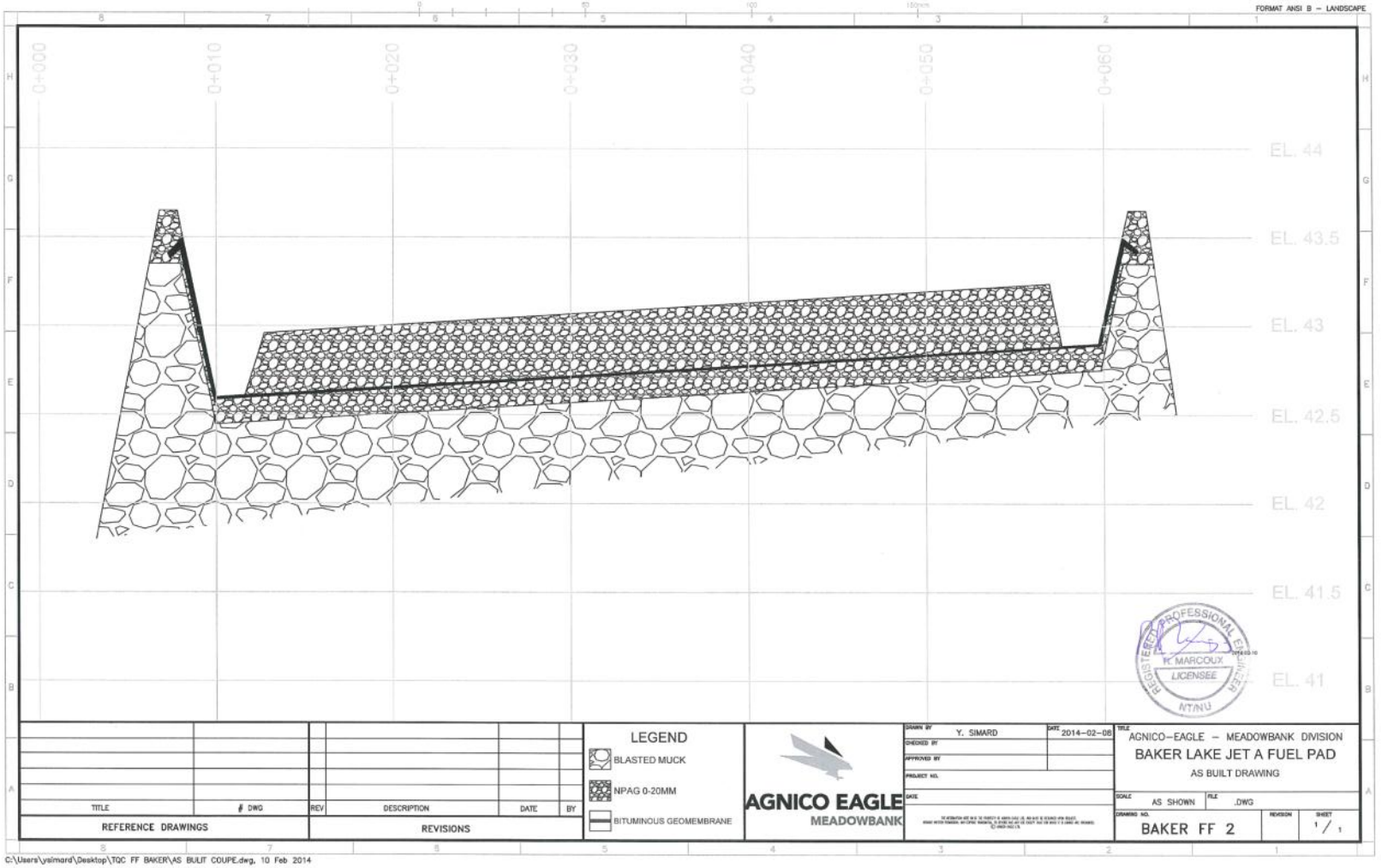
FORMAT ANSI B – LANDSCAPE
0+000
0+010
0+020
0+030
0+040
0+050
0+060
EL. 44
EL. 43.5
EL. 43
EL. 42.5
EL. 42
EL. 41.5
EL. 41
P. MARCOUX
LICENSEE
NT/NU
LEGEND
BLASTED MUCK
NPAG 0-20MM
BITUMINOUS GEOMEMBRANE
AGNICO EAGLE
MEADOWBANK
DRAWN BY Y. SIMARD
DATE 2014-02-06
CHECKED BY
APPROVED BY
PROJECT NO.
DATE
AGNICO–EAGLE – MEADOWBANK DIVISION
BAKER LAKE JET A FUEL PAD
AS BUILT DRAWING
SCALE AS SHOWN
FILE .DWG
DRAWING NO. BAKER FF 2
REVISION
SHEET 1 / 1
TITLE # DWG
REFERENCE DRAWINGS
REV DESCRIPTION DATE BY
REVISIONS
C:\Users\ysimard\Desktop\TQC FF BAKER\AS BUILT COUPE.dwg, 10 Feb 2014

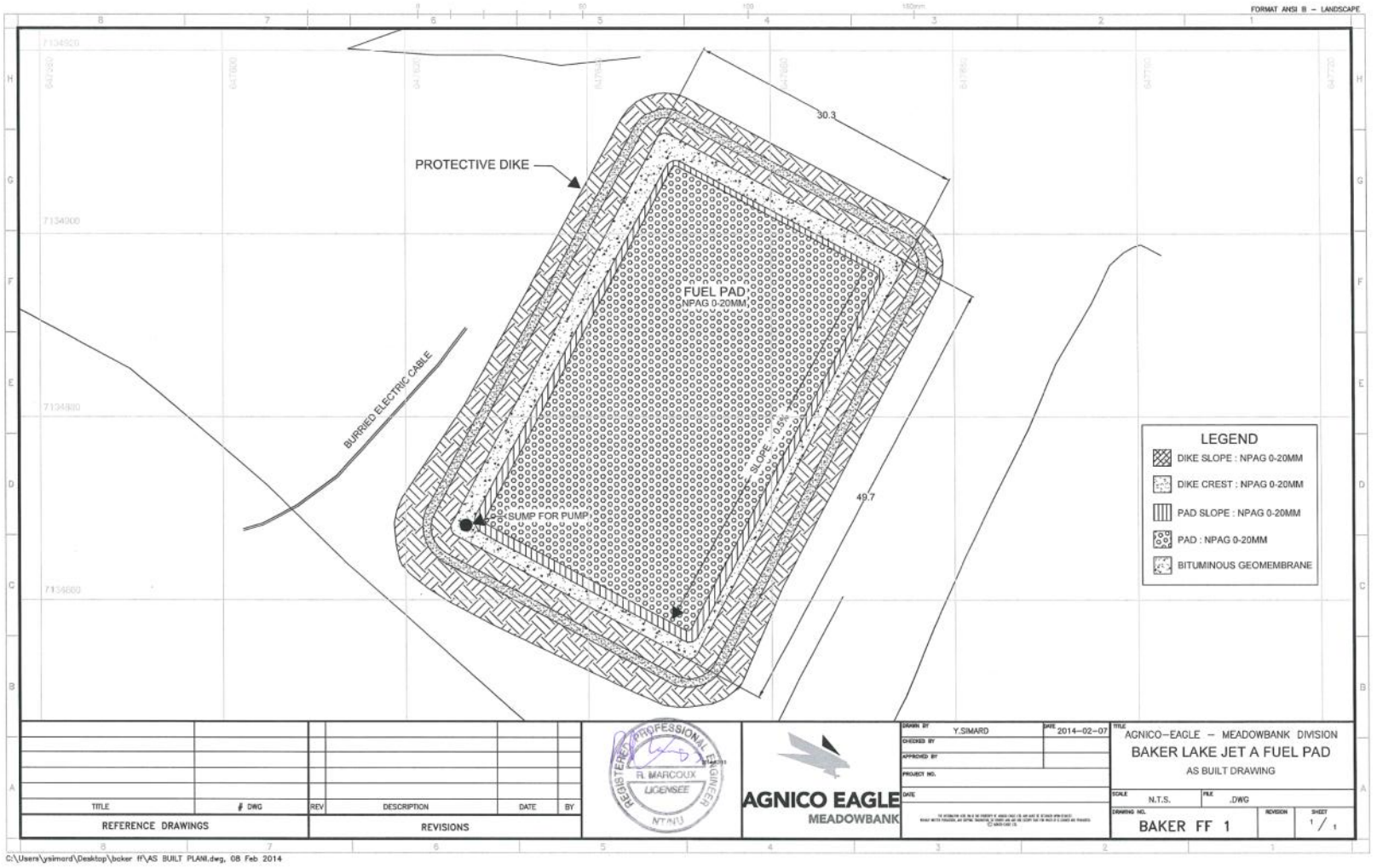
FORMAT ANSI B – LANDSCAPE
PROTECTIVE DIKE
30.3
FUEL PAD
NPAG 0-20MM
BURRIED ELECTRIC CABLE
SUMP FOR PUMP
49.7
LEGEND
DIKE SLOPE : NPAG 0-20MM
DIKE CREST : NPAG 0-20MM
PAD SLOPE : NPAG 0-20MM
PAD : NPAG 0-20MM
BITUMINOUS GEOMEMBRANE
REFERENCE DRAWINGS
TITLE
DWG
REVISIONS
REV
DESCRIPTION
DATE
BY
R. MARCOUX
LICENSEE
AGNICO EAGLE
MEADOWBANK
DRAWN BY Y.SIMARD
DATE 2014-02-07
CHECKED BY
APPROVED BY
PROJECT NO.
DATE
AGNICO–EAGLE – MEADOWBANK DIVISION
BAKER LAKE JET A FUEL PAD
AS BUILT DRAWING
SCALE N.T.S.
FILE .DWG
DRAWING NO. BAKER FF 1
REVISION
SHEET 1 / 1
C:\Users\ysimard\Desktop\baker ff\AS BUILT PLAN.dwg, 08 Feb 2014

APPENDIX 2.

STAVIBEL'S CONSTRUCTION DAILY REPORT.

DESCRIPTION OF THE FUEL CONTAINEMENT PAD CONSTRUCTION STEPS.

AGNICO EAGLE

RAPPORT DE VISITE DE CHANTIER

STAVIBEL

Title of project :	Baker Lake Jet-A Fuel Farm	Date : 2013-07-14	
Project # :	OP-84541-J /VD3356	Doc #:	VD3356-003-RV-01
Prepared by :	Michaël Racine	Contractor :	Fernand Gilbert Ltée
Verified by :	Richard Marcoux, ing.	Temperature :	10 à 16ºC Wind : 5 à 15 km/h

Object : Contractor's schedule (approximative hours)

Labour and machinery	**Company**	**Working hours**
1 Shovel CAT 365C L	FGL	11
Operator	FGL	12
Surveyor	FGL	9
10 tons roller compactor	BLCS	0
Bulldozer CAT D6 (DOZ09)	AEM	1
Field inspector	Stavibel	12

- **7h à 9h** Shovel 365 moves from Baker Lake to the Fuel Farm.
- **9h à 10h** Shovel 365 makes pit test at the North extremity of the projected pond.
- **10h à 12h** Shovel 365 removes the 0-20mm crushed stone in place.
- **13h à 17h30** Shovel 365 stockpiles the contaminated material outside the projected pond.
- **17h30 à 18h30** Bulldozer D6 profiles the infra.

Comments :

- Visit of Jean-François Béland (AEM foreman) and Dany Pageault (FGL superintendant) de 12h à 16h30
- After 3 test pits in the excavation zone, we found the presence of water and frozen material above the proposed elevation of the excavation. We need to increase the elevation of the project of 300mm.
- Presence of contaminated material and organic soil. The materials are stockpile and will be analyse by the environnment. Thereafter, they will indicate how to dispose of it.

- Photo #1 – 3 test pits. Smell of Jet-A fuel and water arrival.



- Photo #2 – Excavation and stockpile of the contaminated material until the final level of the infra.



Par : _____
Michaël Racine, tech.

_____
Richard Marcoux, ing.
No OIQ : 38724
Project manager

AGNICO EAGLE

RAPPORT DE VISITE DE CHANTIER

STAVIBEL

Title of project :	Baker Lake Jet-A Fuel Farm	Date : 2013-07-15	
Project # :	OP-84541-J /VD3356	Doc #:	VD3356-003-RV-02
Prepared by :	Michaël Racine	Contractor :	Fernand Gilbert Ltée
Verified by :	Richard Marcoux, ing.	Temperature :	8 à 17ºC Wind : 5 à 30 km/h

Object : Contractor's schedule (approximative hours)

Labour and machinery	**Company**	**Working hours**	**Volume (m3)**
1 Shovel CAT 365C L	FGL	7	
Opérator	FGL	12	
Surveyor	FGL	12	
Roller compactor	BLCS	1.9	
Bulldozer CAT D6T (DOZ09)	AEM	5	
Shovel 330C	BLCS	8.5	
2 articulated trucks CAT 740	BLCS	8.5	576
Field inspector	Stavibel	12	

- **6h30 à 18h30** Shovel 365 and Bulldozer D6T backfill with blasted rock 0-200 mm from quarry #1.
- **9h30 à 18h30** Loader 966 et 2 trucks haul the blasted rock 0-200 mm from quarry #1.
- **6h30 à 18h30** Compactor compacts the blasted rock when required.

Comments :

- Attempt to cover the stockpile of contaminated material with tarps after the request of the environment. Unfortunately the wind make this operation impossible.
- The water accumulations are pumped before backfilling above.

- Photo #1 – Overview of the infra. Some water accumulations caused by the thaw of the material in place. A small ditch will be make to try to drain this water during night.



Par : _____
Michaël Racine, tech.

_____
Richard Marcoux, ing.
No OIQ : 38724
Project manager

AGNICO EAGLE

RAPPORT DE VISITE DE CHANTIER

STAVIBEL

Title of project :	Baker Lake Jet-A Fuel Farm	Date : 2013-07-16	
Project # :	OP-84541-J /VD3356	Doc #:	VD3356-003-RV-03
Prepared by :	Michaël Racine	Contractor :	Fernand Gilbert Ltée
Verified by :	Richard Marcoux, ing.	Temperature :	8 à 17ºC Wind : 5 à 30 km/h

Object : Contractor's schedule (approximative hours)

Labour and machinery	**Company**	**Working hours**	**Volume (m3)**
1 Shovel CAT 365C L	FGL	11	
Operator	FGL	12	
Surveyor	FGL	12	
Roller compactor Protec Boxer 114	BLCS	0	
Bulldozer CAT D6T (DOZ09)	AEM	0	
Shovel CAT 330C	BLCS	11	
2 Articulated trucks CAT 740	BLCS	11	816
Field inspector	Stavibel	12	

- **6h30 à 18h30** Loader 966 and 2 trucks haul the blasted rock 0-200 mm from quarry #1.
- **6h30 à 12h00** Shovel 365 widens the road on the south side of the pond Sud with blasted rock 0-200 mm from quarry #1.
- **6h30 à 18h30** Shovel 365 backfills with blasted rock 0-200 mm from quarry #1.

Comments :

- Beginning of haulage of the contaminated material to the mine (4 loads per day).

- Photo #1 – Windening of the road on the south side of the pond



- Photo #2 – Drainage of the water on north side of the pad. The ground is more stable at the end of the day.



Par : _____
Michaël Racine, tech.

_____
Richard Marcoux, ing.
No OIQ : 38724
Project manager

AGNICO EAGLE

RAPPORT DE VISITE DE CHANTIER

STAVIBEL

Title of project :	Baker Lake Jet-A Fuel Farm	Date : 2013-07-17	
Project # :	OP-84541-J /VD3356	Doc #:	VD3356-003-RV-04
Prepared by :	Michaël Racine	Contractor :	Fernand Gilbert Ltée
Verified by :	Richard Marcoux, ing.	Temperature :	8 à 17ºC Wind : 30 à 70 km/h

Object : Contractor's schedule (approximative hours)

Labour and machinery	**Company**	**Working hours**	**Volume (m3)**
1 Shovel CAT 365C L	FGL	11	
Operator	FGL	12	
Surveyor	FGL	12	
Loader CAT 966H + operator	AEM	10	
Roller compactor Protec Boxer 114	BLCS	2.54	
Bulldozer CAT D6T (DOZ09)	AEM	0	
Shovel CAT 330C	BLCS	5	
2 articulated trucks CAT 740	BLCS	11	muck : 254.4 0-20mm : 272.5
Fiel inspector	Stavibel	12	

- **6h30 à 18h30** Shovel 365 builds the mini dikes with blasted rock 0-200 mm.
- **6h30 à 11h30** Shovel 330 and 2 trucks (BLCS) haul the blasted rock 0-200 mm from quarry #1.
- **7h30 à 10h15** Loader 966 separates the contaminated and the non-contaminated material.
- **10h15 à 18h30** Loader 966 builds the mini dikes.
- **13h à 18h** 2 trucks 740 (BLCS) haul the 0-20mm.

Comments :

- Haulage of the contaminated material to the mine (4 loads of 10 wheeler per day).
- The non-contaminated material that containt a bit of organic soil is stockpile in order to do the access road for the pump house.

- Photo #1 – Construction of the mini dikes around the pad. Stockpile of the 0-20mm on the pad.



- Photo #2 – Loading of the contaminated material.



Par : _____
Michaël Racine, tech.

_____
Richard Marcoux, ing.
No OIQ : 38724
Project manager

AGNICO EAGLE

RAPPORT DE VISITE DE CHANTIER

STAVIBEL

Title of project :	Baker Lake Jet-A Fuel Farm	Date : 2013-07-18	
Project # :	OP-84541-J /VD3356	Doc #:	VD3356-003-RV-05
Prepared by :	Michaël Racine	Contractor :	Fernand Gilbert Ltée
Verified by :	Richard Marcoux, ing.	Temperature :	5 à 10ºC Wind : 30 à 50 km/h

Object : Contractor's schedule (approximative hours)

Labour and machinery	**Company**	**Working hours**
1 Shovel CAT 365C L	FGL	9
Operator	FGL	12
Surveyor	FGL	12
Loader CAT 966H + operator	AEM	8
Roller compactor Protec Boxer 114	BLCS	0
Bulldozer CAT D6T (DOZ09)	AEM	0
Field inspector	Stavibel	12

- **6h30 à 12h00** Shovel 365 builds the mini dikes with blasted rock 0-200 mm.
- **6h30 à 15h30** Loader 966 loads the contaminated material, moves the contaminated stockpile that disturbed the construction of the ditch and moves the sea-cans.
- **13h à 15h** Shovel 365 stands by for mechanical problems.
- **15h à 18h30** Shovel 365 puts the 0-20mm on the mini dike.

Comments :

- Haulage of the contaminated material to the mine (6 loads of 10 wheeler per day).
- The crushed stone 0-20mm is stockpile and survey. The results give 18,17 m3/trucks instead of 24m3 as specified in the spec of the truck. Here are the adjusted volumes for the last days :

	2013-07-15		**2013-07-16**		**2013-07-17**		**Cumulatif**	
	load	volume (m3)	load	volume (m3)	load	volume (m3)	load	volume (m3)
Muck quarry 1	24	436,048	34	617,7347	14	254,3613	72	**1308,144**
0-3/4" BLCS		0		0	15	272,53	15	**272,53**

- Photo #1 – Placing the crushed stone 0-20mm on the mini dike.



- Photo #2 – Moving the contaminated stockpile to make the drainage ditch behind the north dike.



Par : _____
Michaël Racine, tech.

_____
Richard Marcoux, ing.
No OIQ : 38724
Project manager

AGNICO EAGLE

RAPPORT DE VISITE DE CHANTIER

STAVIBEL

Title of project :	Baker Lake Jet-A Fuel Farm	Date : 2013-07-19	
Project # :	OP-84541-J /VD3356	Doc #:	VD3356-003-RV-06
Prepared by :	Michaël Racine	Contractor :	Fernand Gilbert Ltée
Verified by :	Richard Marcoux, ing.	Temperature :	8 à 18ºC Wind : 20 à 30 km/h

Object : Contractor's schedule (approximative hours)

Labour and machinery	**Company**	**Working hours**
1 Shovel CAT 365C L	FGL	11
Opérateur	FGL	12
Arpenteur	FGL	12
Rouleau compacteur Protec Boxer 114	BLCS	1.21
Chargeur CAT 966H + opérateur	AEM	3.5
Camion 10 roues + opérateur	AEM	5.5
Bulldozer CAT D6T (DOZ09)	AEM	0
Surveillant de chantier	Stavibel	12

- **6h30 à 12h00** Shovel 365 loads the truck with the non-contaminated material that contain organic soil.
- **6h30 à 12h00** 10 wheels truck hauls the material containing organic soil for the construction of the access road for the pump house.
- **6h30 à 10h00** Loader 966 moves the concrete blocks and other small jobs.
- **13h à 18h30** Shovel 365 builds the mini dike and the infra on the north side of the pad.

Comments :

- Haulage of the contaminated material to the mine (6 loads of 10 wheeler per day).

- Photo #1 – Loading the truck with the non-contaminated material that contain organic soil for the construction of the access road for the pump house.



- Photo #2 – Reparation of an instability on the North-East side of the pad.



Par : _____
Michaël Racine, tech.

_____
Richard Marcoux, ing.
No OIQ : 38724
Project manager

AGNICO EAGLE

RAPPORT DE VISITE DE CHANTIER

STAVIBEL

Title of project :	Baker Lake Jet-A Fuel Farm	Date : 2013-07-20	
Project # :	OP-84541-J /VD3356	Doc #:	VD3356-003-RV-07
Prepared by :	Michaël Racine	Contractor :	Fernand Gilbert Ltée
Verified by :	Richard Marcoux, ing.	Temperature :	8 à 18ºC Wind : 5 à 10 km/h

Object : Contractor's schedule (approximative hours)

Labour and machinery	**Company**	**Working hours**
Shovel CAT 365C L	FGL	2
Shovel CAT 320	FGL	5
Bulldozer Komat'su 39px	FGL	4
Operator	FGL	12
Surveyor	FGL	12
Roller compactor Protec Boxer 114	BLCS	0.4
Truck CAT 740	BLCS	114.1 m3
Bulldozer CAT D6T (DOZ09)	AEM	0
Field inspector	Stavibel	12

- **6h30 à 8h30** Shovel 365 builds the mini dike.
- **8h30 à 10h30** Shovel 320 is moving from Baker Lake to the field.
- **10h30 à 14h30** Shovel 320 builds the mini dike and profile the ditch.
- **14h30 à 18h30** Bulldozer 39px places the 0-20mm crushed stone.
- **14h30 à 18h30** Truck CAT 740 places the 0-20mm crushed stone.

Comments :

- Survey of a load of 0-20mm crushed stone to confirm the volume. Recalculation of the volumes with 16.3m^3/load.

	2013-07-15		2013-07-16		2013-07-17		2013-07-20		Cumulative	
	load	volume	load	volume	load	volume	load	volume	load	volume
Muck quarry 1	24	391,2	34	554,2	14	228,2			72	**1173,6**
0-3/4" BLCS		0		0	15	244,5	7	114,1	15	**407,5**

- Photo #1 – There is frost in the north ditch that prevent the excavation to the desired elevation.



- Photo #2 – A bit of water on the pad because of the ditch that is to high. No instability.



- Photo #3 – Placing the 0-20mm crushed stone.



Par : _____
Michaël Racine, tech.

_____
Richard Marcoux, ing.
No OIQ : 38724
Project manager

AGNICO EAGLE

RAPPORT DE VISITE DE CHANTIER

STAVIBEL

Title of project :	Baker Lake Jet-A Fuel Farm	Date : 2013-07-21	
Project # :	OP-84541-J /VD3356	Doc #:	VD3356-003-RV-08
Prepared by :	Michaël Racine	Contractor :	Fernand Gilbert Ltée
Verified by :	Richard Marcoux, ing.	Temperature :	8 à 18ºC Wind : 5 à 10 km/h

Object : Contractor's schedule (approximative hours)

Labour and machinery	**Company**	**Working hours**
Shovel CAT 365C L	FGL	0
Shovel CAT 320	FGL	9
Bulldozer Komat'su 39px	FGL	2
Operator	FGL	12
Surveyor	FGL	12
Roller compacter Hamm 3625	FGL	2
Truck CAT 740	BLCS	48.9 m3
Bulldozer CAT D6T (DOZ09)	AEM	0
Field inspector	Stavibel	12

- **6h30 à 15h30** Shovel 320 builds the dike, builds the access road and places the concrete blocks for the pump house.
- **15h30 à 17h30** Bulldozer 39px places the 0-20mm crushed stone.
- **17h30 à 18h30** Shovel 320 digs the ditch.
- **15h30 à 17h00** Truck CAT 740 hauls the 0-20mm crushed stone.

Comments :

- Volumes of material hauled by BLCS :

	2013-07-15		**2013-07-16**		**2013-07-17**		**2013-07-20**		**2013-07-21**		**Cumulative**	
	load	volume	load	volume	load	volume	load	volume	load	volume	load	volume
Muck quarry 1	24	391,2	34	554,2	14	228,2					72	**1173,6**
0-3/4" BLCS		0		0	15	244,5	7	114,1	3	48,9	15	**407,5**

- Photo #1 – Placing the 0-20mm crushed stone. All the 0-20mm is on the field at the end of the day.



- Photo #2 – Excavation of the north ditch at the good elevation to drain the pad infra.



Par : _____
Michaël Racine, tech.

_____
Richard Marcoux, ing.
No OIQ : 38724
Project manager

AGNICO EAGLE

RAPPORT DE VISITE DE CHANTIER

STAVIBEL

Title of project :	Baker Lake Jet-A Fuel Farm	Date : 2013-07-22	
Project # :	OP-84541-J /VD3356	Doc #:	VD3356-003-RV-09
Prepared by :	Michaël Racine	Contractor :	Fernand Gilbert Ltée
Verified by :	Richard Marcoux, ing.	Temperature :	8 à 15ºC Wind : 5 à 10 km/h

Object : Contractor's schedule (approximative hours)

Labour and machinery	**Company**	**Working hours**
Shovel CAT 365C L	FGL	0
Shovel CAT 320	FGL	2.5
Bulldozer Komat'su 39px	FGL	0
Operator	FGL	5.5
Surveyor	FGL	5.5
Roller compactor Hamm 3625	FGL	0
Field inspector	Stavibel	12

- **16h à 18h30** Shovel 320 digs the ditch around the pad.

Comments :

- Cross shift. No activity on the field before 16h. I make a roundtrip to Meadowbank to go get the new operator and surveyor.
- Volumes of material hauled by BLCS :

	2013-07-15		**2013-07-16**		**2013-07-17**		**2013-07-20**		**2013-07-21**		**Cumulative**	
	load	volume	load	volume	load	volume	load	volume	load	volume	load	volume
Muck quarry 1	24	391,2	34	554,2	14	228,2					72	**1173,6**
0-3/4" BLCS		0		0	15	244,5	7	114,1	3	48,9	15	**407,5**

- Photo #1 – Excavation of the north ditch to the frost. There is a groundwater artery.



Par : _____
Michaël Racine, tech.

_____
Richard Marcoux, ing.
No OIQ : 38724
Project manager

AGNICO EAGLE

RAPPORT DE VISITE DE CHANTIER

STAVIBEL

Title of project :	Baker Lake Jet-A Fuel Farm	Date : 2013-07-23	
Project # :	OP-84541-J /VD3356	Doc #:	VD3356-003-RV-10
Prepared by :	Michaël Racine	Contractor :	Fernand Gilbert Ltée
Verified by :	Richard Marcoux, ing.	Temperature :	8 à 15ºC Wind : 5 à 10 km/h

Object : Contractor's schedule (approximative hours)

Labour and machinery	**Company**	**Working hours**
Shovel CAT 365C L	FGL	0
Shovel CAT 320	FGL	9
Bulldozer Komat'su 39px	FGL	1
Operator	FGL	12
Surveyor	FGL	12
Roller compactor Hamm 3625	FGL	5
Truck CAT 740	BLCS	32.6 m3
Field inspector	Stavibel	12

- **6h30 à 11h** Shovel 320 places the 0-20mm crushed stone.
- **8h à 9h** Truck CAT 740 hauls the 0-20mm cruched stone.
- **11h à 12h** Bulldozer 39px places the 0-20mm cruched stone.
- **12h à 15h** Shovel 320 finishes the mini dike and builds the key for the membrane.
- **15h à 18h30** Shovel 320 builds the acces road for the pump house.

Comments :

- Volumes of material hauled by BLCS :

	2013-07-15		**2013-07-16**		**2013-07-17**		**2013-07-20**		**2013-07-21**		**2013-07-23**		**Cumulative**	
	load	volume	load	volume	load	volume	load	volume	load	volume	load	volume	load	volume
Muck	24	391,2	34	554,2	14	228,2							72	**1173,6**
0-3/4"					15	244,5	7	114,1	3	48,9	2	32,6	15	**440,1**

- Photo #1 – Overview of the pond ready for the geotextile and the bituminous geomembrane.



- Photo #2 – Small key trench for the membrane.



- Photo #3 – Construction of the access road for the pump house.



- Photo #4 – Arrival of 11 tanks of 100 000L and 2 tanks of 50 000L on the barge.



Par : _____
Michaël Racine, tech.

_____
Richard Marcoux, ing.
No OIQ : 38724
Project manager

AGNICO EAGLE

RAPPORT DE VISITE DE CHANTIER

STAVIBEL

Title of project :	Baker Lake Jet-A Fuel Farm	Date : 2013-07-24	
Project # :	OP-84541-J /VD3356	Doc #:	VD3356-003-RV-11
Prepared by :	Michaël Racine	Contractor :	Fernand Gilbert Ltée
Verified by :	Richard Marcoux, ing.	Temperature :	15 à 23ºC Wind : 5 à 20 km/h

Object : Contractor's schedule (approximative hours)

Labour and machinery	**Company**	**Working hours**
Shovel CAT 365C L	FGL	0
Shovel CAT 320	FGL	0
Bulldozer Komat'su D39px	FGL	1
Operator	FGL	12
Surveyor	FGL	12
Roller compactor Hamm 3625	FGL	0
3 labours	FGL	4
2 membrane installers	Texcel	3.5
Shovel CAT 307	AEM	4.5
Field inspector	Stavibel	12

- **6h30 à 7h30** Stand by
- **7h30 à 12h** Shovel 307 cleans the membrane in previson of the reparations between the existing diesel tanks #1 and 2.
- **8h à 12h** 3 labours place the crushed stone 0-20 mm crushed stone to make sure the foundation for the bituminous geomembrane is flat.
- **17h à 18h** Bulldozer 39px places the 0-20mm crushed stone on the access road for the pump house.

Comments:

- The membrane installers arrive at 15h.

Par : _____
Michaël Racine, tech.

_____
Richard Marcoux, ing.
No OIQ : 38724
Project manager

AGNICO EAGLE

RAPPORT DE VISITE DE CHANTIER

STAVIBEL

Title of project :	Baker Lake Jet-A Fuel Farm	Date : 2013-07-25	
Project # :	OP-84541-J /VD3356	Doc #:	VD3356-003-RV-12
Prepared by :	Michaël Racine	Contractor :	Fernand Gilbert Ltée
Verified by :	Richard Marcoux, ing.	Temperature :	15 à 24ºC Wind : 5 à 20 km/h

Object : Contractor's schedule (approximative hours)

Labour and machinery	**Company**	**Working hours**
Shovel CAT 365C L	FGL	9
Shovel CAT 320	FGL	0
Bulldozer Komat'su 39px	FGL	0
Roller compactor Hamm 3625	FGL	0
Operator	FGL	12
Surveyor	FGL	12
3 Labours	FGL	12
Vibratory plate (small)	BLCS	1 jour
2 membrane installers	Texcel	12
Field inspector	Stavibel	12

- **6h30 à 11h30** Shovel 365 places the geotextile and failed attempt for the installation of the bituminous geomembrane.
- **11h30 à 16h30** Stand by
- **16h30 à 20h** Shovel 365 places the bituminous geomembrane.

Comments :

- Impossible to place the membrane with the membrane rack available. Waiting for the rack with bearings to roll out the membrane from 11h30 to 16h30. The wasted time is catched up after souper.

- Photo #1 – Compaction of the slopes with the vibratory plate to avoid rock punching in the membrane.



- Photo #2 – Placing the geotextile and the bituminous geomembrane.



Par : _____
Michaël Racine, tech.

_____
Richard Marcoux, ing.
No OIQ : 38724
Project manager

AGNICO EAGLE

RAPPORT DE VISITE DE CHANTIER

STAVIBEL

Title of project :	Baker Lake Jet-A Fuel Farm	Date : 2013-07-26	
Project # :	OP-84541-J /VD3356	Doc #:	VD3356-003-RV-13
Prepared by :	Michaël Racine	Contractor :	Fernand Gilbert Ltée
Verified by :	Richard Marcoux, ing.	Temperature :	15 à 26ºC Wind: 5 à 20 km/h

Object : Contractor's schedule (approximative hours)

Labour and machinery	**Company**	**Working hours**
Shovel CAT 365C L	FGL	4.5
Shovel CAT 320	FGL	0
Bulldozer Komat'su 39px	FGL	0
Roller compactor Hamm 3625	FGL	0
Operator	FGL	12
Surveyor	FGL	12
3 labours	FGL	12
2 membrane installers	Texel	12
Field inspector	Stavibel	12

- **6h30 à 18h30** 4 labours (FGL) et 2 labours (Texcel) place the bituminous geomembrane.
- **6h30 à 9h** Shovel 365 places the bituminous geomembrane.
- **9h à 12h** Shovel 320 works on another project for the diesel fuel tanks.
- **13h à 15h** Shovel 365 places the bituminous geomembrane.
- **15h à 16h** Shovel 320 works on another project for the diesel fuel tanks.
- **16h à 18h30** Shovel 365 places the bituminous geomembrane.

Comments :

- Photo #1 – Placing the bituminous geomembrane with a geotextile under.



- Photo #2 – Reparation of hole in the bituminous geomembrane.



Par : _____
Michaël Racine, tech.

_____
Richard Marcoux, ing.
No OIQ : 38724
Project manager

AGNICO EAGLE

RAPPORT DE VISITE DE CHANTIER

STAVIBEL

Title of project :	Baker Lake Jet-A Fuel Farm	Date : 2013-07-27	
Project # :	OP-84541-J /VD3356	Doc #:	VD3356-003-RV-14
Prepared by :	Michaël Racine	Contractor :	Fernand Gilbert Ltée
Verified by :	Richard Marcoux, ing.	Temperature :	15 à 23ºC Wind : 0 à 10 km/h

Object : Contractor's schedule (approximative hours)

Labour and machinery	**Company**	**Working hours**
Shovel CAT 365C L	FGL	5.5
Shovel CAT 320	FGL	0
Bulldozer Komat'su 39px	FGL	0
Roller compactor Hamm 3625	FGL	0
Operator	FGL	12
Surveyor	FGL	12
3 Labours	FGL	4
Generator 6000 W	BLCS	1 jour
Truck Cat 740	BLCS	55.2 m3
2 membrane installers	Texel	6.5
Field inspector	Stavibel	12

- **6h30 à 12h** Shovel 365 et 2 labours (Texcel) place the bituminous geomembrane.
- **6h30 à 10h30** 3 labours (FGL) place the bituminous geomembrane.
- **13h à 15h** 2 labours (Texcel) test the resistance of the welds in the bituminous geomembrane.
- **13h à 18h30** Operator and surveyor (FGL) stand by.
- **17h à 18h30** Truck CAT 740 hauls the 0-20mm crushed stone.

Comments :

- Inspection of the membrane.
- The 0-20 mm crushed stone produce by BLCS for the pad above the bituminous geomembrane is non- compliant. It contains particules up to 1-1/2". The material is rescreened and the placing of the 0-20 mm crushed stone begins at the end of the day.
- I inspect the membrane before filling above to make sure that no hole and no punching remains. Small rocks are detected under the membrane. Pieces of membrane are added on it.

- Survey of a load of 0-20 mm crushed stone. The result is 18.4 m3/load. Here are the corrected quantities according to this new volume:

	0-3/4"		Muck quarry 1	
	load	volume (m3)	load	volume (m3)
2013-07-15			24	441,6
2013-07-16			34	625,6
2013-07-17	15	276	14	257,6
2013-07-20	7	128,8		
2013-07-21	3	55,2		
2013-07-23	2	36,8		
2013-07-27	3	55,2		
Cumulative	30	**552**	72	**1324,8**

- Photo #1 – Installing the bituminous geomembrane with a geotextile under.

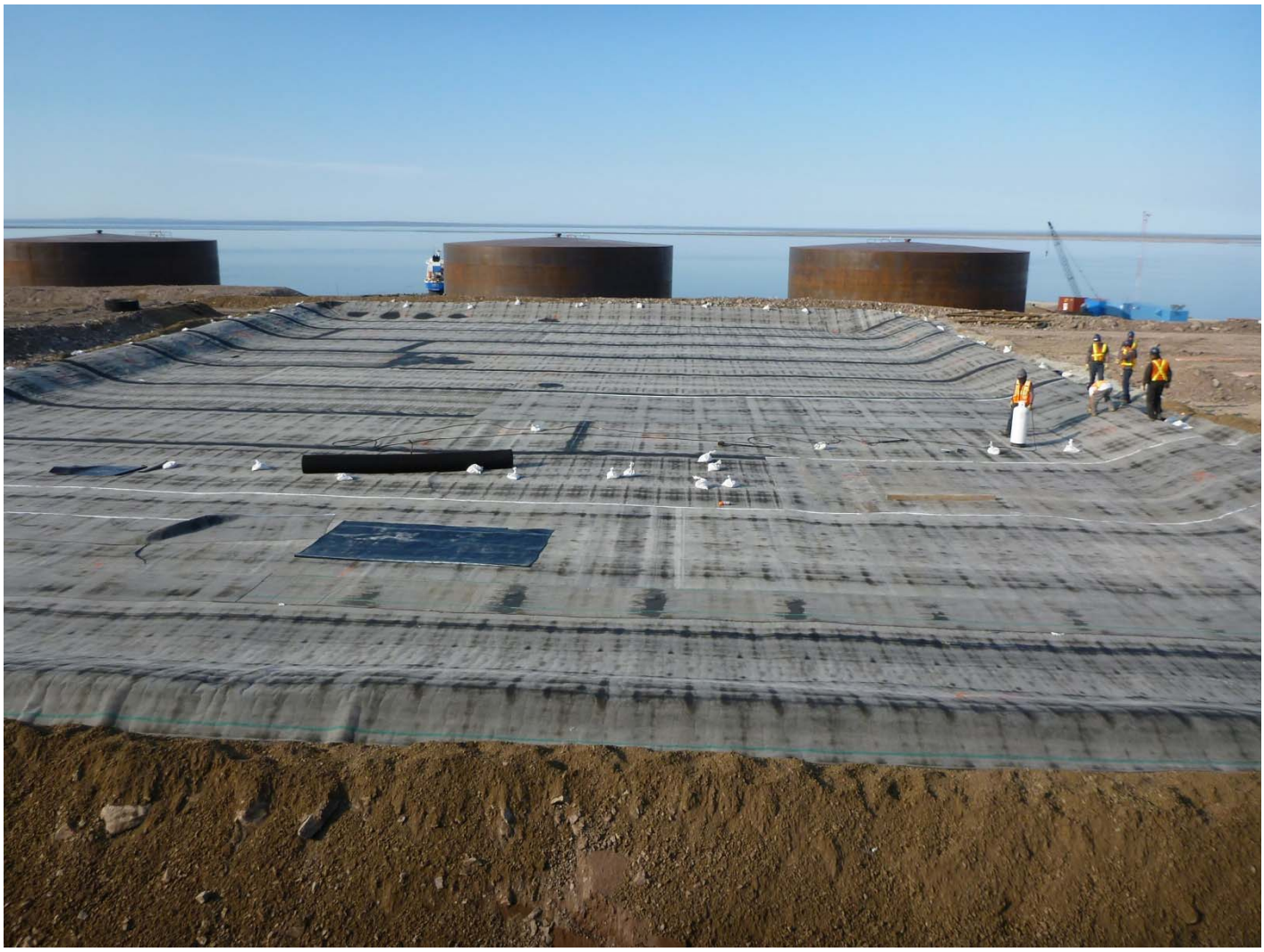

- Photo #2 – Sampling of Colétanche in place to test the welds resistance with the tensometer. The results are compliant according to the Texel membrane installers.

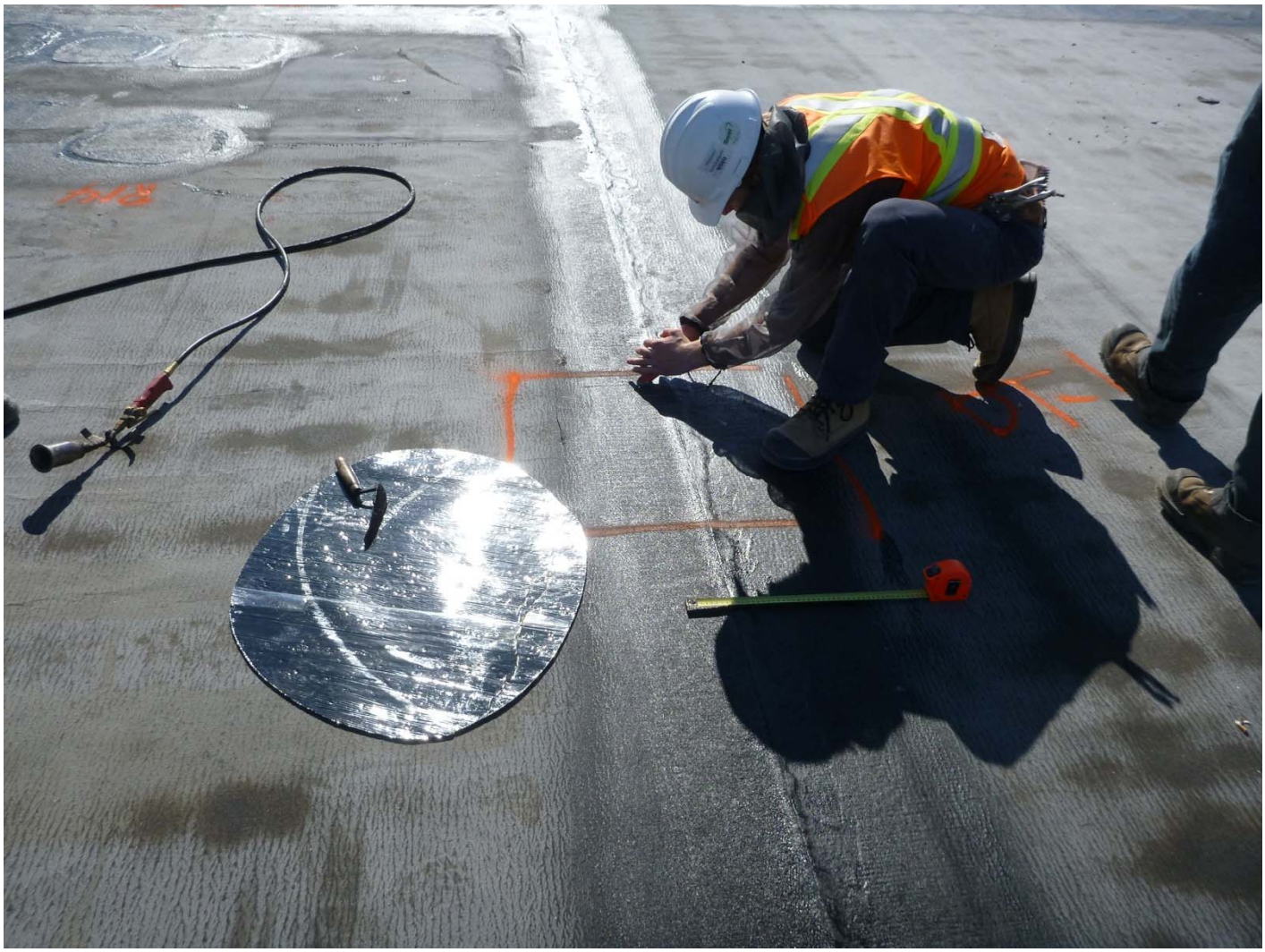

- Photo #3 – Inspection of the membrane. Small proeminent rocks (10mm and less) are detected at some place under the membrane. A second tickness of colétanche is added on these spots to make sure there will not be any punching.



Par : _____
Michaël Racine, tech.

_____
Richard Marcoux, ing.
No OIQ : 38724
Project manager

AGNICO EAGLE

RAPPORT DE VISITE DE CHANTIER

STAVIBEL

Title of project :	Baker Lake Jet-A Fuel Farm	Date : 2013-07-28	
Project # :	OP-84541-J /VD3356	Doc #:	VD3356-003-RV-15
Prepared by :	Michaël Racine	Contractor :	Fernand Gilbert Ltée
Verified by :	Richard Marcoux, ing.	Temperature :	15 à 23ºC Wind : 0 à 10 km/h

Object : Contractor's schedule (approximative hours)

Labour and machinery	**Company**	**Working hours**
Shovel CAT 365C L	FGL	8
Shovel CAT 320	FGL	0
Bulldozer Komat'su 39px	FGL	2
Roller compactor Hamm 3625	FGL	0
Operator	FGL	12
Surveyor	FGL	12
Truck Cat 740	BLCS	239.2 m3
Shovel Cat 307	AEM	1
Field inspector	Stavibel	12

- **6h30 à 18h30** Shovel 365, Shovel 320 et Bulldozer 39px (alternating) place the 0-20mm crushed stone on the bituminous geomembrane.
- **8h à 18h30** Truck CAT 740 hauls the 0-20mm crushed stone.

Comments :

- After comparison of the specs of the shovel CAT 307 and the bulldozer Komat'su 39px, we decide to use the bulldozer instead of the shovel 307. The ground pressure is 33.34 kPa (with the bulldozer) instead of 32.3 kPa (with the shovel).
- Big waiting time for the BLCS material. Only 1 truck. Around 2 loads/hour.

- Summary of the volumes hauled by BLCS (18.4 m^3/load) :

	0-3/4"		Muck quarry 1	
	load	volume (m3)	load	volume (m3)
2013-07-15			24	441,6
2013-07-16			34	625,6
2013-07-17	15	276	14	257,6
2013-07-20	7	128,8		
2013-07-21	3	55,2		
2013-07-23	2	36,8		
2013-07-27	3	55,2		
2013-07-28	13	239,2		
Cumulative	43	**791,2**	72	**1324,8**

- Photo #1 – Sreening of the 0-20mm and loading of the trucks at the Nuna Pad (BLCS).



- Photo #2 – Placing the 0-20mm above the bituminous geomembrane. A geotextile is place before.



Par : _____
Michaël Racine, tech.

_____
Richard Marcoux, ing.
No OIQ : 38724
Project manager

AGNICO EAGLE

RAPPORT DE VISITE DE CHANTIER

STAVIBEL

Title of project :	Baker Lake Jet-A Fuel Farm	Date : 2013-07-29	
Project # :	OP-84541-J /VD3356	Doc #:	VD3356-003-RV-16
Prepared by :	Michaël Racine	Contractor :	Fernand Gilbert Ltée
Verified by :	Richard Marcoux, ing.	Temperature :	15 à 17ºC Wind : 20 à 30 km/h

Object : Contractor's schedule (approximative hours)

Labour and machinery	**Company**	**Working hours**
Shovel CAT 365C L	FGL	7.5
Shovel CAT 320	FGL	0
Bulldozer Komat'su 39px	FGL	3.5
Rolle compactor Hamm 3625	FGL	0
Operator	FGL	12
Surveyor	FGL	12
Truck Cat 740	BLCS	257.6 m3
Shovel Cat 307	AEM	0
Field inspector	Stavibel	12

- **6h30 à 18h30** Shovel 365 et Bulldozer 39px (alterning) place the 0-20mm on the bituminous geomembrane.
- **7h à 18h30** Camion CAT 740 hauls the 0-20mm.

Comments :

- Big waiting time for the BLCS material. Only 1 truck. About 40 minutes between loads.
- The BLCS crusher is out of use. The 0-20mm will be make entirely by the screener.

- Summary of the volumes hauled by BLCS (18.4 m^3/load) :

	0-3/4"		Muck quarry 1	
	load	volume (m3)	load	volume (m3)
2013-07-15			24	441,6
2013-07-16			34	625,6
2013-07-17	15	276	14	257,6
2013-07-20	7	128,8		
2013-07-21	3	55,2		
2013-07-23	2	36,8		
2013-07-27	3	55,2		
2013-07-28	13	239,2		
2013-07-29	14	257,6		
Cumulative	57	**1048,8**	72	**1324,8**

- Photo #1 – Lot of particules bigger than 20mm in the 0-20mm brought by BLCS. We advise BLCS to check the sreener. Indeed, there was a gap on the side of the sreen because of a missing inner bar. After the reparation of the screener, there is still presence of particules up to 100mm in the material from an unknow source. We remove them by hand on the field, but there is still a lot of rocks around 1 1/2" big.



- Photo #2 – Placing the 0-20mm above the bituminous geomembrane. A geotextile is placed before.



Par : _____
Michaël Racine, tech.

_____
Richard Marcoux, ing.
No OIQ : 38724
Project manager

AGNICO EAGLE

RAPPORT DE VISITE DE CHANTIER

STAVIBEL

Title of project :	Baker Lake Jet-A Fuel Farm	Date : 2013-07-30	
Project # :	OP-84541-J /VD3356	Doc #:	VD3356-003-RV-17
Prepared by :	Michaël Racine	Contractor :	Fernand Gilbert Ltée
Verified by :	Richard Marcoux, ing.	Temperature :	15 à 17ºC Wind : 20 à 30 km/h

Object : Contractor's schedule (approximative hours)

Labour and machinery	**Company**	**Working hours**
Shovel CAT 365C L	FGL	7
Shovel CAT 320	FGL	0
Bulldozer Komat'su 39px	FGL	4
Roller compactor Hamm 3625	FGL	0
Operator	FGL	12
Surveyor	FGL	12
Truck Cat 740	BLCS	202.4 m3
Shovel Cat 307	AEM	0
Field inspector	Stavibel	12

- **6h30 à 18h30** Shovel 365 and Bulldozer 39px (alterning) place the 0-20mm on the bituminous geomembrane.
- **8h à 18h00** Truck CAT 740 hauls the 0-20mm.

Comments :

- Big waiting time for the BLCS material. Only 1 truck. About 40 minutes between loads.
- The BLCS crusher is out of use. The 0-20mm will be make entirely by the screener.
- Taking of 2 samples of 0-20mm on the field and 1 more sample in the BLSC stockpile at the Nuna Pad.

- Summary of the volumes hauled by BLCS (18.4 m^3/load) :

	0-3/4"		Muck quarry 1	
	load	volume (m3)	load	volume (m3)
2013-07-15			24	441,6
2013-07-16			34	625,6
2013-07-17	15	276	14	257,6
2013-07-20	7	128,8		
2013-07-21	3	55,2		
2013-07-23	2	36,8		
2013-07-27	3	55,2		
2013-07-28	13	239,2		
2013-07-29	14	257,6		
2013-07-30	11	202,4		
Cumulative	68	**1251,2**	72	**1324,8**

- Photo #1 – I mesured the mesh size of the BLCS screener. The opening of 30mm explain the presence of particules higher than 20 mm. BLCS affirmed that they don't have a smaller screen on July 27th when they change the screen. Also, there is still several rocks up to 100 mm in the 0-20 mm. We remove them by hand on the field.





- Photo #2 – Placing the 0-20mm above the bituminous geomembrane. A geotextile is placed before.



- Photo #3 – Compaction test with the roller compacter Hamm 3625 on low vibration directly on the 0-20mm uncompacted and without any covering above. Not any hole nor any deformation are noticed on the bituminous geomembrane. The decision is taken to use the roller compactor for the compaction of the pad above the Colétanche membrane.



Par : _____
Michaël Racine, tech.

_____
Richard Marcoux, ing.
No OIQ : 38724
Project manager

AGNICO EAGLE

RAPPORT DE VISITE DE CHANTIER

STAVIBEL

Title of project :	Baker Lake Jet-A Fuel Farm	Date : 2013-07-31	
Project # :	OP-84541-J /VD3356	Doc #:	VD3356-003-RV-18
Prepared by :	Michaël Racine	Contractor :	Fernand Gilbert Ltée
Verified by :	Richard Marcoux, ing.	Temperature :	15 à 17ºC Wind : 20 à 30 km/h

Object : Contractor's schedule (approximative hours)

Labour and machinery	**Company**	**Working hours**
Shovel CAT 365C L	FGL	5
Shovel CAT 320	FGL	4.5
Bulldozer Komat'su 39px	FGL	1.5
Roller compactor Hamm 3625	FGL	2
Operator	FGL	12
Surveyor	FGL	12
Truck Cat 740	BLCS	33.8 m3
Water tanker	Hamlet	2
Shovel Cat 307	AEM	0
Field inspector	Stavibel	12

- **6h30 à 10h** Shovel 365 and Bulldozer 39px (alterning) place the 0-20mm on the bituminous geomembrane.
- **8h30 à 10h30** Water tanker moistens the 0-20mm using a total of 15234 L of water.
- **10h30 à 13h30** Compactor compacts the pad of 0-20mm.
- **10h à 14h** Shovel 365 moves the contaminated stockpile to profile better the ditch.
- **14h à 18h30** Shovel 320 backfills the small key trench for the bituminous geomembrane and installs a steel pipe for the electric wire feeding the pump house..

Comments :

- Departure of the field inspector (myself) on August 1st around 7h.

- Survey of 42 loads of 0-20mm in place uncompacted. Here is the summary of the volumes haules by BLCS (estimate with an average of 16.9 m^3/load) :

	0-3/4"		Muck quarry 1	
	load	volume (m3)	load	volume (m3)
2013-07-15			24	405,6
2013-07-16			34	574,6
2013-07-17	15	253,5	14	236,6
2013-07-20	7	118,3		
2013-07-21	3	50,7		
2013-07-23	2	33,8		
2013-07-27	3	50,7		
2013-07-28	13	219,7		
2013-07-29	14	236,6		
2013-07-30	11	185,9		
2013-07-31	2	33,8		
Cumulative	70	**1183**	72	**1216,8**

- Photo #1 – Moistening and compaction of the 0-20mm. Compaction: 2 static passes, 1 vibratory pass in each direction and 2 last static passes.



- Photo #2 – Installation of a steel pipe with a rope inside in prevision of passing the electric wire to the pump house.



- Photo #3 – Overview of the second containment system ready to take the Jet-A tanks.



Par : _____
Michaël Racine, tech.

_____
Richard Marcoux, ing.
No OIQ : 38724
Project manager

Dewatering Dikes - Operation, Maintenance and Surveillance Manual, Version 8

AGNICO EAGLE

MEADOWBANK GOLD PROJECT

DEWATERING DIKES

Operation, Maintenance and Surveillance Manual

Prepared by:
Agnico Eagle Mines Limited – Meadowbank Division

Version 8
March 2019

DEWATERING DIKES

OPERATION, MAINTENANCE AND

SURVEILLANCE MANUAL

MEADOWBANK GOLD PROJECT

AGNICO EAGLE MINES LIMITED

This Operation, Maintenance and Surveillance Manual has been prepared by Agnico Eagle Mines Limited and is to be used for the operation, maintenance and surveillance of the Tailings Storage Facility at the Meadowbank Gold Project. All Registered Manual Holders are responsible for ensuring that they are using the most recent revision of this document. This Operation, Maintenance and Surveillance Manual, may not be copied in whole or in part without the written consent of Agnico Eagle Mines Limited.

DISTRIBUTION LIST

AEM - General Mine Manager

AEM – General Superintendent

AEM- Environment Superintendent

AEM- Mine Operations Superintendent

AEM- Engineering Superintendent

AEM- Energy & Infrastructure Superintendent

AEM- Maintenance Superintendent

AEM- Nunavut Division Engineer of Record

DOCUMENT CONTROL

Version	Date (YMD)	Section	Page	Revision
(first revision)	February 2012	All	All	
V2	August 27, 2013	All	All	
V3	September 15, 2013	All	All	Updated items mentioned by MDRB and the Mine Inspector in the Annual Geotechnical Inspection in September 2013
V4	January 2015	All	All	
V5	January 2016	All	All	
V6	February 2017	All	All	
V7	February 2018	All	All	
V8	February 2019	All	All	

Approved by :

Luc Chouinard
Mine Manager

Pierre McMullen
Engineering Superintendent

TABLE OF CONTENTS

DISTRIBUTION LIST ..... **IV**

DOCUMENT CONTROL ..... **V**

LIST OF TABLES ..... **VII**

LIST OF FIGURES ..... **VIII**

LIST OF APPENDICES ..... **VIII**

SECTION 1 • INTRODUCTION **1**

1.1 Objective of the OMS Manual 1
1.2 Control of DOcumented Information 1
1.3 management of change 2
1.4 Required Levels of Knowledge 3
1.5 LINKAGE with Emergency Response plan 3

SECTION 2 • ROLES AND RESPONSIBILITIES **4**

SECTION 3 • DEWATERING DIKES DESCRIPTION **11**

3.1 East Dike 13
3.1.1 East Dike - Design and Construction 13
3.2 Bay-goose Dike 15
3.2.1 Bay-Goose Dike – Design and Construction 15
3.3 SOUTH CAMP Dike 19
3.3.1 South Camp Dike – Design and Construction 19
3.4 VAULT Dike 21
3.4.1 Vault Dike– Design and Construction 21
3.5 instrumentation 23

SECTION 4 • DEWATERING **25**

4.1 Performed dewatering 25
4.1.1 East Dike - Dewatering 25
4.1.2 Vault Dike – Dewatering 26

SECTION 5 • OPERATIONS **27**

5.1 References 27
5.2 Summary of Performance Objective and operation control 27
5.2.1 Freeboard 28

5.3 Seepage Management 28
5.3.1 East Dike - Seepage Collection System 28
5.3.2 Bay-Goose Dike - Seepage Collection System 29
5.3.3 Vault Dike - Seepage Collection System 29
5.4 Operating Procedure during operation of the dewatering dikes at meadowbank 30
5.5 Communication and decision making 35

SECTION 6 • MAINTENANCE 36

6.1 Preventative, predictive and corrective Maintenance 36
6.2 References 36
6.3 component of the Dewatering dikes requiring maintenance 36
6.3.1 Maintenance components that are outside the scope of this OMS manual 37
6.4 description of maintenance activities 37

SECTION 7 • SURVEILLANCE 41

7.1 Reference 41
7.2 Site observations and inspections 42
7.2.1 Site observation 43
7.2.2 Inspection program 43
7.2.3 Routine Visual Inspection 44
7.2.3.1 Special Visual Inspection 47
7.2.3.2 Dike Safety Inspection (annual geotechnical inspection) 47
Independent Dam Safety Review 48
7.2.3.3 48
Instrument monitoring program – data acquistion 48
7.3 48
7.4 Adding instrument to the monitoring program 51
7.5 Analysis of surveillance Results 51
7.5.1 Procedure in case of data exceeding expected range of observation 53
7.5.1.1 Blast Monitor 53
7.5.2 Anomalous Instrumentation Data 53
surveillance documentation & reporting 55
7.6 55
Data Management 56
7.7 56

LIST OF TABLES

Table 1-1 :OMS Manual Distribution List 2
Table 1-2: Emergency Response Reference Documents 3
Table 2-1 : Responsibilities related to Meadowbank Water Management 7
Table 2-2 : OMS Manual Contact for each position 9
Table 3-1 : Description of the Dewatering Dikes of the Meadowbank Project 11
Table 3-2 : Reference documents for East Dike Design and Construction 13
Table 3-3 : Design criteria for East Dike 14
Table 3-4 : Reference documents for Bay-Goose Dike Design and Construction 16

Table 3-5 : Design Criteria for the Bay-Goose Dike 16
Table 3-6 : Reference documents for South Camp Dike Design and Construction 20
Table 3-7 : Design Criteria for the South Camp Dike 20
Table 3-8 : Summary of key reference documents for Vault dike 21
Table 3-9 : Design criteria for Vault Dike 21
Table 3-10 : Reference documents for instrumentation 23
Table 3-11 : Instrumentation summary on the water management infrastructure 24
Table 5-1 : Key reference documents for Operation of the Dewatering Dikes at Meadowbank 27
Table 5-2 : Performance objectives and operational criteria of the Dewatering Dikes at Meadowbank 27
Table 5-3 : Freeboard 28
Table 5-4 : Threshold Criteria and pre-defined action during operation of East Dike 31
Table 5-5 : Threshold Criteria and pre-defined action during operation of Bay-Goose Dike 32
Table 5-6 : Threshold Criteria and pre-defined action during operation of South Camp Dike 33
Table 5-7 : Threshold Criteria and pre-defined action during operation of Vault Dike 34
Table 6-1 : Reference documents for Maintenance of Dewatering Dikes at Meadowbank 36
Table 6-2 : Component of the Dewatering Dikes requiring maintenance 37
Table 6-3 : Description of maintenance activities for components of water management infrastructure 38
Table 7-1 : Key reference documents for Inspection of the Dewatering Dikes at Meadowbank 42
Table 7-2 : Reference documents for Instrument monitoring of the Dewatering Dikes at Meadowbank 42
Table 7-3 : Changes that may be observed through site observation and inspection of the Dewatering Dikes at Meadowbank 43
Table 7-4 : Summary of routine inspection requirements 45
Table 7-5 : Information collected using instrument monitoring 49
Table 7-6 : Summaries of data acquisition program related to instrument monitoring of the Dewatering Dikes at Meadowbank 50
Table 7-7 : Requirements for review, analyses and reporting of instrument data 52
Table 7-8 : Example of anomalous data and some common causes 54
Table 7-9 : How data should be presented in report for instrumentation monitoring 56

LIST OF FIGURES

Figure 2-1 : 5
Figure 3-1: Dewatering Dike Plan View 12
Figure 5-1 : Communication and Decision Process for Water Management Infrastructure TARP 35

LIST OF APPENDICES

Appendix A: Visual Inspection Forms
Appendix B: Potential Mitigation for Upset Conditions
Appendix C: Instrumentation List

SECTION 1 • INTRODUCTION

1.1 OBJECTIVE OF THE OMS MANUAL

The objective of this manual is to define the technical aspects related to the operation, maintenance and surveillance (OMS) of the Dewatering Dikes at the Meadowbank Gold Project operated by Agnico Eagle Mines Limited (AEM), Meadowbank Division.

This manual is intended as a practical document used by the personnel involved in with the Dewatering Dikes at the Meadowbank Gold Project. It incorporates operating, maintenance and surveillance procedures recommended by the Canadian Dam Association (CDA) “Dam Safety Guidelines” (CDA 2013 & 2014) and the Mining Association of Canada (MAC) “Developing an Operation, Maintenance and Surveillance Manual for Tailings and Water Management Facilities” (MAC, 2018). This manual was written by the Meadowbank Engineering team with the support of SNC-Lavalin and the Nunavut Engineer of Record.

The objectives of this OMS manual are to define and describe:

- Roles, responsibilities, and level of authority of personnel who perform activities related to the Dewatering Dikes at Meadowbank
- The Dewatering Dikes at Meadowbank covered in the scope of this OMS manual
- Plans, procedures and processes for :
    - The operation, maintenance and surveillance of the Dewatering Dikes at Meadowbank Gold Project to ensure that they function in accordance with their design, meet performance objectives and link to emergency response planning
    - Evaluating performance of the structures, and report performance results
    - Managing change

This manual contains protocols and information that will assist AEM to operate, maintain, and monitor the Dewatering Dikes in a safe manner and identify early signs of malfunction.

Elements related to design, construction and closure of the Dewatering Dikes, infrastructures related to management of underground water and to water treatment are out of scope of this manual.

1.2 CONTROL OF DOCUMENTED INFORMATION

This OMS manual is a controlled document. The latest version of this document is available in Intelex.

The person responsible for the preparation, update and distribution of this manual is the Engineering Superintendent. Any change to this OMS manual must be submitted to and approved by the Engineering Superintendent who will be responsible to update the OMS manual in Intelex.

It is each user’s responsibility to ensure that they are using the latest version of this document. In case of issue with retrieving the electronic version of this document, the most up to date paper version of this document will always be kept in the Engineering Superintendent Office.

The Engineering Superintendent is responsible to communicate any change to this manual by e-mail to the distribution list in Table 1-1. The Engineering Superintendent is responsible for maintaining an up-to-date distribution list of this manual.

Table 1-1 :OMS Manual Distribution List

Position	**Name**
General Mine Manager	Luc Chouinard
General Superintendant	Eric Côté / Jacques Proulx
Environment Superintendent	Nancy Duquet-Harvey
Mine Operations Superintendent	Yan Côté, Nicolas P. Deschamps (asst.)
Engineering Superintendent	Pierre McMullen, Miles Legault (asst.)
Maintenance Superintendant	Christian Quirion
Energy & Infrastructures Superintendent	Guillaume Gemme
Engineer of Record, Meadowbank Division	Thomas Lepine

1.3 MANAGEMENT OF CHANGE

This manual will be reviewed on an annual basis at the beginning of Q3 and revised as necessary to accommodate changes in the condition and operation of the facilities. The Engineering Superintendent will be responsible to coordinate this review process.

In conducting the review and update of the OMS manual the following must be taken into account:

- Performance of the structure
- Current life cycle of the structure
- Change since the last review (site condition, critical control, risk profile, personnel, methodology and technology for OMS activities)

In addition to the annually scheduled review, a review may be triggered by a significant event or may need to be updated in response to:

- Planned changes, such as change in surveillance instrumentation or methodologies, or introduction of new instrumentation methodology
- Changes in personnel or roles referred to in the OMS manual
- Other changes that may occur that need to be addressed prior to the next scheduled review of the OMS manual

The update needs to be completed in a timely manner following the document control criteria specified in Section 1.2.

As a good practice, the Engineering Superintendent should organise on a yearly basis a session to present the changes in the OMS manual to the persons in its distribution list.

1.4 REQUIRED LEVELS OF KNOWLEDGE

To preserve the integrity of the operation of these structures, the personnel must have a good comprehension of the factors that can impact the performance of the Dewatering Dikes. It must also be known that any deviation can signify the emergence of a problem and change the role that each person must have in the operation, maintenance and surveillance of these infrastructures.

It is the responsibility of each person in the distribution list of this manual to be familiar with it and understand its whole content. They also need to ensure that everyone under their supervision who's duty involves tasks related to the operation, maintenance or surveillance of any component of the Dewatering Dikes have the appropriate level of knowledge and the resources to comply with the protocol presented in this document.

1.5 LINKAGE WITH EMERGENCY RESPONSE PLAN

An emergency is a situation that poses an impending or immediate risk to health, life, property, or the environment and which requires urgent intervention to prevent or limit the expected outcome.

This OMS manual addresses conditions related to operation under normal or upset conditions, as opposed to emergency situation. An Emergency Response Plan (ERP) describes measures the Owner and, in some cases, external parties will take to prepare for an emergency, and to respond if an emergency occurs.

An OMS and ERP manual must be aligned. As a result, this OMS manual contains the following information (refer to Section 4 and 5):

- Performance, occurrences, or observations that would result in an emergency being declared
- Roles and responsibilities of key personnel in transition from normal or upset conditions to an emergency
- Actions to be taken to transition from normal or upset conditions to an emergency situation

Once an emergency has been declared, reference must be made to the Emergency Response Plan (Reference included in Table 1-2). The most recent version of the ERP can be found on Intelex and in the Engineering Superintendent Office

Table 1-2: Emergency Response Reference Documents

Document	Current Revision
Emergency Response Plan	Updated by AEM. Version 12, January 2018. (Intelex)

SECTION 2 • ROLES AND RESPONSIBILITIES

A functional chart for the Dewatering Dikes at the Meadowbank Project is shown in Figure 2-1.

The roles and responsibilities of the key personnel involved in the Dewatering Dikes of the Meadowbank Project are shown in Table 2-1. Contact information for each position is indicated in Table 2-2.

Personnel who have tasks directly related to the Dewatering Dikes need to receive a training when they start in the position, to ensure they understand their roles and responsibilities related to this OMS manual.

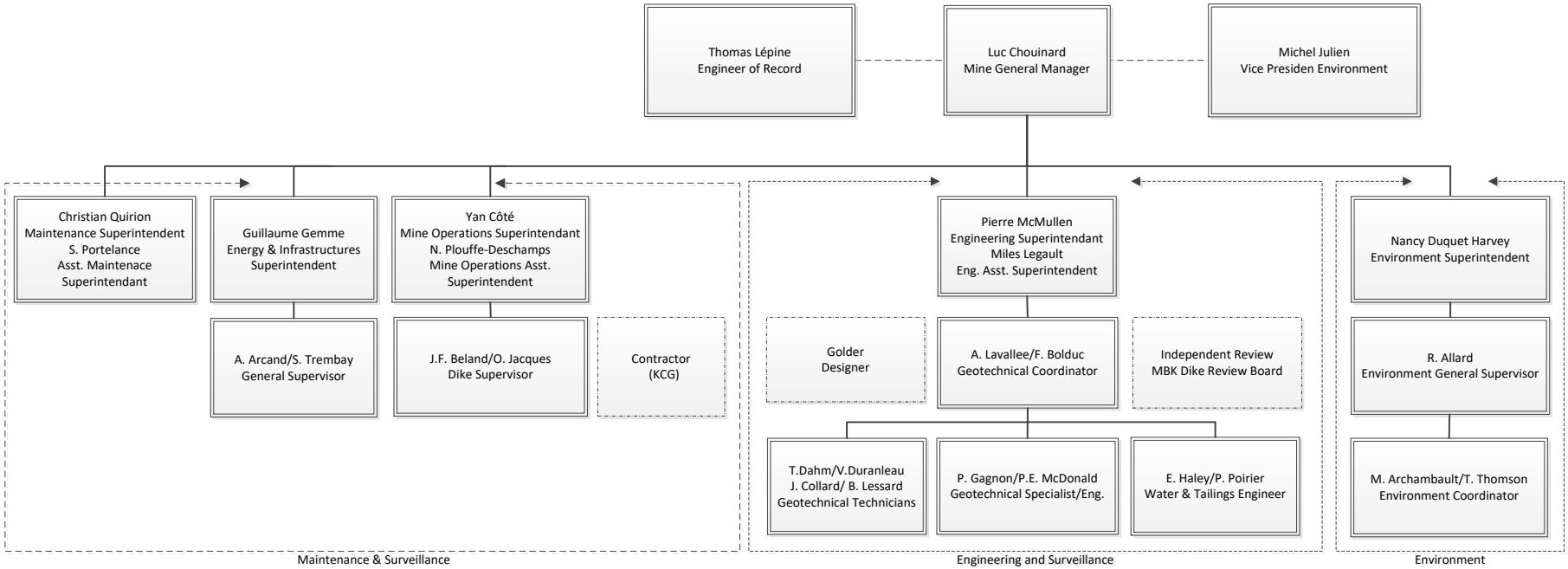

Figure 2-1 :Organizational structure

Table 2-1 : Responsibilities related to Meadowbank Water Management

Role	Responsibilities
Vice-President Environment	• Be aware of key outcomes of water management risk assessment and of how these risks are being managed • Has accountability and responsibility for putting in place appropriate management structure • Assign responsibility and appropriate budgetary authority for water management and define the personnel duties, responsibility and reporting relationships, supported by job description and organisational charts to implement the water management system through all stages in the facility life cycles • Provide assurance to AEM and its Community of Interest that the Dewatering Dikesare are managed responsibly
General Mine Manager	• Identify the scope of work and budget requirement for all aspect of water management • Approve budget for OMS related activity • Establish an organisational structure with Roles and Responsibilities that meets the operational needs • Delegate specific tasks and responsibilities for water management to qualified personnel • Liaise with independent reviewer (MDRB) as required
Engineer of Record (EoR)	• Input into the OMS activities in accordance with the design • Receive and review the OMS manual on a regular basis • Either confirm operation is compliant or identify deviations from performance objectives and advise the Owner with recommendations • Advise on contemplated changes on the structure operation • Maintain records related to design construction and operation • Participate in inspections and independent reviews
Independent Reviewer – Meadowbank Dike Review Board (MDRB)	• Provide independent, objective, expert commentaries, advices and recommendations, to assist in identifying, understanding, and managing risks associated with the Dewatering Dikes
Engineering Superintendent	• Revise and update the OMS Manual to reflect as-built conditions and any other changes • Review and update the OMS manual into Intelex • Maintain up to date distribution list of the OMS Manual • Establish a formal relationship with the EOR to ensure operation is compliant with design intent • Identify when/where contemplated operational changes are a potential deviation from the design intent and engage the EoR and Designer as part of process to manage changes • Coordinate work force as required for monitoring and maintenance.

Role	Responsibilities
Mine Operations Superintendent / Dike Supervisor	• Maintain access to the structure and seepage collection systems, including making road repairs, controlling dust and removing snow. • Carry out field maintenance related to earthwork as required, • Supervise Mine Contractor for aspect related to earthwork construction and maintenance
Geotechnical Coordinator	• Supervise the work of the geotechnical engineer/specialist, geotechnical technician and water and tailings engineer
Geotechnical Engineer	• Carry out inspections of the structures as required in the OMS Manual. • Carry out instrument monitoring as required in the OMS Manual. • Review and analyse surveillance data to evaluate dike performance with respect to design parameters • Review and distribute surveillance reporting as required in the OMS Manual • Analyse geotechnical instrumentation monitoring data to evaluate dike performance with respect to design parameters
Geotechnical Technician	• Carry out inspections of the structures as required in the OMS Manual • Monitor instrumentation as required in the OMS Manual • Maintain instrumentation, readout units, data acquisition system and cabins • Responsible for data acquisition as required in the OMS manual • Prepare reports on instrumentation readings, dike performance, visual observations, etc., as required in the OMS Manual.
Water & Tailings Engineer	• Carry out inspections of the structures as required in the OMS Manual • Carry out instrument monitoring as required in the OMS Manual • Coordinate equipment, labour, materials and maintenance activities required for pumps and pipelines associated with dewatering, seepage collection systems and any runoff diversions. • Prepare reports on instrumentation readings, dike performance, visual observations, etc., as required in the OMS Manual
Environment Department Superintendent / General Supervisor / Coordinator / Technician	• Ensure monitoring of water quality and total suspended solids as required in the water management plan • Review environmental monitoring data for compliance with Water License and regulations and to determine dike performance with respect to design parameters • Liaise with external stakeholders including NIRB, Nunavut Water Board, NGO's, government agencies

Role	Responsibilities
Energy & Infrastructures Superintendent / General Supervisor / Pump crew supervisor / electrical supervisor	• Installation and operation of pumps and pipeline (electrical, mechanical) • Maintain and service pumps and pipelines • Coordinate equipment, labour and materials for maintenance of electrical and mechanical equipment • Carry out field operations, including pumping • Carry out field maintenance on pumps and pipeline, including electrical and mechanical repairs
Mine Contractor	• Rent equipment and manpower for construction and maintenance of the Dewatering Dikes
Design Engineer	• Advise on contemplated changes to the structure design • Advisor on structure performance as required • Participate in inspection and independent review as required
Maintenance Superintendent/ Pump mechanics	• Ensure preventive maintenance is carried out regularly on each pumping equipment • Repair pumping equipment as required • Update and maintain a list of operational pumping equipment • Keep records of maintenance on pumping equipment

Table 2-2 : OMS Manual Contact for each position

Role	Name	Work Contact Info
Vice-President Environment	Michel Julien	michel.julien@agnicoeagle.com 416-947-1212 x3738 514-244-5876
General Mine Manager	Luc Chouinard	819-759-3555 x4606896
Engineer of Record (EoR)	Thomas Lepine	thomas.lepine@agnicoeagle.com 416-947-1212 x3722 418-473-8077
Engineering Superintendent / Assistant	Pierre McMullen Miles Legault	819-759-3555 x4606721
Mine Operations Superintendent / Assistant	Yan Côté Nicolas Plouffe-Deschamps	819-759-3555 x4606832
Dike Supervisor	Jean-François Béland Olivier jacques	819-759-3555 x4606807
Geotechnical Coordinator	Frédérick L.Bolduc Alexandre Lavallée	819-759-3555 x4606837

Role	Name	Work Contact Info
Geotechnical Engineer	Patrice Gagnon Pier-Eric McDonald	819-759-3555 x4606726
Geotechnical Technician	Vincent Duranleau Thomas Dahm Bruno Lessard Jerome Collard	819-759-3555 x4606818 819-759-3555 x4606851
Water & Tailings Engineer	Eric Haley Pascal Poirier	819-759-3555 x4606752
Environment Superintendent	Nancy Duquette	819-759-3555 x4606980 x3175
Environment General Supervisor	Robin Allard	819-759-3555 x4606838
Environment Coordinator	Martin Archambault Tom Thomson	819-759-3555 x4606744
Energy & Infrastructures Superintendent	Guillaume Gemme	819-759-3555 x4606632
Maintenance Superintendent	Pierre Laberge Sylvain Portelance	819-759-3555 x4606722
Energy & Infrastructure General Supervisor	Alexandre Arcand Steven Tremblay	819-759-3555 x4606822
Pump crew supervisor	Shawn Valiquette Gaetan Martel	819-759-3555 x4606616
Electrical Supervisor	Alain Villeneuve	819-759-3555 x4606762
Mine Contractor	KCG	819-759-3555 x4606963 418-615-0559
Designer – Golder	Yves Boulianne	514 383 6196 x7434 514 207-0264
Independent Reviewer – Meadowbank Dike Review Board (MDRB)	• Anthony Rattue • Don Hayley	anthony.rattue@bell.net don.hayley@icloud.com

SECTION 3 • DEWATERING DIKES DESCRIPTION

The Meadowbank Gold Project site is located approximately 80 km north of Baker Lake, Nunavut. The Meadowbank property is located on Inuit Owned Land, in the Kivalliq region of Nunavut. A description of the physical conditions of the site, as well as a geological and geotechnical conditions can be found in the design document of each structure referred to in this section.

The Meadowbank Project required the construction of a series of Dewatering Dikes as shown in Figure 3-1.

Table 3-1 : Description of the Dewatering Dikes of the Meadowbank Project

Infrastructure	Function
East Dike	Non-contact water retention and dewatering structure. ED isolates the Portage pit mining activities from Second Portage Lake and provides an area for the storage of tailings
Bay-Goose Dike	Non-contact water retention and dewatering structure. Isolates the Portage and Goose pit mining activities from Third Portage Lake
South Camp Dike	Non-contact water retention structure. Isolates the Portage and Goose pit mining activities from Third Portage Lake
Vault Dike	Non-contact water retention and dewatering structure. Isolates the Vault pit mining activities from Wally Lake
West Channel Dikes (dismantled)	Used to isolate the Portage pit mining from Second Portage Lake. Dismantled in 2012 as part of the Portage Pit mining operation.

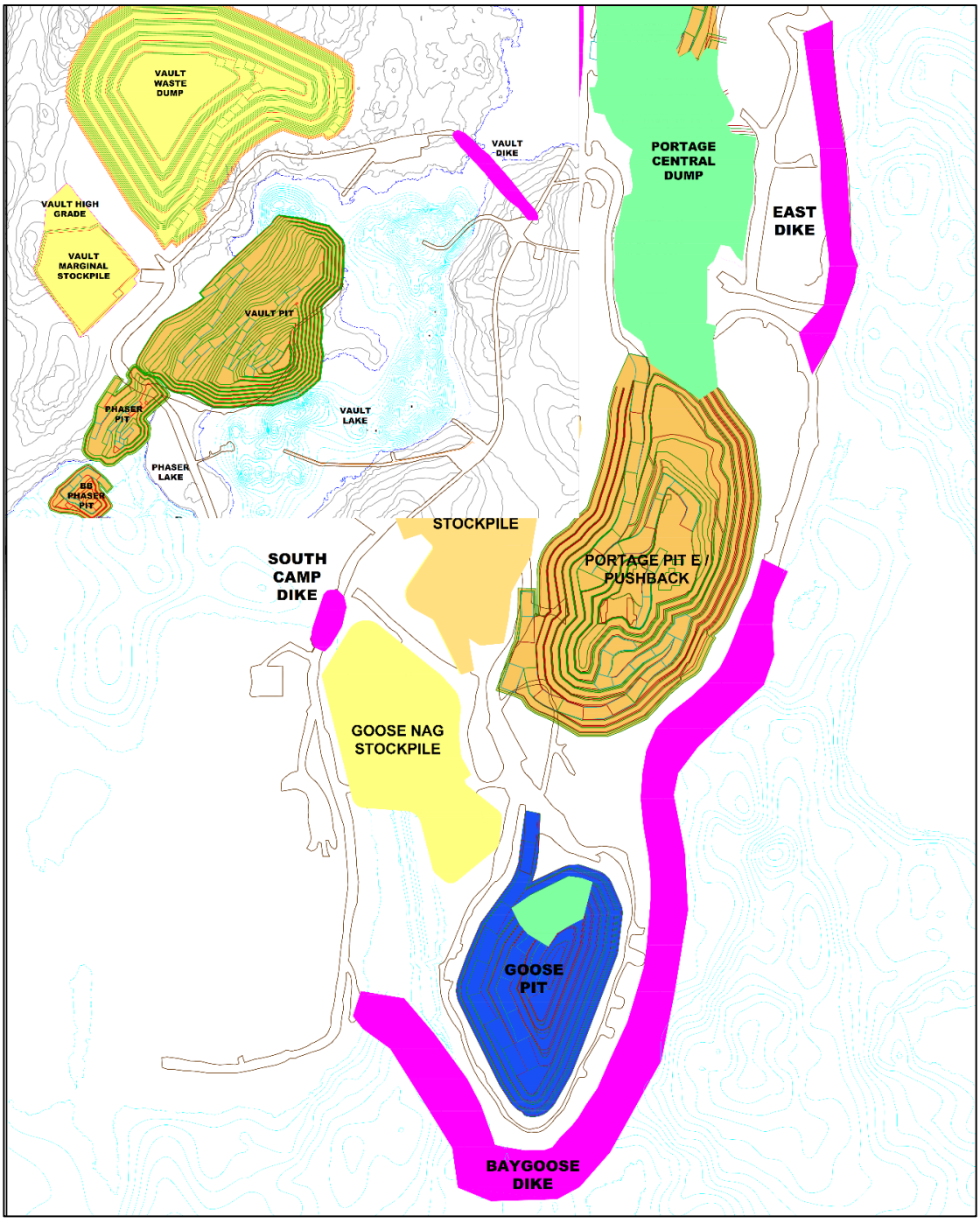

Figure 3-1: Dewatering Dike Plan View

3.1 EAST DIKE

The East Dike together isolate the northwest arm of Second Portage Lake. It isolates the Portage Pit and the tailings storage area from Second Portage Lake. In closure, East Dike will separate Third Portage Lake from Second Portage Lake. There are no spillways or water diversion works associated with the East Dike. The East Dike was also used to serve as a haul road to connect the North Portage Pit to the ore stockpiles and to the crushing facility within the plant site. The West Channel Dike is used to cover a narrow channel and prevent flow from Third Portage Lake to Second Portage Lake.

3.1.1 East Dike - Design and Construction

References to key document for the design and construction of East Dike are presented in Table 3-2. Table 3-3 summarises the main design criteria of ED.

Table 3-2 : Reference documents for East Dike Design and Construction

Dike	Type of Information	Reference Document	Link to retrieve document
East Dike	Design Report	East Dike Design Report (Golder, 2008) 07-1413-0074/2500/1000 Doc. No. 572 Ver. 0	..\..\..\..\99-Archive\References\Dike Designer Report GOLDER\East Dike\Doc 572 1031_08 RPT-East Dike Design Report-Meadowbank Ver 0.pdf
	Drawings	Appendix VIII of East Dike Design Report (Golder, 2008) 07-1413-0074/2500/1000 Doc. No. 572 Ver. 0	..\..\..\..\99-Archive\References\Dike Designer Report GOLDER\East Dike\Doc 572 1031_08 RPT-East Dike Design Report-Meadowbank Ver 0.pdf
	Technical Specifications	Appendix VII East Dike Design Report (Golder, 2008) 07-1413-0074/2500/1000 Doc. No. 572 Ver. 0	..\..\..\..\99-Archive\References\Dike Designer Report GOLDER\East Dike\Doc 572 1031_08 RPT-East Dike Design Report-Meadowbank Ver 0.pdf
	As-built	East Dike Construction As-Built Report (Golder, 2009) 07-1413-0074; 09-1428-5007 Doc. No. 900 Ver. 0	..\..\..\..\99-Archive\References\Dike Designer Report GOLDER\East Dike\Doc 900 1202_09 Rpt-East Dike Construction As-Built Report - Meadowbank Ver 0.pdf

Table 3-3 : Design criteria for East Dike

Use	Water type	Classification (CDA, 2007)	Inflow Design Flood	Water Level (m)		Crest Elevation (m)
				Normal	Design Flood	
Water Retention / Dewatering	Non-contact	High	1/3 between 1000-year and PMF[1]	133.1	135.1	137.1
Note 1: PMF means Probable Maximum Flood						

The East Dike was constructed in the summer of 2008 and grouting of the foundation and bedrock occurred in 2008 and during the first quarter of 2009. It is approximately 800 m in length, and was constructed within Second Portage Lake prior to dewatering. The dike consists of a wide rockfill shell, with downstream filters and a soil-bentonite cutoff wall that extends to bedrock. The cutoff wall extends up to 8 m below lake level.

Dike construction occurred in the following general manner:

Rockfill Embankment:

- A rockfill platform approximately 50 m wide was advanced from the south abutment to the north. The rockfill platform provided construction access and support for the core materials.
- The width of the rockfill platform (embankment) was subsequently increased by placement of additional rockfill on the downstream side, to provide an adequate road width to accommodate two-way haul traffic.

Initial Trench Excavation:

- Rockfill and lakebed soils were excavated from the crest of the rockfill platform to expose bedrock along the cutoff centreline. Loose blocks or slabs from the bedrock surface were removed, as practical.

Backfilling of the Initial Trench:

- A coarse granular filter (150 mm minus) was placed using the bucket of the excavator on the downstream slope of excavation.
- Then the remaining portion of the excavation was backfilled with Core Backfill (19 mm minus) material in the central portion along the cutoff wall centreline and Coarse Filter (150 mm minus) material on the upstream and downstream sides of the Core Backfill. Backfilling of the trench with the Core Backfill and Coarse Filter materials was a simultaneous activity and occurred progressively as the initial trench was the excavation front advanced.
- At the bedrock surface, a minimum of 5 m of Core Backfill material was to be placed.

Compaction of Core Backfill:

- Core Backfill and Coarse Filter were placed to an elevation of 2 m above the water level to form a platform from which densification could occur.

- The Core Backfill was densified using multiple passes of dynamic compaction. Craters produced by the dropped weight were backfilled to level the working platform between passes.

Cutoff:

- A 1 m wide trench was excavated through the Core Backfill material and extended to the bedrock surface along the cutoff wall centreline. Bentonite slurry was used to support the trench.
- The trench was backfilled with soil-bentonite.

Grouting:

- Grouting of the bedrock foundation and "contact area" identified as the zone between the base of the cutoff wall and bedrock surface was performed through the centerline of the cutoff wall.

In July 2009, during dewatering, a sinkhole cavity (18 m^3) was identified in the general vicinity of a leak identified at Sta.60+472. This was caused by erosion of the soil bentonite material in the cut-off wall. Additional grouting was performed to mitigate this occurrence. The dike has been performing adequately since then.

3.2 BAY-GOOSE DIKE

The Bay-Goose Dike together with the South Camp Dike isolates the Bay-Goose Basin from Third Portage Lake, which permits mining of the Goose Pit and the southern portion of Portage Pit. No spillways or water diversion works are associated with the Bay-Goose Dike.

3.2.1 Bay-Goose Dike – Design and Construction

Reference to key document for the design and construction of Bay-Goose Dike are presented in Table 3-4. Table 3-5 summarises the main design criteria of Bay-Goose Dike.

Table 3-4 : Reference documents for Bay-Goose Dike Design and Construction

Dike	Type of Information	Document Reference	Link to Retrieve Document
Bay-Goose Dike	Design Report	Bay-Goose Dike and South Camp Dike Designs (Golder, 2009) 08-1428-0028 Doc. No. 802 Ver. 0	..\..\..\..\99-Archive\References\Dike Designer Report GOLDER\Bay-Goose Dike\Doc 802 0202_09-Let-Bay Goose Dike South Camp Dike Designs-Ver 0.pdf
	Drawings	Appendix A of Bay-Goose Dike and South Camp Dike Designs (Golder, 2009) 08-1428-0028 Doc. No. 802 Ver. 0	..\..\..\..\99-Archive\References\Dike Designer Report GOLDER\Bay-Goose Dike\Doc 802 0202_09-Let-Bay Goose Dike South Camp Dike Designs-Ver 0.pdf
	Technical Specifications	Appendix B of Bay-Goose Dike and South Camp Dike Designs (Golder, 2009) 08-1428-0028 Doc. No. 802 Ver. 0	..\..\..\..\99-Archive\References\Dike Designer Report GOLDER\Bay-Goose Dike\Doc 802 0202_09-Let-Bay Goose Dike South Camp Dike Designs-Ver 0.pdf
	As-built	Bay-Goose Dike Construction As-Built Report (Golder, 2013) 09-1428-5007 1328 Ver. 0	..\..\..\..\04-DewateringDikes\Bay-Goose Dike\As Built\From Golder\Bay Goose Final As-Built Report\Doc 1328-0914285007 0419_13 Text & Figures - Ver. 0.pdf

Table 3-5 : Design Criteria for the Bay-Goose Dike

Use	Water Type	Classification (CDA, 2007)	Inflow Design Flood	Water Level (m)		Crest Elevation (m)
				Normal	Design Flood	
Water Retention/Dewatering	Non-contact	High		134.1		137.1

The Bay-Goose Dike is approximately 2,200 m in length and was constructed “in the wet”, prior to dewatering. The earthworks component of the Bay-Goose Dike construction occurred over two summer construction seasons. The north portion of the Bay-Goose Dike was constructed in 2009 and the south portion in 2010. Grouting and jet grouting works commenced in 2010 and were completed by mid-July 2011.

Dike construction occurred in the following general manner:

Rockfill Platform / Embankment:

- A rockfill platform of varying width (approximately 60 to 90 m) was advanced from the north abutment to Goose Island, between July and September 2009 to an elevation of about 134 m.

- A rockfill causeway about 25 m wide was advanced from Goose Island to the south abutment between February and June 2010 while ice cover existed on Third Portage Lake. Ice was broken and removed, as practical, in front of the advancing rockfill platform.
- Following ice breakup from the lake in July 2010, additional rockfill was placed to widen the causeway to the full design width of the rockfill platform (approximately 55 to 100 m).
- The rockfill platforms surface elevation was about 134 m and was used to provide a working surface for the subsequent construction activities. The rockfill also provides lateral support for the granular core materials.

Initial Trench Excavation:

- Rockfill and lakebed soils were excavated from the rockfill platform surface to bedrock or competent lakebed soils along the cutoff centreline. As much as practical, loose blocks or slabs from the bedrock surface were removed.
- Ice rich soils beneath the cutoff wall were removed with the exception of at the south abutment where beyond Sta. 32+112 some ice-rich soils remain beneath the base of the initial trench excavation and cutoff wall.
- The required bottom width of the excavation varied based on its depth and varied between 8 and 11 m.

Backfilling of the Initial Trench:

North Portion of Dike

- A layer of Core Backfill (19 mm minus) material was placed along the downstream slope of the excavation such that Core Backfill material would be in contact with the lakebed soils.
- Then the remaining portion of the excavation was backfilled with Core Backfill (19 mm minus) material in the central portion along the cutoff wall centerline, with Coarse Filter (150 mm minus) material simultaneously placed on either side of the Core Backfill. Backfilling of the excavated trench occurred progressively as the excavation front advanced.

South Portion of Dike

- In very limited areas along the alignment, a layer of Core Backfill (19 mm minus) material was placed along the downstream slope of the excavation prior to the primary backfilling of the trench.
- The excavation was backfilled with Core Backfill (19 mm minus) material in the central portion along the cutoff wall centerline, with Coarse Filter (150 mm minus) material simultaneously placed on the downstream side of the Core Backfill and a “Fine Rockfill” material placed on the upstream side. Backfilling of the excavated trench occurred progressively as the excavation front advanced.
- In areas to be compacted using the vibratory-densification method, the width of Core Backfill material was required to be 8 m. Therefore, once the initial backfilling had been completed relatively small V-shaped excavations were made at the surface on either side of the initially placed Core Backfill. These excavations were then refilled with Core Backfill material to provide the required 8 m width of Core Backfill.

Compaction of Core Backfill:

- For all of the North Portion of the dike and a majority of the South Portion of the dike, a 2 m layer of Core Backfill, Coarse Filter, and Rockfill was placed to increase the elevation of the platform to provide a working surface for the dynamic compaction.
- The Core Backfill was densified using multiple passes of dynamic compaction. Craters produced by the dropped weight were backfilled to the level of the working platform between passes.
- For the South Portion of the dike, in zones where the initial excavation was not extended to bedrock, termed "partial cutoff" zones, compaction of the Core Backfill material was done using two methods: vibratory-densification and dynamic-compaction. Vibratory-densification of the Core Backfill material was conducted from the initial rockfill platform working surface (134 m). Vibro-densification was utilized to treat the Core Backfill material at the base of the excavation up to an elevation of about.128 m (i.e. 6 m below the water level). Then the 2 m of additional Core Backfill, Coarse Filter, and Rockfill materials were placed to increase the elevation of the platform to about 136 m creating the working surface for the dynamic compaction. The upper portion of the Core Backfill material was then treated using multiple passes of dynamic compaction. Craters produced by the dropped weight were backfilled to the level of the working platform between passes.

Cutoff:

- A 1 m wide trench was excavated through the Core Backfill material and extended to bedrock or competent till surface along the cutoff wall centreline. Bentonite slurry was used to support the trench.
- The trench was backfilled with:
  - Soil-bentonite (SB);
  - Cement Soil-bentonite (CSB); or
  - A combination of SB and CSB.
- Then a capping layer about 0.5 m thick of SB was placed above the trench to an approximate elevation of 136.5 m.

Jet Grouted Wall

- Jet grouting has been used to extend the low permeability element (cutoff wall) of the dike to the bedrock surface. A double jet system was used with a cement water ratio of 1:1 to construct the jet grouted columns. Jet grouting was completed from a working platform elevation of approximately 137 m.
- Jet grouting beneath the cutoff wall to the bedrock surface was conducted in the "partial cutoff" areas where the cutoff wall was not excavated to bedrock. This occurred in Channel 1 (Sta. 32+007 to 32+110), Channel 2 (Sta. 31+820 to 31+928), and Channel 3 (Sta. 31+575 to 31+611). Jet grouted columns were constructed with a centre to centre spacing of 1.2 m with an overlap with the cutoff wall and extended into the bedrock surface. Columns were constructed in two passes, primary columns at a spacing of 2.4 m with secondary columns subsequently constructed between the primary columns.
- Jet grouting was also conducted in two additional areas of the dike where significant silt accumulated at the base of the initial excavation and prevented the cutoff wall from being successfully constructed to bedrock. These two areas the North Channel (Sta. 30+361 to

30+435) and between Channel 1 and Channel 2 (Sta. 31+928 to 32+007). Jet grouted columns were constructed with a centre to centre spacing generally of 1.5 m, with the exception of the portion between Sta. 31+928 and Sta. 31+966.4 where a spacing of 1.2 m was utilized, following a primary and secondary sequence for installation.

Grouting:

- The working platform along the cutoff wall centerline was raised with Coarse Filter material to an elevation of 137 m, from which grouting work was conducted.
- Grouting of the bedrock foundation and "contact area" identified as the zone between the base of the cutoff wall or jet grout columns and bedrock surface was performed through the centerline of the cutoff wall.

3.3 SOUTH CAMP DIKE

The South Camp Dike covers a narrow channel within Third Portage Lake and in conjunction with the Bay-Goose Dike isolate the Bay-Goose Basin from Third Portage Lake. No spillways or water diversion works are associated with the South Camp Dike. It is located south of the plant site area and is used to connect the mainland to South Camp Island. It covers a narrow channel, approximately 60 m in width, where water depths were between 0.5 and 1 m.

3.3.1 South Camp Dike – Design and Construction

Reference to key document for the design and construction of South Camp Dike are presented in Table 3-6. Table 3-7 summarises the main design criteria of South Camp Dike.

Table 3-6 : Reference documents for South Camp Dike Design and Construction

Dike	Type of Information	Document Reference	Link to Retrieve Document
South Camp Dike	Design Report	Bay-Goose Dike and South Camp Dike Designs (Golder, 2009) 08-1428-0028 Doc. No. 802 Ver. 0	..\..\..\..\99-Archive\References\Dike Designer Report GOLDER\Bay-Goose Dike\Doc 802 0202_09-Let-Bay Goose Dike South Camp Dike Designs-Ver 0.pdf
	Drawings	Appendix A of Bay-Goose Dike and South Camp Dike Designs (Golder, 2009) 08-1428-0028 Doc. No. 802 Ver. 0	..\..\..\..\99-Archive\References\Dike Designer Report GOLDER\Bay-Goose Dike\Doc 802 0202_09-Let-Bay Goose Dike South Camp Dike Designs-Ver 0.pdf
	Technical Specifications	Appendix B of Bay-Goose Dike and South Camp Dike Designs (Golder, 2009) 08-1428-0028 Doc. No. 802 Ver. 0	..\..\..\..\99-Archive\References\Dike Designer Report GOLDER\Bay-Goose Dike\Doc 802 0202_09-Let-Bay Goose Dike South Camp Dike Designs-Ver 0.pdf
	As-built	South Camp Dike Construction Summary Report (AEM, 2012)	..\..\..\..\04-DewateringDikes\South Camp Dike\As-Built\As-Built report\South Camp Dike Construction Summary VER 0_stamp.pdf

Table 3-7 : Design Criteria for the South Camp Dike

Use	Water Type	Classification (CDA, 2007)	Inflow Design Flood	Water Level (m)		Crest Elevation (m)
				Normal	Design Flood	
Water Retention	Non-contact	Significant		134.1		137.6

The South Camp Dike was primarily constructed between April and June of 2009, prior to ice breakup. During the winter of 2009-2010 additional thermal capping material and rockfill for the haul road was added to the dike. The South Camp Dike has a broad rockfill shell with a bituminous geomembrane liner installed on the upstream side of the shell. The liner was founded on native frozen (permafrost) till material, in a trench approximately 3 to 5 m below the lakebed surface. Compacted granular material mixed with bentonite was placed above the toe of the liner. The haul road is located on the downstream side of the dike.

The dike design includes the following components: a rockfill shell, a bituminous geomembrane liner and granular material mixed with bentonite.

3.4 VAULT DIKE

Vault Dike is located across a shallow creek which connects Wally Lake and Vault Lake, at the Vault Pit area approximately 8 km north of the main Meadowbank site. Vault Dike is essential to allow the dewatering of Vault Lake and to isolate Vault Pit during mining activities from Wally Lake.

3.4.1 Vault Dike– Design and Construction

References to key document for the design and construction of Vault Dike are presented in Table 3-8. Table 3-9 summarises the main design criteria of Vault Dike.

Table 3-8 : Summary of key reference documents for Vault dike

Dike	Type of Information	Document Reference	Link to Retrieve Document
Vault Dike	Design Report	610548-2020-4GER-0001_00	"\\CAMBFS01\Groups\Engineering\05-Geotechnic\04-DewateringDikes\Vault Dike\1 - Design Work\Documents from SNC\610548-2020-4GER-0001_00.pdf"
	Drawings	Appendix 1 of Construction of Vault Dike (SNC, 2013) 610548-2020-4GEF-0001	..\..\..\..\04-DewateringDikes\Vault Dike\1 - Design Work\Documents from SNC\610548-2020-4GEF-0001-00.pdf
	Technical Specifications	Construction of Vault Dike (SNC, 2013) 610548-2020-4GEF-0001	..\..\..\..\04-DewateringDikes\Vault Dike\1 - Design Work\Documents from SNC\610548-2020-4GEF-0001-00.pdf
	As-built	Construction Summary Report Vaut (AEM, 2013)	..\..\..\..\04-DewateringDikes\Vault Dike\18-As-Built Report and Drawings\Vault Dike Construction Report Final with Appendices.pdf

Table 3-9 : Design criteria for Vault Dike

Use	Water Type	Classification (CDA, 2007)	Inflow Design Flood	Water Level (m)		Crest Elevation (m)
				Normal	Design Flood	
Water Retention/Dewatering	Non-contact	Low	1-100 year snow melt + 1-100 year rainfall	139.52	141	142.5

The construction of the Vault Dike at Meadowbank was conducted from February 2013 to March 2013. Vault Dike is designed and constructed as a zoned rockfill dam with filter zones, an impervious upstream liner consisting of a bituminous membrane, and an upstream key trench made of aggregate mixed with bentonite. The filter zones minimize seepage and internal erosion and facilitate seepage collection. Vault Dike includes a key trench at the base of the upstream side filled with a 0-25 mm fill amended with bentonite surrounding the liner. Coarse and fine filter material was placed on the upstream slope as geomembrane bedding. The bulk part of the dike consists of coarse rockfill

material. The embankment crest is at El. 142.4 m and the upstream toe is at approximately El. 139.4 m. The downstream toe is at approximately El. 139.6 m and the bottom of the key trench ranges from El. 135.6m to El. 142.3m, with an average height of El. 137.0m. The upstream and downstream fill slopes of the dam are 1.5H:1V.

3.5 INSTRUMENTATION

The Dewatering Dikes are instrumented to continuously monitor performance. In-situ instrumentations are installed within the structure and their foundation (piezometers, thermistors, inclinometers).

Water levels in the ponds are monitored by means of a visible staff gauge installed at a strategic location, piezometers and periodic water survey.

Reference document for the instrumentation installed on the Dewatering Dikes is summarized in Table 3-12. The summary of the instrument installed is summarised in Table 3-13

Table 3-10 : Reference documents for instrumentation

Type of Information	**Reference Document**	**Link to retrieve document**
Instrumentation campaign as-built	As-built report for each dike	ED: Refer to table 3.2 BGD: Refer to table 3.4 SCD: Refer to table 3.6 VD: Refer to table 3.8
Instruments database	AEM	ED & BGD : ..\..\..\..\11-Instrumentation\Instruments\ALL Instruments Databases (GKM)\ED & BGD Instrument_database_rev2.xls
Manufacturer data sheet	GKM	..\..\..\..\11-Instrumentation\Instruments\Instruments SHEETS
Instrument map and cross-section	AEM	ED : ..\..\..\..\04-DewateringDikes\East Dike\Instrument Monitoring\Cross Sections\East Dike-sections.pdf BGD : ..\..\..\..\04-DewateringDikes\Bay-Goose Dike\Instrument Monitoring\Cross Sections\Bay Goose-Sections-30158-to-30645.5-NORTH.pdf & ..\..\..\..\04-DewateringDikes\Bay-Goose Dike\Instrument Monitoring\Cross Sections\Bay Goose-Sections-31165-to-32105-SOUTH.pdf

Table 3-11 : Instrumentation summary on the water management infrastructure

Structure	Piezometer	Thermistors	Inclinometer	Survey Monument	Staff Gauge
East Dike	44	5	3	-	-
Bay-Goose Dike	125	33	6	-	-
South Camp Dike	-	2	-	-	-
Vault Dike	-	5	-	-	-

SECTION 4 • DEWATERING

The Dewatering Dikes isolate the open pit mining activities from the Second Portage Lake, Third Portage Lake, and Wally Lake. The northwest arm of Second Portage Lake was dewatered upon completion of the East Dike and West Channel Dike in 2009. A total of 6.7 Mm^3 were pumped from the Second Portage Arm.

The Bay-Goose Dike together with the South Camp Dike isolates the Bay-Goose Basin from Third Portage Lake. Dewatering of the Bay-Goose Basin commenced on July 25, 2011 and was completed on November 14 2011. As the operational stage of Goose Pit has started, both dikes are no longer under dewatering conditions. The approximate pool volume dewatered is in the order of 3 Mm^3. This is referring to the amount of water removed to expose the majority of the downstream toe of the Bay-Goose Dike.

Vault Dike isolates Vault Pit from Wally Lake. Dewatering of Vault Lake started on June 27th, 2013 and was completed during the summer of 2014. The approximate pool volume to be dewatered was in the order of 2 Mm^3.

All of the dewatering dikes are now in the operation phase as dewatering is complete. The following outlines the key criteria and constraints that will need to be observed and followed in accordance with the design objectives, concepts, and assumptions for the Dewatering Dikes.

4.1 PERFORMED DEWATERING

4.1.1 East Dike - Dewatering

During dewatering of the northwest arm of Second Portage Lake, an apparent leak through the East Dike of up to 0.5 m^3/s occurred over several days near Sta. 60+490. The leak then appeared to self-heal following drilling works for the additional grouting carried out in this sector. A sinkhole cavity of about 18 m^3 in the general vicinity of the leak (Sta. 60+472) also appeared in July 2009. The sinkhole was located immediately upstream of the cutoff wall and extended at least partially through the cutoff wall. A Technical Memorandum entitled “Meadowbank East Dike Grouting Response Plan – Completed Works” (Golder 2009b) provides additional information regarding the remedial grouting work and Golder Doc. No. 961 (Golder, 2009d) “East Dike Sinkhole Summary Report” provides more details about the sinkhole.

Following the appearance of the sinkhole, a cone penetration test (CPT) investigation was conducted, and three diamond drill holes and a surface geophysical survey were advanced in the area to obtain additional information. Based on the CPT results, there appeared to be a zone of coarser grained material (area with lower fines content) in the apparent leak area. The drilling investigation indicated that there may be soil between the base of the cut-off wall and underlying bedrock that was not completely excavated and/or grouted. An additional investigation of the sinkhole and apparent leakage area consisting of the temporary installation of thermistor strings and monitoring of the thermal condition was initially conducted in 2010 and repeated in 2011. Based on the thermal results, it appeared that a pervious zone existed within the cut-off wall and shallow bedrock between approximately Sta. 60+440 and 60+504. In the past, AEM considered potential mitigation options to

reduce seepage through the dike and to provide contingency protection for the Portage Pit. Based on the stability of the dike and the seepage rate, remediation or implementation of contingency control measures is not considered necessary. The condition of the dike will continually be monitored and if the condition of the dike is judged to be deteriorating then remediation would be reassessed. Details regarding these investigations are provided in East Dike CPT Investigation Report (Golder, 2010b) and East Dike Sinkhole Investigation Program October-November 2009 (Golder 2010a).

The seepage is currently controlled by a seepage collection system and is not impacting the mining operation. The seepage is regularly monitored and appears to have stabilized and does not have a negative effect on the dike stability.

4.1.2 Vault Dike – Dewatering

The dewatering of Vault Lake started on June 27th, 2013 and was completed in the summer of 2014. The approximate pool volume to be dewatered was 2 Mm^3. The downstream water levels and the upstream water levels needed to be closely monitored during dewatering to preserve the integrity of the dike. During dewatering, water from the Vault Basin was pumped and directly discharged to Wally Lake through a diffuser or processed through the Water Treatment Plant (WTP) to reduce Total Suspended Solids (TSS).

SECTION 5 • OPERATIONS

The following section outlines the key operational procedures that need to be observed and followed during operation of the Dewatering Dikes at Meadowbank in accordance with the performance objective.

5.1 REFERENCES

References to key documents for the operation of the Dewatering Dikes are presented in Table 5-1.

Table 5-1 : Key reference documents for Operation of the Dewatering Dikes at Meadowbank

Type of information	Reference	Link to Retrieve Document
Meadowbank Water Management Plan	V7 AEM 2018	..\..\..\..\..\12- Annual Report\2019\Water management plan
Meadowbank Annual Water Balance	2019	..\..\..\..\05-WaterManagement\2019\Water Balance

5.2 SUMMARY OF PERFORMANCE OBJECTIVE AND OPERATION CONTROL

The performance objective and the operational criteria for the Dewatering Dikes at Meadowbank during operation are summarized in Table 5-2.

Table 5-2 : Performance objectives and operational criteria of the Dewatering Dikes at Meadowbank

Water Management
• Operational freeboard of each water retention structure must be respected during operation (refer to section 5.2.1) • Water movement must respect the water balance for intake and discharge location (refer to water balance) • Water movement must be tracked and recorded on a monthly basis (volume, origin, destination) • The water management system (pump, pipes) must be operated and maintained as per the defined operating procedure • Any seepage must be captured by sump and pumped back to allowed location (or naturally report to an approved location)
Water Quality
• All water discharged in the environment must be through an approved diffuser • Water quality at discharge met the approved criteria (refer to water management plan) • Water quality forecast data is used to make informed water management strategy decision • Water quality and quantity of seepage water is monitored
Surveillance
• Proper surveillance (inspection and data review) of the Dewatering Dikes performance occur and is documented during dewatering (refer to section 7) • The performance of the Dewatering Dikes during dewatering is reviewed against the threshold for performance criteria and trigger pre-defined actions (refer to Table 5-4 to 5-8)

5.2.1 Freeboard

The design criteria for minimum freeboard for the Dewatering Dikes are presented in Table 5-3. The freeboard may change due to fluctuations in lake levels or due to settlement of the dikes. Maintenance may be required to restore loss of freeboard due to settlement.

Table 5-3 : Freeboard

Structure	Freeboard	
	To the Dike Crest (m)	To the Dike Cut-off Wall or Liner (m)
East Dike	3.0	1.0
Bay-Goose Dike	4.0	1.0
South Camp Dike	3.0	1.0
Vault Dike	3.0	1.5

5.3 SEEPAGE MANAGEMENT

If seepage is observed through a Dewatering Dike, a system of collection ditch and sump will be constructed at the downstream toe of the structure to capture the seepage into a contact water retention pond. The water quality will be monitored and it will be directed to an approved discharge point.

The quantity and quality of each seepage from a Dewatering Dike has to be monitored as per the requirement of section 7.

5.3.1 East Dike - Seepage Collection System

The purpose of the seepage collection system is to:

- Collect and convey seepage and runoff away from the downstream toe area; and
- Allow measurement of seepage through the dike.

The downstream toe of the East Dike was mostly exposed by July 2009 and then entirely by July 2010. Three seepage zones have been identified along the toe of the East Dike at approximately Sta. 60+480, Sta. 60+225 and Sta. 60+550. A temporary rectangular weir was installed in 2009 to monitor the seepage observed at approximately Sta. 60+480. Monitoring of the seepage from this location has occurred during the open water season (approximately mid-July through early October) in 2009 and 2010. During 2010, a temporary v-notch weir was installed to measure a second zone of seepage exposed near Sta. 60+225 following dewatering. This portion of the dike was not exposed for visual inspection in 2009 due to the downstream water elevation. No monitoring system has been installed in the area around Sta. 60+550. Seepage flows have been measured to be between 7 L/s

and 11 L/s at Sta. 60+480 and around 4 L/s at Sta. 60+225 and estimated to be about 1 L/s at Sta. 60+550.

The installation of a seepage collection system downstream of East Dike to capture and pump the seepage water started in September 2011 and was completed in 2012. After the system installation, 3 zones of seepage were identified near the downstream toe. The zones at about Sta. 60+247 and Sta. 60+498 each had a collection sump with pump connected to a year round pumping and piping system.

In 2011, the downstream seepage at Sta. 60+498 had been stable at a rate of about 864 m^3/day (10 L/s) with no visual signs of turbidity, which was consistent with rates recorded during previous years. In 2011, the seepage downstream at Sta.60+247 appeared stable at around 345.6 m^3/day (4L/s) with no visual signs of turbidity noted, which was consistent with previous rates. Since the installation of the seepage collection system, all seepage is being captured within the sumps and no sign of additional seepage on the ground surface or downstream in the Portage Pit was observed. No active monitoring of the seepage rate at these locations occurred in 2012 but AEM has been visually inspecting the flow in the sumps and no turbidity was noted. AEM performed a pump test after the installation of the sumps, it was noted that the measured flow were consistent with 2010 and 2011 data. Flow meters have been installed in 2013 at the exit of each pump. Since then, the observed flow average 474 m^3/day in 2018 with a maximum flow of 615 m^3/day in May and minimum flow of 354 m^3/day in December 2018.

5.3.2 Bay-Goose Dike - Seepage Collection System

In 2012, four small seepage areas were identified with a total of 9 seepage channels along the dike. The number of active seepage channels decreases each year, as some channels stop flowing. No turbidity has been observed in the seepage. The total flow coming from these seepages each year has been decreasing. The flow of the seepages is directed toward Goose Pit as part of natural reflooding. The overall seepage is less than anticipated and is not a concern for now. The area will continue to be monitored to follow the evolution of the seepage in these areas.

Refer to the 2018 Annual Geotechnical Inspection (Golder Associates) for detailed field observations made on the dike. No mitigation measure has been implemented on the dike other than additional geotechnical instrumentation installation and field investigation in certain areas. No seepage collection has been implemented so far as the seepage is not affecting the mine operation or the integrity of the dike. The condition of the dike will continually be monitored and if the condition of the dike is judged to be deteriorating then remediation would be reassessed.

5.3.3 Vault Dike - Seepage Collection System

As of summer 2018 no seepage through the Vault Dike has been observed. Seepage through the dike will be visually monitored if discovered. Seepage and runoff from the Vault Dike will be collected in ditches along the downstream toe and directed to topographic lows if required based on the visual monitoring.

5.4 OPERATING PROCEDURE DURING OPERATION OF THE DEWATERING DIKES AT MEADOWBANK

Table 5-4 to 5-8 below present performance indicators for each of the Dewatering Dike at Meadowbank and the Triger Action Response Plan (TARP) if the associated performance criteria deviate from defined range.

Table 5-4 : Threshold Criteria and pre-defined action during operation of East Dike

		Threshold Criteria During Operation			
		Green **Acceptable Situation**	**Yellow** **Areas of concern**	**Orange** **High Risk Situation**	**Red** **Emergency Situation**
Criteria	Downstream toe displacement, sloughing or bulging	None visible	Visible displacement or bulging	Toe displacement related to a sloughing slide from near downstream crest to 5 m from centreline Bulging > 1 m in height	Toe displacement related to a sloughing slide reaching 5 m from centreline Bulging greater than 4m in height
	Tension crack along downstream rockfill embankment (more than 3 m from centreline)	Within 7 m of the downstream crest edge and < 0.1 m deep and < 3 m length along the dike	Within 10 m of the downstream crest edge and > 0.1 m and < 1.0 m deep	> 1.0 m deep	> 1.0 m deep
	Tension crack along upstream rockfill embankment (more than 3 m from centreline)	< 0.1 m deep and < 3 m length along the dike	> 0.1 m and < 1.0 m deep	> 1.0 m deep	> 1.0 m deep
	Tension crack within 3 m each side of the cutoff wall at crest (upstream or downstream)	None visible	< 0.1 m deep or < 0.1 m wide	> 0.1 m deep or > 0.1 m wide	> 0.1 m deep or > 0.1 m wide
	Sinkhole on crest	Not visible	> 5 m outside from centreline	Within 5 m from centreline	Within 5 m from centreline
	Cut-off wall lateral cumulative deformation (based on survey monument)	None	<0.05 m	> 0.05 and 0.10 m	> 0.10 m
	Cut-off wall lateral cumulative deformation (based on inclinometer)	None	< 0.05 m	> 0.05 m and < 0.10 m	> 0.10 m
	Lake elevation	< 134.1 masl	> 134.1 and < 134.8 masl	> 134.8 and < 135.6 masl	> 135.6 masl
	Pore water pressure (based on piezometers)	Pore water pressure measurements stable or decreasing.	Increasing trend in pore water pressure downstream of cut-off wall.	Anomalous trends (sharp increase) in pore water pressure downstream of cut-off wall.	Anomalous trends (sharp increase) in pore water pressure downstream of cut-off wall.
	Temperature variation along centreline (based on thermistors and piezometers)	Temperature measurement stable and similar variation at surface from previous years.	Increasing trend in temperature below the active layer	Continuous increasing trend in temperature below the active layer	Continuous increasing trend in temperature below the active layer
	Seepage through dike (excluding Freshet water)	< 3,000 m^3/day	>3,000 m^3/day and <6,000 m^3/day and / or turbidity in the water	> 6,000 m^3/day and < 20,000 m^3/day and / or turbidity in the water	> 20,000 m^3/day *Condition where the seepage inflow is rapidly increasing and projected to soon exceed pumping capacity*
Action Required		• Instrumentation monitoring and visual inspection according to frequency set out in OMS manual. • Possibility of a mitigation plan to be evaluated by Engineering Department.	• Increased instrumentation monitoring frequency, particularly in area of concern. • Document location, photograph, survey, and increase inspection and monitoring in area of concern. • Identify potential cause • Implement engineering review.	• Suspend activities on dike crest at area of concern • Increased instrumentation monitoring frequency, particularly in area of concern. • Document location, photograph, survey, and increase inspection and monitoring in area of concern. • Plan and take appropriate mitigation measures with engineering review. (Use as reference contingency measures for different scenarios proposed by AEM (See Table 12-9)). • Reassess thresholds and conditions for red category (emergency situation) taking into account the changing conditions presently observed and interactions of various items.	• Temporary evacuation of personnel and equipment from pit and suspension of activities. • Update planning and take appropriate mitigation with engineering review.
Personnel Notified		Geotechnical Engineer/Specialists, Geotechnical Coordinator, Engineering Superintendent, Engineering Assistant Superintendent, Corporate Environment Director, Designer (Golder or SNC, if required).	Geotechnical Engineer/Specialist, Geotechnical Coordinator, Engineering Superintendent, Engineering Assistant Superintendent, Corporate Environment Director, Designer (Golder or SNC), Specialized Contractor (if required), Environment Superintendent, Mine Manager, Discuss at MDRB Meeting.	Geotechnical Engineer/Specialist, Geotechnical Coordinator, Engineering Superintendent, Engineering Assistant Superintendent, Corporate Environment Director, Designer (Golder or SNC), Specialized Contractor, Environment Superintendent, Mine Manager, Dike Review Board, Mine Inspector, Health and Safety, ERT (Emergency Personnel, if required).	Geotechnical Engineer/Specialist, Geotechnical Coordinator, Engineering Superintendent, Engineering Assistant Superintendent, Corporate Environment Director, Designer (Golder or SNC), Specialized Contractor, Environment Superintendent, Mine Manager, Dike Review Board, Mine Inspector, Health and Safety, ERT (Emergency Personnel).

Table 5-5 : Threshold Criteria and pre-defined action during operation of Bay-Goose Dike

		Threshold Criteria During Operation			
		Green **Acceptable Situation**	**Yellow** **Areas of concern**	**Orange** **High Risk Situation**	**Red** **Emergency Situation**
Criteria	Downstream toe displacement, sloughing or bulging	None visible	Visible displacement or bulging	Toe displacement related to a sloughing slide from near downstream crest to 5 m from centreline and bulging > 1 m in height	Toe displacement related to a sloughing slide reaching 5 m from centreline Bulging greater than 4m in height
	Tension crack along downstream rockfill embankment (more than 3 m from centreline)	Within 7 m of the downstream crest edge and < 0.1 m deep and < 3 m length along the dike	Within 10 m of the downstream crest edge and > 0.1 m and < 1.0 m deep	> 1.0 m deep	> 1.0 m deep
	Tension crack along upstream rockfill embankment (more than 3 m from centreline)	< 0.1 m deep and < 3 m length along the dike	> 0.1 m and < 1.0 m deep	> 1.0 m deep	> 1.0 m deep
	Tension crack within 3 m of either side of the cutoff wall at crest	None visible	< 0.1 m deep or < 0.1 m wide	> 0.1 m deep or > 0.1 m wide	> 0.1 m deep or > 0.1 m wide
	Sinkhole on crest	Not visible	> 5 m outside from centreline	Within 5 m from centreline	Within 5 m from centreline
	Cut-off wall lateral cumulative deformation (based on survey monument)	None	<0.05 m	> 0.05 and 0.10 m	> 0.10 m
	Cut-off wall lateral cumulative deformation (based on inclinometer)	None	< 0.05 m	> 0.05 m and < 0.10 m	> 0.10 m
	Lake elevation	< 135.1 masl	> 135.1 and < 135.8 masl	> 135.8 and < 136.1 masl	> 136.1 masl
	Pore water pressure (based on piezometers)	Pore water pressure measurements stable or decreasing.	Increasing trend in pore water pressure downstream of cut-off wall.	Anomalous trends (sharp increase) in pore water pressure downstream of cut-off wall.	Anomalous trends (sharp increase) in pore water pressure downstream of cut-off wall.
	Temperature variation along centreline (based on thermistors and piezometers)	Temperature measurement stable and similar variation at surface from previous years.	Increasing trend in temperature below the active layer	Continuous increasing trend in temperature below the active layer	Continuous increasing trend in temperature below the active layer
	Seepage through dike at toe (excluding Freshet water)	< 300 m^3/day	>300 m^3/day and <1,000 m^3/day and / or turbidity in the water	> 1,000 m^3/day and < 2,000 m^3/day and / or turbidity in the water	> 2,000 m^3/day *Seepage inflow is rapidly increasing and projected to soon exceed pumping capacity*
	Seepage through dike in North Channel area	< 150 m^3/day	>150 m^3/day and <500 m^3/day and / or turbidity in the water	> 500 m^3/day and < 1,000 m^3/day and / or turbidity in the water	> 1,000 m^3/day *Seepage inflow is rapidly increasing and projected to soon exceed pumping capacity*
	Seepage through dike in pit (excluding Freshet water, estimated visually)	Slow trickle of water along pit walls, easily handled by regular pit sumps	Steady stream of water along pit walls, easily handled by regular pit sumps	Large quantity of water flowing down the pit walls, cannot be easily handled by regular pit sumps, mining activities are impacted	Water flowing down the walls cannot be handled by regular pit sumps and has markedly increased in flow rate and quantity, mining activities are disrupted.
Action Required		• Instrumentation monitoring and visual inspection according to frequency set out in OMS manual. • Possibility of a mitigation plan to be evaluated by Engineering Department.	• Increased instrumentation monitoring frequency, particularly in area of concern. • Document location, photograph, survey, and increase inspection and monitoring in area of concern. • Identify potential cause • Implement engineering review.	• Suspend activities on dike crest at area of concern • Increased instrumentation monitoring frequency, particularly in area of concern. • Document location, photograph, survey, and increase inspection and monitoring in area of concern. • Plan and take appropriate mitigation measures with engineering review. (Use as reference contingency measures for different scenarios proposed by AEM (See Table 12-9)). • Reassess thresholds and conditions for red category (emergency situation) taking into account the changing conditions presently observed and interactions of various items.	• Temporary evacuation of personnel and equipment from pit and suspension of activities. • Update planning and take appropriate mitigation with engineering review.
Personnel Notified		Geotechnical Engineer/Specialist, Geotechnical Coordinator, Engineering Superintendent, Engineering Assistant Superintendent, Corporate Environment Director, Designer (Golder or SNC, if required).	Geotechnical Engineer/Specialist, Geotechnical Coordinator, Engineering Superintendent, Engineering Assistant Superintendent, Corporate Environment Director, Designer (Golder or SNC), Specialized Contractor (if required), Environment Superintendent, Mine Manager, Discuss at MDRB Meeting.	Geotechnical Engineer/Specialist, Geotechnical Coordinator, Engineering Superintendent, Engineering Assistant Superintendent, Corporate Environment Director, Designer (Golder or SNC), Specialized Contractor, Environment Superintendent, Mine Manager, Dike Review Board, Mine Inspector, Health and Safety, ERT (Emergency Personnel, if required).	Geotechnical Engineer/Specialist, Geotechnical Coordinator, Engineering Superintendent, Engineering Assistant Superintendent, Corporate Environment Director, Designer (Golder or SNC), Specialized Contractor, Environment Superintendent, Mine Manager, Dike Review Board, Mine Inspector, Health and Safety, ERT (Emergency Personnel).

Table 5-6 : Threshold Criteria and pre-defined action during operation of South Camp Dike

		Threshold Criteria During Operation			
		Green **Acceptable Situation**	**Yellow** **Areas of concern**	**Orange** **High Risk Situation**	**Red** **Emergency Situation**
Criteria	Downstream toe displacement, sloughing or bulging	None visible	Visible displacement or bulging	Toe displacement related to a sloughing slide from near downstream crest to 5 m from centreline Bulging > 1 m in height	Toe displacement related to a sloughing slide reaching 5 m from centreline Bulging greater than 4m in height
	Tension crack along downstream rockfill embankment (more than 3 m from centreline)	Within 7 m of the downstream crest edge and < 0.1 m deep and < 3 m length along the dike	Within 10 m of the downstream crest edge and > 0.1 m and < 1.0 m deep	> 1.0 m deep	> 1.0 m deep
	Tension crack along upstream rockfill embankment (more than 3 m from centreline)	< 0.1 m deep and < 3 m length along the dike	> 0.1 m and < 1.0 m deep	> 1.0 m deep	> 1.0 m deep
	Sinkhole on crest	Not visible	> 5 m outside from centreline	Within 5 m from centreline	Within 5 m from centreline
	Lake elevation	< 135.6 masl	> 135.6 and < 136.3 masl	> 136.3 and < 136.6 masl	> 136.6 masl
	Temperature variation within foundation (based on thermistors)	Temperature measurement stable and similar variation at surface from previous years.	Increasing trend in temperature below the active layer	Continuous increasing trend in temperature below the active layer	Continuous increasing trend in temperature below the active layer
	Seepage through dike (excluding Freshet water)	< 300 m^3/day	>300 m^3/day and <1,000 m^3/day and / or turbidity in the water	> 1,000 m^3/day and < 2,000 m^3/day and / or turbidity in the water	> 2,000 m^3/day *Condition where the seepage inflow is rapidly increasing and projected to soon exceed pumping capacity*
Action Required		• Instrumentation monitoring and visual inspection according to frequency set out in OMS manual. • Possibility of a mitigation plan to be evaluated by Engineering Department.	• Increased instrumentation monitoring frequency, particularly in area of concern. • Document location, photograph, survey, and increase inspection and monitoring in area of concern. • Identify potential cause • Implement engineering review.	• Suspend activities on dike crest at area of concern • Increased instrumentation monitoring frequency, particularly in area of concern. • Document location, photograph, survey, and increase inspection and monitoring in area of concern. • Plan and take appropriate mitigation measures with engineering review. • Reassess thresholds and conditions for red category (emergency situation) taking into account the changing conditions presently observed and interactions of various items.	• Temporary evacuation of personnel and equipment from pit and suspension of activities. • Update planning and take appropriate mitigation with engineering review.
Personnel Notified		Geotechnical Engineer/Specialist, Geotechnical Coordinator, Engineering Superintendent, Engineering Assistant Superintendent, Corporate Environment Director, Designer (Golder or SNC, if required).	Geotechnical Engineer/Specialist, Geotechnical Coordinator, Engineering Superintendent, Engineering Assistant Superintendent, Corporate Environment Director, Designer (Golder or SNC), Specialized Contractor (if required), Environment Superintendent, Mine Manager, Discuss at MDRB Meeting.	Geotechnical Engineer/Specialist, Geotechnical Coordinator, Engineering Superintendent, Engineering Assistant Superintendent, Corporate Environment Director, Designer (Golder or SNC), Specialized Contractor, Environment Superintendent, Mine Manager, Dike Review Board, Mine Inspector, Health and Safety, ERT (Emergency Personnel, if required).	Geotechnical Engineer/Specialist, Geotechnical Coordinator, Engineering Superintendent, Engineering Assistant Superintendent, Corporate Environment Director, Designer (Golder or SNC), Specialized Contractor, Environment Superintendent, Mine Manager, Dike Review Board, Mine Inspector, Health and Safety, ERT (Emergency Personnel).

Table 5-7 : Threshold Criteria and pre-defined action during operation of Vault Dike

		Threshold Criteria During Operation			
		Green Acceptable Situation	**Yellow Areas of concern**	**Orange High Risk Situation**	**Red Emergency Situation**
Criteria	Downstream toe displacement, sloughing or bulging	None visible	Visible displacement or bulging	Toe displacement related to a sloughing slide from near downstream crest to 5 m from centreline Bulging > 1 m in height	Toe displacement related to a sloughing slide reaching 5 m from centreline Bulging greater than 4m in height
	Tension crack along downstream rockfill embankment (more than 3 m from centreline)	Within 7 m of the downstream crest edge and < 0.1 m deep and < 3 m length along the dike	Within 10 m of the downstream crest edge and > 0.1 m and < 1.0 m deep	> 1.0 m deep	> 1.0 m deep
	Tension crack along upstream rockfill embankment (more than 3 m from centreline)	< 0.1 m deep and < 3 m length along the dike	> 0.1 m and < 1.0 m deep	> 1.0 m deep	> 1.0 m deep
	Sinkhole on crest	Not visible	> 5 m outside from centreline	Within 5 m from centreline	Within 5 m from centreline
	Lake elevation	< 141.5 masl	> 141.5 and < 142.2 masl	> 142.2 and < 142.5 masl	> 142.5 masl
	Temperature variation within foundation (based on thermistors)	Temperature measurement stable and similar variation at surface from previous years.	Increasing trend in temperature below the active layer	Continuous increasing trend in temperature below the active layer	Continuous increasing trend in temperature below the active layer
	Seepage through dike (excluding Freshet water)	< 300 m^3/day	>300 m^3/day and <1,000 m^3/day and / or turbidity in the water	> 1,000 m^3/day and < 2,000 m^3/day and / or turbidity in the water	> 2,000 m^3/day *Condition where the seepage inflow is rapidly increasing and projected to soon exceed pumping capacity*
Action Required		• Instrumentation monitoring and visual inspection according to frequency set out in OMS manual. • Possibility of a mitigation plan to be evaluated by Engineering Department.	• Increased instrumentation monitoring frequency, particularly in area of concern. • Document location, photograph, survey, and increase inspection and monitoring in area of concern. • Identify potential cause • Implement engineering review.	• Suspend activities on dike crest at area of concern • Increased instrumentation monitoring frequency, particularly in area of concern. • Document location, photograph, survey, and increase inspection and monitoring in area of concern. • Plan and take appropriate mitigation measures with engineering review. • Reassess thresholds and conditions for red category (emergency situation) taking into account the changing conditions presently observed and interactions of various items.	• Temporary evacuation of personnel and equipment from pit and suspension of activities. • Update planning and take appropriate mitigation with engineering review.
Personnel Notified		Geotechnical Engineer/Specialist, Geotechnical Coordinator, Engineering Superintendent, Engineering Assistant Superintendent, Corporate Environment Director, Designer (Golder or SNC, if required).	Geotechnical Engineer/Specialist, Geotechnical Coordinator, Engineering Superintendent, Engineering Assistant Superintendent, Corporate Environment Director, Designer (Golder or SNC), Specialized Contractor (if required), Environment Superintendent, Mine Manager, Discuss at MDRB Meeting.	Geotechnical Engineer/Specialist, Geotechnical Coordinator, Engineering Superintendent, Engineering Assistant Superintendent, Corporate Environment Director, Designer (Golder or SNC), Specialized Contractor, Environment Superintendent, Mine Manager, Dike Review Board, Mine Inspector, Health and Safety, ERT (Emergency Personnel, if required).	Geotechnical Engineer/Specialist, Geotechnical Coordinator, Engineering Superintendent, Engineering Assistant Superintendent, Corporate Environment Director, Designer (Golder or SNC), Specialized Contractor, Environment Superintendent, Mine Manager, Dike Review Board, Mine Inspector, Health and Safety, ERT (Emergency Personnel).

5.5 COMMUNICATION AND DECISION MAKING

Figure 5-1 indicates the communication and decision processes when the threshold criteria are met and when pre-defined action need to be implemented.

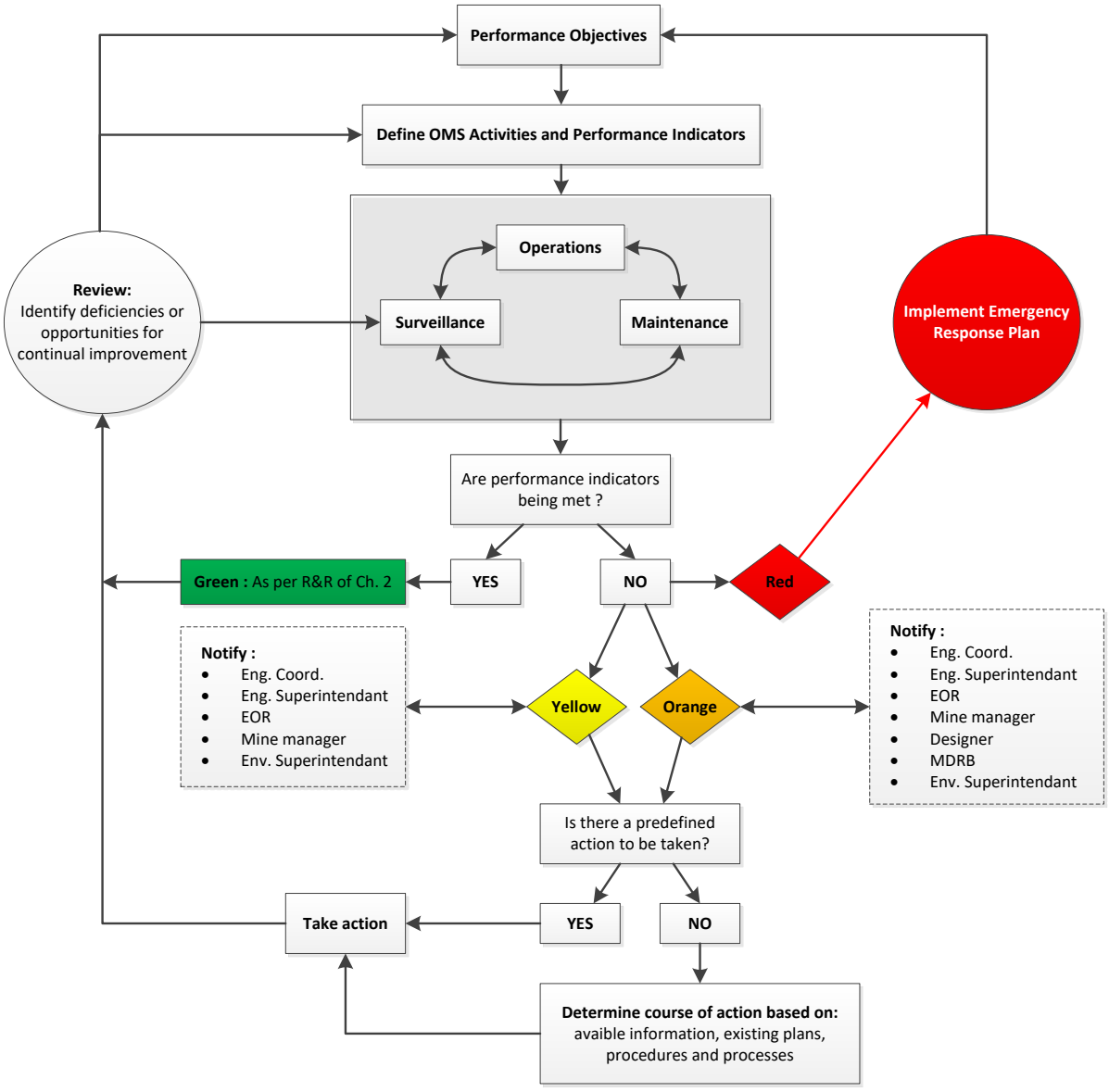

Figure 5-1 : Communication and Decision Process for Water Management Infrastructure TARP

SECTION 6 • MAINTENANCE

This section identifies all infrastructures within the scope of this manual that have maintenance requirements and identifies all preventative, predictive and corrective maintenance activities.

6.1 PREVENTATIVE, PREDICTIVE AND CORRECTIVE MAINTENANCE

Maintenance is divided into preventative (planned), predictive and corrective.

Preventative maintenances are planned, recurring maintenance activities conducted at a fixed or approximate frequency and not typically arising from results of surveillance activities. Example of such maintenance includes calibration and maintenance of surveillance equipment or regularly changing oil on a pump as per manufacturer's requirement.

Predictive maintenances are pre-defined maintenances conducted in response to results of surveillance activities that measure the condition of a specific component against performance criteria.

Corrective maintenance of a component of the water management system is to prevent further deterioration and ensure their performance in conformance with performance objectives. The need for corrective maintenances is based on surveillance activities, with surveillance results identifying the need and urgency of maintenance.

6.2 REFERENCES

References to key documents for the maintenance of the Dewatering Dikes at Meadowbank are presented in Table 6-1.

Table 6-1 : Reference documents for Maintenance of Dewatering Dikes at Meadowbank

Type of information	Link to Retrieve Information
Maintenance log of water management infrastructure	In progress
Maintenance log of pumping equipment	I:\MAINTENANCE\G dore\PWA-COM-LGT hrs reading.xlsx
Maintenance log of geotechnical instrumentation	In progress
Pump allocation tool	In progress
Geotechnical instrument & Datalogger inventory	In progress

6.3 COMPONENT OF THE DEWATERING DIKES REQUIRING MAINTENANCE

Table 6-2 indicates all the component of the Meadowbank water management infrastructure that requires maintenance.

Table 6-2 : Component of the Dewatering Dikes requiring maintenance

Water Management Infrastructure
• Dike embankment (i.e repair erosion) • Dike crest (i.e fill inactive tension cracks) • Seepage collection sump (i.e, reprofile slope, increase sump volume) • Ditches and diversions (i.e snow removal, repair erosion)
Surveillance
• Geotechnical instruments (thermistors, piezometers, inclinometers, survey monument) • Data acquisition system • Flowmeter
Other
• Dike crest access road • Access to sump

6.3.1 Maintenance components that are outside the scope of this OMS manual

The following component maintenance activities are outside of the scope of this OMS manual. For more information, the superintendent of the department responsible for these maintenance can be contacted

- Electrical systems and supply – E&I
- Maintenance of heavy equipment and light vehicles – Maintenance
- Communication infrastructures - IT
- Road used to access the infrastructures – Mine

6.4 DESCRIPTION OF MAINTENANCE ACTIVITIES

Table 6-3 summarizes the description of maintenance activities for each component of the Meadowbank water management infrastructure. Each component has activities as well as a trigger for that maintenance and a person responsible for this activity. It is the duty of the person responsible for the maintenance activity to ensure that the person doing the maintenance has the qualifications and competencies required to conduct the maintenance and is following the proper safety procedure. The responsible person must also ensure that the proper documentation and reporting requirement are followed.

Table 6-3 : **Description of maintenance activities for components of water management infrastructure**

Component	Type of maintenance	Nature of the activity	Frequency of maintenance (preventative) OR Trigger of maintenance (predictive and corrective)	Responsible for the activity	Documentation Required	Reporting Requirement
Water Management Infrastructure						
Dike embankment - repair erosion	Corrective	Gullies and depression to be filled with rockfill and re-sloped	Following a demand from engineering superintendant following a visual inspection showing erosion	Mine Superintendent (can use a contractor alternatively)	Photo of remediation work	Engineering to update the maintenance log of the structure
Dike crest – fill inactive tension cracks	Corrective	Inactive tension cracks to be filled with bentonite to prevent widening due to water infiltration	Following a demand from engineering superintendant following a visual inspection showing inactive tension cracks	Geotechnical technician	Photo of remediation work	Engineering to update the maintenance log of the structure
Dike crest - compensate settlement	Corrective	Add rockfill to increase the height of the dike following observation of settlement	Following a demand from engineering superintendant following a visual inspection showing settlement that need to be compensated (i.e loss of freeboard)	Mine Superintendent (can use a contractor alternatively)	Photo of remediation work Surveying of remediation work	Engineering to update the maintenance log of the structure and provide surveying
Seepage collection sump– increase volume	Predictive	Excavate an additional sump or increase the capacity of an existing sump	Following a demand from engineering superintendant following a re-assessment of the sump capacity	Mine Superintendent (can use a contractor alternatively)	Photo of remediation work Surveying of remediation work	Engineering to update the maintenance log of the structure and provide surveying
Seepage collection sump – reprofile sump	Corrective	Excavate flatter slope for the sump or add material against the slope to reprofile them	Following a demand from engineering superintendant following a visual inspection showing instable sump slope	Mine Superintendent (can use a contractor alternatively)	Photo of remediation work	Engineering to update the maintenance log of the structure and provide surveying
Ditches – snow removal	Predictive	Use an excavator to remove snow in the ditch	Every year prior to freshet to ensure that ditch is clear of snow obstruction. Demand will be formulated by the Engineering Superintendent	Energy & Infrastructure Superintendant	Photo of remediation work	Engineering to update the maintenance log of the structure
Ditches – clean debris and sediment accumulation	Corrective	Remove any debris and accumulation of sediment that can hinder flow	Following a demand from engineering superintendant following a visual inspection showing accumulation of debris and sediment	Energy & Infrastructure Superintendant	Photo of remediation work	Engineering to update the maintenance log of the structure
Ditches – repair erosion of granular layer	Corrective	Add granular material to repair erosion of the ditches	Following a demand from engineering superintendant following a visual inspection showing erosion of the ditches	Energy & Infrastructure Superintendant	Photo of remediation work	Engineering to update the maintenance log of the structure
Ditches – release of TSS from the ditches	Corrective	Corrective action to mitigate release of TSS from ditches. Can include placement of sill curtain or temporary by-passing the ditches using pump	Following a demand from the environment superintendant following sampling of a high turbidity event from the diches	Environment Superintendant	Water sample results Photo of remediation work	Engineering to update the maintenance log of the structure
Surveillance						
Geotechnical Instrument – loss of reading	Corrective	Investigate the status of an instrument who no longer gave data	When an instrument no longer gave data for an unknown reason	Geotechnical technician	Update status in instrument database	Update of the geotechnical instrument database by the geotechnical technician
Geotechnical instrument – unusual reading	Corrective	Investigate the status of an instrument who gave unusual data	When an instrument gave an unusual data	Geotechnical technician	Update status in instrument database	Update of the geotechnical instrument database by the geotechnical technician
Geotechnical instrument – replacement	Corrective	Replace an instrument that no longer work	When the engineering superintendant as for a geotechnical instrument to be replaced	Geotechnical technician	Instrument installation as-built report Update spare inventory Calibration sheet Initial instrument rading	Update of the geotechnical instrument database by the geotechnical technician
Geotechnical instrument –calibration of total station	Preventative	Send the total station to be calibrated	yearly	Geotechnical technician	Calibration sheet	Update of the geotechnical instrument database by the geotechnical technician
Geotechnical instrument –calibration of inclinometer probe	Preventative	Send the inclinometer probe to be calibrated	yearly	Geotechnical technician	Calibration sheet	Update of the geotechnical instrument database by the geotechnical technician
Datalogger – maintenance	Preventative	Do maintenance of datalogger as per manufacturer specification	yearly	Geotechnical technician	Maintenance report	Update of the geotechnical instrument maintenance log by the geotechnical technician

Component	Type of maintenance	Nature of the activity	Frequency of maintenance (preventative) OR Trigger of maintenance (predictive and corrective)	Responsible for the activity	Documentation Required	Reporting Requirement
Datalogger – battery change	Predictive	Change battery when the battery level alarm get triggered	When the battery alarm is trigered in VDV	Geotechnical technician	Maintenance report	Update of the geotechnical instrument maintenance log by the geotechnical technician
Datalogger – troubleshooting	Corrective	Repair of a dataloger deficiency	When a dataloger is suspected of being deficient	Geotechnical technician	Update status in instrument database	Update of the geotechnical instrument maintenance log by the geotechnical technician
Flowmeter – calibration	Preventative	Send the flowmeter to be calibrated	yearly	Energy & Infrastructure Superintendant	Calibration sheet	Update of the geotechnical instrument maintenance log by the geotechnical technician
Flowmeter – deficient reading	Corrective	Repair of a flowmeter deficiency	When the Engineering Superintendant ask that a flowmeter be troubleshoot based on irregular data	Energy & Infrastructure Superintendant	Update status in instrument database	Update of the geotechnical instrument database by the geotechnical technician
Other						
Dike crest access	Predictive	Snow clearing, maintaining roadway, grading access	As required to maintain access	Mine Superintendent	-	-
Access to sump	Predictive	Snow clearing, maintaining roadway, grading access	As required to maintain access	Mine Superintendent	-	-

SECTION 7 • SURVEILLANCE

Surveillance involves the inspection and monitoring (i.e collection of qualitative and quantitative observation and data) of the Dewatering Dikes. Surveillance also includes the timely documentation, analysis and communication of surveillance results, to inform decision making and verify whether performance objectives including critical controls are being met.

There are two type of surveillances activities which are further discussed in this chapter:

- Site observation and inspection
- Instrument monitoring

7.1 REFERENCE

References to key documents for site observation & inspection of the Dewatering Dikes at Meadowbank are presented in Table 7-1. References to key documents for instrument monitoring are presented in Table 7-2.

Table 7-1 : Key reference documents for Inspection of the Dewatering Dikes at Meadowbank

Type of information	Document #	Document Title and link
Simplified inspection form Template	-	OMS manual - Appendix A
Detailled visual inspection form template	-	OMS manual – Appendix A
East Dike Dewatering inspection report	ED-VIR	..\..\..\..\04-DewateringDikes\East Dike\Inspection
Bay-Goose Dike inspection report	BG-VIR	..\..\..\..\04-DewateringDikes\Bay-Goose Dike\Inspection
South Camp Dike inspection report	SCD-VIR	..\..\..\..\04-DewateringDikes\South Camp Dike\Inspection .....
Vault Dike inspection report	VD-VIR	..\..\..\..\04-DewateringDikes\Vault Dike\19 - Inspection.....
Annual dike safety inspection (annual geotechnical inspection)	-	..\..\..\10- Audit & External Inspection\2- Annual Geotech Inspection..\..\..\04- Water Management\6- Inspection

Table 7-2 : Reference documents for Instrument monitoring of the Dewatering Dikes at Meadowbank

Type of information	Link to Retrieve Information
Geotechnical Instruments map	..\..\..\..\11-Instrumentation\Instruments\MAP & DWG
Access to instrument data	VDV
Instrumentation Report	..\..\7 - Instrumentation Report
Blast vibration log	**"\\CAMBFS01\Groups\Engineering\05-Geotechnic\99-Archive\Blast Monitoring\Events\k_factor(to update).xls"**

7.2 SITE OBSERVATIONS AND INSPECTIONS

The purpose of site observations and inspections is to identify warning signs of the development of potentially adverse conditions that could lead to a failure or some other form of loss of control. Site observations and inspections include the direct observations by personnel on or adjacent to the Dewatering Dikes and may also include observations from helicopter or photos taken from unmanned airborne vehicle (UAV, satellites).

Site observations and inspections are used to identify and track visible changes in the condition of the Dewatering Dikes. Changes that may be observed throughout site observations and inspections are included in Table 7-3

Table 7-3 : Changes that may be observed through site observation and inspection of the Dewatering Dikes at Meadowbank

Changes related to physical risk of dike, road, ramp
• Change in freeboard • Deformation or change in condition at the crest, slopes and toes (i.e bulge, cracks, sinkhole, sloughing, settlement) • Newly form or expanding areas of erosion • Evidence of piping or unexpected water movement through water containment structures • Changes in the seepage quantity (pumping rate) and quality (turbidity)
Changes related to physical risk of ditch
• Newly form or expanding areas of erosion • Newly form of obstruction to flow (i.e boulder, sediments, snow) • Newly form of slope instability
Changes related to water storage and transport
• Change in sump level • Verify using the staff gauge that the pond is operated within its normal operating condition • Changes in the seepage quantity (pumping rate) and quality (turbidity) • Condition of pipe for water transport • Sign of leaks from water line • Condition of pumps
Change related to surveillance instrumentation
• Condition of surveillance instruments and associate protection around instruments (i.e cover, barriers to prevent vehicle damage) • Condition of power supplies for instruments (i.e solar panel) • Condition of communication infrastructures associated with instruments (i.e antenna, datalogger)

7.2.1 Site observation

Site observation is conducted by personnel working on or adjacent to the Dewatering Dikes as part of their daily activities, maintaining awareness of the facility in the course of carrying their duties. Trained personnel such as geotechnical technician should be on the lookout for sign of changing condition as indicated in Table 7-3 as adverse condition can develop rapidly between inspections. A simplified visual observation form can be used to document such observations but they do not need to be documented unless a new condition has been observed. Any new observation should be documented by photograph and reported to the geotechnical personnel or Engineering Superintendent.

7.2.2 Inspection program

Inspections are conducted by the engineering department or other personnel with appropriate training and competency and are more rigorous than site observations.

The inspection program consists of several types of inspections such as routine and special visual inspection, dike safety inspection and dam safety review. The following sub-section describe in more details the scope, frequency and responsible for each type of inspection.

7.2.3 Routine Visual Inspection

Routine visual inspections are conducted on a pre-defined schedule and may target specific activities. Their objective is to identify any conditions that might indicate change in the Dewatering Dikes performance and therefore require follow-up. The inspections need to cover the aspect described in Table 7-2. Of particular significance are new occurrences or noted changed in seepage, erosion, sinkholes, boils, slope slumping, settlement, displacement, or cracking of structure components. These inspections are held during dewatering and operation.

There are two approved inspection form for inspection; a simplified one and a detailed one. The detailed form should be used for monthly inspection while the simplified one can be used when inspection are required at an increased frequency. All areas of the form must be filled.

The person responsible for the inspection must:

- Do the inspection as per the required frequency
- Fill all information on the proper inspection form
- Take pictures to supplement the inspection. As much as possible, these are to be taken from the same vantage points during each inspection so that changes in conditions can be readily identified. Photos should be annotated or captioned and should include a date stamp.
- Store electronically all photo and inspection form
- Update the surveillance log
- Ensure that the reviewer is aware that the document is ready to be reviewed

During the review process, the reviewer must:

- Ensure that all required information is present
- Ensure that the observation does not trigger a change in alert level
- Sign the inspection form as a reviewer
- Update the surveillance log
- Distribute the inspection results

The frequency for inspection of a structure will vary based on its TARP level and need to be updated in the surveillance log.

Table 7-4 summarises the Routine & Special visual inspection R&R, suggested frequency and scope in function of the alert level of the structure

Table 7-4 : Summary of routine inspection requirements

Structure	TARP Level	Inspection Responsible	Scope of inspection	Inspection Frequency	Reporting	Inspection Reviewer	Distribution List
East Dike, Bay-Goose Dike, South Camp Dike, Vault Dike - Operation	Green	Geotechnical Technician	Physical risk and surveillance	Monthly	Detailled inspection form	Geotechnical Engineer	Engineering Geotechnical Team, EOR
				Weekly during period of flow (from May to October)	Simplified inspection form	-	
	Yellow	Geotechnical Technician	Physical risk and surveillance	Monthly	Detailled inspection form + presentation and analysis of instrumentation data	Geotechnical Engineer	Engineering Geotechnical Team, EOR
				Weekly	Simplified inspection form		
	Orange	Geotechnical Technician	All of Table 7-2	Weekly	Report on summary of surveillance activity + status of mitigation action	Geotechnical Engineer	Engineering Geotechnical Team, EOR, designer, Management
				Monthly	Detailled inspection form + presentation and analysis of instrumentation data	Geotechnical Engineer	Engineering Geotechnical Team, EOR
		Geotechnical Engineer		Daily	Simplified inspection form	Geotechnical Coordinator	Engineering Geotechnical Team, EOR

7.2.3.1 Special Visual Inspection

Special inspections are conducted during and after unusual or extreme events that may impact the facility. Special inspections are conducted by the Geotechnical Engineer/Specialist or Engineer of Record using the detailed inspection form and using the same procedure for review and documentation. Special visual inspections must be done on each structure after each of these events:

- At the end of dewatering once downstream toe is exposed
- Following a blast that exceeds the vibration limits of the structure
- After an earthquake
- After a high intensity rainfall event (higher than a 1:2 years recurrence)
- Immediately after a site observation notices a change in condition
- Prior or immediately after increasing or decreasing the TARP level of a structure

7.2.3.2 Dike Safety Inspection (annual geotechnical inspection)

A dike safety review is a more comprehensive technical inspection, integrating inspections and results of monitoring instrument. This type of inspection is conducted by an external geotechnical engineer and supported by the Engineer of Record to have a more complete understanding of the facility performance and identify deficiencies in performance or opportunity for improvement. This will provide information to be used to revise the OMS manual.

For the Dewatering Dikes at Meadowbank, such inspection needs to occur on an annual basis between the month of July and September. The following components need to be inspected during this review:

- East Dike, Bay-Goose Dike, South Camp Dike and Vault Dike
- Ditches and channel

In addition to field inspection done as part of the safety review the following point should be addressed during the review:

- Review of all inspections report performed since the last review
- Review of monitoring instruments data;
- Identify deficiencies in performance or opportunity for improvement
- Review OMS performance and operational criteria and confirm that these meet the performance objective of the design
- Review and provide recommendations regarding OMS for the following year.

After each safety inspection, a report must be submitted to the Engineering Superintendent which includes the results of the inspection done and addressing all points above. These reports will be stored electronically.

7.2.3.3 Independent Dam Safety Review

Independent dam safety reviews are carried out by an independent third party to review all aspects of the design, construction, operation, maintenance, processes and other systems affecting the dam's safety, including the dam safety management system. The review defines and encompasses all components of the "dam system" under evaluation including the dams, foundations, abutments, instrumentation and seepage collection works. The independent third party for the Dewatering Dikes is the Meadowbank Dike Review Board (MDRB).

Modification to the MDRB composition can only be made by the Engineer of Record.

The Meadowbank Dike Review Board (MDRB) is comprised of the following member.

- Anthony Rattue
- Don Haley

An annual MDRB meeting will be held every year at the Meadowbank site. Other events that could trigger a MDRB meeting are:

- Major modifications to the design or design criteria;
- Discovery of unusual conditions that can compromise the integrity of the Dewatering Dikes;
- After extreme hydrological or seismic events; and
- Decommissioning.

During the annual MDRB meeting, a dam safety review will be carried out according to the recommendations laid out in the Dam Safety Guidelines (CDA, 2013).

This review will include, but is not limited to:

- Review of the dikes classification;
- Site inspection;
- Review of design and construction records;
- Review of monitoring practices and the instrumentation records
- Assessment of the operation of the facilities;
- Provide recommendation on operation, maintenance and surveillance based on the results of the instrumentation readings, construction records and site observations;

7.3 INSTRUMENT MONITORING PROGRAM – DATA ACQUISTION

Instrument monitoring provides information on parameters or characteristics that cannot be detected through site observation or inspections, cannot be observed with sufficient precision and accuracy or need to be monitored at high frequency or continuously.

The objective of instrument monitoring is to collect data to be used to assess the performance of the infrastructures against the performance objectives and indicators and the critical controls (refer to table 4-2 and 5-2). Instrument monitoring and inspections work together as a comprehensive data set to enable assessment of the Dewatering Dikes performance and provide a basis for informed

decision. All are essential, and none of these forms of surveillance can be neglected if performance objectives are to be met and risks are to be managed.

More information on the type of in-situ instruments installed on each structure, how they were installed and their location can be found in Section 3-6 of this OMS manual.

Table 7-5 indicates the type of information collected through instruments monitoring and how it is collected. Table 7-6 summarizes the data acquisition program related to instrument monitoring.

Table 7-5 : Information collected using instrument monitoring

Direct collection of information
• In-situ thermistors to measure temperature profile within the structure and its foundation • In-situ piezometer to measure pore-water pressure providing information about flow of water through the structure and foundation stability • In-situ shape array inclinometer (SAA) to provide information on deformation within the cut-off wall • Survey monument to provide information on settlement and deformation • Staff gauge to inform about water level of a pond versus its operating level • Blast monitor to inform on potential impact of blasting vibration on the structure • Flow meters and seepage monitoring station to inform on volume of water movement • Surveys conducted to measure ice cover, water level, update height and slope of containment structure
Collection of information from remote sensing
• Data acquired from airborne survey to generate detailed topographic map
Collection of information based on laboratory analyses
• Water quality analysis of seepage and surface runoff • Water quality analysis of water discharged through diffuser to inform on Environmental compliance • Water quality analysis of water stored in the various pond on site to inform on water movement decision
Collection of information related to the conduct of OMS activities
• Automatic data collection and transmission system for in-situ instruments (datalogger, solar panel, antenna, battery)

Table 7-6 : Summaries of data acquisition program related to instrument monitoring of the Dewatering Dikes at Meadowbank

Instrument monitoring	Location of monitoring (3)	Parameter measured	Acquisition Methodology	Standard Acquistion frequency	Acquisition Responsible	Documentation methodology	Documentation Responsible
Thermistors	East Dike, Bay-Goose Dike, South Camp Dike, Vault Dike	Temperature (C^0) point for each bead on the chain	In-situ instrument connected to automatic data acquisition and transmission system	New data are acquired and transmitted to VDV every 3 hrs	Geotechnical Technician	Data are exported from VDV into instrumentation report emited at a predetermined frequency (1)(2)	Geotechnical Engineer
Piezometer	East Dike, Bay-Goose Dike	Pressure (kpa) point for each instrument	In-situ instrument connected to automatic data acquisition and transmission system	New data are acquired and transmitted to VDV every 3 hrs	Geotechnical Technician	Data are exported from VDV into instrumentation report emited at a predetermined frequency (1)(2)	Geotechnical Engineer
Shape array accelerometer (SAA)	-	Displacement in mm	In-situ instrument connected to automatic data acquisition and transmission system	New data are acquired and transmitted to VDV every 3 hrs	Geotechnical Technician	Data are exported from VDV into instrumentation report emited at a predetermined frequency (1)(2)	Geotechnical Engineer
Survey monument	-	Elevation of monument which is then converted into mm of displacement (minimum precision of 3 mm required)	Data are acquired using a total station	Monthly in winter and bi-weekly from May to September	Geotechnical Technician	Data are exported into geoexplorer. Instrumentation report are emited at predetermined frequency (1)(2)	Geotechnical Technician
Staff Gauge	-	Water level in pond	Take picture of the gauge	During each inspection	Inspection officer	Within inspection report	Inspection officer
Blast Monitor	Bay-Goose Dike	Peak particle velocity (PPV) measured by the blast monitor (mm/s)	Placement of blast monitor at a predetermined area on the dike	Before each blast in the vicinity of the dike	Geotechnical Technician	Update the blast vibration log. Discussion on recorded vibration in instrumentation report	Geotechnical Technician
Flow meter	-	Volume of water pump (m^3)	Pumpman operator will inscribe flowmeter value ona pumping sheet	Daily when pump is operating	E&I Pump crew supervisor	Data will be integrated in the water balance	Water & Tailings engineer
Seepage monitoring station (manual reading with a V notch)	East Dike, Bay-Goose Dike	Seepage flow (m^3/s)	Using a bucket and a stopwatch	Weekly during period of flow	Geotechnical Technician	Documented within instrumentation	Geotechnical Engineer
Survey shot	East Dike, Bay-Goose Dike	Elevation of the water level (minimum precision of 3 mm required)	Surveyor will take a water/ice level at a predetermined area	Once per week	Surveyor Leader	Integrated in the water movement log	Water & Tailings engineer
Airborne survey	All water management infrastructure	Topographic aerial survey made using drone	Surveyor will take a drone survey	Once per year after freshet	Surveyor Leader	Within survey database	Surveyor Leader
Water quality(4)	East Dike	Parameter indicated within water management plan	Water quality sample taken and sent for laboratory analyses	Acquisition frequency within water management plan	Environment General Supervisor	Within Env water quality database	Environment General Supervisor

(1)Refer to section 7-5 for more information on reporting methodology and the frequency of reporting
(2) Refer to section 7-6 on how to present instrumentation data from VDV in a report
(3) Exact location of each instrument can be found in the instrumentation database
(4) Location of water quality sampling point can be found in water management plan

7.4 ADDING INSTRUMENT TO THE MONITORING PROGRAM

Any addition to the monitoring program must be validated by the Engineering Superintendent or by the Environment Superintendent for aspect relating to water quality. In-situ instrument installation must be recorded in an as-built report and added to the instrumentation database and map. After each installation of instrumentation the following must be done:

- Document the calibration sheet and initial data reading
- Document instrument specification (manufacturer sheet)
- Document Information to which datalogger the instrument is connected
- Survey instrument coordinates (x,y,z)
- If the instrument is drilled, a schematic view of the depth of the instrument versus the stratigraphy must be produced
- Photo of installation must be documented

7.5 ANALYSIS OF SURVEILLANCE RESULTS

For the effective use of surveillance results and decision making, results must be collated, examined, analysed and reported in a timely and effective manner.

For visual inspections, the process of analyzing the data and communicating the results is described in section 7-4 and happens while the inspection is done and the report is sent. The information gained from the analysis of these results is then compared during the inspection and review to the TARP criteria which will then indicate the action to take if performance indicators are not met.

For the instrumentation monitoring to be effective, the data must be reviewed, analysed and reported at the proper frequency. Table 7-6 summarises the requirements for review, analyses and reporting of instrumentation data.

The person responsible for instrumentation data review needs to update the surveillance log each time an instrument result has been reviewed and analysed. The person responsible for review of reporting and distribution needs to update the surveillance log once the report has been reviewed and distributed.

Table 7-7 : **Requirements for review, analyses and reporting of instrument data**

	TARP Level	Expected range of observation	Responsible for review & analyse	Frequency of review	Responsible for reporting	Reporting frequency	Responsible for review and distribution	Distribution List
Piezometer, thermistor, inclinomter, survey monument (**Operation**)	Green	Define in TARP of each structure	Geotechnical Engineer	Bi-Weekly	Geotechnical Technician	Quaterly instrumentation report	Geotechnical Engineer	Engineering geotechnical team, designer, EOR
			Geotechnical technician	Weekly				
	Yellow	Define in TARP of each structure	Geotechnical Engineer	Weekly	Geotechnical Technician	Instrumentation reporting included within monthly inspection report	Geotechnical Engineer	Engineering geotechnical team, designer, EOR
			Geotechnical technician	Every 3 days				
	Orange	Define in TARP of each structure	Geotechnical Engineer	Daily	Geotechnical Engineer	Instrumentation reporting included within weekly update report	Geotechnical Coordinator	Engineering Geotechnical Team, EOR, designer, Management
			Geotechnical technician	Daily				
Staff Gauge / Survey shot (freeboard)	Green	Define in TARP of each structure	Water & Tailings Engineer	Weekly	Water & Tailings Engineer	Within the monthly attenuation pond and pumping infrastructure inspection report	Geotechnical Coordinator	Engineering geotechnical team, designer, EOR
	Yellow	Define in TARP of each structure	Water & Tailings Engineer	Daily	Water & Tailings Engineer	Within the monthly attenuation pond and pumping infrastructure inspection report	Geotechnical Coordinator	Engineering geotechnical team, designer, EOR
	Orange	Define in TARP of each structure	Water & Tailings Engineer	Twice a day	Water & Tailings Engineer	Included within weekly update report	Geotechnical Coordinator	Engineering Geotechnical Team, EOR, designer, Management
Blast Monitor	-	PPV> 50 mm/s	Geotechnical Technician	After retrieving a blast monitor on a water management structure	Geotechnical Technician	In Quaterly instrumentation report	Geotechnical Engineer	Engineering geotechnical team, designer, EOR
Flow meter / Seepage monitoring	Green	Define in TARP of each structure	Water & Tailings Engineer	Weekly	Water & Tailings Engineer	During the monthly update of the water balance	Geotechnical Coordinator	Engineering geotechnical team, designer, EOR
	Yellow	Define in TARP of each structure	Water & Tailings Engineer	Daily	Water & Tailings Engineer	During the monthly update of the water balance	Geotechnical Coordinator	Engineering geotechnical team, designer, EOR
	Orange	Define in TARP of each structure	Water & Tailings Engineer	Twice a day	Water & Tailings Engineer	Included within weekly update report	Geotechnical Coordinator	Engineering Geotechnical Team, EOR, designer, Management
Water quality	Green	Define in TARP of each structure	Environment General Supervisor	As per water management plan	Environment General Supervisor	As per water management plan	Environment Superintendant	Engineering geotechnical team
	Yellow	Define in TARP of each structure	Environment General Supervisor	As per water management plan	Environment General Supervisor	As per water management plan	Environment Superintendant	Engineering geotechnical team
	Orange	Define in TARP of each structure	Environment General Supervisor	As per water management plan	Environment General Supervisor	As per water management plan	Environment Superintendant	Engineering geotechnical team

7.5.1 Procedure in case of data exceeding expected range of observation

If data exceeding the expected range of observation or anomalous data readings are observed, the following actions need to be taken:

- Re-read to check the reading (if the reading is from VDV, take a manual reading in the field);
- Check readout equipment to verify that it is functioning correctly;
- Verify calibration;
- If instrument has stopped functioning, notify the Engineering Superintendent immediately. If considered critical, a replacement instrument should be installed;
- If an anomalous reading is confirmed, a detailed review of the effects of the reading should be carried out and design or remedial actions should be implemented if determined necessary by the Engineering Superintendent. Any malfunctioning instrument or frozen piezometer must be documented;
- In the case of valid data that would exceed the TARP level do a special inspection if possible

Before modifying the TARP level due to in-situ instrumentation or reading that cannot be confirmed by other visual observation, the EOR must be consulted for further guidance.

7.5.1.1 Blast Monitor

If a reading exceeding the PPV limit for a water management structure (50 mm/s) is observed, this event must be communicated to the drill and blast engineer who will need to ensure that the blasting pattern is modified to avoid re-occurrence of this event. Afterward a special inspection will need to be done on the structure to look for changing condition.

If more than one occurrence of blast vibration exceeding the limit is observed within a 2 weeks period, the Engineering Superintendent needs to be notified of the situation.

7.5.2 Anomalous Instrumentation Data

Anomalous instrumentation data are presented in Table 7-8. These anomalies could happen without triggering a TARP level change and need to be investigated and recorded:

Table 7-8 : Example of anomalous data and some common causes

Thermistors
• Increase or decrease in measurements (over two or more readings) that cannot be explained by seasonal temperature variations; • Progressive loss of data (starting from the bottom and progressing). This is usually a sign of water infiltration • Observation of a spike in temperature in one bead. This is usually due to a capacitive effect • Loss of data (could be a transmission error, faulty hardware or a sheared cable)
Piezometer
• Increase or decrease in pore water pressure measurements that cannot be explained by seasonal lake level variations (verify that the instrument has not been installed in a casing); • Sharp increase in reading (verify that the instrument is not frozen) • Loss of data (could be a transmission error, faulty hardware or a sheared cable)
Inclinometer
• Cumulative increases in displacement (greater than 3 cm); • Erratic movement. This is usually a sign of water infiltration
Survey Monument
• Accelerating displacement rate of the survey monuments (x, y, z directions) (over two or more readings) (could be due to a prism shooting error or problem with the total station)
Blast Monitor
• Vibrations during a blast are not observed (the blast was cancelled, the blast monitor was not properly installed or vibrations were too weak to be recorded)
Flowmeter, survey shot and staff gauge
• Sudden change in staff gauge reading. Or reading that seems not to reflect the probable water elevation. This could be due to a settlement or displacement of the staff gauge. • Increase or decrease of a flowmeter reading that are inconsistent with pumping rate or rainfall or observed water level. • Survey elevation that has a sharp fluctuation from last reading. This can be caused by the reading not being taken at the good location, wave actions or daily variances in GPS signal

7.6 SURVEILLANCE DOCUMENTATION & REPORTING

One visual inspection report per structure needs to be completed, reviewed and distributed per the frequency shown in Table 7-4.

An instrumentation report needs to be prepared at predetermined frequency to present all instrumentation monitoring data as described in Table 7-7.
Table 7-9 describes how instrumentation data should be reported.

Instrumentation report needs to include the following informations:

- Table presenting all the instruments installed on each structure, their status and pertinent installation information
- Graph of all instruments for all structure covered by the report. The graph needs to present data for a minimum period of 1 year. Higher recurrence should be presented if clarity of the presented information allows it. The graph needs to be presented in a way that allows for data interpretation without referring to other document
- Analyses of all instruments data presented highlighting specific trend
- Discussion on anomalous trend

For the structure that have a yellow Tarp level, the instrumentation data relevant to the cause of the alert needs to be included with each visual inspection report.

For the structure that have an orange Tarp level, the instrumentation data relevant to the alert level needs to be included with each inspection report. In addition the weekly update report needs to be written with the following information:

- Context on why the structure is at the orange level
- Change in condition since the last weekly report
- What is the mitigation plan and what action have been taken since the last update report
- Discussion on the results of the instrumentation data

Table 7-9 : How data should be presented in report for instrumentation monitoring

Thermistor
• Temperature vs. depth plots over time. • The plot should indicate the thermistor string reference number and date of each measurements presented • The plot need to indicate relevant stratigraphy and their depth • Plot need to be presented with a cross-section of the installation (if on a structure) as well as a plan view showing the instrument location
Piezometer
• Plots of total head as elevation versus time; and • Plot need to be presented with a cross-section of the installation showing lithology with depth as well as a plan view showing the instrument location • The plot need to indicate the instrument number, the dates of each measurement and a mention if the temperature read by the instrument is less than 0 degree
Inclinometer
• Cumulative displacement plots (to view total displacement); • Incremental displacement plots (to present increasing or accelerating movements between readings); • Cumulative displacement at crest versus time; and • Time plots at zones of identified displacement. • The plot need to indicate the SAA number, what is considered positive and negative displacement and the dates of each measurement • Both elevations and depths should be presented together with the lithology. • A plan view needs to be included showing the instruments locations
Survey Monument
• Total net movement plots (to present total displacement); • Vertical displacement plots; and • Lateral displacement plots parallel and perpendicular to the dike axis • The plot need to indicate the survey monument number, what is considered positive and negative displacement and the dates of each measurement • A plan view needs to be included showing the instruments locations

7.7 DATA MANAGEMENT

An electronic library or database, which is easily accessible, shall be set up to catalogue and store inspection documents, maintenance reports and instrumentation measurements. The following will be stored in the hard copy and/or electronic format. Section 7.1 indicates where each of these items can be found electronically:

- Instrumentation report
- Visual inspection report
- Weekly report for structure in orange Tarp level

- Dike safety inspection (annual geotechnical inspection)
- Dam Safety Review report;
- Surveillance log
- Instruments database and map
- Maintenance log of geotechnical instrument
- Maintenance log of water management infrastructure
- Pump maintenance record

Appendix A

Simplified Inspection Form

Detailed Inspection Form Template

Simplified Inspection Form

Simplified Surveillance Form					
Structure :				Date	
Surveillance done by :					
	Item	Changing condition ? Yes	No	NA	Comments
1	Freeboard and pond level				
2	Tension Cracks				
3	Sinkhole				
4	Settlement				
5	Sloughing				
6	Erosion				
7	Debris & Obstruction (ditches, sump)				
8	Seepage				
9	Turbidity				
10	Instrumentation Condition				
11	Piezometric reading				
12	Thermistor reading				
13	SAA reading				
14	Flowmeter				
15	Condition of pipe and pump				

Recommendation

This simplified form is to be used as per the OMS manual instruction. The surveillance log must be updated after this surveillance report is filed. All condition deviating from normal operating threshold must be described in the comments section. Picture of changing condition should be attached to this document. Any changing condition must be reported to the geotechnical engineer. Any chaning condition trigering a change in threshold level must be communicated to the Engineering Coordinator or Superintendant

Detailed Inspection Form Template

DIKE VISUAL INSPECTION REPORT

AGNICO EAGLE
MEADOWBANK

The instrumentation data is treated separately in the instrumentation quarterly report.

Inspecting Officer	Choose an item.
Report No.	Dike-VIR-
Inspection Date	

Dike name	

Last Inspection Date						
Weather during the current inspection		Sunny ☐	Overcast ☐	Rain ☐	Snow ☐	Wind ☐
	Comments:					
Main changes since the last inspection						

Tarp level (Based on OMS manual revision from March 2018)	

General Condition Summary

➢

Inspecting Officer: _____ Review Officer: _____ Date Reviewed: _____
(YY/MM/DD)

DIKE VISUAL INSPECTION REPORT

AGNICO EAGLE
MEADOWBANK

Field observations

Location	Observations	Recommendations
Downstream slope and berm	▪	▪
Upstream slope and berm	▪	▪
Crest	▪	▪

Seepage Report

Location	Observations	Recommendations
	▪	▪

Methodology: For the visual inspection, any anomaly or change since the last inspection must be reported. These anomalies include cracks, erosion, settlements, sink holes, bulging, sloughing, seepage signs, snow/ice, rutting, mud, ponds/puddles, signs of saturated soil and any damage on the liner or objects/water over the liner.

DIKE VISUAL INSPECTION REPORT

AGNICO EAGLE
MEADOWBANK

Aerial view of the Dike

DIKE VISUAL INSPECTION REPORT

AGNICO EAGLE
MEADOWBANK

Map of the Dike

DIKE VISUAL INSPECTION REPORT

Downstream slope and berm

DS1: Downstream slope and berm.	Location and orientation of DS1.

DS2: Downstream slope and berm.	Location and orientation of DS2.

DIKE VISUAL INSPECTION REPORT

AGNICO EAGLE
MEADOWBANK

Upstream slope and berm

US1: Upstream slope. Lake is frozen.	Location and orientation of US1.

US2: Upstream slope.	Location and orientation of US2.

DIKE VISUAL INSPECTION REPORT

AGNICO EAGLE
MEADOWBANK

Crest surface

CR1: Rolling surface.	Location and orientation of **CR1**

Appendix B

Potential Mitigation for Upset Condition

Potential Mitigation Plan for Upset Condition on Water Management Infrastructures

Upset Condition	Area / Cause		Comments/Monitoring	Contingency or Corrective Action
Overtopping and Subsidence	1a	Water level rise / storm event	Lake levels and crest elevations is monitored as part the water management infrastructure surveillance program Outflow channels are inspected during thaw, open water season and during ice break-up.	Add additional pumping unit If rise is caused by a channel obstruction, remove the obstruction
	1b	Dam crest settlement	This scenario requires extensive loss of support in the foundation since the rockfill of the dikes is essentially not settlement prone itself after construction and dewatering. For foundation settlement of this magnitude to occur, a piping event must develop or there is unexpected layer of compressible soil in the foundation. The situation would develop slowly with crest settlement evident at least several weeks before a run-away event develops. Easily observed cracks should be evident. Monitoring of the crest settlement is conducted routinely.	The crest is wide and comprises of coarse rockfill. Significant damage to the dike is not credible, based on performance of other rockfill structures subjected to overtopping or flow through events Rockfill from the mining operations can be placed to raise the dike crest and compensate settlement. Mining operations may need to be suspended, but there will be considerable warning time given the slow development of the scenario.
	1c	Wave action	Large freeboard and wide crest zone makes this a low concern	rip-rap can be added and/or dam crest can be raised.
Internal Erosion	2a	Dike section: Cut-off wall/geomembrane is defective, allowing high water flow. This defect occurs at a location where the core allows high flows and where the fills/geomembrane are defective; the combination allows erosion of the cut-off and/or the Core Backfill.	The cut-off wall/geomembrane and/or core backfill will develop a progressively increasing void ratio, thereby increasing the rate of water flow through the dike. This is not a catastrophic failure mode but could lead to an inability to manage water on site	Monitor seepage from downstream face for rate of seepage and for presence of sediment in seepage. Identify zone of seepage and establish a seepage capture and monitoring station with sufficient pumping capacity Re-evaluate the impact of this water inflow on the site wide water balance
	2b	Dike section: geomembrane is defective.	Results in increasing the rate of water flow through the dike. This is not a catastrophic failure mode as the rockfill will be stable and at its worst would lead to temporary suspension of mining.	Monitor seepage from downstream face for rate of seepage and for presence of sediment in seepage. Identify zone of seepage and establish a seepage capture and monitoring station with sufficient pumping capacity Re-evaluate the impact of this water inflow on the site wide water balance
	2c	Foundation till is possibly non-uniform with more transmissive zones and not self-filtering. It is possible that one of these zones may align with defective construction of the cut-off wall allowing high flows. Seepage would lead to erosion of the cut-off into the downstream rockfill. Seepage could also erode the foundation tills at the downstream toe or into the downstream rockfill because of the lack of filtering.	Limited seepage at the toe or into the rockfill would accelerate in to a large inflow, and could lead to the undermining of the dike if no action was taken. This is a credible catastrophic mode if increased seepage is not detected in time. No particular instrumentation is needed as this failure mode will show itself as localized and increasing seepage. It could be detected by walk-over inspection by an experienced engineer or technician.	Remedial action could comprise a reverse filter and rockfill buttress depending on location of the flow and configuration of the foundation, freezing or grouting, if identified in time. In the worst case, the pit may be deliberately flooded in a controlled manner, the cut-off repaired and the pit dewatered. Build additional dike downstream increasing pumping.

Upset Condition	Area / Cause		Comments/Monitoring	Contingency or Corrective Action
Seepage	3a	Within the Embankment	Seepage on its own is not a credible failure scenario. The downstream rockfill shell has extremely high flow through capacity. The rockfill zone is both large and pervious, so that seepage will not daylight and lead to instability.	Monitor seepage from downstream face for rate of seepage and for presence of sediment in seepage. Identify zone of seepage and establish a seepage capture and monitoring station with sufficient pumping capacity Re-evaluate the impact of this water inflow on the site wide water balance
	3b	Within the Foundation	Defective construction of cut-off leading to transfer of unexpectedly high fraction of the reservoir head into the downstream part of the dike foundation, or leading to a piping event as described in internal erosion (2c). If this mechanism arises it should show itself during initial dewatering or very shortly thereafter.	Monitor seepage from downstream face for rate of seepage and for presence of sediment in seepage. Identify zone of seepage and establish a seepage capture and monitoring station with sufficient pumping capacity Re-evaluate the impact of this water inflow on the site wide water balance Re-assess stability (numerical modelling) and construct a stabilising berm
Structural - Slope Instability	4a	Normal Operation: Slope Failure	The rockfill shoulders of the dike are wide and have high shear strength Slope failure requires failure in the foundation and which would extend into the overlying dike. Sliding failure is considered unlikely given the low horizontal forces generated by the water and ice relative to the normal frictional force due to the weight of the dikes and the frictional angles of foundational materials. This mechanism should develop during construction or dewatering, due to the increase in load and associated pore water pressure development. Initial stages of failure should be observable as tension cracks in the dike crest. Walk-over inspection of the dike by trained inspector is an appropriate monitoring strategy in addition the instrumentation. Survey of crest face and toe is conducted.	Re-assess stability (numerical modelling) and construct a stabilising berm if required Fill inactive tension cracks with bentonite
	4b	Earthquake Induced: Slope Failure	Site is located in a low seismic zone. Dam consisting of massive rock zone has a low sensitivity to seismic motion.	Do an inspection and repair damage
	4c	Erosion; washout, ice scour	Crest – minimum 50 m section, Downstream – large quarry rock face.	Repair erosion by placing additional rockfill and material
Structural – Lateral Movement	5a	Failure of Cut-off Wall	Differential horizontal movement of the dike due to dewatering, water or ice loading or pit wall failure may create a breach in the cut-off wall. Ice and water forces are not credible due to the ratio of frictional forces generated by the self weight of the dike versus ice loads and water pressure. Large inflows through the breach may occur as a consequence if the cut-off wall breached. Pit would flood requiring suspension of mining activities. Potential for loss of life of workers inside dikes. Inclinometer, settlement prism and monument monitoring is done routinely.	Repair the cutoff wall
Subsidence	6	Foundation Soils	Unexpected foundation soils consolidated during dike construction or dewatering. A significant quantity of clay would be required to generate settlement resulting in a water release event. Prism and monument monitoring is done routinely.	A 1 m core settlement would be required to allow water to flow through the rockfill and over the settled cut-off. This flow would not cause failure of the rockfill shells. It would also be readily repaired by excavating rockfill above the cut-off wall and placing more till. Soil conditions will be observed during dewatering to accommodate actual conditions.
Premature Closure	7	Corporate Bankruptcy or Early Resource Depletion	Bond is provided for this eventuality. Design of rehabilitation is the same as rehabilitation at closure of project.	This would trigger the closure plan
Pump and Pipeline Failure	8	Pumping infrastructures	Freezing protection is provided by heat tracing and insulation. Pipelines monitored pump pressures at plant and frequent site inspection.	Replace defect in pipeline Repair the pump and use another pump in the meantime

Appendix C

Instrumentation List

Table 1: Bay Goose Instruments List (TH+PZ)

Station	Instrument ID	Type	Status	Readings	For PZ		For TH	
#	ID	PZ/TH	Operational (✓)/Not operational (×)/Frozen (F)	Manual/ Automatic	Elevation (m)	Stratigraphic unit	Number of operational beads	Elevation interval in m (top/bottom)
30+134	T1	TH	✓	Automatic (DL1)	-	-	16	135/115
30+158	Pz01P1A	PZ	×(F)	-	-	-	-	-
30+158	Pz01P1B	PZ	×(F)	-	-	-	-	-
30+158	Pz01P1C	PZ	×(F)	-	-	-	-	-
30+158	Pz01P2A	PZ	✓	Automatic (DL1)	117.05	10m below bedrock	-	-
30+158	Pz01P2B	PZ	✓	Automatic (DL1)	122.05	5m below bedrock	-	-
30+158	Pz01P2C	PZ	×(F)	Automatic (DL1)	128.05	1m above bedrock	-	-
30+158	Pz01P3A	PZ	×	Automatic (DL1)	117.13	10m below bedrock	-	-
30+158	Pz01P3B	PZ	×	Automatic (DL1)	122.13	5m below bedrock	-	-
30+167	Pz06P2	PZ	×	Automatic (DL1)	127.57	1m above bedrock	-	-
30+185	T2	TH	✓	Automatic (DL1)	-	-	16	135/115
30+249.5	Pz07P2	PZ	×(F)	Automatic (DL1)	129.85	1m above bedrock	-	-
30+260	T3	TH	✓	Automatic (DL1)	-	-	16	130/125.5
30+272	T4	TH	✓	Automatic (DL1)	-	-	16	130/125.5
30+276.5	Pz02P1A	PZ	×(F)	Automatic (DL1)	119.25	10m below bedrock	-	-
30+276.5	Pz02P1B	PZ	×(F)	Automatic (DL1)	124.25	5m below bedrock	-	-
30+276.5	Pz02P1C	PZ	×	Automatic (DL1)	130.25	1m above bedrock	-	-
30+276.5	Pz02P2A	PZ	✓	Automatic (DL1)	119.1	10m below bedrock	-	-
30+276.5	Pz02P2-B	PZ	✓	Automatic (DL1)	124.1	5m below bedrock	-	-
30+276.5	Pz02P2-C	PZ	×	Automatic (DL1)	130.1	1m above bedrock	-	-
30+276.5	Pz02P3-A	PZ	✓	Automatic (DL1)	119.7	10m below bedrock	-	-

Station	Instrument ID	Type	Status	Readings	For PZ		For TH	
#	ID	PZ/TH	Operational (✓)/Not operational (×)/ Frozen (F)	Manual/ Automatic	Elevation (m)	Stratigraphic unit	Number of operational beads	Elevation interval in meters (top/bottom)
30+276.5	Pz02P3-B	PZ	✓	Automatic (DL1)	124.7	5m below bedrock	-	-
30+288.5	T5	TH	✓	Automatic (DL1)	-	-	16	130/125.5
30+306.5	*Pz08P2*	*PZ*	×(F)	*Automatic (DL1)*	*129.65*	*1m above bedrock*	-	-
30+330.5	*T6*	*TH*	✓	*Automatic (DL1)*	-	-	*16*	*135/115*
30+378.5	*Pz03P1A*	*PZ*	✓	*Automatic (DL2)*	*113.12*	*10m below bedrock*	-	-
30+378.5	*Pz03P1B*	*PZ*	✓	*Automatic (DL2)*	*118.12*	*5m below bedrock*	-	-
30+378.5	*Pz03P1C*	*PZ*	✓	*Automatic (DL2)*	*124.12*	*1m above bedrock*	-	-
30+378.5	*Pz03P2A*	*PZ*	✓	*Automatic (DL2)*	*113.1*	*10m below bedrock*	-	-
30+378.5	*Pz03P2B*	*PZ*	✓	*Automatic (DL2)*	*118.1*	*5m below bedrock*	-	-
30+378.5	*Pz03P2C*	*PZ*	✓	*Automatic (DL2)*	*124.1*	*1m above bedrock*	-	-
30+378.5	*Pz03P3A*	*PZ*	✓	*Automatic (DL2)*	*113.58*	*10m below bedrock*	-	-
30+378.5	*Pz03P3B*	*PZ*	✓	*Automatic (DL2)*	*118.58*	*5m below bedrock*	-	-
30+386	*T7*	*TH*	✓	*Automatic (DL2)*	-	-	*16*	*135/115*
30+417.5	*T8*	*TH*	✓	*Automatic (DL2)*	-	-	*16*	*135/115*
30+440	*Pz09P2*	*PZ*	✓	*Automatic (DL2)*	*126.73*	*1m above bedrock*	-	-
30+453.5	*Pz04P1A*	*PZ*	✓	*Automatic (DL2)*	*116.61*	*10m below bedrock*	-	-
30+453.5	*Pz04P1B*	*PZ*	✓	*Automatic (DL2)*	*118.61*	*5m below bedrock*	-	-
30+453.5	*Pz04P1C*	*PZ*	×(F)	*Automatic (DL2)*	*124.61*	*1m above bedrock*	-	-
30+453.5	*Pz04P2A*	*PZ*	✓	*Automatic (DL2)*	*115.13*	*10m below bedrock*	-	-
30+453.5	*Pz04P2B*	*PZ*	✓	*Automatic (DL2)*	*120.13*	*5m below bedrock*	-	-
30+453.5	*Pz04P2C*	*PZ*	✓	*Automatic (DL2)*	*126.13*	*1m above bedrock*	-	-
30+453.5	*Pz04P3A*	*PZ*	✓	*Automatic (DL2)*	*115.25*	*10m below bedrock*	-	-
30+453.5	*Pz04P3B*	*PZ*	✓	*Automatic (DL2)*	*120.25*	*5m below bedrock*	-	-

Station	Instrument ID	Type	Status	Readings	For PZ		For TH	
#	ID	PZ/TH	Operational (✓)/Not operational (×)/ Frozen (F)	Manual/ Automatic	Elevation (m)	Stratigraphic unit	Number of operational beads	Elevation interval in meters (top/bottom)
30+489.5	T9	TH	✓	Automatic (DL2)	-	-	16	135/115
30+516.5	Pz010P2	PZ	×(F)	Automatic (DL2)	130.26	1m above bedrock	-	-
30+553.25	T10	TH	✓	Automatic (DL2)	-	-	16	135/115
30+621.5	T11	TH	✓	Automatic (DL3)	-	-	16	135/115
30+645.5	Pz05P1A	PZ	×(F)	Automatic (DL3)	118	10m below bedrock	-	-
30+645.5	Pz05P1B	PZ	×(F)	Automatic (DL3)	123	5m below bedrock	-	-
30+645.5	Pz05P1C	PZ	×(F)	Automatic (DL3)	129	1m above bedrock	-	-
30+645.5	Pz05P2A	PZ	✓	Automatic (DL3)	117.85	10m below bedrock	-	-
30+645.5	Pz05P2B	PZ	✓	Automatic (DL3)	122.85	5m below bedrock	-	-
30+645.5	Pz05P2C	PZ	×(F)	Automatic (DL3)	128.85	1m above bedrock	-	-
30+645.5	Pz05P3A	PZ	✓	Automatic (DL3)	115.15	10m below bedrock	-	-
30+645.5	Pz05P3B	PZ	✓	Automatic (DL3)	122.6	5m below bedrock	-	-
30+650	TH12	TH	✓	Automatic (DL3)	-	-	16	135/115
30+684.5	Pz11P2	PZ	×(F)	Automatic (DL3)	130.65	1m above bedrock	-	-
30+713	TH13	TH	✓	Automatic (DL3)	-	-	16	135/115
30+770	Pz12P2	PZ	×(F)	Automatic (DL3)	132.16	1m above bedrock	-	-
30+804.5	Pz13P2	PZ	×(F)	Automatic (DL3)	132.05	1m above bedrock	-	-
30+827	TH14	TH	✓	Automatic (DL3)	-	-	16	135/115
31+052	Pz14P2	PZ	×(F)	Automatic (DL4)	131.06	1m above bedrock	-	-
31+080	TH15	TH	✓	Automatic (DL4)	-	-	16	135/115
31+134.5	TH16	TH	✓	Automatic (DL4)	-	-	16	135.08/115.08

Station	Instrument ID	Type	Status	Readings	For PZ		For TH	
#	**ID**	**PZ/TH**	**Operational (✓)/Not operational (×)/ Frozen (F)**	**Manual/ Automatic**	**Elevation (m)**	**Stratigraphic unit**	**Number of operational beads**	**Elevation interval in meters (top/bottom)**
31+165	Pz23P1A	PZ	×(F)	Automatic (DL4)	118.49	10m below bedrock	-	-
31+165	Pz23P1B	PZ	×(F)	Automatic (DL4)	123.49	5m below bedrock	-	-
31+165	Pz23P1C	PZ	×(F)	Automatic (DL4)	127.49	1m above bedrock	-	-
31+165	Pz23P2A	PZ	✓	Automatic (DL4)	116.91	10m below bedrock	-	-
31+165	Pz23P2B	PZ	✓	Automatic (DL4)	121.91	5m below bedrock	-	-
31+165	Pz23P2C	PZ	×(F)	Automatic (DL4)	127.91	1m above bedrock	-	-
31+165	Pz23P3A	PZ	✓	Automatic (DL4)	116.96	10m below bedrock	-	-
31+165	Pz23P3B	PZ	✓	Automatic (DL4)	121.96	5m below bedrock	-	-
31+170	TH17	TH	✓	Automatic (DL4)	-	-	16	135/115
31+220	Pz15P2	PZ	×(F)	Automatic (DL4)	130.73	1m above bedrock	-	-
31+352	TH18	TH	✓	Automatic (DL4)	-	-	16	135/115
31+565	Pz16P2	PZ	×(F)	Automatic (DL5)	131.28	1m above bedrock	-	-
31+595	TH19	TH	✓	Automatic (DL5)	-	-	16	135/108
31+600	Pz24P1A1	PZ	✓	Automatic (DL5)	111.3	11m below bedrock	-	-
31+600	Pz24P1A2	PZ	×(F)	Automatic (DL5)	116.3	4m below bedrock	-	-
31+600	Pz24P1B1	PZ	×(F)	Automatic (DL5)	121.8	1m above bedrock	-	-
31+600	Pz24P1B2	PZ	×(F)	Automatic (DL5)	124.3	4m above bedrock	-	-
31+600	Pz24P2A1	PZ	✓	Automatic (DL5)	110.15	10m below bedrock	-	-
31+600	Pz24P2A2	PZ	✓	Automatic (DL5)	116.15	4m below bedrock	-	-
31+600	Pz24P2B1	PZ	✓	Automatic (DL5)	120.65	10m above bedrock	-	-
31+600	Pz24P2B2	PZ	✓	Automatic (DL5)	123.15	3m above bedrock	-	-

Station	Instrument ID	Type	Status	Readings	For PZ		For TH	
#	ID	PZ/TH	Operational (✓)/Not operational (×)/ Frozen (F)	Manual/ Automatic	Elevation (m)	Stratigraphic unit	Number of operational beads	Elevation interval in meters (top/bottom)
31+600	Pz24P2C	PZ	✓	Automatic (DL5)	124.65	4m above bedrock	-	-
31+600	Pz24P3A1	PZ	✓	Automatic (DL5)	110.64	10m below bedrock	-	-
31+600	Pz24P3A2	PZ	✓	Automatic (DL5)	115.64	5m below bedrock	-	-
31+600	Pz24P3B1	PZ	✓	Automatic (DL5)	121.16	11m above bedrock	-	-
31+600	Pz24P3B2	PZ	×(F)	Automatic (DL5)	123.00	13m above bedrock	-	-
31+605	TH20	TH	✓	Automatic (DL5)	-	-	16	135/115
31+615	Pz17P2	PZ	×(F)	Automatic (DL5)	129.4	1m above bedrock	-	-
31+700	Pz18P2	PZ	×(F)	Automatic (DL5)	130.53	1m above bedrock	-	-
31+752.5	TH21	TH	✓	Automatic (DL6)	-	-	16	135/115
31+815	Pz25P1A1	PZ	✓	Automatic (DL6)	117.02	7m below bedrock	-	-
31+815	Pz25P1A2	PZ	✓	Automatic (DL6)	122.02	2m below bedrock	-	-
31+815	Pz25P1B1	PZ	×(F)	Automatic (DL6)	127.52	3m above bedrock	-	-
31+815	Pz25P1B2	PZ	×(F)	Automatic (DL6)	129.52	5m above bedrock	-	-
31+815	Pz25P2A1	PZ	✓	Automatic (DL6)	113.82	11m below bedrock	-	-
31+815	Pz25P2A2	PZ	✓	Automatic (DL6)	118.82	6m below bedrock	-	-
31+815	Pz25P2B1	PZ	✓	Automatic (DL6)	124.32	bedrock	-	-
31+815	Pz25P2B2	PZ	✓	Automatic (DL6)	126.32	2m above bedrock	-	-
31+815	Pz25P2C	PZ	✓	Automatic (DL6)	127.32	3m above bedrock	-	-
31+815	Pz25P3A1	PZ	✓	Automatic (DL6)	115.1	9m below bedrock	-	-
31+815	Pz25P3A2	PZ	✓	Automatic (DL6)	120.1	4m below bedrock	-	-
31+815	Pz25P3B1	PZ	✓	Automatic (DL6)	123.1	12m below bedrock	-	-
31+815	Pz25P3B2	PZ	✓	Automatic (DL6)	125.1	1m above bedrock	-	-

Station	Instrument ID	Type	Status	Readings	For PZ		For TH	
#	ID	PZ/TH	Operational (✓)/Not operational (×)/ Frozen (F)	Manual/ Automatic	Elevation (m)	Stratigraphic unit	Number of operational beads	Elevation interval in meters (top/bottom)
31+820	TH22	TH	✓	Automatic (DL6)	-	-	16	135/115
31+842	Pz22P2	PZ	✓	Automatic (DL6)	116.8	2m above bedrock	-	-
31+850	TH23	TH	✓	Automatic (DL6)	-	-	16	135/108
31+880	TH24	TH	✓	Automatic (DL6)	-	-	16	135/108
31+885	Pz26P1A1	PZ	✓	Automatic (DL6)	104.44	10m below bedrock	-	-
31+885	Pz26P1A2	PZ	✓	Automatic (DL6)	109.44	5m below bedrock	-	-
31+885	Pz26P1B1	PZ	✓	Automatic (DL6)	114.94	bedrock	-	-
31+885	Pz26P1B2	PZ	✓	Automatic (DL6)	117.94	3m above bedrock	-	-
31+885	Pz26P2A1	PZ	✓	Automatic (DL6)	106.77	8m below bedrock	-	-
31+885	Pz26P2A2	PZ	✓	Automatic (DL6)	111.77	3m below bedrock	-	-
31+885	Pz26P2B1	PZ	✓	Automatic (DL6)	117.27	2m above bedrock	-	-
31+885	Pz26P2B2	PZ	✓	Automatic (DL6)	120.27	5m above bedrock	-	-
31+885	Pz26P2C	PZ	✓	Automatic (DL6)	123.27	8m above bedrock	-	-
31+885	Pz26P3A1	PZ	✓	Automatic (DL6)	104.74	10m below bedrock	-	-
31+885	Pz26P3A2	PZ	✓	Automatic (DL6)	109.69	5m below bedrock	-	-
31+885	Pz26P3B1	PZ	✓	Automatic (DL6)	117.46	2m above bedrock	-	-
31+885	Pz26P3B2	PZ	×(F)	Automatic (DL6)	120.46	5m above bedrock	-	-
31+928	Pz19P2	PZ	✓	Automatic (DL7)	123.22	1m above bedrock	-	-
31+960	TH25	TH	✓	Automatic (DL7)	-	-	16	135/115
31+990	Pz20P2	PZ	✓	Automatic (DL7)	122.44	1m above bedrock	-	-
31+995	TH26	TH	✓	Automatic (DL7)	-	-	16	135/115

Station	Instrument ID	Type	Status	Readings	For PZ		For TH	
#	ID	PZ/TH	Operational (✓)/Not operational (×)/ Frozen (F)	Manual/ Automatic	Elevation (m)	Stratigraphic unit	Number of operational beads	Elevation interval in meters (top/bottom)
32+000	Pz27P1A1	PZ	✓	Automatic (DL7)	113.25	8m below bedrock	-	-
32+000	Pz27P1A2	PZ	✓	Automatic (DL7)	118.25	3m below bedrock	-	-
32+000	Pz27P1B1	PZ	✓	Automatic (DL7)	123.75	2m above bedrock	-	-
32+000	Pz27P1B2	PZ	✓	Automatic (DL7)	125.75	4m above bedrock	-	-
32+000	Pz27P2A1	PZ	✓	Automatic (DL7)	112.61	9m below bedrock	-	-
32+002	Pz27P2A2	PZ	✓	Automatic (DL7)	117.61	4m below bedrock	-	-
32+000	Pz27P2B1	PZ	×(F)	Automatic (DL7)	123.11	2m above bedrock	-	-
32+000	Pz27P2B2	PZ	×(F)	Automatic (DL7)	125.11	4m above bedrock	-	-
32+000	Pz27P2C	PZ	✓	Automatic (DL7)	126.61	5m above bedrock	-	-
32+000	Pz27P3A1	PZ	✓	Automatic (DL7)	111.72	10m below bedrock	-	-
32+000	Pz27P3A2	PZ	✓	Automatic (DL7)	116.72	5m below bedrock	-	-
32+000	Pz27P3B1	PZ	✓	Automatic (DL7)	122.22	1m above bedrock	-	-
32+000	Pz27P3B2	PZ	×(F)	Automatic (DL7)	123.22	2m above bedrock	-	-
32+020	Pz21P2	PZ	✓	Automatic (DL7)	121.13	1m above bedrock	-	-
32+030	TH27	TH	✓	Automatic (DL7)	-	-	16	135/108
32+060	TH28	TH	✓	Automatic (DL7)	-	-	16	135/108
32+065	Pz28P1A1	PZ	✓	Automatic (DL7)	102.99	12m below bedrock	-	-
32+065	Pz28P1B1	PZ	✓	Automatic (DL7)	107.99	7m below bedrock	-	-
32+065	Pz28P1B2	PZ	✓	Automatic (DL7)	112.99	2m below bedrock	-	-
32+065	Pz28P1B3	PZ	✓	Automatic (DL7)	115.99	1m above bedrock	-	-
32+065	Pz28P2A1	PZ	✓	Automatic (DL7)	105.02	10m below bedrock	-	-

Station	Instrument ID	Type	Status	Readings	For PZ		For TH	
#	ID	PZ/TH	Operational (✓)/Not operational (×)/ Frozen (F)	Manual/ Automatic	Elevation (m)	Stratigraphic unit	Number of operational beads	Elevation interval in meters (top/bottom)
32+065	Pz28P2B1	PZ	✓	Automatic (DL7)	110.02	5m below bedrock	-	-
32+065	Pz28P2B2	PZ	✓	Automatic (DL7)	115.02	bedrock	-	-
32+065	Pz28P2B3	PZ	✓	Automatic (DL7)	118.02	3m above bedrock	-	-
32+065	Pz28P2C	PZ	✓	Automatic (DL7)	124.02	9m above bedrock	-	-
32+065	Pz28P3A1	PZ	✓	Automatic (DL7)	105.91	10m below bedrock	-	-
32+065	Pz28P3B1	PZ	✓	Automatic (DL7)	110.91	5m below bedrock	-	-
32+065	Pz28P3B2	PZ	✓	Automatic (DL7)	115.91	1m above bedrock	-	-
32+065	Pz28P3B3	PZ	×(F)	Automatic (DL7)	118.91	4m above bedrock	-	-
32+100	TH29	TH	✓	Automatic (DL7)	-	-	16	135/115
32+105	Pz29P1A1	PZ	✓	Automatic (DL7)	115.32	10m below bedrock	-	-
32+105	Pz29P1B1	PZ	✓	Automatic (DL7)	120.32	5m below bedrock	-	-
32+105	Pz29P1B2	PZ	×(F)	Automatic (DL7)	125.32	bedrock	-	-
32+105	Pz29P1B3	PZ	×(F)	Automatic (DL7)	127.32	2m above bedrock	-	-
32+105	Pz29P2A1	PZ	✓	Automatic (DL7)	114.99	10m below bedrock	-	-
32+105	Pz29P2B1	PZ	✓	Automatic (DL7)	119.99	5m below bedrock	-	-
32+105	Pz29P2B2	PZ	✓	Automatic (DL7)	124.99	bedrock	-	-
32+105	Pz29P2B3	PZ	×(F)	Automatic (DL7)	126.99	2m above bedrock	-	-
32+105	Pz29P2C	PZ	×(F)	Automatic (DL7)	129.99	5m above bedrock	-	-
32+105	Pz29P3A1	PZ	✓	Automatic (DL7)	115.91	9m below bedrock	-	-
32+105	Pz29P3B1	PZ	✓	Automatic (DL7)	120.91	4m below bedrock	-	-
32+105	Pz29P3B2	PZ	✓	Automatic (DL7)	125.91	1m above bedrock	-	-
32+105	Pz29P3B3	PZ	×(F)	Automatic (DL7)	127.91	3m above bedrock	-	-
32+140	TH30	TH	✓	Automatic (DL7)	-	-	16	135/115

Table 2: Bay Goose (TDR)

Location of hole	DL #	Instrument ID	Inclination (°)	Length (m)	Casing elevation (m)	Crimps
31+255	9	TDR-11	60	70	134.4	Every 25 m
31+153	9	TDR-12	60	180	133.5	Every 25 m
31+105	9	TDR-14	60	200	133.6	Every 25 m
31+058	9	TDR-15	60	180	134.3	Every 25 m
31+035	9	TDR-17	60	206.35	134.9	Every 25 m
30+937	9	TDR-18	60	180	135.6	Every 25 m
30+960	9	TDR-20	60	200	136.5	Every 25 m

Table 3: Bay Goose (Inclinometers)

Location	Instrument ID	Operational (✓)/Not operational (×)	Manual/Automatic	Elevation interval in meters (top/bottom)
30+282	BG-IN-30+282	✓	Manual	139.3/124.8
30+390	BG-IN-30+390	✓	Manual	140.0/119.0
30+640	BG-IN-30+640	✓	Manual	138.8/124.3
31+180	BG-IN-31+180	✓	Manual	139.0/124.5
31+590	BG-IN-31+590	✓	Manual	139.5/115.0
31+815	BG-IN-31+815	✓	Manual	139.2/119.7
31+885	BG-IN-31+885	✓	Manual	138.8/113.3
32+065	BG-IN-32+065	✓	Manual	139.1/116.6

Table 4: East Dike (Inclinometers)

Location	Instrument ID	Operational (✓)/Not operational (×)	Manual/Automatic	Elevation interval in meters (top/bottom)
60+195	ED-IN-195	×(Damaged)	-	-
60+495	ED-IN-495	✓	Manual	136.6/124.1
60+705	ED-IN-705	✓	Manual	137.1/126.1

Table 5: East Dike Instruments List (TH+PZ)

Station	Instrument ID	Type	Status	Readings	For PZ		For TH	
#	ID	PZ/TH	Operational (✓)/Not operational (×) /Frozen (F)	Manual/ Automatic	Elevation (m)	Stratigraphic unit	Number of operational beads	Elevation interval in meters (top/bottom)
60+092	TH92	TH	✓	Automatic (DL8-SH1)	-	-	16	136/119
60+150	Pz150C	PZ	×(F)	Automatic (DL8-SH1)	127.35	Interface	-	-
60+185	TH185	TH	✓	Automatic (DL8-SH1)	-	-	16	136/119
60+190	Pz190P1A	PZ	✓	Automatic (DL8-SH1)	116.7	Bedrock	-	-
60+190	Pz190P1B	PZ	✓	Automatic (DL8-SH1)	121.7	Bedrock	-	-
60+190	Pz190P1C	PZ	✓	Automatic (DL8-SH1)	126.7	Interface	-	-
60+190	Pz190P2A	PZ	✓	Automatic (DL8-SH1)	116.34	Bedrock	-	-
60+190	Pz190P2B	PZ	✓	Automatic (DL8-SH1)	121.34	Bedrock	-	-
60+190	Pz190P2C	PZ	**×(F)**	Automatic (DL8-SH1)	126.34	Bedrock		
60+190	Pz190P3A	PZ	✓	Automatic (DL8-SH1)	116.63	Bedrock	-	-
60+190	Pz190P3B	PZ	✓	Automatic (DL8-SH1)	121.63	Bedrock	-	-
60+200	Pz200C	PZ	✓	Automatic (DL8-SH1)	127.71	Interface	-	-
60+240	Pz240C	PZ	✓	Automatic (DL8-SH1)	128.71	Interface	-	-
60+400	Pz400C	PZ	✓	Automatic (DL8-SH2)	126.76	Interface	-	-
60+420	Pz420C	PZ	✓	Automatic (DL8-SH2)	125.32	Interface	-	-
60+440	Pz440C	PZ	✓	Automatic (DL8-SH2)	124.66	Interface	-	-
60+450	Pz450C	PZ	✓	Automatic (DL8-SH2)	127	Interface	-	-
60+460	Pz460C	PZ	✓	Automatic (DL8-SH2)	125.15	Interface	-	-
60+470	Pz470C	PZ	×(F)	Automatic (DL8-SH2)	124.76	Interface	-	-

Station	Instrument ID	Type	Status	Readings	For PZ		For TH	
#	ID	PZ/TH	Operational (✓)/Not operational (×)	Manual/ Automatic	Elevation (m)	Stratigraphic unit	Number of operational beads	Elevation interval in meters (top/bottom)
60+472	Pz472C	PZ	✓	Automatic (DL8-SH2)	126.87	Interface+1M	-	-
60+480	Pz480C	PZ	✓	Automatic (DL8-SH2)	125.44	Interface	-	-
60+485	TH485	TH	✓	Automatic (DL8-SH2)	-	-	16	136/119
60+490	Pz490P1A	PZ	✓	Automatic (DL8-SH2)	114.12	Bedrock	-	-
60+490	Pz490P1B	PZ	✓	Automatic (DL8-SH2)	119.12	Bedrock	-	-
60+490	Pz490P1C	PZ	✓	Automatic (DL8-SH2)	125.81	Interface	-	-
60+490	Pz490P2A	PZ	✓	Automatic (DL8-SH2)	115.07	Bedrock	-	-
60+490	Pz490P2B	PZ	✓	Automatic (DL8-SH2)	120.07	Bedrock	-	-
60+490	Pz490P2C	PZ	✓	Automatic (DL8-SH2)	126.76	Interface	-	-
60+490	Pz490P3A	PZ	✓	Automatic (DL8-SH2)	114.62	Bedrock	-	-
60+490	Pz490P3B	PZ	✓	Automatic (DL8-SH2)	119.62	Bedrock	-	-
60+500	Pz500C	PZ	✓	Automatic (DL8-SH2)	125.78	Interface	-	-
60+510	Pz 510C	PZ	✓	Automatic (DL8-SH2)	126.06	Interface	-	-
60+550	Pz 550C	PZ	×**(F)**	Automatic (DL8-SH2)	129.85	Interface	-	-
60+600	Pz 600C	PZ	✓	Automatic (DL8-SH3)	128.6	Interface	-	-
60+650	Pz 650C	PZ	×	Automatic (DL8-SH3)	128.48	Interface	-	-
60+695	TH695	TH	✓	Automatic (DL8-SH3)	-	-	16	136/119

Station	Instrument ID	Type	Status	Readings	For PZ		For TH	
#	ID	PZ/TH	Operational (✓)/Not operational (×)	Manual/ Automatic	Elevation (m)	Stratigraphic unit	Number of operational beads	Elevation interval in meters (top/bottom)
60+700	Pz700P2A	PZ	✓	Automatic (DL8-SH3)	118.08	Bedrock	-	-
60+700	Pz700P2B	PZ	✓	Automatic (DL8-SH3)	123.08	Bedrock	-	-
60+700	Pz700P2C	PZ	✓	Automatic (DL8-SH3)	129.77	Interface	-	-
60+700	Pz700P3A	PZ	✓	Automatic (DL8-SH3)	117.93	Bedrock	-	-
60+700	Pz700P3B	PZ	✓	Automatic (DL8-SH3)	122.93	Bedrock	-	-
60+750	Pz750C	PZ	×**(F)**	Automatic (DL8-SH3)	128.16	Interface	-	-
60+842	TH842	TH	✓	Automatic (DL8-SH3)	-	-	16	136/119

Table 6: South Camp Dike (TH)

Hole	ID	Type	Status	Readings	For PZ		For TH	
#	ID	PZ/TH	Operational (✓)/Not operational (×)	Manual/ Automatic	Elevation (m)	Stratigraphic unit	Number of operational beads	Elevation interval in meters (top/bottom)
38-3	SC-09-A	TH	✓	Manual	-	-	16	133.03/110.03
38-5	SC-10	TH	✓	Manual	-	-	16	132.40/109.40

Table 7: Vault Dike (TH)

Hole	ID	Type	Status	Readings	For PZ		For TH	
#	ID	PZ/TH	Operational (✓)/Not operational (×)	Manual/ Automatic	Elevation (m)	Stratigraphic unit	Number of operational beads	Elevation interval in meters (top/bottom)
71-2	VD-TH5	TH	✓	Manual	-	-	16	142.50/136.10
94-2	VD-TH6	TH	✓	Manual	-	-	16	140.50/121.50
96-1	VD-TH8	TH	✓	Manual	-	-	16	140.50/119.50
96-2	VD-TH7	TH	✓	Manual	-	-	16	140.50/119.50

Note that some of the marked Not Operational, still work and give temperature readings but cannot be used for collecting any good data and could also be frozen.

Incinerator Waste Management Plan, Version 8

MEADOWBANK GOLD PROJECT

Incinerator Waste Management Plan

In Accordance with Water License 2AM-MEA1526

Prepared by:
Agnico Eagle Mines Limited – Meadowbank Division

Version 8
October 2018

EXECUTIVE SUMMARY

This Incinerator Waste Management Plan (IWMP) describes the performance limits, waste management protocols, operation, monitoring and record keeping requirements for the incinerator and waste oil burning furnaces as well as the operations and management requirements of the composter. This updated IWMP is a component of the Meadowbank Environmental Management System. This IWMP will be maintained by Agnico Eagle to reflect the current operations at the Meadowbank Gold Project, permit requirements and regulatory setting. The IWMP will be reviewed on a regular basis and revised by Agnico Eagle when necessary to ensure that the project staff, operators and regulatory bodies are kept aware of any changes to project operations. Any changes in operation/procedures are communicated to all applicable Meadowbank Departments.

The main objective of waste management relating to the primary incinerator, waste oil furnaces, and composter is to minimize the amount of solid waste to be incinerated by implementing an effective waste segregation, composting, and reuse (in the case of waste oil) program to ensure that only appropriate types of waste are incinerated. The primary objective of incineration is to reduce the volume of burnable waste to manage the day to day waste generated on-site. The composting of organic waste generated at the Meadowbank camp provides an alternative to incineration that is expected to reduce overall emissions. On-site composting reduces greenhouse gas emissions and atmospheric pollutants related to the incineration of wastes. The primary incinerator is a dual chamber, high-temperature incinerator and is used to dispose of solid waste from the accommodation camp, kitchen, shops, and offices that cannot be composted or landfilled. The materials to be incinerated will be limited to wood and food packaging. In addition, a number of small waste oil burning furnaces will be utilized to recycle used petroleum products such as heavy lubricants and engine oil. Ash produced from the incineration process will be disposed of in the on-site landfills provided it meets criteria as stated in Industrial Waste Discharges into Municipal Solid Waste and Sewage Treatment Facilities (GN, 2011). A protocol is implemented for testing incinerator ash and contingent measures for alternate disposal of ash if quality is unsuitable for landfilling.

The incinerator at Meadowbank is manufactured by Eco Waste Solutions. The incinerator is designed to ensure the emissions meet Canadian Council of Ministers of the Environment (CCME) Canada-wide Standards for Dioxin and Furans (CCME, 2000a) and the CCME Canada-wide Standards for Mercury Emissions (CCME, 2000b). In addition to the incinerator technology, the implementation of a waste management and segregation plan will further limit emissions of dioxins and furans from the incinerator. Compliance with the performance limits is confirmed by stack testing conducted once every two years (providing that the waste stream has not changed). Should an exceedance of the CCME Standards occur, Agnico Eagle will change the frequency of stack testing to once per year for five years then return to biannual testing following ECCC approval. An investigation related to the cause of the exceedance (thoroughly check the waste stream).

To demonstrate compliance with performance limits, an annual incineration management report will be prepared and submitted to the NWB (as part of the water license annual report), Government of Nunavut (GN), Environment and Climate Change Canada (ECCC), and NIRB. The quantity of materials incinerated on site during operations and a record of performance temperatures together with results from stack testing and ash monitoring, will be included within the annual report. Quantity and performance information for the composter will also be included in the annual report.

IMPLEMENTATION SCHEDULE

As required by Water License 2AM-MEA1526, Part B, Item 11, the proposed implementation schedule for this Plan is outlined below.

This Plan will be implemented immediately (October 2018) subject to any modifications proposed by the NWB as a result of the review and approval process. This document will supersede the Incinerator Waste Management Plan Version 7 – 2017.

DISTRIBUTION LIST

Agnico Eagle – General Mine Manager

Agnico Eagle – Environment Superintendent

Agnico Eagle – Environmental Coordinator

Agnico Eagle – Environmental Technician

Agnico Eagle – Site Services Superintendent

Agnico Eagle – Field Services Supervisor

Agnico Eagle – Incinerator Operator

Agnico Eagle – Composter Operator

DOCUMENT CONTROL

Version	Date (YMD)	Section	Page	Revision
1	08/10/08	3 & 6	5 & 13	Revised to consider best management practices for ash
		App 1		Technical specifications for primary incinerator included
2	09/05/12	1; 3.3; 4.1	1; 7; 8	Revised to include regulatory comments
3	12/11/16			2012 Comprehensive Review
4	12/11/16	ES; 3.1, 6.1	II, 5, 13	Stack testing will be completed biennially
		5.5	12	Adjusted quantities for mass reduction
		APP III		Include Procedure for Loading Incinerator
5	14/07/21	All	All	2014 Comprehensive Review
6	16/03/31	All	All	2016 Comprehensive Review
7	17/03/31	3.1	5	Add details regarding the stack testing frequency following an exceedance
8	18/10/2	1.1 1.2 2 5.1 5.2 5.4.1 Figure 5-1 APP III	1 2 3 9 9 11 12	Added composter activities Added composter location Referred to Appendix III for regulatory framework for composter Updated section to reflect changes due to addition of composter Updated section to reflect changes due to addition of composter Adjusted to reflect changes due to addition of composter Adjusted to reflect changes due to addition of composter Composter Management Plan added.

Approved by:



Nancy Duquet Harvey
Superintendent - Environment

Table of Contents

SECTION 1. INTRODUCTION 1
1.1 PROJECT OVERVIEW 1
1.2 INCINERATOR AND COMPOSTER LOCATION 2
SECTION 2. REGULATORY CONTEXT 3
2.1 BACKGROUND INFORMATION 3
2.1.1 Dioxins and Furans 3
2.1.2 Mercury 3
2.1.3 Used Oil and Waste Fuel 3
SECTION 3. PERFORMANCE LIMITS 4
3.1 PRIMARY INCINERATOR 4
3.2 USED OIL 4
3.3 INCINERATOR ASH 6
SECTION 4. INCINERATOR OPERATION 7
4.1 PRIMARY INCINERATION 7
4.1.1 Emissions 7
4.1.2 Dust/Odour Control Measures 7
4.1.3 Staffing and Equipment 7
4.1.4 Operator Training 8
4.2 USED OIL INCINERATOR and FURNACES 8
SECTION 5. WASTE MANAGEMENT 9
5.1 APPROACH 9
5.2 ACCEPTABLE WASTE FOR INCINERATION/WASTE OIL FURNACES 9
5.3 UNACCEPTABLE WASTE FOR INCINERATION 10
5.4 WASTE VOLUMES 11
5.4.1 Solid Waste 11
5.4.2 Used Oil 11
5.4.3 Incineration Ash 11
5.5 WASTE INCINERATION RATE 11
SECTION 6. MONITORING AND TESTING 13
6.1 INCINERATOR EMISSIONS TESTING 13
6.2 WASTE OIL TESTING 13

6.3 ASH TESTING 13
SECTION 7. MAINTENANCE 14
SECTION 8. REPORTING 15
8.1 NATIONAL POLLUTANT RELEASE INVENTORY 15
8.2 GREENHOUSE GAS EMISSIONS 15
SECTION 9. PLAN REVIEW AND CONTINUAL IMPROVEMENT 16
SECTION 10. REFERENCES 17

LIST OF TABLES

Table 3-1 Emission Standards for Solid Waste Incinerators 4
Table 3-2: Summary of Used Oil and Waste Fuel Guideline 5
Table 3-3: Used Oil Impurity Limit 6
Table 3-4: Guidelines for Solid Waste/Process Residuals Suitable for Landfill 6
Table 6-1: Summary of Incinerator Emissions Testing 13
Table 8-1: NPRI Incineration Reportable Substance List 15

LIST OF FIGURES

Figure 1-1 Incinerator, Waste Oil Furnaces, and Composter Location 2
Figure 5-1: Process Flow Chart for Waste Incineration and Compost 12

LIST OF APPENDICES

APPENDIX I: Technical Specifications: Eco Waste Solutions Incinerator

APPENDIX II: MBK-SIT-0011 – Incinerator Loading

APPENDIX III: Composter Management Plan

SECTION 1. INTRODUCTION

1.1 PROJECT OVERVIEW

This Incinerator Waste Management Plan (IWMP) describes the performance limits, waste management plans, operation, monitoring and record keeping requirements for the primary incinerator, on-site waste oil burning furnaces, and composter. The body of this IWMP focuses on the operations and requirements of the Incinerator; information specific to the operations and management of the composter has been provided in Appendix III.

This update to the 2017 Incinerator Waste Management Plan (Version 7) is a component of the Meadowbank Environmental Management System. The objectives of this Plan are summarized as follows:

1. To define the operating procedures to be used in the incineration of appropriate non-hazardous solid waste generated at the Meadowbank Mine;
2. To define acceptable/non-acceptable types of solid waste to be placed in the Meadowbank incinerator; and
3. To define operating and monitoring requirements for the incinerator and waste oil burning furnaces.

Agnico Eagle will be responsible for managing and implementing this IWMP.

The primary incinerator is required for the disposal of solid waste from the accommodation camp, kitchen, shops, and offices that cannot be landfilled at the Meadowbank Gold Project Site and for the disposal of material that cannot be composted. The incineration and composting of waste will function such that no waste that could attract wildlife and/or create leachate (putrescible materials) is disposed of at the on-site landfill. The materials to be incinerated will be limited to wood and food packaging but may include compostable materials should issues with the composter arise due to maintenance or processing issues. The materials to be composted include putrescible waste, such as organic matter, including food, paper, and cardboard. A number of small waste oil burning furnaces, to provide space heating, will be utilized in order to recycle used petroleum products such as heavy lubricants and engine oil. The waste oil burning furnaces have been included within this IWMP.

Ash produced from the incineration process is disposed of within the on-site landfill according to the GN Environmental Guideline for Industrial Waste Discharges (GN, 2011). The incinerator ash will be tested to confirm its suitability for landfill disposal (Section 3.3 and 6.3). If monitoring indicates the ash is not suitable for landfilling, it will be buried within the Tailings Storage Facility (TSF). Materials buried within the TSF are expected to freeze over a period of time, resulting in permafrost encapsulation (Golder, 2014).

The product from the composter will initially be disposed in the on-site landfill, and in future its suitability for beneficial re-use may be considered.

The camp is currently accommodating ~520 persons on any given day during operations, and the expected life of operation of the incinerator is until 2020 (Golder, 2014).

1.2 LOCATION

The primary incinerator is located away from the plant site and accommodations complex, adjacent to the fuel storage facility. The composter is located in the same building as the incinerator. Thirteen waste oil burning furnaces were installed on site at the cat dome, SS coverall and, blue coverall to provide space heating (see Figure 1-1). One waste oil burner is also located in the incinerator.

Figure 1-1 Incinerator, Waste Oil Furnaces, and Composter Location

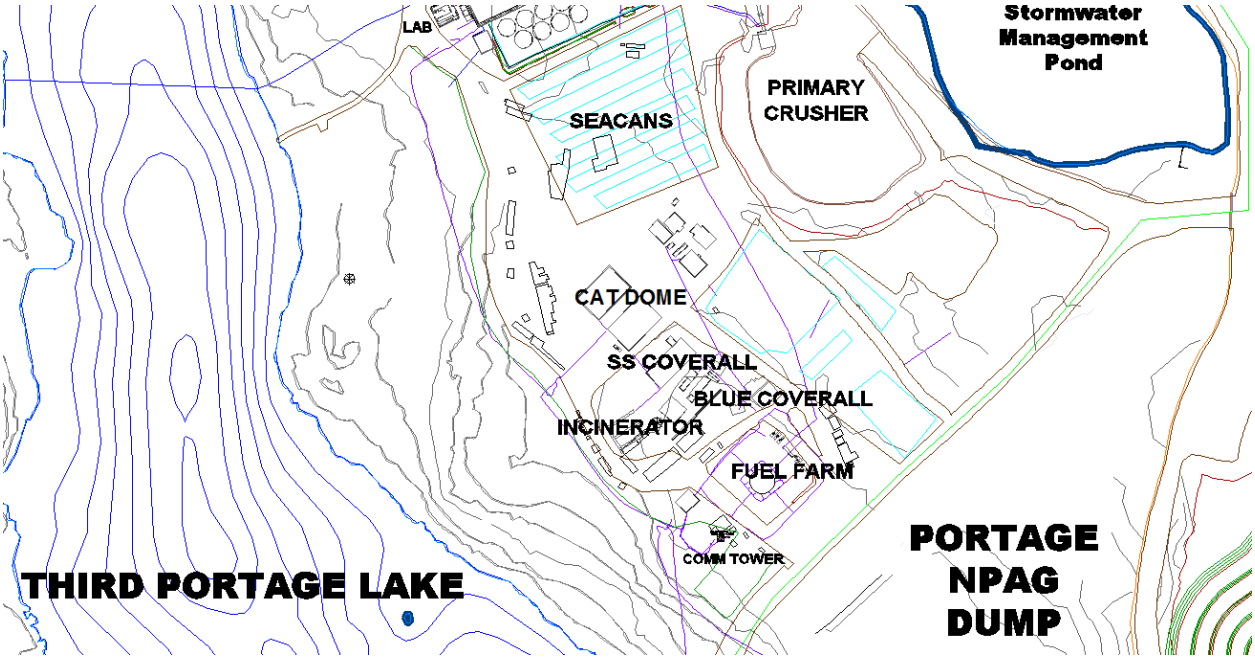

SECTION 2. REGULATORY CONTEXT

The following section outlines the regulatory context related to solid waste incinerators and waste oil furnaces and discusses how the regulations apply to the incinerator and waste oil furnaces at the Meadowbank site. Information pertaining to the composter is provided in Appendix III.

Performance parameters for the incinerator at Meadowbank will be in accordance with the emission guidelines set out by the Canadian Council of Ministers of the Environment (CCME) Canada-wide Standards for Dioxins and Furans (CCME, 2000a) and the CCME Canada-wide Standards for Mercury Emissions (CCME, 2000b).

Best management practices regarding the management of used oil and waste fuel are provided in the Environmental Guideline for Used Oil and Waste Fuel (GN, 2012). Agnico Eagle will ensure used oil is managed and controlled according to these guidelines.

Ash produced from the incineration and waste oil burning process will be disposed of according to the Nunavut Environmental Guideline for Industrial Waste Discharges (GN, 2011).

2.1 BACKGROUND INFORMATION

2.1.1 Dioxins and Furans

Polychlorinated dibenzo-p-dioxins (PCDDs) and polychlorinated dibenzofurans (PCDFs), commonly known as dioxins and furans, are toxic, persistent, bioaccumulative, and result predominantly from human activity. Due to the extraordinary environmental persistence and capacity to accumulate in biological tissues, dioxins and furans are slated for virtual elimination under the CEPA, the federal Toxic Substances Management Policy (TSMP) and the CCME Policy for the Management of Toxic Substances (CCME, 2000a).

2.1.2 Mercury

Mercury is a naturally occurring substance, which is transformed through biological processes to methyl mercury, a persistent substance which bioaccumulates in the food chain and is particularly toxic to humans and wildlife. Mercury levels originate from a combination of naturally-occurring mercury and anthropogenically emitted mercury. Under a variety of regional, national, bi-national and internal programs, treaties and agreements, mercury is being targeted for emissions reductions consistent with the CCME Policy for the Management of Toxic Substances, which identifies that mercury shall be managed through its lifecycle to minimize release (CCME, 2000b).

2.1.3 Used Oil and Waste Fuel

According to GN Environmental Guideline for Used Oil and Waste Fuel (GN, 2011) ‘used oil’ means engine, turbine and gear lubricating oil, hydraulic and transmission fluid and insulating coolant (i.e. transformer fluid) that is unsuitable for its intended purpose due to the presence of impurities or the loss of original properties, but does not include waste oil derived from animal or vegetable fat or a petroleum product spilled on land or water. ‘Waste fuel’ means a flammable or combustible petroleum hydrocarbon, that is unsuitable for its intended purpose due to the presence of impurities or the loss of original properties, and includes gasoline, diesel and fuel oil, aviation fuel, kerosene, naphtha, but does not include paint, solvent or propane.

SECTION 3. PERFORMANCE LIMITS

3.1 PRIMARY INCINERATOR

Agnico Eagle selected a Primary Camp Waste Incinerator (model no, ECO 1.75TN 1P MS 60L) from Eco Waste Solutions, which is designed to comply with the regulations in Table 3-1, where the maximum emissions are expressed as a concentration in the exhaust gas exiting the stack of the facility. The specifications of the incinerator are available in Appendix I. In addition to incinerator technology, the implementation of the waste management plan is designed to limit emissions of dioxins and furans from the incinerator.

Table 3-1 Emission Standards for Solid Waste Incinerators

Emissions	Sector	Units	Guideline Maximum	Reference guideline
Dioxins and Furans	Municipal Waste	pg I-TEQ/m^3	80	CCME, CWS 2000a
Dioxins and Furans	Sewage Sludge Incineration	pg I-TEQ/m^3	80	CCME, CWS, 2000a
Mercury	Municipal Waste	µg/R m^3	20	CCME, CWS, 2000b
Mercury	Sewage Sludge Incineration	µg/R m^3	70	CCME, CWS, 2000b

Notes: Stack concentrations are corrected for 11% oxygen

At Meadowbank, the primary incinerator may be subject to either Municipal or Sewage Sludge standards based upon the total amount of waste type incinerated (>50% as one type) or upon the territorial designation of facility type. According to the Canada Wide Standards “municipal solid waste’ includes any waste that might be disposed of in a non-secure landfill site if not incinerated (i.e., non-hazardous wastes regardless of origin), but does not include “clean” wood waste.

Compliance to these performance limits will be confirmed by stack testing performed by an external contractor once every two years. Should the performance limits above be exceeded then an investigation will be undertaken to determine the cause of the exceedance. In most cases exceedances will be related to improper waste being fed into the incinerator. Following the exceedance, Agnico Eagle will conduct annual stack testing until five has been accumulated with all results reported below the Level of Quantification (emission standard), then stack testing frequency may be revised to a biennial. The return to biennial testing will be done following approval from ECCC.

3.2 USED OIL

Agnico Eagle manages used oil and waste fuel according to the GN Environmental Guideline for Used Oil and Waste Fuel (GN, 2012).

Table 3-2 summarizes some main points of the guideline that pertain to waste oil generated on site, as per the Environmental Guideline for Used Oil and Waste Fuel (GN, 2012).

Table 3-2: Summary of Used Oil and Waste Fuel Guideline

As per 'Used Oil and Waste Fuel Management Regulations'	
Disposal	Waste oil/Waste fuel will not be disposed of directly into the environment
Storage	Storage is not acceptable for the long-term management of these wastes except under extraordinary circumstances and should be considered as a temporary measure only. Store used oil and waste fuel in its original container or another container certified by the Canadian Standards Association for this purpose. Containers should be located so as to enable their physical inspection for damage or leakage and should be protected from the sun, weather and physical damage. Waste oil/Waste fuel will be stored as per the *Hazardous Materials Management Plan* (Version 3, October 2013)
Sampling and Analysis	Waste oil will be tested for: ***Flash point*** ***Existence and amount of each impurity Listed in Table 3-3***
Burning	Open burning used oil and waste fuel should be avoided. Used oil and waste fuel appliances should not be operated on property that is zoned residential. Waste Oil that exceeds guidelines will not be burned.
Records	The following is recorded in association with the incineration of used oil: ***Volume of Used oil generated*** ***Volume of used oil incinerated/consumed*** ***Name and Address of person in charge, management or control of the used oil*** ***A summary of maintenance performed on incinerator or processing equipment*** ***The destination of the used oil products shipped from the facility (if any)***

Table 3-3 summarizes the maximum level of contaminants in used oil that can be used as fuel for the incinerator or consumed by the waste oil burning furnaces as stipulated within the GN Environmental Guideline for Used Oil and Waste Fuel (GN, 2012). Under the regulations blending of used oil that exceeds one of more of the criteria listed in Table 3-3 is not allowed.

Table 3-3: Used Oil Impurity Limit

Impurity	Units	Maximum Level Allowed in Used Oil
Cadmium	ppm	2
Chromium	ppm	10
Lead	ppm	100
Total Organic Halogens (as chlorine)	ppm	1000
Polychlorinated biphenyls	ppm	2

3.3 INCINERATOR ASH

Ash resulting from the incineration of solid waste is disposed of in the landfill and tested for metals according to the GN Environmental Guideline for Industrial Waste Discharges (GN, 2011). Ash that does not meet these guidelines will be buried within the Tailings Storage Facility (TSF). Table 3-4 summarizes the guidelines for metals parameters based on leachate test results.

Table 3-4: Guidelines for Solid Waste/Process Residuals Suitable for Landfill

Parameter	Concentration maximum (mg/L)
Arsenic	2.5
Barium	100
Cadmium	0.5
Chromium	5
Lead	5
Mercury	0.1
Selenium	1
Silver	5
Zinc	500

NOTE: Standards based on leachate test results

SECTION 4. INCINERATOR OPERATION

4.1 PRIMARY INCINERATION

The controlled-air batch (dual chamber) incinerator used at Meadowbank is based on the principals of pyrolysis (starved-air burning condition) and complete oxidation (high temperature, excess oxygen and sufficient time). The incineration system is a two-stage process. In the first stage, waste is converted to gas in the primary chamber at approximately 650 to 850°C. At this temperature any potentially infectious material is destroyed. This process is self-fueling until the volume is reduced by 90%. Gases from the primary chamber enter the secondary chamber of oxygen rich and turbulent conditions, which is typically at a higher temperature – around 1000°C. Combustion is complete after a minimum retention time. A used oil burner is used in the secondary chamber to reduce the quantity of fuel needed for the operation of the incinerator.

Critical process parameters and process control data as per the incinerator operation specifications such as temperature, combustion air flow and burner output are computer controlled to maintain optimal combustion conditions. These parameters are recorded daily, and the records are kept for at least 2 years.

For an incinerator capacity suitable for the predicted volumes of waste to be generated at the Meadowbank site the total particulate matter (PM) generated is extremely low (confirmed through stack testing). Therefore, dust collection technologies such as bag house filters are not being employed, and no fly ash is generated. Ash residual from the incinerator is generated and is removed daily.

4.1.1 Emissions

The Eco Waste Solutions Incinerator used by Agnico Eagle is designed to meet performance limits described in Section 3.1. The Primary incinerator has been designed by Eco Waste Solutions using good engineering practice to ensure required dispersion of gases to meet applicable air quality standards/objectives.

The incinerator stack design incorporates appropriate sampling ports (with caps where necessary) at appropriate locations to allow for stack testing to be undertaken during incinerator operation.

4.1.2 Dust/Odour Control Measures

Modern incinerators are commonly designed such that the non-turbulent atmosphere in the primary burn chamber reduces the formation of particulate matter. Therefore, the need for additional dust and /or odour control measures is not required.

4.1.3 Staffing and Equipment

The computerized incinerator requires one person to operate and monitor the equipment for approximately 1 to 1.5 hours per day (for ash removal, loading and start-up). Operators are not required to be in attendance during the rest of the operation, as it is a fully automated process. This incinerator is designed so that the operators are not exposed to high temperatures during loading or ash removal due to complete cool down after the burn cycle. Also, the waste is not allowed to combust until the chamber is sealed thus isolating the worker from smoke and high temperatures. The operating procedure for the incinerator loading can be found in Appendix II.

4.1.4 Operator Training

Operator training was initially provided by an experienced technician from the incinerator supplier/manufacturer (Eco Waste Solutions). Training for operation of the incinerator is now given by the supervisor in charge of the incinerator.

4.2 USED OIL INCINERATOR AND FURNACES

Used oil is used as auxiliary fuel at the secondary chamber at the incinerator. This used oil burner at the incinerator has the capacity to handle approximately 200,000 litres of used oil per year. This used oil burner will reduce the amount of fuel used in the incinerator.

Thirteen (13) waste oil furnaces were installed in the existing blue coverall, cat dome and site services coverall to provide space heating. One waste oil burner is also located at the incinerator. These waste oil furnaces/burners have an aggregate capacity to handle approximately 410,000 litres of waste oil per year, however more may be put in service to expand the waste reduction program and minimize the shipment of this material south each year. The source of the waste oil will be from oil changes on the mining equipment and light vehicles as well as oil changes on mechanical gearboxes within the mill. The waste oil is filtered on-site prior to use as a fuel source.

In accordance with the Interim Closure and Reclamation Plan (Golder, 2014), salvageable buildings and surface structures, including the primary incinerator and used oil furnace, will be dismantled and demobilized from the site. No structural material will be incinerated during the closure phase of the mine.

SECTION 5. WASTE MANAGEMENT

The amount of waste will be reduced through purchasing policies that focus on reduced packaging and on-site diversion and segregation programs. At Meadowbank the main objective of the waste management plan relating to incineration is to minimize the amount of solid waste to be incinerated by following an effective waste segregation and reduction program to ensure that only appropriate types of waste are incinerated.

Figure 2 provides a schematic diagram for the management of solid waste and used oil produced on site.

5.1 APPROACH

A waste segregation and reduction program is implemented at the site (i.e., the separation of food and non-food waste items suitable for storage and subsequent transport and disposal, composting, or recycling). This will allow materials that are unsuitable for incineration to be either landfilled on site or hauled offsite to a licensed disposal/recycling facility. The waste segregation program will also document the quantities and types of materials that are incinerated. In addition, Agnico Eagle is now incorporating a waste reduction strategy for materials that originally were being incinerated. For example, styrofoam coffee cups and plastic lids were eliminated from general site use in 2012 and replaced with stainless steel mugs and re-washable plastic cups. Other materials will be considered during the life of mine for elimination from the incinerator waste stream.

5.2 ACCEPTABLE WASTE FOR INCINERATION/WASTE OIL FURNACES

Acceptable wastes for incineration, in the primary incinerator as per the operational instructions, include the following:

- Wood;
- Food containers and wrappings including plastics that are contaminated by food;
- Food waste (divert to composter);
- Paper and cardboard (divert to composter); and
- Dead animals - small size only (divert to composter);

Acceptable wastes for incineration in the used oil furnaces include the following:

- Waste oils; and
- Flammable or combustible petroleum hydrocarbons unsuitable for its purpose due to the presence or contaminants or loss of original properties (such as gasoline, diesel fuel, aviation fuel, kerosene, naphtha or fuel oil).

5.3 UNACCEPTABLE WASTE FOR INCINERATION

Materials that are not listed above are unacceptable for incineration. These materials include, but are not limited to:

- Uncontaminated plastics, including chlorinated plastics;
- Inert materials such as concrete, bricks, ceramics, ash;
- Bulky materials such as machinery parts or large metal goods such as appliances (shipped south and recycled in an accredited facility);
- Radioactive materials such as smoke detectors;
- Potentially explosive materials such as propane tanks, other pressurized vessels, unused or ineffective explosives;
- Other hazardous materials such as organic chemicals (PCBs, pesticides), other toxics (arsenic, cyanide);
- Electronics (shipped south and recycled in an accredited facility);
- Batteries (shipped south and recycled in an accredited facility);
- Asbestos;
- Dry wall;
- Vehicles and machinery (shipped south and recycled in an accredited facility);
- Fluorescent light bulbs;
- Whole tires; and
- Any materials containing mercury.

Unacceptable wastes for incineration in the used oil furnace include the following:

- Used oil that exceeds the Maximum Impurity Limits for parameters listed in Table 3.3;
- Waste oil with a flash point of less than 37.7 deg C;
- Paint;
- Solvents; and
- Propane.

5.4 WASTE VOLUMES

5.4.1 Solid Waste

The quantity of waste being incinerated is averaging 1,750 kg per day during operations with a camp size of ~520 persons during operations. This amount will decrease following the use of the composter.

5.4.2 Used Oil

The quantity of used oil generated from the servicing of machinery and generators is estimated at approximately 400,000 litres per year (Meadowbank Gold Project – 2015 Annual report).

5.4.3 Incineration Ash

The quantity of ash from the incinerator is approximately 240 tonnes/year, assuming that the incineration process results in a 63% reduction in mass. Assuming the ash has a total density of 1.2 tonnes /m^3, then a volume of approximately 200 m^3 /year of ash will require disposal. Incinerator ash will be disposed of in the on-site approved landfill.

5.5 WASTE INCINERATION RATE

The incinerator has an approximate incineration capacity of 1,750 kg / h based on a 10 hour burn cycle. If this cannot be achieved the primary chamber can be used as storage. According to the Eco Waste Solution, the type of waste that is used will never exceed the weight limit. To ensure maximum efficiency, 3 quarters of the chamber has to be filled to ensure that the gas outlet of the primary chamber is never blocked.

The system has a sizable front door for easy access to manually load feed waste into the unit with a front-end loader. Dry waste (wood) and wet waste (food containers) will be layered to ensure proper combustion and maximum efficiency according to the incinerator operational instructions.

The batch cycle for the Primary Chamber typically lasts approximately 10 hours for the burn cycle and is followed by a cool down of approximately 6 hours. The Secondary Chamber operates with a retention time of approximately 2 seconds.

Figure 5-1: Process Flow Chart for Waste Incineration and Compost

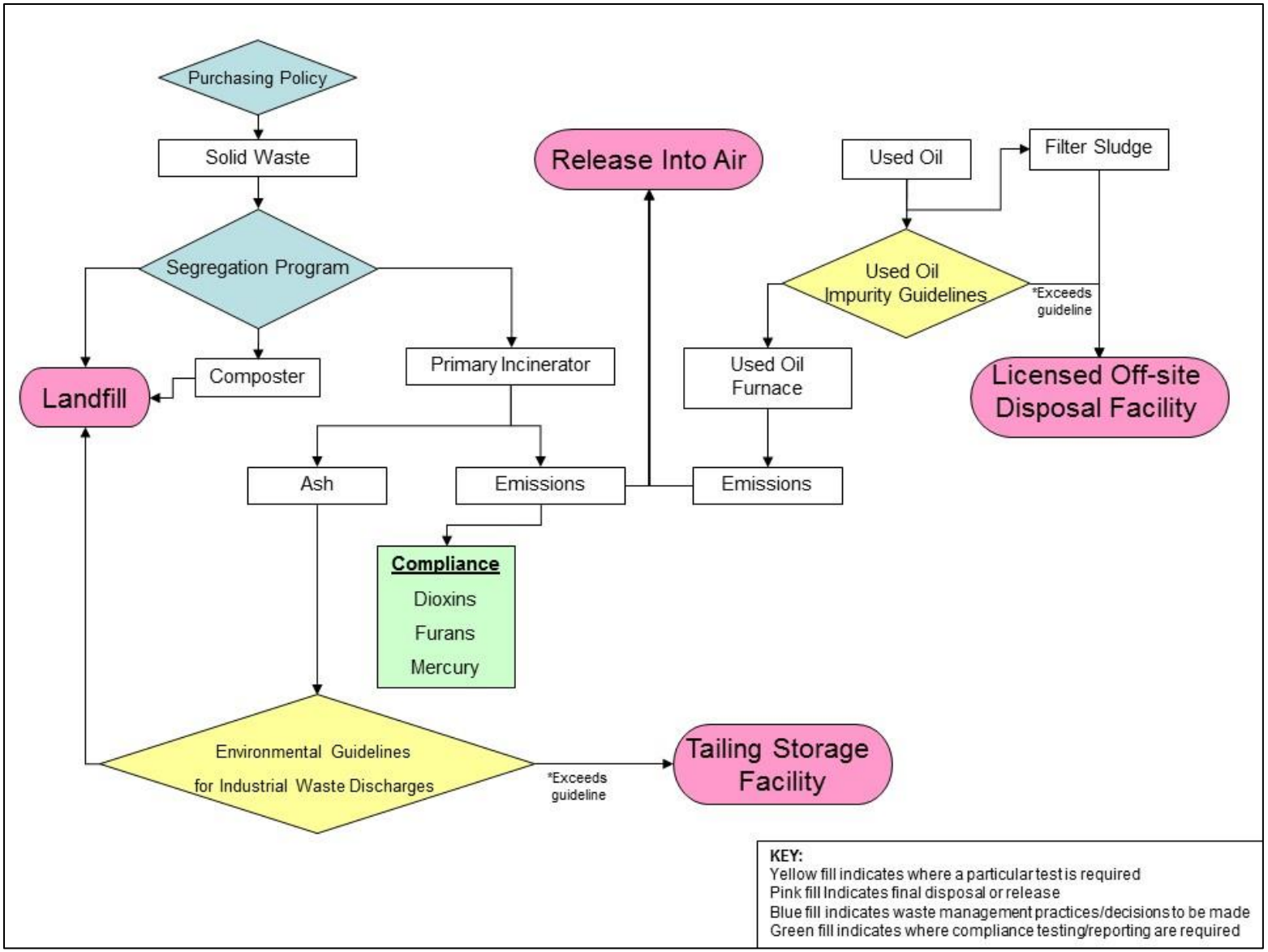

SECTION 6. MONITORING AND TESTING

The following presents the monitoring and testing plan for the incinerator.

6.1 INCINERATOR EMISSIONS TESTING

The incinerator stack incorporates appropriate sampling ports at appropriate locations, in right angle configuration, to allow for stack testing to be undertaken during incinerator operation. Table 6-1 summarizes the frequency of testing that is completed.

Table 6-1: Summary of Incinerator Emissions Testing

	Frequency	Number of Tests Required	Relevant Guideline
Furans and Dioxins	Biennial	3	CCME, CWS 2000a
Mercury	Biennial	3	CCME, CWS 2000b

6.2 WASTE OIL TESTING

No sampling frequency for waste oil is specified in the GN Environmental Guideline for Used Oil and Waste Fuel (2012). To ensure compliance with the Guideline parameters, Agnico Eagle will sample the waste oil feedstock twice a year. Waste oil that does not meet the regulation impurity limits is drummed and shipped off site as hazmat to a re-refining facility or licensed disposal facility. Agnico Eagle may increase the testing frequency of the waste oil if any exceedance to GN Environmental Guideline for Used Oil and Waste Fuel (GN, 2012). (Section 3.2 above)

6.3 ASH TESTING

The purpose of sampling ash is to determine its acceptability for disposal in the landfill, pursuant to the GN Environmental Guidelines for Industrial Discharge (2011). No sampling frequency is specified in this guideline. To ensure compliance with the Guideline parameters, ash will be sampled twice a year by Agnico Eagle. Should an exceedance be measured, an investigation will be undertaken to identify the cause and eliminate the source for this exceedance. Agnico Eagle may increase the testing frequency of the ash following an exceedance. Ash with metals concentrations exceeding the GN Guidelines will be buried within the Tailings Storage Facility (TSF); materials buried within the TSF are expected to freeze over a period of time, resulting in permafrost encapsulation (Golder, 2014). If deemed necessary, the ash will be packaged in drums and sent to a licensed hazardous waste disposal facility in the south.

SECTION 7. MAINTENANCE

Maintenance of the incinerator is scheduled annually. This maintenance is performed to evaluate the insulation and structural integrality of the incinerator. This is done to ensure the incinerator is functioning at its optimal standard.

When maintenance is performed, four small single chambered incinerators are used to incinerate the waste that would normally be disposed in the Eco Waste main unit, to prevent a back log of putrescible waste which would attract wildlife.

SECTION 8. REPORTING

In order to demonstrate compliance with performance limits, an annual incineration management report will be submitted as an Appendix in the Meadowbank Gold Projects Annual Report to the NWB, Government of Nunavut (GN), Environment and Climate Change Canada (ECCC), and NIRB. The quantity and type of materials incinerated on site during operations, together with results from stack emission testing, waste oil testing and ash monitoring, are to be included within the annual report.

8.1 NATIONAL POLLUTANT RELEASE INVENTORY

The National Pollutant Release Inventory (NPRI) is a Canadian database containing information on the annual on-site release of specific substances to the air, water and land from industrial and institutional sources (EC, 2007). The NPRI provides a list of tracked substances and requirements for reporting incinerator emissions. Table 8-1 lists the substances under the NPRI that Meadowbank is required to report annually. In addition, there are certain substances as indicated in Table 8-1 that may require reporting depending on the quantity of incinerator emissions. Whether or not reporting is necessary will depend on results of the periodic stack emission testing data and the quantity of annual emissions calculated with emission factors.

Table 8-1: NPRI Incineration Reportable Substance List

Substance Name	Notes
Hexachlorobenzene	Required to Report
Dioxins and Furans	
Carbon Monoxide	Required to Report if released to air from facility in a quantity of 20 tonnes or more per annum
Oxides of nitrogen	
Sulphur dioxide	
Total Particulate matter with diameter <100 microns	
Particulate matter with diameter less than or equal to 10 microns (PM10)	Required to Report if released to air from facility in a quantity of 0.5 tonnes or more per annum
Particulate matter with diameter less than or equal to 2.5 microns (PM2.5)	Required to Report if released to air from facility in a quantity of 0.3 tonnes or more per annum

8.2 GREENHOUSE GAS EMISSIONS

Agnico Eagle is committed to reporting greenhouse gas emissions (GHG) in support of Canada's Voluntary Challenge Registry; currently termed the Canadian GHG Challenge Registry. Agnico Eagle has developed a baseline and monitoring system for GHG to evaluate and report on progress in improving efficiency and reductions in GHG.

SECTION 9. PLAN REVIEW AND CONTINUAL IMPROVEMENT

This IWMP will be maintained by Agnico Eagle to reflect the current operations at the Meadowbank Gold Project, permit requirements and regulatory setting. The plan will be reviewed on a regular basis and revised when necessary to ensure that the project staff, operators and regulatory bodies are kept aware of any changes to operational procedures.

The latest IWMP will be made available at all times by Agnico Eagle for review by the NWB, Government of Nunavut, and Environment Canada.

SECTION 10. REFERENCES

CEPA, 1999. Canadian Environmental Protection Act. March 31, 1999

Canadian Council of Ministers of the Environment (CCME), 2000a. Canada-Wide Standards for Dioxins and Furans, May, 2000

Canadian Council of Ministers of the Environment (CCME), 2000b. Canada-Wide Standards for Mercury Emissions, June 2000

Canadian Council of Ministers of the Environment (CCME), 2001, Canada-Wide Standard for Waste Incineration – Stack Testing Requirements.

Government of Nunavut, 2011. Environmental Guideline for Industrial Waste Discharges. April 2011.

Government of Nunavut, 2012. Environmental Guideline for Used Oil and Waste Fuel. June 2012.

Environment Canada (EC), 2007. National Pollutant Release Inventory (NPRI). http://www.ec.gc.ca/pdb/npri/npri_home_e.cfm

Golder (Golder Associates Ltd.), 2007. Final Report On Landfill Design and Management Plan, Meadowbank Gold Project Nunavut, *Project 06-1413-089/9000, Doc. No. 458, Rev. 0,* submitted to Meadowbank Mining Corporation, dated August 27, 2007.

Golder (Golder Associates Ltd.), 2014. Interim Closure and Reclamation Plan, Meadowbank Gold Project, *Project 13-1151-0131.* Submitted to Meadowbank Division on January 7 2014.

Letter from Nunavut Impact Review Board to Cumberland Resources Ltd, dated December 30, 2006 Re: Meadowbank Gold Mine Project Certificate; Nunavut Land Claims Agreement Article 12.5.12.

National Guidelines for Hazardous Waste Incineration Facilities - Design and Operating Criteria, Volume 1, March 1992, (CCME).

APPENDIX I

TECHNICAL SPECIFICATIONS: ECO WASTE SOLUTIONS INCINERATOR MODEL NO. ECO 1.75TN 1P MS 60L

TECHNICAL DATA SHEET

Technical Data

Supply all technical data for each item applicable, in the format shown on the following pages. Include drawings necessary for a technical evaluation of each item.

Equipment Number	TBD
Equipment Description	Camp Waste Incinerator
Manufacturer	Eco Waste Solutions
Model Number	ECO 1.75TN 1P MS 60L
Total Installed Weight, kg	44,500 kg (estimated with building)
1 Waste Incinerator	
Waste classification: (TYPES)	1. Camp Waste
	2. Sewage Sludge
	3. Waste Oil
Mixed waste charge classification: Break-down of each type of waste (%)	1. Camp Waste - 75%
	2. Sewage Sludge - 25%
	3. Waste Oil - N/A charged into secondary
****Emissions:**	
SO_2 (mg/m^3)	50 mg/m^3
CO (mg/m^3)	7 mg/m^3
NOx (ppm)	< 50 ppm
VOCs µg/m^3	50 - 2000 µg/m^3
Particulate (mg/m^3)	20 mg/m^3
PM_{10} (g/s)	N/A
Dioxins/Furan (pg I-TEQ/m^3)	< 80
Mercury (µg/Rm^3)	N/A - Materials cotaining Mercury to be excluded from incinerator waste stream
Flue Gas Temperature (°C)	1000°C
Flue Gas Flow Rate (kg/s)	1.996 kg/s (max)
Incineration capacity: (kg/h)	175 kg/h (10 hour burn)
Charge per cycle: (kg)	1750kg
Burning rate: (kg/h)	175 kg/hr average
Off-time per cycle: (h)	6 hr cool down
Heat value: (kJ/kg or BTU/lb)	5125 BTU/lbs (Solid and Sewage sludge mixed waste)

**The emission estimates provided are given as volumetric concentrations or pollutants; as per test reporting standards. Estimates are based on previous air emission tests.

© Hatch 2006/05

	Fuel mixing ratio with waste oil (if applicable)	N/A
	Capability to burn waste oil with loading rate (kg/h)	60.6 kg/h (8 hour liquid burn)
	Applicable auxiliary burner.	N/A
	Incinerator to bear CSA label?	All electrical components CSA or UL approved. Approval of complete incinerator package at additional cost..
	Temperature: Primary chamber (°C):	705°C
	Temperature: Secondary chamber (°C):	1000°C
	Burner Efficiency:	High
	Internal Volume of Primary Chamber:	2.43(l) x 2.43(w) x 2.29(h) m
	Internal Volume of Secondary Chamber:	1.83 (dia) x 5.49(l) m
	Destruction efficiency	95% DRE
	Tested Emission results (rates)	- See Section 1 (Emissions)
	Stack internal diameter (mm)	965mm
	Height of Stack (m)	7.62m
	Stack materials of construction	Refractory Lined - Mild Steel (44W HSLA)
	Spark Arrester length (mm)	1092mm
	Spark Arrester open area (m^2)	0.425m^2
	Burner System	Primary Burner - Riello RL28/2
		Secondary Burner - Qty(2) Riello RL100/M
		Liquid Waste Burner - Eco Waste Solution Liquid Waste Oxidizer
	Valve Train	N/A - Integrated in Burners
	Charging System	N/A - Batch System
	Charging opening size	1.78m (w) x 1.43m(h)
	Charging Chute size	N/A - no chute
	Ash Removal System	N/A - Manual
	Expected ash production per cycle (kg)	200kg (estimated)
	Maximum Capacity of ash removal system	N/A
2.	**Materials of Construction**	
	External Casing	Mild Steel (44W HSLA)
	Spark Arrester	Stainless Steel (SS 304)
	Insulation in Primary Chamber	Walls - Ceramic Fibre Blocks (152mm (6") Thick)
		Floor, Door Sills & Breech entrance - Castble (101 - 152mm (4-6") Thick)
	Insulation in Secondary Chamber	Walls - Ceramic Fibre Blocks (152mm (6") Thick)
		Breech exit & Stack Entrance - Castable - (76 -152mm (3-6") Thick)
	Insulation in Stack (materials and thickness)	Insulating Castable (76mm (3") Thick)
	Charging Chute	N/A
	Paint System Used	Carboline - Silicon Zinc Primer, Silicon Finish
	Dry Film Thickness of Paint	Primer - 2 mils (50 micron)
		Final Coat - 2 mils (50 micron)
	Primary Chamber Burner Rating	(663 - 1266)x10^3 KJ/hr
	Secondary Chamber Burner Rating	(1582 - 6119)x10^3 KJ/hr
3.	**BLOWERS**	
	Blower Manufacturer	New York Blower
	Primary Chamber Blower Capacity (m^3/hr)	2696
	Primary Blower Pressure (kPag)	0.25
	HP/ RPM	1.15 hp @ 2200rpm
	Secondary Chamber Blow Capacity (m^3/hr)	4247
	Secondary Blower Pressure (kPag)	0.5
	HP/ RPM	1.9hp @ 4900 RPM
4.	**CONTROL SYSTEM**	
	Please list all instrumentation and details including	- Please See Appendix A (Attached)
	CSA approval and labelling:	

© Hatch 2006/05

5.	**INCINERATOR BUILDING (if applicable)**	
	Overall Length (mm)	12 192mm
	Overall Width (mm)	12 192mm
	Overall Height (mm)	6420 mm
	Shipping Dimensions (mm)	6660 x 3050 x 914 mm
6.	**DIMENSIONS**	
	Overall Length (mm)	6 858 mm
	Overall Width (mm)	7 188 mm
	Overall Height (mm)	11 049 mm
	Shipping Dimensions (mm)	**Largest Pieces (L x W x H) mm**
		Primary Chamber - 3403 x 3225 x 2895
		Secondary Chamber - 6172 x 2413 x 2794
		Shipping Container - 12 000 x 2438 x 2591
7.	**WEIGHTS (KG)**	
	Incinerator	20 275 kg
	Stack	4082 kg
	Blowers & Burners	400 kg (Blowers) 580 kg (Burners)
	Total Weight	25 337kg

© Hatch 2006/05

FOR: REVIEW ONLY.

BILL OF MATERIAL		
11M. QIY.	DESCRII'TION	WEIGHT kg.

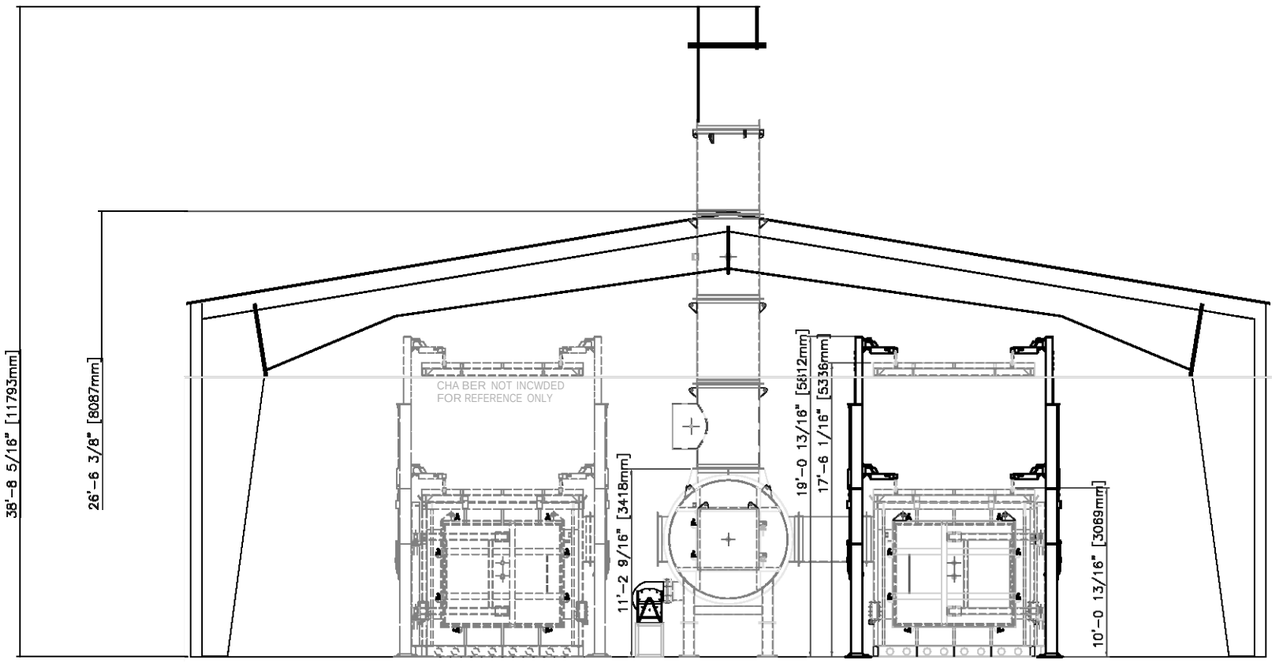

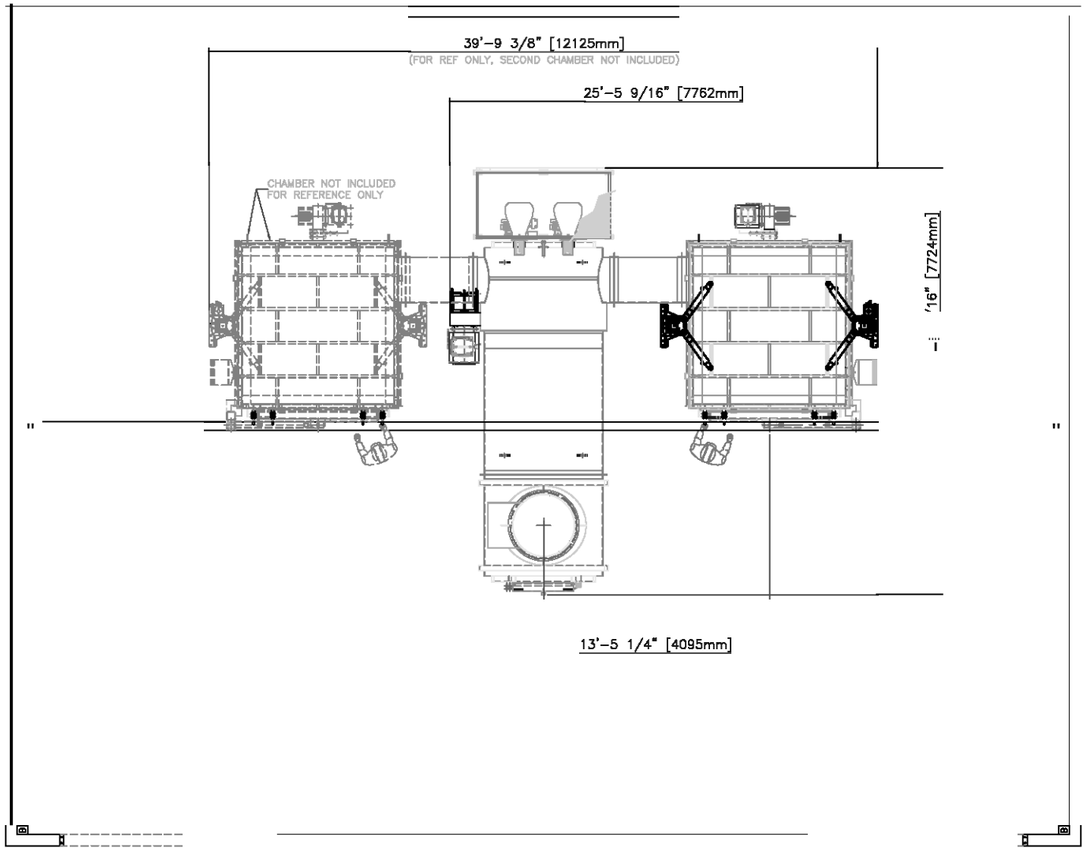

REV.	DESCRII'TION	APPROVED

THIS DOCU ENT IS THE PROPERTY OF ECO BURN INC. AIID SHALI. NOT BE USED, COPIED DR TRANSFERRED TO OTHER DOCUMENTS WITHOUT PRIOR WRITIEN PERMISSIOII OF ECO W>.SIE SOLUTIONS.

DRAWN: J.S.	DAIE: 19-08-0B	BCO WASTE !, !: TIONS
CHECKED:	DAIE:	
PROJECT NAL.E: HATCH – MEADOWBANK		CUSTOLIER P.O.
PROJECT NUMBER: MDB-S-268		CUSTOMER EQUIPMENT. T
SCALE:	JOB .NO: OB-2MS	TITLE: BUILDING DRAWING HATCH MEADOWBANK
THIRD ANII.E -$8		DWG. NO. MDB-EC01.75TN1PMS60L-XXX REV.

APPENDIX II

ANNUAL COMPLIANCE AND REPORTING TEMPLATE

Appendix 2
Annual Report for
Incinerated Waste Management

Contact Information			
Company Name:			
Contact Name:		**Position**	
Contact Email:			
Address			
City/Town:		**Province:**	
Postal Code:			
Telephone:		**Fax:**	

Incinerator Data and Information

Name of Emission Unit	

Type of Process	

Description of Process	

Description of Material Produced from incineration	

Manufacturer of Emission Unit	

Model No.	

Dates of Commencing:	**Date**
Construction	
Operation	
Modification	

Operating Information	**Hour/day**	**Days/week**	**Weeks/year**
Maximum Operating hours			
Average Operating hours			

Annual Throughput	Dec-Feb (%)	Mar-May (%)	Jun-Aug (%)	Sep-Nov (%)

Incinerator Charging Rate	Maximum (kg/day)	Average (kg/day)	Annual (tonnes/year

Appendix 2
Annual Report for
Incinerated Waste Management

Waste Description	Maximum Rates		Average Rates	
Type of Waste Material	kg/day	tonnes/year	kg/day	tonnes/hour

Fuel Usage Data	Maximum	Typical
Firing rate		

Fuel Type	

Sector Determination:	Check Applicable Box
Municipal Waste Incineration	
Sewage Sludge Incineration	

Stack Emissions Tests For Compliance (must be corrected for 11% oxygen)

	Date	Test 1	Test 2	Test 3	Average	**Compliance (check)**
Furans and Dioxins						
Mercury						

Provide Test method details:

Appendix 2
Used Oil Impurity Limits

Contact Information			
Company Name:			
Contact Name:		**Position**	
Contact Email:			
Address			
City/Town:		**Province:**	
Postal Code:			
Telephone:		**Fax:**	

Volume of Used Oil Generated:	

Volume of Used Oil incinerated/Cons	

Sample Analysis:

Flash Point:	

Impurity	**Units**	**Maximum Level Allowed**	**Sample #**			
Cadmium	ppm	2				
Chromium	ppm	10				
Lead	ppm	100				
Total Organic Halogens (as chlorine)	ppm	1000				
Polychlorinated biphenyls	ppm	2				
Ash content	%	-				

Volume of Products Produced from Used Oil Use:

Maintenance Performed on Incinerator:

Destination of Used Oil not Incinerated:

Appendix 2
Guidelines for Ash Testing
Environmental Guidelines for Industrial Waste Discharges

Parameter	Concentration maximum (mg/L)	Sample Number		
Ammonia Sulphide	100			
Benzidine	100			
Benzyl Chloride	100			
Enthalamine	100			
Ethylenediamine	100			
Maleic Anhydride	100			
Potassium Permanganate	100			
Quinoline	100			
Strychnine	100			
Tetrachloroethanes	100			
Arsenic	2.5			
barium	100			
Cadmium	0.5			
Carbon tetrachloride	0.5			
Chromium	0.5			
Cyanide (free)	20			
DDT	3			
Endrin	0.02			
Heptachlor + Heptachlor epoxide	0.3			
Lead	5			
Lindane	0.4			
Mercury	0.1			
Methoxychlor	10			
Methyl ethyl Ketone	200			
Metolachlor	5			
PCBs	50*			
Selenium	1			
Silver	5			
Tetrachloroethylene	3			
Toxaphene	0.5			
Trialomethanes	10			
2, 4, 5-TP (Silvex)	1			
Zinc	500			

* based on concentration by mass

APPENDIX II

MBK-SIT-0011 – INCINERATOR LOADING

Incinerator Loading

	PROCEDURE NUMBER:	**MBK-SIT-0011**	
People concerned	• **Agnico-Eagle employees working on the AWPR**	**Prepared by**	Site Services
		Approved by	Roger Sauvé, Site Services General Foreman
Issuing date :	2011-11-30		
This procedure corresponds to the required minimum standard. Each and every one also has to comply with the rules and regulations of the Nunavut Government in terms of health and safety at work.			

Objective:

To load the incinerator

Concerned departments:



Site services

Required equipment

- Proper Protective Equipment: mask, glasses, fire retardant coveralls, welding gloves, rechargeable mask, face shield

Impacts



Health & Safety



Process/Quality



Costs



Environment

Incinerator Loading

Procedure	Risks/ Impacts
1. There are 2 BLUE ash bins, one of which has an ORANGE spray on it. There is a sign on the yard which indicates a cold and hot side. The one with the cold side could be dumped into the roll off. 24 hours after ash deposition	 Prevent incident and /or accident
2. After the dumping of the ash bin, inspect the roll off bin to ensure there is no red hot ash that will start a fire	
3. If there is smoke or red ash seen, ask the team leader to arrange for the small water truck located in the incinerator to give it a good spray of water to avoid a fire	
4. Bring empty ash bin into the incinerator building for the new batch	
5. Go outside of the incinerator and move the ash bin from the hot side to the cold side	
6. Close the breaker switch to the OFF position for the primary chamber and lock it using Ensure a “Zero State of Energy” and follow lock-out- Tag out Standard MBK- HSS-0010	
7. Turn on the primary chamber exhaust vacuum system	
8. Open the door and make sure the burn is good; If not: call the supervisor or team leader	
9. Tie the door in the open position for safety	

10. Empty the chamber and remove all ashes using large shovels into the ash bin	
11. When taking out the fresh ash bin, make sure to put on the hot side of the sign	
12. Once the chamber is completely cleaned, load the bottom row with medium wet bags	
13. Put two layers of contaminated cardboards and contaminated rags	
14. Put one row of dry garbage bags	
15. Put two more layers of cardboard and rags	
16. Put one row of dry to wet bags	
17. Continue the same way and finish with the wet bags on top and no cardboards (this will help keep the flames from coming up and also prolong the life of the chamber since the flames are not in direct contact with the top wall of the chamber, it will also cut down on having to reset the burner which is caused by the flame being high at the top)	
18. Close the door and make sure all the locking latches are in proper position	

19. Turn off the primary chamber exhaust vacuum system	
20. Unlock the primary chamber breaker and turn it to the ON position	
21. Start the burning cycle - Never open the door after the start - If the burner does not start, call team leader or supervisor	
22. Do not store any flammable products around the primary and secondary chambers within the marked area - Never add any accelerant into the chamber to help the start	

APPENDIX III

COMPOSTER MANAGEMENT PLAN

MEADOWBANK GOLD PROJECT

Composter Management Plan

In Accordance with Water License 2AM-MEA1526

Prepared by:
Agnico Eagle Mines Limited – Meadowbank Division

Version 1
October 2018

Table of Contents

SECTION 1. INTRODUCTION 1
1.1 PROJECT OVERVIEW 1
1.2 COMPOSTER LOCATION 2
SECTION 2. REGULATORY CONTEXT 3
SECTION 3. COMPOSTER OPERATION 4
3.1 Compost Waste Stream 4
3.1.1 Acceptable Wastes for Composting: 4
3.1.2 Unacceptable Wastes for Composting: 4
3.2 Composter Description and Installation 5
3.3 How the Composter Works 6
3.4 Chemical Process 6
3.5 Process Duration 6
3.6 Output 7
3.6.1 Disposing of Residual Materials 7
3.7 Odour and Dust Control 7
3.8 Introduction of Invasive Species 8
SECTION 4. TRAINING, INSPECTIONS, MAINTENANCE AND MONITORING 9
4.1 Staffing and Training 9
4.2 Inspections 9
4.3 Monitoring and Testing 9
4.4 Maintenance 9
SECTION 5. REPORTING 10
SECTION 6. PLAN REVIEW AND CONTINUAL IMPROVEMENT 11
SECTION 7. REFERENCES 12

LIST OF FIGURES

Figure 1-1 Composter Location..... 2

LIST OF APPENDICES

APPENDIX III-I: Brome Composter Instruction Manual

SECTION 1. INTRODUCTION

1.1 PROJECT OVERVIEW

This Composter Management Plan (CMP) describes the requirements and guidelines for the safe and efficient operation of the in-vessel composter at the Meadowbank Mine. Composting is a waste treatment process that decomposes waste organic materials under controlled conditions, prior to disposal of the end-product in a landfill. Agnico Eagle has decided to include composting in the on-site operations for the purpose of reducing the amount of waste going to the incinerator and thus reduce emissions fuel consumption at the Meadowbank Mine site.

This CMP (Version 1) is an appendix to the Incinerator Waste Management Plan (IWMP) and is a component of the Meadowbank Environmental Management System. The objectives of this CMP are summarized as follows:

1. To define the operating procedures to be used in the composting of appropriate non-hazardous solid waste generated at the Meadowbank Mine;
2. To define acceptable/non-acceptable types of solid waste to be placed in the Meadowbank composter; and
3. To define operating and monitoring requirements for the composter.

Agnico Eagle will be responsible for managing and implementing this CMP. Agnico Eagle will introduce one in-vessel composter in the fall of 2018, with the intention of adding an additional composter should this project be successful. The first in-vessel composter is scheduled to be commissioned at the end of October 2018.

Prior to the introduction of the in-vessel composter, organic material at the Meadowbank facility was being sent to the on-site incinerator. The incineration process utilizes fuel for its operation. Diverting organic material to the composting operation instead will result in a potential reduction in fuel consumption for the incinerator of approximately 1,500 litres of fuel per day and has the potential of reducing greenhouse gas emissions and atmospheric pollutants associated with incineration.

Composting is an efficient means of reducing the mass and volume of organic waste generated. During the composting process, various microorganisms break down organic matter. Composting in general can be undertaken either in the presence of oxygen (aerobic conditions) with appropriate moisture and in specific temperature conditions, or in the absence of oxygen (anaerobic conditions) with appropriate moisture and temperature control. The aerobic process naturally occurs in the environment. In-vessel composting provides an opportunity to break down organic matter in an enclosed environment with accurate temperature control and monitoring. It also provides the benefit of mechanical assistance to reduce the organics in size and to turn over the compost materials to speed up and improve the composting process. The composter that is planned for the Meadowbank Mine will utilize an aerobic composting process. Agnico Eagle will use experience with composting acquired from another northern Canada mine site (Ekati Diamond Mine) that started composting a few years ago using the same composter equipment supplier.

1.2 COMPOSTER LOCATION

The in-vessel composter will be located in the same building as the incinerator away from the plant site and accommodations complex, adjacent to the fuel storage facility (see Figure 1-1).

Figure 1-1 Composter Location

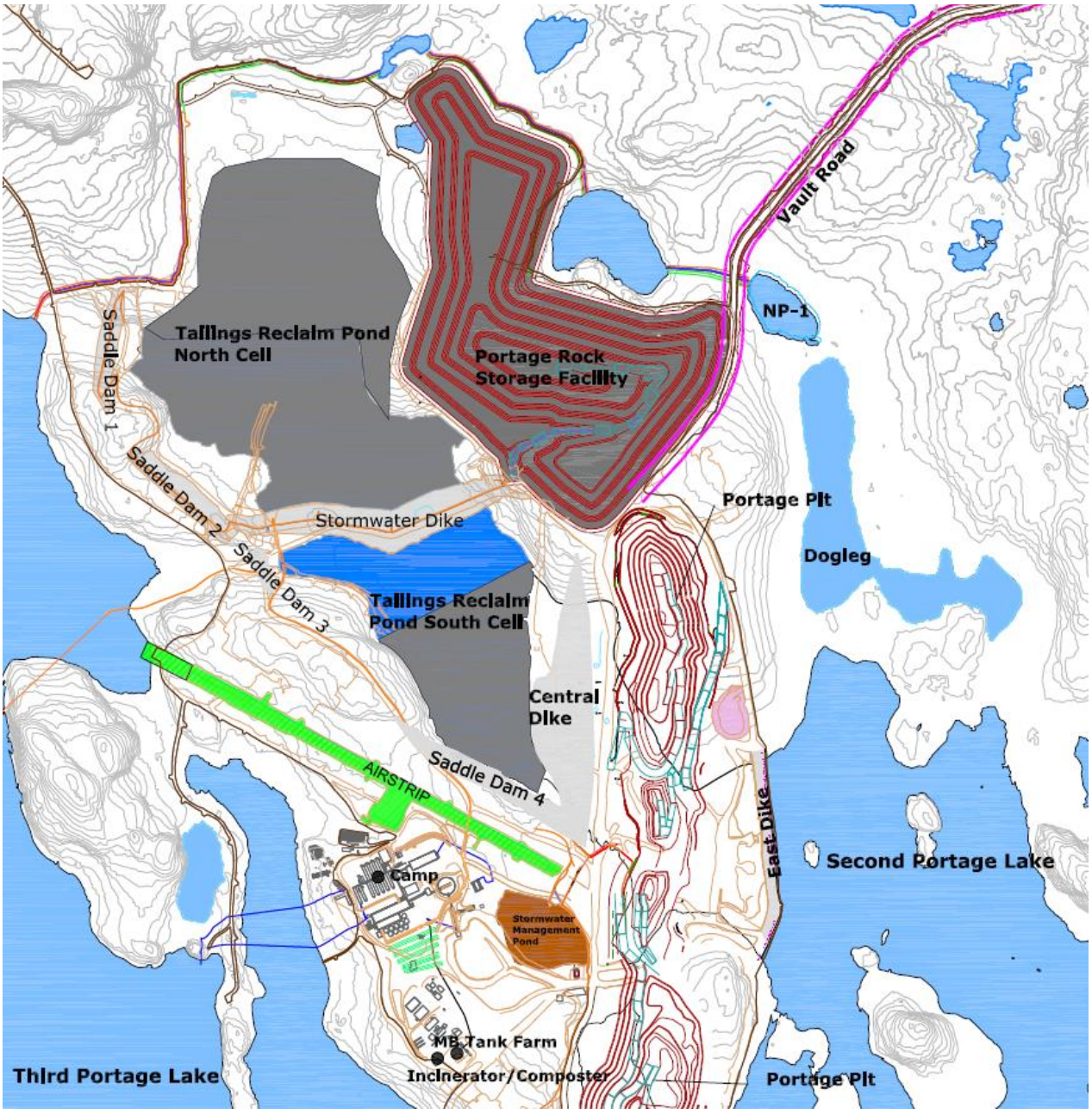

SECTION 2. REGULATORY CONTEXT

The following section outlines the regulatory context related to composters, and discusses how the regulations apply to the composter at the Meadowbank site.

There are several standard-setting organizations across Canada that are mandated to regulate compost quality and provide standards concerning compost. These include federal, provincial and territorial governments.

Within the federal government, the Canadian Food Inspection Agency (CFIA) regulates compost when it is sold either as a soil amendment or as a product with plant nutrient claims under the *Fertilizers Act*. The provinces and territories regulate the disposal and beneficial use of wastes on land, and therefore, the production and use of compost.

In Nunavut, there is currently no organics waste strategy. However, guidelines developed for Nunavut focus on diverting materials from disposal and proper safe management. According to the Government of Nunavut, in an effort for planning for effective solid waste management, there are plans to focus its resources on a number of targeted initiatives. The plans include the development of a Nunavut-wide Solid Waste Management Strategy, whose purpose is to evaluate all aspects of waste management with a focus on available land, fencing, environmental concerns, recycling, re-use, segregation, sequestration, composting and various other options. The Nunavut *Environmental Protection Act* (Nunavut, 2010) prescribes the requirements for activities relating to the environment.

A guideline from Environment and Climate Change Canada, dated 2017 and entitled, “Solid Waste Management for Northern and Remote Communities, Planning and Technical Guidance Document,” provides guidance on the complex waste management issues faced by northern and remote communities and provides planning and technical guidance and best practices relevant to the northern communities. Composting is included in the solid waste management diversion strategies in this guideline and states that diverting organic waste from landfills through composting reduces greenhouse gas emissions. According to the guidance document, compost output is considered residual waste if it is sent to landfill for disposal, and composting represents an opportunity for northern and remote communities to reduce leachate quantity and improve leachate quality, reduce greenhouse gas emissions, preserve landfill capacity and produce a compost product that can be used for other purposes.

Agnico Eagle initially plans to place the final compost product from the composting process into the on-site landfill but may explore other potential uses of the compost product in the future. In Nunavut, there are no regulations or guidelines specific to the quality or uses of compost product, however, guidelines for compost quality and categorization exist in other provinces and at the federal level. Should Agnico Eagle wish to employ compost for other potential uses, this management plan will be updated to incorporate the above-mentioned guidelines.

SECTION 3. COMPOSTER OPERATION

3.1 Compost Waste Stream

The Meadowbank Mine generates organics as part of its waste stream. On-site composting has the potential to reduce greenhouse gas emissions and atmospheric pollutants related to the incineration of wastes. Diverting the organic waste to the composting operation will provide an opportunity to reduce the volume of waste that will eventually go to the landfill by turning it into compost and avoid fuel consumption and emissions typically associated with burning the organic material in an incinerator.

3.1.1 Acceptable Wastes for Composting:

- Organic matter including food (e.g., coffee grounds and tea bags, eggs and egg shells, fruit and vegetable peelings, meat, chicken and fish including bones, nut shells, pasta, rice, sauces and gravy, solid dairy products, table scraps and plate scraping etc. as well as leaf and yard organic material including brush and tree trimmings);
- Paper and cardboard; and,
- Dead animals (small size only).

During daily composter operation, waste materials will be segregated at the source to ensure non-compostable waste streams do not enter the composter.

3.1.2 Unacceptable Wastes for Composting:

Materials that are not listed above are unacceptable for composting. These materials include, but are not limited to:

- Food containers and wrappings including plastics that are contaminated by food;
- Uncontaminated plastics, including chlorinated plastics;
- Inert materials such as concrete, bricks, ceramics, ash;
- Bulky materials such as machinery parts or large metal goods such as appliances (shipped south and recycled in an accredited facility);
- Radioactive materials such as smoke detectors;
- Potentially explosive materials such as propane tanks, other pressurized vessels, unused or ineffective explosives;
- Other hazardous materials such as organic chemicals (PCBs, pesticides), other toxics (arsenic, cyanide);
- Electronics (shipped south and recycled in an accredited facility);
- Batteries (shipped south and recycled in an accredited facility);
- Asbestos;
- Drywall board;
- Vehicles and machinery (shipped south and recycled in an accredited facility);
- Fluorescent light bulbs;
- Whole tires;
- Waste oils;
- Flammable or combustible petroleum hydrocarbons unsuitable for its purpose due to the presence or contaminants or loss of original properties (such as gasoline, diesel fuel, aviation fuel, kerosene, naphtha or fuel oil);

- Any materials containing mercury;
- Used oil that exceeds the Maximum Impurity Limits for parameters listed in Table 3.3;
- Waste oil with a flash point of less than 37.7 deg C;
- Paint; and,
- Solvents.

3.2 Waste volumes

It is expected that approximately 7000 kg of waste will enter the composter weekly.

3.3 Composter Description and Installation

Agnico Eagle will select an appropriate in-vessel composter from the Brome series and commissioning of the composter is planned for the fall of 2018. A composter operating manual has been provided in Appendix III-I for the Brome series of composters. The composter will be one of the composters described in this manual. This manual must be referred to for all installation, operational and maintenance requirements.

Precautions must be followed for the indoor installation of this composting equipment as per the composter operating manual and include the following:

- Plan a ventilation shaft or a sanitary drain that exits the building for the elimination of composting gas and odours;
- Do not place the air exit near an air intake, a door or a window;
- Take care to place the system in a separate room to avoid any contact with human food preparation or food storage areas to minimize contamination risks;
- Make sure the building's foundation can support the weight of the composter when it's both empty and full; and
- Allow sufficient space around the composter to provide ease of movement related to composting operations (addition of matter, collecting compost at the exit, etc.).

The composter will be located in the same building as the incinerator, as described in Section 1.2 above. The building where the composter will be located allows personnel to operate and repair the composter and incinerators in a temperature controlled environment. In the event that unplanned maintenance is required for the composter, the incinerator provides an alternate temporary means for handling compostable waste. For additional information regarding the incinerator, refer to the Incinerator Waste Management Plan, to which the CMP is as an Appendix.

During daily composter operation, waste should be segregated at the source to ensure non-compostable waste streams do not enter the composter. Collected compostable waste will be stored in dedicated waste containers, located throughout the Meadowbank Mine site where organic material may be produced.

Prior to loading the waste into the composter, the waste will be visually inspected by the composter operator on sorting tables to ensure it does not contain inappropriate types of waste materials. Materials that do not meet the criteria for composting will be incinerated, recycled, or disposed of as hazardous material.

Personnel operating or performing maintenance on the composter will be trained by a Brome Composter representative. The training will include a composting theory portion and a practical, hands-on portion. A more detailed discussion of individual components, features and functions of the composter can be found in the Brome Composter Operating and Maintenance Manual (available on site) and referenced in Appendix III-I of this CMP.

3.4 How the Composter Works

The Brome series in-vessel composter will consist of an insulated cylinder that rotates according to pre-set timed intervals. The rotation of the cylinder allows the material inside of the chamber to mix while providing aeration. Aeration is important to provide oxygen for the microorganisms that are digesting organic material to make the compost. Heat will be produced during the composting process from the breakdown of organic material by the microorganisms. The cylinder will be insulated to preserve the heat generated inside the cylinder during the winter months, thereby avoiding the need for additional heating and consumption of extra energy for the process.

The composter will operate in a continuous-feed manner. As more material is added and the cylinder rotates, the digesting material is moved along the vessel and is then discharged at the cylinder's extremity through an opening that also serves as an air inlet for oxygen. The amount of finished compost depends on the rotation intervals and the amount of organic material added to the vessel.

This composter is designed to work year-round, indoors or outdoors. The selected composter and installation process will consider the conditions in the context of the climate at the Meadowbank Mine. Key performance indicators such as temperature and humidity will be developed with the composted supplier during commissioning, based on the model of composter selected and the site conditions.

3.5 Chemical Process

The composter uses an aerobic, biological process involving the succession of various microorganisms decomposing organic materials and converting them into a biologically stable product. The predominant types of microorganisms present during composting are bacteria, fungi and actinomycetes. Composting is different than the decay process that occurs in nature, as composting is monitored and controlled, aerobic conditions are maintained and includes a high-temperature phase for a specified amount of time (e.g., above 55 ˚C) that reduces or eliminates pathogens and weed seeds.

Almost any organic material is suitable for composting, as described in Section 3.1.1. The composter requires a certain ratio of carbon-rich materials, or "browns," and nitrogen-rich materials, or "greens." Examples of brown carbon-containing materials are dried leaves, paper and cardboard. Nitrogen-containing materials are fresh or green, such as grass clippings and kitchen scraps. Food scraps provide nitrogen to the system whereas paper and cardboard provide high carbon values. A specific strategy is used to achieve the required balance of nitrogen-rich and carbon-rich materials fed into the composting system such that optimum conditions are provided for the bacteria in the composter. The carbon to nitrogen ratio required will be confirmed by the supplier for the specific model of composter selected by Agnico Eagle prior to commissioning.

3.6 Process Duration

An agricultural mixer will be used to break down and mix the material, which is then transferred to the composter. The breakdown of materials increases the surface area to volume ratio and allows for increased aeration and biological activity within the composter.

The compostable material will spend a minimum of nine days in the composter. This duration will be assessed during commissioning and reviewed if needed. During the composting process the operators will review the temperature of the compost within the composting chamber to ensure proper targets are being reached (minimum of 55˚C unless otherwise specified by the supplier). The operators will visually inspect the compost for foreign matter and check that the texture and consistency of the compost appears normal. Depending on the amount of material composted, the material may have a residency time of between 9-20 days in the composter, during which time the cylinder completes one full revolution at regular intervals

throughout the day. Rotating the material causes an aerobic environment to be maintained for maximum bacterial growth. The bacteria generate heat, water, and gases such as carbon dioxide during aerobic respiration. The insulated composting chamber traps heat and produces favorable temperatures for aerobic respiration. Gases produced during the composting (e.g. carbon dioxide) process will be ventilated from the building using a hood vent at the output of the composting unit. The compost will be discharged once the material has reached the end of the composting cylinder. Compost will only be discharged during the cylinder revolutions, and thus the amount of product being discharged can be manipulated based on the time intervals between revolutions and the amount of product added to the composter.

3.7 Output

As the compost is discharged, it will run across a screen/sifter that will remove any large material that may have been accidently introduced into the composter. The material discharged from the composter will be typically equal to roughly half of the tonnage fed into the composter (i.e. 3500 kg per week). Most of the weight loss will be due to the dehydration of the material as it breaks down. The solid decomposed material is discharged and stored in a bin. The full bin of compost will be then transported to the landfill for disposal.

Composting the material will provide a significant environmental benefit by reducing the amount of material being incinerated. The type of material that will be diverted from the incinerator to the composter coincidentally also has higher water content and takes longer to incinerate which will help to further reduce greenhouse gas emissions at the Meadowbank Mine.

3.7.1 Disposing of Residual Materials

The residual material that will be discharged from the composter will mainly consist of materials that are too large to fit through the sizing screen/sifter. The residual materials will be sorted into incinerator waste, recyclable material, landfill material, or hazardous goods that will be shipped off site. Larger organic material may be reintroduced into the mixer to begin the composting process again. If the composting process does not break down the material effectively after the second cycle, or if the composter is temporarily out of service for any reason, the material will then be sent to the incinerator.

3.8 Odour and Dust Control

Since the composter will be in an enclosed area, a ventilation shaft or a sanitary drain that exits the building for the elimination of composting gas and odours will be included in the building design. Odours during the operation of the equipment will be mitigated by sweeping the floor, cleaning up any organic matter debris on or around the composter, and removing any material that has fallen on the floor. Waste will also be cleaned up in the loading and unloading areas. Loads of organic matter arriving at the composting building will be promptly mixed and added to the composter.

For the operation of the incinerator, waste is stored prior to incineration. With the diversion of the organic waste to the composter, the waste will no longer need to be stored and instead will be introduced promptly into the composting process. This will help to reduce potential odours associated with the material management prior to processing.

Careful monitoring of the composting process using appropriate carbon to nitrogen ratios as discussed with the supplier as well as using regular log book entries and adherence to the procedures and recipes will aid in avoiding the generation of odours. The monitoring of humidity is an important factor in controlling odours from the composting process. Composting often proceeds well at a moisture content of 40-60% by weight. At lower moisture levels, microbial activity is limited. At higher levels, the process is likely to become anaerobic and foul-smelling.

The site staff will monitor the landfill where possible to ensure that wildlife does not become attracted to the compost material being added to the waste.

3.9 Introduction of Invasive Species

Composting will be monitored and controlled. Aerobic conditions will be maintained and includes a high-temperature phase for a specified amount of time (e.g. above 55 ˚C) that reduces or eliminates pathogens and weed seeds. Adherence to the composting instructions will avoid concerns over introduction of invasive species to the landfill.

SECTION 4. TRAINING, INSPECTIONS, MAINTENANCE AND MONITORING

4.1 Staffing and Training

The computerized composter requires at least one dedicated person to operate and monitor the equipment at a given time. Personnel operating or performing maintenance on the composter will be trained by a Brome Composter representative. The training will include a composting theory portion and a practical, hands-on portion.

4.2 Inspections

Inspection criteria and work instruction checklists will be developed with assistance from the composter supplier to ensure proper operation of the equipment. Routine inspections of the composter and associated facilities will be conducted by a competent, trained operator prior to every use. Work Instruction checklists are to be used so that each operator diligently operates and inspects the composter consistently. These checklists are also a source of information when trouble shooting or maintenance is required for the unit and include pre-operational checks and operational checks. The inspection could include the following depending on the equipment model type chosen for the operation:

- Feed transfer conveyor;
- Patz grinder;
- Grinder transfer conveyer;
- Brome In-Vessel Composter components;
- Discharge sifter/screen;
- Discharge conveyor;
- Air discharge fans;
- Collection bins;
- Curing pad where applicable;
- Waste feedstock;
- Composter internal temperatures;
- Compost in vessel; and
- Mature compost piles where applicable.

4.3 Monitoring and Testing

The compost output will be visually inspected each time it exits the sieve as described in Section 3.6. Should Agnico Eagle decide to explore other options for potential uses of compost, further analytical testing will be undertaken as detailed in relevant compost quality guidelines.

4.4 Maintenance

Maintenance of the composter will be scheduled annually or as specified by the Brome supplier/manufacturer. This maintenance will be performed to evaluate the insulation and structural integrality of the cylinder. This will be undertaken so that the composter is functioning at its optimal standard.

SECTION 5. REPORTING

To demonstrate compliance with site requirements, annual reporting on the performance of the composter will be submitted as part of the Meadowbank Gold Project Annual Report to the Nunavut Water Board (NWB), Government of Nunavut (GN), Environment and Climate Change Canada (ECCC), and Nunavut Impact Review Board (NIRB).The quantity and type of materials composted as well as the quantity of compost produced and sent to landfill on-site during operations will be included within the annual report.

The Meadowbank Mine will maintain detailed records for the operation of the composter including site specific operational and maintenance checklists. Records will be kept on file for each day composting occurs. Out-of-specification situations such as temperature readings below the minimum of 55˚C or maintenance issues with the composter will be reported to the Energy and Infrastructures Superintendent immediately. The composter will not be used until maintenance or remedial measures have been applied.

SECTION 6. PLAN REVIEW AND CONTINUAL IMPROVEMENT

This CMP will be maintained by Agnico Eagle to reflect the current operations at the Meadowbank Mine, permit requirements and regulatory setting. The plan will be reviewed on a regular basis and revised when necessary to ensure that the project staff, operators and regulatory bodies are kept aware of any changes to operational procedures.

The latest CMP will be made available at all times by Agnico Eagle for review by the NWB, NIRB, GN, and ECCC.

Should Agnico Eagle determine the need to add additional composters to the on-site operation, the CMP will be reviewed and updated to reflect this change to the operation. Should Agnico Eagle wish to employ compost for other potential uses, this management plan will be updated to incorporate the above mentioned guidelines.

SECTION 7. REFERENCES

Agnico Eagle Mines Limited (Agnico), 2018. Landfill Design and Management Plan, Meadowbank Gold Project Nunavut, *Ver. 4* dated October, 2018.

Agnico Eagle Mines Limited (Agnico), 2018. Incinerator and Composter Waste Management Plan, Meadowbank Gold Project Nunavut, *Ver. 8* dated October, 2018.

Canadian Council of Ministers of the Environment (CCME), 2005. Guidelines for Compost Quality, 2005. PN 1340.

Environment and Climate Change Canada, 2017. Solid Waste Management for Northern and Remote Communities, Planning and Technical Guidance Document. March 2017.

APPENDIX III-I

Brome Composter Instruction Manual

BROME Compost inc.

Brome Composter Instruction Manual

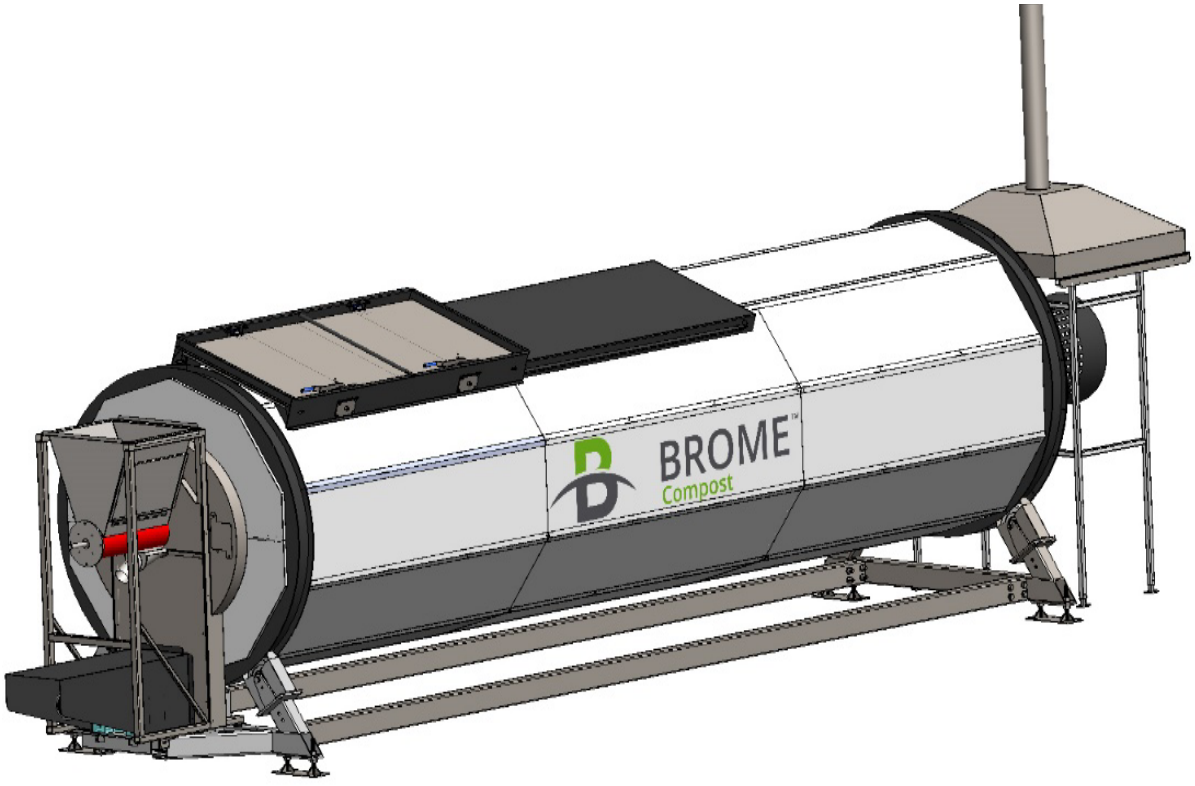

Operator Manual

Before using this composter, please be sure to carefully read the following instructions and become familiar with its operation in order to prevent problems and accidents.



INTRODUCTION

Composting is the ideal solution for the disposal of organic waste, especially when the alternative is sending it to landfill sites. Composting on-site greatly reduces greenhouse gas emissions and atmospheric pollutants related to the transport of organic residual matter to landfills or to industrial composting sites.

Brome Composters are easy to install and use. They have low operating costs and low maintenance requirements, making on-site composting accessible to many types of industries, commercial business and institutions (ICI), as well as farms and municipalities.

Brome Composters are designed to convert many types of organic waste including food scraps, animal products, green waste, animal carcasses, sceptic mud, etc., into high-quality compost in a short period of time and with little handling. Brome Composters are available in a variety of different models, which can easily be adapted to the user's needs.

Models :

Composter 400 Series	Brome 406 Brome 410 Brome 416 Brome 424 Brome 430
Composter 500 Series	Brome 506 Brome 510 Brome 516 Brome 524 Brome 530
Composter 600 Series	Brome 608 Brome 616 Brome 624 Brome 630

Model: (capacities can vary depending on the type of material, the required residency time, and whether the input is pre-treated).

The composter is an insulated cylinder that self-rotates according to the user's pre-set time intervals. These rotations mix the contents while at the same time providing aeration, allowing the bacteria to breathe and break down the organic waste (O.W.) into compost more rapidly than other composting methods. The decomposition process produces heat. The cylinder is insulated with a 1½" insulating material (R 7.5) to preserve heat inside the cylinder during the winter months. The compost is discharged at the cylinder's extremity through an opening that also serves as an air inlet.[1] The rotation intervals and the amount of matter added regulate the amount of finished compost being discharged.

This composter is designed to work year-round, indoors or outdoors, and can compost a wide variety of O.W. In certain extreme conditions, adaptation may be required during the installation process.



Figure 1 -- Interior view of the cylinder

[1] Composters are pre-perforated to accommodate an optional ventilation system. Valves can also be installed as an option (passive ventilation).

Safety

Before operating this equipment, make sure that each employee understands and follows the safety, operation and maintenance rules described in this document.

No modifications should be made to this equipment without authorization from Brome Compost. Equipment modification will automatically invalidate the warranty offered by the manufacturer and could cause serious injuries.

Table of Content

INTRODUCTION 2

Section 1-- Safety 7

1.2 Operating the Equipment Safely 8

1.3 Performing Maintenance Safely 8

1.4 Precautions Against the Risk of Electrocution and Physical Damage 8

Section 2 – Important Information for Delivery 10

2.1 Transport and Unloading 11

Section 3 -- Installation 12

3.1 Site selection and preparation 12

3.2 Precautions for Outdoor Installation 12

3.3 Precautions for Indoor Installation 13

3.4 Electrical Installations 13

Section 4 – Operating Procedures 14

4.1 Sanitary Precautions When Composting 14

4.2 Verifying the Installation and Assembly Before Start-up 14

4.3 Initial Start-up 14

4.4 Monitoring the Temperature in the Composter 16

4.5 Odours 16

4.6 How to Set Rotation Intervals 17

4.7 How to Set the Door Position 18

Section 5 -- Maintenance 19

5.1 Performing Maintenance Safely (in Enclosed Spaces) 19

Work Procedures for Enclosed Spaces 19

Securing the Composter and/or the Screw Feeder (Dispenser) 20

5.2 Checking the Condition of the Composter 20

5.3 Maintenance Schedule 21

Section 6 – Brome Composter Dimensions 22

Section 8 – Problem Solving 25

8.1 Broken Chain 25
Section 9 – Warranty 26
9.1 Limitation of Liability 27

Section 1-- Safety

1.1 Safety instructions

- Never go into the cylinder unless you are trained to work in confined spaces and have authorization from your immediate superior; always follow the appropriate lockout procedure;
- Make sure all the warning labels are in place and visible
- Repairs and maintenance on the equipment must be made by qualified personnel only;
- Respect all established safety standards while performing maintenance on the equipment;
- Make a visual inspection of the equipment as often as possible
- It is recommended to use replacement parts from the manufacturer
- It is recommended to restrict access to the equipment by installing a fence or other barrier
- We recommend that the doors be locked when there is no surveillance or operator present



1.2 Operating the Equipment Safely

Before operating the composter, please note that a support service is offered for the installation, the initial start-up, and the training of personnel designated for the equipment's operation and maintenance.

Start-up support is available once the installation is completed. A remote monitoring service, as well as an interactive data tracking system are available upon request. Please contact Brome Compost for more information on this subject.

1.3 Performing Maintenance Safely

- Always ensure that the electrical current is switched off and that the lockout procedure is done properly when performing maintenance on the composter. If you must go inside the composter, be sure to have adequate ventilation and to respect the regulations governing work in enclosed spaces.
- If you need to rotate the cylinder during maintenance, please remove toolboxes, stepping stools, ladders, etc. and ensure that there are absolutely NO OBSTACLES within the rotational axis in front, in back, and on each side of the composter.

1.4 Precautions Against the Risk of Electrocution and Physical Damage

- Always cut the electrical current if you need to open the control panel
- Never go beneath the composter
- Always ensure the doors are closed and locked before operating the composter
- Pay close attention to the turning of the wheels
- Never climb on the composter
- ***Screw option : never clear or clean matter without first cutting the electrical current and locking the composter.***

Feeder Mechanism : Feeding Screw

Never place hands or tools inside the composter's feed shaft without first cutting the electrical current and always respect the recommended lockout and safety procedures.

If the screw mechanism becomes jammed, you should under no circumstances try to remove matter with your hands or with a tool without first having followed the safety lockout procedure.

1) Operate the screw for only a few seconds in reverse to unblock it. Stop the screw and start it again in the right direction

2) If this does not work, follow the lockout procedure;

3) Remove the screw or the lock from the access door and remove the blocked matter carefully with an appropriate tool in order to avoid injuries;

4) Once the matter is removed, close the access door, put the screw or lock back in its proper position and restart the composter and the screw according to the proper procedure;



Section 2 – Important Information for Delivery

Composter Model	Weight (empty) (Kg)	Weight (in operation) (kg)	Working Volume (m3)
Brome 406	599	1291	1.8
Brome 410	1796	2950	2.3
Brome 416	2199	4041	3.7
Brome 424	2595	5364	5.4
Brome 430	3193	6656	6.9
Brome 506	3492	4443	1.9
Brome 510	2023	3609	3.1
Brome 516	2381	4918	5.0
Brome 524	2821	3201	7.5
Brome 530	3401	8159	9.5
Brome 608	798	3113	4.6
Brome 616	3493	8121	9.2
Brome 624	5189	12132	13.8
Brome 630	5988	15245	18.3

2.1 Transport and Unloading

- Transport of the composter from the manufacturer to the installation site is the responsibility of the client.

- The unloading, on-site transport and installation of the composter are the responsibility of the client. The client is responsible for providing the machinery needed to unload the composter and a foundation on which to place it according to the technical data sheet provided by *Brome Compost*.





Place the strap firmly around the grooves by passing through the composter's support beams





Lift the composter with the appropriate lifting equipment (ensure that the composter is empty first).

Section 3 -- Installation

3.1 Site selection and preparation

The client is responsible for choosing the layout for the composting site and providing the correct type of surface required for the equipment, as specified in the information provided by Brome Compost. The composter must be installed on a level surface. The surface or structure must be strong enough to support the composter with its full load and ensure it stays level at all times. For example, a concrete slab or steel plate can serve as a foundation depending on the type of soil underneath it.





When the composter is used with mechanized loading equipment (e.g. a bin lift), we recommend securing the composter to the ground with an appropriate anchor depending on the type of surface it is resting on.

Respect all current regulations regarding the installation of a composting site.

3.2 Precautions for Outdoor Installation

- Install the composter as far from houses as possible;
- Avoid placing the composter near an air intake, a ventilation system, windows and doors;
- Avoid placing the composter in busy areas;
- Unless the composter is equipped with a cover (available as an option), we recommend the installation of a fence around the equipment.

3.3 Precautions for Indoor Installation

- Plan a ventilation shaft or a sanitary drain that exits the building for the elimination of composting gas and odours;
- Do not place the air exit near an air intake, a door or a window;
- Take care to place the system in a separate room to avoid any contact with human food preparation or food storage areas in order to minimize contamination risks;
- Make sure the building's foundation can support the weight of the composter when it's both empty and full;
- Allow sufficient space around the composter to ensure ease of movement related to composting operations (addition of matter, collecting compost at the exit, etc.).

3.4 Electrical Installations

- The client is responsible for the electrical installations for the equipment.
- It is possible, however, to deliver the equipment with an electrical connection as specified by the client.
- Please contact Brome Compost to schedule your electrical installation before the delivery of the equipment.

Section 4 – Operating Procedures

4.1 Sanitary Precautions When Composting

Composting is considered a safe activity for operators and compost users when certain basic rules are respected and followed. It is the owner's duty to give all necessary information to operators to ensure composting activities are conducted safely. Brome Compost is a manufacturer and is not responsible for the client's use of the equipment.

4.2 Verifying the Installation and Assembly Before Start-up

Verify that the surrounding area is free of all equipment, tools, etc. and that the safety guards are installed before the initial start-up.

4.3 Initial Start-up

Before adding matter:

1- Ensure that the emergency stop button is in the OFF position;
2- Wear personal safety equipment such as a mask, safety goggles, gloves;
3- Ensure that the doors are open facing the operator
4- If necessary, use a platform to ensure a safe and ergonomic operation
5- Verify that the composter is free from all possible collisions with equipment or work tools when it is rotating.

Always make sure the emergency stop button is pulled (composter is working) after each use.



Figure 2 -- Brome Composter Control Panel

Adding Matter into the Composter
Step 1:

Push the emergency stop button before working on the composter. This will prevent the rotation of the composter while you are working around the machine and when the door is open.

Step 2: Open the composter door.

Sliding door:

Unlock the door padlocks (on both handles) if you have this option. Pull the door locks at the same time as you pull on the handles. Pull on both handles alternately for ease of opening. When the handles are completely free, slide the door to the right.



Out-swing doors:

Unlock the door padlock (on the handle) if you have this option. Pull the handle slightly up and then towards you. Open both doors by pulling them towards you.



Step 3: Closing the door and starting the composter.

Close the door and lock the padlocks, if you have this option.

Start the composter by pulling the emergency stop button. A green light on the control panel will indicate that the composter is in operation.



Check the Organic Matter Before Adding It Into the Composter:

Before adding organic matter to the composter, check the contents to be sure there is no foreign or contaminating matter (i.e. plastic, metal, glass, etc.). If you see foreign material, take out as much of it as you can before you add the bin contents into the composter.

** **If you notice that most of the contents of the bin have a bad smell, throw it out.** **

4.4 Monitoring the Temperature in the Composter

Temperature is the best indicator of the composting process and it is crucial to monitor it daily. The best temperature range for aerobic composting is between 45°C and 70°C2.

• To read the temperature, check the thermometer(s) on the cylinder.

Using a portable thermometer is recommended for taking temperature readings at various locations through the door opening, especially during the initial start-up phase.



Figure 3 -- Composter Thermometer

4.5 Odours

Odour control is important to maintaining a good image of your composting installation and to avoid disagreements with your neighbours. By following good maintenance habits, you will prevent odour problems.

A good maintenance plan consists of:

1. Sweeping the floor and cleaning up splotches of O.W. on and around the composter;
2. Removing any waste that has fallen on the floor;
3. Carefully monitoring the composting process (make regular logbook entries, respect the procedures and recipes, etc.);[3]
4. Install an odour dispersion or treatment system if there is a possibility that odours may eventually bother neighbours in close proximity to your installation (available as an option).

[2] Check the standards in effect.

[3] An online calculator for composting recipes and monitoring is available as an option.

4.6 How to Set Rotation Intervals

The Brome composter can be set to rotate at different intervals by adjusting the programmable timer located in the control panel.

1. Locate the timer on the control panel:

- The clock can be set for different units of time (hours, seconds and minutes) to meet the needs of the user;
- Turn the screw located at the lower left on the clock (see red circle on the photo) to change the time intervals;
- Turn the screw located at the top right on the clock (see the red circle on the photo) to change the time units (hours, minutes).



Figure 4-- Rotation Programmed Every Hour

2. Turn the plastic wheel to change the hand position.

During normal use, the composter's rotation intervals should be around an hour. During special operations, it can be programmed differently.

3. When you are finished setting the adjustments, close the panel.

4.7 How to Set the Door Position

The rotations can be stopped at a specific spot so that the door's position is always the same.

1. Press the red emergency stop button on the composter before you work on or near it.

2. Unscrew the panel located to the side of the control box.

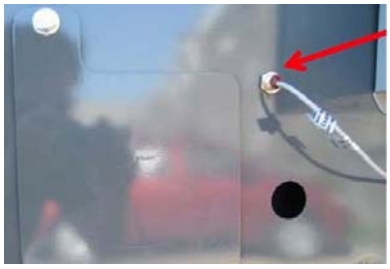

3. When you look inside the composter, on the right-hand side, you will see a red magnet. The magnet stops the composter after a full rotation when it passes in front of the sensor. Remove the magnet and put it aside.



4. Pull the emergency stop button and set the composter on manual mode. Turn the composter to set the door at the desired position. Push the emergency stop button.

5. Put the magnet in front of the sensor. Pull the emergency stop button and allow one rotation on automatic mode to test the door stop position (set the clock at 0 to make a rotation on automatic mode).



6. After one rotation, the door should stop at the same position from which it started (if you still hear the alarm, put the composter back on manual mode to prevent a second rotation).

7. If the position is correct, you can screw the panel back on, set the clock back to its original position and return the composter to automatic mode.

Section 5 -- Maintenance

5.1 Performing Maintenance Safely (in Enclosed Spaces)

Work Procedures for Enclosed Spaces

Never enter the cylinder without having the proper training for work in closed spaces and without your organisation's authorisation. Always use the appropriate lockout procedure.

Generally speaking, an enclosed space refers to a partially or completely closed site that:

- Is not adapted nor destined for prolonged human occupation
- Has limited or restricted access and exit routes, or has a configuration that complicates first aid, rescue and evacuation procedures, as well as other emergency intervention practices
- Presents a potential risk to the health and security of persons entering the space, due to one or more of the following factors:
    - Its conception, its construction, its location and its atmosphere
    - The matter or substances that it contains
    - The nature of the work to be done
    - Risks related to the mechanisms and procedures used, as well as dangers to personal security

Please visit the following Government of Canada website for more information on enclosed spaces:
https://www.cchst.ca/oshanswers/hsprograms/confinedspace_intro.html

Securing the Composter and/or the Screw Feeder (Dispenser)

For your safety, it is vital to lock the composter in position during all maintenance procedures, whether it be according to the established schedule or when a malfunction occurs.

Composter:

It is important to cut contact and lock the control panel while performing your maintenance routine in order to prevent someone else from accidentally starting or turning the composter. If you are inside the composter, make sure that another person is there to monitor you or make sure that you clearly indicate your presence.

Feeding Screw (Dispenser):

Never attempt to clean, unblock or perform maintenance on the feeding screw with your hands unless the power is cut and the screw is locked in position. Serious injuries could result. In addition, the lateral panel should always be blocked so that it cannot open when in operation.

5.2 Checking the Condition of the Composter

The Brome Composter is designed to function with only minimal maintenance. To ensure the composter's optimal operation, you must:

- Regularly inspect the inside of the cylinder to identify any damage that could cause premature deterioration. Remove the output end cap occasionally to allow an unobstructed inspection of the interior surfaces of the cylinder.
- Inspect and clean the area surrounding the cylinder. If material accumulates around the exterior, it can hinder the cylinder's rotational movements, contribute to the development of fly larvae, attract animals and create odours.
- Regularly inspect the opening through which the finished compost exits the cylinder (exit outlet) and clean it, if necessary.
- Do not operate the composter during prolonged periods of inactivity during the wintertime (in freezing conditions), and when if the material inside is frozen. This could damage the equipment.

5.3 Maintenance Schedule

	Component	Check	Frequency
1	Door	Rubber Seal	Weekly
	Door	Easy to open	Each use
3	Compost exit outlet	Compost height	Each use
4	Ventilation	Working well	Weekly
5	Composter level	Keep it leveled	Twice a year
6	Control panel	➢ Waterproof ➢ Broken buttons	Monthly
7	Sifter	Holes are free of waste	Weekly
8	Interior of composter	Visual inspection	Annually
9	Mechanical components (motor, gear box, panel)	See manufacturer recommendations	As recommended
10	Wheel (Rotating and guide wheels)	➢ Visual inspection ➢ Rolling smoothy ➢ Check bearings	Each use

Section 6 – Brome Composter Dimensions

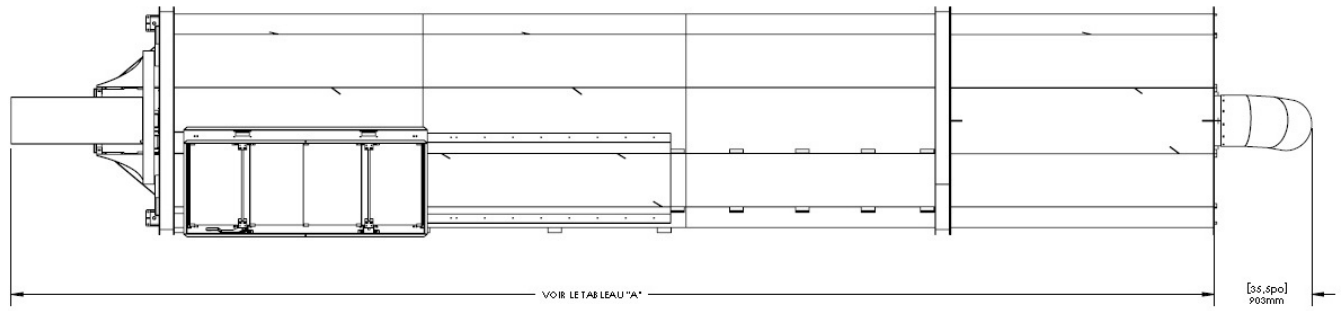

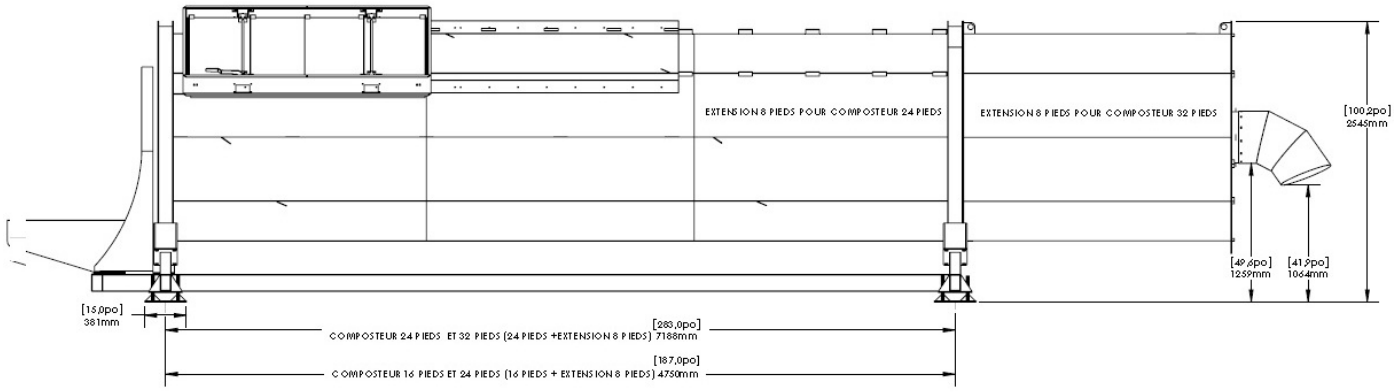

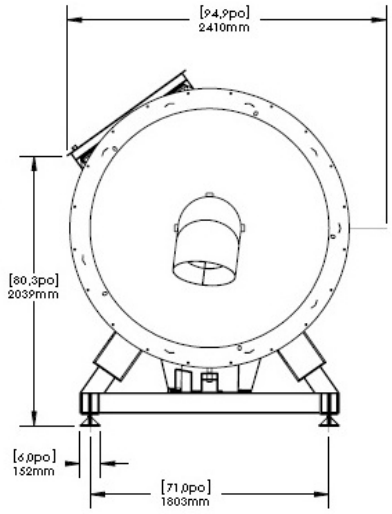

7 Equipment options / accessories

Brome Compost offers a wide range of accessories to facilitate on-site composting. Contact us for more information or if you have questions regarding the different options we offer.



Loading Ramp



Dumping Bin

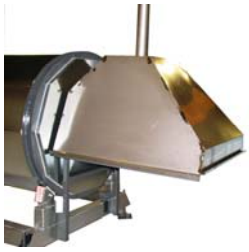

Ventilation option (With full air extraction)



Valve for passive ventilation



Universal Bin Lifter



Protected safety cage



Extension

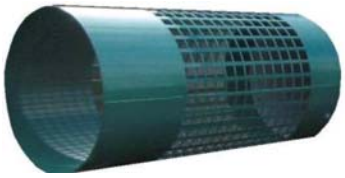

Sifter



Out-swinging doors



Sliding door



Stainless steel finish

For more information, contact: Brome Compost

450 574-2000

Always inform your immediate superior of any incidents and/or damage to the equipment.

Section 8 – Problem Solving

8.1 Broken Chain

- Are the four wheels in good working condition? Perform a visual inspection of the rotating and guide wheels, and their bearings. A visual inspection should suffice.
- Are the two guide wheels located under the front part of the composter in good condition? Are they misaligned or rubbing against the groove thread?
- Is the composter rotating well on all four wheels when in operation?
- Is the composter level? 50%, 60%, 70% or more?
- Is the chain tensioner in good working condition? This prevents the chain from jumping off the sprocket.
- Are the two groove threads allowing the four wheels to turn correctly or are they problematic?
- Are the motor sprocket, the chain tensioner and the large composter sprocket all aligned?
- What is the internal temperature of the cylinder?
- According to you, are the humidity levels of the matter in the cylinder high, low or normal?
- To what height is the composter filled?
- Is the composter turning clock-wise when you look at the cylinder from the head / motor end?
- Is the overload mode on the control panel activated and causing the composter to restart?
- Could some material have become stuck in the chain or sprocket and damage either one?
- Are all the sprockets correctly aligned?

Section 9 – Warranty

The Brome Composter is guaranteed against manufacturing defects for one (1) year after the invoicing date. The warranty includes reimbursement, replacement, correction and/or the repairing of the defect. Brome Compost will repair or replace equipment that displays a defect during normal usage at our discretion. This warranty covers parts and labour.

Mechanical parts (the control panel and the motor/gear box) are guaranteed against manufacturing defects, according to the current guarantees of the supplier of these parts. This guarantee includes replacement, correction and/or the repairing of the defect. It covers parts and labour.

In case of damage, the supplier's/manufacturer's corroboration and assessment will aid in determining the decision to repair or replace a defective part.

All travel and/or delivery expenses, brokerage and customs fees are at the expense of the client.

Any damage due to environmental conditions are not covered by the warranty for the modular composter and its mechanical parts.

Any modification to the modular composter and its components made by a third party not authorised by Brome Compost will result in the automatic cancellation of the warranty.

Components	**Warranty**	**Conditions**	**Duration**
Modular Composter	Manufacturing defaults	Remplacement, correction and/or repairing of the defect.	! year after the invoicing date
Mechanical Parts	According to the manufacturer	Remplacement, correction and/or repairing of the defect.	According to the manufacturer

Brome Compost rejects all other damages sought due to defects or breakage of its equipment such as profit loss, travel, transport and labour costs.

Only this warranty applies to Brome Compost's equipment. No other person is authorised to interpret this warranty.

Operating the composter when the condition of the organic matter is such that it has a higher than 63% humidity level may result in mechanical and/or operating problems, as well as a premature deterioration of the system, which may limit the warranty.

9.1 Limitation of Liability

Please note that *Brome Compost inc.* is not responsible for problems that may present themselves due to the nature of the biological process involved in composting activities and releases itself from all such liability. We cannot guarantee that no problems will arise during the operation of the composter, as this is contingent upon the nature and variety of the organic matter to be processed, the operator's experience as well as the influence of weather conditions.

The equipment is under guarantee for normal use. A mechanical breakdown or premature wear of the equipment caused by abusive use will invalidate the manufacturer's warranty.

Brome Compost inc. reserves the right to make changes to the conception and manufacturing of their line of equipment at any time without obligation to change or modify the products already sold.

Landfill Design and Management Plan, Version 4

AGNICO EAGLE

MEADOWBANK GOLD PROJECT

Landfill Design and Management Plan

In Accordance with Water License 2AM-MEA1526

Prepared by:
Agnico Eagle Mines Limited – Meadowbank Division

Version 4
October 2018

EXECUTIVE SUMMARY

This Landfill Design and Management Plan outline the design of the current operational and a conceptual closure industrial waste landfill as part of Agnico Eagle Mines Limited (Agnico Eagle) Meadowbank Mine in Nunavut.

The current landfill (Landfill #1) is required for the disposal of non-salvageable, non-hazardous solid wastes from mining activities that cannot be incinerated; as well as for disposal of compost from the composting operation. It is located on the Portage Rock Storage Facility and will consist of several sub landfills that evolve with the placement of waste rock. All of the sub-landfills will be identified and mapped.

The leachate from the landfill is very weak (diluted) or simply no existent due to the controls on materials placed in the landfill, and therefore specific leachate management is not considered. Any leachate is naturally drained into the Tailing Storage Facility.

At the end of mine life, the landfill waste will be covered by 0.3 to 1 m thickness of rock fill, with an additional 4 m of coarse NPAG waste rock material. The final landfill slopes will be up to 50%. Drainage water will be managed under the current Water Management plan.

To meet NWB guidelines, an environmental overview effects assessment was conducted to characterize environmental resources and determine the anticipated environmental effects of the landfills. The primary potential environmental effects from landfill activities included leachate generation, windblown debris and habitat (vegetation) loss. Operation of the landfill has not shown any such environmental effects.

A conceptual closure industrial waste landfill will be located near the top of the Portage RSF and would serve the mine for the last two years of the mine closure. Demolition waste from the plant site removal / reclamation will be disposed of in Landfill #2.

IMPLEMENTATION SCHEDULE

This plan will be immediately implemented (October 2018) and is subject to any modifications proposed by the NWB as a result of the review and approval process**.**

DISTRIBUTION LIST

Agnico Eagle – General Mine Manager

Agnico Eagle – Environment Superintendent

Agnico Eagle – Environmental Senior Coordinator

Agnico Eagle – Engineering Superintendent

Agnico Eagle – Mine Superintendent

Agnico Eagle – Energy and Infrastructure Superintendent

DOCUMENT CONTROL

Version	Date (YMD)	Section	Page	Revision
1	08/10/08			Amalgamation of original report and supplementary documents (Golder Associates, Doc 562 – *Landfill Design and Management Supplementary Information* and AEM document – *Meadowbank Type A Water License – Response to Pre-Hearing Commitments*, Appendix I)
		4	11	Addition of testing protocol and incinerator criteria; Incorporation of Government of Nunavut Environmental Guidelines
		5	14	Addition of protocols for material placement in the landfills; Confirmation that there are no planned design changes as of October 2008 to Landfill #1 or Landfill #2
2	12/12/18	ALL	ALL	Comprehensive update of entire plan
3	17/03/31	ALL	ALL	Comprehensive update of entire plan
4	18/10/02	1.1 3.1 3.2.1 3.3	1 4 5 6	Addition of composting waste stream to site operations, where applicable. Composter output will be sent to landfill.

Approved by:



Nancy Duquet Harvey
Superintendent - Environment

Table of Contents

1 INTRODUCTION 1
1.1 PROJECT OVERVIEW 1
1.2 LANDFILL SITING 1
2 REGULATORY SETTING 3
3 PLAN FOR THE ON-SITE DISPOSAL OF SOLID WASTE 4
3.1 APPROACH 4
3.2 ACCEPTABLE WASTE FOR LANDFILLING 5
3.2.1 Acceptable waste 5
3.2.2 Asbestos 6
3.3 UNACCEPTABLE WASTE FOR LANDFILLING 6
3.3.1 Fluorescent Lamp Tubes 6
3.3.2 Ozone Depleting Substances 6
3.4 TOTAL VOLUME OF WASTE 7
3.5 INCINERATOR ASH TESTING PROTOCOL 7
4 LANDFILL LOCATION AND CONSTRUCTION 8
4.1 LANDFILL #1 8
4.1.1 Landfill #1 Protocol for Placement of Material 8
4.2 LANDFILL #2 8
4.2.1 Landfill #2 Protocol For Placement of Material 9
4.3 LEACHATE MANAGEMENT 9
4.4 LANDFILL ENCAPSULATION WITHIN THE PORTAGE RSF 9
5 LANDFILL OPERATION 10
5.1 CONCEPTUAL OPERATIONS PLAN 10
5.2 CONCEPTUAL CLOSURE PLAN 11
6 POTENTIAL ENVIRONMENTAL EFFECTS 12
6.1 EFFECTS SUMMARY 13
7 PLAN REVIEW AND CONTINUAL IMPROVEMENT 14
8 REFERENCES 15

LIST OF FIGURES

Figure 1: Meadowbank Mine Site Facility Layout 17
Figure 2: Landfill #1 Location 18
Figure 3: Approximate location of the Landfill #2 on top of Portage RSF 19
Figure 4: Landfill #2 Conceptual Cross Section 20

LIST OF APPENDICES

APPENDIX A: MBK-HSS-IH-PRO Asbestos Waste Management Procedure

1 INTRODUCTION

1.1 PROJECT OVERVIEW

This Landfill Design and Management Plan (Plan) outlines the design, operation and closure for two solid waste landfills as part of the Agnico Eagle Mines Limited (Agnico Eagle) Meadowbank Mine.

The objectives of this Plan are summarized as follows:

1. To define the location, design and operating procedures to be used in the landfill disposal of non-hazardous solid waste generated at the Meadowbank Mine;
2. To define acceptable/non-acceptable types of solid waste to be placed in the Meadowbank landfill; and
3. To define operating and monitoring requirements for the landfill.

This updated version of the Landfill Design and Management Plan was developed in March 2017 in concordance with the water license requirement and updated in October 2018 to include composting operations. This document will supersede all previous Landfill Design and Management Plans created by Agnico Eagle.

The landfills are required for the disposal of non-salvageable, non-hazardous industrial wastes from standard mining activities that cannot be incinerated.

Hazardous wastes will not be placed in the landfills. Management procedures for hazardous wastes are provided under a separate management plan – Hazardous Materials Management Plan (Ver.3, October 2013). All other materials considered unsuitable for landfill deposition are packaged for shipment and disposal off site at a licensed facility.

To meet NWB guidelines, an environmental overview effects assessment was conducted to characterize environmental resources and determine the anticipated environmental effects of the landfills. Other applicable regulatory guidelines and criteria were also incorporated into this Plan, as discussed in Section 2.

The overall Meadowbank Mine description, landfill siting options and descriptions, and corresponding environmental overview approach are described in the sections below. The Meadowbank Mine Site facility layout is shown in Figure 1.

At the Meadowbank site and Baker Lake Marshalling Area, hazardous waste materials are stored in secure facilities until they can be backhauled for off-site recycling or disposal in an approved facility.

1.2 LANDFILL SITING

The landfills were positioned considering the following criteria:

- Drainage – sites that drain into areas where water will be collected and monitored as part of the overall mine plan are preferred.
- Avoid Ice Rich Soil Excavation – sites where bedrock is at relatively shallow depth are preferred.
- Disturbed Areas – sites that will be within or near areas that will be disturbed as part of the overall mine plan are preferred.
- Access – sites that are located close to existing access roads are preferred.

The first three criteria are recommendations from the Mine Site Reclamation Guidelines for the Northwest Territories (INAC, 2006).

Based on the above criteria, a landfill is planned at each of the two following locations:

- Landfill #1 is developed in the Portage RSF (Figure 2). This landfill consists of multiple sub landfills that are built and buried according to the evolution of the RSF. As the RSF evolves, the elevation and location of the sub landfills change; and
- Landfill #2 will be developed at the top of the Portage RSF during Meadowbank closure.

While the preferred landfill location is the top of the Portage RSF (minimizing the disturbed area), such a landfill would hinder waste rock placement during mining activities. Thus Landfill #1 will be developed first and serve as the non-hazardous waste disposal site for the life of operation. For the closure of the mine, Landfill #2 will serve as the non-hazardous waste disposal site.

2 REGULATORY SETTING

Waste management in Nunavut is regulated under the *Nunavut Public Health Act*, the *Nunavut Environmental Protection Act* and the federal *Environmental Protection Act*. In addition to mandatory requirements, a number of waste management guidelines are commonly used in the NWT and Nunavut. The most recent of these was developed for municipal solid waste, and is titled "*Guidelines for the Planning, Design, Operations and Maintenance of Modified Solid Waste Sites in the NWT*" (Ferguson Simek Clark, April 2003, on behalf of the Department of Municipal and Community Affairs, Government of Northwest Territories). While not all of the recommendations provided in this guideline are appropriate for the management of industrial waste such as those generated at a gold mine, those principles that are considered applicable have been adopted in the Plan.

In addition, the NWB guidelines *Mine Site Reclamation Guidelines for the Northwest Territories* (INAC 2006) were followed in this current document regarding specific landfill design and mitigation for impacts pertaining to waste. The recommendations from *Implications of Global Warming and the Precautionary Principle in Northern Mine Design and Closure* (BGC 2003) were also incorporated into this document, where appropriate.

3 PLAN FOR THE ON-SITE DISPOSAL OF SOLID WASTE

3.1 APPROACH

The strategy for the disposal of solid waste is to first identify and segregate acceptable disposal items from non-acceptable items. Acceptable items that can be disposed of at the on-site facility are those that are non-hazardous, non-organic, with a low leachate and heat generation potential. All other materials are either incinerated, composted prior to landfilling, or hauled off site. This strategy for limiting the materials that can be placed in the landfills greatly reduces the potential for leachate.

All solid wastes that may contain food waste or other organic waste that could attract wildlife are composted in the on-site composter (see the Meadowbank Incinerator Waste Management Plan - Ver.8, October 2018 for more details). This includes all organic waste from the camp, camp kitchen, site lunchrooms and offices. The compost output is then sent to the on-site landfill. Wood and food packaging waste that could attract wildlife are incinerated in the on-site incinerator (see the Meadowbank Incinerator Waste Management Plan - Ver.8, October 2018 for more details). This includes all food packaging waste from the camp, camp kitchen, site lunchrooms and offices.

The ash from the incinerator is placed in a container and disposed of at the landfill. Incinerator ash samples are collected and tested for metals according to the Government of Nunavut Environmental Guideline for Industrial Waste Discharges (D of SD, 2002). Ash that does not meet these guidelines will be buried within the TSF.

The second part of the strategy is to concentrate disposal of solid waste at two landfills, Landfill #1 and Landfill #2. Landfill #1 is located in the Portage RSF. It consists of multiple sub landfills that are built and buried according to the evolution of the RSF. As the RSF evolves, the elevation and location of the sub landfills change. It will serve the mine for the life of operation. Landfill #2 will be located near the top of the Portage RSF, on the last rockfill lift, and would serve the mine for mine closure. Demolition waste from the plant site removal / reclamation will be disposed of in Landfill #2.

The development of the two landfills minimizes the area disturbed and the re-handling of waste. Landfills at the selected locations allow any leachate that may be generated to be collected, monitored and managed with seepage and runoff water from the Portage RSF. The leachate from the landfills is very weak or simply absent due to the controls on materials placed in the landfill and thus site specific landfill leachate management is not considered to be required. Any leachate that may become present would runoff into the Tailings Storage Facility which will be capped at the end of mine life.

Based on the above strategy, a liner is not required for the landfills, nor is any special monitoring being completed or foreseen to be recommended in the future. However, the landfills conform to the Type A Water License requirements and closure plan for each landfill site for orderly landfill development and to reduce the potential for windblown debris.

The Type A Water License requires the following landfill related monitoring:

- Part I, Item 8 stipulates that the monthly runoff/seepage flow from both Landfill #1 and #2 in cubic meters must be measured, recorded and reported to the Water Board;

- Part I, Item 10 stipulates that the annual geotechnical inspection to be carried out by a geotechnical engineer between the months of July and September should include all earth works including the two landfill sites with the results being included in the report to the Water Board;

- Part I, Item 13 stipulates that seepage and runoff from the landfills is to be observed at a minimum of once per quarter; and

- Part I, Item 14 stipulates that the results and interpretation of the Seepage monitoring required in Part I, Item 13 in the Annual Report required under Part B, Item 2.

3.2 ACCEPTABLE WASTE FOR LANDFILLING

3.2.1 Acceptable waste

The following materials are acceptable for disposal at the landfills:

- Plastic (except expanded polystyrene);
- Steel, copper, aluminum, iron (most of this metal is recycled);
- Wood;
- Fiberglass insulation;
- Fiberglass;
- Roofing;
- Cardboard
- Concrete;
- Carpet;
- Bricks;
- Ceramics;
- Rubber;
- Empty caulking tubes;
- Hardened caulk;
- Clothing;
- Glass;
- Wire;
- Small appliances (with batteries removed);
- Gyproc;
- Ash (provided it has cooled to 60ºC or less and follows procedures laid out in the Incinerator Management Plan);
- Composter output; and
- Vehicles and machinery (provided all liquids, grease, batteries, and electronics have been removed, see Section 3.3.2 for more details on ozone depleting substances).

3.2.2 Asbestos

Asbestos being present naturally in rock formations, asbestos related waste will be generated within the milling and production processes. As such, this type of waste will be disposed according to the MBK-HSS-IH-PRO Asbestos Waste Management procedure (Appendix A). Once ready for disposal, asbestos waste will be capped quickly to minimize exposure, using mini-landfill type of disposal within the existing Landfills.

3.3 UNACCEPTABLE WASTE FOR LANDFILLING

Materials that are not listed above are unacceptable for placement at the landfills, unless approved in writing by the Meadowbank Environment Superintendent or General Supervisor Environment. These materials include:

- Organic matter including food, septic tank pumping or sludge from waste water treatment, dead animals, paper;
- Food containers and wrappings, unless cleaned;
- Whole tires;
- Hazardous waste including mercury, medical waste, batteries, solvents, glues, ethylene glycol antifreeze, adhesives (except empty caulking tubes);
- Electronics;
- Light bulbs or Fluorescent Lamp Tube;
- Petroleum products, including materials contaminated with petroleum products; and
- Expanded polystyrene.

In particular, organic matter is not accepted in the landfill, thus eliminating the attraction to carnivores and/or raptors. This is accomplished by requiring all personnel to dispose domestic waste in designated receptacles and by sending all collected domestic waste (e.g., from kitchens and living quarters) to the site incinerator and/or the composter.

3.3.1 Fluorescent Lamp Tubes

Fluorescent tubes contain mercury phosphor powder and traces of lead and cadmium, which are considered environmental contaminants under the Nunavut *Environmental Protection Act* (EPA). The only disposal method for fluorescent tubes is through an approved hazardous waste recycling or disposal facility (Government of Nunavut, Environmental Protection Service, 2003) and as per the *Disposal Guidelines for Fluorescent Lamp Tubes*.

3.3.2 Ozone Depleting Substances

Ozone depleting substances (ODS) include chlorofluorocarbons (CFCs) or halons; common sources include refrigeration equipment, air conditioning equipment, motor vehicle air conditioners and fire extinguishing equipment (Government of Nunavut, Environmental Protection Service, 2002b). These materials are hazardous in nature; consequently, all disposal of ODS take place at an approved facility.

3.4 TOTAL VOLUME OF WASTE

An estimate of waste volume is required to estimate the approximate size of the landfills; however, an exact waste volume is not a critical parameter in the design because of the flexibility of design to accommodate extensions (larger to accept more waste) or contractions (smaller to accept less waste) of the landfill.

In 2016, the recorded amount of waste that went to the Landfill for disposal was 9,576 m^3. It is expected with latest life of mine assessment to have sufficient space within the existing planned landfills.

3.5 INCINERATOR ASH TESTING PROTOCOL

Please see the Meadowbank Incinerator Waste Management Plan - Ver.8, October 2018 for all information regarding the disposal of ash at the landfill.

4 LANDFILL LOCATION AND CONSTRUCTION

4.1 LANDFILL #1

The location of Landfill #1 is shown on Figure 2 in the northwest side of the Portage RSF. This landfill will serve as the solid waste disposal facility for the first 9 years of mine life. The design of Landfill #1 does not require imported materials or exacting survey data or measurement. This is due to the restriction on materials that can be landfilled and the location of the landfill within the catchment of the Portage RSF. These factors reduce the need for leachate collection or control or mitigation measures against vectors such as carnivores or raptors. Thus, the main environmental mitigation measure required is a wind screen to reduce windblown debris. As of March 2017, the Landfill #1 has evolved in sub landfills that are built and buried according to the evolution of the RSF. As the RSF evolves, the elevation and location of the sub landfills change.

The area to receive waste is bounded by a rock fill berm. The purpose of the rockfill berm is to act as a wind shield for the waste. The sub landfills have a rectangular shape with the length perpendicular to the prevailing wind direction so that much of the waste could be protected from wind by the rockfill berm.

Provided the materials that go into the incinerator are controlled to exclude all hazardous materials (i.e., even small quantities of hazardous waste such as batteries are not disposed in the landfill), then the incinerator ash should be non-hazardous. As discussed in Section 3.5, an ash testing protocol has been implemented to ensure that the incinerator ash is suitable for disposal in the landfills.

4.1.1 Landfill #1 Protocol for Placement of Material

Waste is disposed of directly on the ground and compacted with heavy equipment against the berm or existing row. When the sub landfill is either full of compacted waste or the RSF evolution causes the sub landfill to be moved, the waste is compacted and then covered with waste rock. A new sub landfill is then built including rock fill berm to act as a wind shield.

4.2 LANDFILL #2

Prior to the closure and covering of Landfill #1 by waste rock, Landfill #2 will be developed on top of the Portage RSF. Landfill #2 is currently estimated to be a 4 m deep depression in the top of the waste rock pile at the Portage RSF. The depression will be constructed by the waste rock trucks discharging their loads in a controlled manner such that the dimensions of the depression will be approximately as shown on Figure 3 and 4. The area to receive waste will be bounded on the northwest side by a 2 m high rockfill berm. The rockfill berm will act as a wind shield to reduce the amount of wind-blown debris, while providing material for intermediate cover of the landfill. Details and the exact location of Landfill #2 on top of the rock storage facility and the final landfill design will be provided with the Final Reclamation and Closure Plan. At that time, the required size of Landfill #2 will be calculated based on the actual rate of filling of Landfill #1 and the estimated amount of demolition material and decommissioned equipment that will need to be landfilled at the end of the mine life.

Waste will be placed to a maximum thickness of 4 m, after which it will be covered with a minimum of 0.3 m thickness of rock fill. A final cover of 4.0m of NPAG waste rock will then be placed over the waste. This landfill should be provided with a capacity sufficient to allocate for general waste during the active closure, plus an allowance for waste from the demolition of the mine infrastructures and building. The final landfill design will be provided with the Final Reclamation and Closure Plan.

4.2.1 Landfill #2 Protocol for Placement of Material

Materials destined for burial in the demolition landfill will be dismantled as safely and efficiently as possible, stacked in a stockpile and will then be cut by flame, hydraulic shears or saw, into manageable sizes for safe transport and placement in the demolition landfill. The demolition debris will be placed in compacted layers and then buried. Once compacted, waste rock will be placed on the debris to infill voids. Once a continuous layer of waste rock has covered the compacted debris then a final cover of a minimum of 4 m of NPAG rock will be placed over the entire landfill area.

4.3 LEACHATE MANAGEMENT

The leachate from the landfills has a very low strength (dilute) or is simply absent due to controls on materials placed in the landfills, and thus site-specific landfill leachate management is not required. Any leachate generated by the landfill will naturally be directed to the Tailing Storage Facility. Due to the fact that the Portage RSF will cover Landfill #1 and #2, it is not proposed to have a separate water quality monitoring point for leachate.

4.4 LANDFILL ENCAPSULATION WITHIN THE PORTAGE RSF

The Portage Rock Storage Facility contains surplus quantities of waste rock from the Portage and Goose Island pits. A classification system is used to identify the use and storage for all mine rock[1]. Specifically, this system identifies potentially acid generating (PAG) or non-acid generating (NPAG) rock types, as well as those with the potential to leach metals.

The Portage RSF is constructed as a cell, or series of cells, such that the interior of each cell is composed of PAG and/or ML waste rock, and the exterior of each cell is composed of NPAG waste rock. Thus, PAG and/or ML waste rock within the RSF is encapsulated within NPAG waste rock, thereby limiting its exposure to oxidizing agents such as air and water; and providing a buffer for any drainage from the interiors of the cells. The material within the Portage RSF freezes, which limits internal drainage as infiltrating water becomes frozen. As a further ARD control measure, the Portage RSF will be capped with a minimum 4 m thick layer of coarse acid-buffering ultramafic rock at closure.

Owing to their placement within the Portage RSF, the landfills are/will also become encapsulated within waste rock. Specifically, the slopes of the sub landfills are covered with an advancing waste rock layer during operations such that the sub landfills are covered by a minimum 0.3 to 1 m thickness of waste rock by the end of each sub landfill operations. Agnico Eagle plans to use NPAG waste rock to surround and cover the landfills wherever practical. As noted above, a minimum 4 m thick layer of coarse acid-buffering ultramafic rock would also be placed over the landfill cover as part of planned closure activities for the Portage RSF.

[1] See Operational ARD/ML Testing and Sampling Plan

5 LANDFILL OPERATION

5.1 CONCEPTUAL OPERATIONS PLAN

The following is a conceptual plan for operating the landfills:

a) Materials Acceptable for Disposal

See Section 3.2.

b) Materials Not Acceptable for Disposal

See Section 3.3.

c) Site Development and Landfilling Method

The sub landfills are filled progressively in an orderly manner. Specifically, waste is placed at one end of the sub landfill at full height and then the active waste area progressively advances. Areas where the waste has been placed to full height and leveled are progressively covered by placement of a minimum 0.3 m thickness of rock fill on top of the waste.

d) Staffing and Equipment

The landfills do not require a full-time attendant. Roll off trucks haul waste to the landfills and a dozer is used to spread, compact and level the waste.

e) Leachate Management

The leachate from the landfills is very weak (dilute) or simply absent due to the controls on materials placed in the landfills. Therefore, specific leachate management is not required.

f) Surface Water and Erosion Control

The slopes of the landfills are covered with rockfill, thus protecting them from erosion. Any water that may runoff from the RSF will flow to the TSF.

g) Inspections

The environmental department is conducting periodic inspections to ensure compliance with the permit and operation plan.

5.2 CONCEPTUAL CLOSURE PLAN

The following is a conceptual plan for closing the landfills:

a) Estimate of Total Waste Volumes, Tonnage and Life of Landfills

Upon closure, it is estimated that the landfills will have the volumes as described in Sections 4.2.

b) Final Cover Design

- The waste in the landfills will be covered by 0.3 to 1 m thickness of rockfill, covered with an additional 4 m thickness of coarse acid-buffering ultramafic waste rock material;
- The final landfill slopes will be up to 50%; and
- Drainage water, if present will be naturally directed to the Tailing Storage Facility.

c) End use of Landfill After Closure

There is no planned end use of the landfills post-closure. They will become part of the waste rock storage facility.

d) Water Management

Contact water from the landfills in closure will continue to be managed under the current Water Management Plan.

6 POTENTIAL ENVIRONMENTAL EFFECTS

The landfills are designed and built as part of the Portage RSF. The access road to the Rock Storage Facility is used to access the sub landfills considered as Landfill #1. Access to Landfill #2 will also be by the access road to the Portage RSF.

Landfill activities that were identified to have potential effects on VECs include site preparation and construction, operations and closure.

Potential effects from the landfills on VECs were assessed as follows:

- Degradation of permafrost;
- Change in surface water and groundwater drainage patterns due to proposed landfill footprint (altered landscape);
- Change in groundwater and surface water quality from leachate percolation, leading to degradation of aquatic habitat;
- Change in air quality from dust and windblown debris;
- Loss of vegetation cover and terrestrial mammal habitat due to proposed landfill footprint;
- Attraction of predatory and small mammals to waste; and
- Loss of sites of heritage significance or traditional ways of life.

A number of mitigation measures, including management and monitoring plans were implemented as part of the overall Meadowbank Mine and are also incorporated into landfill construction, operations and closure. The plans that set out detailed site-specific protection measures and procedures that serve to protect the VECs include:

- Water Management Plan;
- Air Quality and Dustfall Monitoring Plan;
- Terrestrial Ecosystem Management Plan;
- Hazardous Materials Management Plan;
- Interim Closure and Reclamation Plan; and
- Water Quality and Flow Monitoring Plan.

6.1 EFFECTS SUMMARY

The primary potential environmental effects from landfill activities included leachate generation, windblown debris and habitat (vegetation) loss. Given the effective implementation of mitigation plans, no residual environmental effects to VECs from construction, operation or closure of the landfills are anticipated. See summary below:

- The leachate that will be generated by the landfills is of very low strength (dilute) or simply absent due to restrictions on the materials that is placed in the landfills. Water drainage from the landfill area would naturally be directed to the Tailing Storage Facility and would be managed under the Water Management Plan during operations and closure.

- Rockfill berm acts as a wind shield to reduce amount of windblown debris.

- Habitat loss is minimized because the landfills is designed and built within the footprint of the Portage RSF. With the implementation of terrestrial habitat reclamation strategies, the final surfaces of the landfills are graded to blend into the existing topography and enhance conditions for wildlife. Terrestrial habitat reclamation strategies will be incorporated as part of the Final Closure and Reclamation Plan.

7 PLAN REVIEW AND CONTINUAL IMPROVEMENT

The Landfill Design and Management Plan will be reviewed regularly by the Meadowbank Environmental Department in consultation with the engineering department and updated if necessary. Improvements suggested through these reviews would be implemented in consultation with the Nunavut Water Board.

8 REFERENCES

BGC (BGC Engineering Incorporated), 2003. Implications of Global Warming and the Precautionary Principle in Northern Mine Design and Closure. Prepared for Indian and Northern Affairs Canada, March 27, 2003.

Cumberland Resources Ltd. 2006. Meadowbank Gold Project No-Net-Loss Plan (NNLP). Meadowbank EIS Support Document. Final Report November 2006.

Cumberland Resources Ltd., 2005a. Meadowbank Gold Project Final Environmental Impact Statement. Final Report October 2005.

Cumberland Resources Ltd., 2005b. Meadowbank Gold Project Baseline Physical Ecosystem. Meadowbank EIS Support Document. Final Report October 2005.

Cumberland Resources Ltd., 2005c. Meadowbank Gold Project Air Quality Impact Assessment. Meadowbank EIS Support Document. Final Report October 2005.

Cumberland Resources Ltd., 2005d. Meadowbank Gold Project Noise Impact Assessment. Meadowbank EIS Support Document. Final Report October 2005.

Cumberland Resources Ltd., 2005e. Meadowbank Gold Project Baseline Aquatic Ecosystem Report. Meadowbank EIS Support Document. Final Report October 2005.

Cumberland Resources Ltd., 2005f. Meadowbank Gold Project Baseline Fish Habitat. Meadowbank EIS Support Document. Final Report October 2005.

Cumberland Resources Ltd., 2005g. Meadowbank Gold Project Baseline Terrestrial Ecosystem. Meadowbank EIS Support Document. Final Report October 2005.

Cumberland Resources Ltd., 2005h. Meadowbank Gold Project Baseline Archaeology Report. Meadowbank EIS Support Document. Final Report October 2005.

Cumberland Resources Ltd., 2005i. Meadowbank Gold Project Baseline Traditional Knowledge Report. Meadowbank EIS Support Document. Final Report October 2005.

Cumberland Resources Ltd., 2005j. Meadowbank Gold Project Air Quality & Noise Management. Meadowbank EIS Support Document. Final Report October 2005.

Cumberland Resources Ltd. 2005k. Meadowbank Gold Project Aquatic Effects Management Program. Meadowbank EIS Support Document. Final Report October 2005.

Cumberland Resources Ltd., 2005l. Meadowbank Gold Project Metal Mining Effluent Regulations (MMER) Plan. Meadowbank EIS Support Document. Final Report October 2005.

Cumberland Resources Ltd., 2005m. Meadowbank Gold Project Terrestrial Ecosystem Management Plan. Meadowbank EIS Support Document. Final Report October 2005.

Cumberland Resources Ltd., 2005n. Meadowbank Gold Project Socioeconomic & Archaeology Management Plan. Meadowbank EIS Support Document. Final Report October 2005.

Department of Sustainable Development (D of SD), 2002. Environmental Guideline for Industrial Waste Discharges. January 2002.

Ferguson Simek Clark Engineers and Architects, 2003. Guidelines for the Planning, Design, Operations and Maintenance of Modified Solid Waste Sites in the NWT. Prepared for Indian and Northern Affairs Canada, April 21, 2003.

Government of Nunavut, Environmental Protection Service, 2002a. Environmental Guideline for Waste Asbestos.

Government of Nunavut, Environmental Protection Service, 2002b. Environmental Guideline for Ozone Depleting Substances.

Government of Nunavut, Environmental Protection Service, 2003. Disposal Guidelines for Fluorescent Lamp Tubes.

INAC (Indian and Northern Affairs Canada), 2006. Mine Site Reclamation Guidelines for the Northwest Territories.

MMC (Meadowbank Mining Corporation), 2007a. Meadowbank Mine Waste and Water Management. Final Report August 2007.

MMC (Meadowbank Mining Corporation), 2007b. Water Quality and Flow Monitoring Plan. Final Report August 2007.

MMC (Meadowbank Mining Corporation), 2007c. Meadowbank Gold Project Hazardous Materials Management Plan. Final Report August 2007.

MMC (Meadowbank Mining Corporation), 2007d. Meadowbank Gold Project Preliminary Closure & Reclamation Plan. August 2007.

Figure 1: Meadowbank Mine Site Facility Layout

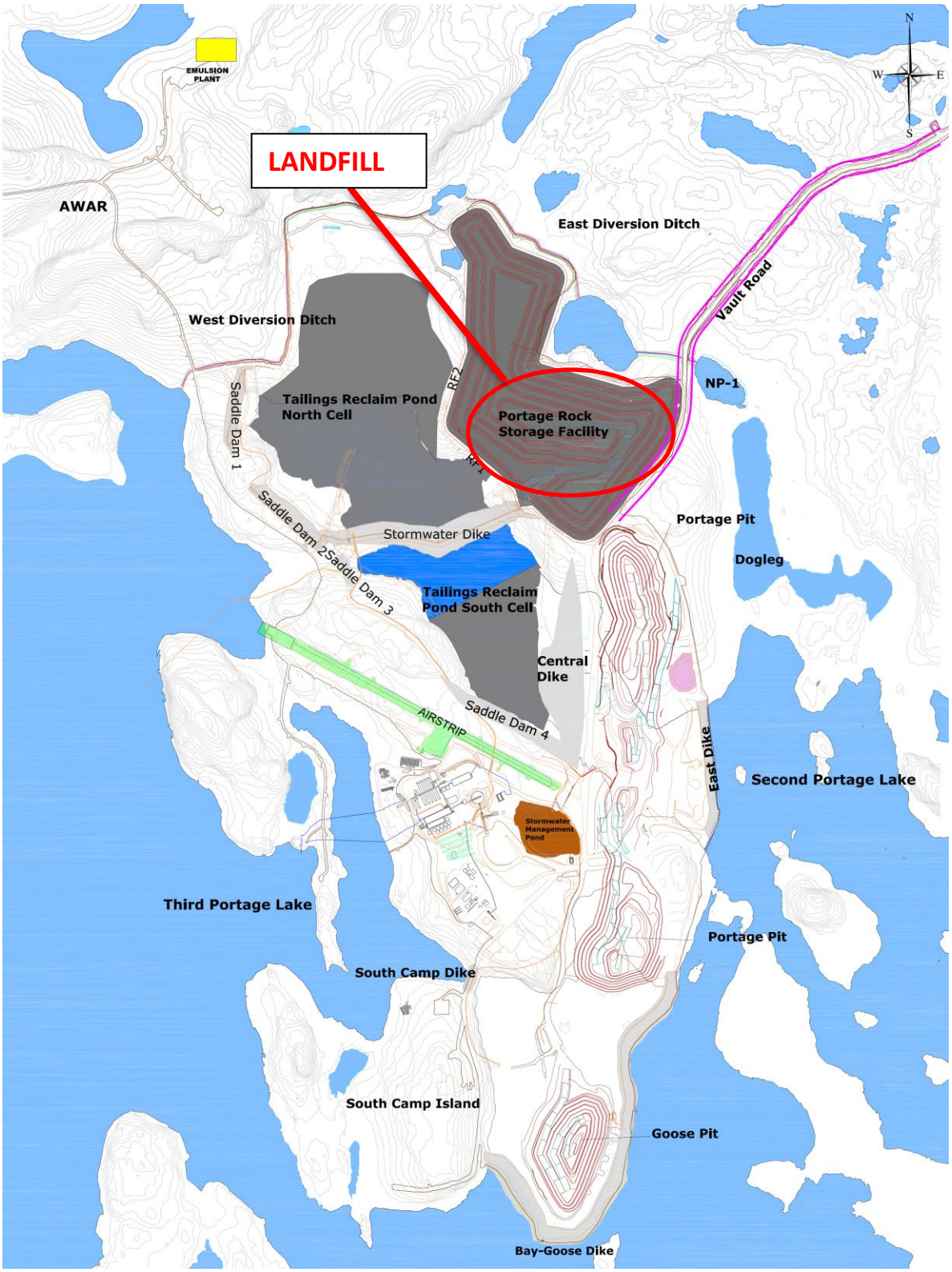

Figure 2: Landfill #1 Location

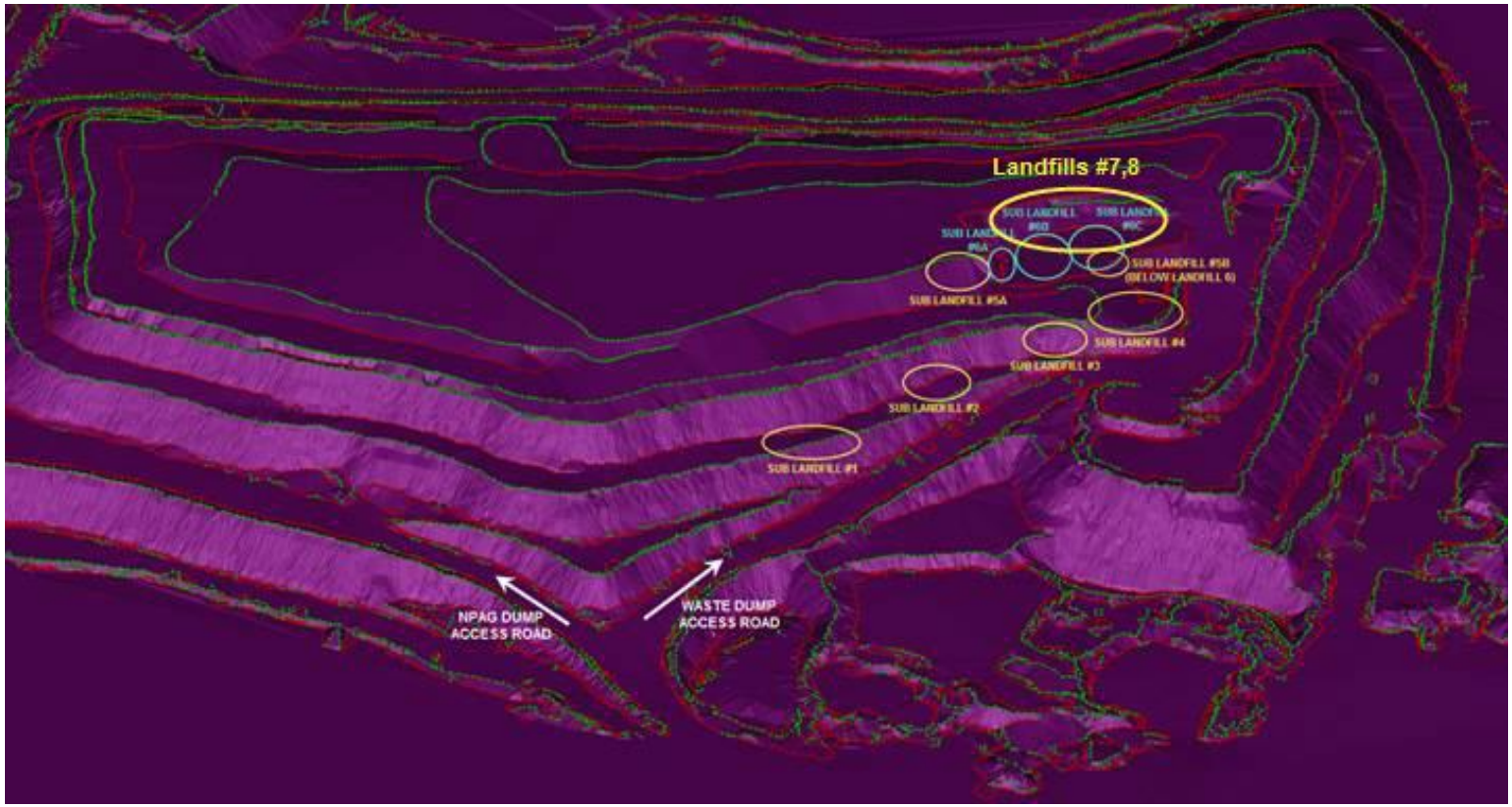

Figure 3: Approximate location of the Landfill #2 on top of Portage RSF



Figure 4: Landfill #2 Conceptual Cross Section

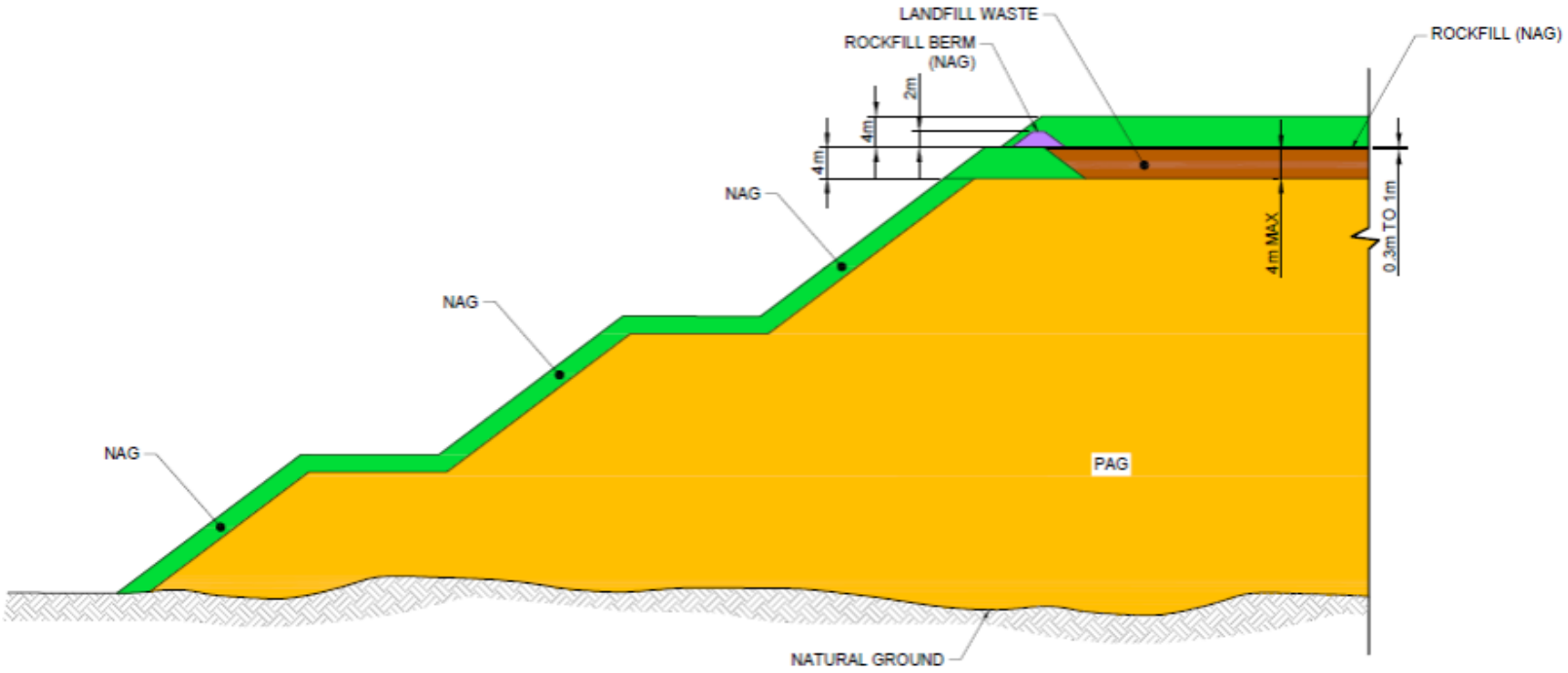

APPENDIX A

MBK-HSS-IH-PRO ASBESTOS WASTE MANAGEMENT PROCEDURE

Asbestos Waste Management

PROCEDURE NUMBER: MBK-HSS-IH-PRO Asbestos Waste Management

People concerned	• **Agnico-Eagle employees, contractors**	**Prepared by**	**Health and safety**
		Authorized by **Reviewed by**	**Norman Ladouceur** **Health and safety assistant Superintendent** **Rick Maunu – OHSC rep.**
Effective date :	April 29, 2013	***"Safety First, Safety Last … Safety Always!"*** ***"No Repeats" – Our Stepping Stone to ZERO HARM***	

This procedure corresponds to the required minimum standard. Each and everyone also have to comply with the rules and regulations of the Nunavut Government in terms of health and safety at work.

Objective: To ensure a safe means of disposing of Asbestos containing materials.

Concerned departments:	**Required equipment:**
Health and Safety, Energy and Infrastructure, Mine, Engineering and Environment	• HEPA Vacuum cleaners • Proper Protective Equipment (PPE) • Properly labeled Refuse Bins

Risks /Impacts legend


Health & Safety


Process/Quality


Costs


Environment

Procedure	Risks/ Impacts
Background With the recent safety and protective measures put in place on site to protect the worker's health and overall exposure to asbestos, several additional waste streams have been identified that require special care when being disposed of. Therefore some new procedures have been developed for implementation. These procedures are designed to minimize workers from exposure to asbestos and also to prevent uncontrolled discharge to the surrounding environment.	Avoid personal injury. Follow established procedures for proper disposal of asbestos containing materials.
Disposal Procedures 1) All used HEPA vacuum filters, HVAC filters, Tyvek coveralls and respirator cartridges/filters are to be place in a designated refuse bin near the HEPA vacuum cleaning stations. These materials will be treated as asbestos waste. Any Asbestos Containing Dust or materials suspected of being contaminated with asbestos that	Dispose of asbesos containing materials as per established procedures.

cannot be thoroughly cleaned and that do not have any substantial value, should be placed in the designated garbage bins as well.

2) The designated bins will be labeled with the proper workplace label for asbestos (See below). The bin will contain double layered, 6 mil polyethylene (plastic) bags. After placing any asbestos containing materials into the bags, workers are requested to tighten the inner bag by hand twisting it and folding it over. The refuse bin lid should then be closed. The bin lid does not have to be air tight as long as the bags are tightened. When the inside bag is full, trained workers (wearing PPE) shall replace the full bags with new double layered (one inside the other) bag.

3) The full bags are to be placed in a labeled sea can by the waste generator. The used filters from the Process Plant HVAC system will be put into cardboard boxes, and placed into the labeled sea can by the Site service department.

4) When the sea cans (4) are full (every 2 to 3 weeks), Field Service Supervisor/Lead Hand is to make arrangement with Mine Operations Supervisor or Auxiliary Supervisor 24 hours in advance to arrange for the cover of asbestos waste. Once a time is determined Field Services will haul the material to a location that is determined by the Mine Production Engineer. The chosen location for asbestos waste disposal must be in the Portage Rock Storage Facility. The asbestos waste should be dumped in the Pag dump ONLY since the N-Pag might be re-used for closure purposes. The Mine Production Engineer will arrange to have this location surveyed. Once the Asbestos Wastes is dumped, a Haul Truck with waste rocks is going to bury the Asbestos Wastes and a dozer will

ensure it is well covered. Persons handling Asbestos Waste shall be trained in the safe handling and shipping for waste asbestos, have access to material safety data sheets and be provided with appropriate PPE. Only trained asbestos personnel should have access to the designated AW storage area.	
Asbestos Work Place Label – to be used on all containers, refuse bins, garbage cans containing possible asbestos. 	Ensure proper asbestos workplace labels are used on all containers containing or may contain asbestos.

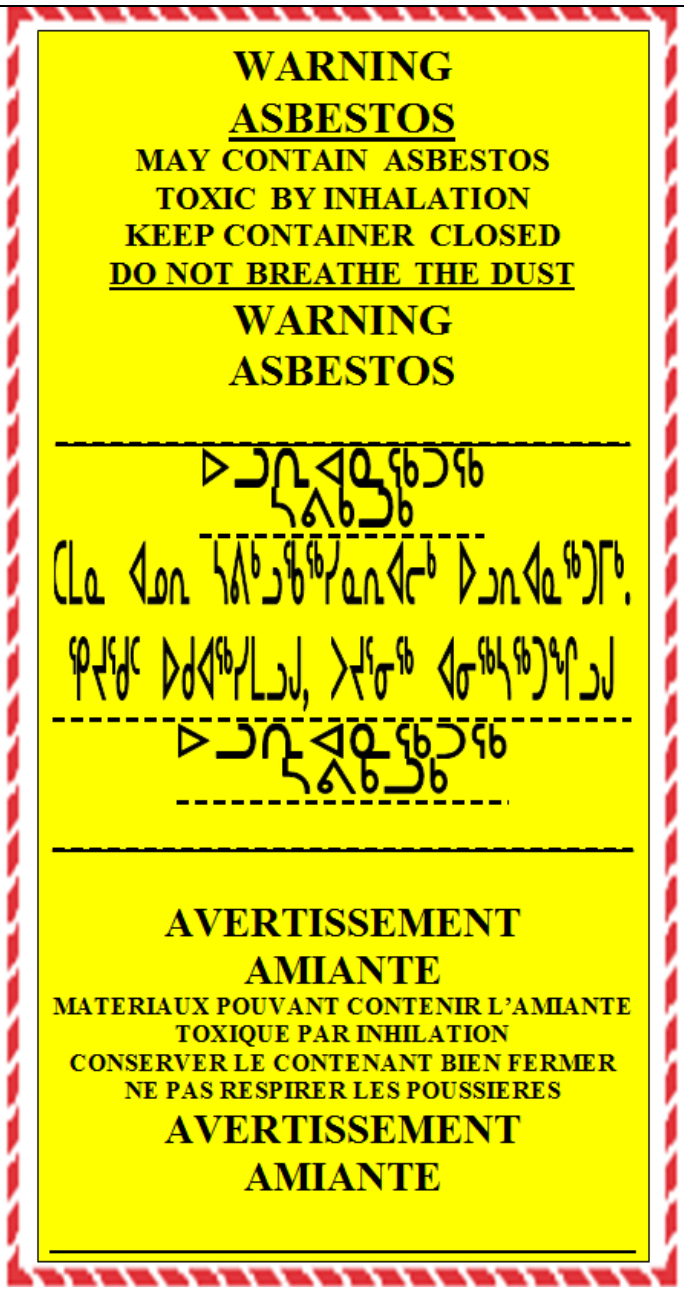
WARNING
ASBESTOS
MAY CONTAIN ASBESTOS
TOXIC BY INHALATION
KEEP CONTAINER CLOSED
DO NOT BREATHE THE DUST
WARNING
ASBESTOS
AVERTISSEMENT
AMIANTE
MATERIAUX POUVANT CONTENIR L'AMIANTE
TOXIQUE PAR INHILATION
CONSERVER LE CONTENANT BIEN FERMER
NE PAS RESPIRER LES POUSSIERES
AVERTISSEMENT
AMIANTE

Map of the Asbestos Waste Sea-Cans (4)

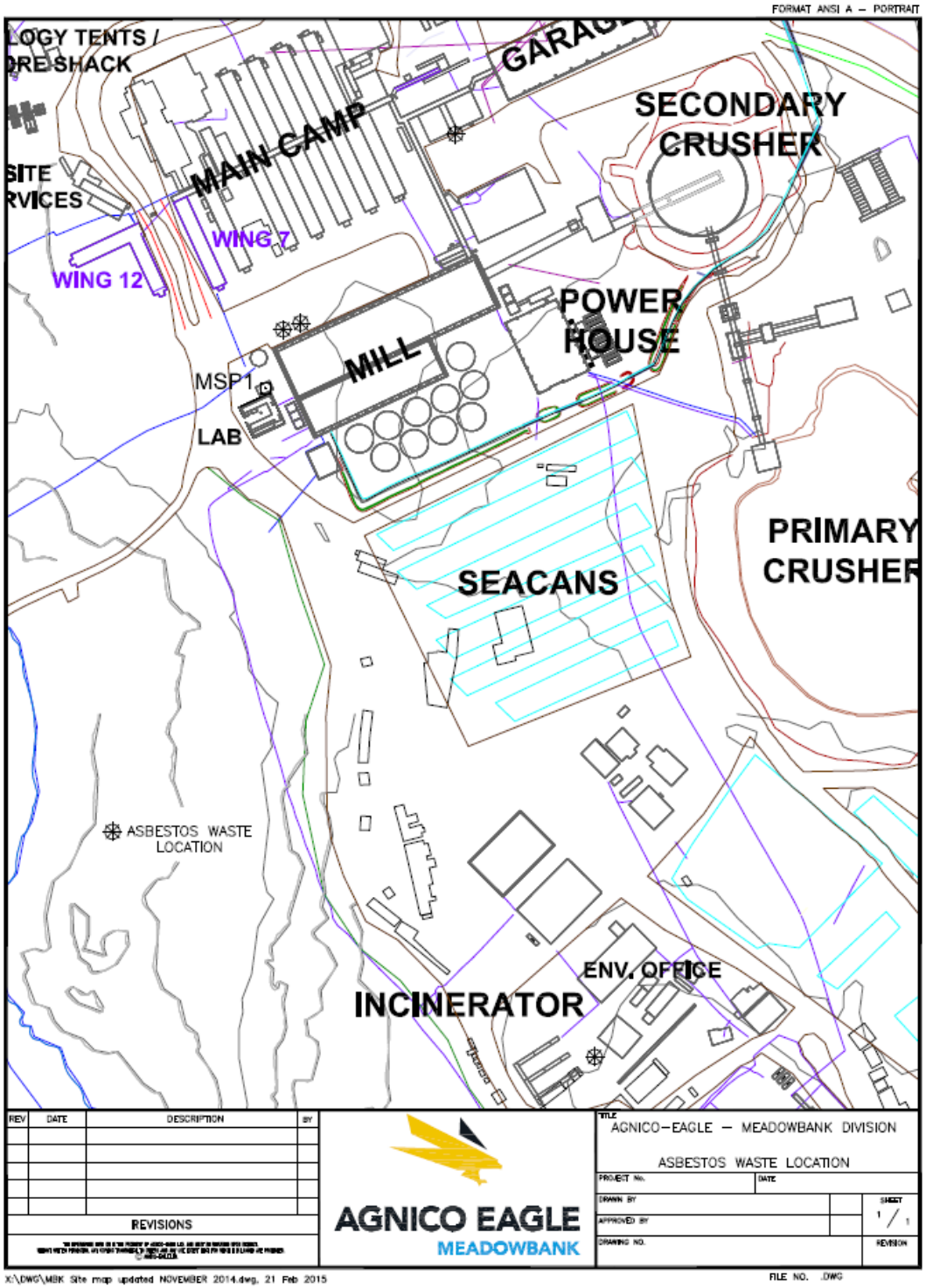

Meadowbank Interim Closure and Reclamation Plan (ICRP) - Update 2018

SNC·LAVALIN

MEADOWBANK GOLD PROJECT

Meadowbank Interim Closure and Reclamation Plan (ICRP) - Update 2018

Meadowbank, Agnico Eagle Mines Limited



Mining & Metallurgy

29 | 06 | 2018

Report > Final Report > Rev. 00
Internal ref. 654769-5000-4EER-0001_00

SNC-LAVALIN INC.
5500 des Galeries Blvd., Suite 200
Quebec (Qc)
Canada G2K 2E2
Tel: (418) 621-5500
Fax: (418) 621-8887

Quebec, June 29, 2018

Mrs. Nancy Duquet-Harvey
MEADOWBANK DIVISION
AGNICO EAGLE MINES LIMITED
Baker Lake, NU X0C 0A0

Subject: Meadowbank Interim Closure and Reclamation Plan (ICRP) - Update 2018
Final Report
Our file: 654769-5000-4EER-0001_00

Dear Mrs. Duquet-Harvey,

We are pleased to submit the final version 00 of the report mentioned in the above subject.

Do not hesitate to communicate with the undersigned should you have further questions regarding the content of this report.

Truly yours,

SNC LAVALIN INC.



Erika Voyer, Eng., M.Sc.
Mining Environment Engineer
Sustaining Capital Works and Consulting Services
Mining and Metallurgy

EV/gb

List of Revisions

Revision				Revised pages	Remarks
#	Prep.	App.	Date		
PA	MHP/AG	EV	19/05/2018	All	Internal review
PB	MHP/AG	EV/DT	23/05/2018	All	Issued for Client Comments
00	MHP/AG	EV/DT	28/06/2018	All	Issued as final

Notice to Reader

This document contains the expression of the professional opinion of SNC-Lavalin Inc. ("SNC-Lavalin") as to the matters set out herein, using its professional judgment and reasonable care. It is to be read in the context of the agreement dated March 20th, 2018 (the "Agreement") between SNC-Lavalin and Agnico Eagle Mines Limited (the "Client") and the methodology, procedures and techniques used, SNC-Lavalin's assumptions, and the circumstances and constraints under which its mandate was performed. This document is written solely for the purpose stated in the Agreement, and for the sole and exclusive benefit of the Client, whose remedies are limited to those set out in the Agreement. This document is meant to be read as a whole, and sections or parts thereof should thus not be read or relied upon out of context.

SNC-Lavalin has, in preparing estimates, as the case may be, followed accepted methodology and procedures, and exercised due care consistent with the intended level of accuracy, using its professional judgment and reasonable care, and is thus of the opinion that there is a high probability that actual values will be consistent with the estimate(s). Unless expressly stated otherwise, assumptions, data and information supplied by, or gathered from other sources (including the Client, other consultants, testing laboratories and equipment suppliers, etc.) upon which SNC-Lavalin's opinion as set out herein are based have not been verified by SNC-Lavalin; SNC-Lavalin makes no representation as to its accuracy and disclaims all liability with respect thereto.

To the extent permitted by law, SNC-Lavalin disclaims any liability to the Client and to third parties in respect of the publication, reference, quoting, or distribution of this report or any of its contents to and reliance thereon by any third party.

Table of Content

Page

1.0 Plain Language Summary 1
1.1 Statutory Context 1
1.2 Description of the Project 1
1.2.1 Geology and ore process 2
1.3 Closure and Reclamation Activities 4
1.3.1 Baker Lake Site Facilities 4
1.3.2 All-Weather Access Road (AWAR) 4
1.3.3 Dikes and Saddle Dams 5
1.3.4 Open Pits 5
1.3.5 Rock Storage Facilities 7
1.3.6 Tailings Storage Facilities 7
1.3.7 Water Management Facilities 8
1.3.8 Infrastructures at Mill and Camp Areas 9
1.3.9 Landfills, Incinerator and Landfarm 10
1.4 Cost Estimate 11
2.0 Introduction 12
2.1 Purpose and Scope of the Interim Closure and Reclamation Plan 12
2.1.1 General description of the Project 12
2.1.2 Purpose of the ICRP 14
2.1.3 Description of the proponent 15
2.2 Goal of the Closure and Reclamation Plan 15
2.3 Closure and Reclamation Planning Team 16
2.4 Engagement 17
2.5 Regulatory Instruments for Closure and Reclamation 18
2.5.1 Applicable regulatory guidelines 18
2.5.2 Concordance between the Water Licence Requirements and the ICRP 19

3.0 Project Environment 22
3.1 Atmospheric Environment 22
3.1.1 Climatic Conditions 22
3.1.2 Climate Change 24
3.1.3 Air Quality 25
3.2 Physical (Terrestrial) Environment 26
3.2.1 Topography and drainage basin 26
3.2.2 Surficial Geology 26
3.2.3 Bedrock Geology 27
3.2.4 Geological Hazards and Seismicity 27
3.2.5 Permafrost 28
3.2.6 Hydrogeology 29
3.2.7 Surface Water Hydrology 29
3.2.8 Lake and Littoral Zone Characteristics 31
3.3 Chemical Environment 32
3.3.1 Soil Chemistry 32
3.3.2 Sediment Quality 32
3.3.3 Surface Water Quality 33
3.3.4 Groundwater Quality 35
3.3.5 Acid Rock Drainage and Metal Leaching Potential 37
3.4 Biological Environment 42
3.4.1 Overall Ecosystem 42
3.4.2 Vegetation Habitat 42
3.4.3 Aquatic Biota and Habitat 43
3.4.4 Wildlife 44
3.5 Social Environment 45
3.5.1 Recent and Traditional Land Use 46
3.5.2 Archaeological and Cultural Site 47
4.0 Project Description 48
4.1 Location and Access 48

4.2 Site History 48
4.3 Site Geology and Ore Processing 52
4.4 Project Summary 53
4.4.1 Project Mine Plan 53
4.4.2 Project Facilities 59
5.0 Permanent Closure and Reclamation 69
5.1 Definition of Permanent Closure and Reclamation 69
5.2 Permanent Closure and Reclamation Requirements 69
5.2.1 Baker Lake Site Facilities 69
5.2.2 All-Weather Access Road 72
5.2.3 Dikes and Saddle Dams 76
5.2.4 Open Pits 80
5.2.5 Rock Storage Facilities 86
5.2.6 Tailings Storage Facilities 91
5.2.7 Water Management Facilities 97
5.2.8 Infrastructures at Mill and Camp Areas 103
5.2.9 Waste Management Facilities 107
6.0 Progressive Reclamation 114
6.1 Definition of Progressive Reclamation 114
6.2 Opportunities for Progressive Reclamation 114
6.2.1 Baker Lake Site Facilities 114
6.2.2 All-Weather Access Road 115
6.2.3 Dikes and Saddle Dams 115
6.2.4 Open Pits 115
6.2.5 Rock Storage Facilities 115
6.2.6 Tailings Storage Facilities 115
6.2.7 Water Management Facilities 116
6.2.8 Infrastructure at Mill and Camp Area 116
6.2.9 Waste Management Facilities 116
7.0 Temporary Closure 116

7.1 Temporary Closure Goal and Closure Objectives 116
7.2 Temporary Closure Activities 117
7.2.1 Short-term Temporary Closure 117
7.2.2 Long-term temporary closure 118
7.3 Temporary Closure Monitoring, Maintenance, and Reporting 119
7.4 Temporary Closure Contingency Program 120
7.5 Temporary Closure Schedule 120
8.0 Integrated Schedule of Activities 121
9.0 Post-Closure Site Assessment 123
9.1 Operational Monitoring Strategies 123
9.2 Closure and Post-Closure Strategies 124
9.3 Reporting 124
10.0 Financial Security 126
11.0 References 127
12.0 Personnel 132

List of Tables

Table 2-1 : NWB Water Licence and NIRB Project Certificate for Meadowbank 19
Table 2-2 : Concordance between the Water Licence Requirements and the ICRP Sections 20
Table 3-1 : Estimated Mine Site Monthly Climate Characteristics (Agnico Eagle, 2018b) 23
Table 3-2 : Estimated Mine Site Extreme 24-hour Rainfall Events (Agnico Eagle, 2018a) 24
Table 3-3 : Estimated Mean Monthly Runoff Depth as Proportion of Annual Depth – Project Basin 30
Table 3-4 : Estimated Annual Runoff Depths – Project Basin 31
Table 3-5 : Characteristics of Lakes at Mine Site Area 31
Table 3-6 : Predicted and Measured impacts to Water Quality (Agnico Eagle, 2018a) 35
Table 3-7 : Summary of Kinetic Testwork for Pit Rock (Cumberland, 2005d) 38
Table 3-8 : Rock Types and Potential for ARD (Cumberland, 2005a) 39
Table 3-9 : Summary of Tailings Chemistry (Cumberland, 2005c) 40
Table 3-10 : Summary of Tailings Chemistry 40

Table 3-11 : 2017 Tailings Monitoring (2017 Annual Report, Agnico Eagle, 2018c) 41
Table 4-1 : Projected Ore Processed at Meadowbank 54
Table 4-2 : Meadowbank Mined Tonnages for 2017 56
Table 4-3 : Projected Meadowbank Mined Tonnages (2018) 57
Table 4-4 : NAG Stockpile for mine closure requirement, Destinations & Tonnages (2018 – 2019) 58
Table 4-5 : Meadowbank Rock Storage Facility Volume 63
Table 4-6: Details of Rock Storage Facilities 63
Table 5-1: Closure Objectives and Criteria – Infrastructures at Mill and Camp Areas 70
Table 5-2: Closure Objectives and Criteria – All Weather Access Road 73
Table 5-3: Closure Objectives and Criteria – Dikes and Saddle Dams 77
Table 5-4: General Description of Decommissioning Components – Dike Reconnection 79
Table 5-5: Closure Objectives and Criteria – Open Pits 81
Table 5-6: Closure Objectives and Criteria – Rock Storage Facilities 87
Table 5-7: Acid Mine Drainage Control Strategies of the Arctic for Waste Rock 89
Table 5-8: Closure Objectives and Criteria – Tailings Storage Facilities 93
Table 5-9: Acid Mine Drainage Control Strategies of the Arctic for Tailings 94
Table 5-10: Closure Objectives and Criteria – Water Management Facilities 98
Table 5-11: Closure Objectives and Criteria – Infrastructures at Mill and Camp Areas 104
Table 5-12: Closure Objectives and Criteria – Waste Management Facilities 108
Table 7-1 : Short-term Temporary Closure Activities 118
Table 7-2 : Long-term Temporary Closure Activities 119
Table 8-1 : Meadowbank - Closure and Post-Closure Main Phases 121

List of Figures

Figure 1-1 : Meadowbank Mine Site Location 3
Figure 2-1 : General Site Layout of Meadowbank 13
Figure 4-1 : Baker Lake Site Facilities 50
Figure 4-2 : All Weather Access Road (AWAR) 51

List of Appendices

Appendix A: Glossary of Terms and Definitions
Appendix B: List of Acronyms, Abbreviations, Units, and Symbols
Appendix C: Record of Engagement
Appendix D: Lessons Learned from Other Projects
Appendix E: Reclamation Research Plans
Appendix F: Site Photos
Appendix G: Meadowbank Site Monitoring Water Quality Stations
Appendix H: Regulatory Instruments
Appendix I: Permafrost Map
Appendix J: Meadowbank Geology, Seismic Zone, Groundwater Flow and Bathymetry
Appendix K: Water Balance
Appendix L: Ecological Land
Appendix M: Baseline Water Quality Results
Appendix N: Internal Structures
Appendix O: Post Closure General Site Layout
Appendix P: Closure Integrated Schedule
Appendix Q: Financial Security Cost Estimate Assumptions and RECLAIM Spreadsheets

1.0 Plain Language Summary

1.1 Statutory Context

This document presents the Interim Closure and Reclamation Plan (ICRP) for the Project. A first closure and reclamation plan (Agnico Eagle Mines Limited, 2008) was developed before the start of mining operation. An ICRP, produced by Golder Associates in January 2014 (Golder, 2014), was an update of the 2008 closure and reclamation plan.

Agnico Eagle Mines Limited (Agnico Eagle) was granted a Type A Water Licence 2AMMEA1525 in July 2015 (NWB, 2015). This Licence authorizes Agnico Eagle to use water and dispose of waste associated with the mining and milling undertakings at the Project mine site. The development of a closure and reclamation plan is also a requirement of the Nunavut Impact Review Board (NIRB) Project Certificate 004 (NIRB, 2016). The closure goal, as described in the Guidelines for the Closure and Reclamation of Advanced Mineral Exploration and Mine Sites in the Northwest Territories issued by the Mackenzie Valley Land and Water Board (MVLWB) and Aboriginal Affairs and Northern Development Canada (AANDC) (AANDC/MVLWB, 2013), is to return the mine site and affected areas to viable and, wherever practicable, self- sustaining ecosystems that are compatible with a healthy environment and with human activities. Planning for mine closure and reclamation is an iterative process where ICRPs are prepared and updated on a regular basis, when there is a significant change to the mine plan, or according to key milestones in the mine life (AANDC/MVLWB, 2013).

1.2 Description of the Project

The Meadowbank Mine site (Meadowbank or the Project) is located in the Kivalliq region, Nunavut, approximately 70 km north of the Hamlet of Baker Lake, as shown on Figure 1-1. Mineral tenure covers 28,888 hectares and includes ten grandfathered Federal mining leases and three exploration concessions acquired from Nunavut Tunngavik Incorporated. The mine site is accessed by plane via the private Meadowbank Aerodrome (TC LID: CMB2), which is located 1 nautical mile (1.9 km; 1.2 mi) northeast of Meadowbank Gold Mine, Nunavut, Canada (latitude 65° 1′ 7″ N, longitude 96° 4′ 26″ W).

The Project components consist of the mine site, the Baker Lake Site Facilities and the All Weather Access Road (AWAR) linking Baker Lake to the mine site. Meadowbank Mine relies on marine transportation (to Baker Lake) for most of its supplies including fuel, construction and operation equipment, materials and consumables, including dangerous goods, food, household goods and other non-perishable supplies. Construction of the AWAR was initiated in 2007 and completed in 2008. The development of the Project has required periodic construction activities since the exploration phase (i.e., South and North Camps and airstrip). Construction activities at the mine site and the Baker Lake Site Facilities, for the purpose of mining operations, began in 2008. Mining was initiated in 2009; operation at the mine process plant started in early 2010, and thus, is entering its ninth year of operations.

Agnico Eagle is now proposing to develop the Whale Tail Pit, a satellite deposit located on the Amaruq property, to continue operations and milling at Meadowbank Mine, pending the receipt of required permits. The proposed open pit mine, mined by truck-and-shovel operation, will produce 8.3 million tonnes of ore that will be hauled and processed at the Meadowbank Mill. The tailings will be deposited in the approved

TSF facilities, under Agnico Eagle existing Type A water Licence 2AM-MEA1525. The operations (mining and ore processing) will continue approximately 3 years with the Whale Tail Pit, from 2019 to 2022. As the Whale Tail project is going through the permitting process to obtain its specific Type A Water Licence, it is understood that all operations components of Whale Tail Pit and Amaruq Exploration/Hauling Road are included specifically in the Whale Tail Interim Closure and Reclamation Plan (Golder, 2016a). Only the activities covered under the Meadowbank Type A Water Licence 2AMMEA1525 will be included in this updated Meadowbank ICRP.

1.2.1 Geology and ore process

Gold deposits are found along two main structural features that cross the property – the Meadowbank Trend and the Pipedream Lake (Northeast) Trend. The Meadowbank Trend hosts the Goose, Portage and Vault deposits, which are the sites of mining. These shallow deposits lie within 7 km of each other. In all deposits, gold mineralization is commonly associated with intense quartz flooding, and the presence of sulphide minerals (pyrite and/or pyrrhotite). The Goose and Portage deposits are hosted by magnetite-rich iron formation, while intermediate volcanic rocks host most of the mineralization at the Vault deposit farther north. Both the rock units and the gold deposits are tightly folded and structurally complex. Until now, Meadowbank has conducted surface mining from a series of three pits all within 7 km of the processing plant. Water retention dikes have been built to allow for mining beneath shallow lakes, using a unique in-water dike construction method. The mine works year-round, using conventional drilling, blasting, truck and shovel methods. Waste rock is used for construction, or dumped in waste storage facilities or previously mined-out areas. To minimize acid generation, the sulphide-bearing waste rock is encapsulated in permafrost and capped with an insulating layer of neutralizing rock.

The 11,000-tonne/day gold processing plant uses conventional technology adjusted to the Arctic climate. Any “free gold” is removed by a gravity circuit. The remainder is leached using cyanide, with the gold captured using carbon-in-pulp technology and electrowinning cells. Gold-plated cathodes and gravity concentrate are smelted in an induction furnace and poured as doré bars. The plant includes both a cyanide recycling thickener and an air-sulphur dioxide cyanide destruction circuit to ensure that no cyanide escapes to the environment. All water from the tailings pond is pumped back to the plant for reuse, making this a zero-discharge system. The plant will require minor modifications to treat the Whale Tail Pit ore, specifically the addition of a continuous gravity and regrind circuit, and is expected to operate at 9,000 tonnes/day.

Figure 1-1 : Meadowbank Mine Site Location



1.3 Closure and Reclamation Activities

1.3.1 Baker Lake Site Facilities

Baker Lake Facilities are located approximately 2 km east of the Hamlet of Baker Lake. This is the transfer point and temporary storage for all dry shipment and fuel materials arriving by barge prior to overland shipment to the mine site via the AWAR. Baker Lake Facilities are listed below:

- Barge Landing;
- Bulk Fuel Storage Facilities (6 diesel fuel storage tanks);
- Dry Freight Storage Facility;
- Access Road.

At closure, it is planned to offer the infrastructures of the Baker Lake Site Facilities to local interests. If there is no local interest, the facilities and equipment will be decommissioned, dismantled and removed as appropriate.

As mentioned in the previous Interim Closure and Reclamation Plan (Golder, 2014), Agnico Eagle will return, if possible, the Baker Lake site to pre-development conditions. The site may also be left in a semi-industrial condition if consistent with a different end land use agreed upon with regulators, the Hamlet of Baker Lake, and other local interest.

All remaining bulk fuel on site will first be cleaned and then removed and offered to local interests. Buildings or infrastructure, including office trailers and barge landing, will be emptied and also offered for local use and/or relocation. In the case that there is no local interest for the tanks or remaining infrastructures, the infrastructures will be dismantled, decontaminate and demolition waste will be either transported to the mine site landfill disposal, barged out of Baker Lake to a southern waste disposal or recycling facility or sale for scrap metal.

At closure, scarification of all disturbed areas, including gravel pads and roadways, is planned to loosen the compacted material. To promote surface drainage, areas will be profiled, and culverts will be removed from the roadways to re-establish natural drainage patterns.

It is important to note that any contaminated soils from the facilities will be removed and placed in sealed drums. These will then be transported to the mine site landfarm for biological treatment, or barged out of Baker Lake to a southern destination for treatment and disposal.

The main uncertainty is related to the local interest for the Baker Lake facilities or equipment.

1.3.2 All-Weather Access Road (AWAR)

The AWAR was constructed to connect the Hamlet of Baker Lake to the mine site. This 108 km long road was constructed above grade, using quarried material from non-acid generating rock.

Agnico Eagle is committed to manage the road as a private road with limited public access during the mine life and to fully decommission the road after closure. Agnico Eagle will consider the option of leaving the AWAR intact if it is deemed in the public interest based on guidance and approval from local communities

and regulatory agencies. If agreed upon, road operation and maintenance responsibility would then be transferred to another party (Golder, 2014).

In the case that Agnico Eagle stays the owner of the AWAR, natural drainage courses will be restored by removing culverts and bridges, road fill material and removing in-stream works down to the original channel bed. Where affected watercourses are fish-bearing, channel beds will be re-constructed similar to baseline conditions. Work at these sites will consider appropriate timing for in-stream works and will be completed in accordance with Department of Fisheries and Oceans (DFO) operational statements (Golder, 2014).

The AWAR will be decommissioned by ripping the road bed to make it as impassable as possible to motorized vehicles, provide favorable conditions for natural drainage, vegetation re-colonization and stabilize the locally steep slopes. The road embankments will also be profiled to better blend with the existing topography to allow safe wildlife passage. All the communication towers will also be decommissioned.

At post-closure, the road will be reclaimed and the natural drainage and terrain will be restored as much as possible. Upon local interest and regulatory approval, the AWAR could be transferred to the local community.

1.3.3 Dikes and Saddle Dams

The dikes and dams are required to isolate mining activities from surrounding lakes (i.e., East, South Camp and Bay-Goose Dikes) or to contain tailings (i.e., Stormwater and Central Dikes, and Saddle Dams 1 to 5).

All dikes and dams were designed for long term stability. Once the Portage and Goose pits, as well as Vault and Phaser pits, will be completely flooded at closure and monitoring has determined that pit lake water meets water quality criteria established by the Meadowbank Water Licence, South Camp Dike, Bay-Goose Dike and Vault Dike will be opened to reconnect the pit lakes to the adjacent lakes. The controlling condition will occur during late winter, when thick ice conditions are expected to coincide with annual minimum lake levels.

As the runoff water from the TSF cover system will convey towards the Reclaim Pond located in the South Cell upstream of Saddle Dam 3, it is planned to open Saddle Dam 3 once the runoff water will demonstrate suitable water quality as per the Meadowbank Water Licence. Central Dike, Saddle Dams 1, 2, 4 and 5 will remain intact, to contain the stored tailings in the TSF.

It should be noted that site water will be kept into a close circuit, meaning that the dikes and dams will not be opened, until the water quality meets criteria of the Meadowbank Water Licence (CCME limits or site specific closure criteria to be defined).

1.3.4 Open Pits

The ore was extracted from the following deposits during the operational lifespan of the mine of the Project:

- Portage deposits (Pit A, B, C, D and E);

- Goose deposit; and
- Vault deposit, including Phaser/BB Phaser.

Open pit development is staged over the course of mining operations. Pit walls have been designed for long-term slope stability during operations and closure; therefore Agnico Eagle does not intend to establish long-term stable slopes by allowing gradual failure of rock masses.

The open pits will be flooded once mining activities in each open pit are complete. Flooding will occur by allowing the natural accumulation of seepage and groundwater into the pits and surface water drainage reporting to the pit to remain in place. In addition, transfer of water at controlled rates from the surrounding lakes using high-capacity mechanical pump systems or siphons will contribute to the majority of the flooding. Goose Pit began natural flooding in 2015, with natural inflows such as groundwater, seepage and runoff water. The flooding of Goose will be completed by pumping 3,182,704 m^3 of water from the Third Portage Lake in summer 2019. The Portage Pit will be flooded with a transfer of 531,266 m^3 of reclaim water from the South Cell TSF following the end of operations in summer 2022, and with the pumping of 31,179,343 m^3 of water from Third Portage Lake, from 2020 to 2026. Both pits are predicted to reach the same water level as Third Portage Lake (133.6 masl) by 2029 (Agnico Eagle Water Balance, 2018a).

Likewise, Vault Pit will be flooded by pumping water from Wally Lake once mining is completed. The pumping of 28,051,096 m^3 from Wally Lake is expected to commence in 2019 and to be completed in 2025. The natural inflow will then allow Vault pit to reach 139.9 masl (natural Wally Lake water level) (Agnico Eagle Water Balance, 2018a). Unlike Vault Pit, Phaser Pit and lake are planned to be flooded exclusively from their watershed run off inflows until the target elevation of Wally is reached, expected in summer 2027. From there, those same inflows will be used conjointly with the Vault Attenuation Pond inflows to flood to the same target elevation at 139.9 masl (Wally Lake level).

To minimize impacts to aquatic habitat in the surrounding lakes, it is anticipated that transfers from Third Portage and Wally lakes will be done during periods of higher water in the spring and summer months. Maximum yearly pumping rates will respect the limits specified in the Meadowbank Water Licence to avoid draw down levels in each source lake. Throughout the pit flooding phase, the dikes will remain in place, acting as barriers for water migration between the pit lake and the surrounding lakes and environment.

Water quality monitoring will continue during operations to expand the available water quality database. Water quality forecast for pit lake water will be performed annually to predict the water quality at closure. Treatment options will be examined and will be assessed in greater detail if required during the preparation of the Final Closure and Reclamation Plan.

The water balance and water management will also be reviewed on an annual basis and in closure to estimate the lake water transfer volume required for flooding, as well as the natural inflows, to ensure adequate water level are maintain into the pits until dikes opening.

1.3.5 Rock Storage Facilities

At Meadowbank some of the waste rock generated from the open pit mining is considered potentially acid-generating (PAG) and some non-potentially acid-generating (NPAG). Due to the distance between the Portage mining area and the Vault mining area, two main separate rock storage facilities are required. Waste rock from the Portage and Goose Pits is stored in a storage facility located near to these pits (Portage RSF or mined out areas of Portage and Goose Pits), while waste rock from the Vault, Phaser and BBPhaser Pits is stored in a separate rock storage facility adjacent to the Vault Pit (Vault RSF).

Some NPAG material is also stored at the Bay Goose RSF. Suitable waste rock material NPAG is used for construction purposes associated with dikes and roads and will also be used for closure activities.

Much of the closure and reclamation of the Portage RSF has been completed progressively during operations with the placement of the 4.0 m NPAG cover over the RSF PAG slopes. Approximately 84% of the NPAG cover has been placed over the PAG Portage RSF area from 2011 to 2017. The remaining closure and remediation requirements of the RSF will be completed after operations cease.

Most of the waste rock from the Vault deposit is NPAG; geochemical and water quality monitoring concluded that the Vault RSF is not expected to require NPAG capping in closure. As a precautionary measure, any PAG material encountered at Vault is and will be placed in the middle of the pile to be capped with NPAG waste rock as placement proceeds.

As mention in the previous Interim Closure and Reclamation Plan (Golder, 2014), the main uncertainty related to the Portage RSF closure is the cover thickness required to ensure adequate aggradation of permafrost, insulation from thaw, and effective long term encapsulation of waste rock.

Thermistors have been installed to monitor temperature and permafrost aggradation within the Portage RSF to monitor the temperature as freezing progresses. Latest results of temperature monitoring indicate that freezeback is occurring in the Portage RSF structures (Updated Waste Rock and Tailings Management Plan, 2018b).

1.3.6 Tailings Storage Facilities

At Meadowbank, all tailings are deposited within the Tailings Storage Facilities (TSF) until the end of mine operations. The TSF is divided into the North and South Cells, both of which employ subaerial or subaqueous tailings disposal within a dewatered lake basin. The North Cell is contained by Stormwater Dike, Saddle Dam 1, Saddle Dam 2, and rockfill road perimeter structures RF-1 and RF-2. All these structures are constructed to elevation 150 masl. Tailings were stored in the North Cell from 2010 to 2015. The South Cell is delineated by Stormwater Dike, Saddle Dam 3, Saddle Dam 4, Saddle Dam 5, and Central Dike. All these structures will be constructed to elevation 150 masl. The South Cell has been in use since November 2014 and will be used until tailings reach elevation 149.5 masl. The general operational management strategy for the TSF involved discharging tailings into the North Cell of the TSF to a maximum elevation of 149.5m. The operational freeboard required is 2.0m. The North Cell is filled up to its final capacity as the final tailings deposition was completed in October 2015. The reclaim system was put in place in the South Cell in October 2014. While the South Cell is in operation, progressive reclamation and NPAG capping was initiated in the North Cell in winter 2015.

Whale Tail Pit will produce an addition of approximately 8.3 million tons (Mt) of tailings to the Meadowbank TSF for a total of 35.4 Mt, including Meadowbank and Whale Tail. Total Meadowbank tailings production is approximately 27.1 Mt (18.2 Mt in North Cell at elevation 149.5 m and 8.9 Mt in South Cell at elevation 142.5 m). To store the additional volume of tailings from Whale Tail Pit, deposition of approximately 5.3 Mt will occur in the TSF South Cell at an elevation of 149.5 m. The proposed construction of internal dike structures placed on the frozen beach tailings in the North Cell will provide the additional tailings storage capacity of 3.0 Mt within the current footprint of the North Cell TSF (upon regulatory approval). Internal structures will be built along the North Cell perimeter road, which will form a perimeter for most of the North Cell TSF with the exception of above the Stormwater Dike (SWD). The disposal of tailings from Whale Tail using the existing Meadowbank Mine facilities will reduce potential impacts to the environment by reducing the project footprint and needs for reclamation of additional facilities.

Preliminary design work was completed for the TSF cover in 2015 and 2016. The tailings cover will consist of non-acid generating granular material (NPAG) and ensures that the active layer remains within the NPAG layer. The objective for the cover system is to keep the tailings under 0°C in most conditions and to maintain saturation above 85%. Progressive reclamation of the North Cell has started in 2015 and continued to 2017 with the NPAG cover placement. The progressive cover is expected to continue in 2018 and 2019. The TSF North Cell is instrumented for thermal monitoring with thermistors installed in the tailings or the NPAG cover.

As mention in the previous Interim Closure and Reclamation Plan (Golder, 2014), the main uncertainty related to the TSF closure is permafrost encapsulation and the cover thickness required to ensure adequate aggradation of permafrost, insulation from thaw, and effective encapsulation of tailings.

Thermistors have been installed to monitor temperature and permafrost aggradation within the TSF and into the 2.0 m of closure capping. Latest results of temperature monitoring in each geotechnical structures along the perimeter of the North Cell TSF present frozen conditions of their foundation.

There is also an incertitude that surface runoff from the TSF covered areas may not be of sufficient quality for release to the environment. This could delay decommissioning of the Reclaim Pond, and/or require additional mitigation such as treatment (Golder, 2014).

1.3.7 Water Management Facilities

The water management facilities were designed to support the construction and operations activities of the mine development. Permanent closure activities for these facilities will involve removal of structural components (i.e., pumps, pipelines and active treatment systems) and establishment of natural drainage conditions. The water management facilities are listed below:

- Dewatering systems;
- Portage and Vault Attenuation Pond;
- Reclaim Pond;
- Tailings Pipelines;
- Pit sump and pumping systems;
- Seepage and runoff collection systems;

- Culverts;
- Water Diversion Ditch;
- Freshwater intake, potable water treatment system and wastewater treatment system;
- Stormwater Management Pond (Tear Drop Lake); and
- Flooding systems.

Water management infrastructures will be decommissioned at various times in the overall closure and post-closure phases depending on their function and location, and natural drainage will be restored as much as possible.

Water quality and treatment requirements of the Reclaim Pond water, prior to discharge to the pit lakes as part of flooding, represent an area of uncertainty. Treatment of the Reclaim Pond water before transfer may be required. Updates to the water balance model, and water quality predictions, will be completed prior to mine closure to determine the need and the type of water treatment, if required, and presented in the Final Closure and Reclamation Plan.

1.3.8 Infrastructures at Mill and Camp Areas

During the life of mine, surface infrastructures were required at different period in time for the mining, accommodation, water treatment, etc. Most of the infrastructures are located near the Portage and Goose pits and the Tailings Storage Facilities. Additional infrastructures were built near the Vault Pit.

The permanent closure activities for Infrastructures at the Mill and Main Camp removal are listed below (Golder, 2014):

- Equipment used for closure activities and long-term maintenance (e.g., trucks, backhoes, etc.) will be removed from the site once they are no longer required. Most of the mobile equipment will be removed once the closure stage is complete. A small subset of equipment will be retained on-site for a portion of the post-closure stage;
- Remaining bulk fuel and empty portable fuel storage tanks will be transported back to the Baker Lake Site Facilities and offered to community interests. The tanks will be emptied, cleaned, and dismantled for disposal in the site landfill or shipped south. Any contaminated soil will be excavated and taken to the landfarm for treatment;
- All buildings and structures will be decontaminated, decommissioned and dismantled at closure. If required, the process plant may be temporarily converted to treat water in the Reclaim Pond. Demolition waste that cannot be reused, recycled or provided to local interests will be disposed of in the on-site landfill. Salvageable material will be removed off site;
- Hazardous wastes will be removed for disposal by a Licenced handler;
- Any above grade concrete structures will be demolished and the rubble will be disposed of in the landfill. Any slabs on grade will be punctured and then left in place and covered with soil or non-potentially acid generating/non-metal leaching waste rock. Any subgrade foundations will be left in place;

- All disturbed site areas will be re-graded to suit the surrounding topography. In areas where the original ground surface was lowered for site grading or structural requirements, the slopes will be stabilized and contoured. Cover materials may be required for erosion and dust control.

If not properly reclaimed, wildlife maybe injured by entering reclaimed areas with depressions and if subsidence occurs. Environmental design features and mitigation, as well as current wildlife management practices used in other mining projects will be implemented at the Project to limit wildlife injury such as re-contouring reclaimed areas to reduce hazards to wildlife. Buildings and equipment not required for post-closure activities will be removed from the site. Proper reclamation is also required to leave the site in appropriate conditions that do not present safety risks for humans. This is considered the most appropriate closure plan based on the Meadowbank Mine experience.

No major uncertainties are related to the closure of the Meadowbank infrastructures. The pre-disturbance terrain was covered by discontinuous vegetation interspersed with few bedrock outcroppings. The reclamation plan will be designed to encourage a natural succession of indigenous plant species within disturbed site areas. Grading and contouring would be done, where appropriate, to control soil erosion and to promote natural drainage.

1.3.9 Landfills, Incinerator and Landfarm

The waste management facilities include the landfill, landfarm, incinerator and hazardous waste management area.

The waste management facilities will be reclaimed following best practices put in place during operation and in order to minimize long term disturbance.

During the closure phase of the Project, demolition and non-hazardous waste from the Meadowbank site will be deposited in the demolition Landfill (Landfill #2), located on top of the Portage RSF. The demolition landfill will be located in an estimated 4.0 m deep depression on the top of the Portage RSF. The demolition landfill will ultimately be encapsulated within the waste rock. It will be covered with a 4.0 m layer of coarse NPAG rock as part of the closure plan for the RSF.

The incinerator receives food, domestic and organic waste from Meadowbank and eventually from Whale Tail Pit Project. At the end of the active closure phase, the incinerator will be decommissioned, barged out of the Baker Lake Site Facilities to a southern destination for re-use or sale, or dismantled and disposed at the on-site landfill.

Hazardous materials will be managed in operations such that minimal quantities remain on site at closure. Any remaining hazardous materials that cannot be used during closure activities will be transported to licensed disposal facilities in the south, as is currently being done, in accordance with the Hazardous Material Management Plan (Agnico Eagle, 2013e).

A landfarm will be required during the closure period for petroleum-contaminated soil. The Landfarm 2, constructed in 2016 and located on the North East side of the TSF South Cell, is now in use until the end of operations and also for the closure period. The Landfarm 2 receives contaminated soil from Meadowbank and will eventually receive contaminated soil from Whale Tail. The landfarm is located within the South Cell TSF and following removal of all remediated soil, will be capped with 4.0m of NPAG waste rock material to ensure freeze-back encapsulation.

1.4 Cost Estimate

A permanent closure and reclamation financial security cost estimate has been prepared with the present Project layout and infrastructure. The cost estimate covers the closure and reclamation of all Project facilities as described in this report and was prepared using RECLAIM Version 7.0, March 2014, for permanent closure of the Project.

Agnico Eagle is required to submit a detailed financial security cost estimate for the Meadowbank ICRP - Update 2018 to Indigenous and Northern Affairs Canada (INAC) and to the Kivallik Inuit Association (KIA) to support land use and water licensing requirements. RECLAIM Version 7.0 workbook has been used for this estimate, as per the Guidelines for Closure and Reclamation Cost Estimates for Mines, issued by Indigenous and Northern Affairs Canada, Mackenzie Valley Land and Water Board and the Government of the Northwest Territories (INAC, MVLWB, GNWT, 2017).

For the purpose of this financial security cost estimate, only progressive rehabilitation measures which have already been completed to date are considered in the calculations.

The updated 2018 estimated closure and reclamation costs for the Meadowbank Project represent a total of $ 83,569,898. This total includes $ 57,883,238 of direct costs and $ 25,686,660 of indirect costs.

2.0 Introduction

2.1 Purpose and Scope of the Interim Closure and Reclamation Plan

2.1.1 General description of the Project

The Meadowbank gold open pit mine (Meadowbank or the Project) achieved commercial production in March 2010, and produced its two millionth ounce of gold in 2015. It has 345,000 ounces of gold in proven and probable reserves (5 million tonnes at 2.28 g/t) as of December 31, 2017. Meadowbank mine is expected to produce 220,000 ounces of gold in 2018, which is anticipated to be the last year of the mine production for Meadowbank.

The mine plan expected start of operations at Amaruq in Q3 2019, with the start of mining of Whale Tail Pit (Whale Tail). Agnico Eagle has approved the Amaruq satellite deposit at Meadowbank for development pending the receipt of the required permits, which are currently expected to be received in Q2 2018. Whale Tail ore will be hauled by truck to the plant at the Meadowbank site for processing and tailings deposition in the approved facilities. Mining at Whale Tail is expected to end in Q4 2021. Ore from stockpiles will be processed in January 2022. Figure 2-1 presents the general site layout of Meadowbank with the different infrastructures.

The present updated Meadowbank Interim Closure and Reclamation Plan (ICRP) is based on the current Life of Mine (LOM) of Meadowbank, (refer to Section 4.4.1 for quantities and detailed LOM) including the mining activities planned at the Meadowbank site, as well as the activities related to Whale Tail ore processing and tailings deposition. As the Whale Tail project is going through the permitting process, it is understood that all operations components of Whale Tail Pit and Amaruq Exploration/Hauling Road are included specifically in the Whale Tail Interim Closure and Reclamation Plan (Golder, 2016a). Only the activities covered under the Meadowbank Type A Water Licence 2AM-MEA1525 are included in this updated Meadowbank ICRP.

96°6' 96°5' 96°4' 96°3' 96°2' 96°1'

65°3' 65°2' 65°1' 65°0' 64°59'

N

West Diversion Ditches

East Diversion Ditches

Vault Road

West Diversion Ditches

Portage NPAG RSF

NP2 Lake

East Diversion Ditches

NP1 Lake

Saddle Dam 1

Portage PAG RSF

North Cell TSF

Saddle Dam 2

Stormwater Dike

Saddle Dam 3

South Cell TSF

Portage Pit A

Central Dike

Saddle Dam 4 and 5

Airstrip

Service Buildings

Portage Pit

East Dike

Teardrop Lake

Mills

Fresh Water Barge

Third Portage Lake

Second Portage Lake

Portage NPAG RSF

South Camp Dike

Portage Pit E

FGL / Sana Shop

Goose NPAG RSF

Laydown Area

Goose Pit

Third Portage Lake

Bay Goose Dike

Road
TSF NPAG Cover
Dike and Dam
Original Lake Limit
Rock Storage Facility (RSF)
Pit waste rock backfill
TSF
Pit

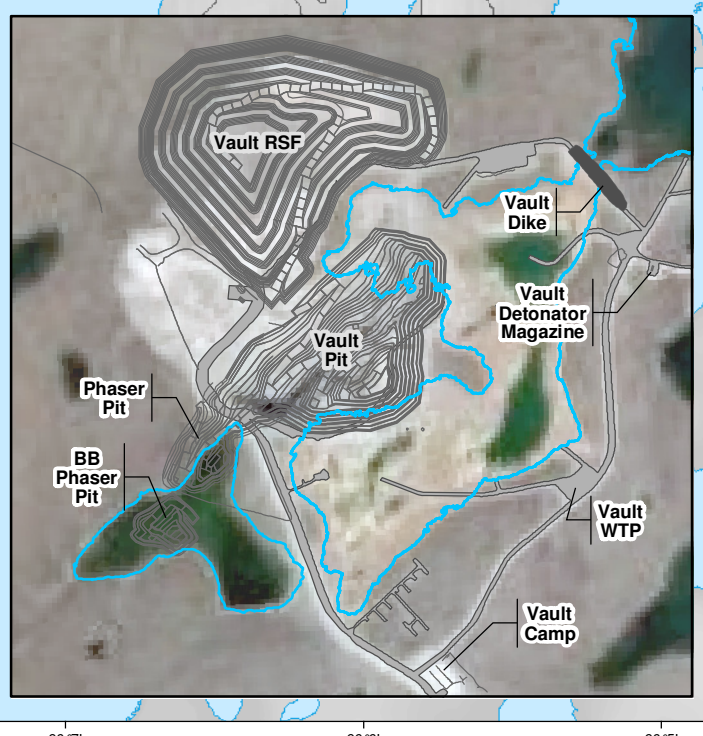

AGNICO EAGLE

SNC·LAVALIN

Meadowbank Interim Closure and Reclamation Plan Update 2018

General Site Layout of Meadowbank

Sources:
Project Data, Agnico Eagle, 2017

Project: 654769
File: snc651196_rp_f2-1_site_layout_tab_180622.mxd

Projection UTM, zone 14, NAD83
Contour interval: 10 m

0 0.16 0.32 km
1/20,000

June 2018

Figure 2.1

\\indu01\public\proj\651196 AE IN-PIT Deposition DET -ENG\40_INGÉNIERIE\40_DD_DESSINS\Geomatique\Interne\Diffusion\Produit\Closure\snc651196_rp_f2-1_site_layout_tab_180622.mxd

2.1.2 Purpose of the ICRP

The general purpose of this ICRP is to update the preceding according to the current mine operating plan, ongoing engagement, reclamation research results and progressive reclamation. This ICRP provides increasing levels of detail on the closure and reclamation of individual project components and details for components that have been progressively reclaimed during mine operation, and operational details for components which are to be progressively reclaimed earlier in the mine life. This document presents an update to the ICRP for the development phase of the Meadowbank Gold Project prepared by Golder Associates in 2014 (Golder, 2014). The ICRP produced in January 2014 was an update of the closure and reclamation plan produced for the development phase of the Project (Agnico Eagle, 2008).

Further steps will be undertaken in order to complete the detailed engineering for the mine closure. The ICRP document is the main reference to be used throughout the closure engineering process for the development of the Final Closure and Reclamation Plan. This document does not include detailed engineering closure designs, or specific post-closure monitoring programs as these will be developed in the future. However, a view of the current closure concepts for each area of the mine site and the plans to advance these designs are provided.

The focus of this ICRP for the Project is to:

- Provide closure objectives for the Project components;
- Describe closure options for temporary and permanent closure;
- Identify uncertainties related to the proposed closure objectives, options, or criteria;
- Identify post-closure monitoring requirements and responsibilities for the selected closure activities;
- Predict the likelihood of potential post-reclamation risks to the environment and human and wildlife health; and
- Estimate the closure and reclamation costs.

This ICRP does not include details on fisheries offsetting compensation activities. Independent closure plans and cost estimates for these activities are provided in the following documents:

- Agnico Eagle Mines Meadowbank Division No-Net-Loss Plan, October 2012 (Agnico Eagle, 2012a);
- Agnico Eagle Meadowbank Mine No-Net-Loss Plan, Implementation Cost Estimate and Construction Schedule, November 2013 (Agnico Eagle, 2013f).

2.1.3 Description of the proponent

The proponent of the Project is :	Agnico Eagle Mines Limited (Agnico Eagle)
The address for the proponent is:	10200, Route de Preissac Rouyn-Noranda, Quebec J0Y 1C0 (Canada)
The Project site is located at: :	latitude 65° 1′ 7″ N, longitude 96° 4′ 26″ W Territory of Nunavut, Canada
Acting on behalf of the proponent :	SNC-Lavalin Inc. (SLI) Mines et métallurgie 5500 des Galeries Blvd., Suite 200 Quebec (Qc) Canada G2K 2E2
The contact person for the Project is:	Nancy Duquet-Harvey Baker Lake, Nunavut, Canada, X0C 0A0 Ph.: 819.759.3555 x6980 Email: nancy.harvey@agnicoeagle.com

2.2 Goal of the Closure and Reclamation Plan

Permanent closure is defined as the final closure of the mine site after mining has ceased. Permanent closure is typically a planned event, the timing of which is dependent on the life of mine of the project. The closure approach for the project, as well as specific closure activities at each project facility, is guided by the intended end land use of the area. Based on stakeholder and local community consultation to date, the intended end land use for project-affected areas is a return to the “natural” state. As such, closure activities are focused on decommissioning mine components so that they blend into the existing landscape to the extent possible.

Agnico Eagle is committed to responsible mining practices for the protection of human, wildlife and aquatic life health, and for minimizing impacts on the environment. Agnico Eagle intends to leave behind a positive community and environmental legacy. The closure goal as described in the Guidelines for the Closure and Reclamation of Advanced Mineral Exploration and Mine Sites in the Northwest (AANDC/MVLWB, 2013), is to return the mine site and affected areas to viable and, wherever practicable, self-sustaining ecosystems that are compatible with a healthy environment and with human activities. The four closure principles of physical stability, chemical stability, no long-term active care requirements, and future use (including aesthetics and values) support the closure goal:

- Physical stability: The components of the reclaimed site should be built or modified at closure so that they do not erode, subside or move under extreme design events, and therefore do not pose a threat to humans, wildlife, or environmental health and safety;

- Chemical stability: The components of the reclaimed site should be chemically stable so as to prevent adverse soil, water and air quality effects that might pose a risk to humans, wildlife or environmental health and safety; and
- Future use and aesthetics: The reclaimed site should be compatible with the surrounding lands at the completion of the reclamation activities.

These broad objectives were used to support the identification of closure objectives that are specific to the Project. These specific objectives are:

- Physically and chemically stable lands and waters at the reclaimed Meadowbank site that are safe for human, wildlife and aquatic life;
- Lands and waters at the reclaimed Meadowbank site that allow for traditional uses;
- Final landscape guided by pre-development conditions and traditional knowledge;
- Post closure conditions that, where appropriate, do not require a continuous presence of project staff until a walk-away condition is achieved.

2.3 Closure and Reclamation Planning Team

The strategy used by Agnico Eagle is an integrated approach consisting of a consortium between all the Meadowbank departments and Engineering consultant firms. This multidisciplinary team will form the Reclamation Planning Team, which will be responsible for coordinating activities and projects related to closure. The Reclamation Planning Team will be in charge of reviewing the ICRP, developing the Final Closure and Reclamation Plan and communicate its content to all departments of the Project. The communication effort is intended to provide a sufficient level of awareness among operations staff as to the importance of closure and reclamation activities on Project development. The proposed team members are comprised of Engineering and Environment Department staff members for now. External support for the development of the plan is currently provided by SNC Lavalin Inc. (SLI) for the development of the Meadowbank ICRP - Update 2018, although other consultants and contractors may be involved in the preparation of the subsequent ICRP and/or the final plan.

The Reclamation Planning Team will ensure to:

- Take leadership of the Closure Project and develop a work environment characterized by open communication, commitment, dedication to safety and continuous improvement;
- Liaise with Engineering Consultant and manage inter-company relationships;
- Take responsibility for the staffing and organization of the studies required for the interim and final closure and reclamation plans;
- Respect the schedule and permitting requirements;
- Identify closure risks and opportunities;
- Manage documentation; and
- Provide services in an ethical manner that is consistent with the Agnico Eagle corporate policies and its professional reputation.

Furthermore, Agnico Eagle has developed a Responsible Mining Management System (RMMS) Standard. The RMMS supports the application of Agnico Eagle's Sustainable Development policy. All Agnico Eagle Divisions must implement the RMMS outlined in the current standard at all of their sites. Sites include operations, exploration, projects, offices, and closed sites. The application of RMMS does not take precedence over site-specific statutory and permitting requirements. The primary focus of this system is to provide an integrated framework for the management of health, safety, environmental and social acceptability performance. This standard applies to all phases of mining projects including closure and post-closure phases.

2.4 Engagement

Since the last ICRP in 2014 (Golder, 2014), Agnico Eagle continued its efforts in community development agreements in Nunavut. In February 2017, the Meadowbank IIBA was renewed and, Agnico Eagle continued its support of the Kivalliq Mine Training Society and for the unique upward mobility training program for Inuit employees developed at Meadowbank. This program provides training and career path opportunities for Inuit with limited education and work experience in the area of heavy equipment operations, mill operations and site services. Skills acquired through the program are easily transferable to other sectors of the Nunavut economy (Agnico Eagle, 2017a). Since operation of the mine began, Agnico Eagle has continued public consultation on a regular basis by meeting with communities, local stakeholders, regulatory agencies, and local employees. Effective consultation has provided Agnico Eagle with a better general understanding of the rights, interests, values, aspirations, and concerns of the potentially affected stakeholders and in particular the local population. Through this continued consultation Agnico Eagle has developed an operational culture that recognizes and respects these relevant interests in the planning and executing processes at the Meadowbank Mine (Golder, 2016a).

Agnico Eagle is committed to the sustainable development of the Kivalliq region and will strive to maximize the benefits of the Project for all parties involved while minimizing or eliminating any negative impacts or long-term influences on the environment and local community. Agnico Eagle has made it a priority to keep the community informed of the Project advancements or setbacks, and to create constructive dialogue between all parties. Consequently, numerous mine elements have been planned based on community input. This practice of information sharing will continue through all phases of mine development, including the development of the closure and reclamation plan, and will provide a framework for addressing future opportunities and concerns (Golder, 2014). Agnico Eagle recognizes the importance of initiating permitting process and discussion with the Regulators and Community during the preparation of the Final Closure and Reclamation Plan.

Agnico Eagle is committed to the following:

- Supporting the local community for procuring resources and personnel wherever possible;
- Maintaining open lines of communication between all parties involved. Extensive traditional knowledge has been gained and community input has been solicited through meetings, personal interviews, site visits, discussions with local heritage associations, and traditional knowledge-based land use maps;
- Understanding and integrating the Project within a context of ecosystem integrity, social health, and economic stability. Agnico Eagle's objective is to minimize disturbance to the local

environment during operations, and leave the site in as natural a state as possible after closure. Post-closure monitoring will be a key component in ensuring this objective is realized.

2.5 Regulatory Instruments for Closure and Reclamation

2.5.1 Applicable regulatory guidelines

The ICRP follows applicable regulatory guidelines, the principles of which are described in:

- Guidelines for the Closure and Reclamation of Advanced Mineral Exploration and Mine Sites in the Northwest Territories (AANDC/ MVLWB, 2013);
- Mine Site Reclamation Guidelines for the Northwest Territories (AANDC, 2007);
- Abandonment and Reclamation Policy for Inuit Owned Lands;
- Mine Site Reclamation Policy for Nunavut (AANDC, 2002);
- Environment Canada, Environmental Code of Practice for Metal Mines (Environment Canada, 2009).

The Project is located within the Nunavut Territory and is thus subject to the regulatory processes established under the applicable laws and regulations of Canada and of Nunavut. The Project is subject to the Federal and Territorial Acts and Regulations listed below:

- Arctic Waters Pollution Prevention Act and Regulations;
- Canadian Environmental Act and Regulations;
- Fisheries Act and Regulations;
- Navigable Waters Protection Act and Regulations;
- Nunavut Land Claims Agreement and Regulations;
- Nunavut Waters and Nunavut Surface Rights Tribunal Act and Regulations;
- Territorial Lands Act and Regulations;
- Nunavut Environmental Protection Act and Regulations;
- Nunavut Transportation of Dangerous Goods Act and Regulations; and
- Nunavut Mine Health and Safety Act and Regulations.

The Nunavut Water Board (NWB) Water Licence and the Nunavut Impact Review Board (NIRB) Project Certificate for Meadowbank details are found in Table 2-1. A list of the known Federal and Territorial Acts and Regulations applicable to the ICRP and a list of all Authorizations for the Project are found in Tables H-1 and H-2 of Appendix H, respectively.

Table 2-1 : NWB Water Licence and NIRB Project Certificate for Meadowbank

Authorization	Issuing Authority	Note
Type A Water Licence (2AM-MEA1525), expires July 22, 2025	Nunavut Water Board (NWB)	
Project Certificate NIRB-004 Amendment 2, August 2016	Nunavut Impact Review Board (NIRB)	Amendment of Project Certificate to reflect development of Vault Pit Expansion Project

2.5.2 Concordance between the Water Licence Requirements and the ICRP

Agnico Eagle was granted a Type A Water Licence 2AM-MEA1525 in July 2015 (NWB, 2015). This licence authorizes Agnico Eagle to use water and dispose of waste associated with the mining and milling undertakings at the Project mine site. The Licence sets out several conditions with respect to Agnico Eagle's right to alter divert or otherwise use water for the purpose of mining. Specifically, in Part J, the Licence stipulates the conditions applying to abandonment, reclamation and closure. A summary of the specific requirements listed within the water Licence for the ICRP are provided in Table 2-2. The development of a closure and reclamation plan is also a requirement of the NIRB Project Certificate 004.

Table 2-2 : Concordance between the Water Licence Requirements and the ICRP Sections

Part/Condition	Water Licence Requirements	Corresponding Sections in the ICRP
Part C-2	An amount that the Kivalliq Inuit Association confirms is sufficient to secure the mine closure and reclamation costs (including cumulative and legacy liabilities) estimated to be required for the portion of the Project located on Inuit-owned lands	Section 10 (Financial Security)
Part J-1	The Licensee shall notify the Board in writing, at least sixty (60) days prior to any intent to achieve Recognized Closed Mine status.	Section 4.4.1 (Project Mine Plan) Section 8 (Integrated Schedule of Activities)
Part J-2	The Licensee shall complete all progressive reclamation work in accordance with the Interim Closure and Reclamation Plan (2014) referred to in this Part as approved by the Board.	Section 6 (Progressive Reclamation) Section 8 (Integrated Schedule of Activities)
Part J-3	The Licensee shall submit to the Board for approval at least twelve (12) months prior to the expected end of planned mining, a Final Closure and Reclamation Plan. The Final Plan shall incorporate revisions, which reflect the pending closed status of the mine, and include: a. Soil Quality Remediation Objectives along with Canadian Council of Ministers of the Environment (CCME) Guidelines and the Government of Nunavut Environmental Guideline for Site Remediation; b. Environmental Site Assessment plans in accordance Canadian Standards Association (CSA) criteria; and c. An evaluation of the Human Health and Ecological Risk associated with closure options.	Section 5 (Permanent Closure and Reclamation Plan) Section 3 (Project Environment)
Part J-4	The Licensee shall notify the Board in writing, at least sixty (60) days prior to, or as soon as practically possible, any intent to enter into a Care and Maintenance Phase.	Section 7 (Temporary Closure) Section 8 (Integrated Schedule of Activities)
Part J-5	The Licensee shall provide the Board, within thirty (30) days of the Licensee providing notice of intent to enter into Care and Maintenance under Part J, Item 4, a Care and Maintenance Plan that details the Licensee's plans for maintaining compliance with the Terms and Conditions of the Licence.	Section 5 (Permanent Closure and Reclamation Plan) Section 8 (Integrated Schedule of Activities)
Part J-6	The Licensee shall implement progressive reclamation, including progressive covering of the tailings and if practicable re-vegetation.	Section 6 (Progressive Reclamation) Section 8 (Integrated Schedule of Activities)

Part/Condition	Water Licence Requirements	Corresponding Sections in the ICRP
Schedule B-17	A summary of any progressive closure and reclamation work undertaken including photographic records of site conditions before and after completion of operations, and an outline of any work anticipated for the next year, including any changes to implementation and scheduling.	Section 6 (Progressive Reclamation) Section 8 (Integrated Schedule of Activities)
Schedule B-18	A summary of on-going field trials to determine effective capping thickness for the Tailings Storage Facility and Rock Storage Facilities for the purpose of long term environmental protection.	Section 5 (Permanent Closure and Reclamation Plan)
Schedule B-19	An updated estimate of the current restoration liability based on Project development monitoring, results of restoration research and any changes or modifications to the Appurtenant Undertaking.	Appendix E (Reclamation Research Plan) Section 10 (Financial Security)
Schedule I	Monitoring programs according to Table 2	Section 9 (Post Closure Site Assessment)

3.0 Project Environment

The Project Environment details presented herein were extracted from the main documents listed below:

- Final Environmental Impact Statement (Cumberland 2005a), including;
- Baseline Physical Ecosystem (Cumberland 2005b);
- Air Quality Impact Assessment (Cumberland 2005c);
- Baseline Kinetic Test Report (Cumberland 2005d);
- Baseline Terrestrial Ecosystem (Cumberland 2005e);
- Baseline Aquatic Ecosystem (Cumberland 2005f);
- Baseline Traditional Knowledge (Cumberland, 2005g);
- Baseline Archaeology Report (Cumberland, 2005h);
- Meadowbank Gold Project Interim Closure and Reclamation Plan (Golder, 2014);
- Meadowbank Water Management Report and Plan (Agnico Eagle, 2018a);
- Meadowbank Updated Mine Waste Rock and Tailings Management Plan (Agnico Eagle, 2018b).

Regional information has also been updated with information contained in the Whale Tail FEIS (Agnico Eagle, 2016a). This section provides a detailed description of the pre-disturbance conditions and the current development status of the Project.

3.1 Atmospheric Environment

3.1.1 Climatic Conditions

The Meadowbank site is located at the southern limit of the Northern Arctic terrestrial ecozone, with a Low Arctic ecoclimate. This ecoregion is classified as a polar desert and is characterized by long cold winters and short cool summers. Winds are predominately from the northwest and exceed 20 kilometers per hour (km/hr) more than 25% of the time

Climate data has been collected at the Environment Canada meteorological station at Baker Lake, near the Baker Lake Marshaling Facilities, and located approximately 107 km southeast of the Project was selected to represent conditions at the Project site. Long-term (1981 to 2010) meteorological records from the Baker Lake A meteorology station record average daily air temperature in June to September of approximately 7 degree Celsius (°C) with October to May average daily air temperatures of -20.6 °C. The mean annual air temperature at the Project site is approximately -11.3 degrees Celsius (°C). The monthly average temperature ranges from -31.3°C in January to +11.6°C in July, with above-freezing averages for only four months of the year i.e., June to September.

Total annual precipitation at Baker Lake station is low, averaging just 249 millimeters (mm) per year, with 59% of precipitation falling as rain, and 41% falling as snow. Table 3-1 summarizes estimated monthly climate characteristics at the Project site. Average annual evaporation for small waterbodies in the Project area is estimated to be 248 mm between June and September. The average annual loss of snowpack to

sublimation and snow redistribution is estimated 29% of the total precipitation for the winter period and occurs between October and May.

Table 3-1 : Estimated Mine Site Monthly Climate Characteristics (Agnico Eagle, 2018b)

Month	Max. Air Temp. (°C)	Min. Air Temp. (°C)	Rainfall (mm)	Snowfall (mm)	Total Precip. (mm)	Lake Evap. (mm)	Min. Relative Humidity (%)	Max. Relative Humidity (%)	Wind Speed (km/h)	Soil Temp. (°C)
January	-29.1	-35.5	0	11.2	11.2	0	67.1	75.9	16.3	-25.5
February	-27.8	-35.2	0	10.5	10.5	0	66.6	76.5	16.0	-28.1
March	-22.3	-30.5	0.1	14.6	14.6	0	68.4	81.4	16.9	-24.9
April	-13.3	-22.5	2.3	16.7	19.0	0	71.3	90.1	17.3	-18.1
May	-3.1	-9.9	9.8	11.3	21.1	0	75.7	97.2	18.9	-8.0
June	7.6	0.0	14.5	3.9	18.4	8.8	62.6	97.2	16.4	2.0
July	16.8	7.2	36.7	0.0	36.7	99.2	47.5	94.3	15.1	10.5
August	13.3	6.4	45.5	0.9	46.4	100.4	59.2	97.7	18.4	9.3
September	5.7	0.9	30.1	8.8	38.9	39.5	70.8	98.6	19.3	3.6
October	-5.0	-10.6	3.5	30.3	33.8	0.1	83.1	97.4	21.4	-2.8
November	-14.8	-22.0	0	23.6	23.6	0	80.6	91.1	17.9	-11.7
December	-23.3	-29.9	0	15.0	15.0	0	73.3	82.7	17.7	-19.9

Note: Some numbers may not add due to rounding.

Data from Baker Lake A station is available from 1946 to 2011. During this period, the data quality is good, with the exception of years 1946 to 1949, and 1993 which were removed from the compilation.

Source: Meadowbank Updated Mine Waste Rock and Tailings Management Plan (Agnico Eagle, 2018b).

Short-duration rainfall, representative of the Project are presented in Table 3-2, based on Intensity duration-frequency (IDF) curves available from the Baker Lake A meteorological station (1987-2006) operated by Environment Canada.

Table 3-2 : Estimated Mine Site Extreme 24-hour Rainfall Events (Agnico Eagle, 2018a)

Return Period (years)	Precipitation (mm)
2	246
5	295
10	322
20	345
100	391
*Source: Meadowbank Water Management Report and Plan (Agnico Eagle, 2018a), from SNC-Lavalin 2012 Water Management Plan (SNC, 2013)	

3.1.2 Climate Change

Closure and reclamation planning must consider the potential impact of climate change on site conditions (Golder, 2014). BGC (2003) suggests that global average temperature may increase by about 2°C by 2100 due to climate change. However, this increase may be for sites located at 50°N. The climate in the Arctic is changing faster than at mid-latitudes (IPCC, 2014). The most recent set of climate model projections (CMIP5) predict an Arctic-wide year 2100 multi-model mean temperature increase of +13°C in late fall and +5°C in late spring under the IPCC's "business as usual scenario". IPCC climate change mitigation scenario results in a year 2100 multi-model Arctic wide prediction of +7°C in late fall and +3°C in late spring (Overland et al., 2013). The effects of changes of this magnitude to terrestrial, aquatic and marine ecosystems, social and economic systems of the Arctic are an active area of research (Agnico Eagle, 2016a).

Permafrost is sensitive to climate change and an increase in air temperature will likely cause natural permafrost degradation. By the middle of the 21st century, the effect of temperature change is predicted to reduce near-surface permafrost by 12% to 15% once equilibrium conditions become established under the new temperatures. The predicted increase of 15% to 30% in active layer thickness will reach equilibrium relatively much faster. Studies have indicated that the boundaries of discontinuous and continuous permafrost are expected to move northward due to climate change (Woo et al. 1992). The sensitivity of permafrost to climate change in Canada has been assessed by Smith and Burgess (1998, 2004) by categorizing the response of ground thermal conditions to climate and the effects of permafrost thaw on terrain stability. The impacts of the warming and thaw of permafrost will be most important in areas of ice-rich permafrost. The Project is within the continuous permafrost zone, and the ground ice content is reported to be between 0 and 10% (Heginbottom et al. 1995). Within the Project area, permafrost is regionally predicted to be moderately thermally sensitive to climate change, with a low to moderate physical response resulting from thaw (Smith and Burgess 2004). Appendix I shows the permafrost map of Canada. Predictions based on a warming of 4°C to 5°C over the next 50 years (NRC, 2010), which approximately double the rate described above from BGC (2003) and IPCC (2014), suggest that the Project areas would remain within the zone of continuous permafrost under this scenario. The active layer thickness would be expected to increase, while the total thickness of permafrost may slowly reduce in time.

However, these changes are not anticipated to compromise the planned permafrost encapsulation strategies for the rock storage and tailings storage facilities.

3.1.3 Air Quality

3.1.3.1 Air Quality and Dustfall Monitoring Plan

The primary sources for air quality emissions for the Project are (Golder, 2014):

- Diesel fuel combustion emissions from the power plant and vehicles; and
- Fugitive dust emissions from tailings and waste rock disposal, process operations (including ore hauling), and road travel.

Other potential sources of emissions are the milling and materials handling operations, although no Particulate Matter (PM) is anticipated from these wet streams. Potential dry PM emission sources include the truck dump bin vent, primary crushing, ore stockpile, pebble crushing plant, and furnace. Plant design includes the installation of dust control equipment that will control emissions of PM to the ambient air for all these sources.

Fugitive dust emissions from the tailings storage facilities and rock storage facilities is caused by three distinct activities: equipment traffic in the storage areas, waste aggregate unloading (handling), and wind erosion of pile surfaces and ground areas around open rubble piles. Fugitive dust from the coarse ore stockpile will comprise emissions from the conveyor ore drop at the top of the pile and wind erosion. However, road travel is anticipated to be the largest contributor of dust emissions at the mine site, caused by entrainment in vehicle wheels and the wake created by moving vehicles.

Yearly, the monitoring program at Meadowbank is conducted according to the Air Quality and Dustfall Monitoring Plan - Version 2 (Agnico Eagle, November, 2013d). The objective of the program is to measure dustfall, NO2, and/or suspended particulates (TSP, PM10, PM2.5) at the four monitoring locations around the Meadowbank site. Locations were established in 2011 in consultation with Environment Canada. No other gaseous pollutants were monitored because of low concentrations predicted in pre-construction dispersion modelling (Cumberland 2005c).

In 2016 and 2017, results obtained for the measured parameters were compared to Government of Nunavut (GN) Environmental Guidelines for Ambient Air Quality (October, 2011) for TSP, PM2.5 and NO2; BC Air Quality Objectives (August, 2013) for PM10; and Alberta Ambient Air Quality Guidelines (August, 2013) for dustfall. The Canadian Ambient Air Quality Standards for PM2.5 (2015) are also referenced.

No TSP samples exceeded the relevant 24-h GN standard of 120 µg/m^3, nor did annual average TSP values exceed the GN guideline of 60 µg/m^3. For PM10, no samples exceeded the BC Air Quality Objective of 50 µg/m^3 for the 24-h average. For PM2.5, no samples exceeded the GN guideline of 30 µg/m^3 or the Canadian Ambient Air Quality Standard of 28 µg/m^3 for the 24-h average (2016 and 2017 Annual Reports, Agnico Eagle 2017a and 2018b).

The Alberta recreational area guideline for dustfall was exceeded in one out of 47 samples. While the applicability of these guidelines is not well defined, there are no recreational or residential users within the vicinity of the mine site and exceedance of one sample is not expected to result in significant aesthetic or nuisance concerns. The industrial area guideline was not exceeded in any sample.

The GN annual average standard for NO_2 of 32 ppb was not exceeded, with a maximum monthly average of 2.4 ppb.

Estimated greenhouse gas emissions for the Meadowbank site as reported to Environment Canada's Greenhouse Gas Emissions Reporting Program in 2017 were 197,678 tonnes CO_2 equivalent, which is similar to the value obtained in 2015 and 2016 (187,280 and 184, 223 tonnes CO_2 equivalent).

Incinerator stack testing has also been completed in 2015, 2016 and 2017. A summary of incinerator stack testing results is provided on an annual basis in the Meadowbank Annual Report.

Overall, there are no apparent trends towards increasing air quality concerns at the Meadowbank site.

In response to community concerns of dust generation, Agnico Eagle has conducted studies of dustfall along the Meadowbank All Weather Access Roads (AWAR) since 2012. These studies characterize dust deposition rates and compare to those predicted in the Final Environmental Impact Statement (FEIS).

Based on results, it is unlikely that impacts to VECs (Valued Ecosystem Components, vegetation community productivity and wildlife) due to dust are occurring beyond FEIS assumptions.

Results of the visual assessment and dust sampling program indicated that Tetra Flake is the optimal product for use in this program, to reduce dust along the AWAR. In 2017, Agnico Eagle applied Tetra Flake to the three areas of concern along the AWAR identified by the HTO, as well as to the locations treated annually in the hamlet of Baker Lake and near the Meadowbank site. Wildlife monitoring to date has indicated no significant road-related effects, dust monitoring has indicated no trend towards increasing rates of dustfall, and risk assessment has indicated no incremental risk for wildlife from chemical contaminants near the AWAR. Therefore, impacts of Meadowbank AWAR road dust do not appear to be exceeding predictions made in the FEIS.

3.2 Physical (Terrestrial) Environment

3.2.1 Topography and drainage basin

The landscape in the region and immediate vicinity of the Project consists of rolling hills and relief with low growing vegetative cover and poor soil development. Numerous lakes are interspersed among boulder fields, eskers and bedrock outcrops, forming complex drainages. The Project mine site is located close to the surface water divide between the Back River basin, which flows north to northeast towards the Arctic Ocean, and the Quoich River basin, which flows east to southeast into Chesterfield Inlet. The terrain along the All Weather Access Road (AWAR) has low relief, and is generally gently-to moderately-sloping with short, steep slopes occurring locally on some bedrock surfaces. Elevation ranges from approximately 130 m above mean sea level at lakeshores up to 200 m on ridge crests (Golder, 2014).

3.2.2 Surficial Geology

Laterally extensive deposits of glacial till cover the Project mine site. Block fields of weathered parent material interspersed with thin veneers of till or organics are common. However, the predominant surficial material is locally derived glacial till. Till thickness at site was determined from core and reverse circulation overburden drill holes and ranges up to 12.5 m with an average of less than 3 m. Appendix J shows the

regional geology of the Meadowbank area and contours that indicate the approximate thickness of overburden (till) (Golder, 2014).

In general, the till can be described as unsorted, medium brown, silty sand/gravel till, with between 20% and 40% fines (silt and clay) of locally derived volcanic, sedimentary, and lesser granitic clasts. Clast sizes range from granule to boulder with a high proportion in the granule to pebble range. In most of the channels between the lakes and ponds, coarse-grained soils are common. In some, the finer organic material and sediments have been removed by flow between lakes, leaving a stony pavement. In others, solifluction has brought coarse grained material into the low-lying areas from adjacent slopes (Golder, 2014).

Small deposits of deltaic sand and fine gravel flank some streams along Third Portage Lake. Glaciofluvial deposits are volumetrically insignificant. The site was above the last glacial marine transgression; consequently, no glaciomarine deposits are known in the area. Material recovered from beneath the Project lakes during geotechnical drilling along the proposed dike alignments can be generally described as cobbles and gravel with traces of sand, silt, and clay. Samples of sand and clay were obtained locally. Further details on the rock types comprising the Portage, Goose, and Vault deposits and their relative proportions within the footprint of the deposits can be found in the Baseline Physical Ecosystem Report (Cumberland, 2005b).

Two main faults have been encountered in the geotechnical drilling completed to date: the Second Portage Lake fault, and the Bay Zone fault. The Second Portage Lake fault trends in a northwest-southeast direction along Second Portage Lake, while the Bay Zone Fault trends in a north-south direction. Stratigraphic contacts are also pervasive structures. No sites of palaeontological or palaeobotonical significance have been found (Golder, 2014).

The terrain along the AWAR is dominated by undulating and irregular bedrock surfaces, veneers and blankets of till and/or weathered (frost-shattered) bedrock (felsenmeer), and discontinuous organic veneers. Occasional marine (beach) deposits and very small glaciofluvial deposits are present locally. Shallow, hand-dug soil pits excavated in late July 2005 indicate thaw to depths of 1 m or less on imperfectly- to poorly-drained upland till surfaces at this time of year (Cumberland 2005b).

3.2.3 Bedrock Geology

The Project mine site is underlain by a sequence of Archaean greenstone (ultramafic and mafic flow sequences) and metasedimentary rocks that have undergone polyphase deformation resulting in the superposition of at least two major structural events. Enclosed within the greenstone are volcaniclastic sediments, felsic-to-intermediate flows and tuffs, sediments (greywackes), and oxide iron formations. The sequence also contains sericite schists, which are believed to be altered felsic flows or dikes. The ultramafic rocks are variably altered, containing serpentinite, chlorite, actinolite, and talc. The ore in the Vault deposit is hosted in intermediate volcanic rocks. The ore in the Portage deposit is hosted in iron formation rocks (Golder, 2014).

3.2.4 Geological Hazards and Seismicity

The mine site is located in an area of relatively low seismic risk. The peak ground acceleration (PGA) for the area was estimated using seismic hazard calculator from the 2010 National Building Code of Canada-

Natural Resources Canada (NRC) website (NRC 2010). The estimated PGA is 0.019 g for a 5% in 50-year probability of exceedance (0.001 per annum or 1 in 1,000 year return) and 0.036 g for a 2% in 50-year probability of exceedance (0.000404 per annum or 1 in 2,475 year return) for the area (see Appendix J for the seismic zoning map).

3.2.5 Permafrost

The Project site is located within a region of continuous permafrost (see Appendix I). Permafrost is defined as ground that remains at or below 0°C for at least two years. Permafrost does not necessarily contain ice; rather, its definition is based solely on the temperature of the mineral or organic parent material. Permafrost in the Project area is considered stable and has temperatures colder than -5°C (Cumberland 2005a). In this region, the layer of permanently frozen subsoil and rock is generally deep and overlain by an active layer that thaws during summer. The depth of the active layer is estimated to range between 1 and 3 m. Permafrost thickness (defined by the depth of zero degree isotherm in the baseline study area is expected to be approximately 425 m below ground surface). Permafrost depths are estimated to be between 450 and 550 m, depending on proximity to lakes, slope, aspect, and other site-specific conditions. The measured active layer depth in the project area currently ranges from about 1.3 m in areas of shallow overburden and away from the influence of lakes, up to 4.0 m adjacent to lakes, and up to 6.5 m beneath the streams connecting Third Portage and Second Portage lakes. Below Whale Tail Lake, a talik is expected to form a continuous channel that is closed in the northern portion of Whale Tail Lake below the open pit and becomes open towards the south and central portion of the lake. Circular lakes with a radius greater than 300 m, or elongated lakes with a half-width of at least 150 m, are assumed to be connected to the deep groundwater flow regime through open taliks.

Late-winter ice thickness on freshwater lakes is approximately 2.0 m. Ice covers usually appear by the end of October and are completely formed in early November. The spring ice melt typically begins in mid-June and is complete by early July, depending on site specific conditions of water depth and exposure. Where water depth is greater than about 2.0 to 2.5 m, taliks are expected. Round lakes that do not freeze to the bottom in winter and have a diameter in the order of 570 m or greater, or elongated lakes that do not freeze to the bottom and have a width in the order of 320 m or greater, are expected to have a talik that extends through permafrost. The taliks beneath Second and Third Portage lakes likely extend through permafrost. The talik beneath Vault Lake likely does not penetrate through permafrost.

The ground ice content of permafrost soil and rock in the Meadowbank area is expected to be between 0% and 10% (dry permafrost) based on regional scale compilation data. Locally on land, ice lenses and ice wedges are present, as indicated by ground conductivity, and by permafrost features such as frost mounds. These areas of local ground ice are generally associated with low-lying areas of poor drainage.

Rock and soil-related terrain instability is a minor concern in the Meadowbank project area. Although permafrost will degrade in certain areas, for the most part the permafrost is “dry,” and has low ground ice content. The exception is the wetlands occupying lowlands adjacent to lakes and ponds where excess ground ice is present and thaw instability is foreseeable. These impacts can be mitigated using currently accepted permafrost engineering practices as part of dike construction, drawdown and re-watering of lakes, pit development, and waste rock facilities and Tailings Storage Facilities construction and closure.

3.2.6 Hydrogeology

In areas of continuous permafrost, there are two groundwater flow regimes: a deep regime beneath the permafrost and a shallow regime in the active layer near the ground surface (see Appendix J). The deep groundwater regime is connected to taliks located beneath large lakes. The water level elevations in lakes that have these deep taliks provide the driving force, or hydraulic head, for the deep groundwater flow. The presence of the thick and low permeability permafrost beneath land located between large lakes results in negligible recharge to the deep groundwater flow. Smaller lakes, which have taliks that probably do not extend down to the deep groundwater regime, do not influence the groundwater flow in the deep regime. Consequently, recharge to the deep groundwater flow regime is predominantly limited to areas of talik beneath large surface water bodies (Golder, 2014).

From late spring to late summer when temperatures are above 0°C, the active layer becomes thawed. Within the active layer, the water table is expected to be a subdued replica of the topographic surface. Groundwater gradients, or the slope of the groundwater level, are assumed to be similar to topographic gradients. Locally, groundwater in the active layer would flow to local depressions and ponds that drain to Second Portage and Third Portage lakes, or would flow directly to these two water bodies (Golder, 2014).

There does not appear to be a detectable difference in the hydraulic conductivity of the various rock types. Ultramafic rocks, at a given depth, have similar hydraulic conductivity to those of the Intermediate Volcanics at the same depth. The hydraulic conductivity of the shallow exfoliated and weathered bedrock and faults, regardless of rock type, is generally higher than the deeper, less fractured rock (Golder, 2014).

Groundwater sources from either the active layer or from the deep groundwater regime below the permafrost are not presently utilized for drinking water at the Project site, due to the presence of deep permafrost, the seasonal nature of the active layer, and the availability of good quality surface drinking water sources in the vicinity of the Project site (Golder, 2014).

3.2.7 Surface Water Hydrology

Hydrology in the Project area is highly influenced by geographic location, the headwater nature of the Project watersheds, and by the seasons. The Project area streams are relatively short, small- to medium-width ephemeral channels with boulders. They connect all Project area lakes in a cascading network (Golder, 2014).

Snowmelt runoff in the region begins in the period from late May to mid-June, and the snowmelt peak is often the peak flow for the year. Secondary peaks due to rainfall events can occur during the summer and can sometimes exceed snowmelt peaks. Flows typically decline through the late summer and fall, with freeze-up occurring in late September for the smallest streams and in late November for the medium channels. All channels are anticipated to freeze to the bottom with zero flows over the winter period (Golder, 2014).

Third Portage Lake currently drains into Second Portage Lake via two small, ephemeral channels that are impassable by fish. The width of these channels is between 50 to 150 m. The construction of the West Channel Dike in 2009 blocked a third outlet channel with similar characteristics. The elevation difference is 1 m between these two lakes (Golder, 2014).

Discharge from Second Portage Lake flows south into Tehek Lake via a wide connecting channel and small chute about 50m long. Vault, Wally, and Drill Trail lakes are connected in succession. Water from these lakes is directed to Second Portage Lake, just north of its outlet to Tehek Lake. Average runoff depths for the four monitored basins (2PL, 3PL, Drill Trail Lake, Turn Lake) over 2002 to 2004 ranged from 112 mm for Third Portage Lake to 176 mm for Drill Trail Lake. The variation in runoff correlates roughly with the relative percentage of lake surface area in each basin. Site runoff data were combined with analysis of available regional stream flow data to estimate long-term average and extreme discharge characteristics for the Project area. Table 3-3 summarizes the mean monthly runoff from May through October, as a proportion of total annual runoff.

Table 3-3 : Estimated Mean Monthly Runoff Depth as Proportion of Annual Depth – Project Basin

Month	Percent of Mean Annual Runoff
May	**0%**
June	**30%**
July	**40%**
August	**20%**
September	**9%**
October	**1%**
Year	**100%**
*__Source:__ Cumberland 2005b	

Table 3-4 summarizes the results of frequency analyses of annual runoff for Project area basins. Analysis of the available data from the four regional stream flow stations was carried out to develop estimates of flood flows and low flows for the outlets of Turn, Drill Trail, Third Portage, and Second Portage lakes (Golder, 2014).

Table 3-4 : Estimated Annual Runoff Depths – Project Basin

Return Period (Years)	Condition	Estimated Basin Runoff Depth (mm)		
		Drill Trail & Turn	Third Portage	Second Portage
100	WET	378	238	284
50	WET	345	217	259
20	WET	300	189	225
10	WET	266	168	200
5	WET	230	145	173
2	MEDIAN	175	110	131
5	DRY	135	85.1	101
10	DRY	118	74.3	88.5
20	DRY	105	66.2	78.8
50	DRY	92.6	58.4	69.5
100	DRY	84.8	53.4	63.6
* **Source**: Cumberland 2005b				

3.2.8 Lake and Littoral Zone Characteristics

Several bathymetric surveys were conducted for the lakes in the Project mine site area (Golder 2002, 2003, 2006, 2008a and b, Dougan 2011). The surface area, volume and average depth of these lakes are summarized in Table 3-5.

Table 3-5 : Characteristics of Lakes at Mine Site Area

Lake	Surface Area (10^3 m^2)	Water Volume (10^6 m^3)	Average Depth (m)
Second Portage	3,851	29.72	7.72
Third Portage	33,065	446.23	13.50
Vault	980	2.2	10 (maximum)
Wally	7,671	27.90	3.64
Turn	3,235	26.47	8.18
Drill Tail	2,149	11.67	5.43
Source: Golder 2006			

These water bodies are headwater lakes, and the surface area for each constitutes an appreciable portion of their respective basin drainage area. Small channels connect the lakes in the Project mine site area, although there is little flow between lakes during most of the year. The ice-free season is very short, with ice breakup occurring in late-June to mid-July and ice freeze-up beginning in late September or early October, with complete ice cover by late October. No flow is anticipated between lakes during the ice cover period. Maximum ice thickness is at least 2 m by March/April (Golder, 2014).

Lake shorelines are covered predominantly with a complex mixture of boulders and large cobble with some gravel to a depth of between 4 to 6 m below the surface. These substrates are very stable and not subject to erosion except by ice scouring and ice rafting. Below a depth of about 6 m, there is a transition to fines, with the bottom consisting predominantly of silt/clay. The organic carbon content of the fine sediment provides a food source for burrowing invertebrate worms and chironomid larvae. The majority of the lakes are relatively shallow, with average depths between 3.6 and 13.5 m maximum depth. In larger lakes, such as Second and Third Portage lakes, maximum depth in certain areas can exceed 40 m (Golder, 2014).

Appendix J shows the bathymetry data for Second and Third Portage, Vault, Wally, Turn and Drill Tail lakes.

3.3 Chemical Environment

3.3.1 Soil Chemistry

All samples of overburden (till) other than Third Portage trench spoil piles have no potential to generate Acid Rock Drainage (ARD). The ARD potential of trench spoil piles is due to the higher sulphide content of soil directly above the ore deposit. Rock samples collected along the AWAR are indicated to be non-acid generating (Cumberland 2005b).

3.3.2 Sediment Quality

Sediment can be an important source or sink for contaminants such as metals. Contaminants entering aquatic systems (via tributary streams or directly from local sources) are usually associated with suspended particulate material in the water column that eventually settle in depositional areas as sediment, especially in deeper areas of lakes. Sediment provides a long-term, temporal record of deposition, integrating concentrations over time (Golder, 2014).

Lakebed substrate in the project area is a key habitat attribute that dictates the species composition and abundance of benthic invertebrates and its importance as feeding habitat by fish. Water depth is the strongest determinant of physical features of the lake substrate, especially grain size. Between the surface and about 4 m depth, substrate consists of a heterogeneous mixture of boulder, rock, and cobble. At depths of less than 2 m, the lakebed substrate is ice scoured and subject to erosion by wave-driven currents. Below 4 m depth, sediment grain size diminishes with sand, silt, and clay becoming more abundant. At depths of 6 to 8 m and greater, bottom sediment consists of a uniform silt/clay mixture that dominates aerial substrate distribution in Second Portage Lake (70%) and Third Portage Lake (81%) (Golder, 2014).

Sediment samples at depths of 8 m or greater collected from numerous locations throughout the Project mine site area and reference lakes revealed a great similarity in grain size, organic carbon (2.5% to 5%)

and metals concentration. Total metals concentration in sediment was similar among project and reference lakes and over years, suggesting that the erosional and geochemical processes within lakes in the Meadowbank region are similar (Golder, 2014).

At Meadowbank, all sediment metals concentrations observed can be regarded as background because of the near absence of anthropogenic activities. Metals concentrations are generally similar across the area, including reference lakes, and reflect the natural, mineralized nature of the sediments and low rate of deposition. Adverse impacts to the benthic community were not observed and fish tissue metals concentrations are low and similar to concentrations in fish found in other pristine lakes (Golder, 2014).

3.3.3 Surface Water Quality

3.3.3.1 Baseline Surface Water Quality

The lakes in the Project mine site are ultra-oligotrophic, soft water, nutrient poor and isothermal, with neutral pH and high oxygen concentrations year round. Limnological conditions tend to be very stable. The vertical distribution of temperature, oxygen and nutrients is typically uniform during summer and winter, with minor temporary stratification. Water clarity is high, with Secchi depths of 10 m or more. The dissolved and suspended solids concentrations are very low. The headwater nature of the Project lakes means that there are no large streams entering or leaving the watershed. As a result, external sources of nutrients or sediment to potentially contribute to nutrient enrichment or productivity of the system are limited (Cumberland, 2005a).

Due to the site's northern latitude and climate, lakes naturally experience long periods of cold temperatures and low light levels during the winter months. Ice covers the lakes for extended periods of time each year and low water temperature exists year round. As a result of the ice cover, gas exchange with the atmosphere is limited most of the year. However, oxygen concentrations remain high under the ice because of the low rates of biological activity and decomposition of organic material (Golder, 2014).

Turbidity and suspended and total dissolved solids in surface waters are low, typically below laboratory detection (<1.1 NTU, <1 mg/L and <10 mg/L, respectively). Hardness (4.4 to 9.5 mg/L), and dissolved anions (chloride, fluoride, sulphate) were also very low and near detection limits (<0.05 to 0.06 mg/L). Surface water has circumneutral pH (6.6 to 7.7) and low conductivity (5 to 77 µS/cm). Nutrient concentrations (nitrogen, carbon, phosphorus) in the project lakes do not differ significantly within or between lakes and seasons and are typical of ultra-oligotrophic lakes. Nitrogen nutrients (nitrate, nitrite, ammonia, dissolved phosphate) seldom exceed 0.001 mg/L, while dissolved phosphate ranges from <0.001 to 0.003 mg/L. Dissolved organic carbon (DOC) concentrations range from 1.4 to 2.3 mg/L (Golder, 2014).

Total and dissolved metals concentrations are remarkably similar within and between lakes between 1997 and 2002. Total antimony, arsenic, chromium, copper, mercury, and nickel concentrations from lakes in the Project mine site are all below laboratory detection limits and well below water quality guidelines for the protection of aquatic life (CCME, 2007). In addition to common salts (sodium, magnesium), the only metals to exceed detection limits are aluminum (0.006 to 0.014 mg/L), lead (up to 0.0012 mg/L), and zinc (0.001 to 0.019 mg/L). Only lead marginally exceeded surface water quality guidelines at a few sampling stations. Dissolved metals concentrations comprise the vast majority of total metals concentrations where results exceeded detection limits, indicating that nearly all metals are dissolved and not associated with

particulates, which is consistent with the low suspended solids concentrations observed (Cumberland, 2005a). Results from the average baseline water quality in Third Portage, Second Portage and Wally are provided in Appendix M.

Spring freshet water is moderately acidic and has very low sulphate, dissolved metals, and total dissolved solids. The quality of water infers limited interaction of surface drainage water with the underlying bedrock (Cumberland, 2005a).

3.3.3.2 Surface Water Quality Monitoring Program

There are many monitoring programs conducted to evaluate water quality at Meadowbank. These are mainly a requirement of the Meadowbank Type A Water Licence. They are designed to provide immediate feedback such that mitigation or adaptive management can be implemented. The site map with the different surface water sampling locations is presented in Appendix G.

As outlined in the FEIS, the Core Receiving Environment Monitoring Program (CREMP) is intended to monitor large-scale (e.g. basin-wide) changes in physical and biological variables to evaluate potential impacts from all mine related sources in the receiving environment. It therefore serves as the most important monitoring program for evaluating short term and long term potential impacts to the aquatic environment. In 2016, Agnico Eagle implemented an updated CREMP plan in accordance with the terms of their renewed NWB water Licence (2AM-MEA1525) for the Meadowbank site. Each year, information from the CREMP and other targeted programs is evaluated in an integrated manner and reported as the Aquatic Effects Management Program (AEMP) to determine any required changes to mitigation practices. The AEMP for the Meadowbank site was developed in 2005 as part of the project's Final Environmental Impact Statement (FEIS), and has been formally implemented since 2006. The AEMP summarizes the results of each of the underlying monitoring programs, including the CREMP, reviews the inter-linkages among the monitoring programs; integrates the results, and recommends management actions.

Aspects of the mine that were identified in the FEIS as potentially leading to significant impacts during operations are summarized Table 3-6, along with results of the monitoring programs aimed at assessing these impacts. Note that this assessment focuses on comparing current measured effects with predictions made in the Physical Environment Impact Assessment Report (Cumberland, 2005b); it does not attempt to compare effects of all aquatic environment monitoring programs with respective threshold or trigger values developed for AEMP programs or to regulatory criteria imposed. In 2017, monitoring was conducted for the constructed spawning pad, located at stream crossing R02 along the all-weather access road (AWAR) to Baker Lake, as well as for several onsite habitat compensation features (East Dike, Bay-Goose Dike, Dogleg Ponds).

Onsite, interstitial water quality within the dike faces met Canadian Council of Ministers of the Environment (CCME) Guidelines for aquatic life with the exception of TSS in one sample, and healthy periphyton community growth with increasing biomass was observed.

Table 3-6 : Predicted and Measured impacts to Water Quality (Agnico Eagle, 2018a)

Potential Impact	Potential Cause(s)	Proposed Monitoring	Monitoring Conducted (2017)	Predicted Impact	Measured Impact (2017)
Impaired Wally Lake water quality	Vault attenuation pond effluent discharge, dike leaching	Effluent and receiving environment monitoring	Receiving environment: CREMP Effluent: MMER, Water Licence	Receiving environment: CREMP results ≤CWQG except arsenic and cadmium Effluent: ≤MMER	Receiving environment: CREMP results all ≤CWQG Effluent: ≤MMER and Water Licence Criteria
Impaired Second Portage Lake water quality	Portage attenuation pond effluent discharge, dike leaching; (East Dike seepage)	Effluent and receiving environment monitoring	Receiving environment: CREMP Effluent: MMER, Water Licence	Receiving environment: CREMP results ≤CWQG except cadmium Effluent: ≤MMER, Water Licence	Receiving environment: CREMP results all ≤CWQG Effluent: ≤MMER and Water Licence Criteria except 2 TSS samples
Impaired Third Portage Lake water quality	Portage attenuation pond effluent, dike leaching	Effluent and receiving environment monitoring	Receiving environment: CREMP (MMER effluent monitoring not required)	CREMP results ≤CWQG except cadmium	Receiving environment: CREMP results all ≤CWQG

Overall, the FEIS predicted a low impact on the receiving environment water quality, designated by <1x change in CCME Water Quality Guidelines, and no exceedances of MMER/NWB Water Licence criteria. As described in Table 3-6, with the exception of 2 TSS samples for effluent discharged to Second Portage Lake, these predictions were not exceeded in 2017. On average, the TSS exceedances did not exceed 10% of the Licence limit of 30 mg/L, and discharge to the receiving environment ceased immediately upon receipt of results (2 days after sample collection). These exceedances are therefore not expected to have a significant impact on receiving environment water quality. Furthermore, no exceedances of TSS triggers were observed in Second Portage Lake through CREMP sampling (2017 Annual Report, Agnico Eagle 2018c).

3.3.4 Groundwater Quality

3.3.4.1 Baseline Groundwater Quality

Groundwater baseline data were collected from four monitoring wells located within the three main rock types in the area of the Goose and Portage deposits and from the talik underlying the proposed tailings

facility area at Second Portage arm. Wells were not installed in the Vault deposit as it lies within continuous permafrost.

No samples reported Canadian Metal Mining Effluent Regulations (MMER, EC, 2009) exceedances, although some samples reported exceedances of Canadian Environmental Quality Guidelines (CCME 2007). Concentrations of total metals generally exceeded those of dissolved metals for all wells. The chemical signature of groundwater (from major ion chemistry) is distinct between each lithology and differs from that of lake water. Groundwater quality is generally consistent with rock leachate characteristics, with the majority of constituents present in rock leachate also present in the groundwater of the corresponding lithology (Golder, 2014).

The groundwater is brackish to saline with high total dissolved solids and chloride concentrations. Based on data from other sites in the Canadian Shield, it is expected that the salinity of the groundwater will increase with depth. Water samples collected from monitoring wells installed in the talik beneath Second and Third Portage lakes to depths of 175 m have chloride concentrations of up to 626 mg/L and total dissolved solids values up to 800 mg/L. This represents a salinity of 1.1, where salinity is equal to approximately 1.8 times the chloride concentration (in parts per thousand). Water samples collected from a number of large lakes in the area have chloride concentrations of less than 1 mg/L. By comparison, sea water has chloride concentrations of approximately 19,000 mg/L (Golder, 2014).

3.3.4.2 Groundwater Monitoring Program

As required by NIRB Project Certificate No.004 (Condition 8), in 2017, semi-annual groundwater sampling has been undertaken through the groundwater monitoring program at Meadowbank. It was conducted in accordance with the Groundwater Monitoring Plan (Agnico Eagle, 2018c). The objective of this program is to document any effects of mining on groundwater quality, particularly with respect to tailings deposition. This is done by monitoring the salinity of shallow and deep groundwater. The recorded data is also used to update water quality predictions at the site. In 2017, efforts were made to collect data to enable comparison of groundwater samples collected to other site water to ensure full comprehension of results and patterns. Therefore, an extensive groundwater sampling program took place. The program aimed at better characterizing natural groundwater chemistry, potential sources of contaminants at the mine site, and potential link between surface and groundwater. In 2017, a total of seventeen (17) groundwater samples were collected. Those sampling stations name and type, general location, sampling period, and concentrations of all parameters measured in groundwater related samples in 2017 are provided in the 2017 Factual report (Agnico Eagle, 2018c).

For the 2017 groundwater campaign, emphasis was put on understanding groundwater water quality and to establish comparatives within onsite water management. With the understanding that each groundwater sample has a distinctive signature defined by its dissolved concentrations of chemical constituents, the interpretation of groundwater chemistry data contributes to a better understanding of groundwater flow. Thus contaminants migration and transformation processes along pathways as water composition varies. This strategy can also help identifying zones where surface water and groundwater interact and defining if the interaction is continuous or only during permafrost thawing.

The 2017 groundwater program was the focus of a detailed and consistent approach that will need consistency (same station need to be sample through time) moving forward. Future groundwater monitoring program will be adapted at Meadowbank. Moreover, methods to obtain representative

groundwater samples and improve well designs under arctic climate continue to be investigated. The groundwater monitoring program will be updated as the project progresses. New information from the hydrogeological numerical model and from hydrogeological field data will be integrated throughout. Moreover, methods to obtain representative groundwater samples and improve well designs under artic climate continue to be investigated.

3.3.5 Acid Rock Drainage and Metal Leaching Potential

3.3.5.1 Baseline Geochemical Data

A material geochemical program was developed to characterize the Project geologic materials and define the nature and magnitude of impacts that may result from the interaction between these materials and the environment during all phases of project development, including post-closure. This program involved characterizing (Golder, 2014):

- Geochemistry of bedrock in the area of the proposed open pits and planned mine infrastructure away from the ore deposits through static testing;
- Tailings material and overburden through static testing; and
- Long-term weathering behaviour of selected pit rock and tailings samples with respect to acid rock drainage (ARD) potential and constituent leaching rates through kinetic testing.

Metal concentrations in leachate generated by static and kinetic tests were compared to the Canadian Council of Ministers of the Environment's (CCME) Quality Guidelines (CCME, 2007) for the protection of freshwater aquatic life, and to the Canadian Metal Mining Effluent Regulations (EC, 2009). Pit rock samples were obtained from exploration drill core specifically for ARD and metal leaching testing to determine the spatial and compositional variability of each rock unit to be disturbed, including targeted testing of starter pit rock that was used for construction of mine site roads and dikes. Analysis of weathered drill cores that had been exposed to climatic conditions on site for 11 to 12 years was conducted to document the effects of weathering on the chemical characteristics of pit rock. Tailing solids and decant water samples were obtained from the metallurgical program, which focused on the processing characteristics of representative ore samples from each deposit (Golder, 2014).

The rock types and their relative proportions within the footprint of Portage, Goose, and Vault deposits are discussed in Cumberland (2005d). The results of kinetic testing relating the measured potential of rock to generate ARD and to leach metals are summarized in Table 3-7. The sulphide content of pit rock from each lithology is generally low, with median total sulphur contents of less than 1%. The bulk of the Iron Formation (IF) and quartzite rock is potentially acid generating (PAG). The ARD potential was realized under accelerated laboratory weathering tests but not under field conditions, after over two years of exposure. Ultramafic (UM) rock is non-potentially acid generating (NPAG) and has the highest median buffering capacity of all rock types. The bulk of the Intermediate Volcanics (IV) rock type is NPAG (Golder, 2014).

Table 3-7 : Summary of Kinetic Testwork for Pit Rock (Cumberland, 2005d)

Area Lithology	Portage			Vault IV
	UM	IF	IV	
Proportion of Pit Rock Waste	36%	37%[a]	28%	13.50
ARD Potential[b]	2% PAG 2% Uncertain 96% NPAG	67% PAG 13% Uncertain 20% NPAG	20% PAG 14% Uncertain 66% NPAG	14% PAG 11% Uncertain 75% NPAG
Laboratory Test Leachate MMER Exceedances	As	pH, Zn	n.e.[c]	n.e.[c]
Field Barrel Test Leachate MMER Exceedances	n.e.	n.e.	n.e.	n.e.

a) IF rock proportions include 2% of quartzite rock
b) Based on static testing database
c) Result from the 100-kg composite sample
n.e.: no exceedances

The relative potentials of the rock types to generate ARD or leach metals under neutral drainage conditions and the implications for potential use as construction rock are presented in Table 3-8. This is based on a classification system used to identify the appropriate use and storage for all mine rock. This system identifies PAG or NPAG rock types and those with the potential for metal leaching (ML) (Golder, 2014).

Table 3-8 : Rock Types and Potential for ARD (Cumberland, 2005a)

Open Pit	Material Type	Potential for ARD	Potential for ML	Restrictions for Storage or use in Construction
All Pits	Overburden	None	Low	None
	Tailings	High	High	Requires measures to control ARD
	Lake Sediment	Variable (none to high)	High	May require collection and treatment of drainage
Portage and Goose	Ultramafic and Mafic Volcanic	None	Low	May require collection and treatment of drainage
	Intermediate Volcanics	Variable (none to moderate)	Moderate	Requires measures to control ARD
	Iron formation	High	High under ARD conditions / Low under neutral conditions	Requires measures to control ARD
	Quartzite	High	Low	Co-disposal with ultramafic/mafic volcanic or cap/water cover
Vault	Intermediate Volcanics	Low	Variable (low to moderate)	May require collection and treatment of drainage

Waste rock represents all rock materials, except ore and tailings, that are produced as a result of mining operations and have no current economic value.

PAG mine waste rock from Portage and Goose Pits are stored in the Rock Storage Facilities (mostly the Portage facility and backfill in the Portage Pit), which are designed for long-term stability with minimal environmental and aesthetic impact. The surface storage area will be constructed to minimize the disturbed area. The Portage Rock Storage Facility will be capped with a layer of NPAG waste rock to constrain the active layer within non-acid generating rock. The waste rock below the capping layer will freeze, minimizing ARD generation in the long term.

All of the waste rock from the Vault and Phaser/BB Phaser Pits can be stored in the Vault Rock Storage Facility northwest of the pit. Geochemical predictions indicate it will not be necessary to place capping over the Vault Rock Storage Facility

The tailings chemistry will be dependent on the origin of the processed ore. It is estimated in the Meadowbank FEIS that 53% of the ore processed will originate from the Portage deposit, 8% from Goose deposit, and 39% from the Vault deposit. A summary of the tailings chemistry is provided in Table 3-9. The Tailings Storage Facilities will be capped with a layer of NPAG waste to constrain the active layer within non-acid generating rock. The tailings below the capping will freeze, minimizing ARD.

Table 3-9 : Summary of Tailings Chemistry (Cumberland, 2005c)

Deposit	Portage	Goose	Vault
Proportion of Total Tailings	53%	8%	39%
ARD Potential of Tailings	PAG	PAG	PAG
Flotation Circuit Tailings MMER Exceedances	pH, Cu, Ni, Zn	pH, Cu, Ni, Zn	n.e.
Whole Ore Circuit Tailing Composite Sample[a] MMER Exceedances	n.e.	n.e.	n.e.

a) Sample consisting of 54% Portage, 8% Goose, and 39% Vault whole ore tailings.
n.e.: no exceedances

3.3.5.2 Geochemical Monitoring

During the operations, Agnico Eagle sampled approximately 25% of blast holes and analyzed the percentages of sulphur and carbon. The results from these analyses are used to differentiate NPAG from PAG materials. Refer to Table 3-10 for a summary of Acid Rock Drainage (ARD) Guidelines used to classify Meadowbank waste rock. The operational acid/base accounting used for waste rock designation (PAG and NPAG rock) is described as well as the frequency of sampling in the Operational ARD/ML Testing and Sampling Plan (Agnico Eagle, 2013c). Once characterized by the geology team, the waste rock material is segregated and placed in appropriate location.

Table 3-10 : Summary of Tailings Chemistry

Initial Screening Criteria	ARD Potential
NPR < 1	Likely Acid Generating (PAG)
1 < NPR < 2	Uncertain
2 < NPR	Acid Consuming Non Potentially Acid Generating (NPAG)

The mine geology staff uses the derived NPR to characterize the rock in the blast pattern. Mine surveyors use this information to delineate the dig limits within the blasted rock to guide the shovel and loader operators in directing where the rock is to be taken.

Segregation of ore, waste rock as PAG or NPAG material based on operational testing during mining activity to differentiate waste rock type is part of the Meadowbank Waste Rock Management Plan. Sampling and testing of waste materials for acid rock drainage (ARD) is conducted during mine operation in order to segregate PAG waste from NPAG waste rock material, so that waste material can be assigned to specific locations or use. This practice has been ongoing since the beginning of the mining operations at Meadowbank, and will continue during the remaining operation period. The geochemical properties of all Meadowbank mining wastes have been confirmed with duplicates samples sent to certified laboratory,

through both static and kinetic testing on numerous representative samples, by various test methods and through multiple project development stages.

In the FEIS, it was determined that for Vault, 14% of the rock will be PAG, 11% uncertain and 75% NPAG. Analysis from Agnico's internal determination shows that in 2017, for Vault material, 8.8 % are PAG, 15.3 % are uncertain and 75.9 % are NPAG. Ultimately, there is a slightly higher ratio of NPAG versus what was initially predicted. Similar results were obtained in 2014, 2015 and 2016. As a mitigative measure any PAG or uncertain waste rock material is placed in the middle of the Vault Rock Storage Facility while NPAG material is placed on the perimeter to encapsulate the PAG material (Agnico Eagle, 2018c).

Agnico Eagle takes throughout the year quarterly samples of tailings that are sent to an accredited laboratory to analyze for ARD potential and metal leaching. Table 3-11 below presents the results of 2017. The results indicate that the tailings are PAG but have low metal leaching potential. These sample results are also integrated in the Water Quality Forecast updated yearly. Tailings samples analyses were also integrated in the design of the TSF cover for closure.

Table 3-11 : 2017 Tailings Monitoring (2017 Annual Report, Agnico Eagle, 2018c)

Analysis	Units	14 jan-2017	3 Apr-2017	4 Jul-2017	6 Nov-2017
NP	t $CaCO_3$/1000t	33	64	94	69
AP	t $CaCO_3$/1000t	76,6	58,4	72,5	50,6
Net NP	t $CaCO_3$/1000t	-43,4	6,06	21	18,1
NP/AP	ratio	0,43	1,1	1,29	1,36
Sulphur	%	2,67	1,94	2,46	1,92
Acid Leachable SO4-S	%	0,22	0,07	0,17	0,3
Sulphide	%	2,45	1,87	2,29	1,62
C	%	0,436	0,87	0,884	0,862
CO_3	%	1,02	2,04	2,16	2,74
Final pH	units	1,78	1,73	1,83	1,55
As	mg/L	0,0220	0,094	0,053	0,035
Cu	mg/L	0,053	0,054	0,047	0,064
Ni	mg/L	0,073	0,066	0,037	0,092
Zn	mg/L	0,088	0,013	0,092	0,079

3.4 Biological Environment

Baseline studies on vegetation, and terrestrial wildlife in and around the Project area were conducted for 3 study areas (Cumberland, 2005e):

- A regional study area (RSA) centered on the Project area, and encompassing the mine site, the AWAR and the Baker Lake Marshaling Area;
- A local study areas (LSA) centered on two sites, the Portage and Goose deposit area and Vault deposit; and
- The AWAR LSA composed of a 3 km wide corridor centered on the AWAR.

A map illustrating the three baseline study areas is provided in Appendix L. Baseline surveys were conducted for the terrestrial components described below.

3.4.1 Overall Ecosystem

The Project Area is characterized by a continuous vegetation cover interspersed with bedrock outcroppings and continuously aggrading surfaces. Vegetative cover is composed of lichens, mosses, ericaceous shrubs and heaths, herbs, grasses, and sedges (Golder, 2014).

3.4.2 Vegetation Habitat

Baseline vegetation studies were conducted in 1999 and 2002 for the mine LSA and in 2005 for the AWAR road (Cumberland, 2005e). An inventory of the flora plant communities was performed and showed that vegetation at the mine site is typical of upland tundra. No sensitive, rare, regionally unique or endangered species or communities were identified within the Project area or AWAR LSA (Cumberland, 2005a). The baseline studies provided field data and set the framework for the Ecological Land Classification (ELC) units. In addition, a land classification initiative undertaken by the Nunavut Department of Sustainable Development provided additional ground data and the mapping methodology used to generate to the ELC mapping (Cumberland, 2005e).

The thirty-one ELC units identified to describe the vegetation characteristics of the mine site RSA are shown in Appendix L. Further details are found in the baseline terrestrial report (Cumberland 2005e). The ELC units for the Project area are defined in Appendix L.

Water is the most common ELC unit within the mine site LSA, covering about 31% of the land surface. The most common vegetated unit within the mine site LSA is Sedge, covering approximately 20%. Other common ELC units are Rock & Boulder and Lichen-Rock. Heath Tundra is the most common ELC unit within the access road LSA, covering approximately 29%. Other common ELC units are Lichen and Birch & Riparian Shrub. Similarly, Heath Tundra is the most common ELC unit within the RSA, covering about 23%, followed by Water (19%), Lichen (14%), and Birch & Riparian Shrub (13%) (Golder, 2014).

Vegetation surveys at Meadowbank identified 121 vascular plant species (including hybrids and intergrades) from 26 families in the project area during the 1999, 2002 and 2005 baseline surveys. An additional 56 vascular plant species are likely to occur near the proposed mine development, but were not observed during field surveys. In addition, 53 non-vascular plants, primarily lichens, were identified during

the same surveys; however, many of the non-vascular plants collected during those surveys remain unidentified (Cumberland 2005e).

No rare vascular plants or plant communities were found in the Project area. Although it is possible that some rare non-vascular species (e.g., lichens) may be present, very little is known of non-vascular plant distribution in the Arctic and most species are difficult to identify (Golder, 2014).

Seven vascular plant species of restricted range are known or expected to occur in the area, but none are considered to be rare or of special concern. These species include greyleaf willow, Bell's crazyweed, mountain heather, diapensia, alpine pussytoes, marsh marigold, and Rocky Mountain cinquefoil. Of these, the first five species were all recorded in the Project area (Golder, 2014).

3.4.3 Aquatic Biota and Habitat

Studies targeting the ecological characteristics of the aquatic environment in the Project mine site area have been conducted since 1991 and were compiled in the baseline aquatic ecosystem report (Cumberland, 2005f). Results indicate that the Project lakes are ultra-oligotrophic/oligotrophic (i.e., nutrient poor and unproductive) lakes. Although biological productivity of the lakes is limited by nutrient availability, cold water and a short growing season, they support healthy communities of plankton, benthos and fish that are typical of oligotrophic Arctic lakes (Cumberland, 2005f).

The headwater nature of the lakes in the Project area, their great distance from marine waters of Hudson Bay, the paucity of stream habitat, and impassable falls (i.e., Quoich River Falls) also determine why certain fish species are found in great abundance and why others are absent. For example, the high latitude, cold climate, and near absence of stream habitat explains the lack of Arctic grayling (Thymallus arcticus). Grayling require stream habitat for spawning during spring as well as for feeding. Their absence from the project area is due in great part to the lack of suitable habitat, but also because the project lakes are situated near the maximum northern range of their distribution (McPhail and Lindsay 1970). The lack of snow cover and brief freshet in spring does not provide sufficient water flow and adequate water temperature for successful incubation of eggs by grayling (Golder, 2014).

Lake cisco are also absent from the mine site lakes and are not known to occur in this watershed (Lawrence and Davies 1977, MacDonald and Stewart 1980). Arctic cisco are relatively abundant in lakes near Hudson Bay, where they have easier access to the ocean. Cisco, like Arctic char, often travel back and forth between the lake and marine environment, where they spend the short summer months foraging near shore in the brackish water, returning to lakes to overwinter (Golder, 2014).

Lake trout and round whitefish dominate in the mine site lakes and are typically the two most common species in Arctic headwater lakes in Nunavut and the Northwest Territories (Scott and Crossman 1979). Lake whitefish are also known to be present in other watersheds in this region, but are absent from the Quoich River system (Lawrence et al. 1977, MacDonald and Stewart 1980). This species is near the edge of its northerly distribution, which may also explain its absence in the mine site area lakes (Golder, 2014).

Landlocked (i.e., non-anadromous) Arctic char are present in all of the mine site lakes, although relative abundance differs among lakes. Char generally tend to be relatively more abundant in downstream lakes than upstream lakes. South of Tehek Lake, anadromous char are known to migrate up the Prince River to Whitehills Lake, which is used by Arctic char to overwinter (MacDonald and Stewart 1980).

Other fish species that comprise a very minor abundance (<1% combined) include burbot (Lota lota), ninespine stickleback (Pungitius pungitius) and slimy sculpin (Cottus cognatus). Burbot typically occur in deep water portions of lakes, and, given the lack of stream habitat are limited to lake basins. Unlike other species, they spawn during mid-winter under the ice over sand, gravel, and rubble substrates in shallow depths (Scott and Crossman 1979, Richardson et al. 2001). Juveniles and adults inhabit rocky shorelines at margins of deeper areas of lakes, as well as in deeper areas away from shorelines and shoals. Sculpin are spring spawners and spawn over sand, gravel and rock substrates in shallow water. Seasonal movements within lakes are restricted and this species is often favored as a sentinel species. Ninespine sticklebacks are widespread in lakes and streams and inhabit shallow bays, ponds, and stream channels. Although stickleback prefer areas with macrophytes and vegetation, given the absence of aquatic plants in the mine site lakes, stickleback were associated with coarse substrates with good shelter nearshore associated with rocky, cobble shorelines (Golder, 2014).

3.4.4 Wildlife

3.4.4.1 Baseline Wildlife Data

Due to the extreme northern climate and low structural heterogeneity, relatively few terrestrial vertebrates are found in the Project area. During the baseline wildlife surveys, 61 terrestrial wildlife species were recorded: 12 mammals; 49 birds; and no amphibians or reptiles (Cumberland, 2005e).

Barren-ground caribou is a key mammal as the Baker Lake Inuit population heavily depends on it for food. Caribou are listed as secure in Nunavut (GN, 2001), and as a species of Special Concern federally (COSEWIC, 2010). They are currently not under any of the schedules of the Species At Risk Act (SARPR, 2010). Seasonal and yearly differences of the various population parameters are difficult to determine as little scientific information is available on local caribou population parameters, distribution, abundance, and migration corridors.

However, Inuit traditional knowledge of caribou is extensive as they are of very high value to the people in Baker Lake and other communities. Based on traditional and scientific knowledge of the area, caribou are present in the RSA in considerable numbers during the fall, winter, and spring, but are very sparsely distributed in summer. Caribou wintering in the RSA appear to originate from a number of different herds in the region, including the Beverly, Qamanirjuaq, Lorillard, Wager Bay, Boothia Peninsula, and Ahiak herds. In February 2004, an estimated 21,000 caribou were recorded in the area (Cumberland, 2005e). Agnico Eagle has participated with the Government of Nunavut Department of Environment Caribou satellite collaring program since 2008. The joint satellite-collaring program was developed to provide information on the distribution of caribou occurring within the Meadowbank RSA and contribute data to other ongoing satellite collaring programs for the Beverly and Qamanirjuaq herds. Based on the results of this monitoring program, collared caribou were primarily present in the Meadowbank RSA and LSA during the early winter period, although some presence during spring migration also occurred. Calving or post calving has not been documented within the Meadowbank study area to date (NEC, 2013).

Barren-ground caribou was the most common mammal species recorded during baseline surveys. Other common mammal species recorded in the Meadowbank area included muskox (Ovibos moschatus), Arctic wolf (Canis lupus arctos), Arctic hare (Lepus arcticus), Arctic ground squirrel (Spermophilus parryi) and Arctic fox (Alopex lagopus). Grizzly bears (Ursus arctos horribilis) and wolverines (Gulo gulo) are occasionally seen in the Meadowbank area. Relevant existing traditional and scientific knowledge on key

wildlife species was documented and supplemented with wildlife surveys during the terrestrial baseline study (MMC, 2007).

The bird species observed in greater numbers than any other species during the surveys were snow goose (Chen caerulescens), Canada goose (Branta canadensis), Lapland longspur (Calcarius lapponicus), and horned lark (Eremophila alpestris). Other commonly observed breeding bird species were savannah sparrow (Passerculus sandwichensis), semipalmated sandpiper (Calidris pusilla), sandhill crane (Grus canadensis), and rock ptarmigan (Lagopus mutus). Sandhill crane, Canada goose, and snow goose were most common during the migratory period. Raptors, as well as all three species of jaegers, were recorded occasionally during baseline surveys (Golder, 2014).

3.4.4.2 Wildlife monitoring

As a requirement of the NIRB Project Certificate, the 2017 Wildlife Monitoring Summary Report represents the 12th of a series of annual Wildlife Monitoring Summary Reports for the Meadowbank Mine. Baseline and monitoring programs were first initiated in 1999 and will continue throughout the life of the mine. The complete report presenting the whole program and complete analysis of the result is presented in Appendix G13 of the 2017 Annual Report (Agnico Eagle, 2018c).

The GN Caribou (Rangifer tarandus) collaring program, ongoing for the past 10 years in the Baker Lake area, continued in 2017 with monitoring of existing collared animals.

Wildlife protection at Meadowbank is ensured by various protocols implemented during operations and presented in the Terrestrial Ecosystem Monitoring Plan (TEMP, a component of the FEIS). Road closures were implemented at specific times of the year under certain conditions to ensure safe passage of migrating Caribou herds. Waste management has also been implemented to limit wildlife attractant. In general, improved food-handling practices and employee awareness programs at the mine site have helped prevent mine-related fatalities.

The raptor nest survey monitoring program has been designed to confirm that mine-related activities do not result in inadvertent negative effects on nesting raptors. To construct the AWAR in 2007/2008, excavated and blasted rock materials were used from numerous quarries along the alignment, resulting in the creation of some moderate and high suitability raptor nesting habitat areas characterized by steep rock walls. Established nests within some of these quarries are monitored on an annual basis to evaluate occupancy.

3.5 Social Environment

The Project area is located in the Kivalliq Region, one of three administrative regions in Nunavut. The 2001 population estimates indicate that over 7,500 people spread among seven communities live in the Kivalliq region (Cumberland, 2005g). Baker Lake, with an estimated population of over 1,500 in 2001, is the only inland community in the region. The regional economy is mixed, combining the formal wage economy with traditional ways of life. Participation in traditional ways of life is high, at about 50% both in Nunavut as a whole and in Baker Lake (Golder, 2014).

3.5.1 Recent and Traditional Land Use

Based on information from the Elders of Baker Lake, the area between Baker Lake and the Meadowbank site was most commonly used as part of a transportation corridor between Baker Lake and the Back River, their traditional winter hunting and fishing area. The traditional winter transportation route passed directly through Third Portage Lake. While hunting and fishing activities were, and still are, conducted near the mine property, these activities seem to be of an opportunistic nature while enroute to Back River and beyond. The Inuit also stop to camp at various lake sites—including the Portage Lakes—but these sites are not annually used. More permanent camp sites utilized by both current residents and their ancestors are further north (Golder, 2014).

Traditionally, Tehek and the Portage Lakes were used extensively for fishing, fox trapping, caribou hunting, and food caching (Cumberland 2005g). This area is also reported by the Elders to be very spiritual, and grave sites exist along the shore of Second Portage Lake. There are also other grave sites located randomly throughout the area between Baker Lake and the Project site. No permanent outpost camps or commercial tourist facilities exist in the vicinity of the Project site, and no known traditional use areas were identified within the footprint of the Project area (Golder, 2014).

In 2016/2017, the third report on the Meadowbank Gold Mine Socio-Economic Monitoring Program (SEMP) was developed in consultation with the Kivalliq Socio-Economic Monitoring Committee (SEMC).

The socio-economic monitoring report is updated yearly and submitted with the annual report.

Monitoring results were provided on the following valued socio-economic components (VSECs) (Agnico Eagle, 2018c):

- Employment;
- Income;
- Contracting and Business Opportunities;
- Education and Training;
- Culture and Traditional Lifestyle;
- Migration;
- Individual and Community Wellness;
- Worker Health and Safety;
- Community Infrastructure and Services;
- Nunavut Economy.

In the Meadowbank IIBA, Agnico has also committed to prepare an annual Baker Lake Wellness Report & Implementation Plan. The KIA has agreed that the report and plan will be community-based and driven.

3.5.2 Archaeological and Cultural Site

Archaeological surveys were conducted in 1999, 2003 and 2005. The surveys covered the following main areas (Golder, 2014):

- Mine site and vicinity;
- The winter road alignment during the exploration phase, which is near the AWAR alignment;
- Selected sites outside the development area; and
- The Baker Lake Site Facilities.

Approximately 70 sites of interest have been identified and detailed information on these sites are found in the Baseline Archaeology Report (Cumberland, 2005h). Additionally, archaeological surveys were conducted by FMA Heritage Resources Consultants Inc. in 2007 and 2010 to supplement previous studies (Golder, 2014).

The area between Baker Lake and the Project site is considered primarily a transit route to the traditional winter hunting and fishing area of Back River, as evidenced by the many campsites and other heritage features along the corridor. Most of the sites encountered in the study area were temporary campsites and were occupied recently, probably within the last 50 years. No Pre-Dorset or Dorset sites were encountered in the study area, and only one Thule or early historic site was visited (Cumberland 2005h). Additionally, Baker Lake residents continue to hunt here and construct stone features in the traditional manner, particularly caches and tent rings (Golder, 2014).

Consequently, there is a continuous temporal range which presents considerable difficulty in differentiating recent use from past use that would be considered archaeological (defined as more than 50 years old). The AWAR was designed to avoid any potential archaeological sites. The sites surveyed were typically small scale with one or two features of interest. The types of features encountered at the various sites included tent rings, semi-subterranean houses, autumn houses, hearths, shelters, inuksuit, markers, blinds, caches, storage features, kayak stands, fox traps, graves, campsites, killsites, and unidentified features (Golder, 2014). Further details can be found in the Baseline Archaeology Report (Cumberland 2005h) and the supplemental study reports (FMA 2007, 2010).

4.0 Project Description

4.1 Location and Access

The mine site of the Project is located in the Kivalliq region, Nunavut, approximately 70 km north of the Hamlet of Baker Lake, as shown in Figure 1-1. Mineral tenure covers 28,888 hectares and includes ten grandfathered Federal mining leases and three exploration concessions acquired from Nunavut Tunngavik Incorporated. The mine site is accessed by plane via the private Meadowbank Aerodrome (TC LID: CMB2), which is located 1 nautical mile (1.9 km; 1.2 mi) northeast of Meadowbank Gold Mine, Nunavut, Canada (latitude 65° 1′ 7″ N, longitude 96° 4′ 26″ W). Meadowbank Mine relies on marine transportation (to Baker Lake) for most of its supplies including fuel, construction and operation equipment, materials and consumables, including dangerous goods, food, household goods and other non-perishable supplies.

4.2 Site History

The exploration phase of the Project began in 1995, after Cumberland Resources Ltd. (Cumberland) purchased a 60% interest in the Project from Asamera Minerals and formed a joint venture with Comaplex Minerals. Cumberland acquired the 40% interest held by Comaplex Minerals in 1997 and hence became the sole owner of the Project. Cumberland later formed a subsidiary: Meadowbank Mining Corporation (MMC). Agnico Eagle acquired its ownership in Meadowbank in 2007 when it acquired Cumberland Resources. First gold pour was completed in February 2010. Pre-feasibility engineering and environmental baseline studies, as well as community consultations, have paralleled the exploration programs. The Project was advanced to the feasibility phase in 2003, and the final environmental impact assessment was submitted to NIRB in 2005. A certificate for the development of the Project was granted by NIRB in 2006. As part of the implementation of the Project, permits and Licences were also obtained from the Nunavut Water Board (NWB), the Kivalliq Inuit Association (KIA), the Government of Nunavut (GN), Aboriginal Affairs and Northern Development Canada (AANDC; formerly INAC) and Fisheries and Oceans Canada (DFO). An Inuit Impact and Benefit Agreement for the Meadowbank mine (the ‘‘Meadowbank IIBA’’) was signed with the Kivalliq Inuit Association to ensure that local employment, training and business opportunities arising from all phases of the project are accessible to Inuit Beneficiaries living in the Kivalliq region and was renewed in 2017.

The Project components consist of the mine site (Figure 2-1) presented in Section 2.1, the Baker Lake Site Facilities (Figure 4-1) and the All Weather Access Road (AWAR, Figure 4-2) linking Baker Lake to the mine site. Construction of the AWAR was initiated in 2007 and completed in 2008. The development of the Project has required periodic construction activities since the exploration phase (i.e., South and North Camps and airstrip). The original water retention dikes, which allow for mining beneath shallow lakes, were the East Dike in Second Portage Lake and the small West Channel Dike. They closed off the North Portage pit area, so that approximately 16 million liters of water could be pumped out before mining could begin at Meadowbank.

Construction activities at the mine site and the Baker Lake Site Facilities, for the purpose of mining operations, began in 2008. Mining was initiated in 2009; operations at the mine process plant started in early 2010, and thus the Project is entering its ninth year of operations. In addition to routine activities throughout the 2018 season, a number of secondary construction/modification projects will be undertaken.

Construction of the Central Dike Phase 7, planned North Cell Internal Structure (depending on regulatory approval) and Saddle Dam 3 Phase 4 will be completed in 2018. In addition, evaluation of future tailings deposition options will be considered in 2018. The mining operations at the Meadowbank site are scheduled to be completed in September 2018 (refer to Section 4.4.1, Tables 4-1 to 4-4 for detailed LOM and schedule).

Environmental monitoring (wildlife, aquatic effects, groundwater, noise and air) will continue yearly in support of all operational undertakings at the Meadowbank site as required by the NWB Type A Water Licence 2AM-MEA1525, NIRB Project Certificate No.004, DFO authorizations, and MMER regulations.

A first closure and reclamation plan (Agnico Eagle, 2008) was developed before the start of mining operations and represented an updated compilation of the following components:

- Meadowbank Gold Project, Reclamation Cost Estimate (Brodie 2008);
- Abandonment and Restoration Plan, Agnico-Eagle Meadowbank Project, Baker Lake Facilities, Licence 8BC-MEA0709, October 24, 2007 (Agnico Eagle, 2007a);
- INAC Lease 66A/8-71-2 & 66A/8-72-2, Updated Closure and Reclamation Plan for the Tehek Lake All Weather Private Access Road, Baker Lake – Meadowbank, December 17, 2007 (Agnico Eagle, 2007b); and
- Meadowbank Gold Project, Preliminary Closure and Reclamation Plan, August, 2007 (MMC, 2007).

An ICRP, produced by Golder Associates in January 2014, was an update of the 2008 closure and reclamation plan.

Following an internal technical study, in February 2017, the Whale Tail satellite deposit at Amaruq was approved for development, pending the receipt of required permits. Agnico Eagle is proposing to develop the Whale Tail Pit, a satellite deposit located on the Amaruq property, to continue operations and milling at Meadowbank Mine. The proposed open pit mine, mined by truck-and-shovel operation, will produce 8.3 million tonnes of ore that will be hauled and processed at the Meadowbank Mill. The tailings will be deposited in the approved TSF facilities, under Agnico Eagle existing Type A water Licence 2AM-MEA1525. The operations (mining and ore processing) will continue approximately 3 years with the Whale Tail Pit, from Q3 2019 to early 2022.

As the Whale Tail project is going through the permitting process to obtain its specific Type A Water Licence, it is understood that all operations components of Whale Tail Pit and Amaruq Exploration/Hauling Road are included specifically in the Whale Tail Interim Closure and Reclamation Plan (Golder, 2016a). Only the activities covered under the Meadowbank Type A Water Licence 2AM-MEA1525 will be included in this updated Meadowbank ICRP.

Figure 4-1 : Baker Lake Site Facilities

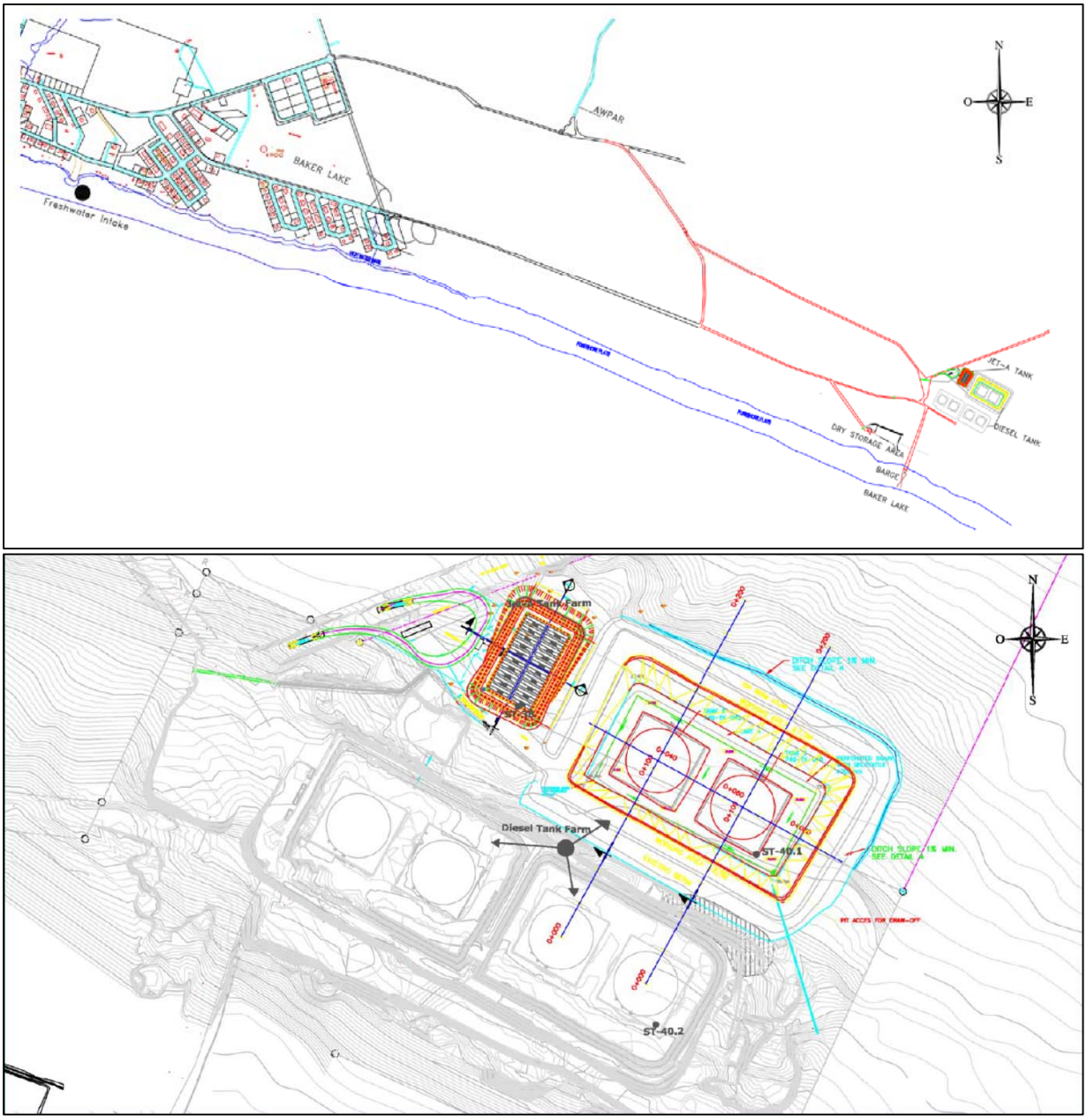

(Source : Agnico Eagle, Oil Pollution Emergency Plan, Version 7, May 2016; Meadowbank Annual Report 2016 (2017a))

All Weather Access Road (AWAR)

Figure 4.2

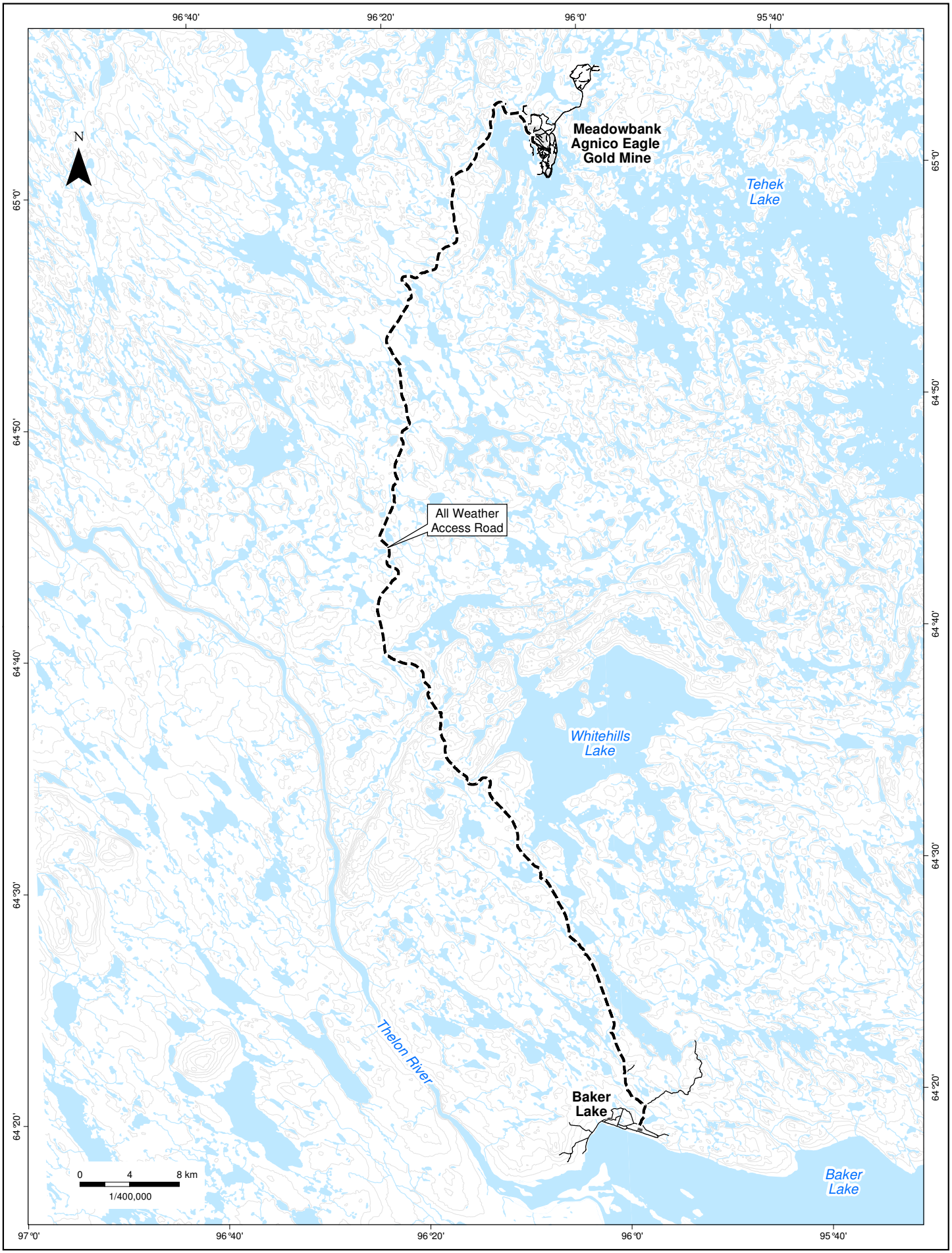

L:\proj\651196 AE IN-PIT Deposition DET -ENG\40_INGÉNIERIE\40_DD_DESSINS\Geomatique\Interne\Diffusion\Produit\Closure\snc651196_rp_f4-2_All_Weather_Access_Road_let_180619.mxd

4.3 Site Geology and Ore Processing

Gold deposits are found along two main structural features that cross the property – the Meadowbank Trend and the Pipedream Lake (Northeast) Trend (refer to Appendix J). The Meadowbank Trend hosts the Goose, Portage and Vault deposits, which are the sites of mining. These shallow deposits lie within 7 km of each other. In all deposits, gold mineralization is commonly associated with intense quartz flooding, and the presence of sulphide minerals (pyrite and/or pyrrhotite). The Goose and Portage deposits are hosted by magnetite-rich iron formation, while intermediate volcanic rocks host most of the mineralization at the Vault deposit farther north. Both the rock units and the gold deposits are tightly folded and structurally complex, sandwiched between granite plutons (Agnico Eagle website, consulted May 2018).

Since this updated Meadowbank ICRP includes the activities related to ore processing and tailings deposition from the additional ore from Whale Tail Pit, the Amaruq property geology is presented herein. The Amaruq property is underlain by Archean supra crustal rocks of the metamorphosed Woodburn Lake Group; the same sequence as at the Meadowbank Mine. These rocks are believed to have been deposited in a continental rift setting. They are comprised of mafic to ultramafic volcanic and volcaniclastic rocks interlayered with clastic sedimentary units that include greywacke, siltstone, mudstone, chert and banded iron formation. This rock sequence has been intruded by granitoid rocks and lamprophyres, and underwent multiple deformation events and metamorphism to the upper greenschists facies. There are four Paleo-Proterozoic aged events of deformation recognized, two of which have significant effects on the geometry of the deposit. There are four Paleo-Proterozoic aged events of deformation, two of which have significant effects on the geometry of the deposit. The main lithological units associated with the Whale Tail deposit include: ultramafic komatiites, clastic sedimentary rocks, mafic volcanic rocks and felsic to intermediate intrusive rocks (Golder, 2016a).

Until now, Meadowbank has conducted surface mining from a series of three pits all within 7 km of the processing plant. Water retention dikes have been built to allow for mining beneath shallow lakes, using a unique in-water dike construction method. The mine works year-round, using conventional drilling, blasting, truck and shovel methods. Waste rock is used for construction, or dumped in waste storage facilities or previously mined-out areas. To minimize acid generation, the sulphide-bearing waste rock is encapsulated in permafrost and capped with an insulating layer of neutralizing rock.

The 11,000-tonne/day gold processing plant uses conventional technology adjusted to the Arctic climate. Any “free gold” is removed by a gravity circuit. The remainder is leached using cyanide, with the gold captured using carbon-in-pulp technology and electrowinning cells. Gold-plated cathodes and gravity concentrate are smelted in an induction furnace and poured as doré bars. The plant includes both a cyanide recycling thickener and an air-sulphur dioxide cyanide destruction circuit to ensure that no cyanide escapes to the environment. All water from the tailings pond is pumped back to the plant for reuse, making this a zero-discharge system. The plant will require minor modifications to treat the Whale Tail Pit ore, specifically the addition of a continuous gravity and regrind circuit, and is expected to operate at 9,000 tonnes/day.

4.4 Project Summary

The Meadowbank Gold Mine consists of several gold-bearing deposits within reasonably close proximity to one another. The three main deposits are: Vault (including Phaser and BB Phaser), Portage (South, Center and North Portage deposits), and Goose, as presented on Figure 2-1.

The South Portage deposit is located on a peninsula, and extends northward under Second Portage Lake (2PL) and southward under Third Portage Lake (3PL). The North Portage deposit is located on the northern shore of 2PL. The South, Center and North Portage deposits are mined as a single pit, termed the Portage Pit, which extends approximately 2 km in a north-south direction. The Goose deposit lies approximately 1 km to the south of the Portage deposit, and beneath a portion of 3PL. The Vault deposit is located adjacent to the former Vault Lake, approximately 6 km north of the Portage deposits. Phaser and BB Phaser Pits are located west of the Vault Pit, in the former Phase Lake. A series of dewatering dikes (East, West Channel, Bay-Goose, South Camp and Vault dikes) were required for dewatering to isolate the mining activities from the lakes. Additional dikes (the Central Dike, Stormwater Dike and Saddle Dams) are required to manage tailings within the dewatered 2PL Arm.

4.4.1 Project Mine Plan

In 2018, Agnico Eagle mining plan (Agnico Eagle, 2018b) is to operate Portage and Vault pits at the Meadowbank mine site. The waste rock management plan for 2018 is to maximize waste storage facility utilization and minimize haulage cycle times which will, in turn, minimize the greenhouse gas emissions and impact on the environment. Environmental monitoring (wildlife, aquatic effects, groundwater, noise and air) will continue through 2018 in support of all operational undertakings at the Meadowbank site as required by the NWB Type A Water Licence 2AM-MEA1525, NIRB Project Certificate No.004, DFO authorizations, and MMER regulations. Tables 4-1 to 4-4 present the detailed Life of Mine (LOM).

Table 4-1 presents the projected mill throughput with the expected quantities of ore to be processed from 2018 to 2022, as well as the ore origin. The end of ore processing from Meadowbank is expected in September 2018, following by a transition period of 9 months. The processing will then restart with ore from Whale tail Pit, from July 2019 to 2022.

The mined tonnages at Meadowbank for ore and waste rock realized for 2017 is presented in Table 4-2. The projected mined tonnages for 2018 are presented in Table 4-3. The NPAG waste rock projected closure requirements for 2018 and 2019 at Meadowbank are presented in Table 4-4, including the various closure construction works.

The waste rock tonnage for Whale Tail Pit is not presented herein as the waste rock management for Whale Tail is included in the Whale Tail Interim Closure Plan (Golder, 2016a).

Table 4-1 : Projected Ore Processed at Meadowbank

Year/Month	Projected Ore Processed (Mill Throughput) (tonnes)	Origin
January-18	279 000	Meadowbank (Portage, Vault and Phaser/BB Phaser)
February-18	252 000	
March-18	279 000	
April-18	270 000	
May-18	279 000	
June-18	270 000	
July-18	249 065	
August-18	249 065	
September-18	241 031	
October-18	0	
November-18	0	
December-18	0	
TOTAL 2018	**2 368 161**	
January-19	0	Whale Tail
February-19	0	
March-19	0	
April-19	0	
May-19	0	
June-19	0	
July-19	276 726	
August-19	276 726	
September-19	267 799	
October-19	276 726	
November-19	267 799	
December-19	276 726	
TOTAL 2019	**1 642 500**	
January-20	279 766	
February-20	261 717	
March-20	279 766	
April-20	270 742	
May-20	279 766	
June-20	270 742	
July-20	276 726	

Year/Month	Projected Ore Processed (Mill Throughput) (tonnes)	Origin
August-20	276 726	Whale Tail
September-20	267 799	
October-20	276 726	
November-20	267 799	
December-20	276 726	
TOTAL 2020	**3 285 000**	
January-21	279 000	
February-21	252 000	
March-21	279 000	
April-21	270 000	
May-21	279 000	
June-21	270 000	
July-21	279 000	
August-21	279 000	
September-21	270 000	
October-21	279 000	
November-21	270 000	
December-21	279 000	
TOTAL 2021	**3 285 000**	
January-22	66 644	
TOTAL 2022	**66 644**	

Source: Water Balance, Agnico Eagle, 2018d

Table 4-2 : Meadowbank Mined Tonnages for 2017

Month	Ore	Portage Pit & Vault Pit							Ore Processed in Mill (tonnes)
		Waste Rock (PAG/NPAG) (tonnes)							
		Destination							
		Dikes	Roads	Crushers	Waste Rock Facilities[1]	Stockpiles	Other	Total	
January	386,298	45,991	0	12,301	1,498,959	14,815	6	1,572,073	331,889
February	374,894	6,084	22,937	23,998	1,251,365	404,648	2,977	1,712,008	314,269
March	376,855	167	8,508	12,614	919,668	483,332	583	1,424,872	279,684
April	355,410	0	10,674	17,671	1,002,425	655,770	10	1,686,550	328,391
May	437,319	0	135,889	84,180	933,559	434,648	27,889	1,616,165	344,961
June	401,035	12,537	14,316	88,241	977,125	522,816	2,588	1,617,623	322,939
July	334,363	183,868	66,559	6,647	1,016,081	523,311	0	1,796,466	336,222
August	391,414	485,008	12,182	2,361	1,271,636	97,549	19,925	1,888,662	326,409
September	343,504	13,148	107,454	14,945	1,246,694	509,366	189	1,891,796	275,754
October	364,663	259,074	57,565	528	1,169,063	255,796	1,991	1,744,017	328,028
November	321,403	21,676	653	5,395	1,406,720	69,651	1,362	1,505,456	330,465
December	352,291	0	401	571	1,781,334		7	1,782,313	334,023
TOTAL	**4,439,449**	**1,027,553**	**437,137**	**269,453**	**14,474,629**	**3,971,701**	**57,528**	**20,238,001**	**3,853,034**

1. Waste Rock disposed at the waste rock facilities includes overburden stripped for exploitation of Portage Pit & Vault Pit

Source: Modified from Updated Mine Waste Rock and Tailings Management Report and Plan, 2017 (Agnico Eagle, 2018b)

Table 4-3 : Projected Meadowbank Mined Tonnages (2018)

		2018
Portage Pit	**Total Waste Rock (tonnes)**	**169,392**
	NAG (~ %)	27%
	PAG (~ %)	73%
	Till (tonnes)	0
	Ore (tonnes)	98,622
Vault Pit	**Total Waste Rock (tonnes)**	**1,464,113**
	NAG (~ %)	100%
	PAG (~ %)	<1%
	Till (tonnes)	0
	Ore (tonnes)	983,366
Phaser Pit	**Total Waste Rock (tonnes)**	**941,121**
	NAG (~ %)	100%
	PAG (~ %)	<1%
	Till (tonnes)	0
	Ore (tonnes)	167,817

1. Difference between pit mill feed and total mill feed is due to stockpiled material to be processed
Source: Updated Mine Waste Rock and Tailings Management Report and Plan, 2017 (Agnico Eagle, 2018b)

Table 4-4 : NAG Stockpile for mine closure requirement, Destinations & Tonnages (2018 – 2019)

Year/Mine Closure Items	2018	2019	TOTAL
Capping Portage Rock Storage Facility (PAG Dump) with NAG	1,157,318	0	**1,157,318**
	12%	0%	**8%**
Capping TSF (North Cell)	3,893,819	2,973,625	**6,867,444**
	39%	56%	**45%**
Capping TSF (South Cell)	0	0	**5245187**
	0%	0%	**0%**
Central Dike	0	0	**0**
	0%	0%	**0%**
Saddle Dams	0	0	**0**
	0%	0%	**0%**
Primary Crusher NAG capping	465,234	0	**465,234**
	5%	0%	**3%**
Goose Rock Garden/Finger Dikes (fish habitat compensation)	256,945	0	**256,945**
	3%	0%	**2%**
Stormwater Dike Capping	350,064	0	**350,064**
	3%	0%	**2%**
Capping Marginal Dump	642,600	0	**642,600**
	6%	0%	**4%**
NAG Stockpiles	3,256,830	2,364,450	**5,621,280**
	32%	44%	**37%**
All Portage NAG to be Stockpiled	10,022,810	5,338,075	**15,360,885**
	100%	100%	**100%**

Source: Updated Mine Waste Rock and Tailings Management Report and Plan, 2017 (Agnico Eagle, 2018b)

4.4.2 Project Facilities

4.4.2.1 Baker Lake Site Facilities

The Baker Lake Site Facilities are located about 2 km east of the Hamlet of Baker Lake, as shown in Figures 4-1 and 4-2. The Baker Lake facilities act as a transfer point and temporary storage for all dry freight and fuel materials arriving by barge prior to overland shipment to the mine site via the AWAR.

The infrastructures present on Baker Lake Site includes (modified from Golder, 2014):

- Barge Landing: All construction and operating supplies for the Project are transported on ocean freight systems to Baker Lake. A barge unloading facility and a container handler receive all shipments prior to redirecting them to the mine site;
- Bulk Fuel Storage Facility: The above ground Bulk Fuel Storage Facility includes six (6) 10 million liters (10,000 m^3) diesel fuel storage tanks to receive bulk shipment of diesel fuel and to provide sufficient above-ground fuel storage capacity to operate the Project for a year. The Bulk Fuel Storage Facility is located on the northeast corner of the Baker Lake Site Facility, approximately 300 m from the shore of Baker Lake. Fuel is shipped by barge to the facility, pumped from the barges to the storage tanks through a 200 mm hose, and distributed to highway vehicles or tanker trucks at a dispensing station located on the North side of the facility. The Bulk Fuel Storage Facility is used throughout the year. The tanks are located within a lined and bermed containment area capable of storing at least 110 % of the volume of one 10,000 m^3 storage tank. In addition, eighteen (18) - 100,000 L fuel tanks are located within a lined and bermed containment pad at the fuel storage area to provide jet fuel storage capacity. The dispensing station for the Jet A Facility is setup within an arctic container installed on a lined and compacted gravel pad. This lined area is capable of containing 110% of the volume of one 100,000L storage tank. A collection sump is also located within the lined pad to collect accidental spills or leakage. A secondary containment area lined with a low permeable geomembrane provides additional fuel confinement at the fuel tank farm;
- Dry Freight Storage Area: The general lay-down area of the dry freight storage area includes a terraced gravel based pad for stacking sea containers and other equipment. The area covers approximately 65,000 m^2. The roads and unloading platform of main traffic zones are covered with 1 m of compacted granular fill. The storage platforms are covered with 0.6 m of compacted granular fill to provide stable support;
- Access Roads: An all-season road links the Baker Lake Site Facilities to the AWAR leading to the mine site. Roads have a gradient of 8% or less and are typically covered with compacted granular fill;
- Water and Power Management: The general strategy for water management is to minimize sediment and pollutant mobilization by implementing best management practices during operation of the facilities. Water that has accumulated within the berms surrounding the Bulk Fuel Storage Facility is released to the environment once it is confirmed to meet all regulatory water quality criteria and approval has been granted from the government inspector;
- Power for the facilities: The facilities include the office trailer supplied by portable generators and yard lighting is provided by portable, diesel powered light towers.

4.4.2.2 All-Weather Access Road

The All-Weather Access Road (AWAR) is 108 km long and links the Hamlet of Baker Lake to the mine site, as shown in Figure 4-2. The AWAR was constructed above grade, using quarried material from non-acid generating rock. Its alignment is contained almost exclusively within the Prince River drainage to avoid stream crossings wherever possible. A total of 24 streams are crossed by the AWAR, using thirty eight (38) culverts and nine (9) bridges.

Additional culverts have been installed in low lying areas to accommodate surface drainage patterns. Only six crossings occur on streams used by Arctic grayling as a migration route and/or for spawning. These streams are crossed using bridges to mitigate potential impacts to the migratory fish populations. Most of the remaining streams have little or no fisheries habitat value as they are mostly small in size and do not connect fish-bearing lakes upstream or downstream of the proposed crossing (Golder, 2014).

Graded aggregate from quarries along the AWAR provided general road embankment fill. A total of 22 quarries were used, with rock that was determined to be not potentially acid generating (Cumberland, 2005i). Finer graded road surfacing fill was obtained from further processing of the coarse aggregate. Two structural fill types were used to construct the AWAR (Golder, 2014):

- Type 1 Fill: Minus 75 mm, well graded crushed “Granular Base”; and
- Type 2 Fill: Minus 300 mm well graded general “Rockfill”.

Additional Facilities along the AWAR consist of 3 communication towers. Typical communication towers include the following:

- Antenna;
- Receiver/transmitter unit;
- Foundation mounts; and
- Portable generator.

4.4.2.3 Dikes and Saddle Dams

Non-acid generating overburden and waste rock materials produced during initial mining on the Portage Peninsula and from the pits are used for dikes and dams adjacent to the receiving environment, with the exception of a portion of the Central Dike. Based on material balance estimations, sufficient quantities of suitable rockfill and till borrow materials are available for the remaining construction activities for the Central Dike and Saddle Dams 3 and 4.

The dikes are required to isolate mining activities from surrounding lakes (i.e., East, West Channel, South Camp and Bay-Goose Dikes) or to contain tailings (i.e., Stormwater and Central Dikes, and Saddle Dams 1 to 5). All dikes and saddle dams are shown in Figure 2-1 and listed below:

- East Dike: Construction was started in 2008 and completed in 2009. The East Dike isolates the Tailings Storage Facilities and Portage Pit from Second Portage Lake and allowed the dewatering of the Second Portage Lake North Arm;

- West Channel Dike: The West Channel Dike was also constructed in 2008. The dike functioned to block the western outlet channel from Third Portage to Second Portage Lakes, upstream of the East Dike. Following completion of the South Camp and Bay-Goose Dikes, and dewatering of the Third Portage Lake area enclosed by these two dikes, the West Channel Dike was no longer required, and removed as part of the development of Portage Pit;
- South Camp Dike: The South Camp Dike was built in 2009 to assist in isolating the Portage and Goose Pits from Third Portage Lake;
- Bay-Goose Dike: The Bay-Goose Dike was built over a 3-year period, from 2009 to 2011. The Bay-Goose Dike, together with the South Camp Dike, isolates the Portage and Goose Pits from Third Portage Lake and allowed dewatering;
- Vault Dike: The Vault Dike was constructed in 2013 and isolates Vault Lake from Wally Lake, to allow mining of the Vault Pit following dewatering of Vault Lake. Dewatering of Vault Lake commenced in 2013 and was completed in 2014;
- Central Dike: The Central Dike retains tailings and limit seepage from the South Cell TSF towards the Portage Pit. The dike crest is used to support tailings pipelines. The Central Dike is founded on competent soils, with an engineered key trench extending to either bedrock or a dense till. The dike is constructed primarily of rockfill, with an upstream low-density polyethylene geomembrane. The Central Dike was constructed in stages, starting in 2012 and is planned to be completed in 2018 at an elevation of 150 masl;
- Stormwater Dike: The Stormwater Dike provides the separation between the North and South Cells of the TSF. The dike crest is used to support tailings pipelines and spigots. The dike is constructed with potentially acid generating rockfill and has a low hydraulic conductivity bituminous geomembrane liner on the upstream face that is keyed into the foundation soils. The first stage of the Stormwater Dike was built in 2009 to elevation 140 masl, the second stage of the Stormwater Dike was constructed in 2010 to elevation 148 masl, and in 2013 the third stage of the Stormwater Dike was completed to elevation 150 masl;
- Saddle Dams 1 to 5: The purpose of the Saddle Dams is to retain the tailings within the TSF and limit seepage to the downstream environment. The dams also support the tailings pipelines. Saddle Dams 1 and 2 contain the tailings in the North Cell of the TSF, while Saddle Dams 3, 4 and 5 will contain the tailings in the South Cell. The first stage of Saddle Dam 1 was constructed in 2009 to an elevation of 141 masl and in 2010 was raised to its Stage 2 crest at elevation of 150 masl. Construction of the first stage of Saddle Dam 2 commenced in 2010; it was completed in 2011 (Stage 2) at elevation 150 masl, in addition to the connection between Saddle Dam 2 and Stormwater Dike, to an elevation of 150 masl. The construction of Saddle Dams 3, 4 and 5 started in 2015 and is planned to be completed in 2018 at elevation 150 masl.

As built information and drawings of the different dikes and dams are available in the following documents:

- Meadowbank East Dike Construction As-Built Report (Golder, 2009);
- Bay-Goose Dike Construction As-Built Report, Meadowbank Gold Mine (Golder, 2013);

- South Camp Dike Construction Summary Report, Meadowbank Gold Project (Agnico Eagle, 2012b);
- Construction Summary Report, Vault Dike (Agnico Eagle, 2013b);
- Construction Report, Tailings Storage Facilities, Meadowbank Gold Project. (Agnico Eagle, 2012b);
- 2016 Construction Season As- Built Report (Golder, 2016b).

4.4.2.4 Open Pits

The deposits are mined as truck-and-shovel open pit operations. The ore was extracted from the following deposits during the operational lifespan of the mine (refer to Figure 2-1):

- Portage deposits (Pit sector A, B, C, D and E);
- Goose deposit; and
- Vault deposit, including Phaser/BB Phaser.

The Portage and Goose deposits are located in a centralized mining and milling area. The Portage deposits are mined as a single pit (Portage pit) that is approximately 2 km long running north-south, across Second and Third Portage lakes. The Goose deposit is approximately 1 km south of the Portage deposit, under Third Portage Lake. The Vault deposit is approximately 8 km to the north of the Portage deposit, on the shores of Vault Lake. Phaser and BB Phaser Pits are adjacent to Vault Pit on the South East side. Mining activities in Goose Pit occurred from 2011 to 2015, started in Portage Pit 2010 and are planned until 2018. Vault Pit mining activities started in 2014 and are planned until 2018, and from 2017 to 2018 in Phaser/BBPhaser.

4.4.2.5 Rock Storage Facilities

Waste rock is stored at the Portage and Vault Rock Storage Facilities (RSF) (Figure 2-1). Deposition tonnages at the Portage RSF is separated into potentially (PAG) and non-potentially (NPAG) acid generating, to be used at closure. The Vault RSF includes mainly NPAG waste rock, with some PAG waste rock placed in the center of the pile. Some waste rock is also placed in the mined areas of the Portage and Goose pits as pit backfill. The material stored at beside Goose Pit only includes NPAG to be used for closure construction. Smaller storage areas also include NPAG material that will be reclaimed at closure. The rock storage facilities volumes are presented in Table 4-5. The total quantity of waste rock generated by Portage and Vault pits in 2017 and the projected quantity in 2018 are presented in section 4.4.1.

Table 4-6 below summarizes the overall (final) physical dimensions and aspects of the Portage and Vault RSFs.

Table 4-5 : Meadowbank Rock Storage Facility Volume

Rock Storage Facilitity	Volume (m^3)	Type of Waste Rock
Vault RSF	35,859,759	PAG/NPAG
Portage RSF - NPAG Area	6,500,000	NPAG
Portage RSF - PAG Area	30,355,469	PAG/NPAG
Portage NPAG - Primary crusher	1,472,517	NPAG
Goose NPAG	2,863,107	NPAG
Central - NPAG SP	425	NPAG

1. Estimated volume to date (February 2018)
2. Vault RSF includes mainly NPAG material and PAG material placed in the center of the facility
3. Portage RSF - PAG Area includes 2,700,000 m3 of NPAG cover
4. Waste rock material is also placed in the mined sectors of Goose Pit and Portage Pit as backfill

Source: Data provided by Agnico Eagle, 2018

Table 4-6: Details of Rock Storage Facilities

Descriptors	Portage Rock Storage Facility	Vault Rock Storage Facility
Approximate storage volume	39.3 Mm^3	29.1 Mm^3
Approximate final crest elevation	254 m	246 m
Approximate final height	100 m	80 m
Maximum elevation of adjacent topography	192 m	190 m
Approximate footprint area	80.8 ha	61.0 ha

Source: Updated Mine Waste Rock and Tailings Management Report and Plan, 2017 (Agnico Eagle, 2018b)

4.4.2.6 Tailings Storage Facilities

All tailings will be deposited within the Tailings Storage Facilities (TSF) until the end of mine operations. The facility includes two cells, the North Cell, where tailings were deposited until 2015, and South Cell, where tailings are deposited since 2014 to the end of the mine life (Figure 2-1). In 2017, a total of 4,042,652 m^3 of tailings slurry was deposited in the tailings storage facilities. From 2010 to 2017, a total of 22,250,000m^3 of tailings slurry from the mill had been deposited in the TSF's (Agnico Eagle, 2018b). The remaining portion of the tailings generated by ore processing from Meadowbank is planned to be stored in the South Cell.

Tailings from Whale Tail Pit will be stored within the approved Meadowbank TSF footprint. According to the approved Meadowbank TSF design, it remains a capacity of 5.3 Mt in the South Cell after the completion of mining Goose Pit, Portage Pit, Vault Pit, BB Phaser, and Phaser Pit. To provide the additional 3 Mt of capacity required to store Whale Tail Pit tailings, Agnico Eagle is proposing to construct an internal structure raise over the outside perimeter of the existing and frozen North Cell. This concept will increase

the tailings beach elevation to a maximum of 153.5 masl in the North Cell. The internal structure design is available in Appendix N. Construction of the internal structure will be completed upon regulatory approval. The management operation and monitoring of the TSF is regulated under Agnico Eagle existing Type A Water Licence 2AM-MEA1525.

Table 4-1 in Section 4.4.1 presents the projected ore process (mill throughput) quantities for the Project, from 2018 until 2022.

4.4.2.7 Water Management Facilities

At Meadowbank, five major sources of inflow water are considered in the site water management system: freshwater pumped from Third Portage Lake, natural run off, natural pit groundwater inflow, seepage inflow from the East Dike and freshet water. This water is either utilized or removed from the inflow by the following means: water treatment plant effluent (if treatment necessary to meet discharge criteria), water trapped in the capillary voids of the tailings fraction (including ice entrapment for winter months) at the TSF, East Dike seepage discharge into Second Portage Lake, water trapped within the in-pit rock storage facilities area voids and natural pit flooding.

A detailed water balance is reviewed yearly and is provided in the annual Water Management Report and Plan (provided with the Meadowbank Annual Report). The Appendix K of this ICRP presents the Water Balance considered (Agnico Eagle, 2018d).

The water management facilities include the components listed below:

- Dewatering systems: Consisting of pumps in parallel connected to a surface pipeline that conveyed water to a treatment facility for the removal of suspended solids prior to discharge;
- Flooding systems: Following completion of mining, the pit areas will be flooded. Flooding will be carried out through a combination of:
  - Precipitation;
  - Surface runoff;
  - Seepage from the East dike (Portage and Goose pits only);
  - Transfers of water from the Reclaim Pond located in the South Cell to Portage Pit in 2022 (this water may require treatment prior to transfer); and
  - Pumping from Third Portage and Wally lakes;
- Rock storage runoff collection systems: The topography on the Southwest side of the Portage Rock Storage Facility naturally conveys surface water runoff to the Tailings Storage Facilities North Cell. To date, this runoff is minimal, generally at spring freshet only. No seeps have been identified on the Southwest side of the Portage RSF. Two (2) sumps, WEP1 and WP2, located on the North side of the Portage RSF NPAG area, collect contact water from the RSF during freshet to be transferred to the North Cell TSF. The topography surrounding the Vault Rock Storage Facility is anticipated to convey runoff into the Vault Pit and Vault Attenuation Pond (SNC 2013);
- Water Diversion Ditch Systems: Two water diversion systems (East and West diversion ditches) were constructed in 2012 to divert surface water from undisturbed areas on the northern perimeter of the mine site away from the Portage Waste Rock Facility and Tailings Storage Facilities;

- Pit sumps and pumping systems: Sumps will be in place for collecting water draining from pit areas. Water from the Portage and Goose pit sumps are pumped to the Reclaim Pond (former Portage Attenuation Pond). Water from Vault Pit sumps will be pumped as needed to the Vault Attenuation Pond;
- Seepage and runoff collection systems: Water collected by any seepage and runoff collection system is monitored during the operations as per the Meadowbank Water Licence requirements. The main seepage collection systems on site are the Central Dike seepage collection system, the East Dike seepage collection system, the Mill seepage collection system and the RSF Seepage (ST-16) collection system;
- Tailings pipelines: Tailings will be carried as slurry through a pipeline to the TSF. Tailings slurry water that does not get trapped within the tailings mass as ice ultimately drains to the Reclaim Pond. The location of the pipelines along the perimeter will be determined by the deposition plan and operational consideration for the development of tailings beaches;
- Vault Attenuation Pond: The pond is collecting runoff from the surrounding drainage basin as well as water drained from the Vault Rock Storage Facility and from the Vault, Phaser/BB Phaser Pits. Collected water is discharged, as needed, after treatment if required for removal of suspended solids, to Wally Lake through the effluent outfall diffuser;
- Reclaim Ponds: The Reclaim Pond is the water body located within the active cell of the Tailings Storage Facilities (i.e., the cell, North or South, where tailings deposition occurs). The current Reclaim Pond is located in the TSF South Cell since 2014. The Reclaim Pond collects runoff water from the Portage RSF, precipitation and tailings slurry water. A pumping system is used to pump water from the Reclaim Pond to the Mill for ore processing;
- Portage Attenuation Pond: The Portage Attenuation Pond became the Reclaim Pond once the South Cell was used for tailings deposition since 2014. The Portage Attenuation Pond collected water from Goose and Portage Pits, and runoff from the surrounding drainage basin. Water from the former Portage Attenuation Pond was discharged after treatment for removal of suspended solids to Third Portage Lake, through the effluent outfall diffuser;
- Stormwater Management Pond (Tear Drop Lake): This water body receives drainage from the Mill and service area (i.e., treated waste water, runoff from part of the airstrip, accommodation facilities, Mill, power plant, stockpiles and contractor areas). Water from the pond is transferred to the Reclaim Pond as necessary during summer. Water will be directed to the Reclaim Pond and then to the pits, once mining at these locations is completed and flooding starts;
- Freshwater intake and treatment system: This system pumps water from Third Portage Lake for human consumption and for providing fresh make-up water to the Mill for ore processing. Water used for human consumption is treated with chlorination and UV light at the accommodation facilities;
- Waste water treatment system: This system treats domestic sewage from the site. The treated water is then directed to the Stormwater Management Pond. This wastewater treatment plant is a tertiary treatment plant designed to remove organic material and nutrients. It is comprised of a primary clarifier, 3 Rotary Biological Contactors and a final clarifier. The dewatered sludge is disposed of in the Tailings Storage Facilities.

4.4.2.8 Infrastructure at Mill and Service Areas

This section describes the buildings and other infrastructures at the mine site used to provide living quarters to the working population and to support mining processes. These infrastructures are located near the Portage and Goose pits and the Tailings Storage Facilities (Figure 2-1). Additional infrastructures are present near the Vault Pit.

Components of this infrastructure are listed below (modified from Golder, 2014):

- Accommodations: The accommodation facilities include 12 dormitory wings (termed the Main Camp), the construction office, the dry change room, the dispatch office, the drinking water treatment facility, housekeeping and building maintenance facilities, and kitchen (with cafeteria), all connected to each other by arctic corridors that are also linked to the Mill and Service Building. The facilities are constructed of ATCO-style rigid wall modules. The dormitory wings consist of single-occupancy rooms with shared or single washrooms and showers. A twelfth dormitory wing is present, but not linked to the complex by an arctic corridor. A gymnasium coverall was also built as part of the accommodation facilities. Additional structures include Nova Camp (additional year-round living quarters) and the Geology tents;
- Ore processing/Mill: The mining processes involved for the extraction of gold from the raw ore material include crushing, grinding, gravity concentration, thickening, leaching, carbon-in-pulp, carbon stripping and gold recovery. Cyanide destruction, tailings deposition and carbon regeneration processes are also undertaken to support the extraction processes. The crushing process consists of reduction of the raw ore material into coarse ore by using a gyratory crusher (also called the primary crusher), a cone crusher (secondary crusher) and a tertiary cone crusher (pebble crusher). The crushed material is stored in the Ore Dome until conveyed to the mill complex to pass through the extraction processes. A total of four conveyor belts are used to carry the ore from the primary crusher to the Mill. The Mill building is a pre-engineered steel structure supported by concrete foundations and is located beside the accommodation facilities. The ten leach tanks are within bermed secondary containment located outside, on the south side of the mill. The assay lab and SO2 Plant, located besides the mill building, provide support to the mining processes;
- Power, electric grid and fuel: The Power Plant is a diesel-fired infrastructure with six (6) generator sets (i.e., generally with some active and some on standby/service mode) for electrical load bearing flexibility and efficiency, with a capacity for providing the 15.5 MW of energy required for the operation of the mine. The plant is a pre-engineered structure, and both the building and generator assembly are mounted on concrete foundations. A local electrical network is in place to supply buildings and other infrastructure near the power plant (i.e., accommodation facilities, Mill, Service Building, contractor area, fuel tank area, and airstrip). In addition, a network of 5KV cable is installed to reach more remote infrastructure, that is, the freshwater intake pumping station, the Reclaim Pond barge pumping station and the Emulsion Plant. The fuel storage and dispensing area is located beside the contractor area, south of the accommodation facilities and Mill. The primary storage consists of a 5.6 Ml steel tank located within a lined bermed containment structure. A fuel unloading and distribution pump and pipeline module feed a network system throughout the Mill area, supplying fuel to the exterior day tanks at the power plant. A fuel dispensing station for supplying light and heavy vehicles is located adjacent to the storage facility;

- Services: Service infrastructure consists of buildings and structures for activities supporting mining activities, the Mill and the accommodation facilities. The Service Building is the largest service infrastructure and is a pre-engineered steel structure supported on concrete foundations. This building provides offices, a warehouse, medical and emergency service area, and serves as the facility for maintenance of large mobile equipment. A coverall, near the Ore Dome and Mill, is used as a warehouse. The contractor area, located between the fuel storage area and Mill, hosts infrastructure supporting activities by contractors hired for the Project. Infrastructure components in these areas include trailers, coveralls, and temporary structures providing garages, tool shops and storage space;
- Roads: The road network at the mine site consists of a series of service and haulage roads. The total length of these roads is approximately 22 km. Service and haulage roads to and around the Vault deposit are approximately 12 km in length. The Vault haul road is approximately 8 km long and was constructed between the mine site and the Vault pit in 2012. Culverts were installed at stream crossings. The roads are constructed above grade using NPAG rock from the pits or the Airstrip Quarry. Road width varies from 10 to 20 m for service roads, and up to 40 m for haulage roads;
- Airstrip: The mine site is accessible via overland travel on the AWAR and via chartered aircraft to the airstrip. The airstrip was commissioned for use in January 2009, transporting personnel and freight, such as food and cargo, to the mine site. The airstrip is entirely overland and is located immediately north of the supporting infrastructure on the peninsula that separates the Second and Third Portage Lakes. Agnico Eagle completed the extension of the airstrip in 2013 from 1,495m x 45m to 1,752m x 45m, to accommodate a Boeing 737;
- Airstrip Quarry (Q23): This quarry is located north of the airstrip and provided material for the rockfill foundation of the building infrastructure at the mine site and for the construction of the dikes. It is now used for storage of drill core and associated equipment;
- Emulsion Plant area: This area is approximately 5 km north of the accommodation facilities and includes the Emulsion Plant and two warehouses installed on a rockfill pad for the storage of ammonium-nitrate. Four (4) explosive magazine storages on rockfill pads are also located along the access road between the AWAR and Emulsion Plant. A freshwater intake at the nearby lake is in place to supply water to the Emulsion Plant;
- Vault area infrastructures: A separate mobile power plant was installed in 2013 to service a small maintenance shop, office, and emergency accommodation facilities in the vicinity of the Vault Pit.

4.4.2.9 Waste Management Facilities

This section describes the facilities at the mine site used to store and dispose of hazardous and non-hazardous wastes. The facilities include the components listed below (modified from Golder, 2014):

- Landfill: Landfill #1 is currently being used for the disposal of non-hazardous, non-putrescible, non-salvageable solid waste material from Meadowbank that cannot be incinerated. This landfill is operated as multiple ‘sub-landfills’ that have been, or will be, built and buried within the footprint of Portage RSF. The elevation and location of these sub-landfills change as the RSF evolves throughout the operations phase of the Project. The sub-landfill area is bounded by a rock fill berm,

to act as a wind shield. These sub-landfills are progressively closed and encapsulated in the Portage RSF. A second landfill (closure landfill) will be developed in a 4 m deep depression at the top of the Portage RSF and will serve as the non-hazardous waste disposal site for the closure phase of the Meadowbank Project. It is expected that demolition waste from infrastructures removal/reclamation will be disposed of in Landfill #2. Whale Tail will have a landfill located in the Whale Tail RSF;

- Incinerator: The incinerator is located inside a building adjacent to the fuel storage facility. The unit is a dual chamber high temperature incinerator. The primary objective of the incinerator is to dispose of onsite putrescible materials (such as paper, cardboard, food waste and other organic type materials), thus diverting materials from the landfill that could create odours, attracting wildlife to the mine site. The incinerator receives waste from Meadowbank and eventually from Whale Tail Pit. The mine site has implemented a waste disposal segregation program to ensure wastes are disposed of in the appropriate manner;
- Hazardous material storage area: An area adjacent to the primary incinerator has been set up for the storage of hazardous wastes and other liquid waste and solid materials, including used waste oil, batteries, and tires. Materials are segregated and stored in drums inside closed secured seacans. Hazardous waste from Whale Tail will eventually be managed before shipping in this area. Annually, materials are transported to the Baker Lake Site Facilities and barged to a southern location for disposal or recycling at a Licenced facility;
- Landfarm: Meadowbank's first landfarm (Landfarm 1) was located on the north-west side of the South Tailings Cell. The South Tailings Cell is currently active; tailings are deposited and water is reclaimed from the cell. The tailings and water level in the South Tailings Cell are increasing in elevation over time and the Landfarm 1 area was flooded with reclaim water and tailings. For this reason, the Landfarm 2, constructed in 2016 and located on the North East side of the TSF South Cell is now in use until the end of operations and also for closure. The Landfarm 2 receives contaminated soil from Meadowbank and will eventually receive contaminated soil from Whale Tail.

5.0 Permanent Closure and Reclamation

5.1 Definition of Permanent Closure and Reclamation

Permanent closure is defined as the final closure of a mine site with no foreseeable intent by the existing proponent to return to either active exploration or mining. Permanent closure indicates that the proponent intends to have no further activity on the site aside from post-closure monitoring and potential contingency actions. Permanent closure does not, however, preclude the proponent or another party from pursuing opportunities at the existing site or in the area at a time beyond the foreseeable future (AANDC/ MVLWB, 2013).

5.2 Permanent Closure and Reclamation Requirements

This section provides the permanent closure and reclamation requirements for each individual component of the Project. The components are categorized in sub-sections for clarity. The specified closure objectives may be revised with subsequent updates to the Interim Closure and Reclamation Plan, but are considered reasonable at this time to guide the advancement of closure planning.

5.2.1 Baker Lake Site Facilities

Baker Lake Facilities are located approximately 2 km east of the Hamlet of Baker Lake. This is the transfer point and temporary storage for all dry shipment and fuel materials arriving by barge prior to overland shipment to the mine site via the AWAR. Baker Lake Facilities are listed below (Golder, 2014):

- Barge Landing;
- Bulk Fuel Storage Facilities: six (6) diesel fuel storage tanks. Fuel is pumped from the barges to the storage tank;
- Dry Freight Storage Facility: terraced gravel base pad to stack sea containers and other equipment;
- Access Road: all-season road that link Baker Lake Site Facilities to the AWAR;
- Water and Power Management: Water accumulation within the berms surrounding the Bulk Fuel Storage Facilities has to be managed as it is release to the environment. Power for facilities is supplied by portable generators and yard lighting is provided by portable diesel powered light towers.

5.2.1.1 Pre-Disturbance, Existing, and Final Site Conditions

Pre-disturbance conditions are based on baseline data collection programs presented in the Meadowbank FEIS (Cumberland, 2005a). The pre-disturbance site conditions are also summarized in Section 3.0 of this plan.

The Baker Lake facilities are currently in use and will be until closure or post-closure.

The facilities will be dismantled and reclaimed following best practices put in place during operation and in order to minimize long term disturbance. The facilities could also be transferred to the local community upon interest.

5.2.1.2 Closure Objectives and Criteria

The closure relevant objectives and closure criteria for the Baker Lake Site facilities are listed in Table 5-1, along with the specific actions and monitoring associated (modified from AANDC/ MVLWB 2013).

Table 5-1: Closure Objectives and Criteria – Infrastructures at Mill and Camp Areas

Closure Objectives	Closure Criteria	Action / Measurements
Return area to its original state or to a condition compatible with the end land-use targets	Remove all facilities and restore natural/compatible terrain as much as possible	Dismantle and reclaim all infrastructure, fuel reservoirs, chemicals and industrial wastes
Buildings and equipment will not be a source of contamination to the environment or a safety hazard to humans and wildlife	Limit access during closure Remove all facilities and restore natural/compatible terrain as much as possible Remove all hazardous material	Place signs to limit access Dismantle and reclaim all infrastructure, fuel reservoirs and hazardous wastes Remaining areas will be scarified and remaining concrete foundations and slabs will be cut in the pieces and buried Soil and water monitoring Physical inspection
Restore natural drainage patterns where surface infrastructure has been removed	Restore natural/compatible terrain as much as possible	Surface will be regraded to promote natural drainage
Restore the area for natural use by wildlife or traditional use by the community	Restore natural/compatible terrain as much as possible	Surface will be regraded to promote the use for wildlife and safe access for traditional activities

5.2.1.3 Consideration of Closure Options and Selection of Closure Activities

Considerations for Baker Lake facilities closure are provided by the AANDC/ MVLWB (AANDC/ MVLWB, 2013). Closure activities were selected in consideration of the closure aspects listed below, related to mine design stage, closure and post-closure periods.

- Recycling or reusing building materials and equipment where possible to reduce waste;
- Dismantle all buildings that are not necessary to achieve the future land use target;
- Cover foundations with materials conducive to vegetation growth;
- Where approved, break or perforate concrete floor slabs and walls to create a free draining condition in order that vegetation can be established;
- Bury materials in the unsaturated zone or below the active layer;
- Cut, shred, crush, or break demolition debris to minimize the void volume during disposal;
- Decontaminate equipment (free of any batteries, fuels, oils, or other deleterious substances) and reuse or sell it to local community interests;

- Remove all hazardous materials and chemicals prior to demolition to national approved hazardous material treatment facilities, or recycle, reuse, or dispose of in an appropriate manner upon approval from the regulatory authorities.

All the options listed above will be required to address closure and reclamation of the Baker Lake facilities. Details on the implementation of those considerations are provided as applicable in the following section.

5.2.1.4 Engineering Work Associated with Selected Closure Activity

At closure, it is planned to offer the infrastructures of the Baker Lake Site Facilities to local interests. If there is no local interest, the facilities and equipment will be decommissioned, dismantled and removed as appropriate.

As mentioned in the previous Interim Closure and Reclamation Plan (Golder, 2014), Agnico Eagle will return, if possible, the Baker Lake site to pre-development conditions. The site may also be left in a semi-industrial condition if consistent with a different end land use agreed upon with regulators, the Hamlet of Baker Lake, and other local interest.

All remaining bulk fuel on site will first be cleaned and then removed and offered to local interests. Buildings or infrastructure, including office trailers and barge landing, will be emptied and also offered for local use and/or relocation. In the case that there is no local interest for the tanks or remaining infrastructures, the infrastructures will be dismantled, decontaminate and demolition waste will be either transported to the mine site landfill disposal, barged out of Baker Lake to a southern waste disposal or recycling facility or sale for scrap metal.

At closure, scarification of all disturbed areas, including gravel pads and roadways, is planned to loosen the compacted material. To promote surface drainage, areas will be profiled, and culverts will be removed from the roadways to re-establish natural drainage patterns.

It is important to note that any contaminated soils from the facilities will be removed and placed in sealed drums. These will then be transported to the mine site landfarm for biological treatment, or barged out of Baker Lake to a southern destination for treatment and disposal.

5.2.1.5 Predicted Residual Effects

No significant residual effects have been identified for after closure of the supporting buildings but changes to terrain caused by the construction and subsequent reclamation of the facilities could result in some alteration of the natural terrain.

5.2.1.6 Uncertainties

The main uncertainty is related to the local interest for the Baker Lake facilities or equipment.

5.2.1.7 Post-Closure Monitoring, Maintenance, and Reporting

The overall post-closure monitoring, maintenance program and reporting for the Meadowbank Project are discussed in Section 9.0 along with the general reporting requirements. The following presents the relevant post-closure monitoring following the closure of the Baker Lake facilities and maintenance strategies as presented by AANDC/ MVLWB (2013):

- Periodic inspections will be performed to visually assess the reclaimed areas; and

- All buildings and equipment left on-site during closure will be maintained until no longer required, at which time they will be removed from the site or demolished and disposed to the mine site landfill disposal or barged out of Baker Lake to a southern waste disposal or recycling facility or for sale or sold as scrap metal.

5.2.1.8 Contingencies

There are no activities proposed as contingencies for the closure of the buildings and equipment in Baker Lake.

5.2.2 All-Weather Access Road

The All-Weather Access Road (AWAR) was constructed to connect the Hamlet of Baker Lake to the mine site. This 108 km long road was constructed above grade, using quarried material from non-acid generating rock.

5.2.2.1 Pre-Disturbance, Existing, and Final Site Conditions

Pre-disturbance conditions are based on baseline data collection programs presented in the Meadowbank FEIS (Cumberland, 2005a). The pre-disturbance site conditions are also summarized in Section 3.0 of this plan.

A total of thirty four (38) culverts, and nine (9) bridges are necessary to cross the steams all along the AWAR.

At post-closure, the road will be reclaimed and the natural drainage and terrain will be restored as much as possible. Upon local interest and regulatory approval, the AWAR could be transferred to the local community.

5.2.2.2 Closure Objectives and Criteria

The closure relevant objectives and closure criteria for the AWAR are listed in Table 5-2, along with the specific actions and monitoring associated (modified from AANDC/ MVLWB 2013).

Table 5-2: Closure Objectives and Criteria – All Weather Access Road

Closure Objectives	Closure Criteria	Action / Measurements
Preserve the main access road to the site in a sufficient condition to allow post-closure access for monitoring, inspection and maintenance activities		Reclaim the AWAR once post-closure monitoring and site maintenance can be completed with helicopter access
At closure, reclaim road to its original state or to a condition compatible with the end land-use targets	Restore natural/compatible terrain as much as possible	Remove bridges, culverts and pipes; restoring natural stream flow and drainage patterns; stabilizing stream banks by using rip-rap Scarify surfaces Remove other infrastructures along the road, including communication towers
Restore natural drainage patterns	Restore natural/compatible terrain as much as possible	Road embankment will be regraded to promote natural drainage Remove bridges, culverts and pipes; restoring natural stream flow and drainage patterns
Reclaim quarries and borrow area by providing safe long term conditions	Promote natural drainage and ensure wall stability	Quarry walls will be drilled and blasted to ensure long term stability and safety of the quarry walls for wildlife Road embankment will be regraded to promote natural drainage

Other recommendations are presented in the Code of Practice for Metal Mines as follows (adapted from EC, 2009):

- Reclaim roads that will not be preserved for post-closure use (R519) by returning area to its original state or to state compatible with the desired and use.

5.2.2.3 Consideration of Closure Options and Selection of Closure Activities

Considerations for the AWAR closure are provided by the MVLWB/AANDC (MVLWB/AANDC, 2013). Closure activities were selected in consideration of the closure aspects listed below, related to mine design stage, closure and post-closure periods.

- Remove structures including bridges and culverts;
- Reclaim areas to the original topography and drainage or to a new topography or drainage compatible with end land use targets;
- Scarify road surfaces to promote re-vegetation of indigenous species;
- Allow gradual slope failure of quarries involving rock masses or slope pit walls;

- Block quarry access routes with boulder fences, berms and/or inukshuks (guidance from local communities and elders would be sought); and
- Flatten berms and slopes at the side of roads to facilitate wildlife passage.

All the options listed above will be required to address closure and reclamation of the AWAR. Details on the implementation of those considerations are provided as applicable in the following section.

5.2.2.4 Engineering Work Associated with Selected Closure Activity

Agnico Eagle is committed to manage the road as a private road with limited public access during the mine life and to fully decommission the road after closure. Agnico Eagle will consider the option of leaving the AWAR intact if it is deemed in the public interest based on guidance and approval from local communities and regulatory agencies. If agreed upon, road operation and maintenance responsibility would then be transferred to another party (Golder, 2014).

In the case that Agnico Eagle stays the owner of the AWAR, natural drainage courses will be restored by removing culverts and bridges, road fill material and removing in-stream works down to the original channel bed. Where affected watercourses are fish-bearing, channel beds will be re-constructed similar to baseline conditions. Work at these sites will consider appropriate timing for in-stream works and will be completed in accordance with Department of Fisheries and Oceans (DFO) operational statements (Golder, 2014).

The AWAR will also be decommissioned by ripping the road bed to make it as impassable as possible to motorized vehicles, provide favorable conditions for natural drainage, vegetation re-colonization and stabilize the locally steep slopes. The road embankments will also be profiled to better blend with the existing topography to allow safe wildlife passage. All the communication towers will also be decommissioned. Removed equipment will be transported to Baker Lake Site Facilities for shipping or will be disposed in the Meadowbank landfill. The rockfill foundations will be scarified and areas will be grading to blend with the surrounding topography.

The decommissioning details of the 22 quarries are provided in the previous Interim Closure and Reclamation Plan (Golder, 2014):

- All equipment (e.g. crushers) will be decommissioned and removed from the quarries;
- All garbage and other debris will be removed from the quarries and transported either to the Meadowbank Project site or to the Baker Lake Site Facilities for appropriate disposal;
- Remaining quarried rock material will either be used for reclamation purposes elsewhere (e.g., erosion protection at decommissioned stream crossings) or spread over the base of the respective quarry site;
- The quarry high walls will be laid back to a 1H:1V side slope to promote long-term stability;
- The base of the quarries will be graded to provide unrestricted drainage of runoff to the surrounding tundra, and to prevent the ponding or collection of water on the sites;
- If acid generating bedrock is exposed in a rock cut or quarry, these areas will be covered with a minimum 2 m thick layer of non-acid generating cover, graded to direct water away from the bedrock exposure;

- The quarry access roads will be decommissioned by removing any culverts, back-grading the watercourse banks, and ripping the road surface; and
- Access into each quarry area will be blocked by placing a rock pile across the entryway to prevent easy access by wheeled vehicles.

The AWAR will be preserve as the main access road to the site in a sufficient condition to allow post-closure access for monitoring, inspection and maintenance activities. The road will be decommissioned once post-closure monitoring and site maintenance can be completed with helicopter access.

5.2.2.5 Predicted Residual Effects

No significant residual effects have been identified for after closure of the AWAR but changes to terrain caused by the construction and subsequent reclamation of the facilities could result in some alteration of the terrain and or loss of plant populations and plant communities.

5.2.2.6 Uncertainties

The pre-disturbance terrain is covered by discontinuous vegetation interspersed with few bedrock outcroppings. The reclamation plan will be designed to encourage a natural succession of indigenous plant species within disturbed site areas. Grading and contouring would be done, where appropriate, to control soil erosion and to promote re-vegetation by natural colonization.

There are also some uncertainties regarding the transfer of ownership of the road to the local community. If it is deemed in the public interest based on guidance and approval from local communities and regulatory agencies, the AWAR will be left intact. Road operation and maintenance responsibility would then be transferred to another party (Golder, 2014).

5.2.2.7 Post-Closure Monitoring, Maintenance, and Reporting

The overall post-closure monitoring, maintenance program and reporting for the Meadowbank Project are discussed in Section 9.0 along with the general reporting requirements. The following presents the relevant post-closure monitoring following the closure of the All-Weather Access Road and maintenance strategies as presented by AANDC/ MVLWB (2013):

- Periodic inspections will be performed to visually assess the reclaimed areas; and
- All roads to be used during closure will be maintained until they are no longer required.

5.2.2.8 Contingencies

There are no activities proposed as contingencies for the closure of the AWAR.

5.2.3 Dikes and Saddle Dams

The dikes and dams are required to isolate mining activities from surrounding lakes (i.e., East, South Camp and Bay-Goose Dikes) or to contain tailings (i.e., Stormwater and Central Dikes, and Saddle Dams 1 to 5).

5.2.3.1 Pre-Disturbance, Existing, and Final Site Conditions

Pre-disturbance conditions are based on baseline data collection programs presented in the Meadowbank FEIS (Cumberland, 2005a). The pre-disturbance site conditions are also summarized in Section 3.0 of this plan.

The dewatering dikes were constructed from non-acid generating (NPAG) waste rock materials produced during mining. Once the water quality will meet the defined regulatory guidelines in the pit lakes, it is planned to open some of the dewatering dikes.

The North Cell is contained by Stormwater Dike, Saddle Dam 1, Saddle Dam 2, and rockfill road perimeter structures RF-1 and RF-2. The South Cell is contained by Stormwater Dike, Saddle Dam 3, Saddle Dam 4, Saddle Dam 5, and Central Dike. Those retaining structures will be kept for closure, as they contain the mine tailings, except Saddle Dam 3, which is planned to be opened to conduct the TSF runoff water to the Third Portage Lake, located downstream of the dike, once runoff water quality meets the required discharge criteria.

5.2.3.2 Closure Objectives and Criteria

The closure relevant objectives and closure criteria for the dikes and dams are listed in Table 5-3, along with the specific actions and monitoring associated (modified from AANDC/ MVLWB 2013).

Table 5-3: Closure Objectives and Criteria – Dikes and Saddle Dams

Closure Objectives	Closure Criteria	Action / Measurements
Ensure physical stability of residual earth structures for environmental, human, and wildlife safety	Stabilize slopes to minimize erosion and slumping Ensure long-term stability	Conduct a comprehensive risk assessment to evaluate long-term risks associated with possible failure modes for dewatering dikes, and associated impacts, parameters, and management strategies. Routine monitoring and sampling Physical and geotechnical inspection
Meet water quality objectives for the completely flooded open pits	Water licence criteria for direct discharge to the receiving environment	Prior to opening the dikes and reconnecting the lakes, the water quality will be profiled to confirm it is suitable for release Water treatment will be established if required Routine monitoring as per the Water Licence requirements
Controlled flooding rate of the open pits	Ensure safe water level during flooding to avoid uncontrolled discharge	Integrate water management plan and water balance to control flooding rate and water level Routine monitoring and inspection
Dismantle and remove as much of water management systems as possible and restore natural or establish new drainage patterns	Re-establish natural grade and drainage where possible	Dismantle all water management systems Surface will be regraded to promote natural drainage. Routine monitoring and sampling
Discourage wildlife from entering the facilities	Wildlife will be discouraged from entering the facilities until water quality is acceptable	Limit access to facilities with berms Routine monitoring and sampling
Remove facilities when water treatment is no longer required	Water licence criteria for direct discharge to the receiving environment	Dismantle all water treatment system when possible Water to be kept into a close circuit until the water quality meets criteria from the water Licence Routine monitoring and sampling

5.2.3.3 Consideration of Closure Options and Selection of Closure Activities

Considerations for the dikes and dams closure are provided by the AANDC/ MVLWB (AANDC/ MVLWB, 2013). Closure activities were selected in consideration of the closure aspects listed below, related to mine design stage, closure and post-closure periods.

- Stabilize embankments by removing weak or unstable materials from slopes and foundations and/or construct toe berms to flatten overall slope;
- Open water retention dams and drain impoundments, avoid post closure impoundment of water when possible; and
- Conduct reclamation risk assessments for design criteria of dams, spillways, and covers.

All the options listed above will be required to address closure and reclamation of the dewatering dikes and permanent structures. Details on the implementation of those considerations are provided as applicable in the following section.

5.2.3.4 Engineering Work Associated with Selected Closure Activity

All dikes and dams were designed for long term stability. Once the Portage and Goose pits, as well as Vault and Phaser pits, will be completely flooded and monitoring has determined that pit lake water meets water quality criteria, South Camp Dike, Bay-Goose Dike and Vault Dike will be opened to reconnect the pit lakes with the adjacent lakes. East Dike will remain intact, preserving the 1 meter difference in elevation between Third Portage Lake and Second Portage Lake.

This opening or partial excavation of the dikes, named ``dike reconnection``, to reconnect the pit lakes with the adjacent lakes, will be designed to ensure long term stability of the structures and protection of the aquatic environment. The controlling condition will occur during late winter, when thick ice conditions are expected to coincide with annual minimum lake levels. The dike reconnection is also discussed in Section 5.2.4 – Open Pits of this report for the permanent closure of the open pits.

As the runoff water from the TSF cover system will convey towards the Reclaim Pond located in the South Cell upstream of Saddle Dam 3, it is planned to open SD3. Central Dike, Saddle Dams 1, 2, 4 and 5 will remain intact, to contain the stored tailings in the TSF.

An update study was performed in 2016 for the design of the dewatering dike opening to reconnect the pit lakes to the adjacent lakes. Table 5-4 presents the general description to each component to be decommissioned.

Table 5-4: General Description of Decommissioning Components – Dike Reconnection

Component	General Description of the reconnection
Bay-Goose Dike Reconnection	Open dike to 3 m below design minimum water level to allow year-round fish passage, facilitate water exchange, and facilitate water movement within the former impoundment; Reconnection at two locations, with an alternate third location to access Portage Pit Lake; Reconnection width of 10 m with 3:1 sideslopes; Erosion protection on exposed shoreline and appropriately sized substrate in reconnection base to satisfy fish habitat requirements for this structure.
South Camp Dike Reconnection	Open dike 1 m below design minimum water level to allow for seasonal fish passage; Reconnection width of 10 m with 3:1 sideslopes; Erosion protection on exposed shoreline and appropriately sized substrate in reconnection base to satisfy fish habitat requirements for this structure.
Vault Dike Reconnection	Reconnection width of 10 m through dike, channel width of 5 m, with 3:1 sideslopes; Erosion protection on exposed shoreline and appropriately sized substrate in reconnection base to satisfy fish habitat requirements for this structure.
Saddle Dam 3	Dike to be opened. Design of opening to be confirmed.
Reference: (Tetra Tech, 2016)	

The final dike reconnection design for the structures will be presented in the Final Closure and Reclamation Plan.

It should be noted that site water will be kept into a close circuit, meaning that the dikes and dams will not be opened, until the water quality meets criteria of the Meadowbank Water Licence (CCME limits or site specific closure criteria to be defined).

5.2.3.5 Predicted Residual Effects

Site water will enter and mix in Third Portage Lake and Phaser Lake. It is predicted that concentrations in post-closure will meet discharge criteria.

5.2.3.6 Uncertainties

There are no major uncertainties related to dikes closure. Uncertainties related to water quality within the pit lakes, prior to dike opening, are addressed in Section 5.2.4.4.

5.2.3.7 Post-Closure Monitoring, Maintenance, and Reporting

The overall post-closure monitoring, maintenance program and reporting for the Meadowbank Project are discussed in Section 9.0 along with the general reporting requirements. The following presents the relevant

post-closure monitoring following the closure of the dikes and dams, and maintenance strategies as presented by AANDC/ MVLWB (2013):

- Periodic inspections will be performed by a geotechnical engineer to visually assess stability and performance of the structures;
- Instrumentation reading and data interpretation to ensure they are performing as designed.

Regular field inspections of the TSF structures are planned to ensure their adequate performance in closure and post-closure. More details are presented in Section 5.2.6 – Tailings Storage Facilities. The geotechnical monitoring of the dikes and dams in closure and post-closure will be defined in the Final Closure and Reclamation Plan.

More details on the contact water management system in closure are presented in Section 5.2.7.

5.2.3.8 Contingencies

There are no stability issue anticipated for the dewatering dikes, as after closure and dikes opening, the water differential across dewatered dikes surrounding the open pits will be inexistent or minimal. The TSF and the peripheral dams are expected to freeze over time, therefore no stability issues are expected. Regular field inspections of the TSF structures are planned to ensure they are performing adequately in closure and post-closure.

5.2.4 Open Pits

The ore was extracted from the following deposits during the operational lifespan of the mine of the Project:

- Portage deposits (Pit A, B, C, D and E);
- Goose deposit; and
- Vault deposit, including Phaser/BB Phaser.

Open pit development is staged over the course of mining operations.

5.2.4.1 Pre-Disturbance, Existing, and Final Site Conditions

Pre-disturbance conditions are based on baseline data collection programs presented in the Meadowbank FEIS (Cumberland, 2005a). The pre-disturbance site conditions are also summarized in Section 3.0 of this plan.

Portage, Goose, Vault, Phaser and BB Phaser Pits are all located in former lake areas that have been dewatered to allow mining activities. For the development of Portage Pit, the North-East Arm of Second Portage Lake, isolated by East Dike, was dewatered from 2008 to 2011. A portion of Third Portage Lake was dewatered in 2011 following the construction of the Goose Dike, to allow the development of the Goose Pit and the Portage Pit south pushback. The dewatering of Vault Lake was completed in 2013 and 2014 following the construction of the Vault Dike, to develop the Vault Pit. The dewatering of Phaser Lake in 2016 was completed to develop Phaser and BB Phaser Pits.

The Portage and Goose pits were mined first, starting respectively in 2010 and 2011. Mining of Vault pit started early 2014 and Phaser and BB Phaser started in 2017. Mining activities in Goose Pit have been

completed since April 2015. Portage, Vault and Phaser/BB Phase Pit are expected to be mined until the third quarter of 2018. At the end of operations, all the pits will be flooded over a period of several years, with an estimated completion by 2025 and 2026.

The open pits are designed to have stable slopes during the mine life and post-closure. The slopes are monitored as part of mine operations and will be progressively modified as required to maintain stability. At the end of active mining operations, rock berms will be placed around exposed perimeters of the pits to restrict access and minimize hazards to people and wildlife.

5.2.4.2 Closure Objectives and Criteria

The closure relevant objectives and closure criteria for the Meadowbank open pits are listed in Table 5-5, along with the specific actions and monitoring associated (modified from AANDC/ MVLWB 2013).

Table 5-5: Closure Objectives and Criteria – Open Pits

Closure Objective	Closure Criteria	Actions/Monitoring
Access to the pits are limited, for the safety of humans and wildlife	Install physical barriers to limit access	Maintain or construct waste rock berm until pit area is flooded Inspection of berms during flooding period
Allow emergency access and exit during flooding stage	Safe access and route will be established during flooding for inspection and emergency	A plan will be developed to allow for reasonable exit should inadvertent access occur
The open pit mine walls, slopes and pit shorelines are physically and geotechnically stable or minimize access to unstable areas	Ensure walls and slopes are stable prior to flooding Install physical barriers to limit access	Inspection of berms, walls, slopes and shorelines before and during flooding period Maintain or construct waste rock berm until pit area is flooded
Dust levels are safe for people, vegetation, aquatic life, and wildlife	Control dust emissions during active reclamation period	Implement best practices and conduct air quality monitoring during active reclamation period
Meet water quality objectives for any discharge from pits Water quality in flooded pits is safe for humans, aquatic life, and wildlife	Prior to dike reconnection, the water quality will meet the Water Licence requirements	Prior to open the dikes, the water quality will be profiled to confirm it is suitable for release Water treatment will be established if required Routine monitoring as per the Water Licence requirements
Migration and discharge of contaminated drainage has been minimized and controlled	Prior to dike reconnection, the water quality will meet the Water Licence requirements Ensure safe water level during flooding to avoid uncontrolled discharge Minimize erosion during flooding.	Prior to open the dikes, the water quality will be profiled to confirm it is suitable for release Integrate water management plan and water balance to control flooding rate and water level Routine monitoring and inspection

Closure Objective	Closure Criteria	Actions/Monitoring
Original or desired new surface drainage patterns have been established	Dike reconnection are designed to ensure proper flow	Design and construct dike reconnection with adequate dimensions at proper locations to maintain required water levels and flow
Pit fill rate and opening/reconnection of dewatering dikes do not cause adverse effects on fish, fish habitat, wildlife safety, or water levels in nearby water bodies/watercourses	Respect fresh water consumption limits for pits flooding as per Water Licence Dike reconnection designed as per the NNLP*	Integrate water management plan and water balance to control flooding rate and water level Design and construct dike reconnection with adequate dimensions at proper locations to maintain required water levels and flow, and as per NNLP* requirements
For flooded pits, establish in-pit aquatic habitat where practical and feasible	Fish habitat compensation features planned as per the NNLP*	Construct fish habitat compensation features Biology monitoring programs
Consider community land use expectations and traditional knowledge in the closure planning	Community engagement and traditional knowledge will continue to be implemented in closure planning	Community engagement during closure planning
*NNLP - Agnico Eagle Mines Meadowbank Division No-Net-Loss Plan, October 2012		

Other recommendations are presented in the Code of Practice for Metal Mines as follows (adapted from EC, 2009):

- If it is technically and economically feasible to do so, infrastructure (e.g., crushers, metal structures and air pipes) and equipment (e.g., pumps) should be removed from the site. Any equipment to be left in the pit should be inspected and remediated as appropriate to ensure that there is no risk of leakage of any contaminants (R506);
- During decommissioning, any contamination associated with vehicle and equipment operations and maintenance should be identified and remediated, as appropriate (R507);
- Open pits should be backfilled or flooded to the extent practicable to prevent unauthorized access and to protect public safety. In cases where backfilling or flooding is not practically feasible, fencing should be installed to protect the public. In all cases, signs should be posted warning the public of potential dangers associated with the site (R510);
- The potential for mine water discharges should be assessed. For open pit mines, this may be done using water balance calculations and, in some cases, hydrogeological assessment. Where mine water discharge is predicted, the flow rate should be estimated (R511);
- Where there is the potential of mine water discharge after mine closure, the quality of the discharge should be predicted. Mine water quality should be assessed once closure has been completed to verify the accuracy of the predictions (R512);

- Where there is the potential of mine water discharge of poor quality, measures should be implemented to prevent or control that discharge and to collect the mine water for treatment. Prevention methods may include capping of mine openings to prevent mine water discharge (R513).

5.2.4.3 Consideration of Closure Options and Selection of Closure Activities

Considerations for open pit closure are provided by the AANDC/MVLWB (AANDC/MVLWB, 2013). Closure activities for the pit were selected in consideration of the closure aspects listed below, related to mine design stage, closure and post-closure periods.

- Excavate rock and soil slopes will remain stable during closure and post-closure;
- Open pit backfill with waste rock as operations proceed;
- Flood the pit, with natural and pumped inflows;
- Block open pit access routes and control access;
- Establish in-pit aquatic habitat.

All the options listed above will be required to address closure and reclamation of the open pits. Details on the implementation of those considerations are provided as applicable in the following section.

5.2.4.4 Engineering Work Associated with Selected Closure Activity

Pit walls have been designed for long-term slope stability during operations and closure; therefore Agnico Eagle does not intend to establish long-term stable slopes by allowing gradual failure of rock masses. In addition, the option for covering slopes with rip rap will not be applied as the priority is for pit flooding given the end land use target of recreating open water areas.

The mined-out sectors of central Portage Pit have been used for the final placement and permanent storage of waste rock since 2015. Waste rock has also been placed in the Goose Pit following the end of the mining activities in 2015. The effects of waste rock disposal in pits water quality have been considered in operational and post-closure water quality forecast assessment, the results of which are presented annually in the Meadowbank Annual Report (Agnico, 2018c), and more specifically in the Meadowbank Water Management Plan and Report (Agnico, 2018a).

At the end of mining, all pit equipment will be removed from the pits and closure activities will proceed. After demobilization and disposal of the equipment, pit access ramps will be blocked using rock barricades and safety berms. A plan will be developed to allow for reasonable exit should inadvertent access occur and emergency egress routes will be provided. At the pit crest, exposed areas will be stabilized and surrounding area contoured so that runoff is directed into the pits, minimizing erosion.

The open pits will be flooded once mining activities in each open pit are complete. Flooding will occur by allowing the natural accumulation of seepage and groundwater into the pits and surface water drainage reporting to the pit to remain in place. In addition, transfer of water at controlled rates from the surrounding lakes using high-capacity mechanical pump systems or siphons will contribute to the majority of the flooding. Goose Pit began natural flooding in 2015, with natural inflows such as groundwater, seepage and runoff water. The flooding of Goose will be completed by pumping 3,182,704 m^3 of water from the Third Portage Lake in summer 2019. The Portage Pit will be flooded with a transfer of 531,266 m^3 of reclaim

water from the South Cell TSF following the end of operations in summer 2022, and with the pumping of 31,179,343 m^3 of water from Third Portage Lake, from 2020 to 2026. Both pits are predicted to reach the same water level as Third Portage Lake (133.6 masl) by 2029 (Agnico Eagle Water Balance, 2018d).

Likewise, Vault Pit will be flooded by pumping water from Wally Lake once mining is completed. The pumping of 28,051,096 m^3 from Wally Lake is expected to commence in 2019 and to be completed in 2025. The natural inflow will then allow Vault pit to reach 139.9 masl (natural Wally Lake water level) (Agnico Eagle Water Balance, 2018). Unlike Vault Pit, Phaser Pit and lake are planned to be flooded exclusively from their watershed run off inflows until the target elevation of Wally is reached, expected in summer 2027. From there, those same inflows will be used conjointly with the Vault Attenuation Pond inflows to flood to the same target elevation at 139.9 masl (Wally Lake level).

To minimize impacts to aquatic habitat in the surrounding lakes, it is anticipated that transfers from Third Portage and Wally lakes will be done during periods of higher water in the spring and summer months. Maximum yearly pumping rates will respect the limits specified in the Meadowbank Water Licence to avoid draw down levels in each source lake. Throughout the pit flooding phase, the dikes will remain in place, acting as barriers for water migration between the pit lake and the surrounding lakes and environment.

At closure, the walls of the mined-out open pits will have been exposed for several years during mine operation, and some oxidation will have occurred. This has also been considered in operational and post-closure water quality forecast assessment.

Once the pit flooding completed, the Bay Goose Dike, South Camp Dike and Vault Dike will be opened provided the water quality in the pits meets the Meadowbank Water Licence requirements, e.i. the Canadian Council of Ministers of the Environment (CCME) criteria and/or site specific criteria for parameters not included in the CCME Guidelines. This opening or partial excavation of the dikes, named ``dike reconnection``, to reconnect the pit lakes with the adjacent lakes, will be designed to ensure long term stability of the structures and protection of the aquatic environment.

Water quality forecast modeling is completed yearly, considering the pit flooding, the reclaim water transfer and the natural inflows. The forecast is presented in the Meadowbank Annual Report, and more specifically in the Meadowbank Water Management Plan and Report. The purpose of the water quality forecast is to identify through a mass balance approach the contaminants of concern during the pit flooding process and determine if water treatment will be required on site for closure activities when comparing the final contaminant levels to the CCME guidelines and/or site specific criteria for parameters that are not included in the CCME guidelines. Each yearly update builds on the previous year as new monitoring data is added from the site. Forecasted model values of the prior years are compared with the actual sample results from the following years for model calibration purposes.

A preliminary assessment of the water quality forecast in Goose and Portage pits at closure was conducted taking into account the additional tailings from Whale Tail Pit that will be deposited in the North and South Cells TSF. Based on this preliminary assessment, dissolved copper, dissolved chromium and dissolved selenium were found to be potential parameters of concerns (SNC, 2016). In the latest water quality forecast performed in 2018 (SNC, 2018) and presented in the 2017 Meadowbank Annual Report, total metal concentrations were considered in the model in order to account for both particulate and dissolved forms of these parameters. Considering the processing of Meadowbank ore only, with a LOM finishing in 2018, nine (9) contaminants have been identified as potential parameters of concern that may

require treatment, namely total concentrations for aluminium, arsenic, cadmium, chromium, copper, iron, nickel, selenium and fluoride.

As the aforementioned parameters may be of concern prior to dike opening, treatment options for their removal during the pit flooding process will need to be examined and will be assessed in greater detail during the preparation of the Final Closure and Reclamation Plan. These contaminants originate from the TSF reclaim water when transferred to the pit, therefore treatment option for the TSF reclaim water would be considered prior to transfer in the Portage Pit.

The closure phase will also include a number of years following filling where water quality will be monitored prior to opening the dikes. Water quality forecast will be performed during the flooding period. Surface water quality monitoring (parameters to be sampled and frequency) and sampling locations will comply with the Meadowbank Water Licence monitoring requirements.

Fish habitat will be constructed prior to flooding as described in the NNLP (Agnico Eagle, 2012a).

5.2.4.5 Predicted Residual Effects

No discharges will occur to receiving environment during operations and flooding period of the pits since all contact waters will be diverted to the TSF South Cell or the open pits. The Goose, South Camp Dike and Vault dike will only be opened when the level of the flooded pits reaches the same elevation as the adjacent lakes, and pit water quality meets CCME/site specific criteria concentrations as per the Meadowbank Water Licence condition. The dike reconnection will maintain required water levels and flow, and will respect the NNLP (Agnico, 2012a) requirements. No residual effect on Third Portage or Wally Lakes water quality and water level are expected during closure and post-closure.

5.2.4.6 Uncertainties

The following uncertainties have been identified with respect to closure planning of the open pits:

- Water quality of the final pit lakes prior to opening of the dewatering dikes and free mixing with adjacent water bodies;
- Flooding rate for filling the open pits at closure, including natural inflows and lake water transfers, and length of time to achieve target water levels.

Water quality monitoring will continue during operations to expand the available water quality database. Water quality forecast for pit lake water will be performed annually to predict the water quality at closure. Treatment options will be examined and will be assessed in greater detail if required during the preparation of the Final Closure and Reclamation Plan.

The water balance and water management will also be reviewed on an annual basis and in closure to estimate the lake water transfer volume required for flooding, as well as the natural inflows, to ensure adequate water level are maintain into the pits until dike reconnections.

5.2.4.7 Post-Closure Monitoring, Maintenance, and Reporting

The overall post-closure monitoring, maintenance program and reporting for the Meadowbank Project are discussed in Section 9.0 along with the general reporting requirements. The following presents the relevant post-closure monitoring following flooding and dike reconnection and maintenance strategies for the open pits as presented by AANDC/MVLWB/ (2013):

- Monitor water level in pit to confirm closure objectives regarding fish, fish habitat, and wildlife safety are being achieved;
- Sample water quality and quantity at controlled pit lake discharge points;
- Inspect aquatic habitat in flooded pits where applicable.

Following opening of the dikes (expected in 2029, or when pit water quality meets the Meadowbank Water Licence requirements), post-closure monitoring and reporting will be conducted for an additional five years, to ensure ongoing compliance and that the pit lakes and dike reconnection are functioning as expected. If water quality continues to be acceptable at that point, then application will be made to regulators to modify or terminate the monitoring program. It is also anticipated that after several years in the post-closure period, monitoring would no longer be required.

In addition to water quality, closure monitoring of the open pits will include a stability and safety component. Visual inspections will be carried out to check for signs of instability, rockfall, changes to groundwater inflows and overall integrity. Safety berms and signage above water level will also be inspected and maintained as required.

Post-closure monitoring program will be defined in details in the Final Closure and Reclamation Plan.

5.2.4.8 Contingencies

The closure plan currently incorporates a water treatment plant as a contingency measure should water in the pit lakes not be suitable for release to the environment. In this case, water would only need to be treated for a short period in order to treat the reclaim water from the TSF until pit water meets closure criteria. The need for water treatment will be determined based on water quality forecast and water quality monitoring before dikes are to be opened.

5.2.5 Rock Storage Facilities

At Meadowbank some of the waste rock generated from the open pit mining is considered potentially acid-generating (PAG) and some non-potentially acid-generating (NPAG). Due to the distance between the Portage mining area and the Vault mining area, two (2) main separate rock storage facilities are required. Waste rock from the Portage and Goose Pits is stored in a storage facility located near to these pits (Portage RSF or mined out areas of Portage and Goose Pits), while waste rock from the Vault, Phaser and BBPhaser Pits is stored in a separate storage facility adjacent to the Vault Pit (Vault RSF).

Some NPAG material is also stored in various smaller RSFs. Suitable waste rock material NPAG is used for construction purposes associated with dikes and roads and will also be used for closure activities.

5.2.5.1 Pre-Disturbance, Existing, and Final Site Conditions

Pre-disturbance conditions are based on baseline data collection programs presented in the Meadowbank FEIS (Cumberland, 2005a). The pre-disturbance site conditions are also summarized in Section 3.0 of this plan.

The rock storage facilities on site are currently in operation. The Portage RSF PAG area is being progressively covered with NPAG material to construct the cover required for closure. At the end of operations, the PAG material in the RSF will be entirely encapsulated in NPAG material, and it is expected

that the stored NPAG material will be used for closure construction purposes. The Vault RSF includes NPAG material in majority and is not expected to require a cover.

5.2.5.2 Closure Objectives and Criteria

The closure relevant objectives and closure criteria related to the closure of the rock storage facilities are taken from the Interim Closure and Reclamation Plan (Golder, 2014) and AANDC/MVLWB (2013) along with the specific actions and monitoring associated are listed in Table 5-6.

Table 5-6: Closure Objectives and Criteria – Rock Storage Facilities

Closure Objectives	Closure Criteria	Action / Measurements
The pile is physically and geotechnically stable for human and wildlife safety in the long-term: minimize erosion, thaw settlement, slope failure, collapse, or the release of contaminants or sediments	The RSF is designed for closure and will account for seismic and permafrost conditions A thermal cover to limit acid generating reactions and migration of contaminants	Place a thermal cover of NPAG rockfill on the RSF surface during progressive reclamation Ensure stable slopes Physical and geotechnical inspection by a qualified engineer Thermal monitoring
Build to blend in with current topography, be compatible with wildlife use, and/or meet future land use targets	Limit RSF elevation to blend into local topography RSF at post-closure will not compromise wildlife safety and safe land use as the RSF will be covered and stable	Place a thermal cover of NPAG rockfill on the RSF surface during progressive reclamation Ensure stable slopes Physical and geotechnical inspection by a qualified engineer
Generation of poor water quality has been minimized, including ARD/ML Surface runoff and seepage water quality is safe for humans and wildlife	Runoff and seepage will meet acceptable discharge criteria to be released to the receiving environment Freezeback of the RSF	The runoff and seepage from the RSF will continue to be collected as needed and monitored for transfer to TSF as per operational practices, and until monitoring results demonstrate that water quality is acceptable for direct discharge Place a thermal cover of NPAG rockfill on the RSF and ensure freezeback Physical inspection, thermal monitoring Routine water quality monitoring and sampling
Dust levels are safe for people, vegetation, aquatic life, and wildlife in the long-term	Best management practices for controlling dust during active reclamation	Implement best management practices as during operation Routine air quality monitoring

Other recommendations are presented in the Code of Practice for Metal Mines as follows (adapted from EC, 2009):

- Carry out detailed inspections and assessments of waste rock piles. The objective of these inspections and assessments is to evaluate the actual performance against design projections related to anticipate post-closure conditions. (R524);
- Conduct a comprehensive risk assessment for mine closure to evaluate the long-term risks associated with possible failure modes for waste rock piles. Identify possible impacts and critical parameters, and develop control strategies. If warranted, implement a long-term monitoring plan. (R525/526);
- Re-evaluate, and revise as necessary, plans for the management of waste rock to prevent, control and treat metal leaching and acidic drainage to ensure that they are consistent with the objectives and plans for mine closure and post closure. If warranted, implement a long-term site-specific monitoring program (R527/538).

5.2.5.3 Consideration of Closure Options and Selection of Closure Activities

Considerations for rock storage facilities closure are provided by the AANDC/MVLWB (AANDC/MVLWB, 2013). Closure activities for the RSF were selected in consideration of the closure aspects listed below, related to mine design stage, closure and post-closure periods.

- Controlled disposal by characterization and segregation PAG materials. Place PAG material within the center of the Vault RFS so permafrost can encapsulate;
- Construct the RSF in lifts with slopes with individual lifts ca be set back to provide long-term stability;
- Controlled runoff water by having sediment collection ponds where required for use during operation and possibly for the initial portion of the closure phase until seepage water quality is proven to be acceptable and stable;
- Minimize contact of clean water with contaminated materials;
- Use TSF as a collection point for impacted runoff from RSF;
- Design and operate the RSF during operation to promote permafrost aggradation.

All the options listed above will be required to address closure and reclamation of the RSF. Details on the implementation of those considerations are provided as applicable in the following section.

Construction/development of RSF with long-term stable slopes and placing thermal cover in a progressive manner is considered the most appropriate closure plan for Meadowbank. Table 5-7 presents various proposed acid mine drainage control strategies for waste rock.

Table 5-7: Acid Mine Drainage Control Strategies of the Arctic for Waste Rock

Strategy	Advantage/Disadvantage
Freeze Controlled	Requires considerable volumes of non-acid waste rock for insulation protection. Better understanding of air and water transport through waste rock required for reliable design.
Climate Controlled	Requires control of convective air flow through waste rock, infiltration control with modest measures and temperature controls. Better understanding of waste rock air, water, and heat transport for reliable design.
Engineered Cover	
Subaqueous Disposal	Very difficult to dispose of waste rock beneath winter ice.
Collection and Treatment	
Segregation and Blending	May be very effective. Research and development on-going.
Reference: (MEND 1.61.2, 1996)	

5.2.5.4 Engineering Work Associated with Selected Closure Activity

Much of the closure and reclamation of the Portage RSF has been completed progressively during operations with the placement of the NPAG cover over the RSF PAG slopes. Approximately 84% of the NPAG cover has been placed over the PAG Portage RSF area from 2011 to 2017. The remaining closure and remediation requirements of the RSF will be completed after operations cease.

Most of the waste rock from the Vault deposit is NPAG; geochemical and water quality monitoring concluded that the Vault RSF is not expected to require NPAG capping in closure. As a precautionary measure, any PAG material encountered at Vault is and will be placed in the middle of the pile and be capped with NPAG waste rock as placement proceeds. The total quantity of waste rock for the Phaser and BB/Phaser Pits will be contained within the Vault RSF. The waste rock from these small pits is similar to Vault Pit waste rock, which is primarily NPAG.

Some of the Portage and Goose Pits waste rock has been placed as backfill into the completed portion of Portage Pit and Goose Pit. As the pits will be flooded at closure, PAG material will become submerged (subaqueous disposal) by a minimum of 4.0 m of water, and the water cover will limit the potential for ARD.

This is also considered as fish habitat compensation in accordance with Agnico Eagle's Meadowbank No Net Loss Plan (Agnico Eagle, 2012a).

It is expected that the NPAG waste rock stockpiled within the different RSFs will be reclaimed for closure construction.

As noted in the previous Interim Closure and Reclamation Plan (Golder, 2014), the RSFs have been designed and constructed to ensure long-term stability in terms of rock lifts, bench heights, and overall slope. At closure, the RSF are consistent with the end-land use of natural conditions and are therefore being left as-is. The ultimate slopes and crest elevations are comparable to the hills of surrounding areas. Although all rock placed in the Portage and Vault RSFs is expected to freeze, the design in terms of permanent physical stability is not dependent on freezing. No additional earthworks at the crest or base of the embankments or re-vegetation of the slopes are required to ensure long-term stability or to meet land use objectives.

The Portage RSF is instrumented for thermal monitoring with thermistors installed in the PAG area and the NPAG cover. Numerical modelling was initiated to estimate the depth of the active layer (layer of materials undergoing freeze-thaw cycles from atmospheric forcing) within the Portage RSF and to confirm that the PAG waste rock will remain frozen, and oxidation rates greatly decreased, for the next 150 years under agreed upon climate change scenarios. Geochemical stability will be maintained by covering PAG materials with suitable NPAG waste rock. The Portage RSF is covered by a 4.0 m layer of NPAG rock to ensure geochemical stability by insulating PAG materials and keeping the waste rock frozen. The cover also controls reactions and the migration of runoff to PAG materials. Thermal data analysis and modelling will continue during operations; the results of the thermal modelling and overall performance of the NPAG cover will be presented in the Final Closure and Reclamation Plan.

The contact water management system for the RSFs will be maintained during the closure period where required. The water collected from the RSFs will be collected and monitored until water quality demonstrates that water flowing from the facilities is acceptable for direct release to the environment.

5.2.5.5 Predicted Residual Effects

The following residual effects are predicted at the RSFs after reclamation:

- The RSFs will be permanent features on the landscape. The vegetation communities which formerly occupied the areas will be permanently lost but it is expected that some of the native community will re-vegetate the RSFs cover surface over time;
- No significant adverse impact on the continued opportunity for traditional and non-traditional use of wildlife in the region is anticipated with the closure of the RSFs;
- Runoff from the RSFs will eventually be discharged in the receiving environment, once water quality demonstrates that water flowing from the facilities is acceptable for direct release. It is predicted that concentrations in post-closure will meet discharge criteria.

5.2.5.6 Uncertainties

As mentioned in the previous Interim Closure and Reclamation Plan (Golder, 2014), the main uncertainty related to the Portage RSF closure is the cover thickness required to ensure adequate aggradation of permafrost, insulation from thaw, and effective long term encapsulation of waste rock.

Thermistors have been installed to monitor temperature and permafrost aggradation within the Portage RSF to monitor the temperature as freezing progresses. Latest results of temperature monitoring indicate that freezeback is occurring in the Portage RSF structures (Updated Waste Rock and Tailings Management Plan, Agnico Eagle 2018b).

5.2.5.7 Post-Closure Monitoring, Maintenance, and Reporting

The overall post-closure monitoring, maintenance program and reporting for the Meadowbank Project are discussed in Section 9.0 along with the general reporting requirements. The following presents the relevant post-closure monitoring following the closure of the rock storage facilities and maintenance strategies as presented by AANDC/MVLWB (2013):

- Periodic inspections will be performed by a geotechnical engineer to visually assess stability and performance of the RSFs;
- Ground conditions in the RSFs will be monitored to confirm permafrost conditions are being established as predicted;
- Thermistor data will be monitored where required to determine thermal conditions within the RSFs to confirm predicted permafrost aggradation/encapsulation and to verify that the thickness of the active zone is less than the design thickness of the cover;
- Water quality from controlled discharge points around the RSFs will be monitored to confirm that drainage is performing as predicted and is not adversely affecting the environment; and
- Any seepage areas from the toe of the RSFs will be identified and monitored.

More details on the contact water management system in closure are presented in Section 5.2.7.

5.2.5.8 Contingencies

From thermal monitoring and modelling, NPAG cover design over the Portage RSF could be adjusted if required. On-going monitoring and containment of seepage from the Portage RSF will be the primary contingency until water quality meets criteria for direct discharge to the environment.

5.2.6 Tailings Storage Facilities

At Meadowbank, all tailings are deposited within the Tailings Storage Facilities (TSF) until the end of mine operations. The TSF is divided into the North and South Cells, both of which employ subaerial or subaqueous tailings disposal within a dewatered lake basin. The North Cell is contained by Stormwater Dike, Saddle Dam 1, Saddle Dam 2, and rockfill road perimeter structures RF-1 and RF-2. All these structures are constructed to elevation 150 masl. Tailings were stored in the North Cell from 2010 to 2015. The South Cell is delineated by Stormwater Dike, Saddle Dam 3, Saddle Dam 4, Saddle Dam 5, and Central Dike. All these structures will be constructed to elevation 150 masl. The South Cell has been in use since November 2014 and will be used until tailings reach elevation 149.5 masl.

The general operational management strategy for the TSF involved discharging tailings to a maximum elevation of 149.5m. The operational freeboard required is 2.0m. The North Cell is filled up to its final capacity as the final tailings deposition was completed in October 2015. The reclaim system was put in place in the South Cell in October 2014. While the South Cell is in operation, progressive reclamation and NPAG capping over the tailings was initiated in winter 2015 over the North Cell.

Whale Tail Pit will produce an addition of approximately 8.3 million tons (Mt) of tailings to the Meadowbank TSF for a total of 35.4 Mt, including Meadowbank and Whale Tail. The total Meadowbank tailings production is approximately 27.1 Mt (18.2 Mt in North Cell at elevation 149.5 m and 8.9 Mt in South Cell at elevation 142.5 m). To store the additional volume of tailings from Whale Tail Pit, deposition of approximately 5.3 Mt will occur in the TSF South Cell at an elevation of 149.5 m. The proposed construction of internal dike structures placed on the frozen beach tailings in the North Cell will provide the additional tailings storage capacity of 3.0 Mt within the current footprint of the North Cell TSF (upon regulatory approval). Internal structures will be built along the North Cell perimeter road, which will form a perimeter for most of the North Cell TSF with the exception of above the Stormwater Dike (SWD). Typical section of the internal structure is presented in Appendix N. The internal structures will be placed as an offset on the tailings beach, which beach is expected to be frozen. It is intended to build the structures during the winter months over the frozen tailings and the previously placed 2015 capping in areas where this structure is present (OKC, 2016).

5.2.6.1 Pre-Disturbance, Existing, and Final Site Conditions

Pre-disturbance conditions are based on baseline data collection programs presented in the Meadowbank FEIS (Cumberland, 2005a). The pre-disturbance site conditions are also summarized in Section 3.0 of this plan.

The tailings storage facilities are currently in use and will be until the end of operations. The construction of the South Cell peripheral structures are expected to be completed in summer 2018, along with the construction of the North Cell internal structure (upon regulatory approval).

The disposal of tailings from Whale Tail using the existing Meadowbank Mine facilities will reduce potential impacts to the environment by reducing the project footprint and needs for reclamation of additional facilities

Progressive reclamation of the TSF was initiated in 2015 with the NPAG cover placement over the North Cell tailings. Ultimately, both TSF cells will be capped with NPAG material, forming a thermal cover including landforms to support adequate long term water management over the reclaimed TSF.

5.2.6.2 Closure Objectives and Criteria

The closure relevant objectives and closure criteria related to the closure of the TSF taken from the previous Interim Closure and Reclamation Plan (Golder, 2014) and AANDC/MVLWB (2013), along with the specific actions and monitoring associated are listed in Table 5-8.

Table 5-8: Closure Objectives and Criteria – Tailings Storage Facilities

Closure Objectives	Closure Criteria	Action / Measurements
Remnant embankments and surfaces of tailings containment areas are physically and geotechnically stable in the long-term	The TSF is designed for closure and will account for seismic and permafrost conditions A thermal cover to limit acid generating reactions and migration of contaminants	Place a thermal cover of NPAG rockfill on the TSF surface during progressive reclamation Physical /geotechnical inspection by a qualified engineer Monitoring
Build to blend in with current topography, be compatible with wildlife use, and/or meet future land use targets	TSF at post-closure will not compromise wildlife safety TSF will be covered	Cover landform of NPAG rockfill on the TSF surface to be adapted to promote drainage and to blend with the topography Physical inspection
Generation of poor water quality has been minimized, including ARD/ML Surface runoff and seepage water quality is safe for humans and wildlife	Runoff and seepage will meet acceptable discharge criteria to be released to the receiving environment Freezeback of the TSF	The runoff and seepage from the TSF will continue to be collected as needed and monitored as per operational practices, and until monitoring results demonstrate that water quality is acceptable for direct discharge Place a thermal cover of NPAG rockfill on the TSF and ensure freezeback Physical inspection, thermal monitoring Routine water quality monitoring and sampling
Dust levels are safe for people, vegetation, aquatic life, and wildlife in the long-term	Best management practices for controlling dust during active reclamation	Implement best management practices Routine air quality monitoring

Other recommendations are presented in the Code of Practice for Metal Mines as follows (adapted from EC, 2009):

- Carry out detailed inspections and assessments of Tailings Storage Facilities. The objective of these inspections and assessments is to evaluate the actual performance against design projections related to anticipate post-closure conditions (R524);
- Conduct a comprehensive risk assessment for mine closure to evaluate the long-term risks associated with possible failure modes for Tailings Storage Facilities. Identify possible impacts and critical parameters, and develop control strategies (R525). If warranted, implement a long-term monitoring plan (R526);
- Re-evaluate and revise as necessary plans for management of tailings to prevent; and control and treat metal leaching and acidic drainage to ensure that they are consistent with the objectives and

plans for mine closure and post closure (R527). If warranted, implement a long-term site-specific monitoring program (R538).

5.2.6.3 Consideration of Closure Options and Selection of Closure Activities

Considerations for the Tailings Storage Facilities closure are provided by the AANDC/MVLWB (AANDC/MVLWB, 2013). Closure activities for the TSF were selected in consideration of the closure aspects listed below, related to mine design stage, closure and post-closure periods.

- Cover tailings with a cover system to control ARD/ML processes and migration of contaminants;
- Construct a cover system to prevent surface erosion and create a stable landform in the long-term;
- Promote freezing of tailings mass into permafrost;
- Collect water that does not meet the discharge criteria for treatment.

All the options listed above will be required to address closure and reclamation of the TFS. Details on the implementation of those considerations are provided as applicable in the following section.

Table 5-9 presents also various acid mine drainage control strategies for tailings. The freeze and climate control are considered the most suitable strategies for tailings reclamation at the Meadowbank site.

Table 5-9: Acid Mine Drainage Control Strategies of the Arctic for Tailings

Strategy	Advantage/Disadvantage
Freeze Controlled	Total or perimeter freezing options can be considered. Can freeze up to 15 m annually if freezing in thin layers. Freezing rate decreased proportionately with depth. Process chemicals could cause high unfrozen water content.
Climate Controlled	May not be a reliable strategy for saturated tailings.
Engineered Cover	Special consideration for freeze-thaw effects. Availability and cost of cover materials are major impediments.
Subaqueous Disposal	Special considerations for winter ice conditions and pipeline freeze-up.
Collection and Treatment	Costly to maintain at remote locations Long term maintenance cost.
Segregation and Blending	Tailings are normally geochemically homogeneous.
Reference: (MEND 1.61.2, 1996)	

5.2.6.4 Engineering Work Associated with Selected Closure Activity

The overall tailings management approach for long term stability and control of Acid Rock Drainage (ARD) involves encapsulation of the tailings in permafrost. A closure NPAG cover will be placed to insulate the frozen tailings and to protect against erosion (Golder, 2014).

As the Meadowbank Gold Mine is located within the zone of continuous permafrost, freeze control and climate control strategies have been adopted for the reclamation of the TSF. The overall tailings management approach for control of ARD and for long term stability involves encapsulation of the tailings in permafrost. Oxygen diffusion and water infiltration into the tailings, seepage from the tailings, and the generation of acid mine drainage are then limited. The option selected to ensure that the active layer (material going through freeze-thaw cycles, overlying permafrost) remains within the inert material is the construction of a cover system consisting of non-acid generating granular material (NPAG) over the tailings material. Permanent diversions infrastructures, as ditches and spillways, will be constructed where necessary to direct non-contact water to the natural environment. These diversions, as well as the TSF containment dikes, will be designed for long-term physical stability.

Preliminary design work was completed for the TSF cover in 2015 and 2016. The tailings cover will consist of non-acid generating material (NPAG) and ensures that the active layer remains within the cover layer. The objective for the cover system is to keep the tailings under 0°C in most conditions and to maintain saturation above 85%. The TSF North Cell is instrumented for thermal monitoring with thermistors installed in the tailings or the NPAG cover. The South Cell TSF will also be instrumented.

The proposed design for the engineered cover system is a layer of compacted NPAG waste rock with a minimum thickness of 2.0 m. The nominal cover thickness over most of the landform is well over the minimum, as a thickness variation is required to obtain the designed landform and promote the water management.

The surface water management plan for the reclaimed TSF is to minimize erosion, thus reducing suspended sediment loading to the receiving environment, and to safely convey runoff water in the event of a storm event coupled with spring snowmelt. To achieve this, the surface water management system will be constructed using riprap-lined drainage channels and riprap-lined aprons at the outlet of each catchment. It should be noted that runoff water will be kept into a close circuit until the water quality meets criteria from the Meadowbank Water Licence for discharge to the environment (CCME limits or site specific closure criteria to be defined).

The cover landform promotes water shedding and consists of two watersheds for North Cell and one watershed for South Cell. The cover will have a minimum slope of 1% and be graded toward permanent drainage channels with a minimum slope of 0.5%. These drainage channels will be constructed on the cover to direct non-contact water to the environment. The surface water management plan minimizes erosion by using riprap-lined drainage channels and aprons at the outlet of each catchment. In the preliminary design, two (2) outlets located in the south and north-west portions of the North TSF, and the final outlet is located near to Saddle Dam 3. The runoff water from the cover system will convey towards a reclaim pond located upstream Saddle Dam 3. The water will then be release into Third Portage Lake once the runoff water quality meets discharge criteria established by the Meadowbank Water Licence.

A detailed design and construction plan for the closure of the North and South Cells will be provided with the Final Closure and Reclamation Plan.

5.2.6.5 Predicted Residual Effects

The following residual effects are predicted at the TSF after reclamation:

- The TSF will be a permanent feature on the landscape. The vegetation communities which formerly occupied the areas will be permanently lost but it is expected that some of the native community will re-vegetate the TSF cover surface over time;
- No significant adverse impact on the continued opportunity for traditional and non-traditional use of wildlife in the region is anticipated with the closure of the TSF;
- Runoff from the TSF will enter and mix in Third Portage Lake. It is predicted that concentrations in post-closure will meet discharge criteria.

5.2.6.6 Uncertainties

As mention in the previous Interim Closure and Reclamation Plan (Golder, 2014), the main uncertainty related to the TSF closure is permafrost encapsulation and the cover thickness required to ensure adequate aggradation of permafrost, insulation from thaw, and effective encapsulation of tailings.

Thermistors have been installed to monitor temperature and permafrost aggradation within the TSF and into the 2.0 m of closure capping placed to date. Latest results of temperature monitoring in each geotechnical structures along the perimeter of the North Cell TSF present frozen conditions of their foundation.

Experimental cells were also built with coarse and fine non-potentially acid generating (NPAG) ultramafic waste rock (soapstone) and are instrumented in order to follow their thermal and hydrogeological behaviors; cells of a 2.0 m and a 4.0 m thick insulation cover as well as a 2.0 m thick cover with capillary barrier effects. The results of the experimental cells have been used so far in the work for the cover design of the TSF North and South Cells. Data collection is still ongoing and results will be used in future studies as needed.

There is also an uncertainty that surface runoff from the TSF covered areas may not be of sufficient quality for release to the environment. This could delay decommissioning of the Reclaim Pond, and/or require additional mitigation such as treatment (Golder, 2014).

5.2.6.7 Post-Closure Monitoring, Maintenance, and Reporting

The overall post-closure monitoring, maintenance program and reporting for the Meadowbank Project are discussed in Section 9.0 along with the general reporting requirements. The following presents the relevant post-closure monitoring and maintenance strategies for the tailings storage facilities as presented by AANDC/MVLWB (2013):

- Periodic inspections will be performed by a geotechnical engineer to visually assess stability and performance of the TSF;
- Ground conditions in the TSF will be monitored to confirm permafrost conditions are being established as predicted;

- Thermistor data will be monitored to determine thermal conditions within the TSF to confirm predicted permafrost aggradation/encapsulation and to verify that the thickness of the active zone is less than the design thickness of the cover;
- Water quality from controlled discharge points around the TSF will be monitored to confirm that drainage is performing as predicted and is not adversely affecting the environment; and
- Any seepage areas from the toe of the TSF will be identified and monitored.

Water quality will also be monitored to determine the time that the reclaim pond can be decommissioned to allow the discharge into Third Portage Lake. More detail on the contact water management system in closure is presented in Section 5.2.7.

5.2.6.8 Contingencies

From the thermal monitoring and modelling, NPAG cover design over the TSF could be adjusted if required.

On-going monitoring and treatment of seepage from the TSF will be the primary contingency until water quality meets criteria to direct discharge to the environment.

5.2.7 Water Management Facilities

The water management facilities, which are described in Section 4.4.2.7, were designed to support the construction and operations activities of the mine development. Permanent closure activities for these facilities will involve removal of structural components (i.e., pumps, pipelines and active treatment systems) and establishment of natural drainage conditions.

5.2.7.1 Pre-Disturbance, Existing, and Final Site Conditions

Pre-disturbance conditions are based on baseline data collection programs presented in the Meadowbank FEIS (Cumberland, 2005a, 2005f). The pre-disturbance site conditions are summarized in Section 3.0 of this plan.

The water management strategy, the dewatering and waterbodies impacted by the pit mining activities are presented in the Meadowbank Gold Project Mine Waste and Water Management (Meadowbank Mining Corporation, 2007b). All mining components have been located to avoid or minimize impact on the local environment to the extent possible.

All water management facilities will be decommissioned at different stages of closure, and natural drainage will be restored as much as possible.

5.2.7.2 Closure Objectives and Criteria

The closure relevant objectives and closure criteria for the Meadowbank water management facilities are listed in Table 5-10, along with the specific actions and monitoring associated (modified from AANDC/MVLWB 2013).

Table 5-10: Closure Objectives and Criteria – Water Management Facilities

Closure Objective	Closure Criteria	Actions/Monitoring
The systems are dismantled and removed/disposed of (i.e. pipelines, culverts, pump systems, WTP) Systems have been stabilized and protected from erosion and failure for the long-term Remove all hazardous wastes	Remove all components above ground or buried	Components or materials will be cleaned up and salvageable materials removed, shipped or disposed at the landfill Concrete slabs on grade will be perforated and covered or removed and the area re-graded to avoid erosion and promote natural drainage Hazardous wastes will be removed for disposal by Licenced handler as per operation practices Physical inspection to confirm removal
To the extent possible, natural drainage patterns have been re-established	Re-establish natural grade where possible	Disturbed surfaces will be re-graded to promote natural drainage Physical inspection
Stable release of water discharge to the environment is maintained at designated discharge points	Maintain controlled release from dike opening, ditches and all points of water discharge to the environment Long term water management structures are properly designed for long term stability	Design and construct dike reconnection, diversion structures and TSF long term water management structures with adequate dimensions at proper locations Routine monitoring and inspection
Post-closure water quality objectives in receiving water bodies are met	Prior to dike reconnection the water quality will meet the Water Licence requirements Minimize erosion	Routine water quality monitoring and inspection
Systems are physically and geotechnically stable for the safety of humans and wildlife	Limit access until water quality is acceptable	Place berms and signs to limit access Physical inspection

As recommended by EC (2009), at the end of the mine operations phase, water management plans should be evaluated and revised as necessary to ensure that they are consistent with the objectives and plans for mine closure and post closure (R351). This final plan will determine the infrastructure components that will be removed, those that will be left in place, and those that will be modified, as well as the monitoring requirements to measure compliance with the closure and reclamation objectives (Golder, 2014).

5.2.7.3 Consideration of Closure Options and Selection of Closure Activities

Considerations for open pit closure are provided by the AANDC/MVLWB (AANDC/MVLWB, 2013). Closure activities for the water management facilities were selected in consideration of the closure aspects listed below, related to mine design stage, closure and post-closure periods.

- For any water management structures that may be required post-closure, select design parameters to reflect the need to maintain stability in the long term;
- Design water management systems to minimize the migration of potential contaminants;
- Treat non-compliant water in storage and subsequently release upon achievement of discharge criteria;
- Open and level/contour of embankments, dikes and culverts not required for long-term use and restore the pre-disturbance drainage network to the extent possible;
- Locate permanent spillways in competent rock or material;
- Drain and backfill all sumps and collection trenches;
- Drain, dismantle, and remove tanks and pipelines from the site;
- Ensure any remnant embankments or other water management structures have appropriate erosion control measures in place to maintain stability post-closure.

All the options listed above will be required to address closure and reclamation of Project water management infrastructure. Details on the implementation of those considerations are provided as applicable to each infrastructure component in the following section.

5.2.7.4 Engineering Work Associated with Selected Closure Activity

Dewatering systems

The Second Portage Lake and Goose dewatering system was used to pump water from the North-East arm of Second Portage Lake and the Goose impoundment area into Third Portage Lake to permit operations at the Portage Pit, Tailings Storage Facilities and Goose Pit respectively. The system included pumps connected to surface high-density polyethylene (HDPE) pipelines that conveyed water to the Portage Water Treatment Plant (WTP) for the removal of suspended solids prior to discharge to Third Portage Lake. The dewatering system for Portage and Goose was then used for the Portage Attenuation Pond but is no longer in operation. The pumps, WTP and some pipelines have been dismantled and re-purposed and the remaining will be removed and disposed in the on-site landfill at closure. The diffuser located into Third Portage Lake will be removed at closure.

A similar dewatering system was implemented in Vault Lake in September 2013 to pump water from Vault Lake to Wally Lake to permit operations in the Vault Pit. The system includes HDPE pipelines, pumps and a WTP. Following the dewatering of Vault, the system has been used to manage the water from the Vault Attenuation Pond. The system was also used to complete the dewatering of Phaser Lake in 2016. The pipelines used for the Vault dewatering system will be decommissioned at closure, once mining operations are completed and the Vault Attenuation Pond is no longer active. The Vault WTP has been partially dismantled and will be used for Whale Tail Pit. The rest of the system will be dismantled at closure.

Portage and Vault Attenuation Pond

The Portage Attenuation Pond was active in the TSF South Cell while tailings were deposited in the North Cell. Once tailings deposition was initiated in the South Cell, the Portage Attenuation becomes the Reclaim Pond. The Portage Attenuation Pond was in used from 2011 to 2014, to manage contact water on site. The contact water was treated in the Portage WTP and discharged in Third Portage Lake though the diffuser. Following the conversion of the Portage Attenuation Pond into the TSF South Cell Reclaim Pond in 2014, some of the dewatering equipment was used for water management in the pits or in the Reclaim Pond. No water is discharged from the Reclaim Pond to the environment.

The Vault Attenuation pond occupies a portion of the former Vault Lake and is used to manage the contact water from Vault pit since 2014. Once dewatering was completed, the pumps and the WTP have been re-purposed to discharge water from the Attenuation Pond to Wally Lake through the diffuser. Once mining operations will be complete and the Attenuation Pond is no longer active, all of the dewatering equipment will be dismantled and either shipped from the mine site or disposed of in the on-site landfill. The diffuser located into Wally Lake will be removed at closure.

Reclaim Pond

The Reclaim Pond was initially located in the TSF North Cell, during tailings deposition. Once tailings deposition shifted from the North Cell to the South Cell in November 2014, the Portage Attenuation Pond became the Reclaim Pond as mentioned above. The water in the Reclaim Pond consists of processed water and is reclaimed for use at the mill during operations. During operations, the water in excess in the TSF North Cell is transferred to the Reclaim Pond during summer months. Following completion of tailings deposition in the South Cell at closure, the process water from the Reclaim Pond will be treated, if deemed necessary, prior to being discharged to the Portage Pit as part of the flooding process. The reclaim system which includes HDPE pipelines and pumps will be dismantled at closure, decontaminated and disposed at the on-site landfill.

Tailings Pipelines

The tailings slurry pipelines are located on the peripheral structures of the TSF, and joint the mill located South West from the TSF. The tailings pipelines will be flushed and drained following completion of ore processing at the mill in closure, in accordance with International Cyanide Management Code requirements. The tailings pumps are located in the mill. The booster pump, located on the Stormwater Dike will be dismantled, decontaminated and disposed in the on-site landfill or shipped from the mine site at closure. The pipelines and related components (like the booster pump) will then either be shipped from the mine site or disposed in the on-site landfill after decontamination.

Pit sump and pumping systems

Pumps and piping used for the conveyance of water from the pit sumps to the Reclaim Pond or Vault Attenuation Pond will be removed before the pits flooding occurs. These pieces of equipment will be dismantled and disposed in the on-site landfill.

Seepage and runoff collection systems

Water collected by any seepage and runoff collection system is or will be monitored during the operations, closure and post-closure phases of the Project as per the Meadowbank Water Licence requirements. The main seepage collection systems on site are the Central Dike seepage collection system, the East Dike

seepage collection system, the Mill seepage collection system and the RSF Seepage (ST-16) collection system. When seepage will have resorbed or when water quality is demonstrated acceptable for release to the receiving environment without further management, these systems will be removed; pipelines and pumps will be decommissioned and disposed in the on-site landfill. The sumps will be backfilled where required and the landscape will be re-contoured to allow natural drainage.

Culverts

Culverts will be maintained as required in closure until site water quality monitoring results indicate that water can be released to the environment without further management and without erosion. Culverts on site, on the AWAR and on Vault Road will be dismantled and disposed of in the on-site landfill when no longer required. Reclaimed areas will be re-graded to promote natural drainage.

Water Diversion Ditch

The water diversion ditch system located in the northern periphery of the North Cell TSF and Portage RSF are designed to be permanent features part of the natural landscape, and will therefore remain in place after closure. The diversion ditch diverts non-contact water away from the TSF during operations and will convey part of the TSF runoff water in closure and post-closure to the receiving environment, when the runoff water quality is demonstrated acceptable for release to the receiving environment without further management. Some work may be required on the structure to ensure slope stability and minimize snow management.

Freshwater intake, potable water treatment system and wastewater treatment system

Following ore processing and the period of active closure completed, the freshwater intake located in Third Portage Lake, the freshwater pipeline, the potable water treatment plant, the sewage treatment plant and the wastewater system will be decommissioned. Structural components (i.e., pumps, tanks and piping) will be decontaminated and either be shipped from the mine site or disposed in the on-site landfill. Sludge from the sewage treatment plant will be buried in the Tailings Storage Facilities as during operations.

Stormwater Management Pond (Tear Drop Lake)

The Stormwater Management Pond receives treated water from the sewage treatment plant and other waste water. The water is transferred to the Reclaim Pond every summer during operations. At closure, the pond will be pumped to the Reclaim Pond and will be transferred to the Portage Pit with the reclaim water as part of flooding. The pipelines and related components will be decontaminated and disposed in the on-site landfill.

Flooding systems

Similar to the dewatering systems, the pits flooding system equipment (i.e., pumps, syphons and piping) will be removed once pit flooding is complete. All equipment will be dismantled, and either be shipped from the mine site or disposed of in the on-site landfill.

5.2.7.5 Predicted Residual Effects

No significant residual effects have been identified for closure of the water management facilities, but some changes to terrain caused by the construction and subsequent reclamation (excavation, re-grading) of the facilities could result in some alteration to the original terrain.

5.2.7.6 Uncertainties

Water quality and treatment requirements of the Reclaim Pond water, prior to discharge to the pit lakes, represent an area of uncertainty. Treatment of the Reclaim Pond water before transfer may be required as discussed in Section 5.2.4.4. Updates to the water balance model and water quality predictions will be completed prior to mine closure to determine the need and the type of water treatment, if required, and presented in the Final Closure and Reclamation Plan.

Seepages from the Central Dike or the Mill may affect closure and post-closure conditions and monitoring requirements. Investigation and controlled strategy will continue to be developed in operation to define the closure and post-closure strategy for the seepage collection systems.

The work to complete on the diversion ditch for closure and post-closure will be defined and presented in the Final Closure and Reclamation Plan.

5.2.7.7 Post-Closure Monitoring, Maintenance, and Reporting

The overall post-closure monitoring, maintenance program and reporting for the Meadowbank Project are discussed in Section 9.0 along with the general reporting requirements. The following presents the relevant post-closure monitoring and maintenance strategies for the water management facilities as presented by AANDC/MVLWB (2013):

- Periodically inspect the remaining water management structures to assess their performance;
- Continue monitoring climatic conditions at site to compare them to design assumptions (e.g., regarding storm events) and performance of selected closure activities;
- Monitor the performance of erosion protection on embankment structures, such as riprap, and the physical stability of water management systems including permafrost integrity where applicable;
- Monitor water quality, quantity, and flows to ensure system is working as predicted and water quality objectives are being met;
- Evaluate post-closure drainage patterns and confirm that they compare to pre-development patterns as described in the closure objectives;
- Sample surface and groundwater if site- specific conditions.

Water management infrastructure will be decommissioned at various times in the overall closure and post-closure phases depending on their function and location. During closure, the frequency of monitoring (inspection, water quality monitoring) will be as specified by the Meadowbank Water Licence, and will focus on the physical state and performance of structures and components. Once the water management facilities are no longer needed, they will be decommissioned, natural drainage patterns will be re-established as much as possible, and monitoring is expected to decrease. Post-closure monitoring will involve annual inspections of permanent diversions as well as general site grading and establishment of proper/natural drainage patterns. Post-closure monitoring program will be defined in details in the Final Closure and Reclamation Plan.

Monitoring of receiving lakes will be conducted in accordance with the Meadowbank Water Licence requirements and the Core Receiving Environment Monitoring Plan (Azimuth, 2015) to confirm Project activities do not contribute to long term adverse effects on the receiving environment. A detailed plan will

be developed prior to the mine closure that will provide details on the locations, frequencies and parameters that are to be monitored, and will be presented in the Final Closure and Reclamation Plan.

5.2.7.8 Contingencies

The closure plan currently incorporates a water treatment plant as a contingency measure should water in the pit lakes not be suitable for release to the environment. The water management for the site will remain a close system (no discharge to the receiving environment) until the pit lakes water, the TSF runoff water and seepage water have demonstrated acceptable water quality for release to the receiving environment without further management.

5.2.8 Infrastructures at Mill and Camp Areas

During the life of mine, surface infrastructures were required at different period in time for the mining, accommodation, water treatment, etc. Most of the infrastructures are located near the Portage and Goose pits and the Tailings Storage Facilities. Additional infrastructures were built near the Vault Pit. All infrastructures are listed in Section 4.4.2.8.

5.2.8.1 Pre-Disturbance, Existing, and Final Site Conditions

Pre-disturbance conditions are based on baseline data collection programs presented in the Meadowbank FEIS (Cumberland, 2005a). The pre-disturbance site conditions are also summarized in Section 3.0 of this plan.

The Meadowbank infrastructures are currently in use and will be until closure or post-closure.

The facilities will be dismantled and reclaimed following best practices put in place during operation and in order to minimize long term disturbance. The facilities could also be transferred to the local community upon interest.

5.2.8.2 Closure Objectives and Criteria

The closure relevant objectives and closure criteria related to the closure of the Meadowbank infrastructures taken from the previous Interim Closure and Reclamation Plan (Golder, 2014) and AANDC/MVLWB (2013) along with the specific actions and monitoring associated are listed in Table 5-11.

Table 5-11: Closure Objectives and Criteria – Infrastructures at Mill and Camp Areas

Closure Objectives	Closure Criteria	Action / Measurements
Return area to its original state or to a condition compatible with the end land-use targets	Remove all facilities and restore natural/compatible terrain as much as possible	Dismantle and reclaim all infrastructure, fuel reservoirs, chemicals and industrial wastes
Buildings and equipment will not be a source of contamination to the environment or a safety hazard to humans and wildlife	Limit access during closure Remove all facilities and restore natural/compatible terrain as much as possible Remove all hazardous material	Place signs to limit access Dismantle and reclaim all infrastructure, fuel reservoirs and hazardous wastes Remaining areas will be scarified and remaining concrete foundations and slabs will be cut in the pieces and buried Soil and water monitoring Physical inspection
Maintain required site infrastructure during active reclamation	Promote early decommissioning	Reduce the use of facilities after closure
Ensure runoff is channelled through the watershed	Restore natural/compatible terrain as much as possible	Surface will be regraded to promote natural drainage
Ensure the remaining surface areas are safe for wildlife use and access	Restore natural/compatible terrain as much as possible	Surface will be regraded to promote the use for wildlife
Control dust generation from demolition and active reclamation activities	Best management practices for controlling dust during active reclamation	Implement best management practices Routine air quality monitoring

Other recommendations are presented in the Code of Practice for Metal Mines as follows (adapted from EC, 2009; Golder, 2014):

- On-site facilities and equipment that are no longer needed should be removed and disposed of in a safe manner. Efforts should be made to sell equipment for reuse elsewhere or to send equipment for recycling, rather than disposing of it in landfill facilities. (from R514);
- The walls of on-site buildings should be razed to the ground. Foundations should be removed or covered with a sufficiently thick layer of soil to support re-vegetation. (from R515);
- Any remaining structures and foundations should be inspected to ensure that no contamination is present. If contamination is found, it should be remediated as necessary to ensure public health and safety for post-closure land use. (from R516);
- Support infrastructure, such as fuel storage tanks, pipelines, conveyors and underground services, should be removed. (from R517);
- The main access road to the site (or runway in the case of remote sites) and other on-site roads, as appropriate, should be preserved in a sufficient condition to allow post-closure access for monitoring, inspection and maintenance activities. (from R518);

- Roads and runways that will not be preserved for post-closure use should be reclaimed. Bridges, culverts and pipes should be removed, natural stream flow should be restored, and stream banks should be stabilized by re-vegetating or by using rip-rap. Surfaces, shoulders, escarpments, steep slopes, regular and irregular benches, etc., should be rehabilitated to prevent erosion. Surfaces and shoulders should be scarified, blended into natural contours, and re-vegetated. (from R519);
- Electrical infrastructure, including pylons, electrical cables and transformers, should be dismantled and removed. (from R520).

5.2.8.3 Consideration of Closure Options and Selection of Closure Activities

Considerations for infrastructures decommissioning are provided by the AANDC/MVLWB (AANDC/MVLWB, 2013) and the previous ICRP (Golder, 2014). Closure activities for the water management facilities were selected in consideration of the closure aspects listed below, related to mine design stage, closure and post-closure periods.

- Recycling or reusing building materials and equipment where possible to reduce waste and importation of materials to site;
- Dismantle all buildings that are not necessary to achieve the future land use target;
- Raze/level all walls to the ground and remove foundations;
- Remove buildings and equipment during the winter to minimize damage to the land where appropriate;
- If disposing on site, decontaminate building materials (free of any batteries, fuels, oils, bulk process chemicals, or other deleterious substances), and use toxicity characteristic leaching procedure testing to confirm suitability for non-hazardous disposal;
- Cut, shred, crush, or break demolition debris to minimize the void volume during disposal;
- Maintain photographic records of major items placed into landfills, as well as a plan showing the location of various classes of demolition debris (e.g., concrete, structural steel, piping, metal sheeting, and cladding);
- Remove and dispose of concrete in an approved hazardous waste landfill if it contains contaminants that may pose a hazard over time;
- Backfill/grade all excavations to achieve the final desired surface contours to re-establish the original drainage or a new acceptable drainage;
- Backfill excavations in permafrost to limit permafrost degradation;
- Control dust emission during demolition of buildings that contain or contained asbestos, lead paint, hazardous chemicals, or other deleterious material;
- Remove buried tanks, where they already exist, to prevent subsidence;
- Dispose of wastes in quarries, borrow pits, underground mine workings, tailings impoundments, and waste rock piles;
- Decontaminate equipment (free of any batteries, fuels, oils, or other deleterious substances) and reuse or sell (local communities may have interests in some of the materials);

- Remove structures including bridges, culverts, pipes, buried wires and power lines and fill ditches in if no longer required and evaluate the area for potential contaminants;
- Reclaim areas to the original topography and drainage or to a new topography or drainage compatible with end land use targets;
- Scarify abandoned road/runway surfaces to promote re-vegetation of indigenous species;
- Leave roads, airstrips, bridges, or railways intact if it is in the public interest to do so (ownership liability will need to be considered); and
- Flatten berms and slopes at the side of roads to facilitate wildlife passage.

All the options listed above will be required to address closure and reclamation of Project infrastructures. Details on the implementation of those considerations are provided as applicable to each infrastructure component in the following section.

5.2.8.4 Engineering Work Associated with Selected Closure Activity

The relevant engineering works associated with the permanent closure activities for the infrastructures at the mill and main camp removal are taken from the Interim Closure and Reclamation Plan (Golder, 2014) and discussed below.

- Equipment used for closure activities and long-term maintenance (e.g., trucks, backhoes, etc.) will be removed from the site once they are no longer required. Most of the mobile equipment will be removed once the closure stage is complete. A small subset of equipment will be retained on-site for a portion of the post-closure stage;
- Remaining bulk fuel and empty portable fuel storage tanks will be transported back to the Baker Lake Site Facilities and offered to community interests. The tanks will be emptied, cleaned, and dismantled for disposal in the site landfill or shipped south. Any contaminated soil will be excavated and taken to the landfarm for treatment;
- All buildings and structures will be decontaminated, decommissioned and dismantled at closure. If required, the process plant may be temporarily converted to treat water in the Reclaim Pond. Demolition waste that cannot be reused, recycled or provided to local interests will be disposed of in the on-site landfill. Salvageable material will be removed off site;
- Hazardous wastes will be removed for disposal by a licensed handler;
- Any above grade concrete structures will be demolished and the rubble will be disposed of in the landfill. Any slabs on grade will be punctured and then left in place and covered with soil or non-potentially acid generating/non-metal leaching waste rock. Any subgrade foundations will be left in place;
- All disturbed site areas will be re-graded to suit the surrounding topography. In areas where the original ground surface was lowered for site grading or structural requirements, the slopes will be stabilized and contoured. Cover materials may be required for erosion and dust control.

If not properly reclaimed, wildlife maybe injured by entering reclaimed areas with depressions and if subsidence occurs. Environmental design features and mitigation, as well as current wildlife management practices used in other mining projects will be implemented at the Project to limit wildlife injury such as re-

contouring reclaimed areas to reduce hazards to wildlife. Buildings and equipment not required for post-closure activities will be removed from the site. Proper reclamation is also required to leave the site in appropriate conditions that do not present safety risks for humans. This is considered the most appropriate closure plan based on the Meadowbank Mine experience.

5.2.8.5 Predicted Residual Effects

No significant residual effects have been identified for after closure of the supporting buildings but changes to terrain caused by the construction and subsequent reclamation of the facilities could result in some alteration of the natural terrain.

5.2.8.6 Uncertainties

No major uncertainties are related to the closure of the Meadowbank infrastructures. The pre-disturbance terrain was covered by discontinuous vegetation interspersed with few bedrock outcroppings. The reclamation plan will be designed to encourage a natural succession of indigenous plant species within disturbed site areas. Grading and contouring would be done, where appropriate, to control soil erosion and to promote natural drainage.

5.2.8.7 Post-Closure Monitoring, Maintenance, and Reporting

The overall post-closure monitoring, maintenance program and reporting for the Meadowbank Project are discussed in Section 9.0 along with the general reporting requirements. The following presents the relevant post-closure monitoring and maintenance strategies for the Meadowbank infrastructures as presented by AANDC/MVLWB (2013):

- Periodic inspections will be performed to visually assess the reclaimed areas; and
- All buildings and equipment left on-site during closure will be maintained until no longer required, at which time they will be removed from the site or demolished and disposed in the on-site landfill.

5.2.8.8 Contingencies

There are no activities proposed as contingencies for the closure of the infrastructures.

5.2.9 Waste Management Facilities

The waste management facilities include the landfill, landfarm, incinerator and hazardous waste management area.

5.2.9.1 Pre-Disturbance, Existing, and Final Site Conditions

The pre-disturbance site conditions are summarized in Section 3.0 of this plan. Pre-disturbance conditions are based on baseline data collection programs presented in the Meadowbank FEIS (Cumberland, 2005a).

The landfill and landfarm are currently in use at Meadowbank and will be until post-closure. The incinerator and the hazardous waste management area are also operating at Meadowbank and will be until the end of active closure.

The waste management facilities will be reclaimed following best practices put in place during operation and in order to minimize long term disturbance.

5.2.9.2 Closure Objectives and Criteria

The closure relevant objectives and closure criteria for the Meadowbank waste management facilities are listed in Table 5-6, along with the specific actions and monitoring associated (modified from AANDC/MVLWB 2013).

Table 5-12: Closure Objectives and Criteria – Waste Management Facilities

Closure Objectives	Closure Criteria	Actions/Monitoring
Inadvertent access to landfill debris by humans and wildlife has been prevented	Limit access to facility Dispose only appropriate waste type in landfill	Limit access to the RSF with berms and signs Avoid food waste in landfill that could attract wildlife Routine inspection of the facilities
Waste disposal areas are not and will not become a source of contamination to the environment	Dispose only appropriate waste type in landfill Treat light hydrocarbon contaminated soil Remove all hazardous waste	Manage and dispose waste in landfill as per operation best practices Treat light hydrocarbon contaminated soil in the Meadowbank Mine landfarm Hazardous wastes will be removed for disposal by licensed handler as per operational practices Routine inspection of the facilities
Erosion and effects to the ground thermal regime have been controlled to ensure physical stability The risk for the occurrence of ARD and leachate has been minimized	Appropriate cover and drainage over the landfarm and landfill	The landfill and landfarm area will be covered with NPAG waste rock at the end of active closure stage Surfaces will be re-graded to promote natural drainage Inspection during cover construction
Surface runoff and seepage water quality is safe for humans and wildlife	Water quality meets Water Licence requirements	Water quality monitoring
Return area to its original state or to a state compatible with the desired end land use	Human land use of the reclaimed area at post closure will not compromise people and wildlife health	Routine monitoring and physical inspection

The Code of Practice for Metal Mines also provides the following recommendations related to the closure of waste facilities and to the handling of contaminated materials (adapted from EC 2009; Golder, 2014):

- Waste from the decommissioning of ore processing facilities and site infrastructure, such as waste from the demolition of buildings and the removal of equipment, should be removed from the site and stored in an appropriate waste disposal site or disposed of on site in an appropriate manner in accordance with relevant regulatory requirements. If material is disposed of on site, the location and contents of the disposal site should be documented. (from R522);

- Sampling and analysis of soils and other materials should be conducted to ensure that none of the material is contaminated, e.g., with asbestos and mercury from buildings. If contaminated materials are identified, they should be handled and disposed of in an appropriate manner in accordance with all applicable regulatory requirements. (from R523)

5.2.9.3 Consideration of Closure Options and Selection of Closure Activities

Considerations for waste management facilities closure are provided by the AANDC/MVLWB (AANDC/MVLWB, 2013). Closure activities for the waste management facilities were selected in consideration of the closure aspects listed below, related to mine design stage, closure and post-closure periods.

- Plan activities to limit the amount of waste generated throughout the life of the mine;
- Locate waste management facilities away from waterways to minimize environmental impacts that could result from leachate generation/migration;
- Select location and design that will have minimal impact on wildlife habitat and therefore require minimal reclamation effort;
- Divert runoff around waste disposal area with ditches or berms to minimize migration of contaminants;
- Burn domestic waste and special waste (i.e., waste oil) in an approved incinerator;
- Remove hazardous waste to an approved on-site waste storage facility prior to shipping for off-site disposal;
- Cover landfill/landfarm with an appropriately designed cover system to limit infiltration to acceptable levels. The surface of the landfill cover should comprise erosion resistant materials, and the surface landform should be sustainable in the long-term.

All the options listed above will be required to address closure and reclamation of waste management infrastructure. Details on the implementation of those considerations are provided as applicable to each infrastructure component in the following section.

5.2.9.4 Engineering Work Associated with Selected Closure Activity

Landfill

The operational landfill (Landfill #1) is currently in operation at the mine site and consists of multiple sub-landfills that have been or will be built in the Portage RSF. Waste from the Meadowbank site is disposed in the Landfill #1. As these sub-landfills are filled the waste is compacted and then encapsulated with waste rock in the Portage RSF, as per the Landfill Management Plan (Agnico, 2017c). Landfill #1 will cease operating at the end of active mining activities.

During the closure phase of the Project, demolition and non-hazardous waste from the Meadowbank site will be deposited in the demolition Landfill (Landfill #2), located on top of the Portage RSF. The demolition landfill will be located in an estimated 4.0 m deep depression on the top of the Portage RSF. The demolition landfill will ultimately be encapsulated within the waste rock. It will be covered with a 4.0 m layer of coarse NPAG rock as part of the closure plan for the RSF.

The depression will be constructed by waste rock trucks discharging their loads in a controlled manner, forming berms on the last rock lift. The area to receive waste will be bounded by a 2.0 m high rockfil berm. The rockfill berm will act as a wind shield to reduce the amount of windblown debris, while providing material for intermediate cover of the landfill.

The protocol for materials placement within the closure landfill includes dismantling, stacking in a stockpile, cutting to manageable sizes, and transport and placement. Waste will be placed in layers then covered. Procedures will be developed to ensure materials segregation, placement, and closure are conducted in an appropriate manner.

Layered waste will not exceed 4.0 m in thickness. Waste will then be covered by a 0.3 to 1.0 m thick layer of rockfill, before being covered with an additional 4.0 m of coarse acid-buffering ultramafic NPAG waste rock material to fill voids.

The area of the landfill is estimated at 36,043 m^2 and the estimated available volume is 144,172 m^3 based on waste placed 4.0 m high. With the current RSF design, sufficient space will be available at the top of the RSF at closure.

At closure, the landfill will accept the same types of material as during operations. As per the Landfill Design and Management Plan (Agnico, 2017c), the following types of materials can be sent to the closure landfill:

- Plastic (except expanded polystyrene);
- Metals (steel, copper, aluminum, iron);
- White goods and small appliances;
- Building materials (wire, wood, fiberglass insulation, fiberglass, roofing, bricks,
- ceramics, empty caulking tubes, hardened caulking, glass, gyprock, bricks);
- Surface materials (asphalt, concrete, carpet);
- Vehicles and machinery provided all liquids, grease, batteries, and electronics have been removed; and
- Other materials (ceramics, rubber, clothing, cooled ash).

In addition to domestic and organic waste, the following materials will not be accepted at the closure landfill:

- Food containers and wrappings (unless cleaned);
- Whole tires;
- Hazardous waste;
- Electronics;
- Petroleum products, and petroleum-contaminated products; and
- Expanded polystyrene.

Incinerator

The incinerator receives food, domestic and organic waste from Meadowbank and Whale Tail Pit Project. At the end of the active closure phase, the incinerator will be decommissioned, barged out of the Baker Lake Site Facilities to a southern destination for re-use or sale, or dismantled and disposed at the on-site landfill. The incinerator building will be emptied and offered for local use and/or relocation. If there is no local interest, the infrastructure will be demolished and taken to the on-site landfill for disposal or barged out of the Baker Lake Site Facilities to a southern waste disposal facility.

Hazardous Material

As presented in the Hazardous Material Management Plan (Agnico Eagle, 2013e), hazardous materials used during mine site operations and closure include:

- Fuel, paints and Lubricants – diesel fuel, oils, greases, anti-freeze, paints, and solvents for equipment operation and maintenance;
- Mill Consumables – sodium cyanide, sulphur (or metabisulphide), hydrochloric acid, lime, flocculants, and anti-scalants for mineral extraction;
- Explosives – ammonium nitrate and high explosives for blasting in the mine; and,
- Laboratory Wastes – various by-products classified as hazardous waste and chemicals used in the assay laboratory (including nuclear sources).

These materials will be managed in operations such that minimal quantities remain on site at closure. Any remaining hazardous materials that cannot be used during closure activities will be transported to licensed disposal facilities in the south, as is currently being done, in accordance with the Hazardous Material Management Plan (Agnico Eagle, 2013e). Used oil is an exception and will be incinerated on site during operations, as is currently being done. Any remaining cyanide reagents will be packaged and transported to licensed facilities in the south or other Agnico Eagle divisions in accordance with the International Cyanide Management Code, and the Hazardous Materials Management Plan. Batteries and electronics will be shipped south for recycling in appropriate facilities.

Landfarm

A landfarm will be required during the closure period for petroleum-contaminated soil. The Landfarm 2, constructed in 2016 and located on the North East side of the TSF South Cell, is now in use until the end of operations and also for the closure period. The Landfarm 2 receives contaminated soil from Meadowbank and will eventually receive contaminated soil from Whale Tail.

Based on the Landfarm Design and Management Plan (Agnico, 2017b) the area of Landfarm 2 is 3,815 m^2. Based on landfarm specifications of other northern mines, contaminated material can be stockpiled up to 4.0 m high. Accounting for a 25% loss of area due to sloping at that windrow height, the landfarm area will allow for the storage of a maximum of 11,445 m^3. This will readily accommodate total of contaminated soil already on site, should all of it need to be stored until closure, and the additional soil from the remaining operation and closure periods. In addition, ample room will be available to accommodate a designated area for spreading of contaminated coarse-grained material that cannot be bioremediated.

The following products may be treated in the landfarm if used onsite and spilled on soil:

- Diesel fuel;
- Gasoline;
- Aviation fuel (Jet A);
- Hydraulic oil;
- Other light oil e.g. engine oil, lubricating oil.

Contaminated soil will be treated in the landfarm at closure. Soil heavily contaminated or not treatable at the landfarm will be shipped south as hazardous material. After removal of all remediated soil and prior to abandonment/closure of the landfarm, the berm and base will be sampled on a 10.0 m grid, including at a depth of 1.0 m in representative locations, to determine if these soils are free from petroleum hydrocarbon contaminated (PHC) contamination. Results of this analysis will be compared to Government of Nunavut criteria. Since this area will form part of the TSF at closure, no excavation is necessary if industrial criteria are not met. The landfarm is located within the South Cell TSF and will be capped with 4.0m of NPAG waste rock material to ensure freeze-back encapsulation.

5.2.9.5 Predicted Residual Effects

No significant residual effects have been identified for closure of the waste management facilities other than changes to terrain caused by the construction and subsequent reclamation of the facilities.

5.2.9.6 Uncertainties

No major uncertainties have been identified in regards to closure of the waste management facilities.

5.2.9.7 Post-Closure Monitoring, Maintenance, and Reporting

The overall post-closure monitoring, maintenance program and reporting for the Meadowbank Project are discussed in Section 9.0 along with the general reporting requirements. The following presents the relevant post-closure monitoring and maintenance strategies for the waste management facilities as presented by AANDC/MVLWB (2013):

- Test water quality and quantity to measure the success of the selected closure activities for landfills and waste disposal areas;
- Monitor the ground thermal regime and the cover system performance to determine if permafrost has aggraded into the landfill and if the seasonal active zone remains within the cover;
- Inspect surface of landfill cover systems for cracking or slumping of the cover and for the underlying waste material's migrating to surface;
- Monitor wildlife and human use to ensure the selected closure activities have been effective in preventing access to these areas.

The landfill will be integrated within the surrounding RSF permafrost so no leachate is expected to occur in the long term. During the transition period (freezing), the leachate from the landfill is expected to have a very low strength (dilute) or is simply absent due to controls on materials placed in the landfill, and thus site-specific landfill leachate management is expected not to be required. Any leachate generated by the landfill will naturally be directed to the TSF. Landfill inspections and thermal monitoring will likely be required to ensure the freezeback of the RSF and landfill. The landfill will be inspected for cracking or

slumping, for underlying waste material pushing its way up through the cover and to establish if buried materials are being pushed to the surface as a result of frost heaving. The thermal monitoring program will be part of the monitoring of the Portage RSF.

Landfarm monitoring and sampling during closure for contaminated soil remediation will follow the procedure specified in the Landfarm Design and Management Plan (Agnico, 2017b). The water contained in the sump in the landfarm will be released in a controlled manner to the TSF once confirmed it meets regulatory criteria. At closure, all remediated soils in the landfarm will be removed and handled as per the Landfarm Design and Management Plan. As the landfarm will be covered with NPAG waste rock as part of the TSF and integrated to the permafrost, no leachate is expected in post-closure.

Hazmat disposal will be audited in closure or post-closure to ensure all material have been disposed off site in appropriate facilities.

A detailed post-closure monitoring program for the waste management facilities has not been developed to date; however, such a plan is anticipated to be similar to the monitoring developed for the operations phase and will comply with the monitoring requirements outlined in the Meadowbank Water Licence.

5.2.9.8 Contingencies

No specific activities are proposed as contingencies for the closure of the waste management facilities.

6.0 Progressive Reclamation

6.1 Definition of Progressive Reclamation

Progressive reclamation takes place prior to permanent closure to reclaim components and/or decommission facilities that no longer serve a purpose. These activities can be completed during operations with the available resources to reduce future reclamation costs, minimize the duration of environmental exposure, and enhance environmental protection. Progressive reclamation may shorten the time for achieving closure objectives and may provide valuable experience on the effectiveness of certain measures that might be implemented during permanent closure (AANDC/MVLWB 2013).

The Code of Practice for Metal Mines includes the following recommendations related to progressive reclamation (adapted from EC 2009):

- Progressive reclamation, including that of waste rock piles, tailings management facilities and mine site infrastructure, should be undertaken during the mine operations phase to the extent feasible;
- Progressive reclamation activities should be consistent with the site-specific objectives and intended post closure land use for the site. Planning and implementation should consider final contouring, final drainage, cover requirements, and re-vegetation;
- The project schedule should be used to monitor the status of progressive reclamation, and the schedule should be updated on a regular basis.

6.2 Opportunities for Progressive Reclamation

Best management practices, including progressive closure, have been incorporated in the Meadowbank operation period. The current mine plan includes progressive closure associated with the following components:

- Open pits;
- Portage RSF;
- Tailings Storage Facilities;
- Water management infrastructures.

The key closure activities that have been identified for progressive reclamation are summarized in the following sections for each individual component of the Project. The progressive reclamations activities provided in this ICRP will be updated in future versions of the plan to include new opportunities for progressive reclamation identified during operations.

Details related to schedule of progressive reclamation is included in the closure schedule presented in Appendix P.

6.2.1 Baker Lake Site Facilities

No progressive reclamation activities have been identified for the Baker Lake site facilities at this time, as the facilities will be required throughout the operation period and the active closure.

6.2.2 All-Weather Access Road

The quarries and granular borrow sites no longer required for operations will be progressively reclaimed during operation, as equipment and resources are available. Specific timeline for quarries progressive reclamation during operation will be eventually defined.

6.2.3 Dikes and Saddle Dams

No progressive reclamation activities have been identified for the dikes and permanent structures this time. Dewatering structures are required for operations in the open pits and also to maintain the pits isolated during the flooding period and prior to opening the dewatering dikes. The TSF structures are required during operations to contain the tailings and will remain in place in the long term.

6.2.4 Open Pits

Following the end of mining activities in Goose Pit in 2015, natural flooding started. No active pumping system is operating in Goose pit and part of the system has been decommissioned. From 2015 to the end of 2017, approximately 1,581,806 m^3 of water have flooded the Goose Pit. This volume includes natural flooding (run off water, seepage, groundwater) and also transfer from the downstream seepage of Central Dike. The flooding of Portage, Vault and Phaser/BB Phaser pits are planned at the end of their operation in 2019-2020, while the Mill will still be processing ore from Whale Tail Pit and tailings deposition.

6.2.5 Rock Storage Facilities

Closure and reclamation of the Portage RSF occurred progressively during operations with the placement of the NPAG cover over the side slopes of the PAG RSF. Refer to Section 5.2.5.4 for cover design details. Approximately 84% of the Portage PAG RSF has been covered as of the end of 2017.

The RSF is designed for long-term stability. Thus no additional re-grading or construction will be required for stability. It will not be possible to progressively reclaim the uppermost bench or the top surface of the Portage RSF as the demolition landfill is located on the RSF. This will be completed in closure.

Open pit backfill with waste rock also occurred during operations at Goose and Portage pits, in the mined out sectors.

Finally, the RSFs containing NPAG waste rock will be reclaimed in operation or in active closure for closure construction requirements.

6.2.6 Tailings Storage Facilities

Progressive reclamation by capping the tailings in the North Cell was undertaken in winter of 2015 following the completion of the tailings deposition. The construction continued in 2016 and 2017. Capping occurred in sections (perimeter areas) where the tailings were at elevation 149.5 m (design level). This consisted of capping with 2.0 m of NPAG material and represents 750,743 m^3 of placed material. Progressive closure in the North Cell is planned to continue in winter 2018 and 2019.

As part of the closure and reclamation planning, Agnico Eagle has undertaken a research program in collaboration with the RIME (Research Institute in Mine and Environment). The focus of this research program is the reclamation of the tailings storage and rock storage facilities. Test pads were constructed

over the North Cell and instrumented to test various type of cover. Additional details are available in Appendix E.

6.2.7 Water Management Facilities

Following conversion of the Portage Attenuation Pond into the Reclaim Pond (South Tailings Cell) in 2014, some of the dewatering equipment from the North Cell reclaim system (i.e. dewatering pipelines, reclaim barge, effluent diffuser pipelines, and pumps) has been dismantled and removed. This activity occurred in 2015. Water management facilities or equipment not used or deemed not necessary could be removed during operations.

6.2.8 Infrastructure at Mill and Camp Area

Potential progressive reclamation activities for the buildings and equipment at Vault could occur during operation after the mining activities. Specific timeline for progressive reclamation at Vault during operation will be eventually defined.

Efforts are also made to reduce inventories of consumables leading up to the end of operations.

6.2.9 Waste Management Facilities

The landfill will be in active use throughout the operation period and also during the closure period in order to receive debris from decommissioning. Operation landfills are progressively closed in the Portage RSF during operation, but final closure of the demolition landfill will occur at the end of the active closure stage. The landfarm will be required in operations and active closure for soil decontamination. No specific progressive reclamation activities have been identified for the other waste disposal areas.

7.0 Temporary Closure

Temporary closure occurs when an advanced mineral exploration or mining operation ceases with the intent of resuming activities in the near future. Temporary closure could be due to an unplanned closure or a planned closure of certain facilities in a complex mining project (AANDC/MVLWB, 2013).

The Project operation is planned to be continuous for the full proposed operating period. However, the mine may need to shut down for a short-term or indefinitely (long-term) due to economic, environmental and/or social factors. The plans for both of these closure periods are discussed below. Notification of temporary closure would be presented to the staff and the local population with at least 30 days' notice; if the conditions allow, a longer notice period will be provided where possible.

7.1 Temporary Closure Goal and Closure Objectives

The goal of temporary closure is ongoing protection of the environment, and regulatory compliance during the shutdown period. Temporary closure measures deemed necessary will depend upon the duration and extent of site activities/presence during the temporary closure. It is anticipated that water management and treatment facilities will function at the same level during temporary shutdown periods as during operations.

The objectives of temporary closure activities are to:

- Maintain all operating facilities and programs necessary to protect humans, wildlife, and the environment, including necessary environmental monitoring;
- Make available appropriate financial resources to continue environmental monitoring and reporting during temporary closure;
- Keep care and maintenance staff at the site and in sufficient number and expertise to care for the site and any potential problems that may arise;
- Make available sufficient equipment and supplies on site for any maintenance or reclamation activities that may need to take place; and
- Comply with all applicable federal and territorial laws and regulations, in addition to the operator's Land Use Permits, Land Leases and Water Licence, will be ensured.

7.2 Temporary Closure Activities

The proposed short-term and long-term temporary closure activities are presented in the following subsections. The extent to which the activities listed will be implemented depends on the site conditions at the time of the temporary closure, and the anticipated length of the closure (short-term or long-term). In all cases, access to the sites, buildings, and all other infrastructures will be secured and restricted to authorized personnel only.

In most circumstances, planned temporary closure activities are expected to occur as described above and in the following sections. Should a situation arise in which temporary closure cannot be executed as planned (e.g. major fire at the processing Mill, dam important break/breach, etc.), the affected features will be subject to alternative temporary closure measures, with the planned temporary closure activities resuming as soon as practical. Also, temporary closure will not affect the AWAR as it is used as the overland transportation route from Baker Lake to the mine site for supplies. Regular maintenance and monitoring activities will be maintained at the same frequency as that of operations during short-term temporary closure and at a reduced frequency as required during long-term temporary closure.

7.2.1 Short-term Temporary Closure

Short term shut down or closure period is defined as a period of less than one year and could last for a period of weeks or several months (up to 12 months) based on economic, environmental, and social factors. The following Table (Table 7-1) summarizes the measures that will be taken as required during a short-term temporary closure (adapted from Golder 2014 and 2016a).

Table 7-1 : Short-term Temporary Closure Activities

Sites	Closure Activities
Open pits	Warning signs and berms will be erected as needed around the pit perimeter
	Dewatering/flooding of the pit will continue as conducted during operations
Monitoring	Monitoring of water quality of the collection ponds will continue as per during operations
	Environmental monitoring and sampling will continue at regular intervals as set out in the Project operations and monitoring program and in accordance with all applicable Licences, permits, and authorizations
	Routine geotechnical stability monitoring and maintenance will continue at a reduced rate compared to that conducted during operations. The pit area will be inspected routinely to check for rock falls, changes to groundwater inflows and overall integrity
Water Management	Surface water management facilities will be maintained to manage contact water runoff
	Unused water distribution lines will be drained, but would be left in place
TSF	Maintenance of water management infrastructures supporting the TSF to operational levels and required freeboard
Infrastructures and services areas	All mobile equipment except for small service equipment required for pit inspections will be removed and placed in secure on-site storage
	Fuel, lubricants, and hydraulic fluids will be removed from the pit area and stored in designated areas
	Fluid levels in all fuel tanks will be recorded and monitored regularly for leaks, or fuel will be removed from the site
	An inventory of chemicals and reagents, petroleum products, and other hazardous materials will be conducted. These materials will be secured appropriately, or the materials will be removed from the site
	All explosives will be relocated to the main powder magazine and secured, disposed of, or removed from the site
	Minimum staffing levels will be maintained to carry out care and maintenance
	The accommodations will be operated at reduced staffing level
	Critical facilities will have nominal heat to prevent freezing of the facilities and possible damage
	The sewage treatment plant and potable water treatment plant will continue to operate as needed
	Hazardous wastes on-site will be collected and stored in an appropriate area for annual disposal to a registered disposal facility

7.2.2 Long-term temporary closure

Long-term temporary closure (indefinite shutdown) is a cessation of mining and processing operation for an indefinite period of time greater than one year. The intention is that the mine will resume operations as soon as possible after the cause for the indefinite shutdown has been addressed. The site must maintain safety and environmental stability during this time. Possible causes for an indefinite shutdown could include prolonged adverse economic conditions or extended labor disputes. A decision on the estimated length of the indefinite shutdown would be made after the initial one year period. Decisions on possible

extensions to the indefinite shutdown would be made every 6 months thereafter and would be based on the conditions at that time. At present, the maximum length of time or number of extensions for interim shutdown before moving to final closure has not been defined. Table 7-2 summarizes the measures that will be taken as required **in addition** to the short-term temporary closure activities (Table 7-1) during a long-term temporary closure (adapted from Golder 2014 and 2016a).

Table 7-2 : Long-term Temporary Closure Activities

Category	Closure Activities
Open pits	Pumps in the pit will be relocated and the pit will be allowed to flood passively (from rainfall and groundwater inflow)
Monitoring	Environmental and geotechnical monitoring and sampling will continue at the regular level as set out in the mine operations and monitoring program, and in accordance with all applicable Licences, permits and authorizations
RSF	If necessary, the working face of the RSFs slopes will be graded to ensure stability and drainage to the contact water management system adjacent to the rock storage facilities. As the RSFs will be designed and operated for long-term stability, it is anticipated that any grading required will be localized and minimal. The RSFs will be monitored to ensure the site stays in compliance with any permits and/or licences
TSF	The tailings surface area will be re-graded, if needed, to promote slope stability. Erosion control measures will be implemented, if required, to reduce the potential mobilization of tailings by wind (spraying water to keep the tailings surface wet and/or covering the tailings surface with a layer of gravel). The TSF will be subject to routine geotechnical stability monitoring and maintenance. Monitoring will be at the same frequency as that of operations. Maintenance will be completed as required.
Dikes/dams	The dikes/dams will be monitored and maintained, and none of the dikes/dams will be opened and reconnected to adjacent lakes
Water Management	Surface water control structures will be maintained as required. In areas where water quality is suitable for discharge, natural drainage courses may be re-established
	Unused water distribution lines will be drained. Unused lines on surface will be removed and placed in a secure lay down area to reduce impacts on wildlife

7.3 Temporary Closure Monitoring, Maintenance, and Reporting

Monitoring and reporting during the short-term and long-term temporary closure will continue at the regular level as set out in the mine operations and monitoring program, and in accordance with all applicable Licences, permits and authorizations. Adjustment of monitoring frequencies for long term temporary closure might be made only following approval from the licensing and permitting authorities concerned.

The numbers of personnel on-site would be reduced to reduce operation costs. The staff present at site during temporary closure would be sufficient in number and expertise to successfully carry out care, maintenance and monitoring duties, and to address and remediate any potential problems that may arise. Sufficient equipment and supplies/reagents would be left on-site for any maintenance or reclamation activities that may need to take place.

As required by the Meadowbank Water Licence 2AM-MEA1525, Part J, items 4 and 5; *the Licensee shall notify the NWB in writing, at least sixty (60) days prior to, or as soon as practically possible, any intent to enter into a Care and Maintenance Phase. The Licensee shall provide the NWB, within thirty (30) days of the Licensee providing notice of intent to enter into Care and Maintenance under Part J, Item 4, a Care and Maintenance Plan that details the Licensee's plans for maintaining compliance with the Terms and Conditions of the Licence.*

The reclamation security deposit will also be kept up to date during temporary closure.

7.4 Temporary Closure Contingency Program

The key staff present at site during temporary closure would be sufficient in number and expertise to successfully address and remediate any conditions or unforeseen events that may arise through the monitoring programs. The key staff at the site would also have access to external consultants and advisors, as required.

The contingency options and actions for events or incidents defined for operations would be also implemented during the temporary closure (i.e., spill responses and reports).

7.5 Temporary Closure Schedule

Mining activities during short-term closure are typically stopped. However, activities such as care-and maintenance, monitoring, intermittent testing, periodic operation of equipment and appropriate facilities will be on-going as described above. Activities related to ensuring public and wildlife safety would be a priority, and would focus upon maintenance and monitoring of all facilities and equipment to maintain physical and chemical stability. A sufficient number of care-and-maintenance staff would be present on site, and an appropriate level of security would be implemented at selected facilities. Access to temporarily inactive facilities would be restricted to authorized personnel only.

The temporary closure schedule would depend on when temporary closure occurs (i.e., what year of the operations stage) and its duration, both of which are commonly uncertain. Therefore, the schedule for the activities presented in Section 7.2 would be developed as temporary closure advances. Establishing a temporary closure schedule inherently contains uncertainty as this is not a planned activity, and the duration of a temporary closure will vary based on the cause for closure. As a result, the schedule will be progressive.

The sequence of activities for short-term and long-term temporary closure would, in summary, be as follows:

- Restrict access to the site, buildings, and infrastructures to authorized personnel as required;
- Carry out an inventory of chemicals and reagents, petroleum products, and other hazardous materials and secure the inventory appropriately or remove some of it from site;
- Post warning signs and berms as needed around the open pits perimeter;
- Remove all mobile equipment except for small service equipment required for open pits and site inspections and place them in secure on-site storage;

- Temporary closure of unnecessary facilities and systems;
- Continue with environmental and geotechnical monitoring and sampling required for care, maintenance and monitoring at the regular level as set out in the mine operations and monitoring program, and in accordance with all applicable Licences, permits, and authorizations.

8.0 Integrated Schedule of Activities

Reclamation of the Meadowbank site can be divided into the following three general stages (Golder, 2014):

- Operations: during which time progressive rehabilitation measures may be undertaken;
- Active Closure/Closure: during which time the major reclamation measures are undertaken; and
- Post Closure: all major construction activities have been completed and ongoing monitoring and maintenance is required, with minimal activity on-site.

The preliminary schedule of the Meadowbank closure is presented in Appendix P and provides a schedule detailing the closure stages of major components of the Meadowbank progressive closure, active closure/closure and post closure. The main key periods included in the schedule are presented in Table 8-1.

Table 8-1 : Meadowbank - Closure and Post-Closure Main Phases

Period	Operations/Closure Main Phases
2017 to September 2018	Mining operations at Meadowbank
2019 Q3 to January 2022	Mining operations at Whale Tail (ore processing at Meadowbank)
2017 to January 2022	Progressive closure
2022 to 2024	Active Closure - Demolition
2019 Q3 to 2026	Active pits flooding
2030	Dikes opening/reconnection
2022 to 2030	Active Closure and Closure monitoring
2031 to 2032	AWAR closure
2031 to 2041	Post-Closure Monitoring

It is anticipated that the schedule will be refined throughout the Project life as the designs for closure are advanced and the closure methods and strategies are further developed. The schedule is subject to changes following mine plan and development as well as market conditions.

9.0 Post-Closure Site Assessment

The ICRP is a “living” document and includes a commitment to adaptive management and monitoring during all stages of the mine life to demonstrate the safe performance of the Project facilities and to reduce any contamination on the site or in the adjacent area after operations cease. Monitoring during operations and in closure will identify non-compliant conditions; allow timely maintenance and clean up as needed; allow timely planning for adaptive and corrective measures; and enable successful completion of the ICRP.

Monitoring programs is already ongoing to provide additional baseline information on which to base the Final Closure and Reclamation plan (FCRP) document. The adaptive management plans to be used in closure will follow the actions completed during operations, and will be coordinated with the existing operational monitoring programs to set appropriate trigger levels, and mitigation plans and actions.

Monitoring and maintenance programs that are implemented during the closure and post-closure phases of the Project life will use the data collected during operational monitoring. The data collected in operation will assist with defining measures of success at closure and the performance of the reclamation and closure efforts. The data collected during post-closure monitoring will allow the procedures and activities to be adjusted or modified as necessary to confirm ongoing environmental protection, and ultimately will determine when final closure is complete, the closure objectives for the Project have been achieved, and the Project site and affected areas have been returned to viable and, wherever practicable, self-sustaining ecosystems that are compatible with a healthy environment and with human activities.

Monitoring programs will be initiated during pre-development and operations to provide additional baseline information on which to base the FCRP document. The adaptive management plans to be used in closure and post-closure will follow the actions completed during operations, and will be coordinated with the operational monitoring programs (e.g., the Aquatic Effects Monitoring Plan (AEMP) and the Terrestrial Environment Management Plan (TEMP)) to set appropriate trigger levels, and mitigation plans and actions.

Monitoring and maintenance programs that are implemented during the closure and post-closure phases of the Project life will use the data collected during operational monitoring to assess the performance of the reclamation and closure procedures, and to identify long-term maintenance requirements, if any. The data collected during post-closure monitoring will allow the procedures and activities to be adjusted or modified as necessary to confirm ongoing environmental protection.

Post closure general arrangement is presented in Appendix O.

9.1 Operational Monitoring Strategies

The overall objectives during operations of the AEMP and the TEMP are to provide programs to identify and mitigate potential adverse Project-related impacts so that construction and operational activities do not cause any undue harm to water quality, sediment quality, vegetation, biota, wildlife, and wildlife habitats. Both the AEMP and the TEMP provide the basis for integrating monitoring efforts with future revisions to the Closure and Reclamation Plan to verify compliance with regulatory instruments and agreements, both federally and territorially.

The AEMP and the TEMP will be reviewed and updated in the final year of operations to reflect conditions at the site as the mine approaches closure. The changes would allow the basic portions of the plans to continue to be used to cover the closure period activities.

9.2 Closure and Post-Closure Strategies

Development of monitoring and maintenance programs is an iterative process in consultation with communities and regulators as the Project advances. The closure and post-closure monitoring and maintenance programs will be extensions of efforts undertaken during the operations phase and would reflect the success of the management of the site during operations to limit contamination.

The actual conditions or impact from the operations within the mine footprint would be understood at closure and this information would be used to modify monitoring plans moving to closure and post closure. It is anticipated that monitoring and maintenance will be carried out during the active closure stage at frequencies similar to those required during operations. Post closure monitoring and maintenance will be carried out at a reduced frequency depending on the results of the monitoring and the measures of success selected for closure. Guidance on monitoring and maintenance programs for closure and post-closure is provided in AANDC/MVLWB (2013). The frame work for the relevant strategies for the back-flooded area identified at this time is discussed below:

- Visual inspections of the reclaimed areas;
- Sample surface water and profiles of the back-flooded area; and
- Inspect fish habitat in back-flooded area.

As the closure effort is completed and the post-closure period begins, the AEMP and the TEMP would be reviewed and updated again to cover the remaining (post-closure) monitoring period. It is also anticipated that after several years in the post-closure period, monitoring would no longer be required.

It is planned that the haul road would be maintained for a sufficient period to enable access to the site for minor maintenance required in the initial portion of the post-closure period. The haul road will be decommissioned once maintenance requirements at the Project site are anticipated to be minor and could be achieved with small crews sent to site via helicopter in the summer. It is anticipated that the need for ongoing maintenance would be reduced with time and will not be required once the site is physically and chemically stable.

9.3 Reporting

The preparation of the following reports is required by the AANDC/MVLWB (2013) guidelines for closure and reclamation of all components of mine sites:

- Annual Closure and Reclamation Plan Progress Report: The general purpose of these annual reports is to provide an opportunity for all parties to track, modify, and report on reclamation. The annual review of research results also provides an opportunity to identify missing research tasks, which allows the research plans to continually evolve. The progress reports keep all parties informed about closure planning and allow the NWB to confirm that the proponent has remained on

schedule. Any proposed changes to the CRP should be presented with supporting rationale in these reports for NWB approval;

- Reclamation Completion Report: The general purpose of the reclamation completion report is to provide details, including figures, of the actual reclamation work completed, and an explanation of any work that deviated from the original or approved CRP. The report should also provide a preliminary assessment on whether appropriate closure objectives and criteria have been achieved. With each reclamation completion report, there may be an opportunity to revise the financial security estimate depending on the stage of the operation and the current CRP;
- Performance Assessment Report: A performance assessment report is prepared at the completion of the reclamation work and following submission of the reclamation completion report. The general purpose of the performance assessment report is to provide a detailed comparison of conditions at the site against the appropriate closure objectives and closure criteria. With each performance assessment report, there may be an opportunity to revise the security estimate depending on the stage of the operation and the current ICRP.

The timelines for preparation and submission to NWB of the above described reports will be according to the Meadowbank Mine approved Licence requirements.

10.0 Financial Security

A permanent closure and reclamation financial security cost estimate has been prepared with the present Project layout and infrastructure. The cost estimate covers the closure and reclamation of all Project facilities as described in this report and was prepared using RECLAIM Version 7.0, March 2014, for permanent closure of the Project.

Reclamation of the Meadowbank Gold Project facilities can be divided into the following three general stages, as presented in the integrated schedule of closure activities presented in Appendix P:

- Operations: during which time progressive rehabilitation measures may be undertaken;
- Active Closure: during which time the major reclamation measures are undertaken;
- Post Closure: all major construction activities have been completed and ongoing monitoring and maintenance is required, with minimal activity on-site.

Agnico Eagle is required to submit a detailed financial security cost estimate for the Meadowbank ICRP - Update 2018 to Indigenous and Northern Affairs Canada (INAC) and to the Kivallik Inuit Association (KIA) to support land use and water licensing requirements. RECLAIM Version 7.0 workbook has been used for this estimate, as per the Guidelines for Closure and Reclamation Cost Estimates for Mines, issued by Indigenous and Northern Affairs Canada, Mackenzie Valley Land and Water Board and the Government of the Northwest Territories (INAC, MVLWB, GNWT, 2017).

This cost estimate provides for the closure measures described in detail in the Meadowbank ICRP – Update 2018. Most closure activities will occur within the active closure period, from 2022 to 2024. The schedule of closure activities presented in Appendix P outlines the major closure measures and their expected timeline.

For the purpose of this financial security cost estimate, only progressive rehabilitation measures which have already been completed to date are considered in the calculations.

The updated 2018 estimated closure and reclamation costs for the Meadowbank Project represent a total of $ 83,569,898. This total includes $ 57,883,238 of direct costs and $ 25,686,660 of indirect costs. The financial security cost estimate assumptions and methodology used for the calculations, along with the complete RECLAIM 7.0 spreadsheets are presented in Appendix Q.

11.0 References

Aboriginal Affairs and Northern Development Canada (AANDC). 2002. Mine Site Reclamation Policy for Nunavut. Formerly Indian and Northern Affairs Canada (INAC).

Aboriginal Affairs and Northern Development Canada (AANDC). 2007. Mine Site Reclamation Guidelines for the Northwest Territories. Formerly Indian and Northern Affairs Canada (INAC). January 2007.

Aboriginal Affairs and Northern Development Canada and Mackenzie Valley Land and Water Board (AANDC/MVLWB). 2013. Guidelines for the Closure and Reclamation of Advanced Mineral Exploration and Mine Sites in the Northwest Territories. November 2013.

Agnico Eagle Mines Limited. 2007a. Abandonment and Restoration Plan, Agnico-Eagle Meadowbank Project Baker Lake Facilities, Licence 8BC-MEA0709. Prepared by Agnico-Eagle Mines Limited, Meadowbank Division, October.

Agnico Eagle Mines Limited. 2007b. INAC Lease 66A/8-71-2 & 66A/8-72-2, Updated Closure and Reclamation Plan For the Tehek Lake All Weather Private Access Road, Baker Lake-Meadowbank. Prepared by Agnico-Eagle Mines Limited, Meadowbank Division, December.

Agnico Eagle Mines Limited. 2008. Closure and Reclamation Plan, Development Phase, Meadowbank Gold Project, Version 1. In Accordance with Water Licence 2AM-MEA0815 and 8BC-TEH0809, prepared by Agnico-Eagle Mines Limited, Meadowbank Division, September.

Agnico Eagle. 2012a. NNLP - Agnico Eagle Mines Meadowbank Division No-Net-Loss Plan, October 2012.

Agnico Eagle Mines Limited. 2012b. South Camp Dike Construction Summary Report, Meadowbank Gold Project, Nunavut. Prepared by Agnico-Eagle Mines Limited, March.

Agnico Eagle Mines Limited. 2013a. Construction Report, Tailings Storage Facilities, Meadowbank Gold, Project. Prepared by Agnico-Eagle Mines Limited, with collaboration of Golder Associates Ltd. June.

Agnico Eagle Mines Limited. 2013b. Construction Summary Report, Vault Dike, Agnico-Eagle Mines, Meadowbank Gold Project. Prepared by Agnico-Eagle Mines Limited, Meadowbank Division, July.

Agnico Eagle Mines Limited. 2013c. Operational ARD/ML Testing and Sampling Plan.

Agnico Eagle Mines Limited. 2013d. Air Quality and Dustfall Monitoring Plan - Version 2. November.

Agnico Eagle Mines Limited. 2013e. Hazardous Material Management Plan.

Agnico Eagle Meadowbank. 2013f. Meadowbank Mine No-Net-Loss Plan, Implementation Cost Estimate and Construction Schedule, Version 2, November 2013.

Agnico Eagle Mines Limited. 2016a. Whale Tail Pit Project, Nunavut. Final Environmental Impact Statement. Submitted to the Nunavut Impact Review Board. 2016.

Agnico Eagle Mines Limited. 2016b. 2015 Water Management Plan. March 2016.

Agnico Eagle Mines Limited. 2017a. Meadowbank Gold Project 2016 Annual Report. 257 p.

Agnico Eagle Mines Limited. 2017b. Landfarm Design and Management Plan, version 4, Agnico-Eagle Mines, March 2017.

Agnico Eagle Mines Limited. 2017c. Landfill Design and Management Plan, version 3, Agnico-Eagle Mines, March 2017.

Agnico Eagle Mines Limited. 2018a. 2017 Water Management Report and Plan. March 2018.

Agnico Eagle Mines Limited. 2018b. Updated Waste Rock and Tailings Management Report and Plan - 2017. March 2018.

Agnico Eagle Mines Limited. 2018c. Meadowbank Gold Project 2017 Annual Report. 278 p. May 2018.

Agnico Eagle Mines Limited. 2018d. Water Balance (Excel Table).

Alberta Province. 2013. Ambient Air Quality Guidelines. August.

Azimuth Consulting Group (Azimuth). 2015. Core Receiving Environment Monitoring Program (CREMP): 2015 Plan Update, Meadowbank Mine. Report prepared by Azimuth Consulting Group, Vancouver, BC for Agnico-Eagle Mines Ltd, November 2015.

B.C. 2013. Ambient Air Quality Objectives. August 2013.

BGC (BGC Engineering Inc.). 2003. Implications of Global Warming and the Precautionary Principle in Northern Mine Design and Closure. Report prepared for Department of Indian Affairs and Northern Development Canada.

Brodie (Brodie Consulting Limited). 2008. Meadowbank Gold Project Reclamation Cost Estimate. Prepared for Water Resources Division, Indian and Northern Affairs Canada, by Brodie Consulting Ltd. West Vancouver, March.

CCME. 2007. Canadian Sediment Quality Guidelines for the Protection of Aquatic Life – Summary Table Update 2007.

Canadian Environmental Assessment Agency. 2015. Canadian Ambient Air Quality Standards.

COSEWIC (Committee on the Status or Endangered Wildlife in Canada). 2010. COSEWIC Species Database. Available at: www.cosewic.gc.ca, accessed June 2010.

Cumberland (Cumberland Resources Limited). 2005a. Final Environmental Impact Statement, Meadowbank Gold Project. Submitted to Nunavut Impact Review Board, October.

Cumberland (Cumberland Resources Limited). 2005b. Baseline Physical Ecosystem Report, Meadowbank Gold Project. Submitted to Nunavut Impact Review Board, October.

Cumberland (Cumberland Resources Limited). 2005c. Air Quality Impact Assessment, Meadowbank Gold Project. Submitted to Nunavut Impact Review Board, October.

Cumberland (Cumberland Resources Limited). 2005d. Baseline Kinetic test Report, Meadowbank Gold Project. Submitted to Nunavut Impact Review Board, October.

Cumberland (Cumberland Resources Limited). 2005e. Baseline Terrestrial Ecosystem Report, Meadowbank Gold Project. Submitted to Nunavut Impact Review Board, October.

Cumberland (Cumberland Resources Limited). 2005f. Baseline Aquatic Ecosystem Report, Meadowbank Gold Project. Submitted to Nunavut Impact Review Board, October.

Cumberland (Cumberland Resources Limited). 2005g. Baseline Traditional Knowledge Report, Meadowbank Gold Project. Submitted to Nunavut Impact Review Board, October.

Cumberland (Cumberland Resources Limited). 2005h. Baseline Archaeology Report, Meadowbank Gold Project. Submitted to Nunavut Impact Review Board, October.

Dougan (& Associates). 2011. Bathymetric surveys. Prepared for Agnico Eagle Mines Limited. February.

Environment Canada, 2009. Environmental code of practice for metal mines, 2009.

FMA (FMA Heritage Resources Consultants Inc.) 2007. Archaeological Impact Assessment. Cumberland Resources Meadowbank Mine All-Season Road and Borrow Sources. Nunavut Permit 2006-027A. Nunavut Department of Culture, Language, Elders and Youth. Iqaluit.

FMA (FMA Heritage Resources Consultants Inc.) 2010. Archaeological Impact Assessment 2010. Agnico-Eagle Mines Limited Meadowbank Gold Project. Nunavut Permit 10-022A. Nunavut Department of Culture, Language, Elders and Youth. Iqaluit.

GN (Government of Nunavut). 2001. Nunavut Wild Species 2000. Department of Sustainable Development, Iqaluit, NU.

GN (Government of Nunavut). 2011. Environmental Guidelines for Ambient Air Quality. Department of Sustainable Development, Iqaluit, NU.

Golder Associates Ltd., 2002. Lake Bathymetry Survey, Meadowbank Project, Nunavut Territory. Project Number 022-1427A, November.

Golder Associates Ltd., 2003. Lake Bathymetry Survey, Meadowbank Project, Nunavut. Project Number 03-1413-427, September.

Golder Associates Ltd., 2006. Bathymetric Surveys, Meadowbank Project, Nunavut. Document No. 309, submitted to Cumberland Resources Ltd., November.

Golder Associates Ltd., 2008a. 2008 Bathymetric Surveys, Meadowbank Project, Nunavut, Canada. November.

Golder Associates Ltd., 2008b. Runway Extension Bathymetric Surveys, Meadowbank Project, Nunavut, Canada. Document No. 805, submitted to Agnico-Eagle Mines Ltd, Meadowbank Division, December.

Golder Associates Ltd., 2009. Meadowbank East Dike Construction As-Built Report.

Golder Associates Ltd., 2013. Bay-Goose Dike Construction As-Built Report.

Golder Associates Ltd., 2014. Interim Closure and Reclamation Plan. Report No. 13-1151-0131 to Agnico Eagle Mines Ltd. January 2014. 115 p.

Golder Associates Ltd., 2016a. Whale Tail Interim Closure and Reclamation Plan. Report No. 1541520. Report to Agnico Eagle Mines Ltd. June 2016.

Golder Associates Ltd., 2016b. TSF 2016 Construction Season As- Built Report. Report Doc 1552 1656047 RPA Rev0, March 2016.

Heginbottom, J. A., M. A. Dubreuil, and P. A. Harker.1995. Canada permafrost, in National Atlas of Canada, 5th ed., Nat. Resour. Can., Ottawa, Ont., Canada.

IPCC (Intergovernmental Panel on Climate Change). 2014. Fifth Assessment Report (AR5). Summary for Policymakers. In: Climate Change 2014: Impacts, Adaptation, and Vulnerability. Part A: Global and Sectoral Aspects. Contribution of Working Group II to the Fifth Assessment Report of the Intergovernmental Panel on Climate Change [Field, C.B., V.R. Barros, D.J. Dokken, K.J. Mach, M.D. Mastrandrea, T.E. Bilir, M. Chatterjee, K.L. Ebi, Y.O. Estrada, R.C. Genova, B. Girma, E.S. Kissel, A.N. Levy, S. MacCracken, P.R. Mastrandrea, and L.L. White (eds.)]. Cambridge University Press, Cambridge, United Kingdom and New York, NY, USA, pp. 1-32.

Lawrence, M., S. Davies, G. Collins, F. Hnytka, K. Kroeker, and R. Sie. 1977. Aquatic Resources Survey-Keewatin District Preliminary Report 1977. Environment-Social Program Northern Pipelines, ESCOM Report No. AI-07. 50 p.

MacDonald, G. and D.B. Stewart. 1980. Arctic Land Use Research Program 1980: A Survey of the Aquatic Resources of the Central Keewatin Region of the Northwest Territories. Northern Affairs Program Environmental Studies Vol. 17, March, Ottawa, Ontario. 111 p.

McPhail, J.D. and C.C. Lindsey. 1970. Freshwater Fishes of Northwestern Canada and Alaska. Fisheries Research Board of Canada, Bulletin 173, 381 p.

MMC (Meadowbank Mining Corporation). 2007a. Preliminary Closure and Reclamation Plan, Meadowbank Gold Project. August.

Meadowbank Mining Corporation, 2007b. Meadowbank Gold Project, Mine Waste and Water Management, August 2007.

MEND. 1996. Acid Mine Drainage Behaviour in Low Temperature Regimes - Thermal Properties of Tailings.

NEC (Nunavut Environmental Consulting). 2013. Meadowbank Mine 2012 Wildlife Monitoring Summary Report. Presented in the AGNICO EAGLE 2012 NWB Annual Report. March.

NRC (Natural Resources Canada). 2010. Climate Warming - National Annual Temperature Scenario: 2050 / Réchauffement climatique - Scénario de température nationale annuelle : 2050; Atlas of Canada. Atlas of Canada Reference Outline Map Series 613, (ed. 6), 2010, 2 sheets. On-line map accessed May 2018.

Nunavut Impact Review Board (NIRB). 2006. Project Certificate [NO.: 004]. December 2006.

Nunavut Impact Review Board (NIRB). 2009. Project Certificate [NO.: 004] Amendment 001. November 2009.

Nunavut Impact Review Board (NIRB). 2016. Project Certificate [NO.: 004] Amendment 002. August 2016.

Nunavut Water Board (NWB). 2015. Water Licence No: 2AM-MEA1525. July 2015.

Overland, J.E., M. Wang, J.E. Walsh, and J.C. Stroeve. 2013. Future Arctic climate changes: Adaptation and mitigation time scales, Earth's Future, 2, doi: 10.1002/2013EF000162.

OKC.2016. Meadowbank North Cell Expansion - Design of Internal Structures, O'Kane Consultants, March 2016.

Richardson, E.S., J.D. Reist and C.K. Minns. 2001. Life History Characteristics of Freshwater Fishes Occurring in the Northwest Territories and Nunavut, with Major Emphasis on Lake Habitat Requirements. Canadian Manuscript Report of Fisheries and Aquatic Sciences 2569, Department of Fisheries and oceans, 149p.

SARPR (Species at Risk Public Registry). 2010. Species List. Available at: http://www.sararegistry.gc.ca/default_e.cfm, accessed June 2010.

Scott, W.B. and E.J. Crossman. 1979. Freshwater Fishes of Canada. Bulletin 184, Fisheries Research Board of Canada, 966 p. (First published 1970, reprinted 1979).

Smith, S.L. and M.M. Burgess. 1998. Mapping the response of permafrost in Canada to climate warming. In, Current Research 1998-E, Geological Survey of Canada, p 163-171.

Smith, S.L. and M.M. Burgess. 2004. Sensitivity of permafrost to climate warming in Canada. Bulletin 579, Geological Survey of Canada, Ottawa, ON.

SNC-Lavalin. 2013. Water Management Plan 2012. SNC Lavalin. March 2013.

SNC-Lavalin. 2016. Tailings Storage Facility Expansion Project Phase 1 - Water Quality Assessment Technical Report. March 11th, 2016.

SNC-Lavalin 2018. Meadowbank Water Quality Forecasting Update Base on the 2017 Water Management Plan. February 2018.

Tetra Tech (2016), Phase 2 Dewatering Dike Decommissioning, Meadowbank Mine, Nunavut, Tetra Tech, September 2016.

Woo, M.K., A.G. Lewkowicz and W.R. Rouse. 1992. Response of the Canadian Permafrost Environment to Climatic Change. Physical Geography, 13:287–317.

12.0 Personnel

This report has been prepared by Marie-Hélène Picard (Sections 5 and 6) and Audrey Gamache (Sections 1, 2, 3, 4, 7, and 9) and revised by Érika Voyer and Dominic Tremblay.

We trust that this report is to your satisfaction. Should you have any question, please do not hesitate on contacting us.

SNC LAVALIN INC.

Prepared by:



Audrey Gamache, M.Sc.A

Project Manager

Mining & Metallurgy

Prepared by:



Marie-Hélène Picard, Eng., M.Sc.

Geotechnical Engineer

Mining & Metallurgy

Reviewed by:



Erika Voyer, Eng., M.Sc.

Mining Environment Engineer

Mining and Metallurgy

Reviewed by:



Dominic Tremblay, Eng., M.Sc.A

Director – Mining Environment

Mining and Metallurgy

EV/gb

Appendix A

Glossary of Terms and Definitions

The following terms are utilized in this document following the definitions provided in the Mine Site Reclamation Guidelines for the Northwest Territories (INAC 2007), the Guidelines for the Closure and Reclamation of Advanced Mineral Exploration and Mine Sites in the Northwest Territories (AANDC/MVLWB, 2013) and the Meadowbank Gold Project Type "A" Water Licence 2AMMEA1525.

This Appendix includes discipline-specific technical terms and key closure and reclamation planning terms (Adapted from Golder, 2014).

Abandonment: The permanent dismantlement of a facility so it is permanently incapable of its intended use. This includes the removal of associated equipment and structures.

Acid Rock Drainage (ARD): Acid rock drainage/metal leaching. The production of acidic leachate, seepage or drainage from underground workings, open pits, ore piles, waste rock or construction rock that can lead to the release of metals to groundwater or surface water during the life of the Project and beyond closure.

Active layer: The layer of ground above the permafrost which thaws and freezes annually.

Adaptive management: A management plan that describes a way of managing risks associated with uncertainty and provides a flexible framework for mitigation measures to be implemented and actions to be taken when specified thresholds are exceeded.

All-Weather Access Road (AWAR): The all-weather access road and associated water crossings between the Hamlet of Baker Lake and the Meadowbank Gold Project mine site.

Aquatic Effects Monitoring Plan (AEMP): A monitoring program designed during the Environmental Impact Statement stage of the Project to determine the short and long-term effects in the aquatic environment resulting from the Project, to evaluate the accuracy of impact predictions, to assess the effectiveness of planned impact mitigation measures and to identify additional impact mitigation measures to avert or reduce environmental effects. An overarching "umbrella" program that conceptually provides an opportunity to integrate results of individual, but related, monitoring programs in accordance with the Water Licence.

Backfill: Material excavated from a site and reused for filling the surface or underground void created by mining.

Background: An area near the site under evaluation not influenced by chemicals released from the site, or other impacts created by onsite activity.

Baker Lake Site Facilities: The facilities associated with the Meadowbank Gold Project, located within the Hamlet of Baker Lake, which includes the barge landing, a dry freight storage area, a fuel tank farm, and associated access roads.

Baseline: A surveyed condition and reference used for future surveys.

Bay-Goose Dike: The structure, along with South Camp Dike, designed to isolate the Portage and Goose Island open pit mining areas from Third Portage Lake.

Appendix A

Glossary of Terms and Definitions

Berm: A mound or wall, usually of earth, used to retain substances or to prevent substances from entering an area.

Best management practices: Any program, technology, process, operating method, measure, or device that controls, prevents, removes, or reduces pollution and impact on the environment.

Biodiversity: The variety of plants and animals that live in a specific area.

Bioremediation: The use of microorganisms or vegetation to reduce contaminant levels in soil or water.

Borrow pit: A source of fill or embanking material.

Canadian Council of the Minister of Environment (CCME): The organizations of Canadian Ministers of Environment that set guidelines for environmental protection across Canada such as the Canadian Water Quality Guidelines for the Protection of Freshwater Aquatic Life.

Care and maintenance: A term to describe the status of a mine when it undergoes a temporary closure. In respect of a mine, means the status of the facility when the Licensee ceases production or commercial operation temporarily for an undefined period of time

Central Dike: The structure designed to isolate the Tailings Storage Facility from Second Portage Lake for the purpose of retaining tailings.

Closure: When a mine ceases operations without the intent to resume mining activities in the future.

Closure criteria: Details to set precise measures of when the objective has been satisfied.

Closure objectives: Statements that describe what the selected closure activities are aiming to achieve; they are guided by the closure principles. Closure objectives are typically specific to project components, are measurable and achievable, and allow for the development of closure criteria.

Commercial operation: In respect of a mine, an average rate of production that is equal to or greater than 25% of the design capacity of the mine over a period of ninety consecutive days.

Construction: Activities undertaken to construct or build any components of, or associated with, the development of the Meadowbank Gold Project.

Contact water: Any water that may be physically or chemically affected by mining activities.

Contaminant: Any physical, chemical, biological or radiological substance in the air, soil or water that has an adverse effect. Any chemical substance with a concentration that exceeds background levels or which is not naturally occurring in the environment.

Contouring: The process of shaping the land surface to fit the form of the surrounding land.

Core Receiving Environmental Monitoring Program (CREMP): A monitoring program designed to determine the short and long-term effects in the aquatic environment resulting from the Project, to evaluate the accuracy of impact predictions, to assess the effectiveness of planned impact mitigation measures and to identify additional impact mitigation measures to avert or reduce environmental effects.

Cumulative Effects: The combined environmental impacts that accumulate over time and space as a result of a series of similar or related actions or activities.

Appendix A

Glossary of Terms and Definitions

Decommissioning: The process of permanently closing a site and removing equipment, buildings and structures. Rehabilitation and plans for future maintenance of affected land and water are also included.

Deleterious substances: A substance as defined in section 34(1) of the Fisheries Act.

Dike: Retaining structure designed for water control to enable safe open pit mining and for containing tailings impoundments.

Discharge: The release of any water or waste to the receiving environment.

Disposal: The relocation, containment, treatment or processing of unwanted materials. This may involve the removal of contaminants or their conversion to less harmful forms.

Domestic waste: All solid waste generated form the accommodations, kitchen facilities and all other site facilities, excluding those hazardous wastes associated with the mining and processing of ore.

Drainage: The removal of excess surface water or groundwater from land by natural runoff and permeation, or by surface or subsurface drains.

East Dike: The structure designed to isolate the Portage Pit area from Second Portage Lake.

Effluent: Treated or untreated liquid waste material that is discharged into the environment from all site water management facilities or from a structure such as a settling pond or a treatment plant.

End land use: The allowable use of disturbed land following reclamation. Municipal zoning and/or approval may be required for specific land uses.

Engagement: The communication and outreach activities a proponent is required to undertake with affected communities and Aboriginal organizations/governments prior to and during the operation of a project, including closure and reclamation phases.

Engineered structure: Any facility, which was designed and approved by a Professional Engineer registered with the Association of Professional Engineers, Geologists and Geophysicists of Nunavut.

Environment: The components of the Earth, and includes: land, water and air, including all layers of the atmosphere; all organic and inorganic matter and living organisms; and the interacting natural systems that include the aforementioned components.

Environmental assessment: An assessment of the environmental effects of a project that is conducted in accordance with the Canadian Environmental Assessment Act and its regulations.

Environmental management system: A management system that incorporates environmentally and socially responsible practices into the project operations.

Erosion: The wearing away of rock, soil or other surface material by water, rain, waves, wind or ice; the process may be accelerated by human activities.

Final discharge point: In respect of an effluent, an identifiable discharge point of a mine beyond which the operator of the mine no longer exercises control over the quality of the effluent (Metal Mining Effluent Regulations).

Fish habitat: Areas used by fish for spawning, nursery, rearing, foraging and overwintering.

Appendix A

Glossary of Terms and Definitions

Geotechnical Engineer: A professional engineer registered with the Association of Professional Engineers, Geologist and Geophysicists of Nunavut and whose principal field of specialization with the engineering properties of earth materials in dealing with man-made structures and earthworks that will be built on a site. These can include shallow and deep foundations, retaining walls, dams, and embankments.

Geothermal analysis: The analysis of temperature below the ground surface.

Glacial till: Unsorted and unlayered rock debris deposited by glacier.

Goose Island Pit: The open pit developed for mining the Goose Island ore deposit.

Greywater: The component of effluent produced from domestic use (i.e. washing, bathing, food preparation and laundering), excluding sewage.

Ground thermal regime: Temperature conditions below the ground surface; a condition of heat losses and gains from geothermal sources and the atmosphere.

Groundwater: All subsurface water that occurs beneath the water table in rocks and geologic formations that are fully saturated. Water that occupies pores and fractures in rock and soil below the ground surface in a liquid or frozen state.

Habitat: The place where animal or plant naturally lives and grows.

Hazardous materials/waste: A contaminant which is a dangerous good that is no longer used for its original purpose and is intended for recycling, treatment, disposal or storage. Materials or contaminant which are categorized as dangerous goods under the Transportation of Dangerous Good Act (1992) and/or that is no longer used for their original purpose and is intended for recycling, treatment, disposal or storage.

Hydrology: The science that deals with water, its properties, distribution and circulation over the Earth's surface.

In situ treatment: A method of managing or treating contaminated soils, sludges and waters "in place" in a manner that does not require the contaminated material to be physically removed or excavated from where it originated.

Incinerator: The dual chamber, high temperature facility designed with the capacity to service the camp.

Interim Closure and Reclamation Plan (ICRP): A conceptual detailed plan on the reclamation of mine components which will not be closed until the end of the mining operations, and operational detail for components which are to be progressively reclaimed throughout the mine life.

Landfarm: The lined, engineered facility designed to treat petroleum hydrocarbon contaminated snow and soil that may be generated during mining activities using bioremediation.

Landfill: An engineered waste management facility at which waste is disposed by placing it on or in land in a manner that minimizes adverse human health and environmental effects.

Leachate: Water or other liquid that has washed (leached) from a solid material, such as a layer of soil or water; leachate may contain contaminants.

Metal leaching: The mobilization of metals into solution under neutral, acidic or alkaline conditions.

Appendix A

Glossary of Terms and Definitions

Migration: The movement of chemicals, bacteria, and gases in flowing water or vapour.

Mine design: The detailed engineered designs for all mine components stamped by a design engineer.

Mine plan: The plan for the development of the mine, including the sequencing of the development.

Mine water: Any water, including groundwater, which is pumped or flows out of any underground workings or open pit.

Mitigation: The process of rectifying an impact by repairing, rehabilitating or restoring the affected environment, or the process of compensating for the impact by replacing or providing substitute resources or environments.

Monitoring: Observing the change in geophysical, hydrogeological or geochemical measurements over time.

No net loss: A term found in Canada's Fisheries Act. It is based on the fundamental principle of balancing unavoidable losses of fish habitats with habitat replacement on a project-by-project basis in order to prevent depletion of Canada's fisheries resources.

Non-contact water: The runoff originating from areas unaffected by mining activity that does not come into contact with developed areas.

Nunavut Land Claims Agreement: The "Agreement between the Inuit of the Nunavut Settlement Area and Her Majesty the Queen in Right of Canada," including its preamble and schedules, and any amendments to that agreement made pursuant to it.

Objectives: Objectives describe what the reclamation activities are aiming to achieve. The goal of mine closure is to achieve the long-term objectives that are selected for the site.

Operations: The set of activities associated with mining, ore processing and recovery of gold; excluding construction and decommissioning activities.

Operator: The person who operates, has control or custody of, or is in charge of a mine or recognized closed mine.

Passive Treatment: Treatment technologies that can function with little or no maintenance over long periods of time.

Permafrost: Permafrost is defined as ground that remains at or below 0°C for at least two years. Permafrost does not necessarily contain ice; rather, the definition is based solely on temperature criteria of the mineral or organic parent material.

Permafrost Aggradation: A naturally or artificially caused increase in the thickness and/or area extent of permafrost.

Permanent Closure: Final closure of the mine site after mining has ceased, when no further exploration, mining, or processing activities are anticipated at the site.

Permeability: The ease with which gases, liquids, or plant roots penetrate or pass through soil or a layer of soil. The rate of permeability depends upon the composition of the soil.

Appendix A

Glossary of Terms and Definitions

pH: A measure of the alkalinity or acidity of a solution, related to hydrogen ion concentration; a pH of 7.0 being neutral.

Piezometer: An instrument used to monitor pore water pressure.

Pore water pressure: The pressure of groundwater held within the spaces between sediment particles.

Pore water: The groundwater present within the spaces between sediment particles.

Portage Attenuation Pond: The pond located in the South Cell of the TSF (prior to the start of tailings deposition in that cell) where mine site contact water will be discharged, and where water in the pond will be reclaimed to satisfy mill process water make up requirements with any excess water being treated if required and discharged to Third Portage Lake.

Portage Pit: The open pit developed for mining the Portage ore deposits.

Portage Rock Storage Facility: The facility designed to store waste rock from the Portage and Goose Island open pits.

Post-closure: The period of time after active closure of the mine.

Progressive Reclamation: Actions that can be taken during mining operations before permanent closure, to take advantage of cost and operating efficiencies by using the resources available from mine operations to reduce the overall reclamation costs incurred. It enhances environmental protection and shortens the timeframe for achieving the reclamation objectives and goals.

Project: The Meadowbank Gold Project as outlined in the Final Environmental Impact Statement and supplemental information submitted by Cumberland Resources Limited, Meadowbank Mining Corporation and subsequently Agnico Eagle Mines Ltd. to the Nunavut Impact Review Board (NIRB) and the Nunavut Water Board. It comprises an open pit mine, an All Weather Private Access Road from Baker Lake to the mine site, and site facilities in the Hamlet of Baker Lake.

Quarry: The areas of surface excavation for extracting rock material for use as construction materials along the All Weather Private Access Road and facilities at the mine site.

Receiving environment: The aquatic and terrestrial environments that receive any discharge resulting from the Project.

Reclaim Pond: The pond located within the active zone of the Tailings Storage Facility, designed to contain process (tailings related) water, and where water in the pond will be used to satisfy mill process water make up requirements.

Reclamation: The process of returning a disturbed site to its natural state or one for other productive uses that prevents or minimizes any adverse effects on the environment or threats to human health and safety.

Reclamation Research: Literature reviews, laboratory or pilot-scale tests, engineering studies, and other methods of resolving uncertainties. Proponents conduct reclamation research to answer questions pertaining to environmental risks; the design of reclamation research plans aims to provide data and information which will reduce uncertainties for closure options, selected closure activities, and/or closure criteria.

Appendix A

Glossary of Terms and Definitions

Rehabilitation: Activities to ensure that the land will be returned to a form and productivity in conformity with a prior land use plan, including a stable ecological state that does not contribute substantially to environmental deterioration and is consistent with surrounding aesthetic values.

Remediation: The removal, reduction, or neutralization of substances, wastes or hazardous material from a site in order to prevent or minimize any adverse effects on the environment and public safety now or in the future.

Restoration: The renewing, repairing, cleaning-up, remediation or other management of soil, groundwater or sediment so that its functions and qualities are comparable to those of its original, unaltered state.

Re-vegetation: Replacing original ground cover following a disturbance to the land.

Ripping: A method of loosening rock or soil using steel tynes attached to the rear of a bulldozer. The tynes are lowered into the ground and as the bulldozer moves forwards the soil or blocks of rock are displaced by the tynes.

Runoff: Water that is not absorbed by soil and drains off the land into bodies of water.

Saddle Dams: Structures located around the Tailings Storage Facilities.

Scarification: Seedbed preparation to make a site more amenable to plant growth. This is typically conducted with a grader.

Security deposit: Funds held by the Crown or land owner that can be used in the case of abandonment of an undertaking to reclaim the site, or carry out any ongoing measures that may remain to be taken after the abandonment of the undertaking.

Sediment: Solid material, both mineral and organic, that has been moved by air, water, gravity, or ice and has come to rest on the earth's surface either above or below sea level.

Seepage: Any water that drains through or escapes from any structure designed to contain, withhold, divert or retain water or waste. Seepage also includes any flows that have emerged through open pits, runoff from rock storage facilities, ore stockpile areas, quarries, and landfill or landfarm areas.

Seismic: Relating to an earthquake or to other tremors of the Earth, such as those caused by large explosions.

Sewage: All toilet wastes and greywater.

South Camp Dike: The structure, along with Bay-Goose Dike, designed to isolate the Portage and Goose Island open pit mining areas from Third Portage Lake.

Stakeholders: Industry, federal agencies, the territorial government, Aboriginal organizations/governments, land owners, affected communities, and other parties with an interest in a project.

Stormwater Dike: The structure designed to divide the North and South cells of the Tailings Storage Facility.

Sump: An excavation in impermeable soil for the purpose of catching or storing water or waste.

Appendix A

Glossary of Terms and Definitions

Surface water: Natural water bodies such as river, streams, brooks, ponds and lakes, as well as artificial watercourses, such as irrigation, industrial and navigational canals, in direct contact with the atmosphere. Sustainable development: Industrial development that does not detract from the potential of the natural environment to ensure benefits for future generations.

Tailings: Material rejected from a mill after most of the recoverable valuable minerals have been extracted.

Tailings Storage Facility: The facility designed to permanently contain the solid fraction of the mill tailings, located in the northwest arm of the partially dewatered Second Portage Lake. The facility includes the Reclaim Pond, the Central Dike, Saddle Dams, and the Stormwater Dike.

Taliks: Unfrozen zones that can exist within, below, or above permafrost layers. They are usually located below deep water bodies.

Temporary closure: When a mine ceases operations with the intent to resume mining activities in the future. Temporary closures can last for a period of weeks, or for several years, based on economical, environmental, political, or social factors.

Total dissolved solids: A measure of the amount of dissolved substances in a waterbody.

Total suspended solids: A measure of the particulate matter suspended in the water column.

Traditional knowledge: A cumulative, collective body of knowledge, experience, and values built up by a group of people through generations of living in close contact with nature. It builds upon the historic experiences of a people and adapts to social, economic, environmental, spiritual and political change. The practical knowledge that has been gathered through the experience of living in close contact with nature and has been passed along or communicated orally, and handed down from generation to generation.

Turbidity: The degree of clarity in the water column typically reflected as the amount of suspended particulate matter in a waterbody.

Vault Attenuation Pond: The pond located in the Vault mining area where contact water including pit water will be discharged and treated, if required, prior to final discharge to Wally Lake.

Vault Dike: The structure designed to isolate Vault Lake from Wally Lake, for the purpose of developing the Vault Pit and allowing for storage of effluent in the Vault Attenuation Pond.

Vault haul road: The road that connects the Portage mining area to the Vault mining area.

Vault haul road crossing: The crossing located at the outlet of Turn Lake to Drill Tail Lake along the road that connects the Portage mining area to the Vault mining area.

Vault Pit: The open pit developed for mining the Vault ore deposit.

Vault Rock Storage Facility: The facility designed to store waste rock from the Vault Pit.

Waste rock: All rock materials, except ore and tailings that are produced as a result of mining operations. All unprocessed rock materials that are or were produced as a result of mining operations and have no current economic value.

Appendix A

Glossary of Terms and Definitions

Wastewater: The water generated by site activities or originates on-site that requires treatment or any other water management activity.

Wastewater treatment system: A tertiary treatment plant designed to remove organic material and nutrients.

Watershed: A region or area bordered by ridges of higher ground that drains into a particular watercourse or body of water.

Water table: The level below where the ground is saturated with water.

Appendix B

List of Acronyms, Abbreviations, Units, and Symbols

List of Acronyms and Abbreviations

2PL	Second Portage Lake
3PL	Third Portage Lake
Agnico	Agnico Eagle Mines Ltd.
AEMP	Aquatic Environmental Management Plan
AANDC	Aboriginal Affairs and Northern Development Canada
ARD	Acid rock drainage
AWAR	All-Weather Access Road
Brodie	Brodie Consulting Limited
CCME	Canadian Council of Ministers for the Environment
COSEWIC	Committee on the Status or Endangered Wildlife in Canada
Cumberland	Cumberland Resources Limited
DFO	Department of Fisheries and Oceans (Fisheries and Oceans Canada)
ELC	Ecological Land Classification
FMA	FMA Heritage Resources Consultants Inc.
GHG	Greenhouse gases
GN	Government of Nunavut
Golder	Golder Associates Ltd.
HADD	Harmful alteration, disruption or destruction (of fish habitat)
ICRP	Interim Closure and Reclamation Plan
IF	Iron formation rock
INAC	Indian and Northern Affairs Canada
IPCC	Intergovernmental Panel on Climate Change
IV	Intermediate volcanic (rock)
KIA/KivIA	Kivalliq Inuit Association
LSA	Local study area
masl	Meters above sea level
ML	Metal leaching
MMC	Meadowbank Mining Corporation
MMER	Metal Mining Effluent Regulations

Appendix B

List of Acronyms, Abbreviations, Units, and Symbols

MW	Mega-Watts
NEC	Nunavut Environmental Consulting
NIRB	Nunavut Impact Review Board
NO^2	Nitrogen dioxide
NPAG	Non-potentially acid generating
NRC	Natural Resources Canada
NWB	Nunavut Water Board
PAG	Potentially acid generating
PM10	Particulate Matter (concentrations less than 10 µg/m3)
PM2.5	Particulate Matter (concentrations less than 2.5 µg/m3)
MGP	Meadowbank Gold Project
SARPR	Species at Risk Public Registry
SO^2	Sulphur dioxide
SNC	SNC-Lavalin Group
TSF	Tailings Storage Facilities
TSP	Total Suspended Solids

List of Units and Symbols

centimetre	cm
megawatt	MW
cubic centimetre	cm^3
metre	m
cubic metre	m^3
cubic metre per tonne	m^3/t
metres per minute	m/min
metres per second	m/s
metric ton (tonne)	t
milligram	mg
degrees Celsius	°C

Appendix B

List of Acronyms, Abbreviations, Units, and Symbols

milligrams per litre	mg/L
gram	g
millilitre	mL
grams per litre	g/L
millimetre	mm
grams per tonne	g/t
million	M
greater than	> (use only in tables)
Million cubic meters	Mm^3
hectare (10 000 m^2)	ha
million tonnes	Mt
million litre	Ml
hour	h
hours per day	h/d
parts per billion	ppb
hours per week	h/wk
parts per million	ppm
hours per year	h/y
kilograms per cubic metre	kg/m^3
square centimetre	cm^2
kilograms per hour	kg/h
square kilometre	km^2
kilometre	km
Tonnes per day	t/day
kilometres per hour	km/h
Tonnes per cubic metre	t/m^3
less than	< (use only in tables)
litre	L

Appendix C

Record of Engagement

This is a table that outlines all engagement specific to closure that has occurred to date. No issue has been identified.

Engagement specific to closure
Following the end of mining activities in Goose Pit in 2015, natural flooding started. No active pumping system is operating in Goose pit and part of the system has been decommissioned. From 2015 to 2017, approximately 1,581,806 m^3 of water have reflooded the Goose Pit.
Closure and reclamation of the Portage RSF occurred progressively during operations with the placement of the NPAG cover over the side slopes of the PAG RSF. Refer to Section 5.2.5.4 for cover design details. Approximately 84% of the Portage PAG RSF has been covered as of the end of 2017.
At the TSF, capping the tailings in the North Cell was undertaken in winter of 2015 following the completion of the tailings deposition. The construction continued in 2016 and 2017. Capping occurred in sections (perimeter areas) where the tailings were at elevation 149.5 m (maximum design level). This consisted of capping with 2.0 m of NPAG material. Progressive closure in the North Cell is planned to continue in winter 2018 and 2019.
Following conversion of the Portage Attenuation Pond into the Reclaim Pond (South Tailings Cell) in 2014, some of the dewatering equipment from the North Cell reclaim system (i.e. dewatering pipelines, reclaim barge, effluent diffuser pipelines, and pumps) has been dismantled and removed. This activity occurred in 2015.

Appendix D

Lessons Learned from Other Projects

This summary table present lessons from similar projects that would have direct application for the Meadowbank closure and reclamation. This table will be updated during further states of the Project, during the next revision of the Interim Closure and Reclamation Plan and for the Final Closure and Reclamation Plan.

Development	Activity which led to lesson learned	Lesson learned	Adaptive management results
Ekati, Diavik, and Snap Lake mine sites	Open pit mining	Wildlife injury or mortality may occur by entering the open pit	A rock berm(s) will be constructed around the open pit during the operations stage
Ekati, Diavik, and Snap Lake mine sites	Mine site infrastructure	Wildlife injury or mortality may occur by entering mine site facilities	Disturbed areas will be recontoured at closure reducing hazards to wildlife

(Modified from Golder, 2016a)

Reference to similar projects:

DDMI (Diavik Diamond Mines Incorporated). 2009. Interim Closure and Reclamation Plan, Version 3. Yellowknife, December.

Golder Associates Ltd., 2016. Whale Tail Interim Closure and Reclamation Plan. Report No. 1541520. Report to Agnico Eagle Mines Ltd. June 2016.

Agnico Eagle, 2015. Meliadine Gold Project Preliminary Closure and Reclamation Plan, Version 1.0, 6513-CRP-01

Appendix E

Research Projects

Summary of On-Going Field Trials – TSF and RSF

A research project in collaboration with the Research Institute of Mines and Environment (RIME) was initiated in 2014 at Meadowbank. The Research Institute on Mines and Environment, through the NSERC-UQAT Chair on Mine Site Reclamation, is mandated to evaluate the performance of three field experimental cells constructed in 2014 and 2015 on Meadowbank's North Cell TSF. The three experimental cells that were built on Meadowbank's TSF are two insulation covers and one thermal cover with capillary barrier effects (CCBE).

The tested experimental cells are a 2m and a 4m thick insulation cover as well as a 2m thick cover with capillary barrier effects. The cells were built with coarse and fine non-potentially acid generating (NAG) ultramafic waste rock (soapstone) and are instrumented in order to follow their thermal and hydrogeological behaviors.

Results have been reviewed by the RIME and Agnico Eagle. The results of the experimental cells have been used so far in the work for the cover design of the TSF North and South Cell. Data collection was still ongoing in 2017 and results will be used in future studies as needed.

Also in collaboration with the RIME, in 2016 a laboratory testing program was developed to obtain a good overview of the effects of freeze/thaw (F/T) and wet/dry (W/D) cycles on the soapstone. The developed experimental program is primarily focused towards the evaluation of the resistance to F/T and W/D of the soapstone to be used as cover materials for the TSF and RSF. Testing was completed to evaluate the effects of F/T and W/D on rock cores and rock slabs, the effects of F/T on various soapstone grain size fractions, and the effects of F/T on the permeability of a compacted soapstone layer. Based on the testing results and weathering criteria available in the literature, it seems that Meadowbank's soapstone has a good resistance to F/T and W/D cycles.

Other laboratory work (such as frost heave or bearing capacity tests) could be conducted in the future if required for other engineering purposes.

(Agnico Eagle Mines Limited. 2018c. Meadowbank Gold Project 2017 Annual Report. 278 p. May 2018)

Contributions to Regional Monitoring

In 2017, Agnico Eagle worked with a group of researchers from the University of Manitoba (Dr. Jorg Stetefeld and team) who are initiating a study on use of eDNA for predicting presence/absence and/or changes in relative abundance of northern fish species. Furthermore, Agnico continues to discuss current methods of evaluating fish habitat and productivity of a fishery under the DFO Fisheries Act and fisheries protection policy with consultants, academic researchers and has provides all raw fishout data and habitat mapping to DFO scientists for use by any interested parties. At a regional level, the information, monitoring tools, monitoring data and modelling that is used at Meadowbank has been applied by Agnico Eagle and other consultants at other proposed projects in Nunavut including, the Meliadine Gold Project and Amaruq Whale Tail Pit project.

In addition, Agnico Eagle Mines has participated as a technical advisory group member of the Inu'tutit project since 2014. The Inu'tutit Initiative is part of longer term plan that is being led by a secretariat of key players made up of the NGMP, KivIA, INAC and Nunavut Water Board (NWB), and is being implemented

Appendix E

Research Projects

through partnerships between the KivIA, federal and territorial governments, industry (Areva Resources and Agnico Eagle Mines), the Hamlet of Baker Lake and eventually, universities and academic institutions. More specifically, the Kivalliq Inuit Association (KivIA) has partnered with Indigenous and Northern Affairs Canada (INAC) and the Nunavut General Monitoring Plan (NGMP) to develop an Aquatic Cumulative Effects Monitoring Program (CEMP) for the Baker Lake Basin under the auspices of the Inu'tutit Initiative.

Although the intent of the Inu'tutit CEMP is not to determine the influence of a particular point source at this time, the concept of gradients of exposure from point sources have influenced site selection in addition to a broader effects-based study design to monitor the condition of the subwatersheds. Sites selected for the Inu'tutit CEMP incorporate concepts of both stressor and effects base study design, and include locations to monitor the aquatic environment at the project, watershed and basin scales.

Finally, Agnico is supporting a study by University of Manitoba researchers (Dr. Charles Wong & team) in the Hamlet of Baker Lake, focusing on assessment of municipal wastewater impacts to the surrounding water quality. Field work for this study will begin in 2018. Agnico is also looking to expand the study to work with the Hamlet and include assessment of current treatment system performance, design and evaluation of a new treatment system, as well as measurements of impacts to lower trophic levels and fish health.

Meadowbank continues to contribute to the GN DOE caribou collaring program which started in 2009. Six deployments have been completed in the area around Baker Lake since Agnico Eagle became involved in the collaring program. Nine (2008), twenty one (2009; shared with AREVA), thirteen (2011), fifteen (2013; shared with AREVA), ten (2015) and 13 (2016) caribou collars were deployed (greater than $250 000). In early 2011, Meadowbank contributed additional funding toward the GN-led program to estimate the number of breeding females in the Beverly herd of taiga-wintering barren-ground caribou. In 2013, Agnico Eagle finalized discussions with the GN and entered into a new Memorandum of Understanding (MOU) to commit to another long term (3 years) contribution in support of the regional GN caribou monitoring program. This agreement will continue to assist the GN- DOE- Wildlife branch in directing the implementation, data analysis and management of caribou populations in the Kivalliq region. Agnico Eagle renewed the MOU in 2016.

In addition, in 2017 Agnico Eagle worked with the GN to evaluate the Zone of Influence of the Meadowbank Mine, as it relates to caribou. Seasonal ranges are important to understand as Barren-ground caribou exhibit migratory behaviour between calving and wintering areas. Migratory animals use a variety (seasonal) of habitats to meet life-history requirements as they move across the landscape and sensory disturbance from development is hypothesized to reduce selection of preferred habitats. In 2017, in collaboration with Agnico Eagle staff, Golder biologists and statisticians worked to determine a zone of influence for the Meadowbank mine, or evaluate if it is affecting a large number of individuals. It is predicted that reduced use of preferred habitats should reduce herd size (from lower survival and reproduction). Data analysis was completed and hypotheses were tested, documents were provided to regulators and reviewed, presentations were made at the GeoScience Forum and publications are expected in 2018. To reach consensus on research projects, needs for future monitoring and research, gain approval and ensure consistent endpoints of success, a Terrestrial Advisory Group (TAG) was also developed and a series of workshops were developed.

Finally, Agnico is also working with raptor researcher Dr. Alastair Franke from the University of Alberta to document presence of raptors in the Meadowbank area. Dr. Franke's Arctic Raptors group will be tracking

Appendix E

Research Projects

changes that may occur as a result of mining activity and sharing results across the scientific community through publications.

(Agnico Eagle Mines Limited. 2018c. Meadowbank Gold Project 2017 Annual Report. 278 p. May 2018)

Appendix F

Site Photos



Photo 1 : Meadowbank Site Facilities, summer 2014



Photo 2 : Meadowbank Portage RSF, summer 2014



Photo 3 : Meadowbank Portage and Goose Pits, summer 2014



Photo 4 : Meadowbank TSF area, summer 2016



Photo 5 : Meadowbank TSF area, North and South Cell, summer 2016



Photo 6 : Vault area, summer 2016



Photo 7: Vault Pit and RSF, summer 2016



Photo 8: TSF North Cell, NPAG Cover construction, winter 2016



Photo 9: TSF North Cell, NPAG Cover construction, winter 2016

Appendix G

Meadowbank Site Monitoring Water Quality Stations

Meadowbank Water Quality Monitoring Stations

Portage Area

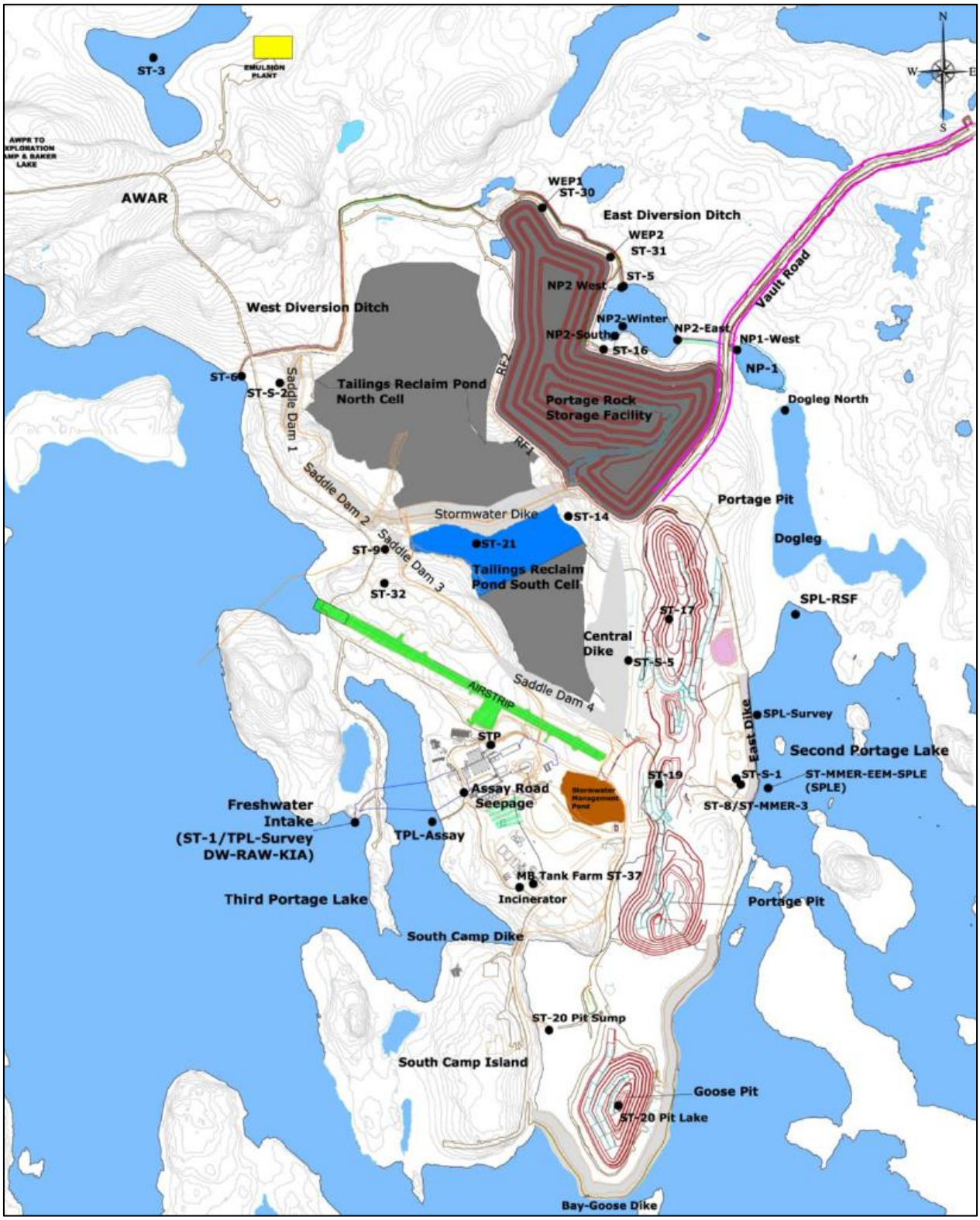

Vault Area

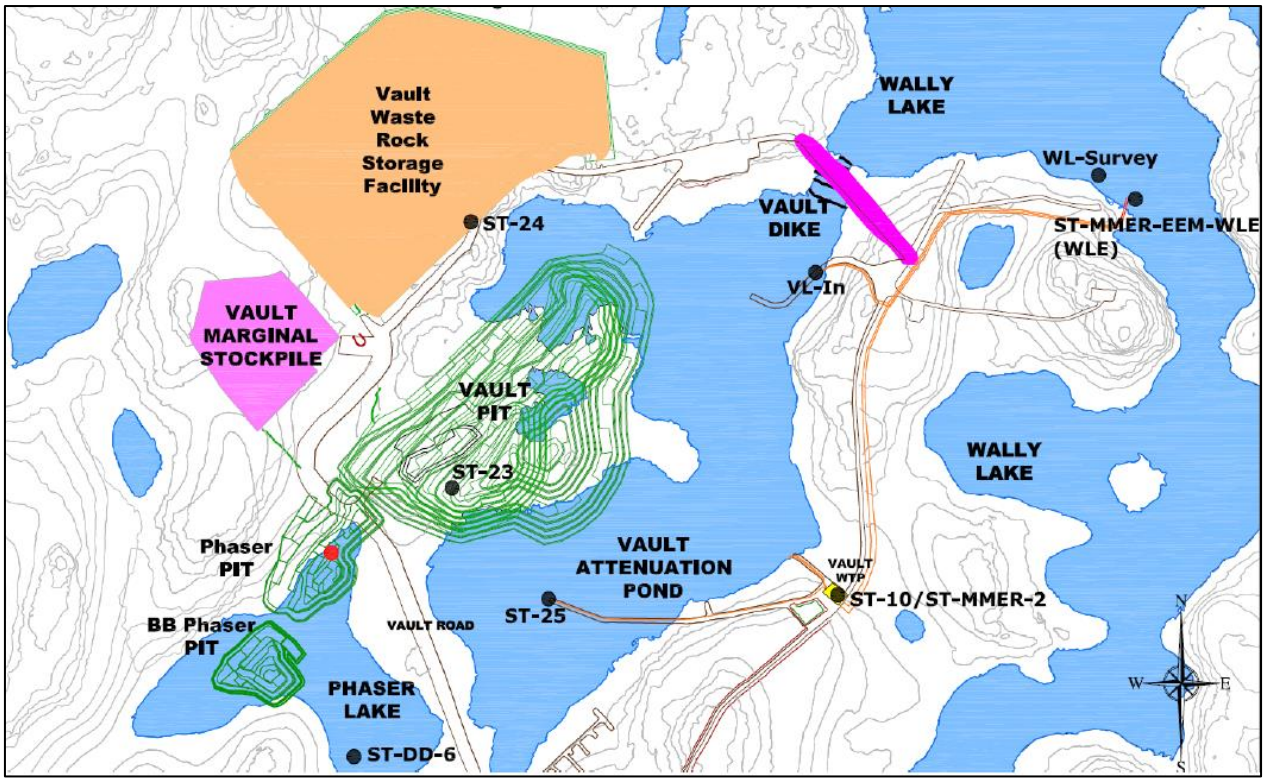
Vault
Waste
Rock
Storage
Facillty
ST-24
VAULT
MARGINAL
STOCKPILE
VAULT
PIT
ST-23
Phaser
PIT
BB Phaser
PIT
VAULT ROAD
PHASER
LAKE
ST-DD-6
VAULT
ATTENUATION
POND
ST-25
VAULT
WTP
ST-10/ST-MMER-2
VAULT
DIKE
VL-In
WALLY
LAKE
WL-Survey
ST-MMER-EEM-WLE
(WLE)
WALLY
LAKE
N
W
E
S

Appendix H

Regulatory Instruments

TABLE H-1: PRIMARY APPLICABLE ACTS, REGULATIONS, AND GUIDELINES APPLICABLE TO CLOSURE AND RECLAMATION (MODIFIED FROM GOLDER, 2016A)

Acts	Regulations	Guidelines
Federal		
Canadian Environmental Protection Act (1999 c.33)	*Storage Tank Systems for Petroleum Products and Allied Petroleum Products Regulations (SOR/2008-197)* *Environmental Emergency Regulations* (SOR/2003-307) *Interprovincial Movement of Hazardous Waste and Hazardous Recyclable Material Regulations* (SOR/2002-301) *Release and Environmental Emergency Notification Regulations* (SOR/2011-90)	Canadian Council of the Ministers of Environment - Environmental Code of Practice for Aboveground and Underground Storage Tank Systems Containing Petroleum and Allied Petroleum Products Notice with respect to substances in the National Pollutant Release Inventory Canada-Wide Standards for Particulate Matter (PM) and Ozone Canada-Wide Standards for Petroleum Hydrocarbons (PHC) In Soil
Canada Wildlife Act (1985 w9)		
Species at Risk Act (2002 c.29)		Species at Risk Policies
Canadian Transportation Accident Investigation and Safety Board Act (S.C. 1989, c. 3)	*Transportation Safety Board Regulations* (SOR/92-446)	
Navigable Waters Protection Act (R.S. 1985 c. N-22)	*Navigable Waters Works Regulations* (C.R.C., c. 1232) *Navigable Waters Bridges Regulations* (C.R.C., c. 1231)	
Fisheries Act (R.S.C. c. F-14) 35. (1) No person shall carry on any work, undertaking or activity that results in serious harm to fish that are part of a commercial, recreational or Aboriginal fishery, or to fish that support such a fishery. Projects that have the potential to obstruct fish passage, modify flow or result in the entrainment of fish may also	*Metal Mining Effluent Regulations* (SOR/ 2002-2222) *Marine Mammal Regulations* (SOR/93-56)	The Policy for the Management of Fish Habitat The Fisheries Protection Policy Statement, 2013 Fisheries Productivity Investment Policy: A Proponent's Guide to Offsetting

TABLE H-1 : PRIMARY APPLICABLE ACTS, REGULATIONS, AND GUIDELINES APPLICABLE TO CLOSURE AND RECLAMATION (CONTINUED-1)

Acts	Regulations	Guidelines
cause serious harm to fish. In these situations, an authorization under Subsection 35(2) is required. Proponents are responsible for avoiding and mitigating serious harm to fish that are part of or support commercial, recreational or Aboriginal fisheries. When proponents are unable to completely avoid or mitigate serious harm to fish, their projects will normally require authorization under Subsection 35(2).		
Canada Labour Code (R.S.C., 1985, c. L-2)	*Canada Labour Standards Regulations* (C.R.C., c. 986) *Canada Occupational Health and Safety Regulations* (SOR/86 304)	
Territorial Lands Act (R.S. 1985, c. T-7)	*Northwest Territories and Nunavut Mining Regulations* (C.R.C., c. 1516) *Territorial Land Use Regulations* (C.R.C. 1524) *Territorial Quarrying Regulations* (C.R.C. c. 1527)	
Nunavut Waters and Nunavut Surface Rights Tribunal Act (2002, c. 10)	*Northwest Territories Waters Regulations* (SOR/93/303)	
Nunavut Act (1993 c.28)	*Nunavut Archaeological and Paleontological Sites Regulations* (SOR/2001-220)	
Nunavut Land Claims Agreement Act (1993, c. 29)		

TABLE H-1 : PRIMARY APPLICABLE ACTS, REGULATIONS, AND GUIDELINES APPLICABLE TO CLOSURE AND RECLAMATION (CONTINUED-2)

Acts	Regulations	Guidelines
Territorial – Nunavut		
Environmental Protection Act (RSNWT (Nu) 1988, c E-7)	*Spill Contingency Planning and Reporting Regulations* (NWT Reg (Nu) 068-93)	Guideline on Dust Suppression Guideline for the General Management of Hazardous Waste in Nunavut Environmental Guideline for Waste Asbestos Guideline for Industrial Waste Discharges in Nunavut Guideline for Industrial Projects on Commissioner's Land
Historical Resources Act (RSNWT (Nu) 1988, c H-3)		
Territorial Parks Act (RSNWT (Nu) 1988, c T-4)	*Territorial Parks Regulations* (RRNWT (Nu) 1990 c T-13)	
Wildlife Act (RSNWT (Nu) 1988, c W-4)	*Wildlife General Regulations* (NWT Reg (Nu) 026-92) *Wildlife Licences and Permits Regulations* (NWT Reg (Nu) 027-92) *Wildlife Management Barren-Ground Caribou Areas Regulations* (NWT Reg (Nu) 099-98) *Wildlife Management Zones Regulations* (RRNWT (Nu) 1990 c W-17) *Wildlife Regions Regulations* (NWT Reg (Nu) 108-98)	
Commissioner's Land Act (RSNWT 1988, c C-11)	*Commissioner's Land Regulations* (RRNWT 1990, c C-13)	
Mine Health and Safety Act (SNWT (Nu) 1994, c 25)	*Mine Health and Safety Regulations* (NWT Reg (Nu) 125-95)	

TABLE H-2 : LIST OF LICENSES/PERMITS FOR THE PROJECT (MODIFIED FROM GOLDER, 2016A)

Permit/License	Type	Licensor	Approved Ops	Status	Begin of Term	End of Term	Comments
66A/8-71-2	Land Lease	INAC	All Weather Private Access Road construction, operation, maintenance and reclamation	Active	01-Jan-07	31-Dec-21	
66A/8-72-5	Land Lease	INAC	Quarrying for the AWPAR	Active	01-Jan-07	31-Dec-27	
08-HCAA-CA7-00039	Freshwater Intake Pipe Screen Approval	DFO	Freshwater Intake Pipe at Exploration Camp	Active	06-Jan-09		No obligations or renewal deadlines. Approval does not have expiry date.
08-HCAA-CA7-00040 (NU-08-0040)	Freshwater Intake Pipe Screen Approval	DFO	Freshwater Intake Pipe at Meadowbank Camp	Active	06-Jan-09		No obligations or renewal deadlines. Approval does not have expiry date.
NU 03-191 s30	Freshwater Intake	DFO	Freshwater Intake at Emulsion plant	Active	16-Nov-09		No obligations or renewal deadlines. Approval does not have expiry date.
FWISL-ACC-07-08-056	Animal Use Protocol	DFO		Expired		31-Mar-08	
FWI-ACC-2009-027	Animal Use Protocol	DFO		Expired	04-Jun-09	31-Dec-09	
FWI-ACC-2008-2009-054	Animal Use Protocol	DFO		Expired	07-Jul-08	31-Mar-09	
FWI-ACC-2008-2009-064	Animal Use Protocol	DFO		Expired	31-Jul-08	31-Mar-09	
FWI-ACC-2010-022	Animal Use Protocol	DFO		Expired	09-Jun-10	31-Dec-10	
FWI-ACC-2011-025	Animal Use Protocol	DFO		Expired	17-Jun-11	31-Dec-11	
FWI-ACC-2012-038	Animal Use Protocol	DFO		Expired	13-Jun-12	01-Oct-12	
FWI-ACC-2013-033	Animal Use Protocol	DFO		Expired	11-Jun-13	01-Nov-13	
FWI-ACC-2015-021	Animal Use Protocol	DFO		Expired	11-Jun-15	01-Dec-15	

TABLE H-2 : LIST OF LICENSES/PERMITS FOR THE PROJECT (CONTINUED-1)

Permit/License	Type	Licensor	Approved Ops	Status	Begin of Term	End of Term	Comments
S-08/09-1042-NU	Licence to fish for scientific purposes	DFO		Expired	11-Aug-08	31-Oct-08	
S-08/09-1040	Licence to fish for scientific purposes	DFO		Expired	14-Jul-08	30-Sep-08	
S-09/10-1027-NU	Licence to fish for scientific purposes	DFO		Expired	24-Jun-09	30-Sep-09	
S-10/10-1011-NU	Licence to fish for scientific purposes	DFO		Expired	17-Jun-10	15-Oct-10	
S-11/12-1015-NU	Licence to fish for scientific purposes	DFO		Expired	15-Jun-11	15-Oct-11	
S-11/12-1042-NU	Licence to fish for scientific purposes	DFO		Expired	10-Aug-11	31-Aug-11	
S-12/13-1023-NU	Licence to fish for scientific purposes	DFO		Expired	15-Jun-12	30-Sep-12	
S-13/14-1010-NU	Licence to fish for scientific purposes	DFO	AWPAR and on-site fisheries monitoring including CREMP	Expired	15-Jun-13	15-Oct-13	
S-13/14 3018-YK	Licence to fish for scientific purposes	DFO	Vault Fishout	Expired	15-Jul-13	31-Mar-14	
S-15/16-1012-NU	Licence to fish for scientific purposes	DFO	AWAR and habitat compensation work	Expired	30-Jun-15	31-Jan-16	
NU-03-0190	HADD Authorization - AWPAR (amendment #1 and #2)	DFO	AWPAR - Infilling of fish habitat as a result of water crossing construction affecting a total of 0.53 HU / 2,793 m^3 of fish habitat	Expired	02-May-07	31-Dec-08	
NU-03-0191	HADD Authorization - Mine Site. *Fisheries Act* Authorization	DFO	Infilling of fish habitat as a result of infilling and dewatering of Second	Expired	30-Jul-08	15-Dec-15	

TABLE H-2 : LIST OF LICENSES/PERMITS FOR THE PROJECT (CONTINUED-2)

Permit/License	Type	Licensor	Approved Ops	Status	Begin of Term	End of Term	Comments
			and Third Portage Lakes - dikes and pits + airstrip extension				
NU-03-0191.02	s.32 *Fisheries Act* Authorization - Meadowbank Dewatering Bay Goose	DFO	Authorization for the fish destruction by means other than fishing during the dewatering of Bay Goose impoundment area in Third Portage Lake	Expired	22-Feb-11	31-Jul-12	
NU-03-0191.03	Portage Pit and Bay Goose *Fisheries Act* Authorization	DFO	Second Portage Lake: Dewatering, excavation, dike and road footprint (east and central dikes) and in water placement of coarse material Third Portage Lake : Dewatering, excavation, road footprint, Bay Goose and South Camp Dike footprints and in water placement of coarse material	Expired	05-Mar-13	31-Dec-17	
NU-03-0191.04	Vault *Fisheries Act* Authorization	DFO	Dewatering, excavation, dike construction and placement of course material in Vault Lake basin	Expired	02-Apr-13	31-Dec-17	
NU-08-0013	HADD Authorization - Western Channel	DFO	Infilling of fish habitat as a result of a temporary culvert installation	Expired	28-May-08	13-Jun-08	

TABLE H-2 : LIST OF LICENSES/PERMITS FOR THE PROJECT (CONTINUED-3)

Permit/License	Type	Licensor	Approved Ops	Status	Begin of Term	End of Term	Comments
			affecting 1.01 HU on the westernmost channel connecting 2PL and 3PL				
NU-08-0052	Authorization for destruction of fish	DFO	*Fisheries Act* Sec.32 - destruction of fish arising from dewatering of NW arm of 2PL	Expired	02-Mar-09	31-Dec-10	
NU-10-0049	Vault Culvert Crossing	DFO	Vault Culvert Crossing	Active	25-Jan-11		No end term
MMER Sec 27.1 Approval TIA (08-HCAA-CA7-00191)	Letter of Approval	DFO	Authorization for deposition of tailings in TIA. Approval of Compensation Plan.	Active	14-Jan-10		TIA Habitat Compensation Plan
DvlptPA	Development Partnership Agreement	GN	700,000 m^3/annually - mining, milling & associated activities, operation of Baker Lake Facilities, operation of AWPAR	Active	17-Feb-07	17-Feb-22	As per article 11.1, Agreement remains in force until completion of Closure and Reclamation
L-51260	Baker Lake Marshalling Area	GN	Marshalling Facility; tank farm, explosive area, access road.	Active	01-Mar-10	01-Mar-13	Permit renewal on going
L-51261	Baker Lake Marshalling Area, Land Lease	GN	Baker Lake Spud Barge	Active	01-Mar-10	01-Mar-20	
L-51262	Baker Lake All Weather Private Access Road Section	GN	Municipal Lands portion of Tahek Lake AWPAR, Baker Lake, Nunavut	Active	01-Mar-10	01-Mar-20	
LUP-06-603-001 (a)	Land use permit	GN	AWPAR construction	Expired			
QP-06-603-001 (a)	Quarry Permit	GN	AWPAR Quarry 1 : authorization to take 85,388m^3 of quarries bedrock - granite	Expired			

TABLE H-2 : LIST OF LICENSES/PERMITS FOR THE PROJECT (CONTINUED-4)

Permit/License	Type	Licensor	Approved Ops	Status	Begin of Term	End of Term	Comments
603-0-LUP-07-001	Land use permit	GN	Baker Lake Marshalling Area	Expired	01-May-07	01-May-08	
WL-2012-050	Wildlife Research Permit	GN	Ground survey of birds, nest, raptors, other animals, and wildlife signs. Must submit report at end of study	Expired	01-Jun-12	31-May-12	
WL-2014-055	Wildlife Research Permit	GN	Ground survey of birds, nest, raptors, other animals, and wildlife signs. Must submit report at end of study	Expired	1-Aug-14	31-Jul-15	
WL-2015-058	Wildlife Research Permit	GN	Ground survey of birds, nest, raptors, other animals, and wildlife signs. Must submit report at end of study	Expired	1-Jun-15	1-Jun-16	
WL-2016-044	Wildlife Research Permit	GN	Ground survey of birds, nest, raptors, other animals, and wildlife signs. Must submit report at end of study	Active	1-Jun-16	30-Jun-17	
Memorandum of Understanding	Wildlife Research	GN	GN has requested that the Proponent participate in the Kivalliq Ungulate Monitoring Program and the Proponent desires to work collaboratively and in good faith to increase the common knowledge	Expired*	11-Sep-13	11-Sep-16	

TABLE H-2 : LIST OF LICENSES/PERMITS FOR THE PROJECT (CONTINUED-5)

Permit/License	Type	Licensor	Approved Ops	Status	Begin of Term	End of Term	Comments
			of caribou and muskoxen for mutual benefit.				
IIBA	Inuit Impact Benefit Agreement	KIA	Inuit Impact Benefit Agreement	Expired	25-Mar-06	23-Jun-11	Reviewed every third year for material change and automatically renewed for a subsequent 3 year term
IIBA	Inuit Impact Benefit Agreement	KIA	Inuit Impact Benefit Agreement	Expired	23-Jun-11	23-Jun-14	Reviewed every third year for material change and automatically renewed for a subsequent 3 year term
IIBA	Inuit Impact Benefit Agreement	KIA	Inuit Impact Benefit Agreement	Expired**	23-June-14	23-June-17	Reviewed every third year for material change and automatically renewed for a subsequent 3 year term
KVCA06Q11	Quarry Permit - AWPAR	KIA	Quarrying for All Weather Private Access Road, 254,546 m^3 of material	Active	02-Feb-07	02-Feb-22	Permit expires in 2022 or when the specified amount of material has been quarried
KVCA09Q09	Quarry Permit	KIA	Removal of 50,000 m^3 of gravel material - sand quarry for concrete production	Expired	03-Mar-09	03-Mar-11	Expires within 24 months or when material has been quarried
KVCA08Q10	Quarry Permit	KIA	Removal of 250,000 m^3 of gravel, sand, loam,	Expired	15-May-08	15-May-12	Expires 12 months from the date hereof

* Memorandum of Understanding Wildlife Research GN-ENV Active 01-Mar-17 01-Mar-20

** IIBA Inuit Impact Benefit Agreement KIA Inuit Impact Benefit Agreement Active 17-Feb-17 Project Termination Date

TABLE H-2 : LIST OF LICENSES/PERMITS FOR THE PROJECT (CONTINUED-6)

Permit/License	Type	Licensor	Approved Ops	Status	Begin of Term	End of Term	Comments
			mining backfill or shot rock from the land				or when material has been quarried
KVPL08D280	Surface Production Lease (Amendment #1 and #2)	KIA	Surface Production Lease: Construction, operation and closure of the mine on Inuit owned land	Active	24-Jul-08	31-Dec-27	Production Lease Amended #1 Feb. 9th, 2009 ; Production Lease Amended #2 May 2, 2013
KVRW06F04	Right of Way Agreement - AWPAR (amendment #1)	KIA	All Weather Private Access Road (and Quarry - KVCA06Q11)	Active	01-Jan-07	31-Dec-21	
KVRW09F05	Right of Way Authorization	KIA	Winter Access Road for sand quarry	Expired	03-Mar-09	31-May-11	ROW expires one year before the sand quarry
Mine Water Comp Agrmt	Water Compensation Agreement - Mine	KIA	Compensation for water consumption at Meadowbank site and any changes in water quality, quantity or flow due to project activities	Active	14-Apr-08		Agreement terminates with C&R when KIA provides a letter of clearance
Road Water Comp Agrmt	Water Compensation Agreement - Road (amendment #1)	KIA	Compensation where development and operation of AWPAR has substantial effect on water quality, quantity or flow	Active	29-Jan-08		Agreement terminates following C&R of the road and all IOL affected by road
PC_NIRB-004	Project Certificate + modification condition 32	NIRB	Approval for the Meadowbank Project to proceed subject to its Terms & Conditions	Active	30-Dec-06		change in Condition 32 in September 15, 2010 (ATV access on AWPAR) Removal of condition 48 and changes to

TABLE H-2 : LIST OF LICENSES/PERMITS FOR THE PROJECT (CONTINUED-7)

Permit/License	Type	Licensor	Approved Ops	Status	Begin of Term	End of Term	Comments
							condition 49 and 53 related to Phaser Lake (NIRB decision on April 18, 2016)
03-023-10N-M	Scientific Research License	NRI	Wind Data Collection	Expired	01-Jan-10	31-Dec-10	Multi-year license for January 1, 2010 - October 29, 2011 but needs to renewed each year
BL14-001-PL Vault	Subsurface Production Lease	NTI	Vault	Active	01-Jul-12	30-Jun-22	
2AM-MEA0815	Water License + Modification East Dike + Modification Airstrip + Amendment Fuel Tank Baker Lake	NWB	700,000 m^3 annually - Milling, mining and associated activities at the Meadowbank Project site Amendment freshwater use permit – 1,870,000 m^3 in 2013 and 1,150,000 m^3 thereafter	Expired	10-Jul-08	31-May-15	Approved by the Minister on July 10, 2008 Modification East Dike approve on July 3, 2013 Modification Airstrip approved in 2012 Amendment Fuel Tank Baker Lake on May 5, 2010
2AM-MEA0815	Short Term Water Licence	NWB	Same conditions as the approved 2008 water licence and amendment	Expired	20-April-15	27-Nov-15	Short term licence while waiting for the water licence renewal

TABLE H-2 : LIST OF LICENSES/PERMITS FOR THE PROJECT (CONTINUED-8)

Permit/License	Type	Licensor	Approved Ops	Status	Begin of Term	End of Term	Comments
2AM-MEA1525	Renewed Water Licence	NWB	2,350,000 m^3 annually up to December 31 2017 and 4,935,000 m^3 annually starting in 2018 through to the Expiry of the License- Milling, mining and associated activities at the Meadowbank Project site	Active	23-Jul-15	22-Jul-25	

INAC = Indigenous and Northern Affairs Canada (formally Aboriginal Affairs and Northern Development Canada); DFO = Fisheries and Oceans Canada; GN = Government on Nunavut; KIA = Kivalliq Inuit Association; NRI = Nunavut Research Institute; NTI = Nunavut Tunngavik Incorporated; NWB = Nunavut Water Board; m^3 = cubic metres.

Appendix I

Permafrost Map

The Atlas of Canada / L'Atlas du Canada
atlas.gc.ca
Since 1906 / Depuis 1906

Atlas of Canada 6th Edition
(archival version)

Climate Warming — National Annual Temperature Scenario: 2050

A simulation of projected changes in annual mean temperatures from the period 1961 to 1990 to the period 2040 to 2060 for Canada is shown on this map. The temperature changes would not be evenly distributed geographically. The largest warming projected is for the interior and northern parts of the country. Temperatures are projected to continue increasing as the century progresses. Temperatures would generally increase as a consequence of the projected increase in greenhouse gas concentrations in the atmosphere. The results are based on climate change simulations made with the Coupled Global Climate Model developed by Environment Canada

0 150 300 450 600 km

Lambert Conformal Conic Projection. Standard Parallels 49°N and 77°N

Annual Temperature Change from 1961-90 to 2040-60 (°C)
- 1 - 2
- 2 - 3
- 3 - 4
- 4 - 5
- 5 - 6

Capitals (Canada)
- ★ National
- ◎ Provincial and Territorial

Populated Places
- 1 - 4999
- 5 000 - 49 999
- 50 000 - 99 999
- 100 000 and greater

International Boundaries
- EEZ (200 mile)
- Canada / Kalaallit Nunaat dividing line
- International

Provincial and Territorial Boundaries
- Provincial / Territorial

Road network
- Road Network
- Ferry route

Source(s):
Annual Temperature Change from 1961-90 to 2040-60 (°C)
The results are based on climate change simulations made with the Coupled Global Climate Model (CGCM2) developed at the Canadian Centre for Climate Modelling and Analysis of Environment Canada. The projected changes in greenhouse gases concentrations and aerosol loadings are based on the IS92a scenario developed in conjunction with the Intergovernmental Panel on Climate Change to portray one of several possible futures. The output of the model is produced on a grid of 3.75 degrees in latitude and longitude. This represents a grid square of approximately 400 kilometres by 300 kilometres at Canadian latitudes. For forestry and other applications, the Canadian Forest Service of National Resources Canada has derived the changes in climate based on the simulation output with reference to the 1961 to 1990 normals, and interpolated the data over Canada to finer resolution using a multi-step methodology.

© 2009. Her Majesty the Queen in Right of Canada. Natural Resources Canada.

This product was originally published as an interactive map in the online Atlas of Canada, 6th Edition. It was not intended for high resolution reproduction and therefore does not conform to the standards of cartographic representation and map design found on the Atlas of Canada's paper reference maps.

Natural Resources Canada Ressources naturelles Canada

Canada

N:\Bur-Graphics\Projects\2010\1428\10-1428-0015\GIS\projects\figure-02-08_permafrost_rev1.mxd

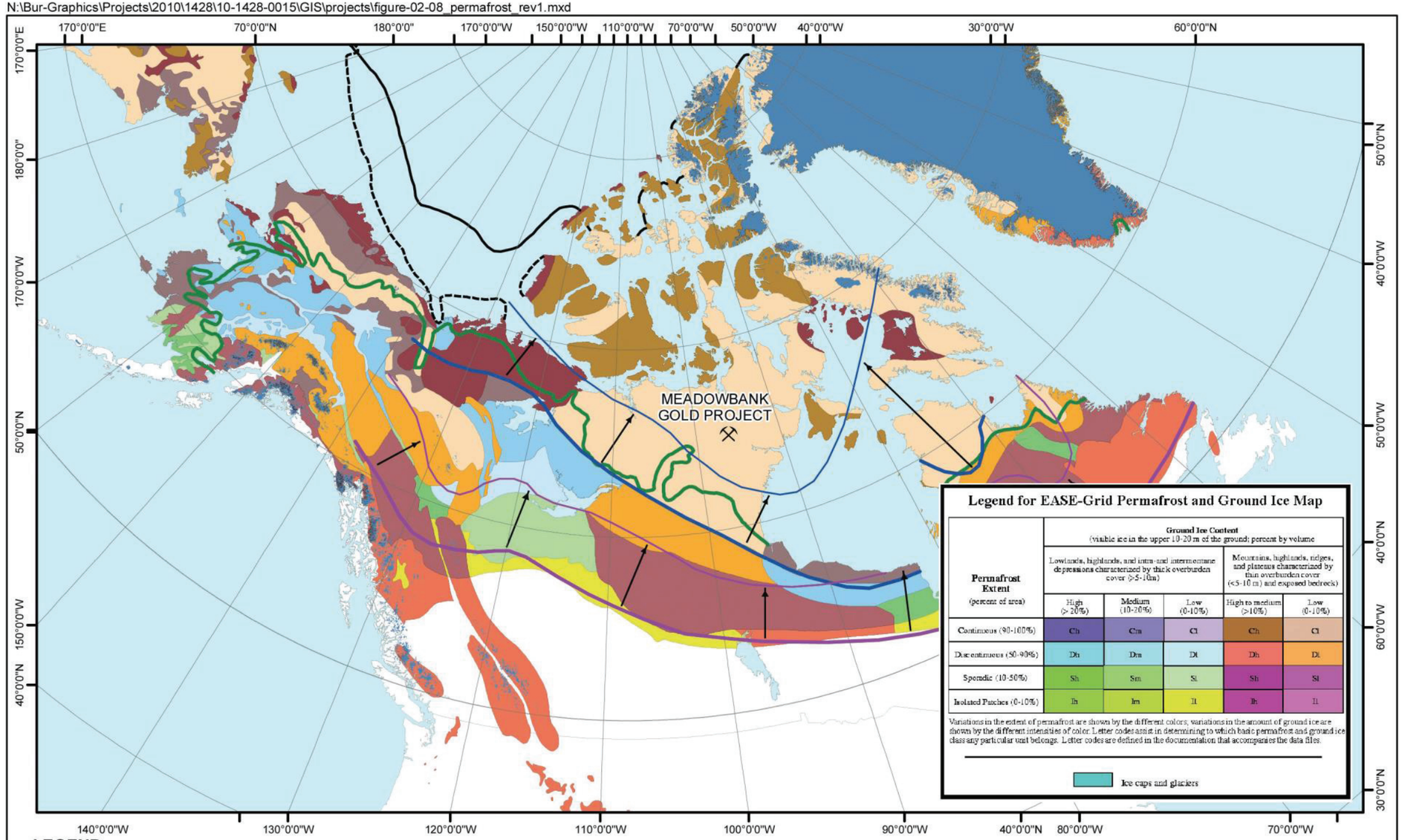

LEGEND

- TREELINE
- SEA-ICE EDGE LIMIT
- SUBSEA PERMAFROST LIMIT
- SOUTHERN BOUNDARY OF DISCONTINUOUS PERMAFROST - PRESENT
- SOUTHERN BOUNDARY OF DISCONTINUOUS PERMAFROST - PREDICTED
- SOUTHERN BOUNDARY OF CONTINUOUS PERMAFROST - PRESENT
- SOUTHERN BOUNDARY OF CONTINUOUS PERMAFROST - PREDICTED
- PREDICTED MOVEMENT OF PERMAFROST BOUNDARIES

NOTES

1) PROJECTION: LAMBERT AZIMUTHAL EQUAL AREA

0 300 600 900 1,200 1,500

Scale in Kilometres

REFERENCES

1) CIRCUM-ARCTIC MAP OF PERMAFROST AND GROUND-ICE CONDITIONS. BOULDER, CO: NATIONAL SNOW AND ICE DATA CENTER/WORLD DATA CENTER FOR GLACIOLOGY. DIGITAL MEDIA. (BROWN ET AL. 1998)
2) PREDICTED PERMAFROST BOUNDARIES. (WOO ET AL. 1992)

AGNICO EAGLE MINES LIMITED

MEADOWBANK GOLD PROJECT
NUNAVUT

PERMAFROST MAP OF CANADA

Source: Cumberland 2005b

Appendix J

Meadowbank Geology, Seismic Zone, Groundwater Flow and Bathymetry

(Golder, 2014)

630000
635000
640000
645000
650000
7230000
7225000
7220000
7215000

PDF
VAULT
PORTAGE
GOOSE ISLAND
PIPEDREAM LAKE
FARSIDE LAKE
WALLY LAKE
THIRD PORTAGE LAKE
SECOND PORTAGE FAULT
BAY ZONE FAULT

N

LEGEND

Lake
Gold Deposit
Fault Line

ROCK TYPE

- Granite, Granodiorite
- Gabbro
- Quartzite, Conglomerate
- Quartz arenite, metasediments
- Ultramafic
- Foliated Diorite, Gabbro
- Intermediate to Felsic Volcaniclastics
- Iron Formation
- Felsic Volcanics
- Mafic Volcanics

REFERENCE

Data provided by Cumberland Resources Ltd.
Projection: Transverse Mercator Datum: NAD 83 Coordinate System: UTM Zone 14

0 800 1,600 3,200
SCALE 1:80,000 METRE

AGNICO EAGLE MINES LIMITED

MEADOWBANK GOLD PROJECT
NUNAVUT

REGIONAL GEOLOGY

N:\Bur-Graphics\Projects\2010\1428\10-1428-0015\GIS\projects\figure-02-09_regional-geology.mxd

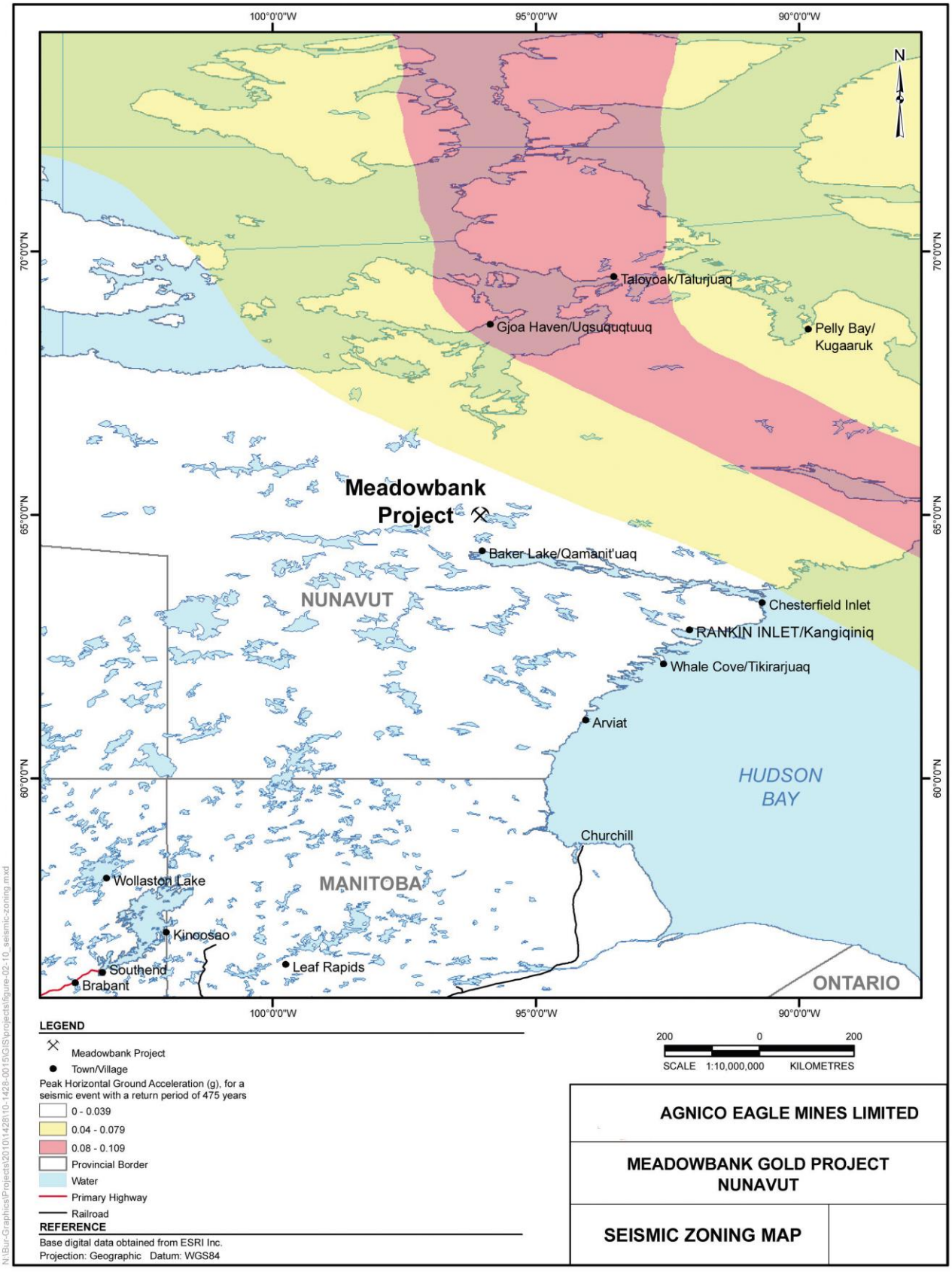

LEGEND

- Meadowbank Project
- Town/Village

Peak Horizontal Ground Acceleration (g), for a seismic event with a return period of 475 years

- 0 - 0.039
- 0.04 - 0.079
- 0.08 - 0.109
- Provincial Border
- Water
- Primary Highway
- Railroad

REFERENCE

Base digital data obtained from ESRI Inc.
Projection: Geographic Datum: WGS84

200 0 200
SCALE 1:10,000,000 KILOMETRES

AGNICO EAGLE MINES LIMITED

MEADOWBANK GOLD PROJECT
NUNAVUT

SEISMIC ZONING MAP

N:\Bur-Graphics\Projects\2010\1428\10-1428-0015\GIS\projects\figure-02-10_seismic-zoning.mxd

N:\Bur-Graphics\Projects\2010\1428\10-1428-0015\GIS\projects\figure-02-11_groundwater-flow.mxd

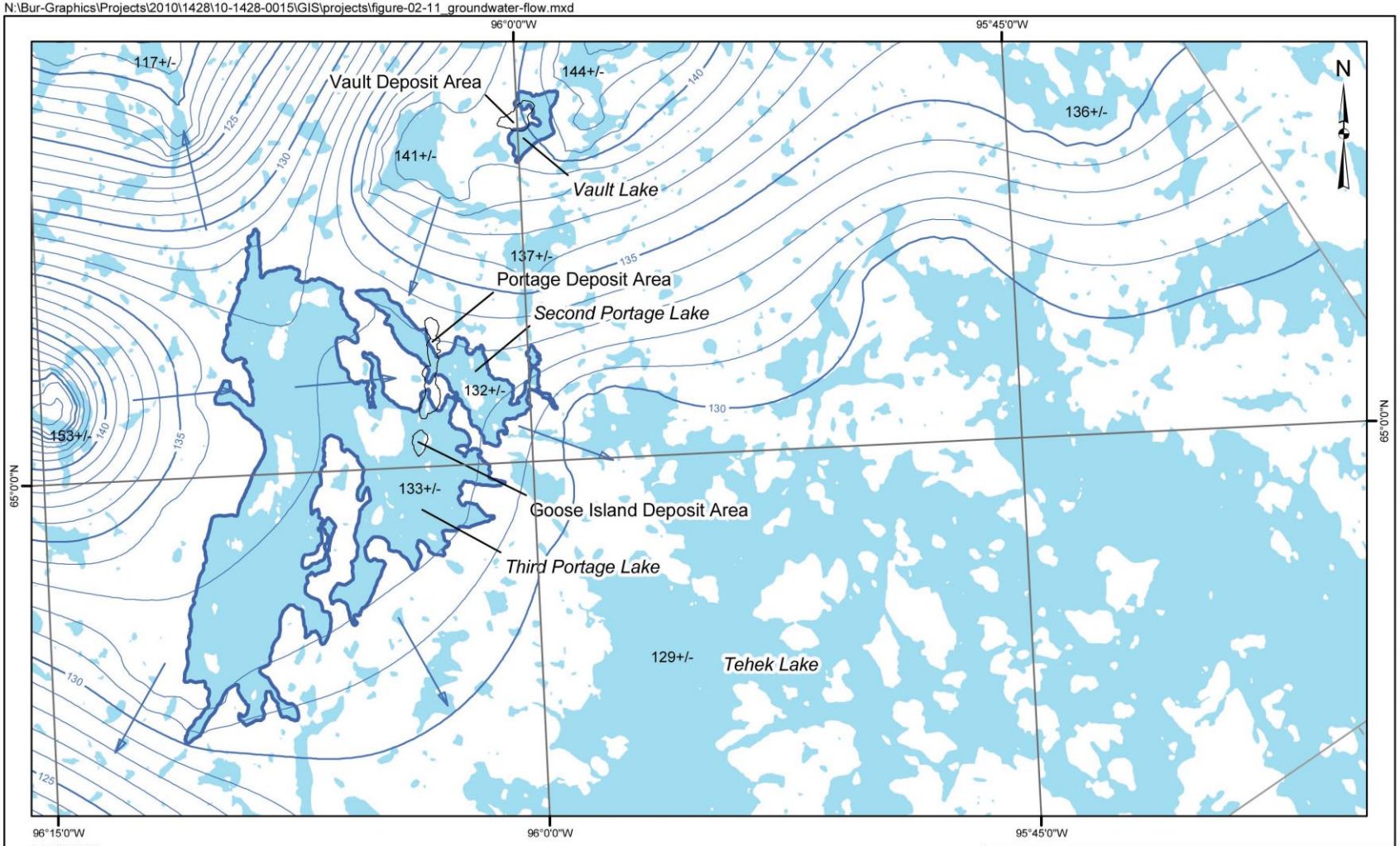

LEGEND

- Proposed Open Pit Crest
- Inferred Groundwater Contour (1 m interval)
- Inferred Groundwater Contour (5 m interval)
- Inferred Groundwater Flow Line
- 133 Waterbody (elevation in masl)

REFERENCE

District of Keewatin, Northwest Territories, Department of Energy, Mines and Resources, Mapsheets 66A/16, 56E/04, 66H/01, 56D/13. Pit Footprint obtained from Golder Drawing 1.2. Datum: NAD83 Projection: UTM Zone 14

0 1,000 2,000 4,000 Meters

Scale - 1:125,000

NOTE

Water levels vary annually and may differ from recently surveyed elevations.

AGNICO EAGLE MINES LIMITED

MEADOWBANK GOLD PROJECT
NUNAVUT

INFERRED REGIONAL GROUNDWATER FLOW

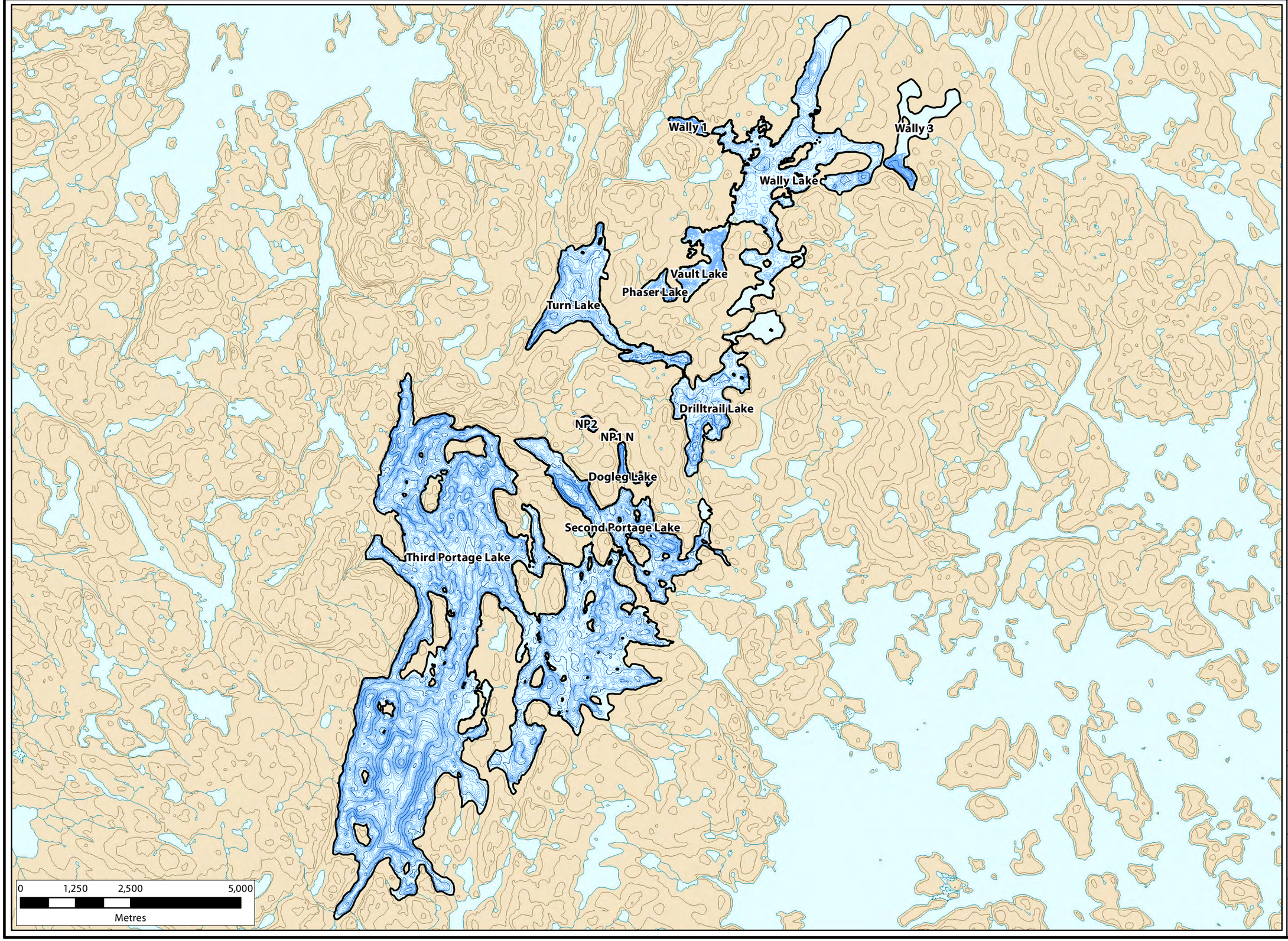

Legend

- Study Lakes
- Major Contour
- Minor Contour

Bathymetry Contours

DOUGAN & ASSOCIATES
ECOLOGICAL CONSULTING & DESIGN
77 Wyndham Street South • Guelph ON N1E 5R3
T 519.822.1609 • F 519.822.5389 • www.dougan.ca

PROJECT: DA11-062-02

CLIENT: Agnico-Eagle Mines Ltd., Meadowbank Div.

N / W / E / S

UTM Zone 14 NAD83

DATE: FEBRUARY 2011

SCALE: 1:80,000

DRAWN BY: LW

CHECKED BY:

FIGURE:

A1

The information displayed on this map has been compiled from various sources. While every effort has been made to accurately depict the information, this map should not be relied on as being a precise indicator of locations, features, or roads, nor as a guide to navigation. MNR data provided by Queen's Printer of Ontario. Use of the data in any derivative product does not constitute an endorsement by the MNR or the Ontario Government of such products.

Appendix K

Water Balance

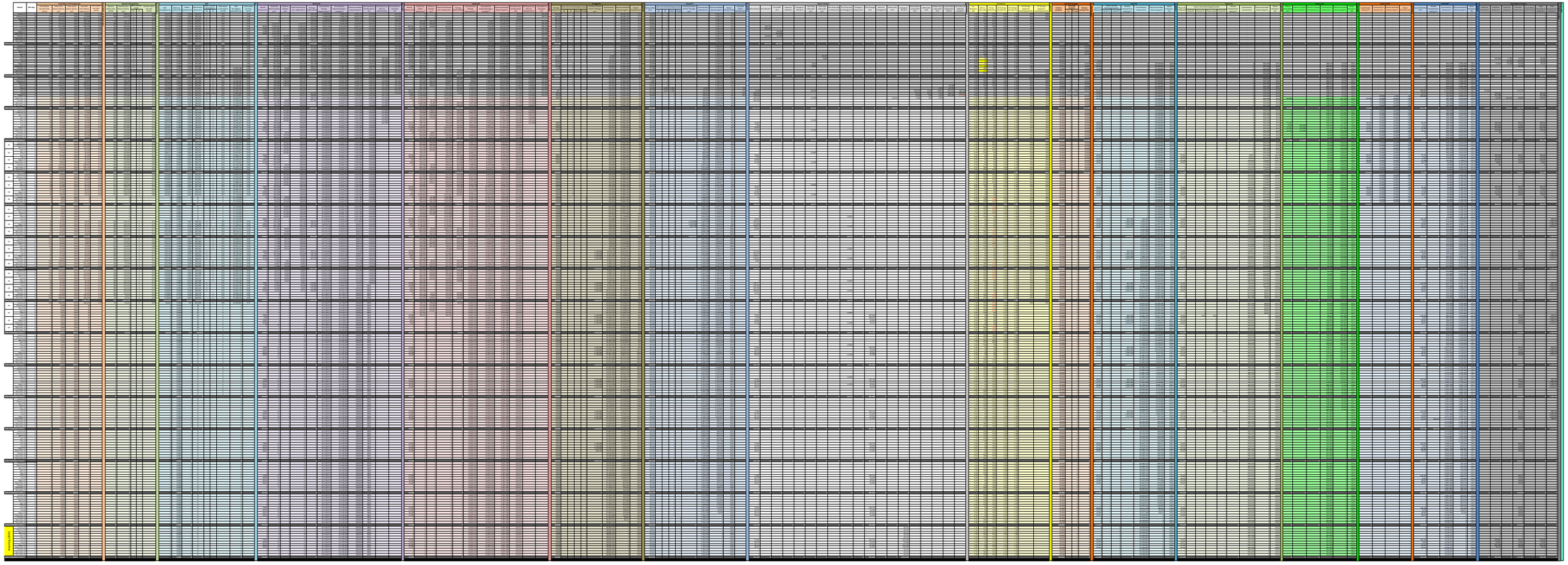

Appendix L

Ecological Land

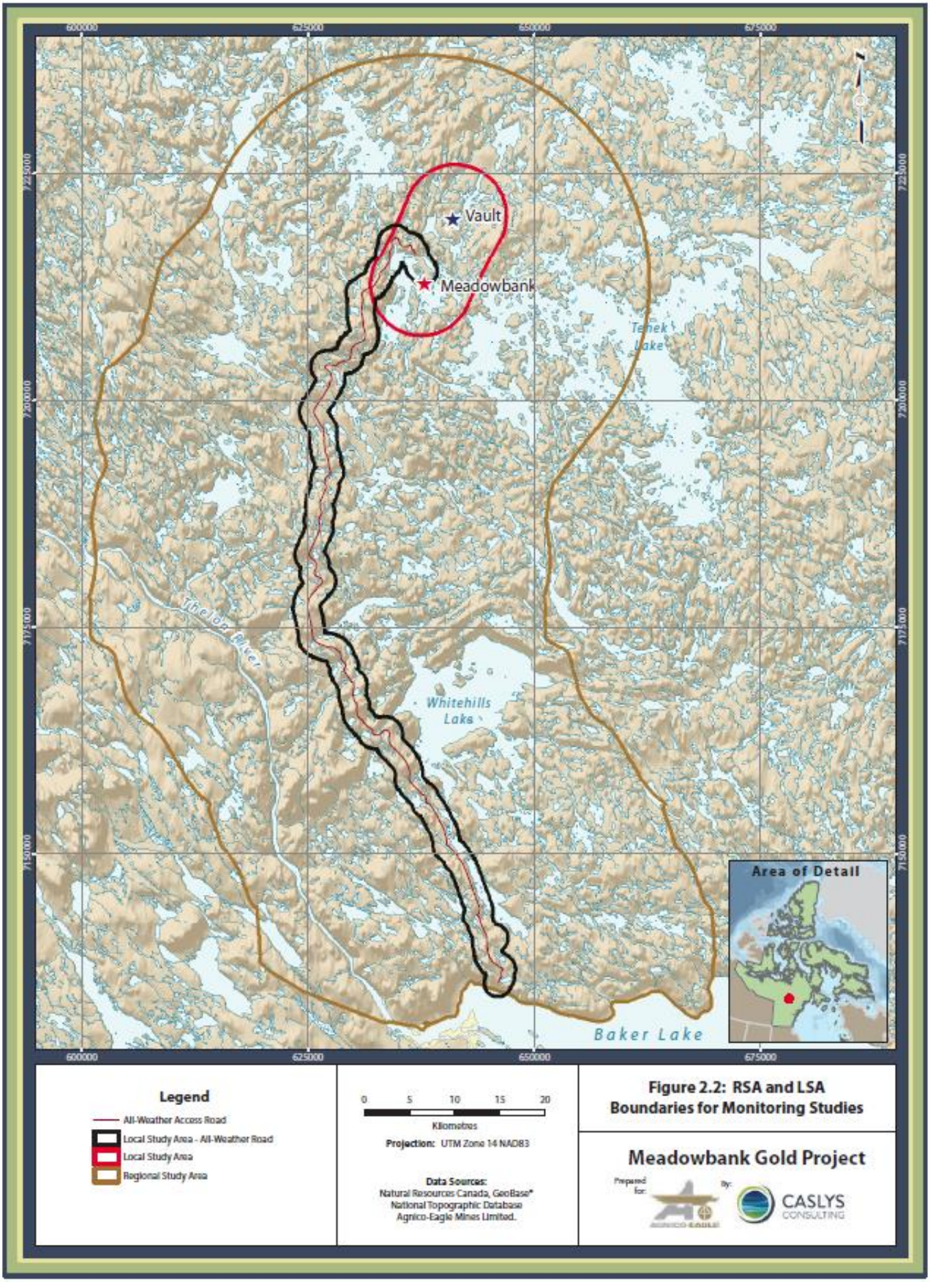
600000
625000
650000
675000
7225000
7200000
7175000
7150000
Vault
Meadowbank
Tehek Lake
Thelon River
Whitehills Lake
Baker Lake
Area of Detail
Legend
All-Weather Access Road
Local Study Area - All-Weather Road
Local Study Area
Regional Study Area
0 5 10 15 20
Kilometres
Projection: UTM Zone 14 NAD83
Data Sources:
Natural Resources Canada, GeoBase®
National Topographic Database
Agnico-Eagle Mines Limited.
Figure 2.2: RSA and LSA Boundaries for Monitoring Studies
Meadowbank Gold Project
Prepared for:
By:
CASLYS CONSULTING

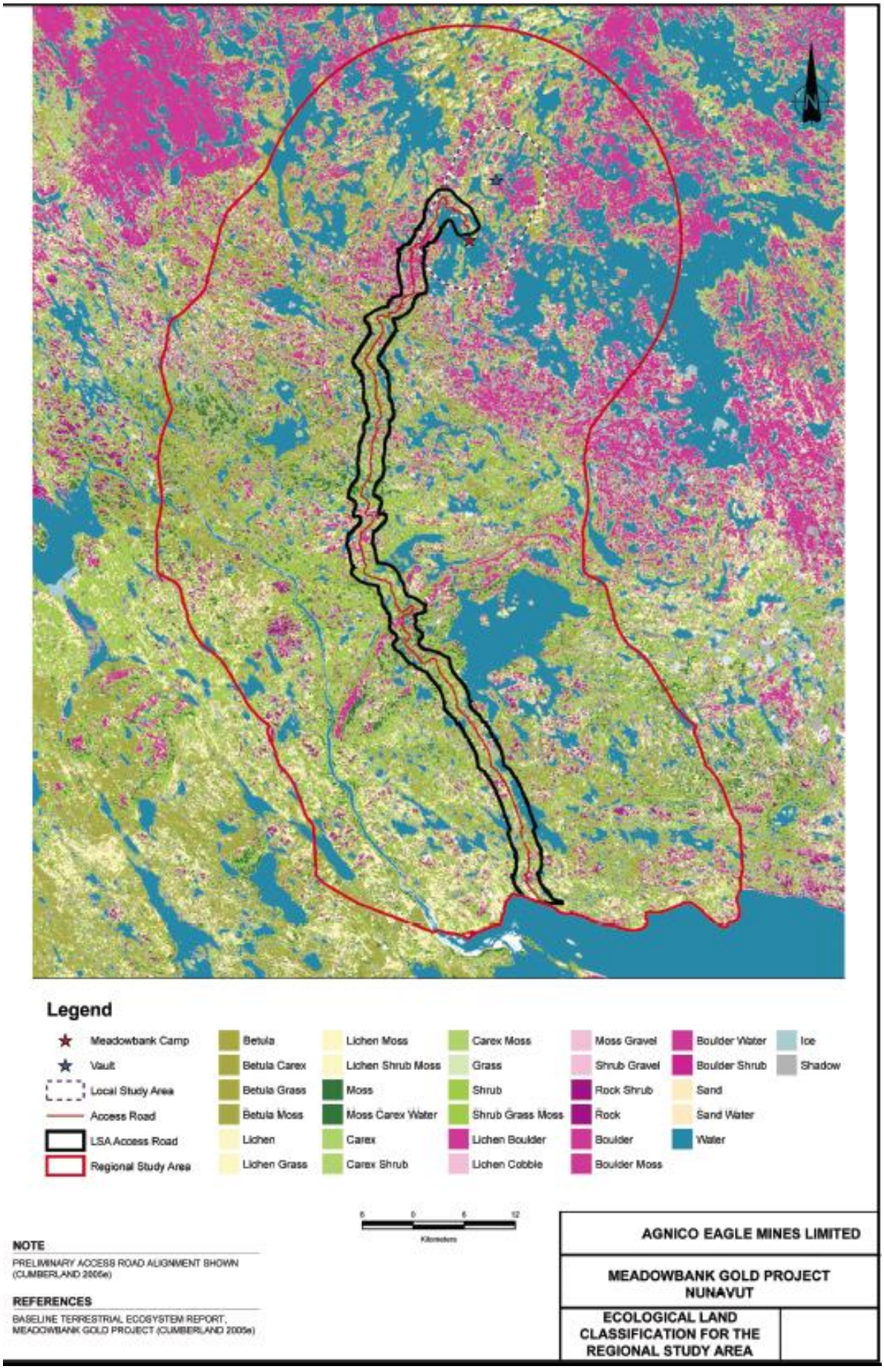

Source : Cumberland, 2005e

Table L-1: Ecological Land Classification Unit Definition (Cumberland, 2005)

ECL Unit	Definition
Betula Community	The Betula (dwarf birch) community is associated with sites with near mesic regimes on a variety of slope positions; this unit is characterized by a moderate to high cover of dwarf birch.
Betula–Carex Community	The dwarf birch-sedge community is associated with sites with near mesic to hygric moisture regimes. It is found on flat (level) to gently sloping sites with hummocky or tussocky surfaces. Dwarf birch is a dominant species; a number of sedge species may be present in the troughs.
Betula–Grass Community	The dwarf birch-grass community is characterized by sites that have dwarf birch and grass (Hierochloe sp.) as dominant species.
Betula–Moss Community	The dwarf birch-moss community is also found on sites with near mesic moisture regimes often with a hummocky surface expression. These sites generally have a moderate cover of dwarf birch (>20%), however at least one other shrub is also dominant along with mosses.
Boulder	Exposed boulders have a very high reflectance value in imagery, and are very easy to identify. The variable size and shape of boulders add texture to the imagery that allows it to be distinguished from the bedrock association. Lichens are generally associated with the boulders.
Boulder–Moss	This unit is similar to the boulder unit in texture, however mosses are found in spaces between the boulders.
Boulder–Water	This unit is also similar to the boulder unit in texture, however standing (or flowing) water is found in interstitial spaces between the boulders. It is situated in depressions or adjacent to water bodies.
Boulder – Shrub Community	The boulder-shrub unit consists of boulder fields where the spaces between the clusters or individual boulders have become covered with mats of heath forming plants. Various shrubs (i.e., crowberry, bearberry, bilberry, dwarf birch) as well as lichens are present in the spaces.
Carex Community	Carex (sedge) communities generally occur in poorly drained areas and around water features. The vegetation composition and the high water content characteristics provide a unique spectral signature that is easily recognizable from other vegetation classes; however, this ELC unit can be highly confused with

	shallow water. These sites are generally dominated by sedges and/or cotton-grasses.
Carex –Shrub Community	Sedge-shrub communities generally occur in flat, poorly drained areas and around water features. Sedges are dominant along with willows.
Carex –Moss Community	Sedge-moss communities generally occur in flat, poorly drained areas and around water features. Sedges are dominant along with mosses.
Grass Community	The grass community is found on mesic sites. *Hierochloe alpina (*alpine holygrass) is the dominant plant species.
Lichen Community	The lichen community occurs on a variety of well-drained landforms on xeric to submesic sites. Lichens generally occupy over 60% of the ground surface.
Lichen–Boulder Community	The lichen-boulder community is found in boulder fields and on morainal deposits throughout the project area. The surface is rough and broken. Boulder cover varies form between 20 to 80%. Hair lichens can be common on the "tundra" between the boulders while crustose lichens are found on the boulder surfaces.
Lichen–Cobble Community	This unit is similar to the lichen-boulder community; however, the surface is not as rough. The cover of vascular plants is low in this unit.
Lichen–Grass Community	This ground cover in this community is dominated by a combination of lichens and grasses; alpine holygrass is generally common.

ECL Unit	Definition
Lichen–Moss Community	The lichen-moss community generally occurs on well-drained morainal material. The ground surface is covered by a variety of lichens and mosses; the cover of vascular plants is low.
Lichen–Shrub-Moss Community	This unit is found on morainal material on mesic sites. It is somewhat similar to the Shrub and Moss units. The lichen and moss layers each cover over 20% of the ground surface. The moderately developed shrub layer is dominated by Labrador tea with lesser amounts of lingonberry and cloudberry and a low cover of dwarf birch.
Moss –Carex - Water	This community is associated with level sites and depressions. It is often found on the edge of ponds and lakes.
Moss Community	The moss community occurs on a variety of landforms but most often on mesic sites on moraine. Mosses are a dominant ground cover; most sites have a moderate cover of ericaceous shrubs (no single species is a dominant) and low cover of dwarf birch, herbs, graminoids and lichens.
Moss -Gravel Community	The moss-gravel community occurs on well-drained sites. It is characterised by a high cover of exposed gravel on the soil surface and with moss cover over 20%.
Rock	Bedrock outcrops have a very high reflectance value in imagery, similar to boulders. The outcrops are generally in a linear orientation and make up a relatively small proportion of the total classified area. Lichens and a variety of low shrubs are generally associated with bedrock.
Rock – Shrub Community	The rock-shrub community occurs on areas of bedrock outcrop on upper and crest of slope positions. Bedrock cover is generally greater than 40%; *Empetrum nigricans* (crowberry) is usually a dominant although the cover of ericaceous shrubs also is greater than 20%.
Sand – Water	Beaches, sand banks and shallow water deltas are identified in the image. Sand has a very high reflectance value and is easily identified in the classification.
Shadow	Shadows in the image are generally from cloud cover and tend to black out the spectral signature of the land beneath it. Areas under shadows cannot be
Shrub Community	The shrub community is generally found on xeric to mesic sites on morainal parent material. Low shrubs are dominant in this unit; however, any one of several shrub species may be common on an individual site. These sites also have a low to moderate cover of forbs, graminoids, lichens, and mosses.
Shrub – Grass – Moss	This community is found on mesic sites. It is dominated by a combination of shrubs, graminoids, and mosses.
Shrub – Gravel Community	The shrub-gravel community is uncommon and is found on well drained, coarse textured soils. It is associated with eskers or gravelly, morainal ridges.
Water	Characterized by standing water. Deepwater areas are easily interpreted due to the spectral energy being absorbed by the water with very little reflectance. However, shallow water (2 m or less) can be confused with wetlands. In areas of shallow water, the bottom of the waterbody reflects the spectral energy. Shallow water is very closely related to the wetland community class (sedge community) because of the high water content, therefore, the separation of these classes can be highly confused.
Disturbed Sites	There is very little disturbed land in the area being classified. The class includes any urban area (Baker Lake) or camp settlements large enough to be detected in the imagery. Due to the characteristics of this class, it cannot be automatically classified; therefore, these areas were added manually. This class represents a very small proportion of the total classified area.
Ice	Ice has a very high reflectance value and is easily identified in the classification. There are a few areas with ice floating on waterbodies.
Unclassified	A very small percentage of cells within the imagery do not fall within a defined class. These cells have been grouped as unclassified.
Ridge Crest Community	This ELC unit is typically associated with eskers. Vegetation cover is often non-contiguous as the environment is dry and unstable. Two associations were mapped in the LSA (i.e., ridge crest community – sand association and ridge crest community – cobble association). The vegetation in this unit occurs in dense mats, which may include bog blueberry, lingonberry, crowberry, black bearberry, or prickly saxifrage. Moss campion, snow cinquefoil, grasses (e.g., purple reedgrass), and xeric woodrushes (e.g., confused woodrush) may be present. Lichens are sparse in this unit. The ridge crest community - cobble association is similar to the lichen-rock community – boulder association.

Appendix M

Baseline Water Quality Results

Table M-1 Average Baseline Water Quality in Third Portage, Second Portage and Wally (Golder, 2014)

Parameter	Units	Third Portage Lake (N=18)	Second Portage Lake (N=14)	Wally Lake (N=3)
Conventional parameters				
Hardness	mg/L	5.3	8.9	17.2
pH	pH units	6.8	7.5	7.3
Dissolved anions				
Total alkalinity	mg/L	4	7	13
Chloride	mg/L	0.5	0.6	0.7
Fluoride	mg/L	0.07	0.07	0.05
Sulphate	mg/L	1.3	2.8	5.3
Nutrients				
Ammonia nitrogen	mg/L	0.01	0.02	0.02
Total kjeldahl nitrogen	mg/L	0.09	0.08	0.11
Nitrate nitrogen	mg/L	0.004	0.007	0.024
Nitrite nitrogen	mg/L	0.001	0.001	0.001
Total phosphate	mg/L	0.002	0.003	0.003
Total phosphorus	mg/L	0.002	0.003	0.003
Organic parameters				
Dissolved organic carbon	mg/L	1.4	1.7	2.2
Cyanides				
Total cyanide	mg/L	<0.005	<0.005	<0.005
Total metals				
Aluminum	mg/L	0.006	0.007	0.008
Antimony	mg/L	<0.0005	<0.0005	<0.0005
Arsenic	mg/L	<0.0005	<0.0005	<0.0005
Barium	mg/L	<0.02	<0.02	<0.02
Beryllium	mg/L	<0.001	<0.001	<0.001
Boron	mg/L	0.1		0.1
Cadmium	mg/L	<0.00005	<0.00005	<0.00005
Calcium	mg/L	1.2	2.3	4.6
Chromium	mg/L	<0.001	<0.001	<0.001
Cobalt	mg/L	<0.0003	<0.0003	<0.0003
Copper	mg/L	0.001	0.001	0.002
Iron	mg/L	<0.03	<0.03	<0.03
Lead	mg/L	0.0006	0.0009	0.0007
Lithium	mg/L	<0.005	<0.005	<0.005
Magnesium	mg/L	0.5	0.8	1.3
Manganese	mg/L	0.001	0.0016	0.0013
Mercury	mg/L	<0.00005	<0.00005	<0.00005

Table M-1 Average Baseline Water Quality in Third Portage, Second Portage and Wally (Golder, 2014), continued

Parameter	Units	Third Portage Lake (N=18)	Second Portage Lake (N=14)	Wally Lake (N=3)
Molybdenum	mg/L	<0.001	<0.001	<0.001
Nickel	mg/L	<0.001	<0.001	<0.001
Potassium	mg/L	2	2	2
Selenium	mg/L	<0.001	<0.001	<0.001
Silver	mg/L	<0.00002	<0.00002	<0.00002
Sodium	mg/L	2	2	2
Thallium	mg/L	<0.0002	<0.0002	<0.0002
Tin	mg/L	<0.0006	<0.0005	<0.0005
Titanium	mg/L	<0.01	<0.01	<0.01
Uranium	mg/L	<0.0002	<0.0002	<0.0002
Vanadium	mg/L	<0.03	<0.03	<0.03
Zinc	mg/L	0.005	0.005	0.013

Note: N = number of samples used to calculate average values.

Appendix N

Internal Structures

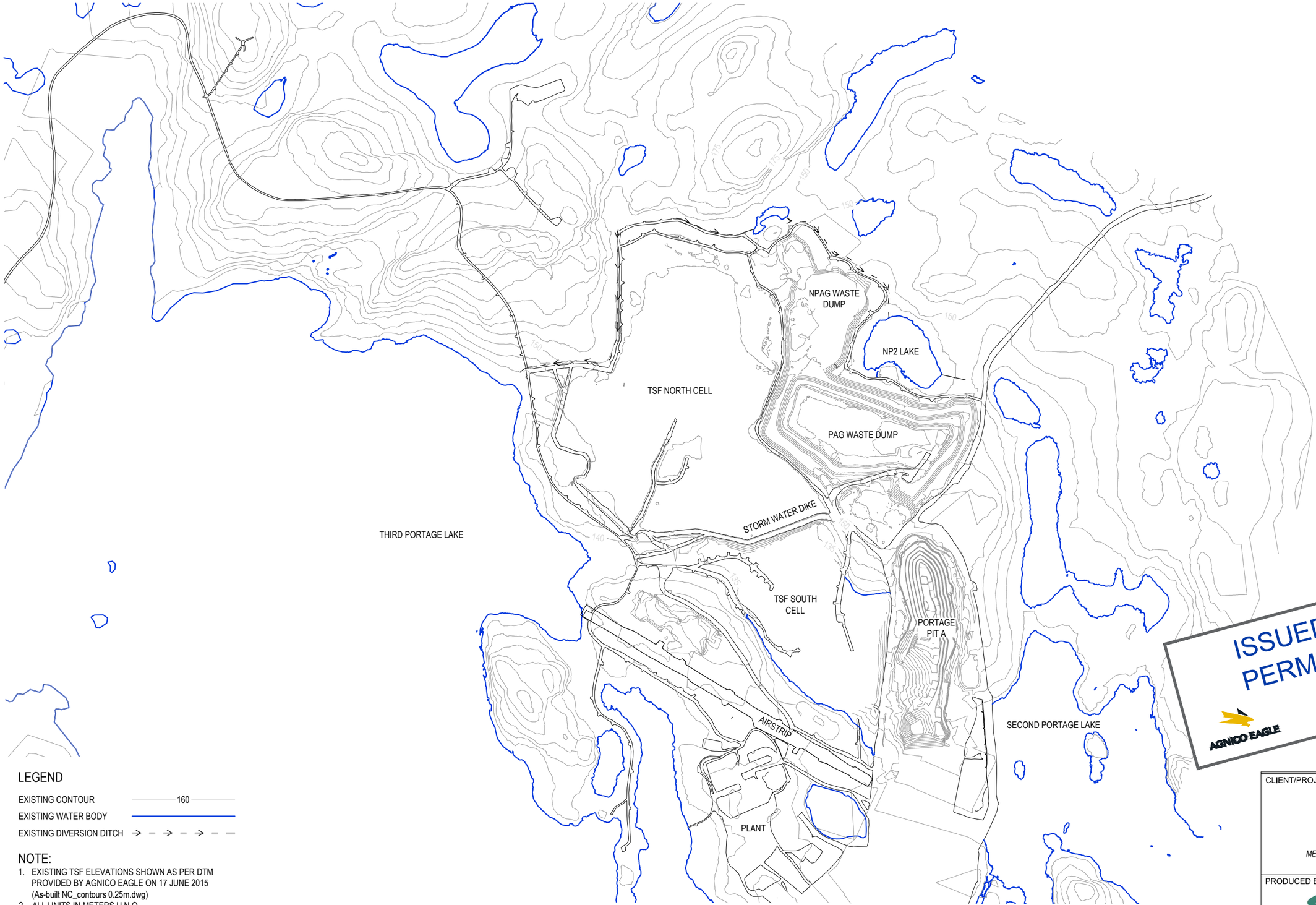

EXISTING FEATURES PLAN
1:20,000

200 100 0 200 400 600 800 1000m
SCALE 1:20000

LEGEND

EXISTING CONTOUR 160
EXISTING WATER BODY
EXISTING DIVERSION DITCH

NOTE:

1. EXISTING TSF ELEVATIONS SHOWN AS PER DTM PROVIDED BY AGNICO EAGLE ON 17 JUNE 2015 (As-built NC_contours 0.25m.dwg)
2. ALL UNITS IN METERS U.N.O.
3. DO NOT SCALE.

ISSUED FOR PERMITTING
AGNICO EAGLE
DATE : 2016-04-27

CLIENT/PROJECT:
AGNICO EAGLE
MEADOWBANK TAILINGS STORAGE FACILITY
NORTH CELL EXPANSION

PRODUCED BY:
O'Kane Consultants Inc.
Integrated Mine Waste Management and Closure Services
Specialists in Geochemistry and Unsaturated Zone Hydrology

EXISTING FEATURES PLAN

DRG NUM: 948/2-001 Rev: B

REFERENCE

DWG. NO.	DESCRIPTION

REVISIONS

NO.	DESCRIPTION	DRN. BY:	DATE
A	ISSUED FOR CLIENT REVIEW.	HSC	01.15.16
B	ISSUED FOR PERMITTING.	HSC	04.27.16

REVD. BY:	P. GARNEAU	DATE:	01.15.16
APPD. BY:	M. O'KANE	DATE:	01.15.16
SCALE:	AS SHOWN	REPORT NUM:	948/2-01

SETOUT DATA			
POINT #	EASTING	NORTHING	RL (masl)
1	637416.88	7215327.07	152.0
2	637285.24	7215441.23	152.0
3	637124.73	7215566.12	152.0
4	637041.67	7215725.89	152.0
5	637013.09	7215783.62	152.0
6	637047.26	7215925.78	152.0
7	637083.42	7216123.70	154.0
8	637285.47	7216098.99	154.0
9	637311.70	7216199.01	154.0
10	637337.93	7216299.03	154.0
11	637329.40	7216411.02	154.0
12	637323.60	7216536.35	154.0
13	637323.60	7216631.99	154.0
14	637318.58	7216772.60	154.0
15	637459.53	7216847.10	154.0
16	637606.79	7216813.15	154.0
17	637735.01	7216789.14	154.0
18	637810.73	7216767.03	154.0
19	637843.73	7216760.82	154.0
20	637908.97	7216765.86	154.0
21	637935.76	7216760.04	154.0
22	637959.84	7216666.92	154.0
23	637983.08	7216627.25	154.0
24	638016.31	7216591.73	154.0
25	638051.47	7216571.66	154.0

SETOUT DATA			
POINT #	EASTING	NORTHING	RL (masl)
26	638097.83	7216536.91	154.0
27	638109.04	7216512.97	154.0
28	638076.42	7216462.57	153.0
29	638041.80	7216294.72	153.0
30	638091.63	7216228.59	153.0
31	638133.49	7216200.34	153.0
32	638092.17	7216087.59	152.0
33	638015.62	7215887.16	152.0
34	638015.16	7215854.51	152.0
35	638024.57	7215829.29	151.0
36	638048.01	7215792.20	151.0
37	638115.41	7215733.63	151.0
38	638312.72	7215588.20	151.0
39	638440.68	7215451.55	151.0

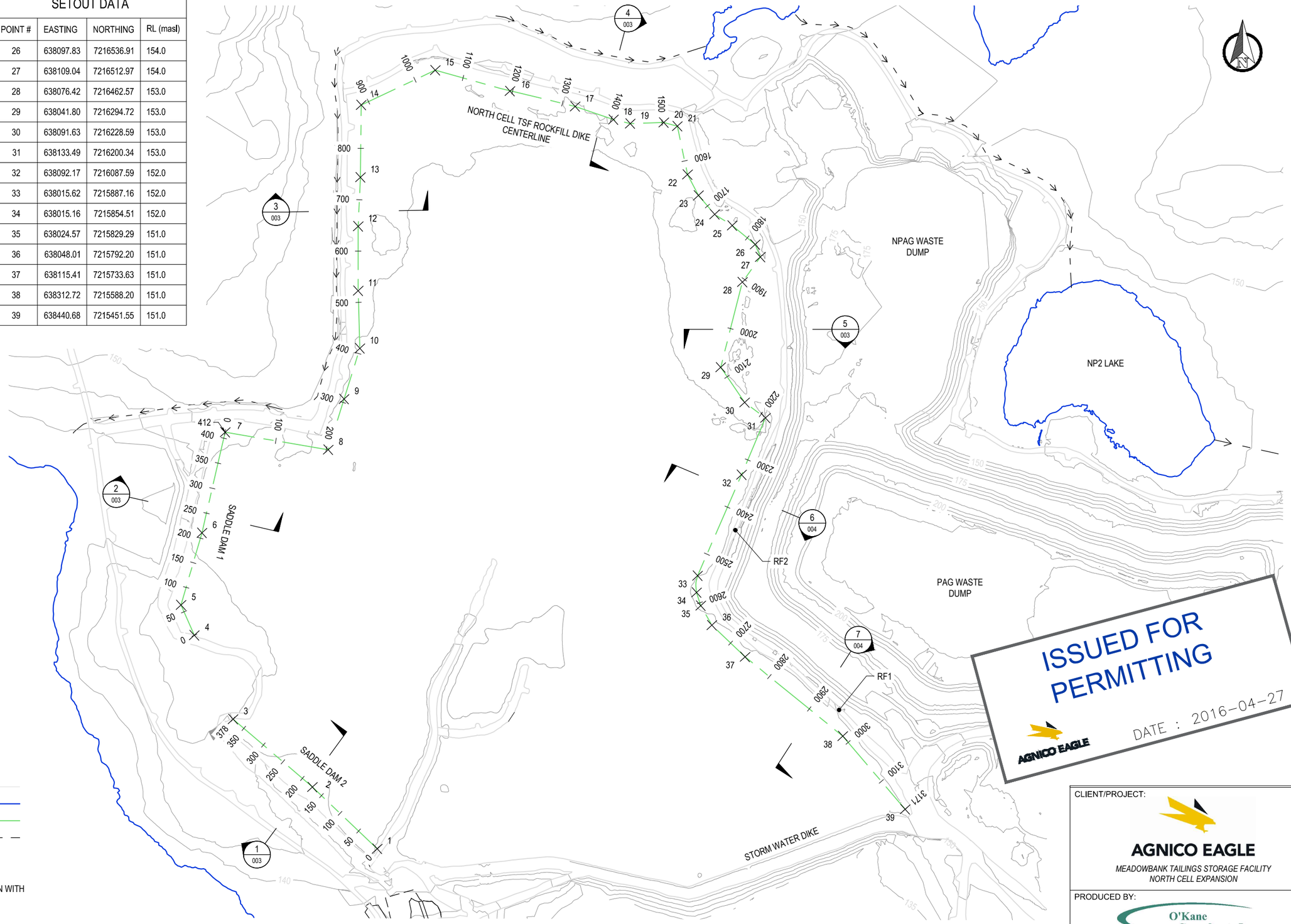

ISSUED FOR PERMITTING

DATE : 2016-04-27

AGNICO EAGLE

LEGEND

- EXISTING CONTOUR 160
- EXISTING WATER BODY
- ROCK FILL DIKE CENTERLINE
- EXISTING DIVERSION DITCH
- SETOUT POINT LOCATION

NOTE:

1. THIS DRAWINGS IS TO BE READ IN CONJUNCTION WITH OKC REPORT No. 948/2-01 DATED DEC 2015.
2. EXISTING TSF ELEVATIONS SHOWN AS PER DTM PROVIDED BY AGNICO EAGLE ON 17 JUNE 2015 (As-built NC_contours 0.25m.dwg)
3. ALL UNITS IN METERS U.N.O.
4. DO NOT SCALE.

GENERAL ARRANGEMENT PLAN
1:7,500

0 75 150 225 300 375 450 525 600m
SCALE 1:7500

CLIENT/PROJECT:
AGNICO EAGLE
MEADOWBANK TAILINGS STORAGE FACILITY
NORTH CELL EXPANSION

PRODUCED BY:
O'Kane Consultants Inc.
Integrated Mine Waste Management and Closure Services
Specialists in Geochemistry and Unsaturated Zone Hydrology

ROCKFILL DIKE ALIGNMENT LAYOUT PLAN

DRG NUM: 948/2-002 Rev: B

REVD. BY: P. GARNEAU DATE: 01.15.16
APPD. BY: M. O'KANE DATE: 01.15.16
SCALE: AS SHOWN REPORT NUM: 948/2-01

REFERENCE

DWG. NO.	DESCRIPTION

REVISIONS

NO.	DESCRIPTION	DRN. BY:	DATE
A	ISSUED FOR CLIENT REVIEW.	HSC	01.15.16
B	ISSUED FOR PERMITTING.	HSC	04.27.16

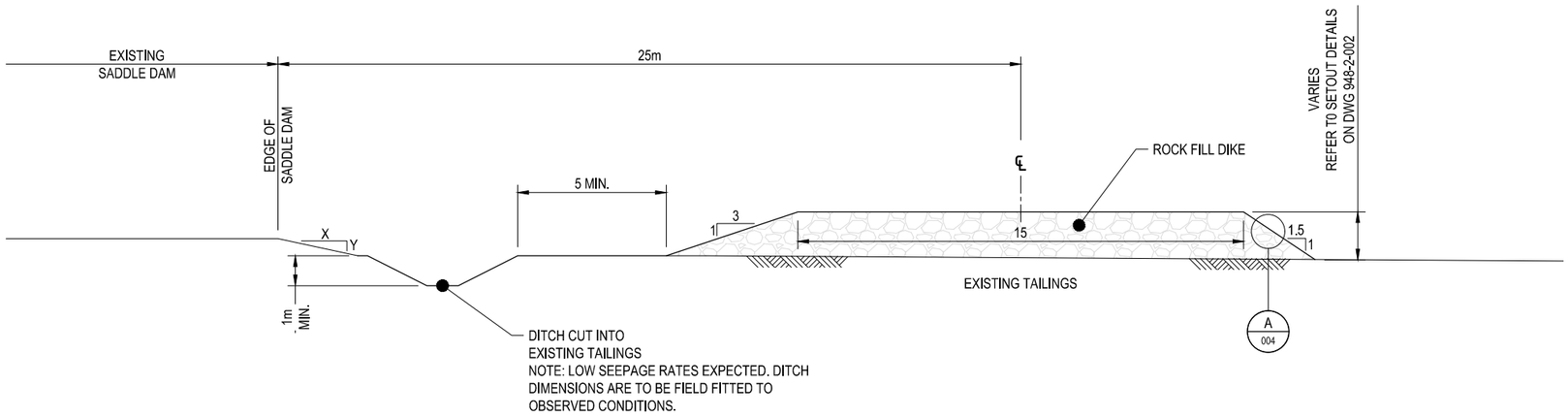

SECTION 1 & 2
1:200

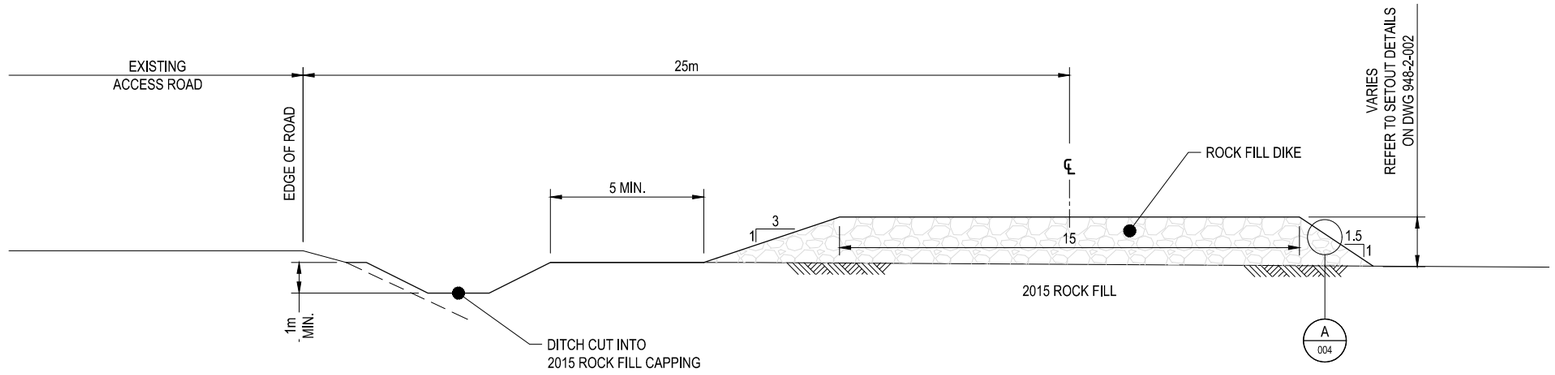

SECTION 3 & 4
1:200

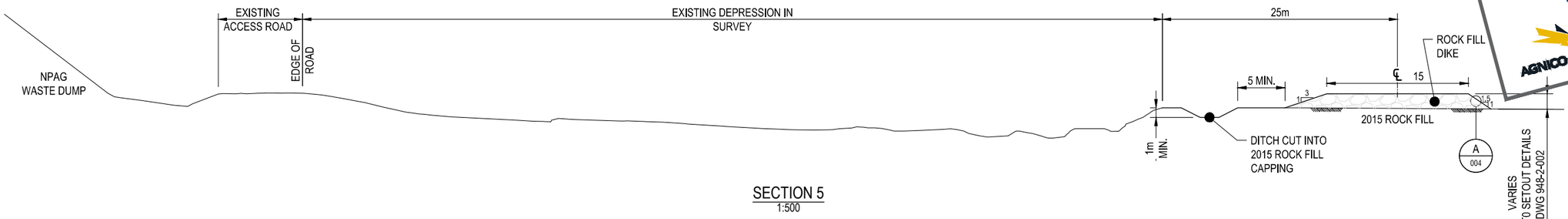

SECTION 5
1:500

ISSUED FOR PERMITTING
AGNICO EAGLE
DATE : 2016-04-27

NOTE:
1. THIS DRAWINGS IS TO BE READ IN CONJUNCTION WITH OKC REPORT No. 948/2-01 DATED DEC 2015.
2. ALL UNITS IN METERS U.N.O.
3. DO NOT SCALE.

REFERENCE	DWG. NO.	DESCRIPTION

REVISIONS	NO.	DESCRIPTION	DRN. BY:	DATE
	A	ISSUED FOR CLIENT REVIEW.	HSC	01.15.16
	B	ISSUED FOR PERMITTING.	HSC	04.27.16

REVD. BY:	P. GARNEAU	DATE:	01.15.16
APPD. BY:	M. O'KANE	DATE:	01.15.16
SCALE:	AS SHOWN	REPORT NUM:	948/2-01

CLIENT/PROJECT:
AGNICO EAGLE
MEADOWBANK TAILINGS STORAGE FACILITY
NORTH CELL EXPANSION

PRODUCED BY:
O'Kane Consultants Inc.
Integrated Mine Waste Management and Closure Services
Specialists in Geochemistry and Unsaturated Zone Hydrology

ROCKFILL DIKE
SECTIONS 1-5

DRG NUM: 948/2-003 | Rev: B

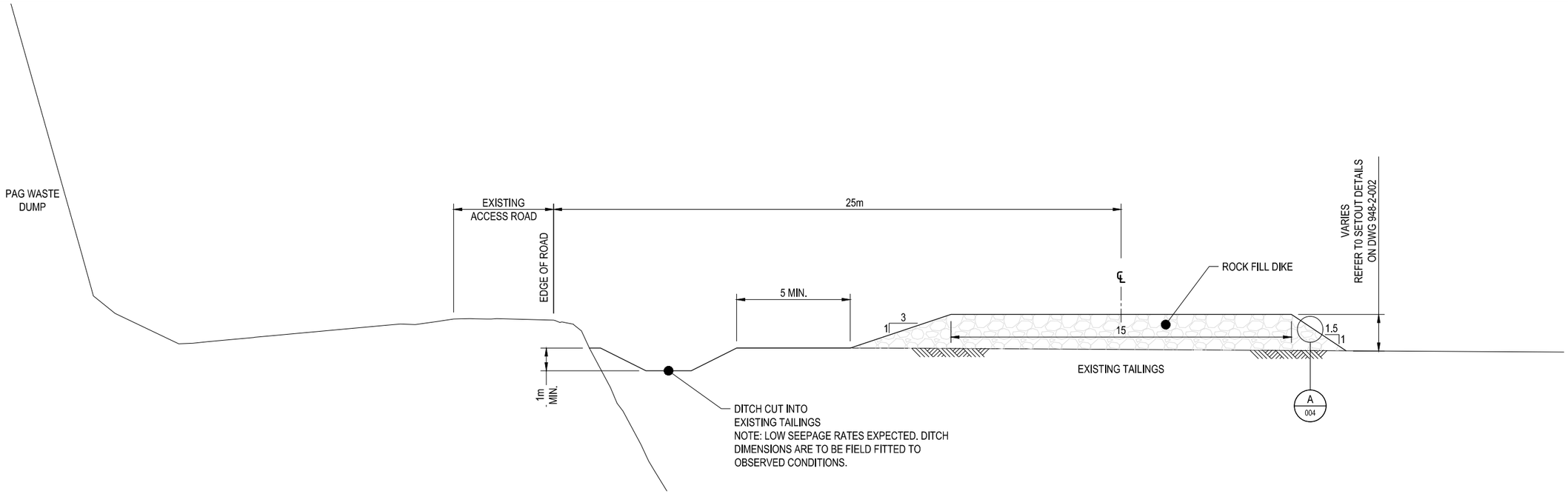

SECTION 6 & 7
1:200

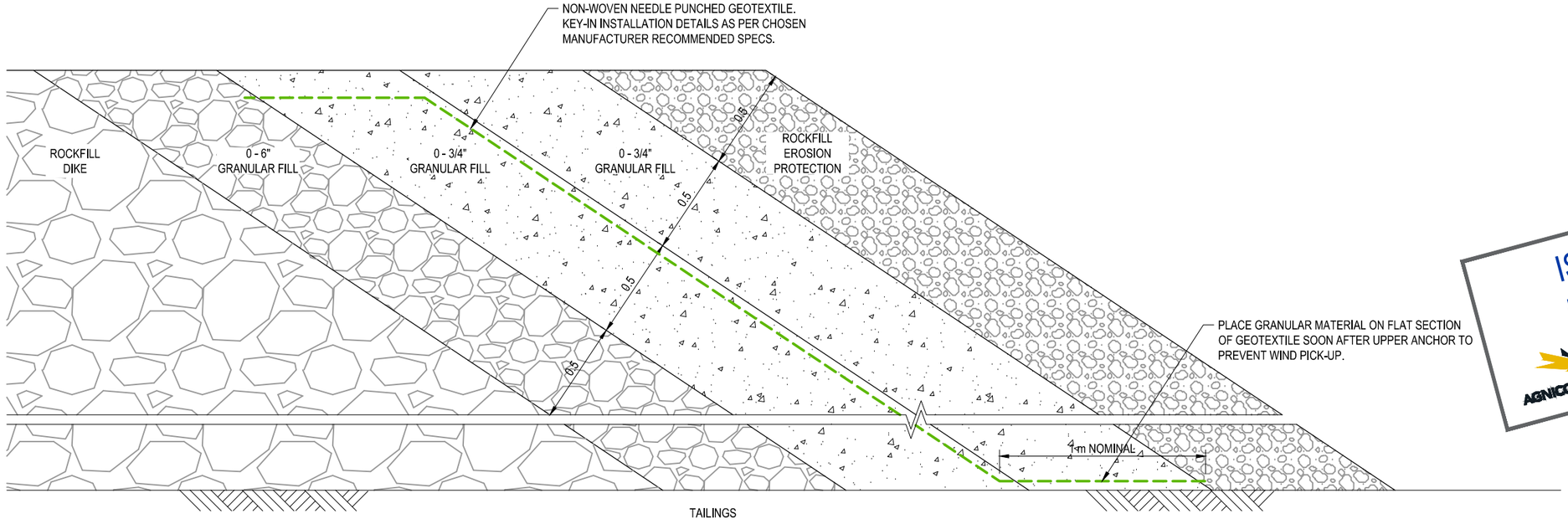

DETAIL A
1:20

ISSUED FOR PERMITTING
AGNICO EAGLE
DATE : 2016-04-27

NOTE:
1. THIS DRAWINGS IS TO BE READ IN CONJUNCTION WITH OKC REPORT No. 948/2-01 DATED DEC 2015.
2. ALL UNITS IN METERS U.N.O.
3. DO NOT SCALE.

REFERENCE	DWG. NO.	DESCRIPTION

REVISIONS	NO.	DESCRIPTION	DRN. BY:	DATE
	A	ISSUED FOR CLIENT REVIEW.	HSC	01.15.16
	B	ISSUED FOR PERMITTING.	HSC	04.27.16

REVD. BY:	P. GARNEAU	DATE:	01.15.16
APPD. BY:	M. O'KANE	DATE:	01.15.16
SCALE:	AS SHOWN	REPORT NUM:	948/2-01

CLIENT/PROJECT:
AGNICO EAGLE
MEADOWBANK TAILINGS STORAGE FACILITY
NORTH CELL EXPANSION

PRODUCED BY:
O'Kane Consultants Inc.
Integrated Mine Waste Management and Closure Services
Specialists in Geochemistry and Unsaturated Zone Hydrology

ROCKFILL DIKE
SECTIONS 6-7 & DETAIL A

DRG NUM: 948/2-004 Rev: B

Appendix O

Post Closure General Site Layout

(Golder, 2014)

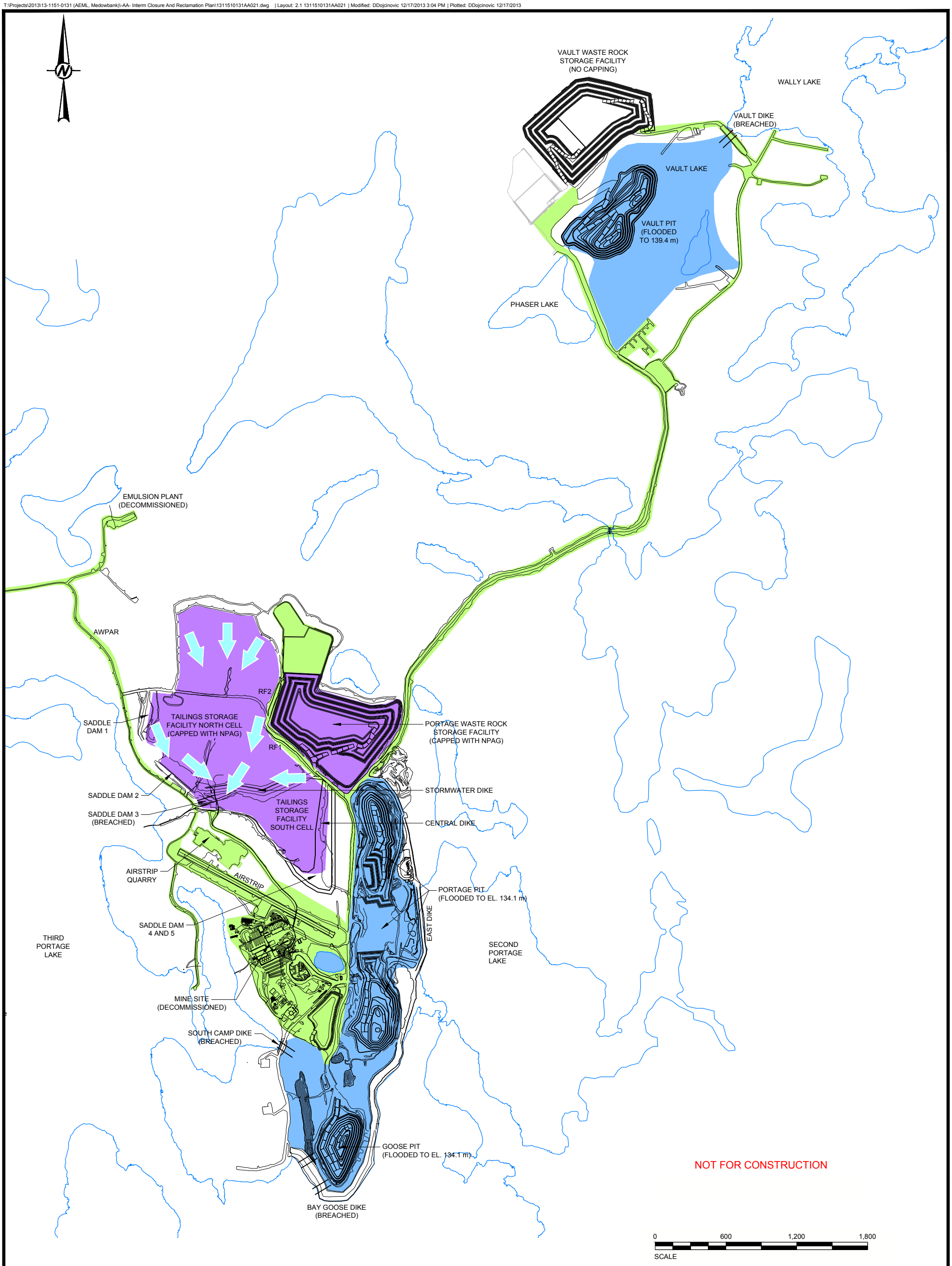

REFERENCE

- NPAG COVER
- REHABILITATED DISTURBED AREA
- PIT LAKES/POND
- BREACHED DIKES/DAMS
- DIRECTION OF SURFACE RUNOFF FLOW

NOTES

1. BASE PLAN PROVIDED IN DIGITAL FORMAT BY AGNICO EAGLE MINES LTD., FILE NO. PORTAGE_GOOSE_VAULT_END2018_LOM2013_V4D-WITH LABEL.DWG, RECEIVED OCTOBER 7, 2013.

PROJECT

AGNICO EAGLE MINES LTD.
MEADOWBANK GOLD PROJECT
INTERIM CLOSURE AND RECLAMATION PLAN

TITLE

GENERAL MINE LAYOUT POST - CLOSURE

Golder Associates

PROJECT No.		13-1151-0131	FILE No.		1311510131AA021
DESIGN			SCALE		AS SHOWN
CADD	DD	2013-12-17	FIGURE		2.1
CHECK	BR	2013-12-17			
REVIEW	RG	2013-12-17			

Appendix P

Closure Integrated Schedule

Meadowbank - Closure and Post-Closure Schedule

Main Project Facilities	Operations/Closure Main Phases	2017	2018 Q1/Q2/Q3	2018 Q4	2019 - Q1/Q2	2019 Q3/Q4	2020	2021	2022	2023	2024	2025	2026	2027	2028	2029	2030	2031	2032	2033	2034	2035	2036	2037	2038	2039	2040	2041
		Operations at MBK		Transition Period		Operations at WT (ore processing at Meadowbank)			Demolition								Dike Reconnection	AWAR Closure										
		Progressive Closure							Active Closure/Closure Monitoring									Post-Closure Monitoring										
Open Pits	Goose - Pit Flooding					Flooding																						
	Portage - Pit Flooding						Flooding																					
	Portage - Pit Flooding Reclaim Water Transfer								Reclaim Transfer																			
	Vault - Pit Flooding					Flooding																						
	Phaser/BB Phaser- Pit Flooding					Flooding (natural)																						
	Water Treatment Plan (if required)								Water Treatment																			
Dikes and Dams	Dike and Dam Reconnection (Baygoose, South Camp, Vault, SD3)																Reconnection											
RSF	Portage RSF Operations	RSF Operation																										
	Portage RSF- NPAG Cover	Cover Construction										Cover Construction																
	NPAG RSFs - Waste rock reclaim for closure			NPAG Reclaim					NPAG Reclaim																			
TSF	North Cell - Tailings Deposition					Deposition																						
	North Cell - NPAG cover	Cover Construction							Cover Construction																			
	South Cell - Tailings Deposition	Deposition																										
	South Cell - NPAG cover								Cover Construction																			
Water Management	Mine Site Water Management in Closure - TSF and Open Pits								Water Management																			
	Water Management Facilities Closure				Closure of Unused Facilities																							
Waste Management Facilities	Demolition Landfill Operation								Waste Deposition																			
	Closure Landfill - NPAG Cover and Closure											Cover Construction																
	Landfarm Operation								Contaminated Soil Treatment																			
	Closure Landfill - NPAG Cover and Closure											Cover Construction																
	Hazmat Management - Closure								Hazmat Management for Closure																			
	Surface Infrastructures Demolition - Mill, Power Plant, Services Building								Demolition																			
Meadowbank Infrastructures	Accommodations								Demolition																			
	Equipment Demobilization								Demobilization or Landfilled								Demob.											
	Fuel tanks and others facilities								Demolition																			
	Site roads and Vault Road									Road Closure																		
	Airstrip																Closure											
Baker Lake Facilities	Surface Infrastructures Demolition - Marshalling area and fuel tanks								Closure of Unused Facilities																			
AWAR	AWAR, Roads, Quarries and Pads Dismantling																	AWAR closure										
Monitoring	Closure Active Monitoring								Active Closure/Closure Monitoring																			
	Post-closure Monitoring																	Post-Closure Monitoring										

Notes:
1. It is anticipated that the schedule will be refined throughout the Project life as the designs for closure are advanced and the closure methods and strategies are further developed. The schedule is subjected to changes following mine plans and development as well as market conditions.
2. Only the main closure activities are presented in this schedule.
3. Water treatment if required will be for the reclaim water prior to transfer in the pit.
4. Pit flooding includes natural pit flooding (runoff, groundwater inflow and seepage) and active flooding (pumping water from adjacent lake).
5. Water management is required in operations; this schedule only presents the water management related to closure activities.
6. Waste management is required in operations; this schedule only presents the water management related to closure activities.
7. Baker Lake facilities will be decommissioned as required in active closure and closure.
8, Whale Tail operations expected from Q3 2019 to January 2022.

Appendix Q

Financial Security Cost Estimate Assumptions and RECLAIM Spreadsheets

SNC-LAVALIN INC.

5500 des Galeries Blvd., Suite 200
Quebec (Qc)
Canada G2K 2E2
Tel: (418) 621-5500
Fax: (418) 621-8887

Memorandum

Certifiée ISO 9001

TO:	Mrs. Nancy Duquet-Harvey Agnico Eagle Mines Ltd.	**DATE:**	June 29, 2018
C.C.:	Dominic Tremblay, SNC Lavalin		
FROM:	Erika Voyer, Philipe Lemieux, Alain Lebel SNC Lavalin	**REF.:**	654769-5000-4EER-0001_00
SUBJECT:	Meadowbank ICRP 2018 Appendix Q – Financial Security Cost Estimate Assumptions		

1.0 INTRODUCTION

Agnico Eagle Mines Ltd. (Agnico Eagle) Meadowbank gold open pit mine (Meadowbank, or the Project) currently in operation, located 70 km north of Baker Lake, Nunavut, achieved commercial production in March 2010. The mine plan at Meadowbank mine is expected to extend the production into January 2022, with the processing and tailings deposition of ore coming from Whale Tail Pit.

Agnico Eagle is required to submit a detailed financial security cost estimate for the Meadowbank Gold Project Interim Closure and Reclamation Plan (ICRP) to Indigenous and Northern Affairs Canada (INAC) and to the Kivallik Inuit Association (KIA) to support land use and water licensing requirements. RECLAIM 7.0 workbook has been used for this estimate, as per the Guidelines for Closure and Reclamation Cost Estimates for Mines, issued by Indigenous and Northern Affairs Canada, Mackenzie Valley Land and Water Board and the Government of the Northwest Territories (INAC, MVLWB, GNWT, 2017).

As the Whale Tail project is going through the permitting process, it is understood that all operations components of Whale Tail Pit and Amaruq Exploration/Hauling Road are included specifically in the Whale Tail Interim Closure and Reclamation Plan (Golder, 2016). Only the activities covered under the Meadowbank Type A Water License 2 AM-MEA1525 are included in the updated Meadowbank Interim Closure and Reclamation Plan (ICRP)—Update 2018 and in the herein financial security cost estimate.

2.0 CLOSURE MEASURES AND CONSIDERATIONS

The cost estimate presented in this memo covers the closure and reclamation of all facilities currently identified within the Meadowbank Project property including the following:

- Open pits;
- Tailings Storage Facilities (TSF);
- Rock Storage Facilities (RSF);
- Support facilities on the property including accommodations, process plant (mill), power plant, bulk fuel storage facility, service building, contractor facilities, warehouses and cold storage, assay Lab, emulsions plant, incinerators, airstrip, borrow areas, on-site roads and laydown areas;
- The Baker Lake Site Facilities and All Weather Access Road (AWAR).

The present updated Meadowbank ICRP and cost estimate are based on the current Life of Mine (LOM) of Meadowbank, including the mining activities planned at the Meadowbank site, as well as the activities related to

ore processing and tailings deposition. The additional ore from Whale Tail Pit processed and its tailings deposited at Meadowbank are also considered in the update of the Meadowbank ICRP 2018.

This cost estimate provides for the closure measures described in detail in the Meadowbank ICRP-Update 2018. Most closure activities will occur within the active closure period, from 2022 to 2024. The schedule of closure activities presented in Appendix Q of the Meadowbank ICRP-Update 2018 outlines the major closure measures and their expected timeline.

For the purpose of this financial security cost estimate, only progressive rehabilitation measures which have already been completed to date are considered in the calculations.

3.0 COST ESTIMATE

3.1 Model

RECLAIM is a model developed in Microsoft Excel used to calculate the estimation of reclamation costs for mine sites in Northern Canada. It provides line items for each reclamation activity which might be required at a given site. For each, the model presents the "quantity" of work multiplied by the appropriate "Unit Cost" provided in the model.

RECLAIM version 7.0 consists of eleven (11) reclamation costing worksheets used to compute the overall closure cost estimate. These include direct costs associated with the following mine components:

- Open pit;
- Underground mine;
- Tailings impoundment;
- Rock pile;
- Buildings and equipment;
- Chemicals, hazardous materials and contaminated soils;
- Water treatment;
- Water management;
- Interim care and maintenance.

It also includes the following indirect costs:

- Post-closure monitoring and maintenance;
- Mobilization and demobilization.

Additional cost factors such as contingency, engineering, project management, health and safety/QA-QC/engagement and bonding are automatically calculated in the cost summary worksheet, with percentages applied to the total direct cost.

3.2 Summary of Costs

The updated 2018 estimated closure and reclamation costs for the Meadowbank Project using RECLAIM Version 7.0 represents a total of $83,569,898. This total includes $57,883,238 of direct costs and $25,686,660 of indirect costs. The costs are summarized in Table 1 presented below.

SNC·LAVALIN

Table 1 Summary Financial Security Cost Estimate

Cost Item	Subtotal (Land and Water Liability)
Direct Costs	
Open pit	$6,480
Portage	*$3,240*
Goose	*$1,080*
Vault	*$1,080*
Phaser	*$1,080*
Underground Mine	$0
Tailings Facility	$34,873,338
Rock Pile	$2,737,534
Portage	*$2,707,534*
Vault	*$30,000*
Buildings and Equipment	10,659,256 $
Meadowbank	*$8,005,508*
Baker Lake	*$1,660,670*
AWAR	*$993,078*
Chemicals and Contaminated Soil Management	$1,316,981
Surface and Groundwater Management	$6,430,945
Interim Care and Maintenance	$1,858,705
Subtotal Direct Costs	**$57,883,238**
Indirect Costs	
Mobilization/Demobilization	$5,345,830
Post-Closure Monitoring and Maintenance	$4,133,524
Engineering (5%)	$2,894,162
Project Management (5%)	$2,894,162
Health and Safety Plans/Monitoring, QA/QC and Engagement Costs (2%)	$1,157,665
Bonding/Insurance (1%)	$578,832
Contingency (15%)	$8,682,486
Market Price Factor Adjustment (0%)	$0
Subtotal Indirect Costs	**$25,686,660**
GRAND TOTAL	**$83,569,898**

Refer to Appendix A for the RECLAIM spreadsheets, presenting the detailed breakdown of closure costs by mine components.

The assumptions used for the calculations of the direct costs and the indirect cost calculations are explained in the sections below.

3.3 Direct Cost Assumptions

The direct costs include the cost related to the physical work activities to be completed for the various project components, as well as the care and maintenance requirements.

In most cases, costs have been developed using unit rates provided by the RECLAIM 7.0 template applied to calculated quantities. Where an appropriate RECLAIM supplied rate was not available, an independent rate was used from Meadowbank operational data or from precedent data for similarly sized projects located in similar conditions. Unit rates used assume third party contractor pricing.

Specific assumptions and quantities used for the financial security cost estimate are provided for each closure component in sections 3.3.1 to 3.3.8.

3.3.1 Open Pits

For this component, it is assumed that the entrance and some perimeter areas of each pit will be blocked with non-acid generating material (NPAG) berms to control access of wildlife and motorized vehicles in the open pits during flooding. The length of berms was estimated from “MBK Site map FEB 2018 for NI43101.dwg” provided by Agnico Eagle, April 2018. Berms are assumed to be 1.5 m high, with 2H:1V side slopes, and made of NPAG rockfill.

Berms at ramp entrances and at exposed Portage Pit crest:

- 300 m long x 1.5 m tall with 2H:1V side slopes = 1350 m³;

Berms at Goose, Vault and Phaser ramp entrances:

- 100 m long x 1.5 m tall with 2H:1V side slopes = 450 m³.

3.3.2 Tailings Storage Facilities

TSF configuration from the last interim closure and reclamation plan were reviewed and adjusted with the projected elevation of tailings at closure with the new LOM. Preliminary design work was completed for the TSF cover in 2015 and 2016. The tailings cover will consist of NPAG waste rock, with a minimum thickness of 2.0 m. The cover for the South and North Cell will include landforms to promote water shedding and consists of two watersheds for North Cell and one watershed for South Cell. The nominal cover thickness over most of the landforms will be well over the minimum, as a thickness variation is required to obtain the designed landforms and promote adequate water management.

Quantities of rockfill required for the cover of the North Cell was adjusted to consider the construction of the internal structure required for the tailings deposition of Whale Tail Pit. These structures and the additional tailings deposited will reduce the quantity of NPAG material required for the construction of the cover and the landforms. For the South Cell, quantities were calculated to cover an area with tailings at El. 149.5 m.

For the TSF North Cell cover, the cover portion constructed between 2015 and 2017 in progressive closure was considered and subtracted from the total material required.

The construction of water diversion ditches within the cover and sedimentation ponds for management of the runoff water over the TSF were also included in the calculation. The runoff water from the cover system will convey towards a reclaim pond located upstream Saddle Dam 3. The water will then be released into Third Portage Lake once the runoff water quality meets discharge criteria. To release runoff water, the Saddle Dam 3 will be opened, which is also considered in the calculations. The quantities considered in the calculations for the construction are presented below.

Finally, it is assumed that 11.5 km (11,500 m) the tailings discharge piping will be dismantled, decontaminated and buried in the on-site landfill. The booster pump will also be dismantled.

Geotechnical instrument installation or maintenance of the existing instruments was also considered in the estimate.

NPAG Cover Tailings Storage Facility:

North Cell:

- Tailings maximum elevation considered at El. 153.5 m;
- Volume of NPAG rockfill required for North Cell NPAG cover: 6,376,000 m³;
- Volume of NPAG cover constructed between 2015 and 2017 (progressive closure): 750,743 m³;
- Volume of internal structure and tailings deposition to El.153.5m: 2,397,535 m³;
- Remaining volume NPAG rockfill required for North Cell NPAG cover: 3,227,722 m³ (data provided by Agnico Eagle, 2018).

South Cell:

- Tailings maximum elevation considered at El. 149.5 m;
- Volume NPAG rockfill required for South Cell NPAG cover for tailings at El.149.5 m: 2,783,838 m³.

Runoff Water Ditches:

North Cell:

- Volume of till excavation: 6,428 m³;
- Volume of rock excavation: 23,512 m³;
- Volume of NPAG waste rockfill: 9,935 m³.

South Cell:

- Volume of till excavation: 20,764 m³;
- Volume of rock excavation: 31,745 m³;
- Volume of NPAG waste rockfill: 25,527 m³.

Sedimentation Ponds:

North Cell:

- Volume of till excavation: 17,428 m³;
- Volume of rock excavation: 32,472 m³;
- Volume of NPAG waste rockfill: 3,510 m³.

SNC·LAVALIN

South Cell:

- Volume of till excavation: 36,176 m³;
- Volume of rock excavation: 74,308 m³;
- Volume of NPAG waste rockfill: 5,394 m³.

Saddle Dam 3 Opening:

- Volume of opening excavation: 25,000 m³;
- Volume of NPAG waste rockfill: 9,000 m³.

Removal of Tailings Discharge Line:

- Provided for removal of 11.5 km of HDPE, with on-site disposal;
- Lump sum of $15,630 for decommissioning of associated booster pump system/building.

Specialized Items:

- Lump sum of $50,000 for the installation/or maintenance of instrumentation.

3.3.3 Rock Storage Facilities

The configuration of the Portage RSF has not changed since 2014. The Portage RSF cover occurred progressively during operations between 2011 and 2017. Presently, it is considered that 84% of the RSF PAG area has been covered with 4.0 m of NPAG material (data from Agnico Eagle, May 2018). No cover is considered required for Vault RSF as the waste rock is mainly NPAG, and the portion of PAG material is encapsulated in the center of the RSF as needed.

The cost estimate also includes the cover of collection sumps around the Portage RSF.

Geotechnical instrument installation or maintenance of the existing instruments was also considered in the estimate.

Cover Portage Rock Storage Facility:

- Volume of NPAG cover required (total): 3,214,286 m³;
- Volume of NPAG cover constructed between 2011 and 2017 (progressive closure): 2,700,000 m³;
- Volume of NPAG cover remaining: 514,285 m³.

Cover Portage Rock Storage Sumps:

- Additional 6,800 m³ of cover provided for backfilling/covering sumps WEP1, WEP2 and RSF (ST-16) sumps.

Specialized Items:

- Lump sum of $50,000 for installation/or maintenance of instrumentation at Portage RSF;
- Lump sum of $30,000 for installation/or maintenance of instrumentation at Vault WRSF.

SNC·LAVALIN

3.3.4 Buildings and Equipment

The areas and footprints of buildings and infrastructures for Meadowbank site and Baker Lake provided in the ICRP 2014 were reviewed and adjusted if changes were required. The following changes were made:

- The airstrip area was increased due to the extension completed in 2013;
- The site road area was increased due to additional access roads built;
- The number of containers (sea cans) remaining on-site after closure is estimated at 1,400 containers;
- A total of 18 Jet-A Fuel tanks at Baker Lake;
- A total of 38 culverts and 9 bridges are considered for the AWAR.

Building and infrastructures footprints are listed in Table 2 available at the end of this memo (modified from Golder, 2014).

Removal of Buildings and Scarification of Foundations:

- Building footprints are listed in Table 2, with demolition areas scaled for heights assuming 3 m stories. Buildings with concrete foundations requiring puncturing assumed;
- A total of 18 Jet-A Fuel tanks at Baker Lake is considered instead of 20 tanks, as 2 were demobilized in 2016.

Reclaim Roads and Laydown Areas:

- Road/Laydown areas for the mine site and Baker Lake are listed in Table 2 and will be scarified. The AWAR will be ripped to promote natural revegetation and re-contoured to promote natural drainage;
- The airstrip length increase from 1495 to 1752 m, for an additional area of 6,000 m² and a total area of 4.1 ha;
- The site road area was increased by 20,000 m² due to additional access roads built estimated at 2.0 km, for a total area of 12 ha;
- Removal of 15 culverts on site including Vault area is considered with a lump sum allowance of $4,000 per culvert removal. Lump sum allowance of $40,000 for the installation of water breaks and erosion control is also provided.

Containers:

- In 2015, the total number of containers estimated on site represented 4,850 containers. It is estimated that between 2015 and 2022, 250 containers per year will be sent south (for a total of 2,000 containers) and that 250 containers will be donated to the community. For demobilization during 2023, 2024 and 2025, 400 containers per year will be required to transport some material and waste. At the end of active closure period, it is estimated that 1,400 containers will have to be disposed in the on-site landfill. Assuming 2.5 metric tons per container, this represents a total of 3,500 metric tons to cut and landfill.

Reclaim Quarries:

- Quarry slopes setback to 1H:1V slope, assuming cut/fill with blasted rock from the upper slope used to form lower slope;
- A total volume of 14,319 m^3 of blasted rock will be required. No change was made from ICRP 2014 (Golder, 2014) in the blasted rock quantities for the rehabilitation of quarries along the AWAR;

AWAR Water Crossing Removal:

- Lump sum allowances of $4,000 per culvert removal and $25,000 per bridge removal. A total of 38 culverts and 9 bridges are considered for the AWAR.

Decontaminate and Dispose Mobile Equipment in Landfill:

- Assumed a number of 136 mobile equipment, with 8 hours per equipment to decontaminate and disposed in the on-site landfill (1088 hours total), with 50% of equipment transferred to the local community or relocalized (Golder, 2014).

3.3.5 Chemicals and Soil Management

Chemicals and soil management were reviewed in accordance with the information available in the Landfarm Design and Management Plan (Agnico Eagle, 2017), the Hazardous Materials Management Plan (Agnico Eagle, 2013) and the Meadowbank Annual Report 2017 (Agnico Eagle, 2018).

Building Decontamination:

- Building decontamination was considered for the maintenance shop, the power plant, the fuel storage and the emulsion plant. A total cost of $33,000 was estimated for decontamination including 33 mandays.

Hazardous Material:

- No waste oil is considered in the cost estimate as the oil will be burned progressively for energy during operations;
- Fuel dregs assumed to be 0.5% of bulk fuel storage capacity (60 million liters of diesel and 1.8 million liters of Jet Fuel) and burned on site with waste oil, for a total of 309,000 liters;
- One year accumulation of oily and glycol contaminated waste water is considered, for a total of 58,456 liters (as per the Meadowbank Annual Report 2017, Agnico Eagle 2018);
- A lump sum of $3,000 is considered for battery disposal;
- Mill and water treatment reagents at closure assumed to be 5% of annual consumption and are summarized in Table 3 at the end of this memo;
- A total of 10,000 kg of assay lab and environmental reagents are assumed (Golder, 2014);
- A lump sum of $20,000 is considered for the disposal of various waste such as machine shop paints, solvents and filters;
- A total of 16,170 liters of glycol is considered based on the quantity on site reported (Hazardous Materials Management Plan, Agnico Eagle, 2013).

Contaminated soil:

- A contingency of 2,745 m^3 of hydrocarbon contaminated soil requiring on-site remediation at closure is considered, based on the reported total for 2017 (Meadowbank Annual Report 2017, Agnico Eagle 2018);
- An allowance of 5% of the total contaminated soil (137 m^3) is considered for heavily contaminated soil not treatable on site, to be managed as hazmat material;

Audit

- An allowance of $7,500 and $50,000 has been provided for Audit Phase 1 and 2 investigations, respectively. Hazmat removal audit is considered covered under these audits.

3.3.6 Water Management

The cost estimate includes the open pits flooding, the construction of the dike reconnections (opening) and closure of the water management facilities.

The volume of water required for Portage, Goose and Vault pits flooding and the period of flooding were adjusted with the information provided in the site water balance (Agnico Eagle, 2018). The operation and the maintenance of the pumping system were considered for an active flooding period of 7 years.

The preliminary design of the dike reconnections for Baygoose, South Camp and Vault dikes was developed in 2016. The construction quantities required for the reconnections were estimated from the preliminary design.

Correction work on the diversion ditches was considered required in closure to ensure long term stability and minimize snow management.

The fresh water barge and pipeline for the fresh water intake will be decommissioned. Water management pipelines will also be removed and landfilled, as well as the Third Portage Lake and Wally Lake diffusers.

The construction of a water treatment plant to treat the reclaim water prior to its transfer to Portage Pit is considered in the estimate, as well as its decommissioning. Due to the water quality forecast results, the additional parameters that may require treatment and the technology, the cost estimate for the water treatment plant was adjusted compared to the ICRP 2014 (Golder, 2014).

The annual cost for operation of the water treatment plant is also calculated. However, the annual cost, considered for a period of 3 years, is included in the “Interim Care and Maintenance” portion of the cost estimate, and presented in Section 3.3.7.

Portage, Goose and Vault Pits Flooding:

- Data extracted from the site water balance of 2018 (Agnico Eagle, 2018);
- Total volume of water pumped to Portage Pit over 7 years (2020–2026): 31.71 Mm³
  - 31,179,343 m³ of water pumped from Third Portage Lake and;
  - 531,266 m³ of water pumped from the Reclaim Pond (2022).
- Total volume of water pumped to Goose Pit over 1 year (2019): 3.18 Mm³ of water pumped from Third Portage Lake;
- Total volume of water pumped to Vault Pit over 7 years (2019–2025): 28.05 Mm³ of water pumped from Wally Lake;
- Remaining volume of flooding for the open pits will be covered by natural flooding (groundwater inflows, seepage, runoff), with no cost associated;
- Phaser and BB Phaser Pits will be flooded by natural flooding, with no cost associated;
- Considered pumping unit cost of $0.02/m³ (Golder, 2014);
- For pump maintenance and operation—2 (two) labourers working 12-hour days, 7 days per week, during active pumping period (4 months/year over 7 years), with associated accommodation costs;
- Annual pump servicing provided by two (2) manufacturer consultants for 1 week site visit per year over 7 years, with associated travel allowance costs.

SNC·LAVALIN

Dike Opening:

Bay-Goose Dike Reconnection (South, East and North):

- Opening of the dike with the lake to 3 m below design minimum water level to allow year-round fish passage, facilitate water exchange, and facilitate water movement within the former impoundment;
- Reconnection at two locations, with an alternate third location to access Portage Pit Lake;
- Reconnection width of 10 m with 3:1 side slopes;
- Erosion protection on exposed shoreline and appropriately sized substrate in reconnection base to satisfy fish habitat requirements for this structure;
- Volume of reconnection excavation = 94,000 m³;
- Volume of rock placement for capping and transition material, shoreline protection and fish substrate = 27,900 m³.

South Camp Dike Reconnection:

- Opening of the dike with the lake to 1 m below design minimum water level to allow for seasonal fish passage;
- Reconnection width of 10 m with 3:1 side slopes;
- Erosion protection on exposed shoreline and appropriately sized substrate in reconnection base to satisfy fish habitat requirements for this structure;
- Volume of reconnection excavation = 24,000 m³;
- Volume of rock placement for capping and transition material, shoreline protection and fish substrate = 9,500 m³.

Vault Pit to North Phaser Pit Channel:

- Channel invert 7 m below design minimum water level to allow for year-round fish passage;
- Opening width of 10 m with 3:1 side slopes;
- Erosion protection on exposed shoreline and appropriately sized substrate in opening base to satisfy fish habitat requirements for this structure;
- Volume of channel excavation = 7,000 m³;
- Volume of rock placement for capping and transition material, shoreline protection and fish substrate = 2,300 m³.

Vault Dike Reconnection:

- Channel invert 3 m below design minimum water level to allow for year-round fish passage;
- Reconnection width of 10 m through dike, channel width of 5 m, with 3:1 side slopes;
- Erosion protection on exposed shoreline and appropriately sized substrate in opening base to satisfy fish habitat requirements for this structure;
- Volume of channel excavation = 27,000 m³;
- Volume of rock placement for capping and transition material, shoreline protection and fish substrate = = 10,800 m³.

Removal or Correction of Water Management Structures:

- Volume for correction work on the diversion ditches—backfill/recountour (consider work on 1000 m of diversion ditch, on an area of 4 m^2 per linear meter, 1 m deep excavation) = 4,000 m^3;
- Lump sum for removal of the fresh water barge of $3,000;
- Lump sum for removal of each diffuser of $3,000;
- Length of pipeline to remove: 1,000 m for the fresh water supply system and 2,000 m for general water pipelines.

Temporary Water Treatment Plant Construction:

- Installation assumes repurposing an existing structure;
- The cost estimated for the tanks and mechanical components in the ICRP 2014 (Golder, 2014) was increased to account for the type of technology required for treatment, for a total of $1,240,000;
- Piping, electrical, instrumentation and controls, and equipment installation costs have been estimated as percentages of the total tanks and equipment cost, for respectively 30%, 15%, 15% and 35%, for a total of $1,178,000;
- The decommissioning is accounted for demolishing a structure of 1,500 m^2 and scarification of the footprint;
- The decommissioning of the system includes 540 man hours (3 labours,12 hours/day for 15 days), with associated accommodation costs.

Temporary Water Treatment Plant Operation:

- Operation of the temporary water treatment plant considered for treatment of reclaim water during 6 months per year, over 3 years (treatment required of 531,266 m^3 over 3 years, for 177,089 m^3/year);
- Considered pumping unit cost of $0.07/$m^3$ with diesel pump;
- A lump sum allowance of $150,000 for reagents is provided, based on the costs presented in the ICRP 2014 (Golder, 2014) increased by 50% to account for the type of technology required for treatment;
- For operation, one (1) skilled labour considered for 12 hours/day during 6 months per year over 3 years;
- Annual plant servicing provided by two (2) manufacturer consultants for a 7 days site visit per year (168h) over 3 years, with associated travel allowance costs.

3.3.7 Interim Care and Maintenance

Interim care and maintenance is considered in this cost estimate as this is a requirement from INAC. The estimate is based on a 3 years period and includes the annual water treatment operation cost and annual surveillance, surveillance and monitoring costs (active closure), presented in the “Post-Closure Monitoring and Maintenance”, in Section 3.4.2.

- The annual operational cost for the interim water treatment is estimated at $336,968;
- The annual cost related maintenance, surveillance, monitoring and inspection of the active closure period is estimated at $282,600 (as presented in the” Post Closure Monitoring and Maintenance”);
- The total cost for 3 years of care and maintenance is evaluated at $1,858,705.

3.4 Indirect Costs

The indirect costs include the cost related to post-closure monitoring and maintenance, mobilization and demobilization, as well as some cost factors such as contingency, engineering, project management, health and safety/QA-QC/engagement costs, bonding/insurance and contingency.

3.4.1 Mobilization/Demobilization

During the active closure stage, mobilization costs have been accounted for by allowing costs for mobilization and demobilization of equipment from Baker Lake, the mobilization of workers to perform the closure work, in addition to one barge trip into and out of Baker Lake exclusively for Meadowbank closure.

- Mobilization and demobilization of heavy mobile equipment for demolition is based on a distance of 110km along the AWAR from Baker Lake to Meadowbank;
- A seasonal work force of 50 workers over 3 years (2022 to 2024) for a 6 months per year demolition/rehabilitation seasons is considered, with associated accommodation and transportation costs (4 trips per year at $2,500 both ways, with 6 hours paid per trip);
- Lump sum for one barge trip into and out of Baker Lake of $1,000,000 is considered.

3.4.2 Post-Closure

The post-closure costs are separated in two (2) main periods; the active closure/closure from 2022 to 2030 (9 years) and the post-closure from 2031 to 2041 (11 years). The costs related to site monitoring/inspection and maintenance/surveillance are presented below.

The annual operation cost of the interim water treatment plan is not included in the post-closure costs as it is already accounted for in “Interim care and maintenance” for the required period of 3 years.

Monitoring and Inspection Active Closure/Closure (2022 to 2030):

- An annual lump sum of $100,000 for general monitoring programs (i.e. aquatic, wildlife, air quality, noise monitoring program) is considered;
- One annual geotechnical inspection if planned per year for $20,800—one week visit by one engineer, 7 days, 12h per day at $150/hour, plus $5,000 of reporting and associated travel and accommodation fees;
- A lump sum of $10,000 for groundwater monitoring;
- A lump sum of $15,500 of regulatory fees including annual reporting, management plans and progress reports;
- An estimated annual cost of $73,100 for the water quality monitoring on site, based on operational laboratory costs and the Meadowbank Water License 2 AM-MEA1525 requirements (Schedule 1, Table 2), as presented in Table 4.

Monitoring and Inspection Post-Closure (2031 to 2041):

- A lump sum of $100,000 every 2 years for general monitoring programs (i.e. aquatic, wildlife, air quality, noise monitoring program) is considered;

- One annual geotechnical inspection if planned per year for $20,800—one week visit of one engineer, 7 days, 12h per day at $150/hour, plus $5,000 of reporting and associated travel and accommodation fees);
- A lump sum of $10,000 for groundwater monitoring;
- A lump sum of $15,500 of regulatory fees including annual reporting, management plans and progress reports;
- An estimated annual cost of $49,432 for the water quality monitoring on site, based on operational laboratory costs and the Meadowbank Water License 2 AM-MEA1525 requirements (Schedule 1, Table 2), as presented in Table 4.

Maintenance and Surveillance:

- Two (2) site caretakers provided with biweekly overnight visits, 12 hours per day, 5 months of the year, along with annual allowances for a site vehicle and equipment ($20,000) and site maintenance ($10,000).

The discount rate for calculation of net present value of post-closure cost is considered at 3%.

3.4.3 Other Indirect Costs

Other indirect costs are calculated based on the direct costs total. The percentage for each indirect cost is automatically imposed by the RECLAIM model.

- Project management and engineering fees are assumed at 5% each of the direct closure costs;
- Health and safety plans/monitoring, QA&QC and engagement costs (communication with stakeholders from the community) are assumed as 2% of the direct closure costs;
- Bonding/insurance fees are assumed as 1% of the direct closure costs;
- Finally, due to the current level of engineering and uncertainties, a contingency of 15% of the direct closure costs has been provided for.

3.5 Comparison with 2014 Estimate

Table 5 lists the key differences between this cost estimate and the cost estimate prepared in the 2014 ICRP (Golder, 2014).

4.0 REFERENCES

Agnico Eagle. 2013. Hazardous Materials Management, Meadowbank Mine Site & Baker Lake Facilities, v3. Prepared by Agnico Eagle Mines Limited, Meadowbank Division.

Agnico Eagle 2017. Landfarm Design and Management Plan, version 4, Agnico-Eagle Mines, March 2017.

Agnico Eagle 2018. MEADOWBANK GOLD PROJECT 2017 Annual Report, May 2018.

Guidelines for Closure and Reclamation Cost Estimates for Mines. 2017. Indigenous and Northern Affairs Canada, Mackenzie Valley Land and Water Board, Government of the Northwest Territories. November, 2017.

Golder, 2014. Interim Closure and Reclamation Plan. Report No. 13-1151-0131 to Agnico Eagle Mines Ltd. January 2014. 115 p.

Golder, 2016. Whale Tail Interim Closure and Reclamation Plan. Report No. 1,541,520. Report to Agnico Eagle Mines Ltd. June 2016.

MBK Site map FEB 2018 for NI43101.dwg provided by Agnico Eagle, April 26, 2018.

Agnico Eagle. 2018 Water Balance (Excel Table).

SNC·LAVALIN

Table 2 Buildings List and Dimensions

Building/Infrastructure	Footprint (m^2)	Stories (3 m Height)	Total Demolition Volume Scaled for Height (m^3)	Concrete Foundation Area (m^2)
Meadowbank				
Mill	7,560	5	37,800	4,560
Leech Tanks (10)	2,500	5	12,500	2,500
Primary and Secondary Crusher	246	3	740	246
Pebble Crusher	325	2	650	325
Conveyors	975	2	1,950	
Assay Lab	440	1	440	
Accommodation Complex (Inc. Nova Camp)	11,744	1	11,744	
Kitchen and Cafeteria	2,630	2	5,259	
Services Building	3,270	4	13,080	3,270
Site Services Building	500	1	500	3,270
Dome Warehouse	1,427	2	2,854	
Ore Dome	3,000	7	21,000	
Power Plant	2,485	3	7,455	
Cat Warehouse	1,345	2	2,690	
Toromont Facilities	925	1	925	
Fountain Tire	330	1	330	
White Coverall	1,395	2	2,790	
Batch Plant	1,050	2	2,100	
Environmental Office	140	1	140	
Dike Dewatering Shop	755	1	755	
Incinerator	280	1	280	
Talbon Shop	235	1	235	

SNC·LAVALIN

Table 2 Buildings List and Dimensions (cont.)

Building/Infrastructure	Footprint (m^2)	Stories (3 m height)	Total Demolition Volume Scaled for Height (m^3)	Concrete Foundation Area (m^2)
Blue Coverall	354	2	710	
Gate House	100	1	100	
Fuel Dispensing Station	165	1	165	
Emulsion Plant	1,000	2	2,000	
5.6 ML Bulk Fuel Tank	955	2	1,910	
Airstrip	41,000			
Access roads (~10 m x 12 km)	120,000			
Haul roads (~25 m x 14.5 km)	363,000			
Portage/Goose Disturbed Area	406,000			
Vault Disturbed Area	65,000			
Sea cans (each)	1,432			
Baker Lake				
10 ML Bulk Fuel Tanks (6 tanks)	5,295	4	21,180	6,095
100,000 L Jet Fuel Tanks (18 tanks)	720	1	720	
Scarify laydown areas	500,000			
AWAR				
Road surface (8 m x 105 km)	840,000			
Remove culverts (each)	34			
Remove bridge (each)	11			
Reclaim quarries (m^3)	14,319			

Source: Modified from Golder 2014, Operational data from Agnico Eagle.

SNC·LAVALIN

Table 3 Mill and Water Treatment Reagent Consumption

Assuming 5% of annual consumption	Annual usage (t)	5% assumed at closure (t)
Activated Carbon	140	7
Anti-Scalant	10	0.5
Borax	22	1.1
Silica	11	0.55
Calcium Oxide (Quicklime)	3150	157.5
Calcium Peroxide	1	0.05
Copper Sulfate	585	29.25
Flocculant	120	6
Hydrochloric Acid	75	3.75
Hydrochloric Acid[1]	1825 gallons	0.35
Hydrogen Peroxide	1	0.05
Lead Acid Batteries	24	1.2
Nitric Acid	18	0.9
Paints[1]	100 gallons	0.02
Sodium Cyanide	1540	77
Sodium Hydroxide	8	0.4
	Total	**286**

Source: ICRP 2014 (Golder, 2014), verified with Hazardous Materials Management Plan (Agnico Eagle, 2013).

SNC·LAVALIN

Table 4 Water Quality Monitoring Estimated Costs

Station	Closure	Post-Closure
	Cost $/Year	Cost $/Year
Drinking water	$ 3,120	$ 3,120
EEM2 a	$ 508	$ 508
EEM3 a	$ 508	$ 508
EEM2 b	$ 7,748	$ 7,748
EEM2c (TPN/Wally Lake)	$ 3,136	$ 3,136
EEM3c (SPL)	$ 1,568	$ 1,568
Incinerator ash	$ 400	$ —
ST-37	$ 324	$ —
ST-5	$ 1,875	$ 1,875
ST-6	$ 1,875	$ 1,875
ST-8	$ 162	$ 162
ST-20 Pit Lake	$ 3,279	$ 3,279
ST-24	$ 1,527	$ 1,527
ST-40.1 ST- 40.2 ST-38	$ 1,458	$ —
ST-MMER 3a	$ 15,548	$ 15,548
ST-MMER 3b	$ 4,518	$ 4,518
STP	$ 5 616	$ -
ST-S- 2	$ 1,527	$ —
ST-S-5	$ 4,242	$ —
ST-16	$ 4,242	$ —
Mill Seepage	$ 4,242	
WEP	$ 1,527	$ —
Ground water	$ 4,060	$ 4,060
Total	**$ 73,010**	**$ 49,432**

Based on operational laboratory costs and the Meadowbank Water License 2 AM-MEA1525 requirements (Schedule 1, Table 2).

SNC·LAVALIN

Table 5 Comparison between 2014 and 2018 ICRP Cost Estimate

Component Group	ICRP 2018 - Cost Estimate ($)	ICRP 2014 (Golder, 2014) - Cost Estimate ($)	Differences between 2018 and 2014 estimates ($)	Main Difference Explanations between 2018 and 2014 estimates
Open pit	$6,480	$5,400	$1,080	
Portage	*$3,240*	*$2,700*	*$540*	Length of safety berms reviewed in 2018 and berms included for Vault and Phaser.
Goose	*$1,080*	*$2,700*	*-$1,620*	
Vault	*$1,080*	*$0*	*$1,080*	
Phaser	*$1,080*	*$0*	*$1,080*	
Underground Mine	$0	$0	$0	
Tailings Facility	$34,873,338	$38,716,200	-$3,842,862	Current TSF configuration and tailings elevation considered in 2018. For the North Cell, integration of the Internal Structure and progressive reclamation from 2015 to 2017 (750,743 m3) on the NPAG cover construction considered with the preliminary cover design including landforms. For the South Cell, preliminary cover design including landforms considered and adjusted for the maximum tailings elevation. Water management structures and SD3 reconnection from preliminary cover design considered in 2018. Removal costs for tailings pipes and booster pump reviewed in 2018. Instrumentation installation and maintenance for closure included in 2018.
Rock Pile	$2,737,534	$6,004,827	-$3,267,293	
Portage	*$2,707,534*	*$6,004,827*	*-$3,297,293*	Considered in 2018 that 84% of the RSF PAG area have been covered in progressive reclamation with 4.0m of NPAG material between 2011 and 2017 (2,700,000 m^3) and subtracted from the total cover required. Cover for Portage RSF sumps reviewed in 2018. Instrumentation installation and maintenance for closure included in 2018.
Vault	*$30,000*	*$0*	*$30,000*	Instrumentation installation and maintenance for closure included in 2018.
Buildings and Equipment	$10,659,256	$10,574,770	$84,486	
Meadowbank	*$8,005,508*	*$7,919,428*	*$86,080*	The airstrip area was increased in 2018 by 6,000m² due to the extension completed in 2013. The site road area was increased in 2018 by 20,000m² due to additional access roads built estimated at 2.0 km. The number of containers remaining on site after closure is estimated at 1400 containers in 2018.
Baker Lake	*$1,660,670*	*$1,664,270*	*-$3,600*	A total of 18 Jet-A Fuel tanks at Baker Lake is considered in 2018 instead of 20 tanks.
AWAR	*$993,078*	*$991,072*	*$2,006*	Lump sum allowances of 4,000$ (instead of 10,000$ in 2014) per culvert removal and $25,000 per bridge removal is considered in 2018. A total of 38 culverts and 9 bridges are considered for the AWAR in 2018, compared to 15 culverts and 9 bridges in 2014.
Chemicals and Contaminated Soil Management	$1,316,981	$1,208,184	$108,797	Building decontamination was considered for some infrastructures in 2018. Hazmat costs reviewed in 2018, no waste oil considered. Contaminated soil increased in 2018 (1245 m^3 additional), including an allowance for heavily contaminated soil.
Surface and Groundwater Management	$6,430,945	$5,198,311	$1,232,634	Pits flooding volumes adjusted (decreased compared to 2014) with water balance in 2018. Dike reconnection preliminary design quantities considered in 2018. Cost for WTP construction and operation increased in 2018 due to the type of technology that may be required for treatment of reclaim water prior to transfer in the pits.
Interim Care and Maintenance	$1,858,705	$0	$1,858,705	Interim care and maintenance considered in 2018, as this is a requirement from INAC. Cost estimate based on annual water treatment cost and annual surveillance and monitoring (active closure), for a 3 years period.
Subtotal Direct Costs	**$57,883,238**	**$61,707,692**	**-$3,824,454**	

SNC·LAVALIN

Table 5 Comparison between 2014 and 2018 ICRP Cost Estimate (cont.)

Component Group	ICRP 2018 - Cost Estimate ($)	ICRP 2014 (Golder, 2014) - Cost Estimate ($)	Differences between 2018 and 2014 estimate ($)	Main Difference Explanations
Mobilization/Demobilization	$5,345,830	$4,762,500	$583,330	Mobilization and demobilization of equipment from Baker Lake considered in 2018. Cost of barge increased in 2018.
Post-Closure Monitoring and Maintenance	$4,133,524	$2,972,373	$1,161,151	In 2018, 2 main periods considered for monitoring from 2022 to 2030 and from 2031 to 2041. Cost for general monitoring programs included in 2018 - annually in closure and every 2 years post-closure. Cost for geotechnical inspection reviewed in 2018. Cost for water quality monitoring reviewed in 2018.
Engineering (5%)	$2,894,162	$3,085,385	-$191,223	Adjusted with direct costs in 2018.
Project Management (5%)	$2,894,162	$3,085,385	-$191,223	Adjusted with direct costs in 2018.
Health and Safety Plans/Monitoring, QA/QC and Engagement Costs (2%)	$1,157,665	$0	$1,157,665	Not considered in 2014, 2% of direct costs considered in 2018, including engagement costs with stakeholders.
Bonding/Insurance (1%)	$578,832	$0	$578,832	Not considered in 2014, 1% of direct costs considered in 2018.
Contingency (15%)	$8,682,486	$9,256,154	-$573,668	Considered 15% of direct costs in 2014 and 2018. Adjusted with direct costs in 2018.
Market Price Factor Adjustment (0%)	$0	$0	$0	No change.
Subtotal Indirect Costs	**$25,686,660**	**$23,161,796**	**$2,524,865**	
GRAND TOTAL	**$83,569,898**	**$84,869,488**	**-$1,299,590**	

SNC·LAVALIN

Appendix A—RECLAIM 7.0 Spreadsheets

SUMMARY OF COSTS

CAPITAL COSTS	COMPONENT NAME	COST	LAND LIABILITY	WATER LIABILITY
OPEN PIT	Portage	$3 240	$1 620	$1 620
	Goose	$1 080	$540	$540
	Vault	$1 080	$540	$540
	Phaser	$1 080	$540	$540
UNDERGROUND MINE		$0	$0	$0
TAILINGS FACILITY		$34 873 338	$17 436 669	$17 436 669
ROCK PILE	Portage	$2 707 534	$1 353 767	$1 353 767
	Vault	$30 000	$15 000	$15 000
BUILDINGS AND EQUIPMENT	Meadowbank	$8 005 508	$4 002 754	$4 002 754
	Baker Lake	$1 660 670	$830 335	$830 335
	AWAR	$993 078	$496 539	$496 539
CHEMICALS AND CONTAMINATED SOIL MANAGEMENT		$1 316 981	$658 491	$658 491
SURFACE AND GROUNDWATER MANAGEMENT		$6 430 945	-	$6 430 945
INTERIM CARE AND MAINTENANCE		$1 858 705	-	$1 858 705
	SUBTOTAL: Capital Costs	**$57 883 238**	**$24 796 794**	**$33 086 444**
	PERCENT OF SUBTOTAL		**43%**	**57%**

INDIRECT COSTS		COST	LAND LIABILITY	WATER LIABILITY
MOBILIZATION/DEMOBILIZATION		$5 345 830	$2 290 118	$3 055 712
POST-CLOSURE MONITORING AND MAINTENANCE		$4 133 524	$1 770 774	$2 362 750
ENGINEERING	5%	$2 894 162	$1 239 840	$1 654 322
PROJECT MANAGEMENT	5%	$2 894 162	$1 239 840	$1 654 322
HEALTH AND SAFETY PLANS/MONITORING, QA/QC & ENGAGEMENT COSTS	2%	$1 157 665	$495 936	$661 729
BONDING/INSURANCE	1%	$578 832	$247 968	$330 864
CONTINGENCY	15%	$8 682 486	$3 719 519	$4 962 967
MARKET PRICE FACTOR ADJUSTMENT	0%	$0	$0	$0
	SUBTOTAL: Indirect Costs	**$25 686 660**	**$11 003 994**	**$14 682 666**

TOTAL COSTS	**$83 569 898**	**$35 800 789**	**$47 769 110**

4 **Open Pit Name:** **Portage** **Pit # 1**

ACTIVITY/MATERIAL	Notes	Units	Quantity	Cost Code	Unit Cost	Cost	% Land	Land Cost	Water Cost
CONTROL ACCESS									
Fence		m		#N/A	$0,00	$0		$0	$0
Signs		each		#N/A	$0,00	$0		$0	$0
Berm at crest and rock barricade at ramp		m3	1350	DRH	$2,40	$3 240	50%	$1 620	$1 620
Block roads		m3							
Other				#N/A	$0,00	$0		$0	$0
STABILITY STUDY									
Conduct stability and setback study		allow		#N/A	$0,00	$0		$0	$0
STABILIZE SLOPES									
Off-load crest, soil A		m3		#N/A	$0,00	$0		$0	$0
Off-load crest, soil B		m3		#N/A	$0,00	$0		$0	$0
Doze/trim overburden at crest		m3		#N/A	$0,00	$0		$0	$0
Drill & blast pit crest		m3		#N/A	$0,00	$0		$0	$0
Buttress slope		m3		#N/A	$0,00	$0		$0	$0
Other				#N/A	$0,00	$0		$0	$0
COVER/CONTOUR SLOPES									
Place fill, soil A		m3		#N/A	$0,00	$0		$0	$0
Place fill, soil B		m3		#N/A	$0,00	$0		$0	$0
Rip rap		m3		#N/A	$0,00	$0		$0	$0
Vegetate slopes		ha		#N/A	$0,00	$0		$0	$0
Vegetate pit floor		ha		#N/A	$0,00	$0		$0	$0
Other				#N/A	$0,00	$0		$0	$0
CONSTRUCT DIVERSION DITCHES									
Excavate ditches -soil		m3		#N/A	$0,00	$0		$0	$0
Excavate ditches -rock		m3		#N/A	$0,00	$0		$0	$0
Rip rap in channel base		m3		#N/A	$0,00	$0		$0	$0
CONSTRUCT SPILLWAY									
Excavate channel		m3		#N/A	$0,00	$0		$0	$0
Concrete		m3		#N/A	$0,00	$0		$0	$0
Rip rap		m3		#N/A	$0,00	$0		$0	$0
Other				#N/A	$0,00	$0		$0	$0
RECLAIM QUARRIES									
Contour slopes		m3		#N/A	$0,00	$0		$0	$0
Place overburden		m3		#N/A	$0,00	$0		$0	$0
Vegetate		m3		#N/A	$0,00	$0		$0	$0
FLOOD PIT-Captital									
Remove stationary equipment (sump pumps)		each		#N/A	$0,00	$0		$0	$0
Remove dewatering pipeline		m		#N/A	$0,00	$0		$0	$0
Remove power lines		each		#N/A	$0,00	$0		$0	$0
Construct diversion ditches		m3		#N/A	$0,00	$0		$0	$0
-Ditch, mat'l A		m3		#N/A	$0,00	$0		$0	$0
-Ditch, mat'l B		m3		#N/A	$0,00	$0		$0	$0
Construct embankment/dam		m3		#N/A	$0,00	$0		$0	$0
Supply/install pump station		each		#N/A	$0,00	$0		$0	$0
Supply/install piping system		m		#N/A	$0,00	$0		$0	$0
Remove pump post-closure		each		#N/A	$0,00	$0		$0	$0
Remove pipeline post-closure		m		#N/A	$0,00	$0		$0	$0
FLOOD PIT-Annual Cost									
Operate pumps (power)		m3		#N/A	$0,00	$0		$0	$0
Maintain pump/pipeline		allow		#N/A	$0,00	$0		$0	$0
Labour:fuel management, comissioning/decom		$/h		#N/A	$0,00	$0		$0	$0
Chemical addition, _____ kg/m3 of water		tonne		#N/A	$0,00	$0		$0	$0
Chemicals, purchase and shipping		tonne		#N/A	$0,00	$0		$0	$0
Passive/biological additives		$/ha		#N/A	$0,00	$0		$0	$0
Passive additives purchase and shipping		tonne		#N/A	$0,00	$0		$0	$0
Other				#N/A	$0,00	$0		$0	$0
				Annual pumping costs		$0			
Number of years of pump flooding		years							
				Total pumping costs		$0		$0	$0
					Total	$3 240		$1 620	$1 620
					% of Total			50%	50%

Open Pit Name: **Goose** **Pit # 2**

ACTIVITY/MATERIAL	Notes	Units	Quantity	Cost Code	Unit Cost	Cost	% Land	Land Cost	Water Cost
CONTROL ACCESS									
Fence		m		#N/A	$0,00	$0		$0	$0
Signs		each		#N/A	$0,00	$0		$0	$0
Berm at crest and Rock barricade at ramp		m3	450	DRH	$2,40	$1 080	50%	$540	$540
Block roads		m3							
Other				#N/A	$0,00	$0		$0	$0
STABILITY STUDY									
Conduct stability and setback study		allow		#N/A	$0,00	$0		$0	$0
STABILIZE SLOPES									
Off-load crest, soil A		m3		#N/A	$0,00	$0		$0	$0
Off-load crest, soil B		m3		#N/A	$0,00	$0		$0	$0
Doze/trim overburden at crest		m3		#N/A	$0,00	$0		$0	$0
Drill & blast pit crest		m3		#N/A	$0,00	$0		$0	$0
Buttress slope		m3		#N/A	$0,00	$0		$0	$0
Other				#N/A	$0,00	$0		$0	$0
COVER/CONTOUR SLOPES									
Place fill, soil A		m3		#N/A	$0,00	$0		$0	$0
Place fill, soil B		m3		#N/A	$0,00	$0		$0	$0
Rip rap		m3		#N/A	$0,00	$0		$0	$0
Vegetate slopes		ha		#N/A	$0,00	$0		$0	$0
Vegetate pit floor		ha		#N/A	$0,00	$0		$0	$0
Other				#N/A	$0,00	$0		$0	$0
CONSTRUCT DIVERSION DITCHES									
Excavate ditches -soil		m3		#N/A	$0,00	$0		$0	$0
Excavate ditches -rock		m3		#N/A	$0,00	$0		$0	$0
Rip rap in channel base		m3		#N/A	$0,00	$0		$0	$0
CONSTRUCT SPILLWAY									
Excavate channel		m3		#N/A	$0,00	$0		$0	$0
Concrete		m3		#N/A	$0,00	$0		$0	$0
Rip rap		m3		#N/A	$0,00	$0		$0	$0
Other				#N/A	$0,00	$0		$0	$0
RECLAIM QUARRIES									
Contour slopes		m3		#N/A	$0,00	$0		$0	$0
Place overburden		m3		#N/A	$0,00	$0		$0	$0
Vegetate		m3		#N/A	$0,00	$0		$0	$0
FLOOD PIT-Captital									
Remove stationary equipment (sump pumps)		each		#N/A	$0,00	$0		$0	$0
Remove dewatering pipeline		m		#N/A	$0,00	$0		$0	$0
Remove power lines		each		#N/A	$0,00	$0		$0	$0
Construct diversion ditches		m3		#N/A	$0,00	$0		$0	$0
-Ditch, mat'l A		m3		#N/A	$0,00	$0		$0	$0
-Ditch, mat'l B		m3		#N/A	$0,00	$0		$0	$0
Construct embankment/dam		m3		#N/A	$0,00	$0		$0	$0
Supply/install pump station		each		#N/A	$0,00	$0		$0	$0
Supply/install piping system		m		#N/A	$0,00	$0		$0	$0
Remove pump post-closure		each		#N/A	$0,00	$0		$0	$0
Remove pipeline post-closure		m		#N/A	$0,00	$0		$0	$0
FLOOD PIT-Annual Cost									
Operate pumps (power)		m3		#N/A	$0,00	$0		$0	$0
Maintain pump/pipeline		allow		#N/A	$0,00	$0		$0	$0
Labour:fuel management, comissioning/decom		$/h		#N/A	$0,00	$0		$0	$0
Chemical addition, _____ kg/m3 of water		tonne		#N/A	$0,00	$0		$0	$0
Chemicals, purchase and shipping		tonne		#N/A	$0,00	$0		$0	$0
Passive/biological additives		$/ha		#N/A	$0,00	$0		$0	$0
Passive additives purchase and shipping		tonne		#N/A	$0,00	$0		$0	$0
Other				#N/A	$0,00	$0		$0	$0
				Annual pumping costs		$0			
Number of years of pump flooding		years							
				Total pumping costs		$0		$0	$0
					Total	$1 080		$540	$540
					% of Total			50%	50%

Open Pit Name: **Vault** **Pit # 3**

ACTIVITY/MATERIAL	Notes	Units	Quantity	Cost Code	Unit Cost	Cost	% Land	Land Cost	Water Cost
CONTROL ACCESS									
Fence		m		#N/A	$0,00	$0		$0	$0
Signs		each		#N/A	$0,00	$0		$0	$0
Berm at crest and Rock barricade at ramp		m3	450	DRH	$2,40	$1 080	50%	$540	$540
Block roads		m3							
Other				#N/A	$0,00	$0		$0	$0
STABILITY STUDY									
Conduct stability and setback study		allow		#N/A	$0,00	$0		$0	$0
STABILIZE SLOPES									
Off-load crest, soil A		m3		#N/A	$0,00	$0		$0	$0
Off-load crest, soil B		m3		#N/A	$0,00	$0		$0	$0
Doze/trim overburden at crest		m3		#N/A	$0,00	$0		$0	$0
Drill & blast pit crest		m3		#N/A	$0,00	$0		$0	$0
Buttress slope		m3		#N/A	$0,00	$0		$0	$0
Other				#N/A	$0,00	$0		$0	$0
COVER/CONTOUR SLOPES									
Place fill, soil A		m3		#N/A	$0,00	$0		$0	$0
Place fill, soil B		m3		#N/A	$0,00	$0		$0	$0
Rip rap		m3		#N/A	$0,00	$0		$0	$0
Vegetate slopes		ha		#N/A	$0,00	$0		$0	$0
Vegetate pit floor		ha		#N/A	$0,00	$0		$0	$0
Other				#N/A	$0,00	$0		$0	$0
CONSTRUCT DIVERSION DITCHES									
Excavate ditches -soil		m3		#N/A	$0,00	$0		$0	$0
Excavate ditches -rock		m3		#N/A	$0,00	$0		$0	$0
Rip rap in channel base		m3		#N/A	$0,00	$0		$0	$0
CONSTRUCT SPILLWAY									
Excavate channel		m3		#N/A	$0,00	$0		$0	$0
Concrete		m3		#N/A	$0,00	$0		$0	$0
Rip rap		m3		#N/A	$0,00	$0		$0	$0
Other				#N/A	$0,00	$0		$0	$0
RECLAIM QUARRIES									
Contour slopes		m3		#N/A	$0,00	$0		$0	$0
Place overburden		m3		#N/A	$0,00	$0		$0	$0
Vegetate		m3		#N/A	$0,00	$0		$0	$0
FLOOD PIT-Captital									
Remove stationary equipment (sump pumps)		each		#N/A	$0,00	$0		$0	$0
Remove dewatering pipeline		m		#N/A	$0,00	$0		$0	$0
Remove power lines		each		#N/A	$0,00	$0		$0	$0
Construct diversion ditches		m3		#N/A	$0,00	$0		$0	$0
-Ditch, mat'l A		m3		#N/A	$0,00	$0		$0	$0
-Ditch, mat'l B		m3		#N/A	$0,00	$0		$0	$0
Construct embankment/dam		m3		#N/A	$0,00	$0		$0	$0
Supply/install pump station		each		#N/A	$0,00	$0		$0	$0
Supply/install piping system		m		#N/A	$0,00	$0		$0	$0
Remove pump post-closure		each		#N/A	$0,00	$0		$0	$0
Remove pipeline post-closure		m		#N/A	$0,00	$0		$0	$0
FLOOD PIT-Annual Cost									
Operate pumps (power)		m3		#N/A	$0,00	$0		$0	$0
Maintain pump/pipeline		allow		#N/A	$0,00	$0		$0	$0
Labour:fuel management, comissioning/decom		$/h		#N/A	$0,00	$0		$0	$0
Chemical addition, _____ kg/m3 of water		tonne		#N/A	$0,00	$0		$0	$0
Chemicals, purchase and shipping		tonne		#N/A	$0,00	$0		$0	$0
Passive/biological additives		$/ha		#N/A	$0,00	$0		$0	$0
Passive additives purchase and shipping		tonne		#N/A	$0,00	$0		$0	$0
Other				#N/A	$0,00	$0		$0	$0
				Annual pumping costs		$0			
Number of years of pump flooding		years							
				Total pumping costs		$0		$0	$0
					Total	$1 080		$540	$540
					% of Total			50%	50%

Open Pit Name: **Phaser** **Pit # 4**

ACTIVITY/MATERIAL	Notes	Units	Quantity	Cost Code	Unit Cost	Cost	% Land	Land Cost	Water Cost
CONTROL ACCESS									
Fence		m		#N/A	$0,00	$0		$0	$0
Signs		each		#N/A	$0,00	$0		$0	$0
Berm at crest and rock barricade at ramp		m3	450	DRH	$2,40	$1 080	50%	$540	$540
Block roads		m3							
Other				#N/A	$0,00	$0		$0	$0
STABILITY STUDY									
Conduct stability and setback study		allow		#N/A	$0,00	$0		$0	$0
STABILIZE SLOPES									
Off-load crest, soil A		m3		#N/A	$0,00	$0		$0	$0
Off-load crest, soil B		m3		#N/A	$0,00	$0		$0	$0
Doze/trim overburden at crest		m3		#N/A	$0,00	$0		$0	$0
Drill & blast pit crest		m3		#N/A	$0,00	$0		$0	$0
Buttress slope		m3		#N/A	$0,00	$0		$0	$0
Other				#N/A	$0,00	$0		$0	$0
COVER/CONTOUR SLOPES									
Place fill, soil A		m3		#N/A	$0,00	$0		$0	$0
Place fill, soil B		m3		#N/A	$0,00	$0		$0	$0
Rip rap		m3		#N/A	$0,00	$0		$0	$0
Vegetate slopes		ha		#N/A	$0,00	$0		$0	$0
Vegetate pit floor		ha		#N/A	$0,00	$0		$0	$0
Other				#N/A	$0,00	$0		$0	$0
CONSTRUCT DIVERSION DITCHES									
Excavate ditches -soil		m3		#N/A	$0,00	$0		$0	$0
Excavate ditches -rock		m3		#N/A	$0,00	$0		$0	$0
Rip rap in channel base		m3		#N/A	$0,00	$0		$0	$0
CONSTRUCT SPILLWAY									
Excavate channel		m3		#N/A	$0,00	$0		$0	$0
Concrete		m3		#N/A	$0,00	$0		$0	$0
Rip rap		m3		#N/A	$0,00	$0		$0	$0
Other				#N/A	$0,00	$0		$0	$0
RECLAIM QUARRIES									
Contour slopes		m3		#N/A	$0,00	$0		$0	$0
Place overburden		m3		#N/A	$0,00	$0		$0	$0
Vegetate		m3		#N/A	$0,00	$0		$0	$0
FLOOD PIT-Captital									
Remove stationary equipment (sump pumps)		each		#N/A	$0,00	$0		$0	$0
Remove dewatering pipeline		m		#N/A	$0,00	$0		$0	$0
Remove power lines		each		#N/A	$0,00	$0		$0	$0
Construct diversion ditches		m3		#N/A	$0,00	$0		$0	$0
-Ditch, mat'l A		m3		#N/A	$0,00	$0		$0	$0
-Ditch, mat'l B		m3		#N/A	$0,00	$0		$0	$0
Construct embankment/dam		m3		#N/A	$0,00	$0		$0	$0
Supply/install pump station		each		#N/A	$0,00	$0		$0	$0
Supply/install piping system		m		#N/A	$0,00	$0		$0	$0
Remove pump post-closure		each		#N/A	$0,00	$0		$0	$0
Remove pipeline post-closure		m		#N/A	$0,00	$0		$0	$0
FLOOD PIT-Annual Cost									
Operate pumps (power)		m3		#N/A	$0,00	$0		$0	$0
Maintain pump/pipeline		allow		#N/A	$0,00	$0		$0	$0
Labour:fuel management, comissioning/decom		$/h		#N/A	$0,00	$0		$0	$0
Chemical addition, _____ kg/m3 of water		tonne		#N/A	$0,00	$0		$0	$0
Chemicals, purchase and shipping		tonne		#N/A	$0,00	$0		$0	$0
Passive/biological additives		$/ha		#N/A	$0,00	$0		$0	$0
Passive additives purchase and shipping		tonne		#N/A	$0,00	$0		$0	$0
Other				#N/A	$0,00	$0		$0	$0
				Annual pumping costs		$0			
Number of years of pump flooding		years							
				Total pumping costs		$0		$0	$0
					Total	$1 080		$540	$540
					% of Total			50%	50%

1 **Tailings Impoundment Name:** **Pond # 1**

ACTIVITY/MATERIAL	Notes	Units	Quantity	Cost Code	Unit Cost	Cost	% Land	Land Cost	Water Cost
CONTROL ACCESS									
Fence		m		#N/A	$0,00	$0		$0	$0
Signs		each		#N/A	$0,00	$0		$0	$0
Berm		m3		#N/A	$0,00	$0		$0	$0
Block roads		m3		#N/A	$0,00	$0		$0	$0
Other				#N/A	$0,00	$0		$0	$0
STABILIZE EMBANKMENT(S)									
Toe buttress, drainage layer		m3		#N/A	$0,00	$0		$0	$0
Toe buttress, bulk fill		m3		#N/A	$0,00	$0		$0	$0
Rip rap		m3		#N/A	$0,00	$0		$0	$0
Vegetate		ha		#N/A	$0,00	$0		$0	$0
Raise crest		m3		#N/A	$0,00	$0		$0	$0
Flatten slopes		m3		#N/A	$0,00	$0		$0	$0
Other				#N/A	$0,00	$0		$0	$0
COVER TAILINGS - North Cell									
NPAG UM waste rock cover (4 m thick)		m3	3227722	SB3L	$5,10	$16 461 382	50%	$8 230 691	$8 230 691
Grade/shape tailings surface		m3		#N/A	$0,00	$0		$0	$0
Liner bedding		m3		#N/A	$0,00	$0		$0	$0
Subgrade preparation - compact		m2		#N/A	$0,00	$0		$0	$0
Supply geotextile/geosynthetic		m2		#N/A	$0,00	$0		$0	$0
Install geotextile/geosynthetic		m2		#N/A	$0,00	$0		$0	$0
Soil cover		m3		#N/A	$0,00	$0		$0	$0
Rock cover		m3		#N/A	$0,00	$0		$0	$0
Vegetate		m2		#N/A	$0,00	$0		$0	$0
Other				#N/A	$0,00	$0		$0	$0
DITCHES - North Cell									
DITCHES excavate soil		m3	6428	SB2L	$4,60	$29 569	50%	$14 784	$14 784
DITCHES excavate rock		m3	23512	RB2L	$12,05	$283 320	50%	$141 660	$141 660
NPAG waste rockfill		m3	9935	SB4L	$5,50	$54 643	50%	$27 321	$27 321
SEDIMENTATION POND - North Cell									
POND excavate soil		m3	17428	SB2L	$4,60	$80 169	50%	$40 084	$40 084
POND excavate rock		m3	32472	RB2L	$12,05	$391 288	50%	$195 644	$195 644
NPAG waste rockfill		m3	3510	SB4L	$5,50	$19 305	50%	$9 653	$9 653
COVER TAILINGS - South Cell									
NPAG UM waste rock cover (4 m thick)		m3	2783838	SB4L	$5,50	$15 311 109	50%	$7 655 555	$7 655 555
Grade/shape tailings surface		m3		#N/A	$0,00	$0		$0	$0
Liner bedding		m3		#N/A	$0,00	$0		$0	$0
Subgrade preparation - compact		m2		#N/A	$0,00	$0		$0	$0
Supply geotextile/geosynthetic		m2		#N/A	$0,00	$0		$0	$0
Install geotextile/geosynthetic		m2		#N/A	$0,00	$0		$0	$0
Soil cover		m3		#N/A	$0,00	$0		$0	$0
Rock cover		m3		#N/A	$0,00	$0		$0	$0
Vegetate		m2		#N/A	$0,00	$0		$0	$0
Other				#N/A	$0,00	$0		$0	$0
DITCHES - South Cell									
DITCHES excavate soil		m3	20764	SB2L	$4,60	$95 513	50%	$47 756	$47 756
DITCHES excavate rock		m3	31745	RB2L	$12,05	$382 531	50%	$191 265	$191 265
NPAG waste rockfill		m3	25527	SB4L	$5,50	$140 399	50%	$70 199	$70 199
SEDIMENTATION POND - South Cell									
POND excavate soil		m3	36176	SB2L	$4,60	$166 410	50%	$83 205	$83 205
POND excavate rock		m3	74308	RB2L	$12,05	$895 406	50%	$447 703	$447 703
NPAG waste rockfill		m3	5394	SB4L	$5,50	$29 667	50%	$14 833	$14 833
BREACH SADDLE DAM 3									
Excavate Breach Saddle Dam		m3	25000	SB2L	$4,60	$115 000	50%	$57 500	$57 500
Rock placement		m3	9000	SB4H	$11,00	$99 000	50%	$49 500	$49 500
REMOVE TAILINGS DISCHARGE									
Removing Piping		m	11500	PLRL	$22,00	$253 000	50%	$126 500	$126 500
Dismantle Booster Pump		allow	1	OPS	$15 630,00	$15 630	50%	$7 815	$7 815
BURY PAG ROCK									
Relocate PAG rock		m3		#N/A	$0,00	$0		$0	$0
Place cover over PAG rock		m3		#N/A	$0,00	$0		$0	$0
Raise crest of dam		m3		#N/A	$0,00	$0		$0	$0
Other				#N/A	$0,00	$0		$0	$0
STABILIZE DECANT SYSTEM									
Excavate and replace		m3		#N/A	$0,00	$0		$0	$0
Plug/backfill with concrete or clay		m3		#N/A	$0,00	$0		$0	$0
Other				#N/A	$0,00	$0		$0	$0
REMOVE TAILINGS DISCHARGE									
Cyclones		m3		#N/A	$0,00	$0		$0	$0
Pipe		m3		#N/A	$0,00	$0		$0	$0
Remove reclaim barge		allow		#N/A	$0,00	$0		$0	$0
CONSTRUCT DIVERSION DITCHES									
Excavate ditches -soil		m3		#N/A	$0,00	$0		$0	$0
Excavate ditches -rock		m3		#N/A	$0,00	$0		$0	$0
Rip rap in channel base		m3		#N/A	$0,00	$0		$0	$0
FLOOD TAILINGS									
Doze tailings to final contour		m3		#N/A	$0,00	$0		$0	$0
Raise crest of dam		m3		#N/A	$0,00	$0		$0	$0
Other				#N/A	$0,00	$0		$0	$0
UPGRADE SPILLWAY									
Excavate channel, rock		m3		#N/A	$0,00	$0		$0	$0
Excavate channel, soil		m3		#N/A	$0,00	$0		$0	$0
Concrete		m3		#N/A	$0,00	$0		$0	$0
Rip rap		m3		#N/A	$0,00	$0		$0	$0
Other				#N/A	$0,00	$0		$0	$0
CONSTRUCT SEEPAGE COLLECTION POND									
Excavate seepage collection pond		m3		#N/A	$0,00	$0		$0	$0
Doze & spread excavated material		m3		#N/A	$0,00	$0		$0	$0
Vegetate spread material		ha		#N/A	$0,00	$0		$0	$0
Bedding layer		m3		#N/A	$0,00	$0		$0	$0
Supply geomembrane		m2		#N/A	$0,00	$0		$0	$0
Install geomembrane		m2		#N/A	$0,00	$0		$0	$0
Erosion protection layer		m3		#N/A	$0,00	$0		$0	$0
INSTALL GROUNDWATER COLLECTION SYSTEM									
Excavate/install sumps		m3		#N/A	$0,00	$0		$0	$0
Install pumping wells		m3		#N/A	$0,00	$0		$0	$0
Install pumps/pipelines/power supply		LS		#N/A	$0,00	$0		$0	$0
SPECIALIZED ITEMS									
Install permanent instrumentation, supply & technican		each		#N/A	$0,00	$0		$0	$0
Install permanent instrumentation and drilling		each	5	OPS	$10 000,00	$50 000	50%	$25 000	$25 000
TREAT SEEPAGE - see "Water Management" and "Water Treatment"									
TREAT SUPERNATANT									
Pump water (to pit, U/G)		m3		#N/A	$0,00	$0		$0	$0
Equipment maintenance and parts		allow		#N/A	$0,00	$0		$0	$0
Supply reagents		tonne		#N/A	$0,00	$0		$0	$0
					Annual treatment costs	$0			
Number of years of treatment		years							
					Total treatment costs	$0			$0
					Total	$34 873 338		$17 436 669	$17 436 669
					% of Total			50%	50%

* for construction of passive treatment system refer to "Water Management"

2 **Rock Pile Name:** **Portage**

ACTIVITY/MATERIAL	Notes	Units	Quantity	Cost Code	Unit Cost	Cost	% Land	Land Cost	Water Cost
STABILIZE SLOPES									
Flatten slopes with dozer		m3		#N/A	$0,00	$0		$0	$0
Flatten "bubble dump" areas		m3		#N/A	$0,00	$0		$0	$0
Divert runon, ditch mat'l A		m3		#N/A	$0,00	$0		$0	$0
Divert runon, ditch mat'l B		m3		#N/A	$0,00	$0		$0	$0
Toe buttress, drain mat'l		m3		#N/A	$0,00	$0		$0	$0
Toe buttress, fill mat'l A		m3		#N/A	$0,00	$0		$0	$0
Toe buttress, fill mat'l B		m3		#N/A	$0,00	$0		$0	$0
Other				#N/A	$0,00	$0		$0	$0
COVER ROCK PILE									
NPAG UM waste rock cover (4 m thick)		m3	514285	SB3L	$5,10	$2 622 854	50%	$1 311 427	$1 311 427
Subgrade preparation - doze surface		m3		#N/A	$0,00	$0		$0	$0
Soil cover - excavate,haul,spread&compact		m3		#N/A	$0,00	$0		$0	$0
Rock cover - excavate,haul & spread		m3		#N/A	$0,00	$0		$0	$0
Excavate downslope drainage channel & chute		m3		#N/A	$0,00	$0		$0	$0
Rip rap drainage channel and chute		m3		#N/A	$0,00	$0		$0	$0
Vegetate		ha		#N/A	$0,00	$0		$0	$0
Other				#N/A	$0,00	$0		$0	$0
COVER SUMPS									
NPAG UM waste rock cover (4 m thick)		m3	6800	SB3L	$5,10	$34 680	50%	$17 340	$17 340
Other				#N/A	$0,00	$0		$0	$0
VERY LOW PERMEABILITY COVER (in addition to above)									
Liner subgrade preparation - compact		m2		#N/A	$0,00	$0		$0	$0
Supply geomembrame		m2		#N/A	$0,00	$0		$0	$0
Install geomembrane		m2		#N/A	$0,00	$0		$0	$0
Protective cover - excavate,haul,spread&compact		m3		#N/A	$0,00	$0		$0	$0
Vegetate		ha		#N/A	$0,00	$0		$0	$0
Install infiltration/seepage instrumentation		allow		#N/A	$0,00	$0		$0	$0
CONSTRUCT DIVERSION DITCHES									
Excavate ditches -soil		m3		#N/A	$0,00	$0		$0	$0
Excavate ditches -rock		m3		#N/A	$0,00	$0		$0	$0
Rip rap in channel base		m3		#N/A	$0,00	$0		$0	$0
CONSTRUCT SEEPAGE COLLECTION POND									
Excavate seepage collection pond		m3		#N/A	$0,00	$0		$0	$0
Doze & spread excavated material		m3		#N/A	$0,00	$0		$0	$0
Vegetate spread material		ha		#N/A	$0,00	$0		$0	$0
Bedding layer		m3		#N/A	$0,00	$0		$0	$0
Supply geomembrane		m2		#N/A	$0,00	$0		$0	$0
Install geomembrane		m2		#N/A	$0,00	$0		$0	$0
Erosion protection layer		m3							
INSTALL GROUNDWATER COLLECTION SYSTEM									
Excavate/install sumps		m3		#N/A	$0,00	$0		$0	$0
Install pumping wells		m3		#N/A	$0,00	$0		$0	$0
Install pumps/pipelines/power supply		allow		#N/A	$0,00	$0		$0	$0
RELOCATE DUMPS									
Load, haul, dump or doze		m3		#N/A	$0,00	$0		$0	$0
Add lime		tonne		#N/A	$0,00	$0		$0	$0
Contour reclaimed area		ha		#N/A	$0,00	$0		$0	$0
Other				#N/A	$0,00	$0		$0	$0
SPECIALIZED ITEMS									
Install permanent instrumentation		each	5	OPS	$10 000,00	$50 000	50%	$25 000	$25 000
Install permanent instrumentation, drilling		each		#N/A	$0,00	$0		$0	$0
TREAT ROCK PILE SEEPAGE - see "Water Treatment"									
HEAP LEACH SEEPAGE TREATMENT - Cyanide Detox									
Cyanide destruction water treatment pumping		m3		#N/A	$0,00	$0		$0	$0
Reagents		tonnes		#N/A	$0,00	$0		$0	$0
Electrician/mechanic to maintain treatment plant		allow		#N/A	$0,00	$0		$0	$0
Equipment maintenance and parts		allow		#N/A	$0,00	$0		$0	$0
					Annual treatment costs	$0			
Number of years of treatment		years							
					Total treatment costs	$0			$0
HEAP LEACH SEEPAGE TREATMENT - ARD/ML**									
Upgrade/modify pumping system - report to WTP		allow		#N/A	$0,00	$0			$0
					Total	$2 707 534		$1 353 767	$1 353 767
					% of Total			50%	50%

* For construction of passive treatment system refer to "Water Management". ARD/ML seepage treatment becomes post-closure water treatment cost

**Heap leach ARD/ML seepage treatment becomes post-closure water treatment cost

Rock Pile Name: **Vault** ***1***

ACTIVITY/MATERIAL	Notes	Units	Quantity	Cost Code	Unit Cost	Cost	% Land	Land Cost	Water Cost
COVER ROCK PILE									
Flatten slopes with dozer		m3		#N/A	$0,00	$0		$0	$0
Flatten "bubble dump" areas		m3		#N/A	$0,00	$0		$0	$0
Divert runon, ditch mat'l A		m3		#N/A	$0,00	$0		$0	$0
Divert runon, ditch mat'l B		m3		#N/A	$0,00	$0		$0	$0
Toe buttress, drain mat'l		m3		#N/A	$0,00	$0		$0	$0
Toe buttress, fill mat'l A		m3		#N/A	$0,00	$0		$0	$0
Toe buttress, fill mat'l B		m3		#N/A	$0,00	$0		$0	$0
Other				#N/A	$0,00	$0		$0	$0
COVER ROCK PILE									
NPAG UM waste rock cover (4 m thick)		m3	0	SB3L	$5,10	$0		$0	$0
Subgrade preparation - doze surface		m3		#N/A	$0,00	$0		$0	$0
Soil cover - excavate,haul,spread&compact		m3		#N/A	$0,00	$0		$0	$0
Rock cover - excavate,haul & spread		m3		#N/A	$0,00	$0		$0	$0
Excavate downslope drainage channel & chute		m3		#N/A	$0,00	$0		$0	$0
Rip rap drainage channel and chute		m3		#N/A	$0,00	$0		$0	$0
Vegetate		ha		#N/A	$0,00	$0		$0	$0
Other				#N/A	$0,00	$0		$0	$0
COVER SUMPS									
NPAG UM waste rock cover (4 m thick)		m3	0	#N/A	$0,00	$0		$0	$0
Other				#N/A	$0,00	$0		$0	$0
VERY LOW PERMEABILITY COVER (in addition to above)									
Liner subgrade preparation - compact		m2		#N/A	$0,00	$0		$0	$0
Supply geomembrame		m2		#N/A	$0,00	$0		$0	$0
Install geomembrane		m2		#N/A	$0,00	$0		$0	$0
Protective cover - excavate,haul,spread&compact		m3		#N/A	$0,00	$0		$0	$0
Vegetate		ha		#N/A	$0,00	$0		$0	$0
Install infiltration/seepage instrumentation		allow		#N/A	$0,00	$0		$0	$0
CONSTRUCT DIVERSION DITCHES									
Excavate ditches -soil		m3		#N/A	$0,00	$0		$0	$0
Excavate ditches -rock		m3		#N/A	$0,00	$0		$0	$0
Rip rap in channel base		m3		#N/A	$0,00	$0		$0	$0
CONSTRUCT SEEPAGE COLLECTION POND									
Excavate seepage collection pond		m3		#N/A	$0,00	$0		$0	$0
Doze & spread excavated material		m3		#N/A	$0,00	$0		$0	$0
Vegetate spread material		ha		#N/A	$0,00	$0		$0	$0
Bedding layer		m3		#N/A	$0,00	$0		$0	$0
Supply geomembrane		m2		#N/A	$0,00	$0		$0	$0
Install geomembrane		m2		#N/A	$0,00	$0		$0	$0
Erosion protection layer		m3							
INSTALL GROUNDWATER COLLECTION SYSTEM									
Excavate/install sumps		m3		#N/A	$0,00	$0		$0	$0
Install pumping wells		m3		#N/A	$0,00	$0		$0	$0
Install pumps/pipelines/power supply		allow		#N/A	$0,00	$0		$0	$0
RELOCATE DUMPS									
Load, haul, dump or doze		m3		#N/A	$0,00	$0		$0	$0
Add lime		tonne		#N/A	$0,00	$0		$0	$0
Contour reclaimed area		ha		#N/A	$0,00	$0		$0	$0
Other				#N/A	$0,00	$0		$0	$0
SPECIALIZED ITEMS									
Install permanent instrumentation		each	3	OPS	$10 000,00	$30 000	50%	$15 000	$15 000
Install permanent instrumentation, drilling		each		#N/A	$0,00	$0		$0	$0
TREAT ROCK PILE SEEPAGE - see "Water Treatment"									
HEAP LEACH SEEPAGE TREATMENT - Cyanide Detox									
Cyanide destruction water treatment pumping		m3		#N/A	$0,00	$0		$0	$0
Reagents		tonnes		#N/A	$0,00	$0		$0	$0
Electrician/mechanic to maintain treatment plant		allow		#N/A	$0,00	$0		$0	$0
Equipment maintenance and parts		allow		#N/A	$0,00	$0		$0	$0
				Annual treatment costs		$0			
Number of years of treatment		years							
				Total treatment costs		$0			$0
HEAP LEACH SEEPAGE TREATMENT - ARD/ML**									
Upgrade/modify pumping system - report to WTP		allow		#N/A	$0,00	$0			$0
					Total	$30 000		$15 000	$15 000
					% of Total			50%	50%

* For construction of passive treatment system refer to "Water Management". ARD/ML seepage treatment becomes post-closure water treatment cost

**Heap leach ARD/ML seepage treatment becomes post-closure water treatment cost

3 **Building / Equip Name:** **Meadowbank** **Bldg / Equip #:** **1**

ACTIVITY/MATERIAL	Notes	Units	Quantity	Cost Code	Unit Cost	Cost	% Land	Land Cost	Water Cost
DISPOSE MOBILE EQUIPMENT									
Decontaminate and ship off-site		allow		#N/A	$0,00	$0		$0	$0
Decontaminate and dispose on-site		manhours	1088	MECHL	$49,00	$53 312	50%	$26 656	$26 656
Other				#N/A	$0,00	$0		$0	$0
REMOVE BUILDINGS - see note below									
Mill Complex:									
Mill		m2	37800	BRS1H	$65,00	$2 457 000	50%	$1 228 500	$1 228 500
Leech Tanks		m2	12500	BRS1H	$65,00	$812 500	50%	$406 250	$406 250
Primary and Secondary Crusher		m2	740	BRS1H	$65,00	$48 100	50%	$24 050	$24 050
Pebble Crusher		m2	650	BRS1H	$65,00	$42 250	50%	$21 125	$21 125
Conveyors		m2	1950	BRS1H	$65,00	$126 750	50%	$63 375	$63 375
Assay Lab		m2	440	BRS1L	$45,00	$19 800	50%	$9 900	$9 900
Accomodation Complex (Inc. Nova Camp)		m2	17005	BRS1L	$45,00	$765 225	50%	$382 613	$382 613
Services Building		m2	13080	BRS1L	$45,00	$588 600	50%	$294 300	$294 300
Site Services Building		m2	500	BRS1L	$45,00	$22 500	50%	$11 250	$11 250
Dome Warehouse		m2	2854	BRS1L	$45,00	$128 430	50%	$64 215	$64 215
Ore Dome		m2	21000	BRS1L	$45,00	$945 000	50%	$472 500	$472 500
Power Plant		m2	7455	BRS1H	$65,00	$484 575	50%	$242 288	$242 288
Cat Warehouse		m2	2690	BRS1L	$45,00	$121 050	50%	$60 525	$60 525
Toromont Facilities		m2	925	BRS1L	$45,00	$41 625	50%	$20 813	$20 813
Fountain Tire		m2	330	BRS1L	$45,00	$14 850	50%	$7 425	$7 425
White Coverall		m2	2790	BRS1L	$45,00	$125 550	50%	$62 775	$62 775
Batch Plant		m2	2100	BRS1L	$45,00	$94 500	50%	$47 250	$47 250
Environmental Office		m2	140	BRS1L	$45,00	$6 300	50%	$3 150	$3 150
Dike Dewatering Shop		m2	755	BRS1L	$45,00	$33 975	50%	$16 988	$16 988
Incinerator		m2	280	BRS1L	$45,00	$12 600	50%	$6 300	$6 300
Talbon Shop		m2	235	BRS1L	$45,00	$10 575	50%	$5 288	$5 288
Blue Coverall		m2	710	BRS1L	$45,00	$31 950	50%	$15 975	$15 975
Gate House		m2	100	BRS1L	$45,00	$4 500	50%	$2 250	$2 250
Fuel Dispensing Station		m2	165	BRS1H	$65,00	$10 725	50%	$5 363	$5 363
Emulsion Plant		m2	2000	BRS1H	$65,00	$130 000	50%	$65 000	$65 000
Bulk Fuel Tank		m2	1910	BRS1H	$65,00	$124 150	50%	$62 075	$62 075
Containers to Landfill		mt	3500	OPS	$20,00	$70 000	50%	$35 000	$35 000
Other				#N/A	$0,00	$0		$0	$0
BREAK BASEMENT SLABS									
Puncture Concrete Foundations		m2	25211	BRCS	$6,00	$151 266	50%	$75 633	$75 633
LANDFILL FOR DEMOLITION WASTE									
Place rock cover	Blast rock fill	m3		#N/A	$0,00	$0		$0	$0
Place soil cover	Soil Cap - Landfill and Septic Field	m3		#N/A	$0,00	$0		$0	$0
Vegetate		ha		#N/A	$0,00	$0		$0	$0
GRADE AND CONTOUR PADS									
Accomodation Complex		ha		#N/A	$0,00	$0		$0	$0
Process Facilities		ha		#N/A	$0,00	$0		$0	$0
Offices, Repair, Lab, Warehouse		ha		#N/A	$0,00	$0		$0	$0
Storage Facilites		ha		#N/A	$0,00	$0		$0	$0
Water and Wastewater Treatment Facilities		ha		#N/A	$0,00	$0		$0	$0
U/G Heating Plant		ha		#N/A	$0,00	$0		$0	$0
Emulsion Plant		ha		#N/A	$0,00	$0		$0	$0
Warehouse, Shops and Other		ha		#N/A	$0,00	$0		$0	$0
Place rock cover		m3		#N/A	$0,00	$0		$0	$0
Vegetate		ha		#N/A	$0,00	$0		$0	$0
Other				#N/A	$0,00	$0		$0	$0
PUNCTURE LINED SUMPS									
Puncture liner and place soil cover		m3		#N/A	$0,00	$0		$0	$0
RECLAIM ROADS, LAYDOWN AREA & AIRSTRIP									
Remove culverts		each	15	OPS	$4 000,00	$60 000	50%	$30 000	$30 000
Install Water Breaks		allow	1	OPS	$40 000,00	$40 000	50%	$20 000	$20 000
Scarify airstriip		ha	4,1	SCFYL	$4 300,00	$17 630	50%	$8 815	$8 815
Scarify laydown areas		ha		#N/A	$0,00	$0	50%	$0	$0
Scarify access roads (~10 m x 12 km)		ha	12	SCFYL	$4 300,00	$51 600	50%	$25 800	$25 800
Scarify haul roads (~25 m x 14.5 km)		ha	36,3	SCFYL	$4 300,00	$156 090	50%	$78 045	$78 045
Scarify Portage/Mill Disturbed Area		ha	40,6	SCFYL	$4 300,00	$174 580	50%	$87 290	$87 290
Scarify Vault Disturbed Area		ha	6,5	SCFYL	$4 300,00	$27 950	50%	$13 975	$13 975
Vegetate		ha		#N/A	$0,00	$0		$0	$0
Other				#N/A	$0,00	$0		$0	$0
SPECIALIZED ITEMS									
Dispose of misc. debris and laydown area refuse				#N/A	$0,00	$0		$0	$0
					Total	$8 005 508		$4 002 754	$4 002 754
					% of Total			50%	50%

Note: Unit costs are based on 3m high, single storey building. Scale larger building areas accordingly. E.g. 10m high building multiply area by 3.3 (10/3)

Building / Equip Name: **Baker Lake** **Bldg / Equip #:** 2

ACTIVITY/MATERIAL	Notes	Units	Quantity	Cost Code	Unit Cost	Cost	% Land	Land Cost	Water Cost
DISPOSE MOBILE EQUIPMENT									
Decontaminate and ship off-site		allow		#N/A	$0,00	$0		$0	$0
Decontaminate and dispose on-site		allow		#N/A	$0,00	$0		$0	$0
Other				#N/A	$0,00	$0		$0	$0
REMOVE BUILDINGS - see note below									
Mill Complex:									
Mill		m2		#N/A	$0,00	$0	50%	$0	$0
Leech Tanks		m2		#N/A	$0,00	$0	50%	$0	$0
Primary and Secondary Crusher		m2		#N/A	$0,00	$0	50%	$0	$0
Pebble Crusher		m2		#N/A	$0,00	$0	50%	$0	$0
Conveyors		m2		#N/A	$0,00	$0	50%	$0	$0
Assay Lab		m2		#N/A	$0,00	$0	50%	$0	$0
Accomodation Complex (Inc. Nova Camp)		m2		#N/A	$0,00	$0	50%	$0	$0
Services Building		m2		#N/A	$0,00	$0	50%	$0	$0
Site Services Building		m2		#N/A	$0,00	$0	50%	$0	$0
Dome Warehouse		m2		#N/A	$0,00	$0	50%	$0	$0
Ore Dome		m2		#N/A	$0,00	$0	50%	$0	$0
Power Plant		m2		#N/A	$0,00	$0	50%	$0	$0
Cat Warehouse		m2		#N/A	$0,00	$0	50%	$0	$0
Toromont Facilities		m2		#N/A	$0,00	$0	50%	$0	$0
Fountain Tire		m2		#N/A	$0,00	$0	50%	$0	$0
White Coverall		m2		#N/A	$0,00	$0	50%	$0	$0
Batch Plant		m2		#N/A	$0,00	$0	50%	$0	$0
Environmental Office		m2		#N/A	$0,00	$0	50%	$0	$0
Dike Dewatering Shop		m2		#N/A	$0,00	$0	50%	$0	$0
Incinerator		m2		#N/A	$0,00	$0	50%	$0	$0
Talbon Shop		m2		#N/A	$0,00	$0	50%	$0	$0
Blue Coverall		m2		#N/A	$0,00	$0	50%	$0	$0
Gate House		m2		#N/A	$0,00	$0	50%	$0	$0
Fuel Dispensing Station		m2		#N/A	$0,00	$0	50%	$0	$0
Emulsion Plant		m2		#N/A	$0,00	$0	50%	$0	$0
Bulk Fuel Tank		m2		#N/A	$0,00	$0	50%	$0	$0
Containers to Landfill		each		#N/A	$0,00	$0	50%	$0	$0
10,000,000L Diesel Fuel Tanks		m2	21180	BRS1H	$65,00	$1 376 700	50%	$688 350	$688 350
100,000L Jet Fuel Tanks		m2	720	BRS1L	$45,00	$32 400	50%	$16 200	$16 200
Other				#N/A	$0,00	$0		$0	$0
BREAK BASEMENT SLABS									
Puncture Concrete Foundations		m2	6095	BRCS	$6,00	$36 570	50%	$18 285	$18 285
LANDFILL FOR DEMOLITION WASTE									
Place rock cover	Blast rock fill	m3		#N/A	$0,00	$0		$0	$0
Place soil cover	Soil Cap - Landfill and Septic Field	m3		#N/A	$0,00	$0		$0	$0
Vegetate		ha		#N/A	$0,00	$0		$0	$0
GRADE AND CONTOUR PADS									
Accomodation Complex		ha		#N/A	$0,00	$0		$0	$0
Process Facilities		ha		#N/A	$0,00	$0		$0	$0
Offices, Repair, Lab, Warehouse		ha		#N/A	$0,00	$0		$0	$0
Storage Facilites		ha		#N/A	$0,00	$0		$0	$0
Water and Wastewater Treatment Facilities		ha		#N/A	$0,00	$0		$0	$0
U/G Heating Plant		ha		#N/A	$0,00	$0		$0	$0
Emulsion Plant		ha		#N/A	$0,00	$0		$0	$0
Warehouse, Shops and Other		ha		#N/A	$0,00	$0		$0	$0
Place rock cover		m3		#N/A	$0,00	$0		$0	$0
Vegetate		ha		#N/A	$0,00	$0		$0	$0
Other				#N/A	$0,00	$0		$0	$0
PUNCTURE LINED SUMPS									
Puncture liner and place soil cover		m3		#N/A	$0,00	$0		$0	$0
RECLAIM ROADS, LAYDOWN AREA & AIRSTRIP									
Remove culverts		each		#N/A	$0,00	$0	50%	$0	$0
Scarify and install water breaks		ha		#N/A	$0,00	$0	50%	$0	$0
Scarify airstriip		ha		#N/A	$0,00	$0	50%	$0	$0
Scarify laydown areas		ha	50	SCFYL	$4 300,00	$215 000	50%	$107 500	$107 500
Scarify access roads (~10 m x 10 km)		ha		#N/A	$0,00	$0	50%	$0	$0
Scarify haul roads (~25 m x 14.5 km)		ha		#N/A	$0,00	$0	50%	$0	$0
Scarify Portage/Mill Disturbed Area		ha		#N/A	$0,00	$0	50%	$0	$0
Scarify Vault Disturbed Area		ha		#N/A	$0,00	$0	50%	$0	$0
Vegetate		ha		#N/A	$0,00	$0		$0	$0
Other				#N/A	$0,00	$0		$0	$0
SPECIALIZED ITEMS									
Dispose of misc. debris and laydown area refuse				#N/A	$0,00	$0		$0	$0
					Total	$1 660 670		$830 335	$830 335
					% of Total			50%	50%

Note: Unit costs are based on 3m high, single storey building. Scale larger building areas accordingly. E.g. 10m high building multiply area by 3.3 (10/3)

Building / Equip Name: **AWAR** **Bldg / Equip #: 3**

ACTIVITY/MATERIAL	Notes	Units	Quantity	Cost Code	Unit Cost	Cost	% Land	Land Cost	Water Cost
DISPOSE MOBILE EQUIPMENT									
Decontaminate and ship off-site		allow		#N/A	$0,00	$0		$0	$0
Decontaminate and dispose on-site		allow		#N/A	$0,00	$0		$0	$0
Other				#N/A	$0,00	$0		$0	$0
REMOVE BUILDINGS - see note below									
Mill Complex:									
Mill		m2		#N/A	$0,00	$0	50%	$0	$0
Leech Tanks		m2		#N/A	$0,00	$0	50%	$0	$0
Primary and Secondary Crusher		m2		#N/A	$0,00	$0	50%	$0	$0
Pebble Crusher		m2		#N/A	$0,00	$0	50%	$0	$0
Conveyors		m2		#N/A	$0,00	$0	50%	$0	$0
Assay Lab		m2		#N/A	$0,00	$0	50%	$0	$0
Accomodation Complex (Inc. Nova Camp)		m2		#N/A	$0,00	$0	50%	$0	$0
Services Building		m2		#N/A	$0,00	$0	50%	$0	$0
Site Services Building		m2		#N/A	$0,00	$0	50%	$0	$0
Dome Warehouse		m2		#N/A	$0,00	$0	50%	$0	$0
Ore Dome		m2		#N/A	$0,00	$0	50%	$0	$0
Power Plant		m2		#N/A	$0,00	$0	50%	$0	$0
Cat Warehouse		m2		#N/A	$0,00	$0	50%	$0	$0
Toromont Facilities		m2		#N/A	$0,00	$0	50%	$0	$0
Fountain Tire		m2		#N/A	$0,00	$0	50%	$0	$0
White Coverall		m2		#N/A	$0,00	$0	50%	$0	$0
Batch Plant		m2		#N/A	$0,00	$0	50%	$0	$0
Environmental Office		m2		#N/A	$0,00	$0	50%	$0	$0
Dike Dewatering Shop		m2		#N/A	$0,00	$0	50%	$0	$0
Incinerator		m2		#N/A	$0,00	$0	50%	$0	$0
Talbon Shop		m2		#N/A	$0,00	$0	50%	$0	$0
Blue Coverall		m2		#N/A	$0,00	$0	50%	$0	$0
Gate House		m2		#N/A	$0,00	$0	50%	$0	$0
Fuel Dispensing Station		m2		#N/A	$0,00	$0	50%	$0	$0
Emulsion Plant		m2		#N/A	$0,00	$0	50%	$0	$0
Bulk Fuel Tank		m2		#N/A	$0,00	$0	50%	$0	$0
Containers to Landfill		each		#N/A	$0,00	$0	50%	$0	$0
Other				#N/A	$0,00	$0		$0	$0
BREAK BASEMENT SLABS									
Puncture Concrete Foundations		m2		#N/A	$0,00	$0	50%	$0	$0
LANDFILL FOR DEMOLITION WASTE									
Place rock cover	Blast rock fill	m3		#N/A	$0,00	$0		$0	$0
Place soil cover	Soil Cap - Landfill and Septic Field	m3		#N/A	$0,00	$0		$0	$0
Vegetate		ha		#N/A	$0,00	$0		$0	$0
GRADE AND CONTOUR PADS									
Accomodation Complex		ha		#N/A	$0,00	$0		$0	$0
Process Facilities		ha		#N/A	$0,00	$0		$0	$0
Offices, Repair, Lab, Warehouse		ha		#N/A	$0,00	$0		$0	$0
Storage Facilites		ha		#N/A	$0,00	$0		$0	$0
Water and Wastewater Treatment Facilities		ha		#N/A	$0,00	$0		$0	$0
U/G Heating Plant		ha		#N/A	$0,00	$0		$0	$0
Emulsion Plant		ha		#N/A	$0,00	$0		$0	$0
Warehouse, Shops and Other		ha		#N/A	$0,00	$0		$0	$0
Place rock cover		m3		#N/A	$0,00	$0		$0	$0
Vegetate		ha		#N/A	$0,00	$0		$0	$0
Other				#N/A	$0,00	$0		$0	$0
PUNCTURE LINED SUMPS									
Puncture liner and place soil cover		m3		#N/A	$0,00	$0		$0	$0
RECLAIM QUARRIEST									
Drill and blast slopes to 1:1		m3	14319	RB3H	$17,80	$254 878	50%	$127 439	$127 439
RECLAIM ROADS									
Remove culverts		each	38	OPS	$4 000,00	$152 000	50%	$76 000	$76 000
Remove bridges (clear Span bridges and HADD bridges)		each	9	OPS	$25 000,00	$225 000	50%	$112 500	$112 500
Scarify and install water breaks		ha	84	SCFYL	$4 300,00	$361 200	50%	$180 600	$180 600
Scarify airstriip		ha		#N/A	$0,00	$0	50%	$0	$0
Scarify laydown areas		ha		#N/A	$0,00	$0	50%	$0	$0
Vegetate		ha		#N/A	$0,00	$0		$0	$0
Other				#N/A	$0,00	$0		$0	$0
SPECIALIZED ITEMS									
Dispose of misc. debris and laydown area refuse				#N/A	$0,00	$0		$0	$0
					Total	$993 078		$496 539	$496 539
					% of Total			50%	50%

Note: Unit costs are based on 3m high, single storey building. Scale larger building areas accordingly. E.g. 10m high building multiply area by 3.3 (10/3)

1 **Chemicals/Soil Area Name:**

Note: The procedures, equipment and packaging for clean up and removal of chemicals or contaminated soils are highly dependent on the nature of the chemicals and their existing state of containment. Government guidelines should be consulted on an individual chemical basis. Any estimate made here should be considered very rough unless specific evaluations have been conducted.

ACTIVITY/MATERIAL	Notes	Units	Quantity	Cost Code	Unit Cost	Cost	% Land	Land Cost	Water Cost
HAZARDOUS MATERIALS AUDIT									
Hazardous materials audit		mandays	1	#N/A	$0,00	$0		$0	$0
BUILDING DECONTAMINATION & CONSOLIDATION OF HAZARDOUS MATERIALS									
Environmental technician/coordinator		mandays		#N/A	$0,00	$0		$0	$0
Decontaminate: oil, fuel		mandays		#N/A	$0,00	$0		$0	$0
Decontaminate maintenance shop		mandays	10	OPS	$1 000,00	$10 000	50%	$5 000	$5 000
Decontaminate power plant		mandays	10	OPS	$1 000,00	$10 000	50%	$5 000	$5 000
Decontaminate bulk fuel storage		mandays	10	OPS	$1 000,00	$10 000	50%	$5 000	$5 000
Decontaminate ANFO plant		mandays	3	OPS	$1 000,00	$3 000	50%	$1 500	$1 500
Decontaminate offices/warehouse/accom		mandays		#N/A	$0,00	$0		$0	$0
Removal of asbestos siding on buildings		m2		#N/A	$0,00	$0		$0	$0
Removal of friable asbestos on equipment		m2		#N/A	$0,00	$0		$0	$0
Other				#N/A	$0,00	$0		$0	$0
HAZARDOUS MATERIALS REMOVAL									
Waste oils		litre	0	#N/A	$0,00	$0		$0	$0
Waste fuel		litre	309000	ORL	$0,43	$132 870	50%	$66 435	$66 435
Oily/Glycol contaminated water		litre	58456	ORL	$0,43	$25 136	50%	$12 568	$12 568
Waste batteries		each	1	OPS	$3 000,00	$3 000	50%	$1 500	$1 500
Assay & environmental lab reagents		kg	10000	PCRH	$2,50	$25 000	50%	$12 500	$12 500
Mill and Water Treatment Reagents		kg	285614	PCRH	$2,50	$714 035	50%	$357 018	$357 018
Machine shop paints, solvents, filters etc		each	1	OPS	$20 000,00	$20 000	50%	$10 000	$10 000
Glycol		kg	16170	PCRH	$2,50	$40 425	50%	$20 213	$20 213
Process reagents		kg		#N/A	$0,00	$0		$0	$0
Nuclear sources		allow		#N/A	$0,00	$0		$0	$0
Other hazardous materials		allow		#N/A	$0,00	$0		$0	$0
HAZARDOUS MATERIALS									
Transportation to disposal facility		allow		#N/A	$0,00	$0		$0	$0
Disposal fees		allow		#N/A	$0,00	$0		$0	$0
Other				#N/A	$0,00	$0		$0	$0
CONTAMINATED SOILS									
Contam. soil investigation - Phase 1		each	1	CS1L	$7 500,00	$7 500	50%	$3 750	$3 750
Contam. soil investigation - Phase 2		each	1	CS2L	$50 000,00	$50 000	50%	$25 000	$25 000
CONTAMINATED SOIL REMOVAL									
Excavate and transport to onsite facility		m3	0	#N/A	$0,00	$0		$0	$0
Manage hydrocarbon remediation at facility		m3	2745	CSRL	$47,00	$129 015	50%	$64 508	$64 508
Reagents/stabilizing agent		m2		#N/A	$0,00	$0	50%	$0	$0
Excavate and transport to offsite facility		m3	137	OPS	$1 000,00	$137 000	50%	$68 500	$68 500
Contour decontaminated area		m3		#N/A	$0,00	$0		$0	$0
CONTAMINATED SOIL VERY LOW PERMEABILITY COVER									
Supply geomembrame, HDPE, ES3, GCL		m2		#N/A	$0,00	$0		$0	$0
Upper and lower bedding layers		m3		#N/A	$0,00	$0		$0	$0
Install geomembrane, HDPE, ES3, GCL		m2		#N/A	$0,00	$0		$0	$0
Erosion protection layer		m3		#N/A	$0,00	$0		$0	$0
Vegetate		m2		#N/A	$0,00	$0		$0	$0
Install infiltration/seepage instrumentation		allow		#N/A	$0,00	$0		$0	$0
Other				#N/A	$0,00	$0		$0	$0
OTHER									
				#N/A	$0,00	$0		$0	$0
					Total	$1 316 981		$658 491	$658 491
					% of Total			50%	50%

1 **Capital Expenditures and Short Term Water Treatment identified in 'Instructions' worksheet**

ACTIVITY/MATERIAL	Notes	Units	Quantity	Cost Code	Unit Cost	Cost
FLOOD PITS						
Repurpose/Install dewatering pumps and piping for pit flooding		Allow	1	OPS	$100 000,00	$100 000
Pumped pit flooding water (Third portage Lake and Reclaim Pond) - Portage Pit		m3	31179343	OPS	$0,02	$623 587
Pumped pit flooding water (Third portage Lake) - Goose Pit		m3	3182704	OPS	$0,02	$63 654
Pumped pit flooding water (Wally Lake) - Vault Pit		m3	28051096	OPS	$0,02	$561 022
Pump maintenance and operation (7 yrs)						
Maintain pumps (2 skilled labourer x 12hr days, 4months/yr, 7yrs)		manhours	20832	LAB-SH	$49,60	$1 033 267
Annual Pump Servicing (2 x Manufacturer Consultant x 7days/year x 7 years)		manhours	1176	OPS	$120,00	$141 120
Pump Servicing Travel Allowance (Round Trip Flight/person)		visits	14	OPS	$4 000,00	$56 000
Camp Accomodations		days	1834	ACCML	$100,00	$183 400
DYKE RECONNECTION						
Bay-Goose Dike Reconnection (1-2-3)		m3	94000	SB2L	$4,60	$432 400
Rock placement Bay-Goose (1-2-3)		m3	27900	SB2H	$7,30	$203 670
South Camp Dike Reconnection		m3	24000	SB2L	$4,60	$110 400
Rock placement South Camp Dike		m3	9500	SB2H	$7,30	$69 350
Channel Vault Pit to North Phaser		m3	7000	SB2L	$4,60	$32 200
Rock placement Channel Vault Pit		m3	2300	SB2H	$7,30	$16 790
Vault Pit to Wally Lake Reconnection		m3	27000	SB2L	$4,60	$124 200
Rock Placement Vault Pit Reconnection		m3	10800	SB2H	$7,30	$78 840
Remove fill		m3		#N/A	$0,00	$0
Contour water intake area		m3		#N/A	$0,00	$0
STABILIZE SEDIMENT PONDS/WATER MANAGEMENT PONDS						
Place soil cover		m3		#N/A	$0,00	$0
Doze & spread excavated material		m3		#N/A	$0,00	$0
Vegetate spread material		ha		#N/A	$0,00	$0
Rip rap in channel base		each		#N/A	$0,00	$0
REDIRECT RUNOFF/CONSTRUCT DIVERSION DITCHES						
Excavate ditches -soil		m3		#N/A	$0,00	$0
Excavate ditches -rock		m3		#N/A	$0,00	$0
Stabilize side slopes		m3		#N/A	$0,00	$0
Rip rap in channel base		m3		#N/A	$0,00	$0
BREACH DITCHES (Diversion ditch)						
Excavate breaches		m3		#N/A	$0,00	$0
Backfill/recontour (consider work on 1000m of diversion ditch: 1000m x 4m²)		m3	4000	SB2L	$4,60	$18 400
Install flow dissipation		m3		#N/A	$0,00	$0
Vegetate remainder of ditch		m2		#N/A	$0,00	$0
DECOMISSION FRESH WATER SUPPLY						
Breach embankment		m		#N/A	$0,00	$0
Remove pump/barge		Allow	1	OPS	$3 000,00	$3 000
Remove pipeline		m	1000	PLRL	$22,00	$22 000
WATER CONTROL IN RECLAMATION QUARRY						
Install pumping system		LS		#N/A	$0,00	$0
Remove pumping system		LS		#N/A	$0,00	$0
REMOVE PIPELINES						
Remove pipes		m	2000	PLRL	$22,00	$44 000
Concrete plug deep pipes		m3		#N/A	$0,00	$0
Other - diffuser		each	2	OPS	$3 000,00	$6 000
GROUNDWATER COLLECTION SYSTEM						
Excavate/install sumps		m3		#N/A	$0,00	$0
Install pumping wells		m3		#N/A	$0,00	$0
Install pumps/pipelines/power supply		LS		#N/A	$0,00	$0
CONSTRUCT CONTAMINATED WATER STORAGE POND						
Excavate pond		m3		#N/A	$0,00	$0
Doze & spread excavated material		m3		#N/A	$0,00	$0
Vegetate spread material		ha		#N/A	$0,00	$0
Bedding layer		m3		#N/A	$0,00	$0
Supply geomembrane		m2		#N/A	$0,00	$0
Install geomembrane		m2		#N/A	$0,00	$0
Erosion protection layer		m3		#N/A	$0,00	$0
CONSTRUCT PASSIVE TREATMENT SYSTEM (e.g. Constructed Wetland)						
Construct access roads		km		#N/A	$0,00	$0
Install HDPE piping system from collection pond		m		#N/A	$0,00	$0
Inter-cell flow structures		allow		#N/A	$0,00	$0
Install liners		m2		#N/A	$0,00	$0
Install growth media		m3		#N/A	$0,00	$0
Wetland vegetation		ha		#N/A	$0,00	$0
CONSTRUCT TEMPORARY WATER TREATMENT PLANT (If Necessary)						
Build treatment plant		LS		#N/A	$0,00	$0
Build sludge containment facility		LS		#N/A	$0,00	$0
Storage, Prep and Reactor Tanks/Silos		Allow	1	OPS	$855 000,00	$855 000
Mech. Equip. (Metering Pumps and Air)		Allow	1	OPS	$385 000,00	$385 000
Piping		%	30		$372 000,00	$372 000
Electrical		%	15		$186 000,00	$186 000
Instrumentation and Controls		%	15		$186 000,00	$186 000
Equipment Installation Costs		%	35		$434 000,00	$434 000
DECOMMISION TEMPORARY WATER TREATMENT PLANT (If Necessary)						
Decontaminate and dispose equipment on site		manhours	540	LAB-USL	$31,00	$16 740
Camp Accomodations		days	45	ACCML	$100,00	$4 500
Demolish Structure		m2	1500	BRS1L	$45,00	$67 500
Scarify Footprint		ha	0,15	SCFYH	$6 030,00	$905
SHORT TERM WATER TREATMENT*						
Annual water treatment cost, from "Water Treatment"						$0
					Total	$6 430 945

For cost of long-term/post-closure water treatment see "WATER TREATMENT" Worksheet"

1 **Water Treatment**

ACTIVITY/MATERIAL	Notes	Units	Quantity	Cost Code	Unit Cost	Cost
OPERATE TEMPORARY WATER TREATMENT PLANT **(3 YEARS CONSIDERED)**						
Reagent Allowance		allow	1	OPS	$150 000,00	$150 000
Direct Pumping cost		m3	177089	OPS	$0,07	$11 511
Skilled Labourer (1 skilled labourers X 12hr/day, 6 Months/year)		manhours	2160	OPER-WTH	$59,86	$129 298
Annual Treatment Plant Servicing (2 Consultants x 7days/year)		manhours	168	OPS	$120,00	$20 160
Treatment Plant Servicing Travel Allowance (Round Trip Flight/person)		visits	2	OPS	$4 000,00	$8 000
Camp Accomodations		days	180	ACCML	$100,00	$18 000
ADDITION OF REAGENTS						
H2O2		kg		#N/A	$0,00	$0
lime		kg		#N/A	$0,00	$0
ferric sulphate		kg		#N/A	$0,00	$0
ferrous sulphate		kg		#N/A	$0,00	$0
flocculents		kg		#N/A	$0,00	$0
Other				#N/A	$0,00	$0
LABOUR AND SUPPLIES						
Annual fuel		litres		#N/A	$0,00	$0
Annual power		kW-h		#N/A	$0,00	$0
Electrician/mechanic to maintain treatment plant		allow		#N/A	$0,00	$0
Equipment maintenance and parts		allow		#N/A	$0,00	$0
Misc. supplies, hoses, tools		allow		#N/A	$0,00	$0
Communications		allow		#N/A	$0,00	$0
Other				#N/A	$0,00	$0
WATER SAMPLING AND ANALYSES						
Sampling equipment		allow		#N/A	$0,00	$0
Analyses		allow		#N/A	$0,00	$0
Shipping to laboratory		allow		#N/A	$0,00	$0
Reporting		allow		#N/A	$0,00	$0
Other				#N/A	$0,00	$0
SITE ACCESS						
Road maintenance (incl. snow removal)		allow		#N/A	$0,00	$0
Winter road tariff		allow		#N/A	$0,00	$0
Truck rental		allow		#N/A	$0,00	$0
Air support		allow		#N/A	$0,00	$0
					Annual water treatment costs	$336 968
Number of years of water treatment		years	3			
					Total	$1 010 905

Assume 3 years of treatment for reclaim water

1 **Interim Care and Maintenance**

ACTIVITY/MATERIAL	Notes	Units	Quantity	Cost Code	Unit Cost	Cost
INTERIM CARE & MAINTENANCE						
on-site caretaker		manmonths		#N/A	0	$0
extra personnel		manmonths		#N/A	0	$0
-electrician		manmonths		#N/A	0	$0
-mechanic		manmonths		#N/A	0	$0
annual fuel		litre		#N/A	0	$0
misc. supplies		allow		#N/A	0	$0
pick-up truck		each		#N/A	0	$0
small dozer		allow		#N/A	0	$0
small excavator		allow		#N/A	0	$0
snow machine		allow		#N/A	0	$0
communications		allow		#N/A	0	$0
SNP/AEMP water sampling & reporting		each		#N/A	0	$0
geotechnical assessment		each		#N/A	0	$0
interim water treatment				#N/A		$336 968
Maintenance, Surveillance, Monitoring and inspection - Active Closure				#N/A		$282 600
other		each		#N/A	0	$0
			Annual	Interim C&M Cost		$619 568
Number of years of ICM		years	3		**Total**	$1 858 705

m **Post-Closure Monitoring & Maintenance:**

ACTIVITY/MATERIAL	Notes	Units	Quantity	Cost Code	Unit Cost	Cost
MONITORING & INSPECTIONS - **ACTIVE CLOSURE (2022 to 2030)**						
Monitoring programs (Meadowbank and AWAR)		each		#N/A	$0,00	$0
- Active closure		each	1	OPS	$100 000,00	$100 000
- Post-closure		each		#N/A	$0,00	$0
Annual geotechnical inspection		each		#N/A	$0,00	$0
- Active closure (1 eng, 7 days, 150$/h, + report at 5000$, 2500$ of transport, 700$ of accommodation)		each	1	OPS	$20 800,00	$20 800
- Post-closure		each		#N/A	$0,00	$0
Groundwater monitoring		each	1	OPS	$10 000,00	$10 000
Survey inspection		each		#N/A	$0,00	$0
Regulatory costs*		each	1	OPS	$15 500,00	$15 500
Site water monitoring		each		#N/A	$0,00	$0
- Active closure		each	1	OPS	$73 100,00	$73 100
- Post-closure		each		#N/A	$0,00	$0
Air Quality Monitoring Program (AQMP)		each		#N/A	$0,00	$0
Wildlife Effects Monitoring Program (WEMP)		each		#N/A	$0,00	$0
Vegetation Monitoring		each		#N/A	$0,00	$0
Other				#N/A	$0,00	$0
COVER MAINTENANCE - **ACTIVE CLOSURE (2022 to 2030)**						
Repair erosion - infill gullies		allow		#N/A	$0,00	$0
Repair erosion - upgrade diversion ditches		allow		#N/A	$0,00	$0
Remove problem vegetation		allow		#N/A	$0,00	$0
Repair animal damage		allow		#N/A	$0,00	$0
Repair/upgrade access controls		allow		#N/A	$0,00	$0
Other				#N/A	$0,00	$0
SPILLWAY MAINTENANCE - **ACTIVE CLOSURE (2022 to 2030)**						
Repair erosion		m3		#N/A	$0,00	$0
Clear spillway		each		#N/A	$0,00	$0
CWTS MAINTENANCE - **ACTIVE CLOSURE (2022 to 2030)**						
Maintain flow, restore vegetation		allow		#N/A	$0,00	$0
MAINTENANCE AND SURVEILLANCE - **ACTIVE CLOSURE (2022 to 2030)**						
Site care-taker		manhours	480	OPERH	$65,00	$31 200
Site Vehicle and equipment		allow	1	OPS	$20 000,00	$20 000
Accommodations		mandays	20	ACCML	$100,00	$2 000
Site Maintenance		allow	1	OPS	$10 000,00	$10 000
Subtotal, Annual active-closure costs						$282 600
Discount rate for calculation of net present value of active-closure cost, %				3,00%		
Number of years of active-closure activity				9	years	
Present Value of payment stream (at Year 2022) - Active closure (2022 to 2030)						$2 200 354
MONITORING & INSPECTIONS - **POST CLOSURE (2031 to 2041)**						
Monitoring programs (Meadowbank and AWAR)		each		#N/A	$0,00	$0
- Active closure		each		#N/A	$0,00	$0
- Post-closure		each	0,5	OPS	$100 000,00	$50 000
Annual geotechnical inspection		each		#N/A	$0,00	$0
- Active closure		each		#N/A	$0,00	$0
- Post-closure (1 eng, 7 days, 150$/h, + report at 5000$, 2500$ of transport, 700$ of accommodation)		each	1	OPS	$20 800,00	$20 800
Groundwater monitoring		each	1	OPS	$10 000,00	$10 000
Survey inspection		each		#N/A	$0,00	$0
Regulatory costs*		each	1	OPS	$15 500,00	$15 500
Site water monitoring		each		#N/A	$0,00	$0
- Active closure		each		#N/A	$0,00	$0
- Post-closure		each	1	OPS	$49 432,00	$49 432
Air Quality Monitoring Program (AQMP)		each		#N/A	$0,00	$0
Wildlife Effects Monitoring Program (WEMP)		each		#N/A	$0,00	$0
Vegetation Monitoring		each		#N/A	$0,00	$0
Other				#N/A	$0,00	$0
COVER MAINTENANCE - **POST CLOSURE (2031 to 2041)**						
Repair erosion - infill gullies		allow		#N/A	$0,00	$0
Repair erosion - upgrade diversion ditches		allow		#N/A	$0,00	$0
Remove problem vegetation		allow		#N/A	$0,00	$0
Repair animal damage		allow		#N/A	$0,00	$0
Repair/upgrade access controls		allow		#N/A	$0,00	$0
Other				#N/A	$0,00	$0
SPILLWAY MAINTENANCE - **POST CLOSURE (2031 to 2041)**						
Repair erosion		m3		#N/A	$0,00	$0
Clear spillway		each		#N/A	$0,00	$0
CWTS MAINTENANCE - **POST CLOSURE (2031 to 2041)**						
Maintain flow, restore vegetation		allow		#N/A	$0,00	$0
MAINTENANCE AND SURVEILLANCE - **POST CLOSURE (2031 to 2041)**						
Site care-taker		manhours	480	OPERH	$65,00	$31 200
Site Vehicle and equipment		allow	1	OPS	$20 000,00	$20 000
Accommodations		mandays	20	ACCML	$100,00	$2 000
Site Maintenance		allow	1	OPS	$10 000,00	$10 000
Subtotal, Annual post-closure costs						$208 932
Discount rate for calculation of net present value of post-closure cost, %				3,00%		
Number of years of post-closure activity				11	years	
Present Value of payment stream (at Year 2022) - Post closure (2031 to 2041)						$1 933 169
POST-CLOSURE WATER TREATMENT**						
Annual water treatment cost, from "Water Treatment"						$336 968
Subtotal, Annual post-closure costs						$336 968
Discount rate for calculation of net present value of post-closure cost, %				3,00%		
Number of years of post-closure activity (included in ICM, 3 YEARS)				0	years	
Present Value of payment stream (at Year 2022)						$0
Present Value of payment stream - TOTAL at Year 2022						$4 133 524

*Regulatory costs - annual reporting, management plans, progress reports etc.

1 Mobilization/Demobilization:

ACTIVITY/MATERIAL	Notes	Units	Quantity	Cost Code	Unit Cost	Cost
MOBILIZE HEAVY EQUIPMENT						
Barge to/from Baker Lake		each	2	OPS	500000	$1 000 000
Excavators	5	km	550	mherh	10,25	$5 638
Dump trucks	3	km	330	mherh	10,25	$3 383
Dozers	3	km	330	mherh	10,25	$3 383
Demolition shears	3	km	330	mherh	10,25	$3 383
Crane	1	km	110	mherh	10,25	$1 128
Loader	2	km	220	mherh	10,25	$2 255
Compactor	1	km	110	mherh	10,25	$1 128
Elavator equipements	3	km	330	mherh	10,25	$3 383
other	4	km	440	mherh	10,25	$4 510
Light duty vehicles	4	km	440	mherh	10,25	$4 510
MOBILIZE MISC. EQUIPMENT						
Pump shipping		each		#N/A	0	$0
Pipe shipping		m		#N/A	0	$0
Minor tools and equipment		allow		#N/A	0	$0
Truck tires		allow		#N/A	0	$0
Other	1 lot	each	1	OPS	50000	$50 000
MOBILIZE CAMP						
Reclamation activities		allow		#N/A	0	$0
Long term reclamation activities (eg pump flooding)		allow		#N/A	0	$0
MOBILIZE AND HOUSE WORKERS						
Maintain Camp Accomodations (50 workers, 180 per year, 3 years)		days	27000	accml	100	$2 700 000
Reclamation activities - travel time (50 workers, 4 trips per year, 6h per trip)		hour	1200	lab-usl	31	$37 200
Reclamation activities - transport cost (50 workers, 4 trips per year, 3 years)		each	600	#N/A	2500	$1 500 000
Long term reclamation activities (eg pump flooding) - transport		each		#N/A	0	$0
Long term reclamation activities (eg pump flooding) - travel time		each		#N/A	0	$0
Monitoring Airfare		each		#N/A	0	$0
WORKER ACCOMODATIONS						
Reclamation activities		manmonths		#N/A	0	$0
Long term reclamation activities (eg pump flooding)		each	0		0	$0
Long term reclamation activities (eg pump flooding)		manhours	0	#N/A	0	$0
MOBILIZE FUEL						
Fuel freight - reclamation activities		litre		#N/A	0	$0
Fuel freight - long term reclamation activities		litre		#N/A	0	$0
Fuel freight accomodations		litre		#N/A	0	$0
WINTER ROAD						
Construction and operation		km		#N/A	0	$0
Limited winter use		km		#N/A	0	$0
Winter road tarriff		km		#N/A	0	$0
DEMOBILIZE HEAVY EQUIPMENT						
Excavators	4	km	440	MHERH	10,25	$4 510
Dump trucks	6	km	660	MHERH	10,25	$6 765
Dozers	3	km	330	MHERH	10,25	$3 383
Demolition shears	2	km	220	MHERH	10,25	$2 255
Crane	1	km	110	MHERH	10,25	$1 128
Loader	2	km	220	MHERH	10,25	$2 255
Compactor	1	km	110	MHERH	10,25	$1 128
Light duty vehicles	4	km	440	MHERH	10,25	$4 510
Other						$0
DEMOBILIZE CAMP						
		allow		#N/A	0	$0
DEMOBILIZE WORKERS						
crew travel time		mandays		#N/A	0	$0
crew transportation		each		#N/A	0	$0
WINTER ROAD						
Construction and operation		km		#N/A	0	$0
Limited winter use		km		#N/A	0	$0
Winter road tarriff		km		#N/A	0	$0
					Total	$5 345 830

Unit Cost Table (for refining unit costs see "Estimator" worksheet)

Filter by unit

ITEM	Detail	COST CODE	UNITS	LOW $	HIGH $	SPECIFIED $	COMMENTS
Accomodation							
		ACCM	manday	100,00	175,00		
Buildings - Decontaminate							
	Asbestos	BDA	m2	25,60	51,20		Low: removal of asbestos siding & flooring; High: removal of insulated pipes, friable asbestos
Buildings - Remove							Unit costs are based on 3m high, single storey building. Scale areas accordingly.
	Wood	BRW	m2	27,50	41,00		
	Concrete	BRC	m2	40,00	65,00	6,00	Specified: puncture concrete foundation slabs
	Steel - teardown	BRS1	m2	45,00	65,00		
	Steel - for salvage	BRS2	m2	67,00	100,00		
Concrete work							
	Small pour	CSF	m3	426,50	639,75		Low: YK; High=1.5xLow
	Large pour	CLF	m3	353,50	530,25	2 130,00	Specified: concrete crown pillar
Contaminated Soils							
	ESA Phase 1	CS1	each	7500,00			Low: small, "clean" site
	ESA Phase 1	CS2	each	50000,00			Low: small, "clean" site
	Remediate on site	CSR	m3	47,00	146,00		
Dozing							
	doze rock piles	DR	m3	1,05	2,40		Low cost: doze crest off dump
	doze overburden/soil piles	DS	m3	0,95	3,80		High cost: push up to 300 m
Excavate Rock; Low Spec's and QA/QC							
	drill/blast/load/short haul	RB1	m3	11,40	17,05		Low:quarry operations for bulk fill
	drill/blast/load/long haul	RB2	m3	12,05	17,80		
	RB1 + spread and compact	RB3	m3	12,05	17,80		
	RB2 + spread and compact	RB4	m3	12,50	30,75		
	Specified activity	RBS	m3				
Excavate Rock; High Spec's and QA/QC							(e.g. ditch/spillway excavation)
	drill/blast/load/short haul	RC1	m3	12,05	17,80		Low:foundation excavation;High:spillway excavation
	drill/blast/load/long haul	RC2	m3	12,70	18,40		
	RC1 + spread and compact	RC3	m3	12,70	18,40		e,g, cover construction
	RC2 + spread and compact	RC4	m3	13,50	19,20		e,g, cover construction
	Specified activity	RCS	m3			175,00	Specified-drift excavation
Excavate Rip Rap							
	drill/blast/load/short haul/place	RR1	m3	13,50	17,75		High: quarry & place rip rap in channel
	drill/blast/load/long haul/place	RR2	m3	14,20	20,65		
	source is waste dump/short haul	RR3	m3	7,00			cost includes sorting
	source is waste dump/long haul	RR4	m3	7,60			
	Specified activity	RRS	m3				
Excavate Soil; Low Spec's and QA/QC							
	clear & grub	SBC	m2	3,40	5,00		
	excavate/load/short haul	SB1	m3	4,30	5,90		
	excavate/load/long haul	SB2	m3	4,60	7,30		
	SB1 + spread and compact	SB3	m3	5,10	8,90		Low: non-engineered; High:engineered
	SB2 + spread and compact	SB4	m3	5,50	11,00		Low: non-engineered; High:engineered
	Specified activity	SBS	m3	3,20	6,30		Low: rehandle waste rock dump by dozing; High:rehandle waste rock by hauling
	Tailings	SBT	m3	1,35	3,70	15,50	High:contour surface - wet or frozen; Specified:haul/place wet infill
Excavate Soil, High Spec's and QA/QC							
	excavate/load/short haul	SC1	m3	6,80	9,30		
	excavate/load/long haul	SC2	m3	7,10	11,75		
	SC1 + spread and compact	SC3	m3	8,90	14,20		Low: non-engineered; High:engineered
	SC2 + spread and compact	SC4	m3	9,30	23,20		Low: non-engineered; High:engineered (e.g. complex covers, low volume dam construction)
	Specified activity	SCS	m3			18,80	Backfill adit with waste rock
Fence							
		FNC	m	13,55	203,00		
Fuel and Electricity							
	Fuel cost - gas	FCG	litre	1,05	1,40		
	Fuel cost - diesel	FCD	litre	0,99	1,39		
	Fuel mobilization	FCM	litre	0,22	0,42		High: winter road usage
	Electricity	FCE	kW-h	0,17	0,19	0,49	Low and High:Yellowknife; Specified:diesel generator
Geo-Synthetics							
	geotextile	GST	m2	3,44			Supply and install
	geogrid	GSG	m2	5,75			
	liner, HDPE	GSHDPE	m2	7,95			Supply and install; large quantity
	liner, ES3	GSES3	m2	20,20			FOB Yellowknife
	geosynthetic installation	GSI	m2	3,16	14,00		Low:geotextile; High:ES3 or HDPE
	bentonite soil ammendment	GSBA	tonne	308,30	348,50		FOB Edmonton, add shipping & mixing
Grouting (/m3 of rock grouted)							
		grout	m3	236,55	286,75		High: cement, FOB Yellowknife
Labour & Equipment Rates							
	Site manager	sman	$/hr	125,00	152,00		
	Supervisor	super	$/hr	52,00	91,84		
	Registered engineer	eng	$/hr	95,00	220,00		
	Environmental coordinator	envco	$/hr	74,16	130,00		
	Evironmental technologist	envtech	$/hr	36,00			

Electrician	elec	$/hr	74,00	95,00		
Journeyman - various	journey	$/hr	44,00	71,79		
Labour - skilled	lab-s	$/hr	41,00	49,60		
Labour - unskilled	lab-us	$/hr	31,00	43,98		
Equipment operator	oper	$/hr	41,00	65,00		
Heavy duty mechanic	mech	$/hr	49,00	72,85		
Water treatment plant operator	oper-wt	$/hr	41,00	59,86		
Security / first aid	safety	$/hr	36,00	66,97		
Administative staff	admin	$/hr	38,00	57,89		
Equipment rates include operator and fuel						
Loader - 4 cu.yd (3.06m3)	load-s	$/hr	175,00			
Loader - 7 cu.yd (5.35m3)	load-l	$/hr	315,00			
Excavator - 26.76-30.84 tonnes	exc-s	$/hr	190,00			
Excavator - 68.95+tonnes	exc-l	$/hr	420,00			
Grader	grad	$/hr	190,00			
Dump truck off hwy 30-50 tonnes	truck-s	$/hr	225,00			
Dump truck off hwy 55-75 tonnes	truck-l	$/hr	300,00			
dozer, small	dozers	$/hr	205,00	260,00		
dozer, large	dozerl	$/hr	490,00	565,00		
smooth drum compactor	comp	$/hr	155,00			
scooptram, 6 yd3 bucket	scoop	$/hr	170,00			
flat bed truck with hiab	hiab	$/hr	155,00			
fuel truck	ftruck	$/hr	150,00			
water truck	wtruck	$/hr	58,00	150,00		
Mobilize Heavy Equipment						
Road access	MHER	kmtonne	3,40	10,25		
Air access	MHEA	kmtonne	12,00			cargo rate>500lb
Mobilize Camp						
Road access	MCR	each	50000,00			refurbish existing camp
Mobilize Workers						
flight	MW	each	4500,00	9100,00		Low:e.g. 8 passenger; High: Dash 7
Oil Removal						
oil removal	OR	litre	0,43	1,20		Low:waste oil heater; High: ship offsite
PCB Removal						
Remove from site	PCBR	litre	40,20	46,90		Low: shipping, handling & disposal from Yellowknife
Pipes, small (<6in dia.)						
remove/dispose on site	PSR	m	1,00	24,00		Low: remove/dispose on site; High: remove/re-use
supply	PSS	m	6,10	11,10		Low:supply; High:supply and ship
install	PSI	m	25,00			
Pipes, large (>6in dia.)						
remove/dispose on site	PLR	m	22,00	72,00		Low: remove/dispose on site; High: remove/re-use
supply	PLS	m	129,00	143,00		Low:supply; High:supply and ship
install	PLI	m	50,00			
Power Lines						
remove/dispose on site	POWR	m	25,50			
Process Chemicals						
Remove from site	PCR	kg	0,45	2,50		Low: shipping, handling & disposal from Yellowknife
Pumps						
Pump capital cost	PC	each	195000,00			
Pump shipping	PS	each	2500,00			
Pump operating cost	POC	m3	0,12			pump operating costs should be calculated based on pump capacity, fuel costs, etc.
Pump maintenance	PM	allow	25000,00			
Pump sand BackFill						
	PBF	m3	85,00	300,00		
Scarify - road/mine site						
	SCFY	ha	4300	6030	2150	
Shaft, Raise & Portal Closures						
Shaft & Raises	SR	m2	645,00	2132,00		Low:pre-cast concrete slabs, little site prep. Area=shaft+>1m all around
Portals	POR	m3	18,80	250,00	1200,00	Low:unit cost code SCS;High:excavate & backfill collapsed portal;Spec: installed pressure plug
Site Inspection Report						
	RPT	each	10000,00	20000,00		
SpillWay - Clear						
	SW	each	3000,00	7000,00		
Survey/Instrumentation						
	SI	each	1800,00	3600,00		2 person crew
Treatment Plant - Construct						
Small (< 1000 m3/d)	TPS	lump sum	9000000	15000000		
Large (> 1000 m3/d)	TPL	lump sum	15000000	46000000		
Constructed Wetland	CWTS	ha	200000	300000		
Treatment Plant - Operate						
	TPO	m3	0,35	2,00		
Treatment Chemicals						
ferric sulphate	ferric	kg	1,19			
ferrous sulphate	ferrous	kg	1,32			
lime	lime	kg	0,56			
hydrogen peroxide, 35%	hperox	kg	1,50			
Sodium Metabisulfate	Nametab	kg	1,18			
Caustic soda, 50%	caustic	kg	0,74			
Sulfuric acid, 93%	sulfuric	kg	0,31			

flocculant	flocc	kg	6,00			
copper sulphate	copper	kg				
shipping	shipping	kg	0,20			
Vegetation						
Hydroseed, Flat	VHF	ha	4000,00			
Hydroseed, Sloped	VHS	ha	4500,00			
Veg. blanket/erosion mat	VB	ha	13000,00			
Tree planting	VT	ha	2600,00	6000,00		
Wetland species	VW	ha			47,72	Specified= /m3, Wetland Growth Media Substrate mixed and installed (sand, biochar and fertilizer, woodchips)
Water Sampling/Analysis/Reporting						
	WS	each	7000,00	10000,00		
Winter Road						
Construction	WRC	km	2000,00	11500,00		
Usage	WRU	kmtonne	0,29			



SNC·LAVALIN
5400, boul. des Galeries
Ville de Québec, Québec, Canada

Tailings Storage Facility - Operation, Maintenance and Surveillance Manual, Version 9

MEADOWBANK GOLD PROJECT

TAILINGS STORAGE FACILITY

Operation, Maintenance and Surveillance Manual

Prepared by:
Agnico Eagle Mines Limited – Meadowbank Division

Version 9
March 2019

TAILINGS STORAGE FACILITY

OPERATION, MAINTENANCE AND

SURVEILLANCE MANUAL

MEADOWBANK GOLD PROJECT

AGNICO EAGLE MINES LIMITED

This Operation, Maintenance and Surveillance Manual has been prepared by Agnico Eagle Mines Limited and is to be used for the operation, maintenance and surveillance of the Tailings Storage Facility at the Meadowbank Gold Project. All Registered Manual Holders are responsible for ensuring that they are using the most recent revision of this document. This Operation, Maintenance and Surveillance Manual, may not be copied in whole or in part without the written consent of Agnico Eagle Mines Limited.

IMPLEMENTATION SCHEDULE

This Plan is immediately implemented.

DISTRIBUTION LIST

AEM - General Mine Manager

AEM – General Superintendent

AEM- Environment Superintendent

AEM- Mine Operations Superintendent

AEM- Engineering Superintendent

AEM- Energy & Infrastructure Superintendent

AEM- Maintenance Superintendent

AEM- Process Plant Superintendent

AEM- Nunavut Division Engineer of Record

DOCUMENT CONTROL

Version	Date (YMD)	Section	Page	Revision
(first revision)	February 2012	All	All	
V2	August 27, 2013	All	All	
V3	September 15, 2013	All	All	Updated items mentioned by MDRB and the Mine Inspector in the Annual Geotechnical Inspection in September 2013
V4	January 2015	All	All	
V5	October 2015	All	All	
V6	February 2016	All	All	
V7	March 2017	All	All	
V8	February 2018	All	All	Integration of the updated Central Dike TARP and Emergency Action Plan
V9	February 2019	All	All	

Approved by :

_____
Luc Chouinard
Mine Manager

_____
Pierre McMullen
Enngineering Superintendent

TABLE OF CONTENTS

DOCUMENT CONTROL ..... **III**

LIST OF TABLES ..... **V**

LIST OF FIGURES ..... **VI**

LIST OF APPENDICES ..... **VI**

SECTION 1 • INTRODUCTION **1**

1.1 objective of the oms manual 1
1.2 Registered Manual Holders and Revisions 1
1.3 management of change 2
1.4 Required Levels of Knowledge 3
1.5 LINKAGE with Emergency Response plan 3

SECTION 2 • ROLES AND RESPONSIBILITIES **4**

SECTION 3 • TAILINGS MANAGEMENT INFRASTRUCTURES DESCRIPTION **10**

3.1 Background 10
3.2 Facility Components 13
3.2.1 Saddle Dam 1 – North Cell 13
3.2.2 Saddle Dam 2 – North Cell 13
3.2.3 RF 1 and RF2 – North Cell 13
3.2.4 North Cell Internal Structure – North Cell 14
3.2.5 Saddle Dam 3, Saddle Dam 4 and Saddle Dam 5 – South Cell 14
3.2.6 Internal Structure for Reclaim – South Cell 15
3.2.7 Central Dike 15
3.2.8 Stormwater Dike – Divider Dike 16
3.2.9 Water Control Structures 17
3.3 Water & Tailings Pumping infrastructure 18
3.4 Instrumentation 21
3.5 Reference Documents and Drawings 23

SECTION 4 • OPERATIONS **27**

4.1 REFERENCES 27
4.2 summary of performance objectives and operation controls 27
4.3 Deposition Planning 28
4.4 Freeboard 32
4.5 Tailings Management 32
4.6 Water Management 33
4.7 Performance indicator during tailings management 34
4.8 Communication and decision making 39

SECTION 5 • MAINTENANCE **40**

5.1 preventative, predictive and corrective maintenance 40
5.2 references 40
5.3 component of the tailings management infrastructure requiring maintenance 41
5.3.1 Maintenance component that are outside the scope of this OMS manual 42
5.4 description of maintenance activity 42

SECTION 6 • SURVEILLANCE 45

6.1 Site observations and inspections 45
6.1.1 Site observation 46
6.1.2 Inspection program 47
6.1.2.1 Routine Visual Inspection 47
6.1.2.1 Special Visual Inspection 50
6.1.2.2 Dike Safety Inspection (annual geotechnical inspection) 50
6.1.2.3 Independent Dam Safety Review 51
6.2 Instrument monitoring program – data acquistion 52
6.3 Adding instrument to the monitoring program 54
6.4 Analysis of surveillance Results 54
6.4.1 Procedure in case of data exceeding expected range of observation 56
6.4.1.1 Blast Monitor 56
6.4.2 Anomalous Instrumentation Data 56
6.5 surveillance documentation & reporting 58
6.6 Data Management 60

SECTION 7 • REFERENCES 61

LIST OF TABLES

Table 1-1: OMS Manual Distribution List 2
Table 1-2 Emergency Response Reference Documents 3
Table 2-1: Responsibilities related to Tailings Management 6
Table 2-2: OMS Manual Contact for each position 8
Table 3-1: Description of the tailings management infrastructures 10
Table 3-2: Tailing Management Earthwork Design Criteria 12
Table 3-3 : Instrumentation Summary within the TSF 21
Table 3-4: Tailings Storage Facility Design Report and Specifications 23
Table 3-5 Tailings Storage Facility Construction Summary Report 23
Table 3-6 List of Construction Drawings for Embankment Structures 24
Table 3-7 List of Construction Drawings for Infrastructure and Piping 25
Table 4-1 : Reference Documents for Operation of Tailing Storage Facility 27
Table 4-2 : Performance Objectives and Operational Criteria for Tailings Management 27
Table 4-3 : Input parameter into a deposition plan 30
Table 4-4 : Output of a deposition plan 31
Table 4-5 : Freeboard Criteria During Operation 32
Table 4-6 Threshold Criteria and pre-defined action during operation of tailings retention structures (Excluding Central Dike) 35
Table 4-7 Threshold Criteria and pre-defined action during operation of Central Dike (Part 1/3) 36
Table 4-8 : Threshold Criteria and pre-defined action during operation of Central Dike (Part 2/3) 37
Table 4-9Threshold Criteria and pre-defined action during operation of Central Dike (Part 3/3) 38

Table 5-1: Reference documents for Maintenance of Whale Tail water management infrastructure 41
Table 5-2: Component of the water management infrastructure requiring maintenance 42
Table 5-3 :Description of maintenance activity for component of tailings management infrastructure 43
Table 6-1: Changes that may be observed through site observation and inspection of tailings management infrastructure 46
Table 6-2: Summary of routine inspection requirements 49
Table 6-3: Information collected using instrument monitoring 52
Table 6-4: Summaries of data acquisition program related to instrument monitoring of Whale Tail water management infrastructure 53
Table 6-5 : Requirement for Review, Analyses and Reporting of Instrument Data 55
Table 6-6: Example of anomalous data and some common cause 57
Table 6-7 : How data should be presented in report for instrumentation monitoring 59

LIST OF FIGURES

Figure 2-1 : Organizational Structure 5
Figure 3-1 - Tailings Storage Facilities Infrastructures 11
Figure 3-2 Deposition Point Locations in the North Cell 19
Figure 3-3 : Deposition Point Locations in the South Cell 20
Figure 3-4 : Instruments Location Within the TSF 22
Figure 4-1 : Water Management Strategy for 2019 34
Figure 4-2 : Communication and Decision Process for Tailings Management TARP 39

LIST OF APPENDICES

Appendix A Tailings Storage Facility - Inspection Form
Appendix B TSF Instruments list
Appendix C Potential Mitigation for Upset Condition

SECTION 1 • INTRODUCTION

1.1 OBJECTIVE OF THE OMS MANUAL

The objective of this manual is to define the technical aspect related to the operation, maintenance and surveillance (OMS) of the tailings storage facility at the Meadowbank Mine operated by Agnico Eagle Mines Limited (AEM).

This manual is intended as a practical document used by the personnel involved in with the Tailings Storage Facility. It incorporates operating, maintenance and surveillance procedures recommended by the Canadian Dam Association (CDA) “Dam Safety Guidelines” (CDA 2013 & 2014) and the Mining Association of Canada (MAC) “Developing an Operation, Maintenance and Surveillance Manual for Tailings and Water Management Facilities” (MAC, 2018). It also incorporate principle found in ‘A Guide to the Management of Tailings Facilities” (MAC 2017). This manual was written by the Meadowbank Engineering team and the Nunavut Engineer of Record.

The objectives of this OMS manual are to define and describes:

- Roles, responsibilities, and level of authority of personnel who perform activities related to the water management infrastructure
- The tailings management infrastructure covered in the scope of this OMS manual
- Plans, procedures and processes for :
    - The operation, maintenance and surveillance of the tailings storage facility infrastructures to ensure that it functions in accordance with their design, meets performance objectives and link to emergency response planning
    - Evaluating performance of the structures, and report performance results
    - Managing change

This manual contains protocols and information that will assist AEM to operate, maintain, and monitor the tailings management infrastructure in a safe manner and identify early signs of malfunction.

Element related to design, construction and closure of tailings management infrastructures, are out of scope of this manual.

1.2 REGISTERED MANUAL HOLDERS AND REVISIONS

This OMS manual is a controlled document. The latest version of this document is available in Intelex.

The person responsible for the preparation, update and distribution of this manual is the Engineering Superintendent. Any change to this OMS manual must be submitted to and approved by the Engineering Superintendent who will be responsible to update the OMS manual in Intelex.

It is each user responsibility to ensure that they are using the latest version of this document. In case of issue with retrieving the electronic version of this document, the most up to date paper version of this document will always be kept in the Engineering Superintendent Office.

The Engineering Superintendent is responsible to communicate any change to this manual by e-mail to the distribution list in Table 1-1. The Engineering Superintendent is responsible for maintaining an up-to-date distribution list of this manual.

Table 1-1: OMS Manual Distribution List

Position	**Name**
General Mine Manager	Luc Chouinard
General Superintendant	Eric Côté / Jacques Proulx
Environment Superintendent	Nancy Duquet-Harvey
Mine Operations Superintendent	Yan Côté, Nicolas P. Deschamps (asst.)
Engineering Superintendent	Pierre McMullen, Miles Legault (asst.)
Maintenance Superintendant	Christian Quirion
Energy & Infrastructures Superintendent	Guillaume Gemme
Process Plant Superintendent	Michel Fortin
Engineer of Record, Meadowbank Division	Thomas Lepine

1.3 MANAGEMENT OF CHANGE

This manual will be reviewed on an annual basis at the beginning of Q3 and revised as necessary to accommodate changes in the condition and operation of the facilities. The Engineering Superintendent will be responsible to coordinate this review process.

In conducting the review and update of the OMS manual the following must be taken into account:

- Performance of the facility
- Current life cycle of the facility
- Change since the last review (site condition, critical control, risk profile, personnel, methodology and technology for OMS activities)

In addition to the annually scheduled review, a review may be triggered by a significant event or may need to be updated in response to:

- Planned changes, such as change in surveillance instrumentation or methodologies, or introduction of new instrumentation methodology
- Changes in personnel or roles referred to in the OMS manual
- Other changes that may occur that need to be addressed prior to the next scheduled review of the OMS manual

The update need to be completed in a timely manner following the document control criteria specified in Section 1.2.

As a good practice the Engineering Superintendent should organise on a yearly basis a session to present the change in the OMS manual to the person in its distribution list.

1.4 REQUIRED LEVELS OF KNOWLEDGE

To preserve the integrity of the operation of these structures, the personnel must have a good comprehension of the factor that can impact the performance of the water management infrastructures. It must also be know that any deviation can signify the emergence of a problem and the role that each person must have in the operation, maintenance and surveillance of these infrastructures.

It is the responsibility of each person in the distribution list of this manual to be familiar with it and understand its whole content. They also need to ensure that everyone under their supervision who's duty involve task related to the operation, maintenance or surveillance of any component of the water management infrastructures have the appropriate level of knowledge and the resources to comply with the protocol presented in this document.

1.5 LINKAGE WITH EMERGENCY RESPONSE PLAN

An emergency is a situation that poses an impending or immediate risk to health, life, property, or the environment and which requires urgent intervention to prevent or limit the expected outcome.

This OMS manual address conditions related to operation under normal or upset conditions, as opposed to emergency situation. An Emergency Response Plan (ERP) describes measures the Owner and, in some cases, external parties will take to prepare for an emergency, and to respond if an emergency occurs.

An OMS and ERP manual must be aligned, as a results this OMS manual contain the following information (refer to Section 4):

- Performance, occurrences, or observation that would results in an emergency being declared
- Roles and responsaibilities of key personnel in transition from normal or upset conditions to an emergency
- Actions to be taken to transition from normal or upset confitions to an emergency situation

Once an emergency has been declared reference must be made to the Emergency Response Plan (Reference included in Table 1-2). The most recent version of the ERP can be found on Intelex and in the Engineering Superintendant Office

Table 1-2 Emergency Response Reference Documents

Document	Current Revision
Emergency Response Plan	Updated by AEM. Version 12, January 2018. (Intelex)

SECTION 2 • ROLES AND RESPONSIBILITIES

A functional chart for the water management infrastructure at the Whale Tail project is shown in Figure 2-1.

The roles and responsibilities of the key personnel involved in the water management infrastructure of the Whale Tail Project are shown in Table 2-1. Contact information for each position is indicated in Table 2-2.

Personnel who have task directly related to the water management infrastructure need to receive a training when they start in the position to ensure they understand their roles and responsibility related to this OMS manual.

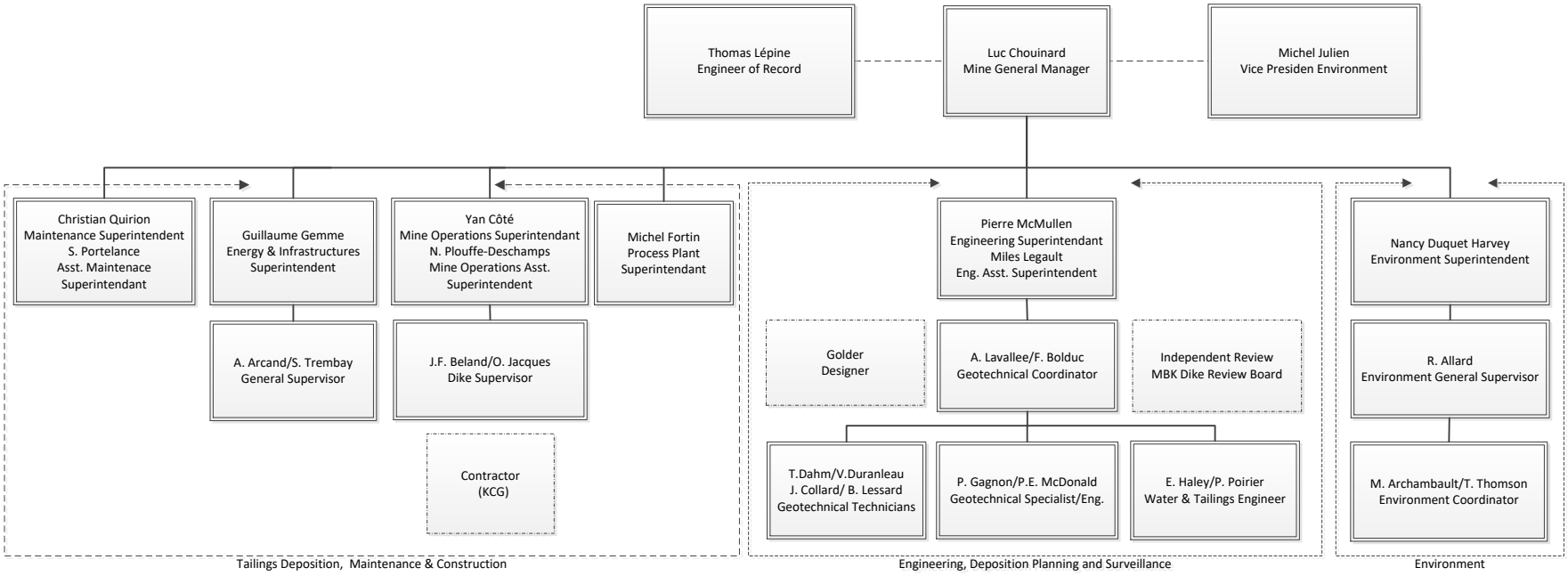

Figure 2-1 : Organizational Structure

Table 2-1: Responsibilities related to Tailings Management

Role	Responsibilities
Vice-President Environment	• Be aware of key outcome of water & tailings management risk assessment and how these risks are being managed • Has accountability and responsibility for putting in place appropriate management structure • Assign responsibility and appropriate budgetary authority for water & tailings management and defines the personnel duties, responsibility and reporting relationships, supported by job description and organisational charts to implements the water management system though all stages in the facility life cycles • Provide assurance to AEM and its Community of Interest that the water & tailings management infrastructure are managed responsibly
General Mine Manager	• Identifies the scope of work and budget requirement for all aspect of water & tailings management • Approve budget for OMS related activity • Establish an organisational structure with Roles and Responsibility that meets the operational needs • Delegate specific tasks and responsibilities for water management to qualified personnel • Liaise with independent reviewer (MDRB) as required
Engineer of Record (EoR)	• Input into the OMS activities in accordance with the design • Receive and review the OMS manual on a regular basis • Receive and review performance data at a frequency determined based on the risks • Either confirm operation is compliant or identify deviations from performance objectives and advise the Owner with recommendations • Advise on contemplated change on the facility operation • Maintain records relating to design construction and operation • Participate in inspection and independent review
Independent Reviewer – Meadowbank Dike Review Board (MDRB)	• Provide independent, objective, expert commentary, advice and recommendations, to assist in identifying, understanding, and managing risk associated with tailings management facilities
Engineering Superintendent	• Revise and update the OMS Manual to reflect as-built conditions and any other changes. • Review and update OMS manual into Intelex • Maintain up to date distribution list of the OMS Manual. • Establish a formal relationship with the EOR to ensure operation is compliant with design intent • Identify when/where contemplated operational changes are a potential deviation from the design intent and engage the EoR and Designer as part of processes to manage change • Coordinate work force as required for monitoring and maintenance.

Role	Responsibilities
Mine Operations Superintendent / Dike Supervisor	• Maintain access to the structure and seepage collection systems, including making road repairs, controlling dust and removing snow. • Carry out field maintenance related to earthwork as required, • Supervise Mine Contractor for aspect related to earthwork construction and maintenance
Geotechnical Coordinator	• Supervise the work of the geotechnical engineer, geotechnical technician and water and tailings engineer • Approve tailings deposition plan
Geotechnical Engineer	• Carry out inspections of the facility as required in the OMS Manual. • Carry out instrument monitoring as required in the OMS Manual. • Review and distribute surveillance reporting as required in the OMS Manual •
Geotechnical Technician	• Carry out inspections of the facility as required in the OMS Manual. • Monitor instrumentation as required in the OMS Manual. • Maintain instrumentation, readout units, data acquisition system and cabins • Responsible for data acquisition as required in the OMS manual • Prepare reports on instrumentation readings, dike performance, visual observations, etc. as required in the OMS Manual.
Water & Tailings Engineer	• Carry out inspections of the facility as required in the OMS Manual. • Carry out instrument monitoring as required in the OMS Manual. • Review and analyse surveillance data to evaluate dike performance with respect to design parameters. • Analyse geotechnical instrumentation monitoring data to evaluate performance with respect to design parameters • Coordinate equipment, labour, materials and maintenance activities required for pumps and pipelines associated with dewatering, seepage collection systems and any runoff diversions. • Prepare tailings deposition plan and water management plan
Environment Department Superintendent / General Supervisor / Coordinator / Technician	• Ensure monitoring of water quality and total suspended solids from the tailings storage facility as required in the water management plan • Review environmental monitoring data for compliance with Water License and regulations and to determine tailings management performance with respect to design parameters. • Liaise with external stakeholders including NIRB, Nunavut Water Board, NGO's, government agencies.

Role	Responsibilities
Energy & Infrastructures Superintendent / General Supervisor / Pump crew supervisor / electrical supervisor	• Installation and operation of pumps and pipeline (electrical, mechanical) • Maintain and service pumps and pipelines • Coordinate equipment, labour and materials for maintenance of electrical and mechanical equipment • Carry out field operations including tailings deposition move, pipe cleaning (pig) and reclaim move • Carry out field maintenance on pumps and pipeline including electrical and mechanical repairs.
Process Plant Superintendant / General Supervisor	• Ensure tailings distribution from the mill to the tailings storage facility • Operation, maintenance and surveillance of mill pump and booster pump
Mine Contractor	• Rent equipment and manpower for construction and maintenance of water management infrastructure
Design Engineer	• Advise on contemplated change to the facility design • Advisor on structure performance as required • Participate in inspection and independent review as required
Maintenance Superintendent/ Pump mechanics	• Ensure preventive maintenance is carried out regularly on each pumping equipment • Repair pumping equipment as required • Update and maintain a list of operational pumping equipment • Keep records of maintenance on pumping equipment

Table 2-2: OMS Manual Contact for each position

Role	Name	Work Contact Info
Vice-President Environment	Michel Julien	416-947-1212 x3738 514-244-5876
General Mine Manager	Luc Chouinard	819-759-3555 x4606896
Engineer of Record (EoR)	Thomas Lepine	416-947-1212 x3722 418-473-8077
Engineering Superintendent / Assistant	Pierre McMullen Miles Legault	819-759-3555 x4606721
Mine Operations Superintendent / Assistant	Yan Côté Nicolas Plouffe-Deschamps	819-759-3555 x4606832
Dike Supervisor	Jean-François Béland Olivier jacques	819-759-3555 x4606807
Geotechnical Coordinator	Frédérick L.Bolduc Alexandre Lavallée	819-759-3555 x4606837
Geotechnical Engineer	Patrice Gagnon Pier-Eric McDonald	819-759-3555 x4606726
Geotechnical Technician	Vincent Duranleau	819-759-3555 x4606818

Role	Name	Work Contact Info
	Thomas Dahm Bruno Lessard Jerome Collard.	819-759-3555 x4606851
Water & Tailings Engineer	Eric Haley Pascal Poirier	819-759-3555 x4606752
Environment Superintendent	Nancy Duquette	819-759-3555 x4606980 x3175
Environment General Supervisor	Robin Allard	819-759-3555 x4606838
Environment Coordinator	Martin Archambault Tom Thomson	819-759-3555 x4606744
Process Plant Superintendent	Michel Fortin	819-759-3555 x4606814
Energy & Infrastructures Superintendent	Guillaume Gemme	819-759-3555 x4606632
Maintenance Superintendent	Pierre Laberge Sylvain Portelance	819-759-3555 x4606722
Energy & Infrastructure General Supervisor	Alexandre Arcand Steven Tremblay	819-759-3555 x4606822
Pump crew supervisor	Shawn Valiquette	819-759-3555 x4606616
Electrical Supervisor	Alain Villeneuve	819-759-3555 x4606762
Mine Contractor	KCG	819-759-3555 x4606963 418-615-0559
Designer – Golder	Yves Boulianne	514 383 6196 x7434 514 207-0264
Independent Reviewer – Meadowbank Dike Review Board (MDRB)	Anthony Rattue Don Hayley	anthony.rattue@bell.net don.hayley@icloud.com

SECTION 3 • TAILINGS MANAGEMENT INFRASTRUCTURES DESCRIPTION

3.1 BACKGROUND

The tailings storage facility (TSF) is the permanent storage facility for tailings produced during the operation of the mine. It is located north of the Process Plant Site within the dewatered portion of the northwestern arm of Second Portage Lake.

The tailings management include the operation of a series of water & tailings management infrastructures as shown in . Table 3-1 indicate the water management infrastructure of the Whale Tail Project.

The design criteria of the earthwork infrastructure are presented in Table 3-2. Reference to design and construction document are presented in Section 3.7

Table 3-1: Description of the tailings management infrastructures

Infrastructure	Function
North Cell Peripheral Structure : Saddle Dam 1, Saddle Dam 2, RF1, RF 2	Peripheral tailings retention structure for tailings containment within the North Cell
North Cell Internal Structure and associated ditches and sump	Upstream raise built on the tailings to increase capacity of the North Cell
South Cell Peripheral Structure : Saddle Dam 3, Saddle Dam 4, Saddle Dam 5, Central Dike	Peripheral tailings retention structure for tailings containment within the South Cell
Stormwater Dike	Internal structure that divide the TSF into the North and the South Cell
Diversion Ditches	Non-contact water diversion structure. Prevents runoff from the watershed to reach the TSF
Deposition and reclaim infrastructure	Infrastructure required for tailings deposition and to reclaim water within the TSF

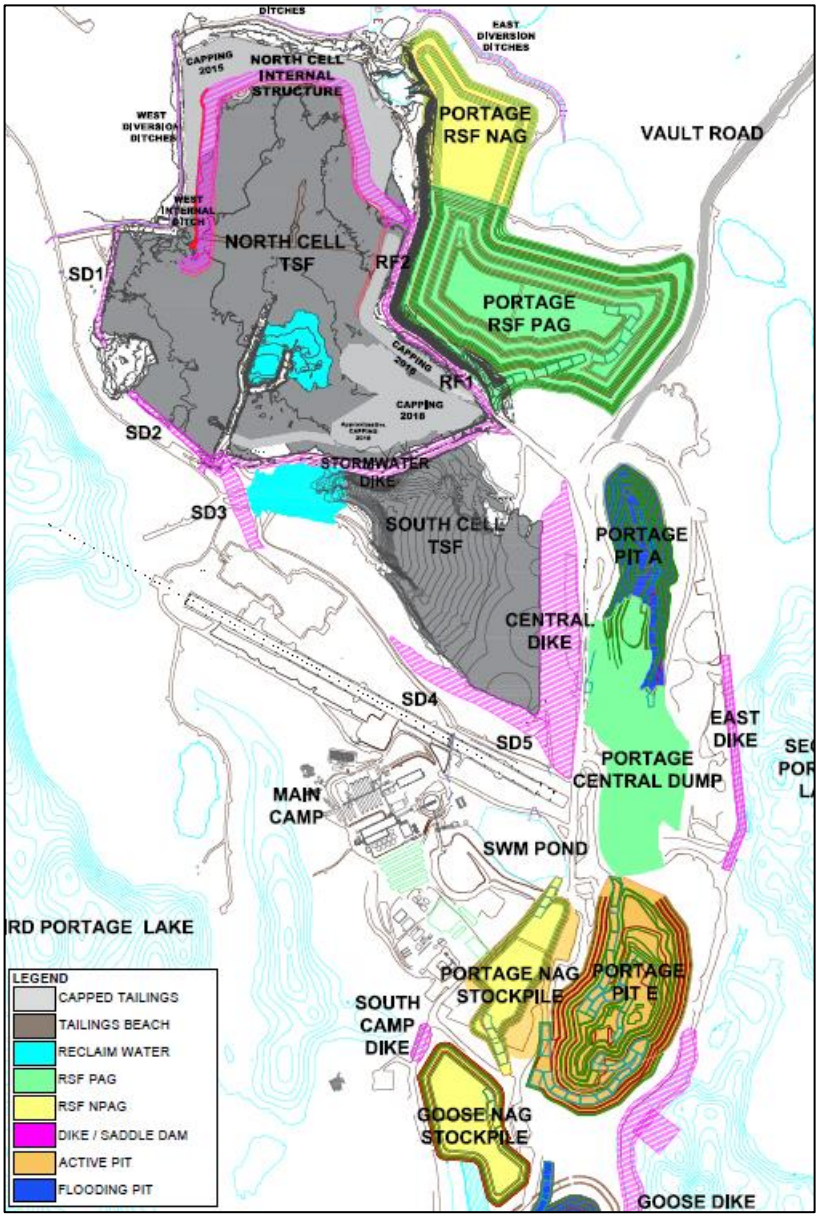

Figure 3-1 - Tailings Storage Facilities Infrastructures

Table 3-2: Tailing Management Earthwork Design Criteria

Structures	Classification (CDA 2007/2013)	Side slope	Crest elevation (m)	Length (m)	Construction period
Saddle Dam 1	High	US 3H:1V DS 1.3H:1V	150	~ 400	2009 (El. 141 m) 2010 (El. 150 m)
Saddle Dam 2	High	US 3H:1V DS 1.5H:1V	150	~460	2011 (El.150 m)
Saddle Dam 3	High	US 3H:1V DS 1.5H:1V	150	~245	2015 (El.140 m) 2016 (El.143 m) 2017-2018 (El.145 m)
Saddle Dam 4	High	US 3H:1V DS 1.5H:1V	143	~365	2015 (El.140 m) 2016 (El.143 m) 2017 (El.145 m)
Saddle Dam 5	High	US 3H:1V DS 1.5H:1V	143	~255	2016 (El.143 m) 2017 (El.145 m)
RF1	-	US 1.5H:1V DS 1.5H:1V	150	~400	2009 2013 (Till Plug)
RF2	-	US 1.5H:1V US 1.5H:1V	150	~281	2009
Central Dike	High	US 2 H:1V El.130 US 3H:1V El. 130 DS 1.5H:1V	150	~900	2012 (El.110 m) 2013 (El. 115 m) 2014 (El.132 m) 2016 (El.143 m) 2017-2018(El.145 m)
Strormwater Dike	High	US 3H:1V DS 1.3H:1V	150	~1000	2009 (El.140 m) 2010 (El.148 m) 2013 (El.150 m)
North Cell Internal Structure	Significant	US 3H:1V DS 1.5H:1V	Variable El.152-154	~2160	2018 (Variable El.152-154)
South Cell Internal Structure (reclaim)	-	US 1.3H:1V DS 1.3H:1V	El 142.5	-	2017 (El. 137.2) 2019 (El. 142.5)

3.2 FACILITY COMPONENTS

3.2.1 Saddle Dam 1 – North Cell

Saddle Dam 1 is located in the northwestern corner of the TSF and forms one of the perimeter structures of the North Cell intended to retain tailings and supernatant fluid during the operation and the closure of the TSF. Saddle Dam 1 crosses a depression between the northwestern arm of Second Portage Lake and Third Portage Lake.

Saddle Dam 1 is a rockfill embankment with an 3H:1V upstream slope and a 1.3H:1V downstream slope. This structure has inverted base filters, upstream graded filters, and a linear low density polyethylene (LLDPE) geomembrane liner on the upstream dike face. The geomembrane liner is placed between an upper and lower non-woven geotextile layer for protection, and is covered by approximately 0.3 m of granular material up to El. 140 m. No granular layer was placed above El. 140 m and the liner is exposed above that elevation. According to the design, a tailings beach has to be maintained on the face of the structure to reduce the potential for ice damage to the liner. The abutments are founded on bedrock, while the central portion of the dike is founded on ice-poor soil. Till and/or crushed aggregate mixed with dry bentonite powder have been placed above the toe of the liner.

Stage 1 of Saddle Dam 1 was constructed in the fall of 2009 to a height of 10 m (crest elevation of 141 m) and a length of 250 m. Stage 2 was constructed in 2010 to an overall height of 20 m (final crest elevation of 150 m) and length of about 400 m.

3.2.2 Saddle Dam 2 – North Cell

Saddle Dam 2 is located along the western side of the TSF and connects to the western corner of Stormwater Dike. Along with Saddle Dam 1, it forms one of the perimeter structures of the TSF's North Cell which retain tailings and supernatant fluid during the operation and closure of the TSF. Saddle Dam 2 crosses a depression between the northwestern arm of Second Portage Lake and Third Portage Lake. Its construction and design is similar to Saddle Dam 1. Saddle Dam 2 has a maximum height of about 10 m and a crest length of 460 m. Saddle Dam 2 was constructed in one stage to El. 150 m in 2011.

The upstream foundation of the dike and abutments are primarily founded on bedrock; however, some portions of the structure, underneath the inverted filter, are founded on ice-poor soil. During construction, a thin layer of low permeability till was placed and compacted along the toe liner tie-in connection with bedrock. A thin layer of crushed aggregate (0-22 mm) mixed with dry bentonite powder was also placed under the thin layer of low permeability till in areas where open factures were observed within the bedrock. The toe liner tie-in was then covered with till.

3.2.3 RF 1 and RF2 – North Cell

RF1 and RF2 are two rockfill access roads located between the eastern side of the North Cell and the Portage Waste Rock Storage Facility. These access roads were not designed as a containment structure and do not include a low permeability element due to the topography of the sector.

In 2013 a till plug was installed on RF1 when seepage was observed reporting into Lake NP2 from this location. The till plug was constructed in the summer of 2013. Its construction consisted in profiling the upstream slope and placing a 0.5-m-thick layer of compacted crusher reject, and then installing a geotextile membrane covered by 0.5 m of fine ultramafic rockfill and material reject from till sieving. Both granular layers were compacted with an excavator bucket.

3.2.4 North Cell Internal Structure – North Cell

The North Cell Internal Structure is designed and constructed as a permeable zoned rockfill dam with filter zones built on the top surface of dried tailings and on an existing rockfill cover. Placement of the rockfill cover on the tailings was carried out in winter when the tailings foundation was frozen. The maximum elevation of the North Cell Internal Structure is designed to be El. 154 m and an offset is keep from the perimeter of the North Cell and the peripheral structure.

The typical section of the structure is a rockfill shell with a 3H:1V upstream slope and a 1.5H:1V downstream slope. The upstream face of the structure is comprised of two granular filter zones. The filter zones are designed to prevent tailings migration and internal erosion while allowing water to flow through the embankment. Fine ultramafic rockfill was used during the construction of the structure. Temporary ditches and sumps system were constructed on the downstream side of the internal structure within the existing tailings to collect seepage and runoffs during operation.

In 2018 the North Cell internal structure was built from Station 1+100 to 3+260 for a total of 2160 m. Section 1+100 to 1+660 and 2+750 to 3+260 were built to El. 152 with a width of 39 m and the part from Sta 1+660 to 2+750 was built to El. 154 m with a crest width of 30 m.

3.2.5 Saddle Dam 3, Saddle Dam 4 and Saddle Dam 5 – South Cell

Saddle Dam 3 is located in the northwestern corner of the South Cell and merges into Saddle Dam 2 to El. 145 m. Saddle Dam 4 is located in the southwestern corner of the South Cell and merges into Saddle Dam 5, which merges with the southern end of Central Dike, to El. 145 m.

Saddle Dams 3, 4, and 5 are designed and constructed as zoned rockfill dams with filter zones, low permeability upstream liners, and upstream toe liner tie-in key trenches. The Saddle Dams 3, 4 and 5 cross-sections consist of a rockfill embankment, constructed from run-of-mine waste rock, placed in lifts and compacted. The upstream faces are designed at a 3H:1V slope and the downstream faces are designed at a 1.5H:1V slope. The upstream faces of Saddle Dams 3, 4 and 5 are comprised of two granular filter zones and a polyethylene liner (LLDPE) extending along the upstream foundation. The filter zones mean to keep the tailings inside the facility in a case of liner puncture but mainly act as appropriate bedding for the liner. An upstream liner tie-in key trench excavated to bedrock and filled with compacted till is located along the upstream area of the structures. The bulk part of Saddle Dams 3, 4 and 5 consists of coarse rockfill material.

The design of Saddle Dam 3 include an additional protection cover over the liner made of till and rockfill. This protection was added to the design as this structure will not be protected with a tailings beach during operation as water need to be maintained in that area for reclaim.

Stage 1 of Saddle Dam 3, 4 and 5 was constructed in 2015. During Stage 1, Saddle Dam 3 and 4 were constructed to El. 140 m and Saddle Dam 5 to El. 137 m. Stage 2 of Saddle Dam 3, 4 and 5 was constructed to El. 143 m in 2016. Stage 3 of Saddle Dam 3, 4 and 5 was constructed to El. 145 m in 2017. The filter and liner installation at Saddle Dam 3 was finalized in 2018. These

structures are designed to be able to be raised to El. 150 m and the final crest elevation of these structures is subject to review by AEM. The completed crest length is approximately 245 m for Saddle Dam 3, 365 m for Saddle Dam 4, and 255 m for Saddle Dam 5.

3.2.6 Internal Structure for Reclaim – South Cell

An internal structure was built into the South Cell in 2017 in front of the reclaim area. The objective of this structure was to prevent tailings from filling the reclaim area near SD3 and to limit the turbidity of the reclaim water for mill usage. This structure was built by pushing rockfill in the South Cell with a dozer. In the winter of 2019 this structure was raised to El 142.5 m.

3.2.7 Central Dike

Central Dike is located along the eastern side of the TSF and crosses a depression within Second Portage Lake. It forms one of the perimeter structures of the South Cell.

Central Dike design includes a compacted rockfill embankment with an upstream seepage barrier, granular filters and a key trench along the centreline of the dike transitioning on the upstream toe near both abutments. The foundation soils include lakebed sediments and till overlying bedrock. Soft and ice-rich soils were removed from the Central Dike footprint during construction.

Construction of Central Dike started in 2012. Central Dike was built to El. 143 m during the 2016 construction season (Stage 5), and its north abutment raised to El. 145 m during the 2017 and 2018 construction season (Sta. 0+090 to 0+174 m). Central Dike is designed to be able to be raised to El. 150 m and the final crest elevation is subject to review by AEM. The completed crest length is approximately 900 m.

Seepage into the basin at the downstream toe of Central Dike was observed when tailings deposition was transferred from the North Cell of the TSF to the South Cell in 2014. The rate of seepage started to increase proportionally to the rise of the pond level of the South Cell and reach a peak of 900 m^3/h in 2015. Desktop studies were undertaken by Golder in 2015 to estimate the seepage flows and pore water pressures, verify the dike stability, and attempt to predict the eventual flow volume that would report to the downstream toe for higher pond elevation. The seepage pathway used in the Golder 2015 model was through a layer of fine material in the till layer of the foundation as it was deemed the most critical scenario for the structure stability. The main recommendation from this desktop study was to maintain beaches adjacent to Central Dike and to maintain a ‘back pressure’ on the downstream side of Central Dike in order to reduce the hydraulic gradient by holding the downstream pond at El. 115 m.

Willowstick was also hired to carry out geophysical soundings (electromagnetic survey) to detect seepage paths. The geophysical campaign led to additional recommendations and identified possible seepage path locations. Following the geophysical investigation, an investigation was conducted by SNC Lavallin (SNC) and AEM in December 2015 at station CD-595, and between CD-810 and CD-850. Highly altered and fractured bedrock was encountered and high hydraulic conductivity was measured from Packer testing. Instrumentation of the four boreholes with piezometers and thermistors was done at the same time. In 2016, the MDRB recommended that the seepage model and stability analyses be updated.

A study has been completed in 2017 to update the seepage modelling and stability assessment with a seepage flow through the bedrock. In the summer of 2017 an investigation and instrumentation campaign was performed by Golder to confirm the results of the seepage modelling. The results from this investigation support the hypothesis that the seepage pathway occur in the bedrock. During this investigation a potential void in the till layer was encountered during drilling. A complementary investigation was thus performed and was not able to confirm the presence of the void.

The Central Dike seepage is normally back into the South Cell. From September to October 2017 the seepage was transferred to Goose Pit as a mitigation measure. This measure, combined with an adapted tailings deposition plan was effective in reducing the seepage flow rate. As a results the average seepage rate at Central Dike decreased from 540 m^3/h in 2017 to 263 m^3/hr at the end of 2018 and is following the trend from the 2017 seepage modelling done by Golder.

In the summer of 2017 the water in the downstream pond became orange and this was associated with rapid temperature variation. This event was investigated by chemical analysis and was found to be caused by the precipitation of iron oxide from bacterial process. As predicted this event re-occurred in the summer of 2018.

3.2.8 Stormwater Dike – Divider Dike

Stormwater Dike is an internal structure that subdivides the TSF into the North Cell and the South Cell within the dewatered northwestern arm of Second Portage Lake. In this document, the North Cell side is taken as upstream and the South Cell side as downstream.

Stormwater Dike is a rockfill embankment structure founded on lakebed soils. The upstream slope is approximately 3H:1V and the downstream slope is about 1.3H:1V. A bituminous geomembrane liner has been installed above the graded filters on the upstream face of the dike. Low permeability till was placed and compacted along the upstream toe of the dike, above the liner.

Stormwater Dike was progressively constructed. Stage 1 was constructed in 2009 to a height of 10 m (crest elevation of 140 m) and a length of 860 m. Stage 2 was primarily constructed in 2010 to an overall height of 18 m (crest elevation of 148 m) and length of about 1,060 m. A horizontal bench is present along the upstream face of the structure due to the connection of the 2009 and 2010 portions of the structure. The junction between the bituminous liner of Stormwater Dike and the LLDPE liner of Saddle Dam 2 was completed in 2011. The crest of Stormwater Dike was raised to 150 m in 2013.

The majority of the dike is seated on dense till from the former lakebed within the talik while the abutments are generally founded on bedrock. The foundation preparation of Stage 2 was completed in winter conditions. It was generally done above water except in an area where water ponding was present (between Sta.10+500 and 10+750 approximately). This pond was located where the topography suggests that the soft lakebed sediment thickness may be greater than at other locations along the dike. Due to the presence of water, the ice crust was cracked with the excavator and only minimal foundation preparation was possible. As a result, most of the lakebed sediment probably remained in place in this area.

At the end of August 2016, during a routine inspection, AEM noticed tension cracks and signs of settlements on the crest of Stormwater Dike between Sta. 10+500 to 10+750 approximatively.

The crack system that suddenly developed in this area had a lateral and vertical component according to the monitoring equipment. To mitigate against a possible foundation failure, a rockfill buttress support was constructed at the downstream toe of Stormwater Dike in the South Cell (from Sta. 10+300 to Sta. 10+700 approximatively). After the completion of this buttress the displacement at Stormwater Dike stabilized and then stopped. Cracks have since been filled with bentonite.

In July 2017, during a routine inspection, AEM noticed new tension cracks and signs of settlements on the crest of Stormwater Dike around Sta. 10+425, between Sta. 10+550 and Sta. 10+650, between Sta. 10+800 and Sta. 10+950, and around Sta. 11+050 approximatively. Settling of about 300 mm was observed between Sta. 10+800 and Sta. 10+950, approximately. Cracks appear to be oblique tension fractures, extending over the entire width of the dike crest. Some cracks were up to 5 cm wide but most of them did not progress after they were first observed. The area affected by these cracks is consistent with the limits of the South Cell water ponding against Stormwater Dike, which probably thawed the frozen soft soil foundation.

In April 2018, new cracks were observed by AEM in between Sta. 10+950 and Sta. 11+010. The widest crack was about 4 cm wide but the cracks did not progress significantly after they were first noted. New crack were observed later in July in between S114 and S115 but no elongation was noted after.

The current understanding of the situation is that the soft sediment foundation was frozen in the winter of 2010 while additional rockfill material continued to be placed over it until July 2010. The foundation freezing explains why no adverse settlement or soil failure was observed until the South Cell water level started reaching the toe of the structure in July 2016, which probably thawed the frozen soft soil foundation. The mechanism that caused the observed movement could be due to a foundation soil failure, the thawing of ice lenses or a combination of both.

3.2.9 Water Control Structures

The diversion ditches (East and West), located around the perimeter of the North Cell TSF and the Portage RSF, are designed to collect the non-contact water runoff from the surrounding watershed. The ditches are divided in two sections – the west and east sections, to divert non-contact water respectively to Third Portage Lake and to NP1 Lake. On the west end of the diversion ditches, an Interception Sump was constructed in 2014-2015. The objective of the interception sump is to collect runoff water from the west section of the diversion ditches and to retain it until the total suspended solids in the water have reached the criteria allowing discharge to the environment. When the TSS level in the interception sump is considered too high water from that sump is pumped back into the North Cell of the TSF.

The perimeter water control structures will be used throughout the operating life of the TSF. These will continue to be used into the post-closure of the project until both the TSF and adjacent ground returns to pre-development permafrost conditions or the surface runoff and seepage waters are of acceptable quality to be discharged directly to the environment.

Following the construction of the North Cell Internal Structure, internal ditches and sump were constructed over the existing tailings surface. A ditch connecting to a sump was built on the western side of the North Cell internal structure and two sumps were built on the eastern side. The objective of these structures is to collect water that would seep through the internal structure during operation. Water collected in these structures is pumped back into the TSF. These structures will be operational only during deposition from the internal structure of the North Cell.

3.3 WATER & TAILINGS PUMPING INFRASTRUCTURE

Tailings is distributed from the mill to the TSF by pumping it as a slurry (details on tailings property are presented in Section 4). The infrastructure located inside the mill is out of scope of this OMS manual.

The pipe used for tailings distribution is insulated 14'' and 16'' HDPE pipe. The tailings pipe is heat traced form the mill to the pig launcher. The tailings pipe from the mill first reach the pig launcher station. The pig launcher station is the location where the tailings deposition can be switch to the by-pass point. This station is used for maintenance of the tailings pipe (passing the pig).

Tailings deposition at Meadowbank is done using the end of pipe technique with only one active tailings deposition point at a given time. From the pig launcher the tailings pipe is then positioned to reach the current deposition points. The location of the tailings deposition point is determined during the tailings deposition plan exercise and are constructed as they become required. Location of the tailings discharge point are shown on Figure 3-2 and Figure 3-3. Each deposition point switch requires physical manipulation of the pipe (extension / shortening) as there is no valve system.

When tailings deposition occurs from a dike, the tailings deposition point is constructed in a way to prevent damaging the structure (also call deposition finger). The protection usually includes placement of aggregate over the structure as well as the placement of geomembrane or used conveyor belt

A booster pump station is required to be able to pump the tailings into the North Cell due to the pumping distance and difference in elevation. The booster pump station includes two electrical pumps that are controlled by the mill.

A reclaim station is located in the South Cell near SD3. This infrastructure is used to send back water from the TSF to be used as part of the milling process. The reclaim station is a pumphouse on skid that can be moved as the water level change in the South Cell. The suction line is placed at the bottom of the pond and is extended as needed. The pump of the reclaim station is electrical and is controlled remotely by the mill. The line that bring the reclaim water to the mill is a heat traced insulated 14'' HDPE DR 17

Water ponding in the North Cell is transferred into the South Cell pond using a HL250 pump.

Water seeping out of the dike TSF is captured in sump and pumped back as required on the upstream side of the dike. Most sumps do not have a permanent pumping system and water is pump out as required during freshet using mobile pump. These sumps are located at SD1, SD3 and SD4, and around North Cell Internal Structure.

At freshet water from the interception sump of the western ditches is pumped back in the North Cell as well as water from ST-16. These setup are considered to be temporary and are used and installed as required.

Central Dike has a permanent pumping system comprised of an electrical pump and a diesel pump. Pumping of the downstream pond is required on a year-round basis as to maintain a target EL. At 115 m. Water from Central Dike seepage is sent back into the South Cell.

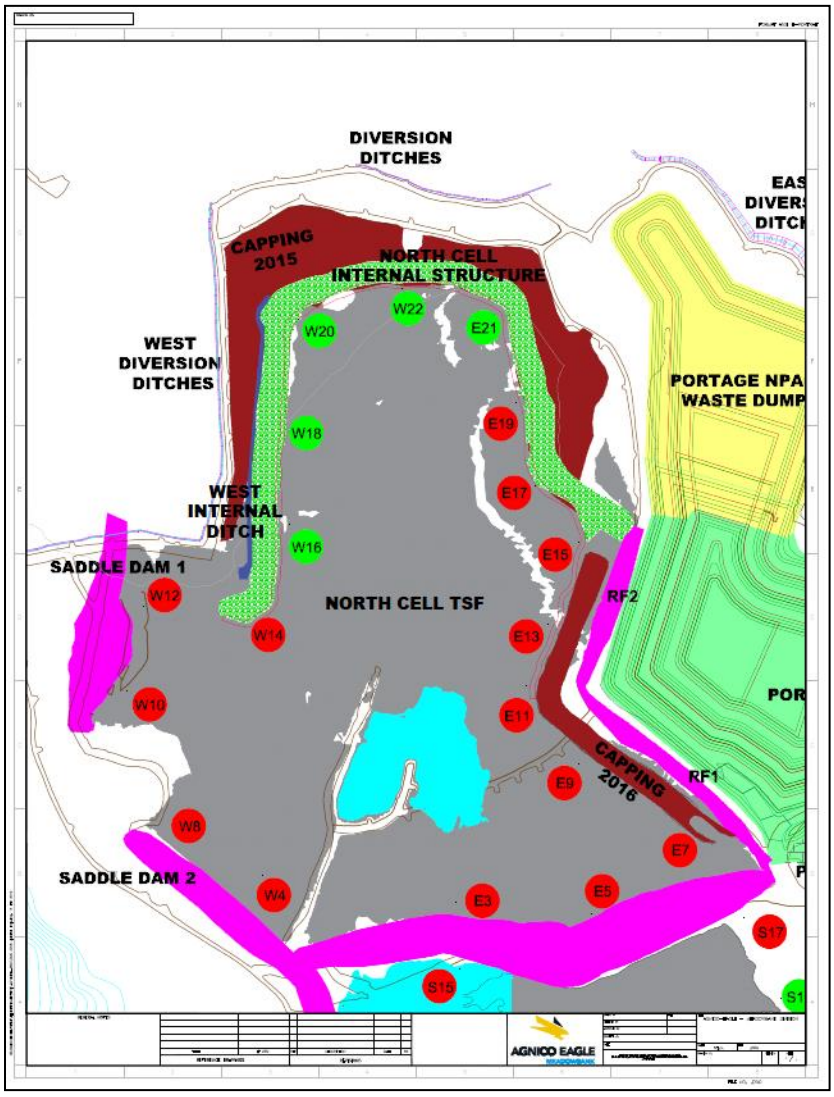

Figure 3-2 Deposition Point Locations in the North Cell

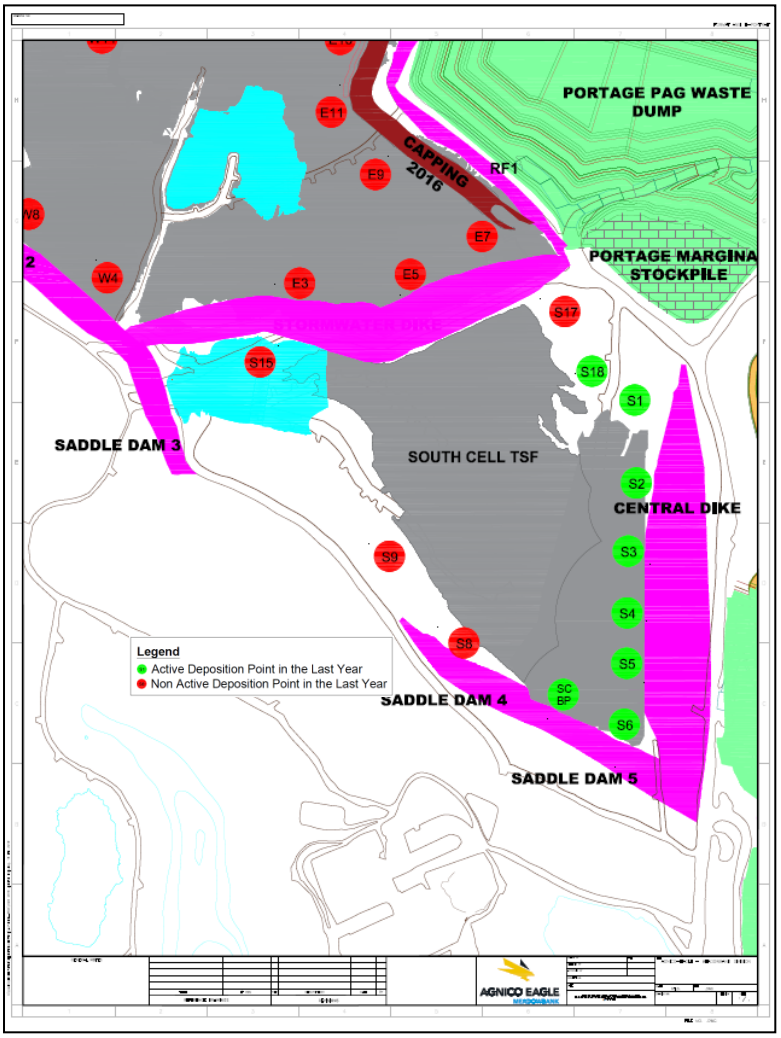

Figure 3-3 : Deposition Point Locations in the South Cell

3.4 INSTRUMENTATION

The TSF is instrumented with geotechnical instrumentation to monitor performance of the containment structure and the freeze back of the tailings. The instruments are installed within the structure and inside the tailings and includes piezometers, thermistors and survey monuments (prisms).

Reference document for the instrumentation installed within the TSF and their status are presented in Appendix 2. The summary of instrument installed is summarised in Table 3-3. Figure 3-4 show the instruments installed within the TSF.

Table 3-3 : Instrumentation Summary within the TSF

Structure	Piezometers	Thermistors	Survey Monument	Crackmeters	Staff Gauge
Central Dike	69	26	-	-	-
Stormwater Dike	3	3	19	3	-
Saddle Dam 1	-	4	-	-	-
Saddle Dam 2	-	4	-	-	-
Saddle Dam 3	-	5	-	-	-
Saddle Dam 4	-	4	-	-	-
Saddle Dam 5	-	3	-	-	-
RF1-RF2	-	4	-	-	-
North Cell Internal Structure	-	4	16	-	-
North Cell Tailings	-	9	-	-	1

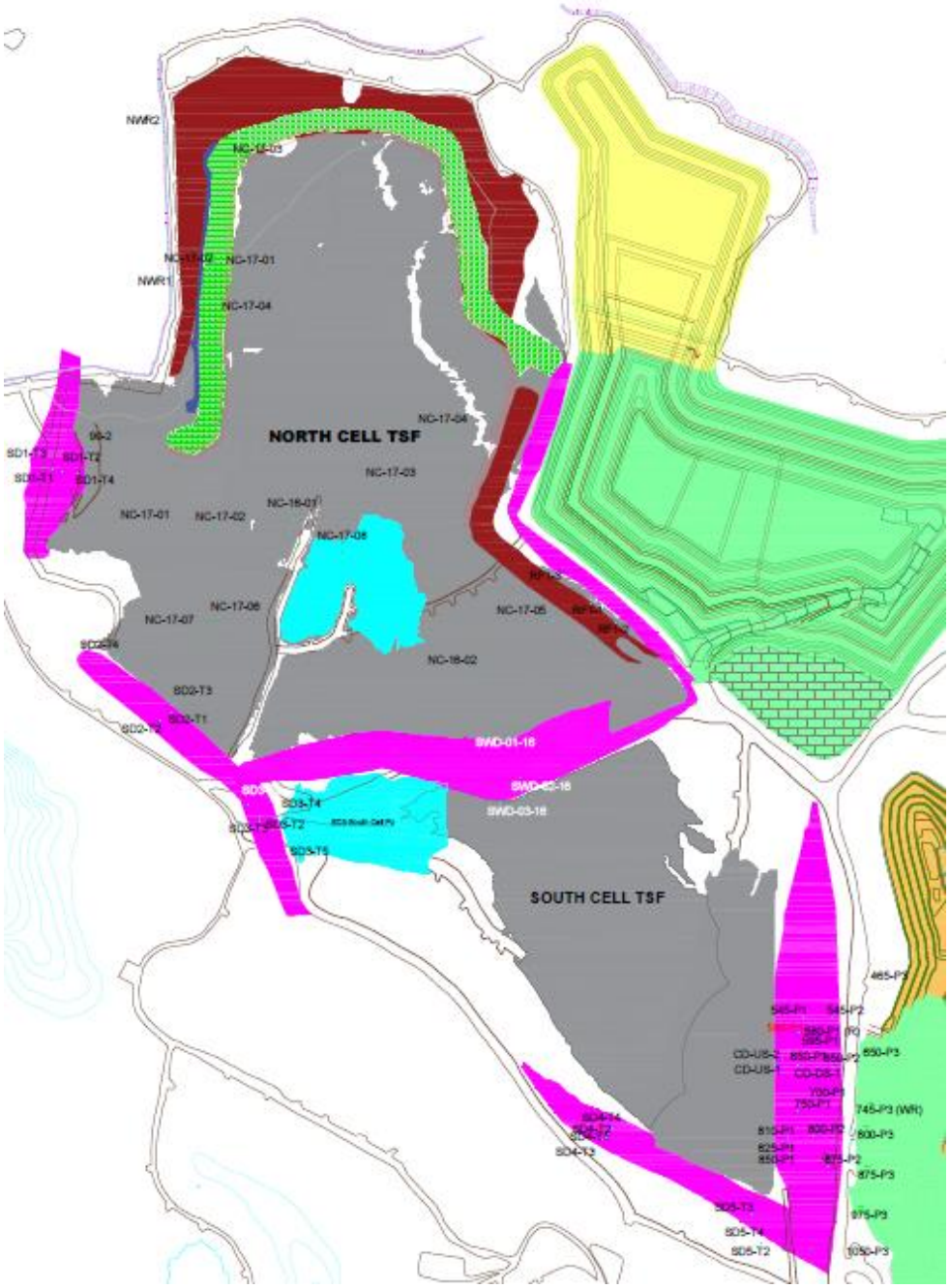

Figure 3-4 : Instruments Location Within the TSF

3.5 REFERENCE DOCUMENTS AND DRAWINGS

Reference to key document for the design and construction of the TSF infrastructures is presented in Table 3-4 to Table 3-6.

Table 3-4: Tailings Storage Facility Design Report and Specifications

Item	Description	Reference
Tailings Storage Facility Dike Design	Design Report	Doc. No. 784 Ver. 0, Golder 2008
TSF Dike Construction Technical Specifications	Technical Specifications	Doc. No. 796 Rev. 0, Golder 2009
Detailed Design Report for Central Dike	Design Report	Doc. No. 1349 Ver. 0 Rev. 1, Golder 2012
Central Dike Construction Technical Specifications	Technical Specifications	Doc. No. 1327 Rev. 0, Golder 2012
North Cell Diversion Ditches	Design Memorandum	Doc. No. 1370 Rev. 0, Golder 2012
Detailed Design Report for Saddle Dams 3, 4 and 5	Design Report, Technical Specifications and Drawings	Doc. No. 1504 Rev. 1, Golder 2015
Detailed Engineering Design of Internal Structure (TSF North Cell)	Design Report, Specifications and Drawings	Doc. No. 1784383 Rev. 0, Golder 2018

Table 3-5 Tailings Storage Facility Construction Summary Report

Item	Description	Reference
RF1, RF2 Stormwater Dike : Stage 1-2 SD1 : Stage 1-2 SD2 : Stage 1-2	2009-2011 Construction Season as-built report	AEM (June 2013)
North Cell Diversion Ditches	2012 construction summary report	AEM 2012
Central Dike Stage 1	Construction Summary Report Stage 1 – Central Dike 2012	AEM 2018
Central Dike Stage 3	Construction Summary Report Stage 3 – Central Dike 2014	AEM 2015
Central Dike Stage 4 SD3, SD4, SD5 Stage 1	2015 Construction Season as-built report	AEM 2015
Central Dike Stage 5 SD 3, SD4, SD5 Stage 2	2016 Construction Season as-built report	Doc. No. 1552 1656047 Rev. 0, Golder 2017

Central Dike North Abutment Raise SD3, SD4, SD5 Stage 3	2017 Construction Season as-built report	Doc. No. 1777687 1572 Rev. 0, Golder 2017
Central Dike Stage 6 Finalization SD3 Stage 3 North Cell Internal Structure	2018 Construction Season as-built report	Doc. No. 1897439 1578 Rev.0, Golder 2018

Table 3-6 List of Construction Drawings for Embankment Structures

Drawing No. (Prepared by)	Title	Revision No.	Date of Revision
4100-30 to 4100-39 (Golder)	Tailings Storage Facility – Stormwater Dike	0	July 10, 2009
4100-50 to 4100-60 (Golder)	Tailings Storage Facility – Saddle Dam 1	0	July 10, 2009
SD2-SD3-01 to SD2-SD3-13 (Golder)	Tailings Storage Facility –Saddle Dam 2 and Saddle Dam 3	A	August 25, 2010
SD6-01 to SD6-11 (Golder)	Tailings Storage Facility – Saddle Dam 6	A	September 13, 2010
Figure 1—Supersedes Drawing Nos. 4100-30, 4100-31, and 4100-32 (Golder)	Agnico-Eagle Mines Limited, Meadowbank Gold Project Nunavut, Stormwater Dike Staged Layout Plan	N/A	August 5, 2009
Figure 2—Supersedes Drawing Nos. 4100-33, Detail 3 on 4100-34 (Golder)	Tailings Storage Facility Typical Cross-Section and Details	N/A	August 5, 2009
Figure 1—Supersedes Drawing Nos. 4100-51, 4100-52, 4100-53, and 4100-58 (Golder)	Tailings Storage Facility Saddle Dam 1 Rockfill Plan and Liner Details	N/A	August 17, 2009
All drawings in the Construction Report TSF (AEM)	Construction Report Tailings Storage Facility	N/A	June 15, 2013
All drawings in the Detailed Design Report for Saddle Dams 3, 4 and 5 Doc 1504 1416081 SD3,4 & 5 Design Rev1	Detailed Design Report for Saddle Dams 3, 4 and 5	0	May 12, 2015
All drawings in the Detailed Design Report for North Cell Internal Structure Doc 1784383 Rev0	Detailed Engineering Design of Internal Structure	0	April 19, 2018
Update as Required			

Table 3-7 List of Construction Drawings for Infrastructure and Piping

Drawing No. (Prepared by)	Title	Revision No. and Title	Date of Revision
All Booster Pump Design Drawings	Booster Pump Design Drawings, MEAD-360	N/A	June 26, 2012
All drawings in the Construction Summary Report North Cell Diversion Ditches (AEM)	Construction Summary Report North Cell Diversion Ditches	N/A	July 27, 2013
All South Cell Infrastructures Drawings (AEM)	Reclaim pump drawings 61-430 Pig launcher drawings 61-360 Central Dike Seepage drawings P1607151-1000-00	N/A	2016
Update as Required			

SECTION 4 • OPERATIONS

The following section outlines the key operational procedure that need to be observed and followed during operation of the tailings management facility in accordance with the performance objectives.

4.1 REFERENCES

Reference to key documents for the operation of the tailings facility are presented in Table 4-1.

Table 4-1 : Reference Documents for Operation of Tailing Storage Facility

Type of information	Reference	Link to Retrieve Document
Tailings Deposition Plan	2019_V1B	..\..\..\..\06-TailingsManagement\4 - DEPOSITION PLAN\2019\1- Current Deposition Plan
Meadowbank Annual Water Balance	2019	..\..\..\..\05-WaterManagement\2019\Water Balance
Meadowbank Water Management Plan	V7 AEM 2018	..\..\..\..\..\12- Annual Report\2019\Water management plan
Meadowbank Waste Management Plan	V8 AEM 2018	..\..\..\..\..\12- Annual Report\2019\Waste rock and tailings management plan

4.2 SUMMARY OF PERFORMANCE OBJECTIVES AND OPERATION CONTROLS

The performance objectives and the operational criteria for tailings management are summarised in Table 4-2.

Table 4-2 : Performance Objectives and Operational Criteria for Tailings Management

Tailings Transportation and Placement
• Tailings must deposited within accepted compliance to the tailings deposition plan (respect of deposition duration and location). Tailings deposition plan has to have some flexibility to take into account variable tailings property and milling schedule. • Tailings transportation and placement must happen continuously while the mill is operating • Limit switching between tailings deposition point so to ease operation (maximize duration at a given deposition point)

• The tailings delivery system (pumps, pipe) must be operated and maintained as per the defined operating procedure • Tailings deposition need to limit ice-entrapment by limiting sub-aerial deposition in the winter over long distance
Tailings Containment
• All tailings must be stored within the TSF. Presence of tailings outside the TSF is considered a spill. • The tailings freeboard must be respected at all time (refer to section 4.4) • Tailings beaches need to be promoted along the peripheral structure (except SD3) • The construction schedule for the raise of the tailings containment structure must be aligned with the deposition plan.
Water Management
• A sufficient water volume must be maintained in the TSF ponds to allow recirculation to the mill (reclaim). The volume of water to be kept in the TSF should not exceed that value • The freshwater limit of the Water License must be respected. • The location of the water pond must comply with the deposition plan and a minimum water head should pond against the peripheral structure (except SD3) • A sufficient water depth must be maintained within the reclaim area • Ice is not allowed to pond against the liner of the tailings retention structure. A 20 m tailings beach need to be maintained in winter • Operational freeboard of each tailings retention structure must be respected during operation (refer to section 4.4) • Water movement must be tracked and recorded on a monthly basis (volume, origin, destination) • The water management system (pump, pipes, WTP) must be operated and maintained as per the defined operating procedure • Any seepage must be captured by sump and pumped back to allowed location (or naturally report to an approved location)
Water Quality
• Water quality and quantity of seepage water is monitored
Surveillance
• Proper surveillance (inspection and data review) of the tailings facility occur and is documented (refer to section 6) • The performance of the tailings management facility is reviewed against the threshold for performance criteria and trigger pre-defined actions (refer to Table 4-6 to 4-9)

4.3 DEPOSITION PLANNING

Deposition of tailings in the TSF (location & duration) must be done according to an approved deposition plan. The process of preparing or updating a deposition includes defining the parameter analysis and the deposition strategy, preparing the deposition plan, having the deposition plan approved and distribution of the deposition plan. Also at the end of each month the actual deposition

performed will be simulated to obtain end of month theoretical surface to verify if the deposition is on track with the plan.

Deposition plan are schedule to be updated twice a year following update to the LOM and Budget. The deposition planning is done by the Engineering Department (water & tailings engineer) using the software Muck 3D. Unplanned update to the deposition plan might be required if compliance to the deposition plan can no longer be reconciled (i.e change in deposition strategy, change in deposition parameter).

While defining the deposition strategy it is important to refer to Table 4-2 to ensure that the strategy of the deposition plan met the performance objective and operational criteria. Any proposed deviation to the performance objective must be submitted for approval to the Engineering Superintendent and Engineer of Record.

Twice a year a bathymetry and scan of the TSF will be completed (one in June and one in September). The latest information is to be used to calculate some of the parameters used in the deposition planning. As much as possible the update of the tailings deposition plan will start from an existing bathymetry.

Table 4-3 presents the information required prior updating a deposition plan and how to obtain it. Input parameter need to be approved prior to beginning working on the deposition plan.

The deposition plan usually presents the deposition strategy for each month for the coming year, on a quarterly basis for the second year and on a yearly basis after that.

Table 4-4 present what are the output of a deposition plan for each timestep modeled.Table 4-3

Once the deposition plan has been reviewed by the Engineering Coordinator and Superintendent it is ready to be approved. An approved deposition plan is an essential tool to be used to plan water management strategy, raise of tailings dike, reclaim vs freshwater ratio and deposition points constructions.

Table 4-3 : Input parameter into a deposition plan

Information obtained from the approved mining schedule (approved LOM or Budget)
• Tonnage profile to be stored until the end of life of the mining operation • Nominal processing rate at the mill on a monthly basis
Information obtained using a bathymetric analysis
• Tailings dry density in t/m^3 (historically varied from 1.2 to 1.4 t/m^3) • Deposition slope angle (sub-aerial and sub-aqueous) for each tailings storage location • Ice entrapment by volume
Information obtained from the water balance
• Volume of water in the pond • Need for water transfer • Quantity of reclaim vs freshwater • Ice entrapment by volume •
Tailings property from the mill
• Tailings discharge solids content (usually around 52 %) • Specific gravity of tailings solid

Table 4-4 : Output of a deposition plan

Active deposition point
• List of the active deposition point and the order of deposition • Duration (days) and tonnage (tons) of deposition at each point • Tailings elevation at each point at the end of deposition (ensure that freeboard is respected) • Total tonnages deposited (ensure compliance with milling schedulle)
Pond Property
• Total water volume (ensure compliance with water balance) • Free water volume (ensure compliance with reclaim objective) • Pond elevation (ensure that freeboard is respected) • Ice volume, ice thickness, ice ratio (%)
Figure of deposition area at the end of deposition
• Pond location is shown (ensure that the pond is at desired location) • Tailings location is shown (ensure that tailings beach requirements are met)
Recommendations
• Verify if a change in water management strategy is required (i.e water transfer, change in reclaim volume vs freshwater)

- Verify if tailings dike raise is required for capacity and what is the timeline
- Verify if new deposition point creation are required
- Verify if action are required to maintain reclaim capability (i.e construction of internal structure to prevent tailings from reaching reclaim area)

4.4 FREEBOARD

The minimum freeboard to be respected for tailings and water is presented within the design report of the TSF and is summarised in Table 4-5.

Table 4-5 : Freeboard Criteria During Operation

Location	Type of freeboard	Value
North Cell / South Cell	Tailings freeboard with containment structure	0.5 m below crest of structure
North Cell	Water freeboard	El. 148 m (2m below El. Of peripheral structure)
South Cell	Water freeboard	El. 143 m (2m below El. Of peripheral structure)

4.5 TAILINGS MANAGEMENT

The TSF was commissioned in conjunction with the mill start-up in February 2010, with tailings being deposited within the North Cell of the facility. Tailings deposition was transferred from the North Cell to the South Cell at the end of 2014. Tailings deposition occurred during the summer of 2015 within the North Cell and resumed in the South Cell in October 2015. Progressive closure of the North Cell started in the winter of 2015 with the construction of a non-acid generating rockfill capping over the tailings and continued in the winter of 2016. In the summer of 2018 the North Cell internal structure were built and deposition was resumed in the North Cell.

Deposition is done using end of pipe tailings deposition with one active point at a time. The deposition point location and duration is planned by the tailings deposition plan. Changing between deposition points on a given line consist of stopping the flow of tailings in the line, redirecting it through the pig launcher bypass, flushing the line, relocating the deposition point pipe and then switching tailings from the by-pass to the newly installed deposition line.

The tailings deposition strategy in the South Cell is to push the pond of water against SD3 and Stormwater Dike while maintaining tailings beach against the other peripheral structure (SD4, SD5, Central Dike). The objective is to keep the pond as far as possible from these structures with a minimum beach length target of 20 m.

The tailings deposition strategy in the North Cell is to promote closure landform as much as possible. This is done by depositing tailings from the North Cell Internal Structure located in the northern section of the North Cell. Due to the length of the beach in the North Cell the deposition strategy is to only perform deposition form May to October to limit aerial deposition in the winter which is typically associated with high ice entrapment.

4.6 WATER MANAGEMENT

The water management strategy for the TSF can be found in the water balance and in the water management plan. A schematic version of the water movement strategy for the TSF is summarised in Figure 4-1.

The strategy to deal with seepage is to capture it within sump at the downstream of the structure and to pump it back in the TSF. The quantity and quality of each seepage out of the TSF is monitored. Historically seepage mixed with runoff water has been pumped back into the TSF at freshet from SD1, SD3, SD4, SD5, RSF (ST 16). Seepage from Central Dike is pump back on a continuous basis into the South Cell. The location of the Central Dike seepage discharge was moved in the winter of 2019 from upstream of Central Dike to upstream of Saddle Dam 4. This decision was made when rapid ice buildup was observed against SD5 due to the seepage water getting entrapped in that sector.

All water accumulation from the North Cell (from tailings deposition, NCIS sumps, seepage and transfer from the Western Ditch interception sump) is transferred into the South Cell to maintain a minimum water level in the North Cell.

The water management strategy in the South Cell is to reclaim as much water as possible while avoiding excess storage of water due to the Central Dike situation. When the pond volume is too low for reclaim, additional freshwater is used at the mill. When the deposition plan predict that water will reach the reclaim pump area, action are taken to maintain the reclaim location. In 2017 and 2019 an internal structure was built into the South Cell to prevent tailings from reaching the reclaim area. The construction of such a structure in the North Cell is currently planned as part of the current tailings deposition plan.

As part of the water management strategy of the South Cell it is possible to send excess water into Goose Pit. This strategy was used in 2015 and 2017 and will be required in 2019 as part of the latest deposition plan update.

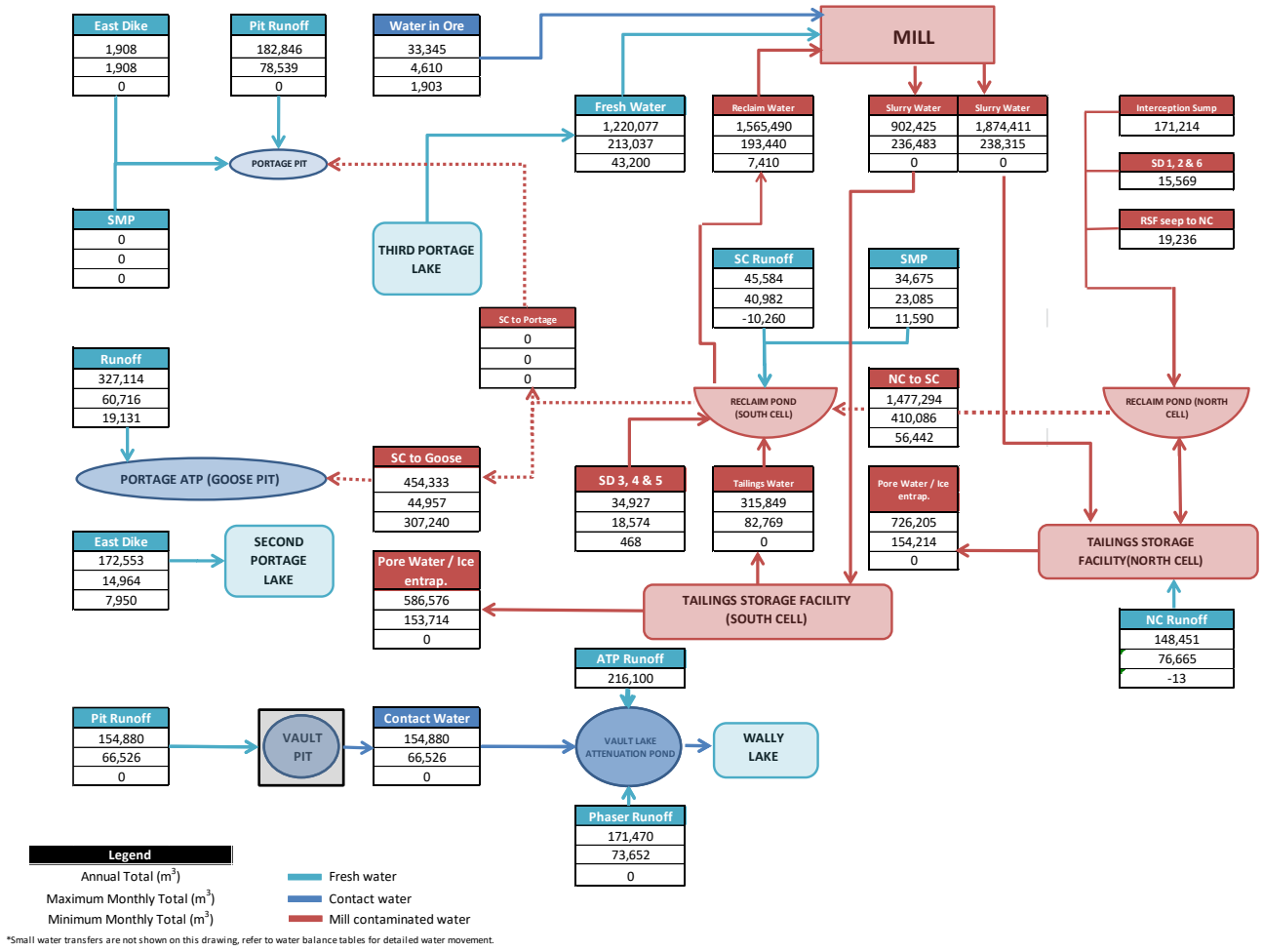

Figure 4-1 : Water Management Strategy for 2019

4.7 PERFORMANCE INDICATOR DURING TAILINGS MANAGEMENT

Table 4-6 to Table 4-9 below present performance indicator for each component of the tailings management system and the Trigger Action Response Plan (TARP) if the associated performance criteria deviate from defined range.

Table 4-6 Threshold Criteria and pre-defined action during operation of tailings retention structures (Excluding Central Dike)

		Threshold Criteria During Operation			
		Green Acceptable Situation	**Yellow Areas of Concern**	**Orange High Risk Situation**	**Red Emergency Situation**
Criteria	Cumulative crest settlement from operations start up	No settlement observed	< 0.2 m	> 0.2 m and < 1.0 m Increasing rate of settlement	> 1.0 m Increasing rate of settlement
	Downstream toe displacement	No displacement observed	Affecting seepage collection system	Loss of roadway	Loss of roadway
	Shear crack along rockfill embankment (differential settlement)	No shear crack observed	< 0.4 m deep	> 0.4 m and < 0.8 m deep	> 0.8 m deep
			< 5 m length along the dike	> 5 m and < 10 m length along the dike	> 10 m length along the dike
	Tension crack embankment alignment at crest	No tension crack observed	< 0.25 m deep	> 0.25 m and < 1 m deep	> 1 m deep
			< 0.10 m wide across the dike	> 0.10 m and < 0.20 m wide across the dike	> 0.20 m wide across the dike
			< 5 m length along the dike	> 5 m and < 10 m length along the dike	> 10 m length along the dike
	Sloughing along downstream rockfill embankment face	No sloughing observed	Observed	Observed and worsening from yellow situation	Observed and worsening from orange situation
	Embankment lateral cumulative deformation	No deformation observed	< 0.1 m	> 0.1 m and <0.25 m	> 0.25 m
	Seepage through embankment	No seepage observed	< 1/3 pumping rate capacity	> 1/3 and < 2/3 pumping rate capacity	> 2/3 pumping rate capacity
	Increase of seepage rate	No increase in seepage rate	< 5% per day over five consecutive days	> 5% < 10% per day over four consecutive days	> 10% per day over three consecutive days
	Turbidity of seepage water	No turbidity observed	Turbidity observed for first time	Turbidity observed and source of sediments matching cut-off wall or foundation till mineralogy	Turbidity observed and source of sediments matching cut-off wall or foundation till mineralogy
	Sinkhole on crest	No depressions or sinkholes on crest observed	Localized depression of embankment crest	Observed	Well developed
Action Required (general)			Monitor as normal All cracks filled or repaired If cracks re open implement engineering review Identify source of turbidity	Implement engineering review Suspend activities on embankment crest at chainage of concern Intensify monitoring at chainage of concern	Remove personnel and equipment from pit and suspend activities
		Take action and notify personel as per decision framework of Figure 4.2			

Table 4-7 Threshold Criteria and pre-defined action during operation of Central Dike (Part 1/3)

		Personnel notified	Seepage				
			Change in inferred Seepage Rate	***Total D/S pumped***	***Downstream Pond Elevation***	***Compliance to seepage model (1)***	
			Threshold	**Threshold**	**Threshold**	**Threshold**	**Possible actions**
Green	Normal	Take action and notify personel as per decision framework of Figure 4.2	Sudden or cumulative increase of < 25% over last 3 days	< 200 m3/h averaged on last 3 days (below capacity of one HL250 F.S ≥ 3)	Pond elevation stable at < 115.3 masl	Expected trend observed	General : Continue monitoring as per standard practices
Yellow	Monitor		Sudden or cumulative increase of > 25% over last 3 days	≥ 200 m3/h and < 1300 m3/h averaged on last 3 days (capacity of two HL250)	Pond elevation > 115.3 but < 115.8 masl	Stable seepage rate	Specific : Increase pumping capacity with back up HL250 pump in place General : Install additional instruments General : Implement engineering review
Orange	Proactive			≥ 1300 m3/h and < 1500 m3/h averaged on last 3 days (limit capacity of two HL250)	Pond elevation >115.8 but < 116 masl	Opposite trend observed	Specific : Evaluation and planning of parallel dewatering infrastructures Specific : Inspect West Road integrity General : Evaluation and planning of alternative deposition location General : Evaluation and planning of diminution of South Cell hydraulic head
Red	Reactive			≥ 1500 m3/h averaged on last 3 days (over capacity of two HL250)	Pond elevation > 116 masl		Specific : Install parallel dewatering infrastructures and consider installation of a 3rd HL250 pump Specific : Frequent inspection of Portage pit and West Road for flooding evidence Specific : Manage flood water in the pit General : Alter deposition sequence to increase tailings cover General : Execution of South Cell hydraulic head diminution strategy General : Grouting General : Initiate Emergency Response Plan

(1) Specific model: Doc1562 CD Seepage Modelling 16670255 Rev0 - must be interpreted by the designer and/or geotechnical coordinator

Table 4-8 : Threshold Criteria and pre-defined action during operation of Central Dike (Part 2/3)

		Personnel notified	Instrumentation monitoring (1)					
			Piezometers P1 installed in the till layer total head (2)	***Piezometers P2 installed in the till layer total head (3)***	***Change in Piezometric head***	***Thermistors***	***Downstream pond and TSS***	
			Threshold	**Threshold**	-	**Threshold**	**Threshold**	**Possible actions**
Green	Normal	Take action and notify personel as per decision framework of Figure 4.2	< 121.5 masl F.o.S > 1.5	< 115.5 F.o.S > 1.5	change less than 1 m in 3 day	Seasonal trend observed	Background TSS observed (4mg/L)	General : Continue monitoring as per standard practices Specific : Daily inspection of the structure by qualified personal and frequent instrumentation monitoring
Yellow	Monitor		121.6 - 126.2 masl 1.5 > F.o.S > 1.3	115.5 - 117.8 masl 1.5 > F.o.S > 1.3	change of 1 m in 3 days of piezometric head	Peak of temperature similar to South Cell TSF temperature observed in at least a single bead	Single TSS event of 30 mg/L	General : Evaluate needs to install additional instruments General : Implement engineering review
Orange	Proactive		126.3 - 127.4 masl 1.3 > F.o.S > 1.1 and based on interpretation by Geotechnical Coordinator or Designer	> 117.9 F.o.S < 1.3 and based on interpretation by Geotechnical Coordinator or Designer			Sustained high turbidity over 30 mg/L	Specific : Implement engineering review Specific : Increase in frequency of monitoring at station of concern Specific : Build buttress General : Evaluate needs to install additional instruments General : Evaluation and planning of alternative deposition location General : Evaluation and planning of diminution of South Cell hydraulic head
Red	Reactive							General : Alter deposition sequence to increase tailings cover General : Execution of South Cell hydraulic head diminution strategy (could include emptying the South Cell) General : Grouting General : Initiate Emergency Response Plan

(1) Instrumentation data must be interpreted by geotechnical coordinator or dike designer (Golder)
(2) Failure of till foundation: add report reference Specific model : Doc1562 CD Seepage Modelling 16670255 Rev0 - Section 6
(3) Backward erosion: add report reference. Specific model : Doc1562 CD Seepage Modelling 16670255 Rev0 - Section 7.3

Table 4-9Threshold Criteria and pre-defined action during operation of Central Dike (Part 3/3)

		Personnel notified	Visual Inspection							
			Loss of tailings	***Dike Vertical Movement - Cumulative crest settlement***	***Downstream toe displacement***	***Tension/shear crack at crest***	***Embankment lateral cumulative deformation (1)***	***Sloughing along downstream rockfill embankment face***	***Sinkhole on embankment***	
			Threshold	**Threshold**	**Threshold**	**Threshold**	**Threshold**	**Threshold**	**Threshold**	**Possible actions**
Green	Normal		Normal operating conditions	No settlement observed	No displacement observed	No tension crack observed	No deformation observed	No sloughing observed	No depressions on crest	General : Continue monitoring as per standard practices Specific : Daily inspection of the structure by qualified personal and frequent instrumentation monitoring
Yellow	Monitor	Take action and notify personel as per decision framework of Figure 4.2	Localized depression in tailings observed	<0.2m	Observed displacement at the toe	< 0.10 m wide across the dike & < 5 m length along the dike	< 0.1 m	Single event observed	Localized depression of embankment crest	Specific : Fill all cracks General : Install additional instruments General : Implement engineering review
Orange	Proactive		Presence of sustained localized depression in tailings and/or tailings observed inside the downstream pond	> 0.2 m and < 1.0 m Increasing rate of settlement	Displacement rate observed	> 0.10 m and < 0.20 m wide across the dike > 5 m and < 10 m length along the dike	> 0.1 m and <0.25 m	More than one events observed	Sinkhole identified	Specific : Implement engineering review Specific : Increase in frequency of monitoring at station of concern Specific : Build buttress General : Evaluation and planning of alternative deposition location General : Evaluation and planning of diminution of South Cell hydraulic head
Red	Reactive		Increase in depression hole dimension and/or tailings observed inside the Portage Pit	> 1.0 m Increasing rate of settlement	Acceleration of displacement rate	> 0.20 m wide across the dike > 10 m length along the dike	> 0.25 m	Continued event(s)	Development of sinkhole	General : Alter deposition sequence to increase tailings cover General : Execution of South Cell hydraulic head diminution strategy (could include emptying the South Cell) General : Grouting General : Initiate Emergency Response Plan

NOTE: *Specific action are triggered by specific risk (stability, seepage, environment)while general action are applied to all risk category*

If more than one criteria is triggered, a reevaluation of our global Alert level will be performed by the AEM team

4.8 COMMUNICATION AND DECISION MAKING

Figure 4-2 indicate the communication and decision process when the threshold criteria are met and when pre-defined action need to be implemented.

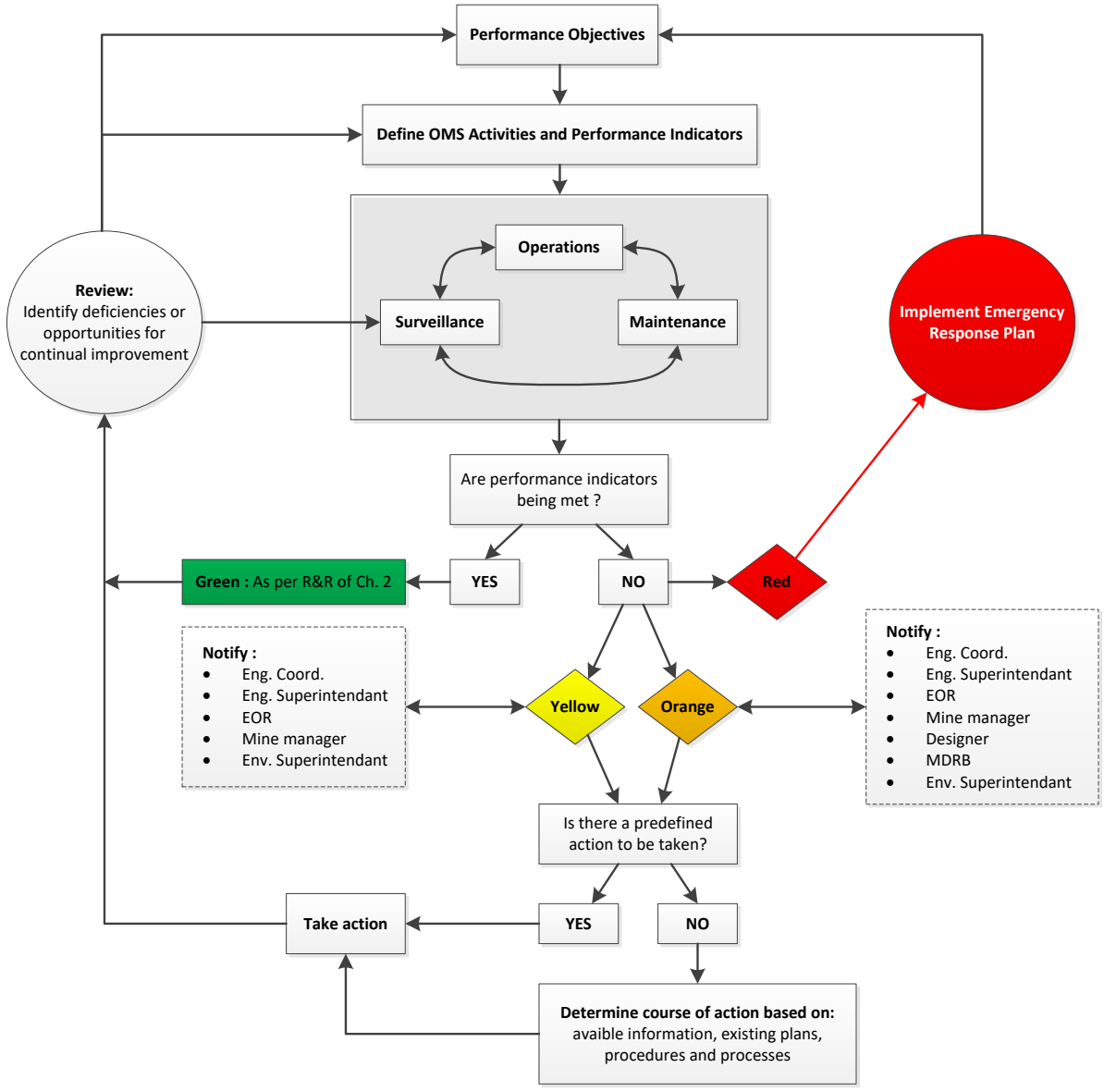

Figure 4-2 : Communication and Decision Process for Tailings Management TARP

SECTION 5 • MAINTENANCE

This section identifies all infrastructures within the scope of this manual that has maintenance requirements and identify all preventative, predictive and corrective maintenance activities.

The objectives of the maintenance program are to review and identify maintenance requirements, executing corrective measures and timely repairs of the containment structures, perimeter water control structures, facility access, and infrastructure.

5.1 PREVENTATIVE, PREDICTIVE AND CORRECTIVE MAINTENANCE

Maintenance is divided into preventative (planned), predictive and corrective.

Preventative maintenance are planned, recurring maintenance activities conducted at a fixed or approximate frequency and not typically arising from results of surveillance activities. Example of such maintenance include calibration and maintenance of surveillance equipment or regularly changing oil on a pump as per manufacturer's requirement.

Predictive maintenance are pre-defined maintenance conducted in response to results of surveillance activities that measure the condition of a specific component against performance criteria.

Corrective maintenance of a component of the tailings management system is to prevent further deterioration and ensure their performance in conformance with performance objectives. The need for corrective maintenance is based on surveillance activities, with surveillance results identifying the need and urgency of maintenance.

5.2 REFERENCES

Reference to key document for the maintenance of the Whale Tail water management infrastructure is presented in Table 5-1.

Table 5-1: Reference documents for Maintenance of Whale Tail water management infrastructure

Type of information	Link to Retrieve Information
Maintenance log of water management infrastructure (to come)	In progress
Maintenance log of pumping equipment	I:\MAINTENANCE\G dore\PWA-COM-LGT hrs reading.xlsx P:\EnergyInfra\08-PowerHouse\2 EQUIPMENT\2 GENERATORS
Maintenance log of geotechnical instrumentation (to come)	In progress
Pump allocation tool	..\..\..\04- Water Management\4- Water Management Infrastucture\3- 2019\1 - Planning\9- Procurement\Pump Allocation\AMQ Pump Allocation 2019-2020.pptx
Geotechnical instrument & Datalogger inventory	In progress

5.3 COMPONENT OF THE TAILINGS MANAGEMENT INFRASTRUCTURE REQUIRING MAINTENANCE

Table 5-2 indicate all the component of the Whale Tail water management infrastructure that require maintenance.

Table 5-2: Component of the water management infrastructure requiring maintenance

Water Management Infrastructure
• Dike embankment (i.e repair erosion, reprofile slope) • Dike crest (i.e fill inactive tension cracks) • Seepage collection sump (i.e, reprofile slope, increase sump volume) • Ditches and diversions (i.e snow removal, repair erosion, remove sediment accumulation)
Pumping infrastructure
• Pumps (mechanical and electrical maintenance) • Pipes (steaming, drain line, repair leak, avoid snow blockage) • Flush pipes of tailings and water prior to periods of non-use
Surveillance
• Geotechnical instruments (thermistors, piezometers, inclinometers, survey monument) • Data acquisition system • Flowmeter
Other
• Dike crest access road • Access to sump

5.3.1 Maintenance component that are outside the scope of this OMS manual

The following component maintenance activity are outside of the scope of this OMS manual. For more information the superintendent of the department responsible for these maintenance can be contacted

- Infrastructures located within the process plant – Process Plant
- Electrical systems and supply – E&I
- Maintenance of heavy equipment and light vehicles – Maintenance
- Communication infrastructures - IT
- Road used to access the infrastructures – Mine

5.4 DESCRIPTION OF MAINTENANCE ACTIVITY

Table 5-3 summarize the description of maintenance activities for each component of the tailings management infrastructure. Each component have activity as well as a trigger for that maintenance and a person responsible for this activity. It is the person responsible for the maintenance activity to ensure that the person doing the maintenance has the qualifications and competency required to conduct the maintenance and is following the proper safety procedure. The responsible person must also ensure that the proper documentation and reporting requirement are followed.

Table 5-3 :Description of maintenance activity for component of tailings management infrastructure

Component	Type of maintenance	Nature of the activity	Frequency of maintenance (preventative) OR Trigger of maintenance (predictive and corrective)	Responsible for the activity	Documentation Required	Reporting Requirement
Water Management Infrastructure						
Dike embankment - repair erosion	Corrective	Gullies and depression to be filled with rockfill and re-sloped	Following a demand from engineering superintendant following a visual inspection showing erosion	Mine Superintendent (can use a contractor alternatively)	Photo of remediation work	Engineering to update the maintenance log of the structure
Dike crest – fill inactive tension cracks	Corrective	Inactive tension cracks to be filled with bentonite to prevent widening due to water infiltration	Following a demand from engineering superintendant following a visual inspection showing inactive tension cracks	Geotechnical technician	Photo of remediation work	Engineering to update the maintenance log of the structure
Dike crest - compensate settlement	Corrective	Add rockfill to increase the height of the dike following observation of settlement	Following a demand from engineering superintendant following a visual inspection showing settlement that need to be compensated (i.e loss of freeboard)	Mine Superintendent (can use a contractor alternatively)	Photo of remediation work Surveying of remediation work	Engineering to update the maintenance log of the structure and provide surveying
Seepage collection sump– increase volume	Predictive	Excavate an additional sump or increase the capacity of an existing sump	Following a demand from engineering superintendant following a re-assessment of the sump capacity	Mine Superintendent (can use a contractor alternatively)	Photo of remediation work Surveying of remediation work	Engineering to update the maintenance log of the structure and provide surveying
Seepage collection sump – reprofile sump	Corrective	Excavate flatter slope for the sump or add material against the slope to reprofile them	Following a demand from engineering superintendant following a visual inspection showing instable sump slope	Mine Superintendent (can use a contractor alternatively)	Photo of remediation work	Engineering to update the maintenance log of the structure and provide surveying
Ditches – snow removal	Predictive	Use an excavator to remove snow in the ditch	Every year prior to freshet to ensure that ditch is clear of snow obstruction. Demand will be formulated by the Engineering Superintendent	Energy & Infrastructure Superintendant	Photo of remediation work	Engineering to update the maintenance log of the structure
Ditches – clean debris and sediment accumulation	Corrective	Remove any debris and accumulation of sediment that can hinder flow	Following a demand from engineering superintendant following a visual inspection showing accumulation of debris and sediment	Energy & Infrastructure Superintendant	Photo of remediation work	Engineering to update the maintenance log of the structure
Ditches – repair erosion of granular layer	Corrective	Add granular material to repair erosion of the ditches	Following a demand from engineering superintendant following a visual inspection showing erosion of the ditches	Energy & Infrastructure Superintendant	Photo of remediation work	Engineering to update the maintenance log of the structure
Ditches – release of TSS from the ditches	Corrective	Corrective action to mitigate release of TSS from ditches. Can include placement of sill curtain or temporary by-passing the ditches using pump	Following a demand from the environment superintendant following sampling of a high turbidity event from the diches	Environment Superintendant	Water sample results Photo of remediation work	Engineering to update the maintenance log of the structure
Pumping infrastructure						
Pumps and Genset – maintenance as per manufacturer specification	Preventative	Do PM on the pumping unit as per manufacturer recommendation	As per manufacturer specification	Pump mechanics	Equipment log Maintenance record	Maintenance to update the pump maintenance log or Genset maintenance log
Pumps and Genset – maintenance when defiency are observed (cavitation, breakdown, electrical trouble)	Corrective	Troubleshoot the pump problem so that it is once again oeprational	When the E&I Superintendant ask that a pump be fixed following a visual inspection of defiecny	Pump mechanics	Equipment log Maintenance record	Maintenance to update the pump maintenance log or Genset maintenance log
Pumps – winterization of unit used in winter	Preventative	Ensure that pumps used in witner have been winterised	Once new pump is received on site that will be used in winter	Maintenance superintendant	Maintenance record	Maintenance to update the pump maintenance log
Pipe – drain the line	Preventative	Ensure that the line is empty of water and tailings during tailings deposition switch or mill shutdown	Every time tailings deposition is interrupted or switch	Energy & Infrastructure Superintendant	-	-
Pipe – unfreezing a line	Corrective	Steaming the line to unfreeze it in winter	When the E&I Superintendant ask that a line be unfroze following visual inspection of a frozen line	Energy & Infrastructure Superintendant	-	-
Pipe – maintenance when defiency are observed (leak, pipe burst)	Corrective	Replacing a deficient part of a line with new pipe	When the E&I Superintendant ask that a line be repaired following visual inspection of pipe deficiency	Energy & Infrastructure Superintendant	-	-
Surveillance						

Component	Type of maintenance	Nature of the activity	Frequency of maintenance (preventative) OR Trigger of maintenance (predictive and corrective)	Responsible for the activity	Documentation Required	Reporting Requirement
Geotechnical Instrument – loss of reading	Corrective	Investigate the status of an instrument who no longer gave data	When an instrument no longer gave data for an unknown reason	Geotechnical technician	Update status in instrument database	Update of the geotechnical instrument database by the geotechnical technician
Geotechnical instrument – unusual reading	Corrective	Investigate the status of an instrument who gave unusual data	When an instrument gave an unusual data	Geotechnical technician	Update status in instrument database	Update of the geotechnical instrument database by the geotechnical technician
Geotechnical instrument – replacement	Corrective	Replace an instrument that no longer work	When the engineering superintendant as for a geotechnical instrument to be replaced	Geotechnical technician	Instrument installation as-built report Update spare inventory Calibration sheet Initial instrument rading	Update of the geotechnical instrument database by the geotechnical technician
Geotechnical instrument –calibration of total station	Preventative	Send the total station to be calibrated	yearly	Geotechnical technician	Calibration sheet	Update of the geotechnical instrument database by the geotechnical technician
Geotechnical instrument –calibration of inclinometer probe	Preventative	Send the inclinometer probe to be calibrated	yearly	Geotechnical technician	Calibration sheet	Update of the geotechnical instrument database by the geotechnical technician
Datalogger – maintenance	Preventative	Do maintenance of datalogger as per manufacturer specification	yearly	Geotechnical technician	Maintenance report	Update of the geotechnical instrument maintenance log by the geotechnical technician
Datalogger – battery change	Predictive	Change battery when the battery level alarm get triggered	When the battery alarm is trigered in VDV	Geotechnical technician	Maintenance report	Update of the geotechnical instrument maintenance log by the geotechnical technician
Datalogger – troubleshooting	Corrective	Repair of a dataloger deficiency	When a dataloger is suspected of being deficient	Geotechnical technician	Update status in instrument database	Update of the geotechnical instrument maintenance log by the geotechnical technician
Flowmeter – calibration	Preventative	Send the flowmeter to be calibrated	yearly	Energy & Infrastructure Superintendant	Calibration sheet	Update of the geotechnical instrument maintenance log by the geotechnical technician
Flowmeter – deficient reading	Corrective	Repair of a flowmeter deficiency	When the Engineering Superintendant ask that a flowmeter be troubleshoot based on irregular data	Energy & Infrastructure Superintendant	Update status in instrument database	Update of the geotechnical instrument database by the geotechnical technician
Other						
Dike crest access	Predictive	Snow clearing, maintaining roadway, grading access	As required to maintain access	Mine Superintendent	-	-
Access to sump	Predictive	Snow clearing, maintaining roadway, grading access	As required to maintain access	Mine Superintendent	-	-

SECTION 6 • SURVEILLANCE

Surveillance Involves the inspection and monitoring (i.e collection of qualitative and quantitative observation and data) of activities related to tailings management infrastructures. Surveillance also includes the timely documentation, analysis and communication of surveillance results, to inform decision making and verify whether performance objective including critical controls are being met.

There are two type of surveillances activities which are further discussed in this chapter :

- Site observation and inspection
- Instrument monitoring

6.1 SITE OBSERVATIONS AND INSPECTIONS

The purpose of site observation and inspection is to identify warning signs for the development of potentially adverse conditions that could lead to a failure or some other form of loss of control. Site observation and inspection include the direct observations by personel on or adjacent to the tailings management infrastructure and may also include observation from helicopter or photo taken from unmanned airborne vehicle (UAV, satellites).

Site observation and inspections are used to identify and track visible change in the condition of the water management infrastructure. Changes that may be observed throughout site observations and inspections are included in Table 6-1.

Table 6-1: Changes that may be observed through site observation and inspection of tailings management infrastructure

Changes related to physical risk of dike, road, ramp, ditches
• Change in freeboard • Deformation or change in condition at the crest, slopes and toes (i.e bulge, cracks, sinkhole, sloughing, settlement) • Newly form or expanding areas of erosion • Evidence of piping or unexpected water movement through water containment structures • Changes in the seepage quantity (pumping rate) and quality (turbidity) • Newly form of obstruction to flow in ditchs(i.e boulder, sediments, snow)
Changes related to chemical risks
• Evidence of newly formed seepage, or changes in seepage and evidence of any changes in seepage characteristics (i.e coloration, turbidity, TSS)
Changes related to tailings & water storage and transport
• Change in sump level • Verify using the staff gauge that the pond is operated within its normal operating condition • Changes in the seepage quantity (pumping rate) and quality (turbidity) • Condition of pipe for tailings or water transport • Sign of leaks from tailings or water line • Condition of pumps and water reclaim infrastructure
Change related to surveillance instrumentation
• Condition of surveillance instruments and associate protection around instruments (i.e cover, barriers to prevent vehicle damage) • Condition of power supplies for instruments (i.e solar panel) • Condition of communication infrastructure associated with instruments (i.e antenna, datalogger)

6.1.1 Site observation

Site observation is conducted by personnel working on or adjacent to tailings management infrastructure as part of their daily activities, maintaining awareness of the facility in the course of carrying their duties. Trained personnel such as geotechnical technician should be on the lookout for sign of changing condition as indicated in **Error! Reference source not found.** as adverse condition can develop rapidly between inspection. A simplified visual observation form can be used to document such observations but they do not need to be documented unless a new condition has been observed. Any new observation should be documented by photograph and reported to the geotechnical personel or Engineering Superintendant.

6.1.2 Inspection program

Inspection are conducted by the engineering department or other personel with appropriate training and competency and are more rigorous than site observations.

The inspection program consists of several types of inspections such as routine and special visual inspection, dike safety inspection and dam safety review. The following sub-section describe in more details the scope, frequency and responsible for each type of inspection.

The main types of inspections are as follows:

- Routine visual inspections – performed on a predetermined basis by AEM geotechnical team;
- Special visual inspections – performed during and afeter unusual events by AEM geotechnical team ;
- Dike Safety Inspection (annual geotechnical inspection) – performed annually by a Geotechnical Engineering Consultant familiar with the design and operation of the facility to verify that the facilities are functioning as intended
- Independent Dam Safety Review – carried out by the dike review board of independent engineers every year to review all aspects of the design, construction, operation, maintenance, processes and other systems affecting the dam's safety, including the dam safety management system. The review defines and encompasses all components of the "dam system" under evaluation including the dam, foundations, abutments and seepage collection works.

6.1.2.1 Routine Visual Inspection

Routine visual inspection are conducted on a pre-defined schedule and may target specific activities. Their objective is to identify any conditions that might indicate change in the tailings management infrastructure performance and therefore require follow-up. The inspection need to cover the aspect described in Table 6-1. Of particular significance are new occurrence or noted changed in seepage, erosion, sinkholes, boils, slope slumping, settlement, displacement, or cracking of structure components. These inspection are held during operation.

There are two approved inspection form for inspection ; a simplified one and a detailed one. The detailed form should be used for monthly inspection while the simplified one can be used when inspection are required at an increased frequency. All area of the form must be fill.

The person responsible for the inspection must :

- Do the inspection as per the required frequency
- Fill all information on the proper inspection form
- Take picture to supplement the inspection. As much as possible, these are to be taken from the same vantage points during each inspection so that changes in conditions can be readily identified. Photos should be annotated or captioned and should include a date stamp.
- Store electronically all photo and inspection form
- Update the surveillance log

- Ensure that the reviewer is aware that the document is ready to be reviewed

During the review process, the reviewer must:

- Ensure that all require information is present
- Ensure that the observation does not trigger a change in alert level
- Sign the inspection form as a reviewer
- Update the surveillance log
- Distribute the inspection results

The frequency for inspection of a structure will vary based on its TARP level and need to be updated in the surveillance log.

Table 6-2 summarise the Routine & Special visual inspection R&R, suggested frequency and scope in function of the alert level of the structure.

Table 6-2: Summary of routine inspection requirements

Structure	TARP Level	Inspection Responsible	Scope of inspection	Inspection Frequency	Reporting	Inspection Reviewer	Distribution List
SD1, SD2, SD3, SD4, SD5, RF1, RF2, Central Dike, Stormwater Dike, NCIS - Operation	Green	Geotechnical Technician	Physical risk and surveillance	Monthly	Detailled inspection form	Geotechnical Engineer	Engineering Geotechnical Team, EOR
				Weekly during period of flow (from May to October)	Simplified inspection form	-	
	Yellow	Geotechnical Technician	Physical risk and surveillance	Monthly	Detailled inspection form + presentation and analysis of instrumentation data	Geotechnical Engineer	Engineering Geotechnical Team, EOR
				Weekly	Simplified inspection form		
	Orange	Geotechnical Technician	All of Table 7-2	Weekly	Report on summary of surveillance activity + status of mitigation action	Geotechnical Engineer	Engineering Geotechnical Team, EOR, designer, Management
				Monthly	Detailled inspection form + presentation and analysis of instrumentation data	Geotechnical Engineer	Engineering Geotechnical Team, EOR
		Geotechnical Engineer		Daily	Simplified inspection form	Geotechnical Coordinator	Engineering Geotechnical Team, EOR
TSF Pond, Tailings distribution and Pumping Infrastructure – Operation	Green	Water & Tailings Engineer	Tailings & Water storage and transport	Monthly	Detailed Inspection	Geotechnical Coordinator	Engineering Geotechnical Team, E&I, EOR,
				Weekly (from May to October)	Simplified inspection form		
	Yellow	Water & Tailings Engineer or Geotechnical Engineer	Water storage and transport	Weekly in area of concern	Simplified inspection form	Geotechnical Coordinator	Engineering Geotechnical Team, E&I, EOR,
				Monthly	Detailled inspection form + presentation and analysis of relevant instrumentation data		
	Orange	Water & Tailings Engineer or Geotechnical Engineer	Water storage and transport + physical stability of ramp	Daily	Simplified inspection form	Geotechnical Coordinator	Engineering Geotechnical Team, EOR, designer, Management
				Weekly in area of concern	Detailed Inspection + report on summary of surveillance activity		

6.1.2.1 Special Visual Inspection

Special inspections are conducted during and after unusual or extreme events that may impact the facility. Special inspection are conducted by the geotechnical engineer or Engineer of Record using the detailed inspection form and using the same procedure for review and documentation. Special visual inspection must be done on each structure after each of these events:

- Following a blast that exceed the vibration limits of the structure
- After an earthquake
- After a high intensity rainfall event (higher than a 1:2 years recurrence)
- Immediately after a site observation notice a change in condition
- Prior or immediately after increasing or decreasing the TARP level of a structure

6.1.2.2 Dike Safety Inspection (annual geotechnical inspection)

A dike safety inspection is a more comprehensive technical inspections, integrating inspections and results of monitoring instrument. This type of inspection is conducted by an external geotechnical engineer and supported by the Engineer of Record to have a more complete understanding of the facility performance and identify deficiencies in performance or opportunity for improvement. This will provide information to be used to revise the OMS manual.

Such inspection need to occur on an annual basis between the month of July and September. The following components need to be inspected during this review:

- Saddle Dam 1, Saddle Dam 2, Saddle Dam 3, Saddle Dam 4, Saddle Dam 5, North Cell Internal Structure, Stormwater Dike, Central Dike, RF1, RF2
- North Cell and South Cell pond and reclaim infrastructure
- Tailings deposition infrastructure
- Ditches and channel

In addition to field inspection done as part of the safety inspection the following point should be addressed during the review:

- Review of all inspections report performed since the last review
- Review of monitoring instruments data;
- Identify deficiencies in performance or opportunity for improvement
- Review OMS performance and operational criteria and confirm that these meet the performance objective of the design
- Review and provide recommendations regarding OMS for the following year.

After each safety inspection a report must be submitted to the Engineering Superintendant which include the results of the inspection done and addressing all point above. These report will be stored electronically.

6.1.2.3 Independent Dam Safety Review

Independent dam safety review are carried out by an independent third party to review all aspects of the design, construction, operation, maintenance, processes and other systems affecting the dam's safety, including the dam safety management system. The review defines and encompasses all components of the "dam system" under evaluation including the dam, foundations, abutments, instrumentation and seepage collection works. The independent third party for the tailings management infrastructure is the Meadowbank Dike Review Board (MDRB).

Modification to the MDRB composition can only be made by the Engineer of Record.

The Meadowbank Dike Review Board (MDRB) is comprised of the following member.

- Anthony Rattue
- Don Haley

An annual MDRB meeting will be held every year at the Meadowbank site. Other event that could trigger a MDRB meeting are:

- Major modifications to the design or design criteria;
- Discovery of unusual conditions that can compromise the integrity the water management infrastructure;
- After extreme hydrological or seismic events; and
- Decommissioning.

During the annual MDRB meeting, a dam safety review will be carried out according to the recommendations laid out in the Dam Safety Guidelines (CDA, 2013).

This review will include, but is not limited to:

- Review of the dikes classification;
- Site inspection;
- Review of design and construction records;
- Review of monitoring practices and the instrumentation records
- Assessment of the operation of the facilities;
- Provide recommendation on operation, maintenance and surveillance based on the results of the instrumentation readings, construction records and site observations;

6.2 INSTRUMENT MONITORING PROGRAM – DATA ACQUISTION

Instrument monitoring provides information on parameters or characteristics that cannot be detected through site observation or inspections, cannot be observed with sufficient precision and accuracy or need to be monitored at high frequency or continuously.

The objective of instrument monitoring is to collect data to be used to assess the performance of the infrastructure against the performance objectives and indicators and the critical controls (refer to Table 4-2). Instrument monitoring and inspections work together as a comprehensive data set to enable assessment of the water management infrastructure performance and provide a basis for informed decision. All are essential, and none of these forms of surveillance can be neglected if performance objectives are to be met and risks are to be managed.

More information on the type of in-situ instruments installed on each structure, how they were installed and their location can be found in Section3.4 of this OMS manual.

Table 6-3 indicate the type of information collected through instruments monitoring and how it is collected. Table 6-4 summarise the data acquisition program related to instrument monitoring

Table 6-3: Information collected using instrument monitoring

Direct collection of information
• In-situ thermistors to measure temperature profile within the structure and its foundation and within the tailings • In-situ piezometer to measure pore-water pressure providing information about flow of water through the structure and foundation stability • Survey monument to provide information on settlement and deformation • Staff gauge to inform about water level of a pond versus its operating level • Blast monitor to inform on potential impact of blasting vibration on the structure • Flow meters and seepage monitoring station to inform on volume of water movement • Surveys conducted to measure ice cover, water level, update height and slope of containment structure
Collection of information from remote sensing
• Data acquired from airborne survey to generate detailed topographic map
Collection of information based on laboratory analyses
• Water quality analysis of seepage and surface runoff • Water quality analysis of water discharged through diffuser to inform on Environmental compliance • Water quality analysis of water stored in the various pond on site to inform on water movement decision
Collection of information related to the conduct of OMS activities
• Automatic data collection and transmission system for in-situ instruments (datalogger, solar panel, antenna, battery)

Table 6-4: Summaries of data acquisition program related to instrument monitoring of Whale Tail water management infrastructure

Instrument monitoring	Location of monitoring (3)	Parameter measured	Acquisition Methodology	Standard Acquistion frequency	Acquisition Responsible	Documentation methodology	Documentation Responsible
Thermistors	SD1, SD2, SD3,SD4,SD5, RF1, RF2, SWD, CD, NCIS, North Cell pond	Temperature (C^0) point for each bead on the chain	In-situ instrument connected to automatic data acquisition and transmission system	New data are acquired and transmitted to VDV every 3 hrs	Geotechnical Technician	Data are exported from VDV into instrumentation report emited at a predetermined frequency (1)(2)	Geotechnical Engineer
Piezometer	Central Dike, Stormwater Dike	Pressure (kpa) point for each instrument	In-situ instrument connected to automatic data acquisition and transmission system	New data are acquired and transmitted to VDV every 3 hrs	Geotechnical Technician	Data are exported from VDV into instrumentation report emited at a predetermined frequency (1)(2)	Geotechnical Engineer
Survey monument	NCIS, SWD, CD	Elevation of monument which is then converted into mm of displacement (minimum precision of 3 mm required)	Data are acquired using a total station	Monthly in winter and bi-weekly from May to September	Geotechnical Technician	Data are exported into geoexplorer. Instrumentation report are emited at predetermined frequency (1)(2)	Geotechnical Technician
Staff Gauge	North Cell Pond	Water level in pond	Take picture of the gauge	During each inspection	Inspection officer	Within inspection report	Inspection officer
Blast Monitor	SD1, SD2, SD3,SD4,SD5, RF1, RF2, SWD, CD, NCIS, North Cell pond	Peak particle velocity (PPV) measured by the blast monitor (mm/s)	Placement of blast monitor at a predetermined area on the dike	Before each blast in the vicinity of the dike	Geotechnical Technician	Update the blast vibration log. Discussion on recorded vibration in instrumentation report	Geotechnical Technician
Flow meter	Central Dike D/S	Volume of water pump (m^3)	Pumpman operator will inscribe flowmeter value ona pumping sheet	Daily when pump is operating	E&I Pump crew supervisor	Data will be integrated in the water balance	Water & Tailings engineer
Seepage monitoring station (manual reading with a V notch)	Where umpumped seepage is observed	Seepage flow (m^3/s)	Using a bucket and a stopwatch	Weekly during period of flow	Geotechnical Technician	Documented within instrumentation	Geotechnical Engineer
Bathymetry / Scan of tailings beach	North Cell / South Cell	Aerial and sub-aerial topography	Surveyor will take a scan and a bathymetry with a boat	At beginning and end of freshet	Surveyor Leader	Integrated in the tailings deposition plan	Water & Tailings engineer
Airborne survey	Whole TSF	Topographic aerial survey made using drone	Surveyor will take a drone survey	Once per year after freshet	Surveyor Leader	Within survey database	Surveyor Leader
Water quality	Central Dike seepage (4)	Parameter indicated within water management plan	Water quality sample taken and sent for laboratory analyses	Acquisition frequency within water management plan	Environment General Supervisor	Within Env water quality database	Environment General Supervisor

(1)Refer to section 6-4 for more information on reporting methodology and the frequency of reporting
(2) Refer to section 6-5 on how to present instrumentation data from VDV in a report
(3) Exact location of each instrument can be found in the instrumentation database
(4) Location of water quality sampling point can be found in water management plan

6.3 ADDING INSTRUMENT TO THE MONITORING PROGRAM

Any addition to the monitoring program must be validated by the Engineering Superintenant or by the Environment Superintendant for aspect relating to water quality. In-situ instrument installation must be recorded in an as-built report and added to the instrumentation database and map. After each installation of instrumentation the following must be done:

- Document the calibration sheet and initial data reading
- Document instrument specification (manufacturer sheet)
- Document Information to which datalogger the instrument is connected
- Survey instrument coordinate (x,y,z)
- If the instrument is drilled, a schematic view of the depth of the instrument versus the stratigraphy must be produced
- Photo of installation must be documented

6.4 ANALYSIS OF SURVEILLANCE RESULTS

For the effective use of surveillance results and decision making, results must be collated, examined, analysed and reported in a timely and effective manner.

For visual inspection the process of analysing the data and communicating the results is describe in Section 6.1 and happen at the same time the inspection is done and the report is sent. The information gained from the analysis of these results is then compared during the inspection and review to the TARP criteria which will then inform the action to take if performance indicator are not met.

For the instrumentation monitoring to be effective the data must be reviewed, analysed and reported at the proper frequency. Table 6-5 summarise the requirement for review, analyses and reporting of instrumentation data.

The person responsible for instrumentation data review need to update the surveillance log each time an instruments results has been reviewed and analysed. The person responsible for review of reporting and distribution need to update the surveillance log once the report has been reviewed and distributed.

Table 6-5 : Requirement for Review, Analyses and Reporting of Instrument Data

Instrumentation	TARP Level	Expected range of observation	Responsible for review & analyse	Frequency of review	Responsible for reporting	Reporting frequency	Responsible for review and distribution	Distribution List
Piezometer, thermistor, survey monument	Green	Define in TARP of each structure	Geotechnical Engineer	Bi-Weekly	Geotechnical Technician	Quaterly instrumentation report	Geotechnical Engineer	Engineering geotechnical team, designer, EOR
			Geotechnical technician	Weekly				
	Yellow	Define in TARP of each structure	Geotechnical Engineer	Weekly	Geotechnical Technician	Instrumentation reporting included within monthly inspection report	Geotechnical Engineer	Engineering geotechnical team, designer, EOR
			Geotechnical technician	Every 3 days				
	Orange	Define in TARP of each structure	Geotechnical Engineer	Daily	Geotechnical Engineer	Instrumentation reporting included within weekly update report	Geotechnical Coordinator	Engineering Geotechnical Team, EOR, designer, Management
			Geotechnical technician	Daily				
Staff Gauge / Survey shot (freeboard)	Green	Define in TARP of each structure	Water & Tailings Engineer	Weekly	Water & Tailings Engineer	Within the monthly attenuation pond and pumping infrastructure inspection report	Geotechnical Coordinator	Engineering geotechnical team, designer, EOR
	Yellow	Define in TARP of each structure	Water & Tailings Engineer	Daily	Water & Tailings Engineer	Within the monthly attenuation pond and pumping infrastructure inspection report	Geotechnical Coordinator	Engineering geotechnical team, designer, EOR
	Orange	Define in TARP of each structure	Water & Tailings Engineer	Twice a day	Water & Tailings Engineer	Included within weekly update report	Geotechnical Coordinator	Engineering Geotechnical Team, EOR, designer, Management
Blast Monitor	-	PPV> 50 mm/s	Geotechnical Technician	After retrieving a blast monitor on a water management structure	Geotechnical Technician	In Quaterly instrumentation report	Geotechnical Engineer	Engineering geotechnical team, designer, EOR
Flow meter / Seepage monitoring	Green	Define in TARP of each structure	Water & Tailings Engineer	Weekly	Water & Tailings Engineer	During the monthly update of the water balance	Geotechnical Coordinator	Engineering geotechnical team, designer, EOR
	Yellow	Define in TARP of each structure	Water & Tailings Engineer	Daily	Water & Tailings Engineer	During the monthly update of the water balance	Geotechnical Coordinator	Engineering geotechnical team, designer, EOR
	Orange	Define in TARP of each structure	Water & Tailings Engineer	Twice a day	Water & Tailings Engineer	Included within weekly update report	Geotechnical Coordinator	Engineering Geotechnical Team, EOR, designer, Management
Water quality	Green	Define in TARP of each structure	Environment General Supervisor	As per water management plan	Environment General Supervisor	As per water management plan	Environment Superintendant	Engineering geotechnical team
	Yellow	Define in TARP of each structure	Environment General Supervisor	As per water management plan	Environment General Supervisor	As per water management plan	Environment Superintendant	Engineering geotechnical team
	Orange	Define in TARP of each structure	Environment General Supervisor	As per water management plan	Environment General Supervisor	As per water management plan	Environment Superintendant	Engineering geotechnical team

6.4.1 Procedure in case of data exceeding expected range of observation

If data exceeding the expected range of observation or anomalous data readings are observed, the following actions need to be taken:

- Re-read to check the reading (if the reading is from VDV, take a manual reading in the field);
- Check readout equipment to verify that it is functioning correctly;
- Verify calibration;
- If instrument has stopped functioning, notify the Engineering Superintendent immediately. If considered critical, a replacement instrument should be installed;
- If an anomalous reading is confirmed, a detailed review of the effects of the reading should be carried out and design or remedial actions should be implemented if determined necessary by the Engineering Superintendent. Any malfunctioning instrument or frozen piezometer must be documented.
- In the case of valid data that would exceed the TARP level do a special inspection if possible.

Before modifying the TARP level due to in-situ instrumentation reading that cannot be confirmed by other visual observation the EOR must be consulted for further guidance.

6.4.1.1 Blast Monitor

If a reading exceeding the PPV limit for a water management structure (50 mm/s) is observed this event must be communicated to the drill and blast engineer who will need to ensure that the blasting pattern is modified to avoid re-occurrence of this event. Afterward a special inspection will need to be done on the structure to look for changing condition.

If more than one occurrence of blast vibration exceeding the limit are observed within a 2 weeks period the Engineering Superintendent needs to be notified of the situation.

6.4.2 Anomalous Instrumentation Data

Anomalous instrumentation data includes the following as presented in Table 6-6. These anomaly could happen without triggering a TARP level change and need to be investigated and recorded:

Table 6-6: Example of anomalous data and some common cause

Thermistors
• Increase or decrease in measurements (over two or more readings) that cannot be explained by seasonal temperature variations; • Progressive loss of data (starting from the bottom and progressing). This is usually a sign of water infiltration • Observation of a spike in temperature in one bead. This is usually due to a capacitive effect • Loss of data (could be a transmission error, faulty hardware or a sheared cable)
Piezometer
• Increase or decrease in pore water pressure measurements that cannot be explained by seasonal lake level variations (verify that the instrument has not been installed in a casing); • Sharp increase in reading (verify that the instrument is not frozen) • Loss of data (could be a transmission error, faulty hardware or a sheared cable)
Inclinometer
• Cumulative increases in displacement (greater than 3 cm); • Erratic movement. This is usually a sign of water infiltration
Survey Monument
• Accelerating displacement rate of the survey monuments (x, y, z directions) (over two or more readings) (could be due to a prism shooting error or problem with the total station)
Blast Monitor
• Vibrations during a blast are not observed (the blast was cancelled, the blast monitor was not properly installed or vibrations were too weak to be recorded)
Flowmeter, survey shot and staff gauge
• Sudden change in staff gauge reading. Or reading that seem to not reflect the probable water elevation. This could be due to a settlement or displacement of the staff gauge. • Increase or decrease in flowmeter reading that are inconsistent with pumping rate or rainfall or observed water level. • Survey elevation that has a sharp fluctuation from last reading. This can be caused by the reading not taken at the good location, wave actions or daily variances in GPS signal

6.5 SURVEILLANCE DOCUMENTATION & REPORTING

One visual inspection report per structure needs to be completed, reviewed and distributed per the frequency in Table 6-2.

An instrumentation report need to prepare at predetermined frequency to present all instrumentation monitoring data as described in Table 6-4.

Table 6-7 describe how instrumentation data should be reported.

Instrumentation report need to include the following information :

- Table presenting all the instruments installed on each structure, their status and pertinent installation information
- Graph of all instruments for all structure covered by the report. The graph need to present data for a minimum period of 1 year. Higher recurrence should be presented if clarity of the presented information allows it. The graph need to be presented in a way that allow for data interpretation without referring to other document
- Analyses of all instruments data presented highlighting specific trend
- Discussion on anomalous trend

For the structure having a yellow Tarp level the instrumentation data relevant to the cause of the alert need to be included with each visual inspection report.

For the structure having an orange Tarp level the instrumentation data relevant to the alert level need to be included with each inspection report. In addition the weekly update report need to be written with the following information:

- Context on why the structure is at the orange level
- Change in condition since the last weekly report
- What is the mitigation plan and what action have been taken since the last update report
- Discussion on the result of the instrumentation data

Table 6-7 : How data should be presented in report for instrumentation monitoring

Thermistance
• Temperature vs. depth plots over time. • The plot should indicate the thermistor string reference number and date of each measurements presented • The plot need to indicate relevant stratigraphy and their depth • Plot need to be presented with a cross-section of the installation (if on a structure) as well as a plan view showing the instrument location
Piezometer
• Plots of total head as elevation versus time; and • Plot need to be presented with a cross-section of the installation showing lithology with depth as well as a plan view showing the instrument location • The plot need to indicate the instrument number, the dates of each measurement and a mention if the temperature read by the instrument is less than 0 degree
SAA
• Cumulative displacement plots (to view total displacement); • Incremental displacement plots (to present increasing or accelerating movements between readings); • Cumulative displacement at crest versus time; and • Time plots at zones of identified displacement. • The plot need to indicate the SAA number, what is considered positive and negative displacement and the dates of each measurement • Both elevations and depths should be presented together with the lithology. • A plan view need to be included showing the instrument location
Survey Monument
• Total net movement plots (to present total displacement); • Vertical displacement plots; and • Lateral displacement plots parallel and perpendicular to the dike axis • The plot need to indicate the survey monument number, what is considered positive and negative displacement and the dates of each measurement • A plan view need to be included showing the instrument location

6.6 DATA MANAGEMENT

An electronic library or database, which is easily accessible, shall be set up to catalogue and store inspection documents, maintenance reports and instrumentation measurements. The following will be stored in the hard copy and/or electronic format.

- Instrumentation report
- Visual inspection report
- Weekly report for structure in orange Tarp level
- Dike safety inspection (annual geotechnical inspection)
- Dam Safety Review report;
- Surveillance log
- Instruments database and map
- Maintenance log of geotechnical instrument
- Maintenance log of water management infrastructure
- Pump maintenance record

SECTION 7 • REFERENCES

Canadian Dam Association (CDA) 2007. Dam Safety Guidelines.

Golder Associates Ltd. (Golder) 2008. Detailed Design of Tailings Storage Facility, Meadowbank Gold Project. December 17, 2008. Doc. 784 Ver. 0.

Golder 2009. Stormwater Dike and Saddle Dam 1 Geomembranes, Meadowbank Gold Project. July 20, 2009. Doc. 917 Ver. 0.

Golder 2011. 2011 Tailings Deposition Plan Update, Meadowbank Gold Project. July 18, 2011. Doc. 1272 Ver. 0.

Golder (Golder Associates Ltd.). 2014. Meadowbank Gold Project – Interim Closure and Reclamation Plan. Prepared for Agnico Eagle Mines Limited – Meadowbank Division. Prepared by Golder Associates Ltd., January.Golder 2015. 2015 Detailed design report for Saddle Dams 3, 4 and 5. Meadowbank Gold Project. May 12, 2015. Doc. 1504 Ver. 1.

Mining Associate of Canada (MAC) 2005 Developing an Operation, Maintenance and Surveillance Manual for Tailings and Water Management Facilities.

Mining Association of Canada (MAC) 2008. A Guide to the Management of Tailings Facilities. Second Edition.

AEM, Emergency Response Plan, Ver.10, August 2016

Appendix A
Tailings Storage Facility – Inspection Form

XX INSPECTION REPORT

The instrumentation data for TARP yellow level structures is attached at the end of each inspection report

Inspecting Officer	
Report No.	XX-VIR-XX
Inspection Date	

Dike name	
Crest Elevation (m)	
D/S Toe Pond Elev. (m)	
South Cell Water Elev. (m)	

Last Inspection Date						
Weather during the current inspection	-XX C°	Sunny ☐	Overcast ☐	Rain ☐	Snow ☐	Wind ☐
	Comments:					
Main changes since the last inspection	None					

Tarp level (Based on OMS manual revision from February 2019)	Green

GENERAL CONDITION SUMMARY

➢

RECOMMENDATIONS

➢

XX INSPECTION REPORT

AGNICO EAGLE
MEADOWBANK

FIELD OBSERVATIONS

Location	Observations	Recommendations
Downstream slope	▪	▪
Upstream slope	▪	▪
Crest	▪	▪

XX INSPECTION REPORT

AGNICO EAGLE
MEADOWBANK

SEEPAGE REPORT

Location	*Observations*	*Recommendations*
	▪	▪

Appendix B
Tailings Storage Facility Instrumentation List

Legend	
	Instrument fully working
	PZ frozen or TH bead missing but still giving data
	Instrument not communicating

Central Dike

Hole	Instrument ID	Type	Status	Readings	For PZ		For TH	
#	ID	PZ/TH	Operational (✓)/Not operational (×)	Manual/ Automatic	Elevation (m)	Stratigraphic unit	Number of operational beads	Elevation interval in meters (top/bottom)
465-P3	465-P3-A	Piezo	Frozen	Automatic (DL37)	65	Bedrock	-	-
	465-P3-B	Piezo	Frozen	Automatic (DL37)	85	Bedrock	-	-
	465-TH-P3	Thermistor	✓	Automatic (DL37)	-	-	10/13	105/69
545-P1	545-P1-A	Piezo	✓	Automatic (DL12)	65	Bedrock	-	-
	545-P1-B	Piezo	× (since Nov. 2018)	Automatic (DL12)	76	Bedrock	-	-
	545-P1-C	Piezo	✓	Automatic (DL12)	80	Dense Till	-	-
	545-P1-D	Piezo	× (since Dec. 2018)	Automatic (DL12)	88	Dense Till	-	-
	545-TH-P1	Thermistor	✓	Automatic (DL12)	-	-	13	111/63
545-P2	545-P2-A	Piezo	× (since Jan 2, 2019)	Automatic (DL44)	65	Bedrock	-	-
	545-P2-B	Piezo	× (since Jan 2, 2019)	Automatic (DL44)	85	Bedrock	-	-
	545-P2-C	Piezo	× (since Jan 21, 2019)	Automatic (DL44)	100	Bedrock	-	-
	545-P2-D	Piezo	Frozen	Automatic (DL44)	104	Rock fill/Till	-	-
	545-TH-P2	Thermistor	✓	Automatic (DL44)	-	-	13	105/51
580-P1	580-P1-A	Piezo	× (since July 2016)	Automatic (DL12)	-	-	-	-
	580-P1-B	Piezo	× (since July 2016)	Automatic (DL12)	-	-	-	-
	580-P1-C	Piezo	× (since July 2016)	Automatic (DL12)	-	-	-	-
	580-P1-D	Piezo	× (since July 2016)	Automatic (DL12)	-	-	-	-
	580-P1-E	Piezo	× (since July 2016)	Automatic (DL12)	-	-	-	-
	580-TH-P1	Thermistor	× (since July 2016)	Automatic (DL12)	-	-	-	-
595-P1	595-P1-A	Piezo	✓	Automatic (DL12)	69.25	Bedrock	-	-
	595-P1-B	Piezo	✓	Automatic (DL12)	85.2	Bedrock (Casing)	-	-
	595-P1-C	Piezo	✓	Automatic (DL12)	92.2	Bedrock (Casing)	-	-
	595-P1-D	Piezo	× (June 2017)	-	96.2	Dense Till (Casing)	-	-
	595-P1-E	Piezo	× (June 2017)	-	105.2	Rock fill (Casing)	-	-
	595-TH	Thermistor	✓	Automatic (DL12)	-	-	16	114.60/69.60
650-P1	650-P1-A	Piezo	× (since February 2016)	Automatic (DL11)	-	-	-	-
	650-P1-B	Piezo	× (since September 2016)	Automatic (DL11)	-	-	-	-
	650-P1-C	Piezo	× (since September 2016)	Automatic (DL11)	-	-	-	-
	650-P1-D	Piezo	× (since September 2016)	Automatic (DL11)	-	-	-	-
	650-TH-P1	Thermistor	× (since August 2016)	Automatic (DL11)	-	-	-	-

Hole	Instrument ID	Type	Status	Readings	For PZ		For TH	
#	ID	PZ/TH	Operational (✓)/Not operational (×)	Manual/ Automatic	Elevation (m)	Stratigraphic unit	Number of operational beads	Elevation interval in meters (top/bottom)
650-P2	650-P2-A	Piezo	✓	Automatic (DL11)	65	Bedrock	-	-
	650-P2-B	Piezo	✓	Automatic (DL11)	85	Bedrock	-	-
	650-P2-C	Piezo	✓	Automatic (DL11)	99.5	Bedrock	-	-
	650-P2-D	Piezo	✓	Automatic (DL11)	103.5	Rock fill/Till	-	-
	650-TH-P2	Thermistor	✓	Automatic (DL11)	-	-	13	105/51
650-P3	650-P3-A	Piezo	Frozen	Automatic (DL38)	65	Bedrock	-	-
	650-P3-B	Piezo	Frozen	Automatic (DL38)	85	Bedrock	-	-
	650-TH-P3	Thermistor	✓	Automatic (DL10)	-	-	13	105/51
750-P1	750-P1-A	Piezo	✓	Automatic (DL10)	65	Bedrock	-	-
	750-P1-B	Piezo	✓	Automatic (DL10)	76	Bedrock	-	-
	750-P1-C	Piezo	✓	Automatic (DL10)	80	Dense Till	-	-
	750-P1-D	Piezo	✓	Automatic (DL10)	88	Dense Till	-	-
	750-P1-E	Piezo	✓	Automatic (DL10)	100	Rock fill	-	-
	750-TH-P1	Thermistor	✓	Automatic (DL10)	-	-	13	111/63
810-P1	810-P1-A	Piezo	× (since Dec. 2017)	-	67.7	Bedrock	-	-
	810-P1-B	Piezo	× (since January 2017)	-	-	-	-	-
	810-P1-C	Piezo	× (since Sept 2018)	-	86.9	Dense Till	-	-
	810-P1-D	Piezo	× Elev. Working only	-	93.9	Dense Till	-	-
	810-TH	Thermistor	× (since February 2018)	Automatic (DL18)	-	-	0/16	134.84/114.84
825-P1	825-P1-A	Piezo	✓	Automatic (DL18)	74.15	Bedrock	-	-
	825-P1-B	Piezo	✓	Automatic (DL18)	93.5	Bedrock	-	-
	825-P1-E	Piezo	✓	Automatic (DL18)	101	Till (Casing)	-	-
	825-TH	Thermistor	✓	Automatic (DL18)	-	-	14/16	131.25/71.25
850-P1	850-P1-A	Piezo	✓	Automatic (DL18)	72	Bedrock	-	-
	850-P1-B	Piezo	✓	Automatic (DL18)	93.7	Bedrock	-	-
	850-P1-E	Piezo	✓	Automatic (DL18)	106	Rock fill	-	-
	850-TH	Thermistor	✓	Automatic (DL18)	-	-	13/16	133.02/73.02
875-P3	875-P3-A	Piezo	✓	Automatic (DL41)	65	Bedrock	-	-
	875-P3-B	Piezo	✓	Automatic (DL41)	85	Bedrock	-	-
	875-TH-P3	Thermistor	✓	Automatic (DL41)	-	-	11/13	105/51
875-P2	875-P2-A	Piezo	✓	Automatic (DL10)	65.08	Bedrock	-	-
	875-P2-B	Piezo	✓	Automatic (DL10)	85.08	Bedrock	-	-
	875-P2-C	Piezo	Frozen	Automatic (DL10)	105.38	Bedrock	-	-
	875-P2-D	Piezo	Frozen	Automatic (DL10)	107.58	Till	-	-
	TH-875-P2	Thermistor	✓	Automatic (DL10)	-	-	15/16	120.08/63.08
800-P2	800-P2-A	Piezo	✓	Automatic (DL11)	70.07	Bedrock	-	-
	800-P2-B	Piezo	✓	Automatic (DL11)	85.07	Bedrock	-	-
	800-P2-C	Piezo	✓	Automatic (DL11)	95.07	Bedrock	-	-
	800-P2-D	Piezo	✓	Automatic (DL11)	105.07	Rock fill/Till	-	-
	TH-800-P2	Thermistor	✓	Automatic (DL11)	-	-	16	120.07/70.07

Hole	Instrument ID	Type	Status	Readings	For PZ		For TH	
#	ID	PZ/TH	Operational (✓)/Not operational (×)	Manual/ Automatic	Elevation (m)	Stratigraphic unit	Number of operational beads	Elevation interval in meters (top/bottom)
700-P1	700-P1-A	Piezo	✓	Automatic (DL11)	63.43	Bedrock	-	-
	700-P1-B	Piezo	✓	Automatic (DL11)	86.93	Bedrock	-	-
	700-P1-C	Piezo	✓	Automatic (DL11)	97.43	Bedrock	-	-
	700-P1-D	Piezo	✓	Automatic (DL11)	101.43	Void before bedrock	-	-
	TH-700-P1	Thermistor	✓	Automatic (DL11)	-	-	16	118.43/63.43
580-P1 (R)	580-P1-R-A (R)	Piezo	✓	Automatic (DL12)	69.55	Sand	-	-
	580-P1-R-B (R)	Piezo	✓	Automatic (DL12)	75.55	Bedrock	-	-
	580-P1-R-C (R)	Piezo	✓	Automatic (DL12)	79.05	Bedrock	-	-
	TH-580-P1 (R)	Thermistor	✓	Automatic (DL12)	-	-	16	120.55/65.55
1050-P3	1050-P3-A	Piezo	Frozen	Automatic (DL43)	66.37	Bedrock	-	-
	1050-P3-B	Piezo	Frozen	Automatic (DL43)	86.37	Bedrock	-	-
	TH-1050-P3	Thermistor	✓	Automatic (DL43)	-	-	16	134.77/65.77
975-P3	975-P3-A	Piezo	✓	Automatic (DL42)	64.53	Bedrock	-	-
	975-P3-B	Piezo	✓	Automatic (DL42)	84.53	Bedrock	-	-
	TH-975-P3	Thermistor	✓	Automatic (DL42)	-	-	16	131.12/64.12
800-P3	800-P3-A	Piezo	✓	Automatic (DL40)	62.95	Bedrock	-	-
	800-P3-B	Piezo	✓	Automatic (DL40)	82.95	Bedrock	-	-
	800-P3-C	Piezo	✓	Automatic (DL40)	96.45	Till	-	-
	TH-800-P3	Thermistor	✓	Automatic (DL40)	-	-	16	118.95/62.95
745-P3 (WR-P3)	TH-745-P3	Thermistor	✓	Automatic (DL39)	-	-	8/16	125.08/102.08
CD_US-0+650	CD-US-1	Thermistor	✓	Automatic (DL29)	-	-	16	126.40/111.056
	CD-US-2	Thermistor	✓	Automatic (DL29)	-	-	16	143/127
SD5	TH-02	Thermistor	✓	Automatic (DL58)	-	-	12/16	144/129
	TH-03	Thermistor	✓	Automatic (DL58)	-	-	16	141/126
	TH-04	Thermistor	✓	Automatic (DL58)	-	-	9/16	144/129

Stormwater Dike

Hole	Instrument ID	Type	Status	Readings	For PZ		For TH	
#	ID	PZ/TH	Operational (✓)/Not operational (×)	Manual/ Automatic	Elevation (m)	Stratigraphic unit	Number of operational beads	Elevation interval in meters (top/bottom)
SWD-01	SWD-01	Thermistor	✓	Automatic (DL19)			16	148/118
SWD-02	PZ-SWD-02-A	Piezo	✓	Automatic (DL19)	62	Bedrock		
	TH-SWD-02	Thermistor	✓	Automatic (DL19)			6	127/117
SWD-03	PZ-SWD-03A	Piezo	×	Automatic (DL19)	110	Bedrock		
	PZ-SWD-03B	Piezo	×	Automatic (DL19)	122			
	TH-SWD-03	Thermistor	✓	Automatic (DL19)			14	125/111
CRK	#1	Crakcmeter	✓	Automatic				
	#2	Crackmeter	✓	Automatic				
	#3	Crackmeter	✓	Automatic				
EXT	#2	Extensometer	Removed	Manual				
	#3	Extensometer	Removed	Manual				
	#4	Extensometer	✓	Manual				
	#5	Extensometer	Removed	Manual				
PSM	000 to 119	Prisms	✓	Manual				

SD1

Hole	Instrument ID	Type	Status	Readings	For PZ		For TH	
#	ID	PZ/TH	Operational (✓)/Not operational (×)	Manual/ Automatic	Elevation (m)	Stratigraphic unit	Number of operational beads	Elevation interval in meters (top/bottom)
SD1-T2	SD1-02	Thermistor	✓	Automatic (DL14)	-	-	16	140/110
SD1-T4	SD1-04	Thermistor	✓	Automatic (DL14)	-	-	16	134/119
SD1-T1	SD1-01	Thermistor	✓	Automatic (DL14)	-	-	16	149/132.84
SD1-T3	SD1-03	Thermistor	✓	Automatic (DL14)	-	-	15/16	148/118

SD2

Hole	Instrument ID	Type	Status	Readings	For PZ		For TH	
#	ID	PZ/TH	Operational (✓)/Not operational (×)	Manual/ Automatic	Elevation (m)	Stratigraphic unit	Number of operational beads	Elevation interval in meters (top/bottom)
SD2-T1	SD2-01	Thermistor	✓	Automatic (DL15)	-	-	16	148.05/145.31
SD2-T2	SD2-02	Thermistor	✓	Automatic (DL15)	-	-	16	148/118
SD2-T3	SD2-03	Thermistor	✓	Automatic (DL15)	-	-	16	144/129
SD2-T4	SD2-04	Thermistor	✓	Automatic (DL15)	-	-	16	148/123

SD3

Hole	Instrument ID	Type	Status	Readings	For PZ		For TH	
#	ID	PZ/TH	Operational (✓)/Not operational (×)	Manual/ Automatic	Elevation (m)	Stratigraphic unit	Number of operational beads	Elevation interval in meters (top/bottom)
SD3-T2	SD3-02	Thermistor	✓	Automatic (DL16)	-	-	16	139.1/123.1
SD3-T3	SD3-03	Thermistor	✓	Automatic (DL16)	-	-	15	138.6/121.6
SD3-T4	SD3-04	Thermistor	✓	Automatic (DL16)	-	-	15	137.3/122.3
SD3-T5	SD3-05	Thermistor	✓	Automatic (DL16)	-	-	16	138.4/122.4
SD3-T6	SD3-06	Thermistor	✓	Automatic (DL16)	-	-	16	143.9/113.9

SD4

Hole	Instrument ID	Type	Status	Readings	For PZ		For TH	
#	ID	PZ/TH	Operational (✓)/Not operational (×)	Manual/ Automatic	Elevation (m)	Stratigraphic unit	Number of operational beads	Elevation interval in meters (top/bottom)
SD4-T2	SD4-02	Thermistor	✓	Automatic (DL17)	-	-	16	139/129
SD3-T3	SD3-03	Thermistor	✓	Automatic (DL17)	-	-	16	144/129
SD4-T4	SD4-04	Thermistor	✓	Automatic (DL17)	-	-	5/14	137.3/127.8
SD4-T1	SD4-01	Thermistor	× (since August 2018)	Automatic (DL17)	-	-	16	143.4/139.6

SD5

Hole	Instrument ID	Type	Status	Readings	For PZ		For TH	
#	ID	PZ/TH	Operational (✓)/Not operational (×)	Manual/ Automatic	Elevation (m)	Stratigraphic unit	Number of operational beads	Elevation interval in meters (top/bottom)
SD5-02	SD4-02	Thermistor	✓	Automatic (DL58)	-	-	16(cap)	144/129
SD5-03	SD3-03	Thermistor	✓	Automatic (DL58)	-	-	16	141/126
SD5-04	SD4-04	Thermistor	✓	Automatic (DL58)	-	-	16(cap)	144/129

RF1-RF2

Hole	Instrument ID	Type	Status	Readings	For PZ		For TH	
#	ID	PZ/TH	Operational (✓)/Not operational (×)	Manual/ Automatic	Elevation (m)	Stratigraphic unit	Number of operational beads	Elevation interval in meters (top/bottom)
121-1	121-RF1-1	Thermistor	✓	Manual	-	-	16/16	136/90
73-6	73-6-RF1-2	Thermistor	✓	Manual	-	-	14/16	149.5/133
RF1-3	RF1-3	Thermistor	✓	Manual	-	-	11/11	148/144
122-1	122-1RF2	Thermistor	✓	Manual	-	-	14/16	137/90

North Cell

Hole	Instrument ID	Type	Status	Readings	For PZ		For TH	
#	ID	PZ/TH	Operational (✓)/Not operational (×)	Manual/ Automatic	Elevation (m)	Stratigraphic unit	Number of operational beads	Elevation interval in meters (top/bottom)
NC-T1	NC-T1	Thermistor	✓	Manual	-	-	16	146.6/86.6
NC-17-01	NC-17-01	Thermistor	✓	Automatic (DL20)	-	-	16	148/112
NC-17-02	NC-17-02	Thermistor	✓	Automatic (DL21)	-	-	16	147.6/102
NC-17-03	NC-17-03	Thermistor	✓	Automatic (DL22)	-	-	16	147.6/102.6
NC-17-04	NC-17-04	Thermistor	✓	Automatic (DL23)	-	-	16	148.5/122
NC-17-05	NC-17-05	Thermistor	✓	Automatic (DL24)	-	-	16	146.6/112.6
NC-17-06	NC-17-06	Thermistor	✓	Automatic (DL25)	-	-	16	148/112
NC-17-07	NC-17-07	Thermistor	✓	Automatic (DL26)	-	-	16	148/112
NC-17-08	NC-17-08	Thermistor	✓	Automatic (DL27)	-	-	16	146/99

North Cell Internal Structure (NCIS)

Hole	Instrument ID	Type	Status	Readings	For PZ		For TH	
#	ID	PZ/TH	Operational (✓)/Not operational (×)	Manual/ Automatic	Elevation (m)	Stratigraphic unit	Number of operational beads	Elevation interval in meters (top/bottom)
NCIS-T1	NCIS-18-01	Thermistor	✓	Automatic (DL55)	-	-	16	140/110
NCIS-T2	NCIS-18-02	Thermistor	✓	Automatic (DL55)	-	-	16	134/119
NCIS-T3	NCIS-18-03	Thermistor	✓	Automatic (DL56)	-	-	16	149/132.84
NCIS-T4	NCIS-18-04	Thermistor	✓	Automatic (DL57)	-	-	15/16	148/118
PSM	NCIS1 TO NCIS16	PRSME	✓	Manual	-	-	15/16	148/118

Appendix C
Potential Mitigation for Upset Condition

Potential Mitigation Plan for Upset Condition on Tailings Management Infrastructures

Upset Condition	Area / Cause		Comments/Monitoring	Contingency or Corrective Action
Overtopping and Subsidence	1a	Water level rise / storm event	Water levels and crest elevations is monitored as part of the surveillance program Outflow channels are inspected during thaw, open water season and during ice break-up.	Add additional pumping unit If rise is caused by a channel obstruction, remove the obstruction
	1b	Dam crest settlement	This scenario requires extensive loss of support in the foundation since the rockfill of the dikes is essentially not settlement prone itself after construction and dewatering. For foundation settlement of this magnitude to occur, a piping event must develop or there is unexpected layer of compressible soil in the foundation. The situation would develop slowly with crest settlement evident at least several weeks before a run-away event develops. Easily observed cracks should be evident. Monitoring of the crest settlement is conducted routinely.	The crest is wide and comprises of coarse rockfill. Significant damage to the dike is not credible, based on performance of other rockfill structures subjected to overtopping or flow through events Rockfill from the mining operations can be placed to raise the dike crest and compensate settlement. Mining operations may need to be suspended, but there will be considerable warning time given the slow development of the scenario.
	1c	Wave action	Large freeboard and wide crest zone makes this a low concern	rip-rap can be added and/or dam crest can be raised.
Internal Erosion	2a	Dike section: geomembrane is defective, allowing high water flow. This defect occurs at a location where the core allows high flows and where the fills/geomembrane are defective; the combination allows erosion of the Core Backfill.	The geomembrane and/or core backfill will develop a progressively increasing void ratio, thereby increasing the rate of water flow through the dike. This is not a catastrophic failure mode but could lead to an inability to manage water on site	Monitor seepage from downstream face for rate of seepage and for presence of sediment in seepage. Identify zone of seepage and establish a seepage capture and monitoring station with sufficient pumping capacity Re-evaluate the impact of this water inflow on the site wide water balance
	2b	Dike section: geomembrane is defective.	Results in increasing the rate of water flow through the dike. This is not a catastrophic failure mode as the rockfill will be stable and at its worst would lead to temporary suspension of mining.	Monitor seepage from downstream face for rate of seepage and for presence of sediment in seepage. Identify zone of seepage and establish a seepage capture and monitoring station with sufficient pumping capacity Re-evaluate the impact of this water inflow on the site wide water balance
	2c	Foundation till is possibly non-uniform with more transmissive zones and not self-filtering. Seepage could erode the foundation tills at the downstream toe or into the downstream rockfill because of the lack of filtering.	Limited seepage at the toe or into the rockfill would accelerate in to a large inflow, and could lead to the undermining of the dike if no action was taken. This is a credible catastrophic mode if increased seepage is not detected in time. No particular instrumentation is needed as this failure mode will show itself as localized and increasing seepage. It could be detected by walk-over inspection by an experienced engineer or technician.	Remedial action could comprise a reverse filter and rockfill buttress depending on location of the flow and configuration of the foundation, freezing or grouting, if identified in time.
Seepage	3a	Within the Embankment	Seepage on its own is not a credible failure scenario. The downstream rockfill shell has extremely high flow through capacity. The rockfill zone is both large and pervious, so that seepage will not daylight and lead to instability.	Monitor seepage from downstream face for rate of seepage and for presence of sediment in seepage. Identify zone of seepage and establish a seepage capture and monitoring station with sufficient pumping capacity Re-evaluate the impact of this water inflow on the site wide water balance
	3b	Within the Foundation	Defective construction of cut-off leading to transfer of unexpectedly high fraction of the reservoir head into the downstream part of the dike foundation, or leading to a piping event as described in internal erosion (2c). If this mechanism arises it should show itself during initial dewatering or very shortly thereafter.	Monitor seepage from downstream face for rate of seepage and for presence of sediment in seepage. Identify zone of seepage and establish a seepage capture and monitoring station with sufficient pumping capacity Re-evaluate the impact of this water inflow on the site wide water balance Re-assess stability (numerical modelling) and construct a stabilising berm

Upset Condition	Area / Cause		Comments/Monitoring	Contingency or Corrective Action
Structural - Slope Instability	4a	Normal Operation: Slope Failure	The rockfill shoulders of the dike are wide and have high shear strength Slope failure requires failure in the foundation and which would extend into the overlying dike. Sliding failure is considered unlikely given the low horizontal forces generated by the water and ice relative to the normal frictional force due to the weight of the dikes and the frictional angles of foundational materials. This mechanism should develop during construction, due to the increase in load and associated pore water pressure development. Initial stages of failure should be observable as tension cracks in the dike crest. Walk-over inspection of the dike by trained inspector is an appropriate monitoring strategy in addition the instrumentation. Survey of crest face and toe is conducted.	Re-assess stability (numerical modelling) and construct a stabilising berm if required Fill inactive tension cracks with bentonite
	4b	Earthquake Induced: Slope Failure	Site is located in a low seismic zone. Dike consisting of massive rock zone has a low sensitivity to seismic motion.	Do an inspection and repair damage
	4c	Erosion; washout, ice scour	Crest – minimum 50 m section, Downstream – large quarry rock face.	Repair erosion by placing additional rockfill and material
Subsidence	5	Foundation Soils	Unexpected foundation soils consolidated during dike construction. A significant quantity of clay would be required to generate settlement resulting in a water release event. Prism and monument monitoring is done routinely.	This scenario would be readily repaired by excavating rockfill above the cut-off wall and placing more till. Soil conditions will be observed during dewatering to accommodate actual conditions.
Premature Closure	6	Corporate Bankruptcy or Early Resource Depletion	Bond is provided for this eventuality. Design of rehabilitation is the same as rehabilitation at closure of project.	This would trigger the closure plan
Pump and Pipeline Failure	7	Pumping infrastructures	Freezing protection is provided by heat tracing and insulation. Pipelines monitored pump pressures at plant and frequent site inspection.	Replace defect in pipeline Repair the pump and use another pump in the meantime

Oil Handling Facility: oil Pollution Emergency Plan, Version 9

AGNICO EAGLE

OIL HANDLING FACILITY

OIL POLLUTION EMERGENCY PLAN

For

Meadowbank and Whale Tail Project Fuel Farm in Baker Lake

EC ID number EC-00025772 P-50 Diesel fuel and EC ID number EC-00026142 for Jet-A

June 2018

Version 9

EXECUTIVE SUMMARY

This document presents the Oil Pollution Emergency Plan for Agnico Eagle Mines Limited (Agnico) Meadowbank Division. This plan is pursuant to the Canada Shipping Act 2001; and all the subtending regulations.

Oil Pollution Emergency Plan (OPEP) designates lines of authority, responsibility, establishes proper reporting and details plans of action in the event of a spill. This plan applies to the operational phase of the fuel transfer which takes place at Agnico Eagle Ltd.'s Baker Lake Marshaling Facilities and Oil Handling Facility located at latitude 64°18'36"N and longitude 95°58'04"W.

A hard copy of the OPEP will be available at the Baker Lake Marshalling facility during the transfer operations.

ACRONYMS

Agnico	Agnico Eagle Mines Limited
ECC	Emergency Control Center
ERT	Emergency Response Team
ERP	Emergency Response Plan
Fuel	P50 Arctic Grade diesel fuel and/or Jet-A aviation fuel
IMO	International Maritime Organization
MARPOL	*The International Convention for the Prevention of Pollution from Ships,* 1973, and the *Protocols* of 1978 and 1997, as amended from time to time
OHF	Oil Handling Facility
OPEP	Oil Pollution Emergency Plan
SCP	Spill Contingency Plan
SOPEP	Ship Oil Pollution Emergency Plan
SMP	Spill Management Plan
TCMSS	Transport Canada Marine Safety & Security
TEU	Twenty-foot equivalent unit

DISTRIBUTION LIST

Agnico - Environmental Superintendent

Agnico – General Mine Manager

Agnico – Health and Safety Superintendent

Agnico – Energy and Infrastructures Superintendent

Agnico – Energy and Infrastructures Superintendent

Agnico – ERT Emergency Measures Councilor

Baker Lake – Baker Lake Hamlet Office

Baker Lake – Fire Department

Petro-NAV Inc. – Director of Operations

Transport Canada – Marine Pollution Officer

Canadian Coast Guard Environmental Response

DOCUMENT CONTROL

Version	Date (YMD)	Section	Page	Revision
0	12/09/02	All	All	Comprehensive plan for Agnico's Baker Lake Fuel Farm Facilities
1	12-09-17		10, 12, 13	P10: Tide and Currents reference change; P12: Rephrasing of the last paragraph title; P13: in INITIAL SPILL RESPONSE PRIORITIES table into Section 2 RESPOND SAFELY, rewording to show only diesel fuel actions.
2	13-03-30	6 & App. D	10	Oil Handling Facility Declaration; 2013 Jet-A to start being stored at OHF
			12	Adequate lighting required during fuel transfer
		9	20 21	Item list on inside door of each Sea can. Internal Contacts Updated
		10 & App. C	23	Update to Agnico site spill training & Location of training records
		13	29	Major Failure At Helicopter Island
		14 & App. E	30	In-situ Burning
		16	32	New for 2013
3	January 2014	ALL		Comprehensive Review
4	July 2014	ALL		Comprehensive Review after Transport Canada Assessment
5	November 2014	ALL		Comprehensive Review following non-compliance letter received from Transport Canada
6	July 2015			Annual Comprehensive Review
		Sec 1	1	Update Declaration
		Fig 5	18	Update Pager numbers
		Table 5,6,7	26&27	Update Contact numbers
		Footnote 3	35	Contact date for JJ Brickett with CCG
		Table 8	44	Update Training Dates
7	May 2016	Sec 1	1	Update Declaration
		Fig 5	18	Update Pager number
		Tables 5,6,7	26-28	Update Contact numbers
		Table 8	45	Update Training Dates

		Appendix A		Update Contact numbers
		Appendix D		Update Meeting Minutes
8	May 2017	Sec 1	1	Update Declaration
		Fig 5	18	Update Pager number
		Tables 5,6,7	31-33	Update Contact numbers
		Section 10.2.1	40	Add details related to the Fisheries Act Regulation and Birds Migratory Convention
		Table 8	50	Update Training Dates
		Appendix B	55	Removed Appendix B Transfer Conduit Annual pressure Test as per TC Inspector's comments
9	May 2018	Section 1	1	Update Declaration
		Fig 5	18	Update Pager number
		Tables 5,6,7	31-33	Update Contact numbers
		Section 10.2.1	40	Add details related to the Fisheries Act Regulation and Birds Migratory Convention
		Table 8	50	Update Training Dates
		Appendix B	55	Removed Appendix B Transfer Conduit Annual pressure Test as per TC Inspector's comments

Prepared By: *Meadowbank Environment Department*

Approved by: _____

Nancy Duquet-Harvey
Environmental Superintendent - NU

Table of Contents

SECTION 1. Oil Handling Facility Declaration 1
SECTION 2. General Introduction 2
2.1 Fundamental Principles 2
2.2 Legislative Requirements 2
2.3 Related Documents 3
2.4 Meadowbank Mine Oil Pollution Emergency Plan 3
SECTION 3. Planning Standards 4
3.1 Facility Category 4
3.2 General Planning Guidelines 4
3.2.1 Response Time Standards 4
3.2.2 On-Water Recovery 4
3.2.3 Dedicated Facility Spill Response Equipment 5
3.2.4 Transfer Conduit 5
3.2.5 MBK-ENV-0013: OHF / Ship to Shore Fuel Discharge Procedure 5
SECTION 4. Baker Lake Marshalling Area and Fuel Storage Facility 6
4.1 General Overview and Site Description 6
4.2 Fuel Storage Facilities Infrastructure 7
4.2.1 P-50 Fuel Tanks 7
4.2.2 Jet-A Fuel 8
4.3 Baker Lake Shoreline and Marine Characteristics 9
4.3.1 Topography 9
4.3.2 Geology 9
4.3.3 Flora and Fauna 9
4.3.4 Subsurface Conditions 9
4.3.5 Water Quality 10
4.3.6 Bathymetric Data 10
4.3.7 Tides and Currents that Prevail at the Facility 10
4.3.8 Meteorological Conditions Prevailing at the Facility 10
4.3.9 Surrounding Area Environmental Sensitivities 10
SECTION 5. Site Activities 13
5.1 Nature of the Oil Product 13
5.2 Bulk Transfer 15

5.3 Measures to Minimize a Diesel and Jet-A Pollution Incident 15
5.4 Portable Containment Pools 16
SECTION 6. Meadowbank Response to Emergencies 17
6.1 Response Management Structure 17
6.2 Logistics and Planning 19
SECTION 7. Equipment and PPE 20
7.1 OHF Response Equipment for spills up to ~5m^3 20
7.2 Additional Response Equipment or for Spills >5m^3 20
7.2.1 General Equipment 21
7.2.2 Spill Response Kits and Containers 22
7.3 PPE 23
7.3.1 PPE at OHF for Spills <5m^3 23
7.3.2 PPE for Spills >5m^3 24
SECTION 8. Communication 25
8.1.1 Communication with the Public 25
8.1.2 Hand Held Radio Communication 25
8.1.3 Contacts 26
SECTION 9. Roles and Responsibilities 29
9.1.1 First Responder (Third Party Contractor (Intertek Personnel) and Spud Barge Supervisor) 29
9.1.2 Supervisor (Spud Barge Supervisor) 29
9.2 Roles & Responsibilities of the Emergency Control Group 29
9.2.1 Official In-Charge 29
9.2.2 General Superintendents 30
9.2.3 Incident Commander: A Trained Staff Member (ERT Coordinators or Supt.) 31
9.2.4 Emergency Response Team (ERT Team) Duties: 31
9.2.5 Environmental Superintendent/Designate Duties: 32
9.2.6 Health and Safety Superintendent/Designate Duties: 32
9.2.7 Energy and Infrastructures Superintendent/Designate Duties: 32
9.2.8 Human Resources Superintendent/Designate Duties: 32
9.2.9 Health Care Professional (Nurse/Medic): 33
9.2.10 Security Department: 33
9.3 Debriefing 33
SECTION 10. General Spill Procedures 34

10.1 Coordination with Government Agencies 34
10.1.1 Coordination with Transport Canada Technical Service Environmental Response 34
10.1.2 Coordination with Canadian Coast Guard 35
10.1.3 Other Government Agencies 35
10.2 Reporting Requirements 35
10.2.1 Government of Nunavut Reporting Requirements 35
10.3 Treatment and Disposal 36
10.4 Resuming Unloading 36
SECTION 11. Spill Scenarios and Response Strategies 37
11.1 Product Properties and Response Strategy 37
11.2 Pipeline safeguards 38
11.3 Wildlife 38
11.4 Scenarios 38
Scenario 1: 39
Scenario 2: 40
Scenario 3: 41
SECTION 12. Preventive Measures 42
12.1 Training 42
12.1.1 Meadowbank site Personnel 42
12.1.2 OHF Personnel Training 43
12.1.3 Boat Operators 44
SECTION 13. Coastal Shipping 46
13.1.1 Coastal Shipping 46
SECTION 14. References 47

FIGURES

Figure 1 - Location of the Community of Baker Lake 6
Figure 2 - Agnico's Baker Lake Oil Handling Facility – Ship to Shore Transfer Area 8
Figure 3 - Location of Community Freshwater Intake at Baker Lake 12
Figure 4 - Location of Helicopter Island 14
Figure 5 - Response Management System 18

TABLES

Table 1 - Category of OHF 4
Table 2 - Material available in the Spill Response Sea Can at Agnico's OHF 20
Table 3 - PPE available at OHF 23
Table 4 - Agnico Radio Channels 25
Table 5 - Agnico Contact 26
Table 6 - Contractors / Local Contacts 27
Table 7 - External Contacts 28
Table 8 - Spill Response Training 45

APPENDICES

APPENDIX A 1.1- COASTAL SHIPPING LTD. SOPEP 48
APPENDIX A 1.2- COASTAL SHIPPING LTD. CONTACT INFO 49
APPENDIX B - The Central and Arctic Regional Response Plan (2008) 50
APPENDIX C - MSDS Jet-A and Diesel 51
APPENDIX D 1.1– Agnico Pre-discharge and Spill Response Sea Can checklists 52
APPENDIX D 1.2 – OHF Ship to Shore Fuel Discharge Procedure 53
APPENDIX D 1.3 – 2016 Meeting Minutes of Fuel Transfer Procedure Revision Meeting 54
APPENDIX D 1.4 – 2016 Mock Spill Minutes 55
APPENDIX E 1.1– COASTAL SHIPPING LTD. GENERAL CHECKLIST 57
APPENDIX E 1.2– COASTAL SHIPPING LTD. SHIP TO SHORE CHECKLIST 57
APPENDIX E 1.3– COASTAL SHIPPING LTD. CARGO PRE ARRIVAL 58
APPENDIX F – Agnico Internal Spill Report Form 59

SECTION 1. OIL HANDLING FACILITY DECLARATION

Pursuant to paragraph 168(1) (b) (i) of the Canada Shipping Act 2001, Agnico Eagle Mines Ltd. (Agnico) has signed an Oil Handling Facility Declaration. This Declaration can be found posted at the Oil Handling Facility (OHF).

OIL HANDLING FACILITY DECLARATION

Pursuant to paragraph 168(1) of the Canada Shipping Act 2001, I, Nancy Duquet-Harvey (Name of the operator of the oil handling facility) declare that to comply with the Oil Handling Facility Regulation, Respecting the circumstances in which operators of oil handling facilities shall report discharges or anticipated discharges of pollutants, the manner of making the reports and the persons to whom the reports shall be made; all the information contained in the submission is true and complete to the best of my ability and accurately reflect our interpretation of the regulations.

The persons listed below are authorized to implement the oil pollution emergency plan:

NAME	COMPANY	ADDRESS	PHONE	EMAIL
Nancy Duquet-Harvey	Agnico Eagle Mines Ltd.	P.O. Box 540; Baker Lake, Nunavut X0C 0A0	(819) 759-3555 ext 6980	nancy.harvey@agnicoeagle.com
Martin Archambault			(819) 759-3555 ext 6744	martin.archambault@agnicoeagle.com
Robin Allard			(819) 759-3555 ext 6744	robin.allard@agnicoeagle.com
Markus Uchtenhagen			(819) 759-3555 ext 6720	markus.uchtenhagen@agnicoeagle.com
Yves Leveque			(819) 759-3555 ext 6720	yves.leveque@agnicoeagle.com
Bruce Waugh			(819) 759-3555 ext 6803	bruce.waugh@agnicoeagle.com
Steven Tremblay			(819) 759-3555 ext 6822	steven.tremblay@agnicoeagle.com
Andre Rouleau			(819) 759-3555 ext 6809	andre.rouleau@agnicoeagle.com
Philippe Beaudoin			(819) 759-3555 ext 6809	philippe.beaudoin@agnicoeagle.com

(Signed by the operator of the oil handling facility or its representative)

June 5, 2018
(Date)

AGNICO EAGLE

SECTION 2. GENERAL INTRODUCTION

The Oil Pollution Emergency Plan (OPEP) is to set in motion the necessary actions to stop or minimize the loss of fuel resulting from a mishap at Agnico Eagle Mines Limited's Baker Lake Fuel Farm Oil Handling Facility located in Baker Lake, Nunavut during the ship to shore fuel transfer. Additionally, it provides direction to Agnico personnel and/or contractors at the laydown and tank farm areas, and to Agnico's Emergency Response Team (ERT) for emergency spill response situations; describes oil pollution scenarios, defines the roles and responsibilities of management and responders; and outlines the measures taken to prevent spills. The purpose of the OPEP is to minimize potential health and safety hazards, environmental damage and cleanup costs.

2.1 Fundamental Principles

The following OPEP is submitted for compliance to the Canada Shipping Act 2001 and all the subtending regulations and to outline the appropriate spill response protocol during fuel transfer operations at the Baker Lake OHF. A hard copy of the OPEP will be located on site for reference and review during transfer operations. This OPEP will be reviewed annually and updates will be provides to TCMSS for compliance prior to every shipping season. The following priorities shall be taken into account when responding to an oil pollution incident and in the following order:

1. Safety of the workers;
2. Safety of the OHF;
3. Safety of the community of Baker Lake;
4. Prevention of fire and explosion;
5. Minimize of the oil pollution incident;
6. Notify and reporting of the oil pollution incident to associated Governing bodies;
7. Environmental impact of the spill;
8. Complete clean-up from the oil pollution incident.

2.2 Legislative Requirements

This plan was prepared in accordance with federal legislation listed below, which lists legislative instruments applicable to Agnico's Baker Lake Fuel Oil Handling Facility. All requirements found in the Canada *Shipping Act*, *2001*, ss. 168 are laid out in the Meadowbank Mine site OHF Concordance Table which will be submitted to Transport Canada as a stand-alone document.

The OPEP complies with the requirements for procedures, equipment and resources as set out in the *Canada Shipping Act* (s.s. 660.2(4)) specific to a fuel handling facility - the bulk incoming transfer of fuel from ship-to-shore and spill scenarios directly relating to this operation.

The following standards and regulatory requirements have been reviewed in preparation of this document:

- Canada Shipping Act;
- Response Organizations and Oil Handling Facilities Regulations;
- Vessel Pollution and Dangerous Chemical Regulation;
- Environmental Response Arrangements Regulations;
- Oil Handling Facilities Standards (TP 12402E);
- Response Organization Standards (TP 12401);

- Arctic Waters Oil Transfer Guidelines (TP 10783);
- Environmental Prevention and Response National Preparedness Plan (TP 13585);
- Release and Environmental Emergency Notification Regulations;
- Guidelines for reporting Incidents Involving Dangerous Goods, Harmful Substances and/or Marine Pollutants; and
- Requirements of the Central & Arctic Regional Response Plan.

2.3 Related Documents

Management and monitoring plans for Meadowbank mine that provided input to the Oil Pollution Emergency Plan include the following:

1. Spill Contingency Plan;
2. Emergency Response Plan; and
3. Shipboard Oil Pollution Emergency Plan[1].

The cornerstones of contingency planning for Agnico are the Spill Contingency Plan and the Oil Pollution Emergency Plan. These, coupled with the Emergency Response Plan, describe the processes to be followed in responding to a spill. The OPEP on its own provides the necessary information in the event of a mishap where fuel is lost during the transfer of fuel from a tanker vessel to the Fuel Tank Facility.

The OPEP complements the Spill Contingency Plan and it should not be construed as superseding it. The Spill Contingency Plan addresses a wider scope of operations stretching 110 kilometers from the Meadowbank mine site in the north to their infrastructure in the south. The OPEP strictly covers the transfers of fuel from ship to OHF.

2.4 Meadowbank Mine Oil Pollution Emergency Plan

This Plan is a working document that will be reviewed annually and updates provided to TCMSS for compliance prior to every shipping season.

This plan specifically centres on the activities in ship-to-shore transfer of fuel from a small tanker delivering fuel to Agnico's Baker Lake Fuel Tank Facility constructed in Baker Lake. On site personnel at the Facility are expected to respond to spill incidents (generally smaller than 1 m^3) that can be contained and cleaned up without assistance, while the Emergency Response Team will respond to larger spills.

Fuel is being delivered to Agnico's Baker Lake Fuel Farm by Petro-Nav Inc., a Division of Desgagnes. Fuel is stored within the existing tank farm owned and operated by Agnico. The Shipboard Oil Pollution Emergency Plan (SOPEP) is the responsibility of the shipping company. The outline of the SOPEP prepared by Petro-Nav Limited can be found in Appendix A – 1.1.

[1] *The Shipboard Oil Pollution Emergency Plan (SOPEP) contains all information and operational instructions as required by the "Guidelines for the development of the Shipboard Marine Pollution Emergency Plan" as developed by the International Marine Organization. Woodward's, the shipping company, is responsible for this Plan.*

SECTION 3. PLANNING STANDARDS

3.1 Facility Category

Oil handling facilities are categorized according to their maximum oil transfer rate in cubic meters per hour, in respect of the oil product loaded or unloaded to or from a ship, as follows (Table 1):

Table 1 - Category of OHF

Category of Oil Handling Facility	Maximum Oil Transfer Rate (cubic meters/hour)
Level 1	150
Level 2	750
Level 3	2 000
Level 4	More than 2 000

The product transfer rate (Diesel and Jet-A) for the Agnico's Baker Lake Fuel Farm OHF at Baker Lake is 400m^3/hr. As indicated in the OHF Standards TP 12402, this flow rate requires the onsite spill response capacity to meet a Level 2. To do this, the OHF will have the equipment and resources to respond to a 5m^3 spill within the required timelines specified in the Response Organization and Oil Handling Facility Regulations:

1. Contain and control in one hour of spill detection; and
2. Commence cleanup within six hours after spill detection.

3.2 General Planning Guidelines

3.2.1 Response Time Standards

Agnico and contractor personnel at Baker Lake Fuel Farm have appropriate training to respond to spills, if it is safe to do so (see Table 8). The material onsite can be deployed within one hour to contain a spill of 5m^3 or less, unless deployment within one hour will be unsafe. Generally, for spill greater than 1m^3, the OPEP and the Emergency Response Plan (ERP) will be activated and the Emergency Response Team (ERT) located at Meadowbank mine site will come in Baker Lake to help. Realistically, the ERT can be on site within 125 minutes (or less) ready to help for the clean-up activity. If the spill is greater than 5m^3, material from the Meadowbank Mine site will be required and will be bring at the Baker Lake OHF within 125 minutes to finalize the containment (if not complete) and recovered of the oil pollution incident.

3.2.2 On-Water Recovery

Agnico will have a registered boat at the Baker Lake barge area that is ready to be deployed in the case of an emergency situation. It will have all required components for an industrial use vessel. All personal involved in a response situation will need to have or complete the pleasure craft operator's certification.

If additional water crafts are required to help with the containment of a spill from the OHF, local resources such as Peters Expediting Ltd. and Baker Lake Contracting & Supplies (BLCS) can be use. Contact info for these companies can be found in Table 6.

3.2.3 Dedicated Facility Spill Response Equipment

Agnico has 3 sea cans with spill response equipment at the Baker Lake shore within Agnico's Marshalling area and includes booms that can rapidly be deployed to limit the spread of any spill on water. The list of equipment can be found in Table 2. The spill supplies and resources are in place to respond to a $5m^3$ spill within the required timelines as specified in the Response Organizations and Oil Handling Facility Regulations. These sea cans will be inspected before each transfer season to ensure that all the spill response material and PPE are there and stored in a manner that is organized and accessible in order to comply with regulatory requirements and allow an efficient spill response. See Appendix D – 1.1 for the checklist inspection sheet that can be found in the sea can.

3.2.4 Transfer Conduit

The transfer conduit or hose that is used to transfer fuel from Petro-Nav to the Agnico Baker Lake Fuel Farm OHF will be pressure tested annually by Petro-Nav according to the regulation prior it being placed into service. A copy of the annual pressure test will be made available to TCMSS on request. The transfer conduit will always have a bursting pressure of not less than 4 times its maximum design pressure and the design pressure will be clearly marked on the conduit.

3.2.5 MBK-ENV-0013: OHF / Ship to Shore Fuel Discharge Procedure

Agnico has created an internal procedure to ensure all planning and precautions are in place prior to the transfer of any fuel from the vessels to the OHF. This procedure can be found in Appendix D – 1.2.

SECTION 4. BAKER LAKE MARSHALLING AREA AND FUEL STORAGE FACILITY

4.1 General Overview and Site Description

Agnico's Oil Handling Facility (OHF) is located in the area of Baker Lake at latitude 64°18 22.778" N and longitude 95°57'33.990" W. The location shown on Figure 1 provides more detail. The Fuel Tank Facility consists of six - 10 million litres diesel fuel[2] (10,000 m^3) storage tanks all holding P50 grade diesel), and 18 tanks holding 1,800,000 litres of Jet-A fuel (Figure 2). The Facility is located adjacent to Agnico's Marshalling area, approximately 250 meters from the shore of Baker Lake at high tide. Power is provided by a generator for the fuel pump module located next to the tank farm.

Figure 1 - Location of the Community of Baker Lake



[2] *1000 litres = 1 m^3 of fuel. Cubic meters are used throughout this document.*

4.2 Fuel Storage Facilities Infrastructure

4.2.1 P-50 Fuel Tanks

The diesel fuel tanks are contained within an impermeable lined and bermed area. The steel fuel tanks have been field-erected and built to API-650 standards with each bermed area holding two tanks. This area is capable of containing 110% of the volume of one 10,000 m^3 storage tank. Each impermeable lined and bermed cell has the following:

- A granular base for the tank completed with an impermeable LLDPE liner system and granular dikes;
- Two – 10,000 m^3 tanks complete with the required appurtenances such as stairs, base manholes, water draw offs, re-supply nozzle, suction nozzle, tank lighting, tank level monitoring, roof manhole, manual gauge hatch, tank temperature and P/V vent;
- Piping for unloading and loading; and
- Site lighting via fixtures mounted from the dispensing building.

The Tank Farm Facility is designed to meet the following standards:

- National Fire Code 2010;
- *Storage Tank Systems for Petroleum Products and Allied Petroleum Products Regulations* – 2008; and
- Canadian Council of Ministers of the Environment, "*Environmental Code of Practice of Aboveground and Underground Storage Tank Systems Containing Petroleum Products and Allied Petroleum Products – 2003* (Updated in 2013) (PN1326)".

The Oil Handling Facility (OHF) is constructed and operated in accordance with Transport Canada Arctic Waters Oil Transfer Guidelines (TP 10783E) and Oil Handling Facility Guidelines (TP 12402E). A fuel dispensing pad area completed with a dispensing unit is located in a lined facility with a provision to capture any and all spills at the fueling area and direct them to a containment area provided at the tank farm.

Figure 2 - Agnico's Baker Lake Oil Handling Facility – Ship to Shore Transfer Area

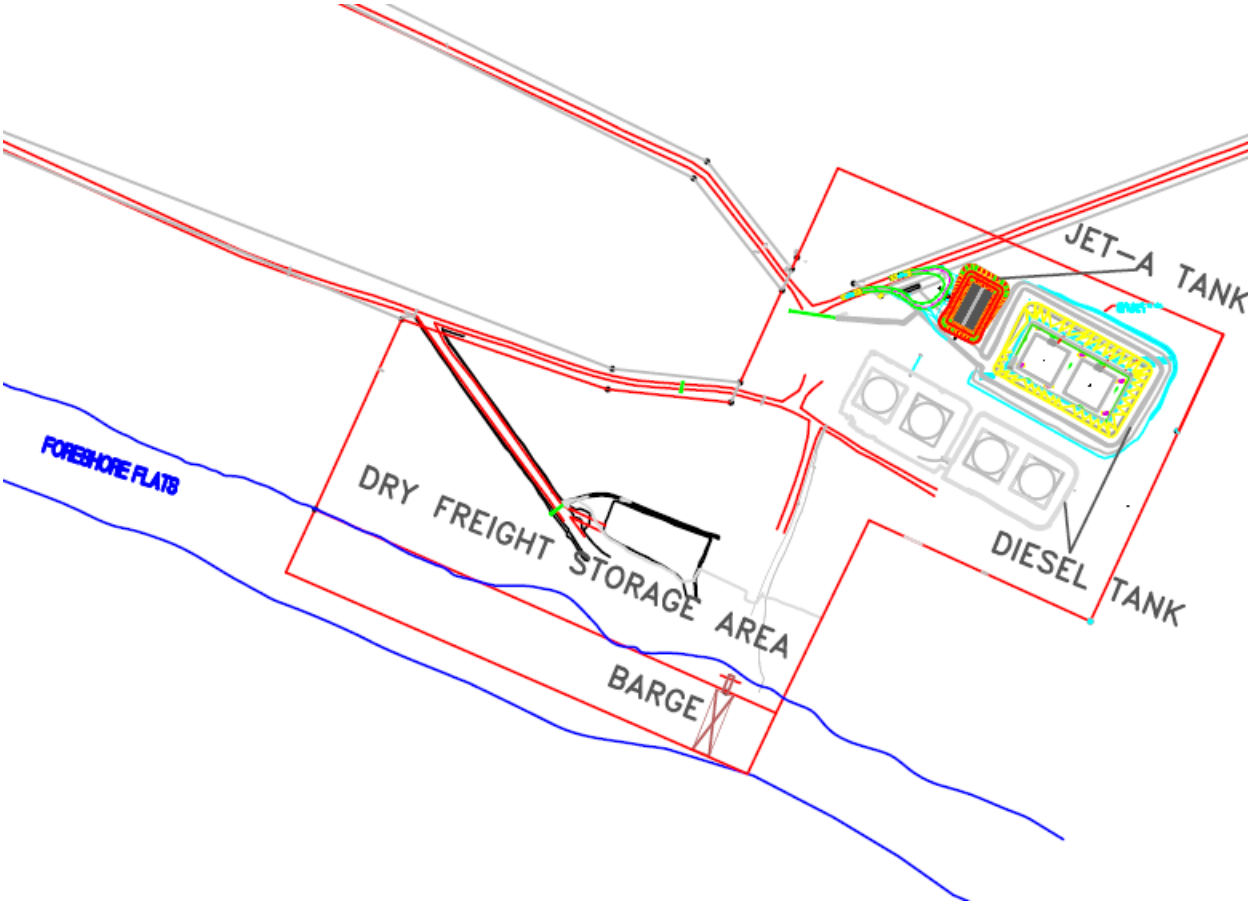

4.2.2 Jet-A Fuel

The Jet-A fuel tanks are contained within an impermeable lined and bermed area. The steel fuel tanks have been field-erected and built to API-650 standards with the bermed area holding eighteen tanks. This area is capable of containing >110% of the volume of one 100,000L storage tank. The impermeable lined and bermed cell has the following:

- A granular base for the tank completed with an impermeable bituminous liner system and granular dikes;
- Eighteen (18) – 100,000L tanks completed with the required appurtenances such as stairs, base manholes, water draw offs, re-supply nozzle, suction nozzle, tank lighting, tank level monitoring, roof manhole, manual gauge hatch, tank temperature and P/V vent; and
- Piping for unloading and loading.

The Jet-A Fuel Facility is designed to meet the following standards:

- National Fire Code 2010;
- *Storage Tank Systems for Petroleum Products and Allied Petroleum Products Regulations* –

2008; and

- Canadian Council of Ministers of the Environment, "*Environmental Code of Practice of Aboveground and Underground Storage Tank Systems Containing Petroleum Products and Allied Petroleum Products – 2003* (Updated in 2013) (PN1326)".

4.3 Baker Lake Shoreline and Marine Characteristics

The following Baker Lake Shoreline and Marine Characteristics were gathered during the Environmental Impact Assessment that was performed prior to construction of the Baker Lake Marshalling facility and Tank Farm.

4.3.1 Topography

The bulk fuel storage area is located east of the Hamlet of Baker Lake, approximately 350 m north of Baker Lake. The OHF sits on a low terrace parallel with the shoreline of the lake. There is a gradual slope (5 to 10% grade) toward Baker Lake with an approximate elevation change of 35 m from the OHF to the Baker Lake shoreline. The Baker Lake shoreline is gently sloping, well-drained and is lined with marine gravels, sands and boulders.

4.3.2 Geology

The regional surficial geology is characterized by sandy till, bedrock outcrops, felsenmeer (ice-shattered bedrock) and shallow lakes (Golder, 2007). The most common soil type in this region is glacial till. Marine beach deposits are found along the north shore of Baker Lake.

The soil near the bulk fuel storage facility is comprised of silts, sands, gravels, cobble and boulders and frost-susceptible glacial till overlying weathered bedrock (Golder, 2007). The soil thickness is typically less than 1.4 m with permafrost or bedrock encountered at less than 2 m. Approximately 60% of the surface area surrounding the bulk fuel storage facility is comprised of bedrock outcrop.

4.3.3 Flora and Fauna

There are no trees and few shrubs in the area surrounding the bulk fuel storage facility. The site is covered by low-lying vegetation; predominated by grassy hummocks, dwarf willow, sedge, green moss and lichen.

Arctic ground squirrels, ptarmigan and songbirds are inhabitants in the area surrounding the bulk fuel storage facility. Lake cisco, lake trout, arctic char, lake whitefish, round whitefish, slimy sculpin and stickleback are predominant species found in Baker Lake.

4.3.4 Subsurface Conditions

Test pits excavated in 2005 near the Bulk Fuel Storage Facility and between the tanks and the shoreline indicate a saturated top layer (0.2 m) of organic material (primarily green moss) (Golder, 2005; 2007). A layer of grey to black medium sand is present up to 0.7 m thickness throughout the area, below which a saturated, grey brown, sand and silt layer is found.

Bedrock is exposed at shallow depths throughout the site in locations where topsoil or till soils are present (Golder, 2005). Bedrock is encountered at a maximum depth of 1.4 m. As predicted by the soil

conditions, seepage flows in test pits indicate high site drainage (*Baker Lake Bulk Fuel Storage Facility Environmental Performance Monitoring Plan Version 3; June 2014*).

4.3.5 Water Quality

Baker Lake water quality closely resembles distilled water as many conventional water chemistry parameters are at or below detection limits (BAER, 2005). The water column is generally well mixed and the water chemistry homogenous. During the open water season there is limited vertical stratification in temperature and dissolved oxygen, with observed higher salinity in the bottom strata.

4.3.6 Bathymetric Data

As required by Water License 2AM-MEA1525 Schedule B, Item 4: *A bathymetric survey(s) conducted prior to each year of shipping at the Baker Lake Marshaling Facility*. The result of this annual bathymetry can be provided if needed.

4.3.7 Tides and Currents that Prevail at the Facility

There is a general southward current in Hudson Bay at Chesterfield Inlet of about 19 km/day (CCG 2008). Tides are 4.6 meters with strong cross-currents at Chesterfield Inlet; usually flowing south-west at about 1.85 km/hr.

4.3.8 Meteorological Conditions Prevailing at the Facility

Monthly meteorological data has been collected from 1971 to 2000 from the Baker Lake “A” climate station, which is a Meteorological Service of Canada climate station. Snow and rain are combined to give monthly average precipitation. The prevailing winds for the area are generally from the north to north-west and average 20.4 km/hr.

4.3.9 Surrounding Area Environmental Sensitivities

The community of Baker Lake is a hamlet in the Kivalliq Region, in Nunavut on mainland Canada. Located 320 km inland from the west coast of the Hudson Bay, it is near the nation's geographical centre, and is notable for being the Canadian Arctic's sole inland community. The hamlet is located at the mouth of the Thelon River on the shore of Baker Lake.

The freshwater provided to the community is taken in Baker Lake. The freshwater intake is located approximately 3.4 km from the Meadowbank OHF. See Figure 3 below for the exact location. In case of a spill during fuel transfer, preventive action will be taken to avoid any contamination in close proximity of the water intake and cause health and safety problems to the community:

1) As part of the spill procedure, Agnico will make the community of Baker Lake aware of any spill to ensure measures can be taken to ensure safety of the community by contacting Mayor / Hamlet counsel and Fire department;
2) As part of the spill procedure, boom and absorbents pads will be deployed to confined and limit the progression of the spill into the water;
3) Booms will be deployed to capture the spill;
4) If spill cannot be captured prior to spreading towards the freshwater intake, booms will be deployed around the freshwater pump and regular inspection will be done to see if there are

visible sheen;

5) As a precaution and depending of the spill size, Agnico will work with the Baker Lake Hamlet Counsel to provide a notice to the community of Bake Lake to stop the consumption of the freshwater during the time spill is recovered and until a test on water is conducted. During this time Agnico will provide potable water to the community. [A]As soon as the spill will be recovered and it's determined that the freshwater intake and distribution system is not contaminated the consumption of freshwater will resume;

[A] The Meadowbank project keeps a supply of 120 twenty litre bottles of drinking water in supply at all times in case of emergency. As well the water treatment plant is capable of producing >200m^3 of water a day and the current usage for the mine site is ~110m^3. Thus if required the Meadowbank mine can produce drinking water for the community for an emergency cease in the consumption of potable water due to a spill at the Baker Lake Marshalling Facility.

Figure 3 - Location of Community Freshwater Intake at Baker Lake



SECTION 5. SITE ACTIVITIES

5.1 Nature of the Oil Product

The main fuel stored at the Agnico's Baker Lake Fuel Farm will be P50 diesel and Jet-A. You can find, in Appendix C, the MSDS for Diesel and Jet-A. All other fuels such as gasoline and possibly other grades of diesel will be purchased in drums or 1m^3 totes and brought to the mine site for storage into the Meadowbank Fuel Storage Facility, or purchased and brought to site from a contractor in Baker Lake.

Petro-Nav Inc, a division of the Desgagnes Group, is contracted by Agnico to supply and deliver diesel fuel and Jet-A to Agnico's OHF facilities in Baker Lake. The tanker picking up the fuel will be double hulled, Motor Tank type ship, will have segregated ballast compartments and would be able to carry up to 20,000 m^3 of diesel and Jet-A fuel collectively. Ballast will not be required during the inward voyage to Baker Lake by the smaller ships. However, ballast will be picked up while on anchor outside the access passage after offloading the diesel and Jet-A fuel for its outward journey. A total of three (3) tanker loads of fuel will be required to fill the six diesel tanks in the tank farm, cumulatively holding 60,000 m^3 and one (1) tanker load to fill the 18 Jet-A tank, cumulative holding 1,800 m^3.

Figure 4 - Location of Helicopter Island



5.2 Bulk Transfer

It is expected that the large tankers delivering diesel fuel and Jet-A will anchor in the same general location as the dry cargo vessels, shown on Figure 4. Ship-to-ship transfer of fuel will occur at this location from the larger tanker to a smaller tanker that can navigate the access passage. The carrying capacity of the small tanker will be either 7,300 m^3 or 10,500 m^3. The Ship to be used at any one time will be subject to its availability at the time when the large fuel tanker is set to deliver fuel to Agnico Eagle Mines Limited's Baker Lake Fuel Farm Oil Handling Facility. The small tanker will anchor directly to Agnico's spud barge. From there, transfer hoses (Conduit) are connected to a shore based pipeline for transfer of P-50 diesel fuel to the diesel tank farm. For Jet-A fuel separate hoses will be laid out from the vessel to the Jet-A storage containment. These hoses or conduit will carry the Jet-A fuel from the vessel to the Jet-A tanks.

Ballast will not be required for the inward voyage of the small tanker as it arrives at Baker Lake loaded with diesel fuel and Jet-A. After transferring the diesel fuel or Jet-A fuel to the tank farm, the small tanker will take on ballast in its segregated ballast compartments before sailing out to Helicopter Island to pick up another load of fuel from the large tanker anchored outside the access passage. Ballast will be dispelled as ship-to-ship transfer of diesel or Jet-A occurs and the small tanker is loaded. This sequence of events will be repeated until the large tanker is empty or the tank farm is full.

Due consideration will be given to prevailing and expected wind, weather and tide conditions when undertaking ship-to-ship and ship-to-shore fuel transfers. The large tanker anchored near Helicopter Island and the small tanker anchored near Baker Lake will be clear of land and traffic routes, and in open water of a depth exceeding the draught of the vessel(s). For ship-to-ship transfers, the ships will be secured alongside or anchored.

The small tanker will discharge at a rate of 400 m^3/hr for diesel fuel and 200 m^3/hr for Jet-A taking approximately one (1) day to fill. Communications between the shore and the small tanker will be maintained throughout to ensure the safe transfer of the fuels and to avoid the overfilling of the tanks. The ship-to-shore transfer to be used will be similar to that used at communities throughout Nunavut.

5.3 Measures to Minimize a Diesel and Jet-A Pollution Incident

The small tanker will be anchored offshore in water of sufficient depth to allow for draught and tidal changes during transfer.

The transfer of the fuels will use sound, well-rehearsed practices, include an adequate number of trained and alert personnel, have sufficient materials, and use well maintained, thoroughly tested equipment. A team of trained personnel on the tanker will be in charge of the tanker fuel transfer equipment, while an onshore team will be in charge of the land based transfer equipment. Agnico will have at least 2 trained personnel on the land to observe for any leak detection: a third part contractor (Intertek) and the Baker Lake Supervisor. The role of the third part contractor will be to apply procedure and oversee operation during the fuel transfer. To do this, the third part contractor will need to come on site at least one (1) day before the first day of transfer to receive the appropriate training given by the Environmental Department. Fire-fighting, spill response equipment and supplies will be located on the tanker and onshore near to the transfer point as required by Transport Canada. This will include readily available absorbent material at the flexible hose connections on deck and onshore to quickly address minor spills at predictable minor spill locations. Additionally, Agnico has placed a sea can with spill response supplies (including boat) and equipment at Agnico's Baker Lake Fuel Farm area where it can quickly be accessed in the event of a

spill.

Four-inch (10 cm) steel piping able to accommodate a flow rate of approximately 400 m^3/hr will lead down to the shore from the diesel tank farm. Conduit from ship-to-shore will be connected to the fuel-receiving manifold located onshore using a dry-break coupling(s). For Jet-A fuel separate hoses will be laid out from the vessel to the Jet-A storage containment. Other measures to be taken to minimize and prevent spills include and must be followed by the on land responsible:

- Complete checklist before / during transfer for the on-land responsible (See Appendix E);
- Complete checklist, provide by Woodward, with vessel captain before transfer begin (Appendix E);
- Complete inspection / inventory of spill response sea can before transfer;
- During the transfer, regular monitoring will be undertaken for detection of incipient spills and leaks between the tanker and the tank farm;
- Radio test before transfer and after that each hour between the personnel on land and the captain of the vessel;
- Transfer operations will be suspended should any leak be detected or filling alarm are activated;
- The onshore area and ship deck will be well light as fuel transfers could continue around the clock;
- Minimization of land drainage containing spilled diesel or Jet-A to limit the amount reaching the marine environment;
- Have a good knowledge of the OPEP requirement and protocol to follow is case of a spill by receiving a training / review each year before the transfer season; and
- The regular update of the OPEP.

During the ship-to-shore transfer, Agnico will have competent personnel on location at all times to monitor the fuel transfer and maintain contact with the tanker's crew. Should problems arise, the ship can be called to shut down the transfer and onshore piping will be closed down. In the event of a spill that escapes the containment boom, diversion booming will be deployed to minimize migration of a spill throughout Baker Lake. Adequate lighting will be put in place during all transfers, to allow for proper inspections of transfer locations around the clock. The lighting system intensity will be not less than 54 lx at each transfer connection point of the vessel and OHF and a lighting intensity not less than 11 lx at each transfer operation work area around each transfer connection point of the vessel and OHF.

See *APPENDIX D: MBK-ENV-0013: OHF / Ship to Shore Fuel Discharge Procedure.*

5.4 Portable Containment Pools

At the connection of the ship's conduit to the OHF manifold a portable containment pool will be erected and in place during the transfer of product. This pool is capable of holding ~250L of liquid in the case that there is a leak at the flange or residual drips out of the conduit or hard wall pipe.

Spill "pop-up" pools will be in place under each joint for the conduit used to fill the Fuel tanks. These pop-up pools are only capable of holding 20-50 L of fuel and are in place to catch residual and be a first line of defense in the case of a leak.

SECTION 6. MEADOWBANK RESPONSE TO EMERGENCIES

The Agnico Baker Lake Tank Farm OHF is considered Level 2 Handling facility as indicated in the OHF Standards TP 12402. With a transfer rate of ~400 m^3/hr Agnico's OHF must have the spill response capacity to respond to a minimum of a 5m^3 spill.

6.1 Response Management Structure

Agnico has an Emergency Response Team (ERT) at the Meadowbank Mine trained and responsible for controlling the Level 2 or greater spills at the Agnico's Baker Lake laydown and tank farm, and for assisting with medical and other emergencies that may occur at the mine site or the OHF.

Figure 5 depicts the Response Management System.

Figure 5 - Response Management System

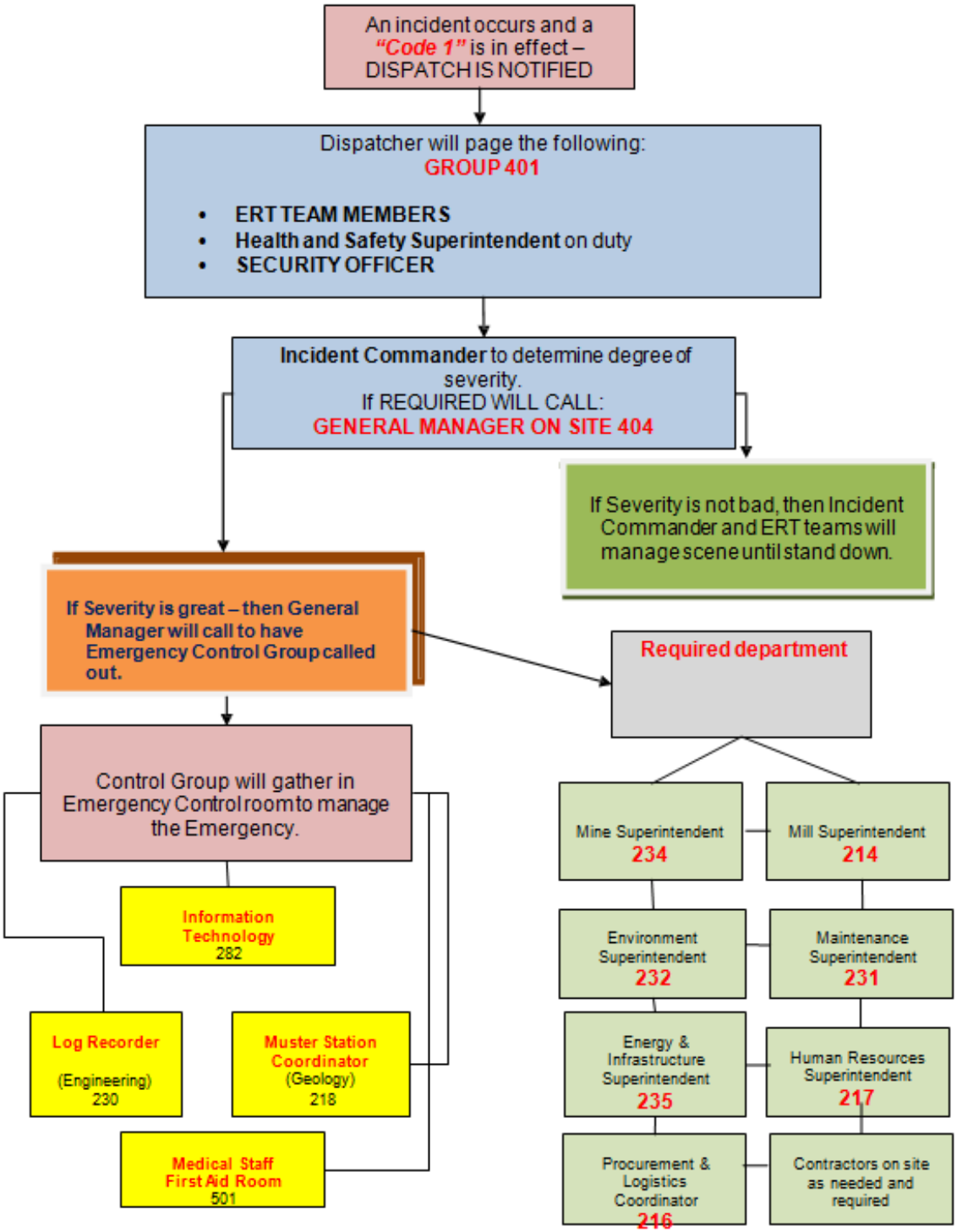

6.2 Logistics and Planning

The Emergency Measures Counsellor (EMC) will ensure that site drawings and equipment lists are posted conspicuously in key locations throughout the site so that important information is always readily available. This will include the following:

- Location and isolation points of energy sources;
- Location of emergency equipment (e.g., fire water pumps, fire extinguishers, monitors, self-contained breathing apparatus);
- Emergency procedures outlines, such as specialist firefighting, chemical neutralization;
- Location of equipment for combating pollution (e.g., booms, pumps, absorbents, dispersants);
- Availability of internal and external emergency medical support (e.g., hospitals, clinics, ambulances, medical supplies, personnel with medical or first aid training);
- Location of toxicity testing facilities (e.g., gas and water);
- Location of wind direction / speed indicators;
- Directions on how to contact the local or regional weather forecasting service;
- Location of personal protective equipment and directions on its proper use; and
- Location of first aid stations and muster areas.

The Incident Commander, EMC, and Health and Safety Superintendent will know where, throughout the project site, all of this information is posted and where emergency equipment is stored. These individuals will also be trained in the proper use of emergency equipment.

SECTION 7. EQUIPMENT AND PPE

The following sections describe the items that are available in the case of a spill at the Agnico Eagle Mines Limited's Baker Lake Fuel Farm Oil Handling Facility. Equipment has been classified into items available for spill sizes either up to or greater than $5m^3$. However, any and all means will always be used to respond to a spill in a timely manner and ensure a prompt clean-up of any spill.

7.1 OHF Response Equipment for spills up to ~$5m^3$

The following equipment (Table 2) is available right at the OHF at any given time in a sea can designated for ***Environmental Emergency*** and can be deployed on scene within one hour, if it's safe to do, to contain and control the spill. Agnico can deploy this material within one hour.

Table 2 - Material available in the Spill Response Sea Can at Agnico's OHF

Quantity	Equipment/tool name
3	Empty drums (sealed)
2	Mini Berm 36"x 36"
2	4 Drums Berm 4'x 8'
4	Tarp 20'x 30'
4	Tarp 30'x 50'
10	Oil Spill Absorbent Pads
5	Universal Absorbent Boom 5"x 10' (For Hydro-soluble Chemical)
5	Universal Absorbent Boom 8"x 10' (For Hydro-soluble Chemical)
5	Petroleum base Absorbent Boom 5"x 10' (for Petroleum product)
4	Maritime Barrier (Baffle)
5	ABS pipe: 10' long x 4" diameter
2	Cell-U-Sorb (Absorbent)
2	Amerisorb Peat moss (Absorbent)
2	Oil Gator Absorbent
1	Plug Patties
4	Quatrex bags
2	Fork Lift Crate
4	Hand Shovel
1	Crow Bar Chisel
1	Ice Breaker Chisel
1	Sledge hammer
15	Rod bar 4'
1	½ drum containment
1	16ft Boat with motor and gasoline jerry can (sea can #321225)

7.2 Additional Response Equipment or for Spills >$5m^3$

All equipment previously mention is available for use during any emergency situation for a spill greater than $5m^3$. The following equipment would take time to get to the spill site; time would vary depending on distance from the spill. All these equipment and resources can be deployed on scene in <6 hours for the

recover and clean-up of the spill.

7.2.1 General Equipment

This section addresses the emergency response machinery, equipment, tools and other resources that will be made available on-site for spill counter measures.

7.2.1.1 Mobile Equipment

Mobile Equipment available to Agnico, that will be used for spill contingency include:

- Graders-4
- Cranes-6
- Snowmobiles-3
- Vacuum Truck-1
- Loaders-14
- Backhoe-10
- Bulldozer-8
- Forklift & Hysters-16
- Water Trucks-2
- Winch Trucks-2
- Pickup Trucks-70
- Generator Sets-20
- Fire Truck-1
- Boats-4
- Fuel Trucks-2
- Bobcat-2
- Haul Trucks-25
- Snow Cat-1

All the previous listed equipment can be found on the Meadowbank mine site. Wheeled equipment can be at the OHF in Baker Lake in 3-6 hours. Tracked equipment would have to be loaded and transported which would take 5-6 hours.

7.2.1.2 Containment System

Temporary containment systems are also available on site and include:

- Absorbent Booms - 130 kits; 4 booms per Kit; each boom 8”x10’
  - 122 Universal booms; each boom 5”x10’
- Open top Drums x 80@200L
- Tanks – 2 x 100,000L tanks
- Tailings Pond – capable of holding contaminated fluids >1,000 m^3 capacity
- Spill absorbent material packages/pads - Quantity changes depending on demand on the Meadowbank site

7.2.1.3 Emergency Transportation

Emergency transportation that will be used under an emergency situation are:

- Aircraft (fixed wing or helicopter)
- 4-wheel drive vehicles >70
- Snowmobiles x 3
- Boats and motor x 4

7.2.2 Spill Response Kits and Containers

7.2.2.1 Kits

Spill response kits are strategically located where required. Each department and work area is responsible for providing sufficient spill response kits in their respective work areas. The kits are kept in marked and accessible locations. The locations include all fuel storage areas, chemical storage areas and so on.

All of the mobile equipment on site (including heavy equipment) contains an emergency spill kit.

7.2.2.2 Emergency Trailer

Agnico also have an Environmental Emergency Trailer which is easily accessible and mobile. The trailer is located on site east of the Environmental Office at the Meadowbank Mine Site. This trailer contains the following items:

- Pump Elastec
- Pump accessories
- Vaccum ends
- 45 gallons top
- Tubing 2 inches diameter
- Tubing 3 or 4 inches diameter
- Diesel Fuel jerry can (place on a miniberm)
- Spill kit accessory (red box)
- Drums opener
- Wescot (to open empty drum screw)
- Empty drums
- 2 drums berm
- 4 drums berm 4x8
- Tarp 20x30
- Tarp 30x50
- Oil white spill pads
- Universal boom 5x10
- Universal boom 8x10
- ABS pipe: 10' (4")
- ABS pipe: 10' (6")
- Cell U-Sorb
- Sphagsorb
- 3 Size of Wedge wood
- Plug pattie
- Quattrex bags
- Hand shovel
- Ice chisel
- Sledge hammer
- Rod bar (4')

7.2.2.3 AWAR Sea cans

Along the AWAR there are 9 environmental emergency sea cans. These sea cans are strategically placed along the road at water crossings. Each environmental emergency sea can contains the following material:

- Empty drums (Sealed)
- Mini berm 36"x36" x4'
- 4 drum spill berm 4x8
- Tarp 20'x30'
- Tarp 30'x50'
- Oil white spill pads
- Universal boom 5"x10' (Chemical)
- Universal boom 8"x10' (Chemical)
- Oil only booms 5"x10' (Hydro-carbons)
- Maritime barrier (Baffle)
- ABS pipe: 10' (4")
- Cell U-Sorb
- Amerisorb peat moss
- Oil gator absorbent
- Plug pattie
- Quattrex bags
- Fork lift crate (pallets)
- Long handle round point shovel
- Chisel point crow bar 16 lbs 57"
- Ice chisel
- Sledge hammer 12 lbs 36"
- Rod bar (4')

7.3 PPE

7.3.1 PPE at OHF for Spills <5m^3

The following PPE (Table 3) will be found in the Emergency Trailer and also on sea can at the OHF:

Table 3 - PPE available at OHF

Quantity	Equipment/tool name
3	Rain gear -- Pants and Top (L & 2-XL)
3	Rubber boots (size 8,10,12)
6	Rubber gloves
3	Goggles
3	Tyvex suits (L & 2 XL)
3	Safety glasses
3	Leather gloves

This is adequate PPE intended for 3 persons. Additional PPE will be available from the Meadowbank mine site.

7.3.2 PPE for Spills >5m^3

Personal Protective Equipment is stored in bulk quantities at the Meadowbank Warehouse. Quantities of each can be found on site using the JD Edwards system. In addition, the community of Baker Lake has certain PPE that can be purchased through Agnico Eagle after consulting the Agnico Eagle Procurement and Logistics department; however quantities of this PPE cannot be relied on within Baker Lake.

SECTION 8. COMMUNICATION

The primary basis for communication will be the phone system; back-up communication will be available via satellite phone. For on-site communication, hand-held radios will be mandatory for all employees working or travelling in remote areas from the OHF. Cell phones can be used as an additional means of communication however only CDMA service is available at the OHF. Back-up power sources and replacement batteries for communications equipment will be available to provide continuous, uninterrupted operation either at fixed facilities or at emergency sites.

Key site personnel will be accessible at all times by either portable radios, radios in vehicles, or office radios. The Health Care Professional will carry a hand-held radio and will be available at all times. Security personnel will monitor the emergency channel twenty-four hours per day. Senior management personnel will rotate as "On-Call Managers" for after-hour emergencies. An accommodations list that highlights key personnel will be posted and updated as required.

In the event of a major emergency all external communications for the mine site and associated areas will be cut and all external contact will take place solely through the Emergency Control Center at the Meadowbank Site.

During fuel transfer operation, the vessel master and the operator of the OHF will always have a two-way communication on a continuing basis. This two-way communication will be the direct communication by radio and the use of the cell phone.

8.1.1 Communication with the Public

Communication with public bodies during the state of emergency will be the responsibility of the General Mine Manager or by the Communications & Public Affairs Corporate Director.

In the case that the communities of Baker Lake should need to be evacuated on short notice, the Emergency Response Team will immediately assist in the evacuation of the community. The General Mine Manager will immediately contact the Mayor of the Hamlet to inform regarding the situation. In addition, if safe to do so, a radio notification should be immediately broadcast on the Baker Lake Radio station.

8.1.2 Hand Held Radio Communication

The channels used for hand held radio communication on the Meadowbank mine site, the All Weather Private Road, OHF, and associated facilities are as follows in Table 4:

Table 4 - Agnico Radio Channels

Surface
1. Spare RPTR
2. Mill Simplex
3. Mill Repeater
4. Exploration
5. Simplex 5
6. Baker Lake
7. Project
8. Auto-Patch

9. Agnico Surface
10. MB Dykes
11. Goose Operation
12. Portage Operation
13. Vault Operation
14. RD MB
15. RD KM37
16. RD Baker

The colors in each zone represents that they are 'linked' together. For instance, the RD MB, RD KM37 and RD Baker are connected in a way that 3 persons talking on those 3 channels separately will hear each other as if they were on the same channel.

8.1.3 Contacts

Internal contact information is contained in Table 5 for all Agnico personnel involved in spill recovery. Table 6 contains contact information for contractor contacts which can be called for assistance with spill recovery. Table 7 is a list of government officials and external contacts to notify and provide subsequent reporting.

Table 5 - Agnico Contact

Title	Name	Telephone No.
Sr. Vice President, Environment and Sustainable Development	Louise Grondin	416.847.8656 Cell: 819.724.2020
Vice President of Environment	Michel Julien	416.947.1212 ext. 3738 Cell: 514.244.5876
Director of Environment, Environment and Sustainable Development	Pascal Lavoie	819.759.3700 ext. 5822 Cell: 819.277.0045
Corporate Director, Communications & Public Affairs	Dale Coffin	416.847.8669 Cell: 647.274.4154
Director, Regulatory Affairs	Stephane Robert	819.759.3700 ext. 5188 Cell: 819.763.0229
Director, Shared Services Nunavut	Jason Allaire	819.759.3555 ext. 8004 M: 819.355.2608
Meadowbank General Mine Manager	Luc Chouinard	819.759.3555 ext. 6896 Cell: 819-856-8160
Meadowbank Assistant General Manager	Christian Bourcier	819.759.3555 ext. 6843 Cell: 819-856-8109
H&S Superintendent or H&S Ass. Superintendent	Markus Uchtenhagen or Yves Levesque	819.759.3555 ext.6720 Cell: 819.856.8715 or 819.759.3555 ext.6720 Cell: 819.856.9051
Incident Commander	André Rouleau or Philippe Beaudoin	819.759.3555 ext.6809

Environmental Nunavut Superintendent	Nancy Duquet-Harvey	819.759.3555 ext.6980 Cell: 819.856.4385
Environmental Senior Coordinator	Martin Archambault or Robin Allard	819.759.3555 ext. 6744
Environmental Department	Environmental Technicians	819.759.3555 ext.6747/6759
On-site Medics	On-site Nurses	819.759.3555 ext.6734/6751
Site Security	On-site Security	(867) 793.4610 ext. 6748

Table 6 - Contractors / Local Contacts

Title	**Telephone No.**	**Contact in Emergency for:**
Nolinor Aviation Services	Protocol Agent (867).759.3700 ext. 8008 Emergency (450) 476.0018 (888) 505.7025	Flight services for additional crew, or additional supplies
First Air	1.800.267.1247 Emergency (867) 669.6694 (867) 444.2002	Flight services for additional crew, or additional supplies
Calm Air	1.800.839.2256 Emergency (204) 677.5013 (204) 677.5019	Flight services for additional crew, or additional supplies
Dyno Nobel Explosives Ltd.	(819) 825.5441	Heavy Equipment, Man power, Emergency Blasting
Woodward Group of Companies (Shipping)	(709) 896.2421	Fuel Hauler
Baker Lake Contracting & Supplies	(867) 793.2831 Press #1 (867) 793.1679	Man power, equipment, trades personnel i.e. pipefitter, plumber, electrical
Peter's Expediting	(867) 793.2703 Cell (867) 793.1701	Equipment, man power, Ground transportation services
Arctic Fuel Services	(867) 793.2311 Office (867) 793.2301 Supervisor	Fuel hauling, trucking, man power.

Table 7 - External Contacts

Organization/Authority	Telephone Number	Fax Number
NT-NU 24-Hour Spill Report Line	(867) 920-8130 spills@gov.nt.ca	(867) 873-6924
Workers Safety and Compensation Commission	(877) 661-0792 (Emergency) or (800) 661-0792	
Kivalliq Inuit Association	(867) 645-2800 (867)645-2810 (reporting line)	(867) 645-2348
Nunavut Water Board	(867) 360-6338	(867) 360-6369
INAC Inspector	(867) 645-2830	(867) 979-6445
Department of Fisheries and Ocean (DFO) – Nunavut Regional Office	(867) 979-8000	(867) 979-8039
Government of Nunavut – Department of Environment	(867) 975-7700	(867) 975-7742
Kivalliq Health Services – Baker Lake	(867) 793-2816 or (867) 793-2817 *Dial 0*	(867) 793-2812
Baker Lake Hamlet Office	(867) 793-2509	
Baker Lake Fire Emergency	(867) 793-2900	
RCMP Regular Hour RCMP 24 Hour Emergency Number	(867) 793-0123 (867) 793-1111	
Canadian Coast Guard (in the event of a spill to the marine environment) Superintendent Environmental Response	(800) 265-0237 (519) 383-1954 (519) 381-6186 (cell)	(519) 337-2498
Transport Canada – Tech services Stephen Sherburne Philip Levesque	(780) 495-6325 (204) 984-5786 Cell : 204-801-6951	 (780) 495-8607

All above phone numbers are current as of April 2017.

SECTION 9. ROLES AND RESPONSIBILITIES

9.1.1 First Responder (Third Party Contractor (Intertek Personnel) and Spud Barge Supervisor)

The person who has caused a spill or is the first to observe the spill is the first responder.

The responsibilities of the First Responder are as follows:

- Oversee the fuel transfer operation;
- Follow procedure set-up in the OPEP to prevent and minimize spill (See Section 5.3)
- In case of spill to land, ice or water, contact the Baker Lake Gatehouse to report the incident;
- Identify and contain the spill, IF SAFE TO DO SO; commence preparing spill response equipment, and
- Participate in spill response as a member of the clean-up crew.

9.1.2 Supervisor (Spud Barge Supervisor)

The responsibilities of the Supervisor are as follows:

- Contact the Baker Lake Gatehouse; contact Environment Department;
- Gather facts about the spill; and
- Participate in spill response.

9.2 Roles & Responsibilities of the Emergency Control Group

Below are the roles and responsibilities of the Emergency control group.

9.2.1 Official In-Charge

The Official In-Charge (General Manager or designate) will take charge for overseeing and approving the overall emergency strategy.

Immediate duties of the Official In-Charge include:

- Consult with the Incident Commander the status of emergency;
- Appoint an Emergency Log Recorder to maintain a written record of the time and events, including all discussions, instructions and decisions made by the Emergency Control Team;
- Issues specific tasks to the members of the Management as they arrive at the Control Room, as per this guideline;
- Brief the Emergency Control Team;
- Ensure that the safety of personnel is maintained, throughout the operation;
- Ensure procedures are in place for prompt dispatch of requested personnel, materials and

equipment to the emergency area;

- Arrange for all reports to be presented at specific intervals to the Emergency Control Team;

- Finalize the recommendations of the Incident Commander for rescue and recovery operations;

- The Official In-Charge is the only person authorized to release information to Government Agencies, Corporate Office or the Local Communities. He may delegate this activity to other members of the Emergency Control Team;

    - Verify all information you release;
    - Keep a record of all inquiries (media and non-media);
    - Do not speculate on causes;
    - Do not speculate on resumption of normal operations or when the problem will be solved; and
    - Advise that further updates will be forth coming.

- Notify the corporate management, if the following appear probable:

    - Fatalities;
    - Injuries that could probably become items of local, regional or national media interest;
    - There is a public health or environmental risk;
    - An incident involving chemicals where there is a large volume or the potential for over reaction (e.g., cyanide);
    - A spill of effluent or contaminated water or chemical substance to an area that lies outside the area of drainage control of the mine site (i.e., an external spill);
    - Mine operations may be stopped for more than two (2) days; and
    - Government authorities will become involved.

- Ensure all response teams, regulatory agencies and any other agency on emergency alert notice are advised when the emergency has ended;

- Ensure all documentation (i.e., notes, log sheets, written instructions, etc.) is gathered for the creation of the final report; and

- Participate in debriefing.

9.2.2 General Superintendents

- General Services, Operations and Maintenance will report to the Emergency Control Room and support the General manager/Designate in whatever capacity required;

- They will also ensure that the Superintendent/Designate in each of their respective Department's is aware of the emergency; and

- They will assist with the investigation and write up of the final report.

9.2.3 Incident Commander: A Trained Staff Member (ERT Coordinators or Supt.)

The responsibilities of the Incident Commander include:

- Ensure Security has been notified of emergency;
- Ensure the evacuation procedures have been activated, if required;
- Ensure that there are sufficient ERT members available to respond to the emergency;
- Ensure that the ERT has back-up support, a standby Team;
- Ensure that ERT Team has refreshments and nourishment (if the emergency requires several hours to resolve);
- Assess the size and severity of the emergency and the likely consequences. Establish response priorities; as well coordinate prevention of fire or explosion;
- Maintain communication with the ERT Captain;
- Advise the Official In-Charge of the ERT Team's activities, regarding the rescue and recovery operations;
- Appoint sufficient personnel, equipment and outside services are available. Utilize the members of the Emergency Control Team to organize these resources;
- Advise Official In-Charge when the emergency situation is under control and give the "All Clear";
- Participate in emergency investigation;
- Coordinate an orderly return to normal operating conditions;
- Arrange for a debriefing session, and utilize the services of all involved in resolving the emergency; and
- Assist to write the final report.

9.2.4 Emergency Response Team (ERT Team) Duties:

- The ERT Team Members must report to the Fire Hall, when paged for a "Code One" emergency;
- ERT Team Members will be given instructions on the emergency by the Incident Commander;
- ERT Team Members will follow instructions from the Incident Commander and will not put the Team at risk; and
- The ERT Team Captain will maintain radio contact with the Incident Commander throughout the emergency.

9.2.5 Environmental Superintendent/Designate Duties:

The following are the responsibilities of the Environmental Superintendent/Designate;

- Provide technical advice on probable environmental effects resulting from a spill and how to minimize them;
- Ensure that the ERT Members of his crew have responded to the "code One" emergency;
- Provide advice to the Official-in-Charge for appropriate spill response procedures;
- Ensure that Environmental Staff are available to direct the spill response action plan; and
- Assist with restoring of the Operations back to normal operating standards.

9.2.6 Health and Safety Superintendent/Designate Duties:

The Health and Safety Superintendent/Designate will be responsible for:

- Ensure that an Incident Commander is in place to oversee the ERT Teams;
- Ensure that all Management respond to the emergency and meet in the emergency control room;
- Oversee all activities that require Security or Nursing and arrange for Medevac transport, if required;
- Assist with getting a "head count" for the Official in-charge; and
- Assist with obtaining outside help if required.

9.2.7 Energy and Infrastructures Superintendent/Designate Duties:

The following are the responsibilities of the Site Services Superintendent/Designate;

- Ensure that all his employees are accounted for;
- Ensure that all ERT Member on his Crew, respond to the " Code One" emergency;
- If the " Emergency" is involves the site facilities, assist the Official-in-Charge with the action plan to deal with the emergency;
- Assist as required by supplying equipment and/or manpower; and
- Assist with restoring of the Operations back to normal operating standards.

9.2.8 Human Resources Superintendent/Designate Duties:

The following are the responsibilities of the Human Resources (HR) Superintendent/Designate:

- Ensure that all HR employees are accounted for; and
- Provide assistance to the Official-in-Charge if there are employees issues, such as injuries, transportation requirements, etc.

9.2.9 Health Care Professional (Nurse/Medic):

The on-site health professionals are responsible for the following:

- Providing on-site first aid and other medical support;
- Establish a triage location if there are multiple casualties;
- Arrange for medevac transportation, if required; and
- Ensuring that the first aid room is maintained at all times, by using First Responders as support.

9.2.10 Security Department:

The on-site Security Supervisor is responsible for the following:

- Ensure that access points to the emergency are properly guarded;
- Notify the Baker Lake Gatehouse if the emergency involves the all-weather private road (AWPR); and
- Assist with other duties as requested by the Emergency Control Group.

9.3 Debriefing

After an incident has taken place and the location is brought back to normal operating standards a debriefing session will occur between ECG, Field Supervisors for the incident, ERT Captain(s), and the supervisor of the department involved with the spill.

The point of this debriefing session to determine the *who, what, where, when, why, and how* the incident occurred. It will also be the time to reflect on the steps that were taken to carry out the response and to determine what was done right and what corrective measures need to be put in place to better the response if needed in the future.

SECTION 10. GENERAL SPILL PROCEDURES

SPILL RESPONSE PRIORITIES

1. **Safety of the personnel working at or around the OHF**
    a. Contact all personnel working around the spud barge area and make them aware
    b. Make contact with the vessels Captain to make aware the ship and stop the transfer of the product
    c. Dawn appropriate PPE
    d. STOP the spill
2. **Make safe the facility**
    a. Create a no entry perimeter to ensure unaware persons do not enter the area in which the incident took place.
    b. Barricade entrances to the facility with red danger tape
    c. Have a person designated to watch entrances to ensure no community persons come on to site.
3. **Make the community of Baker Lake aware of the Spill to ensure measures can be taken to ensure safety of the community**
    a. Contact Mayor / Hamlet counsel
    b. Fire department
    c. RCMP
4. **Prevent fires or explosions / Stop all ignition sources**
    a. Disconnect power supplies
    b. Do not contain diesel or Jet-A fuel if vapors might ignite
    c. Allow fuel vapors to evaporate before intervention
5. **Minimize the Spill**
    a. When safe to proceed stop the spread of the product
    b. Use spill response equipment in emergency sea cans and ask for additional material if the spill is greater than $5m^3$
6. **Notice and Report the Spill**
    a. Spill need to be reported to Transport Canada, Coast Guard and Government of Nunavut immediately
    b. Other governing bodies will also be notified (see section 10.2)
7. **Environmental Impact**
    a. Deter wildlife from entering spill area. Keep track of any wildlife mortalities
    b. Determine what impacts the spill will have on the Environment
8. **Clean-up**
    Commence clean-up of the spill

10.1 Coordination with Government Agencies

10.1.1 Coordination with Transport Canada Technical Service Environmental Response

In the event of a marine spill Transport Canada Technical Service Environmental Response (TC) will be contacted immediately regarding the incident. Agnico will adhere to further recommendations from TC in response to the spill.

TC will also be contacted annually prior to the deposition of fuel at the OHF. As well, annual approval of this OPEP will be required by TC Pollution prevention Officer.

10.1.2 Coordination with Canadian Coast Guard

In the event of a marine spill, the coordination with Canadian Coast Guard (CCG)[3] is required and they will be contacted to report the incident. A description of the event will be provided to the CCG Environmental Response. Agnico will adhere to further recommendations from CCG in response to the spill.

On an Annual basis prior to the shipment of fuels to the OHF commencing, Agnico will contact the CCG and make them aware that the shipping season will be starting so they are aware that fuels will be travelling to Agnico's Baker Lake Fuel Tank Facility constructed in Baker Lake.[4] Also Agnico will inquire if there is any update to "*The Central and Arctic Regional Response Plan (2008).*"

Agnico's Environmental Group will annually, prior to fuel transfer, review "*The Central and Arctic Regional Response Plan (2008).*" A copy of this plan can be found in Appendix B for reference. The plan will be reviewed to ensure that the OPEP and the actions of Agnico's OHF meet all requirements listed for an OHF.

10.1.3 Other Government Agencies

Agnico will contact all government agencies associated with the Meadowbank Gold Project as is the norm for any reportable spill. These groups include: Government of Nunavut (GN) via 24 hour spill reporting line, Indigenous and Northern Affairs Canada (INAC)), Nunavut Water Board (NWB), Environment and Climate Change Canada (ECCC) and Kivaliq Inuit Association (KIA).

10.2 Reporting Requirements

10.2.1 Government of Nunavut Reporting Requirements

As per the Canada Shipping Act spills to the marine environment will be reported to the Transport Canada Technical Service Environmental Response and Canadian Coast Guard (contact numbers in Table 7). Marine spills will be reported in accordance with Transport Canada Guideline TP- 9834E, *Guidelines for Reporting Incidents Involving Dangerous Goods, Harmful Substances and /or Marine Pollutants*. Others to receive the spill report include the Kivalliq Inuit Association, Hamlet of Rankin Inlet, Fisheries and Oceans Canada, Canadian Coast Guard and Indigenous and Northern Affairs Canada Canada and Environment and Climate Change Canada (ECCC). Incidents that require media communications will be the responsibility of Agnico General Mine Manager or Public Affairs Corporate Director.

To ensure compliance with Section 36(3) and 38(5) of the *Fisheries Act* and Section 5(1) of the *Migratory Birds Convention Act*, all spills of fuel or hazardous materials, regardless of quantity, into a water body or

[3] CCG: 1-800-265-0237, Superintendant Environmental Response Phone: 519-383-1954 Cell phone:519-381-6186
[4] Plan submitted by email to CCG before the 2016 Shipping Season and will be for the 2017 Shipping Season once approve by TC.

onto ice will be reported immediately to the NT-NU 24-HOUR SPILL REPORT LINE (phone: (867) 920-8130, fax: (867) 873-6924, spills@gov.nt.ca).

Agnico possess a thorough internal spill reporting system that documents all spills for internal tracking. A copy of this Agnico internal spill report can be found in Appendix F, this is the spill report that the first responder will have to complete. Regardless of the volume, these spills are all reported to the Environment Department and if the NT-NU spill limits are exceeded or if the spill occurs in a water body (regardless of quantity), the Environmental Department reviews the incident, produces the NT-NU spill report and submits the NT-NU spill report to the regulator listed above. Investigation of all reportable spills is completed by the Meadowbank Environment Department.

10.3 Treatment and Disposal

All diesel or Jet-A fuel recovered through the spill response and any contaminated material will be taken to the Meadowbank mine site for recovery and, if applicable, incineration. It could also be packaged for disposal/recycling by a certified hazardous waste management company in southern Canada.

10.4 Resuming Unloading

The unloading of fuel from the tanker to the OHF will not resume if it hinders the response to the spill in any way. Unloading will resume once all problems are corrected, thus ensuring that the spill will not continue.

SECTION 11. SPILL SCENARIOS AND RESPONSE STRATEGIES

Agnico will strive to prevent any accidental spills and take all reasonable steps to minimize the risk of spill incidents and their impact on the environment. In 2016, an exercise program scenario was developed as a prevention protocol for the OHF operation. Safety, including use of personal protective equipment around water, and spill response training were part of this training. This exercise program evaluated the effectiveness of all the aspects of the procedure, equipment and resources that are identified in the OPEP. A summary of the 2016 exercise is provided in Appendix D - 1.4. An exercise will be conducted this year and the summary will be provided in next year's revision of the OPEP.

11.1 Product Properties and Response Strategy

Jet fuel, Jet-A, Jet-A1, or kerosene is a type of aviation fuel designed for use in aircraft powered by gas-turbine engines. It is colourless to straw-coloured in appearance.

P50 Diesel is a bright oily substance that has a low viscosity. It spreads rapidly on the water, has a low solubility in salt water (60 mg/L), and a high evaporation rate as described in the text box below.

At Baker Lake, the wind is largely from the NW to N.

Predicted Evaporation Rate of Spilled Diesel

Weight percent Evaporation = (5.8 + 0.045T) in(t)
Where T = water temperature
t = time in minutes

After a time span of 60 minutes at a surface temperature of 5°C, up to 25 % weight of the spilled diesel would have evaporated.

After 240 minutes, or 4 hours, the weight percent of the diesel that would have evaporated would be 33%.

Source: *Environment Canada, Emergencies Science and Technology Division*

In relation to Jet-A Fuel we will use the same evaporation rate as diesel as per Journal of Petroleum Science Research states; "*Diesel fuel and similar oils, such as jet fuel, kerosene and the like, evaporate as a square root of time. The reasons for this are simply that diesel fuel and such like have a narrower range of compounds which evaporating at similar rates, yield rates which together sum as a square root.*"[5]

As a result of the properties of diesel and Jet-A and the environmental conditions that predominate at Baker Lake, the spill response will need to aim to stop the spilled product from spreading across Baker Lake. This could include activating the Shipboard Oil Pollution Emergency Plan. The tanker would have response equipment on board and a fully trained crew in spill response. This, coupled with a shore based response under the OPEP, would ensure sufficient resources are available to control and recover as much diesel and Jet-A fuel as feasible.

[5] Journal of Petroleum Science Research (JPSR) Volume 2 Issue 3, July 2013 - *Modeling Oil and Petroleum Evaporation* by Merv F. Fingas

11.2 Pipeline safeguards

There are a number of safeguards in operating the ship-to-shore pipeline; these include:

- Save-all trays to capture any minor spills at the ends of the floating pipeline;
- Dry-break couplings at both ends of the floating pipeline;
- A pressure test will be performed before the diesel transfer to confirm the system is free of leaks; and
- Both the crew on the tanker and Agnico's shore based personnel will be fully trained in spill response and spill recovery.

11.3 Wildlife

During a spill event, Agnico will take care to deter any animal that will be near the spill area to minimize the risk to wildlife. In a case of mortalities, Agnico will track any mortality and report these numbers to the GN.

11.4 Scenarios

Three scenarios are considered, these being:

1. A spill between the ship and the flange of the OHF, the floating pipeline, resulting in a spill smaller than 1000 L of diesel or Jet-A fuel;
2. A major failure between the ship and the flange of the OHF, the floating pipeline, resulting in a spill greater than 1000 L but smaller than 5000L of diesel or Jet-A fuel; and
3. Spill greater than 5000 litres.

In most instances Agnico personnel and/or contractors will be able to respond to the spill but if necessary, backup can be requested by calling for the assistance of the Agnico Emergency Response Team that is stationed at the Meadowbank site located 110 kilometers away. The ERT can be at Baker Lake within 125 minutes to take charge of the spill response. Agnico will make every effort to have its equipment and resources deployed within 6 hours of an incident.

Diesel and Jet-A spills will be responded to in the same way. Review of the CANUTEC Emergency Response Guidebook designates the spill response to both products as the same.[6]

[6] 2012 Emergency Response Guidebook

Scenario 1: **Loss between the ship and the flange of the OHF, the floating pipeline, resulting in spill smaller than 1000L of diesel or Jet-A fuel.**

Appropriate Actions	Resources
1. Communicate with vessel and immediately stop the ship-to-shore transfer of fuel, if it's safe to do. The transfer should not restart in a manner that would interfere with the immediate, effective and sustained response to the oil pollution. 2. Make sure that the environment is safe for the facility and vessel personnel, the facility and Baker Lake community. 3. Make sure that risk of fire or explosion are minimize. 4. Contact person found on OHF Declaration to initiate the OPEP. 5. Minimize the oil pollution incident by containing the spilled fuel to spreading within the marine environment, if it's safe to do. 6. Notify CCG, local and regulatory authorities. 7. Containment boom is manned to prevent the escape of fuel outside the boom. 8. If necessary, place a diversion boom outside the containment boom to stop the diesel from getting onto the beach. 9. Spread absorbent material on the spill to capture it. 10. Monitor any fuel that could not be recovered and collect water samples near the spill site and in the access passage for analysis. Repeat as necessary. 11. If diesel reaches the beach, excavate the contaminated beach material and take it to the Landfarm area at the Meadowbank site.	a. Crew on the tanker trained in spill response. b. Agnico's shore based personnel trained in spill response and recovery. c. Emergency Response Team to take control of the spill response and recovery. d. Spill response equipment and supplies maintained on board the tanker and also in the sea can located on shore of Agnico's Fuel Farm and Marshalling area. e. Save-alls (Pop-up pools) placed under the pipeline manifolds to collect minor spills. f. Shore-based boat to position booms. g. Absorbent booms to recover spilled diesel on sea water. h. Heavy equipment such as excavators, back hoes, vacuum trucks, and dump trucks available if beach is contaminated.

Scenario 2: **Loss between the ship and the flange of the OHF, the floating pipeline, resulting in spill greater than 1000L but smaller than 5000L of diesel or Jet-A fuel.**

Appropriate Actions	Resources
1. Communicate with vessel and immediately stop the ship-to-shore transfer of fuel, if it's safe to do. The transfer should not restart in a manner that would interfere with the immediate, effective and sustained response to the oil pollution. 2. Make sure that the environment is safe for the facility personnel, the facility and Baker Lake community. 3. Make sure that risk of fire or explosion are minimize. 4. Contact person found on OHF Declaration to initiate the OPEP. 5. Minimize the oil pollution incident by containing the spilled fuel to spreading within the marine environment, if it's safe to do. 6. Notify CCG, local and regulatory authorities. 7. Containment boom is manned to prevent the escape of fuel outside the boom. 8. If necessary, place a diversion boom outside the containment boom to stop the diesel from getting onto the beach 9. Spread absorbent material on the spill to capture it 10. For larger amounts of spilled materials on water, use absorbent booms to collect the spilled diesel 11. Monitor any fuel that could not be recovered and collect water samples near the spill site and in the access passage for analysis. Repeat as necessary. 12. If diesel reaches the beach, excavate the contaminated beach material and take it to the Landfarm area at the Meadowbank site.	a. Crew on the small tanker trained in marine spill response. b. Crew from the large tanker anchored outside the access passage. c. Agnico's shore based personnel trained in near shore spill response and recovery. d. Emergency Response Team trained for near shore spill response. e. Shore-based boat to position booms and spread absorbent material. f. Spill response equipment and supplies maintained on board the tanker, in Agnico sea can locate at Agnico's Marshalling area. g. Additional booms to place outside the containment boom. h. Additional boats can be transported from the Meadowbank site as well local boats can be rented from local contracting companies i Heavy equipment such as excavators, back hoes, vacuum trucks, and dump trucks for waste materials. j. in the case of larger spills an Incident Command System will be set up at the Meadowbank site as laid out in the Meadowbank Emergency Response Plan.

Scenario 3: **A spill >5,000 litres**

In the case of an ***Extreme*** spill, Agnico follow the actions listed in Scenario 2 to complete the best clean up possible. Between the spill response equipment that the tanker delivering fuel has on board and the spill response supplies at the OHF, a spill up to the size of 5, 000 - 10, 000L will be able to be controlled and cleaned up. However if the spill is greater than 10, 000L, at this point Agnico will require external assistance with the clean-up.

The Canadian Coast Guard (CCG) will be made aware each year prior the fuel transfer, there is a possibility that under direction of CCG that there spill depot supplies located in Baker Lake may be used.

SECTION 12. PREVENTIVE MEASURES

Agnico recognises that spill prevention is more desirable than any modern efficient cleanup measures after the fact. Preventive measures have been adopted in relation to any transport, transfer, use and storage of diesel and Jet-A fuel. The tankers carry a Ship Oil Pollution Emergency Plan (SOPEP) as per the MARPOL 73/78 requirement under Annex I. All ships with 400 GT and above must carry an oil prevention plan as per the norms and guidelines laid down by the International Maritime Organization (IMO).

A SOPEP contains the following things:

- The action plan contains duty of each crew member at the time of spill, including emergency muster and actions;
- General information about the ship and the owner of the ship etc.;
- Steps and procedure to contain the discharge of oil into the sea using SOPEP equipment;
- On-board Reporting procedure and requirement in case of oil spill;
- List of authorities to contact and reporting requirements in case of oil spill. Authorities like port state control, oil clean up team etc. are to be notified;
- Drawing of various fuel lines, along with other oil lines on board vessel with positioning of vents, save-all trays, etc.;
- General arrangement of ship, which includes location of all the oil tanks with capacity, content, etc.; and
- The location of the SOPEP locker and contents of the locker with a list of inventory. (Marine Insight 2012)

The Spill Contingency Plan, Emergency Response Plan and the Oil Pollution Emergency Plan identify potential causes of emergencies and provides for the development and implementation of strategies to minimize the likelihood of the same.

As described in the Spill Contingency Plan, exercises are part of training for the Emergency Response Team. This will include comprehensive spill response exercise to practice the use of spill response equipment, including the use of booms and oil water separator.

The OPEP will be updated annually based on the results of spill exercises, changes to the infrastructure at Agnico's Fuel Handling Facilities, changes to procedures and other variables. The updated OPEP will be distributed to the Agnico Emergency Response Team, Transport Canada, the Kivalliq Inuit Association, the Municipality of Baker Lake and other agencies as appropriate.

12.1 Training

The environmental department and ERT team received training from a response organization and as a result will be able to respond to or assist with incidents that may occur at the OHF.

12.1.1 Meadowbank site Personnel

A designated Emergency Response Team (ERT) consisting of on-site personnel is established at Agnico's Meadowbank Mine Site. Agnico will ensure that the ERT is trained and staffed in sufficient

number so that the ERT is present at all times. All members of the team will be trained and familiar with emergency and spill response resources, including their location and access, the Spill Contingency Plan, the Oil Pollution Emergency Plan and appropriate emergency spill response methodologies. The ERT will have up to 60 members, each of whom will train approximately 8 hours per month.

The training will include the following:

- Worker health and safety during emergency interventions;
- A review of the spill response plan and responsibilities of the ERT members;
- The nature, status, and location of fuel and chemical storage facilities;
- The on-site and off-site spill response equipment and how to use it;
- Emergency contact lists;
- Communication methods and signals;
- Desktop exercises of “worst case” scenarios;
- Emergency evacuation;
- Fires or explosions;
- Emergency equipment and use;
- Personal protective equipment and clothing;
- Marine shoreline recovery operations; and
- The likely causes and possible effects of spills.

Every employee at the Meadowbank project will receive spill and waste management induction during their initial site orientation, so they are able to respond to small spills and raise the alarm if a larger response is required. ERT members will receive more extensive spill response training and learn how to respond while wearing personal protective clothing, use of specific spill response gear, proper deployment of absorbents and maritime boom.

The Environmental Department will regularly provide tool-box sessions to give information on spill response and reporting procedures.

You can find records of different trainings that Agnico personnel have attended in Table 8. Basic spill response training will be completed in 2017 by all Agnico employees and contractors working on the Meadowbank project as part of the induction which is mandatory for all personnel coming to the Meadowbank site.

12.1.2 OHF Personnel Training

Prior to the first discharge of fuel form the vessel to the OHF a mandatory training will take place. This will be a review with all the personnel responsible for the shore based portion of the fuel transfer, including the third party contractor and the Baker Lake supervisor, the current OPEP and make them aware of the procedures to follow in case of a spill before the first fuel barge arrived. A copy of the 2017 log sheet will be provided to TCMSS once the training is completed.

In April 2016, a meeting with all Departments of Agnico involved with fuel transfer was held. The OPEP, prior to and during transfer checklists were reviewed. Meeting minutes can be found in Appendix D – 1.3. The minutes from meeting that will be held in 2017 prior to shipping season will be include in the next OPEP update.

12.1.3 Boat Operators

All people involved in the supervision during operation and / or on the spill response will complete the training course for the pleasure craft operator. Records of pleasure craft operator certification will be retained by the Meadowbank Training department.

All concerned persons working for Agnico Eagle Mines Ltd. must possess a pleasure craft operator card and provide proof of this certification prior to operating any boat relating to the Meadowbank project which includes the Baker Lake Marshalling facility. This includes emergency responders.

Table 8 - Spill Response Training

Agnico Eagle Mines Meadowbank Division

Spill Response Training

	Name	Company	Spill Response Operations Course / CCG	Emergency Planning and Spill Response Awareness / SWAT Consulting	OHF & AWPR Spill Response / Jamie Kataluk	OHF & AWPR Spill Response / Tom Thompson	OHF & AWPR Spill Response / Robin Allard	OHF & AWPR Spill Response / Martin Therialut	OHF Spill Response and Ship to Shore Checklist / Jeffrey Pratt
AEM EE	Jeffrey Pratt	AEM		15/01/2013		14/07/2015			30/09/2014
AEM EE	Robin Allard	AEM	01/01/2012	16/01/2013		14/07/2015			30/09/2014
AEM EE	Martin Theriault	AEM	01/01/2011	15/01/2013				16/07/2016	
AEM EE	Fanny Laporte	AEM		15/01/2013					
AEM EE	Richard Jackson	AEM		15/01/2013					
AEM EE	Tom Thomson	AEM	24/04/2015	15/01/2013					
AEM EE	Jamie Kataluk	AEM	24/04/2015	16/01/2013					30/09/2014
AEM EE	Randy Schwandt	AEM						16/07/2016	
AEM EE	Dave Holmstrom	AEM		16/01/2013					
AEM EE	Potogu Noah	AEM			10/07/2013				
AEM EE	Stephane Larose	AEM		16/01/2013					
AEM EE	Jean-Claude Poitras	AEM					18/06/2013		
AEM EE	Bernard Paradis	AEM					18/06/2013		
AEM EE	Serge Pare	AEM					18/06/2013		
AEM EE	Ray Carlson	AEM					18/06/2013		
AEM EE	Mark Nulait	AEM						20/09/2012	
AEM EE	Tim Chappelle	AEM						20/09/2012	
AEM EE	Alexandre Arcand	AEM						25/09/2012	
AEM EE	Alexande Ouellette	AEM				14/07/2015			30/09/2014
AEM EE	Fredy Riveron	AEM						16/07/2016	
AEM EE	Steve Paquin	AEM							30/09/2014
NOT AEM	Francois Moses	Intertek				14/07/2015			30/09/2014
NOT AEM	Alberto Rodriguez	Intertek				14/07/2015			30/09/2014
NOT AEM	Cerbah Nassim	Intertek						16/07/2016	
NOT AEM	Jose Vergara	Intertek						16/07/2016	
NOT AEM	Sanik Faraq	Intertek				14/07/2015			30/09/2014

SECTION 13. COASTAL SHIPPING

13.1.1 Coastal Shipping

In Appendix A - 1.2 you will find the contact information for Coastal Shipping during the barge season. This contact information will be used again in the 2017 season; no changes are required for this year. This will be reviewed with Coastal Shipping on an annual basis.

SECTION 14. REFERENCES

Transport Canada *Oil Handling Facilities Standards*, TP12402E.

Canadian Coast Guard, Central & Arctic Region, 2008. *Regional Response Plan.*

Marine Insight, 2012. What is Ship Oil Pollution Emergency Plan (SOPEP)? http://www.marineinsight.com/misc/maritime-law/what-is-ship-oil-pollution-emergency-plan-sopep/#ixzz21B2YvDTW http://www.marineinsight.com/misc/maritime-law/what-is-ship-oil-pollution-emergency-plan-sopep/#ixzz21B1dDGL5

Moller, T.H. & Santner, R.S. 1997. *Oil Spill Preparedness and Response: the Role of Industry,* 1997 International Oil Spill Conference, Technical Report IOSC-005.

National Oceanic and Atmospheric Administration
http://response.restoration.noaa.gov/oil-and-chemical-spills/oil-spills/resources/in-situ-burning.html

Transport Canada, TP- 12401, 1995. *Response Organizations Standards.*

Transport Canada, TP-12402, 1995. *Oil Handling Facilities Standards.*

Transport Canada, TP-10783, 1997. *Arctic Waters Oil Transfer Guidelines.*

Transport Canada Guideline, TP-10783E, 1997. *Arctic Waters Oil Transfer Guidelines,* Prairie and Northern Region, Marine (AMNS - OTT).

Transport Canada, TP-13585, 2008. *Environmental Prevention and Response National Preparedness Plan.*

Transport Canada Guideline TP- 9834E, 2009. *Guidelines for Reporting Incidents Involving Dangerous Goods, Harmful Substances and /or Marine Pollutants*.

Journal of Petroleum Science Research (JPSR) Volume 2 Issue 3, July 2013 - Modeling Oil and Petroleum Evaporation by Merv F. Fingas

APPENDIX A 1.1- COASTAL SHIPPING LTD. SOPEP

Appendix 7
Spill Kit Inventory
M/T *Dara Desgagnés*
April 23, 2018

Item	Size	Min Quantity	Quantity Onboard	Location Onboard
Portable Pumps and hoses	Sets	2	4	2 Main Deck 1 Dog House 1 E/R
Absorbent pads	Bales	5	11	7 in stbd rope locker Some in use in spill kits 4 in Chem locker
Absorbent – particulate	Bales	5	45	Boat Deck, port rope locker and Local spill kits
Hand scoops, buckets and shovels	Each	3	6+	Chemical locker drum, stbd rope locker, spill kits
Waste container	55 gal drum	2	7	2 at aft end gangway 1 in chemical locker 4 aft of ER hatch
Emulsifiers	1 gal	5	5	White box at crane
Tyvec coveralls	Various	12	12 +	Chemical locker Spill kit drum, and crew deck stores
Boots, oil resistant	Various	12 pairs	16 pair	10 in chemical locker 6 in change room/CCR
Gloves, oil resistant	Various	12 pairs	12+	Chemical locker drum
Rags	Lbs	20	25+ bags	Stbd rope locker

Dara Desgagnés
Chief Officer
Rigel Shipping

APPENDIX A 1.2- COASTAL SHIPPING LTD. CONTACT INFO

ATLANTIC TOWING

WOODWARD

BAKER LAKE AREA OPERATIONAL PROCESSES

To further support safe operations in the Baker Lake area between Woodward, Atlantic Towing, and Petro Nav, the following information and procedures will be adopted starting in the 2018 season.

1.0 COMMUNICATION PROTOCOL

Daily e-mail sent out by each vessel to all vessels by 8:00am

To include:

- Current position
- ETA thru narrows
- Communication equipment status

Long Distance Communication

- Primary – Satellite phone
- Secondary – Sat-C

Short Distance Communication

- VHF communication – channel 16

2.0 ATL COMMUNICATION INFORMATION

Atlantic Beech

- E-mail: 432525810@stratosmobile.net
- Cellular: (506) 654-1410
- Satellite: 011-870-783-209-055

Atlantic Elm

- E-mail: 431697659@stratosmobile.net
- Cellular: (902) 456-8169
- Satellite: 011-870-773-236-143

ATL VHF working channel is 69

3.0 WOODWARD COMMUNICATION INFORMATION

Vessel
- E-mail:
- Cellular:
- Satellite:

Vessel
- E-mail:
- Cellular:
- Satellite:

WOODWARD VHF working channel is 10

4.0 PETRO NAV COMMUNICATION INFORMATION

Vessel DARA DESGAGNES
- E-mail: captain.dara@desgagnes.com
- Cellular: 1-506-533-4992
- Satellite: 1-418-907-8410

Vessel
- E-mail:
- Cellular:
- Satellite:

PETRO NAV VHF working channel is XX

5.0 RULES OF THE WATER WAYS

Note: Outbound refers to Tanker or Tug & Barge leaving Baker Lake for Helicopter Island

Inbound refers to Tanker or Tug & Barge leaving Helicopter Island for Baker Lake

Helicopter Island to Baker Lake

Inbound ATL Tug will contact outbound Woodward and/or Petro Nav tanker by Sat Phone to get its transit time thru the narrows (confirming information from daily e-mail). Tug and barge will depart Helicopter Island 3 and ½ hours prior to the transit time of the Tanker. It takes 3 hours for the Tug and Barge to reach the narrows from Helicopter Island. This allows plenty of time for all 4 vessels to transit the narrows.

Inbound ATL Tug and Barge **WILL ALWAYS** depart Helicopter Island prior to inbound Woodward and/or Petro Nav tanker. Inbound Woodward and/or Petro Nav tanker **WILL ALWAYS** follow inbound ATL Tug and Barge until to entrance of Baker Lake (no passing). Inbound ATL Tug and Barge and inbound Woodward and/or Petro Nav tanker will communicate on VHF channel 16.

Inbound ATL Tug and Barge will pass thru the narrows first, followed by the inbound Woodward and/or Petro Nav tanker. Outbound Woodward and/or Petro Nav tanker will pass thru the narrows next, followed by the outbound ATL Tug and Barge.

Baker Lake to Helicopter

Outbound Woodward and/or Petro Nav tanker will depart for the narrows. When reaching the narrows, outbound Woodward and/or Petro Nav tanker **WILL NEVER** proceed until inbound traffic has cleared the narrows. Outbound Woodward and/or Petro Nav tanker will hold position above the narrows just south of Bannerman Island.

Outbound ATL Tug and Barge will depart for the narrows. When reaching the narrows, outbound ATL Tug and Barge **WILL NEVER** proceed until inbound traffic has cleared the narrows. Outbound ATL Tug and Barge will hold position above the narrows just south of Bannerman Island.

Once inbound vessel traffic has cleared the narrows, the outbound Woodward and/or Petro Nav tanker will proceed thru the narrows first. The outbound ATL Tug and Barge **WILL ALWAYS** proceed thru the narrows after the outbound Woodward and/or Petro Nav tanker.

6.0 FUEL HOSE POSITIONING

The fuel hose from the Woodward or Petro Nav tanker will be connected to the far side of the vessel away from the spud barge. The fuel hose will lay directly to shore, where a support structure will guide the fuel hose along the shore line until it mates with the shore manifold. This eliminates the risk of the ATL Tug and Barge coming into contact with the fuel hose while departing/ arriving at the spud barge.

APPENDIX B - The Central and Arctic Regional Response Plan (2008)

Canadian Coast Guard
Central & Arctic Region



Regional Response Plan

December 2008

LETTER OF PROMULGATION

The *Central & Arctic Regional Response Plan (2008)* replaces the *Central & Arctic Region Contingency Chapter (2006)* and the *Arctic Response Strategy (1999)*. This plan is a component of the *Canadian Coast Guard National Response Plan* which is the responsibility of the Director of Safety and Environmental Response Systems, Ottawa. It establishes the framework and the procedures by which Central & Arctic Region will prepare for, assess, respond to and document actions taken in response to pollution incidents in this Region.

The saving of life is of paramount consideration and the Plan is subordinate to the operational requirements of marine search and rescue.

The Plan has been reviewed by the internal partners identified in Section 3.3 in context to the services they may provide and by the external partners identified in Sections 3.4 and 3.5 to confirm their mandated response authorities.

Responsibility for the *Regional Response Plan* lies with the Assistant Commissioner Coast Guard Central & Arctic Region. The Central & Arctic Region Environmental Response branch is the custodian of the plan. The responsibility for specific sections is identified in Section 7 - Plan Maintenance and Custodians. Comments, recommendations and communications relating to the various sections are clearly identified in this section.

REVISION RECORD

CENTRAL & ARCTIC REGIONAL RESPONSE PLAN			
Section	Replace	Transmittal No.	Description of Changes
Entire Plan	All	December 1, 2005	Complete revision of Central & Arctic Regional Response Plan
Entire plan	All	April 1, 2006	Complete revision of Central & Arctic Regional Response Plan
7.1 Maintenance Process	Page 7-1	May 8, 2007	Update address to 520 Exmouth Street
8.3 CCG ER Phone List	Page 8-1	June 4, 2007	Update address to 520 Exmouth Street
Entire Plan	All	December 2008	Complete revision of Central & Arctic Regional Response Plan

LETTER OF PROMULGATION i

REVISION RECORD ii

SECTION 1 – INTRODUCTION
- Authority 1-1
- Purpose 1-1
- Area of Responsibility 1-1
- Safety Policy 1-2
- Links to the National Response Plan 1-2
- Regional Response Plan Structure 1-2
- Linkages to International Joint Plans 1-3
- Linkages to International Joint Plans 1-3

SECTION 2 – AGREEMENTS & MEMORANDA OF UNDERSTANDING
- Overview 2-1

SECTION 3 – ORGANIZATION
- General Application 3-1
- Environmental Response Branch (DFO/CCG/ER) 3-1
- Internal Partners – Fisheries and Oceans 3-3
- Internal Partners – Other Federal Departments 3-5
- External Partners 3-8
- Clients 3-9
- External Resources 3-10

SECTION 4 – PREPAREDNESS
- Overview 4-1
- Response Management System (RMS) 4-1
- Planning 4-4
- Training Program and Curriculum 4-6
- Exercise Program 4-12
- Inventory Management, Maintenance and Infrastructure 4-14

SECTION 5 – RESPONSE OPERATIONS
- Pattern of Response 5-1
- Spill Potential or Pollution Risk Assessment 5-5
- Notification 5-5
- Verification 5-5
- Spill Assessment 5-6
- Activation of Canadian Coast Guard Response Resources 5-11
- Response Implementation 5-11
- Summary Report and Post Incident Review 5-16

SECTION 6 – CLAIMS AND COST RECOVERY
Purpose 6-1
Policy Guidelines 6-1
Responsibilities 6-2
Process 6-2
Documentation 6-2
References 6-4
Third Party Claims 6-4

SECTION 7 – PLAN MAINTENANCE AND CUSTODIANS
Maintenance Process 7-1
Canadian Coast Guard Custodians 7-1
Plan Distribution 7-2

SECTION 8 – CONTACTS
Pollution Reports for Canadian Coast Guard (CCG), Central & Arctic Region (C&A) 8-1
Other Lead Agencies that Maintain Spill Report Lines 8-1
Environmental Response Branch Phone List 8-1

SECTION 9 – REFERENCES AND ANNEXES
References 9-1
Annexes 9-1

Section 1 - INTRODUCTION

1.1. Authority

This plan is based upon the policy and guiding principles set forth in the *National Response Plan* of the *Canadian Coast Guard National Response Strategy*.

1.2. Purpose

The *Central and Arctic Regional Response Plan* is designed as a guide to Canadian Coast Guard staff and relevant stakeholders involved in marine spill responses. It outlines the Regional application of the various roles of On-Scene Commander (OSC) (active response), Federal Monitoring Officer (FMO) (ensuring the Responsible Party fulfills their obligations), and as a Resource Agency (in assistance to other Lead Agencies).

It contains the specific information and activities that are pertinent to all spill response activities within Central & Arctic Region (C&A Region).

1.3. Area of Responsibility

For the purposes of marine pollution response Central & Arctic Region is defined geographically as:

- The contiguous waters of the Canadian Arctic (North of 60° Latitude) to the limits of the International Boundary, including the North Slope Area of the Yukon Territories, and internal waters of the Northwest Territories and the Territory of Nunavut; and

- The waterways contained within the provinces of Alberta, Saskatchewan, Manitoba, Ontario, and a western portion of Quebec commencing at the east wall of the Beauharnois Lock in the St. Lawrence River.

(see Figure 1-1 Fisheries and Oceans Central & Arctic Region)

Significant waterways include the Canadian Great Lakes and interconnecting waterways to the international Boundary with the United States, Hudson and James Bays, Lake Winnipeg, Lake Athabasca and interconnecting waterways, Great Slave Lake, Mackenzie River and the Northwest Passage in the Canadian Arctic.

There are also a number of specific geographic locations which, although not excluded from Canadian Coast Guard's mandate, require coordination between the managing authorities and this plan. These areas include the waters associated with

the various Port Authorities (Hamilton, Thunder Bay, Toronto and Windsor) and the St. Lawrence Seaway Authority (Welland Canal, St. Lawrence Locks) as defined by the *Canada Marine Act, 1998*.

Figure 1-1: Fisheries and Oceans Central & Arctic Region



1.4. Safety Policy

Safety is the first and foremost consideration in any pollution response in Central & Arctic Region. This commitment is expressed throughout this and other documents as well as in the programs relied on by the Environmental Response (ER) branch to prepare for such spills (i.e. training and exercising programs). General safety procedures and considerations to be followed by all members of the Regional Response Team are identified in Section 5.7 of this plan.

1.5. Links to the National Response Plan

The Guiding Principles and Mandate (including legislative, interdepartmental, intergovernmental and international agreements) as well as designation of Lead and Resource Agency roles are contained in the *National Response Plan Section 1 – Introduction.* The mechanism for activating the Environmental Response National Response Team is also defined in the *National Response Plan*.

1.6. Regional Response Plan Structure

The Regional Response Plan is structured to reflect the three fundamental phases of Environmental Response activities. These are:

1) Preparedness - through the regional application of Contingency Planning (resulting in specific response strategies), Training (state of personnel readiness), Exercising (state of system readiness) and Inventory Maintenance and Management (state of mechanical/equipment readiness).

2) Response Operations - identifying the mechanisms for:
   - *Initiating* (through a dedicated Duty Officer and Assessment process),
   - *Sustaining* (Operational functions as Lead or Resource Agency),
   - *Controlling* (using the Response Management System), and
   - *Finalizing* the response activity (decommissioning and reporting).

3) Claims, Recovery and After-action activities - for the documentation and recovery of spent resources from the polluter, their agents, national or international funding conventions.

Surrounding these fundamentals are the specifics of the Environmental Response Program in Central and Arctic Region that are too cumbersome to be included in the main text of this Response Plan. They include: Regional Agreements and Memoranda of Understanding, Regional Organization and the specific Annexes which support the program. Finally, the Response Plan includes the preliminary and supplementary matter such as Letter of Promulgation, Record of Revision and the Identification of Custodians and the Plan Maintenance process.

1.7. Linkages to other Response Plans in the Region

When a pollutant is spilled into the water, the Canada Shipping Act is not the only legislation that applies. Recognizing that being designated Lead Agency for pollution response to mystery spills and spills from vessels does not preclude other agencies from completing their mandate CCG acknowledges that the Internal and External Partners listed in Sections 3.4 and 3.5 have plans that are active within Central & Arctic Region.

1.8. Linkages to International Joint Plans

International Joint Plans and agreements affecting Central & Arctic Region include:

- Canada-United States Joint Marine Pollution Contingency Plan
- Canada-Denmark Agreement for Co-operation Relating to the Marine Environment, Annex B (Joint Marine Contingency Plan concerning Incidents resulting from Shipping Activities)
- Great Lakes Water Quality Agreement, Annex 9
- International Boundary Waters Treaty Act

The Canadian Coast Guard Environmental Response Branch also provides technical support for the Emergency Prevention, Preparedness and Response (EPPR) Working Group of the Arctic Council. The EPPR Working Group exchanges information on best practices for preventing spills, preparing to respond to spills should they occur, and practical response measures for use in the event of a spill.

The Arctic Council is an intergovernmental forum of the eight circumpolar countries (Canada, Denmark, Finland, Iceland, Norway, Sweden, the Russian Federation and the United States of America) that provides a mechanism to address the common concerns and challenges faced by the Arctic governments and the people of the Arctic.

Some work has been initiated with the Russian Federation for the development of a Joint Pollution Response Plan. To date no agreements have been signed.

Section 2 - AGREEMENTS AND MEMORANDA OF UNDERSTANDING

2.1 Overview

The Canadian Coast Guard (CCG), both Central & Arctic and National Headquarters, maintain numerous memoranda and letters of understanding and agreement between other government departments which outline shared responsibilities in pollution response. A brief description of the major agreements is listed below.

- Letter of Agreement between Canadian Coast Guard, Environmental Response Branch and Canadian Coast Guard, Operational Services and Canadian Coast Guard, Technical Services regarding the use of Environmental Response First Response Units (FRUs) by non-environmental response staff. This agreement concerns the use of FRUs at the various CCG facility sites (bases, sub-bases and search and rescue stations).

- Northwest Territories/Nunavut Spills Working Agreement. This agreement formalizes procedures whereby spill investigation and monitoring in the Northwest Territories (NT) and Nunavut (NU) can be coordinated.

- Fisheries & Oceans (DFO) and Environment Canada (EC) Letter of Agreement respecting transfer of responsibility as lead agency for mystery spills from Environment Canada (EC) to the Canadian Coast Guard/Fisheries & Oceans Canada (July 1996)

- Transport Canada (TC) and Fisheries & Oceans (DFO) Memorandum of Understanding respecting Marine Transportation Safety & Environmental Protection (May 1996). This MOU outlines the responsibilities transferred from TC to DFO in accordance with the *Public Service Rearrangement and Transfer of Duties Act*. Those pertinent to this plan include:
    a) The responsibility for ensuring the provision of pollution clean up services
    b) The authority to take actions to mitigate or prevent pollution from ships

- Letter of Understanding between the Canadian Coast Guard and the Hamilton Port Authority to outline the roles that the CCG and the HPA will

play in the event of a pollution incident which falls within the mandate of the Canadian Coast Guard.

- Letter of Understanding between the Canadian Coast Guard and the Thunder Bay Port Authority to outline the roles that the CCG and the TBPA will play in the event of a pollution incident which falls within the mandate of the Canadian Coast Guard.

- Letter of Understanding between the Canadian Coast Guard and the Toronto Port Authority to outline the roles that the CCG and the TPA will play in the event of a pollution incident which falls within the mandate of the Canadian Coast Guard.

- Letter of Understanding between the Canadian Coast Guard and the Windsor Port Authority to outline the roles that the CCG and the WPA will play in the event of a pollution incident which falls within the mandate of the Canadian Coast Guard.

Some memoranda of understanding and letters of agreement have been rendered defunct by virtue of the dissolution or reorganization of the entities that signed the original document. It is the Region's intent to assess the need for an MOU and in those cases where renewal is needed, to draft a new MOU and submit to the partner organization the request for re-entry into that agreement. For further information on these memoranda, please contact the Environmental Response Planning Section.

Section 3 - ORGANIZATION

3.1 General Application

This section describes the primary working relationships between Fisheries and Oceans (DFO), Canadian Coast Guard, Environmental Response branch (CCG/ER) and the various internal and external partners, clients and external resources.

Internal partners include: Other DFO sectors, directorates and branches, and other federal departments which provide direct assistance or have specific mandates which directly affect response activities.

External partners include those entities that share the burden of pollution response for their specific area of responsibility. These agencies include the provincial and territorial government ministries with the generic mandate of pollution response.

Clients include those entities that are specifically identified by the *Canada Shipping Act (CSA)* and have direct involvement in the response regime; they include Oil Handling Facilities (OHF), Legislated Ships and Non-legislated Ships.

External resources are those resources outside of the government that the Canadian Coast Guard may engage while conducting spill response activities. These include the Response Organizations (RO) certified by Transport Canada and other independent contractors which may perform more specific functions.

3.2 Fisheries and Oceans, Canadian Coast Guard - Environmental Response Branch (CCG/ER)

The Assistant Commissioner, Canadian Coast Guard through the Maritime Services Directorate and the Superintendent of Environmental Response (ER) directs the Regional Environmental Response Team. This team represents one facet of the overall crisis management structure within Central and Arctic Region and performs the function of the Lead Response Agency for pollution incidents as defined in the *National Response Plan – Section 1* of the *Canadian Coast Guard National Response Strategy.* The branch consists of approximately seventeen (17) full time employees (FTEs).

Internally, the Environmental Response Branch is made up of five (5) distinct but integrated functions:

1) *Direction and Administration* - providing the overall guidance, management and liaison with Headquarters. The Superintendent holds the responsibility for escalating a response and/or dedicating resources.
2) *Planning* - providing the design and management of plans and procedures to facilitate the preparedness posture of the Region (responsible for developing and maintaining intradepartmental, interdepartmental, client and regime stakeholder relationships).

3) *Operations and Inventory Maintenance & Management* - provide the management and maintenance of equipment to ensure the operational response readiness of the Region.
4) *Training* - provides the coordination and delivery of educational materials, to internal as well as external partners and clients, in support of the overall preparedness posture of the Region.
5) *Exercising* - provides the management and coordination of internal and external partners and clients to validate, practice and reinforce all aspects of the Response readiness of the Region.

In addition to these core functions, each staff member is required to actively participate in the operational aspects of the response regime based upon their skill and ability levels. This includes assuming various roles within the Response Management Structure acting as Duty Officer (DO) and supporting the overall emergency preparedness structure within the Region (not necessarily related exclusively to oil spills or pollution).

In the context of this Plan, the Environmental Response Branch is tasked to:

- Fulfill the Canadian Coast Guard's obligations as Lead Agency in an OSC or FMO posture in responding to marine pollution incidents from ships in waters of Canadian interest as well as from unknown sources.
- Act as a Resource Agency in support of a response led by another agency when requested.
- Staff a Duty Officer position on a 24/7 basis which, together with other agency representatives, will assess or direct the assessment of spill reports.
- Ensure that an appropriate response to pollution incidents is initiated on a timely basis.
- Provide initial response capabilities throughout the region.
- Monitor response and clean-up priorities when polluter has accepted responsibility.
- Ensure international commitments in spill preparedness and response are fulfilled.
- Provide a pollution response capability for lightering, salvage and offshore recovery operations.
- Provide Regional and HQ briefings on status of emergency operations.
- Evaluate, acquire and maintain specialized marine emergency countermeasures equipment and develop deployment techniques.
- Develop, distribute and maintain the *Central and Arctic Regional Response Plan* of the *Canadian Coast Guard National Response Strategy* (including area annexes) on behalf of Fisheries and Oceans.
- Review and comment on other government as well as industry pollution response plans upon request.
- Provide pollution response related training to Canadian Coast Guard and civilian personnel.

- Conduct spill response exercises according to the Canadian Coast Guard National Exercise Program (NEP) standards.
- Provide detailed explanations of response operations and policies to representatives of the media, interest groups, industry, police and Provincial and Municipal governments.
- Provide a centre of expertise for pollution concerns.
- Develop and foster a good working relationship with other authorities, shipping and oil/chemical handling communities.
- Working with Environmental Response Headquarters and the Chemical Industry to develop, implement and maintain a corresponding and complimentary regional capability for spills of hazardous and noxious substances other than oil.

3.3 Internal Partners – Fisheries and Oceans

Other branches and directorates within Fisheries and Oceans which directly and in a continuous active way support preparedness and response activities include:

Marine Traffic and Communications Branch (MTCS) – CCG/Marine Programs Directorate

Marine Traffic and Communications Services operates a marine VHF/MF/HF communications system (depending on location) primarily for the provision of marine safety information, distress coordination and marine traffic regulation. MCTS will support Environmental Response (ER) activities by:

- Establishment of Movement Restriction Areas (MRA's) or exclusion zones as directed by the Federal Monitoring Officer (FMO) or On Scene Commander (OSC).
- Providing communications/radio equipment operators in support of off-site ER operations.
- Dissemination of marine information and issuing marine Notices to Shipping (NOTSHIPS).
- Providing vessel tombstone information including, but not limited to, vessel name, call sign, nationality, tonnage, dangerous cargo type and quantity.

Regional Operations Centre (ROC) and Fleet Resources – CCG/Operational Services Directorate

Regional Operations Centre

The ROC provides notification to the Environmental Response Duty Officer (ERDO) when notified of a spill or an occurrence which may result in a spill. Upon receiving information regarding a spill, the ROC confirms the report using reliable resources and agencies. When the incident has been confirmed the Operation Centre begins the alerting and notification procedure. A schedule of ERDOs, approved by the Superintendent Environmental Response Canadian Coast Guard, will be maintained by the ER Regional Emergency Operations Officer (REOO) and forwarded to ROC for distribution.

The Regional Operations Centre will support the Environmental Response Branch during a marine pollution incident by:

- Maintaining up to update contact lists for Canadian Coast Guard and other government agencies for use as incidents progress.
- Coordinating the allocation of CCG resources as required by the FMO or the OSC to respond to a marine pollution incident.
- Provide communications support (when necessary).

Fleet Resources

Fleet Resources may be called upon to provide a host of support and/or lead services depending upon the type and severity of the situation and limitations or constraints of the vessel. Commanding Officers maintain full responsibility for the operation and safety of their vessel and personnel and therefore, will/may:

- Be called upon to be interim On-scene Commander.
- Be the principal point of contact aboard ship for the Environmental Response Duty Officer or On Scene Commander.
- Investigate spill reports for the purpose of confirmation.
- Provide surveillance and monitoring of third party (or pollutant) as required.
- Initiate early spill response; containment, boom or sorbent material deployment, clean up and recovery procedures.
- Provide site safety, (i.e. fire fighting, first aid and crowd control).

Fleet does maintain their own limited capabilities to respond to their needs as required.

Canadian Coast Guard Bases

In preparation for and during a pollution incident, CCG bases may also provide resources for response. These resources are generally within the scope of normal base activities and include:

- Small vessel use
- Base facilities (boardrooms, workshops)
- Helicopter landing pads
- Boat launch and docking slips
- Staging areas

Safety, Security and Emergency Services Branch – DFO Corporate Services

For large spills of a significant nature the Regional Manager of Safety, Security & Emergency Services may provide the following:

- Advice and recommendations to the On Scene Commander on issues of site and employee safety and the application of departmental security policy measures.
- General occupational health & safety and security advice to the On-Scene Commander/Deputy On-Scene Commander as per the departmental Loss Control Manual.

- A Health & Safety Officer to perform the functions of the Heath & Safety Officer described in the Response Management System User Guide. This person will report directly to the OSC or FMO throughout the duration of the response.

On occasions when the Regional Manager of Safety & Security (or delegate) is not available, or when spills are of a minor nature, the On-Scene Commander shall appoint a member of the response team to fulfill the general duties required.

Communications Branch – DFO Communications
Communications team manages the media (external) handling inquiries from print, radio, television and internet news organizations through the application of *Fisheries & Oceans Crisis Communications Plan*. Communications branch coordinates all aspects of information being released to ensure the public is getting the most relevant, accurate information as soon as practicable.

Legal Services
The DFO Legal Services in CCG Headquarters section will provide legal advice and guidance in the event of a marine pollution incident where CCG may or has been engaged. This especially includes advice on the issuance of Letters of Undertaking (LOUs) and in situations where Canadian Coast Guard may have to take command and control of an incident away from the Polluter.

Other DFO Resources
Indirectly, but just as significant in the event of a spill, is the availability of other DFO resources. This includes any and all appropriate functions including, but not limited to the following:

- Trenton Joint Rescue Coordination Centre – CCG, Maritime Services Directorate, Search and Rescue Branch (SAR)
- Finance and Administration – Human Resources and Corporate Services Directorate
- Human Resources - Human Resources and Corporate Services Directorate
- Facilities – Real Property
- Other Technical Resources – CCG, Integrated Technical Services Directorate
- Fish Habitat Branch – Habitat Fisheries and Oceans Management

3.4 Internal Partners – Other Government Departments

Other federal departments which provide direct assistance or have specific mandates which directly affect response activities include:

Environment Canada (EC)
There are two (3) Environment Canada regions located within Central & Arctic region. They are Ontario, Prairie and Northern and Pacific and Yukon Regions.

The Environmental Emergencies Section provides:

- In Ontario, the Co-chair (with the Ontario Ministry of the Environment (MOE)) of the Regional Environmental Emergencies Team (REET).
- In the Arctic (consisting of the three Territories), the Co-chair (with the relevant Territorial Government, Department of Environment) for the Arctic Regional Environmental Emergencies Team.
- Coordination of the Shoreline Cleanup and Assessment Teams (SCAT).
- Advice concerning environmental impacts associated with vessel source spills, resource sensitivity and prioritization, environmental forecasting, spill and cleanup monitoring and clean up techniques and priorities
- Sampling assistance, identification and characterization of materials

The REET serves as a mechanism for the provision of consolidated, coordinated and comprehensive environmental information and advice concerning the fate and effects of hazardous and noxious substances, spill trajectories, resources and shoreline protection strategies, clean up priorities, physical and chemical counter measures, remedial endpoints, damage assessment, and the management of hazardous wastes generated during a spill and other matters which arise while planning and responding to emergency events which affect or risk environmental quality. In the planning mode REET members meet to improve contingency plans, resolve regional preparedness issues and exchange new scientific and response ideas.

In Ontario Region, Environment Canada has divided the province into eighteen (18) REET areas and plans to hold one (1) REET meeting per area per year, consolidating some areas where possible and maintaining annual meetings in the higher risk areas (Windsor, Sarnia, Sault Ste. Marie).

Two of three primary Arctic REET (AREET) areas are in Prairie and Northern Region: the Northwest Territories and Nunavut Territory. There is no REET established in Alberta, Saskatchewan and Manitoba.

The Meteorological Service of Canada (part of EC and REET) provides:

- Meteorological forecasting

The Canadian Wildlife Service (part of EC and REET) provides

- Advice on wildlife protection, rescue and rehabilitation
- Permits for wildlife hazing and capture

Transport Canada (TC)

The Environmental Response Systems Division in Ottawa is responsible for Canada's Marine Oil Spill Preparedness and Response Regime. It:

- works with other federal agencies and departments, such as Fisheries and Oceans Canada, the Canadian Coast Guard and Environment Canada to establish guidelines and regulatory framework for preparedness and response to oil spills and spills of noxious and hazardous substances into Canada's marine environment.

- Manages the National Aerial Surveillance Program

There are two Transport Canada regions located within Central & Arctic region. They are Ontario and Prairie and Northern regions.

The Aircraft Services Directorate provides:

- Aerial surveillance as part of the Prevention mandate within Transport Canada, and can provide aerial spill tracking, recording, and personnel transport.

The Marine Safety Branch provides:

- Technical advice and recommendations to the On-Scene Commander or the Ship Owner regarding, but not limited to, lightering, damage assessment and salvage.

  Note: The MOU between Transport Canada and Fisheries & Oceans Respecting Marine Transportation Safety & Environmental Protection (May 1996) Annex D – E-5 states that "Transport Canada and Fisheries and Oceans will jointly approve salvage operations, emergency lightering or discharge of cargo." After discussing this clause with two senior surveyors, they both agree – Marine Safety does not approve salvage plans. Marine Safety advises and recommends only.
- Restriction of transit or movement of a vessel following a damage assessment.
- Spill investigation and enforcement of the various aspects of the pollution prevention conventions and legislation in Canada
- Regional planning, in conjunction with EC and CCG, for the selection of Places of Refuge. Note: in the Great Lakes and connecting channels, selection of a place of refuge will be determined in conjunction with the USCG and USEPA.
- Monitoring of the spill preparedness activities of Oil Handling Facilities (OHFs) and certified Response Organizations (ROs) through a review and audit process.

Indian and Northern Affairs Canada (INAC)

Canadian Coast Guard (CCG) works most closely with INAC in Nunavut (NU) and the Northwest Territories (NT). INAC has lead responsibilities in the Arctic for spills on water which do not originate at federal facilities, exploration facilities or from ships and barges. INAC also, by letter of agreement, will investigate ship-source spills on behalf of CCG. INAC is also a member of the Beaufort Sea Emergency Preparedness Working Group, along with CCG/DFO, EC, TC and other appropriate agencies.

National Energy Board (NEB)

Based in Calgary, Alberta, the National Energy Board is an independent Agency that reports to parliament through the Ministry of Natural Resources. The NEB is the

Lead Agency for spills that occur at offshore and nearshore oil and gas exploration and production facilities.

In the event of a marine pollution incident where CCG is requested for assistance as a resource agency, CCG is available to provide pollution response expertise as indicated under Section 7.2 of the *National Response Plan* as it relates to NEB.

Public Safety Canada

Public Safety Canada is the federal coordinating department responsible for engaging relevant federal departments in an integrated Government of Canada response to an emergency.

For emergencies requiring an integrated Government of Canada response, federal support is based on a regional "single- window" concept. This concept is intended to facilitate regional interdepartmental and intergovernmental coordination, while not unduly restricting operations. Coordination includes sharing of pertinent information in order to maintain situational awareness.

The Government Operations Centre (GOC) is a 24/7facility where an integrated Government of Canada response is managed. It is the focal point of information management flow and provides strategic-level activities. It's permanent staff includes watch officers, duty officers specializing in national communications as well as a geomatics team to map incidents.

Indirect support from other federal departments in the form of advice or resources also comes from: Heritage Canada (Parks Service) in the form of support to REET, National Defense regarding assistance and resources, RCMP with respect to investigations and those sections or departments specifically identified in the various Memorandums of Understanding (MOU) as outlined in Section 2 of this chapter.

3.5 External Partners - Provincial and Territorial Ministries and Departments

In general, liaison with provincial and territorial concerns is facilitated through REET (Regional Environmental Emergencies Team), which is chaired by Environment Canada (EC) or, in the case of the Province of Ontario, is co-chaired by Environment Canada and the Ontario Ministry of the Environment (MOE). The following agencies have the primary mandate for marine or freshwater pollution response in their province or territory of jurisdiction:

Territory or Province	Department
Northwest Territories	Environment and Natural Resources
Nunavut	Department of Environment
Alberta	Alberta Environment
Saskatchewan	Saskatchewan Environment

Manitoba	Manitoba Conservation
Ontario	Ontario Ministry of the Environment

In emergency situations conflicts sometimes arise with respect to legal and administrative jurisdiction and application of standards and common practices. To facilitate these issues the various Ministries related to emergency measures are usually contacted to provide coordination and clarify where necessary the concerns. These include:

- Government of Nunavut – Department of Community of Government Services, Emergency Management Division
- Government of the Northwest Territories – Department of Municipal and Community Affairs – Emergency Services Division
- Government of the Yukon Territories – Department of Community Services, Emergency Measures Organization
- Government of Ontario - Ministry of the Community Safety & Correctional Service, Emergency Measures Ontario
- Government of Manitoba –Manitoba Emergency Measures Organization
- Government of Saskatchewan – Resource Management and Corrections & Public Safety, Saskatchewan Emergency Measures Organization
- Government of Alberta – Ministry of Municipal Affairs, Public Safety Division, Emergency Management Alberta

Provincial Governments can provide consolidated access to local, municipal and provincial resources.

Central & Arctic Region recognizes that First Nations have a vested interest in response operations that may occur in their territory and will ensure that they are represented on the REET or have access to the Federal Monitoring Officer or On Scene Commander through the CCG Liaison Officer.

3.6 Clients

With respect to ship-source pollution incidents, there are three major groups the Canadian Coast Guard will be directly engaged with. These are Oil Handling Facilities, Legislated Ships and Ships as defined in *Part XV* of the *Canada Shipping Act.*

Oil Handling Facilities (OHF)

Operators of facilities that transfer oil to or from oil tankers over 150 gross registered tonnes or other vessels over 400 gross registered tonnes are required by the Canada Shipping Act (2001) to:

- Have an Oil Pollution Emergency Plan (OPEP) on site.
- Have a declaration conforming to the regulations on site.
- Take reasonable measures to implement their required oil pollution emergency plan in the event of an oil pollution incident.

- Have on site the resources required to contain a spill of oil equal to the facility's rated capability within one hour.
- Begin recovery/cleanup operations of oil equal to the facility's rated capability within 6 hours.
- Have an arrangement with a certified Response Organization (RO) that permits the handling of spills beyond the rated capabilities of the Oil Handling Facility.[1]

Legislated Ships

In Canadian waters, ships over 400 gross registered tonnes and oil tankers over 150 gross registered tonnes are required to have a Shipboard Oil Pollution Emergency Plan (SOPEP) and an arrangement with a certified Response Organization (RO) to respond to an oil pollution incident of an amount equivalent to the maximum amount of product that the vessel can carry as fuel and/or as cargo up to a maximum of 10,000 tonnes.[1]

Other ships as defined by Part XV of the Canada Shipping Act (CSA)

Any ship that is less than 400 GRT or any tanker less than 150 GRT is still covered by the *Canada Shipping Act (2001)* in that it must report the potential or actual pollution incident to a Pollution Response Officer, or in the case of an incident in Canadian Arctic Waters as defined by the Arctic Waters Pollution Prevention Act to a Pollution Prevention Officer. The ship must take immediate steps to mitigate or remedy the situation. These ships are not required to have a Shipboard Oil Pollution Emergency Plan nor an arrangement with a certified Response Organization.

3.7 External Resources

There are two main categories of external resources that the Canadian Coast Guard (CCG) will engage. These are the Response Organizations certified by Transport Canada under the *Canada Shipping Act (2001)* and other contractors.

Response Organizations (ROs)

Response Organizations are privately established pollution response companies certified by Transport Canada. These companies hold a certificate of designation to handle oil spills of up to 10,000 tonnes (T). Response Organizations can provide the polluter or any lead agency with the resources, trained personnel and operational management structure to deal with a marine oil pollution incident within its identified Geographical Area of Response (GAR).

The Eastern Canada Response Corporation (ECRC) is the only certified response organization in Central & Arctic Region. The company is certified to ten thousand tonnes (10 000T) and two of its three regions cover Central & Arctic Region.

[1] There is no requirement for an Oil Handling Facility nor a Legislated Ship to have an arrangement with a Response Organization certified by Transport Canada in Canadian waters north of 60° North Latitude

1) ECRC Great Lakes Region is managed from the Response Centre in Corunna, Ontario. Its area of coverage includes all waters
   - south of 60 degrees north in the provinces of Alberta, Saskatchewan, Manitoba and Ontario to that portion of the St. Lawrence River in the Province of Ontario
   - to a line drawn between Butternut Bay (Latitude 44 31' 12" north and Longitude 75 46' 54" west) on the Canadian side
   - to Oak Point (Latitude 44 30' 48" north and Longitude 75 45' 20" west) on the US side of the St. Lawrence River.

2) ECRC Quebec Region (also known as Societé d'Intervention Maritime Est du Canada - SIMEC) is managed from the Response Centre in Quebec City, Quebec and has staffed Response Centres in Verchères, Quebec and in Sept-Iles, Quebec. Their coverage includes:
   - James Bay, Ungava Bay and in Hudson Bay south of the sixtieth parallel North and that portion of the St. Lawrence River in the Province of Ontario
   - to a line drawn between Butternut Bay (Latitude 44 31' 12" North and Longitude 75 46' 54" West) on the Canadian side to Oak Point (Latitude 44 30' 48" north and Longitude 75 45' 20" West) on the US side of the St. Lawrence River.

There are no certified response organizations established north of 60° N latitude.

Although resources from the Response Organizations in the south may be made available for use north of 60°, they must obtain the necessary approvals to move equipment from their designated area of response.

Contractors

Private sector contractors may be engaged by the CCG as required. All standard government contracting rules apply.

Section 4 – PREPAREDNESS

4.1 Overview

Oil spill preparedness is defined by the advanced planning used to create systems to effectively and efficiently combat the range of spills likely to be encountered.

In Central and Arctic Region, preparedness involves:

- The development of regional procedures to be followed in the event of an incident, coordinated by the Planning section.
- The implementation, training and maintenance of the Response Management System (RMS) to manage and combat the incident.
- The identification of priorities, development of strategies, logistics and tactics necessary to fulfill those priorities, lead by the Planning section.
- The liaising with internal and external partners, clients and resources that may be involved in pollution response activities, lead by the Planning section.
- The training and continued maintenance and upgrading of skills, coordinated through the Training specialist.
- The exercising and quality assurance activities required to continuously reinforce the training and contingency planning activities, facilitated through the Exercise specialist.
- The asset management including the acquisition, lifecycle maintenance, operational readiness and storage of equipment lead by the Operations section and Inventory specialist.
- The integration of other Canadian Coast Guard Assets and Human Resources, when necessary, through the Training and Exercising processes.

The Memorandum of Understanding (MOU) between the Director General/Maritime Services (MS) and the Director General/Integrated Technical Support (ITS) of the Canadian Coast Guard (March 2004) specifies that the ITS Directorate will be the single CCG focus for the life cycle management of all CCG physical assets and for the development of all technical solutions. It is unknown when ITS will assume the services of design, procurement, in-service support and disposal of all equipment and systems required to satisfy ER's mandate. In the interim, ER will remain the focal point.

4.2 Response Management System (RMS)

The Canadian Coast Guard uses the Response Management System (RMS) as its emergency management system. It is based on, and operates under the same principles as the Incident Command System (ICS) which was developed in the U.S. to coordinate multi-agency responses to large forest fires. The system was adjusted to reflect the current marine oil spill response regime and Canadian law. The Canadian Coast Guard does not implement the ICS principle of unified command, but will participate in any command structure used by the Polluter or Other Lead Agency.

The RMS uses a “management by objectives” approach. It outlines the roles and responsibilities of individual positions, identifies the reporting structure, establishes a common set of terminology and uses standardized forms and paperwork. The central document in the RMS process is the Incident Action Plan, which documents the existing conditions and outlines objectives and strategies for recovery and response.

The system structure is designed to expand or contract to best fit the specific circumstances of the incident. Not all positions within the system will be staffed for every incident; in those cases the supervising position shall be responsible for all subordinate tasks/roles. Regional staff members have been designated as members of the Regional Response Team and may be called upon to fill specified roles in this management system (see Figure 4.1 for a fully expanded system design).

The system also contains management tools that can be used by the On Scene Commander and response personnel to better manage the system and the spill incident. These tools include a field operations guidebook, forms, reports, established meeting schedules and agendas. The RMS will also be used by the Federal Monitoring Officer and their Incident Monitoring Team while monitoring the Polluter’s response to an incident.

The detailed RMS process is contained in a separate document referenced in Section 9.1 of this plan (Response Management Systems User’s Guide, Version 3.0 (May 2006)).

Figure 4.1 - CCG RMS Command Structure

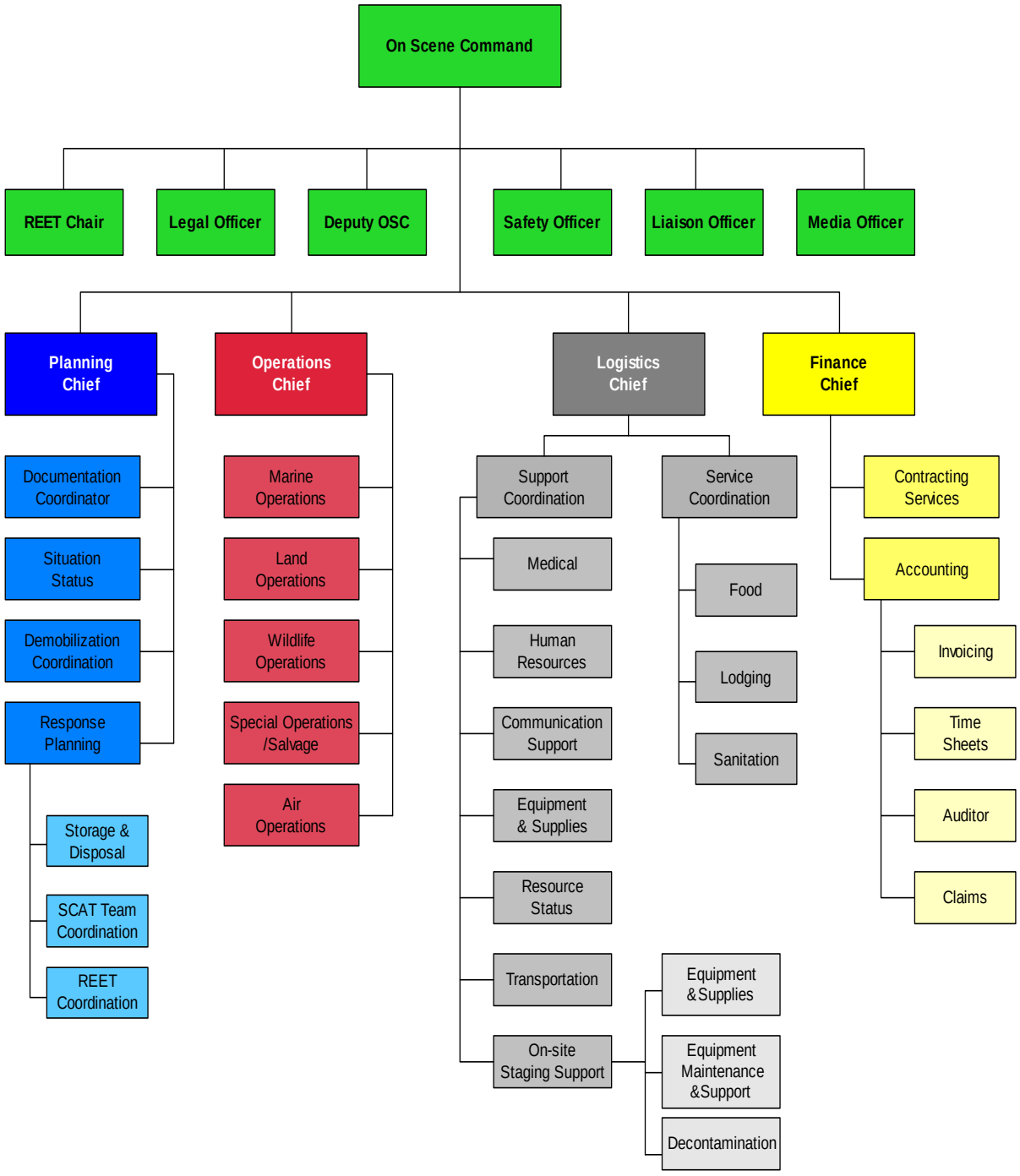

4.3 Planning

Area Plans

To facilitate an effective and efficient response, Canadian Coast Guard administers 16 area plans as an annex to the Central & Arctic Regional Response Plan. They are Keewatin, Baffin, Beaufort Sea & Amundsen Gulf, Great Slave Lake, Hudson & James Bay, Kitikmeot, Mackenzie River & Delta, Inland Waters S of 60, Lake Erie, Lake Huron, Lake of the Woods, Lake Ontario, Lake Superior, St. Lawrence, St. Mary's and St. Clair & Detroit areas. These plans incorporate detailed response information for specific manageable geographic areas or response communities. The normal operating period for an area plan is the first 12-24 hours of a spill response.

They are developed and maintained as follows:

1) Risk Analysis
   The risk analysis determines which communities or areas are most likely to be endangered by a potential oil spill and why, their associated environmental sensitivities, plus the typical type of spill that could be expected. When considering the environmental sensitivities, the focus is on what is most likely to be impacted and to consider as many factors as are applicable. A single factor discovered in the risk assessment is just one of many layers in the decision to make a site a priority.

2) Priority Identification/Verification
   Current priorities are discussed with members of the Regional Environmental Emergencies Team (REET) at planning meetings. It provides the opportunity for additions, deletions or modifications. Where there are no REET meetings held, community consultations are organized by the Planning section.

3) Strategy and Tactics Development
   Canadian Coast Guard determines RMS objectives for the agreed upon priorities. Strategies are designed, that name the activities relative to those objectives. Those activities may be response actions to be implemented, or may be the type of resources that could be affected by the spill. For area plan development, tactics provide the detail for implementing the selected strategies. Tactics then specify the resources, both human and equipment, to facilitate, to install or to maintain the strategy.

4) Updating
   Area plans are reviewed and updated annually.

Regional Procedure Development

Regional procedures for notification, verification, activation and cost recovery of a response are all described in the *Central & Arctic Regional Response Plan* of the *Canadian Coast Guard National Response Plan*. Supporting documentation in the

form of Standard Operating Procedures and supplementary plans (e.g. Health & Safety Plan and Media Relations Plan) are not included in the Regional Response Plan but are referenced in Section 9.

Liaison with External and Internal Partners, Clients and Resources

To ensure that all partners, clients and resources are aware of the Canadian Coast Guard's mandate and responsibilities as they pertain to pollution preparedness and response, the Environmental Response Planning Section takes the initiative to:

- Work with Internal Partners within Fisheries & Oceans to communicate the branch's needs in the event of a pollution incident.

  Exception: Coordination of the Duty Officer (DO) function between Environmental Response (ER) and the Regional Operations Centre (ROC) is coordinated by the Regional Emergency Operations Officer REOO).
- Work with other government departments that have a mandate for pollution response within their jurisdiction to communicate the role that Canadian Coast Guard plays in marine and freshwater pollution incidents and to share what resources Canadian Coast Guard maintains for pollution response activities and the mechanism to access these resources in the event that another Lead Agency may require them for a non-CCG mandated spill or other type of emergency.
- Liaise with potential clients (oil handling facilities, shipping companies and other operators) so that CCG expectations in the event of an incident are understood.
- Provide copies of area plans to CCG vessels that are relevant to their area of operations. CCG ER will brief Operations at the pre and post season conferences on any changes to the plans and/or to the captain and/or crew's responsibilities.
- Maintain a network of contractors that can provide services to Canadian Coast Guard in the event of a pollution incident that exceeds the resource capability of the region.
- Upon request of the Regional Advisory Councils (RACs) or Secretariat (Transport Canada) on Marine Oil Spill Response, provide information on Central & Arctic Region's preparedness and spill response activities.

Arctic Community Emergency Plans

The Canadian Coast Guard is committed to assisting Arctic communities in the development of the marine pollution component of their Community Emergency Plans. This commitment was made in 1999 when the CCG Arctic Response Strategy (ARS) was published. The Arctic Response Strategy has since been re-assessed and viable components have been incorporated into the text of this Plan.

4.4 Training Program and Curriculum

Introduction

The Training Curriculum of the Environmental Response Branch is focused on providing the necessary skills and knowledge for responders to function effectively during a spill response operation. As the competencies required for an effective spill response are described and organized within the Response Management System (RMS), so too can the training curriculum be described in the context of RMS.

With RMS as the framework for spill response, all response team members will be trained in theory and application of RMS. The level of training complexity will vary by level of individual responsibility, but all members will have fundamental knowledge of the structure and processes that drive the RMS.

In addition to the training curriculum described in this section, it is understood that there are competencies and certifications required that are not specific to ER or spill response. These would include driver's licenses, radio operator's licenses, and familiarity with basic electronic equipment such as phones, fax machines, cell phones and laptop computers.

Training Curriculum

Command Staff

During a spill response operation, the command staff will vary depending on the size and complexity of the spill.
On a smaller spill, senior ER staff members may be appointed to command positions with few subordinate or supporting positions.
On larger scale spills, the OSC may be the Director of Maritime Services, or Assistant Commissioner Canadian Coast Guard, with multiple support positions from ER staff, CG fleet, base personnel and contractors.

To adequately prepare personnel for the management functions of spill response, the following curriculum has been identified:

On Scene Command Course (OSC)
This course trains participants in all aspects of spill response including planning, implementation, and supervision. Other topics include legislation, legal issues, financial responsibilities, and media relations. Prerequisites include BOSRC, MSROC, PPO designation, media relations and management training.

Response Management System Course (RMS)
The current RMS curriculum is an introductory two-day course on the system and its user's guide. It is anticipated that future development will include multiple levels of training which will include organizational structure and

responsibilities, as well as in-depth requirements of each position within this emergency management structure.

Federal Monitoring Course (FMO) - Proposed
Subject to national development, this course will augment the On Scene Command Course to provide those persons designated as Canadian Coast Guard Federal Monitoring Officers the necessary skills and knowledge to perform FMO duties.

Operations Section

During a spill response operation, the operations section of the RMS may be populated by regional ER staff, CCG fleet officers and crew, CCG/DFO base personnel or contractors. The resident knowledge of this group will vary, and a comprehensive ER training program exists to train responders in spill response operations. Training for members of the CCG Regional Response Team (RRT) personnel is offered in the following three areas:

(a) Safety Training
(b) Operational Training
(c) Specialty Training

(a) Safety Training

Health and Safety training is required to ensure compliance with federal and provincial legislation with the ultimate goal of ensuring the health and safety of response personnel. Additional video and printed reference material is available through the Canadian Coast Guard ER Training Officer.

Site Safety Course
The Site Safety Course is designed for response personnel prior to commencing work on a response site. Topics include employer and employee responsibilities, classification and hazards of petroleum products, and the safety practices and considerations associated with both water-based and shore-based operations. Site safety training is mandatory for Regional Response Team members and all volunteers or short time workers who may be employed during a response.

Workplace Hazardous Materials Information System (WHMIS)
This 3-hour course is provided to Canadian Coast Guard employees to ensure compliance with appropriate worker safety legislation. It was developed to ensure workers have the necessary information to work safely with hazardous materials in their workplace.

First Aid/CPR
This 16 hour course provides the participants with the skills and knowledge to successfully obtain the St. John Ambulance Standard First Aid Certificate. The primary focus of this 14-hour course is to provide adequate knowledge

and level of skill to persons in positions of responsibility to provide for persons suffering from respiratory and circulatory arrest. Preventative measures are discussed.

Small Non-Pleasure Vessel Basic Safety Course - MED A3
The 8-hour MED A3 course is *required by regulation* for crewmembers of small non-pleasure vessels of not more than 150 GT operating not more than 20 miles offshore. Topics include marine hazards and emergencies, marine firefighting, lifesaving appliances and abandonment and survival and rescue skills.

Transportation of Dangerous Goods (TDG)
This 6-hour course provides personnel with the responsibility for the transportation of dangerous goods to be aware of and comply with safety measures and appropriate legislation concerning TDG.

(b) Operational Training
There are various levels of oil spill response courses designed for response team members, ships crews and other responders who may be expected to assist with marine oil spill response. Operational training related to the assessment and response to petroleum spills is delivered by ER while training for response to hazardous and noxious materials spills is obtained outside of the Branch.

First Responder Oil Spill Training (FROST)
This 1 day course is designed specifically for CCG personnel in Central & Arctic Region who are designated custodians of First Response Units (FRUs), and may be tasked with deployment of the pollution countermeasures equipment. It has also been adapted for use in communities north of 60° where Arctic Community packs function as first response units.
It teaches First Responders to:

- assess an oil spill according to its extent, possible source and likely behavior
- deploy boom for containment and protection purposes and in support of response activities
- work safely at the spill site

Basic Oil Spill Response Course (BOSRC)
This 20 hour course instructs First Responders how to:

- assess an oil spill according to its extent, possible source and likely behavior
- deploy boom for containment and protection purposes and in support of response activities
- operate oil recovery equipment
- undertake basic shoreline cleanup operations
- work safely at the spill site

Marine Spill Response Operations Course (MSROC)
This 40-hour course will enable trained and experienced personnel to coordinate and supervise the response operations of a marine oil spill. It is intended to train individuals to be On Scene Commander (OSC) for small (tier 1) spills, or operations section chief on larger spills. Topics include legislative framework, safety, equipment suites and strategies, media relations, RMS, shoreline assessment and cleanup techniques, and disposal. Prerequisites include BOSRC, a Radio Operator License and current or future deployment to a spill response team.

Environmental Response Duty Officer (ERDO) Training
This 15 hour course is a prerequisite for duty officers for the ER branch and the regional operations centre. It introduces the participant to CCG mandate, lead agency responsibilities and introductory spill assessment techniques. It also integrates delivery of training on the Marine Pollution Incident Reporting System (MPIRS), the database used to capture spill report and response information.

Pollution Response Officer (PRO) Training
This three day course is currently provided by the Environmental Response Branch of the Canadian Coast Guard and is required training for all Environmental Response personnel. Participants who successfully complete this course earn the designation of Pollution Response Officer under Part 8 of the Canada Shipping Act (2001). This course examines the powers of a PRO, specific procedures related to vessel directions and detentions and the legal framework and implications surrounding the execution of those powers. Course participants also learn sampling procedures and gain an understanding of the role of other government agencies involved in a marine pollution incident.

Pollution Prevention Officer (PPO) Training
This 40 hour course is currently provided by the Marine Safety Branch of Transport Canada. It is a prerequisite for any officer of the Canadian Coast Guard to be delegated Pollution Prevention Officer (PPO) powers under the *Arctic Waters Pollution Prevention Act*. Participants learn the existing pollution prevention and response regime, the powers of a PPO and the specific tasks of prevention, control, investigation and prosecution.

Small Vessel Operator Proficiency
This 21-hour course meets the training needs of the small vessel master. This course is required by regulation (for vessels less than 5GT on sheltered and near coastal voyages) and teaches participants to effectively manage safety of those on board, protect the vessel from damage and protect the marine environment.

Basic Barge Operator Training
This course was developed and is delivered by regional ER staff. Through both classroom and practical sessions, the course introduces participants to safe boating practices and procedures, rules of the road, collision regulations, load plans for pollution response vessels, safe deployment of oil spill response equipment and basic trailer towing and maneuvering.

Single Side Sweep System
The single side sweep is an equipment suite designed to allow one vessel to perform oil containment and recovery, and allow for temporary storage. This two day training session is provided to some ER staff and crews of Canadian Coast Guard vessels that can support this equipment. This training typically is conducted with crews who have previously completed BOSRC.

HAZMAT Awareness
This 6-hour course is intended for First Responders on the scene of a hazardous materials incident and shows how to assess the incident. Topics include; First Responder's role and responsibilities, scene safety, recognizing and identifying hazardous materials, incident management, and sources of assistance.

HAZMAT Technicians Level
This 40-hour course is designed for responders to releases or potential releases of hazardous substances. The focus is on recognizing and evaluating a hazardous materials incident, organizing the response team, protecting response personnel, identifying and using response resources, implementing basic control measures, decision-making, and protecting the public and environment. Emphasis is on hands-on use of equipment practically applying lecture information through exercises. Participants will wear fully encapsulating suits.
Prerequisite: Hazmat Awareness.

(c) Specialty Training
Specialty training includes training that only select members of the Regional Response Team (RRT) will have to apply.

Shoreline Clean up and Assessment (SCAT)
This 24-hour course covers how oil impacts the shoreline. Specific topics include shoreline types and effects of oil, wind, waves and ice on shorelines. Shoreline protection and cleanup methods are described in depth. Field exercises are conducted as part of the training.

Media Training
This 16-hour course is designed to provide participants with the skills and knowledge to communicate effectively and proficiently with various forms of media. Topics include; developing and disseminating incident information to

news media, incident personnel, other appropriate agencies and organizations.

Communications System Training
This 8 hours hands-on course provides participants with the knowledge and skills to provide communications in support of a spill response. Topics include; mobile telephone, fax, and intercom set up, preparing communication plans, and internal/external spill response communications.

Wildlife Rehabilitation
The capture and treatment of oiled wildlife is typically assigned to the trained experts at Canadian Wildlife Service (CWS). This CWS training is periodically made available to outside agencies, and some ER staff may participate to facilitate a better understanding of each others' role at the time of a spill.

Financial Management
This training is provided by the Public Service Commission (PSC) and teaches government spending and cost accounting principles. It is imperative that any response team member who may have to purchase assets or manage contracts be familiar with these practices and procedures.

Planning Section
During a spill response operation, the planning section of the RMS will likely be populated with ER staff whose substantive positions are as Planning Officers within the branch. Therefore, the planning skills and training required to effectively and efficiently perform these tasks should be resident within our branch staff.

Should additional personnel be required to fulfill these roles, they would require training in RMS, as well as Site Safety (as required by OSH regulation). The required planning skills and spill response knowledge may be acquired through various training or experience factors, and would be assessed prior to assignment on the response team. In addition to planning skills, preferred training might include SCAT, FROST and/or BOSRC, and MSROC.

Logistics Section
During a spill response operation, the logistics section of the RMS will likely be populated with ER staff whose substantive position involves the tracking of spill response equipment inventory and human resources within the region. Therefore, the skills and training required to efficiently and effectively perform the logistics function should be resident within our regional ER staff.

Should additional personnel be required to fulfill these roles, they would require training in RMS, as well as Site Safety (as required by OSH regulation). The required logistical skills may be acquired through various training or experience factors (knowledge of IRCMS and TMA, BOSRC training) and would be assessed prior to assignment on the response team.

Finance Section
During a spill response operation, the finance section of the RMS will likely be populated by regional finance staff whose substantive positions involve government expenditure and cost accounting knowledge and application. Therefore, the skills and knowledge required to effectively and efficiently perform the finance function should be resident within regional Canadian Coast Guard staff. These personnel will require RMS and Site Safety training prior to deployment on a spill response team.

Training Records
Records for personnel trained in spill response and/or emergency management are maintained by the Region.

4.5 Exercise Program

Introduction
Under the guidelines of the National Exercise Program (NEP), the Environmental Response Branch will implement a Regional Exercise Program. This program will be conducted over a three-year cycle. Coordination of the program will be the responsibility of the Regional Exercise Officer (RXO) of the Environmental Response Branch. Exercises will be designed and conducted in coordination with departmental staff, CCG base staff and CCG vessels on a regular basis. The purpose of the Regional Exercise Program is to validate environmental response training and regional emergency preparedness standards, policies and procedures.

Canadian Coast Guard will, through regional and area-specific exercising, ensure high priority initiatives such as exercising complex equipment (i.e. Lori Brush skimmers, sweep systems and command/communications facilities) are undertaken and will use industry and private sources of personnel where possible and/or appropriate.

Exercise Planning Matrix
The matrix below represents a typical three year exercising cycle followed by Canadian Coast Guard. The program cycle is designed to test all 17-response functions as outlined under NEP as well as including the different types of exercises. It includes internal, external (with other government departments as well as private sector organizations) and international exercises.

Table 4.1 *- Central & Arctic Region Exercise Matrix*

EXERCISE TYPE	YEAR1	YEAR2	YEAR3
Notification	**Quarterly**	**Quarterly**	**Quarterly**
Management	**2**	**2**	**2**
Operational drills	**3**	**3**	**3**
Combined Functional	**1**	**1**	**1**
Full Scale	**0**	**1**	**0**

Notification exercises will test the regional call-out system. Some of these exercises will be internal to the branch, some will be a full regional call-out to all CCG and DFO staff as well as to external resources (eg: freight contractors to check their availability to move Marine Emergency Response Trailers (MERTs) or First Response Units (FRUs).

Management exercises will focus on the development of the spill through the Response Management System (RMS).

Operational Drills will focus on equipment deployments in packages (i.e. a First Response Unit, NOFI V-Sweep).

Combined Functional exercises will be an equipment deployment (operational drill) with the goal of implementing a tactic designed in one of the Region's Area Plan Annexes.

A *Full Scale* exercise will incorporate a management-type exercise with the concurrent deployment of a spill countermeasure system (system = pollution containment, recovery, primary and secondary storage devices)

Exercising Partnership

Canadian Coast Guard will endeavor to participate, by request and on a situation by situation basis, in exercises lead by Oil Handling Facilities (OHFs), certified Response Organizations (ROs) and other government agencies throughout the Region.

Central and Arctic Region is a part of the Canadian Coast Guard response community and as such is also part of the International Response Community. Canadian Coast Guard's regional boundaries are in such close proximity with our United States neighboring response communities that joint exercising is a high priority. Specifically this region conducts joint exercises in the geographic areas of the Great Lakes and the Beaufort Sea with the United States Coast Guard's (USCG) (9th) ninth (Great Lakes) and (17th) seventeenth (Alaska) districts, respectively.

Exercise Evaluation and Shared Learnings

An important part of the National Exercise Program is the evaluation and use of subsequent findings. Four types of information can be learned from an exercise, all of which lead to improvement of overall response capability.

1) Contingency planning
2) Response techniques
3) Response training
4) Exercise program development

The primary sources of the information and learning will be the formal exercise evaluation report that is produced for every exercise by the evaluation team. This formal exercise report will follow the format laid out in Section 11 of the *Canadian Coast Guard National Exercise Program Planning and Evaluation Guide*.

4.6 Inventory Management, Maintenance and Infrastructure

Inventory Response Control Management System

To ensure that a nationally consistent and effective state of preparedness is maintained, an Inventory Response Control & Management System (IRCMS) has been implemented which utilizes The Management Authority database as its main tool. CCG HQ administers this system in concert with regional IRCMS Officers. In this region the program is administered by the Logistics and Statistics Officer in the Operations Section.

This system has been developed to:

- Maintain a real time record of the location and quantity of resources;
- Maintain a proper state of readiness through a pro-active approach using work orders and preventative maintenance;
- Assist in keeping response managers informed about Environmental Response's state of preparedness;
- Assist in the tracking of National Response Team personnel or equipment assigned to National or International incidents

Pre-positioned Equipment Caches and Depots

Central and Arctic Region covers an extremely large geographical and culturally diverse portion of Canada. There are, in essence, two zones of operation which are entrenched in the *Canada Shipping Act*. These are:

- the Arctic Zone, or all areas of Canadian jurisdiction north of 60^0 North Latitude; and
- the Central Zone, dominated in a marine transportation sense by the Great Lakes, but which include the southern portions of Hudson and James Bay, along with the major waterways and watersheds of Lake Winnipeg, Winnipegosis, Lake of the Woods, and Lake Athabasca.

The Environmental Response (ER) Branch has pre-positioned equipment to facilitate and maintain an effective response operation. Response strategies in each of the two zones (Central or Arctic) are based upon identification of local and regional response. This is means that the equipment generally required for such a spill size is contained within the Region. This capacity is supplemented by nationally available resources, which would be "cascaded" from/to other regions when and if required. Preparedness capacities in other regions are identified in their respective Regional Response Plans.

Arctic Zone

Arctic Community Packs (ACPs) are placed in northern communities for rapid (local) initial response. Canadian Coast Guard provides initial response training to members of the communities so that they may effectively deploy equipment in the ACPs in the event of a spill. Access (keys) for the ACPs have been given to an official in each community in most cases. The Senior Response Officer (ER-Hay River) maintains the current key holder listing.

The inventory for each Canadian Coast Guard Arctic Community Pack location is listed in Table 4-2. The program has received funding under the Health of the Oceans Initiative to proceed with placing Arctic Community Packs in additional sites. The equipment profiles at the existing Arctic Community Pack sites will be changed to reflect characteristics of the community. The inventory at all communities will be "site specific" and will coincide with response strategies designed by the ER planning group. The locations for the proposed additional Arctic Community Packs are: Baker Lake, Broughton Island (Qikiqtarjuaq), Chesterfield Inlet, Churchill, Hall Beach, Kimmirut, Iqaluit, Pangnirtung, Tuktoyaktuk and Yellowknife.

The main base of operations with Environmental Response dedicated personnel is located in Hay River, Northwest Territories. This base is home to a Rapid Air Transportable (RAT) cache of equipment known as the "RAT150". The RAT150T used in conjunction with the "Delta" (Δ) 1000T meets planning standards for a 1000 tonne (T) response. The selection of equipment for the RAT150 must meet pumping rates / capacities of 1000T thresholds and be complimentary[2] to the equipment held in the Δ1000T depots.

The response package, warehoused in Hay River, will be maintained in 100% readiness during the shipping season. The equipment will be broken down and be containerized such that it will fit through the smallest cargo door of any of the selected aircraft. Equipment will be TDG compliant, be palletized as appropriate, and labelled for ease of selection and loading.

[2] The logistics of moving large bulky items (ISO containers) in the arctic necessitates a LCM, deck barge, cargo vessel, icebreakers or any combination thereof. Consequently it is estimated that the 1000T design capacity would be available staged on-scene in 5 - 7 days. Following the doctrine *something sooner rather than everything later* having 150T of the 1000T equipment suite air-lifted within 48 hours is preferable to having nothing until the entire 1000T capacity arrives a week later.

Table 4-2 *- Canadian Coast Guard Arctic Community Pack Locations*

LOCATION	EQUIPMENT SUMMARY			
	Boom (24")	**Skimmers**	**Boats**	**Storage**
Arctic Bay (Ikpiarjuk)	3,650'	TDS-118	16' Aluminum	Open top Tank
Cambridge Bay (Ikaluktutiak)	1,350'	TDS-118	16' Aluminum	Open top Tank
Cape Dorset (Kinngait)	1500'	TDS-118	16' Aluminum	Open top Tank
Clyde River (Kangiqtugaapik)	4,500'	TDS-118	16' Aluminum	Open top Tank
Coppermine (Kugluktuk)	1,350'	TDS-118	16' Aluminum	Open top Tank
Coral Harbour (Salliq)	1,500'	TDS-118	16' Aluminum	Open top Tank
Gjoa Haven (Uqsuqtuuq)	1,350'	TDS-118	16' Aluminum	Open top Tank
Holman (Ulukhaktok)	1,500'	TDS-118	16' Aluminum	Open top Tank
Rankin Inlet (Kangiqsiniq)	2,200'	TDS-118	16' Aluminum	Open top Tank
Resolute (Qausuittuq)	1,350'	TDS-118	16' Aluminum	Open top Tank
Hay River FRU +	1,000'	-	37' Seatruck 42' Cutter	-

In combination with the RAT150T, equipment found in the ∆1000T depots will be at a 1000T capacity. Hence, the delta or "∆" is the difference between the RAT150T and a full 1000T. The ∆1000T depots will have containerized heavier equipment (not suitable for air transport to smaller communities) augmenting the RAT150T to a 1000T capacity, ready to be loaded on deck barge, Canadian Coast Guard icebreaker or freighter. While response personnel cascade in to the spill site pre-identified local, CCG base and available ER personnel will mobilize to the centres and load the equipment on suitable marine transport.

Three ∆1000T depots are strategically located in the northern communities of Tuktoyaktuk (NorthWest Territories), Iqaluit (Nunavut), and in Churchill (Manitoba). For the purposes of response in Central & Arctic Region, Churchill is included in the Arctic Zone of operations despite it being south of 60° North Latitude due to the similarities in response characteristics that it shares with locations north of 60° North Latitude.

Table 4-3 *- Canadian Coast Guard Arctic Design Inventory*[3]

PCM equipment	Description	Hay River RAT150T	Tuk Δ1000T	Iqaluit Δ1000T	Churchill Δ1000T
Skimmers	Light to medium product /disk type	3	1	1	1
	Heavy product /weir type	0	2	2	2
Boom	24" river type	0	10000'	10000'	10000'
	24" lay-flat type	5000'	0	0	0
Land storage	4T Open top tank	0	0	0	0
	8T Open top tank	7	3	3	3
	45T shore bladders	3	0	0	0
O/w storage	Total (in 5-25T Seaslugs)	50	250T	250T	250T
Pumps	2" low pres / volume style	4	1	1	1
	4" trash	5	1	1	1
	3" positive displacement	6	1	1	1
Vessels	"Car-topper" + 9.9hp	0	0	0	0
	Seatruck	0	2	2	2
	RAT RHI	2	0	0	0
Generators	5KW gas	7	2	2	2
Pressure washer	Larger hot water type	1	1	1	1
	Small cold water type	3	1	1	1
Incinerator	Sorbent	2	0	0	0
	Liquid waste	2	0	0	0

Central Zone

The Central zone is dominated by the Great Lakes and has well defined road transportation infrastructure.

Local / first response inventories have been established at all regional Canadian Coast Guard shore-side facilities that have fleet assets or a significant number of program vessels and that have operational personnel to deploy the equipment. Standardized inventory consists of a 20-24' trailer with a 1000' (nominal) of 24" boom and related accessories.

The 2500T Rapid Road Transportable cache is centred around the St. Mary's River and from time to time in major CCG facilities in Ontario. The response package warehoused in a series of 45' transport trailers will be maintained in 100% readiness during the shipping season. The primary purpose of the RRT 2500T system is significant containment of resources; shoreline, sheltered, and off-shore sweep and recovery ability; and staging and storage transfer area equipment.

[3] Inventories in Tuktoyaktuk and Iqaluit are at 95% completion. The Churchill Depot is at about 50% (pending the construction of a new and adequate facility) with the bulk of the inventory in storage at the Thundar Bay Coast Guard base. The RAT 150 needs an evaluation of the command and control component as well as storage for the second Saccke burner.

Table 4-4 *Canadian Coast Guard RRT 2500T Design Inventory*

PCM equipment	Description	BOOMERT #1-5 (each)	SKIMMERT #1 and #2[4]	Softside
Skimmers	Light to medium product/ disk type	-	3	
	Heavy product/ weir type	-	1	1
Boom	24" river type	4000'		
Sweep	36" Nofi V-sweep	-		1
Land storage	4T Open top tank	-	7	1
O/w storage	25T Towable bladders	-	4	4
Pumps	3" positive displacement	-	4	1
Generators	5KW gas	-	2	

Table 4-5 *Canadian Coast Guard locations for First Response Units (FRUs)*

Location	Relevant Area Plan(s)	Primary custodian	Secondary custodian
Amherstburg	Lake Erie/St. Clair-Detroit	SAR crew	ITS field services
Cobourg	Lake Ontario	SAR crew	
Gimli	Lake Winnipeg	SAR crew	
Goderich	Lake Huron	SAR crew	
Kenora	Lake of the Woods	ITS field services	
Kingston	Lake Ontario	SAR crew	
Meaford	Lake Huron	SAR crew	
Parry Sound	Lake Huron	ER personnel	ITS field services
Port Dover	Lake Erie	SAR crew	
Port Weller	Lake Ontario	SAR crew	
Prescott	St. Lawrence River	ER personnel	ITS field services
Selkirk	Lake Winnipeg	ITS field services	
Thunder Bay	Lake Superior	SAR crew	ITS field services
Tobermory	Lake Huron	SAR crew	
Hay River	Mackenzie River & Delta	ER personnel	ITS field services

[4] An additional SkimMERT is being added this year to accommodate additional hoses. The exact configuration of each SKIMMERT is not known yet so the inventories will remain listed together for this year.

Section 5 - RESPONSE OPERATIONS

5.1 Pattern of Response

Based upon the principles outlined in the *National Response Plan*, *(Sections 1.3, 1.5 & 4.4),* Central and Arctic Region assesses, notifies relevant parties, and initiates the tasking/deployment of necessary resources. This is based upon the determination of CCG's role as Lead or Resource Agency and the appropriate CCG Posture. The Duty Officer (DO) is tasked with this initial assessment, which is then verified by the Superintendent, Environmental Response. The appropriate response is activated by the Superintendent who in turn assigns an On-scene Commander (OSC) or Federal Monitoring Officer (FMO) and notifies Canadian Coast Guard (CCG) Management. Upon termination of the incident cost recovery actions are undertaken. To illustrate the generic process see Figure 5-1-Typical Sequence of Events and Table 5-1-Typical Functions Descriptions has been provided.

CCG Expectations of Ships for Response

In most instances when a spill occurs the initial report will trigger the mobilization of local response organizations. It is not normally practical for ship personnel to be directly involved in the clean up activities.

Small Spills

Ships are expected to take whatever actions listed in their Shipboard Oil Pollution Emergency Plan (SOPEP) that are reasonable and necessary to prevent the oil from escaping over the side and having done so, to take action to clean-up the oil contained on deck. Spilled oil should not be washed overboard, nor should degreasers or dispersants be used on spilled oil in the water. Once the oil is in the water, the ship's ability to respond in a practical manner is greatly reduced. It is Canadian Coast Guard's expectation that a response organization or other competent contractor be called upon to provide operational response capability at the discretion of the Polluter.

Where there is no availability of local response contractors or where there is a delay in response activation, the Master of the vessel should consider the use of available materials to contain and clean up the spilled oil by, for example, using ship-stocked absorbent material or utilizing mooring ropes or air filled hoses as makeshift booms.

Large Spills

The ship is restricted as to what action it can take to respond to a major spill. In the case of a casualty the safety of the ship and crew take priority. Therefore the ship's actions will be limited to reporting the incident details

to the appropriate authorities and to ensure that a response is initiated. In large spills it is Canadian Coast Guard's expectation that the Polluter appoint an On-Scene Commander (OSC) which may be a representative of the company that owns the ship or the ship's insurer.

Canadian Coast Guard needs to be kept informed as to the escalating response costs accrued by the Polluter during a response in order to prepare for the possibility that the Polluter will cease their response activities once their Limit of Liability is reached.

CCG expectations of Oil Handling Facilities (OHF) for Response

In most instances when a spill occurs, the initial report will trigger the mobilization of the facility response team. It is normal, in most cases, for the oil handling facility personnel to be the initial responders when a spill occurs.

Small Spills

For the purpose of this plan, a small spill will be defined based on the maximum oil transfer rate of the oil handling facility (i.e. what Level it is assigned under the *Canada Shipping Act, 2001),* which directly links to the minimum spill size to which it must be prepared to respond to within one hour. Oil handling facilities are required to have the resources on site to contain a spill of a minimum size within one hour and have the resources required to recover, or where the oil cannot be recovered the resources to control a spill of a minimum spill size within six hours. Response organizations may be called upon to provide additional operational response capability at the discretion of the Polluter.

Large Spills

For the purposes of this plan, any spill above the facility's minimum spill size will be characterized as a large spill. Oil handling facility personnel are still expected to deploy their on-site equipment. Response organizations will likely be called upon to provide additional operational response capability at the discretion of the Polluter.

***Figure 5-**1 - Pattern of Response – Typical Sequence of Events*

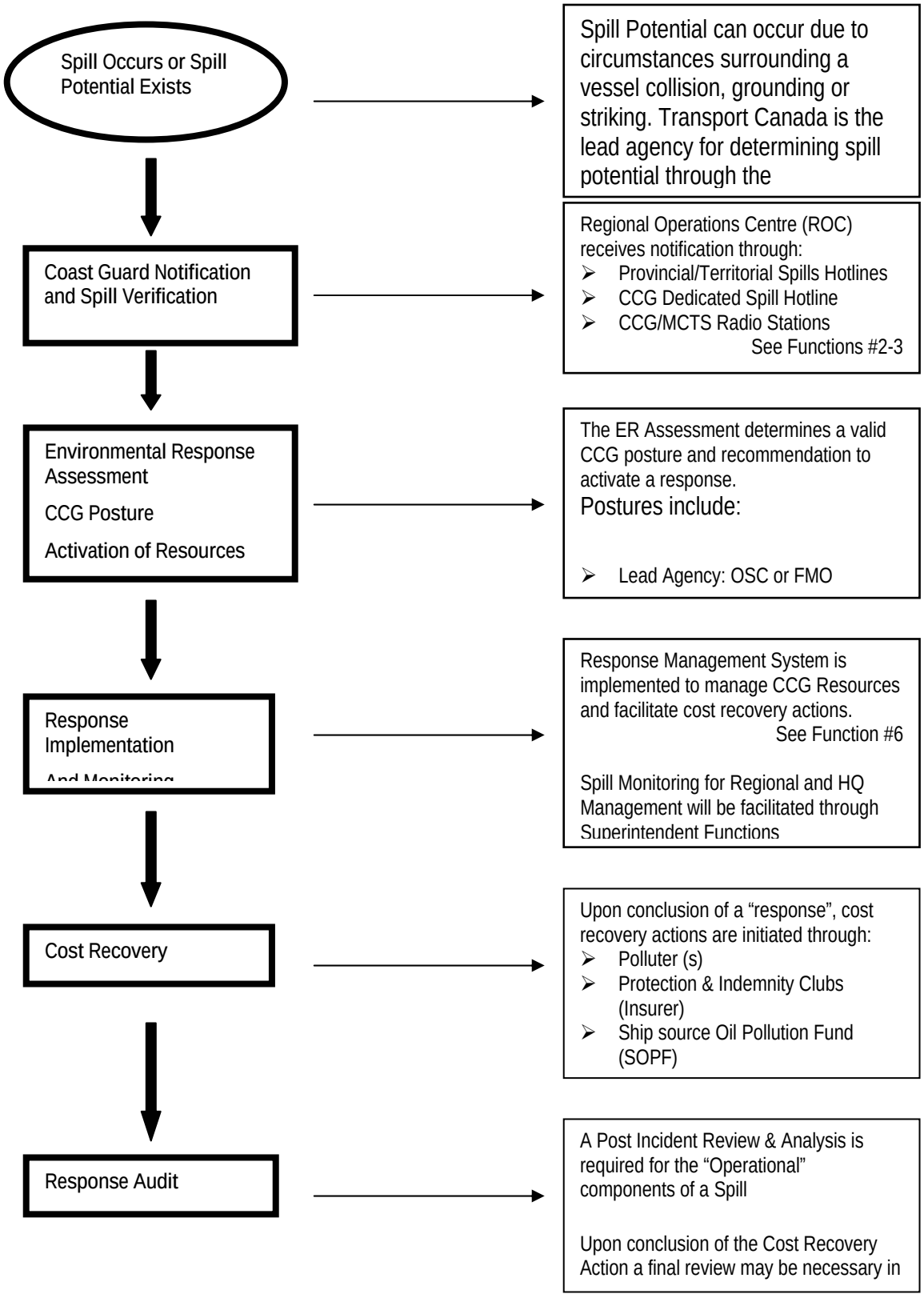

Table 5-1 *- Pattern of Response – Function Descriptions*

Function		***Description***
1	**Responsible Party/Third Party Functions** *(Spill occurs or sufficient potential risk exists)*	• Spill is sighted/reported. Spill reports originate from source (to regulatory body) or by third party (to various emergency or dedicated pollution hotlines) • Transport Canada is responsible for determining potential risk
2	**Spills Hotline Functions** *(Canadian Coast Guard Notification)*	• Assessment for dissemination • Dissemination (fan out according to applicable procedures) to relevant parties, calls from other spill hotlines are received by CCG-ROC.
3	**CCG-ROC Duty Officer Functions** *(Canadian Coast Guard Spill Verification)*	• Spill Assessment-pollution verification ➢ Mandate Confirmation ➢ Pollution Verification ➢ Source Credibility • Notification to ERDO • Dissemination • Initiation of MPIRS
4	**ER Duty Officer Functions** *(Environmental Response Assessment – CCG Posture)*	• Spill Assessment-response analysis • Source Control/Mitigation • Safety Issues • Tactical & Logistical Issues • Recommendation to Superintendent of likely Response Posture • Documentation – MPIRS
5	**Superintendent Functions** *(Environmental Response Assessment – Activation of CCG Resources)*	• Response Posture Evaluation ➢ Potential Risk to CCG Personnel and Equipment ➢ Propriety of request ➢ International Implications • Identification of OSC/FMO • Obtain an Order-In-Council (Arctic) • Obtain a Finance Code & Regional File Number • Notification of Senior Management and ongoing monitoring • MPIRS documentation • Obtain AC CCG sign off on MPIRS situation report
6	**OSC/FMO Functions** *(Response Implementation*	• Management or monitoring of response using the Response Management System (RMS). Escalation or de-escalation in accordance with needs of the incident. • Consolidation of all documentation upon conclusion of the response for Cost Recovery purposes. • Coordinate final debrief to facilitate future improvements to the systems and processes in place.
7	**Chief Financial Officer Function** *(Cost Recovery)*	• Utilizing CCG Ship-source and Marine Pollution Response Costing Principles and Documentation Standards (DFO 6332) compile pollution response costs recovery claim.

8.	**Internal** **Review Team Functions** *(Audit)*	• Utilizing the National Exercise Program Planning and Evaluation Guide, a Team is selected to complete the Post-Incident Review of an incident. • Improvements & corrective actions are to be documented

5.2 Spill Potential or Pollution Risk Assessment

Given an actual spill (i.e. pollutant in the water), the activities specified in this plan are rather obvious. However, in the event of vessel grounding, striking or collision that does not immediately result in a release, the responsibility for determining the risk of pollution rests with a Pollution Prevention Officer (PPO) within the Marine Safety (MS) branch of Transport Canada (TC). Should TC-MS be unable to make that determination, the Canadian Coast Guard (CCG), Environmental Response Duty Officer (ERDO) will complete that requirement. In some cases this may involve engaging a marine architect as no accredited expertise for vessel stability assessment resides within the ER section.

For all other areas where Canadian Coast Guard is the Lead Agency, this activity shall be considered the responsibility of the Canadian Coast Guard, Environmental Response Duty Officer.

5.3 Notification

To facilitate the notification of Canadian Coast Guard, and in addition to the existing Marine Communications system, a series of call-out or “Spill Hotline” agreements with the Province of Ontario, Nunavut and Northwest Territories and other Federal Departments within the Region have been implemented.

In addition, Central and Arctic Region, provides a 24 hr public access spills hotline:

24 hour toll free - Spills Hotline:
1-800-265-0237

Notification may occur through various mechanisms, depending upon the manner in which the spill (incident) occurs.

5.4 Verification

In all cases, spill information is initially processed and verified through the Regional Operations Centre (ROC) located in Sarnia, Ontario (See Section 3.3 – Organization). The ROC Officer on duty:

1. Determines whether the pollution is within Canadian Coast Guard’s mandate as Lead Agency or as a potential Resource Agency
2. Establishes the credibility of the source

3. Identifies the following:
    - Incident name (nature of incident)
    - Time of call (local / UTC)
    - Time of spill (local/UTC) *(if available)*
    - Reported by / call back particulars
    - Source determination
    - Incident background and description of clean-up activities (if any)
    - On-scene environmental/atmospheric conditions
    - Pollutant type and quantity
    - Verifying party contact information (as applicable)
4. Initiates an MPIRS entry for the following cases:
    - Originally pursuing verification as Canadian Coast Guard mandate but additional information about source changes lead to another agency
    - Canadian Coast Guard mandate and verified no pollution
    - Canadian Coast Guard mandate and verified pollution
    - Likely to impact on / impacting on foreign waters
    - Significant impact on region, though not falling under Canadian Coast Guard mandate.
    - Request for Canadian Coast Guard as a resource agency.
5. Enters information into MPIRS (indicated in #3 above) as well as name of paged ERDO.

This information is then relayed to the Environmental Response Duty Officer to determine Canadian Coast Guard posture. It should be noted that all spill incidents, irrespective of CCG's mandate, may require Canadian Coast Guard resources if requested (see Resource Agency Role in Section 1.5 of the *National Response Plan).*

By agreement, spill verification will be completed by the Regional Operations Centre (ROC) Duty Officer. The verification will be complete when the ER Duty Officer is advised where Canadian Coast Guard is Lead Agency. (see Figure 5.2 Pollution Verification Process and Figure 5.3 Response Analysis Process)

5.5 Spill Assessment – Environmental Response Duty Officer

To facilitate the requirement for efficient and rapid notification and assessment of incidents, Central and Arctic Region, in accordance with the *National Response Plan,* Section 4.4, has instituted a 24-hr year round monitoring regime integrated with the Regional Operations Centre (ROC). The following sections identify the context in which this activity is carried out.

Coordination

The coordination of the ER Duty Officer is the responsibility of the ER Regional Emergency Operations Officer (REOO). These duties include assigning shifts in an equitable manner, keeping records of the duty officer schedules, maintaining equipment required to perform ER Duty Officer functions, reviewing individual ER Duty Officer performance, reviewing ER Duty Officer procedures, and liaising with the ROC and National HQ.

Performance

The ER Duty Officer function shall be performed by the following positions provided sufficient experience, appropriate training, and at the discretion of the Superintendent ER:

- ✓ Senior Officers
- ✓ Those in capacity to act for Senior Officer.

Review

The ER Duty Officer procedures shall be reviewed in reaction to:

- Changes at the Regional Operations Centre (ROC) affecting the ER Duty Officer function
- Changes in Canadian Coast Guard (CCG) policy on the response to ship source pollution
- In consideration of accepted recommendations stemming from exercises and operational responses.

The individual officer performance shall be reviewed in context of their execution of a spill assessment.

Responsibilities

At the beginning of the ER Duty Officer's shift the following are required:

- Functioning communication equipment (pager, cell phone/Blackberry);
- The necessary analytical tools (e.g. spill assessment forms, Greenwood's Guide to Great Lakes Shipping, Area Plans, Oil Spill Response Field Guide, OSH reference tools, and the CANUTEC Emergency Response Guide book.)

During the ER Duty Officers shift the following are required to be complete:

- MPIRS cases for any spill reports that required ER Duty Officer analysis by noon of the next business day;
- Extra Duty Reports;
- Notification of the next ER Duty Officer and the ER Regional Emergency Operations Officer of any on-going cases.

Availability

The availability of the ER Duty Officer is 24 hours/7 days a week. Pages must be responded to within 10 minutes of notification. Should the ER Duty Officer (DO) be unable to fulfill their duties at any time during the shift, they are required to

notify the ER Regional Emergency Operations Officer (REOO) immediately who will notify the ROC of any changes immediately. The following activities conflict with the performance of the ER Duty Officer function:

- travel out of country / region / pager range;
- inability to respond immediately due to performance of other job functions (instructing a course, running an exercise, delivering a presentation, involved in a maintenance run that would be too difficult to reschedule, chairing a meeting, or participating in any activity that requires attendance or would be inappropriate to leave);
- inability to respond immediately due to personal reasons (vacation, sickness, etc.).

Should an individual become unavailable for a significant portion of the shift for reasons noted above, that shift may be assigned to another officer at the discretion of the ER Regional Emergency Operations Officer.

Function

The primary function of the ER Duty Officer is to complete an initial incident assessment and analysis, making a recommendation to the Superintendent of ER as to the appropriate course of action. **

The initial assessment will be complete for the following cases:

- Canadian Coast Guard mandate and verified pollution
- Likely to impact on / impacting on foreign waters
- Significant impact on region, though not falling under Canadian Coast Guard mandate.
- Request for Canadian Coast Guard as a resource agency.

The analysis function is complete when the Superintendent ER is informed and advised of the recommended course of action that will consider the following (see flow chart):

- polluter's actions and intentions (if applicable);
- safety concerns, tactical, logistical, and environmental feasibility of any response.

** The ER Duty Officer does not need to notify the Superintendent of any incidents that require "no activation" of CCG resources (assets/personnel) in monitoring/clean-up activity.

Spill assessment: *pollution verification process*

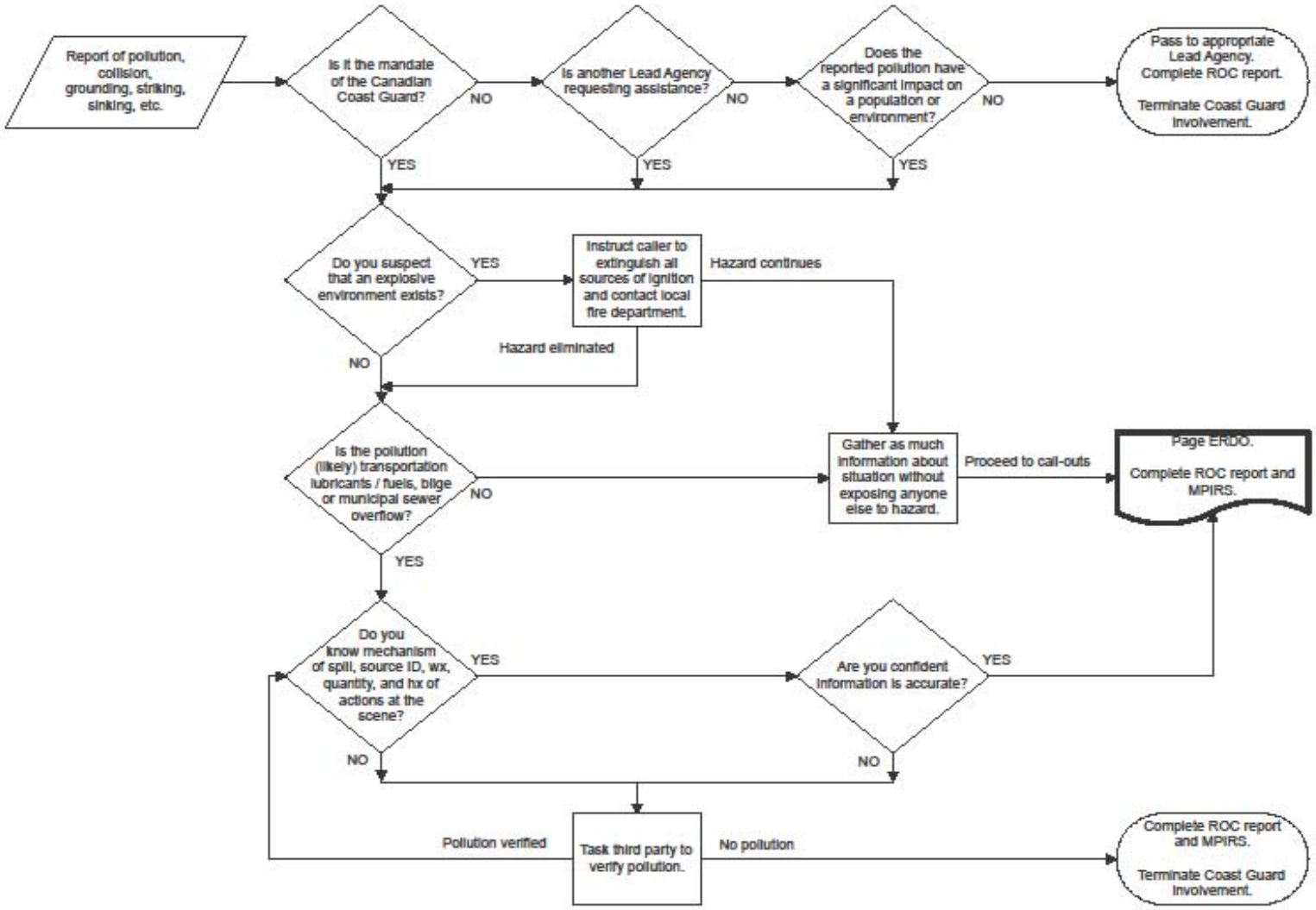

Spill assessment: *response analysis process*

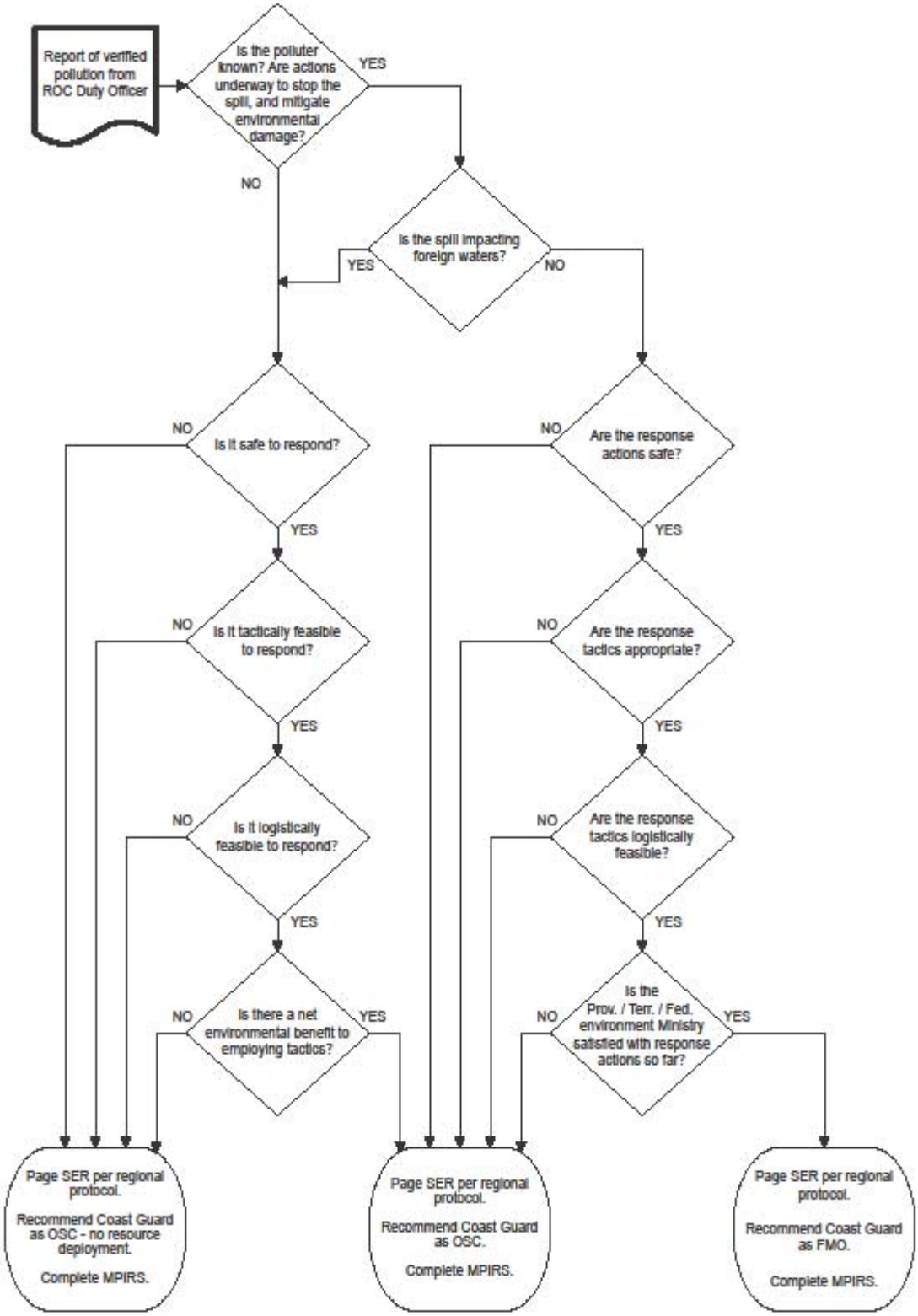

5.6 Activation of Canadian Coast Guard Response Resources

In the event of small (0-150 T) to medium size (150-1000 T) spill incidents, the Superintendent, Environmental Response, acting upon the assessment provided by the Duty Officer, initiates/activates the appropriate response. This entails, but is not limited to, the following activities:

- Identification of overall health and safety risks to response personnel.
- Establishing the propriety of the recommended response posture. This includes the verification of international issues in border areas.
- Verification of Canadian Coast Guard capability to respond, impact on normal regional operations and, if necessary, the potential requirement for the notification and activation of the National Response Team.
- Assignment of the designated On-Scene Commander (OSC) or Federal Monitoring Officer (FMO). SROs are typically assigned as FMO/OSC for incidents occurring within their geographic area.
- Obtaining the necessary Order-in-Council, for spills in Arctic Waters
- Obtaining the financial project code, and forwarding it to the OSC/FMO.
- Signing a contract with the Response Organization (RO) in accordance with PWGSC contracting rules.
- Creation and dissemination of initial situation report to Regional and National management in accordance with the *Safety and Environmental Response Systems (SERS) – Incident Notification Guidelines*.
- Completion of MPIRS to document above activities.

For significantly larger spill incidents (1000T and above) the Superintendent, Environmental Response shall immediately assume the OSC/FMO role, notify Regional and National management of the situation and initiate the Response Management System (RMS) (and activation of the National Response Team, if necessary) in addition to the above activities. Upon stabilization of the immediate emergency, the Assistant Commissioner, Canadian Coast Guard, Central and Arctic Region and/or Director General, Canadian Coast Guard shall assess the requirement for assigning a new OSC/FMO.

5.7 Response Implementation

As stated previously (Section 4 - Preparedness), the Canadian Coast Guard will employ the Response Management System (RMS) as its primary management and operational tool. At the heart of this system is the development of clear obtainable objectives and the implementation of the supporting tactical deployment. This is achieved through the creation of incident action plans spanning specified operational time periods. For small spills these plans can be rather informal. As spill size and impacts increase, so to will the complexity of

operational assignments and hence a need for greater formalization of the Incident Action Plan.

All operations shall be carried out in accordance with the Guiding Principles set out in *Section 1.3* of the *National Response Plan* and the *Oil Spill Response Field Guide* (ISBN 0-660-16112-5).

Central and Arctic Region covers an extremely large geographical and culturally diverse portion of Canada. There are, in essence, two zones of operation which are entrenched in the *Canada Shipping Act*.
These are the:

- Arctic zone, or all areas of Canadian jurisdiction north of 60^0 N Latitude;
- Central zone, dominated in a marine transportation sense by the Great Lakes, but which include the southern portions of Hudson, James and Ungava Bay, along with the major waterways and watersheds of Lake Winnipeg, Winnipegosis, Lake of the Woods, and Lake Athabasca.

Arctic zone – first response
The highest risk of pollution in the arctic is during a ship fuel transfer to facilities in Canada's northern communities. Should pollution occur, the vessel and oil handling facility have responsibilities to implement their Oil Pollution Emergency Plans (OPEP) that deal with source control. The next step would be for the community to respond using its response plan, protecting the identified priority area(s) and employing the response equipment in an Arctic Community Pack, if so equipped.

Arctic zone – escalation
If the pollution is beyond the ship, facility, and community response then the Rapid Air Transportable (RAT)150T will be the first line Canadian Coast Guard ER response (Arctic icebreakers or Special River Nav-aid Tenders may have been on-scene first). Upon activation of the RAT150T, standing offers with aviation contractors will be called up. Closest ER personnel will be dispatched to the community to assess, plan, assemble (and train) responders, while preparing to stage the in-coming equipment. The Hay River base personnel will transport the pallets to the airport where they will be loaded into the awaiting airframe. Upon arrival the pallets will be unloaded and a trailer tongue and wheels affixed to the pallet to facilitate movement (by ATV if necessary) to a forward staging area and ultimately to a beach site. The timeframe for full forward staged capacity with personnel at any community with suitable runways is under 48 hours.

The hospitality industry of Arctic communities can be rapidly overwhelmed with the influx of as little as 10 people. Experience has shown that these communities could only support 10-15 additional personnel and only offer 10-15 community responders. Consequently, the RAT was designed considering the amount and type of equipment that is most easily handled by a combination of trained

Canadian Coast Guard personnel and community responders. The RAT150T response is predicated on an in-community response with the following positions identified in the table below:

Table 5-2 *Anticipated personnel usage for the RAT150T in an Arctic community*

Position	Canadian Coast Guard responder	Community responder
OSC	X	
OSC support		X
Chief Ops & Planning	X	
Logs – services	X	X
Logs – support	X	X
Ops skimming (A)	X	X
Ops skimming (B)	X	X
Ops shoreline (A)	X	X X X X
Ops shoreline (B)	X	X X X X
Ops booming vessel (A)	X	X
Ops booming vessel (B)	X	X
Transfer / disposal	X	X
Totals	**11**	**16**

Upon escalating beyond a RAT150T response, the Δ1000T will be stood up. Standing offers / arrangements with local contractors will be activated to move the containers / seatrucks to a location where they can be transferred to a ship / barge. If required, closest Canadian Coast Guard base personnel will be dispatched to the depot to assist. The closest suitable marine transportation asset will also be contracted to move the equipment to the spill site. The timeframe for full forward staged capacity with personnel is estimated at one week.

As the 150T response is predicated on an in-community response a larger spill would have to be supported by a Canadian Coast Guard icebreaker, rented camp barge, or flown in from surrounding communities.

Table 5-3 *Anticipated personnel usage for the 1000T in an Arctic community.*

Position	Canadian Coast Guard ER responder	CCG Fleet or professional contractor	Community responder
OSC	X		
OSC support		X	X
Chief of Planning	X		
Plan – response	X		
Plan – demobilization	X		
Chief of Logs	X		
Logs – services		X	X
Logs – support	X X	X X X	
Chief of Ops	X		
Air Ops		X	
Ops on-water	X X	X X X X	
Ops shoreline	X X		X X X X X X X X X
Ops booming	X X	X X X X	
Transfer / disposal	X	X	X
Totals	**14**	**13**	**13**

Central Zone – first response

The highest risk of pollution occurring in the region is found in the Great Lakes. Statistically the areas in the Great Lakes of highest risk are the connecting channels due to volumes, numbers of transits, and convergence factors (existing VTS / navigational aid systems recognize this). Areas with traditionally high pleasure craft and small commercial craft traffic experience frequent (though low in volume) pollution incidents.

If the pollution is in the local vicinity of a Canadian Coast Guard Search and Rescue (SAR) station or facility with operational staff, a First Response Unit (FRU) may be deployed as an initial attempt at containment. If more equipment sweeps systems or recovery units are required then the Rapid Road Transportable (RRT) 2500T will be activated.

Transfer of Lead Agency

Transfer of Lead from CCG

Should an incident initially appear to fall within the jurisdiction of the Canadian Coast Guard yet later is determined to be another government agency's

responsibility, the CCG-appointed OSC or FMO will verbally acknowledge the transfer of Lead Agency responsibility followed by written confirmation on the terms of the transfer (this may require time for termination of a response contract with CCG and the establishment of a response contract with the appropriate Lead Agency.) When the Lead is transferred from CCG to another Lead Agency, CCG will submit an invoice of its response costs to the Lead Agency for response activities undertaken up to the time of transfer recognition.
Should the Lead Agency wish to retain CCG as a Resource Agency, the criteria in Section 7 of the *National Response Plan* of the *CCG National Marine Spills Response Plan* will apply.

Transfer of Lead to CCG
When the Lead is transferred to Canadian Coast Guard from another agency, the Canadian Coast Guard will incorporate the appropriate costs borne by the other agency in the initial stages of the spill into its claim to the Polluter or to the Ship Source Oil Pollution Fund, (SOPF) as the case may be.

Safety Procedures and Considerations

All petroleum cargoes are considered hazardous substances. Canadian Coast Guard command, clean-up, monitoring and verification personnel have protective equipment and training available to them up to Level “D”. All Environmental Response branch staff have been issued with a variety of personal protective equipment (PPE) and are expected to deploy to a spill site (includes exercises and training) with all appropriate gear. Safety glasses and rain suits with rubber boots and gloves are appropriate for Canadian Coast Guard's traditional verification of and response to oil pollution.

Bulk chemical carriers, rail cars, road trailers, sour (H2S) petroleum products or BTX (benzene, toluene, xylene) carried on oil tankers are all sources of substances for which Canadian Coast Guard personnel are not readily equipped for. In most cases where the pollutant reported is suspected to be from one of these sources Canadian Coast Guard assets should not be tasked to verify. If it falls within Canadian Coast Guard mandate the ER program personnel will get directly involved in the verification, likely looking to other government departments or contractors to continue with the assessment and response.

When the pollution is reported to the ROC by a member of the public, or by a credible professional as a mystery spill, closer examination of the circumstances or probable cause of the pollution will occur as part of spill verification. During the conversation with the individual reporting the incident the ROC Duty Officer will want to find out what it is that they observed. These are:

- Colour [typical petroleum silvery to rainbow to dark purple / brown or is it frothy, green organic matter, rusty, etc.]
- Odour [does it smell like gas, diesel, rotten eggs, no odour]
- Proximity to any likely source [vessel, industrial outfall, municipal outfall, midlake, mid channel, washed up industrial storage drum]

- Volumes [football field sized, shopping mall parking lot big, or a thin ribbon]
- Other factors [heavy rainfall in last 12 hours; seasonal conditions / times / areas known for algae blooms; fish or animal kills].

By picking up on any "flags" during an assessment it can be reasonably determined whether the pollution should not/should be classified as a hazardous substance (for which CCG personnel are unable to respond to). The ER duty officer will consult with experts in Environment Canada (EC), Spills Action Centre (SAC), and CANUTEC, as appropriate to determine the safety for personnel.

Alternative countermeasures

Alternative countermeasures are those non-mechanical techniques utilized in oil spill response operations such as in-situ burning, dispersant application, and shoreline cleaner application.

Central Zone

The likelihood of approval of in-situ burning operations on the Great Lakes or in connecting channels or inland lakes is minimal. The use of dispersants in the Great Lakes, connecting channels or in inland waterways will not be considered. Shoreline cleaner agents approved by Environment Canada may be considered.

Arctic Zone

In view of the difficulties associated with mounting an effective response in the Arctic, the CCG has recommended that further research be done in the areas of in-situ burning, the use of dispersants (reference Quebec paper) and other oil in ice recovery methods. This research should be operational R&D and assume that the product spilled is Arctic diesel and that the spill occurs during the Arctic shipping season.

5.8 Summary Report and Post Incident Review

It is regional policy to provide a Summary Report and/or conduct a formal Post Incident Review for incidents deemed noteworthy or valuable by the OSC/FMO or Assistant Commissioner, Canadian Coast Guard.

Summary Report

The summary report shall contain at minimum the following, but can include any information deemed relevant by the OSC/FMO.

Summary Incident Report Format

(a) Overview of Crisis Event

- spill source (not cause), initial environmental conditions and assessment of situation

(b) Spill chronology
- spill response activities and climate/wind /sea condition data
- key response objectives (success and failures in implementation), major shifts in tactics, other agencies involvement

(c) Costs and cost recovery issues
- total estimated cost summary
- identification of Cost Recovery requirements and options

(d) References
- Situation Reports

Post Incident Review

The main objective of a Post Incident Review is the evaluation of the incident to ultimately improve Canadian Coast Guard's effectiveness at spill response. To that end, this requirement is essentially similar to the principles of exercise evaluation. Therefore, when required, the review shall be conducted in accordance with the principles contained in the *National Exercise Program – Evaluation guidelines, Chapter 11*.

This entails six distinct tasks:

1) Brief the Evaluation Team
2) Brief the Response Team
3) Evaluate the Incident
4) Prepare a Preliminary Summary of Key Observations
5) Hold an Incident Debriefing Session
6) Prepare an Official Post Incident Evaluation Report

Post Incident Evaluation Report Format

(a) Executive Summary -Summarizes overall findings and observations

(b) Overview of Incident Objectives -Briefly describes the key objectives, environmental conditions and initial situation assessment

(c) Evaluation Techniques and Criteria - Describes the technique(s) (i.e. self, peer or independent evaluation) and the major evaluation criteria used

(d) Assessment of Key Incident Objectives - This provides a critical appraisal of the incident objectives or major shifts in tactics. Each key objective assessment will include the following:

Findings – A summary statement describing key positive and negative findings.

Specific Observations - Observed decisions and tasks noted during the incident by responders, management and interested parties.

Conclusions - Assessment of the impact of the finding on overall achievement of the incident objective(s)

Recommendations – A description of potential corrective or follow-up action required to implement the findings to improve overall marine spill response preparedness.

(e) Appendices or Attachments - May or may not be required

Section 6 – CLAIMS & COST RECOVERY

6.1 Purpose

The purpose of this section of the *Regional Response Plan* is to outline the requirements and regional processes to assist in the creation of a claim to the relevant fund or directly to a polluter.

The ability of Canadian Coast Guard to recover or pursue recovery of response expenses or costs associated with monitoring activities is set out in the *Marine Liability Act, Part 6, "Liability and Compensation for Pollution"*. This ability to recover costs is seen as the embodiment of the polluter-pay-principle set out in the *National Response Plan, Guiding Principles, Section 1.3*.
Note: That at this time there is no mechanism to recover monitoring costs from an oil handling facility.

In addition to the above and recognizing the potential financial risks and impacts to Canada, Canadian legislation also provides for the creation and maintenance of a Ship-Source Oil Pollution Fund, (SOPF). This fund, in addition to the International Oil Pollution Compensation Fund (IOPCF) and the Protection & Indemnity (P&I) Clubs, provides for the assessment of claims/loss against member ships and/or shipping companies. Neither of these funds hinder nor otherwise limit Canadian Coast Guard's ability to lay claims directly against a Polluter. However, the Polluter is only required to reimburse a claim up to its Limit of Liability. This limit is calculated using the guidelines established in the *Convention on Limitation of Liability for Maritime Claims (LLMC), 1976*.

6.2 Policy Guidelines

The following points serve as regional guidelines for pursuing cost recovery activities:

- The decision to seek cost recovery should be made based on common sense and in consultation with other operational and finance team members.
- Cost recovery should be avoided in situations where the administrative costs of recovery action exceed the dollars expected to be recovered.
- Cost recovery embodies the "Polluter Pays" principle.
- Costs incurred while acting as a resource agency must be recovered from the lead agency.
- Costs incurred while acting as OSC/FMO are recoverable from either the polluter, its P&I Club, the Ship-Source Oil Pollution Fund or from the International Oil Pollution Compensation Fund.

6.3 Responsibilities

On-Scene Commander/Federal Monitoring Officer (OSC/FMO)
The OSC/FMO is responsible for ensuring that complete and accurate documentation is provided for a timely and effective cost recovery process. The OSC/FMO is responsible for preparing all documentation necessary to initiate cost recovery.

Regional Finance Staff
Response, monitoring and administrative costs must be calculated in accordance with national financial accounting and recording practices. Senior administrative officers within Maritime Services may be called upon to provide expert advice as required. It is recommended that a regional finance representative be on-scene as soon as possible to help establish procedures, to safeguard documentation, and to ensure the integrity of the costing process.

Environmental Response Headquarters
The Environmental Response Senior Advisor for Cost Recovery and Claims will submit those claims that are intended for the Ship-Source Oil Pollution Fund and to International Fund Conventions in accordance with the guidelines specified by each. The Advisor will also issue equipment charge-out rates periodically for use by all regions.

6.4 Process
The Response Management System (RMS) documentation (field notes, Incident Action Plans, Minutes and meeting records, time sheets and any and all expense records, invoices/requisitions etc.) shall form the basis of data for the Cost Recovery action.

The Region will initiate cost recovery actions against the Polluter. Should the Polluter be unable or unwilling to pay the costs, the Region will forward the claim to HQ Senior Advisor for Cost Recovery and Claims for submission to the Ship-Source Oil Pollution Fund. Should the costs of the response exceed the Limit of Liability of the Polluter, reimbursement of costs will be through the SOPF and then through the IOPCF. Claims associated with mystery spills will be submitted directly to HQ for a claim against the SOPF.

6.5 Documentation
Proper documentation alleviates the need to reconstruct the incident after the fact, reduces the volume of questions, and adds credence to the claim. The key source of information that enables various parties to determine the degree of reasonableness of the actions taken and the costs claimed is the part of the cost recovery summary known as a “narrative”. That justification is considered to be a critical component to successful and timely claims.

The regional guideline for producing cost summaries and documentation handling is as follows:

Incidents of minimum complexity and limited expenditures (under $15K)

- Expenditures may be summarized within the body of the Final Report, including any description of "calculated" values (i.e. administration costs)
- Original invoices shall be kept on the dedicated spill file.

Incidents of medium complexity and moderate expenditures (up to $50K)

- Expenditures will be summarized in a single table by Cost Element within the body of the Final Report.
- A supporting cost summary document or appendix shall be created to provide a detailed cost summary by date. Copies of the expenditure documentation will be included.
- Original invoices shall be kept on the dedicated spill file organized by date.

Incidents of high complexity and significant expenditures ($50K plus)

- Expenditures will be summarized in a single table by Cost Element within the body of the Final Report. (similar to medium complexity incidents)
- A supporting cost summary document will be created summarizing the daily expenditures by individual cost element, followed by a cumulative summary of each cost element (spreadsheet of all daily summaries). The sum total of all cost elements will then be summarized for use in the final report.
- Due to the volume of transactions, copies of the expenditure documents will not be provided in the supporting cost summary document.
- Original invoices will be kept in their original state, filed by date and archived when feasible to a dedicated file.

Table 6.1 Sample Cost Element Table

Cost Element	Description
Personnel	Includes hourly regular and overtime costs associated with CCG Staff (includes EBP)
Equipment	Includes cost of all CCG assets, based upon established charge out rates
Purchases/Expendables	Includes expendables such as office supplies and PPE
Travel	Includes meals and accommodation costs incurred by CCG staff accordance with TB travel directive.
Contractors	Includes the costs of all private sector contractor/goods and services.
Administration	Includes the cost of CCG administration.
Total Estimated Cost	

6.6 References

- CCG Ship Source and Marine Pollution Response Costing Principles and Documentation Standards DFO2004-6332
- Cost Recovery of Ship Source and Marine Pollution Response Directive # D-4010-2001-01
- Cost Recovery Related Policies, Memorandum dated October 26, 1998, File AWE 1001-5-2-1 (AWEA)

6.7 Third Party Claims

While monitoring or responding to an incident, Canadian Coast Guard will refer all inquiries regarding third party claims to the Polluter. In the case of a mystery spill, the Canadian Coast Guard will encourage claimants to submit a claim directly to the Ship Source Oil Pollution Fund.

Section 7 - PLAN MAINTENANCE AND CUSTODIANS

7.1 *Maintenance Process*

Responsibility
The *Regional Response Plan* of the *Canadian Coast Guard Marine Spills Response Plan* for Central & Arctic Region is the responsibility of:

Assistant Commissioner, Canadian Coast Guard
Central & Arctic Region
520 Exmouth Street
Sarnia, Ontario
N7T 8B1
fax (519) 383-1991

Revision Requests
All requests or suggestions for revision to this plan should be forwarded, in writing, to the above noted address and should include the following information:

- Originator (including return address and telephone number)
- Date
- Subject (i.e. request for revision)
- Suggested change (including section and page number references)
- Reason for revision

All formally received requests will be acknowledged in writing and assessed for inclusion into the plan. Upon approval the revision will be distributed accordingly.

Revision Record
Upon receiving a revision transmittal, recipients are requested to ensure that its number is next in sequence to the previous issue, process the amendments according to the transmittal instructions and complete the revision record in this section.

Should there be any discrepancies or questions, the recipient should contact the Canadian Coast Guard, Assistant Commissioner, Central & Arctic Region at the above address.

The onus is on the plan holder to maintain a current plan.

7.2 *Canadian Coast Guard Custodians*

This document is structured to reflect the fundamental phases of Environmental Response (ER) activities and hence reflects the co-operative nature of each

aspect of the Central and Arctic Region Environmental Response organization. In conjunction with this, each component has been assigned to a specific section within the branch (e.g. training is the responsibility of the Training Officer). The Assistant Commissioner – Canadian Coast Guard, Central and Arctic Region retains the overall responsibility for the document's implementation. The Emergency Plan Development Officer (EPDO) facilitates the physical management and co-ordination of this document.

These custodial relationships herein are designed to facilitate the annual review and maintenance of the *Regional Response Plan*.

Letter of Promulgation	Emergency Plan Development Officer
Record of Revision	Plan Holders
Section 1 – Introduction	Emergency Plan Development Officer
Section 2 - Agreements & Memoranda of Understanding	Emergency Plan Development Officer
Section 3 – Organization	Emergency Plan Development Officer
Section 4 – Preparedness 4.2 RMS	 Regional Training Officer
4.3 Planning	Emergency Plan Development Officer
4.4 Training	Regional Training Officer
4.5 Exercising	Regional Exercise Officer
4.6 Inventory Maintenance & Management	Regional Emergency Operations Officer
Section 5 – Response Operations	Regional Emergency Operations Officer
Section 6 – Claims & Cost Recovery	TBD
Section 7 - Plan Maintenance & Custodians	Emergency Plan Development Officer
Section 8 – Contacts	Emergency Plan Development Officer
Section 9 – References & Annexes	Responsibility for each annex is assigned in each Annex.

All unassigned sections shall be considered the responsibility of the Emergency Plan Development Officer unless otherwise indicated.

7.3 Plan Distribution

The *Regional Response Plan* shall be distributed to all holders of the *Canadian Coast Guard Marine Spills Response Plan*, in accordance with the Area of Responsibility set in Section 1 - Introduction. This includes the relevant Federal and Provincial Lead Agencies as described in the National Response Plan Section 1, sub-section 1.5; all Canadian Coast Guard Management; Facilities and Vessels; all Oil Handling Facilities and relevant certified Response Organizations by request and in accordance with Transport Canada-Marine

Safety, Compliance and Enforcement division. All subsequent revisions will be automatically distributed to these plan holders.

Any member of the general public wishing to obtain a copy may do so through the Fisheries and Oceans, Canadian Coast Guard, National Headquarters. These plan holders will not be advised of revisions.

Section 8 – CONTACTS

8.1 Pollution Reports for Canadian Coast Guard, Central & Arctic Region

To report a pollution emergency anywhere within Central & Arctic Region telephone the Canadian Coast Guard, Regional Operations Centre (ROC) toll free at:

1-800-265-0237

or report via

Marine Radio on VHF, Channel 16.

8.2 Other Lead Agencies that Maintain Spill Report Lines

- Ontario Ministry of the Environment - Spills Action Centre: 1-800-268-6060
- Territorial Spills Line – Arctic Alarm: 1-867-920-8130
- Manitoba Conservation: 1-204-944-4888
- Saskatchewan Environment - Saskatchewan Spill Centre: 1-800-667-7525
- Alberta Environment: 1-800-222-6514

8.3 Canadian Coast Guard, Environmental Response Branch (CCG/ER) Phone List – Regular Office Hours

Regional Office, Canadian Coast Guard **520 Exmouth Street** **Sarnia, ON N7T 8B1**	
Title	**Telephone**
Superintendent, Environmental Response	519-383-1954
Emergency Plan Development Officer	519-464-5126
Assistant Contingency Planning Officer	519-383-1953
Regional Exercise Officer	519-383-1978
Regional Emergency Operations Officer	519-383-1956
Environmental Training Officer	519-383-1957
Administrative Assistant	519-383-1951

Canadian Coast Guard Base **42037 McKenzie Highway** **Hay River, NT X0E 0R9**	
Title	**Telephone**
Senior Response Officer	867-874-5557
Response Specialist	867-874-5558
Response Specialist	867-874-5559

Canadian Coast Guard Base **PO Box 1000, 401 King Street** **Prescott, ON K0E 1T0**	
Title	**Telephone**
Senior Response Officer	613-925-2865 x 157
Response Specialist (2)	613-925-2865 x 262
Logistics and Statistics Officer	613-925-2865 x 126

Canadian Coast Guard Base **28 Waubeek Street** **Parry Sound, ON P2A 1B9**	
Title	**Telephone**
Senior Response Officer	705-746-2196 x 228
Response Specialist	705-746-2196 x 270
Response Specialist	705-746-2196 x 201

Section 9 – REFERENCES & ANNEXES

9.1 References

The following list includes those documents which supplement the Regional Response Plan.

Supplement	Custodian
Environmental Response Manual – Standard Operating Procedures and Directives	Canadian Coast Guard, Environmental Response, Headquarters
Response Management System User's Guide, version 3.0 (May 2006)	Canadian Coast Guard, Environmental Response, Headquarters
Environmental Response Superintendent's Manual	Superintendent, Environmental Response, Regional Office
Environmental Response Regional Health & Safety Plan	Environmental Response, Regional Emergency Operations Officer
National Exercise Program (NEP) Manual	Canadian Coast Guard, Environmental Response Headquarters
Inventory Control and Response Management System – TMA database	Regional Logistics and Statistics Officer, Environmental Response
DFO Crisis Communications Plan	DFO Corporate Services, Communications Branch

9.2 Annexes

The following Area Plans make up the Annexes to the Regional Chapter:

1) St. Lawrence River and Lake Francis
2) Lake Ontario
3) Lake Erie
4) St. Clair and Detroit River
5) Lake Huron, Georgian Bay and North Channel
6) St. Mary's River
7) Lake Superior
8) Lake of the Woods
9) Inland waters (South of 60°N Latitude)
10) Hudson and James Bay
11) Baffin Region
12) Keewatin Region
13) Kitikmeot Region
14) Great Slave Lake Region
15) Mackenzie River and Delta
16) Beaufort Sea and Amundsen Gulf

APPENDIX C - MSDS Jet-A and Diesel

SECTION 1. PRODUCT AND COMPANY IDENTIFICATION

Product name	:	DIESEL FUEL
Synonyms	:	Seasonal Diesel, #1 Diesel, #2 Heating Oil, #1 Heating Oil, D50, Arctic Diesel, Farm Diesel, Marine Diesel, Low Sulphur Diesel, LSD, Ultra Low Sulphur Diesel, ULSD, Mining Diesel, Naval Distillate, Dyed Diesel, Marked Diesel, Coloured Diesel, Furnace special, Biodiesel blend, B1, B2, B5, Diesel Low Cloud (LC). Marine Gas Oil
Product code	:	101802, 100107, 100668, 100658, 100911, 100663, 100652, 100460, 100065, 101796, 101793, 101795, 101792, 101794, 101791, 100768, 100643, 100642, 100103, 101798, 101800, 101797, 101788, 101789, 101787, 102531, 100734, 100733, 100640, 100997, 100995, 100732, 100731, 100994
Manufacturer or supplier's details		Petro-Canada P.O. Box 2844, 150 - 6th Avenue South-West Calgary Alberta T2P 3E3 Canada
Emergency telephone number		Suncor Energy: +1 403-296-3000; Poison Control Centre: Consult local telephone directory for emergency number(s).

Recommended use of the chemical and restrictions on use

Recommended use	:	Diesel fuels are distillate fuels suitable for use in high and medium speed internal combustion engines of the compression ignition type. Mining diesels, marine diesels, MDO and naval distillates may have a higher flash point requirement.
Prepared by	:	Product Safety: +1 905-804-4752

SECTION 2. HAZARDS IDENTIFICATION

Emergency Overview

Appearance	Bright oily liquid.
Colour	Clear to yellow (This product may be dyed red for taxation purposes).
Odour	Mild petroleum oil like.

GHS Classification

Flammable liquids	:	Category 3
Acute toxicity (Inhalation)	:	Category 4

Petro-Canada is a Suncor Energy business.
TM Trademark of Suncor Energy Inc. Used under licence.

Skin irritation	:	Category 2
Carcinogenicity	:	Category 2
Specific target organ toxicity - single exposure	:	Category 3 (Central nervous system)
Specific target organ toxicity - repeated exposure	:	Category 2 (Liver, thymus, Bone)
Aspiration hazard	:	Category 1

GHS Label element

Hazard pictograms :



Signal word : Danger

Hazard statements :
H226 Flammable liquid and vapour.
H304 May be fatal if swallowed and enters airways.
H315 Causes skin irritation.
H332 Harmful if inhaled.
H336 May cause drowsiness or dizziness.
H351 Suspected of causing cancer.
H373 May cause damage to organs (Liver, thymus, Bone) through prolonged or repeated exposure.

Precautionary statements :
Prevention:
P201 Obtain special instructions before use.
P202 Do not handle until all safety precautions have been read and understood.
P210 Keep away from heat/sparks/open flames/hot surfaces. - No smoking.
P233 Keep container tightly closed.
P240 Ground/bond container and receiving equipment.
P241 Use explosion-proof electrical/ ventilating/ lighting/ equipment.
P242 Use only non-sparking tools.
P243 Take precautionary measures against static discharge.
P260 Do not breathe dust/ fume/ gas/ mist/ vapours/ spray.
P264 Wash skin thoroughly after handling.
P271 Use only outdoors or in a well-ventilated area.
P280 Wear protective gloves/ eye protection/ face protection.
P281 Use personal protective equipment as required.
Response:
P301 + P310 IF SWALLOWED: Immediately call a POISON CENTER or doctor/ physician.
P303 + P361 + P353 IF ON SKIN (or hair): Remove/ Take off immediately all contaminated clothing. Rinse skin with water/ shower.
P304 + P340 + P312 IF INHALED: Remove victim to fresh air and keep at rest in a position comfortable for breathing. Call a POISON CENTER or doctor/ physician if you feel unwell.

Petro-Canada is a Suncor Energy business.
TM Trademark of Suncor Energy Inc. Used under licence.

P308 + P313 IF exposed or concerned: Get medical advice/ attention.
P331 Do NOT induce vomiting.
P332 + P313 If skin irritation occurs: Get medical advice/ attention.
P362 Take off contaminated clothing and wash before reuse.
P370 + P378 In case of fire: Use dry sand, dry chemical or alcohol-resistant foam for extinction.
Storage:
P403 + P233 Store in a well-ventilated place. Keep container tightly closed.
P403 + P235 Store in a well-ventilated place. Keep cool.
P405 Store locked up.
Disposal:
P501 Dispose of contents/ container to an approved waste disposal plant.

Potential Health Effects

Primary Routes of Entry	:	Eye contact Ingestion Inhalation Skin contact Skin Absorption
Target Organs	:	Skin Eyes Respiratory Tract
Inhalation	:	May cause respiratory tract irritation. Inhalation may cause central nervous system effects. Symptoms and signs include headache, dizziness, fatigue, muscular weakness, drowsiness and in extreme cases, loss of consciousness.
Skin	:	Causes skin irritation.
Eyes	:	Causes eye irritation.
Ingestion	:	Ingestion may cause gastrointestinal irritation, nausea, vomiting and diarrhoea. Aspiration hazard if swallowed - can enter lungs and cause damage.
Aggravated Medical Condition	:	None known.

Carcinogenicity:

IARC	No component of this product present at levels greater than or equal to 0.1% is identified as probable, possible or confirmed human carcinogen by IARC.
ACGIH	No component of this product present at levels greater than or equal to 0.1% is identified as a carcinogen or potential carcinogen by ACGIH.
OSHA	No component of this product present at levels greater than or

Petro-Canada is a Suncor Energy business.
TM Trademark of Suncor Energy Inc. Used under licence.

equal to 0.1% is identified as a carcinogen or potential carcinogen by OSHA.

NTP No component of this product present at levels greater than or equal to 0.1% is identified as a known or anticipated carcinogen by NTP.

SECTION 3. COMPOSITION/INFORMATION ON INGREDIENTS

Pure substance/mixture : Mixture

Hazardous components

Chemical Name	CAS-No.	Concentration (%)
kerosine (petroleum), hydrodesulfurized	64742-81-0	70 - 100 %
kerosine (petroleum)	8008-20-6	
fuels, diesel	68334-30-5	
fuel oil no. 2	68476-30-2	
Alkanes, C10-20-branched and linear	928771-01-1	0 - 25 %
Soybean oil, Methyl ester	67784-80-9	0 - 5 %
Rape oil, Methyl ester	73891-99-3	
Fatty acids, tallow, Methyl esters	61788-61-2	

SECTION 4. FIRST AID MEASURES

If inhaled : Move to fresh air.
Artificial respiration and/or oxygen may be necessary.
Seek medical advice.

In case of skin contact : In case of contact, immediately flush skin with plenty of water for at least 15 minutes while removing contaminated clothing and shoes.
Wash skin thoroughly with soap and water or use recognized skin cleanser.
Wash clothing before reuse.
Seek medical advice.

In case of eye contact : Remove contact lenses.
Rinse immediately with plenty of water, also under the eyelids, for at least 15 minutes.
Obtain medical attention.

If swallowed : Rinse mouth with water.
DO NOT induce vomiting unless directed to do so by a physician or poison control center.
Never give anything by mouth to an unconscious person.
Seek medical advice.

Most important symptoms : First aider needs to protect himself.

Petro-Canada is a Suncor Energy business.
TM Trademark of Suncor Energy Inc. Used under licence.

and effects, both acute and delayed

SECTION 5. FIREFIGHTING MEASURES

Suitable extinguishing media	:	Dry chemical Carbon dioxide (CO2) Water fog. Foam
Unsuitable extinguishing media	:	Do NOT use water jet.
Specific hazards during firefighting	:	Cool closed containers exposed to fire with water spray.
Hazardous combustion products	:	Carbon oxides (CO, CO2), nitrogen oxides (NOx), sulphur oxides (SOx), sulphur compounds (H2S), smoke and irritating vapours as products of incomplete combustion.
Further information	:	Prevent fire extinguishing water from contaminating surface water or the ground water system.
Special protective equipment for firefighters	:	Wear self-contained breathing apparatus for firefighting if necessary.

SECTION 6. ACCIDENTAL RELEASE MEASURES

Personal precautions, protective equipment and emergency procedures	:	Use personal protective equipment. Ensure adequate ventilation. Evacuate personnel to safe areas. Material can create slippery conditions.
Environmental precautions	:	If the product contaminates rivers and lakes or drains inform respective authorities.
Methods and materials for containment and cleaning up	:	Prevent further leakage or spillage if safe to do so. Remove all sources of ignition. Soak up with inert absorbent material. Non-sparking tools should be used. Ensure adequate ventilation. Contact the proper local authorities.

SECTION 7. HANDLING AND STORAGE

Advice on safe handling	:	For personal protection see section 8. Smoking, eating and drinking should be prohibited in the application area. Use only with adequate ventilation. In case of insufficient ventilation, wear suitable respiratory equipment. Avoid spark promoters. Ground/bond container and

Petro-Canada is a Suncor Energy business.
TM Trademark of Suncor Energy Inc. Used under licence.

equipment. These alone may be insufficient to remove static electricity.
Avoid contact with skin, eyes and clothing.
Do not ingest.
Keep away from heat and sources of ignition.
Keep container closed when not in use.

Conditions for safe storage : Store in original container.
Containers which are opened must be carefully resealed and kept upright to prevent leakage.
Keep in a dry, cool and well-ventilated place.
Keep in properly labelled containers.
To maintain product quality, do not store in heat or direct sunlight.

SECTION 8. EXPOSURE CONTROLS/PERSONAL PROTECTION

Components with workplace control parameters

Components	CAS-No.	Value type (Form of exposure)	Control parameters / Permissible concentration	Basis
kerosine (petroleum), hydrodesulfurized	64742-81-0	TWA	200 mg/m3	ACGIH
kerosine (petroleum)	8008-20-6	TWA	100 mg/m3	NIOSH REL

Engineering measures : Use only in well-ventilated areas.
Ensure that eyewash station and safety shower are proximal to the work-station location.

Personal protective equipment

Respiratory protection : Use respiratory protection unless adequate local exhaust ventilation is provided or exposure assessment demonstrates that exposures are within recommended exposure guidelines. Respirator selection must be based on known or anticipated exposure levels, the hazards of the product and the safe working limits of the selected respirator.

Filter type : organic vapour cartridge or canister may be permissible under certain circumstances where airborne concentrations are expected to exceed exposure limits. Protection provided by air-purifying respirators is limited. Use a positive-pressure, air-supplied respirator if there is any potential for uncontrolled release, exposure levels are unknown, or any other circumstances where air-purifying respirators may not provide adequate protection.

Hand protection
Material : neoprene, nitrile, polyvinyl alcohol (PVA), Viton(R). Consult your PPE provider for breakthrough times and the specific glove that is best for you based on your use patterns. It should be realized that eventually any material regardless of their imperviousness, will get permeated by chemicals. Therefore, protective gloves should be regularly checked for

Petro-Canada is a Suncor Energy business. TM Trademark of Suncor Energy Inc. Used under licence.

wear and tear. At the first signs of hardening and cracks, they should be changed.

Remarks	:	Chemical-resistant, impervious gloves complying with an approved standard should be worn at all times when handling chemical products if a risk assessment indicates this is necessary.
Eye protection	:	Wear face-shield and protective suit for abnormal processing problems.
Skin and body protection	:	Choose body protection in relation to its type, to the concentration and amount of dangerous substances, and to the specific work-place.
Protective measures	:	Wash contaminated clothing before re-use.
Hygiene measures	:	Remove and wash contaminated clothing and gloves, including the inside, before re-use. Wash face, hands and any exposed skin thoroughly after handling.

SECTION 9. PHYSICAL AND CHEMICAL PROPERTIES

Appearance	:	Bright oily liquid.
Colour	:	Clear to yellow (This product may be dyed red for taxation purposes).
Odour	:	Mild petroleum oil like.
Odour Threshold	:	No data available
pH	:	No data available
Pour point	:	No data available
Boiling point/boiling range	:	150 - 371 °C (302 - 700 °F)
Flash point	:	> 40 °C (104 °F) Method: closed cup
Auto-Ignition Temperature	:	225 °C (437 °F)
Evaporation rate	:	No data available
Flammability	:	Flammable in presence of open flames, sparks and heat. Vapours are heavier than air and may travel considerable distance to sources of ignition and flash back. This product can accumulate static charge and ignite.
Upper explosion limit	:	6 %(V)
Lower explosion limit	:	0.7 %(V)
Vapour pressure	:	7.5 mmHg (20 °C / 68 °F)

Petro-Canada is a Suncor Energy business.
TM Trademark of Suncor Energy Inc. Used under licence.

Relative vapour density	:	4.5
Relative density	:	0.8 - 0.88
Solubility(ies)		
Water solubility	:	insoluble
Partition coefficient: n-octanol/water	:	No data available
Viscosity		
Viscosity, kinematic	:	1.3 - 4.1 cSt (40 °C / 104 °F)
Explosive properties	:	Do not pressurise, cut, weld, braze, solder, drill, grind or expose containers to heat or sources of ignition. Runoff to sewer may create fire or explosion hazard.

SECTION 10. STABILITY AND REACTIVITY

Possibility of hazardous reactions	:	Hazardous polymerisation does not occur. Stable under normal conditions.
Conditions to avoid	:	Extremes of temperature and direct sunlight.
Incompatible materials	:	Reactive with oxidising agents and acids.
Hazardous decomposition products	:	May release COx, NOx, SOx, H2S, smoke and irritating vapours when heated to decomposition.

SECTION 11. TOXICOLOGICAL INFORMATION

Information on likely routes of exposure: Eye contact, Ingestion, Inhalation, Skin contact, Skin Absorption

Acute toxicity

Product:

Acute oral toxicity	Remarks: No data available
Acute inhalation toxicity	Remarks: No data available
Acute dermal toxicity	Remarks: No data available

Components:

kerosine (petroleum), hydrodesulfurized:

Acute oral toxicity	LD50 (Rat): > 5,000 mg/kg

Petro-Canada is a Suncor Energy business.
TM Trademark of Suncor Energy Inc. Used under licence.

Acute inhalation toxicity	LC50 (Rat): > 5.2 mg/l Exposure time: 4 hrs Test atmosphere: dust/mist
Acute dermal toxicity	LD50 (Rabbit): > 2,000 mg/kg

kerosine (petroleum):

Acute oral toxicity	LD50 (Rat): > 5,000 mg/kg
Acute inhalation toxicity	LC50 (Rat): > 5 mg/l Exposure time: 4 h Test atmosphere: dust/mist
Acute dermal toxicity	LD50 (Rabbit): > 2,000 mg/kg

fuels, diesel:

Acute oral toxicity	LD50 (Rat): 7,500 mg/kg
Acute dermal toxicity	LD50 (Mouse): 24,500 mg/kg

fuel oil no. 2:

Acute oral toxicity	LD50 (Rat): 12,000 mg/kg
Acute inhalation toxicity	LC50 (Rat): 4.1 mg/l Exposure time: 4 h Test atmosphere: dust/mist

Skin corrosion/irritation

Product:

Remarks: No data available

Serious eye damage/eye irritation

Product:

Remarks: No data available

Respiratory or skin sensitisation

No data available

Germ cell mutagenicity

No data available

Carcinogenicity

No data available

Reproductive toxicity

No data available

STOT - single exposure

No data available

STOT - repeated exposure

Petro-Canada is a Suncor Energy business.
TM Trademark of Suncor Energy Inc. Used under licence.

No data available

SECTION 12. ECOLOGICAL INFORMATION

Ecotoxicity

Product:

Toxicity to fish	:	Remarks: No data available
Toxicity to daphnia and other aquatic invertebrates	:	Remarks: No data available
Toxicity to algae	:	Remarks: No data available
Toxicity to bacteria	:	Remarks: No data available

Persistence and degradability

Product:

Biodegradability	:	Remarks: No data available

Bioaccumulative potential

No data available

Mobility in soil

No data available

Other adverse effects

No data available

SECTION 13. DISPOSAL CONSIDERATIONS

Disposal methods

Waste from residues	:	The product should not be allowed to enter drains, water courses or the soil. Offer surplus and non-recyclable solutions to a licensed disposal company. Waste must be classified and labelled prior to recycling or disposal. Send to a licensed waste management company. Dispose of as hazardous waste in compliance with local and national regulations. Dispose of product residue in accordance with the instructions of the person responsible for waste disposal.
Contaminated packaging	:	Do not re-use empty containers.

SECTION 14. TRANSPORT INFORMATION

International Regulation

Petro-Canada is a Suncor Energy business.
TM Trademark of Suncor Energy Inc. Used under licence.

IATA-DGR

UN/ID No.	:	1202
Proper shipping name	:	Diesel fuel
Class	:	3
Packing group	:	III
Labels	:	3
Packing instruction (cargo aircraft)	:	366

IMDG-Code

UN number	:	1202
Proper shipping name	:	DIESEL FUEL
Class	:	3
Packing group	:	III
Labels	:	3
EmS Code	:	F-E, S-E
Marine pollutant	:	no

Transport in bulk according to Annex II of MARPOL 73/78 and the IBC Code

Not applicable for product as supplied.

49 CFR

UN/ID/NA number	:	1202
Proper shipping name	:	Diesel fuel
Class	:	3
Packing group	:	III
Labels	:	3
ERG Code	:	128
Marine pollutant	:	no

Special precautions for user

Not applicable

SECTION 15. REGULATORY INFORMATION

The components of this product are reported in the following inventories:

DSL	On the inventory, or in compliance with the inventory
TSCA	All chemical substances in this product are either listed on the TSCA Inventory or are in compliance with a TSCA Inventory exemption.
EINECS	On the inventory, or in compliance with the inventory

SECTION 16. OTHER INFORMATION

Petro-Canada is a Suncor Energy business.
TM Trademark of Suncor Energy Inc. Used under licence.

Further information

NFPA:

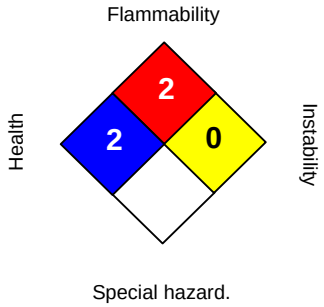

HMIS III:

HEALTH	**2**
FLAMMABILITY	**2**
PHYSICAL HAZARD	**0**
PERSONAL PROTECTION	**H**

0 = not significant, 1 =Slight,
2 = Moderate, 3 = High
4 = Extreme, * = Chronic

For Copy of (M)SDS : Internet: www.petro-canada.ca/msds
Canada-wide: telephone: 1-800-668-0220; fax: 1-800-837-1228
For Product Safety Information: 1 905-804-4752

Prepared by : Product Safety: +1 905-804-4752

The information provided in this Safety Data Sheet is correct to the best of our knowledge, information and belief at the date of its publication. The information given is designed only as a guidance for safe handling, use, processing, storage, transportation, disposal and release and is not to be considered a warranty or quality specification. The information relates only to the specific material designated and may not be valid for such material used in combination with any other materials or in any process, unless specified in the text.

TM Trademark of Suncor Energy Inc. Used under licence.

APPENDIX D 1.1– Agnico Pre-discharge and Spill Response Sea Can checklists

Agnico Eagle Mines: Meadowbank Division
Environment Department

AGNICO EAGLE MEADOWBANK

Pre-discharge Checklist for AEM's Oil Handling Facility in Baker Lake

Date: _____ **Inspected By:** _____

Time: _____ **Vessel Unloading:** _____

Pre-Discharge Check List	Conform	Non-Conform	Comments
Is there two way communications between the OHF and the off-loading Vessel?			
Has a review of response material checklist been completed?			
Current Copy of OPEP and Declaration at the OHF.			
Prior to discharge have the certification of the transfer conduits been received?			
Has there been secondary containment placed underneath each connection of Conduit?			
Is lighting in place at the transfer flange to provide illumination during any transfers taking place during the low to no light hours.			
Prior to discharge has the Vessels Ship/Shore checklist been reviewed and a completed copy received by AEM.			
Prior to discharge inform H&S and Environment Departments that fuel transfer will commence.			
Has the emergency response equipment been reviewed with all personnel and contractors on shore.			

Comments/Recommendations:_____

_____

_____

_____

_____

_____

_____

Signature : _____

Agnico Eagle Mines: Meadowbank Division
Environment Department

AGNICO EAGLE MEADOWBANK

Inventory report for Spill Response Sea Can at AEM's Oil Handling Facility in Baker Lake

Date: _____ **Inspected By:** _____

Time: _____ **Vessel Unloading:** _____

Subject	Conform	Non-conform	Comments
Is the material and PPE stored in a manner that is organized and accessible in order to easily respond to spill?			
Are the sea cans in physically good shape? Easy to open?			
Are the sea cans identified as "Environmental Emergency Sea Can"?			
Is all the spill material in place? Nothing Missing?			
3 x Empty drums (sealed)			
2 x Mini Berm 36"x 36"			
2 x 4 Drums Berm 4'x 8'			
4 x Tarp 20'x 30'			
4 x Tarp 30'x 50'			
10 x Oil Spill Absorbent Pads			
5 x Universal Absorbent Boom 5"x 10' (For Hydro-soluble Chemical)			
5 x Universal Absorbent Boom 8"x 10' (For Hydro-soluble Chemical)			
5 x Petroleum base Absorbent Boom 5"x 10' (for Petroleum product)			
4 x Maritime Barrier (Baffle)			
5 x ABS pipe: 10' long x 4" diameter			
2 x Cell-U-Sorb (Absorbent)			
2 x Amerisorb Peat moss (Absorbent)			

1

Agnico Eagle Mines: Meadowbank Division
Environment Department

2 x Oil Gator Absorbent			
1 x Plug Patties			
4 x Quatrex bags			
2 x Fork Lift Crate			
4 x Hand Shovel			
1 x Cro Bar Chisel			
1 x Ice Breaker Chisel			
1 x Sledge hammer			
15 x Rod bar 4'			
1x ½ drum containment			
100 feet of rope			
Knife to cut rope			
Emergency Boat			
18ft Lund boat			
20 HP motor			
Fresh gasoline in jerry can			
Boat Safety Kit			
2 Mustang Suits			
2 Paddles			
Anchor with 30 feet of rope			
Additional 20 feet of rope			
Is all the PPE material in its place?			
3 x Rain gear -- Pants and Top (L & 2-XL)			
3 x Rubber boots (size 8, 10,12)			
6 x Rubber gloves			
3 x Goggles			
3 x Tyvex suits (L & 2 XL)			

3 x Safety glasses			
3 x Leather gloves			

Comments/Recommendations:_____
_____
_____
_____
_____
_____
_____
_____

Signature : _____

APPENDIX D 1.2 – OHF Ship to Shore Fuel Discharge Procedure

OHF / Ship to Shore Fuel Discharge

		PROCEDURE NUMBER:	**MBK-ENV-0013 Rev. 2**
People concerned	• **Environment** • **Site Services** • **Procurement and Logistics** • **Health and Safety**	**Prepared by**	**Environment Department**
		Authorized by	**Jeffrey Pratt – Environment Coordinator**
Effective :	**July 8, 2015**	***"Safety First, Safety Last … Safety Always!"*** ***"No Repeats" – Our Stepping Stone to ZERO HARM***	
This procedure corresponds to the required minimum standard. Each and every one also have to comply with the rules and regulations of the Nunavut Government in terms of health and safety at work.			

Objective:

- To ensure that prior to the discharge of any fuel into the Agnico Eagle Baker Lake Tank Farm or Agnico Eagle Baker Lake Oil Handling Facility (OHF) that all proper steps are in place to ensure compliance with Canadian Shipping Act, as well as Nunavut Water Board License and Nunavut Impact Review Board Certificate.

Concerned departments:

Environment | Health & Safety | Site Services | Procurement and Logistics

Risks/ Impacts Legend

Health & Safety | Process/quality | Legal Requirement | Environment

Prior to the beginning of the annual fuel discharge the following must be completed.

Procedure	Risks/ Impacts
1. The Oil Pollution Emergency Plan (OPEP) must be reviewed on an annual basis and updated prior to the first annual discharge. This will include but not limited to: a) Reviewing the Phone numbers for emergency's b) Updating maps c) Review and if necessary update equipment lists d) Review roles and responsibilities e) Update Declaration This is the responsibility of the Environment department.	
2. Contact Canadian Coast Guard and Transport Canada Pollution Prevention and make them aware of plans for transferring of fuel into our OHF for that season. This is the responsibility of the Environment department.	
3. Complete *Inventory report for Spill Response Sea Can at AEM's Oil Handling Facility in Baker Lake*. (*Inventory Checklist found on Page 6) This is the responsibility of the Environment department.	
4. Ensure Woodward (Shipping Company) has provided Transfer Conduit Annual certification. This is the responsibility of Environment Department.	
5. All personnel who will be a part of the fuel transfer (including Baker Lake Supervisor and third part contractor Intertek) must review the OPEP and be familiar with preventive measures to take and with the steps to take in the case of a spill event while fueling. This is the responsibility of Procurement and Logistics	
6. Install secondary containment underneath each connection of conduit on land. This is the responsibility of Environment Department	

7. Monitor secondary containment underneath each connection of conduit on land. This is the responsibility of Procurement and Logistics	
8. Ensure there is two way functional communications between the OHF and the off-loading Vessel. This is the responsibility of Procurement and Logistics	
9. Ensure there is lighting in place at the transfer flange to provide illumination during any transfers taking place during the low to no light hours. This is the responsibility of Procurement and Logistics	
10. Prior to any discharge AEM must receive a copy of the Ship/Shore checklist completed by Woodward. And should verify this has been completed (as much as realistically possibly without boarding the ship). This is the responsibility of Procurement and Logistics	
11. Contact must be made with both the H&S and Environmental Departments prior to the discharge of fuels. Meadowbank Health & Safety meadowbank.healthandsafety@agnicoeagle.com Meadowbank Environment meadowbank.environment@agnicoeagle.com This is the responsibility of Procurement and Logistics	
12. The *Pre-discharge Checklist for AEM's Oil Handling Facility in Baker Lake* must be completed, signed and provided to the Environment department prior to discharge. (*Checklist found on Page 5) This must be done for each fuel tanker for each campaign. This is the responsibility of Procurement and Logistics	
Transfer	
1. Once the above points are completed, the ship to shore transfer can commence.	
2. Photos of the complete fuel transfer process should be taken, visually proving that all above procedures have been reached. This is the responsibility of Environment department and Procurement and Logistics.	

3. During the ship-to-shore transfer, AEM will have competent personnel on location at all times to monitor the fuel transfer and maintain contact with the tanker's crew. This is the responsibility of Procurement and Logistics.	
4. Monitor the fuel transfer at the beginning of each transfer and after that on an hourly basis checking the manifold, conduit, tank, and any connection points on land for spills and/or leaks. Communication between shore and ship should take place on an hourly basis. This is the responsibility of Procurement and Logistics.	
5. We are required by law to have a fuel spill scenario every two years. However, since we have shift work at Meadowbank, to ensure adequate training annually we will do mock spill/training and switch shifts each year. This way each shift completes every second year. This is the responsibility of Environment Department in conjunction with ERT to plan and execute.	

APPENDIX D 1.3 – 2016 Meeting Minutes of Fuel Transfer Procedure Revision Meeting

Environmental, P&L and E&I Departments
Ship to Shore Fuel Discharge Meeting Agenda
Agnico-Eagle Mines Limited
Meadowbank Project

Date:	April 19, 2016
Prepared By:	Environment Department
Meeting Lead By:	Robin Allard and Erika Voyer
Attendees:	Monique Cossette (P&L), Christian Soucy (E&I), Alex Arcand (E&I), Robin Allard (ENV), Erika Voyer (ENV)
Distribution:	Meadowbank Environment, Meadowbank Procurement and Logistic, Meadowbank Energy and Infrastructure

E&I – Energy and Infrastructures, P&L – Procurement and Logistics, ENV - Environment

	Procedure MBK-ENV-0013 Review	Task Owner	Due Date
1	**OPEP Review**	ENV	May 9th (+60 days prior to transfer)
2	**Contact Canadian Coast Guard and Transport Canada Pollution Prevention**	ENV	May-June
3	**Complete Inventory report for spill response c-can**	ENV	May-June
4	**Ensure that Woodward provide Transfer Conduit Annual certification (Hose Cert.)**	ENV	Prior to first transfer – in OPEP
5	**All personal to review the OPEP and be familiar with preventive measures.** (OPEP will be provided by Env.)	All	Prior to first transfer – July 1st
6	**Install secondary containment underneath each connection of conduit on the land** - *For Jet A hose installation – collaboration between P&L and E&I*	ENV	Prior to first transfer
7	**Monitor secondary containment underneath each connection of conduit on land.**	P&L (Intertek)	Before and during transfer
8	**Ensure there is two way functional communications between the OHF and the off-loading Vessel**	P&L	Before and during transfer
9	**Ensure there is lighting in place at the transfer flange to provide illumination during any transfers taking place during the low to no light hours**	P&L/ E&I (if repairs is required)	Before and during transfer
10	**Prior to any discharge AEM must receive a copy of the **Ship/Shore checklist completed by Woodward. And should verify this has been completed (as much as realistically possibly without boarding the ship).**	P&L	Prior to each transfer

11	**Contact must be made with both the H&S and Environmental Departments prior to the discharge of fuels (generally by email)**	P&L	Prior to each transfer
12	**The Pre-discharge Checklist for AEM's Oil Handling Facility in Baker Lake must be completed, signed and provided to the Environment department prior to discharge.** **This must be done for each fuel tanker for each campaign.**	P&L (Intertek)	Prior to each transfer
During Transfer Procedure review			
1	**Once the above points are completed, the ship to shore transfer can commence** - *Valve opening and sequence for tank filling will be completed by E&I*		
2	**Photos of the complete fuel transfer process should be taken, visually proving that all above procedures have been reached**	ENV. and P&L	Prior and during transfer
3	**During the ship-to-shore transfer, AEM will have competent personnel on location at all times to monitor the fuel transfer and maintain contact with the tanker's crew.**	P&L (Intertek)	During transfer
4	**Monitor the fuel transfer at the beginning of each transfer and after that on an hourly basis checking the manifold, conduit, tank, and any connection points on land for spills and/or leaks. Communication between shore and ship should take place on an hourly basis**	P&L (Intertek)	During transfer
5	**We are required by law to have a fuel spill scenario every two years. However, since we have shift work at Meadowbank, to ensure adequate training annually we will do mock spill/training and switch shifts each year. This way each shift completes every second year.**	ENV and ERT	Summer, during period of transfer
Miscellaneous			
1	**Document required prior to fuel transfer** - Hose certifications (Hydrostatic test) – Woodwards (will be included in OPEP) - **Notice of readiness, Floating hose Ship/Shore Cargo checklist , Cargo preparation checklist - Woodwards - OHF Ship to Shore Fuel Discharge AEM Checklist prior to transfer - AEM	P&L	

2	**Intertek role and responsibility** Intertek is the contractor under the responsibility of P&L hired for the fuel transfer. Intertek must be aware of the required procedure for the fuel transfer and have received the proper documents (OPEP, OHF / Ship to Shore Fuel Discharge AEM procedure). Intertek will complete some tasks related to P&L responsibilities during transfer.	P&L	
3	**Management of the wildlife monitors to be on the barge** - ENV will contact Woodwards for lodging on the boat - ENV will contact Comm. Affairs in BL for management of the monitors this summer	ENV/Comm. Affairs	
4	**Inspection by Environment**	ENV	Prior and during transfer

APPENDIX D 1.4 – 2016 Mock Spill Minutes

AGNICO EAGLE

On October 3rd, 2016 AEM Sr. Environment Technician Tom Thomson and Environment Technician Randy Schwandt met with Intertek personal in Baker Lake to conduct a mock spill at the Baker Lake transfer valve.

AEM Sr. ENV Tech Tom Thomson took photographs and documented the spill actions as well as acted as the "Control Room" responder. AEM ENV Tech Randy Schwandt acted as the BL Dispatch and the ENV Technician on the scene.

The scenario was a leaking flange at the transfer valve. The secondary containment under the transfer valve had overflowed and was now leaking diesel fuel into the tundra and towards the shoreline. Below is the timeline of the scenario.

13:30 – Spill occurs (45g drum w/water and dye is tipped over outside the secondary containment pool)



13:34 – Intertek crew do visual inspection of transfer valve and pipeline. Overflow of secondary containment pool and leaking flange at the transfer valve is observed by Intertek crew.



AGNICO EAGLE

13:36 – Intertek crew calls the vessel to stop transfer of fuel and relays the message of leaking flange at transfer valve to the Captain.



13:40 – Intertek crew has receive confirmation from captain of vessel that fuel transfer has stopped. Intertek calls Code 1 to Baker Lake dispatch. BL dispatch confirms the spill and advises Intertek that they will relay information to Environment department.

13:45 – Intertek crew goes to Emergency Sea-Can to pull out spill response equipment



13:50 – Spill response equipment is deployed by Intertek crew and containment of the spill commences. ENV Tech arrives on site to assess the spill and advise crew of containment and clean up actions

AGNICO EAGLE

13:52 – AEM ENV Tech relays status of the spill and clean up/containment actions to AEM Control room.





13:55 – AEM ENV Tech asks Site Service for vacuum truck and ENV team for Emergency spill trailer with pump to be brought down to Baker Lake to empty secondary containment pool.

14:00 – AEM ENV Tech asks Intertek crew if the spill is contained. Intertek confirms and ENV tech relays status of spill to MBK control room and MBK environment team.

AGNICO EAGLE

AEM Comments/Recommendations: Intertek crew communicated and confirmed with the vessel the stopping of fuel transfer. The Baker Lake dispatch was also notified of the spill. After identifying the source of the spill and assuring the safety of the crew - Intertek commenced preparing spill response equipment for containment and clean up.

AEM stressed the importance of taking all necessary precautions to ensure that a spill does not enter Baker Lake. Containment booms, diversion booms, or maritime booms are all available in the Emergency Sea Cans. Be sure to use all available resources to contain spill. AEM also mentioned that any heavy equipment such as backhoes, excavators, dump truck is available at any time in the event of a spill. Intertek should not hesitate to ask for AEM assistance.

AEM mentioned the importance of the making the facility safe by installing barricades or a "No Entry" perimeter around the spill area. Intertek should not hesitate to ask for AEM assistance.

AEM mentioned to Intertek/ENV Tech to follow chain of command. Use people/resources as necessary – i.e. send 1 or 2 people to get spill response gear, another person to barricade area, another person to call dispatch or control, etc.

AEM mentioned the OPEP and Spill Contingency plan located in the spud barge office. If Intertek crew is unsure of what to do or what procedures to follow – they can refer to the plans listed above or call Environment department. Again – Intertek should not hesitate to ask for AEM assistance.

Intertek Comments/Recommendations: Intertek asked AEM to provide a radio with BL Dispatch, Vessel, and Spud Barge radio frequencies to allow for quicker communication with the Spud Barge and BL dispatch in the event of a spill.

Intertek asked AEM to provide more "spill" drums (at each connection) or move one of the emergency spill Sea-cans closer to the transfer valve to allow for faster deployment of spill recovery equipment in the event of a spill.

Intertek asked AEM for a solid berm or a solid secondary containment pool around the transfer valve. The current secondary containment pool walls are pushed down by the pipes and would not fully contain a spill or leak if it occurred. Intertek suggested a small genset, pump, and empty tote be accessible to empty the containment pool in the event of a spill.

Intertek suggested to AEM an upgrade of spill response equipment, including more equipment to respond a spill that entered Baker Lake.

Intertek asked for additional tower lights along the pipeline to assist in the inspection process.

APPENDIX E 1.1– COASTAL SHIPPING LTD. SHIP GENERAL CHECKLIST

ARCTIC WATERS OIL TRANSFER

TRANSFER PARTICULARS

VESSEL / STATION INFORMATION			Location:	
	Supplier	Recipient	Start Date	
Vessel / Station Name			Start Time	
Officer in Charge			Finish Date	
Title			Finish Time	

OPERATIONS	
Transfer Type:	Connection Type (eg 2/4 bands):
Total Length of Hose (m):	Number of Hose Sections:
Diameter (m):	Test Pressure (kPa):
Purge Method: Nitrogen / Air	Pig Used: Yes / No
Boom deployed before transfer: Yes / No	If yes, type:
Work Boat used: Yes / No	
Hose Strain Relief System used: Yes / No	

PRODUCT INFORMATION				WEATHER CONDITIONS
Type	Quantity	Start Time	Finish time	Ice:
				Wind Force (knots):
				Wind Direction:
				Sea State:
				Visibility:
				Light Conditions:

COMMUNICATIONS	
Primary Method:	(VHF/UHF CHAN/FREQ)
Backup Method:	(PHONE, RADIO, ETC)
Language Used:	

ARCTIC WATERS OIL TRANSFER **GENERAL CHECKLIST FOR ALL TRANSFERS**

GENERAL PROCEEDURE	CHECK	SUPPLIER		RECIPIENT		COMMENTS
	YES	INITIAL	DATE	INITIAL	DATE	
1. Pre-transfer P.A. Announcement made?						
2. All personnel involved are informed & adequately trained? A designated person in charge on duty at all times during the transfer operation?						
3. Language agreed to?						
4. All communications including Backup System tested?						
5. Is fire fighting equipment tested, available & are fire screens in place?						
6. Are all regulations for transfer unders tood and observed and "NO SMOKING, NAKED LIGHTS or FLAMES" signs posted?						
7. Are flashlights "intrinsically safe" and approved?						
8. Are window type A.C. units switched off?						
9. Are exterior doors and ports leading to main deck closed?						
10. Is equipment, tools & material required for transfer available at hand?						
11. Is containment equipment and absorbent material available?						
12. Has Transfer Emergency Shutdown been tested?						
13. Hoses to be used have been checked for:						
a) correct diameter & length to reach other station,						
b) chafing, cracks or other deformation,						
c) damaged fittings,						
d) blanking of hoses,						
e) continuity.						
14. All repair work at either station stopped. (if dangerous for transfer)						
15. Inert gas system is fully operational (if fitted).						

16. Main transmitting aerials and radar scanners are used with due care .

GENERAL PROCEEDURE	CHECK	SUPPLIER		RECIPIENT		COMMENTS
	YES	INITIAL	DATE	INITIAL	DATE	
17. All craft alongside are authorised and following hazard warnings, etc.						
18. Is hose test certificate or records available for inspection?						
19. Have weather and ice report s been determined?						
20. Are gas concentration accumulations in still air conditions monitored?						
21. Are all scuppers plugs in place?						
22. Are main decks free of standing water?						
23. Were manifolds drained before removing blanks?						
24. Are pressure gauges ready and in place?						
25. All sea valves on cargo systems closed?						
26. Are drip cans and trays in place, and empty?						
27. Is lighting adequate for all transfer requirements?						
28. Is mooring watch being monitored?						
29. Are spill reporting procedures understood?						
30. Are all tank vents free of blockage?						
31. Have Pressure/Vacuum Relief (PVR) valves been checked?						
32. Has a post-transfer PA announcement been made?						
33. Are International signals being displayed? (if required)						
34. Has a written procedure and the sequence of the transfer been agreed upon?						
35. Is there a clear understanding of the watch and shift arrangement?						
36. Will there be sufficient personnel a vailable at all times to monitor the transfer operation, tend cargo hose and mooring lines and take appropriate action in an emergency?						

APPENDIX E 1.2– COASTAL SHIPPING LTD. SHIP TO SHORE CHECKLIST

ARCTIC WATERS OIL TRANSFER **CHECKLIST FOR SHIP TO SHORE TRANSFERS**

	SHIP to SHORE - PROCEEDURE	CHECK	SUPPLIER		RECIPIENT		COMMENTS
		YES	INITIAL	DATE	INITIAL	DATE	
1.	Has the General Checklist for All Transfers complete?						
2.	Are all vehicles outside the agreed safe distance?						
3.	Are the emergency towing wires in place?						
4.	Is the vessel ready to move under its own power immediately?						
5.	Has a hose drainage plan been agreed upon?						
6.	Has the hose string been checked to working pressure?						
7.	Is a work boat deployed to check the hose frequently for leaks during transfer?						
8.	Are all transfer associated valves and tanks closed after transfer?						
9.	Have hoses been purged prior to their return to the vessel?						
10.	Are hoses and other transfer equipment properly stowed?						

APPENDIX E 1.3– COASTAL SHIPPING LTD. CARGO PRE ARRIVAL

ARCTIC WATERS OIL TRANSFER **CHECKLIST FOR BARGE TRANSFERS**

	BARGE - PROCEEDURE	CHECK	SUPPLIER		RECIPIENT		COMMENTS
		YES	INITIAL	DATE	INITIAL	DATE	
1.	Has the General Checklist for All Transfers been completed?						
2.	Is the dis charge pump as close as possible to suction pipe of the discharge tank?						
3.	Check hard line hose between pump and tank (if fitted)?						
4.	Check couplings on discharge between pump and recipient?						
5.	Do not exceed the following: a) maximum list (P & S) b) maximum trim (FWD & AFT)						
6.	Are barge tank diagrams and pipe schematics available?						
7.	Are fenders between the barge and other vessel?						
8.	Is barge equipment bonded to barge structure?						
9.	Are fire screens installed in ullage openings?						
10.	Are all valves closed and hoses stowed after completion of transfer?						

APPENDIX F – Agnico Internal Spill Report Form

Agnico Eagle Mines Meadowbank Project:
Internal Spill Reporting Form

(Spills greater than the *Reportable Volume*, see Spill Contingency Plan, require the completion and submission of the *Nunavut Spill Report Form*)

AGNICO EAGLE	Meadowbank Project	Spill report #.
Date and time of spill :		
Location of spill :		
First responder name :		
Company Name:		
AEM Contact:		
Nature of contaminant :		
Volume/quantity of the container / tank (L)		
Quantity spilled (L) :		
Cause of the spill :		
Contaminant collected by :		
Follow-up done by :		
Actions taken :		
Report completed by:	Date :	
Incident investigation recommended :	YES ☐	NO ☐
Government agency notified :	YES ☐	NO ☐
Date of notification to government agency :		
Date of report : _____	Signature of environmental personnel : _____	

Landfarm Design and Management Plan, Version 4

MEADOWBANK GOLD PROJECT

Landfarm Design and Management Plan

In Accordance with Water License 2AM-MEA1525

Prepared by:
Agnico Eagle Mines Limited – Meadowbank Division

Version 4
March, 2017

EXECUTIVE SUMMARY

General Information

The Landfarm Design and Management Plan (LDMP) describe the design features and operational procedures for the landfarm constructed at the Meadowbank Gold Project site for the storage and treatment of petroleum hydrocarbon contaminated soil.

Annual Review

The LDMP will be reviewed and updated if necessary. Completion of the review of the LDMP will be documented through signatures of the personnel responsible for reviewing, updating and approving the LDMP.

Record of Changes

A record will document all significant changes that have been incorporated in the LDMP subsequent to the latest review. The record will include the names of the persons who made and approved the change, as well as the date of the approval.

Distribution List

Agnico Eagle Mines Limited will maintain a distribution list for the LDMP providing information about all parties that receive the plan including mine personnel, departments, and outside agencies.

IMPLEMENTATION SCHEDULE

As required by Water License 2AM-MEA1525, Part B, Item 11, the proposed implementation schedule for this Plan is effective immediately (February 2017) subject to any modifications proposed by the NWB as a result of the review and approval process.

DISTRIBUTION LIST

Agnico Eagle – Environmental Superintendent
Agnico Eagle – Environmental Senior Coordinator
Agnico Eagle – General Mine Manager
Agnico Eagle – Energy and Infrastructure Superintendent
Agnico Eagle – Field Services Supervisor
Agnico Eagle – Engineering Superintendent

DOCUMENT CONTROL

Version	Date	Section	Page	Revision
1	08/10/08	2		Remediation guidelines used and the parameters measured
		7		Details on storage and treatment options for metals, solvents, glycol and heavy oils; Measures to prevent damage to the liner during mechanical operation
		4		Contingency plans for exceedances in the amounts of contaminated soil and/or snow/ice
		5		Details describing the design components/specifications of the spillway
		8		Contingency planning and monitoring of sump volumes during the snowmelt period
2	12/10/22	All	All	Comprehensive revision to original plan
3	13/02/28	All	All	Further detail and rationale provided
4	17/02/20	All	All	Comprehensive review. Add detail regarding the Landfarm #2

Prepared By: Meadowbank Environment Department

Approved By: Jamie Quesnel
Environmental Superintendent

TABLE OF CONTENTS

1 Introduction 6
1.1 Background 6
1.2 Objectives 6
2 Spill Prevention 7
2.1 Spill Management Documentation 7
2.2 Spill Severity 7
3 Landfarm Design 8
3.1 Background 8
3.2 Location 8
3.2.1 Proximity of Surface Water 12
3.2.2 Proximity of Groundwater 12
3.3 Design 12
3.3.1 Soil Volume Requirements Landfarm 2 12
3.3.2 Design Specifications 12
4 Landfarm Operation and Maintenance 14
4.1 Management Responsibility 14
4.2 Acceptable Materials 14
4.2.1 Contaminants 14
4.2.2 Grain Size 15
4.3 Contaminated Soil Additions 15
4.3.1 Spill Excavation 15
4.3.2 Placement in the Landfarm 15
4.4 Contaminated Snow 15
4.5 Remediation 15
4.5.1 Absorbent Materials 16
4.5.2 Aeration 16
4.5.3 Soil Moisture 16
4.5.4 Nutrient Amendment 16
4.6 Removal of Soil from the Landfarm 17
4.6.1 Remediation Guidelines 17
4.6.2 Sampling and Analysis 18
4.6.3 Soil Removal 18

4.7 Water and Snow Management 19
4.7.1 Snow Management 19
4.7.2 Water Management 19
4.8 Landfarm Abandonment 19
4.9 Summary of Activities 20
5 Contingency Options 22
5.1 Large Spill Event 22
5.2 Alternate Treatment Options 22
5.2.1 Soil Amendment 22
5.2.2 Tier 2 – Modified Criteria Approach 22
5.2.3 Thermal Desorption 23
5.2.4 Direct Placement in the TSF or PRSF 23
6 Plan Review and Continual Improvement 24

LIST OF TABLES

Table 1 - Summary of relevant Government of Nunavut Tier 1 soil remediation criteria for surface soil for industrial land uses. 18
Table 2 - Summary of landfarm activities and records to be kept. 21

LIST OF FIGURES

Figure 1. General location of Landfarm 1 and Landfarm 2. 9
Figure 2. Landfarm 1 as-built design 10
Figure 3. Landfarm 2 as-built design 11

1 INTRODUCTION

1.1 Background

In 2008 the Landfarm Design and Management Plan was developed by Agnico Eagle in accordance with Water License 2AM- MEA0815 to describe the handling and remediation of petroleum hydrocarbon (PHC)-contaminated soil at the Meadowbank site. During construction and initial operations (2008-2011, prior to construction of the landfarm facility), soil potentially contaminated with PHCs, as a result of spills was deposited in two quarries (Q5 and Q22) along the All Weather Access Road (AWAR). The majority of this soil was from a transport tanker spill in 2010 and from the contractor camp used for roadway construction in 2007 and 2008. In 2012 the transport of this soil back to the minesite for treatment/storage at the onsite landfarm began. Subsequent landfarm design and management plan modifications (Version 2 and 3) focused on minimizing the waste footprint onsite, and maximizing remediation potential through implementation of a pilot bioremediation project, as well as spill prevention and contingency planning. The current version (Version 4) has been updated to describe construction of an extension to the original landfarm, and construction of a new landfarm facility in 2016.

1.2 Objectives

Onsite storage and remediation has been established as the preferred method for treatment of petroleum hydrocarbon-contaminated soil that may be generated on the Meadowbank site, Exploration Camp and Amaruq Road. Specifically, remediation through landfarming has been identified as the primary treatment option and, as such, is the focus of this contaminated soil management plan. A pilot project to enhance rates of bioremediation through addition of a nutrient source is also described. Alternate contingency options in the event that landfarming is not successful or as efficient as planned are also discussed.

This plan is a component of the Meadowbank Environmental Management System. The objectives of this plan are:

- To provide an overview of contaminated soil management at Meadowbank
- To describe the physical setting, location and design criteria of the landfarm
- To define acceptable types of contaminated soils to be placed in the landfarm and conditions for removal of treated soil
- To define operating procedures and monitoring requirements for the landfarm, including the pilot bioremediation project
- To describe contingency options for alternate treatment/storage of PHC contaminated soil

2 SPILL PREVENTION

2.1 Spill Management Documentation

Spill prevention is the first stage in contaminated soil management at the Meadowbank site. Three documents describe spill prevention, management and response at this facility: the Spill Contingency Plan, the Emergency Response Plan, and the Oil Pollution Emergency Plan. Specifically, Section 2.1 of the Spill Contingency Plan describes spill prevention measures and can be referred to for further detail. All are updated regularly. General spill prevention methods include:

- Regular inspections of fuel/chemical storage areas for leaks
- Training in safe handling procedures
- Keep containers sealed
- Use methods of secondary containment
- Keep over pack drums nearby to contain leaking drums
- Keep storage area secure from unauthorized access, and protected from weathering and damage
- Segregate incompatible materials
- Regular meetings with site departments

2.2 Spill Severity

In 2011, spills of landfarmable materials (fuel and hydraulic oil) at Meadowbank totaled 5,338 liters. In 2012, Meadowbank Division Environment Department increased delivery of spill prevention programing. This included more departmental information sessions to maintain awareness about spill prevention methods and reporting procedures. In 2012, spills of fuel and hydraulic oil have been reduced to 3,012 liters. In 2013, the Environment Department incorporated a site wide training session for every employee on site. In addition, the Emergency Response Team as well as Environment and Road Maintenance staff had extensive training in spill response by a consultant specializing in spill training (January, 2013). Training pertains to spill response on the tundra as well as surface water. In addition, Agnico has begun use of a new hydraulic fluid (Hydrex^{TM} Extreme; Petro-Canada) that contains no heavy metals and is 40% biodegradable in 28 days. It is therefore estimated that any soil contaminated with the new fluid will be more rapidly remediated in the landfarm than soil contaminated with the previously used fluid. A significant increase of reported spills was noted in 2016 comparing to previous years. The overall changes are a result of different factors, focus on proper spill reporting, equipment wear and increased mining production. An action plan was initiated to address the increase and identify proper improvement channels.

3 LANDFARM DESIGN

3.1 Background

When spills do occur, onsite storage and remediation is the most practical and efficient method of handling contaminated soil, particularly in an isolated location like Meadowbank. For PHC contamination, bioremediation through landfarming has been identified as a viable remedial technique. This method involves spreading, mechanical mixing, and placing the contaminated soil in windrows within a containment area and promoting conditions favorable for the volatilization and aerobic microbial degradation of hydrocarbons. A number of environmental factors and physical properties of the soil affect microbial growth and rates of biodegradation, including temperature, soil moisture, nutrient content, salinity and soil particle size.

Previously, a landfarm options analysis prepared for Agnico by Golder (2007a) identified some of these factors, and presented the following information from the literature on landfarming in the north. Although rates of biodegradation decline with temperature, landfarming is still a feasible technique in arctic climates (Reimer et al. 2005). Microbial activity stops between 0 – -5°C (although volatilization continues at this temperature), so degradation in the north is typically restricted to the months of June – September. Nevertheless, degradation was reported at 70% after one year in a study in Alert, NU (Greer et al. 2007), and 90% over two summers on Resolution Island (Paudyn et al. 2005).

3.2 Location

The overall site plan for the Meadowbank Gold Project and the location of the landfarm facilities are shown in Figure 1. This central location was chosen to minimize the waste footprint on site and the transport distance of contaminated material from spill locations. All of the waste generated at Meadowbank in the form of tailings, wasterock and the site landfill is in close proximity. The location of the original landfarm facility (Landfarm 1) is directly north of the South Cell Tailings Facility. In 2016, Landfarm 1 was extended due to operational work required at the buttress of the Stormwater Dike. The Landfarm 1 extension as-built drawing is presented in Figure 2.

In 2016, a second landfarm facility (Landfarm 2) was constructed in the same general location within the South Cell Tailings impoundment, since the Landfarm 1 facility is planned to be flooded by reclaim water in mid-2017. Landfarm 2 is located on the north east side of the South Tailing Cell, north of the Central Dike. Specifications of the Landfarm 2 design are presented in the as-built drawing, Figure 3. As with the original landfarm, the Landfarm 2 facility is designed with one soil remediation/storage cell.

Landfarm 1 may continue to be used until mid-2017. At that point, any un-remediated soil will be moved to Landfarm 2 as necessary.

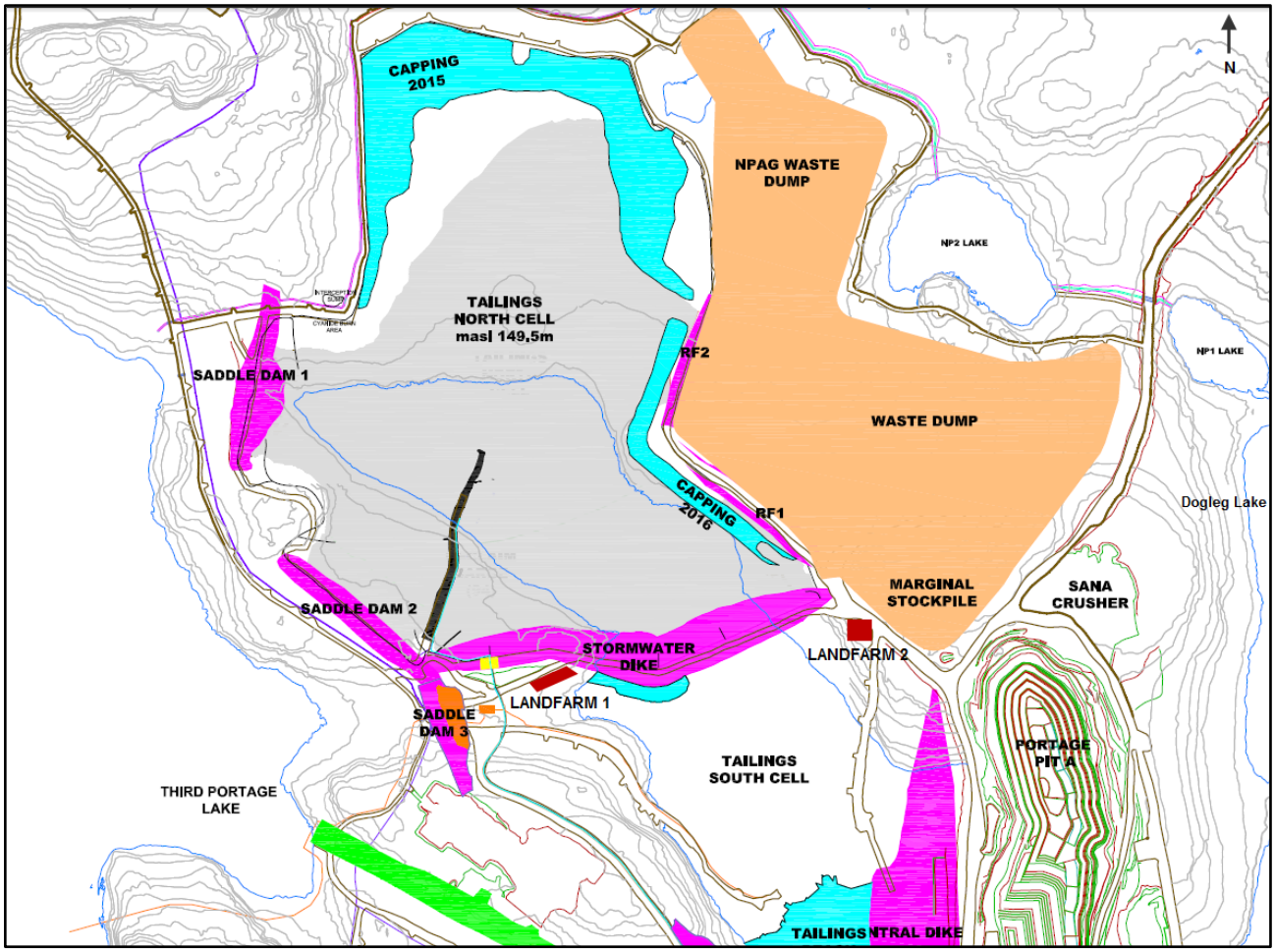

Figure 1. General location of Landfarm 1 and Landfarm 2.

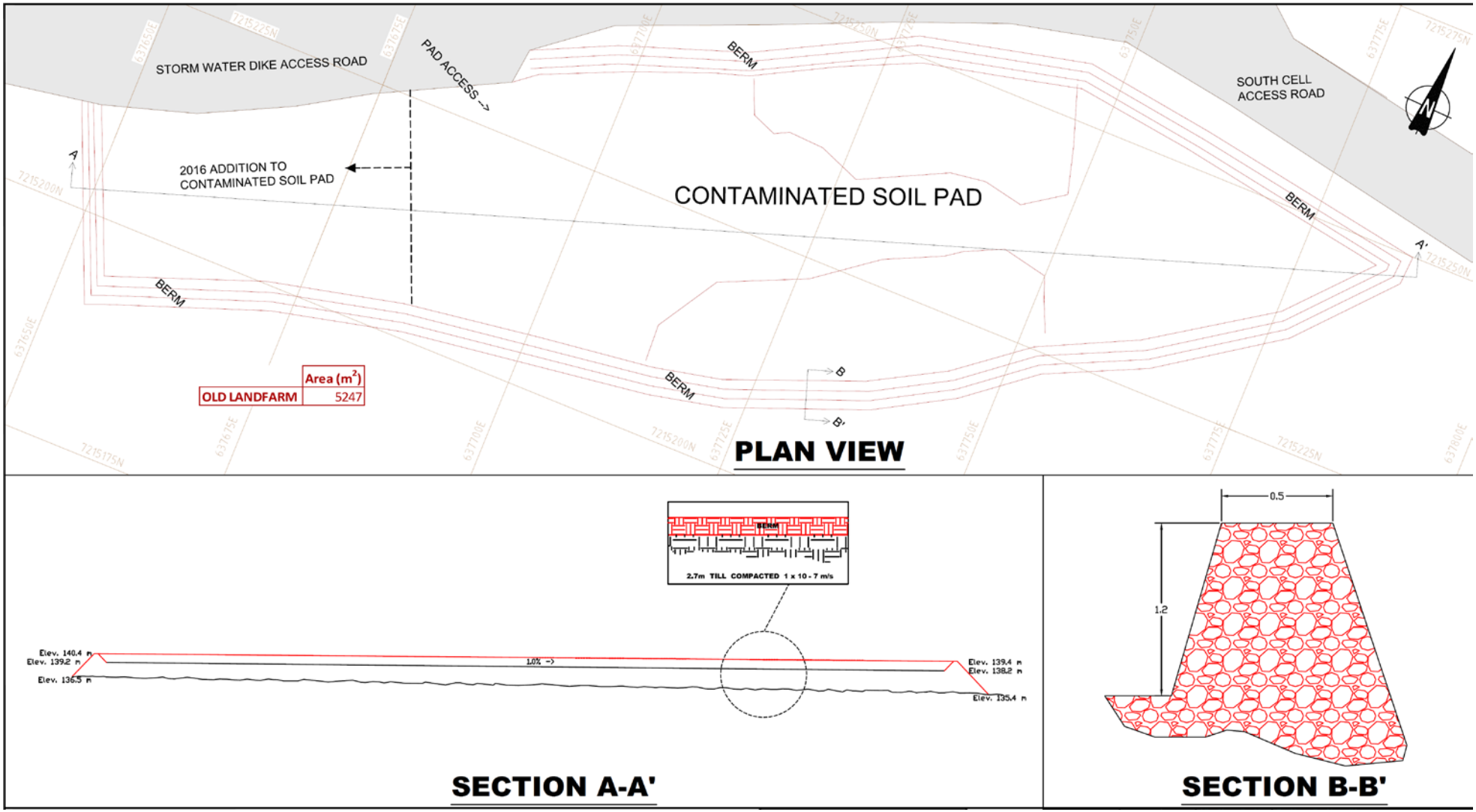

Figure 2. Landfarm 1 as-built design

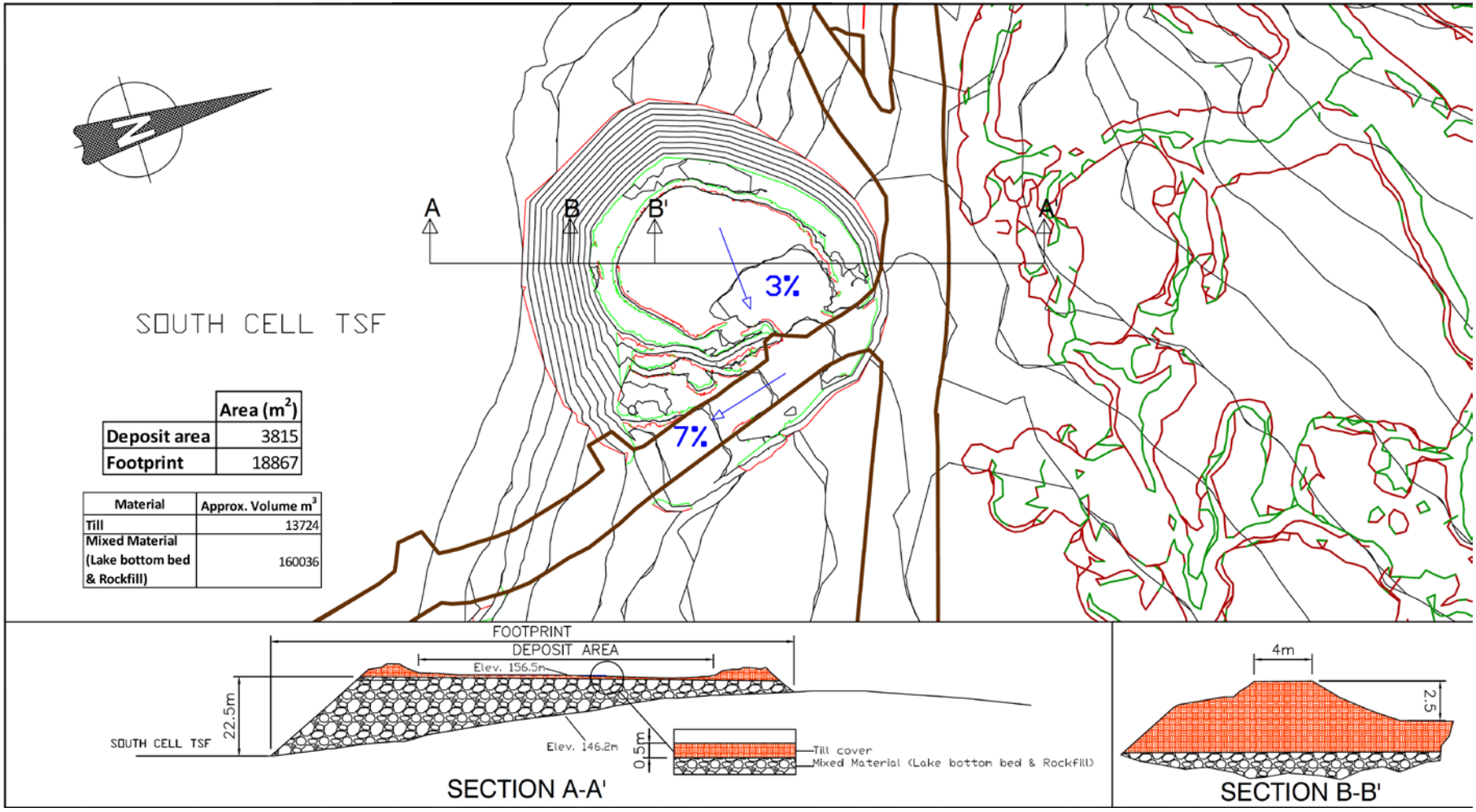

Figure 3. Landfarm 2 as-built design

3.2.1 Proximity of Surface Water

Landfarm 1 is located 300 m from the nearest water body, Third Portage Lake (TPL) and immediately adjacent to the North Cell Tailings Storage Facility (TSF). Surface drainage in this area is easterly, towards the TSF and away from TPL.

Landfarm 2 is 900 m west of the nearest water body (Dogleg Lake). Surface drainage in the area of Landfarm 2 is westerly, towards the South Tailings Cell and away from surface watercourses.

3.2.2 Proximity of Groundwater

In the Meadowbank area, the shallow groundwater is estimated to be 1.5 m below surface (active layer July – October), at the average depth of thaw. In order to prevent movement of contaminants from the landfarm facility into groundwater, Environment Canada (SAIC, 2006) recommends implementation of a barrier with 10^{-7} m/s hydraulic conductivity at a thickness of 0.6 m. The Meadowbank Landfarm 1 facility pad is constructed of 2.7 m of compacted till with a hydraulic conductivity of 10^{-7} m/s. The Landfarm 2 cell is constructed with a 0.5 m thick layer of compacted till base with hydraulic conductivity estimated of 10^{-7} m/s, over a constructed pad which varies between 6 m and 22.5 m in thickness. Therefore, no impacts to groundwater are anticipated.

3.3 Design

The landfarm facilities are designed with one soil remediation/storage cell. The design volumes of the cells are based on allowances for the materials to be treated. This calculation is described in the following section.

3.3.1 Soil Volume Requirements Landfarm 2

In September 2016, Landfarm 1 held a total of 1,258 m^3 of contaminated soil, based on survey results. Currently production will continue through 2018 for an expected additional required landfarm capacity of 692 m^3 (2 years x 346 m^3/year; average yearly amount of contaminated soil, from LDMP (Agnico, 2013)). With an additional 30% for contingency, and conservatively assuming that no soil will be remediated in Landfarm 1 in 2017 and before closure, the total estimated required capacity for landfarm 2 is 2,535 m^3.

3.3.2 Design Specifications

Specifications of the landfarm designs are shown in Figure 2 and 3. Landfarm 1 is constructed with a 1.5 m high berm and a 2.7 m deep compacted till base with hydraulic conductivity of $1x10^{-7}$ m/s. The slope of the base is 1.5%.

Landfarm 2 is constructed with a 2.5 m high berm and a 0.5 m thick compacted till base with hydraulic conductivity estimated of 10^{-7} m/s. The slope of the base is 3% towards the east side, and 7% towards the South Tailings Cell. The pad under the till layer on top of the tundra

varies from 6 – 22.5 m thick.

For Landfarm 1, the useful landfarm area is 5,247 m^2, with the extension. The area of Landfarm 2 is 3,815 m^2. Based on landfarm specifications of other northern mines (Ekati Diamond Mine – in Golder, 2007a), contaminated material can be stockpiled up to 4 m high. Accounting for a 25% loss of area due to sloping at that windrow height, the landfarm area will allow for the storage of a maximum of 11,445 m^3. This will readily accommodate the estimated total of 2,535 m^3 of contaminated soil, should all of it need to be stored until closure. In addition, ample room will be available to accommodate a designated area for spreading of contaminated coarse-grained material that cannot be bioremediated (see Section 4.2.2).

Based on the available area, maximum windrow size will be 15 m wide at base x 4 m high x 50 m long, but smaller piles will be used as space allows maximizing rates of biodegradation and volatilization.

4 LANDFARM OPERATION AND MAINTENANCE

The following presents the operational procedures that apply to each landfarm facility.

4.1 Management Responsibility

Agnico Eagle will be responsible for managing and implementing the operation plan. Operation and monitoring of the facility will come under the responsibility of the Environment Superintendent. Designation of training requirements is the responsibility of Meadowbank Environment Department.

4.2 Acceptable Materials

4.2.1 Contaminants

The landfarm facility will only treat and/or store petroleum hydrocarbon contaminated soils that have been generated through mine-related activities at the Meadowbank Gold, Project Meadowbank exploration camp and the Amaruq Road. Material from other sites will not be accepted without approval from the Nunavut Water Board, AANDC Water Resources Officers and the Kivalliq Inuit Association.

The following products may be treated in the landfarm if used onsite and spilled on soil:

- Diesel fuel
- Gasoline
- Aviation fuel (Jet A)
- Hydraulic oil
- Other light oil e.g. engine oil, lubricating oil

In the event that the contaminant source is unknown, soil samples will be analyzed for petroleum hydrocarbons and possibly additional contaminants prior to placement in the landfarm. These additional parameters could include total metals, oil and grease, and volatile organic compounds. Analysis for additional compounds will be determined by the Environment Department on a case-by-case basis. Concentrations of contaminants will be compared to the site background values (for metals) and/or criteria in the GN Guidelines for Contaminated Site Remediation (March, 2009). If this analysis indicates soil contamination above background or GN guidelines with any substances not described in Section 4.2.1 (i.e. non-PHC contaminants), it will not be placed in the landfarm facility. This is to ensure PHC contaminated soil is not contaminated with other products.

Spills of > 100 L of non-PHC material (e.g. solvents, glycol) will be placed in drums and stored in the site Hazmat area for shipment south to approved facilities during barge season. Spills of non-PHC material < 100 L will be placed in the TSF.

4.2.2 Grain Size

While very coarse-grained larger soil material does not readily retain moisture and nutrients, inhibiting bioremediation, volatilization will occur more rapidly (SAIC, 2006). It has been noted that this material likely contains lower concentrations of contaminants due to a lower volume:surface area ratio, and can typically be screened out prior to landfarming (SAIC, 2006). A 2010 study at Meadowbank (Qikiqtaaluk Environmental, 2010) indicated increasing concentrations of PHC with decreasing grain size in one group of samples with soil fractions of 0.5, 0.5-1 and >1" (two other groups sampled were below detection at all grain sizes) (see Section 4.3.1).

4.3 Contaminated Soil Additions

4.3.1 Spill Excavation

Soil contaminated with the above-described petroleum hydrocarbon materials will be excavated from the source and transported to the landfarm facility in dump trucks or by roll- off containers. Care will be exercised to ensure that the entire spill is excavated (verified by visual assessment, by using a PID meter or sampling if necessary) and that none of the contaminated material is lost during transport.

4.3.2 Placement in the Landfarm

All material collected (coarse and fine) from spill locations will be deposited at the landfarm to be remediated.

A mechanical screener, used to separate coarse and fine material, will be operated to segregate material once in landfarm when conditions permit it.

4.4 Contaminated Snow

For spills < 100 L, PHC-contaminated snow will be placed in a designated area of the landfarm and treated as contact water after snowmelt.

For spills > 100 L, PHC-contaminated snow will be excavated and stored in labeled drums. After snow melt, the contaminated water will be pumped through the site's oil-water separator (carbon filter) to remove PHC residue. The treated water will be sampled per Part F, Item 7 of the Water License, and discharged to the Stormwater Management Pond if criteria are met. If criteria are not met, water will be treated as hazardous material and shipped south. Also, after snowmelt, visible product will be cleaned up with absorbent pads or booms.

4.5 Remediation

Remediation of fine-grained PHC-contaminated soil in landfarms occurs naturally through volatilization and aerobic microbial degradation. Soil aeration and nutrient amendment are recognized as methods of improving rates of remediation. To this end, remedial operations at

the Meadowbank site include soil mixing (aeration) and a pilot project utilizing onsite nutrient additions. While it is recognized that pH, salinity, moisture content and microbial population density also contribute to rates of degradation, these factors will not be explicitly investigated or managed unless remediation rates are too slow to meet the site closure time period (see Section 5.2).

4.5.1 Absorbent Materials

Coarse-grained soils are not readily bio-remediated, but concentrations of PHC contaminants may still be reduced through volatilization. Oil absorbent pads will be used to help remove visible product from coarse-grained material. Used absorbent materials will be incinerated.

4.5.2 Aeration

In order to promote aerobic conditions throughout the windrows, soil will be mixed mechanically with earth-moving equipment. This turnover of soil piles will occur at least once per year, during the summer months. The presence of coarse material also helps creating gaps within the piles which will increase aeration and help degradation of PHC.

4.5.3 Soil Moisture

Prior to turning, site personnel will ensure that soil is not so dry as to generate significant dust, nor overly saturated. If soil is dry, water from within the landfarm containment area will be used as a moisture source and sprayed on the piles. If no accumulated water is available, a freshwater supply will be used. If the windrows are saturated, aeration will be conducted at a later date.

4.5.4 Nutrient Amendment

A number of studies have indicated that amendment with nutrients may increase rates of biodegradation in PHC contaminated soils, but the effectiveness of this practice is not well defined in northern climates. For example, in a Resolution Island study by Paudyn et al. (2008), aeration alone reduced concentrations of diesel fuel by 80% over three summers, almost entirely due to volatilization (not biodegradation). One-time amendment with nutrients (C:N:P of 100:7.5:0.5) in combination with aeration resulted in 90% reduction of TPH concentrations over this time, with significant (but undefined) contributions from microbial degradation.

In 2012, three pilot piles in the landfarm facility were treated with 400 gallons of sewage sludge as a nutrient source. Sewage sludge was mixed into the pilot piles on October 8th 2012. Each pile consisted of approximately 140 m^3 of soil. Samples of the nutrient-treated piles were taken in July 2013 (CSP-STP-1, 2, 3) in attempts to determine if this method of nutrient amendment significantly affects rates of PHC degradation

Representative composite samples of two non-treated piles (CSP-WDP-1, 2) were taken from two locations (0.5 m depth) in October 2012 and again in July 2013 to assess degradation of TPH over this time period without sewage sludge amendment. Samples were sent to an

accredited analytical laboratory and analyzed for humidity, BTEX and F1-F4 hydrocarbons. Attempts to sample all piles again in the fall of 2013 were unsuccessful because of frozen ground.

Overall, rates of PHC degradation were found to be sufficiently rapid to warrant continued use of the landfarm as a viable treatment for spills of the designated materials. Nutrient treatment appeared to generally increase degradation rates, particularly for the F3 fraction. Use of the landfarm with application of sewage sludge as a nutrient treatment will be continued. Based on these results, the pilot project (comparison of treated and untreated piles) was completed and the addition of sewage sludge as a nutrient source to enhance bioremediation was implemented as an operational practice in 2014. Sewage sludge was incorporated into all contaminated soil since 2014.

The use of sewage sludge as a nutrient amendment has precedent in the north. This method has been used at Diavik Diamond Mine, as reported in the BSc thesis of Brenda Lee Bailey, Carleton University (in Golder, 2007). It was found in this study that with sewage sludge amendment (12.6 gallons on a 6 m^3 soil pile), aeration by perforated pipe and clear polyethylene covers to retain heat and moisture, TPH concentrations declined from 15,000 mg/kg to less than 2,000 mg/kg in 88 days. Sewage sludge as a nutrient source has also been proposed for the Milne Inlet Mary River Project (EBA, 2010). This material not only provides the benefit of nutrients, but adds organic matter to help retain moisture, and is a source of microorganisms. Furthermore, the re-use of this material produced onsite helps to reduce the waste footprint of the mine by re-directing this material from disposal facilities and avoiding the import of chemical fertilizer.

4.6 Removal of Soil from the Landfarm

When PHC vapors are no longer detected, coarse-grained material will be removed to the site waste rock disposal area and disposed of as potentially acid generating (PAG) material. PAG will be covered with a minimum of 2 m of non-potentially acid generating (NPAG) material to closure, such that freeze-back occurs and any potentially remaining contaminants are not mobile in the environment.

Prior to removal of the finer grained soil from the landfarm, soil samples will be analyzed to ensure they meet Government of Nunavut guidelines, as described below.

4.6.1 Remediation Guidelines

In assessing the remediation success of PHC contaminated soils being treated in the landfarm facility, Agnico Eagle will use the Government of Nunavut (GN) Department of Environment, Environmental Guidelines for Site Remediation (March, 2009) to determine if the soil has been suitably treated.

The following parameters will be measured and compared with the GN industrial remediation criteria in order to determine whether PHC contaminated soil has been adequately remediated:

- Benzene, toluene, ethylbenzene and xylene (BTEX)
- Petroleum hydrocarbon fractions 1 - 4

GN remediation criteria are characterized for agricultural/wildland, residential/parkland, commercial and industrial land uses. At the Meadowbank site, remediation to agricultural/wildland criteria is targeted. However, if these criteria cannot be met efficiently, industrial criteria will be followed and soil disposed of accordingly (see Section 4.6.3). Remediation criteria for coarse-grained (>75 um) soils will be applied. Table 1 presents the applicable Tier 1 criteria for coarse-grained soil, assuming agricultural/wildland or industrial land uses. For contaminated sites, a Tier 1 analysis involves the most conservative criteria, and may be applied when the proponent does not wish to establish site-specific criteria.

Table 1 - Summary of relevant Government of Nunavut Tier 1 soil remediation criteria for surface soil for industrial land uses.

Parameter	Criteria (mg/kg)
Benzene	0.03
Toluene	0.37
Ethylbenzene	0.082
Xylene	11
PHC Fraction 1	320
PHC Fraction 2	260
PHC Fraction 3	1700
PHC Fraction 4	3300

4.6.2 Sampling and Analysis

Landfarm windrows will be sampled annually to determine if remediation objectives have been met. Representative composite samples will be taken of each windrow to estimate remaining PHC concentrations. For each 10 m of windrow length, one composite sample will be collected, each consisting of three surface sub-samples and three sub-samples at 1 m depth. Sub-samples will be taken approximately 3.3 m apart, and will be taken from both sides of the windrow.

Degradation rates are assessed regularly to estimate the total remediation time required for PHC-contaminated soil under these conditions. If remediation to GN guidelines is feasible within the timeframe, landfarm operations will continue, with aeration and nutrient amendments as described above. If rates of TPH degradation are not sufficient through this method, alternate options will be further investigated (see Section 5).

4.6.3 Soil Removal

Coarse-grained material will be assessed after segregation from mechanical screening has been started, by Environment Department technicians for PHC product and odors. A PID monitor may be employed to assist in petroleum-hydrocarbon based vapor detection. When PHC vapors are no longer detected, this material will be removed to the Portage Rock Storage Facility (PRSF) and disposed of as PAG material.

When sample analysis of fine-grained material indicates that concentrations of contaminants are below Government of Nunavut guidelines, a soil pile or the appropriate section of a pile will be deemed acceptable for removal from the facility. Interim monitoring may be conducted through measurements of head-space with a portable instrument (e.g. flame ionization detector), but samples will be confirmed by an accredited laboratory prior to soil removal.

Soil remediated to agricultural/wildland criteria will be appropriately delineated by Environment Department staff, and stockpiled outside the landfarm for use in site works or reclamation activities.

Soil remediated to industrial-use criteria will be removed from the landfarm and placed in the (PRSF) as PAG material. This material will be capped with a minimum of 2 m of NPAG at closure, allowing freeze-back and permanent encapsulation to occur.

4.7 Water and Snow Management

Since the landfarm facility is uncovered to facilitate natural weathering, water accumulating inside the bermed area may come into contact with contaminated material. The management plan for handling this potentially contaminated water is described below.

4.7.1 Snow Management

Snow will be removed as much as possible during winter to minimize the quantity of spring melt water inside the berm. Care will be taken to ensure contaminated snow/soil is not disturbed by leaving a base layer of snow (no less than 10 cm) in place. After snowmelt any contaminated product left from winter spill clean-up operations will be padded up. The base soil in these areas will be excavated and added to existing remediation windrows as soon as possible after snow melt to minimize migration into the facility substrate.

4.7.2 Water Management

Monitoring will be conducted for seepage of contact water through the perimeter berm, or accumulation of water within the containment berm through visual inspection by the Environment Department. This will be conducted on a weekly basis, after freshet, from July through October when water is likely to be present. In the event of water accumulation or seepage, the ponded water will be analyzed for Group 4 monitoring parameters, as described in Table 2 – Monitoring programs of the Water License prior to discharge to the adjacent Tailings Storage Facility (monitoring stations ST-14 and ST-14b). Alternatively, ponded water will be sprayed on the windrows to increase moisture content, as required. Water accumulating in the landfarm will not be discharged to the environment as per Part F, Item 18 of the water license.

4.8 Landfarm Abandonment

After removal of all remediated soil and prior to abandonment/closure of the landfarm, the

berm and base will be sampled on a 10 m grid, including at a depth of 1 m in representative locations, to determine if these soils are free from PHC contamination. Results of this analysis will be compared to GN criteria. Since this area will form part of the TSF at closure, no excavation is necessary if industrial criteria are not met. Agnico Eagle's Closure Plan notes that the tailings facilities will be capped with at least 2 m of NPAG to ensure freeze-back encapsulation. Monitoring of tailings freeze-back is ongoing at the site, and to date the results indicate that tailings are already freezing as planned.

4.9 Summary of Activities

A summary of landfarm activities including monitoring of the physical condition and potential environmental impacts of the landfarm facility is provided in Table 2. A report will be prepared annually, indicating the volume of material added to the facility, amount of material removed and disposal or reuse location, all analysis results, volume and type of nutrient addition, visual inspection results and volume of contact water pumped. This information will be appended to Agnico Eagle's Annual Report to the NWB.

Table 2 - Summary of landfarm activities and records to be kept.

Activity	Analysis	Frequency	Record
Excavation of spill and transport of contaminated material	If unsure of full excavation - F1-F4, BTEX	As needed	Date and time of excavation; estimated quantity of excavated soil; storage/disposal location of excavated soil, if applicable; any evidence of remaining product
Contaminated soil additions to landfarm	If contaminant source unknown, F1-F4, BTEX, metals, oil and grease, VOCs (at discretion of Environment Department)	Prior to soil addition at facility	Date and time; quantity of soil; original location; landfarm location; spill/excavation record # or storage container label
Soil aeration	N/A	Min. once during summer	Date and time; location; soil condition (moisture, odour, etc.)
Soil treatment with sewage sludge as nutrient supplement	Visual inspection to ensure proper incorporation	At least once during summer on selected windrows	Date and time; location in landfarm
Ponded contact water	BTEX, oil and grease, lead – as per Part F, Item 6 of Water License	Prior to any dewatering; if re-used in landfarm, no sampling necessary	Date and time, location, laboratory report, Annual Report
Sampling for progress of remediation	Hydrocarbon vapour in headspace (by PID); F1-F4, BTEX (laboratory)	Vapour – as needed; Laboratory - annually	Date and time; location; odour; laboratory report;
Soil removal from landfarm	Removal subject to meeting GN criteria	N/A	Date and time; location; quantity of soil removed; final location
Identification of maintenance requirements	Visual inspection of facility	Twice annually during summer	Inspected areas; condition of berm and base; previously unidentified safety concerns

5 CONTINGENCY OPTIONS

The following sections describe the contaminated soil management plan, should a large spill event occur, and if landfarm treatment is not successful.

5.1 Large Spill Event

Considering that the landfarm is built to hold nearly 5x as much contaminated soil as is expected to be produced, a large spill event producing a quantity of soil that cannot be contained in the landfarm is unlikely. Nevertheless, in this event, soils will be placed in a temporary storage area. A temporary stockpile area would be set up in the PRSF or at another location as approved by the NWB and AANDC. The soil would then be placed in the landfarm as soon as practical. Through extensive spill prevention measures discussed earlier in this Plan Agnico Eagle is minimizing the probability of this scenario occurring.

5.2 Alternate Treatment Options

Should landfarm treatment not perform as anticipated and it is evident that rates of degradation are not sufficient to meet GN Tier 1 criteria within the life-of-mine and the anticipated closure period (to 2025) the following alternative treatment options will be considered. Implementation will be after development of a more detailed protocol and approval of a revised plan by the NWB.

5.2.1 Soil Amendment

Since pH, salinity, moisture content and microbial population density all affect rates of biodegradation by microbes, these factors may be monitored and adjusted through soil amendments if they are not found to be optimal (see SAIC, 2006). In addition, the height of soil windrows could be reduced to maximize air exposure if space in the facility allows.

5.2.2 Tier 2 – Modified Criteria Approach

According to the Government of Nunavut Environmental Guideline for Contaminated Site Remediation (Appendix A), in cases where site conditions, land uses, receptors or exposure pathways are different from those assumed in the development of the Tier 1 criteria, modified criteria may be permitted. This process requires the collection of site-specific information on exposure and risk estimates, and is subject to GN approval. In the case of the Meadowbank site, landfarmed soils are to be encapsulated in the PRSF rather than used in surface applications, as assumed in Tier 1, reducing the likelihood of exposure to any remaining contamination. Therefore, the Tier 2 approach could be warranted if Tier 1 criteria cannot be met. Any consideration for this approach would be based on soil sampling results and science based information.

5.2.3 Thermal Desorption

In the thermal desorption process, excavated soils are heated in a chamber to rapidly volatilize PHCs. Gases produced are consumed in an oxidation unit, and particulate matter removed (baghouse). Soil, free of any contamination, can then be replaced, or used in site reclamation or construction processes. The other advantage of this approach is that this equipment is mobile and could be brought to any spill site for remediation activities (e.g. spills along the AWAR). This method is described by Environment Canada (2002). The purchase or rental of a portable thermal desorber unit is under consideration by Agnico Eagle as a contingency option.

5.2.4 Direct Placement in the TSF or PRSF

Another option for management of contaminated soil would be the direct placement of this material in the Tailings Storage Facility or Waste Rock Storage Facility, if bioremediation is not effective or for operational reasons. Although the consumption of space in these storage areas is not optimal, the quantity of PHC-contaminated soil created onsite is small in comparison to the quantity of tailings or waste rock. While this method would not result in the treatment of soil, it is a viable contingency option because it would allow for the safe disposal of the contaminated material. The final cover with NPAG will be a minimum of 2 m deep (current closure plan is 4 m of NPAG cover). Total encapsulation and freeze-back would occur, eliminating any movement of contaminants. Over time, this material would undergo natural degradation. Consideration of this option would also include a suitable monitoring program for PHCs, which would be incorporated into the Meadowbank Closure Plan.

6 PLAN REVIEW AND CONTINUAL IMPROVEMENT

The Landfarm Design and Management Plan will be reviewed regularly by the Meadowbank Environmental Superintendent, and updated, when needed.

REFERENCES

EBA. 2010. Hydrocarbon Impacted Soils Storage and Landfarm Facility Operations, Maintenance and Monitoring Plan, Milne Inlet, Mary River Project, Nunavut. Prepared for: Baffinland Iron Mines Corporation. Issued for Review. December 2010.

Environment Canada. 2002. Technical Assistance Bulletin 13: Soil Remediation: Low Temperature Thermal Desorption Available at: http://www.on.ec.gc.ca/pollution/ecnpd/tabs/tab13-e.html

Environment Canada. 2007. Part 4 screening for Land Farm, Hamlet of Pond Inlet – NIRB 07UN061. Technical advice. Available at: http://ftp.nirb.ca/01-SCREENINGS/COMPLETED%20SCREENINGS/2007/07UN061-GN-CGS%20-%20Pond%20Inlet%20Quarry/02-DISTRIBUTION/COMMENTS/070829-07UN061-EC%20Comment-IEAE.pdf

Golder (Golder Associates Ltd). 2007a. Technical Memorandum: Landfarm Option Analysis, Meadowbank Gold Project, Nunavut. Prepared for: Agnico-Eagle Mines Ltd. August 23, 2007.

Golder (Golder Associates Ltd.), 2007b. Final Report on Pit Slope Design Criteria for Portage and Goose Island Deposits, Meadowbank Gold Project Nunavut, Project 06-1413-089/5000, Doc. No. 449, Revision 0, submitted to Meadowbank Mining Corporation, dated April 5, 2007.

MMC (Meadowbank Mining Corporation), 2007. Meadowbank Gold Project Mine Waste and Water Management. August 2007.

SAIC (Science Applications International Corporation), 2006. Federal Guidelines for Landfarming Petroleum Hydrocarbon Contaminated Soils. Final report presented to: Contaminated Sites Division and Emergencies Engineering Technologies Office (EETO), Environmental Technology Centre, Environment Canada. SAIC Canada Project #: 11953.B.S08. CM #:

WHALE TAIL PROJECT

Core Receiving Environment Monitoring Program (CREMP): 2015 Plan Update – Whale Tail Pit Addendum

FINAL

Core Receiving Environment Monitoring Program (CREMP): 2015 Plan Update – Whale Tail Pit Addendum

Prepared for:

Agnico Eagle Mines Ltd.

Meadowbank Division
Baker Lake, NU
X0C 0A0

May 2018

Azimuth Consulting Group Partnership

218-2902 West Broadway
Vancouver, BC
V6K 2G8

Project No. AEM-15-03

TABLE OF CONTENTS

1. INTRODUCTION 1
2. WHALE TAIL PIT CREMP ROUTINE MONITORING 1
2.1. Introduction 1
2.2. Study Design 1
2.2.1. Approach 2
2.2.2. Sampling Areas 3
2.2.3. Sampling Components 4
2.2.4. Sampling Effort and Frequency 4
2.3. Sampling Methods 10
2.4. Quality Assurance/Quality Control 12
2.5. Data Evaluation Criteria 12
3. REFERENCES 12

LIST OF TABLES

Table 2–1. Status of Whale Tail Pit and Meadowbank CREMP areas. 2
Table 2–2. CREMP monitoring component sampling summary for Whale Tail Pit Project. 11

LIST OF FIGURES

Figure 2–1. Meadowbank – Whale Tail Pit Study Area Overview. 5
Figure 2–2. CREMP – Whale Tail Pit Sampling Areas. 6
Figure 2–3. Whale Tail Lake Sampling Areas. 7
Figure 2–4. Mammoth and A20 Lake Sampling Areas. 8
Figure 2–5. Nemo Lake Sampling Areas. 9

1. INTRODUCTION

In accordance with the terms of the Nunavut Impact Review Board (NIRB) Project Certificate No .008 and the associated Nunavut Water Board (NWB) Type A Water Licence (2AM-WTP ----), Azimuth Consulting Group Partnership (Azimuth) was retained by Agnico Eagle Mines Limited (Agnico Eagle) to complete an update of the core receiving environment monitoring program (CREMP) plan (Azimuth, 2015a). This report is an addendum to the 2015 CREMP plan update, and addresses how receiving environment monitoring for the Whale Tail Pit Project fits into the Meadowbank/Baker Lake CREMP program. Note that this addendum only highlights differences and does not repeat what is already stated in the CREMP 2015 plan update (see Azimuth, 2015a).

Baseline sampling was conducted in 2014 to 2017 (Azimuth, 2017) to support the final environmental impact statement (FEIS) as well as to characterize pre-mining "before" conditions for the development of a long-term receiving environment monitoring program consistent with the Meadowbank CREMP (Azimuth, 2016). Additional baseline sampling for the CREMP is planned, prior to the onset of activities with potential to impact to the aquatic receiving environment.

2. WHALE TAIL PIT CREMP ROUTINE MONITORING

2.1. Introduction

Agnico Eagle Mines Limited – Meadowbank Division (Agnico Eagle) has been approved to develop Whale Tail Pit (Project), a satellite deposit on the Amaruq property, to continue mine operations and milling at Meadowbank Mine according to the terms and conditions outlined in Nunavut Impact Review Board (NIRB) Project Certificate No .008, specifically condition 19 and 23 and the associated Nunavut Water Board (NWB) Type A Water Licence (2AM-WTP ----). .

The Amaruq property is a 408 square kilometre (km^2) site located on Inuit Owned Land approximately 150 kilometres (km) north of the hamlet of Baker Lake and approximately 50 km northwest of Meadowbank Mine in the Kivalliq Region of Nunavut (**Figure 2–1**). The deposit will be mined as an open pit (i.e., Whale Tail Pit), and ore will be hauled to the approved infrastructure at Meadowbank Mine for milling.

The proposed open pit mine, mined by truck-and-shovel operation, will produce 8.3 million tonnes (Mt) of ore, 46.1 Mt of waste rock, and 5.6 Mt of overburden waste. There are four phases to the development: 1 year of construction, 3 years of mine operation, 8 years of closure, and the post-closure period.

2.2. Study Design

The study design is based on a before-after-control-impact (BACI) approach, but has also incorporated the concept of gradients in exposure; the study design mirrors the approved Meadowbank Mine CREMP. Tracking spatial and temporal differences related to mining activities relied on categorizing areas using two factors:

- *Area Type* – this concept relates to an area's spatial proximity to the planned mine development (i.e., whether built or not); categories include near-field, mid-field, far-field, and reference (see **Section 2.2.2**).
- *Area Status* – this concept is temporal and has two levels: control (not exposed to mine-related activity) or impact (exposed to mine-related activity). The term "impact" is taken from the BACI statistical study design approach and does not mean that an actual impact has taken place;

rather, it designates a time period when potential mine-related impacts may occur for an area (i.e., that an area has been exposed to one or more mining activities).

Together, area categorization by type and status provide a logical framework to facilitate the identification of real mining-related changes to the aquatic receiving environment (as opposed to natural regional changes due to climate or other factors). According to NIRB Project Certificate No .008, the objective of the CREMP is to monitor the freshwater environment, evaluate against FEIS predictions and inform mitigation measures specifically outlined in Condition 19 and 23. The CREMP is designed to include sufficient sampling and monitoring determine the short and long-term effects on the aquatic environment related to the site and to assess the impact predictions made in the Environmental Impact Statement for the Whale Tail Pit Project.

The onset of construction activities in proximity to a CREMP monitoring area formally ends the baseline phase and changes the status of that area from "control" to "impact". Status changes are also important for any statistical analyses, as they dictate how data are grouped when assessing potential trends. The status of the Amaruq CREMP areas starting in 2017 is provided in **Table 2–1**.

Table 2–1. Status of Whale Tail Pit and Meadowbank CREMP areas.

	Meadowbank Reference Areas		Whale Tail Pit Areas					
	REF	REF	NF	NF	NF	MF	MF	FF
Year	INUG	PDL	WTS	MAM	NEM	A20	A76	DS1
2015	C	C	C	C	C			
2016	C	C	C	C	C	C	C	C
2017	C	C	C	C	C	C	C	C

Notes: Area designations: C=Control; I=Impact; REF=reference (in grey shading); NF=near-field (in blue shading); MF=mid-field (in pink shading); FF=far-field (in teal shading); Blank denotes that the area was not part of the monitoring program that year. Area IDs: INUG=Inuggugayualik Lake; PDL=Pipedream Lake; WTS=Whale Tail Lake South; MAM=Mammoth Lake; NEM=Nemo Lake.

2.2.1. Approach

The 2015 AEMP describes a two-tiered approach for decision criteria based on 'trigger' and 'threshold' level concentrations (Azimuth, 2015b). These are defined as:

- *Triggers* are early warning criteria that may lead to action. Exceedance of a trigger value does not necessarily imply that an adverse effect may be expected. The triggers may be based on absolute numbers (e.g., an increases half-way from baseline to an identified effects-based threshold) or statistical criteria (e.g., statistically significant difference from baseline-reference conditions; these are used in the absence of an effects-based threshold for a substance and may be very conservative).
- *Thresholds* are legal requirements, regulatory guidelines (e.g., CCME), or other discrete benchmarks, below which unacceptable adverse effects are not expected and above which adverse effects may occur. If effects-based thresholds do not exist or are not warranted for a particular variable, then early warning triggers (based on statistical criteria) will be developed without thresholds. In such cases, if triggers are exceeded then the implications of such

exceedances can only be understood through the integration of results from other AEMP monitoring programs, or, if important information gaps still exist, through prescribed EEM studies or targeted studies.

Thus, comparison of the data to the early warning trigger values is the initial analytical focus; only if trigger values are exceeded are data then compared to the applicable thresholds (if available). Similar to what was done for the Meadowbank CREMP (Azimuth, 2012), area-specific trigger/threshold (as appropriate) values may need to be developed after the baseline period to support management of the Whale Tail Pit Study Area.

2.2.2. Sampling Areas

The core monitoring program is intended to detect changes at a basin or lake scale of inference and to help define the extent (both spatially and temporally) of any adverse effects identified and designed to meet NIRB Project Certificate No. 008 conditions 19 and 23. The CREMP for the Whale Tail Pit program will be comprised of 8 sampling areas (6 new monitoring areas and continued use of the two existing reference areas), each categorized into one of the four main types of areas described below. An overview of the Whale Tail Pit sampling areas is shown in **Figure 2–2**.

- Near-field (NF) areas – Near-field locations provide the first line of early-warning for introductions of stressors into the receiving environment. These areas are situated in close proximity to the development, in particular near dikes, dewatering discharge, and proposed effluent sources. As per NIRB PC No.008 condition 23, Agnico Eagle will conduct analysis to evaluate the potential impacts to freshwater ecosystem productivity and have designed NF stations in Mammoth Lake (**Figure 2–4**). As determined by academic researchers and DFO, further studies will leverage the CREMP data and as needed, collect additional biological data to evaluate productivity and change in trophic status in Mammoth Lake as outlined in the complementary measures (Agnico Eagle, 2018). The NF areas in the Whale Tail Pit Study Area include Whale Tail Lake South (**Figure 2–3**) and Mammoth Lake (**Figure 2–4**), due to their placement in relation to the planned development and in the watershed[1]. Nemo Lake (**Figure 2–5**) is also considered a NF area due to its proximity to Whale Tail and Mammoth Lakes even though it is located in an adjacent watershed. Nemo Lake is the source of drinking water for the exploration camp, and routine water quality monitoring is scheduled for this location. Additional CREMP sampling at Nemo Lake is proposed only in the event that increased parameter concentrations are observed in the routine drinking water quality monitoring samples.
- Mid-field (MF) areas – This area designation includes two lakes: Lake A20 and Lake A76. Sampling at Lake A20 and A76 will be undertaken according to the strategy outlined in the CREMP 2015 plan update for MF areas (Azimuth, 2015a). In the case of Lake A20, the start of the "impact" monitoring period would coincide with back-flooding of Whale Tail Lake into Lake A20, and the diversion of water towards Mammoth Lake through the Northwest Channel. Lake A76 is situated at the junction of the two flow paths leading to Lake DS1. Given its morphology and location, it represents an ideal mid-field exposure area for both flow paths.
- Far-field (FF) area – The intent of this area (Lake DS1) is to monitor water and sediment quality downstream of project infrastructure to provide insights into the spatial extent of any effects observed at the near-field areas. Lake DS1 will be the key location that will ultimately determine whether or not contaminants are detectable downstream of the entire mine development

[1] The north basin of Whale Tail Lake (WTN) was sampled in 2014 and 2015 to support the FEIS, but will not be part of the routine CREMP sampling plan as it lies within the pit footprint.

(**Figure 2–2**)[2]. Beyond the baseline period, the sampling strategy for Lake DS1 will follow the same approach for FF stations outlined in the CREMP 2015 plan update (Azimuth, 2015a).

- Reference (Ref) areas – By definition, reference areas are sufficiently removed from mine activities that they are presumed to be unaffected by any infrastructure and point sources (e.g. aerial deposition and effluent) associated with mine development and activities. Inuggugayualik Lake (INUG) and Pipedream Lake (PDL) are external reference areas chosen for the purposes of making comparisons with the Meadowbank project lakes (EVS, 1999; BAER, 2005). INUG has been the core reference area since formal monitoring began in 2006. PDL was added to the Meadowbank CREMP in 2009. In relation to the Whale Tail Pit Study Area, INUG is located about 41 km southeast of the Whale Tail Pit Study Area, while PDL is located 40 km to the southeast (**Figure 2–1**). Pipedream Lake is located northeast of INUG, and the exploration access road runs along the northeast shore of this lake. INUG and PDL satisfied the requirements of an external reference lake for the Meadowbank CREMP from a physical/chemical perspective because they are at similar latitude, have similar geology, relief and climate, do not have any significant inflows and has generally similar limnology, water chemistry and aquatic biological community structure to the project lakes (BAER, 2005). It should be noted that their proximity to the proposed access road may lead to dust deposition into each of the lakes under certain conditions. However, both lakes are quite large and the sampling locations for each are away from the road (i.e., approximately 2 km for PDL and 10 km for INUG), so while road-related trends will be tracked they are not anticipated.

2.2.3. Sampling Components

As described in the CREMP 2015 plan update (Azimuth, 2015a), CREMP monitoring includes the following components, which apply to Whale Tail Pit Study Area lakes: limnology, water chemistry, sediment chemistry, phytoplankton, and benthic invertebrates.

2.2.4. Sampling Effort and Frequency

As described in the 2015 CREMP plan update (Azimuth, 2015a), CREMP sampling effort (i.e., number of replicates per event) and frequency (i.e., number of events per year) follows the recommendations from the CREMP Design Document 2012 (Azimuth, 2012). NWB interveners were consulted over several years during the re-design of the CREMP that was resubmitted following the Type A renewal in 2015 and subsequently approved by regulators. CREMP sampling at Whale Tail Pit Study Area will follow the same level of effort and frequency by area type; refer to Azimuth (2015a) for details on the decision making strategy for initiating sampling at the MF and FF stations.

[2] According to Golder (2016), the downstream flow of water splits into two paths. Downstream path 1 follows Lake A12 (immediately south of Lake A76) to Lake A76 and then flows west to the southern tip of Lake DS1. Downstream path 2 flows north from Lake A76 and A11 (east of Lake 76) through a series of small lakes and eventually enters Lake DS1 along the east shore (approximately 2/3 of the way up the bounded area shown on **Figure 2–2**). At present, Lake DS1 is shown as a single station; however, the area may be split into two stations to monitor the contribution of each flow paths.

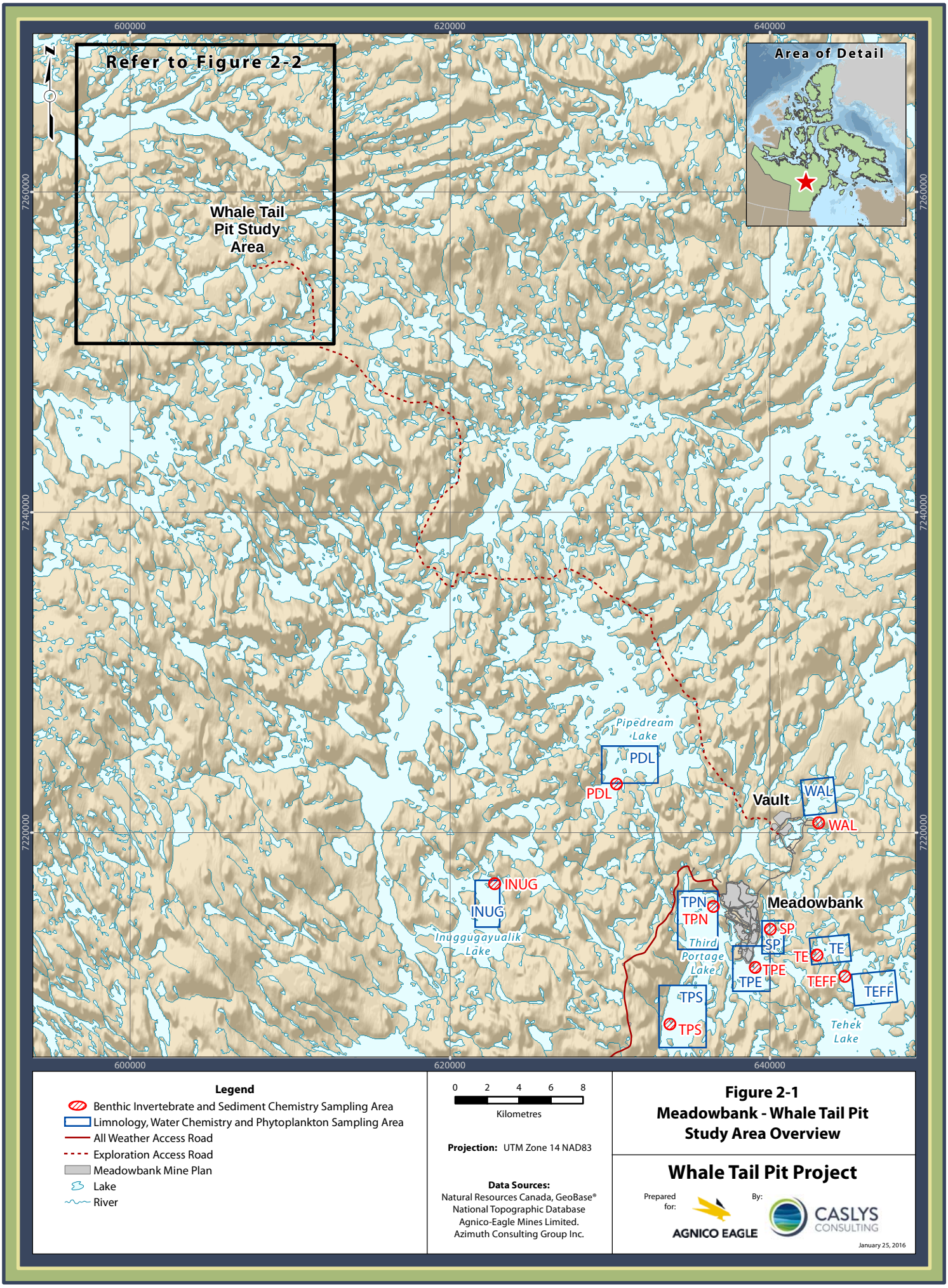

Legend

- Benthic Invertebrate and Sediment Chemistry Sampling Area
- Limnology, Water Chemistry and Phytoplankton Sampling Area
- All Weather Access Road
- Exploration Access Road
- Meadowbank Mine Plan
- Lake
- River

0 2 4 6 8

Kilometres

Projection: UTM Zone 14 NAD83

Data Sources:
Natural Resources Canada, GeoBase®
National Topographic Database
Agnico-Eagle Mines Limited.
Azimuth Consulting Group Inc.

Figure 2-1
Meadowbank - Whale Tail Pit
Study Area Overview

Whale Tail Pit Project

Prepared for: AGNICO EAGLE

By: CASLYS CONSULTING

January 25, 2016

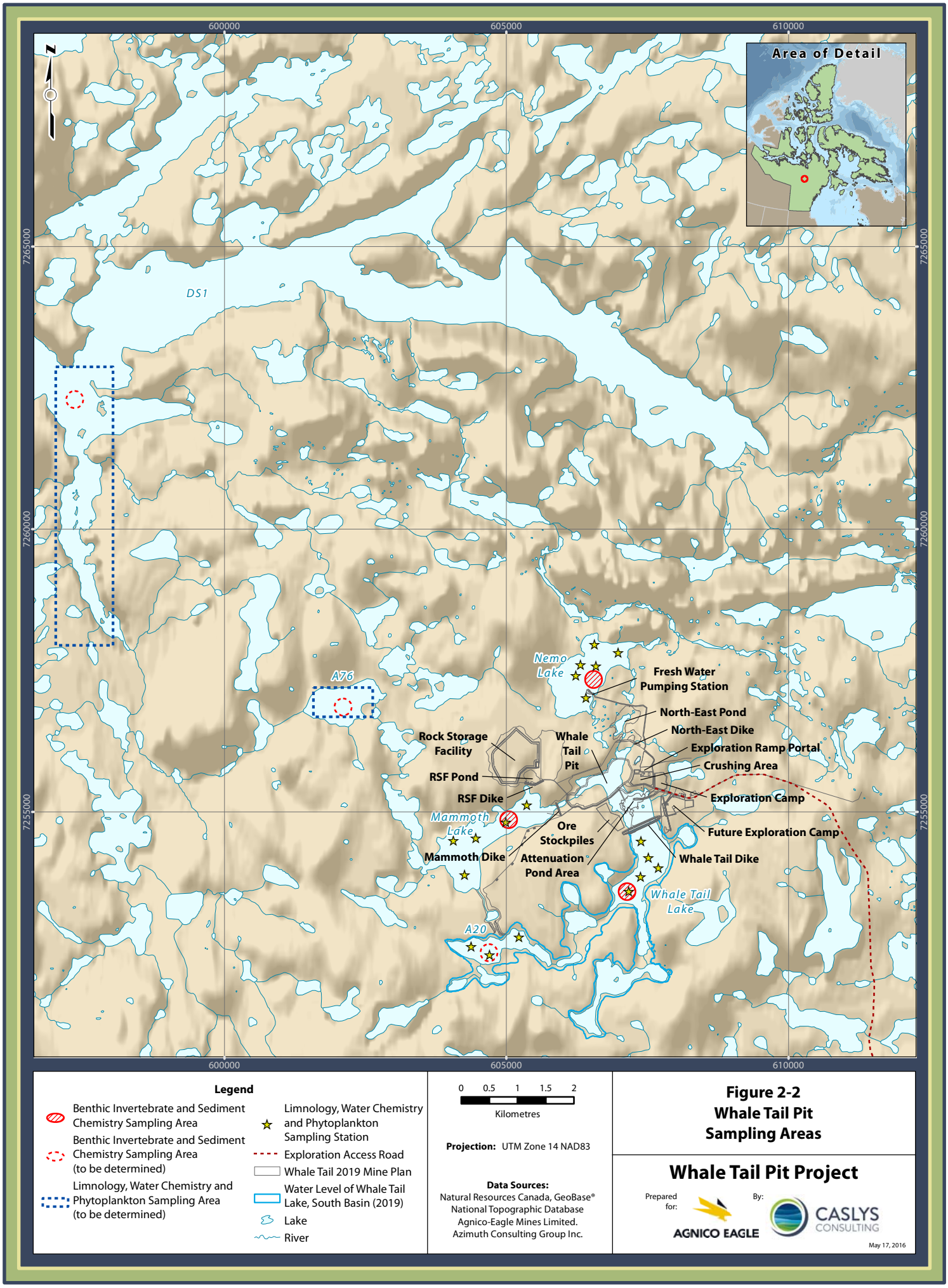

Legend

- Benthic Invertebrate and Sediment Chemistry Sampling Area
- Benthic Invertebrate and Sediment Chemistry Sampling Area (to be determined)
- Limnology, Water Chemistry and Phytoplankton Sampling Area (to be determined)
- Limnology, Water Chemistry and Phytoplankton Sampling Station
- Exploration Access Road
- Whale Tail 2019 Mine Plan
- Water Level of Whale Tail Lake, South Basin (2019)
- Lake
- River

0 0.5 1 1.5 2

Kilometres

Projection: UTM Zone 14 NAD83

Data Sources:
Natural Resources Canada, GeoBase®
National Topographic Database
Agnico-Eagle Mines Limited.
Azimuth Consulting Group Inc.

Figure 2-2
Whale Tail Pit
Sampling Areas

Whale Tail Pit Project

Prepared for: AGNICO EAGLE

By: CASLYS CONSULTING

May 17, 2016

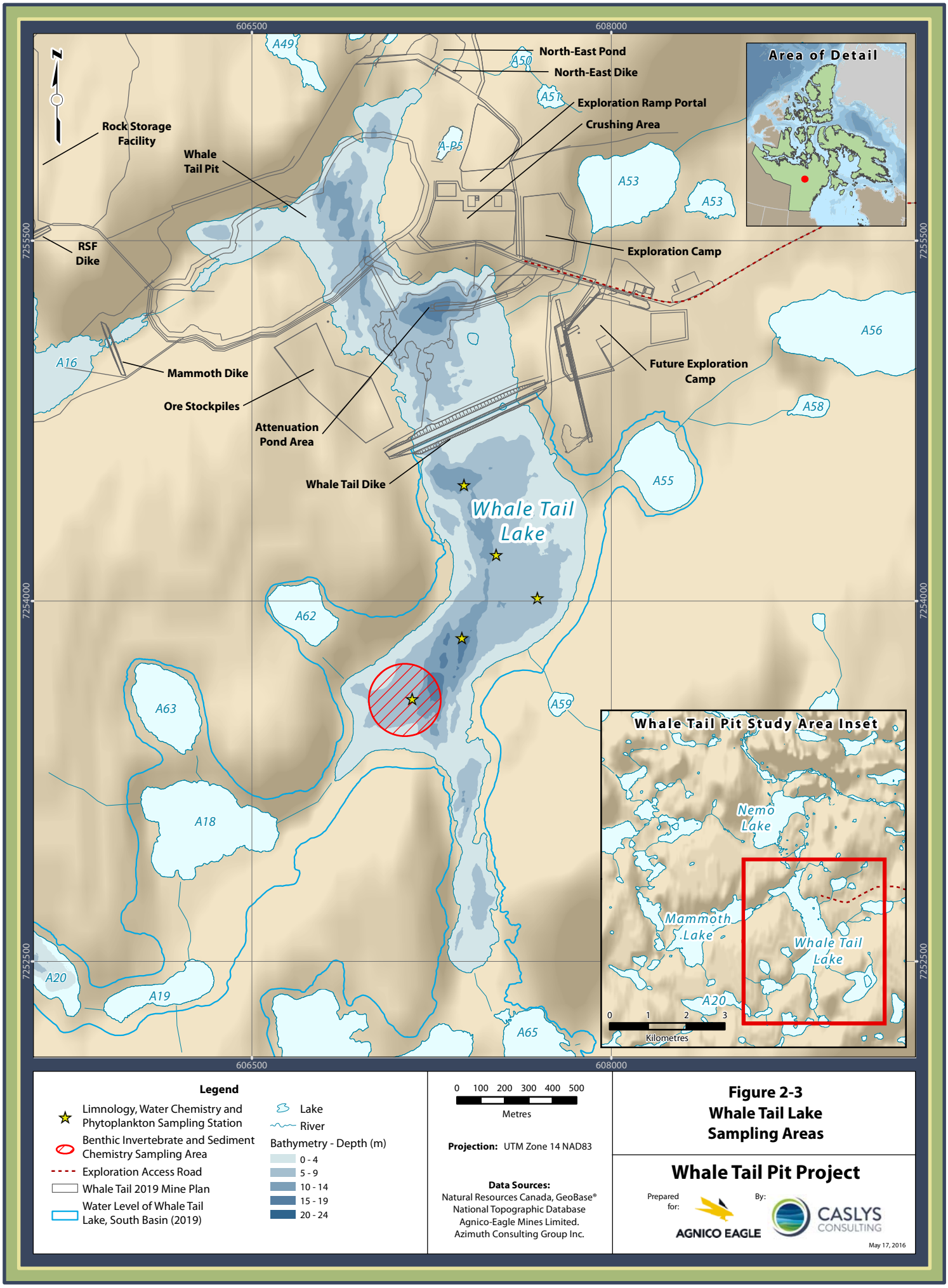

Legend

- Limnology, Water Chemistry and Phytoplankton Sampling Station
- Benthic Invertebrate and Sediment Chemistry Sampling Area
- Exploration Access Road
- Whale Tail 2019 Mine Plan
- Water Level of Whale Tail Lake, South Basin (2019)
- Lake
- River

Bathymetry - Depth (m)

- 0 - 4
- 5 - 9
- 10 - 14
- 15 - 19
- 20 - 24

0 100 200 300 400 500
Metres

Projection: UTM Zone 14 NAD83

Data Sources:
Natural Resources Canada, GeoBase®
National Topographic Database
Agnico-Eagle Mines Limited.
Azimuth Consulting Group Inc.

Figure 2-3
Whale Tail Lake Sampling Areas

Whale Tail Pit Project

Prepared for: AGNICO EAGLE

By: CASLYS CONSULTING

May 17, 2016

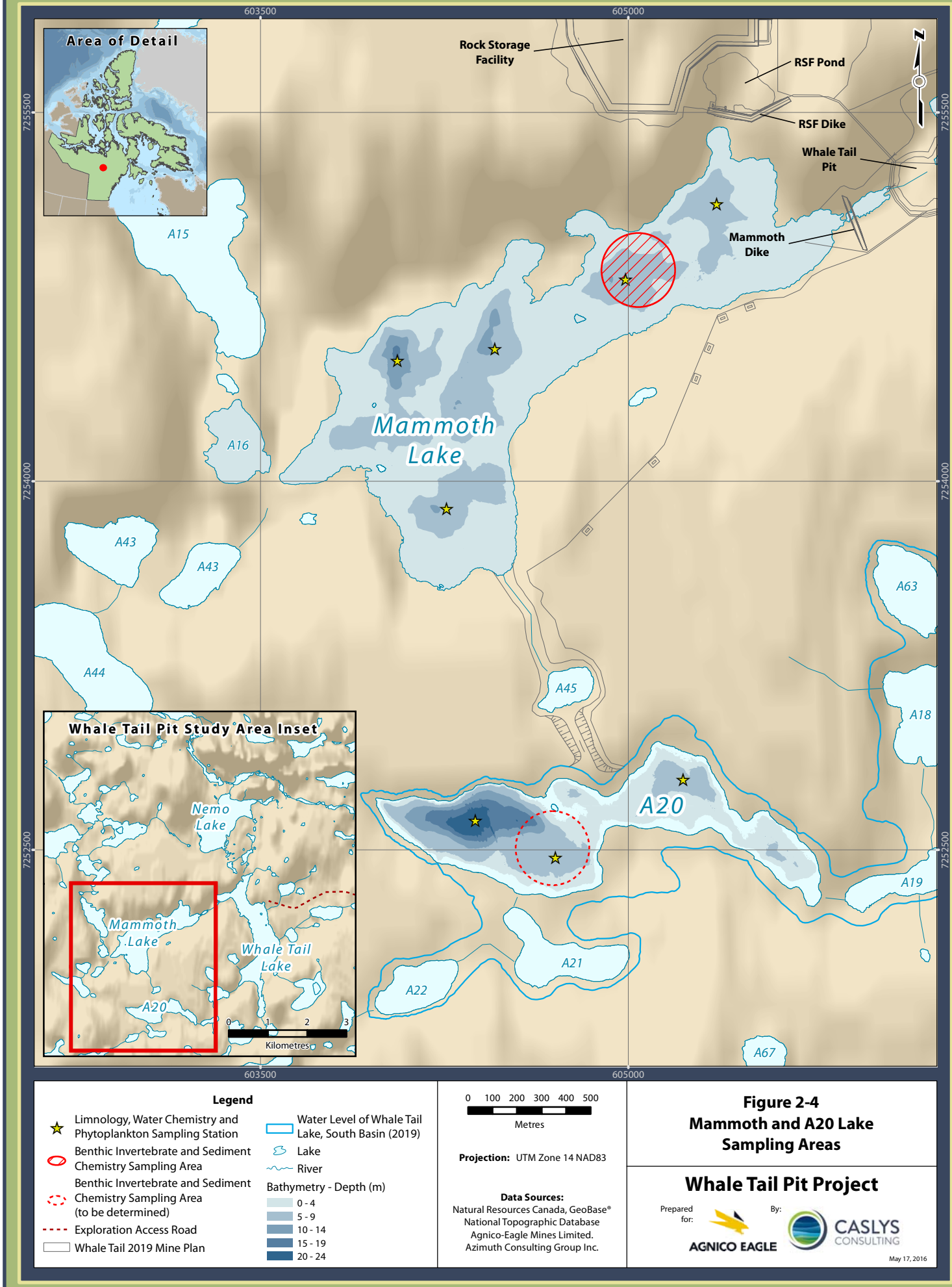

Figure 2-4
Mammoth and A20 Lake Sampling Areas

Whale Tail Pit Project

Prepared for: AGNICO EAGLE

By: CASLYS CONSULTING

May 17, 2016

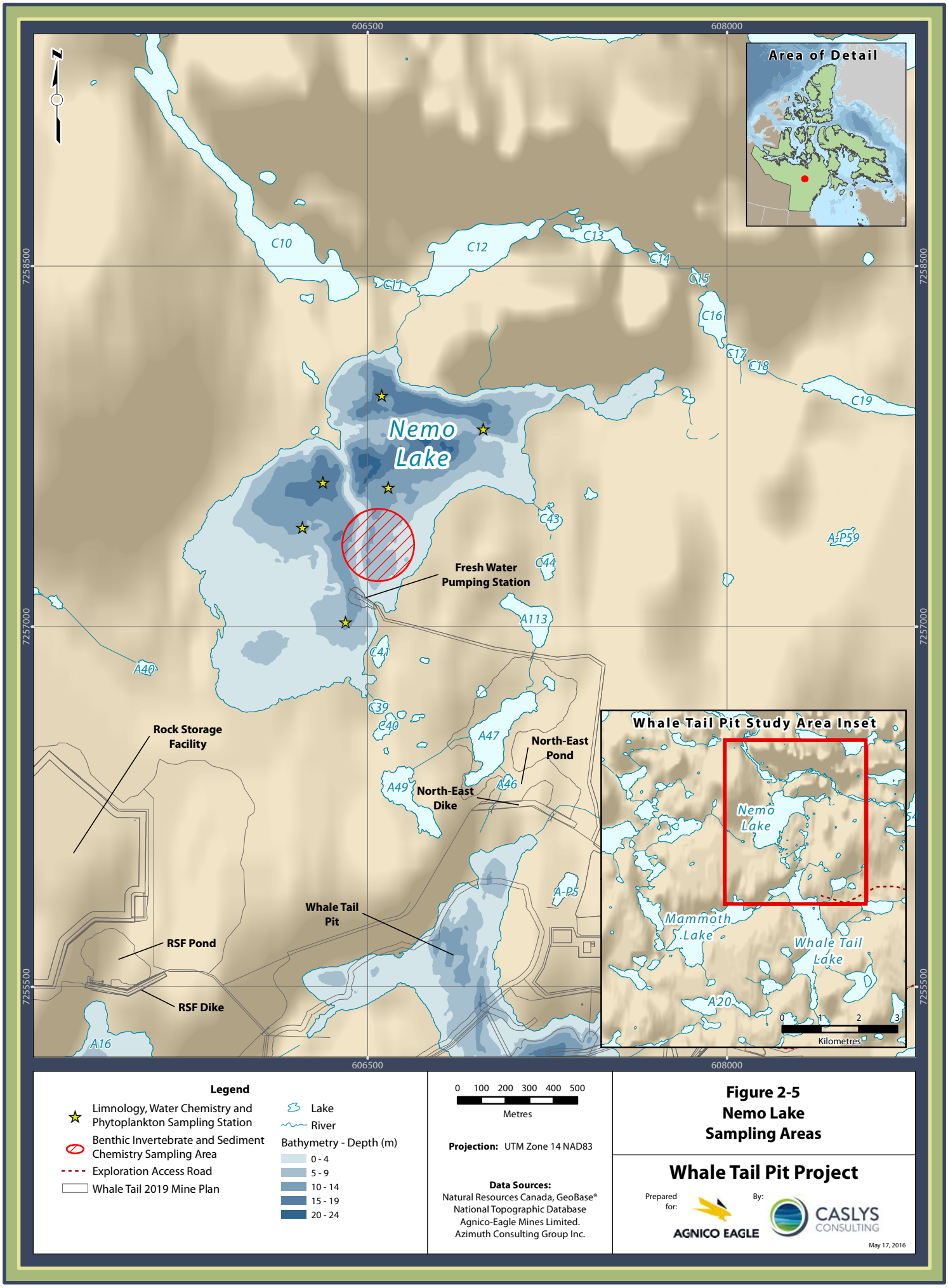

Legend

- Limnology, Water Chemistry and Phytoplankton Sampling Station
- Benthic Invertebrate and Sediment Chemistry Sampling Area
- Exploration Access Road
- Whale Tail 2019 Mine Plan
- Lake
- River

Bathymetry - Depth (m)

- 0 - 4
- 5 - 9
- 10 - 14
- 15 - 19
- 20 - 24

0 100 200 300 400 500
Metres

Projection: UTM Zone 14 NAD83

Data Sources:
Natural Resources Canada, GeoBase®
National Topographic Database
Agnico-Eagle Mines Limited.
Azimuth Consulting Group Inc.

Figure 2-5
Nemo Lake
Sampling Areas

Whale Tail Pit Project

Prepared for: AGNICO EAGLE

By: CASLYS CONSULTING

May 17, 2016

2.3. Sampling Methods

A summary of timing and frequency of sampling for each of the CREMP monitoring components for the Whale Tail Pit area is shown in **Table 2–2** by sampling season and month. Important to note is that the sampling frequency by area shown in the table is representative of the full study design, and not necessarily what would need to be conducted in a given year (e.g., for MF and FF areas if no changes are detected at NF areas the previous year; see **Section 2.2.4** for more information).

Sampling for the CREMP program follows the Standard Operating Procedures (SOPs) for each of the monitoring components. The SOPs include general information on field collections, pre-trip planning, field collection materials, field quality assurance / quality control protocols, step-by-step instructions on sample collection, bottle requirements and list of parameters, sample preservation, and sample handling and transportation. The SOPs are appended to the CREMP 2015 plan update (Azimuth, 2015a):

- Water chemistry, limnology, and phytoplankton sampling methods are outlined in Appendix A
- Benthic invertebrate and sediment grab chemistry methods are outlined in Appendix B
- Sediment coring is outlined in Appendix C.

The small size of the Whale Tail Pit Project lakes and comparably shallower depths relative to the Meadowbank Lakes was not amenable to using the bounded area method of generating random water quality sampling stations (see SOP and blue rectangles in **Figure 2–1**). Instead, a number of "fixed" sampling locations for limnology, water chemistry and phytoplankton were established for the Whale Tail Pit lakes[3] in areas where the water depth is greater than 5 m (**Figure 2–2**). Prior to going in the field for each sampling event, two of the locations are randomly selected for sampling. Coordinates are recorded in MapSource and in the hand-held GPS units (NAD 83).

The specific sampling locations for benthic invertebrates and sediment chemistry are selected each year from within established depositional zones in each lake (see red circles on maps) with a target water depth of 8 m ± 1.5 m. Areas in Whale Tail Lake (WTS), Nemo Lake (NEM), and Mammoth Lake (MAM) were established during the August 2015 field program. Lakes A20, A76 and DS1 were not sampled as part of the 2015 baseline program; suitable sampling locations will be selected prior to construction.

[3] Bathymetry is currently not available for Lake DS1 and Lake A76. Sampling stations will be chosen when in the field until bathymetry data is available to establish either fixed sampling locations or bounded areas of sampling.

Table 2–2. CREMP monitoring component sampling summary for Whale Tail Pit Project.

Sampling Season	Sampling Month	Monitoring Conditions	Monitoring Components[1]	INUG	PDL	WTS	MAM	NEM*	A20*	A76*	DS1*
				REF	REF	NF	NF	NF	MF	MF	FF
Winter	January	Ice	L			✓	✓				
	February	Ice	L			✓	✓				
	March	Ice	L			✓	✓				
Spring	April/May	Ice	L,W,P	✓	✓	✓	✓	✓	✓	✓	✓
	June	***Ice not safe***									
Summer	July	Open-water	L,W,P	✓	✓	✓	✓	✓	✓	✓	✓
	August	Open-water	L,W,P	✓	✓	✓	✓	✓	✓	✓	✓
			B,S,C**	✓	✓	✓	✓	✓	✓	✓	✓
	September	Open-water	L,W,P	✓	✓	✓	✓	✓	✓	✓	✓
Autumn/ Winter	***October***	***Ice not safe***									
	November/December	Ice	L,W,P	✓	✓	✓	✓	✓	✓	✓	✓

Notes:

1. The monitoring components shown for each month are an example of how the annual monitoring program could be completed on an annual basis. The summary table shows three open water events and 2 through-ice events where the full CREMP surface water program (L,W,P) is completed. The timing of the two winter water sample and limnology data may be completed prior to the open water season in July depending on logistical considerations for the annual monitoring cycle.

Area IDs: INUG=Inuggugayualik Lake; PDL=Pipedream Lake; WTS=Whale Tail Lake South; MAM=Mammoth Lake; NEM=Nemo Lake.

Area types: REF=reference (in grey shading); NF=near-field (in blue shading); MF=mid-field (in pink shading); FF=far-field (in teal shading).

***** Sampling at NEM and the MF and FF stations during the operation phase will be conducted according to the sampling strategy outlined in the CREMP 2015 plan update (Azimuth, 2015a). NEM is the source of drinking water for the exploration camp and water quality will be monitored monthly.

Components: L=Limnology; W=Water chemistry; P=Phytoplankton; B=Benthic invertebrates; S=Sediment grab chemistry; C=Sediment coring chemistry.

✓ indicates that monitoring components are conducted at the area/month given.

** Sediment coring is conducted every three years and synchronized to the EEM field program.

2.4. Quality Assurance/Quality Control

There are no Whale Tail Pit-specific differences in QA/QC methodology and reporting. See the 2015 CREMP plan update (Azimuth, 2015a) for details.

2.5. Data Evaluation Criteria

There are no Whale Tail Pit-specific differences in data evaluation methodology and reporting. See the 2015 CREMP plan update (Azimuth, 2015a) for details.

3. REFERENCES

Agnico Eagle Mines. 2018. Whale Tail Pit Fish Habitat Offsetting Plan, Appendix C – Complementary Measures. May 2018.

Azimuth Consulting Group (Azimuth). 2016. Whale Tail Pit Core Receiving Environment Monitoring Program (CREMP): 2014-2015 Baseline Studies. Report prepared by Azimuth Consulting Group for Agnico Eagle Mines Ltd., Baker Lake, NU. January 2016.

Azimuth. 2015a. Core Receiving Environment Monitoring Program (CREMP): 2015 Plan Update. Report prepared by Azimuth Consulting Group, Vancouver, BC for Agnico Eagle Mines Ltd., Baker Lake, NU. November, 2015.

Azimuth. 2015b. Aquatic Effects Management Program (AEMP), Meadowbank Mine. Report prepared by Azimuth Consulting Group, Vancouver, BC for Agnico Eagle Mines Ltd., Baker Lake, NU. November, 2015.

Azimuth. 2012. Core Receiving Environment Monitoring Program (CREMP): Design Document 2012, Meadowbank Mine. Report prepared by Azimuth Consulting Group, Vancouver, BC for Agnico Eagle Mines Ltd., Baker Lake, NU. December, 2012. Available at: Link

Baseline Aquatic Ecosystem Report (BAER). 2005. A report prepared by Azimuth Consulting Group, Vancouver for Cumberland Resources Ltd. October, 2005.

EVS Environment Consultants (EVS). 1999. Fisheries evaluation of candidate reference lakes, Meadowbank Gold Project Nunavut, 1998. A report prepared for Cumberland Resources Ltd., Vancouver BC by EVS Environment Consultants, North Vancouver, April 1999. 60 pp.

Golder Associates Limited (Golder). 2016. Draft Report on Mine Site and Downstream Receiving Water Quality Predictions Whale Tail Project, Meadowbank Division. Report Number 1520817. May 2016.

CREMP Addendum - Appendix A: Mercury Monitoring Plan for Whale Tail South Area, Version 2

Erosion Management Plan, Version 1

AGNICO EAGLE

Meadowbank Division

Whale Tail Project - Erosion Management Plan

JUNE 2018
VERSION 1

EXECUTIVE SUMMARY

This document presents the proposed erosion management plan (the Plan) at the Amaruq property for the development of the Whale Tail Project. The purpose of this Plan is to provide consolidated information on the management and monitoring of potential areas subjected to erosion, by presenting first a review of the potential effects of total suspended solids (TSS) and turbidity, the Federal guidelines and the license requirements, followed by the periods and type of activities subjected to erosion, the specific monitoring and mitigating measures.

General findings on the effects of TSS on fish and fish habitat have been listed, such as sublethal and lethal effects on fish and their eggs. Federal TSS Guidelines have been cited, distinguishing the short-term and long-term exposure thresholds. Turbidity guidelines are also discussed in the present document.

The Plan presents the monitoring and mitigating actions related to three (3) specific periods of activity for the Whale Tail Pit: the period of construction and dewatering (during construction and operation), the period of freshet (during construction, operation and closure) and the period of rise in water level in the South Basin of Whale Tail Lake (during operation). The proposed monitoring and mitigating measures are discussed for those periods of activity.

DOCUMENT CONTROL

Version	Date (YM)	Section	Page	Revision
1	June 2018	ALL	-	Comprehensive plan for Whale Tail Project

TABLE OF CONTENTS

Executive Summary ..... **i**

Table of Contents ..... **iii**

Acronyms ..... **iv**

Units ..... **iv**

Section 1 • INTRODUCTION **1**

Section 2 • TOTAL SUSPENDED SOLIDS/TURBIDITY EFFECTS, FEDERAL GUIDELINES AND LICENSE REQUIREMENTS **3**

2.1 Effects of Total Suspended Sediments on Fish Habitat 3

2.2 Federal Guidelines 3

2.2.1 TSS Guidelines 3

2.2.2 Turbidity Guidelines 4

2.3 License Requirements for the Protection of Fish and Fish Habitat at Whale Tail 5

Section 3 • EROSION MONITORING AND MITIGATION **6**

3.1 Erosion During Construction and Dewatering 6

3.2 Erosion During Freshet 6

3.2.1 Proposed Monitoring 7

3.2.2 Mitigating Measures 7

3.3 Erosion Due to the Rise of Water Level 7

3.3.1 Proposed Monitoring 8

3.3.2 Mitigating Measures 8

Section 4 • REFERENCES **9**

List of Tables in Text

Table 1.1 Overview of Timeline and General Activities 1

Table 2.1 Existing Federal TSS Guidelines (after Agnico Eagle, 2016) 4

ACRONYMS

Agnico Eagle	Agnico Eagle Mines Limited – Meadowbank Division
CCME	Canadian Council of Ministers of the Environment
DFO	Fisheries and Oceans Canada
MMM	Maximum Monthly Mean
NIRB	Nunavut Impact Review Board
NTU	Nephelometric Turbidity Units
NWB	Nunavut Water Board
Plan	Erosion Management Plan
STM	Short Term Maximum
TSF	Tailings Storage Facility
TSS	Total Suspended Solids
WTD	Whale Tail Dike

UNITS

h	hour
km	kilometre
km^2	square kilometre
mg/L	milligram per litre

SECTION 1 • INTRODUCTION

Agnico Eagle is seeking to extend the life of the Meadowbank Mine by constructing and operating the Whale Tail Pit (Whale Tail), which is a satellite deposit on the Amaruq property, and will be a continuation of mine operations and milling at the Meadowbank Mine.

The Amaruq property is a 408 km^2 site located on Inuit Owned Land approximately 150 km north of the Hamlet of Baker Lake and approximately 50 km northwest of the Meadowbank Mine in the Kivalliq Region of Nunavut. The deposit will be mined as an open pit (i.e., Whale Tail Pit), and ore will be hauled on the Whale Tail haul road to the approved infrastructure at the Meadowbank Mine for milling.

As presented in Table 1.1, there are four main phases to the development: 1 year of construction, 4 years of mine operations (2019 to Q1 2022), 8 years of closure, followed by the post-closure period. Pending regulatory approvals, the construction phase is anticipated to start at the beginning of the third quarter of Year -1 (2018) and focus on site preparation and construction of infrastructure to support mine development, along with commencement of open pit development.

Table 1.1 Overview of Timeline and General Activities

Phase	Year	General Activities
Construction	Year -1	• Construct site infrastructure • Develop open pit mine • Stockpile ore
Operations	Year 1 to 3	• Open pit operations • Transport ore to Meadowbank Mine • Stockpile ore • Discharge Tailings in Meadowbank TSF
	Year 4	• Complete transportation of ore to Meadowbank Mine • Complete discharge tailings in Meadowbank TSF
Closure	Year 4 to 11	• Remove non-essential site infrastructure • Flood mined-out open pit • Re-establish natural Whale Tail Lake level
Post-Closure	Year 11 forwards	• Site and surrounding environment monitoring

This document presents the Erosion Management Plan (the Plan). The purpose of this Plan is to provide consolidated information on the management and monitoring of potential areas subjected to erosion, by presenting first a review of the potential effects of total suspended solids (TSS) and turbidity, the Federal guidelines and the license requirements, followed by the periods and type of activities subjected to erosion, the specific monitoring and mitigating measures.

As per Nunavut Impact Review Board (NIRB) Whale Tail Project Certificate No.008 Condition 11, the Erosion Management Plan should be developed to prevent or minimize erosion and its resulting effects from project-related land disturbance. The Plan should be submitted to the NIRB at least 30

days prior to the start of construction, with updates submitted annually thereafter or as may otherwise be required by the NIRB.

This Plan should be consulted in association with the the Water Quality Monitoring and Management Plan for Dike Construction and Dewatering (Agnico Eagle, 2016) and the future Whale Tail Freshet Action Plan.

SECTION 2 • TOTAL SUSPENDED SOLIDS/TURBIDITY EFFECTS, FEDERAL GUIDELINES AND LICENSE REQUIREMENTS

2.1 Effects of Total Suspended Sediments on Fish Habitat

Suspended sediments, and associated effects on water clarity, have the potential to affect fish and fish habitat in a variety of ways, including but not limited to:

- Smothering of deposited eggs or siltation spawning habitats;
- Smothering of benthic invertebrate communities;
- Decreased primary productivity caused by reduced light penetration;
- Reduced visibility, which may decrease feeding efficiency and/or increase predator avoidance; and
- Clogging and abrasion of gills.

Moreover, the general findings for effects of TSS on fish and fish habitat indicate the following:

- Effects of TSS depend on both the concentration of TSS and duration of exposure;
- Effects of TSS can also be influenced by the size and shape of suspended particles;
- Lethal concentration of TSS to fish over acute exposure range from hundreds to hundreds of thousands of mg/L;
- Sublethal effects on fish (reduced growth, changes in blood chemistry, histological changes) associated with chronic exposures tend to be exhibited at TSS concentrations ranging from the tens to hundreds of mg/L;
- There is considerable uncertainty about potential effects of low TSS concentrations over long time periods;
- Overall, the most sensitive group of aquatic organisms to TSS appears to be salmonids, and guidelines are developed to protect this group;
- Adult salmonids are generally more sensitive to short duration, high concentration of suspended sediments than juvenile salmonids; and
- Low suspended sediment levels are known to cause egg mortality (40 %) to rainbow trout at long durations (7 mg/L at 48 days). Guidelines for long-term exposure reflect these findings.

More details can be found in the report from Fisheries and Oceans Canada (DFO) on the effects of sediments on fish and their habitat (Fisheries and Oceans Canada, 1999).

2.2 Federal Guidelines

2.2.1 TSS Guidelines

The Canadian Council of Ministers of the Environment (CCME) specifies separate guidelines for TSS for clear flow and high flow periods. The guidelines are derived primarily from Caux *et al*. (1997), with application intended mainly for British Columbia streams. In the case of application to the Amaruq Project lakes, the clear flow guidelines would be most relevant; even during freshet, one would not expect to see large natural fluctuations in TSS expect in localized areas for short periods.

The guidelines put forth by the CCME recognize that the severity of effects of suspended sediments is a function of both the concentration of suspended sediments and the duration of exposure. Guidelines are intended to protect the most sensitive taxonomic group and the most sensitive life history stages. **Erreur ! Source du renvoi introuvable.** summarizes the available guidelines applicable to clear water (CCME) and to mine-related effluent discharges (MMER).

Table 2.1 Existing Federal TSS Guidelines (after Agnico Eagle, 2016)

Source	Short-Term Exposure	Long-Term Exposure
CCME (1999)	Anthropogenic activities should not increase suspended sediment concentrations by more than 25 mg/L over background levels during any short-term exposure period (e.g., 24-h).	For longer term exposure (e.g., 30 days or more), average suspended sediment concentrations should not be increased by more than 5 mg/L over background levels.
MMER (2002)	Maximum authorized concentration in a composite effluent sample = 22.5 mg/L. Maximum authorized concentration in a grab sample of effluent = 30 mg/L.	Maximum authorized monthly mean effluent concentration = 15 mg/L.

The guidelines mentioned in **Erreur ! Source du renvoi introuvable.** are based on hundreds of studies in different environments (see Caux *et al*., 1997). Some of the studies may not be particularly relevant to the case of suspended sediment associated with dike construction and dewatering in a lake environment. Consequently, it is worth considering whether all aspects of existing guidelines are applicable for the Amaruq project. There are two particular aspects that warrant discussion.

First, in relation to short-term exposure guidelines, it is important to note that guidance is based on findings for adults and juveniles (which are more sensitive than eggs and larvae over short durations), and that the guidance is based primarily on reviews looking at application to stream environments. In a stream environment, compared to a lake environment, it is difficult for fish to swim away from suspended sediments because the high degree of mixing in the water column facilitates higher uniformity in TSS concentrations. In contrast, in lakes, in particular for sediment plumes associated with construction activities or discharges, high TSS concentrations would generally be expected to be localized, with dilution over distance. In a lake situation, adult and juvenile fish (the most sensitive life stages to short-term exposure) should readily be able to swim away from a sediment plume.

Second, in relation to long-term exposure guidelines, it is important to note that guidance is heavily influenced by findings indicating the sensitivity of eggs to low-level exposure to TSS over long durations. Consequently, the long-term exposure guidelines would be rather conservative if applied during times when eggs are not present, or in areas of a lake or stream that are not spawning habitat.

2.2.2 Turbidity Guidelines

Turbidity guidelines put forth by the CCME (1999) are based on extrapolation from the TSS guidance above, adjusted by a factor of about 3:1 (a typical average ratio for TSS: turbidity). In the case of turbidity for clear water, CCME (1999) recommends a maximum increase of 8 Nephelometric

Turbidity Units (NTU) from background levels for a short-term exposure (e.g., 24-hour period), and a maximum average increase of 2 NTU from background levels for a longer term exposure (e.g., 30-day period).

CCME (1999) notes that in some cases short-term resuspension of sediments and nutrients in the water column can augment primary productivity, and in other cases changes in light penetration may be inconsequential if a system is limited by other factors such as nutrients. The Caux *et al*. (1997) study considered effects of suspended sediment not only on fish but also on algae and zooplankton. In the end, the recommendations put forth by Caux *et al*. (1997) are based mainly on the most sensitive taxonomic group, which is salmonids.

However, research has shown that widespread, chronic turbidity can result in reduced light penetration and subsequent reductions of primary productivity (Fisheries and Oceans Canada, 1999; Canadian Council of Ministers of the Environment, 1999; Lloyd, Koenings, & Laperriere, 1987). Consequently, water clarity is of concern at broader spatial scales and longer timeframes, such as the proposed dewatering activities.

It should be noted that DFO's report on effects of sediment on fish and their habitat (DFO, 1999) endorses the guidelines for TSS put forth by the CCME (1999), but does not recommend following guidelines for turbidity. Rather, turbidity may be used as a surrogate for suspended sediment only when the relationship between the two parameters is established for a particular waterbody.

2.3 License Requirements for the Protection of Fish and Fish Habitat at Whale Tail

The Nunavut Water Board (NWB) Type A Water License for the Whale Tail Pit Project will include the maximum monthly mean (MMM) and short term maximum (STM) TSS concentrations for the dike construction, the dewatering activities and the applicable monitoring stations during operation. These requirements will be included during the erosion monitoring and water quality sampling.

SECTION 3 • EROSION MONITORING AND MITIGATION

The purpose of the Plan is to ensure that Agnico Eagle can monitor signs of erosion and minimize its resulting effects. This plan presents the monitoring and mitigating actions related to three (3) specific periods of activity for Whale Tail Pit:

- Period of construction and dewatering – during construction and operation;
- Period of freshet – during construction, operation and closure;
- Period of rise in water level in the South Basin of Whale Tail Lake – during operation.

Monitoring plan and mitigating measures are proposed below for each of these periods of activity.

3.1 Erosion During Construction and Dewatering

The construction of water management infrastructure, especially the WTD, could potentially lead to excess TSS. Dewatering could also require erosion control. A water quality monitoring program and TSS management plan is proposed in the Water Quality Monitoring and Management Plan for Dike Construction and Dewatering (Agnico Eagle, 2016) in order to minimize the effects of the construction of dewatering dikes and subsequent dewatering.

This plan provides details of water quality monitoring and management actions specifically related to the dike construction and dewatering activities. This plan includes the following components:

- Water quality monitoring and management plan for dike construction;
- Water quality and lake level monitoring and management plan for dewatering.

For those specific activities and their respective erosion monitoring and management practices, refer to the Water Quality Monitoring and Management Plan for Dike Construction and Dewatering (Agnico Eagle, 2016).

3.2 Erosion During Freshet

The freshet season at Whale Tail occurs approximately from mid-May until the end of July; however, this period of time can extend up to early fall (mid-October), when re-freezing occurs. Following the construction of the main dewatering dike (the WTD), the hydrogeological regime of the site will change during operations as water from the South Basin of Whale Tail Lake will be rerouted south until it reaches the Mammoth Lake through a newly excavated channel (the South Whale Tail Diversion Channel). Following the site construction, new areas and infrastructures will become potentially vulnerable to excess of water during the freshet season, such as, but not limited to:

- Culverts and other water management infrastructures;
- Newly constructed embankments, such as roads and berms;
- Water diversion ditches and channels.

A monitoring program and mitigating measures are proposed in the next sections.

3.2.1 Proposed Monitoring

In order to monitor the potential erosion during freshet, smaller water management infrastructures such as culverts, cross drains and ditches should be inspected on a regular basis and after significant rain events. Bigger culverts and bridges should be inspected more often if they represent a risk for daily operations, for the receiving environment or for the health and safety of workers. More specifically, the following aspects, but not limited to, should be monitored during visual inspections:

- Accumulation of debris near the inlet of the crossings, impeding the free flow of water at those locations;
- Bed erosion upstream and downstream of watercourse crossing structures;
- Scour under bridge abutments and abutment foundations;
- Erosion along cutslopes and fillslopes of embankments (rill and gully erosion), etc.

Newly excavated channels should be inspected on a regular basis and after significant rain events as well. Erosion signs along the channel flow path should be monitored. Inspections should be carried out during the spring when surficial ice moves towards the inlet of the diversion channels to ensure that no ice blockage cause water buildup upstream of the channel, which could lead to subsequent erosion problems.

The frequency of water grab samples and turbidity should follow the Type A Water License requirements and could be increased in required during the freshet season, if the TSS contents gets near or exceed the maximum allowed value as per the license.

Monitoring will be documented with site photographs and inspection forms.

3.2.2 Mitigating Measures

The following mitigation measures could be used if applicable and required to reduce risks associated with erosion:

- Riprap or clean non-acid generating/non-metal leaching rockfill could be used to armor shorelines, bridge abutments, culverts inlets and outlets and toe berms;
- Ditches managing high volumes of water could be armored for erosion control and reduce the speed of water flow;
- Sedimentation basins could be constructed at sensitive locations to allow settlement of finer sediments;
- Ditches, culverts and other water crossing structures should be maintained free of debris to allow free flow of runoff water;
- Installation of erosion control material such as turbidity barriers, silt curtains or straw booms.

Site-specific erosion issues may arise during the mine operation that require specific local corrective actions.

3.3 Erosion Due to the Rise of Water Level

The Whale Tail Dike (WTD) is an important dewatering dike that is required to enable mining of the open pit located in the north part of Whale Tail Lake. This dike is located on a shallow plateau of the

lake floor with an approximate 2 m depth of water. Once in operation, the downstream side of the dike will be dewatered and the upstream side of the dike will allow a 3.5 m raise of the water level prior to being discharged by gravity towards Mammoth Lake.

The 3.5 m rise of water level following the construction of the WTD is a potential source of erosion, specifically along the shorelines located on both shores of the Whale Tail Lake from the South Basin up until the South Whale Tail Diversion Channel.

Gradation curves obtained from samples collected at both abutments of the WTD showed that the esker located at the west shore is composed of coarser material (sand and gravel), whereas the soil near the east shore is mostly silty sand with some gravel and clay (SNC-Lavalin, 2018b). Erosion hazard varies with soil type and slope along the shorelines. These factors will be taken into account for the monitoring and mitigation presented below.

3.3.1 Proposed Monitoring

According to the water balance of the Whale Tail Lake, it is expected that the water level in South Whale Tail Lake will reach its final elevation of 156.0 m approximately two (2) years after the construction of the WTD, during the summer of 2020 (SNC-Lavalin, 2018a). Visual inspection of the shoreline stability and of the water quality on a regular basis during open water season will be required to ensure that erosion along the new banks will not mobilize excess TSS in the Whale Tail Lake, especially during the first years following construction while the water level is rising. Shorelines instability will be noted, along with signs of permafrost degradation such as ground ice melting, gully and fissuring.

The frequency of grab water samples and turbidity should follow the Type A Water License requirements and could be increased in required during the freshet season, if the TSS contents gets near or exceed the maximum allowed value as per the license.

Monitoring will be documented with site photographs and inspection forms.

3.3.2 Mitigating Measures

Because erosion of the shorelines is a rather specific problem, the installation of riprap, clean non-acid generating/non-metal leaching rockfill on the affected banks could be considered in most cases if erosion-related issues are observed. Installation of erosion control material such as turbidity barriers, silt curtains or straw booms could be done if required.

If severe erosion problems occur following the rise of the water level in the South Basin, additional site specific mitigating measures such will be developed according to the site conditions.

SECTION 4 • REFERENCES

Agnico Eagle Mines Ltd. (2016). *Water Quality Monitoring and Management Plan for Dike Construction and Dewatering.* In Accordance with Water License 2AM-MEA0815. Prepared by Agnico-Eagle Mines Limited - Meadowbank Division, Version WT, June 2016.

Canadian Council of Ministers of the Environment. (1999). *Canadian Water Quality Guidelines for the Protection of Aquatic Life - Total Particulate Matter.* (Updated 2002).

Caux, P. Y., Moore, D. R., & MacDonald, D. (1997). *Ambient water quality guidelines for turbidity, suspended particles and benthic sediments - technical appendix.* Prepared for BC Ministry of Environment, Lands and Parks.

Fisheries and Oceans Canada. (1999). *The Effects of Sediment on Fish and their Habitat.* Research Document 99/139.

Government of Canada. (2002). *Metal Mining Effluent Regulations.* SOR/2002-222. Minister of Justice of Canada. Current to April 24, 2018, last amended on December 8, 2017.

Lloyd, D. S., Koenings, J. P., & Laperriere, J. D. (1987). Effects of Turbidity in Fresh Waters of Alaska. *North American Journal of Fisheries Management, 7*(1), 18-33.

SNC-Lavalin. (2015). *Scoping Study Report of Whale Tail Pit Project, Geotechnical Infrastructures and Water Management.* 627215-0000-4GER-0001, May 2015.

SNC-Lavalin. (2018a). *Thermal analysis at Whale Tail Dike.* Report No. 651298-2100-4GER-0001_PB, February 2018.

SNC-Lavalin. (2018b). *Design report of Whale Tail Dike.* 651298-2700-4GER-0001_01, May 10, 2018.

Fish Habitat Offset Monitoring Plan, Version 1

AGNICO EAGLE

WHALE TAIL PIT

Fish Habitat Offset Monitoring Plan

Prepared by:
Agnico-Eagle Mines Limited – Meadowbank Division

Version 1
March, 2018

EXECUTIVE SUMMARY

General Information

This Fish Habitat Offset Monitoring Plan (FOMP) defines the sampling methods and criteria for success of the fish habitat offsetting features described in the Fish Habitat Offsetting Plan for Whale Tail Pit (March, 2018).

Record of Changes

A record will document all significant changes that have been incorporated in the FOMP subsequent to the latest review. The record will include the names of the persons who made and approved the change, as well as the date of the approval.

Distribution List

Agnico Eagle Mines Limited will maintain a distribution list for the FOMP, providing information about all parties that receive the plan including mine personnel, departments, and outside agencies.

IMPLEMENTATION SCHEDULE

The implementation schedule for this plan is effective immediately subject to any modifications proposed by DFO as a result of the review and approval process.

DISTRIBUTION LIST

AEM - Environmental Superintendent

AEM – Environmental Coordinator

AEM – General Mine Manager

AEM – Site Services Superintendent

AEM – Field Services Supervisor

AEM – Engineering Superintendent

DFO Arctic Region Representative

DOCUMENT CONTROL

Document Control

Version	Date (YMD)	Section	Page	Revision
Draft	2017/06/15	All	All	Initial document
1	2018/03/27	All	All	Update based on DFO consultation on offsetting concepts

Version 1

Prepared By: Meadowbank Environment Department

Approved By: _____

Ryan Vanengen
Environmental Permitting Lead – Amaruq Project

TABLE OF CONTENTS

EXECUTIVE SUMMARY ..... **II**

IMPLEMENTATION SCHEDULE ..... **III**

DISTRIBUTION LIST ..... **III**

DOCUMENT CONTROL ..... **IV**

SECTION 1 • INTRODUCTION **1**

1.1 Background 1
1.2 Objectives 1

SECTION 2 • SUMMARY OF OFFSETTING MEASURES **2**

2.1 Rock Shoals 2
2.2 Constructed Sill and Elevated Water Level 3
2.3 Complementary Measures 3

SECTION 3 • MONITORING METHODS **3**

3.1 Habitat Enhancement/Creation Features 3
3.1.1 Physical Structure Monitoring 4
3.1.2 Ecological Monitoring 5
3.1.2.1 Interstitial Water Quality 5
3.1.2.2 Open Basin and Pit Water Quality 5
3.1.2.3 Periphyton Growth 6
3.1.3 Fish Use 7
3.2 Complementary Measures 7

SECTION 4 • FREQUENCY **7**

SECTION 5 • QA/QC **7**

5.1 Laboratory QA/QC 8
5.2 Field QA/QC 8

SECTION 6 • CRITERIA FOR SUCCESS **9**

6.1 Habitat Enhancement/Creation Features 9
6.1.1 Physical Structure 9
6.1.2 Interstitial Water Quality 9
6.1.3 Open Basin Water Quality 9
6.1.4 Periphyton Community 10

6.1.5 Fish Use 10
6.2 Complementary Measures 11

SECTION 7 • REPORTING AND PLAN REVIEW 11

SECTION 8 • REFERENCES 11

TABLES 21

LIST OF TABLES

Table 1. Estimated timeline for the construction of fish habitat offsets. Offsets will be realized once reflooding of Whale Tail North Basin occurs (est. 2027), dikes are breached (est. 2029), and criteria for success are met. 21
Table 2. Estimated timeline for complementary measures (research projects). 21
Table 3. Example comparison of designs and as-built physical properties of habitat compensation features. 22
Table 4. Summary of monitoring methods, analytical parameters, sampling frequency and number of samples for habitat offsetting features to be monitored. Reflooding (F) is estimated to be completed in 2028, and the dike breached in 2029 (B). Construction (C) dates vary by feature, according to Table 1. 22

SECTION 1 • INTRODUCTION

1.1 BACKGROUND

Since 2010, Agnico Eagle Mines Limited (Agnico) has operated the Meadowbank Gold Mine, approximately 70 km north of the hamlet of Baker Lake, Nunavut. In 2016, Agnico submitted applications to the Nunavut Impact Review Board and Nunavut Water Board to permit the construction and operation of the Whale Tail Pit satellite deposit on the Amaruq site.

Since mining activities related to Whale Tail Pit are planned to result in serious harm to fish as described under Section 35 of the *Fisheries Act*, Agnico is applying to Fisheries and Oceans Canada (DFO) for an authorization under Subsection 35(2) of the Act. To support this application, a Fish Habitat Offsetting Plan for Whale Tail Pit has been developed, which quantifies losses to fish habitat that are expected to occur, and describes the habitat gains that will be achieved through fish habitat offsetting measures. Further, this Fish Habitat Offset Monitoring Plan has been developed to describe the specific monitoring program that will be implemented to determine the effectiveness of fish habitat offsetting features and confirm when offsets have reached full functionality.

Existing authorizations for the Meadowbank site under *Fisheries Act* Section 35 include NU-03-0190 (streams along the Meadowbank All Weather Access Road), NU-03-0191.3 (Second and Third Portage Lakes), NU-03-0191.4 (Vault Lake), NU-08-0013 (Western Channel), and NU-14-1046 (Phaser Lake). These authorizations are supported by the 2012 No Net Loss Plan for the Meadowbank Site, and the 2016 Fish Habitat Offsetting Plan for Phaser Lake, as well as the 2017 Habitat Compensation Monitoring Plan for the Meadowbank Site.

Overall, the monitoring approach for Whale Tail Pit offsets has been developed based on methods that are consistent with those used since 2009 on the Meadowbank site (as described in the 2017 Habitat Compensation Monitoring Plan) and to enhance regional understanding of fish, fish habitat, ecosystem function and productivity. These include structural assessments of constructed features, as well as monitoring of water quality, periphyton growth, and fish use. Further, these endpoints are consistent with Traditional Knowledge concerns related to protecting fish, fish habitat and ensuring clean water (Whale Tail Pit FEIS Appendix 7-A: IQ Baseline, Agnico Eagle 2016).

1.2 OBJECTIVES

The majority of required habitat gains for Whale Tail Pit offsetting are planned to be achieved through habitat creation and enhancement efforts. These include:

- re-flooding of the de-watered Whale Tail Lake - North Basin following construction of habitat enhancement features (shoals);

and

- maintaining an elevated water level in Whale Tail Lake compared to baseline conditions;

In order to ensure that offsets are functioning fish habitat as intended and projected through Traditional Knowledge workshops, assessment of the structure and successful utilization of these features by fish are the primary goals of the monitoring program for habitat enhancement/creation offsets.

The overall objectives of this plan are:

a. To describe physical and ecological monitoring methods for each feature
b. To describe the quality assurance and control measures to be included in the monitoring program
c. To define the criteria for success
d. To present the monitoring frequency and reporting schedule

In addition to the constructed habitat offsetting features to be monitored through this plan, a portion of offsetting for Whale Tail Pit will be provided through development and coordination of a suite of complementary measures (research projects). No physical monitoring is conducted in relation to research projects, so they are referred to minimally in this plan (refer to Fish Habitat Offsetting Plan for Whale Tail Pit, March, 2018 for full descriptions of complementary measures). However, progress monitoring will be incorporated in each research project to document annual activities, and that component is described here along with criteria for success.

SECTION 2 • SUMMARY OF OFFSETTING MEASURES

The following constructed features will create or enhance fish habitat to offset losses occurring in the North Basin of Whale Tail Lake. Complementary measures included in the offsetting plan area also summarized. Further details for each are provided in the Fish Habitat Offsetting Plan for Whale Tail Pit (March, 2018).

2.1 ROCK SHOALS

Placement of rock material to change lake basin substrate from fine or mixed to coarse (i.e. the creation of rock shoals) is the most commonly used enhancement technique. This offsetting measure will occur in the dewatered area of Whale Tail Lake – North Basin outside of the pit, with the work conducted prior to reflooding.

Roads, jetties and other features will be scarified or converted to coarse substrate as necessary, prior to closure. A pit sill cap of coarse rock material will also convert fine substrate to coarse in areas where coarse substrate did not already exist. In addition, a

network of shoals (termed grid shoals based on their conceptual design pattern) will convert half of the southern area of the North Basin to higher-value habitat.

2.2 CONSTRUCTED SILL AND ELEVATED WATER LEVEL

During the operations period when Whale Tail Lake – North Basin is dry, a permanent water control structure (sill) will be constructed just upstream of Mammoth Dike. Once the Whale Tail Dike is breached and flows resume its natural direction through Mammoth Lake, this feature will ensure that water levels in Whale Tail Lake and connecting channels remain at 1 m higher than baseline conditions. It is estimated that a 1 m increase in water levels upstream of the Mammoth Dike would create approximately 46.6 ha of new aquatic habitat.

2.3 COMPLEMENTARY MEASURES

A suite of complementary measures (research projects) is proposed to include:

- Assessment of changes in aquatic productivity and fish populations due to flooding of Whale Tail South and downstream lakes during operations
- Assessment of impacts of the Baker Lake wastewater outflow on aquatic systems including fish and fish habitat
- Literature review and field validation of northern lake fish habitat preferences
- Arctic grayling occupancy modeling
- Pit lake habitat use assessment
- eDNA methods development

SECTION 3 • MONITORING METHODS

3.1 HABITAT ENHANCEMENT/CREATION FEATURES

As in the Habitat Compensation Monitoring Plan for the Meadowbank site, both physical and ecological components are included in the offset monitoring plan, to record whether each feature is constructed and is functioning as intended.

The assessment of habitat features incorporates monitoring methods with specific quantitative criteria for success (physical structure, interstitial water quality), as well as complementary “qualitative” tools (periphyton growth and fish use). All lines of evidence are then integrated in a weight-of-evidence approach to make the final determination regarding habitat feature functionality.

The proposed type and schedule of monitoring is described for each feature in Table 3 and 4, and details for each monitoring component are provided below.

3.1.1 Physical Structure Monitoring

Since the habitat evaluation procedure focuses on quantifying losses and gains to habitat, based on physical characteristics (area, depth and type of substrate), physical structure is arguably the most important component to monitor in cases where habitat offsets are derived from constructed features (such as reefs or boulder gardens).

All habitat structures constructed as offsets will be assessed post-construction to determine whether they meet the assumptions of the offsetting plan. These include area, depth and substrate characteristics. For each feature, a comparison will be made to the specifications described for these characteristics, to determine whether expected physical habitat gains are achieved in the as-built state (i.e. to confirm features were constructed as planned).

In addition to the analysis of depth, area, and substrate in the dry basins, structural integrity will be qualitatively assessed after re-flooding, to record any movement occurring during this process.

Methods of evaluation will depend on the specific offsetting feature, and are detailed in Tables 3 and 4. Depending on the feature, these methods may include:

On-the-ground photos – photos will be taken of the compensation feature pre-, during and post-construction.

Aerial photos or PhotoSat Imagery – will be taken of dry basin just prior to re-flooding, to compare areal extents of compensation features with offsetting plan predictions. Differences will be estimated visually or by GIS.

Visual observation – conducted to ground-truth substrate types for confirmation in air photos.

Field survey – conducted in the dry to determine depth-below-surface of offsetting features.

Underwater video – conducted post-flooding to qualitatively examine structural integrity of constructed features.

Results will be recorded for each feature and compared to the associated offsetting plan estimate, making use of the example provided in Table 3.

Analysis of the physical components will occur in the dry for features constructed in the de-watered basin, in order to facilitate ground-truthing of substrate and total area. This analysis will occur just prior to re-flooding, such that features are in their final condition. As-built reports will first be consulted to determine if the required information is available.

3.1.2 Ecological Monitoring

Ecological monitoring elements include interstitial water quality, open basin water quality, periphyton community biomass and fish use.

3.1.2.1 Interstitial Water Quality

Modeling during the EIA process did not indicate that metals leaching from quarried rock used to construct dikes and roads would significantly impact the aquatic environment. Nevertheless, interstitial water quality of constructed habitat offsetting features will be assessed to verify these predictions.

In order to collect a representative sample from the bioactive zone between the rocks, an electric diaphragm pump with food-grade silicon tubing is used. If possible, samples will be taken at depths between 1 and 4 m, and analyzed in an accredited laboratory for total suspended solids, and total and dissolved metals. Results will be compared to background concentrations, CCME guidelines where available, or CREMP threshold values. Locations and schedules for interstitial water quality sampling are described in Table 4.

3.1.2.2 Open Basin and Pit Water Quality

Modeling during the EIA process indicated that water quality in the re-flooded pit and lake basin would be suitable for aquatic life during the post-closure period. Although the pit area is not included as habitat, the re-flooded adjacent basin areas form part of habitat offsetting for Whale Tail Pit. Water quality within both the basin and the pit will be monitored as the pit re-fills and after breaching of the dike as part of NWB Type A Water License requirements under the site's Water Quality and Flow Monitoring Plan (during operation, closure and post-closure) and Core Receiving Environmental Monitoring Plan. Specific monitoring locations within the Whale Tail Lake North Basin will be determined by experienced field technicians.

According to the Water Quality and Flow Monitoring Plan, these assessments will occur 4x per year, and parameters to be monitored include:

Total and dissolved metals: aluminum, antimony, arsenic, boron, barium, beryllium, cadmium, copper, chromium, iron, lithium, manganese, mercury, molybdenum, nickel, lead, selenium, tin, strontium, titanium, thallium, uranium, vanadium and zinc

Nutrients: Ammonia-nitrogen, total kjeldahl nitrogen, nitrate nitrogen, nitrite-nitrogen, ortho-phosphate, total phosphorous, total organic carbon, total dissolved organic carbon and reactive silica

Conventional Parameters: bicarbonate alkalinity, chloride, carbonate alkalinity, conductivity, hardness, calcium, potassium, magnesium, sodium, sulphate, pH, total alkalinity, TDS, and TSS, turbidity;

Total cyanide and free cyanide: If CN total is detect above 0.05 mg/L in an analysis result for monitoring station in receiving environment; further analysis of CN WAD will be triggered.

In addition to the above monitoring under the Water Quality and Flow Monitoring Plan, supplemental monitoring that will inform fish habitat offsetting will be conducted as a component of the Core Receiving Environment Monitoring Plan (CREMP). This analysis will generally follow methods established in the CREMP: 2015 Update – Whale Tail Pit Addendum (May, 2016).

These supplemental analyses will include vertical depth profiles of temperature, DO and conductivity to a representative depth. Secchi depth and surface pH will also be determined at each sampling location. In addition to the list of water quality parameters above, water samples will be collected to assess organic parameters (chlorophyll-α, dissolved and total organic carbon).

Water samples will be collected from approximately 3 m depth by pumping lake water using weighted flexible (food-grade silicone) tubing, and a diaphragm pump connected to a 12 volt battery. An inline filter is connected to the end of the outflow tube when filling bottles for dissolved metals and dissolved organic carbon analyses.

Results of water quality monitoring will be compared to background concentrations, CREMP trigger or threshold levels, CCME guidelines where available, and any site-specific criteria. General locations and schedules for open basin water quality sampling are described in Table 4.

3.1.2.3 Periphyton Growth

The periphyton community consists of a collection of microorganisms, including algae, that grow attached to or in very close proximity to submerged substrate. Colonization of the community occurs over time, with rates depending on nutrient and light availability. Periphyton is an important food source for benthic invertebrates, so colonization will be monitored to ensure that quarried rock substrate provides habitat that is as suitable at this level of the food chain as natural substrate.

Periphyton sampling for habitat assessments will be carried out in the same manner as described in the Whale Tail CREMP (Azimuth, 2016), and Habitat Compensation Monitoring Plan for the Whale Tail Site.

Periphyton Samplers: Briefly, a specialized scrubber will be used to collect periphyton samples from a prescribed area of rock face, in order to calculate cell density and/or biomass ($\mu g/cm^2$). This method will be appropriate to assess growth of periphyton in the flooded littoral zone.

Underwater Video: For deeper areas (constructed shoals) underwater video will be used to make qualitative assessments of periphyton growth.

Results will be compared to reference sites, baseline data, and/or historical monitoring programs. Locations and schedules for periphyton sampling are described in Table 4.

3.1.3 Fish Use

In accordance with DFO's "Fisheries Productivity Investment Policy: A Proponent's Guide to Offsetting" (November, 2013), monitoring of fish use in the reflooded Whale Tail Lake will aim to demonstrate that the system has reached full ecological functionality (i.e. supports fish reproduction, growth, and survival). Since the use of gill nets has historically been found to result in elevated incidences of mortality, electrofishing, angling and underwater camera techniques were proposed in 2014 for the Meadowbank site, used during baseline data collection in 2016 and will continue to be used to establish fish presence around the constructed habitat features and in the open basin of Whale Tail Lake. Catch per unit effort and physical characteristics (species, length, weight, maturity, sex) will be recorded and compared to reference areas and/or historical results, as the dataset allows. Use of hydroacoustic surveys may also be employed to assess fish presence within the north basin of Whale Tail Lake.

If these techniques are not successful, a DFO representative will be contacted and the use of gill nets may need to be included. It is estimated to be likely that use of gill nets will be required to demonstrate that DFO's criteria for success related to full ecological functionality have been met, since catch through angling is typically low, and quantitative assessments of growth are not feasible using underwater camera work. Locations and schedules for monitoring of fish use are provided in Table 4.

3.2 COMPLEMENTARY MEASURES

Progress reports for each research project will be provided annually to DFO (see Section 7) from study initiation until criteria for success are met. Results of the offsetting monitoring will be shared on an annual basis with the Meadowbank Fisheries Advisory Group to further mutually inform research projects and future monitoring programs.

SECTION 4 • FREQUENCY

The initial planned sampling schedule and general locations of monitoring for each feature are described in Table 4. Specific sampling locations will be determined in the field by a qualified environment technician or biologist. Monitoring will be conducted at a minimum for the time period specified in Table 4, and may be continued if criteria for success are not met within this time frame.

SECTION 5 • QA/QC

The following QA/QC procedures are presented for general consideration, and primarily apply to assessments of habitat enhancement features. QA/QC procedures for research programs will be encouraged by Agnico but will ultimately be determined by academic partners based on individual project components.

5.1 LABORATORY QA/QC

Water Quality – Data Quality Objectives (DQOs) are numerically definable measures of analytical precision and completeness. Analytical precision is a measurement of the variability associated with duplicate analyses of the same sample in the laboratory. Completeness for this study is defined as the percentage of valid analytical results. Duplicate results will be assessed using the relative percent difference (RPD) between measurements.

The laboratory DQOs for this project are:

Analytical Precision = 25% RPD or less for concentrations that exceed 10x the method detection limit (MDL).

Completeness = 95% valid data obtained.

Periphyton Community – Laboratory analyses for periphyton samples will be conducted by experienced scientists following a standardized procedure (i.e., quality assurance). Internal quality control samples (e.g., duplicate counts) will be included to document analytical variability.

5.2 FIELD QA/QC

Water Sampling – Field QA/QC standards during water sampling will be maintained for every sample. The standard QA/QC procedures include thoroughly flushing the flexible tubing and pump to prevent cross-contamination between stations and thoroughly rinsing the sample containers with site water prior to sample collection. Trip blanks and field duplicates will be collected (approximately 1 per 10 samples). Field duplicates assess sample variability and sample homogeneity; a RPD of 50% or less for concentrations that exceed 10x the MDL is considered acceptable.

Periphyton Community – Standard procedures will be used to collect biota samples. All sampling gear will be thoroughly rinsed between sampling stations to ensure that there was no inadvertent introduction of biota from one station to another. A field duplicate will be collected for phytoplankton at one sampling station per sampling event to assess sampling variability and sample homogeneity. Due to large natural variability and the qualitative nature of this component, no specific RPD acceptability criterion is recommended for density and biomass.

Fish Use – These study components will be conducted in accordance to the general practices listed previously. All relevant spatial and depth information will be recorded. Fish biological data will be recorded as will reference spatial information. Field notebooks or field sheets will be used to compile notes and observations relevant to the studies. Fishing will be carried out by experienced technicians or biologists who are very familiar with this kind of work. Video/photo survey data will be conducted carefully to provide representative images

of target communities. All relevant spatial and depth information will be recorded and identified by the time stamp (or photo number) and tape number (or memory card number).

SECTION 6 • CRITERIA FOR SUCCESS

6.1 HABITAT ENHANCEMENT/CREATION FEATURES

Criteria for success for habitat offsetting are aimed at demonstrating fish presence, survivorship and full ecological functionality of the system (i.e. reproduction, growth, survival of fish). Specific criteria have been established for physical structure, water quality, and fish use to determine whether these conditions have been met. However, as described in Agnico's 2008 HCMP, a weight-of-evidence approach will continue to be used to determine whether habitat offsetting features are functioning as intended overall, and to make decisions regarding offsetting achievements.

The following specific success criteria will be used prior to integrating data in a weight-of-evidence evaluation of habitat enhancement or habitat creation offsetting projects.

6.1.1 Physical Structure

In order to provide the required habitat gains, constructed features should meet the specifications described for area, depth and substrate in the offsetting plan. Where specifications are not met, the total habitat units afforded by the feature in its as-built state will be calculated. If there is a deficiency in habitat units site-wide, DFO will be consulted.

6.1.2 Interstitial Water Quality

Water chemistry results will be compared to reference locations and CCME water quality guidelines as available. If necessary, follow-up sampling will be conducted as soon as practical during ice-free conditions. If water quality criteria do not meet background or CCME guidelines after two monitoring events, risk-based toxicity reference values will be compared, and additional testing, such as laboratory toxicity tests will be considered. Because onsite experience and HCMP dike face monitoring results to date at Meadowbank indicate that adverse effects are unlikely, any additional testing would be determined in consultation with DFO if required. Criteria for success will be maintenance of acceptable water quality conditions for aquatic life according to the above comparisons throughout three sequential monitoring events.

6.1.3 Open Basin Water Quality

In post-closure, water quality in the fully flooded Whale Tail Pit and Whale Tail Lake (North Basin) are predicted to be relatively constant throughout the year, and there are no predicted exceedances of the CEQG-AL criteria or the site specific water quality objective (SSWQO) developed for arsenic during the FEIS phase. Water quality will be suitable for overflow to Mammoth Lake, assuming that diffusion from the pit wall rock will not occur, nor any exchanges between the Whale Tail Pit and above lake water. As per NWB Type A

Water Licence requirements, a site wide water balance will be updated as part of the annual water management plan and end pit water quality modelling will be conducted to update these predictions. Dikes will not be breached to allow fish entry until water quality in the flooded area meets CEQG-AL, baseline concentrations, or appropriate SSWQOs in accordance with the NWB Type A. Specific criteria for success related to water quality to allow breaching of the Whale Tail Dike and entry of fish into the North Basin area will be determined in consultation with NWB (including DFO) and KIA, upon submission of the final closure plan.

Water quality within the open basin following breaching of the dike will be monitored in accordance with NWB Water License requirements. The criteria for success from a fish habitat offsetting perspective will be maintenance of acceptable water quality conditions for aquatic life according to these programs throughout three sequential monitoring events.

6.1.4 Periphyton Community

Since lakes in the Meadowbank region are ultra-oligotrophic and ice-covered for the majority of the year, periphyton development is expected to be slow. Results from monitoring of habitat features at the Meadowbank site (East Dike) demonstrate that periphyton biomass is not fully established to baseline values within 5 years following construction, although year-over-year improvements are considerable. Since periphyton growth has been extremely variable in reference sites historically (Azimuth, 2008), no specific quantitative criteria for success for this metric are proposed. However, within the weight of evidence assessment, periphyton measurements should document increases in biomass between monitoring events, and a trend towards reaching baseline biomass density.

6.1.5 Fish Use

According to DFO's "Fisheries Productivity Investment Policy: A Proponent's Guide to Offsetting" (November, 2013), monitoring of offsetting measures must be designed to confirm that serious harm to fish has been effectively counterbalanced. As a result, criteria for success for fish use are aimed at demonstrating presence, survivorship and full ecological functionality of the system (i.e. fish reproduction, growth, survival). Specifically, to establish success for Whale Tail Lake – North Basin, fish of each expected species from baseline studies will be documented as present in a natural range of sizes (for large bodied fish) around habitat features within the re-flooded area. Comparisons will generally be made to appropriate reference sites. Reproduction will be determined through observations of fry or specific assessments of spawning activities within the reflooded area, such as night-time visual searches for spawning events. If used, hydroacoustic surveys will demonstrate that fish populations in the Whale Tail North basin area (i.e. not the pit area, as that is not considered habitat) have a similar abundance, biomass or otherwise appropriate endpoint to reference areas in Whale Tail South Basin or reference lake. Criteria for success for all metrics related to fish use will be demonstration of the above-described conditions for three sequential monitoring events.

6.2 COMPLEMENTARY MEASURES

The main goal for all complementary measures is publication of research or methods development studies in the peer-reviewed literature (one or more publications per study). However it is recognized that not all factors affecting outcomes of research projects and suitability of studies for such publication are within the control of Agnico, academic partners, or DFO. As a result, in certain instances, peer-reviewed publication may not be a viable route for dissemination of knowledge gained through these projects. In such cases, Agnico suggests discussions be undertaken between researchers, DFO, and Agnico to determine a mutually agreeable solution (e.g. conference presentations, inter-agency workshops). Criteria for success of complementary measures are thus considered to be submission of one or more manuscripts per study for publication in a peer-reviewed journal.

SECTION 7 • REPORTING AND PLAN REVIEW

Annual reports describing activities conducted under this Fish Habitat Offset Monitoring Plan will be submitted with Agnico's Annual Report to the NIRB by March 31 of the following year. These will include monitoring related to constructed habitat offsets as well as progress reports on complementary measures.

The FOMP will be reviewed as required by the Meadowbank Environment Superintendent, and updated as necessary based on changes to mine site designs. All changes will be provided to DFO for approval as a revised document in the Annual Report.

SECTION 8 • REFERENCES

Agnico Eagle. 2016. Inuit Qaujimajatuqangit Baseline Report. Whale Tail Pit FEIS Appendix 7-A. June 2016.

Azimuth, 2008. Habitat Compensation Monitoring Plan, Meadowbank Gold Project. Prepared by Azimuth Consulting Group Inc. for Agnico-Eagle Mines Ltd. May, 2008.

Azimuth. 2016. Core Receiving Environment Program: 2015 Update. Whale Tail Pit Addendum. Prepared by Azimuth Consulting Group Inc., Vancouver, BC for Agnico-Eagle Mines Ltd., Vancouver, BC. May, 2016.

TABLES

Table 1. Estimated timeline for the construction of fish habitat offsets. Offsets will be realized once reflooding of Whale Tail North Basin occurs (est. 2027), dikes are breached (est. 2029), and criteria for success are met.

Lake	Feature Name	Date of Construction
Whale Tail Lake	Grid shoals	TBD - Prior to reflooding
	Road augmentation/scarification (shoals)	TBD - Prior to reflooding
	Mammoth Dike Sill	TBD - Prior to reflooding
	Whale Tail South - Flooded area	2019 - 2021

Table 2. Estimated timeline for complementary measures (research projects).

Project	Study Start Date	Estimated Study Duration
Changes in Aquatic Productivity	Summer 2018	3-4 years
Baker Lake Wastewater Assessment	Summer 2018	5 years
Lake Fish Habitat Preferences	Summer 2018	2 years
Arctic Grayling Occupancy Modelling	Summer 2018	3 years
Pit Lake Habitat Assessment	TBD	5 years
eDNA Methods Development	Summer 2017/2018	3-5 years

Table 3. Example comparison of designs and as-built physical properties of habitat compensation features.

Feature	Assessment Metric*	Method	Design	As-Built
Boulder garden	Area	Air photo	2.97 ha	3.5 ha
	Substrate	Visual observation	Coarse	Coarse (indicate actual grain size)
	Depth	Field survey	> 4 m	> 4 m
	Stability	Underwater video	-	Minor movement

*Area, depth, substrate type or stability

Table 4. Summary of monitoring methods, analytical parameters, sampling frequency and number of samples for habitat offsetting features to be monitored. Reflooding (F) is estimated to be completed in 2028, and the dike breached in 2029 (B). Construction (C) dates vary by feature, according to Table 1.

Feature	Component	Reason	Method	Parameters	Number of Samples	Sampling Schedule
Mammoth Sill	Structure	Design intent met	As-built designs Air photos Field survey of flooded zone	Area (ensure flooded area meets offsetting requirements)	-	F+1
		Stability	Visual assessment of sill	Qualitative observations	-	C+1 F+1
Basin	Open basin water quality*	Possible metals leaching, anoxia	Tube sampler Grab samples Depth profiles	Metals, nutrients, conventionals, cyanide, organic parameters. See Section 4.1.2.2	1 location within Whale Tail North Basin	4x/year, according to Type A Water License requirements (Water Quality and Flow Monitoring Plan). Additional according to CREMP.

Feature	Component	Reason	Method	Parameters	Number of Samples	Sampling Schedule
	Structure	Design intent met	Air photos Field survey	Area, substrate, depth zone	-	Prior to flooding
	Fish use	To confirm the presence, survivorship, growth, and reproduction of fish	Angling Electrofishing Underwater motion camera Hydroacoustic survey Spawning surveys Gill nets if necessary	CPUE Physical characteristics Length-weight; meristics data on incidental mortalities Total abundance Presence of spawning	TBD by field staff and results	B+1, 3, 5, 10
Roads & Grid Shoals	Structure	Design intent met	Air photos Field survey	Area, substrate, depth zone	-	Prior to flooding
		Stability	Underwater camera	Qualitative observations	Representative transects TBD by field staff	F+2
	Interstitial water	Possible metals leaching	Tube sampler	TSS Total and dissolved metals	3 locations	B+1, 3, 5, 10
	Periphyton	Base of food chain	Underwater camera	Qualitative observations	Representative transect TBD by field staff	B+1, 3, 5, 10
	Fish use	To confirm the presence, survivorship,	Angling	CPUE	One location TBD by field staff	B+1, 3, 5, 10

Feature	Component	Reason	Method	Parameters	Number of Samples	Sampling Schedule
		growth, and reproduction of fish	Underwater motion camera Gill nets if necessary	Physical characteristics		
Flooded zone	Periphyton	Base of food chain	Periphyton sampler	Biomass	Four representative locations in flooded zone TBD by field staff – two in north basin and two in south basin	B+1, 3, 5, 10
	Fish use	To confirm the presence, survivorship, growth, and reproduction of fish (small bodied fish in new flooded littoral zone)	Minnow traps, if possible Visual assessments	Length/weight, relative abundance Presence/absence	Four representative locations in flooded zone TBD by field staff - two in north basin and two in south basin	B+1, 3, 5, 10

*Monitoring and sampling protocols will be further developed and conducted as a component of Water Quality and Flow Monitoring Plan and CREMP, and will be conducted throughout the post-closure period; this duration will be determined in the final Reclamation and Closure Plan, to be submitted to NWB 1 year prior to closure.

Fish Habitat Offsetting Plan, Version 1

AGNICO EAGLE

WHALE TAIL PIT

Fish Habitat Offsetting Plan

Prepared by:
C. Portt and Associates
&
Agnico Eagle Mines Limited – Meadowbank Division

Final:
Version 1
March, 2018

TABLE OF CONTENTS

EXECUTIVE SUMMARY IV

SECTION 1 • INTRODUCTION 1

1.1 Goal 1
1.2 Hydrologic Setting 3
1.3 Water Elevations and Lake Shorelines 3
1.4 Whale Tail Study Area Fish Community 6

SECTION 2 • HABITAT EVALUATION PROCEDURE 9

2.1 HEP Model 9
2.1.1 Habitat Type Area (HT_{1-13}) 10
2.1.2 Habitat Suitability Index ($HSI_{sp,nu,fo,ow}$) 13
2.1.3 Life Function Weight 17
2.1.4 Species Weight 17
2.1.5 Access Factor 17
2.1.6 Habitat Co-factor 18

SECTION 3 • HABITAT LOSSES 19

3.1 Baseline Conditions 19
3.1.1 Site Description 19
3.1.2 Habitat Units Calculation 19
3.2 Operations Phase 25
3.2.1 Site Description 25
3.2.2 Habitat Units Calculation 26
3.3 Post-Closure Phase 30
3.3.1 Site Description 30
3.3.1 Habitat Units Calculation 30

SECTION 4 • OFFSETTING MEASURES 36

4.1 Habitat Enhancement and Creation 36
4.2 Complementary Measures 44
4.3 Timeline, Design and Construction of the Offsetting Measures 44
4.4 Monitoring 46

SECTION 5 • CONTINGENCY OPTIONS 46

5.1 Option 1 – Expanded Whale Tail Lake South Basin 46
5.2 Option 2 – Whale Tail Pit Berm 47
5.3 Option 3 – Additional Complementary Measures 47

SECTION 6 • CONCLUSION 47

SECTION 7 • REFERENCES 49

LIST OF TABLES

Table 1-1. Water elevation estimated from the July 21, 2011, imagery, the minimum, maximum and range of water elevations recorded in the field in 2015 and 2016, the difference between the minimum and maximum water elevations recorded in the field and the water elevation estimated from the July 21, 2011, imagery, and the number of days each year that the recorded water elevation was higher than the water elevation estimated from the July 21, 2011, imagery, for 2015 and 2016. 5
Table 1-2. Number of individuals of large-bodied fish species captured by gillnetting and the small-bodied fish species that were captured by electrofishing (X indicates that the species was captured) in the waterbodies that will be directly altered or have access affected during operations at the Whale Tail pit. Nemo Lake was not sampled for small-bodied fish. 8
Table 2-1. Physical characteristics of the habitat types used in the Whale Tail Lake HEP. Note that habitat type 10 is applied to all non-backfilled pit areas, independent of depth and substrate characteristics. 11
Table 2-2. Substrate category assigned to flooded terrestrial areas based on the terrestrial ecological land classification community types that are present under baseline conditions. 13
Table 2-3. HSI values for the Whale Tail fish species (sp=spawning, nu=nursery, fo=foraging, ow=overwintering). *Habitat type 10 is applied to all pit and pit cap areas regardless of depth and substrate. 16
Table 2-4. Access factor theoretically applied to each species for habitat loss and gain calculations, based on presence/absence (or anticipated presence/absence, for offsetting projects). 18
Table 2-5. Habitat co-factor for various pre- and post-compensation scenarios, according to Minns, 2012. 18
Table 3-1. Net change in fish habitat during the post-closure phase, without offsetting (losses). 32
Table 4-1. Habitat area (ha) and habitat units (HUs) gained from the implementation of the proposed habitat enhancement and creation offsetting measures. 38
Table 4-2. Timing of construction and accessibility of offsetting features (habitat enhancements and creation). 44
Table 5-1. Increase in habitat area (ha) and habitat units (HUs) compared to baseline conditions provided by contingency option 1 (maintaining fish habitat conditions as during operations). 47

LIST OF FIGURES

Figure 1-1. Location of the proposed Whale Tail Pit Study Area. 2
Figure 1-2. Hydrologic setting and lake identification codes. Mammoth Lake is A16. Whale Tail Lake is A17. Nemo Lake is C38. 4
Figure 3-1. Whale Tail Project infrastructure during operations, 2019 to 2022 (does not show flooding that will occur in Whale Tail Lake – South Basin). 20
Figure 3-2. Whale Tail Project Infrastructure 2029 (post-closure phase). 21
Figure 3-3. Whale Tail pit lake study area depths under baseline conditions. 22
Figure 3-4. Whale Tail pit study area substrates under baseline conditions. 23
Figure 3-5. Whale Tail pit study area habitat types under baseline conditions. 24
Figure 3-6. Whale Tail Pit study area depths during operations. 27
Figure 3-7. Whale Tail pit study area substrates during operations. 28
Figure 3-8. Whale Tail pit habitat types during operations. 29
Figure 3-9. Whale Tail pit depths post-closure with no offsetting. 33
Figure 3-10. Whale Tail pit substrates post-closure with no offsetting. 34
Figure 3-11. Whale Tail pit habitat types post-closure with no offsetting. 35
Figure 4-1. Habitat created by increasing the water elevation by 1 m east of the Mammoth Dike. 39
Figure 4-2. Proposed roads scarified and constructed rock shoals proposed as offsetting measures. 40
Figure 4-3. Whale Tail pit depths post-closure with a 1 m increase in water elevation east of Mammoth Lake sill, roads scarified and rock shoals constructed for offsetting. 41
Figure 4-4. Whale Tail pit substrates post-closure with a 1 m increase in water elevation east of Mammoth Lake sill, roads scarified and rock shoals constructed for offsetting. 42
Figure 4-5. Whale Tail pit habitat types post-closure with a 1 m increase in water elevation east of Mammoth Lake sill, roads scarified and rock shoals constructed for offsetting. 43
Figure 4-6. Preliminary engineering design for sill to raise water level of Whale Tail Lake by 1 m in the long term. 45

APPENDICES

Appendix A – Lake Elevations and Summary of Fish Catches during Baseline Field Investigations

Appendix B – Habitat Areas and Habitat Units, by Habitat Type, for Baseline, Operations, and Post-closure Phases

Appendix C – Complementary Measures

EXECUTIVE SUMMARY

Agnico Eagle Mines Limited: Meadowbank Division (Agnico Eagle) is proposing to develop Whale Tail Pit, a satellite deposit on the Amaruq property, in continuation of mine operations and milling of the Meadowbank Mine. The Amaruq Exploration property is a 408 square kilometre (km^2) site located on Inuit Owned Land approximately 150 kilometres (km) north of the hamlet of Baker Lake and approximately 50 km northwest of the Meadowbank Mine in the Kivalliq region of Nunavut.

Baseline fisheries investigations were conducted in Mammoth Lake, Whale Tail Lake, and tributary streams and lakes in 2014, 2015, and 2016. Individuals of six fish species were captured in the primary study area. These were comprised of four large-bodied species (Lake Trout, *Salvelinus namaycush;* Arctic Char, *Salvelinus alpinus*; Round Whitefish, *Prosopium cylindraceum*; Burbot, *Lota lota*) and two small-bodied species (Slimy Sculpin, *Cottus cognatus*; Ninespine Stickleback, *Pungitius pungitius*).

The goal of this document is to characterize fish habitat in areas that will be directly affected by Whale Tail Pit mining operations under baseline conditions and predicted conditions during the operations and post-closure scenarios, and to describe habitat creation and enhancement along with complementary measures that will be used to offsetlosses to fish habitat. This document presents an approach to offsetting for the Whale Tail Pit that achieves a 1.66:1 ratio of habitat gains to habitat losses.

The habitat evaluation procedure (HEP) used to quantify habitat losses and offsets for Whale Tail Pit is based on the procedure used for the 2012 No Net Loss Plan (NNLP) for the Meadowbank Mine, and incorporates changes introduced between 2014 and 2016 based on DFO review of plans for Vault Lake, Phaser Lake, and the conceptual and draft offsetting plans for Whale Tail Pit (June, 2016; June, 2017)).

Changes to baseline fish habitat will occur during the operations and post-closure phases of Whale Tail Pit. During the operations phase there will be habitat losses due to dewatering or isolation of portions of Whale Tail Lake and some of its tributary lakes and connecting watercourses. Much smaller habitat losses will also occur in Mammoth Lake during operations as a result of diking and dewatering and in Nemo Lake due to the construction of a freshwater intake jetty. Habitat gains will occur from flooding of terrestrial areas south of the Whale Tail Dike. Overall, there is a 48.6 ha increase in the area of fish habitat and a 42.7 unit increase in the number of habitat units (HUs) during operations relative to baseline conditions. However, since flooding of terrestrial zones is only planned to occur over a 4-7 year period prior to drawdown, fish habitat availability during the operations phase is conservatively not considered a habitat offset, and calculations were performed for reference only. In the final net change calculation, only differences between baseline and post-closure conditions are compared.

Post-closure, in the absence of offsetting, most of the area affected during operations will revert to baseline conditions. The dikes will be breached, dewatered areas will be reflooded and isolated areas will be reconnected. The largest change between baseline and post-

closure conditions is the creation of Whale Tail Pit. For the purposes of offsetting calculations, and at the request of DFO, it has been assumed that the flooded pit and pit cap will have no fish habitat value. Therefore, although the excavation of the pit into terrestrial areas will increase the surface area of Whale Tail Lake by 27.4 ha after flooding, the number of habitat units present will decrease. There also remains a small decrease in the area and number of habitat units in Nemo and Mammoth Lakes. Following closure, without offsetting, there would be a net decrease of 14.45 HUs compared to baseline conditions.

As offsetting for these losses, it is proposed to construct a sill in the connecting channel between Whale Tail Lake and Mammoth Lake to raise the elevation of Whale Tail Lake by 1 m which will flood a band around the perimeter of Whale Tail Lake. This increase would convert land to aquatic habitat and modify much of the existing habitat by increasing its depth. It is also proposed to construct 8.77 ha of shoals in the portion of Whale Tail Lake that is dewatered during operations, and to scarify the roads within that area prior to reflooding, converting them from mixed to coarse habitat. The net result of all habitat creation and enhancement measures is an increase of 21.26 ha and 15.03 HUs relative to the post-closure condition with no offsetting. This results in an offsetting to losses ratio of approximately 1:1 (losses = 14.45 HUs, gains = 15.03 HUs).

DFO has indicated support for complementary measures to provide 60% of the required offsetting. Following discussions of suitable research topics with DFO, Agnico Eagle has worked with researchers to develop proposals for a suite of research activities to benefit local stakeholders and contribute to the understanding of aquatic systems. These complementary measures are valued at 60% of constructed offsets (9.02 HUs), providing a total offsetting ratio of 14.45 HUs lost to 24.05 HUs gained (1:1.66).

SECTION 1 • INTRODUCTION

Agnico Eagle Mines Limited: Meadowbank Division (Agnico Eagle) is proposing to develop Whale Tail Pit, a satellite deposit on the Amaruq property, in continuation of mine operations and milling of the Meadowbank Mine. The Amaruq Exploration property is a 408 square kilometre (km^2) site located on Inuit Owned Land approximately 150 kilometres (km) north of the hamlet of Baker Lake and approximately 50 km northwest of the Meadowbank Mine in the Kivalliq region of Nunavut (Figure 1-1).

1.1 GOAL

The goal of this document is to characterize fish habitat in areas that will be directly altered by Whale Tail Pit mining operations. Changes to fish habitat between baseline conditions and predicted conditions during the operations and post-closure scenarios are compared.

Options being considered to offset residual serious harm to fish that would occur as a result of mining activities at Whale Tail Pit were introduced in the Conceptual Fish Habitat Offsetting Plan (Agnico Eagle, 2016). In subsequent meetings to discuss offsetting for the project, DFO indicated that, given the need for knowledge regarding how fish populations and communities in the north respond to habitat changes, it would be acceptable for 60% of offsetting to consist of complementary measures. Those complementary measures would focus on funding scientific research that will improve the understanding of how aquatic systems in the far north respond to perturbations from human activities and/or the development of technologies to reduce impacts from human activities. The amount of research funding provided would be based on the predicted cost of achieving the desired offsets using typical offsetting methods that involve habitat alteration.

The approach used here to quantify harm and offsetting (previously termed compensation) builds upon methods developed for the Meadowbank mine site from 2012 through 2016. This offsetting approach was introduced in the 2012 Meadowbank no-net-loss plan (NNLP) after researching techniques and projects implemented at other northern mines, holding workshops and site visits with the local Hunter's and Trapper's Organization, Kivalliq Inuit Association and the DFO Habitat and Science & Research Departments, and reviewing the literature for information on effectiveness of compensation. Offsetting concepts specific to Whale Tail Pit were discussed with community groups during TK workshops initially held in Baker Lake in February 2016; follow-up workshops were held during the authorization phase of the project.

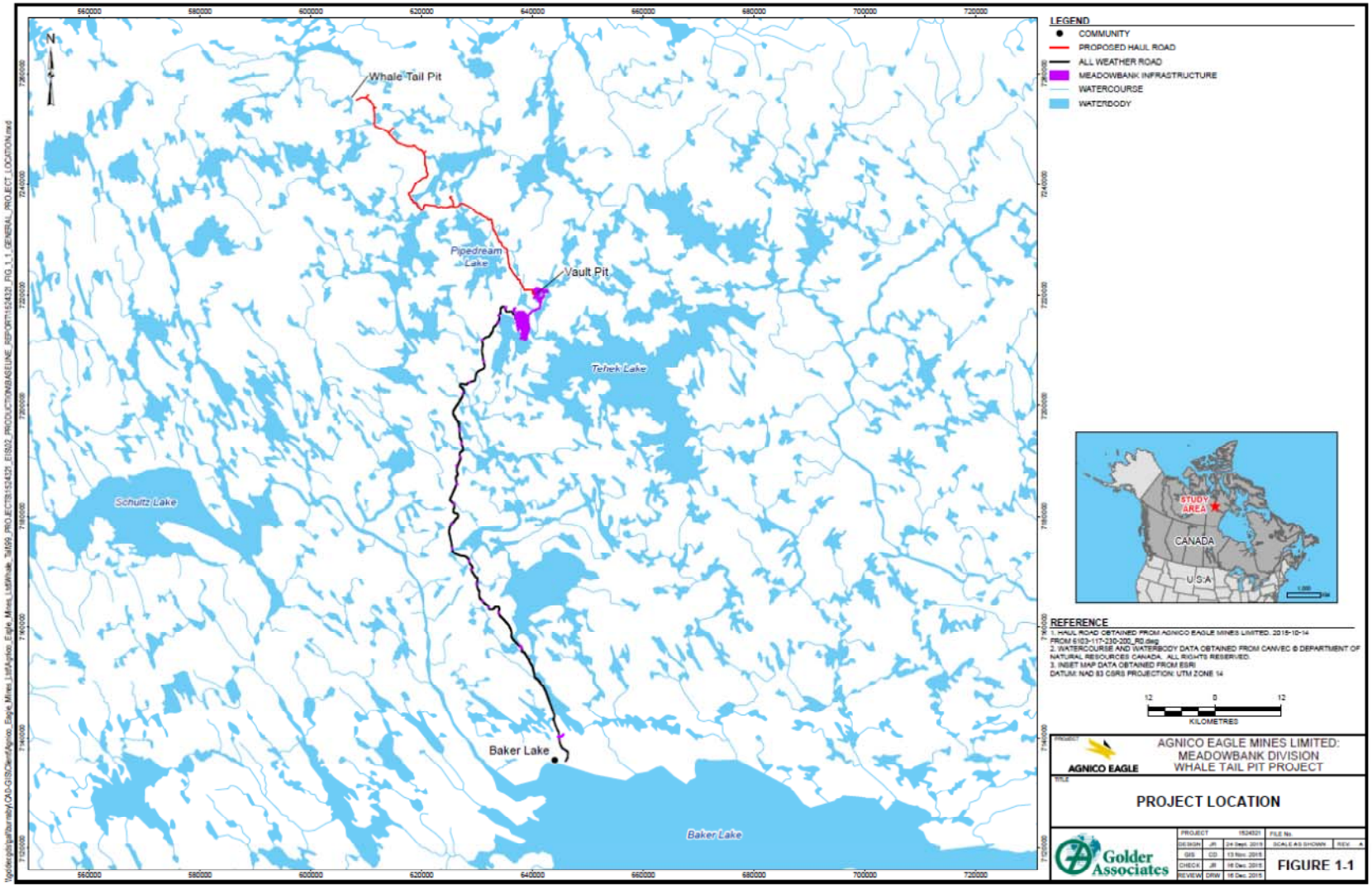

Figure 1-1. Location of the proposed Whale Tail Pit Study Area.

1.2 HYDROLOGIC SETTING

The hydrologic setting of Whale Tail Pit is shown in Figure 1-2. Lakes were assigned alpha-numeric codes to facilitate discussion, with the letter designating the subwatershed and, within each branch, the number increasing in an upstream direction. Lake A17 is referred to as Whale Tail Lake. Lake A16 is referred to as Mammoth Lake and lake C38, in the subwatershed immediately north of the Whale Tail Pit, is referred to as Nemo Lake.

The primary study area is in the headwaters of subwatershed A. All flow from the primary study area ultimately reaches lake DS1, but there are two pathways of flow downstream from Lake A12. The primary flow path, which conveys the majority of the flow, passes through lakes A11, A10, A9, A8 and A7, and then into Lake A32 before continuing through Lakes A6, A5, A4, A3, A2, A1 and into DS1. The secondary flow path is from Lake A12 to Lake A77 and then to Lake A76. Lake A76 has two outlets; with about half the outflow of the lake flowing to the east through Lake A41 to rejoin the primary flow path at Lake A10, while the other half flows west through Lakes A75, A74, A73, A72, A71, A70, A69 and into Lake DS1.

1.3 WATER ELEVATIONS AND LAKE SHORELINES

The shorelines used to determine baseline habitat areas in the Conceptual Fish Habitat Offsetting Plan (Agnico Eagle, 2016) were from CanVec mapping. Comparison of these shorelines to satellite imagery from July 21, 2011, indicated that the water levels represented by the CanVec shorelines were lower than those shown in the imagery. Water elevations were estimated by overlaying the digital elevation model for the study area and the July 21, 2011, satellite imagery for three lakes where actual water level data were available for 2015 and 2016 and the estimated elevations were compared to the field data1. The results (Table 1-1) were shared with DFO (meeting held in Winnipeg, March 23, 2017) and it was agreed that the water elevations and shorelines used to calculate habitat areas in the final offsetting plan would be determined using DEM and the July 21, 2011, imagery. Those elevations are provided in Appendix A.

[1] The following determination of shoreline elevations was provided in response to DFO IR 4 and 7. Agnico Eagle (January, 2017). DFO IR 4 – Freshwater Environment – Habitat Alteration; DFO IR 7 – Monitoring, Mitigation and Management Plans – Conceptual Offsetting Plan. January 20th, 2017 submission RE: NIRB File No 16MN056 Application No: 124683/NWB File No. 2AM WTP ----: Information Requests Received from Parties Regarding Agnico Eagles Mines Ltd's "Whale Tail Pit" Project.

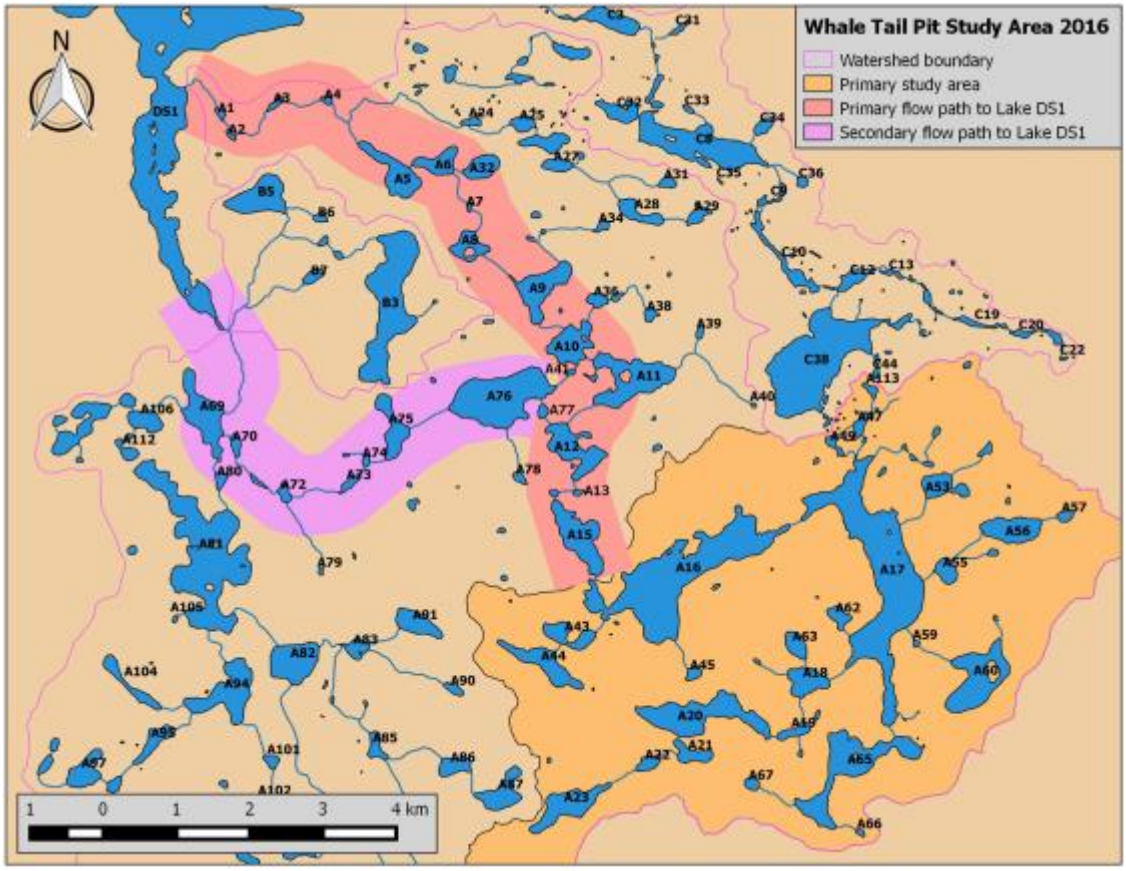

Figure 1-2. Hydrologic setting and lake identification codes. Mammoth Lake is A16. Whale Tail Lake is A17. Nemo Lake is C38.

Table 1-1. Water elevation estimated from the July 21, 2011, imagery, the minimum, maximum and range of water elevations recorded in the field in 2015 and 2016, the difference between the minimum and maximum water elevations recorded in the field and the water elevation estimated from the July 21, 2011, imagery, and the number of days each year that the recorded water elevation was higher than the water elevation estimated from the July 21, 2011, imagery, for 2015 and 2016.

Parameter	**Whale Tail Lake (A17)**		**Lake A18**		**Nemo Lake (C38)**	
Water elevation estimated from July 21, 2011 imagery (masl)	153.02		154.05		156.00	
Year	2015	2016	2015	2016	2015	2016
Maximum water elevation (masl)	153.31	153.11	154.20	154.10	155.98	156.04
Minimum water elevation (masl)	152.46	152.59	153.80	153.78	155.65	155.70
Range (m)	0.85	0.53	0.40	0.32	0.33	0.34
Difference between estimated water elevation and the recorded maximum (m)	0.29	0.09	0.15	0.05	-0.02	0.04
Difference between estimated water elevation and the recorded minimum (m)	-0.56	-0.43	-0.25	-0.27	-0.35	-0.30
# of days water elevation was higher than the water elevation estimated from shoreline elevation	10	5	11	5	0	11

1.4 WHALE TAIL STUDY AREA FISH COMMUNITY

Baseline fisheries investigations conducted in Mammoth Lake, Whale Tail Lake, and tributary streams and lakes in 2014, 2015 and 2016 are described in C. Portt and Associates (2018). The results are summarized here.

A total of six fish species are present in the primary study area, comprised of four large-bodied species (Lake Trout, *Salvelinus namaycush;* Arctic Char, *Salvelinus alpinus*; Round Whitefish, *Prosopium cylindraceum*; and Burbot, *Lota lota*) and two small-bodied species (Slimy Sculpin, *Cottus cognatus*; and Ninespine Stickleback, *Pungitius pungitius*).

Arctic Grayling occur further downstream in the watershed but upstream migration barriers prevent them from moving into the primary study area. The major barriers are a steep set of rapids on the primary flow path and a long section where there is only sub-surface, interstitial flow, even during spring freshet, on the secondary flow path. In addition to those primary barriers, there are connecting channels between a number of other lakes along these flow paths where there is only interstitial flow except during spring freshet. The absence of Arctic Grayling in the primary study area is consistent with the paucity of suitable spawning habitat and absence of riverine adult habitat in the tributaries to Mammoth and Whale Tail Lake.

Lake Trout was the most abundant species in gill net catches and the most widely distributed among the lakes, followed by Round Whitefish and Arctic Char (Table 1-2). Few Burbot were captured. Gill netting catch per unit effort was low for all species. In Mammoth, Whale Tail and Nemo Lakes combined, average catch per unit effort in gill nets, calculated as the number of individuals captured per hour of soak time using a standard Agnico Eagle gill net was 0.5, 0.1 and 0.01 for Lake Trout, Round Whitefish and Arctic Char, respectively. Lake Trout was the most frequently observed large-bodied species on underwater video recorded in Whale Tail Lake.

Electrofishing more than 3400 m of lake shoreline and pond habitat resulted in the capture of approximately 250 Ninespine Stickleback, 55 Slimy Sculpin, 2 juvenile Arctic Char and 3 juvenile salmonids, either Arctic Char or Lake Trout, which were not identified to species. Ninespine Stickleback was the most frequently observed small-bodied fish species on underwater video recorded in Whale Tail Lake.

No large-bodied fish were captured in Lake A45 or in Lake A113 and it is thought that none are present. Lake A45 is 2.9 ha in area and has a maximum depth of 4.5 m. There is no surface connection between Lake A45 and any other waterbody. No fish were captured in a 2 hour gill net set in Lake A45 in 2015 or in a 29.2 hour gill net set in 2016 using a standard Agnico index gill net gang comprised of 22.7 m long and 1.8 m deep panels of 126, 102, 76, 51, 38, and 25 mm stretched mesh (total gang length = 136.4 m). Lake A113 is 2.1 ha in area with a maximum depth of less than one metre and there is no defined channel connecting it to other waterbodies or watercourses downstream. There, no fish were captured in 3 panels of gill net (22.7 m long and 1.8 m deep panels of 38 mm, 51 mm and 76 mm mesh) set for 16.6 hours in 2015.

At least one large-bodied fish species was captured in eleven of the larger lakes, in addition to Whale Tail, Mammoth and Nemo and Ninespine Stickleback and Slimy Sculpin were also present in most of those. In three of the smaller waterbodies, only Ninespine Stickleback were captured. There were several isolated or nearly isolated small lakes and ponds in which no fish were captured. Most of these are located north of Whale Tail Lake.

All of the watercourses in the primary study area freeze during the winter. There are two broad categories of watercourses present. One type consists of connecting channels between larger lakes. These are generally wide and shallow with boulder and cobble substrate. Some of these connecting channels never have surface flow. Others have sufficient depth during spring freshet for adult large-bodied fish to pass through them but, as flow subsides, they become shallower and impassible to and unusable by large fish and, eventually, all of the flow is interstitial.

Based on the sampling conducted, there is little movement of large fish through the connecting channels that have sufficient depth to pass large fish during the spring. Hoop nets set in or immediately downstream from connecting channels in 2015 and 2016 during the freshet, when there was sufficient water present for large-bodied fish to move through the channels, did not capture any fish. Low numbers of juvenile Lake Trout and Round Whitefish, as well as Ninespine Stickleback and Slimy Sculpin, were captured by electrofishing in the connecting channels (Table A 2) before flow became totally interstitial.

The other type of watercourses present is small streams, most of which drain smaller catchments. These shallow streams often have multiple channels (i.e. are braided). The mean total wetted width of the Whale Tail Lake tributaries ranged from 0.7 m to 7.6 m and their mean depth ranged from 6 cm to 17 cm. Riffle and run habitat is dominant and there are few pools in these tributaries. Peat is the dominant substrate in most of these watercourses.

Electrofishing effort and catches in small streams in the primary study area during the 2015 and 2016 field seasons are summarized in Table A 3. Effort totalled 35,657 electroseconds and 6,330 m. Portions of the largest of these streams were fished on up to eight occasions. Ninespine Stickleback and Slimy Sculpin were the most widely distributed species in the Whale Tail Lake tributaries. Low numbers of juvenile Arctic Char were captured in five of the tributaries and juvenile Lake Trout were captured in two. Juvenile Burbot were captured in three tributaries and a juvenile Round Whitefish was captured in one.

One Lake Trout and one Arctic Char were captured in a hoop net set near the mouth of stream A55-A17 for 12 days in late June and early July of 2015. In the latter part of June and early July of 2016, gill nets were set across two of the smaller tributary streams to assess fish movement. A gill net set across stream A53-A17 near its mouth for a total 17 days caught one adult Arctic Char. A gill net set across stream A55-A17 near its mouth for a total of 16 days caught seven adult Arctic Char, five moving upstream and two moving downstream.

Table 1-2. Number of individuals of large-bodied fish species captured by gillnetting and the small-bodied fish species that were captured by electrofishing (X indicates that the species was captured) in the waterbodies that will be directly altered or have access affected during operations at the Whale Tail pit. Nemo Lake was not sampled for small-bodied fish.

Waterbody	Lake Trout	Arctic Char	Round Whitefish	Burbot	Ninespine Stickleback	Slimy Sculpin
A18	0	8	0	0	X	X
A19	0	2	0	1	X	X
A20	11	0	6	0		
A22	2	1	0	0	X	X
A45	0	0	0	0	X	
A47	0	1	0	0	X	
A49	3	0	0	0		X
A53	1	2	0	0	X	
A55	5	0	0	1		X
A62	3	0	0	0	X	
A63	1	0	0	0		X
A65	2	0	2	0	X	X
A113	0	0	0	0	X	
Mammoth Lake	49	0	20	0	X	X
Whale Tail Lake	34	2	5	0	X	X
Nemo Lake	22	0	0	0	ns	ns

SECTION 2 • HABITAT EVALUATION PROCEDURE

The habitat evaluation procedure (HEP) used to quantify habitat losses and offsets for Whale Tail Pit in this report is based on the procedure used for the 2012 NNL assessment for the Meadowbank Mine and incorporates refinements that have been introduced during subsequent work between 2014 and 2016 to develop offsetting measures for Vault and Phaser Lake. Various changes have also been incorporated as a result of DFO review of the conceptual (June 2016) and draft offsetting plans (June 2017) for Whale Tail Pit.

The HEP involves the classification of lake habitat into ten habitat types, based on depth and substrate. For the Whale Tail Pit HEP three additional habitat types have been incorporated to address connecting channels between lakes and small streams, as described in Section 2.1.1. Suitability of each habitat type is ranked between 0 and 1 for each of four life functions (spawning, nursery, foraging, overwintering) for each fish species that is (or is predicted to be) present. The area of each habitat type (in hectares) is multiplied by a habitat suitability index (HSI) and a series of weights (a species weight, a life-function weight and an access weight) and summed in order to derive a value in habitat units (HUs) that describes both the quality and quantity of habitat. These calculations are made for the pre-construction, or baseline, condition and for predicted conditions during the operations and post-closure phases of the project.

Net changes in HUs between phases depend on losses or gains in the area of each habitat types (1 - 13) that are present, and the suitability of each habitat type for each fish species. The HEP model is described in further detail below.

2.1 HEP MODEL

The HEP model used here can be described, for each fish species (spp 1-n) as:

$$\mathbf{HU}_{\text{spp 1-n}} = \sum_{\text{HT 1-10}} \left(\sum_{\text{sp,nu,fo,ow}} (\mathbf{HT}_{\text{1-10}} \times \mathbf{HSI}_{\text{sp,nu,fo,ow}} \times \mathbf{life\ function\ weight} \times \mathbf{species\ weight}) \right) \times \mathbf{access\ factor} \times \mathbf{habitat\ co\text{-}factor}$$

Where $HT_{1\text{-}10}$ = area (ha) of habitat types 1 through 10

$HSI_{sp,nu,fo,ow}$ = habitat suitability index for each life function:

- sp = spawning use
- nu = nursery use
- fo = foraging use
- ow = overwintering use

2.1.1 Habitat Type Area (HT_{1-13})

The foundation of the HEP is the delineation of areas that provide certain "habitat types" based on depth and substrate (Table 2-1). Habitat types 1 – 9 are lake habitats and were components of the original Meadowbank HEP model. These habitats are delineated by intersecting depth and substrate polygons.

Habitat Type 10 was added to the HEP model during the development of the Phaser Lake offsetting plan at the request of DFO to address uncertainty with respect to fish utilization of the deep pit areas. At that time, DFO indicated that the uncertainty arises primarily because there are "no examples of successful re-establishment of self-sustaining fish populations in refilled pits in Canada's North upon which to base end pit lake design" and there is a possibility that the deep areas of flooded pit may become meromictic (i.e. permanently stratified) and therefore be unsuitable for fish (DFO letter to Agnico Eagle dated November 27, 2015). DFO requested that the deep areas of the pit be designated Habitat Type 10 and that zero habitat value be assigned to those deep areas. An earlier conceptual offsetting plan was prepared for Whale Tail using that approach, in which the portion of the pit that is shallower than 22 m was assigned a habitat type based on its depth and it being coarse substrate and the portion deeper that 22 m was assigned Habitat Type 10. After reviewing that conceptual offsetting plan, DFO requested that, at Whale Tail, the entire pit area, regardless of depth and including the pit cap, be designated Habitat Type 10. This has been done for the calculations in this report.

Habitat Type 11 was initially used in the 2012 NNLP for the Meadowbank site to denote pit areas with some level of assigned habitat value. However in this offsetting plan for Whale Tail Pit, the designation HT11 was assigned to the connecting channels that occur between several of the lakes in the Whale Tail Pit study area. These channels are wide and have predominantly boulder and cobble substrates. They have shallow surface flow over most or all of their length during spring freshet and only interstitial flow over most or all of their length later in the open-water season. They freeze during the winter. The edge of the water in the connecting channels was observed in the field to correspond closely to the edge of the tundra vegetation. Therefore, these channels were delineated by digitizing the edge of the tundra vegetation in the July 21, 2011, satellite imagery. The upstream and downstream limits of the connecting channels are defined by the intersection of the upstream and downstream lake elevations with the DEM. When an area that is Type 11 habitat under baseline conditions is flooded during the operations or post-closure phases it becomes the lake habitat type with coarse substrate that corresponds to its new depth.

Habitat types 12 and 13 are also specific to this study and represent small streams with fine and coarse substrate respectively. These streams were characterized from field measurements made using a point-transect method during the period July 5 through July 8, 2016 (C. Portt and Associates, 2018). Many of these small streams have multiple channels and the width of each of the channels was measured at transects across the watercourses and those widths were summed to determine the total wetted width at a transect. To facilitate GIS analysis, the primary flow path of each of these streams was digitized based

on the July 21, 2011, satellite imagery and a ‘stream polygon’ was created by assigning the total wetted width to the digitized flow path at each transect location. This allows the areas of stream habitat to be visualized and calculated during baseline and subsequent stages using standard GIS techniques. The portion of stream habitat that is fine substrate (Habitat Type 12) or coarse substrate (Habitat Type 13) was calculated by multiplying the stream polygon area by the proportion of the points where substrate was fine or coarse based on the field measurements. In the operations and post-closure phases, when Type 12 or 13 habitat was flooded due to increased water levels it was considered converted to lake habitat and the habitat type was assigned based on depth and substrate.

Table 2-1. Physical characteristics of the habitat types used in the Whale Tail Lake HEP. Note that habitat type 10 is applied to all non-backfilled pit areas, independent of depth and substrate characteristics.

Habitat Type	Depth Zone	Substrate
1	0-2 m	Fine
2	0-2 m	Mixed
3	0-2 m	Coarse
4	2-4 m	Fine
5	2-4 m	Mixed
6	2-4 m	Coarse
7	>4 m	Fine
8	>4 m	Mixed
9	>4 m	Coarse
10	Pit and pit cap*	Pit and pit cap*
11	connecting channels	Coarse
12	small streams	Fine
13	small streams	Coarse
* Depth and substrate in pit and pit cap areas are not relevant to suitability, which is assigned 0 value (see Section 2.1.2).		

In order to calculate the extents of each habitat type, bathymetry for each of the lakes was merged with the digital elevation model in GIS. Bathymetry for Whale Tail, Mammoth and Nemo Lakes was provided by Agnico. For the smaller lakes that were deep enough to operate a boat, bathymetry was determined using a Humminbird 798ci HD SI Sonar unit. The sonar unit recorded georeferenced standard and side-scan sonar data. Straight, parallel boat runs, orientated to best characterize the lake's features, were used to record slightly overlapping side-scan images of the lake bottom. Additional sonar recordings were then made to obtain standard sonar data for as much of the lake bottom as was practical. A stake was driven into the ground at the water’s edge on the day that the Sonar data were collected and this elevation was later determined by a survey crew, so that the depth data could be converted to elevations and integrated with the digital elevation model. Visual point observations of the substrate were also made, either from the surface where the water was clear and shallow enough, or using an Aqua-Vu 740c underwater colour video system where the water was deeper. All visual substrate observations were georeferenced with a Garmin GPSmap76CSx gps unit.

The side-scan images were processed using ReefMaster software (ver. 1.8) to create a single georeferenced side-scan mosaic of the lake's bottom, and the standard sonar data were processed to create maps of bottom hardness and water depth. ReefMaster determines bottom hardness by analysis of the sonar output/input ratio, and lag, to calculate a unitless relative hardness and roughness value that is displayed as a colour-coded map. The georeferenced data (side-scan image, bottom hardness and water depth maps, and visual point observations) were layered using GIS software (QGIS version 2.8). In anticipation of the need to prepare substrate mapping, on September 2, 2014, oblique aerial photographs were taken, from a helicopter, of the shoreline and near-shore areas of Mammoth Lake, Whale Tail Lake, Nemo Lake and the adjacent smaller lakes and ponds. Additional oblique photographs were taken in June and August of 2016. Using the overlaid data, with reference to the oblique aerial photographs (n=229), the areas of the various substrate types were identified and hand digitized as polygons in GIS, creating substrate maps. With the exception of Nemo Lake this was done for each lake in its entirety. For Nemo Lake substrate mapping was only prepared in the area that would be impacted by the freshwater intake, as no other alterations of Nemo Lake are anticipated.

A few small, shallow ponds near the north end of Whale Tail Lake were too shallow to permit use of a boat and motor. The depths and substrates in these ponds were visually assessed from shore in 2015, and depth and substrate mapping was prepared based on those observations, aerial imagery, and the oblique aerial photographs taken in 2014 and 2015.

All habitat type area calculations and mapping were completed by Dougan and Associates using standard GIS methods consistent with mapping procedures used in AEM (2012) and Phaser Lake offsetting plan. The digital elevation model was used to determine depth and the depth information was overlain with the substrate layers, determined as decribed above, to delinate polygons with the characteristics of habitat types 1 through 9. The area of habitat types 1 – 9 was determined by summing the area of those polygons.

For the operations and post-closure phases, depths were determined using the water elevations proposed for each phase and the digital elevation model. The substrate under baseline conditions was left unchanged unless a physical change was made to the habitat (i.e. a dike was built or grid shoals were built). These alterations are described in the sections that describe the changes in habitat area during the operations and post-closure phases. If connecting channels were flooded so that they became lake habitat, their new habitat types was assigned based on their depth and their existing coarse substrate. If small streams were flooded so that they became lake habitat their new habitat type was based on depth and their existing substrate. The substrate for terrestrial areas that are flooded during operations or post-closure was assigned based on the ecological land classification community types, as shown in Table 2-2.

Table 2-2. Substrate category assigned to flooded terrestrial areas based on the terrestrial ecological land classification community types that are present under baseline conditions.

Substrate Category	ELC Community Type
Coarse	Boulder/gravel
	Lichen/rock
Fine	Graminoid tundra
	Wet graminoid
	Sand
Mixed	Graminoid/Shrub tundra
	Heath tundra
	Heath upland
	Heath upland/rock complex
	Lichen tundra
	Shrub tundra
	Shrub/heath tundra

2.1.2 Habitat Suitability Index ($HSI_{sp,nu,fo,ow}$)

The habitat suitability term represents the relative quality of each habitat type for each life function of each fish species present in the region. In the case of this HEP, the life functions spawning, nursery, foraging and overwintering were considered. Habitat suitability for each life function is indicated through a ranking of 0, 0.25, 0.5, 0.75 or 1. HSIs for all fish species[2] and habitat types used in this HEP are shown in Table 2-3. The HSIs for the lake habitats (habitat types 1 – 9) were developed through a series of consultations and workshops beginning in July 2011 with KivIA, HTO, and DFO in Baker Lake, and a series of workshops held with Golder Associates and DFO between November 2011 and December 2011 (by webex and in Ottawa). The process is further described in AEM (2012). Further review of the HEP by Dr. Ken Minns (August, 2017) recommended continued use of this method by Agnico Eagle. As stated previously, for the time being, it has been conservatively assumed that habitat type 10 will provide no fish habitat (i.e. all HSIs are zero) with the understanding that HSIs and the provision of habitat units will be re-evaluated if field investigations demonstrate that there is no stratification or that fish use the pelagic zone above a chemocline.

The HSIs for habitat types 11, 12, and 13 were assigned based on their habitat characteristics and the fish sampling conducted as part of the Whale Tail pit baseline

[2] Addresses, DFO 1- Freshwater Environment – Habitat Losses technical comment regarding consideration of all species, including bottom dwellers. Agnico Eagle (April, 2017). April 7th, 2017 submission NIRB File No. 16MN056 Application No: 124683/ NWB File No. 2AM WTP ---- : Receipt of Technical Review Comment Submissions for the NIRBs Review and NWB Consideration of Agnico Eagle Mines Ltd's " Whale Tail Pit" Project Proposal and associated Water License Application

investigations, taking into consideration the HSIs previously developed for lake habitats[3]. The connecting channels have primarily boulder and cobble substrate. There is shallow water above the substrate during the spring freshet in most of these channels but later in the summer there is only interstitial flow. No adult large-bodied fish have been observed or captured by electrofishing in these connecting channels and hoop nets set in or immediately downstream from these connecting channels in 2015 and 2016 captured no fish. A single Arctic Char was captured in a gill net set across the connecting channel between Lake A18 and Whale Tail Lake from June 22 – 28, 2016 and July 2-8, 2016. Based on these data, these connecting channels do not provide foraging habitat for large-bodied fish (foraging HSI = 0). Juvenile Lake Trout and juvenile Lake Whitefish have been captured by electrofishing in the connecting channels and it has been assumed that juvenile Arctic Char and juvenile Burbot can also use this habitat during the open-water season. Therefore, for all large-bodied species the connecting channels have been assigned the same nursery HSIs as coarse substrate in the 0 – 2 m lake depth stratum. The connecting channels freeze during the winter and therefore have been assigned HSIs of zero for overwintering for all species and zero for spawning for fall/winter-spawning species, which includes all of the large-bodied species that are present.

Slimy Sculpin and Ninespine Stickleback, the two small-bodied species that are present in the study area, have both been captured in the connecting channels and are likely to use the shallow areas and interstitial spaces in much the same way that they do in shallow areas with coarse substrate in lake habitats. Therefore, for these two species the HSIs for coarse substrate in the 0 – 2 m deep stratum has also been used for the connecting channels.

The dimensions of the small streams in the Whale Tail Pit primary study area are summarized in Appendix A, Table A 4. These streams typically have multiple channels and are shallow, with mean depths ranging from 6 cm to 17 cm. Peat is the dominant substrate in the majority of the watercourses and only watercourse A55-A17 is dominated by coarse substrates. These watercourses freeze in the winter and have been assigned HSIs of zero for overwintering for all species and zero for spawning for fall/winter-spawning species, which includes all of the large-bodied species that are present.

Electrofishing catches in these streams were dominated by Ninespine Stickleback and Slimy Sculpin and for these two species the HSIs for fine and for coarse substrates in the 0 – 2 m lake depth habitat (Habitat Types 1 and 3 respectively) were applied to Habitat Types 12 and 13 for spawning, nursery and foraging.

One or more juveniles of all of the large-bodied species were captured in the small streams, although the numbers were low. The nursery HSIs for fine and for coarse substrates in the 0

[3] The stream habitat types were developed in response to DFO 4 and 8 Information Request. Agnico Eagle (January, 2017). DFO- 4 and 8 – Freshwater Environment- Habitat Alteration. January 20th, 2017 submission RE: NIRB File No 16MN056 Application No: 124683/NWB File No. 2AM WTP ----: Information Requests Received from Parties Regarding Agnico Eagles Mines Ltd's "Whale Tail Pit" Project.

– 2 m lake depth habitat (Habitat Types 1 and 3 respectively) have been applied to Habitat Types 12 and 13 for the four large-bodied species.

The absence of adult large-bodied fish from the electrofishing catches in the small streams is consistent with them being so shallow, and confirms that, as would be expected, there is little if any foraging in these streams by adults of the large-bodied species. It is thought that the few individuals that were captured in gill nets or hoop nets set in these streams were moving between lake habitats. The small streams have been assigned a HSI of zero (0) for foraging by the four large-bodied species.

Table 2-3. HSI values for the Whale Tail fish species (sp=spawning, nu=nursery, fo=foraging, ow=overwintering). *Habitat type 10 is applied to all pit and pit cap areas regardless of depth and substrate.

Habitat Type	Depth	Substrate	Arctic Char				Lake Trout				Round Whitefish			
			SP	NU	FO	OW	SP	NU	FO	OW	SP	NU	FO	OW
1	<2 m	Fines	0	0.25	0.25	0	0	0.25	0.25	0	0	0.25	0.75	0
2	<2 m	Mixed	0	0.25	0.25	0	0	0.5	0.5	0	0	0.75	0.5	0
3	<2 m	Coarse	0	0.5	0.5	0	0	1	0.75	0	0	0.75	0.5	0
4	2-4 m	Fines	0	0.5	0.5	0.75	0	0.5	0.5	0.75	0	0.25	1	0.75
5	2-4 m	Mixed	0.5	0.75	0.75	0.75	0.5	0.75	0.75	0.75	0.5	0.75	0.75	0.75
6	2-4 m	Coarse	1	1	1	0.75	1	1	1	0.75	1	1	0.75	0.75
7	>4 m	Fines	0	0.25	0.5	1	0	0.25	0.5	1	0	0.25	1	1
8	>4 m	Mixed	0.5	0.5	0.75	1	0.5	0.5	0.75	1	0.25	0.25	0.5	1
9	>4 m	Coarse	1	0.5	1	1	1	0.5	1	1	0.75	0.5	0.5	1
10*	pit area	pit area	0	0	0	0	0	0	0	0	0	0	0	0
11	connecting channel	Coarse	0	0.5	0	0	0	1	0	0	0	0.75	0	0
12	stream	Fines	0	0.25	0	0	0	0.25	0	0	0	0.25	0	0
13	stream	Coarse	0	0.5	0	0	0	1	0	0	0	0.75	0	0
Habitat Type	**Depth**	**Substrate**	**Burbot**				**Slimy Sculpin**				**Ninespine Stickleback**			
			SP	NU	FO	OW	SP	NU	FO	OW	SP	NU	FO	OW
1	<2 m	Fines	0	0.25	0.25	0	0	0	0.25	0	1	1	1	0
2	<2 m	Mixed	0	0.75	0.5	0	0.25	0.25	0.5	0	0.5	0.5	0.75	0
3	<2 m	Coarse	0	1	0.5	0	1	1	1	0	0	0.25	0.75	0
4	2-4 m	Fines	0	0.25	0.25	0.75	0	0	0.25	0.75	0	0	0.5	0.75
5	2-4 m	Mixed	1	0.5	0.75	0.75	0.25	0.25	0.5	0.75	0	0	0.25	0.75
6	2-4 m	Coarse	0.75	0.5	1	0.75	0.75	0.75	1	0.75	0	0	0.25	0.75
7	>4 m	Fines	0	0	0.25	1	0	0	0	1	0	0	0	1
8	>4 m	Mixed	1	0	0.75	1	0	0	0.25	1	0	0	0	1
9	>4 m	Coarse	0.75	0.25	1	1	0.5	0.5	0.5	1	0	0	0	1
10	pit area	pit area	0	0	0	0	0	0	0	1	0	0	0	0
11	11	connecting channel	0	1	0	0	1	1	1	0	0	0.25	0.75	0
12	12	stream	0	0.25	0	0	0	0	0.25	0	1	1	1	0
13	13	stream	0	1	0	0	1	1	1	0	0	0.25	0.75	0

2.1.3 Life Function Weight

This HEP values all life functions equally, with a weight of 0.25 each assigned for spawning, nursery, foraging and overwintering.

2.1.4 Species Weight

The overall species weights used in the HEP method sum to 1 across species. The species weights for various Meadowbank offsetting plans are comprised of a biomass weighting and a fishery value weighting:

Species weight = (biomass weight/2) x (fishery weight/2)

In the conceptual Whale Tail pit offsetting plan (Agnico, 2016) the biomass weight was based on the relative biomass of the species determined during fish-outs of Meadowbank site lakes that have been drained, with one percent allocated to each of slimy sculpin and ninespine stickleback, as they are not susceptible to the gill nets used in the fish-outs. Also, in the conceptual Whale Tail pit offsetting plan (Agnico, 2016) a modification of this approach was proposed that included an aboriginal fishery value which would be determined through community consultations (as requested by DFO for the updated Vault Lake no net loss plan; February, 2016). However in subsequent discussions, DFO has indicated a preference for all species to be weighted equally[4]. Therefore, each of the six species that are present in the study area has a weight of 0.165 in the calculations presented in this document.

2.1.5 Access Factor

In a workshop conducted in February, 2012 (The Basic Concepts of No Net Loss Accounting - February, 2012) Dr. Charles K. Minns suggested the use of an access factor when fish assemblages are expected to change in the offsetting scenario. According to this concept, the access factor is 1 for any species present in the habitat area, and 0 for any species not present (Table 2-4). Each species receives an access factor in both the loss and gain calculations. Therefore, the opening of access to a habitat area for a species (that did not have access previously), results in an increase of habitat units. Similarly, the loss of access results in a loss of habitat units. These gains or losses may be complete (i.e. affect all species), or partial (only some species are affected). The presence or absence of a species in loss calculations is typically based on the observed presence/absence of each

[4] Agnico Eagle (January, 2017). KivIA – IR – Aquatic- Final fish habitat offsetting plan. January 20th, 2017 submission RE: NIRB File No 16MN056 Application No: 124683/NWB File No. 2AM WTP ----: Information Requests Received from Parties Regarding Agnico Eagles Mines Ltd's "Whale Tail Pit" Project. &

Agnico Eagle (April, 2017). DFO 5- Freshwater Environment – Changes to Lake Ecosystem Productivity. April 7th, 2017 submission NIRB File No. 16MN056 Application No: 124683/ NWB File No. 2AM WTP ---- : Receipt of Technical Review Comment Submissions for the NIRBs Review and NWB Consideration of Agnico Eagle Mines Ltd's " Whale Tail Pit" Project Proposal and associated Water License Application

species during baseline monitoring studies (AEM, 2012, 2013, 2016). If a change in access is predicted for an offset scenario (i.e. due to the removal of a barrier to fish movement) the change would need to be confirmed as part of compensation monitoring.

Table 2-4. Access factor theoretically applied to each species for habitat loss and gain calculations, based on presence/absence (or anticipated presence/absence, for offsetting projects).

Scenario	Access Factor	
	Losses	Gains
Species Present	1	1
Species Not Present	0	0

Typically, the access factors applied are based on the observed presence/absence of each species during baseline monitoring studies (AEM, 2012, 2013, 2016). For the calculations in this report, an access factor of 1 has been applied for all six fish species that have been captured in the study area. The effect of isolating the north-east pond during operations has been addressed by conservatively estimating that habitat is temporarily 'lost' during that time period, but re-gained during post-closure.

2.1.6 Habitat Co-factor

The habitat co-factor represents any changes to non-mapped habitat quality (thermal, hydrological, biological or chemical regimes) that will occur as a result of impacts or offsetting. The use of this factor is suggested by Dr. Ken Minns, and his suggested values as presented in a workshop for DFO in February, 2012 are shown in Table 2-5. No habitat co-factor has been applied to the HEP calculations presented in this report

Table 2-5. Habitat co-factor for various pre- and post-compensation scenarios, according to Minns, 2012.

Change in regime	Description	Baseline conditions factor	Post-closure factor
Degradation (expected)	Thermal, hydrologic, chemical and/or biological regime shifts away from preferred state for fish habitat	1	> 0 and < 1
No change	-	1	1
Enhancement (anticipated or proposed)	Thermal, hydrologic, chemical and/or biological regime expected to shift towards preferred state for fish habitat	> 0 and < 1	1

SECTION 3 • HABITAT LOSSES

In order to mine Whale Tail Pit, a series of three dewatering dikes will be constructed to isolate the pit area. The area within those dikes will be dewatered to allow mining to occur (operations phase). When mining is completed, the dikes will be breached, allowing the pit and adjacent lake basin area to flood and water elevations to return to baseline conditions (post-closure phase). Site infrastructure during these operations and post-closure phases is shown in Figure 3-1 and Figure 3-2.

This section describes calculation of habitat losses occurring as a result of mining activities during both the operations and post-closure phases, compared to baseline conditions. Extents of losses and gains were calculated for all impacted areas using the HEP described in Section 2. However, since flooding of terrestrial zones is only planned to occur over a 4-7 year period prior to drawdown, fish habitat availability during the operations phase is conservatively not considered a habitat offset, and calculations were performed for reference only. In the final net change calculation, only differences between baseline and post-closure conditions are compared.

3.1 BASELINE CONDITIONS

3.1.1 Site Description

Baseline site conditions are described in Section 1.

3.1.2 Habitat Units Calculation

As calculated using the HEP described in Section 2, depth zones, substrate types (fines, mixed, coarse), and habitat types under baseline conditions throughout the primary study area are shown in Figure 3.3, 3.4 and 3.5, respectively.

Net change in habitat units between the baseline, operations, and post-closure scenarios are detailed in Sections 3.2 and 3.3, below

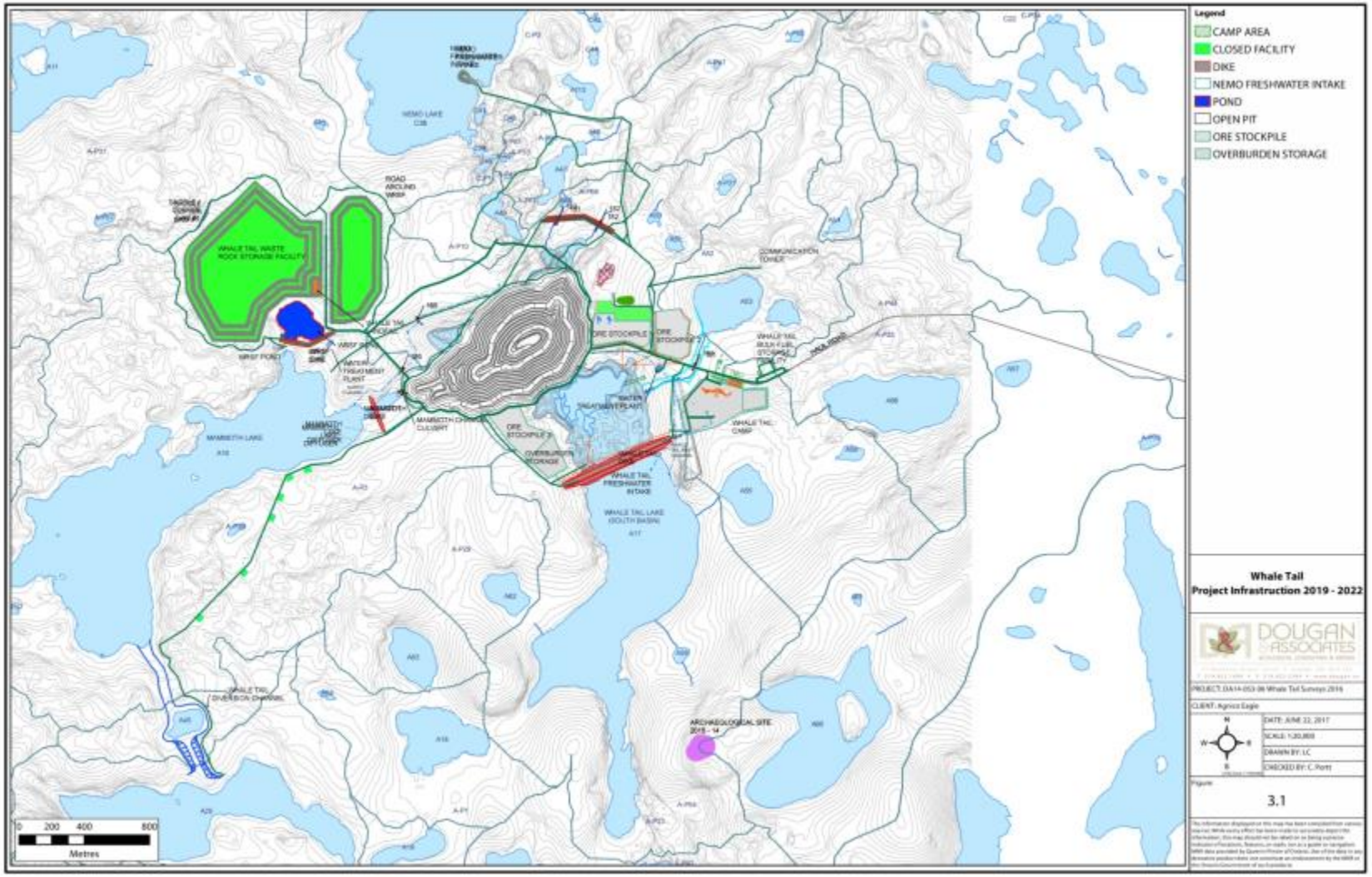

Figure 3-1. Whale Tail Project infrastructure during operations, 2019 to 2022 (does not show flooding that will occur in Whale Tail Lake – South Basin).

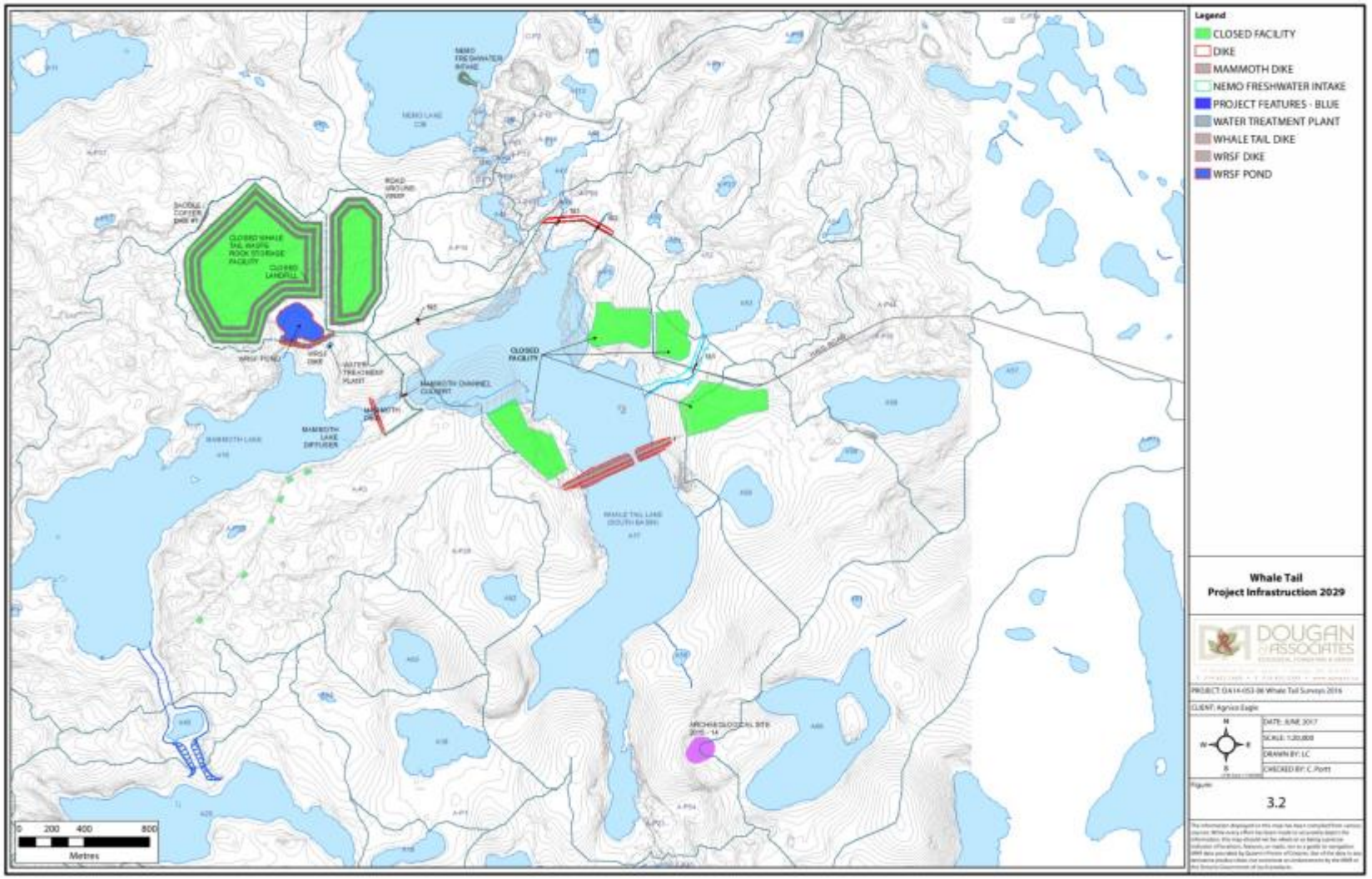

Figure 3-2. Whale Tail Project Infrastructure 2029 (post-closure phase).

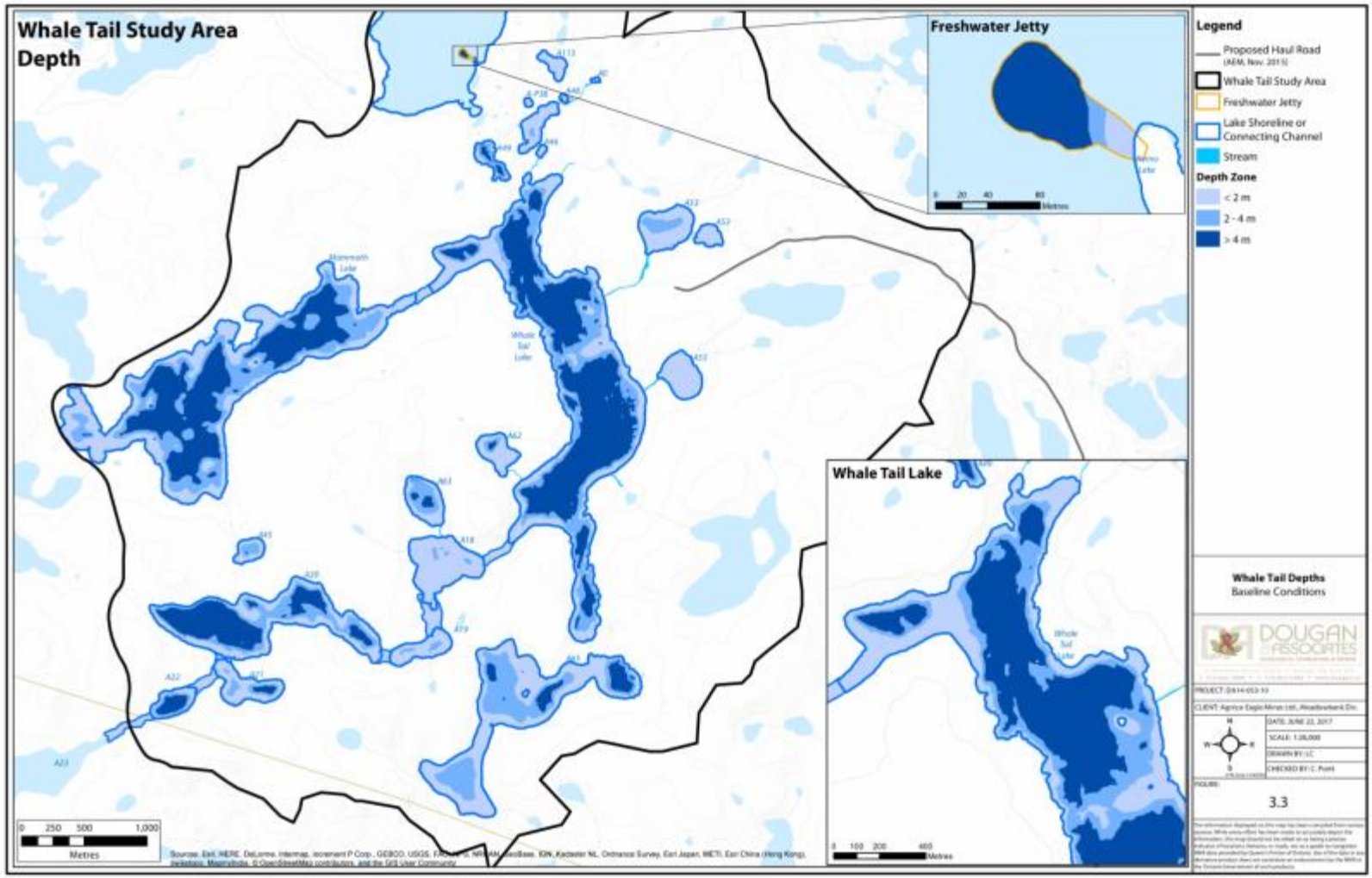

Figure 3-3. Whale Tail pit lake study area depths under baseline conditions.

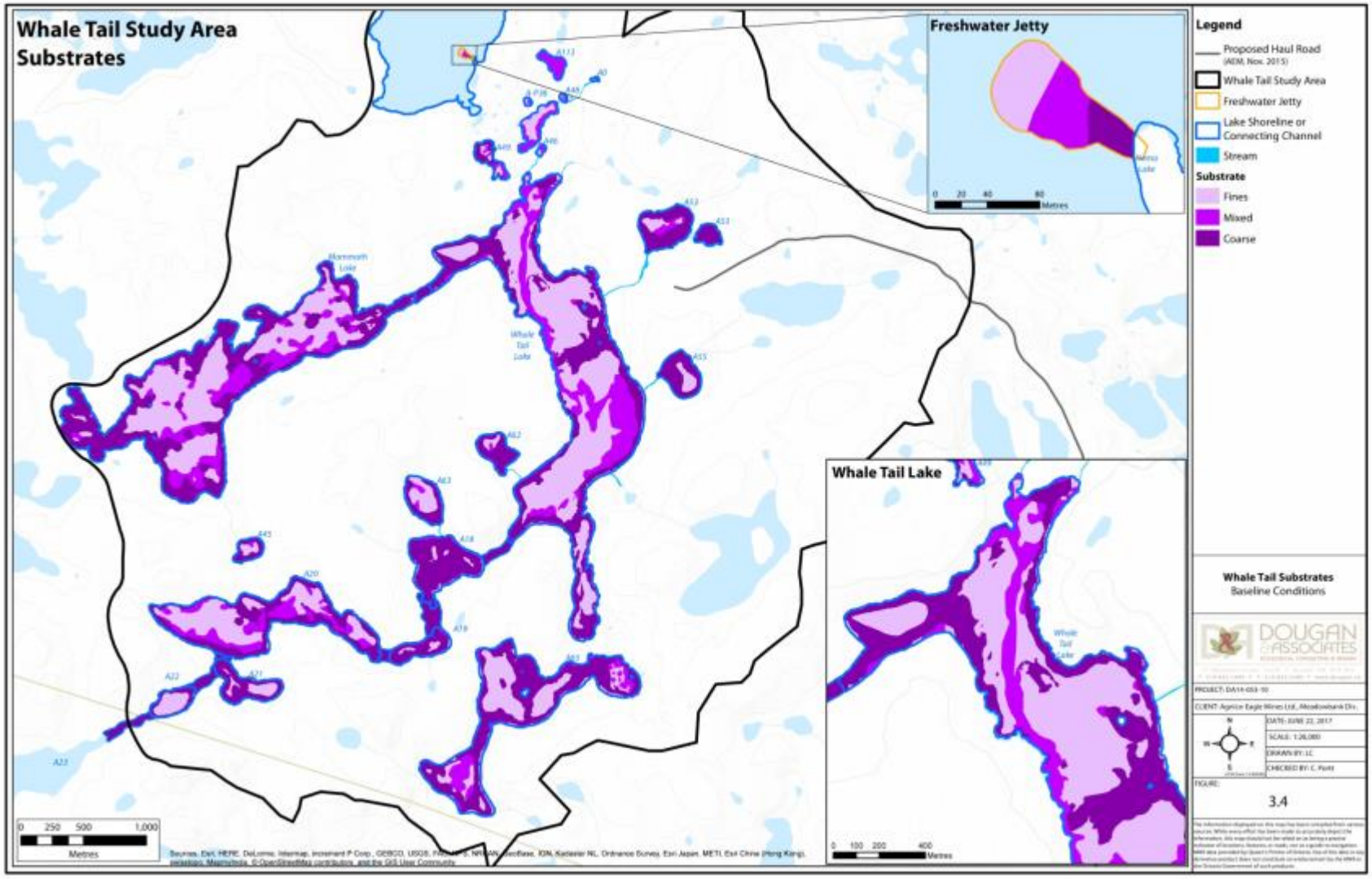

Figure 3-4. Whale Tail pit study area substrates under baseline conditions.

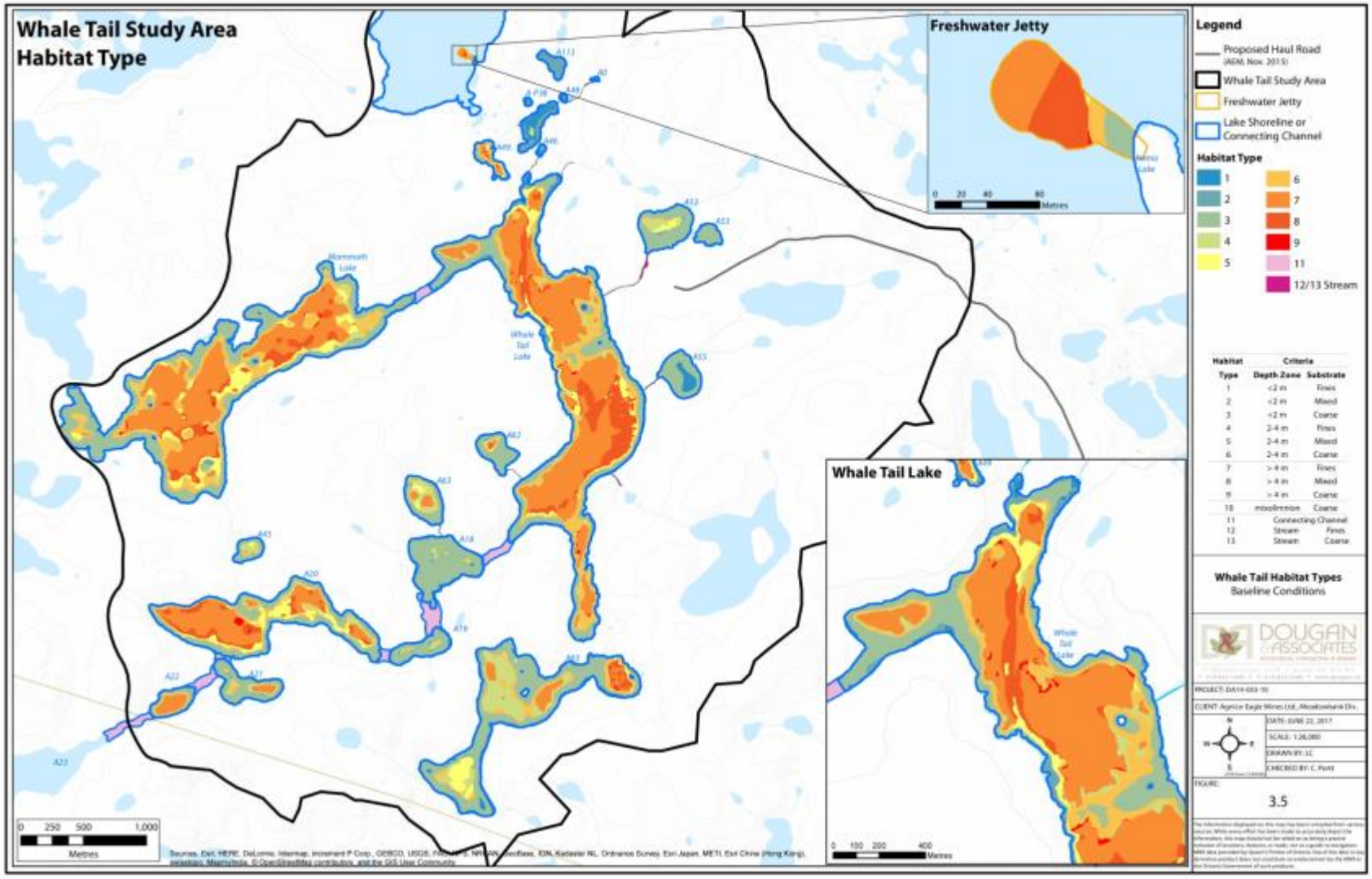

Figure 3-5. Whale Tail pit study area habitat types under baseline conditions.

3.2 OPERATIONS PHASE

3.2.1 Site Description

The area to be enclosed by dikes and dewatered during mine operations includes the northern basin of Whale Tail Lake and a small portion at the east end of Mammoth Lake, as well as the connecting channel between those two lakes. The exterior surface of the dikes will be coarse substrate.

An area to the north of Whale Tail Lake, that includes a number of small lakes and ponds which currently drain to Whale Tail Lake, would be isolated by the north dike. In this area, referred to as the north-east pond, the water level would rise to 156.47 masl, resulting in the flooding of some terrestrial areas. This area would drain to Nemo Lake. For the purposes of offset planning, it has been assumed that fish from Nemo Lake would not have access to the north-east pond and therefore it will be completely isolated. It has also been assumed that, due to the limited amount of deep habitat in the north-east pond, fish might not survive the winter there. Therefore the habitat present in the area occupied by north-east pond under baseline conditions is assumed to be 'lost' during the operations phase. If monitoring determines that fish survive there, an operations phase offsetting credit could be calculated.

The Whale Tail Dike will bisect Whale Tail Lake into north and south basins. South of the Whale Tail Dike the water level will rise from 153.02 (baseline; see Section 1.3) to 156 masl during operations. This will result in the flooding of terrestrial areas, so that a number of lakes now connected to each other or to Whale Tail Lake (South Basin) by connecting channels (lakes A18, A19, A20, A21 and A22) or small streams (lakes A55, A62, A63), or have no surface connection to Whale Tail Lake (lake A65), would become contiguous. This larger contiguous waterbody is referred to as the Whale Tail Lake (South Basin) and is an *expanded Whale Tail Lake*; fish salvaged during the fishout of Whale Tail Lake (North Basin) will be transferred to the Whale Tail Lake (South Basin) (Agnico Eagle, 2017a). The Whale Tail Lake (South Basin) will drain to Lake A45 via a constructed channel and Lake A45 will drain to Mammoth Lake via an existing boulder feature. The boulder feature between Lake A45 and Mammoth Lake does not exhibit surface flow under existing conditions, even during spring freshet. It has not yet been determined if it will be necessary to modify that connection, but for the purposes of the habitat calculations it has not been assigned any fish habitat value during any phase of the project.

Lake A53, east of Whale Tail Lake, currently drains to the portion of Whale Tail Lake that would be dewatered via a small stream. A new watercourse will be constructed to convey this flow to the south basin of Whale Tail Lake. The lower reach of the existing watercourse will be eliminated. The proposed route of this realignment is shown in Figure 3-1. It has been assumed that the width and the proportions of fine and coarse substrates of the realigned portion will be the same as those of the existing watercourse.

There will be a reduction in the flow to Mammoth Lake and downstream during the period when the expanded Whale Tail Lake is filling, before flow via Lake A45 occurs. Flow into Mammoth Lake approaches zero during the latter part of the ice-free season under baseline

conditions. During the period when the expanded Whale Tail Lake is filling, the water level in Mammoth Lake is expected to be at or near what is its minimum elevation under baseline conditions. This will occur again during closure when the pit is refilling. This temporary condition has not been incorporated into the HEP calculations.

In addition to the alterations within the Whale Tail Lake and Mammoth Lake drainages, a water intake jetty would be constructed in Nemo Lake that will result in a change in depth and substrate, including an area that will be raised so that it is above the water surface and no longer fish habitat. The jetty will have coarse substrate.

3.2.2 Habitat Units Calculation

Changes in habitat area and habitat units between the baseline conditions and the operations phase as calculated using the HEP described in Section 2 are provided for each habitat type in Appendix B, Table B-1. At the request of DFO, the locations and areas of habitat losses and gains and habitat modified are presented in Appendix B, Table B-2. Change in habitat for each lake/stream system are provided in Appendix B, Table B-3. Overall, there is a 49.24 ha increase in the area of fish habitat and a 42.93 increase in the number of habitat units during operations.

As indicated previously, for the operations phase, the extent of flooding and the depths were calculated based on an elevation of 156 masl elevation for the expanded Whale Tail Lake and no change from baseline conditions to the elevation of Mammoth Lake. The dike side slopes and the freshwater jetty in Nemo Lake will have coarse substrate. The constructed channel connecting the expanded Whale Tail Lake to Lake A45 will be less than 2 m deep and have coarse substrate. It has been assumed that the connection between Lake A45 and Mammoth Lake will continue to be subsurface/interstitial during operations and that it will not provide fish habitat. The depth zones, substrate types (fines, mixed, coarse) and habitat types for the operations phase are shown in Figure 3.6, 3.7 and 3.8 respectively

There are relatively small decreases in the habitat area and habitat units in Nemo Lake as a result of the construction of the freshwater intake jetty. The area of Mammoth Lake is decreased due to the construction of the Mammoth dike and the dewatering of the portion of Mammoth Lake that is east of that dike, resulting in a concomitant number of habitat units.

The expanded Whale Tail Lake during operations (407.3 ha) includes the portion of Whale Tail Lake that is not dewatered or covered by the Whale Tail dike (plus the other existing lakes, connecting channels and streams that are within the flooded area (280.0 ha), land that is flooded (127.4 ha), and the portion of the south side of the Whale Tail dike that is below the water (0.4 ha). The total area of habitat lost, including the habitat that is isolated in the north-east pond, is 73.7 ha. In addition to the increase in habitat area, during the operations phase the habitat value increases in some of the existing habitats where depth increases, contributing to the overall increase in habitat units.

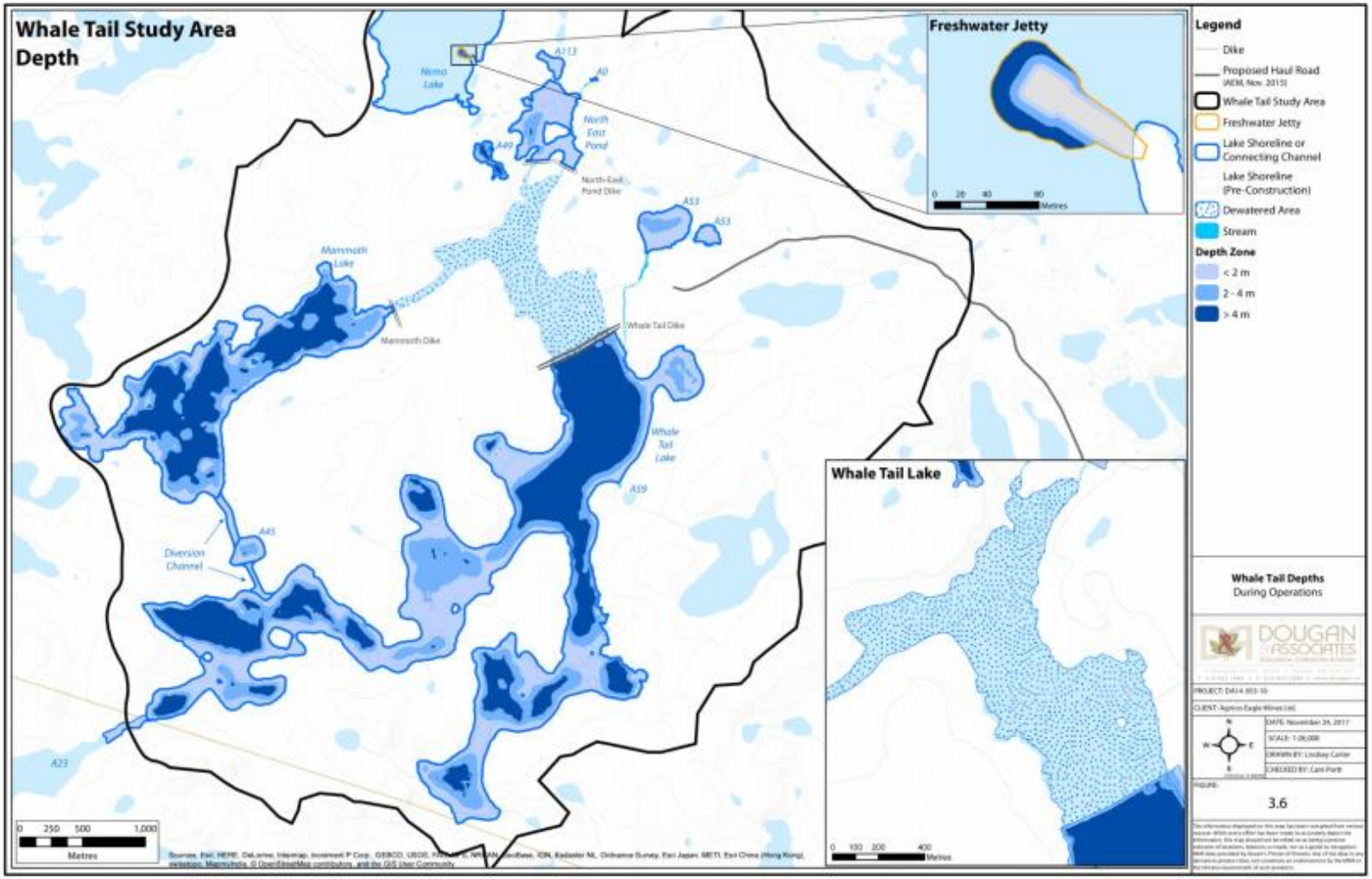

Figure 3-6. Whale Tail Pit study area depths during operations.

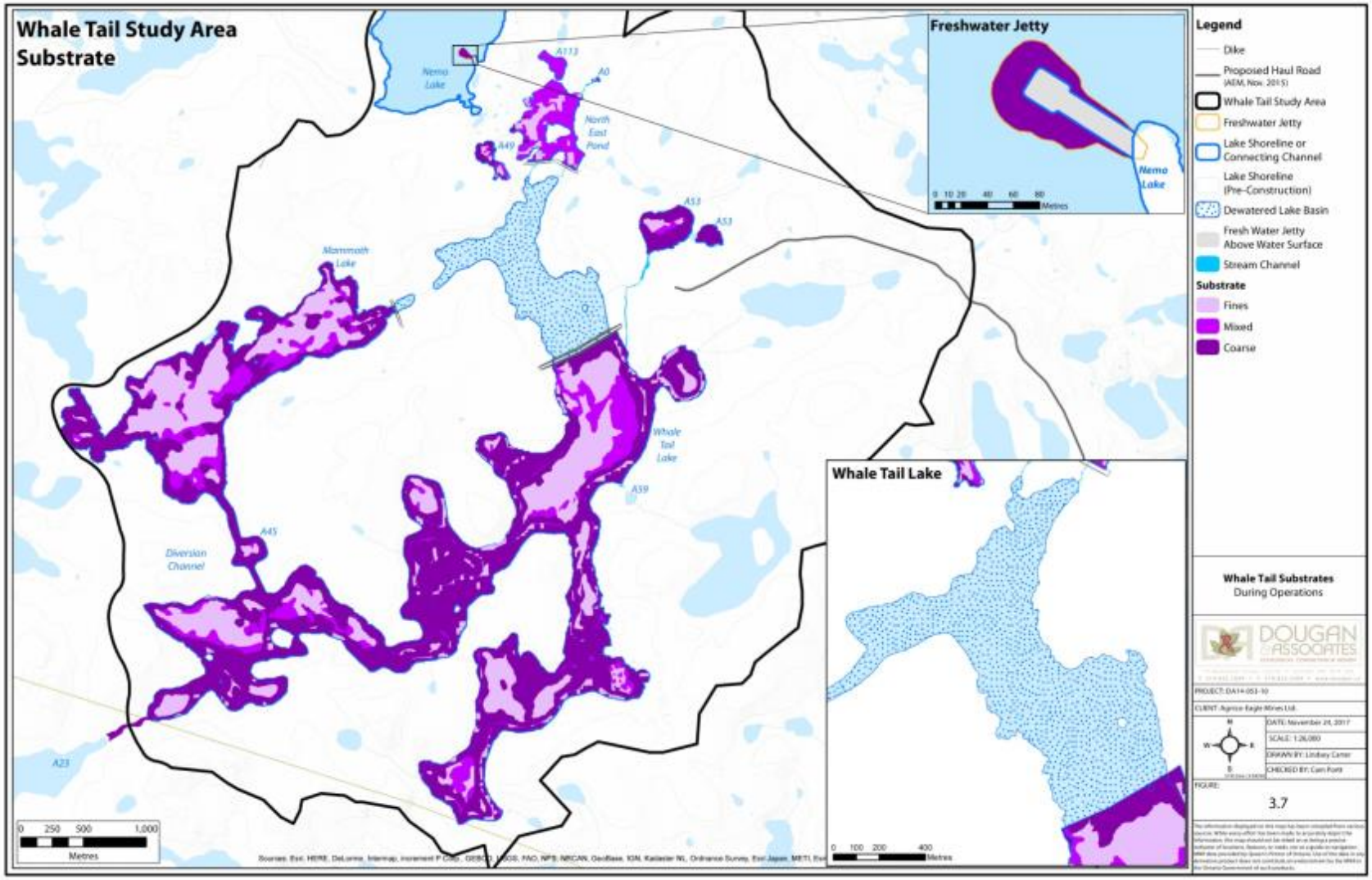

Figure 3-7. Whale Tail pit study area substrates during operations.

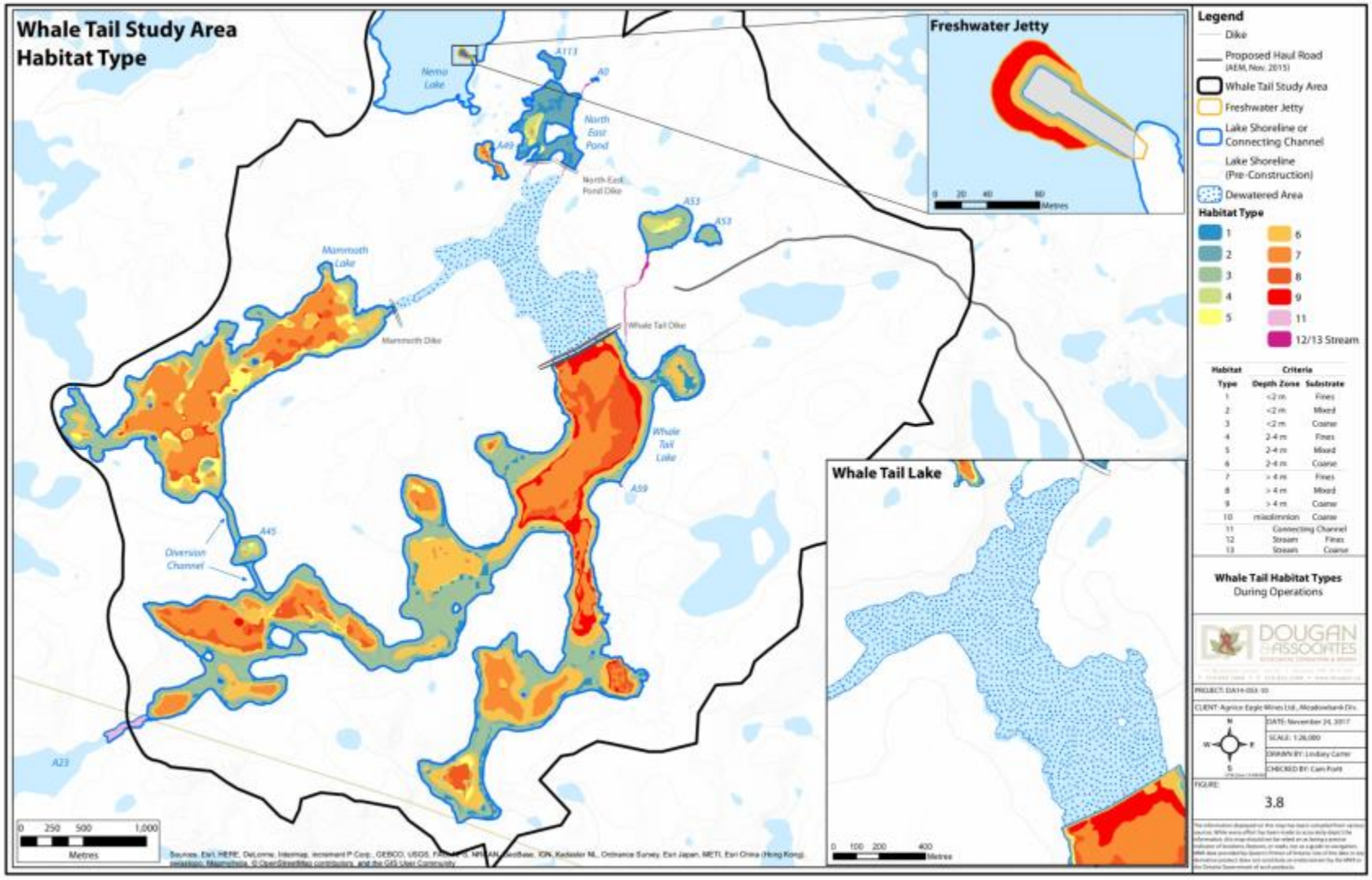

Figure 3-8. Whale Tail pit habitat types during operations.

3.3 POST-CLOSURE PHASE

3.3.1 Site Description

Consistent with approved closure plans reviewed during the NWB/ NIRB review, based on current water quality predictions and on the current mine plan for Whale Tail Pit, it is assumed that dewatering dikes would be breached and water levels would return to pre-mine elevations following mine closure by 2029 (refer to Figure 3-2). Therefore, aquatic habitats would revert to their pre-mine condition with the following exceptions:

1. The area of Whale Tail Lake will be increased by 26.17 ha as a consequence of terrestrial areas being excavated and becoming part of the flooded pit and pit cap, post-closure. This area has also been assigned Habitat Type 10.

2. The Whale Tail Dike that bisects Whale Tail Lake will be breached but not removed following mine closure. Therefore it will continue to occupy a portion of what was previously Whale Tail Lake and a portion of it will be above the water. For the purposes of habitat calculations, it has been assumed that a 100 m wide breach will be created in the Whale Tail Dike. This area has been assigned Habitat Type 3..

3. The Mammoth Dike that isolates the eastern end of Mammoth Lake will be reduced in height, so that it becomes shallow lake habitat with coarse substrate (Type 3 habitat).

4. The North-east Dike will be breached at the locations where two small watercourses existed pre-construction, so that the watercourses are re-established and the lakes and ponds are reconnected to Whale Tail Lake through the approved access road culverts.

5. The portion of the watercourse connecting Lake A53 to Whale Tail Lake that was re-aligned will be returned to its former channel.

6. Roads that are flooded post-operations will remain in their operations phase condition and have mixed substrate.

7. A jetty to the attenuation pond that is in the dewatered area during operations will remain in its operations phase condition and have coarse substrate.

8. The jetty for the freshwater intake in Nemo Lake will remain in its operations phase condition.

3.3.1 Habitat Units Calculation

Net changes in habitat area (ha) and habitat units (HUs) between the baseline and the post-closure phase, without offsetting (i.e. habitat losses), are summarized in Table 3-1 for each habitat type. The locations (lakes/steams) and areas of habitat losses and gains and habitat modified are presented in Appendix B, Tables B-4 and B-5.

Depth zones, substrate types (fines, mixed, coarse), and habitat types following closure and reflooding of the pit, in the absence of any measures to offset for harm to fish habitat, are shown in Figures 3.9, Figure 3.10 and 3.11 respectively. For these calculations it was assumed that the elevations of all lakes would revert to their pre-construction levels. It was also assumed that substrate within the area that was dewatered did not change from pre-construction conditions unless it was excavated as part of the pit or the pit cap (where substrate is irrelevant because these areas are assigned Habitat Type 10), or covered by infrastructure (dikes, roads, jetties).

There is the same small reduction in both habitat area and habitat units in Nemo Lake as during operations, due to the construction of the freshwater jetty which will remain in place post-closure. There is no reduction in either the habitat area or the habitat units in Mammoth Lake because the Mammoth Dike is lowered and is coarse substrate, thus becoming Type 3 habitat.

Post-closure, 27.9 ha of habitat is added to Whale Tail Lake due to the excavation of the pit. This includes 27.4 ha that was terrestrial habitat under existing conditions; the remainder was part of the connecting channel between Whale Tail and Mammoth Lakes. There is a loss of 1.7 ha from Whale Tail Lake because part of the Whale Tail dike remains above the water and another 0.1 ha is lost because a portion of the water attenuation pond ramp remains above the water. The result is a net increase of 26.2 ha in the area of Whale Tail Lake.

Although the area of Whale Tail Lake increases, the number of habitat units in Whale Tail Lake decreases by 14.2. This reduction is largely because the pit and pit cap occupy 30.3 ha that were part of Whale Tail Lake under baseline conditions. Post-closure, this area is assigned habitat type 10, which has been assigned zero fish habitat value.

The net change between baseline and post-closure conditions, or overall project related fish habitat losses in the absence of offsetting, is a loss of 14.5 habitat units.

Table 3-1. Net change in fish habitat during the post-closure phase, without offsetting (losses).

Habitat Type	Hectares			HUs		
	Baseline	Post-closure - no offsetting	Net Change	Baseline	Post-closure - no offsetting	Net Change
1	1.58	1.26	-0.32	0.38	0.30	-0.08
2	4.60	4.55	-0.05	1.29	1.28	-0.01
3	81.42	71.44	-9.99	32.23	28.28	-3.95
4	11.30	10.11	-1.19	4.24	3.79	-0.45
5	15.87	14.89	-0.98	9.26	8.68	-0.57
6	41.71	37.90	-3.82	31.72	28.82	-2.90
7	128.36	114.45	-13.91	48.14	42.92	-5.22
8	30.87	28.77	-2.10	16.08	14.99	-1.09
9	3.76	3.79	0.03	2.54	2.57	0.02
10	0.00	58.30	58.30	0.00	0.00	0.00
11	2.15	1.50	-0.65	0.65	0.45	-0.20
12	0.58	0.58	0.00	0.10	0.10	0.00
13	0.18	0.18	0.00	0.05	0.05	0.00
Total			**25.33**			**-14.45**

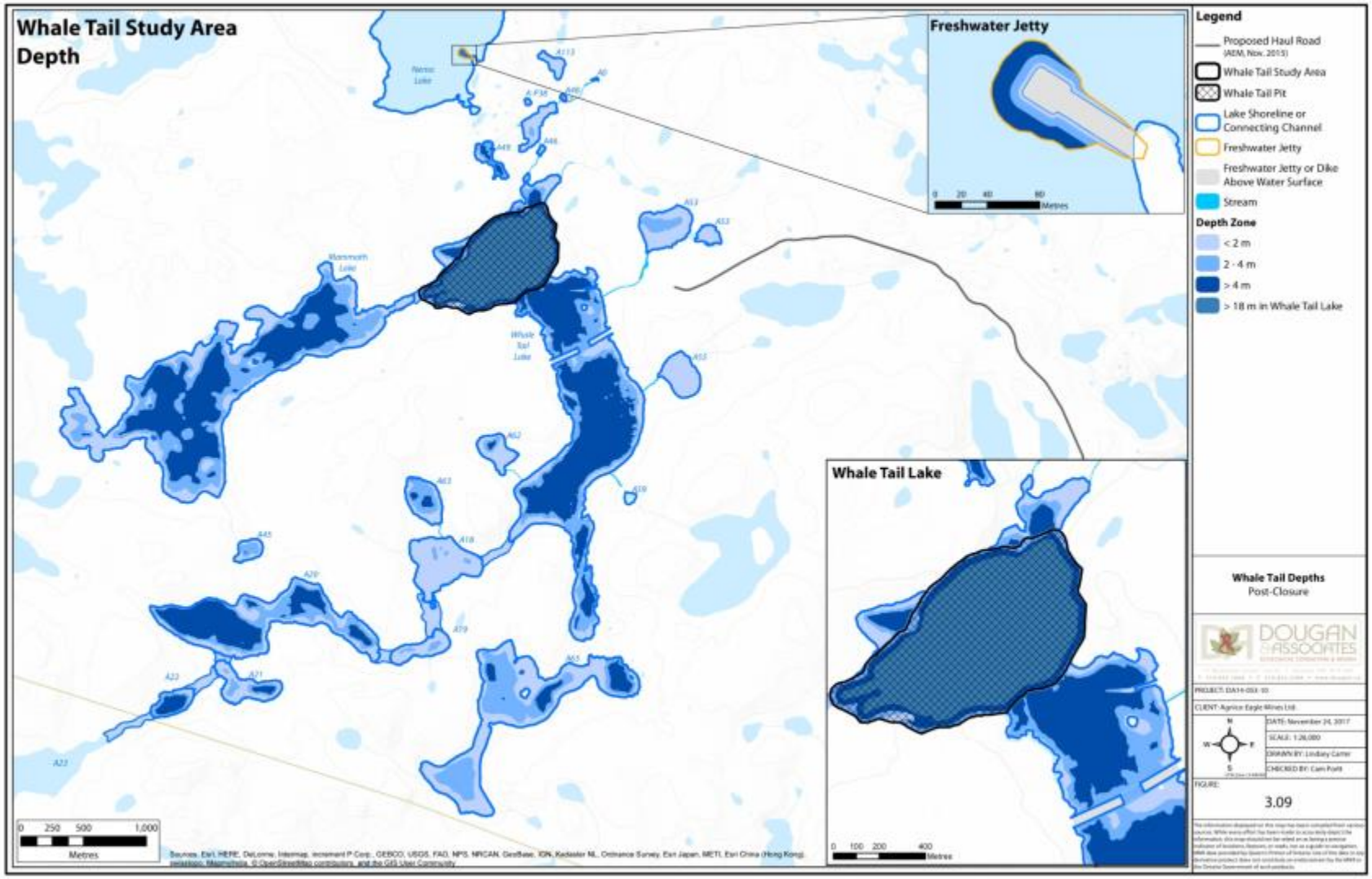

Figure 3-9. Whale Tail pit depths post-closure with no offsetting.

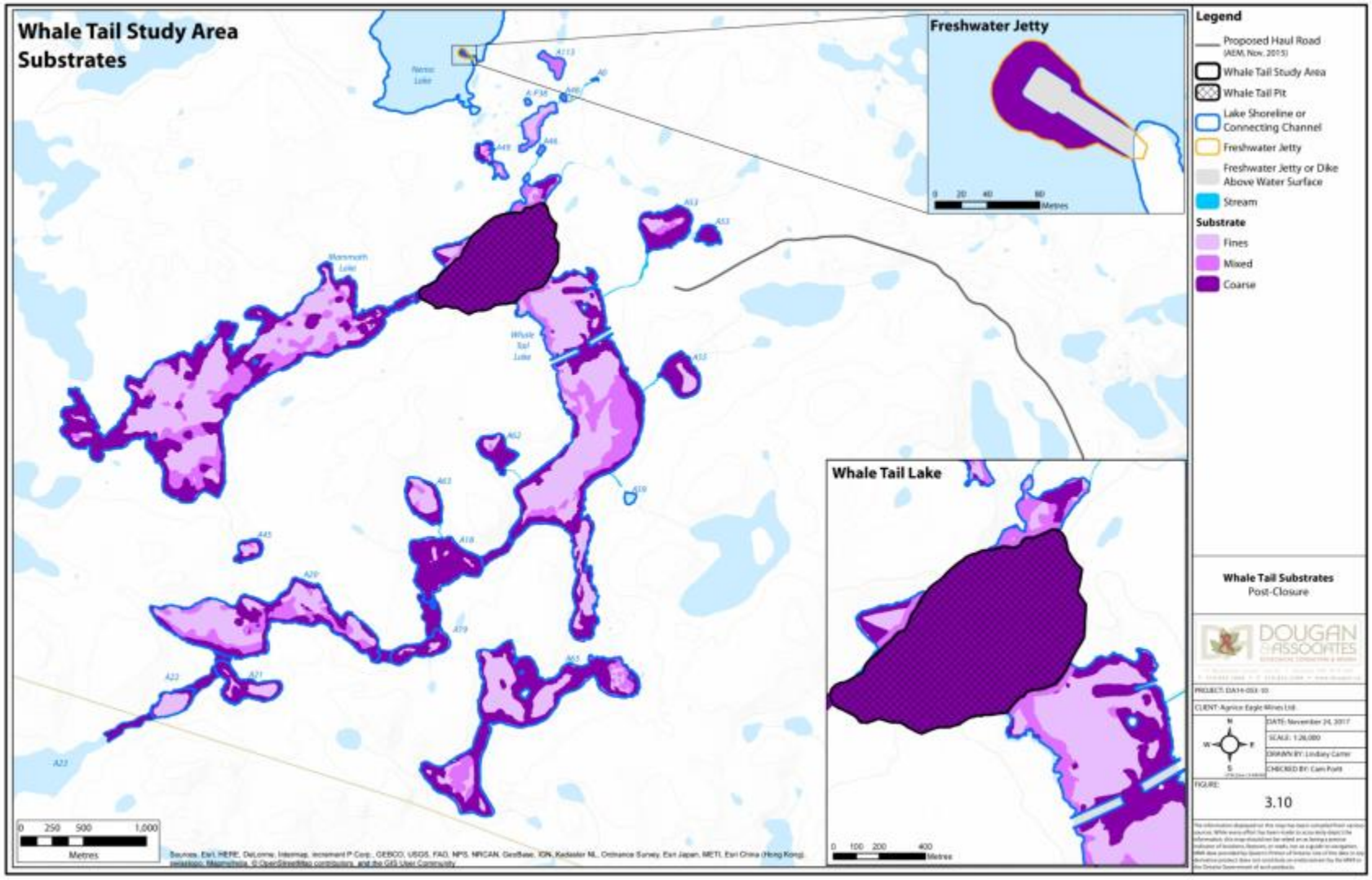

Figure 3-10. Whale Tail pit substrates post-closure with no offsetting.

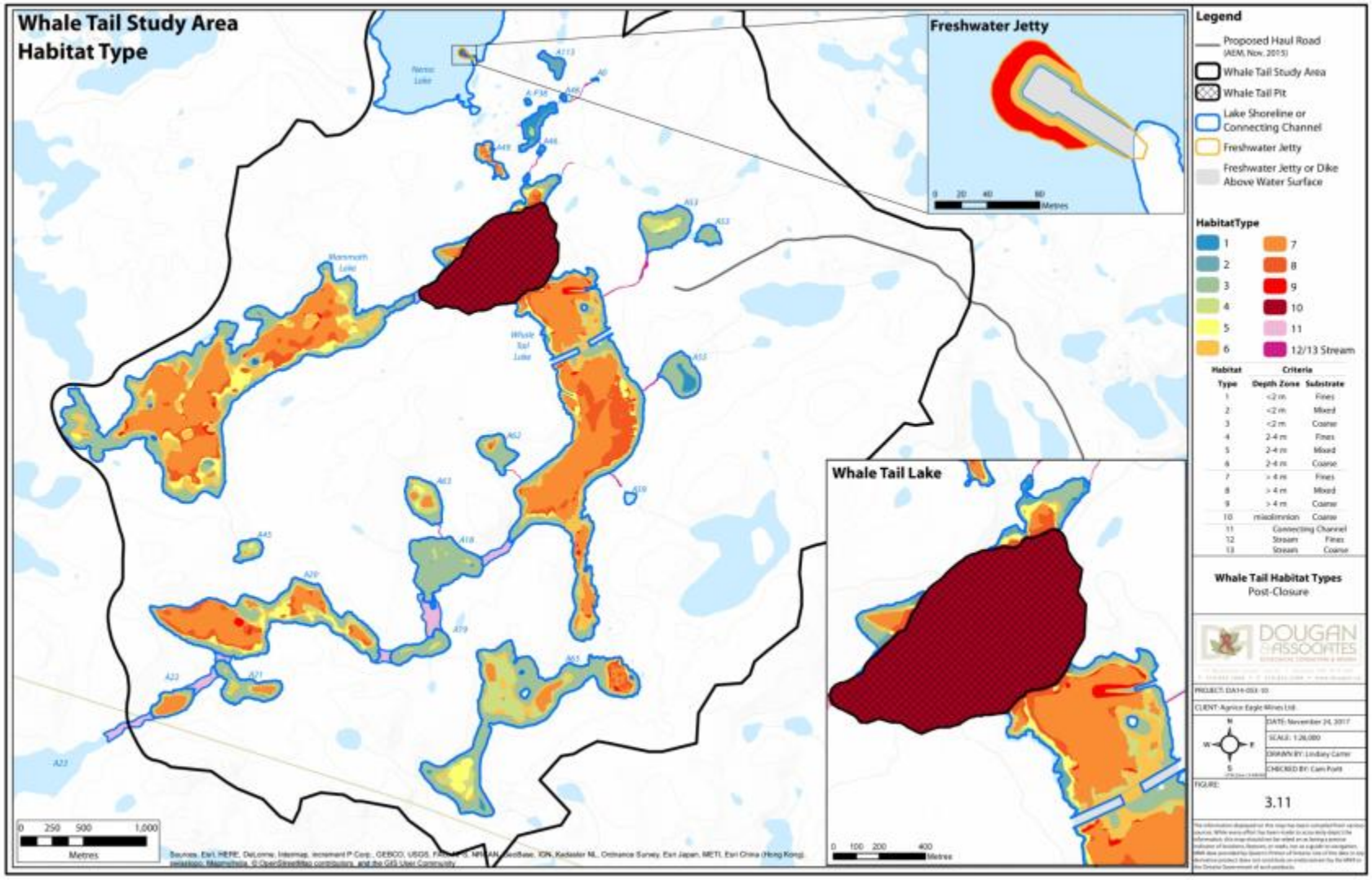

Figure 3-11. Whale Tail pit habitat types post-closure with no offsetting.

SECTION 4 • OFFSETTING MEASURES

The substantial increase in habitat area and habitat units in the expanded Whale Tail Lake during the operations phase is expected to result in an increase productivity of the aquatic system (Minns and Portt, 2017 pers. comm. June 14). Following closure, however, without offsetting, even though there will be an increase in the area of aquatic habitat due to the flooding of areas excavated as part of the pit, there will be a net decrease of 14.45 habitat units compared to baseline conditions. This occurs because no habitat value is attached to the pit or pit cap. Offsetting is required to address this loss.

Offsetting measures may be grouped into the following general categories (Fisheries and Oceans Canada, 2013):

- Habitat restoration and enhancement, which includes physical manipulation of existing habitat to improve habitat function and productivity;
- Habitat creation which is the development or expansion of aquatic habitat into a terrestrial area;
- Chemical or biological manipulation, which includes chemical manipulation of water bodies, and stocking of fish or shellfish, management or control of aquatic invasive species;
- Complementary measures, which are investments in data collection and scientific research related to maintaining or enhancing the productivity of commercial, recreational or Aboriginal fisheries.

A combination of habitat creation, by raising the water level of Whale Tail Lake, habitat enhancement, and complementary measures to offset the loss of habitat units is presented below.

4.1 HABITAT ENHANCEMENT AND CREATION

It is proposed that, as an offsetting measure, a sill is installed in the connection between Mammoth Lake and Whale Tail Lake that allows flow from Whale Tail to Mammoth Lake but maintains Whale Tail lake at an elevation of 154.02 masl, which is 1 m higher than its baseline elevation. This increase would create new habitat around the periphery of Whale Tail Lake and the connecting channel between Whale Tail Lake and Mammoth Lake, as well as around the portion of Mammoth Lake that is east of the sill (Figure 4.1). It will also create a small amount of additional habitat along the Whale Tail Dike due to the water level increase.

The 1 m increase in water elevation will also result in some habitat modifications. Small sections of the streams that are tributary to Whale Tail Lake will be converted to lake

habitat, as will the remaining section of the connecting channel between Whale Tail Lake and Mammoth Lake and a portion of connecting channel A18-A17. Depth will increase in the portion of Mammoth Lake that is east of the Mammoth Lake dike and throughout Whale Tail Lake.

Coarse substrate has the highest habitat value and conversion of mixed or fine substrate to coarse substrate is a common habitat enhancement practice. Therefore, in addition to increasing the water level by 1 m east of connection between Whale Tail Lake and Mammoth Lake, the roads within the area that is flooded will be scarified to convert them from mixed to coarse substrate and 8.77 ha of rock shoals will be constructed in areas of fine substrate within the portion of Whale Tail Lake that is dewatered during operations (Figure 4.2). The shoal construction converts those areas to coarse substrate and was assumed to increase their elevation by 1 m. The elevation of the roads was assumed not to change due to scarification.

The depth zones, substrate types (fines, mixed, coarse) and habitat types for the post-closure phase with these offsetting features (a 1 m increase in the water level elevation east of the Mammoth dike, scarification of the roads and construction of 8.77 ha of grid shoals) are shown in Figures 4.3, 4.4, and 4.5, respectively. These offsets provide an increase of 21.26 ha and 15.03 habitat units over the post-closure scenario without offsets (Table 4-1) (Changes relative to baseline for each lake or stream are summarized in Appendix B Table B-6).

These planned offsetting features result in an offsetting gains to losses ratio of approximately 1:1 (gains of 15.03 HU and losses of 14.45 HU).

Table 4-1. Habitat area (ha) and habitat units (HUs) gained from the implementation of the proposed habitat enhancement and creation offsetting measures.

Habitat Type	Hectares			Habitat Units		
	Post-closure no offsets	Post-closure with offsets	Net Change	Post-closure no offsets	Post-closure with offsets	Net Change
1	1.260	4.176	2.916	0.302	1.001	0.699
2	4.552	11.021	6.470	1.280	3.100	1.820
3	71.436	69.026	-2.410	28.277	27.323	-0.954
4	10.113	6.353	-3.760	3.792	2.382	-1.410
5	14.887	12.433	-2.454	8.684	7.253	-1.431
6	37.897	49.292	11.395	28.817	37.482	8.665
7	114.451	109.449	-5.002	42.919	41.044	-1.876
8	28.774	30.607	1.833	14.987	15.941	0.955
9	3.791	17.016	13.226	2.567	11.521	8.955
10	58.298	58.667	0.370	0.000	0.000	0.000
11	1.499	0.232	-1.267	0.453	0.070	-0.383
12	0.577	0.546	-0.031	0.102	0.097	-0.006
13	0.176	0.155	-0.022	0.053	0.047	-0.007
Total			**21.264**			**15.027**

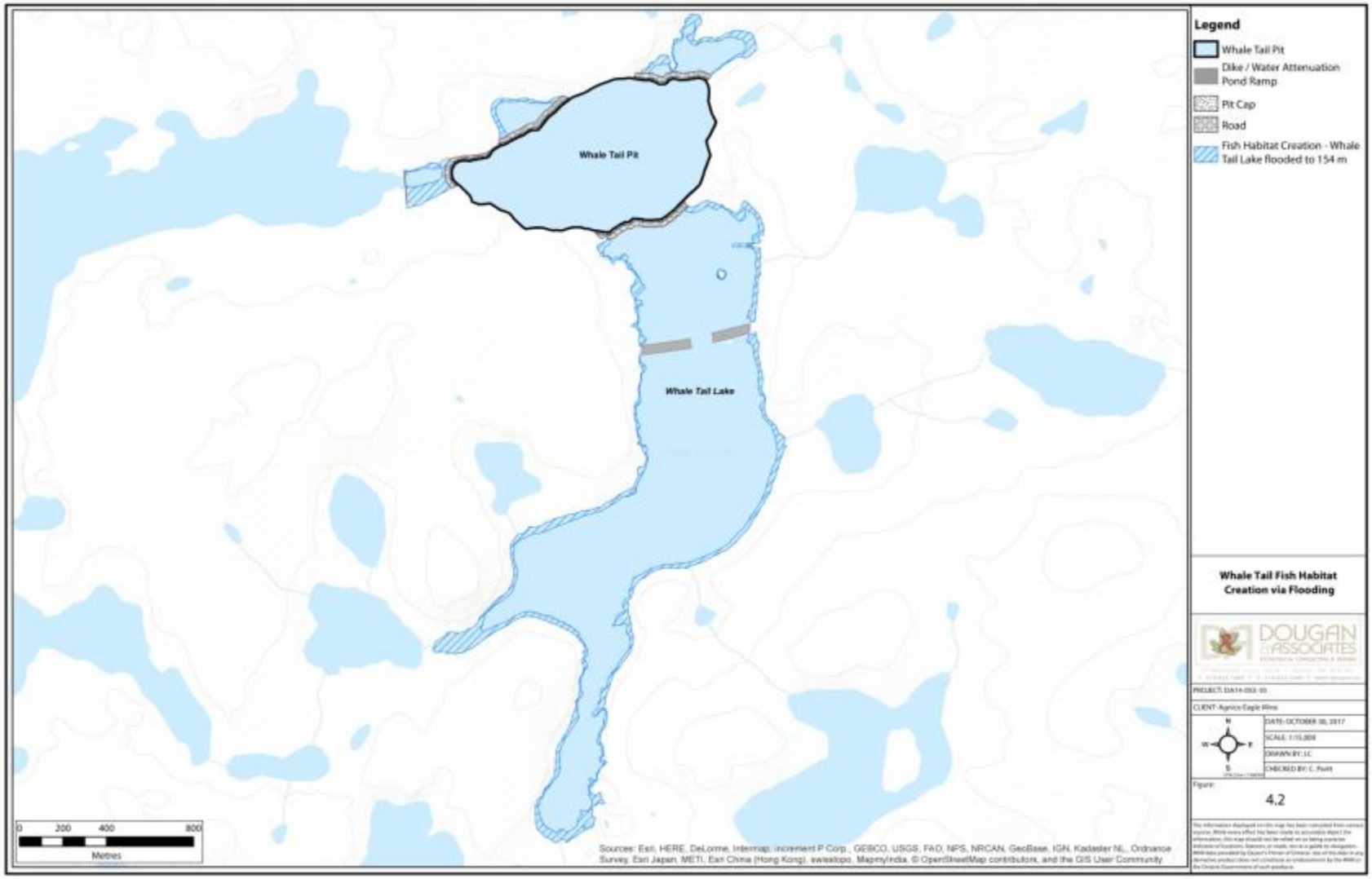

Figure 4-1. Habitat created by increasing the water elevation by 1 m east of the Mammoth Dike.

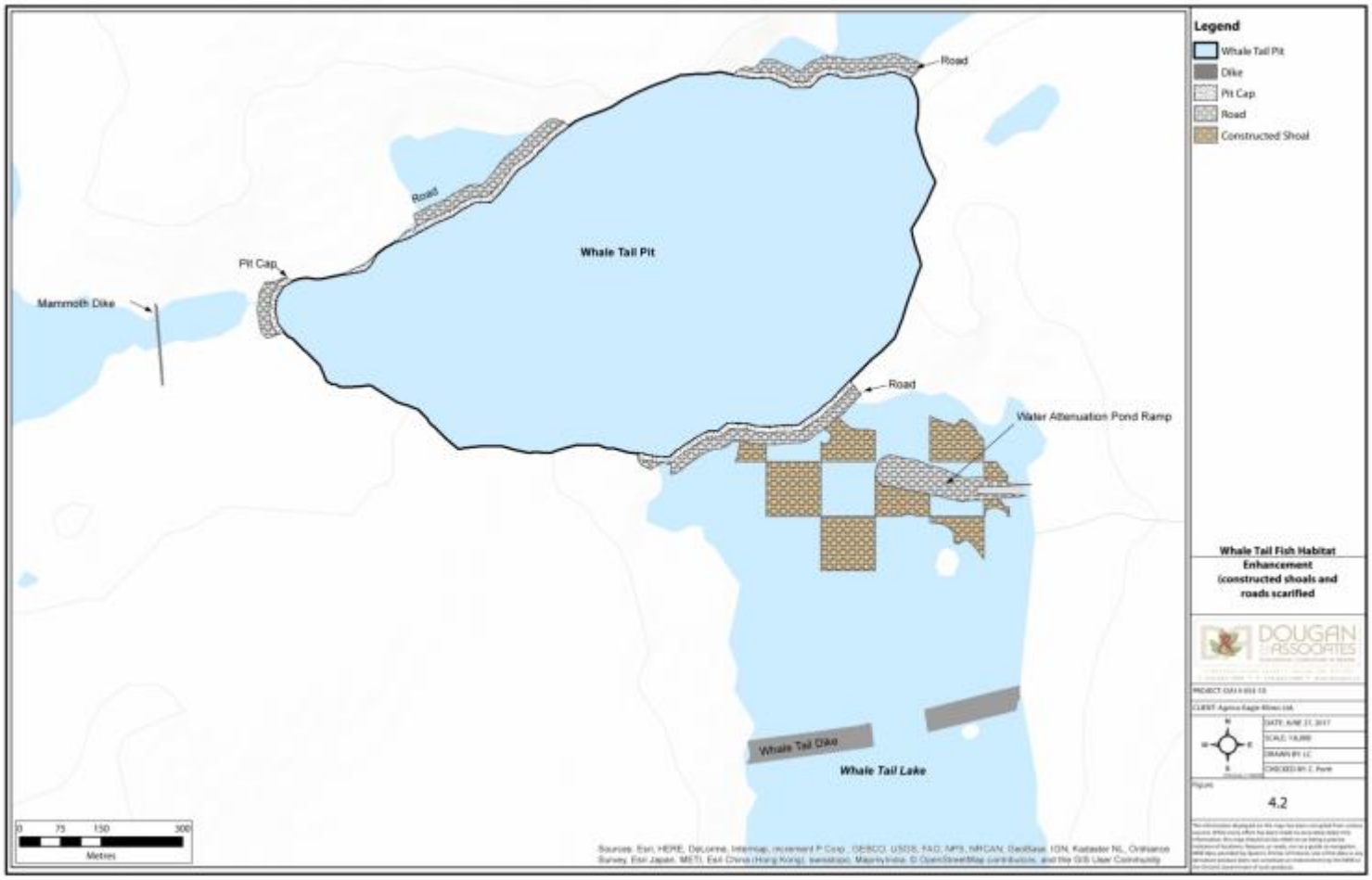

Figure 4-2. Proposed roads scarified and constructed rock shoals proposed as offsetting measures.

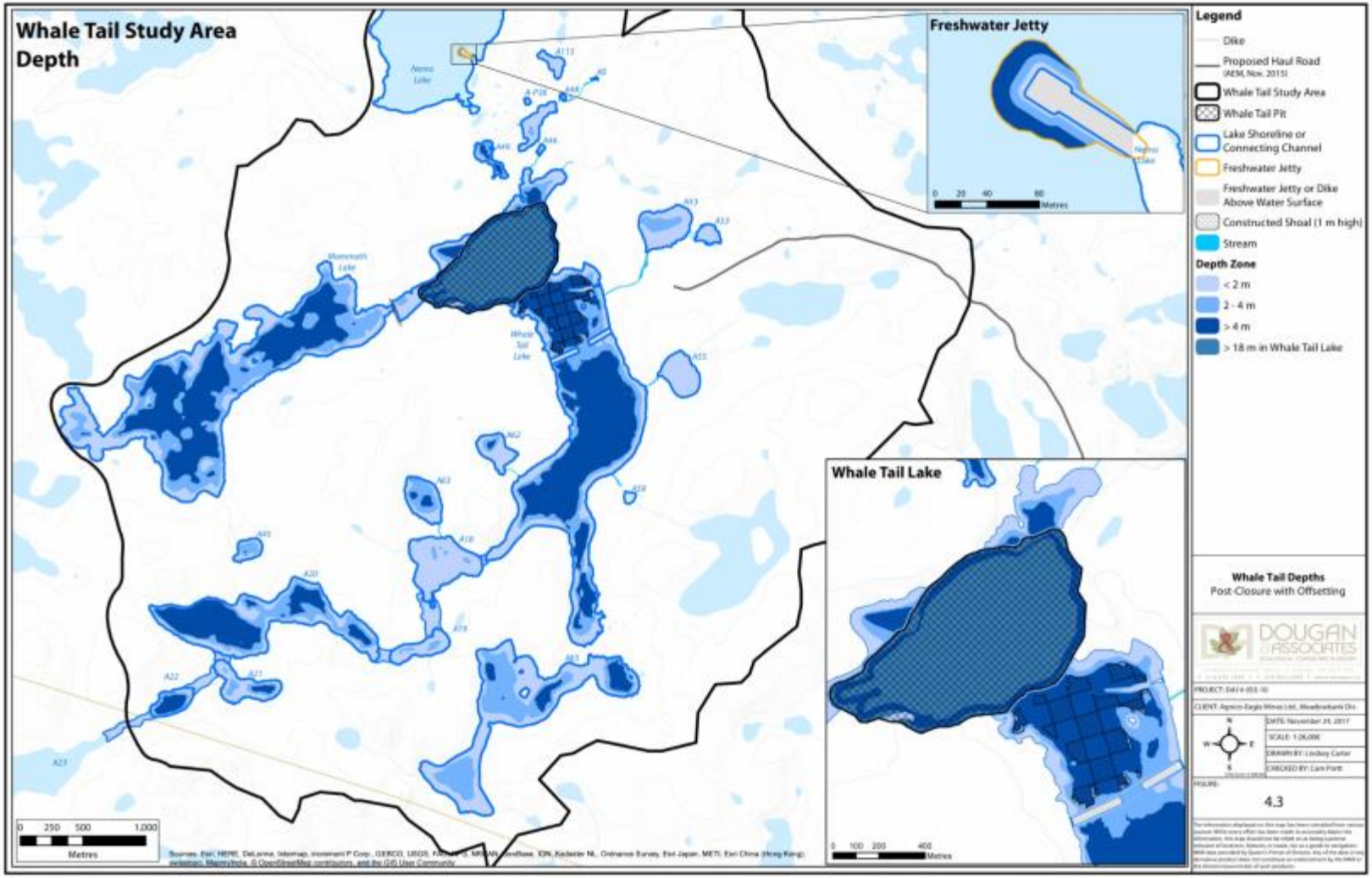

Figure 4-3. Whale Tail pit depths post-closure with a 1 m increase in water elevation east of Mammoth Lake sill, roads scarified and rock shoals constructed for offsetting.

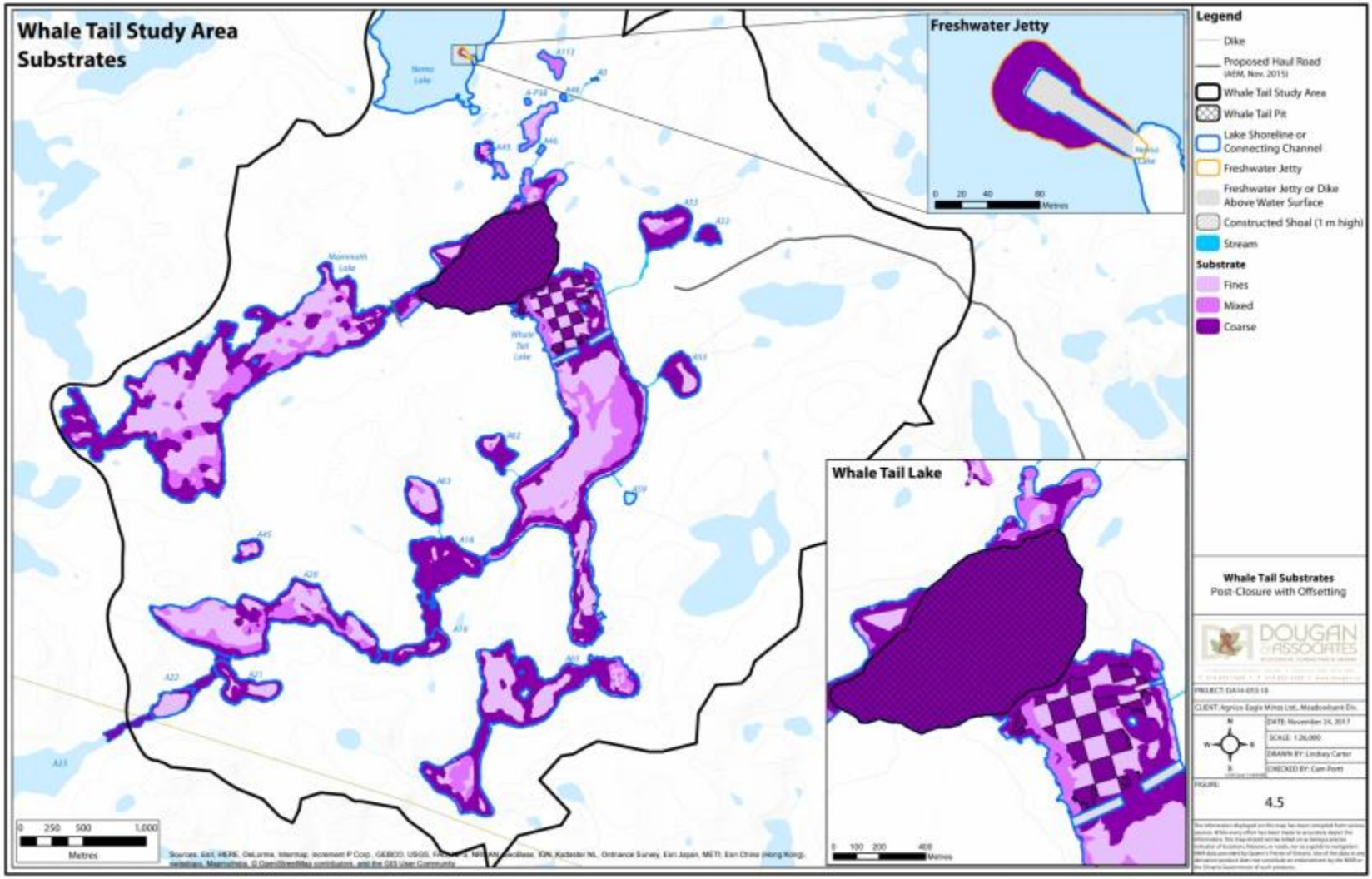

Figure 4-4. Whale Tail pit substrates post-closure with a 1 m increase in water elevation east of Mammoth Lake sill, roads scarified and rock shoals constructed for offsetting.

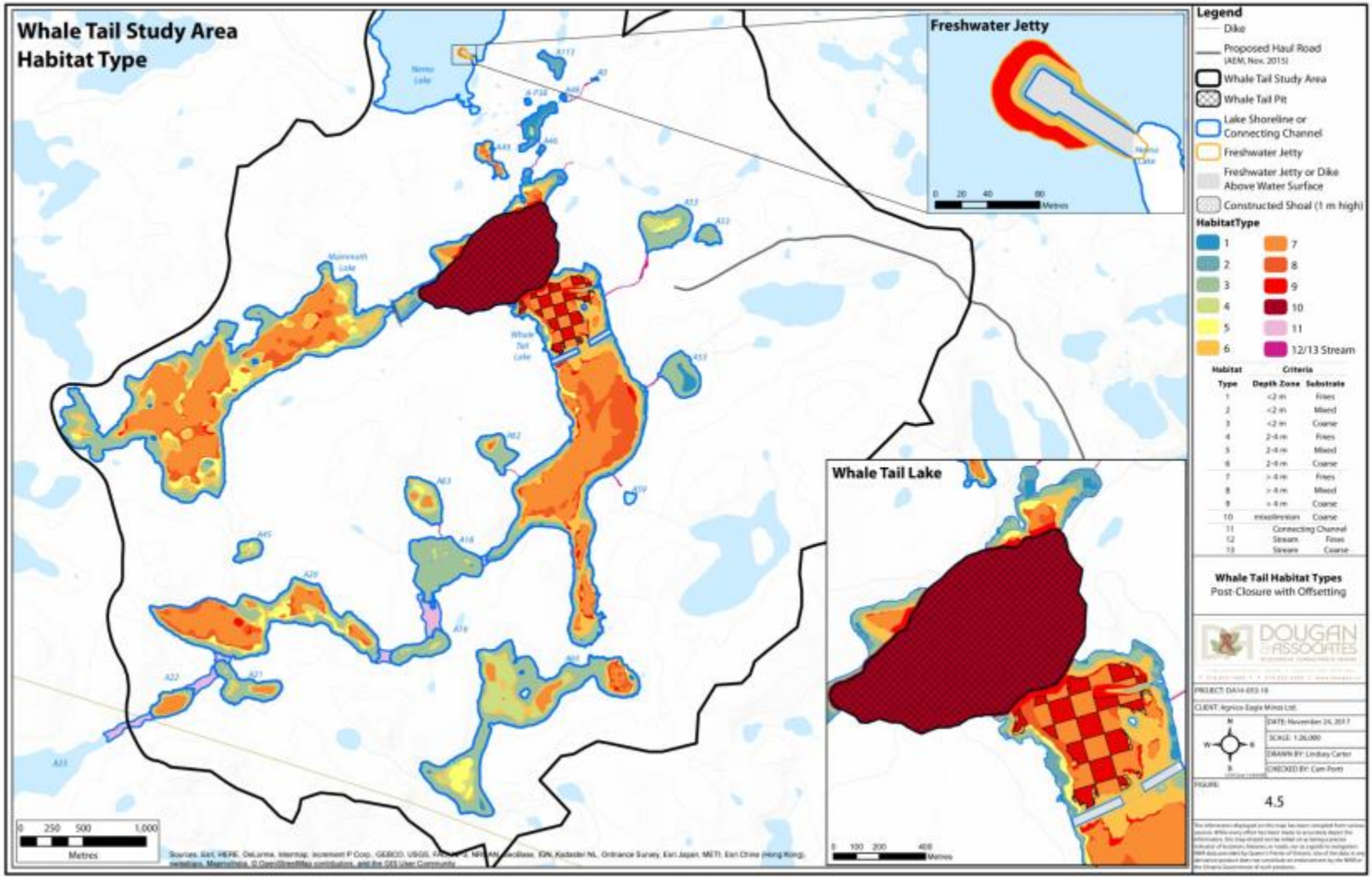

Figure 4-5. Whale Tail pit habitat types post-closure with a 1 m increase in water elevation east of Mammoth Lake sill, roads scarified and rock shoals constructed for offsetting.

4.2 COMPLEMENTARY MEASURES

As defined by Fisheries and Oceans Canada (2013), “complementary measures are investments in data collection and scientific research related to maintaining or enhancing the productivity of commercial, recreational or Aboriginal fisheries.” As discussed in Section 1.1, for the Whale Tail pit, DFO has indicated support for complementary measures to provide 60% of the required offsetting. Agnico Eagle is supportive of funding research as a complementary measure to offset habitat losses resulting from the Whale Tail Pit and has provided to DFO for consideration project descriptions for a suite of research activities to benefit local stakeholders and contribute to the understanding of aquatic systems (Appendix C). These complementary measures are valued at 60% of constructed offsets (0.6 * 15.03 HUs = 9.02 HUs), providing a total offsetting ratio of 14.45 HUs lost to 24.05 HUs gained (1:1.66). Through this accounting method, the proposed complementary measures actually account for 38% of total offsets based on HUs (9.02 HUs / 24.05 HUs = 38%).

4.3 TIMELINE, DESIGN AND CONSTRUCTION OF THE OFFSETTING MEASURES

The following estimated timeline of water management activities is described in the Whale Tail Pit - Water Management Plan Addendum (FEIS, June, 2016). The exclusion of fish from available habitat in Whale Tail Lake – North Basin will extend from the initiation of dike construction (2018), dewatering and the fishout (2019), until re-flooding is complete (2025) and dikes are breached to allow fish re-entry (estimated 2029). Until the expanded Whale Tail Lake – South Basin is returned to baseline water levels (2022 – 2025), a large quantity of supplemental habitat will be available throughout that area due to flooding of terrestrial zones (see Section 3.2).

Construction timing of offsetting features is described in Table 4-2.

Table 4-2. Timing of construction and accessibility of offsetting features (habitat enhancements and creation).

Feature	Construction Complete	Offset Accessible to Fish
Scarification of roads	2022	2029
Construction of shoals	2022	2029
Sill	2025	2029
1-m Increase in Water Level	2025	2029

Preliminary engineering designs for the sill to raise water levels within Whale Tail Lake are provided in Figure 4-6.

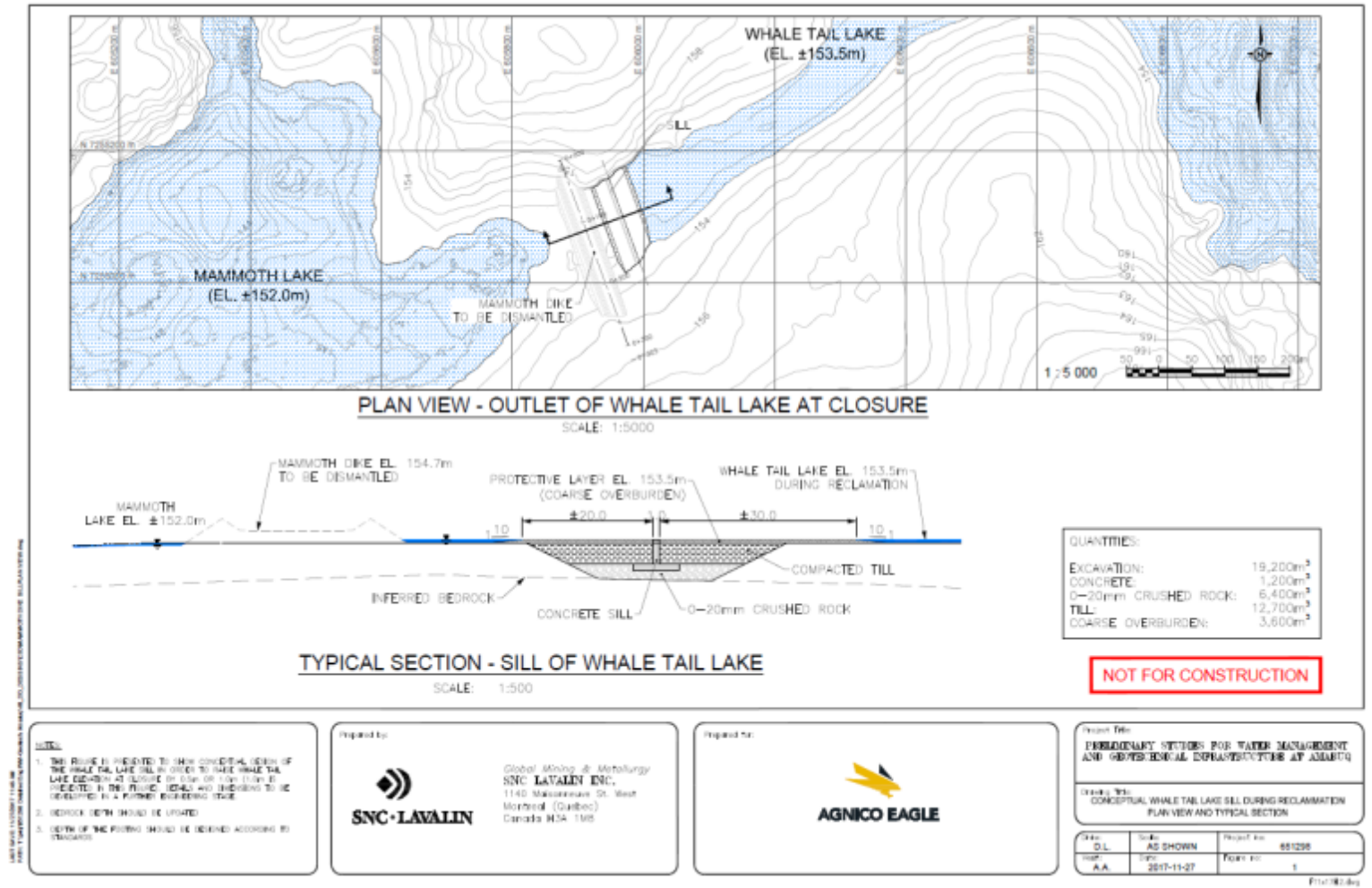

Figure 4-6. Preliminary engineering design for sill to raise water level of Whale Tail Lake by 1 m in the long term.

4.4 MONITORING

Monitoring to confirm that offsetting measures have been properly implemented and are effectively counterbalancing the serious harm to fish habitat occurring in Whale Tail Lake will be conducted as described in Agnico Eagle's Whale Tail Pit Fish Habitat Offset Monitoring Plan (March, 2018).

The planned duration and type of monitoring will allow for demonstration of full ecological functionality of the system (i.e. growth, reproduction and survival), with clearly identified criteria for success. Once criteria for success have been demonstrated, Agnico expects that there would be a reduction in the Letter of Credit (LOC) held by DFO in the amount corresponding to the successful offset.

SECTION 5 • CONTINGENCY OPTIONS

As a requirement in DFO offset planning Agnico Eagle recognizes uncertainty exists in all projections of future conditions. Therefore, Agnico Eagle is proposing three potential contingency options[5] that could be implemented in the case that the primary offsets are determined not to provide functional fish habitat (e.g. if conditions within the reflooded area do not permit breaching of the Whale Tail Dike to allow fish re-entry).

5.1 OPTION 1 – EXPANDED WHALE TAIL LAKE SOUTH BASIN

If deemed feasible, contingency option 1 could involve maintaining all or a portion of the flooded conditions south of the Whale Tail Dike. In concept, the Whale Tail Dike would not be breached to allow fish entry into Whale Tail Lake. As during the operations phase described in Section 3, water would continue to flow into Mammoth Lake through the southern diversion channel, rather than through Whale Tail Lake – North Basin. Based on preliminary planning to support DFOs requirements, habitat area (ha) and habitat units gained through this contingency offsetting option (i.e. maintaining habitat conditions as during operations in the long term) are summarized in Table 5-1. Provided this option is feasible, it could provide an increase over baseline conditions of up to 42.7 HUs, and would therefore provide more offsets than the primary option of habitat enhancement and creation (15.03 HUs). Agnico expects that these supplemental HUs could be banked or utilized towards future offsetting projects. Modifications of contingency option 1, such as a maintaining a lower level of flooding, could also be further investigated.

[5] These options are highly conceptual in support of the base case; as discussed with DFO, these concepts will require greater feasibility and engineering evaluation

Table 5-1. Increase in habitat area (ha) and habitat units (HUs) compared to baseline conditions provided by contingency option 1 (maintaining fish habitat conditions as during operations).

Habitat Location	Hectares	Habitat Units
Nemo Lake	-0.2	0.02
Mammoth Lake	-1.2	-0.47
Whale Tail Lake (South Basin) expanded during operations)	240.1	122.15
Other Lakes and Ponds[1]	-183.62	-77.01
Connecting channels	-8.0	-2.41
Streams	-0.3	-0.06
Diversion Channel A17-A45	1.8	0.54
Total	**48.6**	**42.72**

[1]Other lakes south of Whale Tail Lake become part of expanded Whale Tail Lake.

5.2 OPTION 2 – WHALE TAIL PIT BERM

As per NWB Type A requirements, water quality modeling will continue to be updated on an annual basis until closure. If it is determined that water quality within the flooded basin area could be deficient in nutrients required to support lower trophic levels and fish populations, this second proposed contingency option could aim to construct a berm or dike along the southern edge of Whale Tail Pit, in order to reduce the potential for the pit area to function as a nutrient sink. This feature may help to maintain nutrient supply within the basin area by preventing sediments from being washed into the pit. However further considerations of engineering design and water quality modeling would need to be explored to fully develop and understand the utility of this option.

Overall this contingency option may increase the potential for the primary offsetting option to function as intended as fish habitat, Assuming the berm is feasible and will function as fish habitat, change in habitat units over the primary offsetting scenario would be minimal, maintaining the originally proposed ratio of gains to losses. This contingency option would therefore provide approximately 15 HUs.

5.3 OPTION 3 – ADDITIONAL COMPLEMENTARY MEASURES

Based on the calculation method used here, the currently proposed complementary measures represent 38% of total offsets (9.03 of 24.05 HUs). DFO has previously indicated to Agnico Eagle (meeting March 15, 2017) that they would approve 60% of offsets as complementary measures for the Whale Tail Pit project. Thus, as a contingency option, an additional 5.4 HUs could be obtained through development and funding of supplemental research projects. This contingency option could be used in tandem with Option 2 to help to offset any small reduction in habitat gains that might occur as a result of berm construction.

SECTION 6 • CONCLUSION

There will be serious harm to fish habitat as a result of Whale Tail Pit development during both the operations and post-closure phases, resulting in a loss of 14.5 habitat units.

Accepted methods of habitat enhancement and habitat creation will be utilized, along with complementary measures, to offset the serious harm that will occur.

Offsets proposed for the Whale Tail Pit Project include:

- Construction of a sill in the connecting channel between Whale Tail Lake and Mammoth Lake that will increase the water level in Whale Tail Lake by 1 m;
- Conversion of roads to coarse substrate and construction of 8.77 ha rock shoals, together these represent 15.03 HUs; and
- Complementary measures consisting of a suite of research studies to benefit local stakeholders and contribute to the understanding of aquatic systems, representing 9 HUs.

Combined, this offsetting package achieves a ratio of habitat units lost to habitat units gained of 1:1.66.

SECTION 7 • REFERENCES

AEM, 2012. AEM Meadowbank Division – No Net Loss Plan. October 15, 2012.

AEM, 2013. Meadowbank Mine – Draft No Net Loss Plan Implementation Cost Estimate and Construction Schedule. Version 2. May 2013.

AEM, 2016. Meadowbank Gold Project – Habitat Compensation Monitoring Plan. AEM Meadowbank Division. Version 3. February, 2016.

Agnico Eagle. 2017a. Conceptual Whale Tail Lake (North Basin) Fishout Work Plan. Version 1. February 2017.

Agnico Eagle. 2017b. Fisheries and Offsetting Monitoring Plan Whale Tail Pit. Version 1. June 2017.

C. Portt and Associates. 2018. Whale tail pit 2014 - 2016 fish and fish habitat field investigations: Agnico Eagle Mines Ltd. - Meadowbank Division. xi +157 pp.

C. Portt and K. Minns. 2017. Personal Communication on June 14th, 2017. Toronto, Ontario. Discussion with Portt, Minns and DFO (by webex) regarding HEP model and conceptual offsetting plans including the flooding of Whale Tail Lake (South Basin).

DFO, 2013. Fisheries Productivity Investment Policy: A Proponent's Guide to Offsetting. Ecosystem Programs Policy, Fisheries and Oceans Canada. Ottawa, Ontario. November, 2013. ISBN: 978-1-100-22930-0

Appendix A –

Lake Elevations Used for Existing Conditions and Summary of Fish Catches during Baseline Field Investigations

Table A 1. Elevations used to represent baseline conditions for the determination of depths and shorelines.

Lake	Water elevation (masl) determined from the July 21, 2011 imagery
A113	156.47
A18	154.05
A19	154.85
A20	154.77
A21	154.83
A22	155.01
A45	156.47
A47	154.94
A49	159.28
A62	155.59
A63	154.62
A65	154.84
Mammoth Lake (A16)	152.57
Nemo Lake (C38)	156.00
Whale Tail Lake (A17)	153.02

Table A 2. Electrofishing effort and catches in connecting channels between lakes.

Connecting channel	Date	Distance (m)	Juvenile Lake Trout	Juvenile Round Whitefish	Ninespine Stickleback	Slimy Sculpin
A16-A15	8/25/2015	43	1		2	5
	6/21/2016	59				
	6/24/2016	23				
A16-A15 Total		**125**	**1**		**2**	**5**
A17-A16	7/9/2016	189	2	1	1	1
A18-A17	6/26/2015	100				1
	7/5/2015	112				5
	8/30/2015	30	1		6	
	6/22/2016	104				1
	6/25/2016	141				
	7/8/2016	113		16		
	8/20/2016	27			2	
A18-A17 Total		**627**	**1**	**16**	**8**	**7**
A19-A18	7/9/2015	32				
A19-A18 Total		**32**				
Grand Total		**1213**	**5**	**17**	**11**	**17**

Table A 3. Electrofishing effort and catches in small streams in the primary study area. All Arctic Char, Lake Trout, Salvelinus sp. (which are either Arctic Char or Lake Trout), Round Whitefish and Burbot are juveniles. Large catches of Ninespine Stickleback in A46-A17 occurred immediately downstream of a ledge that appeared to impede upstream migration.

Watercourse	Date	Electro-seconds	Distance (m)	Arctic Char	Lake Trout	*Salvelinus* sp.	Round Whitefish	Burbot	Ninespine Stickleback	Slimy Sculpin
A0-A48	8/1/2015	196	10						2	
A113-A47	8/1/2015	68	10						1	
	6/19/2016	160	191							
A113-A47 Total		**228**	**201**						**1**	
A46-A17	6/28/2015	579	201	1					11	8
	7/9/2015	925	148	1					153	8
	7/12/2015	85	na						100	
	8/30/2015	470	36							
	6/22/2016	110	36						20	
	6/24/2016	608	162	1					27	8
	7/7/2016	498	142	1					600	7
	8/19/2016	993	194					1	7	5
A46-A17 Total		**4268**	**919**	**4**				**1**	**918**	**36**
A47-A17	6/19/2016	500	348						1	
A47-A46	7/9/2015	136	17							1
	6/24/2016	77	13							
A47-A46 Total		**213**	**30**							**1**
A48-A47	7/6/2016	1403	147						6	
A49-A47	7/7/2016	290	59							
	8/20/2016	58	7							
A49-A47 Total		**348**	**66**							
A50-A17	6/28/2015	265	51						5	
	7/9/2015	1204	163	2	1				56	9
	8/30/2015	180	52	1				1	2	

Watercourse	Date	Electro-seconds	Distance (m)	Arctic Char	Lake Trout	*Salvelinus* sp.	Round Whitefish	Burbot	Ninespine Stickleback	Slimy Sculpin
	6/22/2016	208	37	1					20	
	6/24/2016	180	38						3	
	7/7/2016	1050	195	1					10	4
	8/19/2016	275	66							2
A50-A17 Total		**3362**	**602**	**5**	**1**			**1**	**96**	**15**
A53-A17	6/20/2015	1664	571						7	
	7/8/2015	2142	182	5					78	77
	8/30/2015	518	359		4					26
	6/18/2016	2565	563						4	4
	7/8/2016	2415	357	1					28	43
	8/26/2016	433	248	3					5	23
A53-A17 Total		**9337**	**2280**	**9**	**4**				**122**	**170**
A55-A17	6/21/2015	996	166						6	
	7/6/2015	3330	167	1		1			20	50
	8/30/2015	483	46				1		17	1
	6/19/2016	917	182	1					1	1
	6/26/2016	1482	159							8
	7/8/2016	676	141	1				1		31
	8/19/2016	758	22						59	7
A55-A17 Total		**8642**	**883**	**3**		**1**	**1**	**1**	**103**	**98**
A59-A17	6/27/2015	730	126	1						6
	7/9/2015	1444	97						2	21
	8/30/2015	535	181	1						7
	6/22/2016	766	126						4	6
	7/7/2016	1115	122			2				24
	8/20/2016	630	56	2					4	8
A59-A17 Total		**5220**	**708**	**4**		**2**			**10**	**72**

Watercourse	Date	Electro-seconds	Distance (m)	Arctic Char	Lake Trout	*Salvelinus* sp.	Round Whitefish	Burbot	Ninespine Stickleback	Slimy Sculpin
A62-A17	7/7/2015	1025	107						1	
	7/7/2016	707	129							
A62-A17 Total		**1732**	**236**						**1**	
A63-A18	7/5/2015	848	81							3
	7/7/2015	793	81							3
A63-A18 Total		**1641**	**162**							**6**
A-P23-A17	6/26/2015	582	95							2
Grand Total		**38702**	**6747**	**25**	**5**	**3**	**1**	**3**	**1260**	**403**

Table A 4. Maximum number of channels, mean total wetted width (sum of the width of all channels at a transect), and mean and maximum depth of small streams in the Whale Tail Study area.

Stream	Maximum number of channels	Mean total wetted width (m)	Mean depth (cm)	Maximum depth (cm)
A0-AP48	2	2.5	8	30
A47-A46	1	2.0	9	21
to A47	1	3.4	6	12
A50-A17	2	0.7	9	26
A53-A17	8	7.6	7	27
A55-A17	2	7.2	17	36
A59-A17	8	6.7	9	20
A62-A17	2	1.2	6	42
A63-A18	2	2.8	7	22
A46-A17	2	1.9	11	36

Appendix B

Habitat Areas and Habitat Units, by Habitat Type, for Preconstruction, Operations, and Post-closure Phases

Table B-1. Habitat areas (ha) and habitat units (HUs) for all habitats under baseline conditions and during operations phase.

Habitat Type	Habitat Area (ha)		Habitat Units (HUs)	
	Baseline	Operations	Baseline	Operations
1	8.39	13.65	2.01	3.27
2	11.27	2.90	3.17	0.81
3	175.40	201.11	69.43	79.61
4	33.11	14.08	12.42	5.28
5	25.09	13.51	14.64	7.88
6	53.63	101.24	40.78	76.98
7	157.88	145.73	59.21	54.65
8	37.97	43.71	19.77	22.77
9	4.90	26.79	3.32	18.14
10	0.00	0.00	0.00	0.00
11	9.38	3.18	2.83	0.96
12	0.70	0.39	0.12	0.07
13	0.19	0.18	0.06	0.06
Total	517.92	566.47	227.76	270.48
Change		**48.56**		**42.72**

Table B-2. Area of habitat that is lost, isolated in the north-east pond, unaltered, modified and created during the operations phase.

Changes to habitat	Area in hectares
Habitat lost during operations	
Lake habitat dewatered	
Nemo Lake filled and above water during operations	0.2
Whale Tail Lake dewatered or covered by dike and above water during operations	69.5
Mammoth Lake dewatered or covered by dike and above water during operations	1.2
Connecting channels dewatered	0.9
Small streams dewatered	0.03
Total habitat lost during operations	74.3
Habitat isolated in north-east pond during operations	
Existing lake and pond habitat	7.6
Existing stream habitat	<0.1
Total isolated in north-east pond (assumed not to be fish habitat, so effectively also a loss)	7.6
Habitat not altered during operations	
Mammoth Lake	150.5
Portion of connecting channel A23-A22	1.4
Portion of watercourse A53-A17	0.4
Total habitat not altered during operations	152.3
Existing Habitat modified during operations	
Existing Nemo Lake covered by freshwater jetty (that remains below water)	0.4
Existing Mammoth Lake covered by Mammoth dike (that remains below water)	0.0
Existing Whale Tail Lake (water level increased)	94.8
Existing Whale Tail Lake covered by Whale Tail dike (that remains below water)	0.4
Other existing lakes in expanded Whale Tail Lake (water levels increased)	177.8
Lake A45 water levels increased	2.9
Existing connecting channels converted to lake habitat	7.1
Existing streams converted to lake habitat	0.3
Total existing habitat modified during operations	283.8
Habitat created during operations	
Land flooded around expanded Whale Tail Lake	127.4
New channel alignment for stream A53-A17	0.2
Connecting channel constructed between expanded Whale Tail Lake and A45	1.8
Land flooded around Lake A45	1.6
Total habitat created during operations	130.9

Table B-3. Changes in habitat area and habitat units between baseline conditions and the operations phase for each lake/stream system.

Lake/Stream	Change from existing conditions to operations phase	
	Hectares	**Habitat Units**
Nemo Lake	-0.2	-0.02
Mammoth Lake	-1.2	-0.47
Whale Tail Lake	240.1	122.15
Other Lakes and Ponds	-183.6	-77.01
Connecting channels	-8.0	-2.41
Streams	-0.3	-0.06
Diversion Channel A17-A45	1.8	0.54
Net change	48.6	42.72

[1]Most become part of the expanded Whale Tail Lake

Table B-4. Areas of habitat that are lost, unaltered, modified or created during the post-closure phase with no offsetting.

Changes to habitat	Area in hectares
Habitat lost during post-closure phase	
Nemo Lake filled	0.2
Streams dewatered	none
Whale Tail Lake (covered by dike and water attenuation ramp and dry post-closure)	1.8
Mammoth Lake (covered by dike and dry post-closure)	none
Total habitat lost during post-closure phase	2.0
Habitat not altered during post-closure phase (includes areas reflooded)	
Mammoth Lake not modified	151.6
Whale Tail Lake habitat not modified	130.6
Connecting channel A17-A16 habitat not modified	0.3
Connecting channel A18-A17 – (a portion is altered in offsetting scenario so required for comparison)	1.3
Streams not altered - (but altered in offsetting scenario so required for comparison)	0.7
Total habitat not altered post-closure	284.5
Habitat modified during post-closure phase	
Existing Nemo Lake covered by freshwater jetty	0.4
Whale Tail Lake and connecting channel A16-A17 converted to pit or pit cap	30.9
Whale Tail Lake and connecting channel A16-A17 converted to roads	2.2
Whale Tail Lake converted to attenuation pond jetty	1.1
Whale Tail Lake converted to dike (portion that is below water)	1.2
Mammoth Lake - (covered by remains of dike, now lowered to become lake habitat)	0.1
Total habitat altered during post-closure phase	35.9
Habitat created during post-closure phase	
Whale Tail Lake habitat created post-closure (due to pit excavation)	27.4

Table B-5. Changes in habitat area and habitat units between baseline conditions and post-closure phase with no offsetting, for each lake/stream system.

Lake/Stream	Change from existing conditions to post-closure phase with no offsetting	
	Hectares	**Habitat Units**
Nemo Lake	-0.2	0.02
Mammoth Lake	0.0	0.00
Whale Tail Lake	26.2	-14.23
Connecting channel A17-A16[1]	-0.6	-0.20
Other connecting channels	0.0	0.00
Streams	0.0	0.00
Total	25.3	-14.45

1. Becomes part of the expanded Whale Tail Lake (South Basin)

Table B-6. Change in post-closure habitat areas and habitat units, relative to baseline, that will result from the proposed offsetting features, for each lake/stream system.

Lake/Stream	Changes resulting from a 1 m increase in the water level upstream from the Whale Tail Lake to Mammoth Lake sill, scarification of roads and construction of 8.77 ha rock shoals, compared to baseline conditions	
	Hectares	**Habitat Units**
Nemo Lake	-0.2	-0.02
Mammoth Lake[1]	-1.2	-0.47
Whale Tail Lake	50.0	1.67
Connecting channel A17-A16[1]	-0.9	-0.27
Connecting channel A18-A17[1]	-1.0	-0.31
Streams	<-0.1	-0.01
Total	46.6	0.58

1. Becomes part of the expanded Whale Tail Lake (South Basin)

APPENDIX C – COMPLEMENTARY MEASURES

SECTION 1 • INTRODUCTION

As suggested by DFO in 2017, a portion of fish habitat offsetting for Whale Tail Pit may be comprised of complementary measures in the form of fisheries-related research. Research projects will be aimed at closing knowledge gaps regarding the biology and habitat requirements of northern fish species, developing tools and validating methods to facilitate and advance ongoing monitoring, and/or characterizing responses of fish-bearing aquatic systems to direct anthropogenic manipulations.

The following research projects are proposed as complementary measures to offset fish habitat losses associated with the Whale Tail Pit project. Conceptual design of each project has been discussed with DFO over the past year. Details of projects that will occur in the nearer term have been established with interested academic partners but may evolve over the life of the project based on initial field experiences. This program will continue to be developed and coordinated by Agnico, in collaboration with academic partners, and reporting to the Meadowbank Fisheries Research Advisory Group (MFRAG; see Section 2.6).

While these projects are proposed as complementary measures, and Agnico will work towards achieving their criteria for success as identified in the Fish Habitat Offset Monitoring Plan (March, 2018), it should be recognized that total funding for complementary measures is detailed in the calculated Letter of Credit (LOC) held by DFO, and described in the Cost Estimate for Whale Tail Offsetting (March, 2018). Depending on the final chosen suite of research projects and their scope, additional studies or objectives may be feasible. Ultimately, projects will be chosen and their direction confirmed or updated annually based on interests of stakeholders including KIA, academic partners, Hunting and Trapping Organizations (HTO) and DFO, through the Meadowbank Fisheries Research Advisory Group (see Section 2.6).

Where appropriate, research projects are designed to work in tandem with existing monitoring programs such as the Core Receiving Environment Monitoring Program (CREMP) and monitoring for habitat enhancement/creation offsetting features. However, research studies are planned to collect supplementary data over and above regular monitoring programs, and to assess scientifically-driven hypotheses, independent of compliance monitoring.

A common goal will be to publish results in peer-reviewed literature to provide a tangible benefit for future assessments of northern fish populations. Outside of deliverables related to scientific publications, Agnico will emphasize and facilitate local community input and capacity building as a component of each study.

SECTION 2 • COMPLEMENTARY MEASURES

Four general topics are proposed as research study directions for Whale Tail Pit complementary measures, with one or more specific associated research projects. Topics include:

1. Assessment of changes in aquatic productivity and fish populations due to flooding of Whale Tail South and downstream lakes during operations

2. Assessment of impacts of the Baker Lake wastewater outflow on aquatic systems including fish and fish habitat

3. Characterization of northern fish species' habitat preferences

    - Literature review and field validation of northern lake fish habitat preferences
    - Arctic grayling occupancy modeling
    - Pit lake habitat use assessment

4. eDNA methods development

The objectives and methods of the associated research studies as planned at this time are described in detail below. Information on approximate total budgets and estimated levels of Agnico support for each project are described in Section 2.5, and role of the MFRAG is described in Section 2.6.

2.1 CHANGES IN AQUATIC PRODUCTIVITY

2.1.1 Introduction

Flooding of the Whale Tail South Basin and upstream lakes during operations will result in a release of nutrients from terrestrial sources into the aquatic system. Although a change in trophic status was also predicted in the EIS in relation to effluent discharge into Mammoth Lake, mitigative options are now being investigated to minimize those impacts, so research projects will focus on the flooded zone south of the Whale Tail dike.

Currently, relatively little information is available in the open literature to support development of productivity models for Arctic lakes. Not only is this information integral to environmental impact assessment, but understanding drivers of productivity will help inform future directions of HEP methods.

The following objectives and methods have been developed in consultation with the proposed lead researcher, Dr. Heidi Swanson (University of Waterloo).

2.1.2 Objectives

Specifically, this research study will aim to understand changes in fish population productivity and habitat use during and after flooding occurs, as determined through relative abundance and/or biomass and condition factor within the resident fish population.

Since flooding activities are planned to occur over a relatively short term (2-3 years), the study will specifically include a focus on small-bodied fish, which are expected to react first to changes in nutrient profiles. Nevertheless, methods will also include hydroacoustic surveys that can assess changes at the community level, and a substantial body of information for condition factor and abundance of large-bodied fish will be collected during the fishout of Whale Tail Lake – North Basin. If elevated water levels are maintained in Whale Tail Lake over a longer term (as

proposed as a contingency offsetting measure), post-impact assessments could be carried out using that data.

Changes in productivity will be related to water quality variables and changes in lake morphometry (especially area). Use of newly flooded habitats will be assessed and related to habitat characteristics.

2.1.3 Methods

The following specific methods related to surveillance and analysis of fish populations are planned to be included as part of this study:

- Hydroacoustics surveys, both before and after flooding. Key variable investigated: kg fish/hectare

- Minnow trap/fyke net surveys, both before and after flooding. Key variable investigated: catch per unit effort

- Presence-only surveys, after flooding. Key variable investigated: fish presence in newly-flooded habitats, and relationships with habitat covariates.

- Collection of small-bodied fishes for trophic ecology and growth parameters, both before and after flooding. Key variables investigated: sources of carbon (pelagic or benthic, trophic position, growth rates).

Assessments of changes in fish populations will take into account relationships with the following water quality parameters, some of which are planned to be collected through compliance monitoring programs, and some of which are supplementary:

- Quantity and quality of dissolved organic carbon

- Total and dissolved concentrations of nitrogen

- Total and dissolved concentrations of phosphorus

- TSS

- Chlorophyll-a

- Major anions and cations

- Stable isotope ratios on dissolved inorganic carbon

2.1.4 Timeline

This study is planned to begin in Summer 2018 due to tight timelines related to dike construction and flooding of Whale Tail – South Basin. Based on current mine plans and offsetting measures, this study will occur over a 3 – 4 year time period.

See Section 2.5 for a summary of proposed timelines for each project.

2.1.5 Project Deliverables

As described in the Fish Habitat Offset Monitoring Plan (March, 2018), criteria for success (deliverables) of all research projects are centred around publication of one or more manuscripts per study in a peer-reviewed journal, such that research outcomes would be broadly available to the scientific community. However it is recognized that not all factors affecting outcomes of research projects and suitability of studies for such publication are within the control of Agnico, academic partners, or DFO. As a result, in certain instances, peer-reviewed publication may not be a viable route for dissemination of knowledge gained through these projects. In such cases, Agnico suggests discussions be undertaken between researchers, DFO, and Agnico to determine a mutually agreeable solution (e.g. conference presentations, inter-agency workshops).

Specifically, this study will improve scientific understanding of relationships between productivity of northern fish communities and nutrient inputs derived from natural sources. This information will be valuable for consideration by proponents and regulatory agencies during future assessments of impacts in aquatic systems due to flooding.

2.2 BAKER LAKE WASTEWATER ASSESSMENT

2.2.1 Introduction

Currently, wastewater from the hamlet of Baker Lake is released through a series of tundra ponds into Baker Lake, ultimately affecting fish and fish habitat. Since 2012, Agnico has maintained an interest in characterizing these impacts, and working with the hamlet to ameliorate their wastewater treatment, with significant support from the community. In the fall of 2017, Agnico presented the conceptual research project and potential associated wastewater upgrades to the Hamlet Council, and again received strong support. It was noted by an elder during consultation (Agnico Eagle, 2016)that Airplane Lake, which receives run-off from the wastewater lagoon and landfill was once used by locals for fishing and recreation, but is no longer fished due to concerns of contamination.

Having identified this project as a potential complementary measure for the Whale Tail Pit project, Agnico has begun working with a research team including Dr. Rob Jamieson (Dalhousie University), Drs. Mark Hanson and Charles Wong (University of Manitoba), and Drs. Brendan McConkey and Heidi Swanson (University of Waterloo) to tailor an appropriate research program.

Since this research will directly assess changes in the aquatic system related to fish and fish habitat, and will provide significant value to the local community, Agnico is proposing to partially fund this study as a complementary measure for Whale Tail Pit offsetting. Additional funding will be sought through application for an NSERC CRD, with Agnico acting as industrial partner.

The following objectives and methods have been developed by the research team indicated above.

2.2.2 Objectives

1. Validate passive wastewater treatment system design guidelines for Arctic regions

2. Develop and incorporate human health risk assessment into Arctic wastewater system design and planning process

3. Characterize microbial community structure in Arctic wastewater treatment systems and receiving waters and assess ARG transfer mechanisms

4. Characterize trace metal sources, transport pathways and environmental risks in Arctic wastewater systems

5. Quantify improvements in fish habitat and health associated with Arctic wastewater treatment system upgrades

2.2.3 Methods

Preliminary methods developed by the research team to address these objectives are described below.

1: The hydraulic performance and treatment kinetics of the current wastewater treatment system will be characterized during the 2018 treatment season. Initial field work would be conducted during the spring melt period. The current wetland treatment area would be instrumented with water level loggers to quantify flow rates at several points throughout the system (upstream of Lagoon Lake, outlet of Lagoon Lake, outlet of Finger Lake, inlet to Airplane Lake). Stage-discharge relationships would be developed for each location to relate water level to discharge rate. A rhodamine dye tracer study would also be conducted to characterize the hydraulic retention time and mixing behavior of the current treatment system. The ability of the current treatment system to meet effluent quality criteria for regulated parameters (CBOD5, TSS, etc) would be evaluated. A mass balance modeling approach would be used to derive treatment rate constants for the wetland, and the level of dilution occurring in the system. A similar assessment would be conducted in August to characterize the performance of the current system during the non-melt period.

2: A spatial analysis would be conducted to identify 2-4 alternative locations for a new passive wastewater treatment systems. For each site a conceptual design for a pond-wetland based treatment system would be developed and effluent quality would be predicted for each alternative site using performance models previously developed by our research group. The relative human health risks associated with each option would also be evaluated using quantitative microbial risk assessment (QMRA) approaches. A variety of participatory research approaches would be employed to engage the community and better understand concerns and risks associated with potential options for wastewater management, and to identify an appropriate location for the treatment facility.

3: Once the new facility is constructed and operational the hydraulic behavior and treatment performance would be evaluated using methods previously described in 1. This data would be used to validate the performance model predictions and treatment rate kinetics. Autonomous

water quality sensors would also be installed in both the pond and wetland to continuously measure oxygen status, temperature and pH throughout the treatment season.

3: We hypothesize that otoliths provide a history of trace element exposure in fish via water and food pathways that can be used in ecological risk assessment. To test this hypothesis, we will sample for select trace elements in the proposed compartments along the wastewater release pathway (with a focus on Airplane and Baker Lake, plus reference sites), as well as reconstruct the trace element history through sediment coring. The exposures will be evaluated relative to water quality guidelines and hopefully partitioned by source (e.g., background vs landfill vs wastewater). We predict that the new treatment system will reduce trace element release, and that this will be associated with a decline in otolith concentrations. To this end, fish will be sampled pre- and post- construction and otoliths analyzed via laser-ablation ICP-MS.

4: Pathways of contaminant movement tend to focus on large-scale drivers in the Canadian Arctic. We hypothesize that aquatic insects represent a possible vector of metals and ARGs to pristine ecosystems not physically connected to wastewater flows. Emergent insects from the wastewater pathway and reference locations will be captured over the course of the off-ice season, identified, and their metals and ARGs quantified.

5: Standard toxicity bioassays have been developed for many cosmopolitan species, but rarely do their ranges include the Arctic. This element will seek to develop and validate a laboratory-based plant bioassay to screen for contaminants in water and sediments. The test will have two aspects that a user could select; a seedling germination phase and a full plant phase. The data can be then used to screen for the impacts of effluent release, design of treatment wetlands, as well as remediation and restoration efforts at contaminated sites.

6: Shifts in microbial community composition is one of the more rapid biological changes that may occur in response to changing environmental conditions. Microbial communities will be assessed both by 16S and rRNA gene analyses, providing a broad assessment of microbial populations. The researchers' current Polar Knowledge grant (C.Wong, PI) will collect data during and after the 2018 spring melt, and this data will be used to help establish a baseline for microbial community composition for sites near the Baker Lake wastewater treatment system, providing data for reference and potentially impacted sites. This work would be extended to a 'before and after' analysis linked to implementation of a new wastewater treatment system.

7: Antibiotic resistance genes (ARGs) are a type of environmental pollutant, and are associated with the spread of pathogenic drug resistance. ARGs are naturally occurring in the environment, but may increase in abundance through selection by antibiotics. ARGs may also be introduced to new environments through human activities and specifically though wastewaters. We will determine the presence and abundance of known ARGs at near-site and reference lakes and determine if there is a correlation with wastewater and wastewater treatment.

8: The microbial populations that are active in northern climates can differ significantly from populations in temperate climates. Based partly on the data from 6 and 7 we will target selected microorganisms for further characterization, to understand their role in nitrification, denitrification, and antibiotic resistance. A large majority of cold-climate bacteria remain uncultured and we will target these to provide insights into metabolic pathways and gene

function. By characterizing the composition and functions of northern wastewater microbial communities, molecular analyses will provide baseline data for optimizing such processes, and evaluate potential risks from antibiotic resistance proliferation.

9: Arctic fishes are often energy-limited, and freshwater Arctic ecosystems can be quite sensitive to nutrient inputs. We hypothesize that fishes living in Airplane Lake will have relatively higher lipid content, growth rates, and condition than fishes living in Baker Lake (prior to the treatment upgrade). Indicators of exposure to contaminants, including GSI and LSI, will also be higher in Airplane Lake than in Baker Lake prior to treatment upgrade. We predict that the new treatment system will result in a decline in indicators of contaminant exposure in fishes in Airplane Lake. Fish growth rates and condition many also decline as nutrient inputs decrease.

2.2.4 Timeline

Initial field work is planned to commence in summer 2018, following further community consultations this spring. Field studies will continue over a five-year duration, including a pre- and post-construction monitoring period. Construction of a new water treatment facility is tentatively planned for 2020.

2.2.5 Project Deliverables

As a large scale, multi-faceted research study, a suite of publications is expected as an outcome of this project. Specifically, these will include guidelines for passive wastewater treatment system design in Arctic regions, assessments of microbial system functions, ARGs and trace metal sources, transport pathways and environmental risks associated with Arctic wastewater systems, development of a toxicity assay for Arctic macrophytes, and analysis of changes in resident fish at organism and population scales in response to upgrades in water treatment technologies. Ultimately, observed responses of fish communities can be related to changes in water chemistry and lower trophic levels, which are significant components of fish habitat quality.

Along with written publications, researchers will present their studies at scientific meetings, providing experience and developing skills of graduate students.

Outside of the traditional scientific arena, this project has received strong community support in its early stages, and Agnico is fully engaging their Community Relations department to assist researchers in developing a program for consultations and capacity building within the Baker Lake community in regards to this project.

Though costs are not included as a complementary measure, this work will facilitate construction of an optimal wastewater treatment system for the community, which is a clear tangible benefit.

2.3 CHARACTERIZATION OF FISH HABITAT PREFERENCES

In recent years, HEP models for northern species have commonly been based on HSIs developed from Richardson et al. 2001, which itself identified a significant data gap surrounding habitat preferences of these fishes. In order to develop this body of available information and

help reduce uncertainty in future habitat assessments, Agnico will help to facilitate one or more research studies on habitat preferences of fish common to the Meadowbank area. Currently, three projects related to fish habitat preferences are proposed.

2.3.1 Lake Fish Habitat Preferences

2.3.1.1 Introduction

In order to work towards updating HSIs for northern lake fish species, Agnico is proposing to collaborate with a team of researchers from various academic institutions and DFO, to support a literature review and field assessment of northern fish species' habitat associations.

The research team would be lead by Dr. Susan Doka (DFO Central and Arctic Region), and would include Tom Hoggarth, Liz Patreau, Bev Ross and Martyn Curtis (DFO Fisheries Protection Program and Ecosystem Management), Drs. Mike Rennie & Nandakumar Kanavillil (Lakehead University), Dr. Ken Minns (DFO Science Emeritus & University of Toronto), Drs. Neil Mochnacz, Paul Blanchfield (DFO Science), as well as graduate students to be determined.

Initially, Agnico is proposing to provide in-kind support for travel and accommodations of field crews on their Meadowbank site for this project, but this involvement could be extended depending on evolution of the study and interests of the MFRAG. More details on initial proposed budgets and levels of support for each project are provided in Section 2.5.

The objectives and methods below were provided by Dr. Doka.

2.3.1.2 Objectives

1. To systematically review the literature and compile unpublished information on northern fish species and their habitat associations and environmental tolerances since the last compilation of data was generated for lakes (Richardson et al 2001). Rivers (last reviewed in Evans et al 2001) may be addressed at a later date. This compilation may include the fish-out database held by DFO Science Winnipeg (Hedges, unpub data).

2. To outline data gaps in our knowledge of northern species and their life-cycle habitat needs and environmental tolerances that would be related to impacts from mining and offset creation or improvements.

3. To sample northern fish communities of several lakes in Nunavut in natural, impacted and offset areas to compare to the literature and data findings above and fill data gaps locally required for an evidence-based approach to calibrating, validating and standardizing evaluation methods for habitat loss and offsets for major projects in the area.

4. To scope the area for a future telemetry project to address a known gap, namely overwintering habitat usage.

2.3.1.3 Methods

Literature review: Following closely the Centre of Environmental Evidence guidelines for systematic literature review, a graduate student with Lakehead University under the co-

supervision of Dr. Mike Rennie and Dr. Susan Doka will review primary and grey literature sources as well as canvas for unpublished data (e.g. Golder & Associates 2016) on up to 40 northern species with current fish distributions in lakes of Nunavut and the Northwest Territories.

Meta-analysis and gap analysis: The data extracted from the review will be analyzed using appropriate statistical methods to synthesize the information by life stage (4 stages: spawning, nursery, juvenile and adult habitats) for 40 northern fish species with ranges in Nunavut and the Northwest Territories. Habitat variables of interest include: substrate associations, thermal tolerances and preferends, timing windows, depth associations at different seasons, turbidity tolerances, species-species associations, flows and lake order, cover associations, pH and dissolved oxygen tolerances. Data and information from northern areas will be compared with new and existing information from more southern locales in North America.

Field Sampling: Working with Agnico Eagle Mines – Meadowbank Division to coordinate existing scientific work and travel, the graduate student and DFO support staff will work with consultants to sample up to 6 lakes. Lakes may include Baker Lake (an intended impact site), a proposed offset area, and 4 natural lakes in the vicinity. If possible another impacted lake will be sampled if technically feasible for travel. Techniques used to sample fish distributions will include acoustics (likely BioSonics DTX), trap nets or minnow traps and gill nets, and will link to ongoing e-DNA results (from a separate study) if available. Habitat sampling methods will include bottom acoustics (BioSonics), sediment grabs, longterm logger deployments and multiprobe sonde surveys. We will focus on gap filling if information is already available from the proponent or DFO for certain lakes.

2.3.1.4 Timeline

Initial field assessments will commence in summer 2018, and as currently proposed the study will be conducted over a two- to three-year duration (2018 – 2020).

2.3.1.5 Project Deliverables

The following project deliverables were provided by Dr. Doka.

CSAS or technical document on northern fish species and their habitat associations at northern latitudes to complement Richardson et al 2001.

Also to be included in the above document or separate paper(s):

- Statistical or meta-analysis of data to guide offsetting and restoration in the north as well as updates to tools like HEAT (CSAS SAR 2017, Abdel-Fattah et al 2017a,b and Abdel-Fattah et al 2018, Minns et al 1999).

- Data and knowledge-gap identification to be addressed by future research.

2.3.2 Arctic Grayling Occupancy Modeling

2.3.2.1 Introduction

As a complementary measure for the Whale Tail Pit project offsetting, Agnico is proposing to work with Dr. Heidi Swanson (University of Waterloo) to validate Arctic grayling occupancy

models for use in the Kivalliq region, in follow-up to work she has previously conducted in the Northwest Territories[1]. The following background information on occupancy models was provided by Dr. Swanson.

2.3.2.2 Background

Evaluating the effectiveness of habitat offsetting measures requires robust and accurate data on fish populations both before and after enhancements have taken place. Obtaining these data in northern, remote environments is difficult and expensive. As a result, there is often a great deal of uncertainty around the findings.

All methods of fisheries monitoring have advantages and disadvantages, but obtaining robust and reliable data on fish abundance from standard techniques (such as three-pass depletion surveys) is especially problematic in the Arctic, where studies are expensive, logistics (and thus, often timing of surveys) are constantly changing, and backpack or big boat electrofishing (standard in many abundance three-pass depletion surveys) requires trained and certified operators and specialized equipment (which has to be shipped up from the south). In addition, to meet the required intensity of sampling required for abundance estimates, the spatial scale of abundance surveys is often small.

Occupancy surveys and occupancy models are a relatively new (~15 years) method of monitoring technique for animals. Instead of focusing on the number of animals, occupancy models focus on presence/absence. For each study, the spatial scale is carefully considered and adapted to reflect how far fish are expected to move, the scale at which habitats might be being selected, and the presence of any disturbance (or enhancement). Presence/absence of fish is then related to habitat characteristics, such as water depth, velocity, bank type, substrate, etc. When stakeholders need information about abundance, the models can give broad information about 'high,' 'medium,' and 'low' "states" of occupancy if the study and sampling are set up to achieve this. Also, unlike any other model, occupancy studies also consider the probability of detection – that is, if no fish were captured or observed, what was the chance that the fish were there, but weren't found? The probability of detection can then be related to habitat variables. For example, we might be less likely to find fish in a stretch of stream with large boulders – not because there are less fish, but simply because they are more difficult to catch. Probability of detection can also be related to factors that affect catchability such as the experience of the sampler, the substrate, and the weather. When we explicitly take into account how our ability to catch fish is affected by external factors, we are much better able to model the types of habitats that fish are using.

2.3.2.3 Objectives

Objectives of this work will be the development of occupancy models for Arctic grayling in the Meadowbank region, and a comparison of model fit and Arctic grayling habitat predictors in this area with those observed in the NWT.

2.3.2.4 Methods

[1] Baker, L.F., Artym, K.J., Swanson, H.K., 2017. Optimal sampling methods for modelling the occupancy of Arctic grayling (*Thymallus arcticus*) in the Canadian Barrenlands. Canadian Journal of Fisheries and Aquatic Sciences 74, 1564-1574.

Methods will involve characterizing occupancy of Arctic grayling in relation to habitat characteristics. Specifically this occurs through presence-absence surveys (visual, electrofishing) and assessment of habitat characteristics (stream width, depth, velocity, vegetation cover, bank formation, distance to overwintering habitat) for 30-m stream segments (number of replicates to be determined through initial field surveys). Study sites will include anthropogenically-impacted as well as reference systems in the Meadowbank and Baker Lake area.

As a component of previous No Net Loss Plans, Agnico has constructed habitat enhancement features for Arctic grayling spawning, and has been monitoring the success of these features over a number of years. In addition, Arctic grayling habitat may be impacted by wastewater treatment upgrades in the hamlet of Baker Lake, where changes in nutrient regimes and contaminants could affect use of this system by fish. Both of these habitat manipulations provide interesting opportunities to evaluate the use of occupancy models for the Kivalliq region, in comparison to reference systems.

2.3.2.5 Timeline

Initial reconnaissance and habitat characterizations for this study will begin in 2018, and the project is expected to be complete within three years.

2.3.2.6 Project Deliverables

The development and publication of occupancy models for this region will assist proponents and regulators in future assessments of potential new project impacts and design of offsetting measures for Arctic grayling habitat.

2.3.3 Pit Lake Habitat Assessments

2.3.3.1 Introduction

In recent years, significant uncertainty has arisen regarding the capability of pit lakes to act as fish habitat. While DFO previously accepted reflooded pit areas as habitat in offsetting plans, these areas are no longer considered habitat regardless of connectivity or modeled water quality. As a result, data regarding fish use in pit areas will no longer be regularly documented through standard monitoring programs. However, since multiple pits of various sizes at the Meadowbank site are planned to be reflooded in the relatively near term (2025 – 2029), there is an opportunity to thoroughly characterize fish use of pit lake habitat and population growth in re-flooded lakes through a research program.

Currently, monitoring for general fish presence using underwater camera or angling in lake basin areas adjacent to pits forms a component of Agnico's existing Habitat Compensation Monitoring Plan for the Vault pit. However, the proposed research program could intensify methods to document habitat preferences throughout the re-flooded basin and pit area through techniques such as telemetry and sonar, and further compare movements to reference lakes. This assessment could also be expanded to other pit areas (e.g. Phaser pit, Whale Tail Pit) which are not considered as fish habitat in offsetting plans and thus not planned to be monitored for fish use under compliance programs.

Due to the extended timeframe for this project compared to others (field work 2025+), specific researchers and methods have not been identified at this point. However, following approval of the study topic by DFO as a complementary measure, steps could begin to be taken towards preliminary project objectives to be completed in the years prior to commencement of field work, such as initial literature reviews and methods development.

2.3.3.2 Objectives

Characterize fish use of new pit lake habitat in relation to habitat and water quality variables, and particularly in relation to reference systems.

2.3.3.3 Methods

To be determined in consultation with the identified research team. Likely to include literature review and field assessment in multiple flooded pit areas at the Meadowbank site. Potential to collaborate across sites with other interested industry partners.

2.3.3.4 Timeline

Flooding of pits at the Meadowbank site is currently planned to be complete in between 2027 - 2029 (Phaser, Vault, and Whale Tail Pits), after which time field studies could begin. Initial literature reviews and methods development could occur in the years prior to pit reflooding, or Agnico could collaborate with other industry partners if appropriate sites are available in other locations in the nearer term.

2.3.3.5 Project Deliverables

Since significant uncertainty exists in the literature and between fisheries biologists regarding potential for fish use of habitat in flooded pit lakes, this research would help to provide a better foundation for assessing long-term impacts of development projects in the north on local fish populations.

2.4 EDNA METHODS DEVELOPMENT

2.4.1 Introduction

eDNA methods present a potentially useful tool for rapid and non-invasive assessments of fish communities, but have not been significantly developed or validated for Arctic systems. With their relatively low biodiversity and frequently isolated populations, Arctic lakes present a compelling location for eDNA research.

Since assessments of fish communities are conducted frequently for monitoring, fishout, or research purposes across the Meadowbank site, there are regular opportunities to pair eDNA analyses with data from traditional surveys, or to develop stand-alone research studies. Agnico is very interested in developing tools for estimating fish abundance and biomass, as well as furthering field tests for determining species presence/absence.

As a complementary measure for the Whale Tail Pit project, Agnico is proposing to provide partial support for the University of Manitoba COGRAD group’s project on development and optimization of non-invasive monitoring tools based on DNA metabarcoding technology to measure fish species assemblage in Canada’s Eastern Arctic Kivalliq Region of Nunavut. This

project is currently being supported in part by the KIA, and in 2017 Agnico provided transit and accommodation onsite for two researchers to conduct an initial field reconnaissance and sample collection. The background, preliminary objectives, methods, and deliverables of this project as provided by the COGRAD research group are described below.

2.4.2 Background

It is necessary to efficiently monitor water quality and assess fish species distributions in aquatic ecosystem for their effective management and conservation. Traditional monitoring techniques which rely on physical identification of species remain problematic due to non-standardized sampling methods, cost, labour intensity, and their invasive nature. Traditional methods become even more difficult in remote Arctic areas. Hence, there is an urgent need for alternative, efficient and customized techniques for large-scale monitoring of fish populations.

Recently, the environmental DNA (eDNA) method for the direct detection of specific DNA from water has been recognized as a powerful tool for monitoring aquatic species. eDNA– defined as: genetic material obtained directly from environmental samples without any obvious signs of biological source material – is an efficient, non-invasive and easy-to-standardize sampling approach. Coupled with sensitive, cost/field time-efficient and ever-advancing DNA sequencing technology, it may be an appropriate candidate for the challenge of biodiversity monitoring in remote Arctic areas.

2.4.3 Objectives

The main goal of this project is to develop and optimize monitoring tools based on eDNA metabarcoding technology to assess fish species assemblages in in Canada's Eastern Arctic Kivalliq Region of Nunavut and population changes near the Amaruq mine site.

Objectives are:

1. Development and optimization of the eDNA metabarcoding technique adapted for arctic and mining environment aiming the Amaruq site and utilizing the method as a substitute for current fish species determination approaches.

2. Producing guidelines for handling and analyzing of samples and deliver the method and provide training to the local community.

3. Produce long-term reliable and precise baseline data on the distribution of aquatic associated fish species in the Amaruq mine site lakes using developed eDNA technology.

4. Producing data on the physiochemical properties of the lake water including dissolved mineral content to understand if any changes in stated parameters affect the eDNA/fish assemblage results.

5. Examine the impact of flooding Whale Tail Lake South Basin with the coincident changes in physiochemical properties of the aquatic area (e.g., increase in turbidity, dissolved solids) on the fish population using developed eDNA technique.

6. Collecting baseline eDNA and water quality data on lakes nearby Amaruq mine site outside the mining activity (potential candidates include B3 or DS1) and use them as a control for population changes.

2.4.4 Methods

We are proposing a 5-year plan that would involve development and utilizing eDNA metabarcoding approach in order to measure fish assemblage in the Amaruq areas. Environmental DNA metabarcoding technology will be developed and optimize to detect fish species including Arctic Char, Arctic Grayling, Lake Trout, Cisco, Round Whitefish, Burbot, Slimy Sculpin, Ninespine Stickleback, Hybridized Lake Trout/Arctic Char and analyze their relative abundances. For water quality data, temperature, pressure, dissolve oxygen, pH, salinity, conductivity, and dissolved metals including Cu/ Zn/ Cd/Fe/Hg/Mn will be measured (some metrics may be obtained through regular compliance monitoring programs).

Water samples for all parameters will be collected through three sampling period in each year; at melt, midsummer, and immediately prior to freeze up. First round of sampling was done before mining activity starts (July 2017). The second round of sampling will be done at the start and during mining operation and the final round of sampling will be done after mining operations have ceased. The result will be used to assess the influence of mining activity on changes in fish species populations, as measured through eDNA methods.

2.4.5 Timeline

This project is currently proposed to occur over an additional three year field study period (2017 – 2020), and a five-year total time frame.

2.4.6 Project Deliverables

Once optimized for mining restoration, eDNA metabarcoding could allow industry specialists to identify indicators of successful restoration and evaluate restoration with greater frequency and spatial resolution. In addition, biological recovery may be tracked over multiple mining sites to determine if there is a predictable trajectory. This opens up the possibility of effective adaptive management, informing researchers and industry specialists when intervention may be necessary to achieve restoration goals.

Education and training of the local community on collection, storage, shipment of samples to the U of M is a priority, and will be provided by members of the U of M. COGRAD commits to support, involve, or engage Indigenous organizations in this project. We intend to install a rigorous Field Sampling Protocol and to train and educate local people to assist in the project. In addition, we will establish a team at the U of M composed of fish experts (Department of Biological Science) in conjunction with Analytical Chemists (MCAL) and experts in remote sensing.

2.5 LEVEL OF SUPPORT, STUDY TIMELINES, AND DURATION

For each proposed project, the level of support provided by Agnico may differ. Based on initial consultation with each researcher and the funding available as determined by the cost estimate provided to DFO (March, 2018), the estimated value of Agnico's contributions for each study are shown in **Table *1***.

Table 1. Estimated value of direct monetary and in-kind support to be provided by Agnico Eagle for each complementary measure (research project) proposed as fish habitat offsetting for Whale Tail Pit[2].

Project	Researcher[3]	Type of Support	Study Start Date	Study Duration	Estimated Contribution (rounded) [4]
Changes in Aquatic Productivity	Dr. Heidi Swanson, University of Waterloo	Full funding	Summer 2018	3-4 years	$100,000
Baker Lake Wastewater Assessment	Dr. Rob Jamieson, Dalhousie University (et al.)	Partial funding – industrial partner in NSERC CRD (application to be submitted)	Summer 2018	5 years	$630,000
Lake Fish Habitat Preferences	Dr. Susan Doka, DFO Science (et al.)	Mainly in-kind support	Summer 2018	2 years	$50,000
Arctic Grayling Occupancy Modelling	Dr. Heidi Swanson, University of Waterloo	Full funding	Summer 2018	3 years	$150,000
Pit Lake Habitat Assessment	TBD	TBD	TBD	5 years	$450,000
eDNA Methods Development	University of Manitoba COGRAD group	Partial funding	Summer 2018/2019	3-5 years	$240,000
TOTAL Contributions (as calculated through LOC)					$1,618,046.22

2.6 MFRAG, PLAN REVIEW AND UPDATES

A Meadowbank Fisheries Research Advisory Group (MFRAG) will be established to review and approve any changes to research projects proposed under the Fish Habitat Offsetting Plan for Whale Tail Pit. This group will include DFO, Agnico Eagle, KIA, HTO and a third party research advisor. The MFRAG will meet annually to review project progress reports, propose and approve or reject new projects or project components, and assess whether criteria for success have been met.

[2] The contributions are based on the most current available information and may be subject to change. The total Agnico Eagle contribution will be prescribed by DFO, in accordance with agreed upon LOC calculations

[3] Partnerships with KIA, Baker Lake hamlet and DFO are established for respective projects.

[4] Funding is an estimate. Agnico Eagle expects funding to be leveraged by researchers and their respective institutions through additional grant applications. As a result, based on previous experience, it is possible that total project expenditures could double, benefiting the researchers and research projects.

This plan describing complementary measures for Whale Tail Pit fish habitat offsetting will be updated annually to reflect changes and progress in research projects and to track project funding to date.

Greenhouse Gas Reduction Plan, Version 1



AGNICO EAGLE

Meadowbank Division

Whale Tail Pit – Greenhouse Gas Reduction Plan

MAY 2018
VERSION 1

EXECUTIVE SUMMARY

Agnico Eagle Mines Limited – Meadowbank Division (Agnico Eagle) is proposing to develop the Whale Tail Pit and Haul Road Project (Project), a satellite deposit located on the Amaruq property, to continue mine operations and milling at the Meadowbank Mine. The proposed Whale Tail open pit will be mined by truck-and-shovel operation.

The impacts of climate change have the potential to affect a wide range of environmental, social and economic systems of value to Inuit, as indicated by the observations and changes experienced by Baker Lake traditional land users. Climate change is a global issue caused by emissions of greenhouse gases (GHG).

This document presents the Greenhouse Gas Reduction Plan as per Nunavut Impact Review Board (NIRB) Project Certificate No.008, Condition 3. It discusses predicted emissions for the Project (including Whale Tail Project and Meadowbank), sources of GHG, as well as monitoring measures and energy reduction initiatives.

Development of the Whale Tail Pit and emissions from traffic along the haul road to Meadowbank Mine are predicted to result in a 14.8% increase in GHG emissions for Nunavut. By adding the Meadowbank mill and camp activities, the emissions for the Project are predicted to result in a 56% increase in GHG emissions for Nunavut. When compared to Canada's national emissions (714,000 kt CO2e/yr), the Project contributes to a less than 0.04% increase in national GHG emissions (Agnico Eagle, 2016). Four (4) main sources of GHG emissions have been identified for the Project; off-road vehicle exhaust, on-road vehicle exhaust, power plant and camp heater.

Emissions of GHG for the Whale Tail Pit Project and Meadowbank Mine will be calculated on a monthly basis and reported annually through Environment Canada's Greenhouse Gas Emissions Reporting Program (GHGRP) and NIRB Annual Report. This report will also include a discussion on the monthly variations of GHG emissions, as well as a comparison with FEIS emission predictions.

A number of initiatives are planned to reduce project-related GHG emissions over the Project lifecycle. Some strategies have already been implemented while others are currently being assessed.

DOCUMENT CONTROL

Version	Date (YM)	Section	Page	Revision
1	May 2018	ALL	-	Comprehensive plan for the Whale Tail Pit Project.

TABLE OF CONTENTS

Executive Summary ..... **i**

Table of Contents ..... **iii**

Acronyms ..... **v**

Units ..... **v**

Section 1 • INTRODUCTION **1**

Section 2 • PROJECT BASELINE EMISSIONS **5**

2.1 Project Baseline Emissions Predictions 5

2.2 Main Sources of Greenhouse Gas for the Project 6

Section 3 • DESCRIPTION OF MONITORING MEASURES **7**

3.1 Greenhouse Gas Emission Monitoring 7

3.2 Data Analysis and Reporting 7

Section 4 • Reduction Initiatives **8**

4.1 Strategies to Reduce Fuel Consumption 8

4.1.1 Heat recovery system – promote cogeneration to increase efficiency and convert to glycol 8

4.1.2 Energy Diagnostic Page 8

4.1.3 Optimization integrated with mining plan 9

4.1.4 Incinerator capacity and alternative 9

4.2 Strategy to Replace Fuel Consumption by Renewable Energy 9

4.3 Strategy Development and Awareness 9

4.3.1 Energy saving staff committee 9

4.3.2 Towards Sustainable Mining flow chart 10

4.3.3 Raising Awareness 10

Section 5 • REFERENCES **11**

List of Figures in Text

Figure 1.1 Location of Whale Tail Pit 3

List of Tables in Text

Table 1.1 Overview of Timeline and General Activities

Table 2.1 Greenhouse Gas Summary for the Project and the Meadowbank Mill (2020)

ACRONYMS

Agnico Eagle	Agnico Eagle Mines Limited – Meadowbank Division
ANFO	Ammonium nitrate/fuel oil
FEIS	Final Environmental Impact Statement
GHGRP	Canada's Greenhouse Gas Emissions Reporting Program
NIRB	Nunavut Impact Review Board
Project	Whale Tail Pit and Haul Road Project
TSM	Towards Sustainable Mining
CO_2	carbon dioxide
CH_4	methane
N_2O	nitrogen dioxide

UNITS

<=	less than
%	percent
CO_2e/yr	carbone dioxide equivalents per year
kt CO_2e	kilotonnes of carbone dioxide equivalents
kt CO_2e/yr	kilotonnes of carbone dioxide equivalents per year
t CO_2e/yr	tonnes of carbone dioxide equivalents per year
L	liters
km	kilometre(s)
km^2	square kilometre(s)
kW	kilowatt

SECTION 1 • INTRODUCTION

Agnico Eagle Mines Limited – Meadowbank Division (Agnico Eagle) is planning to develop the Whale Tail Pit and Haul Road Project (Project), a satellite deposit located on the Amaruq property, to continue mine operations and milling at the Meadowbank Mine.

The Amaruq property is a 408 square kilometre (km^2) site located on Inuit Owned Land approximately 150 kilometres (km) north of the Hamlet of Baker Lake and approximately 50 km northwest of the Meadowbank Mine in the Kivalliq Region of Nunavut. The deposit will be mined as an open pit (i.e., Whale Tail Pit), and ore will be hauled on the Whale Tail haul road to the approved infrastructure at the Meadowbank Mine for milling.

The proposed Whale Tail open pit will be mined by truck-and-shovel operation. As presented in Table 1.1, there are four main phases to the development: 1 year of construction, 4 years of mine operations (2019 to Q1 2022), 8 years of closure, followed by the post-closure period. Pending regulatory approvals, the construction phase is anticipated to start at the beginning of the third quarter of Year -1 (2018) and focus on site preparation and construction of infrastructure to support mine development, along with commencement of open pit development.

The general mine site location for the Project is shown in Figure 1.1. Mine development will include the following major infrastructures:

- industrial area (camp and garage);
- crusher;
- ore stockpiles;
- rock and overburden storage facilities;
- landfill;
- haul and access roads;
- open pit mine; and
- dewatering dikes.

Table 2.1 Overview of Timeline and General Activities

Phase	Year	General Activities
Construction	Year -1	• Construct site infrastructure • Develop open pit mine • Stockpile ore
Operations	Year 1 to 3	• Open pit operations • Transport ore to Meadowbank Mine • Stockpile ore • Discharge Tailings in Meadowbank TSF
	Year 4	• Complete transportation of ore to Meadowbank Mine • Complete tailings discharge in Meadowbank TSF
Closure	Year 4 to 11	• Remove non-essential site infrastructure • Flood mined-out open pit • Re-establish natural Whale Tail Lake level
Post-Closure	Year 11 forwards	• Site and surrounding environment monitoring

TSF = Tailings Storage Facility

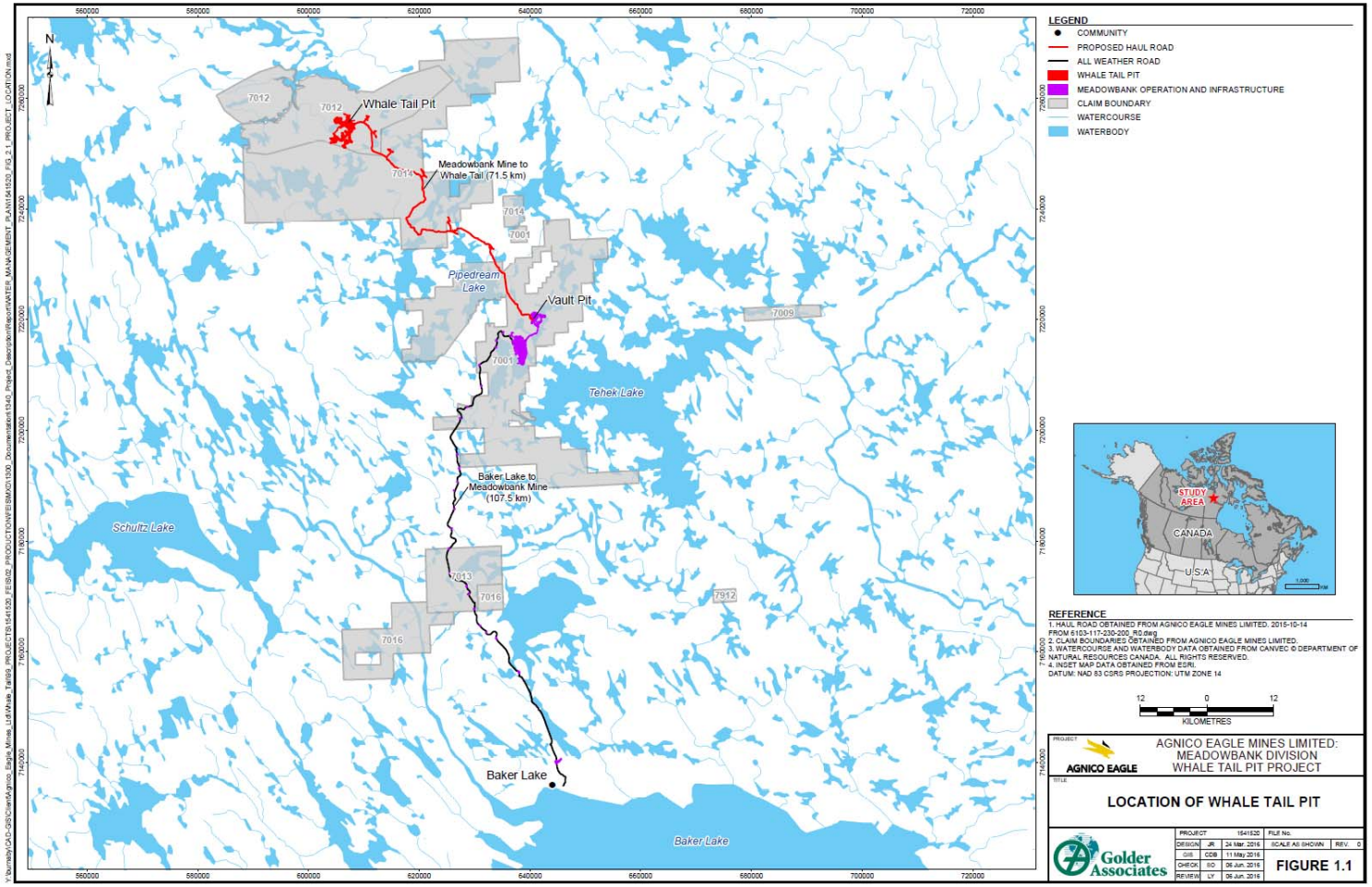

Figure 1.1 Location of Whale Tail Pit

The impacts of climate change have the potential to affect a wide range of environmental, social and economic systems of value to Inuit, as indicated by the observations and changes experienced by Baker Lake traditional land users. Climate change is a global issue caused by emissions of greenhouse gases (GHG). Changes to weather and climate have the potential to affect environmental, social and economic systems of value to the Inuit and other regional stakeholders.

Weather and climate have been identified as valued components (VCs) in the Whale Tail Final Environmental Impact Statement (FEIS) Amendment, Volume 4 – Atmospheric Environment, Section 4.1.2 (Agnico Eagle, 2016). Community elders are concerned about climate change and recent unpredictability in weather (Volume 7, Appendix 7-A) (Agnico Eagle, 2016).

This document presents the Greenhouse Gas Reduction Plan. The purpose of this Plan is to provide consolidated information on the management and monitoring of GHG for the Project, by presenting predicted emissions for the Project (including Whale Tail Project and Meadowbank), sources of GHG, followed by monitoring measures and initiatives taken to reduce emissions.

As per Nunavut Impact Review Board (NIRB) Whale Tail Project Certificate No.008 Condition 3, the Greenhouse Gas Reduction Plan should be submitted to the NIRB within 60 days of the issuance of the Project Certificate, with results submitted annually thereafter or as may otherwise be required by the NIRB. This Plan includes:

- An estimate of the Project's GHG baseline emissions;
- A description of monitoring measures to be undertaken, including the methods, frequency, parameters, and a description the analysis;
- A description of reduction initiatives planned and taken, to reduce project-related GHG emissions over the Project lifecycle.

SECTION 2 • PROJECT BASELINE EMISSIONS

2.1 Project Baseline Emissions Predictions

As presented in the Whale Tail FEIS, Volume 4 – Atmospheric Environment, Section 4.2.3.1 (Agnico Eagle, 2016), an assessment was completed in order to estimate the GHG emissions related to the Project. As part of this assessment, Project-related GHG emissions were calculated using methods consistent with Canada's Greenhouse Gas Emissions Reporting Program (GHGRP).

Table 2.1 presented below summarizes predictions of GHG emissions for the Project for the peak year of production in 2020 (Agnico Eagle, 2016). Mining production will likely be at its highest, meaning that most of the heavy and light equipment will be in operation, and that camp occupancy will be at its maximum. Therefore, the predictions, estimated at 64.2 kilotonnes of carbon dioxide equivalent per year (kt CO_2e/yr), are considered to be the maximum expected for the Project.

Table 2.1 also summarizes predictions from the Project plus those from the existing Meadowbank mill and camp in 2020 (Agnico Eagle, 2016). As the ore material from the Whale Tail Pit Project will be hauled to the approved infrastructures at the Meadowbank Mine for processing and tailings deposition, the predicted emissions for Meadowbank are included with the Whale Tail Pit Project predicted emissions. Total estimated emissions for 2020 are estimated at 244 kt CO_2e/yr.

Since the ore throughput for the Meadowbank mill from the Whale Tail Project is predicted to be 15% to 20% lower than current throughput when processing ore from the Whale Tail Pit, it is estimated that the GHG emissions rate for the mill will be 180 kt CO_2e/yr. This is considered a conservative estimate for the Meadowbank mill processing the Whale Tail Pit ore, as presented in Table 2.1.

There are four (4) main sources of GHG emissions considered for the Project. These sources are described in Section 2.2 below.

Table 2.1 Greenhouse Gas Summary for the Project and the Meadowbank Mill (2020)

Emissions Source	Greenhouse Gas Emissions (kt CO_2e)
Off-road exhaust	52.8
On-road exhaust	4.4
Power plant	4.1
Camp heater	2.9
Whale Tail Project Total [(a)]	64.2
Meadowbank mill	180.0
Whale Tail Project plus Meadowbank Total	244.0

(a) Project Total includes emissions from the Whale Tail Pit and the Haul Road.
kt CO_2e = kilotones of carbon dioxide equivalents; % = percent; <= less than
Source: Modified from Whale Tail FEIS, Volume 4 – Atmospheric Environment (Agnico Eagle, 2016)

2.2 Main Sources of Greenhouse Gas for the Project

As presented in Table 2.1, there are four (4) main sources of GHG identified for the Project predicted emissions:

- Off-road vehicle exhaust emissions which include the heavy and light vehicles not operating on the haul road, but rather in areas of production such as the open pit;
- On-road vehicle exhaust emissions which stand for traffic on the 63 km Whale Tail Haul Road;
- Power plant related GHG emissions, which includes the four (4) expected Caterpillar 3516 generators installed in the power plant to provide power for the mine site - two running and two on standby;
- Camp heater related GHG emissions, including a 500 kW diesel-fired heater expected for the Project.

SECTION 3 • DESCRIPTION OF MONITORING MEASURES

3.1 Greenhouse Gas Emission Monitoring

Emissions of GHG for the Whale Tail Pit Project and Meadowbank Mine will be calculated on a monthly basis. Emissions related to the four (4) main sources described in Section 2 will be calculated. Although considered minimal compared to the other sources, emissions produced by the following activities will also be calculated and compiled:

- aviation (commercial charter planes required for the transportation of employees and cargo freight);
- light truck transportation using gasoline;
- blasting (use of emulsion - ammonium nitrate/fuel oil (ANFO)) ;
- heating using propane.

Quantity of diesel (in liter) used for the generation of electricity and for light and heavy equipment will be recorded on a monthly basis for the Project. The quantities of aviation fuel (liter), propane (liter) and ANFO explosive (tonne) will also be recorded on a monthly basis. From those quantities, the direct emissions based on ``Standard Emissions Factors`` will be calculated. For each sources, carbon dioxide (CO_2) emissions are calculated (in tonnes), as well as methane (CH_4) and nitrogen dioxide (N_2O) in tonnes of carbon dioxide equivalent (CO_2e tonnes). Emissions calculated for each sources are added to obtain a monthly total Project related emissions in tonnes of carbon dioxide equivalents (t CO_2e/yr).

3.2 Data Analysis and Reporting

Estimated GHG emissions for the Project (including Whale Tail Pit and Meadowbank) will be compiled and analysed on a monthly basis. Data will be reviewed and variations will be correlated to factor of causes such as seasonal climate, production activities or other factors of influence identified.

GHG emissions will be reported on an annual basis, as per the requirements of the Whale Tail NIRB Project Certificate No.008, in the Whale Tail Annual Report and to Environment and Climate Change Canada via the GHGRP. The NIRB Annual Report will also include a discussion on GHG emissions monthly variations, as well as a comparison with FEIS emission predictions. Emissions related to aviation, blasting, propane heating, and light truck transportation using gasoline will also be presented and analysed.

SECTION 4 • REDUCTION INITIATIVES

A number of reduction initiatives are planned to reduce project-related GHG emissions over the Project lifecycle. While some have already been implemented others are currently being assessed.

4.1 Strategies to Reduce Fuel Consumption

4.1.1 Heat recovery system – promote cogeneration to increase efficiency and convert to glycol

The main Meadowbank power plant consists of six 4,400 kW generators and a heat recovery system. The heat recovery system was not performing as expected, resulting in additional operating costs, higher GHG emissions, and low comfort level for workers in certain buildings. Cogeneration is recognized as an efficient way of using fossil energy by recovering heat generated from a facility that is usually exhausted into the environment. The optimization of the power plant efficiency was completed in two (2) main phases; increasing cogeneration plant heat production through recovery and synchronizing heat consumption with heat production.

At Meadowbank, the service building heating system was synchronized with the recovered heat (exhaust of generators), further increasing heat production efficiency of the cogeneration plant through heat recovery. The average recovered heat increased by over 50%, replacing the need for auxiliary electric heating at Meadowbank. The power plant consumes now approximately two million (2,000,000) liters less of diesel per year than originally planned, which represents a GHG reduction of approximately 5,600 t CO_2e/yr.

Furthermore, a glycol system, replacing the electric one, was installed in the service building at Meadowbank and is fed by the heat recovery system. This results in diesel consumption reduction and GHG emissions reduction.

A similar cogeneration system and usage of glycol is being evaluated at the Whale Tail Pit Project, resulting in further GHG emissions reduction if implemented.

4.1.2 Energy Diagnostic Page

The implementation of an ``Energy Diagnostic Page`` on the operation screens of the power plant would allow the energy leader staff to monitor the performance of the heating system on a daily basis. This new monitoring tool would also allow the setting of power consumption targets for specific areas of the facilities and of alarms with automated emails when consumption is over the fixed target. This tool would promote rapid identification and diagnostic of problems in the heating system, which is a large contributor to the GHG emissions. The implementation of this device is being evaluated at the moment.

4.1.3 Optimization integrated with mining plan

The Mine and Mill departments are the main energy consumers for the Project, and therefore the main GHG emissions contributors. Both departments are continuously assessing ways to increase their efficiency, whether by reducing the number of trucks or by optimizing cycle time of the fleet. The dispatch system used to monitor the production activities in the open pit and during hauling of the material also contributes to increase the efficiency of the production equipment. Finding optimal rock fragmentation for rock blasting in the pit is also among the ways to reduce rock grinding required at the Mill, reducing energy consumption. These optimizations, along with others, can reduce the energy used for production activities, and therefore reduce GHG emissions and overall costs.

4.1.4 Incinerator capacity and alternative

The optimization of the incinerator cycles to increase capacity with the same energy consumption, while respecting the protocols and procedures to ensure proper operation of the facility, has been completed with success at Meadowbank. The optimization will continue when the incinerator receives waste from the Whale Tail Project.

The potential of food waste composting instead of burning at the incinerator is being evaluated at the moment, to assess its global impact on GHG emissions reduction. This would potentially reduce the amount of waste sent to the incinerator, and therefore reduce the facilities' burning and energy needs, and related GHG emissions. In addition to reducing emissions, composting would consist in an innovative project in the North.

4.2 Strategy to Replace Fuel Consumption by Renewable Energy

Renewable energy alternatives are being assessed and validated on a continuous basis. Historically, trials were conducted in 2015 to assess maintenance needs and reliability of solar panels at Meadowbank. A total of nine (9) solar panels were ordered to assess their performance in a northern environment during the 2015 and 2016 winter months. The trials were successful. At this time, one alternative energy option being assessed is the feasibility of implementing a wind power system.

4.3 Strategy Development and Awareness

4.3.1 Energy saving staff committee

This committee is formed by a group of employees from various departments, who work together to identify areas of improvement for energy consumption savings and to find innovative ideas to improve energy consumption and reduce GHG emissions. For example, the committee initiated the idea of composting food waste on site rather than using the incinerator.

4.3.2 Towards Sustainable Mining flow chart

The Towards Sustainable Mining (TSM) flowchart has been implemented with the Strategic Optimization Group and intends to create a visual approach for employees to understand the energy system and consumption on site, in order to create a venue for discussing energy-savings opportunities.

4.3.3 Raising Awareness

On a regular basis, the Environment and Camp Departments send emails and memos, or install posters to remind employees about the importance of saving energy. For example, the Camp Department staff place individual reminders in rooms during cleaning when the lights are left on by guests. The Environment Department sends regular communications about the ``no idling policy`` for vehicles on site, to avoid having vehicles left on idle mode while not in use. Inspections on site are also completed to raise awareness and enforce this policy.

SECTION 5 • REFERENCES

Agnico Eagle, 2016. Final Environment Impact Statement (FEIS) Volumes 1 to 8, Whale Tail Pit Project, Meadowbank Division. Volume 4 – Atmospheric Environment, Volume 7 – Human Environment.

Groundwater Monitoring Plan, Version 2.1

AGNICO EAGLE

WHALE TAIL PIT PROJECT

Groundwater Monitoring Plan

In Accordance with:
Project Certificate No. 008, T&C 15 and 16

Prepared by:
Agnico Eagle Mines Limited – Meadowbank Division

Version 2

Revision 1
February 2019

EXECUTIVE SUMMARY

Agnico Eagle Mines Limited – Meadowbank Division (Agnico Eagle) received a Project Certificate No.008 from the Nunavut Impact Review Board for the development of the Whale Tail Pit, a satellite deposit located on the Amaruq Exploration property.

The deposit will be mined as an open pit (i.e., Whale Tail Pit), and ore will be hauled by truck to the approved infrastructure at Meadowbank Mine for milling. Approximately 8.3 million tonnes (Mt) of ore will be mined from the open pit and processed over a three to four-year mine life. Ore from Whale Tail Pit will be crushed on site after which it will be transported to Meadowbank Mine for milling. The mill rate will be approximately 9,000 to 12,000 tonnes per day.

During mining, groundwater will flow into the open pit. This water is naturally high in total dissolved solids and will not be directly discharged out of the active mine site without treatment. Water management during mine operations will involve a variety of activities, described in detail in the Water Management Plan (WMP) developed for the Project (Agnico Eagle 2018a).

This Groundwater Management Plan (GWMP) reflects the commitments made with respect to submissions provided during the technical review of the FEIS, to comply with Terms and Conditions No. 15 and 16 included in the Project Certificate. This version of the plan includes:

1. Sampling results of the multi-level Westbay well system, that were completed in November 2018;

2. Thermal analyses completed in 2018;

3. Groundwater monitoring plan for horizontal and vertical groundwater flow; and,

4. Threshold and adaptive management plan related to the groundwater management.

Additional modelling efforts were completed in support of the water quality predictions at closure and post-closure. The additional modelling that were completed are: post-closure hydrogeological modelling in combination with the diffusion model; and, the pit lake hydrodynamic model and receiving lake (Mammoth Lake) hydrodynamic model.

The results of these studies indicated that arsenic release from the submerged pit wall (arsenic diffusion) will not affect water quality in the pit lake; and, mass transfer to water is very low even under the conservative assumptions of the calculations. Results from these studies further indicate that the seepage into and out of the pit lake are negligible in volume, particularly compared to surface water exchanged annually during post-closure when flows are re-established based on average climate year watershed runoff. The combination of results corroborates to support that the hydrogeological regime around the pit lake is not critical to pit lake water quality.

Agnico Eagle considers that the uncertainty related to the arsenic-related water quality issues emanate from the Water Rock Storage Facility and the fill water in the proposed pit lake created after the excavation of the ore body, are addressed, and the NIRB Project Certificate No. 008 terms and conditions No. 15 and 16 has been fulfilled.

The GWMP was updated to include additional monitoring of the horizontal and vertical groundwater flow to validate the prediction of these studies during the operation of the Whale Tail pit.

Agnico Eagle would like to clarify the monitoring requirements related to the Waste Rock Storage Facility (WRSF) are addressed in the approved ARD-ML monitoring plan, Water Quality and Flow Monitoring Plan, Water Management Plan and Waste Management Plan, as any seepage emanating from the WRSF is considered as a surface water management issue. The groundwater monitoring plan focus on the definition of the groundwater quality and flow reporting to the pit lake created before, during and after the excavation of the ore body.

DISTRIBUTION LIST

AEM – Geology Superintendent

AEM – Engineering Superintendent

AEM – Geotechnical Coordinator

AEM – Environment Superintendent

AEM – Environmental Coordinator

DOCUMENT CONTROL

Version	Date (YMD)	Section	Revision
1	2018-05-30	All	To address Project Certificate No. 008. T&C 15 and 16
2	2018/11/8	1.1, 2.4, 2.5	To address ECCC and CIRNAC recommendations issued in October 2018
2 Rev. 1	2019/02/19	All	To address NWB and CIRNAC comments discussed on February 13, 2019

Prepared by:
Golder Associates & Agnico Eagle Mines Limited - Meadowbank Division

TABLE OF CONTENTS

EXECUTIVE SUMMARY ..... **II**

DISTRIBUTION LIST ..... **IV**

DOCUMENT CONTROL ..... **V**

LIST OF FIGURES ..... **VII**

LIST OF TABLES ..... **VII**

1 INTRODUCTION **1**

1.1 Concordance 1
1.2 Objectives 2

2 BACKGROUND **4**

2.1 Site Conditions 4
2.2 Hydrogeology Setting 4
2.2.1 Conceptual Model 4
2.2.2 Post-Closure Hydrogeological and Thermal Analysis 9
2.2.3 Groundwater Volumes and Quality 11
2.3 Additional Data Collection 13
2.3.1 Groundwater Quality 13
2.3.2 Hydraulic Conductivity Testing 13
2.3.3 Verification of Horizontal and Vertical Groundwater Flow Direction 14

3 GROUNDWATER MONITORING PLAN **15**

3.1 Horizontal and Vertical Groundwater Flow Monitoring 15
3.2 GroundWater Quantity and Quality Monitoring 16
3.2.1 Water Quantity 16
3.2.2 Water Quality 17
3.3 Data Compilation and Updates to Groundwater Model 17

4 QUALITY ASSURANCE/QUALITY CONTROL PROCEDURES **21**

4.1 Quality Assurance 21
4.1.1 Field Staff Training and Operations 21
4.1.2 Laboratory 21
4.1.3 Office Operations 21
4.2 Quality Control 22

5 REFERENCES **24**

APPENDIX A – WHALE TAIL PIT POST-CLOSURE PIT LAKE THERMAL ASSESSMENT 25

APPENDIX B –2018 WESTBAY SYSTEM GROUNDWATER MONITRORING INVESTIGATION ...27

LIST OF FIGURES

FIGURE 1: SITE LOCATION.....3

FIGURE 2: HYDROGEOLOGY BASELINE STUDY AREA 6

FIGURE 3: CONCEPTUAL MODEL OF PRE-MINING DEEP GROUNDWATER FLOW REGIME - CROSS-SECTION VIEW.....7

FIGURE 4: CONCEPTUAL MODEL OF DEEP GROUNDWATER FLOW REGIME DURING MINING - CROSS-SECTION VIEW.....8

FIGURE 5: CONCEPTUAL MODEL OF DEEP GROUNDWATER FLOW REGIME IN LONG-TERM POST-CLOSURE - CROSS-SECTION VIEW.....9

LIST OF TABLES

TABLE 1: 2015 PREDICTED GROUNDWATER INFLOW TO THE OPEN PIT DURING OPERATIONS AND CLOSURE.....11

TABLE 2: 2015 PREDICTED GROUNDWATER INFLOW TO THE ATTENUATION POND DURING OPERATIONS AND CLOSURE.....12

TABLE 3: PREDICTED GROUNDWATER INFLOW AND GROUNDWATER QUALITY – POST-CLOSURE.....12

TABLE 4: GROUNDWATER ADAPTIVE MANAGEMENT PLAN 19

1 INTRODUCTION

Agnico Eagle Mines Limited – Meadowbank Division (Agnico Eagle) received Project Certificate No.008 from the Nunavut Impact Review Board (NIRB) for the development of the Whale Tail Pit (the Project), a satellite deposit located on the Amaruq Exploration property. The Amaruq Exploration property is a 408 square kilometre (km^2) site located on Inuit Owned Land approximately 150 kilometres (km) north of the hamlet of Baker Lake and approximately 50 km northwest of the Meadowbank Mine in the Kivalliq region of Nunavut (Figure 1). The deposit will be mined as an open pit, and ore will be hauled by truck to the approved infrastructure at Meadowbank Mine for milling.

This document presents Groundwater Monitoring Plan (GWMP) for the Whale Tail Pit. Overall water management for operations, closure, and post-closure is described in the Agnico Eagle Water Management Plan (WMP) (Agnico Eagle 2018a). The WMP provides descriptions of the water control structures and associated design criteria.

1.1 CONCORDANCE

Meadowbank Mine is an approved mining operation and Agnico Eagle is planning to extend the life of the mine by constructing and operating the Project. The Project was subject to an environmental review established by Article 12, Part 5 of the Nunavut Agreement. In June 2016, Agnico Eagle submitted a Final Environmental Impact Statement (FEIS) seeking a reconsideration of the Meadowbank Mine Project Certificate (No. 004/File No. 03MN107) and Type A Water Licence Amendment (No. 2AM-MEA1525) from the NIRB.

On July 2016, the NIRB determined that the proposed Project required a separate screening assessment under the Nunavut Agreement and the *Nunavut Planning and Project Assessment Act* (NuPPAA). A separate Project Certificate (NIRB Project Certificate No. 008) was issued for the Project on March 15, 2018 by the NIRB. This GWMP reflects the commitments made with respect to submissions provided during the technical review of the FEIS, to comply with Terms and Conditions No. 15 and 16 included in the Project Certificate.

This version of the plan includes:

1. Sampling results of the multi-level Westbay well system, that were completed in November 2018;

2. Thermal analyses completed in 2018;

3. Groundwater monitoring plan for horizontal and vertical groundwater flow; and,

4. Threshold and adaptive management plan related to the groundwater management.

Additional modelling efforts were completed in support of the water quality predictions at closure and post-closure. The additional modelling that were completed are: post-closure hydrogeological modelling in combination with the diffusion model; and, the pit lake hydrodynamic model and receiving lake (Mammoth Lake) hydrodynamic model.

The results of these studies indicated that arsenic release from the submerged pit wall (arsenic diffusion) will not affect water quality in the pit lake; and, mass transfer to water is very low even under the conservative assumptions of the calculations. Results from these studies further indicate that the seepage into and out of the pit lake are negligible in volume, particularly compared to surface water exchanged annually during post-closure when flows are re-established based on average climate year watershed runoff. The combination of results corroborates to support that the hydrogeological regime around the pit lake is not critical to pit lake water quality.

Agnico Eagle considers that the uncertainty related to the arsenic-related water quality issues emanate from the Water Rock Storage Facility and the fill water in the proposed pit lake created after the excavation of the ore body, are addressed, and the NIRB Project Certificate No. 008 terms and conditions No. 15 and 16 has been fulfilled.

The GWMP was updated to include additional monitoring of the horizontal and vertical groundwater flow to validate the prediction of these studies during the operation of the Whale Tail pit.

Agnico Eagle would like to clarify the monitoring requirements related to the Waste Rock Storage Facility (WRSF) are addressed in the approved ARD-ML monitoring plan, Water Quality and Flow Monitoring Plan, Water Management Plan and Waste Management Plan, as any seepage emanating from the WRSF is considered as a surface water management issue. The groundwater monitoring plan focus on the definition of the groundwater quality and flow reporting to the pit lake created before, during and after the excavation of the ore body.

1.2 OBJECTIVES

The objective of the GWMP is to provide consolidated information on groundwater management for the Project. The GWMP is divided into the following components:

- Introductory section (Section 1)
- A brief summary of the physical and hydrogeological setting at the mine site, the mine development plan and FEIS pit inflow predictions (Section 2)
- A description of the groundwater monitoring program (Section 3)
- A summary of procedures for quality assurance and quality control (QA/QC) (Section 4)

Whale Tail Pit

Meadowbank Mine to Whale Tail (71.5 km)

Baker Lake to Meadowbank Mine (107.5 km)

Pipedream Lake

Vault Pit

Tehek Lake

Schultz Lake

Baker Lake

7012
7014
7001
7009
7013
7016
7912

560000 580000 600000 620000 640000 660000 680000 700000 720000

7260000 7240000 7220000 7200000 7180000 7160000 7140000

N

LEGEND

- COMMUNITY
- PROPOSED HAUL ROAD
- ALL WEATHER ROAD
- WHALE TAIL PIT
- MEADOWBANK OPERATION AND INFRASTRUCTURE
- CLAIM BOUNDARY
- WATERCOURSE
- WATERBODY



REFERENCE

1. HAUL ROAD OBTAINED FROM AGNICO EAGLE MINES LIMITED. 2015-10-14 FROM 6103-117-230-200_R0.dwg
2. CLAIM BOUNDARIES OBTAINED FROM AGNICO EAGLE MINES LIMITED.
3. WATERCOURSE AND WATERBODY DATA OBTAINED FROM CANVEC © DEPARTMENT OF NATURAL RESOURCES CANADA. ALL RIGHTS RESERVED.
4. INSET MAP DATA OBTAINED FROM ESRI.

DATUM: NAD 83 CSRS PROJECTION: UTM ZONE 14

12 0 12
KILOMETRES

PROJECT

AGNICO EAGLE

AGNICO EAGLE MINES LIMITED:
MEADOWBANK DIVISION
WHALE TAIL PIT PROJECT

TITLE

LOCATION OF THE PROJECT

Golder Associates

PROJECT		1541520	FILE No.	
DESIGN	JR	24 Mar. 2016	SCALE AS SHOWN	REV. 0
GIS	CDB	24 Mar. 2016		
CHECK	JR	09 May 2016		
REVIEW	LY	09 May 2016		

FIGURE 1

Y:\burnaby\CAD-GIS\Client\Agnico_Eagle_Mines_Ltd\Whale_Tail\99_PROJECTS\1541520_FEIS\02_PRODUCTION\FEIS\MXD\1300_Documentation\1340_Project_Description\Report\1541520_FIG_1.1-1_PROJECT_LOCATION.mxd

2 BACKGROUND

2.1 SITE CONDITIONS

The Project is located in Canada's Northern Arctic ecozone. This region includes most of Canada's Arctic Archipelago and northern regions of continental Nunavut and the Northwest Territories. This ecoregion is classified as a polar desert and is characterized by long cold winters and short cool summers. The mean air temperatures in June to September is approximately 7 degrees Celsius (°C) and -20.6 °C in October to May.

Average annual precipitation at Meadowbank Mine is 142.6 mm (1998 to 2004). The annual precipitation at site generally falls as rain between June and September, and snow between October and May. However, snowfall can occur at any time of the year.

Based on data for Baker Lake (120 km to the south), and from experience ice auguring within the Meadowbank Mine lakes in the winter, the mean maximum lake ice thickness over Whale Tail Lake is expected to be 2.25 m. During the winter collection of water quality baseline data in Whale Tail Lake in April 2016, ice thickness was confirmed to be 2 m.

The surficial geology of the Project area shows strong evidence of glacial activity and is dominated by veneers and blankets of till overlying undulating bedrock. Bedrock frequently outcrops in isolated exposures, elevated plateaus and elongated ridges. Lakes and ponds are abundant, occupying approximately 16% of the area.

The local overburden consists of till with a silty sand matrix and clasts that range from granule gravel to large boulders in size. Glaciofluvial deposits in the form of eskers and terraces are found in the northeast section of the satellite deposit and they continue in a southeast direction intersecting the haul road in several locations.

The bedrock geology in the Project area consists of Archean and Proterozoic supercrustal sequences and plutonic rocks.

2.2 HYDROGEOLOGY SETTING

2.2.1 Conceptual Model

The Project is in an area of continuous permafrost. In this region, the layer of permanently frozen subsoil and rock is generally deep and overlain by an active layer that thaws during summer. The depth of the active layer is typically expected to range between one and three metres. Depending on lake size, depth, and thermal storage capacity, the talik (unfrozen ground surrounded by permafrost) beneath lakes may fully penetrate the permafrost layer resulting in an open talik. Circular lakes with a radius greater than 300 m, or elongated lakes with a half-width of at least 150 m, are assumed to be connected to the deep groundwater flow regime through open taliks. The thickness of the permanently frozen permafrost was estimated to be on the order of 427 to 495 m.

In areas of continuous permafrost, there are two groundwater flow regimes: a deep groundwater flow regime beneath permafrost, and a shallow groundwater flow regime located in the active (seasonally thawed) layer near the ground surface. With the exception of areas of taliks beneath lakes, the two groundwater regimes are isolated from one another by thick permafrost.

The shallow groundwater regime is active only seasonally during the summer months, and the magnitude of the flow in this layer is expected to be several times less than runoff from snowmelt. Groundwater in the active layer primarily flows to local depressions and ponds that drain to larger lakes; therefore, the total travel distance would generally extend only to the nearest pond, lake, or stream. Water in the active layer is stored in ground ice during the cold season and is then released with the ice thaws in late spring or early summer, thus providing flow to surface. During the warm season, groundwater in the active layer is recharged primarily by precipitation.

Permafrost reduces the hydraulic conductivity of the bedrock by several orders of magnitude (Burt and Williams 1976; McCauley et al. 2002). Consequently, the permafrost in the rock would be virtually impermeable to groundwater flow. The shallow groundwater flow regime, therefore, has little to no hydraulic connection with the deep groundwater regime which is overlain by massive and continuous permafrost.

Groundwater flow within the deep groundwater flow regime is limited to the sub-permafrost zone. This deep groundwater flow regime is connected to the ground surface by open taliks underlying larger lakes. Talik exist beneath lakes that have enough depth so that they do not freeze to the bottom over the winter. If the lake is sufficiently large and deep, the talik can extend down to the deep groundwater regime. These taliks are referred to as open talik. If the talik does not extend down to the deep groundwater, it is referred to as a closed or an isolated talik. The width and shape of lakes in the Hydrogeology Baseline Study area were reviewed to estimate if open taliks could be present below the lakes (FEIS Volume 6 Appendix 6.A). Based on 1-D analytical solutions presented in Burn (2002), Golder estimated that open taliks could be present for circular lakes with a radius of approximately 300 m and for elongated lakes with a half-width of approximately 150 m. Beneath smaller lakes that do not free to the bottom over the winter, a talik bulb may form; however, the talik bulb is not expected to extend to the deep groundwater flow system.

Generally, deep groundwater will flow from higher elevation lakes with open taliks to lower elevation lakes with open taliks. To a lesser degree, groundwater beneath the permafrost is influenced by density differences due to saline water conditions (density driven flow).

Below the active layer, permafrost underlies the land surrounding the lakes, which restricts the lateral or horizontal flow of groundwater and restricts the recharge of the sub-permafrost groundwater flow system by precipitation. Multiple thermistors in the land surrounding Whale Tail Lake, in combination with thermal modelling, indicate the permafrost extends to 425 m to 495 m below ground surface. In particular, thermistor data recorded at AMQ15-452, AMQ17-1233, AMQ17-1337 and AMQ17-1277A (Golder 2018b) indicates the presence of permafrost

between Whale Tail Lake and Nemo lake, and therefore the absence of horizontal groundwater flow in the upper 425 to 495 m of bedrock.

Groundwater flow is controlled by surface water elevations in lakes with open talik; water moves vertically through the open talik to the underlying sub-permafrost groundwater flow system. The elevations of the lakes with expected talik in the baseline study area indicate that Whale Tail Lake is likely a groundwater discharge zone at the south end of the Lake (upward vertical hydraulic gradient), with flow from Lake A60 to Whale Tail Lake, and a groundwater recharge zone at the north end of the Lake (downward hydraulic gradient), with groundwater flow from Whale Tail Lake to Lake DS1 as presented on the Figure 2 showing the hydrogeology baseline study area. Whale Tail Pit is located in the north basin and therefore a downward vertical hydraulic gradient is expected (Figure 3). This was verified by hydraulic head monitoring at the Westbay Well system, which had a measured downward hydraulic gradient of 0.008 m/m, which is equivalent to what would be expected based on the relative lake elevation of Whale Tail Lake and Lake DS1 (Golder 2019).

Figure 2: Hydrogeology Baseline Study Area

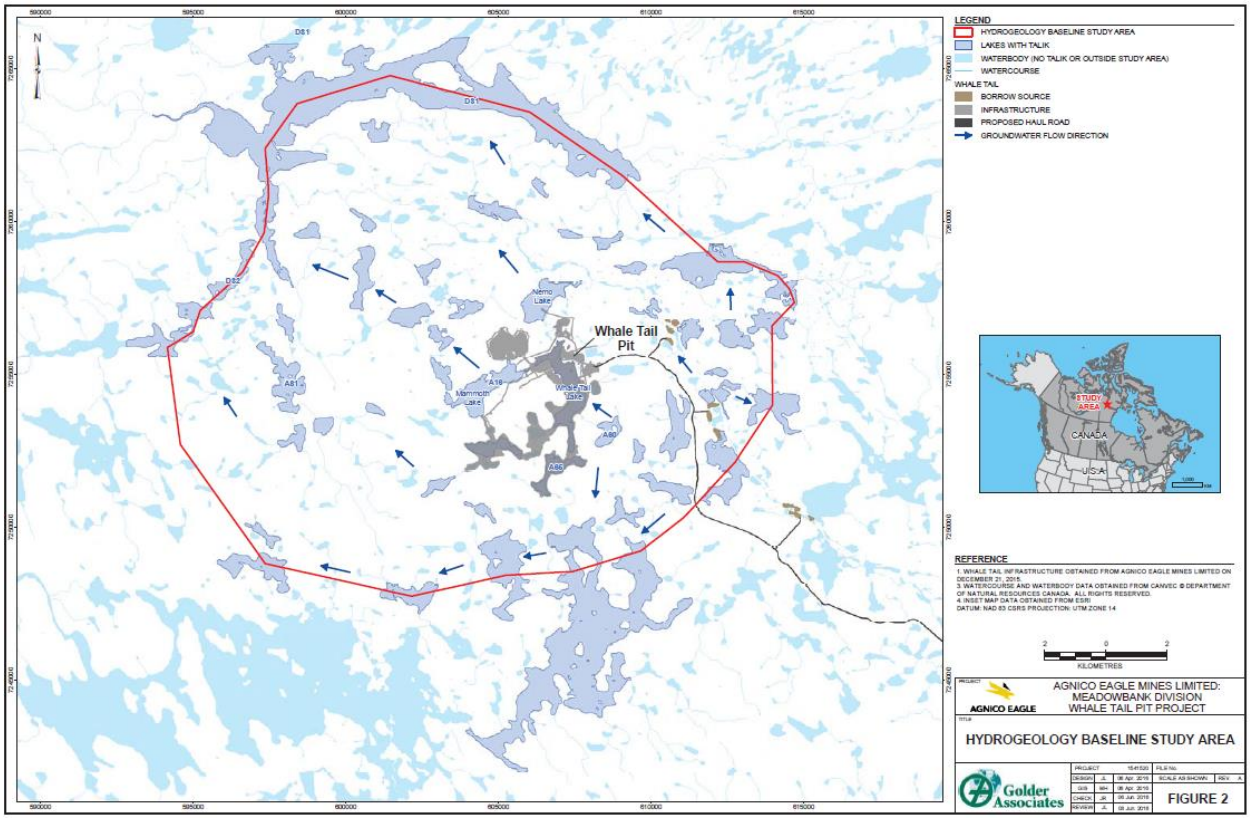

Figure 3: Conceptual Model of Pre-Mining Deep Groundwater Flow Regime - Cross-Section View

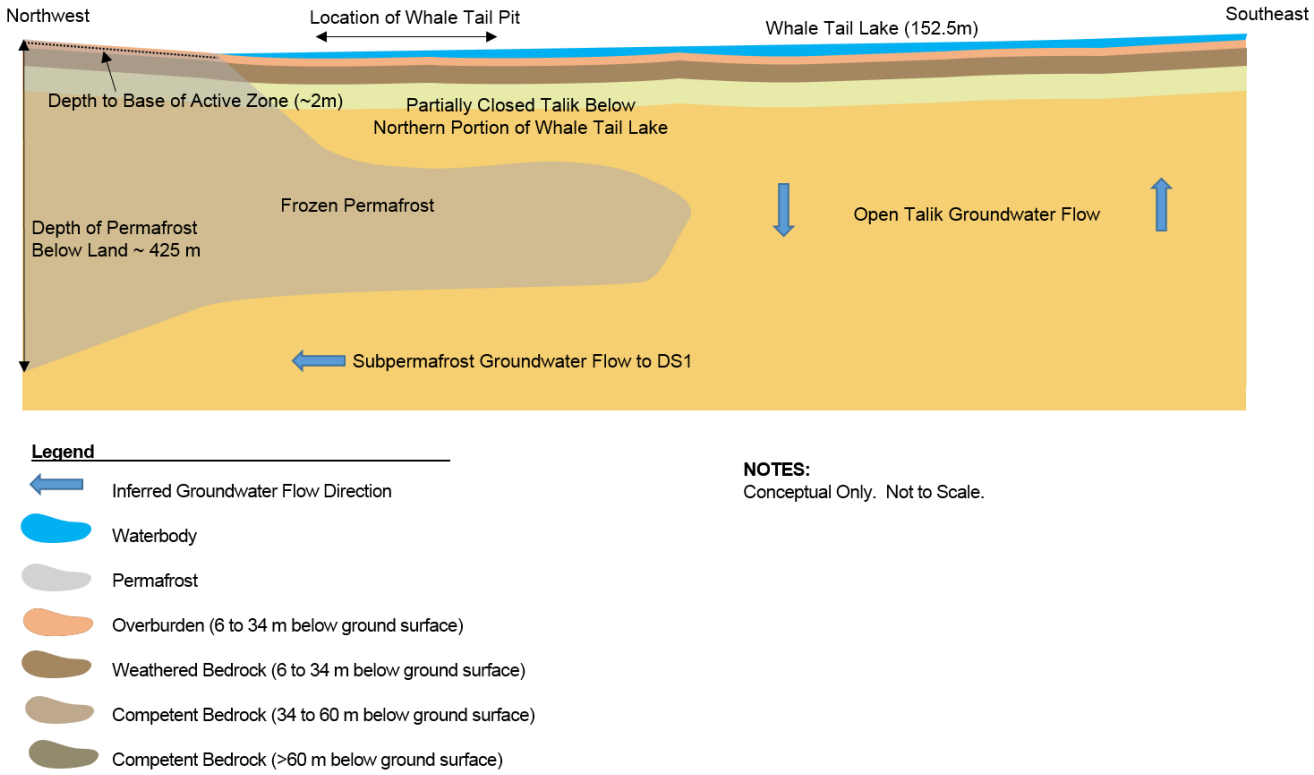

Below Whale Tail Lake, a talik is expected to form a continuous channel that is closed in the northern portion of Whale Tail Lake below the open pit and becomes open towards the south and central portion of the lake. As shown in Figure 4, during mining the open pit will act as a sink for groundwater flow, with seepage faces developing along the pit walls. In response to mining of the open pit, groundwater will be induced to flow through bedrock to the open pit. Mine inflow will primarily originate from Whale Tail Lake, the attenuation pond between the pit and Whale Tail dike, and deep bedrock. The quality of mine inflow will be a result of the mixing from each of these sources.

Figure 4: Conceptual Model of Deep Groundwater Flow Regime during Mining - Cross-Section View

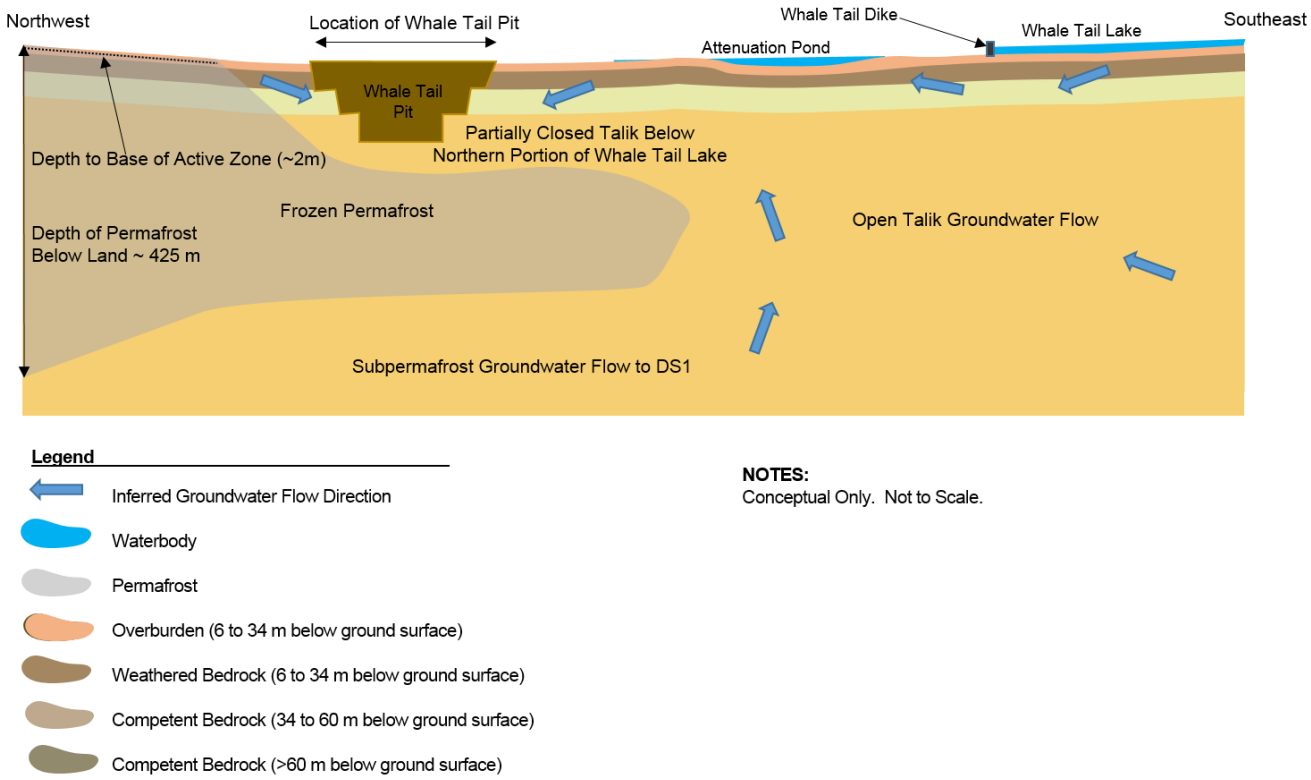

During closure (Figure 5), the open pit will be flooded with water from a variety of sources including: water pumped from the flooded South Whale Tail watershed until the original Whale Tail Lake level is reached (152.5 m), the north-east watershed following the breach of the North-East dike, groundwater originating from nearby lakes underlain by open taliks, connate water and water pumped from the attenuation pond. This process will dissipate the large hydraulic head differences established during mine operations in the vicinity of the mine workings. The rate of groundwater inflow will decrease as the water level in the open pit rises. From the start of closure and following the formation of the pit lake in post-closure, permafrost below the pit is expected to thaw slowly. The thermal regime in the vicinity of the pit will be monitored, as outlined in the Thermal Monitoring Plan for the Project (Agnico Eagle 2018b).

Figure 5: Conceptual Model of Deep Groundwater Flow Regime in Long-Term Post-Closure - Cross-Section View

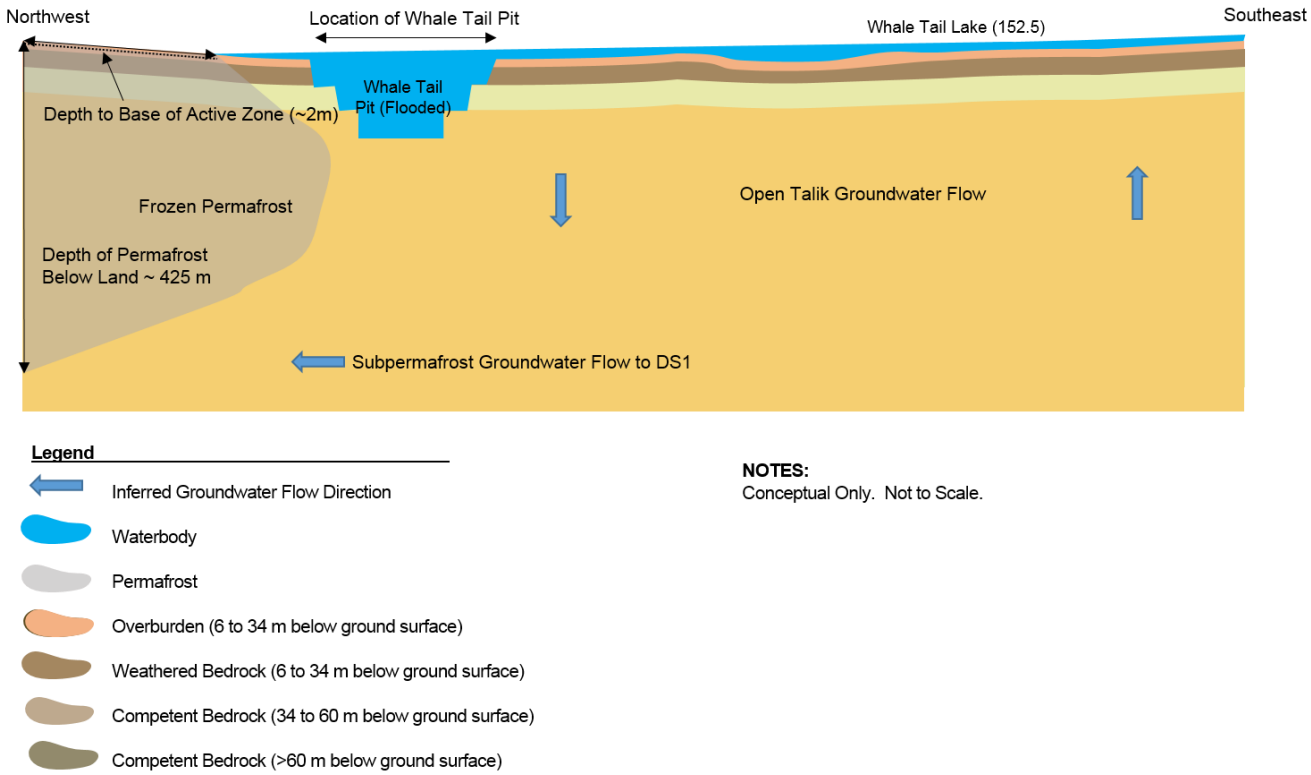

2.2.2 Post-Closure Hydrogeological and Thermal Analysis

Hydrogeological analysis was conducted to assess the post-closure groundwater regime in the vicinity of the Whale Tail Pit (Golder 2018a). The intent of the study was to consider post-closure changes in the groundwater regime once the pit lake reaches its ultimate elevation and the influence, if any, that these changes may have on water quality in the flooded pit. As part of the analysis, the predicted changes in the permafrost regime, based on a post-closure thermal assessment, were incorporated in to the hydrogeological model. The results of the hydrogeological assessment provided input into a concurrent study that assessed water quality in the flooded pit (Golder 2018c). Overall, groundwater was found to be a minor component of the flooded pit lake water quality due to the small predicted seepage rates from the pit in relation to typical surface water exchanges.

Results of the post-closure thermal assessment (Golder, 2018b) included:

- During pit flooding, the warm pit lake temperature impacts mostly the upper portion of the permafrost under the pit, and a talik starts to form around the pit wall and floor.

- The permafrost under the pit lake continues to thaw during the long-term post-closure stage, and the open talik expands towards the northern edge of the pit lake (land side). The majority of the permafrost under the pit lake is thawed 300 years after closure.

- The steady-state model indicates the pit lake would thaw the permafrost in the long-term, and eventually somewhat reduce the permafrost depth to the northwest of the pit. A significantly longer time (in the order of 10,000 years) is likely required for the pit lake to reach the steady-state thermal conditions**.** Permafrost is still predicted to the north of the pit, restricting the horizontal flow of groundwater to towards Nemo Lake where the permafrost is present.

Result of the Post-closure hydrogeological model (Golder, 2018a) included:

- Initially, once the hydraulic heads return to near equilibrium shortly after mine flooding, groundwater inflow into the pit is greater than pit lake discharge into surrounding bedrock. This groundwater discharge to the pit lake decrease gradually over 100 years, at which time it reverses and the pit lake discharge into the bedrock is greater than the groundwater inflow. The relative difference in flow increases with time and as the permafrost layer beneath the pit lake thaws.

- Long-term, the pit lake establishes as a source of groundwater recharge, which is consistent with the current pre-development groundwater flow condition.

As summarized above, with the exception of deep sub-permafrost groundwater flow, groundwater flow during closure will be similar to pre-development conditions and limited to the area of talik below Whale Tail Lake and the developed pit lake during closure. Horizontal flow beneath land will be restricted by the presence of permafrost below the active layer. Thermal analysis indicates that although permafrost degradation below the pit footprint will occur, permafrost will be present below the land outside of the pit lake and other lakes with talik (i.e., including between the pit and Nemo Lake).

Predictions from the hydrogeological modelling were an input into a concurrent study that assesses overall water quality in the flooded pit (Golder, 2018c). Arsenic loading rate from the Whale Tail pit north wall has been determined from the completion of the Arsenic diffusion model (Golder, 2018d) and integrated to the Whale Tail Pit hydrodynamic model (Golder, 2018c). Result of the hydrodynamic model are:

- The concentration of TDS will remain below site specific water quality objectives at all times. TDS will peak at just below 25mg/L in year 2025, and thereafter decrease over time. Concentration of TDS will stabilize at approximately 11mg/L by 2055.

- The concentration of arsenic will remain below site specific water quality objectives at all times. Arsenic will peak at just below 0.025mg/L in year 2025, and thereafter decrease over time. Concentration of arsenic will stabilize at approximately 0.0025mg/L by 2055.

- The concentration of total phosphorous will remain below site specific water quality objectives at all times. Total phosphorus will peak at just above 0.007mg/L in year 2025, and thereafter decrease over time. Concentration of total phosphorus will stabilize at approximately 0.0025 mg/L by 2055.

The pit lake in the long-term is expected to be a source of groundwater recharge, with a seepage loss rates to groundwater of approximately 1.7 m^3/day (620 m^3/year), which is negligible relative to the 3,000,000+ m^3 of surface water exchanged annually post-closure when surface water flows are re-established, based on average climate year watershed runoff. This groundwater loss rate is representing 0.02% of the total surface water exchanged annually. This indicates that uncertainty in the hydraulic gradient and groundwater flow is not critical to the long-term assessment of pit lake water quality. As presented in Golder (2018) recent monitoring of the hydraulic gradient, and calculated fluxes based on this gradient suggest that the predicted post-closure seepage rates are reasonable based on the measured data.

2.2.3 Groundwater Volumes and Quality

Potential groundwater inflow quantity and quality with respect to total dissolved solids was predicted in the FEIS using a groundwater numerical model (FEIS Volume 6, Appendix 6.B). A summary of these predictions is presented on Table 1 and Table 2.

Table 1: 2015 Predicted Groundwater Inflow to the Open Pit during Operations and Closure

Phase	Period	Groundwater Inflow (m^3/day)	TDS Concentration (mg/L)
Dewatering	Mar 2019 to Oct 2019	-	-
Mining	Q4 2019 to 2020	275	415
	2021	100	410
Filling	2022	65	370
	2023	55	365
	2024	30	370
	Jan to Oct 2025	15	370
	Nov 2025 to Oct 2028	1	370

Note: Mining prior to Q4 2019 is within permafrost and groundwater inflow will be negligible.

TDS = total dissolved solids; m^3/day = cubic metres per day; mg/L = milligrams per litre

Table 2: 2015 Predicted Groundwater Inflow to the Attenuation Pond during Operations and Closure

Phase	Period	Net Groundwater Inflow (m^3/day)	TDS Concentration (mg/L)
Dewatering	Mar 2019 to Oct 2019	-	-
Mining	Q4 2019 to 2020	2	160
	2021	1	170
Filling	2022	1	195
	2023	1	175
	2024	1	175
	Jan to Oct 2025	1	175
	Nov 2025 to Oct 2028	-	-

TDS = total dissolved solids; m^3/day = cubic metres per day; mg/L = milligrams per litre

In accordance with Project Certificate Term and Condition No. 16b and 16c, Golder conducted a supplemental hydrogeological assessment to predict the post-closure groundwater regime in the vicinity of the Whale Tail Pit (Golder 2018a). The purpose of the model simulations was to evaluate the effects of higher TDS groundwater beneath the open pit on the groundwater flow system after closure and to evaluate the influence of solute transport by density–driven flow on the movement of solutes from the bedrock into the flooded pit.

Table 3 presents the predicted groundwater inflow quantity and quality to the Whale Tail Pit during post-closure. The results of the post-closure hydrogeological assessment provided input into a concurrent study that was assessing overall water quality in the flooded pit (Golder 2018b). The post-closure model results show that, initially, once the hydraulic heads return to near equilibrium shortly after mine flooding, groundwater inflow into the pit lake is greater than pit lake discharge into surrounding bedrock. Over time, pit lake water is drawn downwards from the bottom part of the flooded pit into bedrock. Approximately 100 years after closure, pit lake water discharge into bedrock becomes greater than groundwater inflow into the pit lake. The relative difference in flow increases with time and as the permafrost layer beneath the pit lake is predicted to thaw.

Table 3: Predicted Groundwater Inflow and Groundwater Quality – Post-Closure

Years Following Closure	Groundwater Inflow to Pit Lake (m^3/day)	Average TDS Concentration into pit (mg/l)	Pit Lake Outflow to Groundwater (m^3/day)
1	2.2	650	1.1
10	1.1	540	0.8
100	0.2	440	0.8
500	0.1	77	1.7

2.3 ADDITIONAL DATA COLLECTION

Project Certificate Term and Condition No. 15 indicates the need to collect additional site-specific hydraulic data in key areas of the Project during the pre-development, construction and operational phases. Agnico Eagle has commenced with the collection and documentation of this data, and a summary of the results is presented below.

2.3.1 Groundwater Quality

At the time of the FEIS, a representative sample of deep groundwater had not been collected and data collected at the Meadowbank Mine was used to infer the TDS profile at the project. A Westbay well system was installed on site between March and April in 2016. The borehole was drilled to a depth of 499 m. The well was installed to monitor hydraulic heads, test hydraulic conductivity, and collect groundwater samples from multiple intervals (Golder 2016c). The groundwater samples collected from the Westbay system at depths from 276 m to 392 m indicate that the TDS content in the groundwater was between 3,198 mg/L and 4,042 mg/L. This range is slightly higher than the groundwater TDS measured at Meadowbank from shallower depths (less than 200m vertical depth).

Groundwater samples were also collected from the Westbay in November 2018, along with the measurement of vertical hydraulic gradient (Golder 2018). The 2018 program estimated groundwater quality were in the same range as previously estimated. The calculated groundwater TDS were slightly higher in 2018 which was attributed to the higher proportion of residual drilling water in the sample. The concentrations of metals and arsenic were low. Given that the arsenic concentrations are similar to the assumptions adopted in the geochemical models (low arsenic in formation groundwater), groundwater arsenic content is still not likely to have a significant effect on mine surface water quality.

Data collected from the Westbay will be used in future updates to the water quality forecast in support of the Project. At this time, it is expected that the water treatment system planned for the project can handle groundwater with the measured water quality observed in 2016 and 2018.

2.3.2 Hydraulic Conductivity Testing

Supplemental hydrogeological investigations have been undertaken between 2015 and 2017 to further characterize the hydraulic conductivity of the bedrock in the vicinity of the Whale Tail Pit. These investigations have been documented in reports by Knight Piesold (2016), Golder (2016a, 2017), and SNC (2017). These investigations included the completion of 49 packer tests in unfrozen areas of bedrock (i.e., within the talik or below the regional permafrost).

Data collected from these four supplemental investigations indicate the bulk hydraulic conductivity of the bedrock ranges on the order of 1×10^{-5} m/s near surface (i.e., up to depths of 40 m) to approximately 1×10^{-9} m/s at greater depths. As part of the FEIS, the hydraulic conductivity was estimated to be between 1×10^{-8} and 2×10^{-7} m/s. Evaluation of the refined estimates of hydraulic conductivity from the supplemental testing with respect to groundwater

flows indicate that the inflow to the pit could be up to five times higher (up to 1,400 m^3/day) during mining due to the groundwater flow rates to the pit being controlled by the shallow bedrock hydraulic conductivity (connection of the pit to the south whale tail basin). This higher flow rate is within the limits of the water treatment system and water management infrastructure and adaptive management of these flows is not required at this time.

The lower hydraulic conductivity of the bedrock at depth indicate that the seepage rates from the pit are likely to be lower than predicted in the post closure hydrogeological assessment. This indicates that the predicted seepage rates were conservatively high, and that actual seepage rates from the pit lake will be slightly lower due to the lower bedrock hydraulic conductivity expected to be present near the base of the pit. Based on the lower estimated hydraulic conductivity near the base of the pit (1×10^{-9} m/s), the measured vertical hydraulic gradient in the Westbay (0.008 m/m), and an approximately flooded pit lake area of approximately 0.5 Km3, the long-term predicted discharge from the pit lake at post-closure would be approximately 0.3 m^3/day). Overall, the estimated flux is similar to the long-term predicted discharge from the pit lake at post-closure (1.7 m^3/day) and supports the conclusion in the FEIS that long-term predicted flows from the pit lake to the groundwater flow system will be negligible relative to the surface water exchange into the pit lake (Golder 2018c).

2.3.3 Verification of Horizontal and Vertical Groundwater Flow Direction

Thermal data continues to be collected at the Project to verify assumptions in the permafrost conditions. Thermistors have been installed at ten locations, of which four are located to the north of the Whale Tail Pit, between Nemo Lake and Whale Tail Pit (Golder 2018b). These thermistors verify the presence of permafrost below the active layer and that the deep-sub permafrost groundwater flow system will only be connected/recharged by vertical flow through talik present below lakes of sufficient size, such as Whale Tail lake. The four thermistors between Nemo Lake and Whale Tail Pit (AMQ17-1337, AMQ17-1233, AMQ17-1277A and AMQ15-452) each indicate permafrost below the land and that horizontal flow below the active layer is restricted by permafrost in the upper 425 to 495 m of bedrock.

The vertical movement of groundwater flow through the open talik is being monitored using the Westbay Well system (AMQ16-626) to measure the vertical hydraulic gradient. This monitoring verified the direction of groundwater flow and can be used in combination with the measured bedrock hydraulic conductivity to estimate the groundwater flux near Whale Tail Pit.

The data collected at AMQ16-626 (Golder 2018), indicates the presence of a downward hydraulic gradient. Assuming the measured hydraulic head is representative of the midpoint of the measurement interval, the downward gradient is 0.008 m/m. This gradient is consistent with the estimated gradient derived from looking at the relative elevation of Whale Tail Lake and DS1 (0.008 m/m), as reported in Agnico Eagles response to TC15 (Agnico Eagle 2018). DS1 is the predicted receptor from water in the area of Whale Tail Pit and Underground (Golder 2016c). Figure 2 is presenting location of Whale Tail Lake and DS1 Lake.

For the depth interval over which the hydraulic head was measured (326 to 456 mbgs), the estimated hydraulic conductivity of the bedrock for the FEIS for the Whale Tail Pit Project was 1 $x10^{-8}$ to 3 x 10^{-8} m/s (Golder 2016c). As discussed, in support of TC15 and the development of the Project, additional packer testing was conducted subsequent to the FEIS and the data indicate the hydraulic conductivity of bedrock over this depth interval is likely lower (1 x 10^{-9} m/s based on the geometric average of the test data) (Golder 2018a). Considering the measured gradient (0.008), the historical range of bedrock hydraulic conductivity adopted in the FEIS (1 $x10^{-8}$ to 3 x 10^{-8}) and the now refined hydraulic conductivity (1 x 10^{-9} m/s) and an assumed effective porosity of 0.001 (Maidment 1992; Stober and Bucher 2007), the estimated downward groundwater flow velocity is between approximately 0.25 m/yr and 8 m/yr. The lower bound of this range is considered more reasonable, as it uses the refined hydraulic conductivity data discussed above, which is based on the geometric mean of all the packer test measurements (pre- and post-FEIS).

Gradients measured during this monitoring program are considered a reasonable interpretation of what long-term gradients could be post-closure following the formation of the pit lake. Recharge and discharge from the base of Whale Tail Lake or a flooded pit lake will be controlled by the vertical hydraulic gradients and the bedrock hydraulic conductivity near the base of the permafrost. Considering the approximate area of the Whale Tail Pit (0.5 km^2), the range in bedrock hydraulic conductivity (1 x 10^{-9} to 3 x 10^{-8} m/s), and the measured downward gradient (0.008), the data would indicate long-term groundwater flux would be approximately 0.3 m^3/day to 11 m3/day. Similar to the estimated groundwater velocity, the lower bound of this range is considered more reasonable, as it uses the refined estimate of hydraulic conductivity. Overall, the estimated flux is similar to the long-term predicted discharge from the pit lake at post-closure (1.7 m3/day; Golder 2016c) and supports the conclusion in the FEIS that long-term predicted flows from the pit lake to the groundwater flow system will be negligible relative to the surface water exchange into the pit lake (Golder 2018c).

3 GROUNDWATER MONITORING PLAN

Water quantity and quality monitoring data will be used to verify the predicted water quality and quantity trends and to conduct adaptive management should differing trends be observed. Monitoring will be initiated at the start of mining and continue during operations and closure.

The GWMP will be further defined as the open pit is developed and will be conducted in agreement with the WMP for the Project.

3.1 HORIZONTAL AND VERTICAL GROUNDWATER FLOW MONITORING

Thermal monitoring will continue at each of the installed thermistors to monitor the presence of permafrost below the active layer during construction and operations phases. The monitoring will continue until such time as a thermistor is destroyed by active mining. Two thermistors, AMQ17-1233 and AMQ17-337, are located outside of the pit footprint and will be used to

monitor permafrost conditions between Nemo Lake and Whale Tail Pit. The thermistor data will be used to verify the presence of permafrost and the restricted horizontal movement of groundwater below the active layer due to permafrost in the upper 425 to 495 m of bedrock.

As part of the Whale Tail Dike Operation Maintenance and Surveillance manual, performance of the Whale Tail dike will be monitored with different instruments (e.g. piezometers) located in the principal horizontal groundwater flow pathway between Whale Tail South Basin and the Whale Tail pit. Piezometer readings and water level in the Whale Tail South Basin and the Attenuation Pond will be available to calibrate the hydrogeological model during operation if deemed necessary.

Vertical groundwater flow conditions in the area of Whale Tail Pit will be monitored by the Westbay Well system. Agnico Eagle will be sampling the Westbay Well system commencing in March 2019 and will continue to sample and report on an annual basis during the Construction and Operations Phases. The monitoring will include the measurement of the vertical hydraulic gradient and the collection of groundwater samples. During operations, this data will be supplemented by the direct measurement of groundwater quality in the seepage inflow to the pit (Section 3.2). Water sampling parameters will be consistent with the sump sampling and seepage surface parameters planned for the pit (Section 3.2.2).

Data collected during construction and operations phases will be used to develop an appropriate monitoring for closure and will be documented in the Interim Closure and Reclamation Plan.

3.2 GROUNDWATER QUANTITY AND QUALITY MONITORING

3.2.1 Water Quantity

Groundwater inflow to the open pit will be collected in sumps prior to being pumped to surface. Water collected in the sumps represents the bulk, or combined inflow to the open pit, and may include other sources of water, such as precipitation. During construction and operations, groundwater inflow to the pit will be evaluated four time per calendar year as per Water Licence 2AM-WTP1826 requirements. Management of the pumped-out water is described in the WMP.

The above flow monitoring will be supplemented by periodic seepage surveys to be conducted twice during the first year of mining and once a year thereafter. In the first year of pit development, one of the seepage surveys will be conducted in early summer, following snow melt and thawing of any ice in the pit walls, and then again in late August. In the following years of mining, one survey will be conducted in August of each year. The objective of the seepage surveys is to identify preferential groundwater flow paths in the walls of the open pit, if present, and to determine their relative contribution to the groundwater inflow to the pit with respect to water quantity and quality.

3.2.2 Water Quality

During the operations phase, the quality of water from the sumps (either at the sump or at end of pipe at the surface) will be monitored four time per calendar year as per Water Licence 2AM-WTP1826 requirements.

Water samples will also be collected from seeps in the pit walls if there is sufficient water for analysis and if access to the seep is possible.

For each sample, field parameters will be recorded (pH, turbidity, salinity and electrical conductivity). Analytical parameters will include:

- Total and Dissolved Metals: aluminium, antimony, arsenic, boron, barium, beryllium, cadmium, copper, chromium, iron, lithium, manganese, mercury, molybdenum, nickel, lead, selenium, tin, strontium, titanium, thallium, uranium, vanadium and zinc.

- Nutrients: ammonia-nitrogen, total kjeldahl nitrogen, nitrate nitrogen, nitrite-nitrogen, ortho-phosphate, total phosphorous, total organic carbon, total dissolved organic carbon and reactive silica.

- Conventional Parameters: bicarbonate alkalinity, chloride, carbonate alkalinity, conductivity, hardness, calcium, potassium, magnesium, sodium, sulphte, pH, total alkalinity, total dissolved solids, total suspended solids and turbidity.

- Total cyanide and free cyanide. If total cyanide is detected above 0.05 mg/L at a monitoring station in receiving environment; further analysis of Weak Acid Dissociable Cyanide will be triggered.

Additional chemical analyses may be required to more completely characterize the chemical loading from the mine water. The additional analyses will be dependent on monitoring results.

3.3 DATA COMPILATION AND UPDATES TO GROUNDWATER MODEL

Groundwater monitoring data will be compiled into a Project-specific database and evaluated for trends in groundwater data with respect to pit and underground inflow quantity and quality.

Measured groundwater inflow rates will be compared to model predictions on an annual basis. If significant variations from model predictions are observed, the assumptions behind the data will be reviewed and the analysis updated if required. In addition, updates to the groundwater model will be made if operational changes occur as the open pit advances which could significantly alter groundwater inflow or quality.

Variations that would be considered significant and would be triggers for review of the data include:

- Groundwater inflow quantity to the mine, based on rolling monthly average of inflow over six consecutive months, is 20% higher than predicted groundwater inflow. The six-month averaging period of observation is based on observed seasonal variations in inflow quantities in mines situated in continuous permafrost regions, where half the year there is virtually no surface water component of flow to the pit.

- Collected water samples that indicate that the TDS is more than 25% higher than the estimated water quality, based on a 6-month rolling average.

- Temperature profiles observed in the sentinel thermistors (AMQ17-1233 and AMQ17-337) located between Nemo Lake and Whale Tail Lake are showing sign of permafrost degradation below the active layer.

- Observed inflow quantity and quality is lower than expected would not be of concern and/or effect water management plans on-site. Model updates or analysis would therefore not be conducted if predicted inflow quantity and quality is higher than observed conditions.

If the first three variations are triggered, the groundwater and/ or permafrost data would be assessed to evaluate trends, the potential causes of the triggers and the potential for long-term effects associated with the variation. If for example, the greater than predicted inflows were correlated to a short-term effect such as freezing in the pit walls, changes in mining rate, freshet or transient drainage of a high storage feature, then further reassessment of groundwater inflows may not be required, and the adaptive management of these short-term effects would be evaluated under the Water Management Plan (WMP). However, if the effects of these variations is found to be potentially long term, this may warrant review of the model and/or permafrost calibration and predictions.

Table 4 presents the adaptive management plan with respect to groundwater monitoring. The design of the water management infrastructure includes contingencies in case of unplanned events. The Whale Tail attenuation pond can handle higher groundwater inflows and the Operation Water Treatment Plan (O-WTP) is designed to handle total flow rates 60% higher than planned (including surface and groundwater inflows reporting to the Attenuation Pond). O-WTP has the capacity to treat more than a five times increase in groundwater inflows from the one predicted during operation. Moreover, if the inflows are greater than this then there is the capacity to store water within the pit and adjust the mining plan to deal with extra inflows. In any case, all contact water will be managed within the pit area.

The groundwater management strategies: the ponds, sumps and water conveyance strategies around the pit can be modified to mitigate the effect of additional groundwater volume or salinity prior to treatment and discharge. The water conveyance strategy will be evaluated and optimized during operations and closure to maintain post-closure commitments. Other engineering solutions such as depressurization wells, grouting and thermosiphons may be considered, if warranted.

If one of the thresholds in Table 4 is triggered and it is found to be a potentially long-term effect, then hydrogeological and thermal analyses will be required to define the best solution to address the exceedance. Agnico Eagle considers that adaptive management must be based on well informed decisions and may include re-calibration of the thermal and hydrogeological models, predictions based on these re-calibrations, and revised Site-Wide water balance and Site-Wide water quality forecasts.

Table 4: Groundwater Adaptive Management Plan

Threshold	Consequence	Likelihood	Adaptive Management
Groundwater inflows to the mine, based on rolling monthly average of inflow over six consecutive months, is 20% higher than predicted groundwater inflow	• Higher water volume to treat during operation • Potential to compromise storage capacity of the attenuation pond • Impact on mining sequence	Low	O-WTP have 60% contingency to manage higher inflow to attenuation pond (forecasted peak operation flow in the water balance is 1,300m^3/h during 12h a day vs treatment capacity of 1,800 m^3/h during 24h per day); O-WTP have the capacity to treat more than five times increase in groundwater inflows from the one predicted during operation; Attenuation pond has 50% contingency to manage higher groundwater inflow; Assess situation by performing additional inspection, monitoring and field investigation; Review hydrogeological model, Site-wide water balance and Site-wide water quality forecast with updated data; Review water management strategy (e.g. temporary storing water in the pit); Evaluate potential long-term mitigations (e.g., grouting); Review water management strategy.
Collected groundwater samples that indicate that the TDS is more than 25% higher than the estimated groundwater quality, Based on rolling monthly average over 6 consecutive months	• Higher TDS water quality to treat during operation • Compromise storage capacity of the attenuation pond • Potential to reduce water treatment efficiency and management plan if not meeting Metal and Diamond Mining Effluent Regulations • Impact on mining sequence	Low	O-WTP have 60% contingency to manage higher inflow to attenuation (forecasted peak operation flow in the water balance is 1,300m3/h during 12h a day vs treatment capacity of 1,800m3/h during 24h per day); O-WTP have the capacity to treat more than five times increase in groundwater inflows from the one predicted during operation; Flow to the pit is dominated by seepage loss from the Attenuation Pond and seepage from the South Basin of Whale Tail Lake. As the groundwater inflow to the pit is representing a small ratio of the overall water inflows in the attenuation pond, water treatment efficiency should not be impacted significantly by uncertainty in the groundwater

			TDS; Assess situation by performing additional inspection, monitoring and field investigation; Review hydrogeological model, Site-wide water balance and site-wide water quality forecast with updated data; Evaluate additional treatment and storage capacity required to manage flow in operation (e.g. storing water in the pit); Evaluate potential long term mitigations (e.g. grouting, thermosiphon); Review water management strategy.
Temperature profile observed in the sentinel thermistors (AMQ17-1233 and AMQ17-337) located between Nemo Lake and Whale Tail Lake are showing sign of permafrost degradation below the active layer.	• Horizontal groundwater flow observed between Whale Tail Pit north wall and Nemo Lake. • Potential for groundwater seepage to pit sump/pit lake. • Increased water treatment requirement.	Unlikely	Assess situation by performing additional inspection, monitoring and field investigation; Review thermal model, hydrogeological model, Site-wide water balance and site-wide water quality forecast with updated data; Install new thermistor(s) to evaluate the extent of the permafrost degradation; Evaluate additional treatment and storage capacity required to manage flow in operation (e.g. storing water in the pit); Evaluate potential long-term mitigations as depressurization wells, grouting, thermosiphon Review water management strategy.

4 QUALITY ASSURANCE/QUALITY CONTROL PROCEDURES

Quality Assurance (QA) refers to plans or programs that encompass a wide range of internal and external management and technical practices designed to ensure the collection of data of known quality that matches the intended use of the data. Quality Control (QC) is a specific aspect of QA that refers to the internal techniques used to measure and assess data quality. Specific QA and QC procedures that will be followed during sampling performed for the GWMP are described in Section 4.1 and 4.2.

4.1 QUALITY ASSURANCE

Quality assurance protocols will be diligently followed so data are of known, acceptable, and defensible quality. There are three areas of internal and external management, which are outlined in more detail below.

4.1.1 Field Staff Training and Operations

To make certain that field data collected are of known, acceptable, and defensible quality, field staff will be trained to be proficient in standardized field groundwater sampling procedures, data recording, and equipment operations applicable to the GWMP. All field work will be completed according to specified instructions and established technical procedures for standard sample collection, preservation, handling, storage and shipping protocols.

4.1.2 Laboratory

To make sure that high quality data are generated, accredited laboratories that will be selected for sample analysis. Accreditation programs are utilised by the laboratories so that performance evaluation assessments are conducted routinely for laboratory procedures, methods, and internal quality control.

4.1.3 Office Operations

A data management system will be utilized so that an organized consistent system of data control, data analysis, and filing will be applied to the GWMP. Relevant elements will include, but are not limited to the following:

- all required samples are collected;
- chain-of-custody and analytical request forms are completed and correct;
- proper labelling and documentation procedures are followed, and samples will be delivered to the appropriate locations in a timely manner;
- laboratory data will be promptly reviewed once they are received to validate data quality;
- sample data entered into a Mine-specific groundwater quality database will be compared to final laboratory reports to confirm data accuracy; and
- appropriate logic checks will be completed to ensure the accuracy of the calculations.

4.2 QUALITY CONTROL

The QC component will consist of applicable field and sample handling procedures, and the preparation and submission of two types of QC samples to the various laboratories involved in the program. The QC samples include blanks (e.g., travel, field, equipment) and duplicate/split samples.

Sample bottle preparation, field measurement and sampling handling QC procedures include the following:

- Sample bottles will be kept in a clean environment, capped at all times, and stored in clean shipping containers. Samplers will keep their hands clean, wear gloves, and refrain from eating or smoking while sampling.
- Where sampling equipment must be reused at multiple sampling locations, sampling equipment will be cleaned appropriately between locations.
- Temperature, pH, and specific conductivity will be measured in the field using hand held meters (e.g., YSI water quality sondes).
- Samples will be cooled to between 4°C and 10˚C as soon as possible after collection. Care will be taken when packaging samples for transport to the laboratory to maintain the appropriate temperature (between 4°C and 10˚C) and minimize the possibility of rupture. Where appropriate, samples will be treated with preservatives to minimize physical, chemical, biological processes that may alter the chemistry of the sample between sample collection and analysis.
- Samples will be shipped to the laboratory as soon as reasonably possible to minimize sample hold times. If for any reason, samples do not reach the laboratory within the maximum sample hold time for individual parameters, the results of the specific parameters will be qualified, or the samples will not be analysed for the specific parameters.
- Chain of custody sample submission forms will be completed by field sampling staff and will be submitted with the samples to the laboratory.
- Only staff with the appropriate training in the applicable sampling techniques will conduct water sampling.

Quality control procedures implemented will consist of the preparation and submission of QA/QC samples, such as field blanks, trip blanks, and split/duplicate water samples. These are defined as follows:

- Field Blank: A sample will be prepared in the field using laboratory-provided deionized water to fill a set of sample containers, which will then be submitted to the laboratory for the same analysis as the field water samples. Field blanks will be used to detect potential sample contamination during collection, shipping and analysis.
- Travel Blank: A sample will be prepared and preserved at the analytical laboratory prior to the sampling trip using laboratory-provided deionized water. The sample will remain unopened throughout the duration of the sampling trip. Travel blanks will be used to detect potential sample contamination during transport and storage.

- Duplicate Sample: Two samples will be collected from a sampling location using identical sampling procedures. They will be labelled, preserved individually and submitted for identical analyses. Duplicate samples will be used to assess variability in water quality at the sampling site. Duplicate will be collected and submitted for analyses at approximately, 10% of sampling locations. For smaller batches of samples (less than 10), at least one duplicate will be collected and submitted for analysis.

Additional QA/QC procedures that will be applied to the seepage survey component of the GWMP will include:

- Location – Universal Transverse Mercator (UTM) coordinates of seepage will be defined through the use of a hand-held Global Positioning System (GPS) unit and will be recorded in the field log book with a photograph of each pit wall.
- Sample Labels – appropriate sample nomenclature will be assigned to the sample labels that will define sample locations, sample type, year, and designation. These labels will distinguish between samples collected from seeps versus samples collected from sumps.

5 REFERENCES

Agnico Eagle (Agnico Eagle Mines Limited). 2017. Whale Tail Pit Water Management Plan. Version 1. January 2017.

Agnico Eagle. 2018. Whale Tail Pit Thermal Monitoring Plan. Version 1. May 2018.

Burn, C.R. 2002. Tundra lakes and permafrost, Richards Island, western Arctic coast, Canada. Can J Earth Sci 39: 1281-1298.

Burt, T.P. and Williams, P.J. 1976. Hydraulic Conductivity in Frozen Soils, Earth Surface Processes, Volume 1, John Wiley, pp. 349-360.

Golder (Golder Associates Ltd.). 2016a. Westbay System Installation Summary – Whale Tail Pit Project, Nunavut. Dated 7 July 2016.

Golder. 2016b. Groundwater Quality Investigation, Amaruq, Nunavut. Dated 31 November 2016.

Golder. 2017. Hydrogeological and Permafrost Field Investigation, Amaruq Project 2017 Factual Report. 31 July 2017.

Golder. 2018a. Whale Tail Pit Project, Post-closure Hydrogeological Assessment for the Whale Tail Open Pit. Reference No. 1789310-180-TM. 27 June 2018.

Golder. 2018b. Whale Tail Pit Post Closure Pit Lake Thermal Assessment. 30 July 2018.

Golder. 2018c, in preparation. Whale Tail Pit Project, Hydrodynamic Modelling of Whale Tail Pit Lake. Reference No. 1789310-181-TM.

Golder. 2019. 2018 Westbay System Groundwater Monitoring Investigation. 8 February 2019.

Knight Piesold Ltd. 2016. Geomechanical Site Investigation Summary, 12 December 2016.

McCauley, C.A, White, D.M, Lilly, M.R., and Nyman, DM. 2002. A comparison of hydraulic conductivities, permeabilities and infiltration rates in frozen and unfrozen soils. Cold Regions Science and Technology 34(2002). PP. 117-125.

SNC Lavalin. 2017. Preliminary Studies for the Water Management and Geotechnical Infrastructures at Amaruq, 2017 Geotechnical Investigation Factual Report. Dated 25 May 2017.

APPENDIX A – WHALE TAIL PIT POST-CLOSURE PIT LAKE THERMAL ASSESSMENT

GOLDER

TECHNICAL MEMORANDUM

DATE 30 July 2018 1789310-174-TM-Rev0

TO Jamie Quesnel
Agnico Eagle Mines Limited

CC Michel Groleau, Valérie Bertrand

FROM Colin McGrath, Jianfeng Chen, Don Chorley, and Serge Ouellet **EMAIL** Jianfeng_Chen@golder.com

WHALE TAIL PIT
POST-CLOSURE PIT LAKE THERMAL ASSESSMENT

1.0 INTRODUCTION

Agnico Eagle Mines Limited (Agnico Eagle) is currently evaluating the potential development for mining the Whale Tail Pit Project (Project), a satellite deposit located on the Amaruq exploration property in Nunavut. The Amaruq property is a 408 km^2 site located in Inuit Owned Land approximately 150 km north of the hamlet of Baker Lake and approximately 50 km northwest of Agnico Eagle's operating Meadowbank Mine.

The following technical memorandum presents the assumptions and results of two-dimensional (2D) thermal analysis that was conducted in support of post-closure hydrogeological modelling for the Whale Tail Pit (Golder 2018a). The thermal analysis was conducted to evaluate how quickly the permafrost below Whale Tail Pit could melt following the formation of the Whale Tail Pit Lake during closure. The location of Whale Tail Pit is presented on Figure 1.

The thermal assessment included a review of the original Whale Tail Lake talik formation estimation based on available thermistor data at the time of the FEIS, the previous assessment completed by Golder (2017a), the current ground thermal conditions in the Whale Tail Lake area, and thermal changes during and after flooding the Whale Tail Pit.

This technical memorandum presents a summary of the updated evaluation of permafrost conditions based on the available thermistor data to October 2017, and the numerical modelling results of predicted thermal conditions under the Whale Tail Pit Lake post-closure.

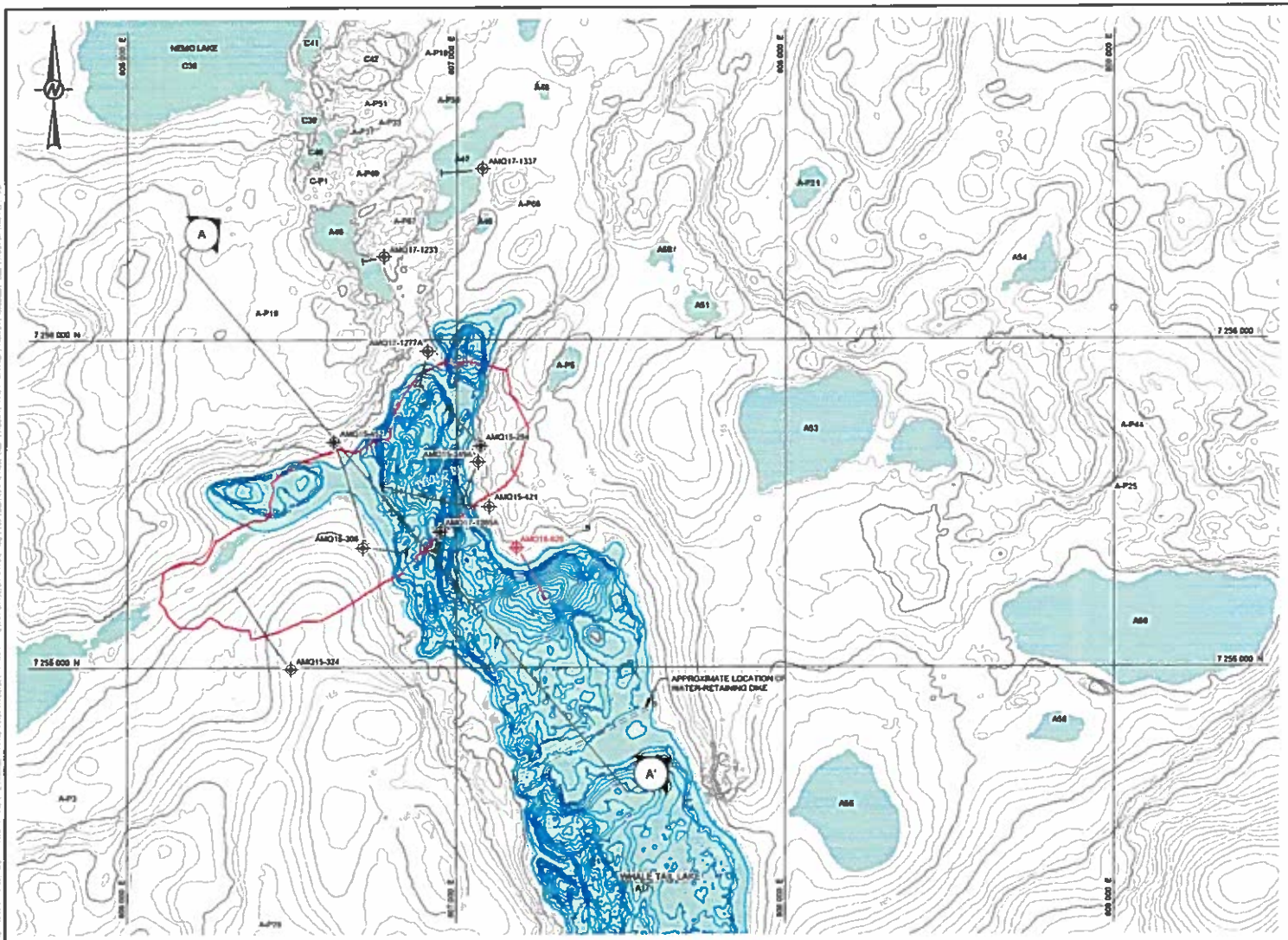
MEMO LAKE
C38
C41
C42
A-P18
A-P19
A-P20
A-P21
A-P22
A-P23
C39
C40
A-P24
C-P1
A-P25
A-P26
A-P27
A-P28
A-P29
A-P30
A-P31
A-P32
A-P33
A-P34
A-P35
A-P36
A-P37
A-P38
A-P39
A-P40
A-P41
A-P42
A-P43
A-P44
A-P45
A-P46
A-P47
A-P48
A-P49
A-P50
A-P51
A-P52
A-P53
A-P54
A-P55
A-P56
A-P57
A-P58
A-P59
A-P60
A-P61
A-P62
A-P63
A-P64

2.0 BACKGROUND

The Project is located in the zone of continuous permafrost. The land surface of the Project is underlain by permafrost except under the lake where water is too deep to freeze to the bottom during winter. Taliks (areas of unfrozen ground) are expected beneath a water body where the water depth is greater than the ice thickness. Closed talik formations consist of a depression in the permafrost table below relatively shallower and smaller lakes. Open talik formations that penetrate through the permafrost and connect the lake waterbody with the sub-permafrost hydrogeological regime are to be expected for relatively deeper and larger lakes in the Project area.

A previous site investigation on the Project completed by Knight Piésold (Knight Piésold 2015) between June and October of 2015 included the installation of six thermistors in the vicinity of the proposed development of Whale Tail Lake to collect ground temperature data.

The project site permafrost conditions were initially assessed by Knight Piésold (2015). A further review on site thermistor data was carried out by Golder during the thermal assessment for the Whale Tail Lake, with a summary of the thermal conditions presented in Golder (2017a). An additional four thermistors were installed within the vicinity of Whale Tail Lake in 2017 by Golder.

Based on site investigation data, soils in the project area are typically medium to coarse grained glacial till and colluvium with high coarse fragment content overlying bedrock at shallow depths. The six thermistor boreholes drilled in 2015 indicated soil thicknesses varying from 6.1 to 12.4 m. Review of existing data indicates the soil thicknesses varying from about 1 m to 12 m in the proposed waste rock storage facility area located northwest of the proposed pit. Underlying the soil, bedrock in the area generally consists of a stratigraphic sequence of greywacke, komatiite, and ultramafics, with varying thicknesses.

A mean annual air temperature for the site is of -11.3 °C, based on climate data provided by Agnico Eagle (Golder 2016a, Agnico Eagle 2016). Climate normal for Baker Lake between 1981 and 2000 shows a mean annual air temperature of -11.2 °C (Golder 2017b). Table 1 presents a summary of average air temperature at the site and at the Baker Lake climate station. The mean monthly temperatures of the two sets of data are similar. Mean monthly temperatures from Meadowbank site based on camp site data from 1997 to 2003 is included in the table for comparison (Golder 2003). The Meadowbank data gives a similar annual average of -11.1 °C.

Table 1: Mean Monthly Air Temperatures

	Whale Tail Project (Golder 2016a, Agnico Eagle 2016)	Meadowbank Project (1997 - 2003) (Golder 2003)	Baker Lake Climate Normal (1981 to 2000)
Unit	**°C**	**°C**	**°C**
January	-31.3	-31.6	-31.2
February	-31.1	-31.7	-31.0
March	-26.3	-25.5	-26.2
April	-17.0	-17.2	-17.0
May	-6.4	-5.6	-6.3
June	4.9	3.8	4.8
July	11.6	12.4	11.6
August	9.8	9.9	9.8
September	3.1	3.3	3.1
October	-6.5	-7.6	-6.4
November	-19.3	-18.0	-19.3
December	-26.8	-25.6	-26.5
Average	**-11.3**	**-11.1**	**-11.2**

3.0 SITE PERMAFROST CONDITIONS

The following sections present a summary of site-specific permafrost conditions based on the available thermistor data.

3.1 Thermistor Installation

The locations of the existing thermistors are shown in Figure 1; Table 2 presents a summary of thermistor data obtained to date.

Table 2: Thermistor Location and Installation Summary

Borehole	Collar Coordinates					Drilled Length (m)	Thermistor	Status[c]
	Northing	Easting	Elevation	Inclination (deg)	Azimuth (deg)		Depth Below Ground Surface (m)	
AMQ15-294	607,073.2	7,255,676.1	155.9	-45.18	322.7	220.5	144.4	Functioning
AMQ15-306	606,714.8	7,255,363.8	154.9	-45.41	96.3	201.0	141.5	Functioning[b]
AMQ15-324	606,496.8	7,254,995.2	161.8	-55.46	325.5	505.0	317.4	Functioning
AMQ15-349A	607,064.9	7,255,627.5	155.3	-45.32	204.4	202.5	140.6	Not functioning
AMQ15-421	607,098.3	7,255,490.8	155.1	-51.31	273.9	501.0	388.3	Not functioning
AMQ15-452	606,627.2	7,255,687.9	156.2	-49.98	159.5	501.0	382.3	Functioning
AMQ17-1265A	606,950.1	7,255,413.6	152.5	-80.0	196.0	425.0	349.6[a]	Functioning
AMQ17-1233	606,777.7	7,256,253.8	161.9	-59.06	252.7	156.0	132.4	Functioning
AMQ17-1337	607,078.4	7,256,522.0	155.2	-59.62	260.4	250.0	218.0	Functioning
AMQ17-1277A	606,911.1	7,255,963.6	153.2	-60.17	193.1	250.0	217.4	Functioning

a) Depth below lake water (ice) level.
b) Only the top node is functioning.
c) Based on information provided by Agnico Eagle in April 2018

3.2 Thermistor Data Summary

Table 3 presents a summary of the permafrost information estimated from the ten thermistors on site. The parameters were estimated using average values from September 2015 to October 2017. Ground temperature plots for the thermistor data is presented in Attachment 1.

Based on the thermistor data, the findings on the permafrost characteristics in the project area remain similar to those presented in Golder (2017a), with following updates:

- The thermistor AMQ17-1337 suggested deeper permafrost in the area away from deep lakes of up to 495 m, compared to the 427 m depth from the thermistor AMQ15-324
- The temperatures at the depths of zero amplitude changed slightly, they are now in the range of -3.0 °C to -8.4 °C (-3.1 °C to -8.6 °C reported in Golder 2017a)
- The thermistor AMQ17-1265A installed within the lake suggests the talik depth at this location is about 112 m from the lake water level

No additional groundwater quality and freezing point depression data were provided during this assessment; these are assumed to remain unchanged since the last assessment (Golder 2016b).

Table 3: Summary of Permafrost Conditions from Site Thermistors

Hole ID	Approx. Collar Distance to Lake (m)	Thermistor Location	Zero Annual Amplitude		Mean Annual Ground Temperature (°C)[a]	Geothermal Gradient (°C/m)	Estimated Permafrost Depth (metres below ground or lake surface)
			Approximate Depth (m)	Approximate Temperature (°C)			
AMQ15-294	31	Beneath Whale Tail Lake	19	-3.0	-3.5	Insufficient depth	Insufficient depth
AMQ15-306	55	Beneath Whale Tail Lake	20	-7.4	-8.1	Insufficient depth	Insufficient depth
AMQ15-324	370	On land	35	-8.4	-9.9	0.025[b]	427
AMQ15-349A	40	Beneath Whale Tail Lake	18	-5.2	-5.2	Insufficient depth	Insufficient depth
AMQ15-421	40	Beneath Whale Tail Lake	24	-3.6	-3.9	0.005[c]	445
AMQ15-452	50	Beneath Whale Tail Lake	23	-3.6	-3.4	0.011[d]	468
AMQ17-1265A	0 (within Whale Tail Lake)	Beneath Whale Tail Lake	N/A	N/A	N/A	0.016[e]	343 (including 112 m lake talik)
AMQ17-1233	21	Beneath A49 Lake	Insufficient depth	Insufficient depth	Insufficient depth	Insufficient depth	Insufficient depth
AMQ17-1337	12	Beneath A47 Lake	Insufficient depth	Insufficient depth	-9.5	0.019[f]	495
AMQ17-1277A	29	Beneath Whale Tail Lake	Insufficient depth	Insufficient depth	Insufficient depth	Insufficient depth	Insufficient depth

a) Estimated by projecting best fit line to surface.
b) Based on thermistor data from 105.1 to 282.1 m depth.
c) Based on thermistor data below 271.8 m depth.
d) Based on thermistor data below 248.4 m depth.
e) Based on thermistor data below 290.5 m depth.
f) Based on thermistor data below 166.2 m depth.

4.0 PIT LAKE THERMAL MODEL

Two-dimensional thermal modelling was carried out using the finite element program, TEMP/W, of GeoStudio 2007 (Ver. 7.23), developed by GEO-SLOPE International Ltd. This section presents the model scenarios, input parameters, and assumptions.

Golder previously conducted thermal modelling to evaluate the permafrost and talik conditions in the Whale Tail Lake and project area (Golder 2017a), and conducted thermal modelling for the cover of the Whale Tail waste rock storage facility (Golder 2017b, 2018b). A number of model parameters used in these assessments were adopted for this pit lake thermal modelling.

For the purpose of providing input to the pit hydrogeological modelling, the section A shown in Figure 1 was selected for thermal modelling of the post-closure pit lake. The modelling included the following steps.

- Evaluate the current condition of permafrost regime under Whale Tail Lake by reviewing of the existing thermistor data and the 2017 Whale Tail Lake thermal assessment results (Golder 2017a).
- Estimate the ground thermal conditions when the Whale Tail Pit is mined out, for use as the initial condition.
- Run a transient thermal model with the pit being flooded based on the proposed flooding schedule, to estimate the evolution of the permafrost regime during flooding at closure. The model stops when most of the permafrost under the pit lake thaws.
- Continue running the model to evaluate long-term permafrost regime, after the water-retaining dike is breached, and the Whale Tail Lake (South Basin) and the fully flooded Whale Tail Pit Lake are merged.
- Run a steady-state thermal model for the pit lake to estimate the ultimate permafrost regime.

4.1 Material Properties

Consistent with Golder (2017a), for the purposes of this thermal assessment, each model assumed a uniform thickness of 12 m of till overlying bedrock both on land and under the lake, except the pit lake. No lake bed sediment or weathered bedrock materials were included in the models. It is expected that the material properties of the bedrock will have a more significant effect on the thermal conditions than the soil due to the relative thickness of the soil compared to the bedrock. Material properties and depths used in the thermal models are summarized in Table 4. The material thermal properties were referenced from typical values presented in Andersland and Ladanyi (2004) and are consistent with Golder (2017a and b).

Table 4: Material Thermal Properties Used in the Models

Material	Assumed Volumetric Water Content	Thermal Conductivity (W/m-°C)		Volumetric Heat Capacity (MJ/m^3-°C)		Assumed Depth Below Ground surface (m)
		Frozen	Unfrozen	Frozen	Unfrozen	
Till	30%	1.8	1.5	2.0	2.5	0 to 12
Bedrock	1%	3.0	3.0	2.0	2.0	>12

The thermal models were solved considering groundwater with a phase change temperature of 0 °C. The addition of salinity in the groundwater would result in a freezing point depression and could lower the phase change temperature to below 0 °C if salinity is high enough. The freezing point depression was not modelled directly. A Westbay well system is installed in borehole AMQ16-626. Groundwater samples collected from the Westbay system at depths from 276 m to 392 m indicated a salinity range of 0.3% to 0.4% (Golder 2016b). This salinity level indicates an approximate 0.2 °C of freezing point depression and is considered to have minor impact to the evolution of the thermal regime around the pit lake.

4.2 Boundary Conditions

4.2.1 Ground Surface Temperature

The monthly ground surface temperature function was estimated through numerical modelling using daily climate data from Baker Lake, and review of existing thermistor data from the Whale Tail site (Golder 2017b). Ground surface temperatures are often observed to be warmer than the air temperatures in permafrost regions. Figure 2 shows the ground surface temperature function used in the model, as well as the Baker Lake normal air temperatures from 1981 to 2010. The mean annual ground temperature is about -7.3 °C, which lies in the range of -3.4 to -9.9 °C, projected from the thermistor data (Table 3) and is considered to be reasonable for use in the transient model.

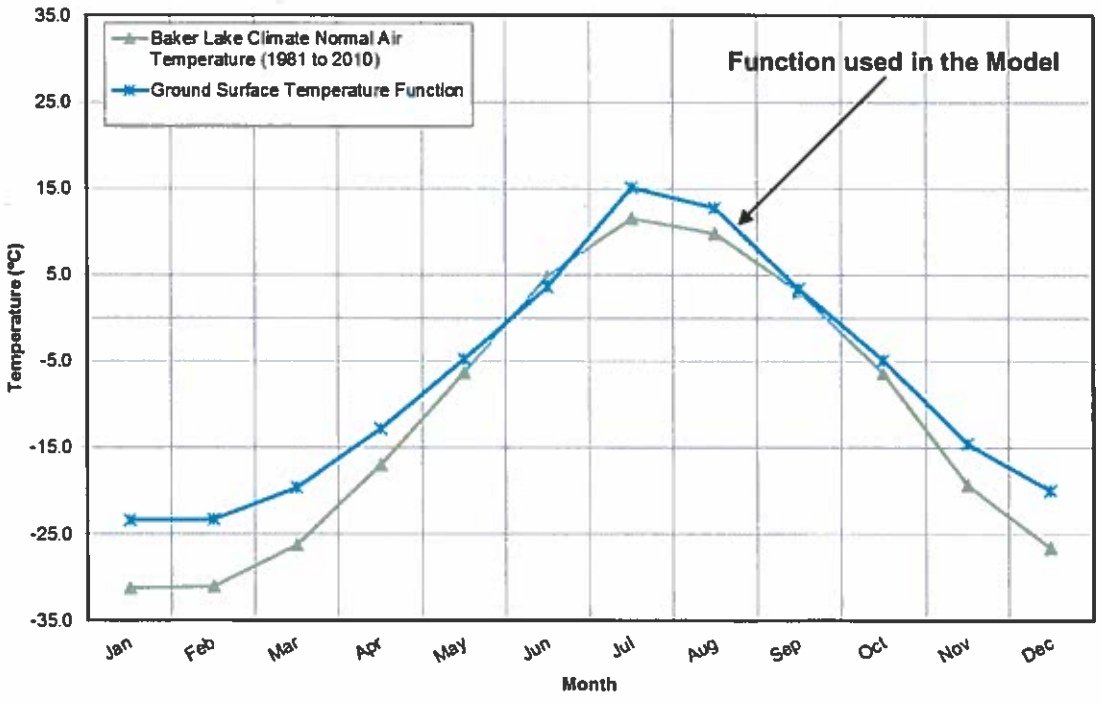

Figure 2: Monthly Air and Ground Surface Temperature Functions

4.2.2 Geothermal Gradient

A geothermal heat flux of 0.048 J/sec was applied to the models as the lower boundary condition based on the assumed bedrock thermal conductivity of 3.0 W/m-°C and a geothermal gradient of 0.016°C/m (Golder 2017a). This thermal gradient is consistent with the one estimated during the Meadowbank Project baseline study (Golder 2003).

4.2.3 Pit Lake Bottom Temperature

Typically, a mean annual lake bottom temperature is related to water depth in a permafrost region: the deeper the lake, the higher the expected mean annual lake bottom temperature. The mean annual lake bottom temperature is typically higher than the mean annual ground surface temperature in a permafrost region.

Deep pit lake temperatures tend to stabilize near +4°C at which the maximum water density typically occurs for fresh water and low salinity water. An assessment of the variation of the pit lake temperature was not carried out at this stage. A review of measured pit lake bottom temperatures from Pieters and Lawrence (2014) and Crusius et al. (2002) indicates the following:

- +3.5°C at about 110 m depth for Zone 2 Pit Lake at Colomac Mine located 250 km north of Yellowknife, NWT
- +5°C at about 90 m depth for Faro Pit Lake at Faro Mine near Faro, Yukon
- +4.5°C at about 60 m depth for Grum Pit Lake at Faro Mine near Faro, Yukon
- +4.2°C at about 50 m depth for Vangorda Pit Lake at Faro Mine near Faro, Yukon
- +5.2°C at about 120 m depth at Main Zone Pit Lake at Equity Mine near Houston, BC
- +5.5°C at about 40 m depth at Waterline Pit Lake at Equity Mine near Houston, BC

For the purpose of the modelling, the Whale Tail Pit Lake was assumed to have a constant mean annual bottom temperature of +4°C in all models based on the above review. Due to the depth of the proposed Whale Tail Pit Lake, meromictic conditions are expected to develop. When meromictic conditions are present, mixing of the surface and deep water is inhibited (stratification) which results in a stable bottom temperature.

For the relatively shallow lake area near the proposed water-retaining dike (Whale Tail Dike), a constant temperature of +2°C was assumed for the lake bottom.

4.3 Model Scenario and Assumptions

Pit flooding was adopted according to the mine schedule adopted in the 3D hydrogeological model at the time of the FEIS (Appendix 6-B of the FEIS). This 3D hydrogeological model also forms the basis of the post-closure prediction of groundwater inflows to the flooded pit lake. This thermal model was designed to provide reasonable assumptions for a conservative approach to melting of permafrost for the groundwater modelling. Since the FEIS, some changes in filling schedule have been potentially identified; however, for the scale of analysis being adopted and evaluated in the post-closure hydrogeological analysis, these changes will not significantly affect predictions of groundwater inflow quantity and quality to the pit lake. Pit flooding was assumed in the FEIS to commence in 2022 and was expected to reach the top of the pit / base of Whale Tail Lake (138 masl) in 2025. Subsequent re-flooding of Whale Tail Lake (North Basin) will continue until 2028. The assumed yearly water elevations during flooding is shown in Figure 3, and Table 5.

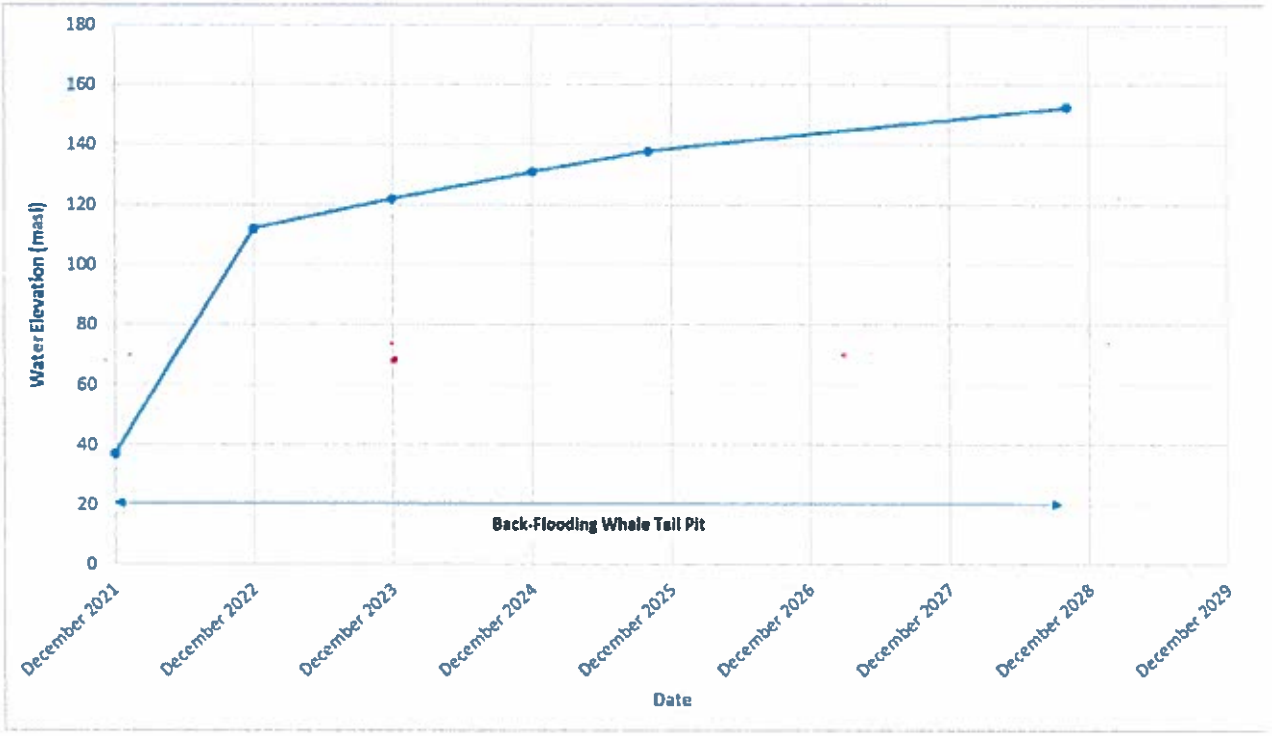

Figure 3: Whale Tail Pit Flooding Schedule from FEIS

The modelling scenario was developed to simulate the proposed Whale Tail Pit flooding elevations from years 1 to 7 as presented in Table 5.

Table 5: Thermal Model Back-Flooding Elevations

Year	Whale Tail Pit Back-Flooding Elevation (masl)
1	112
2	122
3	131
4	138
7	152.5

The post-closure pit lake and Whale Tail Lake are assumed to maintain the elevation of 152.5 masl.

The modelling was completed up to 300 years from start of flooding for the section through the centreline of the ultimate pit configuration. The model used the ground surface temperature function and a daily time step without consideration for any climate change. This hypothetical scenario assumed climatic conditions in 300 years remain similar to current site conditions.

The thermal modelling was completed to support the post-closure groundwater modelling in which the time to penetrate through the permafrost beneath the proposed Whale Tail Pit Lake was required. Climate change may accelerate slightly the warming progress of the upper ground thermal regime. This is considered to be insignificant for the purpose of supporting the hydrogeological study and therefore consideration for climate change was not included in the thermal model.

4.4 Thermal Conditions Prior to Flooding

Section A is located within Whale Tail Lake, in the longitudinal direction. Modelling the entire section is not expected to be appropriate to estimate the initial thermal conditions before pit flooding, as the lateral thermal impacts from surrounding colder ground cannot be accounted for in two dimensions. Instead, the initial thermal regime along section A was interpolated by modelling a steady-state condition of the northern terrace at the proposed Whale Tail Pit, the ground temperature data from thermistor AMQ17-1265A, and previous thermal analysis of the Whale Tail Lake completed by Golder (2017a). Based on the ground temperature profile from AMQ17-1265A, the extent of permafrost is expected to occur from El. 40.8 masl to -191 masl at the southeast side of the pit on section A. The assumed initial conditions are presented on Figure 2-1 of Attachment 2.

For the purpose of this assessment, the majority of the thermal regime prior to mining was assumed to be the same as when the mining is complete due to the short duration of mining. Some freeze-back during the pit mining is expected and was estimated to form a part of the initial thermal condition for the post-closure period.

5.0 SUMMARY OF MODEL RESULTS FOR THE POST-CLOSURE PERIOD

Post closure thermal modelling and hydrogeological analysis was not completed as part of the FEIS. In response to an information request regarding post closure groundwater flow, thermal modelling has been carried out to provide input to the hydrogeological study for post closure. The modelling was specifically conducted to evaluate how quickly the permafrost below Whale Tail Pit could melt following the formation of the Whale Tail Pit Lake during closure.

Several assumptions were made for the thermal modelling to evaluate when the permafrost below the pit could melt. The model results are presented in Figures 2-1 to 2-6 of Attachment 2 including:

- The assumed initial thermal conditions prior to pit flooding.
- Thermal conditions during the pit flooding in closure.
- Zero degree isolines at select years of post-closure, up to year 300.
- Steady-state thermal conditions for the post-closure pit lake.

The following findings are based on the model results:

- During pit flooding, the warm pit lake temperature impacts mostly the upper portion of the permafrost under the pit, and talik zones starts to occur around the pit wall and floor.
- The permafrost under the pit lake continues to thaw during the long term post-closure stage, and the open talik expands from the lake side (south) to the land side (north). The majority of the permafrost under the pit lake is thawed 300 years after closure.

- The steady-state model indicates the pit lake would thaw the permafrost in the long-term, and eventually reduce the permafrost depth under the ground northwest of the pit. A significantly longer time (in the order of 10,000 years) is likely required for the pit lake to reach the steady-state thermal conditions.

6.0 CLOSURE

The reader is referred to the Study Limitations, which follows the text and forms an integral part of this technical memorandum.

We trust this document satisfies you current requirements. If you have any questions or require further assistance, please do not hesitate to contact the undersigned.

GOLDER ASSOCIATES LTD.

REGISTERED PROFESSIONAL ENGINEER
30/Jul/2018
J.F. CHEN
LICENSEE
NT/NU

Colin McGrath
Junior Geotechnical Specialist

Jianfeng Chen, M.Sc., P.Eng. (NT/NU)
Geotechnical Engineer

Don Chorley, M.Sc., P.Geo.
Senior Hydrogeologist

Serge Ouellet, Ph.D., P.Eng. (NT/NU)
Senior Environmental Engineer

CM/JFC/DC/VJB/jr

Attachments: Study Limitations
Attachment 1: Thermistor Readings
Attachment 2: Thermal Model Results

PERMIT TO PRACTICE
GOLDER ASSOCIATES LTD.
Signature
Date 31 July 2018
PERMIT NUMBER: P 049
NT/NU Association of Professional Engineers and Geoscientists

https://golderassociates.sharepoint.com/sites/19830g/1000_phase1commitments/reports_all subphases/thermal modelling/rev0/1789310-174-tm-rev0-phase1whaletailpit post-closure thermal.docx

REFERENCES

Agnico Eagle (Agnico Eagle Mines Limited). 2016. Meadowbank Mine – Amendment/Reconsideration of the Project Certificate (No.004/File No. 03MN107) and Amendment to the type A Water Licence (No. 2AM-MEA1525). Volume 8, Appendix 8-B.2. Submitted to the Nunavut Impact Review Board, 30 June 2016.

Andersland, O.B. and Ladanyi, B. 2004. Frozen Ground Engineering. 2nd edition, John Wiley & Sons, Inc.

Crusius J, Pieters R, Leung A, Whittle P, Pedersen T, Lawrence GA, McNee JJ. 2002. A Tale of Two Pit Lake: Initial Results of a Three-Year Study of the Main Zone and Waterline Pit Lakes Near Houston, BC. 2002 SME Annual Meeting, Feb. 25 – 27, Phoenix Arizona, USA.

Golder (Golder Associates Ltd.). 2003. Report on Permafrost Thermal Regime Baseline Studies, Meadowbank Project, Nunavut. Golder Project No. 03-1413-078. Prepared for Cumberland Resources Ltd. Submitted 18 December 2003.

Golder. 2016a. Water Management and Water Balance Related to Amaruq Exploration Portal/Ramp Program, Quarry and Advanced Underground Exploration and Bulk Sample, Amaruq Exploration Site, Nunavut. Golder Doc. No. 069-1665859 Ver 0. Prepared for Agnico Eagle Mines Ltd. Submitted 15 November 2016.

Golder. 2016b. Groundwater Quality Investigation, Amaruq, Nunavut. Golder Document No. 080-1649355. Prepared for Agnico Eagle Mines Ltd. Submitted 15 November 2016.

Golder. 2017a. Whale Tail Lake Thermal Assessment. Golder Reference No. 1665859-085-TM-Rev0-5100. Prepared for Agnico Eagle Mines Ltd. Submitted 22 February 2017.

Golder. 2017b. Commitment 39: Whale Tail Pit Project Waste Rock Storage Facility Cover Thermal Assessment. Golder Reference No. 1774579-124-TM-Rev0-2500. Prepared for Agnico Eagle Mines Ltd. Submitted 10 July 2017.

Golder. 2018a. Whale Tail Pit Post-closure Hydrogeological Assessment for the Whale Tail Open Pit. Reference No. 1789310-180-TM. June 2018.

Golder. 2018b. Whale Tail Pit Project Waste Rock Storage Facility Cover Thermal Assessment. Reference No. 1789310_177_TM_Rev0. June 2018

Knight Piésold. 2015. Agnico Eagle Mines Ltd.: Meadowbank Division – Whale Tail Pit – Permafrost and Hydrogeological Characterization. Submitted 24 November 2015.

Pieters R, Lawrence GA. 2014. Physical Processes and Meromixis in Pit Lakes Subject to Ice Cover. Canadian Journal of Civil Engineering. 41(6):569-578.

STUDY LIMITATIONS

Golder Associates Ltd. (Golder) has prepared this document in a manner consistent with that level of care and skill ordinarily exercised by members of the engineering and science professions currently practising under similar conditions in the jurisdiction in which the services are provided, subject to the time limits and physical constraints applicable to this document. No warranty, express or implied, is made.

This document, including all text, data, tables, plans, figures, drawings and other documents contained herein, has been prepared by Golder for the sole benefit of Agnico Eagle Mines Limited It represents Golder's professional judgement based on the knowledge and information available at the time of completion. Golder is not responsible for any unauthorized use or modification of this document. All third parties relying on this document do so at their own risk.

The factual data, interpretations, suggestions, recommendations and opinions expressed in this document pertain to the specific project, site conditions, design objective, development and purpose described to Golder by Agnico Eagle Mines Limited, and are not applicable to any other project or site location. In order to properly understand the factual data, interpretations, suggestions, recommendations and opinions expressed in this document, reference must be made to the entire document.

This document, including all text, data, tables, plans, figures, drawings and other documents contained herein, as well as all electronic media prepared by Golder are considered its professional work product and shall remain the copyright property of Golder. Agnico Eagle Mines Limited. may make copies of the document in such quantities as are reasonably necessary for those parties conducting business specifically related to the subject of this document or in support of or in response to regulatory inquiries and proceedings. Electronic media is susceptible to unauthorized modification, deterioration and incompatibility and therefore no party can rely solely on the electronic media versions of this document.

ATTACHMENT 1

Thermistor Readings

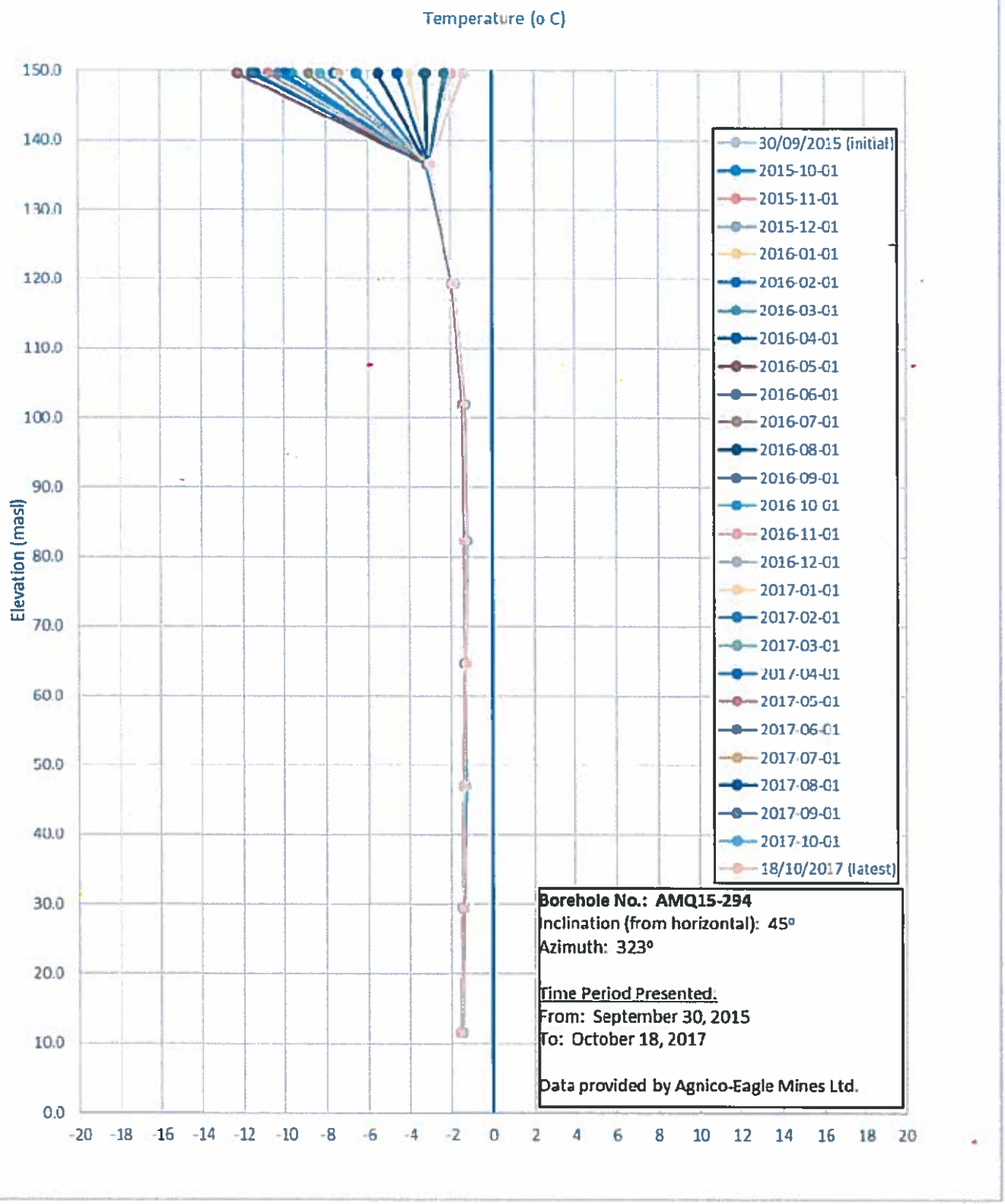

NOTE: Readings are shown once per month for clarity.

CLIENT
AGNICO EAGLE MINES LTD.

PROJECT
WHALE TAIL PIT PROJECT
WHALE TAIL LAKE THERMAL ASSESSMENT
NUNAVUT

CONSULTANT
GOLDER

YYYY-MM-DD	2018-01-19
PREPARED	CTM
DESIGN	CTM
REVIEW	SO
APPROVED	JFC

TITLE
THERMISTOR AMQ15-294 2015/2017 READINGS

PROJECT No	PHASE/TASK	Rev	FIGURE
1789310	1000/12020	0	1-1

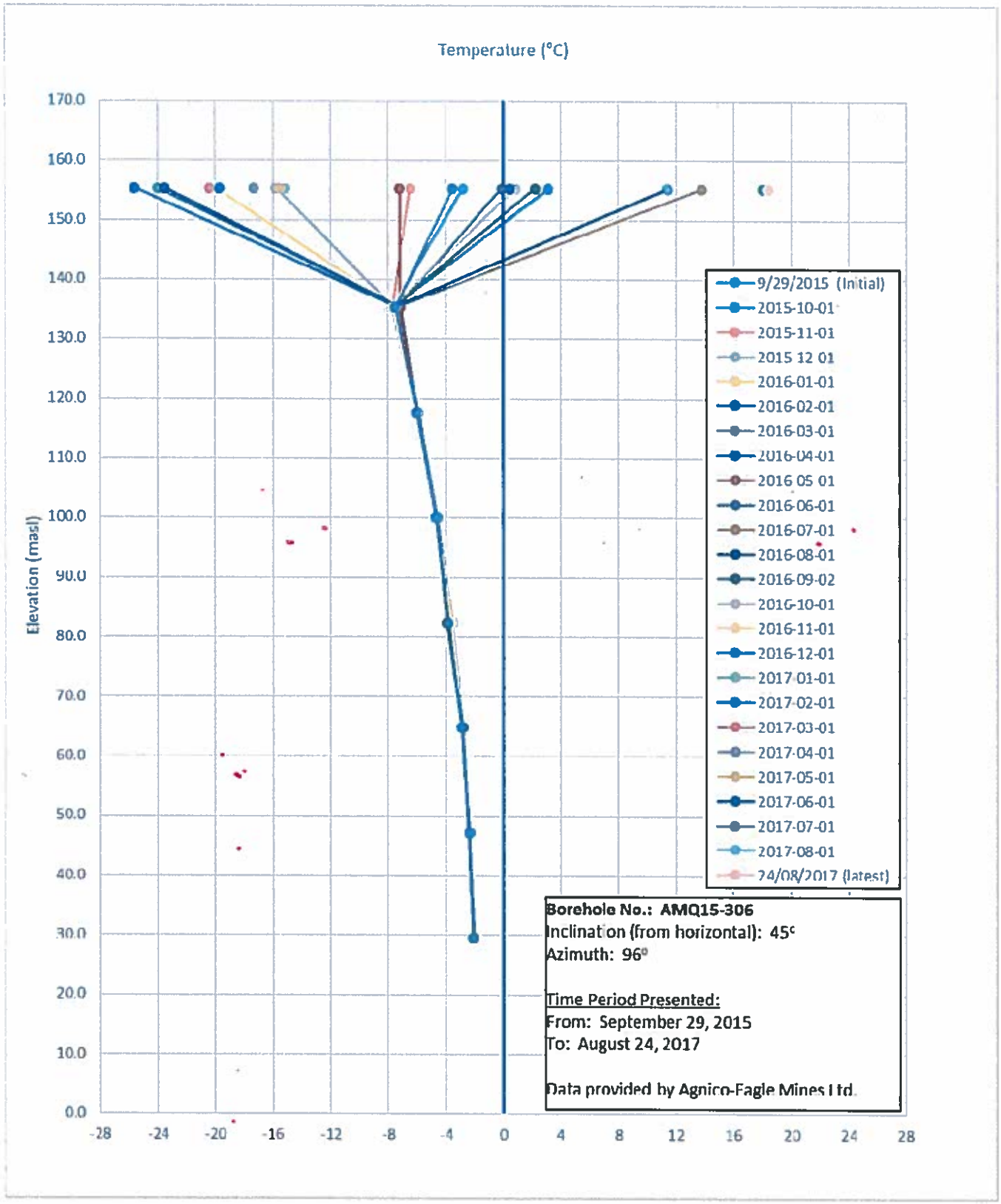

NOTE: Readings are shown once per month for clarity.

CLIENT
AGNICO EAGLE MINES LTD.

CONSULTANT
GOLDER

YYYY-MM-DD	2018-01-19
PREPARED	CTM
DESIGN	CTM
REVIEW	SO
APPROVED	JFC

PROJECT
WHALE TAIL PIT PROJECT
WHALE TAIL LAKE THERMAL ASSESSMENT
NUNAVUT

TITLE
THERMISTOR AMQ15-306 2015/2017 READINGS

PROJECT No.	PHASE/TASK	Rev.	FIGURE
1789310	1000/12020	0	1-2

IF THIS MEASUREMENT DOES NOT MATCH WHAT IS SHOWN, THE SHEET SIZE HAS BEEN MODIFIED FROM ANSI A

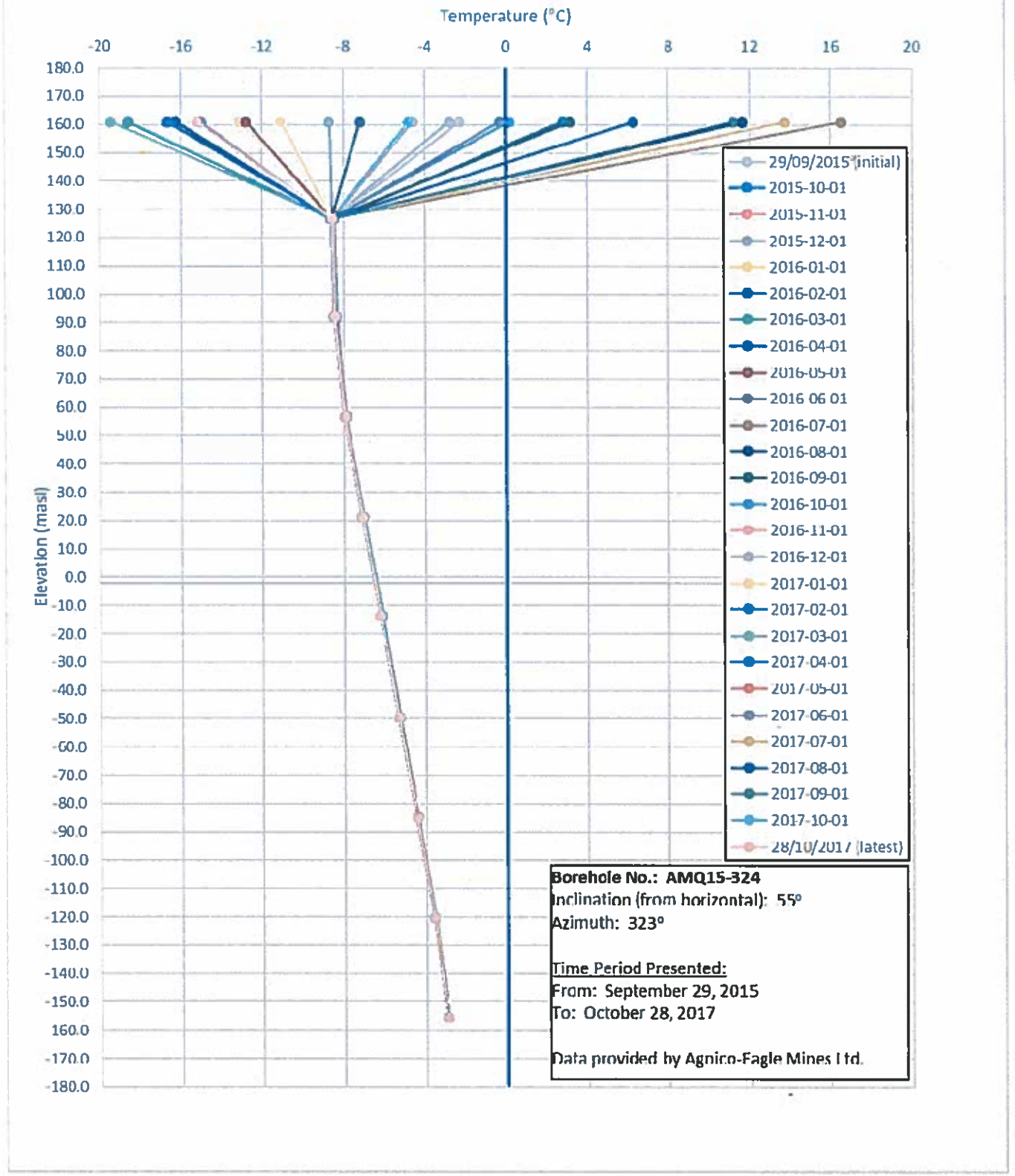

NOTE: Readings are shown once per month for clarity.

CLIENT
AGNICO EAGLE MINES LTD.

CONSULTANT
GOLDER

YYYY-MM-DD	2018-01-19
PREPARED	CTM
DESIGN	CTM
REVIEW	SO
APPROVED	JFC

PROJECT
WHALE TAIL PIT PROJECT
WHALE TAIL LAKE THERMAL ASSESSMENT
NUNAVUT

TITLE
THERMISTOR AMQ15-324 2015/2017 READINGS

PROJECT No.	PHASE/TASK	Rev.	FIGURE
1789310	1000/12020	0	1-3

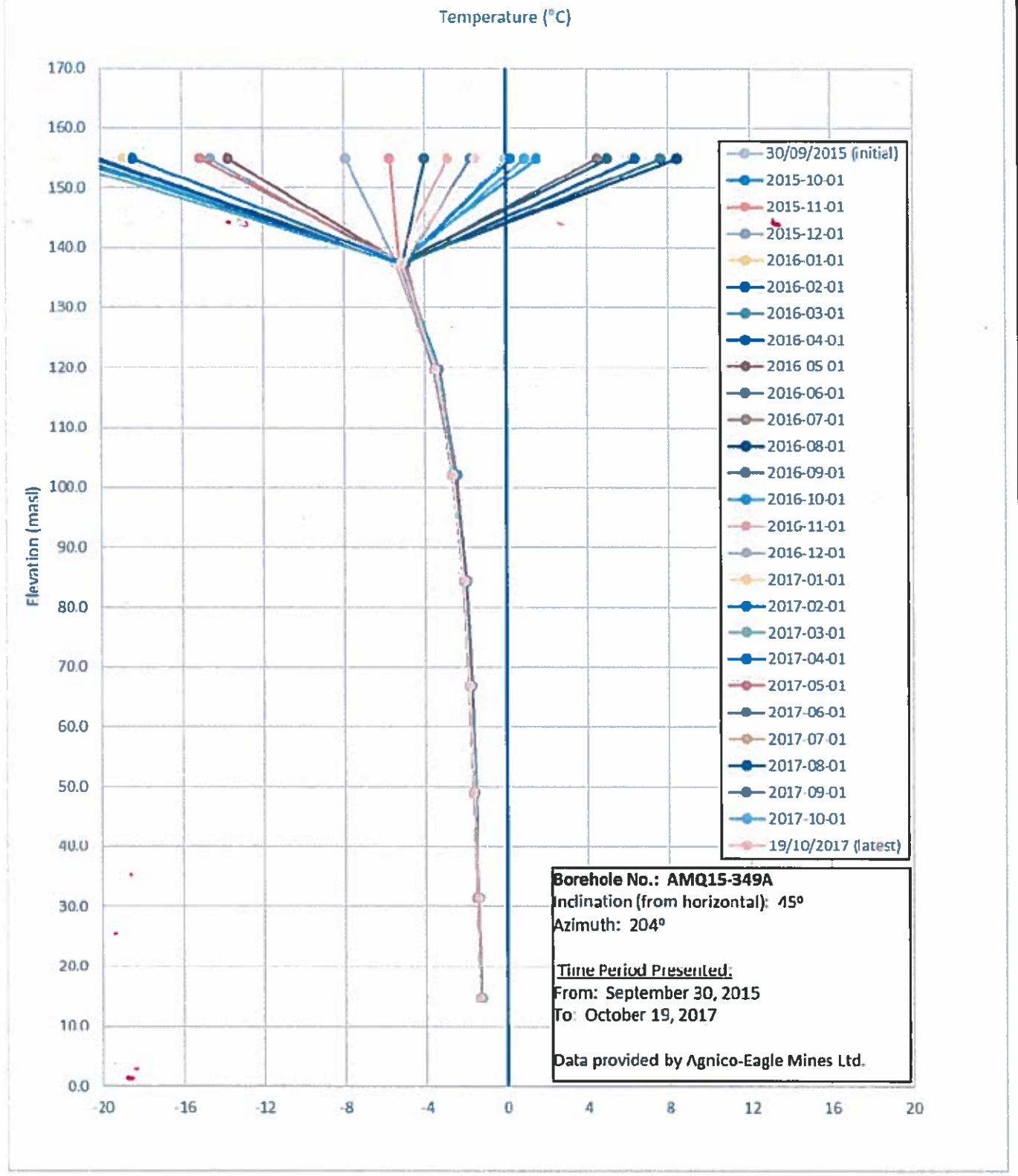

NOTE: Readings are shown once per month for clarity.

CLIENT
AGNICO EAGLE MINES LTD.

CONSULTANT
GOLDER

YYYY-MM-DD	2018-01-19
PREPARED	CTM
DESIGN	CTM
REVIEW	SO
APPROVED	JFC

PROJECT
WHALE TAIL PIT PROJECT
WHALE TAIL LAKE THERMAL ASSESSMENT
NUNAVUT

TITLE
THERMISTOR AMQ15-349A 2015/2017 READINGS

PROJECT No	PHASE/TASK	Rev	FIGURE
1789310	1000/12020	0	1-4

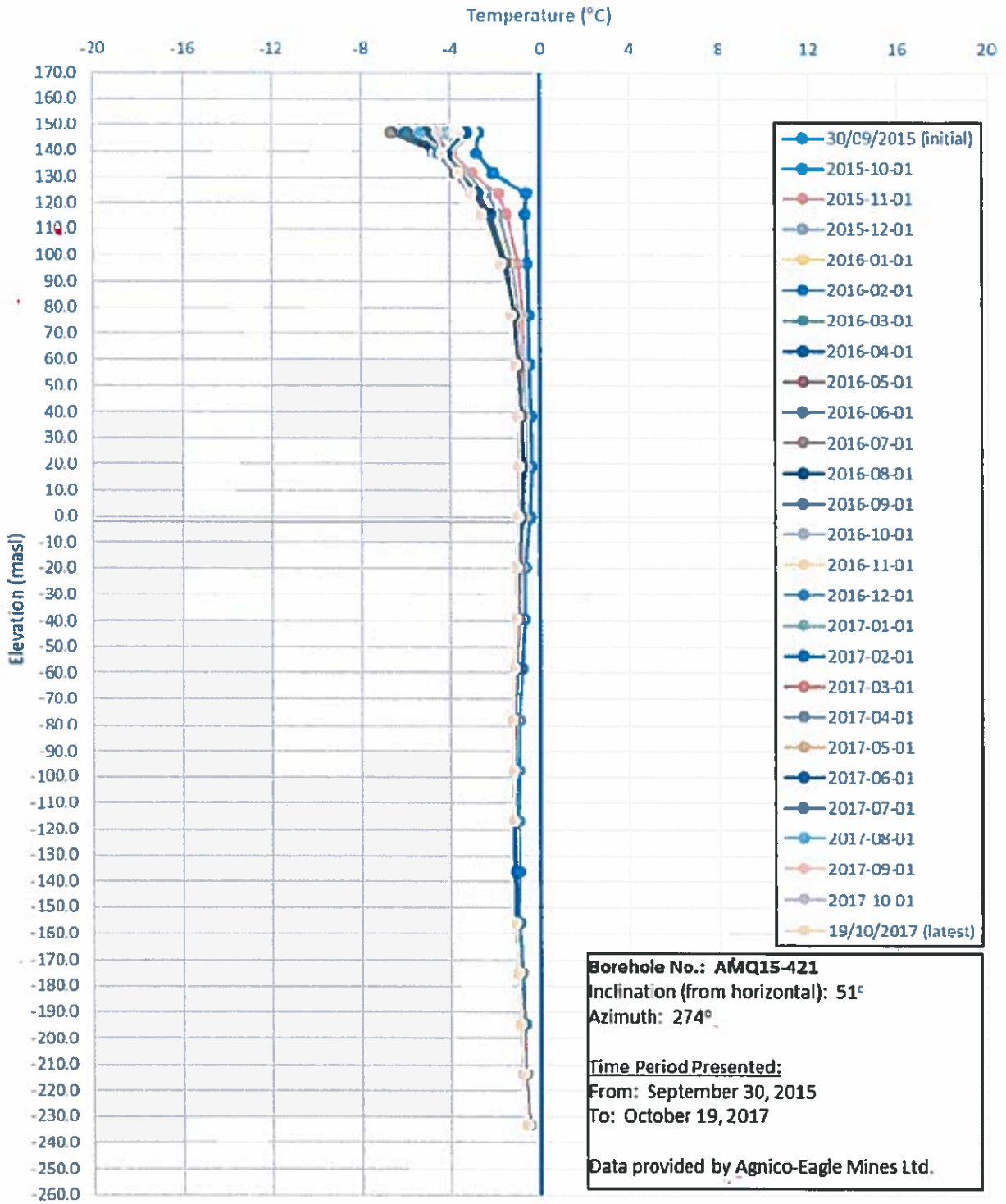

Borehole No.: AMQ15-421
Inclination (from horizontal): 51°
Azimuth: 274°

Time Period Presented:
From: September 30, 2015
To: October 19, 2017

Data provided by Agnico-Eagle Mines Ltd.

NOTE: Readings are shown once per month for clarity.

CLIENT
AGNICO EAGLE MINES LTD.

PROJECT
WHALE TAIL PIT PROJECT
WHALE TAIL LAKE THERMAL ASSESSMENT
NUNAVUT

CONSULTANT
GOLDER

YYYY-MM-DD	2018-01-19
PREPARED	CTM
DESIGN	CTM
REVIEW	SO
APPROVED	JFC

TITLE
THERMISTOR AMQ15-421 2015/2017 READINGS

PROJECT No	PHASE/TASK	Rev	FIGURE
1789310	1000/12020	0	1-5

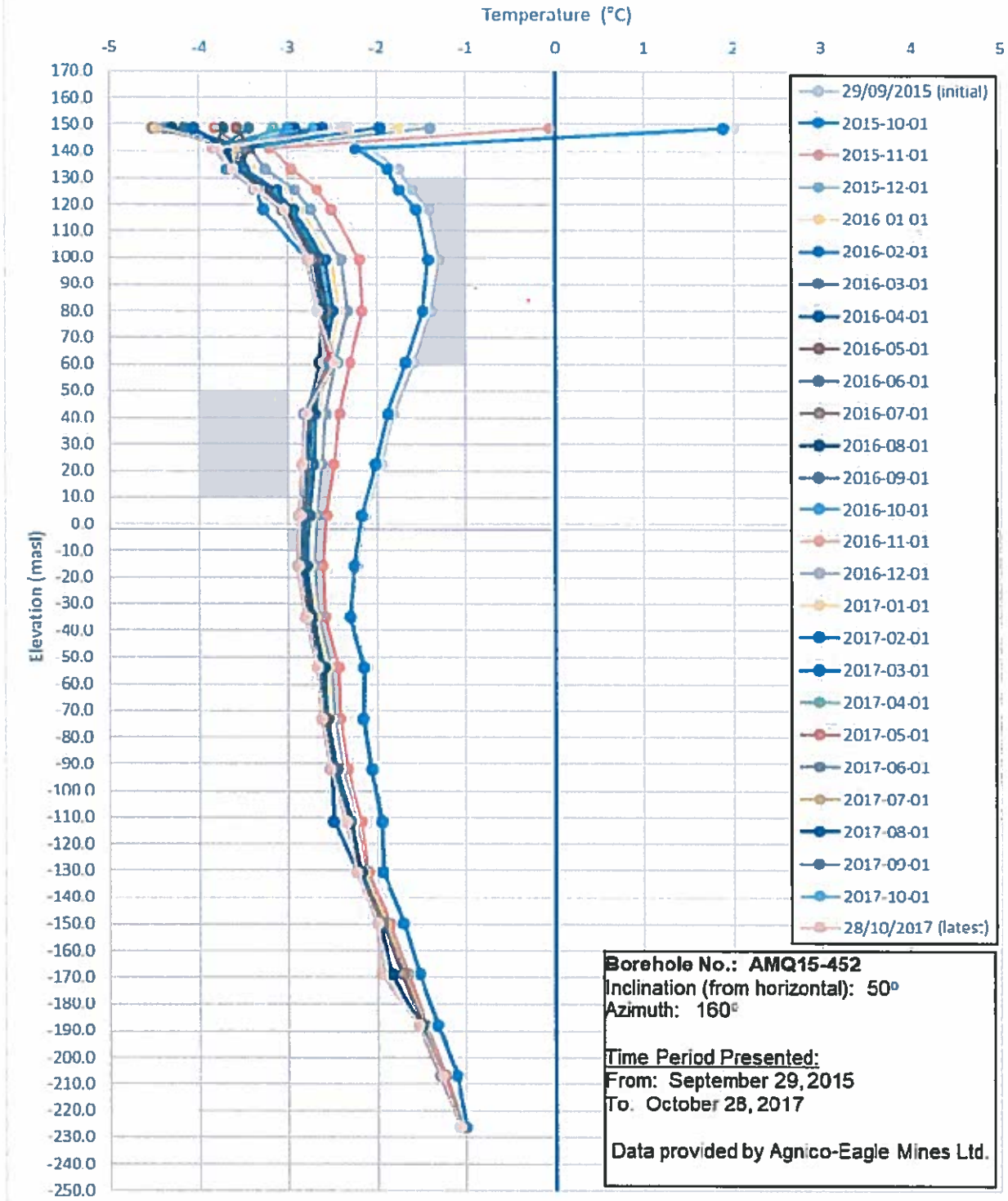

NOTE: Readings are shown once per month for clarity.

CLIENT
AGNICO EAGLE MINES LTD.

CONSULTANT
GOLDER

YYYY-MM-DD	2018-01-19
PREPARED	CTM
DESIGN	CTM
REVIEW	SO
APPROVED	JFC

PROJECT
WHALE TAIL PIT PROJECT
WHALE TAIL LAKE THERMAL ASSESSMENT
NUNAVUT

TITLE
THERMISTOR AMQ15-452 2015/2017 READINGS

PROJECT No	PHASE/TASK	Rev	FIGURE
1789310	1000/12020	0	1-6

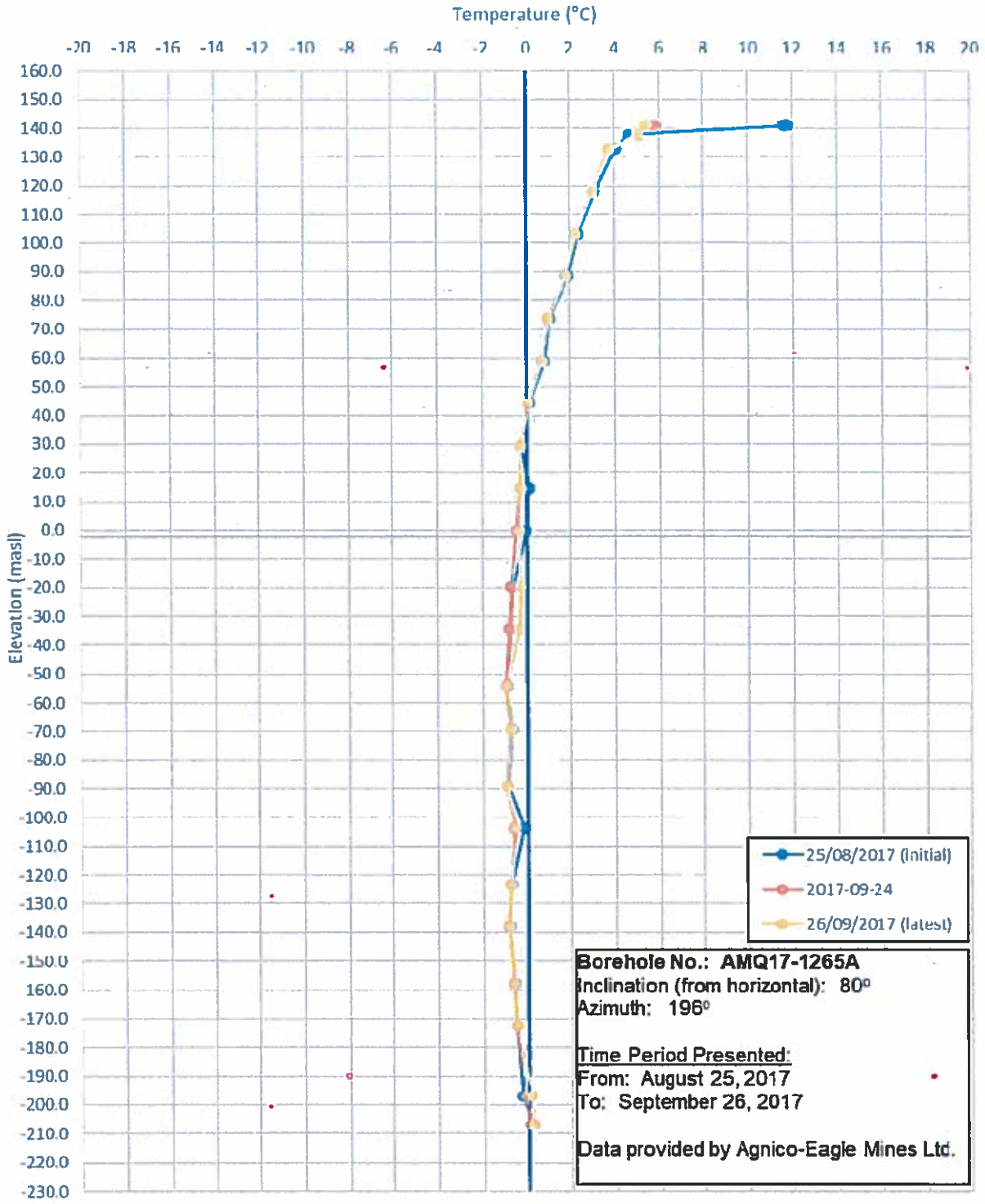

CLIENT
AGNICO EAGLE MINES LTD.

CONSULTANT
GOLDER

YYYY-MM-DD	2018-01-19
PREPARED	CTM
DESIGN	CTM
REVIEW	SO
APPROVED	JFC

PROJECT
WHALE TAIL PIT PROJECT
WHALE TAIL LAKE THERMAL ASSESSMENT
NUNAVUT

TITLE
THERMISTOR AMQ17-1265A 2017 READINGS

PROJECT No	PHASE/TASK	Rev	FIGURE
1789310	1000/12020	0	1-7

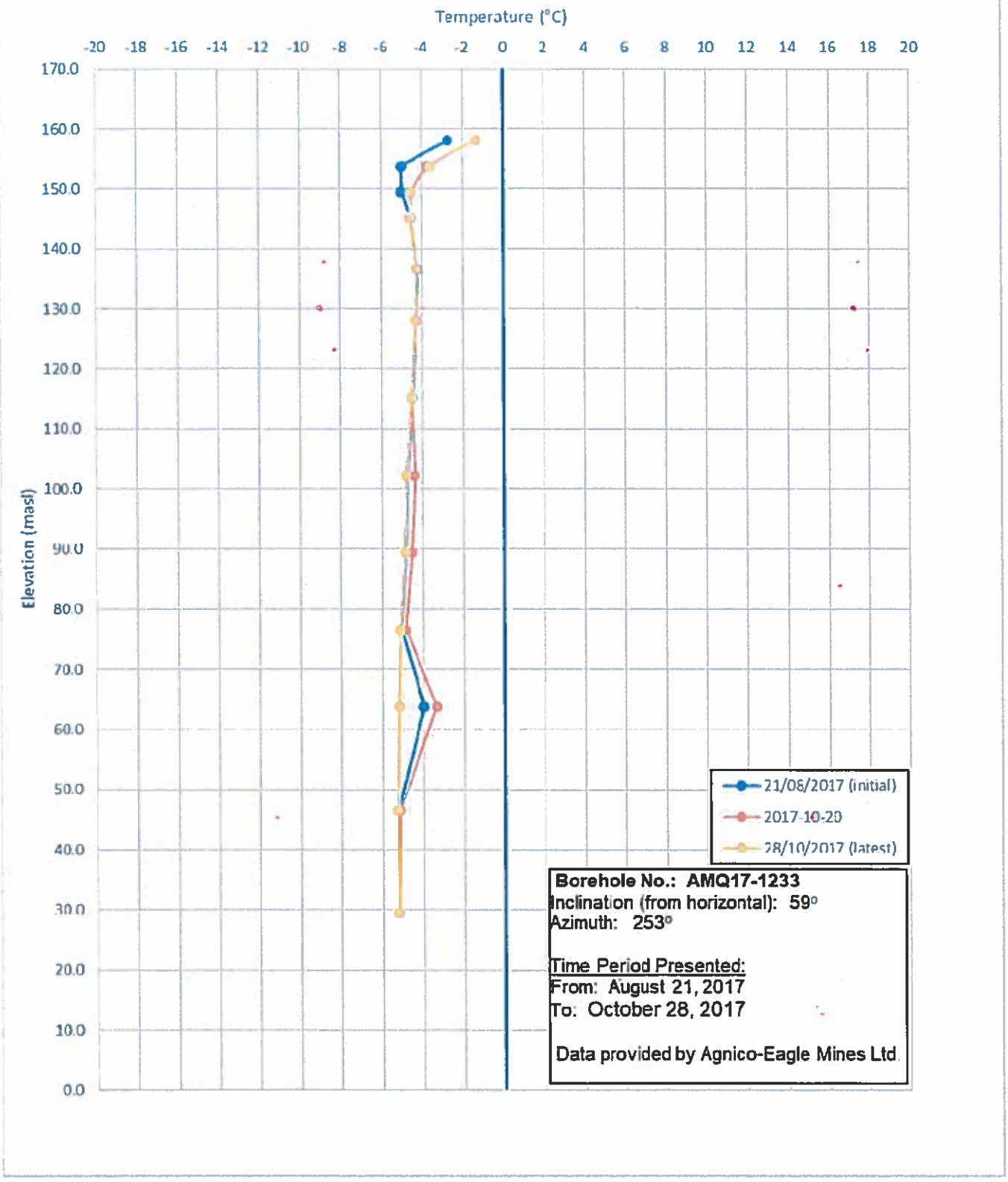

CLIENT
AGNICO EAGLE MINES LTD.

CONSULTANT
GOLDER

YYYY-MM-DD	2018-01-19
PREPARED	CTM
DESIGN	CTM
REVIEW	SO
APPROVED	JFC

PROJECT
WHALE TAIL PIT PROJECT
WHALE TAIL LAKE THERMAL ASSESSMENT
NUNAVUT

TITLE
THERMISTOR AMQ17-1233 2017 READINGS

PROJECT No	PHASE/TASK	Rev	FIGURE
1789310	1000/12020	0	1-8

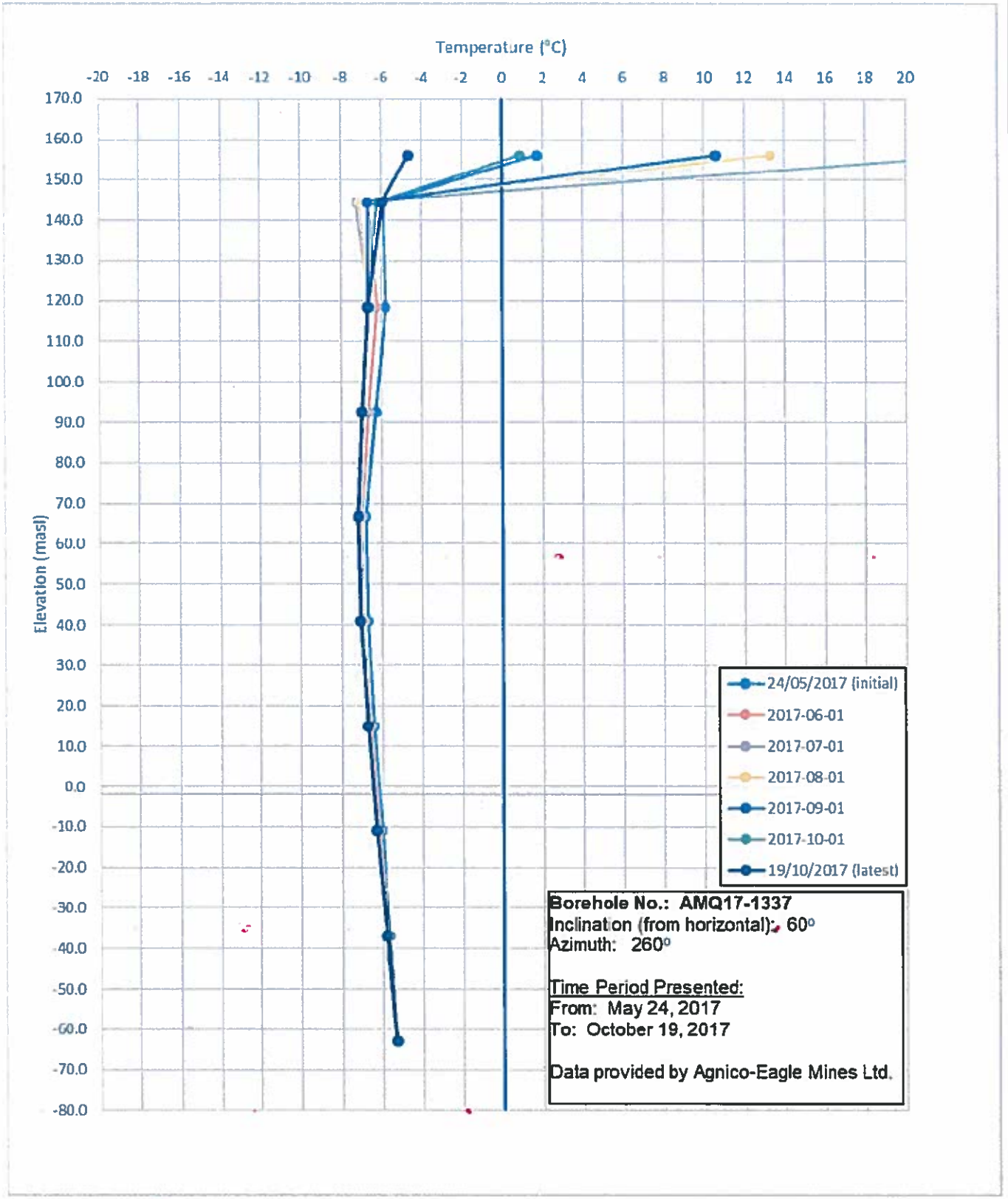

NOTE: Readings are shown once per month for clarity.

CLIENT
AGNICO EAGLE MINES LTD.

CONSULTANT
GOLDER

YYYY-MM-DD	2018-01-19
PREPARED	CTM
DESIGN	CTM
REVIEW	SO
APPROVED	JFC

PROJECT
WHALE TAIL PIT PROJECT
WHALE TAIL LAKE THERMAL ASSESSMENT
NUNAVUT

TITLE
THERMISTOR AMQ17-1337 2017 READINGS

PROJECT No	PHASE/TASK	Rev	FIGURE
1789310	1000/12020	0	1-9

© THIS MEASUREMENT DOES NOT MATCH WHAT IS SHOWN, THE SHEET SIZE HAS BEEN MODIFIED FROM ANSI A

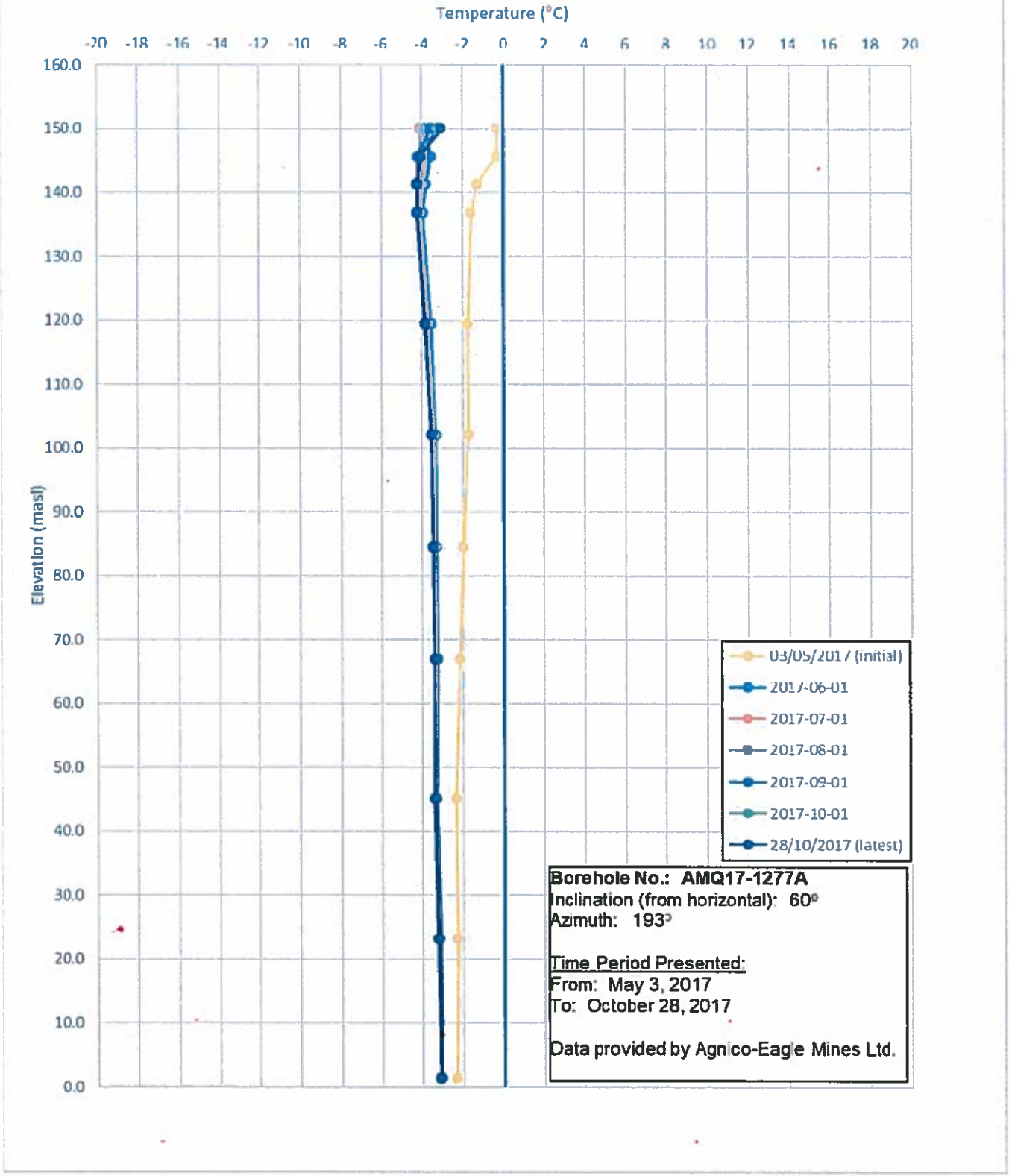

NOTE: Readings are shown once per month for clarity.

CLIENT
AGNICO EAGLE MINES LTD.

CONSULTANT
GOLDER

YYYY-MM-DD	2018-01-19
PREPARED	CTM
DESIGN	CTM
REVIEW	SO
APPROVED	JFC

PROJECT
WHALE TAIL PIT PROJECT
WHALE TAIL LAKE THERMAL ASSESSMENT
NUNAVUT

TITLE
THERMISTOR AMQ17-1277A 2017 READINGS

PROJECT No.	PHASE/TASK	Rev.	FIGURE
1789310	1000/12020	0	1-10

IF THIS MEASUREMENT DOES NOT MATCH WHAT IS SHOWN, THE SHEET SIZE HAS BEEN MODIFIED FROM ANSI A

ATTACHMENT 2

Thermal Model Results

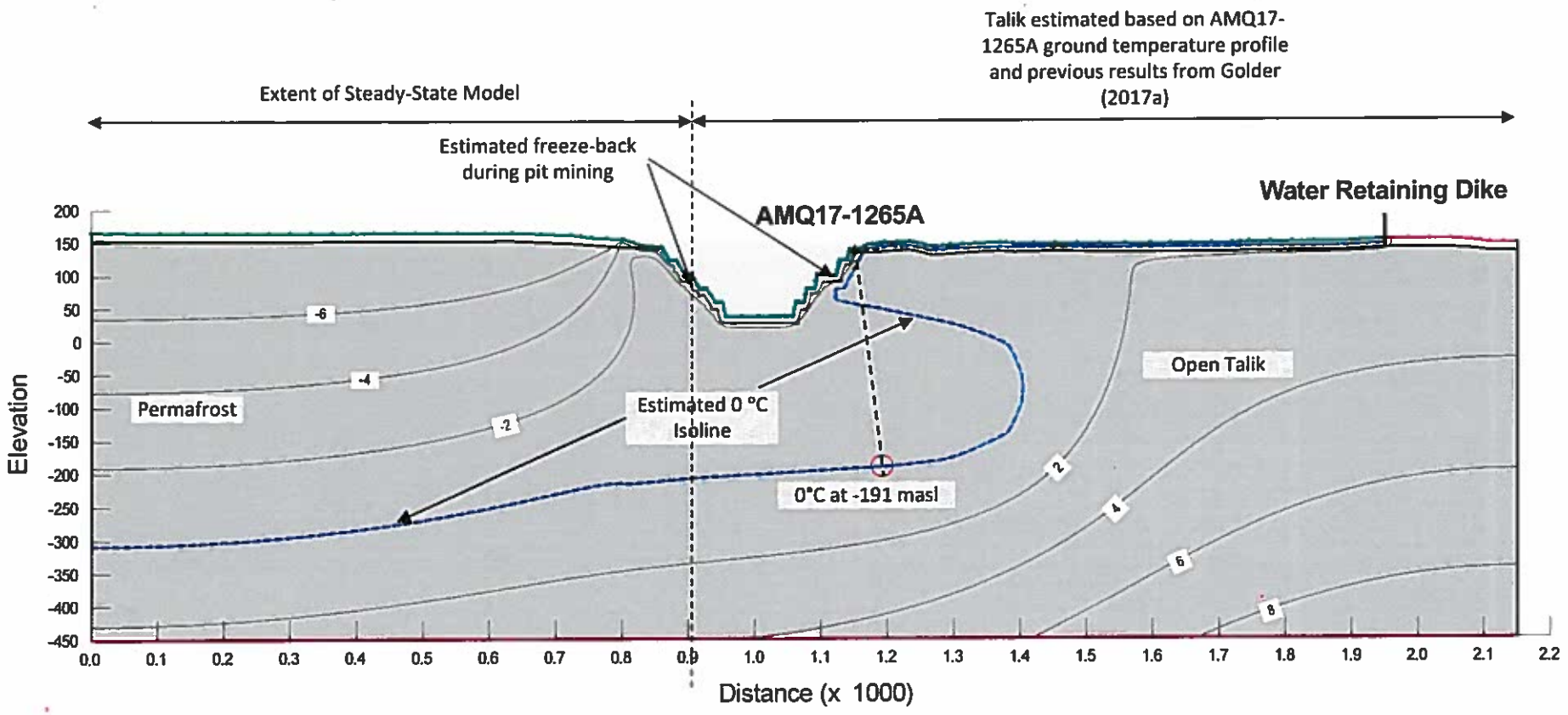

File Name: Phase 1 Section.gsz

Notes

1. Location of thermistor AMQ17-1265A is approximate.
2. Temperature contour interval 2 °C.

CLIENT
AGNICO EAGLE MINES LTD.

CONSULTANT
GOLDER

YYYY-MM-DD	2018-04-03
PREPARED	CTM
DESIGN	CTM
REVIEW	SO
APPROVED	JFC

PROJECT
WHALE TAIL PIT PROJECT
POST-CLOSURE PIT LAKE THERMAL ANALYSIS
NUNAVUT

TITLE
TRANSIENT THERMAL MODELLING
ASSUMED INITIAL CONDITION
BEFORE PIT FLOODING

PROJECT No	Phase/Task	Rev	Figure
1789310	1000/12020	0	2-1

Path: D:\Active\20163 Proj\1685859 Agnico Eagle_Water Mgmt_Whale Tail\1789310_ThermalThermal Analysis

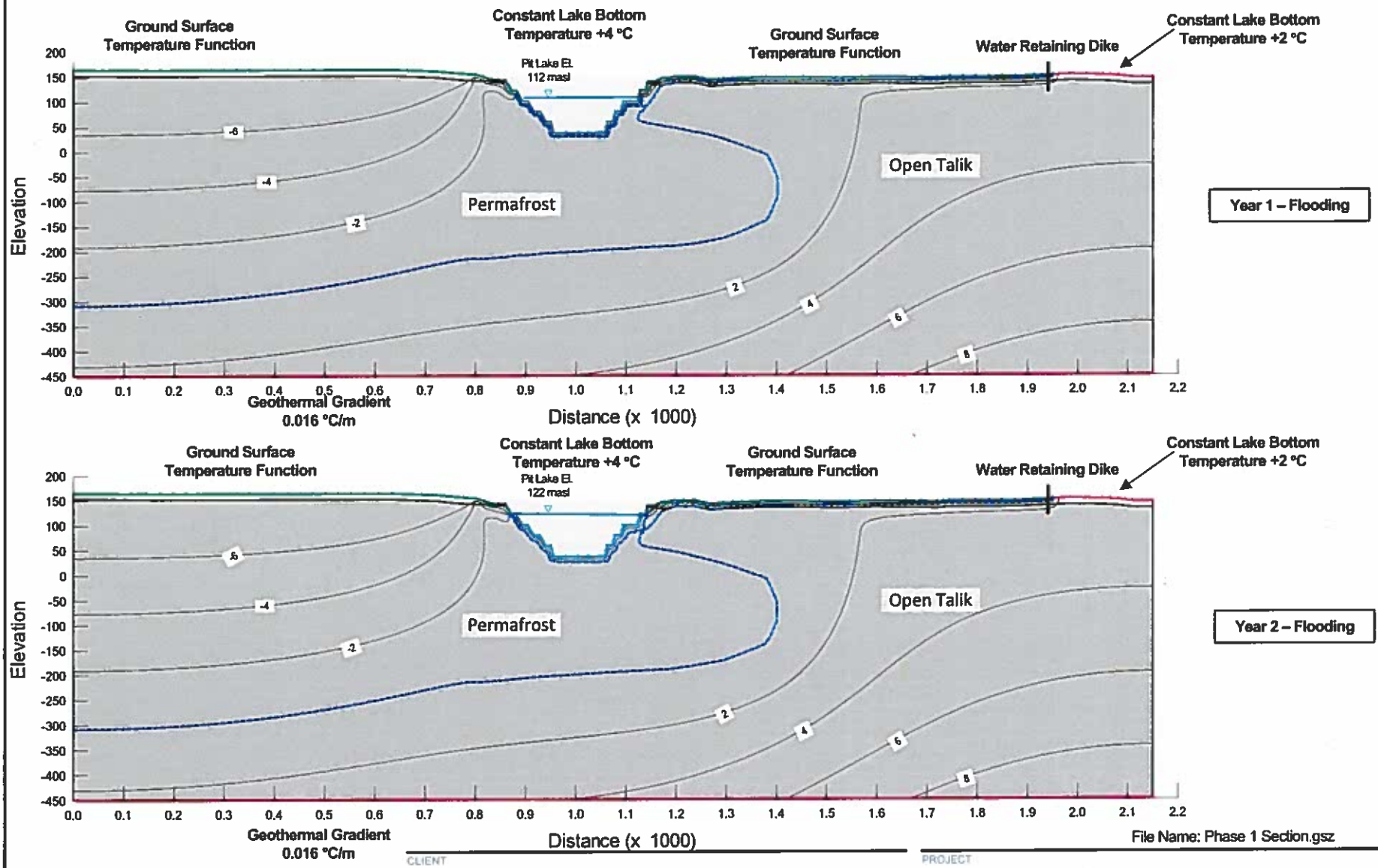

File Name: Phase 1 Section.gsz

Notes

1. Location of thermistor AMQ17-1265A is approximate.
2. Temperature contour interval 2 °C.

CLIENT
AGNICO EAGLE MINES LTD.

CONSULTANT
GOLDER

YYYY-MM-DD	2018-04-03
PREPARED	CTM
DESIGN	CTM
REVIEW	SO
APPROVED	JFC

PROJECT
WHALE TAIL PIT PROJECT
POST-CLOSURE PIT LAKE THERMAL ANALYSIS
NUNAVUT

TITLE
TRANSIENT THERMAL MODELLING
PIT FLOODING
YEARS 1 & 2

PROJECT No	Phase/Task	Rev	Figure
1789310	1000/12020	0	2-2

Path: O:\Active\2016\3 Proj\1665859 Agnico Eagle_Water Mgmt_Whale Tail\1789310_Thermal\Thermal Analysis

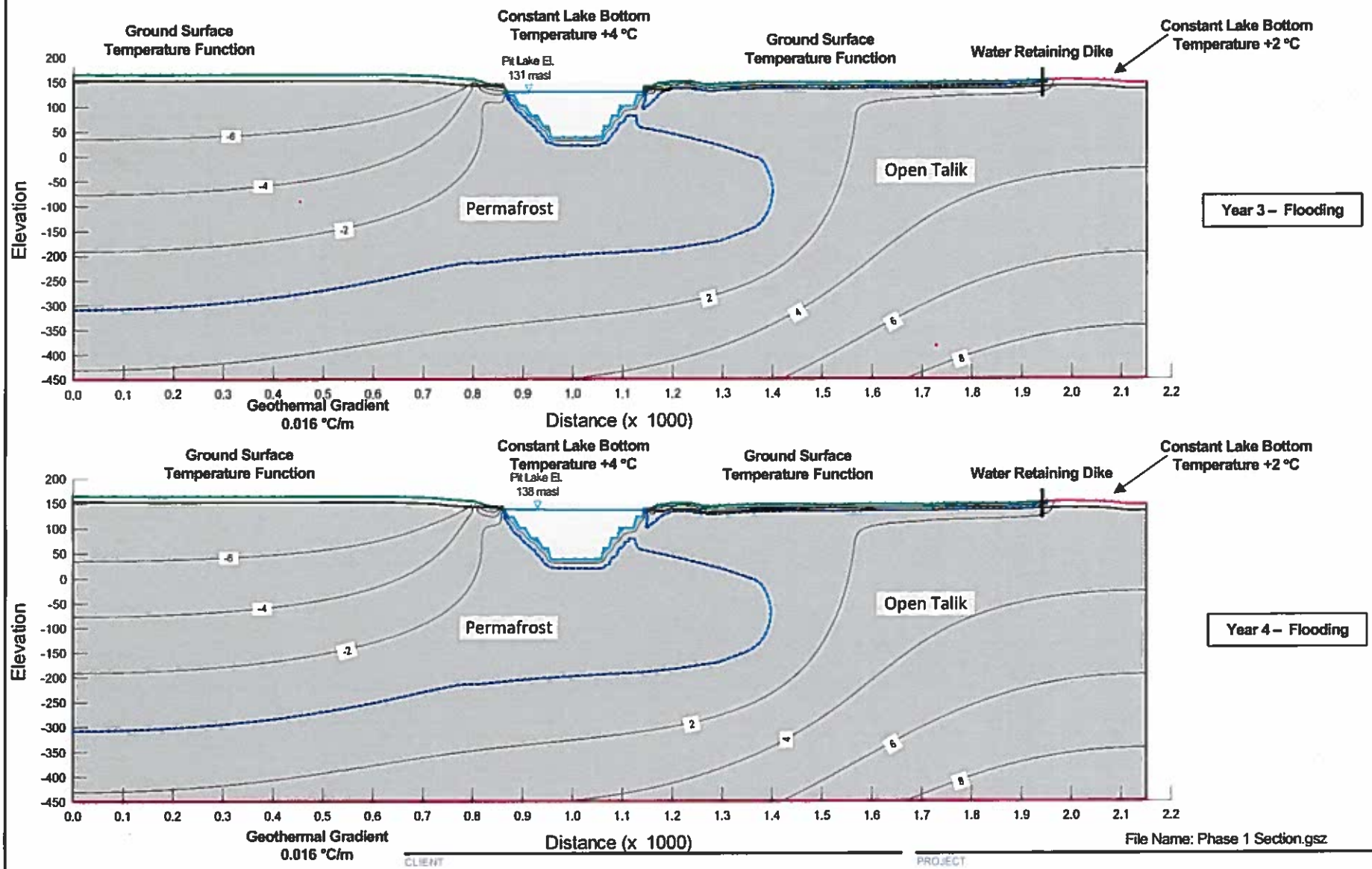

File Name: Phase 1 Section.gsz

Notes

1. Location of thermistor AMQ17-1265A is approximate.
2. Temperature contour interval 2 °C.

CLIENT
AGNICO EAGLE MINES LTD.

CONSULTANT
GOLDER

YYYY-MM-DD	2018-04-03
PREPARED	CTM
DESIGN	CTM
REVIEW	SO
APPROVED	JFC

PROJECT
WHALE TAIL PIT PROJECT
POST-CLOSURE PIT LAKE THERMAL ANALYSIS
NUNAVUT

TITLE
TRANSIENT THERMAL MODELLING
PIT FLOODING
YEARS 3 & 4

PROJECT No.	Phase/Task	Rev.	Figure
1789310	1000/12020	0	2-3

Path: O:\Active\20183 Proj\1665859 Agnico Eagle_Water Mgmt_Whale Tail\1789310_ThermalThermal Analysis

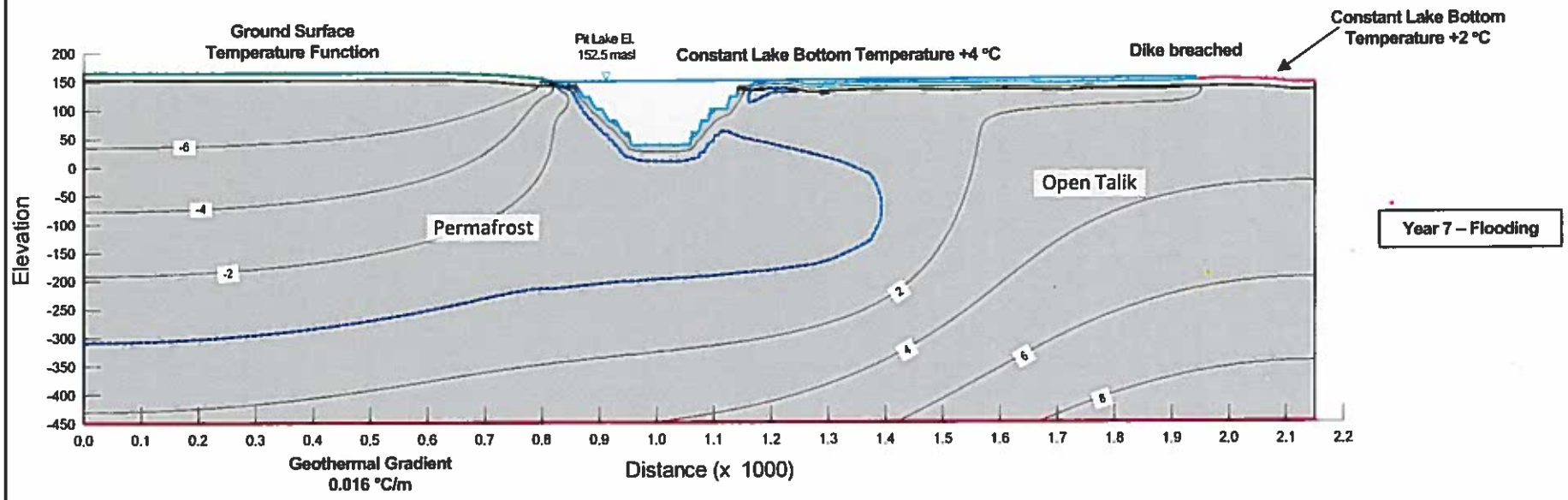

Notes

1. Location of thermistor AMQ17-1265A is approximate.
2. Temperature contour interval 2 °C.

File Name: Phase 1 Section.gsz

CLIENT
AGNICO EAGLE MINES LTD.

CONSULTANT
GOLDER

YYYY-MM-DD	2016-04-03
PREPARED	CTM
DESIGN	CTM
REVIEW	SO
APPROVED	JFC

PROJECT
WHALE TAIL PIT PROJECT
POST-CLOSURE PIT LAKE THERMAL ANALYSIS
NUNAVUT

TITLE
TRANSIENT THERMAL MODELLING
PIT FLOODING
YEAR 7

PROJECT No	Phase/Task	Rev	Figure
1789310	1000/12020	0	2-4

Path: O:\Active\2018\3 Proj\1865859 Agnico Eagle_Water Mgmt_Whale Tail\1789310_Thermal\Thermal Analysis

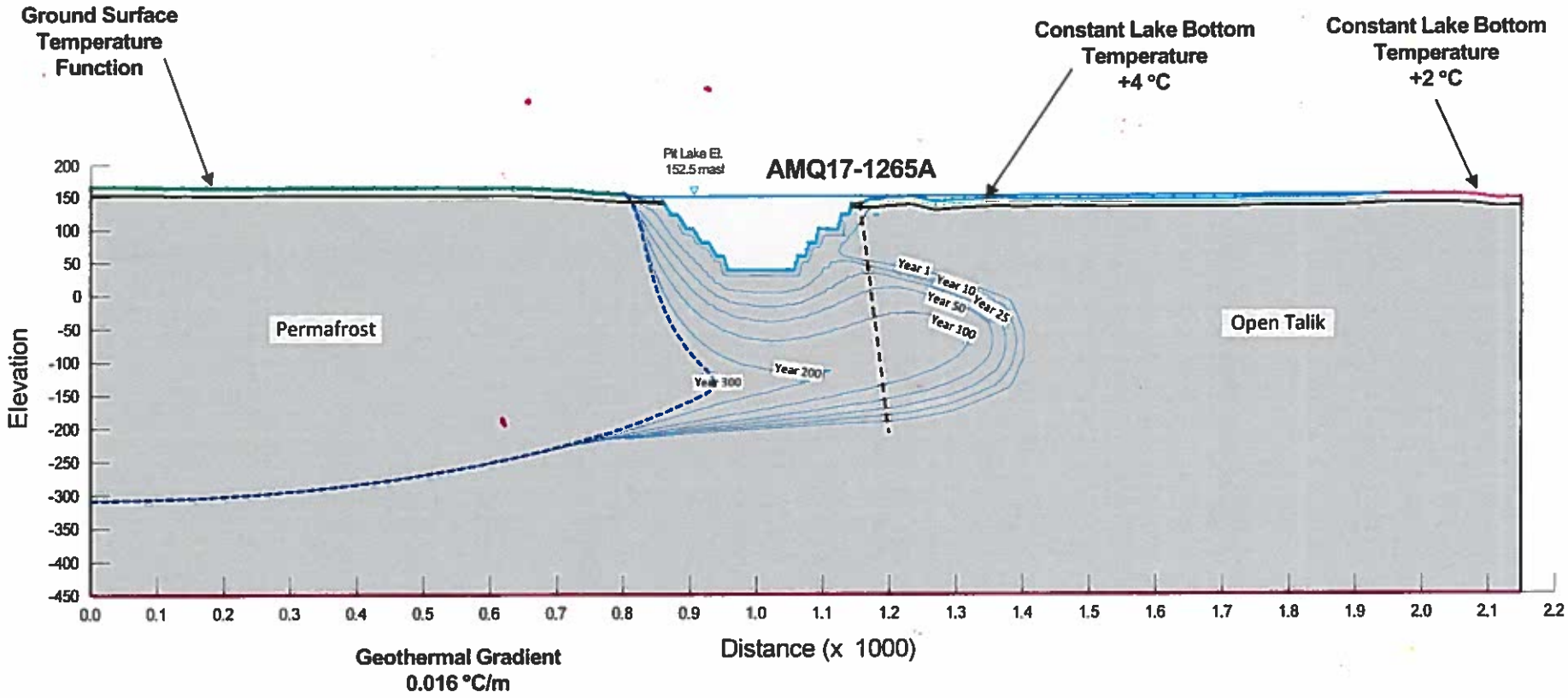

File Name: Phase 1 Section.gsz

Notes

1. Location of thermistor AMQ17-1265A is approximate.
2. The 300 year isotherm includes the 7 years of back-flooding.

CLIENT
AGNICO EAGLE MINES LTD.

CONSULTANT
GOLDER

YYYY-MM-DD	2018-04-03
PREPARED	CTM
DESIGN	CTM
REVIEW	SO
APPROVED	JFC

PROJECT
WHALE TAIL PIT PROJECT
POST-CLOSURE PIT LAKE THERMAL ANALYSIS
NUNAVUT

TITLE
TRANSIENT THERMAL MODELLING
POST-CLOSURE PIT LAKE
ZERO DEGREE ISOTHERMS AT SELECT YEARS

PROJECT No.	Phase/Task	Rev	Figure
1789310	1000/12020	0	2-5

Path: O:\Active\201663 Proj\1665859 Agnico Eagle_Water Mgmt_Whale Tail\1789310_Thermal\Thermal Analysis

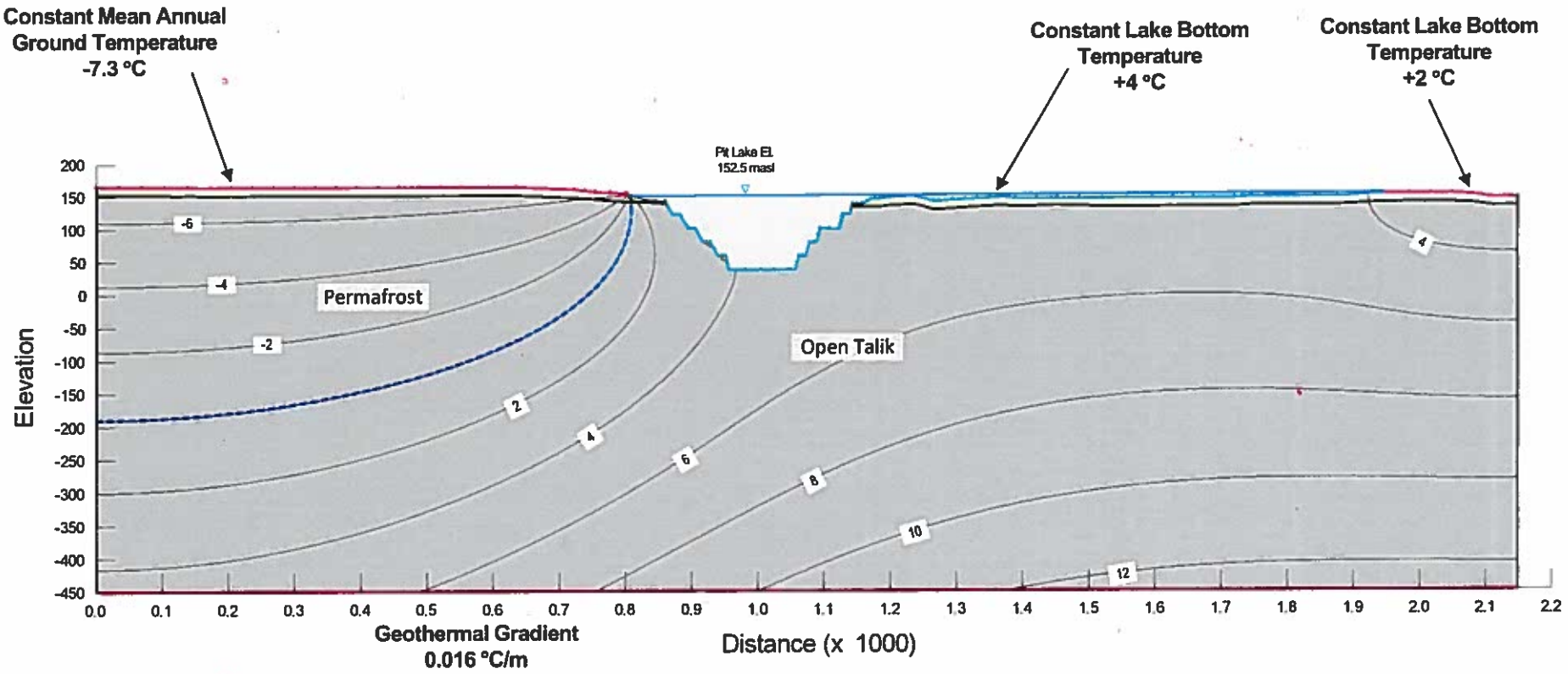

Notes

1. Location of thermistor AMQ17-1265A is approximate.
2. Temperature contour interval 2 °C.

File Name: Phase 1 Section.gsz

CLIENT
AGNICO EAGLE MINES LTD.

CONSULTANT
GOLDER

YYYY-MM-DD	2018-04-03
PREPARED	CTM
DESIGN	CTM
REVIEW	SO
APPROVED	JFC

PROJECT
WHALE TAIL PIT PROJECT
POST-CLOSURE PIT LAKE THERMAL ANALYSIS
NUNAVUT

TITLE
STEADY-STATE THERMAL MODELLING
POST-CLOSURE PIT LAKE
THERMAL REGIME

PROJECT No	Phase/Task	Rev	Figure
1789310	1000/12020	0	2-6

APPENDIX B –2018 WESTBAY SYSTEM GROUNDWATER MONITRORING INVESTIGATION

GOLDER

TECHNICAL MEMORANDUM

DATE February 8, 2019

Project No. 1789310-244-TM-Rev0

TO Michel Groleau
Agnico-Eagle Mines Ltd.

FROM Valerie Bertrand, Dale Holtze, Jennifer Levenick

EMAIL vbertrand@golder.com

2018 WESTBAY SYSTEM GROUNDWATER MONITORING INVESTIGATION

1.0 INTRODUCTION

Agnico Eagle Mines Limited – Meadowbank Division (Agnico Eagle) is developing the Whale Tail Pit Project that was approved by the Nunavut Impact Review Board (NIRB). The property is a 408 square kilometre (km^2) site located on Inuit Owned Land approximately 150 kilometres (km) north of the hamlet of Baker Lake and approximately 50 km northwest of the Meadowbank Mine in the Kivalliq Region of Nunavut.

As part of the Approved Project baseline studies, groundwater samples were collected from a Westbay monitoring well installed in borehole AMQ16-626, drilled in March and April 2016 targeting the area of the talik zone below Whale Tail Lake near future mine developments. Agnico Eagle retained Nuqsana Golder Engineering and Environmental Inc. (Nuqsana Golder) to complete a groundwater monitoring program in November 2018. The objective of the program was to obtain additional pre-development hydraulic head and groundwater quality data in support of the Whale Tail Pit Project Certificate No. 008, Term and Condition No. 15 (TC15) (NIRB 2018).

This technical memorandum provides an interpretation of the data collected from AMQ16-626 in November 2018 with respect to hydraulic gradients and groundwater quality. The collected data was reviewed in the context of conceptual and numerical model predictions for the Whale Tail Pit Project to evaluate if follow-up assessment is required (i.e., if significant differences in the model assumptions or predictions was indicated by the collected data).

2.0 BACKGROUND

2.1 Westbay Well Installation

A Westbay groundwater well system was installed on site between March and April in 2016 to obtain groundwater quality and verify the vertical hydraulic gradient within the talik zone of Whale Tail Lake, in the area of future mine development, to define future effects of the mine workings on the groundwater flow regime and overall site water quality from development to post-closure.

The well was installed in the purpose-specific borehole (AMQ16-626) which was drilled at an inclination of -69 degrees, an azimuth of 152.6 degrees and advanced to a depth of 499 m along the borehole, through massive diorite throughout the borehole. The Westbay well was designed to tap discrete zones of unfrozen bedrock and, if encountered, zones of higher hydraulic conductivity that were observed during drilling and well testing conducted prior to well installation. Six sampling ports were installed at and below the depth of anticipated ramp development (0 to 385 metres below ground surface [mbgs]), listed in Table 1. Borehole drilling, packer test results along the borehole and well installation details are documented in another report (Golder 2016b). A schematic of the Westbay well instrument that was installed in borehole AMQ160626 is included in Appendix A for reference.

Golder Associates Ltd.
1931 Robertson Road Ottawa, Ontario, K2H 5B7 Canada

T: +1 613 592 9600 +1 613 592 9601

Golder and the G logo are trademarks of Golder Associates Corporation

golder.com

Table 1: Borehole AMQ16-626 Westbay System Zones

Sampling Interval	Depth Along Borehole			Interval Depth Vertical Depth		
	From	To	Length	From	To	Thickness
	(mah)	(mah)	(m)	(mbgs)	(mbgs)	(m)
Zone 6	276	287.4	11.4	257.7	268.3	10.6
Zone 5	298.9	310.3	11.4	279.0	289.7	10.6
Zone 4	349.3	359.1	9.8	326.1	335.2	9.1
Zone 3	381.3	392.7	11.4	356.0	366.6	10.6
Zone 2	440.8	452.2	11.4	411.5	422.2	10.6
Zone 1	488.1	499.0	10.9	455.7	465.9	10.2

Notes: Depth values were provided by Westbay Instruments Completion Report.
m = metres; mah = metres along the hole, relative to ground surface; mbgs = metres below ground surface.

Upon completion of the installation in 2016, the well was used to collect groundwater samples from select intervals that were within and below the proposed development; Ports 3, 4, and 6 ranging in depths from 276 m to 392 m. Sampling methods, data interpretation and water quality results were presented in Golder 2016a. The total dissolved solids (TDS) content in the Formation groundwater was determined to range between 3,198 mg/L and 4,042 mg/L (Golder 2016a).

The groundwater quality were used to predict groundwater inflow quantity into future mine developments (Golder 2016d), which were used as input to operational and post-closure hydrogeological and permafrost models (Golder 2018a) and into the Whale Tail pit lake hydrodynamic model (Golder 2018b). These models were ultimately used to assess effects of hydrogeological processes on site contact water quality during development, operations and closure and on pit lake water quality during closure and post-closure.

The results of the compendium of these studies for the Whale Tail Pit Project indicated that mass transfer from the pit to the pit lake is very low, that groundwater seepage into and out of the pit lake are negligible in volume, particularly compared to surface water exchanged annually post-closure when flows are re-established based on average climate year watershed runoff. The combination of results corroborates to support that the hydrogeological regime around the pit lake is not critical to pit lake water quality post-closure.

The data collected as part of the 2018 monitoring program aim to add to the pre-operational database of results and to verify model inputs and model outcomes obtained to date.

2.2 The Groundwater Monitoring Program

The 2018 groundwater monitoring program was completed to support the requirements of the Groundwater Monitoring Program stated in TC15 (NIRB 2018). TC15 requirements were as follows:

> *Subject to the additional direction and requirements of the Nunavut Water Board, the Proponent shall prepare and implement a Groundwater Monitoring Plan that, at a minimum includes:*
>
> - *The collection of additional site-specific hydraulic data (e.g., from new monitoring wells) in key areas during the pre-development, construction and operation phases;*

- *Definition of vertical and horizontal groundwater flows in the project development areas;*
- *Delineates monitoring plans for both vertical and horizontal ground water; and*
- *Thresholds that will trigger the implementation of adaptive management strategies that reflect site-specific conditions encountered at the project site.*

The groundwater monitoring program documented in this technical memorandum consisted of measurements of hydraulic head (vertical gradients) and sampling of the formation groundwater to evaluate groundwater quality with depth.

2.3 Thresholds for Additional Assessment or Adaptive Management

Groundwater monitoring data being collected in the pre-development phase is being compiled into a Project-specific data and will be used in combination with future data collected during operational and closure phases of the Project to evaluate trends in groundwater data with respect to pit inflow quantity and quality.

Measured groundwater inflow rates and groundwater quality will be compared to model predictions on an annual basis. If significant variations from model predictions are observed, the assumptions behind the data will be reviewed and the analysis updated if required. In addition, updates to the groundwater model will be made if operational changes occur as the open pit advances which could significantly alter groundwater inflow or quality.

Variations that would be considered significant include:

- Groundwater inflows to the mine, based on rolling monthly average of inflow over six consecutive months, is 20% higher than predicted groundwater inflow.
- Collected water samples that indicate that the concentration of total dissolved solids (TDS) is more than 25% higher than the estimated water quality.

If the above variations are observed, the groundwater data (quantity and quality) would be assessed to evaluate trends, the potential causes of the greater than expected groundwater inflow quantity or quality, and the potential for long-term effect associated with the groundwater flow or quality. If the greater than predicted flows were correlated to a short-term effect such as freezing in the pit walls, changes in mining rate, freshet or transient drainage of a high storage feature, then further reassessment of groundwater inflows may not be required, and the adaptive management of these short-term effects would be evaluated under the Water Management Plan.

If the greater than predicted flows or quality would be considered as potentially long term, consideration will be given to reviewing the model calibration. The six-month averaging period of observation is based on observed seasonal variations in inflow quantities in mines situated in permafrost regions.

If model re-calibration is deemed necessary, future groundwater inflow quantity and quality would be predicted using this re-calibrated model and new results will be considered as part of the adaptive management of the groundwater quantity contribution to the Water Management Plan.

Modification of groundwater management strategies: the ponds, sumps and water conveyance strategies around the pit can be modified to mitigate the effect of additional groundwater volume or salinity prior to treatment and discharge. The water conveyance strategy will be evaluated and optimized during operations and closure to maintain post-closure commitment.

Groundwater monitoring data collected at this stage is representative of the pre-development condition of the project, and therefore an evaluation of trends in flow quantity and quality is not possible for the operational and closure phases. Results of the monitoring has been compared to assumptions adopted in the initial conditions for groundwater conceptual and numerical models and has been used to assess if the post-closure predictions are likely reasonable in consideration of the observed vertical hydraulic gradients and flow directions in the November 2018 monitoring program.

3.0 2018 GROUNDWATER MONITORING PROGRAM

3.1 Objectives

The objectives of the program are as follows:

- To collect site specific hydraulic head data during Project pre-development through the measurement of the hydrostatic pressure profile from the existing Westbay well.
- Assess the vertical hydraulic gradient and groundwater flow direction in that location of the Whale Tail Lake talik.
- Collect groundwater samples from the Westbay Well for chemical analysis, adding to the database of groundwater quality results.
- Compared water quality results to the threshold adopted for additional assessment and adaptive management.

3.2 Monitoring Methods

3.2.1 Hydraulic Head Measurements and Assessment of Vertical Hydraulic Gradients

Hydraulic heads were derived from the formation pressures measured at each monitoring port installed along the Westbay system. The formation pressure for each monitoring port was measured on November 9, 2018 using the Mosdax sampler manufactured and supplied by Westbay Instruments (refer to Appendix B for instrument calibration record).

3.2.2 Groundwater Sampling

Groundwater samples were collected from fixed ports in the Westbay well system that are positioned at different intervals along the hole to assess baseline groundwater chemistry with depth. Ports 6, 4 and 3, which are located within the anticipated ramp development zone (0 to 385 m), were targeted for sampling because these intervals had been previously developed (drill water had been largely removed from the interval) in 2016. Port 2 was also sampled although it was less developed than the other sample intervals in 2016 in order to verify if the aquifer was naturally flushed of the drilling water. Information on each of the Ports that were purged is presented in Table 2.

Fluorescein tracer was added to the 2016 drilling water to differentiate between the drilling fluid and the formation water. It is assumed that the only source of fluorescein was introduced during the 2016 drilling activities of borehole AMQ16-626 such that it is a reliable tracer of introduced water into the Formation.

Table 2: 2018 AMQ16-626 Westbay Well Development and Groundwater Sampling Information

Sample Port	Sampling Interval (mah)		Volume of Water Removed in 2018 (L)	Sample Date	Groundwater Parameters at Sampling Period (field measured)			
	From	To			Residual Fluorescein (ppb)	Conductivity (mS/cm)	TDS (ppm)	pH
6	276.0	287.4	8.25	13-Nov-18	83.54	9.02	4543	6.37
4	349.3	359.1	13.25	11-Nov-18	66.21	14.56	7275	7.50
3	381.3	392.7	12.5	12-Nov-18	100.05	7.50	3765	8.33
2	440.8	452.2	6.25	10-Nov-18	73.30	17.52	8825	8.90
1	488.1	499.0	0.25	not sampled	-	-	-	-

m = metres, mah = metres along hole, relative to ground surface; L = litres, TDS = total dissolved solids

Throughout the development and upon water sample collection, field chemical parameters (pH, conductivity, TDS, fluorescein content and temperature) were measured in order to track the fluid introduced into the Formation by drilling and to follow the removal of this fluid from the Formation during development and sampling of groundwater. Fluorescein content was measured using the AquaFluor handheld Fluorometer manufactured by Turner Designs. Temperature, pH, TDS and electrical conductivity values were measured with a Hanna Combo tester (HI 98130). A drilling water content of less than 5% (estimated using fluorescein content) is targeted in order to provide a reliable estimate of formation groundwater quality. Higher residual drilling fluid content can be used for this purpose but decreases the precision of the calculation of groundwater quality.

Groundwater sampling was preformed using the Westbay Mosdax sampler in a similar fashion as the initial development and sampling program completed in 2016. The Mosdax sampler collects 1 Litre of groundwater at a time (per sampling instrument descent into the well); multiple sampler runs were carried out to collect one complete groundwater sample set from each interval. Calibration reports of the Mosdax sampler probe are included in Appendix B.

Groundwater samples were collected from Intervals 6, 4, 3, and 2 in triplicate. Groundwater samples were filtered and preserved in the field, as required, and collected in laboratory-supplied bottles which were packed and shipped to the analytical laboratory following the collection of each sample. Duplicate samples collected from Ports 6, 4, 3, and 2 were submitted for analysis, while the third sample set was kept on site as backup and disposed of upon receipt of the samples by the analytical laboratory. An equipment and field blank were also collected for quality assurance/quality control (QA/QC) purposes. Analysis of general chemistry was completed at ALS Environmental (ALS) in Vancouver for the following parameters:

- Physical tests, including hardness, pH, conductivity, total suspended solids and total dissolved solids
- Anions and nutrients, including alkalinity, ammonia, bicarbonate, bromide, carbonate, chloride, fluoride, nitrate, nitrite, phosphorus (total and dissolved) and sulphate
- Metals (dissolved and total), including aluminum, antimony, arsenic, barium, beryllium, bismuth, boron, cadmium, calcium, chromium, cobalt, copper, iron, lead, lithium, magnesium, manganese, mercury, molybdenum, nickel, selenium, silicon, silver, sodium, strontium, sulfur, tellurium, thallium, tin, titanium, uranium, vanadium and zinc. Additional metals were also analyzed by the analytical laboratory as part of the metals package, however they are not of interest to the project and will not be discussed herein out: cesium, rhenium, rubidium, sulfur, thorium, tungsten, yttrium and zirconium

Certificates of analysis from ALS are included in Appendix C.

3.3 Evaluation of Formation Water Quality

To properly assess the quality and salinity of true rock formation groundwater, the drilling fluid present in the sampling interval must be removed as much as possible by purging. The amount of drilling fluid present in the Formation is estimated from the concentration of fluorescein in the raw groundwater sample at each interval, compared to the fluorescein content of the drilling fluid used during drilling of the borehole. In 2016 upon well installation, the sampling intervals were purged to remove as much of the drilling fluid as possible within the task schedule, prior to collecting a sample for chemical analysis.

In 2018, the fluorescein, electrical conductivity and TDS of groundwater was monitored during sampling and compared to data from the end of development in 2016 to assess whether the interval remained purged and still reflected true Formation groundwater quality. Fluorescein and conductivity were within the range of values recorded in 2016 and groundwater samples were collected and submitted for chemical analysis.

The following summarizes the calculations made to estimate true Formation water quality and TDS from field measurements of electrical conductivity and laboratory analytical results of raw groundwater samples in 2018 and drilling water fluid in 2016.

1) **Estimation of the chemistry of the drilling fluid introduced in the Formation during the 2016 well borehole drilling and installation activities.** The drilling fluid consisted of very low TDS lake water to which was added a concentrated brine. The range of composition of the drill fluid (the dilute brine) was estimated by comparing both the initial and maximum conductivity values measured in samples from the Formation (for each port 6, 4, 3, and 2; conductivity varied between sampling ports) against the conductivity of the concentrated brine[1]. This Dilute Brine Factor was used to calculate composition of the drilling fluid introduced into the sampling interval during the 2016 drilling and well installation activities as per equation (1) below.

$$(1) \qquad Dilute\ Brine\ Factor_{Port\ i} = \frac{Field\ Conductivity_{Port\ i}}{Brine\ Conductivity_{calculated}}$$

This calculation assumes an insignificant proportion of formation water is present immediately after drilling, which is a fair assumption given that a high volume of drilling water was lost to the Formation (Golder, 2016a).

The drilling brine composition for each parameter was calculated from the product of the dilution brine factors and the chemistry of the drilling brine fluid for each port per equation (2).

$$(2) \qquad Dilute\ Brine_{Port\ i} = Laboratory\ Result_{Brine} \times Dilution\ Brine\ Factor_{Port\ i}$$

2) **Calculation of the proportion of drill brine remaining in the Formation upon sampling.** This was calculated based on the amount of residual fluorescein measured upon sample collection at each port in 2018 compared to the initial fluorescein content of the drilling fluid measured in 2016 (i.e. 512.7 ppb).

3) **Removal of the drilling fluid chemistry from the raw groundwater sample analysis.** The concentration of constituents from the drilling fluid are removed from the reported analytical results for each chemical constituent per the below equation (3). The November 2018 laboratory results are provided in Appendix C.

$$(3) \qquad Groundwater\ Quality_{calculated} = Laboratory\ Result - \frac{Proportion\ of\ Drill\ Brine \times Dilute\ Brine\ Chemistry}{Proportion\ of\ Formation\ Water}$$

[1] Brine conductivity was estimated from the calculated TDS of the drilling brine fluid using a conversion factor of 0.75 which is appropriate for brine solutions (Rusydi, 2017). Brine TDS was calculated based on constituent concentrations (refer to Table 3 and Appendix C). Laboratory-reported TDS and conductivity were not reliable as they exceeded instrument calibration.

The estimated drilling brine chemistry, proportion of residual drilling brine and Formation water for each sampling port are summarized in Table 4. The calculated groundwater quality for Ports 6, 4, 3 and 2 are summarized in Table 5.

4.0 RESULTS AND DISCUSSION

4.1 Hydraulic Head Profile and Groundwater Flow Direction Below Whale Tail Lake

The planned Whale Tail Pit sits within the closed talik below the North Basin of Whale Tail Lake. The closed talik is inferred to transition to open talik below the South Basin due to the increased width and depth of the lake towards the south. The water table below both basins will be equivalent to the lake surface elevation.

Permafrost underlies the land surrounding the lake, which restricts the lateral flow of groundwater to the talik and restricts the recharge of the sub-permafrost groundwater flow system by precipitation. Groundwater flow is controlled by surface water elevations in lakes with open talik; water moves vertically through the open talik to the underlying sub-permafrost groundwater flow system. In effect, lakes with open taliks in continuous permafrost regions are equivalent to large monitoring wells.

AMQ16-626 was installed to evaluate groundwater quality in the unfrozen bedrock and to verify the hydraulic gradient that exists below Whale Tail Lake. The hydraulic gradient, in combination with the bedrock hydraulic conductivity, will control the potential flux to or from Whale Tail Lake, and the flooded Whale Tail Pit post-closure.

Table 3 summarizes the calculated hydraulic heads based on the measured pressure in each of the ports. Although Zone 6 (shallowest port) is included in Table 3, it is suspected that this port may be in permafrost or near the permafrost contact, which could affect the measured hydraulic head. This inference is supported by the measured formation temperature, which is less than zero. Although the measured hydraulic head in the shallowest port is consistent with the overall trend, data from the deeper ports, which are confirmed to be in unfrozen rock by the formation temperature, were used to assess the vertical gradient.

Table 3: AMQ16-626 Westbay Well Hydraulic Heads and Formation Temperatures (November 9, 2018)

Port/ Zone	Measurement Interval (mah)		Measurement Interval (mbgs)		Port Depth (mah)	Port Depth (mbgs)	Calculated Depth to Water (mbgs)	Calculated Hydraulic Head (masl)	Formation Temperature (°C)
	From	To	From	To					
6	276.0	287.4	257.7	268.3	276.2	257.9	1.9	154.0	-0.17
4	349.3	359.1	326.1	335.2	349.5	326.3	1.6	153.6	0.24
3	381.3	392.7	356.0	366.6	381.5	356.2	1.1	153.4	0.36
2	440.8	452.2	411.5	422.2	441.0	411.7	0.9	152.9	0.87
1	488.1	499.0	455.7	465.9	488.3	455.9	0.5	152.6	1.29

Source: Golder (2016a).
m = metres; mah = metres along hole relative to ground surface (borehole angled to surface); mbgs = metres below ground surface (vertical down from surface); masl = metres above sea level (elevation)

The data collected at AMQ16-626, indicates the presence of a downward hydraulic gradient. Assuming the measured hydraulic head is representative of the midpoint of the measurement interval, the downward gradient between Port 1 and Port 4 is 0.008 m/m. This gradient is consistent with the estimated gradient derived from looking at the relative elevation of Whale Tail Lake and DS1 (0.008 m/m), as reported in Agnico Eagles response to TC15 (Agnico Eagle 2018). DS1 is the predicted receptor from water in the area of Whale Tail Pit and Underground (Golder 2016c).

For the depth interval over which the hydraulic head was measured (326 to 456 mbgs), the estimated hydraulic conductivity of the bedrock for the FEIS for the Whale Tail Pit Project was 1 x10^{-8} to 3 x 10^{-8} m/s (Golder 2016c). In support of TC15 and the development of the Project, additional packer testing was conducted subsequent to the FEIS and the data indicate the hydraulic conductivity of bedrock over this depth interval is likely lower (1 x 10^{-9} m/s based on the geometric average of the test data) (Golder 2018a). Considering the measured gradient (0.008), the historical range of bedrock hydraulic conductivity adopted in the FEIS (1 x10^{-8} to 3 x 10^{-8}) and the now refined hydraulic conductivity (1 x 10^{-9} m/s) and an assumed effective porosity of 0.001 (Maidment 1992; Stober and Bucher 2007), the estimated downward groundwater flow velocity is between approximately 0.25 m/yr and 8 m/yr. The lower bound of this range is considered more reasonable, as it uses the refined hydraulic conductivity data discussed above, which is based on the geometric mean of all the packer test measurements (pre- and post-FEIS).

Gradients measured during this monitoring program are considered a reasonable interpretation of what long-term gradients could be post-closure following the formation of the pit lake. Recharge and discharge from the base of Whale Tail Lake or a flooded pit lake will be controlled by the vertical hydraulic gradients and the bedrock hydraulic conductivity near the base of the permafrost. Considering the approximate area of the Whale Tail Pit (0.5 km^2), the range in bedrock hydraulic conductivity (1 x 10^{-9} to 3 x 10^{-8} m/s), and the measured downward gradient (0.008), the data would indicate long-term groundwater flux would be approximately 0.3 m^3/day to 11 m^3/day. Similar to the estimated groundwater velocity, the lower bound of this range is considered more reasonable, as it uses the refined estimate of hydraulic conductivity. Overall, the estimated flux is similar to the long-term predicted discharge from the pit lake at post-closure (1.7 m^3/day; Golder 2016c) and supports the conclusion in the FEIS that long-term predicted flows from the pit lake to the groundwater flow system will be negligible relative to the surface water exchange into the pit lake (Golder 2018c).

4.2 Groundwater Quality

Field measurements of electrical conductivity and fluorescein concentration serve, in part, to evaluate whether the groundwater accessed via the Westbay well sampling ports continues to be representative of Formation groundwater quality.

The 2016 and 2018 electrical conductivity and fluorescein trends measured throughout the sampling program in Ports 6, 4, 3, 2, and 1 are summarized in Figures 1 and 2, respectively. Groundwater samples were collected from Ports 6, 4, 3, and 2. Port 1 groundwater quality was deemed not representative of Formation groundwater and was not sampled. The field measurements of electrical conductivity, TDS and fluorescein recorded at the time of sampling are summarized in Table 3. The values are averages from the subsamples collected to obtain the required volume of water for analysis.

Port 6

The temperature measured by the Mosdax sampler during the pressure profile and sampling at Port 6 was below zero (-0.17 °C, refer to Table 3) and slush was present in the sampling canister from this Port. The cryopeg zone (temperature below 0 degrees, but not frozen) is interpreted to extend to at least 258 m depth (top interval of Port 6) within the vicinity of the Westbay well. Groundwater from the crypogeg (Port 6) could have a heterogenous composition (non-saline ice and slightly saline groundwater) where free water is primarily transmitted through the more permeable unfrozen zones. Groundwater collected from Port 6 is interpreted to be located within the cryopeg have the potential to yield variable water quality even following periods of sufficient development.

Notwithstanding this, the estimation of true Formation groundwater quality was still completed per the method described in Section 2.3. Table 5 presents the minimum and maximum range of calculated concentrations of formation water at each port sampled in 2018 and 2016 for comparison.

The 2018 field-measured groundwater fluorescein content and electrical conductivity at the port remained within the same range albeit slightly higher than values recorded at the end of the well development period in 2016. This suggests that groundwater quality at that location remained representative of true Formation water since it was last sampled in 2016. The results of the 2018 groundwater quality estimation (Table 5) are also within the same order of magnitude but slightly higher than those reported in 2016 suggesting that residual drilling brine fluid is still present in Formation water at a proportion slightly higher than at the end of development in 2016. This can occur where drilling fluid that is still present in undeveloped zones in the aquifer (for example, in zones between sampling Ports) migrates back into the developed zones tapped by the sampling Ports following the normal movement of groundwater along the downward vertical gradient.

The estimated Formation groundwater minimum and maximum TDS concentrations in 2018 are 25% and 38% higher than the minimum and maximum TDS values estimated in 2016. The difference is higher than the TDS variability threshold of 25%. This is attributed to the higher proportion of drilling brine fluid in the Formation at Port 6 collected in 2018.

Arsenic concentration in groundwater at Port 6 is estimated to be low based on 2018 calculations, within the range of 2016 estimation.

The 2016 data is considered potentially more accurate, but 2018 data is still valid. The initial model input is still considered accurate and the new data does not warrant revising the conceptual model of groundwater TDS.

Ports 3 and 4

The 2018 field-measured groundwater fluorescein content and electrical conductivity at these sampling ports were similar (slightly higher) to measured values recorded at the end of the well development period in 2016, suggesting that groundwater quality remained representative of true Formation water at these zones. These slightly higher 2018 readings suggest that a small influx of drilling fluid that was still present in undeveloped zones migrated back into the developed zones as for Port 6. The higher proportion of drilling brine fluid in the Formation and in the samples collected may result in a lower accuracy of calculated groundwater quality from samples collected in 2018 compared to those collected in 2016 after a more complete purge; nonetheless, the data is still considered valid.

Figure 2 illustrates how electrical conductivity and fluorescein concentrations evolved in parallel during the short development period at Ports 3 and 4, inferring that groundwater in the vicinity of the Westbay well has not been affected by an outside brine source that could have originated from salt water used in exploration drilling nearby, approximately 26 metres from the Westbay well.

Estimated true Formation groundwater quality is shown in Table 5 presenting the minimum and maximum range of calculated concentrations of Formation water at each port sampled in 2018 and 2016. The results of the 2018 groundwater quality data are within the same order of magnitude to those reported in 2016 albeit slightly higher than in 2016. Port 3 minimum and maximum estimated TDS values are 35% and 28% higher than the calculated minimum and maximum values from 2016 data. At Port 4, they are 76% and 86% higher than the calculated minimum and maximum values from 2016 data. Variability is higher than the threshold of 25%. This is attributed to the higher proportion of drilling brine fluid in the Formation collected in 2018 compared to 2016.

Arsenic concentrations at both Ports 4 and 3 are estimated to be in the same order of magnitude as concentration ranges calculated in 2016.

The 2016 data is considered potentially more accurate, but 2018 data is still valid. The initial model input is still considered accurate and the new data does not warrant revising the conceptual model of groundwater TDS.

Port 2

Due to time constraints in 2016, this Port had not been extensively developed, leaving a higher proportion of drilling brine in the groundwater prior to sampling. A groundwater sample was collected in 2018 to verify the progression of water quality at that location; to assess whether drilling brine might have flushed out of the horizon since 2016 through natural groundwater flow. The 2018 field-measured groundwater fluorescein content and electrical conductivity were within a similar range than after development in 2016. Values were slightly lower than in 2016 but the trend was rising throughout the brief purging period in 2018. Electrical conductivity and fluorescein progressed at different rates during purging (conductivity rose faster than fluorescein; Figure 2) suggesting interference by a source of saline water that is not tagged with fluorescein, such as possibly, adjacent exploration borehole drilling water. Given the continued high proportion of drilling brine potentially mixed with another source of saline water that cannot be quantified at this time, a proper estimation of true Formation groundwater quality is not deemed possible for from this Port.

Summary

The higher TDS values calculated at Ports 6, 4, and 3 in 2018 are above the threshold value of 25%. These higher values are attributed to the presence of a higher content of non-Formation drilling brine in groundwater in 2018 compared to 2016. Consequently, the initial model input is still considered accurate and the new data does not warrant revising the conceptual model of groundwater TDS.

Arsenic concentration at all sampling ports is still low, the maximum calculated to be at Port 6 measured in 2016. Based on the results of the groundwater sampling completed to date, arsenic presence is low in the formation water.

5.0 QUALITY ASSURANCE/QUALITY CONTROL

Groundwater samples were collected from each interval in triplicate and submitted in duplicate for analysis to the analytical laboratory as part of the quality assurance/quality control ('QA/QC') protocol. In addition, field and equipment blanks were also submitted for analysis of select parameters. The analytical laboratory performs equipment blanks as a method of internal QA/QC verification.

Analytical repeatability was tested by assessing the similarity between duplicate pairs of results. For each duplicate pairs of analysis where both results were higher than 5 times the method detection limit (MDL), the relative percent difference (RPD) was calculated as follows:

$$RPD = \frac{\text{absolute [difference (concentration of a given parameter)]}}{\text{[average (concentration of a given parameter)]}} \times 100$$

Per USEPA recommended methods (USEPA, 1994), an RPD of 20% or less was considered acceptable. Where one or both results of the duplicate pair were less than 5 times the MDL, a margin of +/- MDL was considered acceptable.

Table 6 presents the RPD or =/- MDL value calculated from the duplicate pair of results. Approximately 50% of duplicate pairs of analyses had one or both results below the method detection limit and consequently could not be assessed for repeatability. QA/QC results for the duplicate samples were within acceptable tolerance limits (RPD or +/- MDL) with the exception of duplicate concentrations of total suspended solids in Port 4 as well as duplicate concentrations of total chromium and nickel in Port 3. Trace components and major elements for all samples are considered adequately repeatable.

Groundwater samples were analyzed for TDS in the field and in 2018 by the analytical laboratory (ALS). The original brine fluid was analyzed by Multilab analytical laboratory. TDS values were also calculated from the laboratory results in order to assess potential discrepancies between the ionic balance and uncertainty of the results (refer to Tables 4 and 6). The results of the field, calculated, and laboratory measured values were within reasonable range limits for all

samples, with the exception of the brine fluid. The TDS result reported for the brine fluid (36,946 mg/L) was significantly less than the calculated value (130,500 mg/L). The laboratory measured TDS and consequently electrical conductivity (55.42 mS/cm) of the brine fluid were deemed unreliable due to the ionic imbalance discrepancy. This assumption was confirmed during a telephone discussion between Nuqsana Golder and the analytical laboratory (H2Lab, formerly Multilab chemist Jean-Francois Bouffard) on January 15, 2019, where the chemist indicated the TDS and electrical conductivity values reported for the brine fluid were outside the suitable range for the analytical instrument and may not be accurate. The certificate of analysis for the brine fluid is included in Appendix D. The calculated TDS of the brine fluid was used to correct the groundwater quality data as discussed in Section 2.3 of the report.

Uncertainty in the calculated groundwater water quality results from the variability in drill water composition augmented by probable mixing between aquifer zones having different levels of development (purging of drill water); this has a higher potential influence on the accuracy of 2018 calculated groundwater quality because of the higher proportion of drilling brine fluid remaining in the raw water samples compared to 2016 samples; thus while 2018 data remain valid to estimate water quality at Port 3, 4 and 6, 2016 results may be a more accurate representation of Formation groundwater quality than 2018 data.

6.0 CONCLUSION

The 2018 Westbay Well field program was carried out in support of the Whale Tail Pit Project Certificate No. 008, Term and Condition No. 15, to obtain additional pre-development groundwater quality data and to verify the hydraulic gradient. These data were used to verify modelling assumptions related to the groundwater quality and the hydraulic gradient near the mine development areas.

Hydraulic head measurements indicate that a downward vertical hydraulic gradient is present in the North Basin of Whale Tail Lake, which is consistent with the conceptual understanding of groundwater flow directions and the predicted conditions post-closure following the formation of the Whale Tail Pit Lake. Revisions to the numerical or conceptual models is not considered necessary based on the vertical gradients as the data is consistent the model assumptions.

Groundwater quality was estimated from the samples collected, removing the anticipated proportion of residual drilling water in the Formation (in the raw water sample). The 2018 program estimated groundwater quality at Ports 6, 4, and 3 are in the same range as previously estimated. The calculated groundwater TDS are slightly higher in 2018; the calculated increase in TDS ranges from 25% to 86% which is above the threshold value of 25% variability for TDS. The variation is attributed to the higher proportion of residual drilling water in the sample. In consideration that higher TDS is not considered to represent an increase in Formation water TDS, the assumptions for the conceptual model, which are based on the more reliable and applicable 2016 data, are still considered to be appropriate. Therefore, adaptive management is not considered necessary at this time.

The concentrations of metals and arsenic are low. The maximum calculated arsenic concentration remains similar to what was calculated for Port 6 in 2016. Given that the arsenic concentrations are similar to the assumptions adopted in the geochemical models (low arsenic in Formation groundwater), groundwater arsenic content is still not likely to have a significant effect on mine surface water quality.

7.0 STUDY LIMITATIONS

This technical memorandum was prepared for the exclusive use of Agnico Eagle Mines Limited. The technical memorandum, which specifically includes all tables and attachments, is based on data and information collected by Golder Associates Ltd. and is based solely on the conditions of the property at the time of the work, supplemented by historical information and data obtained by Golder Associates Ltd. as described in this technical memorandum.

Golder Associates Ltd. has relied in good faith on all information provided and does not accept responsibility for any deficiency, misstatements, or inaccuracies contained in the technical memorandum as a result of omissions, misinterpretation, or fraudulent acts of the persons contacted or errors or omissions in the reviewed documentation.

The services performed, as described in this technical memorandum, were conducted in a manner consistent with that level of care and skill normally exercised by other members of the engineering and science professions currently practicing under similar conditions, subject to the time limits and financial and physical constraints applicable to the services.

Any use which a third party makes of this technical memorandum, or any reliance on, or decisions to be made based on it, are the responsibilities of such third parties. Golder Associates Ltd. accepts no responsibility for damages, if any, suffered by any third party as a result of decisions made or actions based on this technical memorandum.

The findings and conclusions of this technical memorandum are valid only as of the date of this technical memorandum and for the locations investigated. If new information is discovered in future work, including excavations, borings, or other studies, Golder Associates Ltd. should be requested to re-evaluate the conclusions of this technical memorandum and provide amendments as required.

8.0 CLOSURE

We trust this report meets your needs at this time. Should you have any questions, please do not hesitate to contact the undersigned.

Golder Associates Ltd.

REGISTERED PROFESSIONAL GEOLOGIST
08-02-2019
V.J. BERTRAND
LICENSEE
NWT/NU

Dale Holtze, M.Sc.
Hydrogeologist

Valerie Bertrand, M.A.Sc., P.Geo. (NT, NU)
Associate, Senior Geochemist

Jennifer Levenick, M.Sc.
Senior Hydrogeologist

PERMIT TO PRACTICE
GOLDER ASSOCIATES LTD.
Signature
Date 2019-02-08
PERMIT NUMBER: P 049
NT/NU Association of Professional Engineers and Geoscientists

DH/VJB/JL/jr
https://goldersociates.sharepoint.com/sites/19830g/9100_westbay/deliverables/rev0/1789310-244-tm-westbay gw monitoring_rev0.docx

Attachments: Tables 4, 5, 6
Figure 1 – 2016 and 2018 Development Record
Figure 2 – 2018 Development Record
Appendix A – AMQ160626 Westbay System Installation Details
Appendix B – Westbay Instruments Mosdax Sampler Calibration Reports
Appendix C – 2018 Laboratory Certificates of Analysis
Appendix D – 2016 Laboratory Certificate of Analysis – Brine Fluid

9.0 REFERENCES

Agnico Eagle (Agnico Eagle Mines Limited). 2018. Whale Tail Pit Management Plans - AEM RESPONSES TO ECCC & CIRNAC Reply - Waste Rock Management Plan, Water Management Plan, Water Quality and Flow Monitoring Plan. November 23 2018.

Golder (Golder Associates Ltd.). 2016a. Groundwater Quality Investigation, Amaruq, Nunavut. Technical Memorandum 1649355-080 prepared for Agnico Eagle Mines Ltd. November 15, 2016.

Golder. 2016b. Westbay System Installation Summary – Whale Tail Pit Project, Nunavut. Technical Memorandum 1649355-033-TM-Rev0-4000 prepared for Agnico Eagle Mines Ltd. July 7, 2016.

Golder. 2016c. Hydrogeological Model Pre-Mining, During Mining, and Closure. Submitted as Volume 6, Appendix 6-B in the Whale Tail Pit and Haul Road Final Environmental Impact Statement. June 2016.

Golder. 2016d. Hydrogeology Baseline Report – Whale Tail Project. Submitted as Volume 6, Appendix 6-A in the Whale Tail Pit and Haul Road Final Environmental Impact Statement. June 2016.

Golder. 2018a. Hydrogeological Assessment and Modelling, Whale Tail Pit – Expansion Project. Submitted to Agnico Eagle Mines Limited. Ref. 1789310-213-RPT-Rev0. November 2018.

Golder. 2018b. Whale Tail Pit Project, Hydrodynamic Modelling of Whale Tail Pit Lake. Submitted to Agnico Eagle Mines Limited. Ref. 1789310-181-TM-Rev0. June 26, 2018.

Golder. 2018c. Whale Tail Pit Post-Closure Hydrogeological Assessment for the Whale Tail Open Pit. Dated 27 June 2018.

Maidment, D.R. 1992. Handbook of Hydrology. McGraw-Hill, New York, USA

NIRB (Nunavut Impact Review Board). 2018. Whale Tail Pit Project, NIRB Project Certificate No.: 008. Issued March 15, 2018.

Rusydi, A. 2017. Correlation between conductivity and total dissolved solids in various types of water: A review. Global Colloquium on GeoSciences and Engineering 2017. IOP Conf. Series: Earth and Environmental Science 118 (2018) 012019. IOP Publishing. Pp. 1-6.

Table 4
Drilling Brine Composition
Westbay Well in Whale Tail Lake Talik
Whale Tail Project, Nunavut

Sample		Brine Fluid	Calculated Drilling Brine Port 6		Calculated Drilling Brine Port 4		Calculated Drilling Brine Port 3	
			Initial Brine	Maximum Brine	Initial Brine	Maximum Brine	Initial Brine	Maximum Brine
Date		17-Apr-16	21-Jul-16	21-Jul-16	24-Apr-16	27-Apr-16	02-Sep-16	02-Sep-16
Field measured parameters	Units							
Fluorescein Concentration	mg/L	512.70	138.00	158.10	512.70	341.90	445.90	437.20
Drilling Fluid Proportion		1.00	0.27	0.31	1.00	0.67	0.87	0.85
Formation Water Proportion		0.00	0.73	0.69	0.00	0.33	0.13	0.15
Initial Conductivity Reading	uS/cm	0	10240	12210	3810	19400	52280	53800
Dilution of Brine Factor in Port		0.00	0.06	0.07	0.02	0.11	0.30	0.31
Conventional Parameters								
Total dissolved solids (calculated)	mg/L	130500	7680	3122	2858	14550	39210	40350
Total dissolved solids (lab)	mg/L	36946	-	-	-	-	-	-
pH	S.U.	10	11.25	7.40	12	11	11	11
Conductivity (lab)	uS/cm	55420	-	-	-	-	-	-
Conductivity (calculated)	uS/cm	174000	10240	4684	3810	19400	52280	53800
Reported Hardness	mg $CaCO_3$/L	105554	6212	2230	2311	11769	31715	32637
Alkalinity	mg $CaCO_3$/L	145.0	8.5	38.0	3.2	16.2	43.6	44.8
Bicarbonate (HCO3)	mg $CaCO_3$/L	27.0	1.6	38.0	0.6	3.0	8.1	8.3
Major ions								
Calcium (Ca)	mg/L	42266	2487	2966	925	4712	12699	13068
Magnesium (Mg)	mg/L	3.92	0.23	0.28	0.09	0.44	1.18	1.21
Potassium (K)	mg/L	1717	101	120	38	191	516	531
Sodium (Na)	mg/L	838	49	59	18	93	252	259
Bromide (Br)	mg/L	1066	63	75	23	119	320	330
Chloride (Cl)	mg/L	83700	4926	5873	1833	9332	25149	25880
Fluoride (F)	mg/L	0.060	0.004	0.004	0.001	0.007	0.018	0.019
Sulphate (SO4)	mg SO_4/L	<0.6	0	0	0	0	0	0
Nutrients								
Nitrates (NO3)	mg N/L	0.540	0.032	0.038	0.012	0.060	0.162	0.167
Nitrites (NO2)	mg N/L	0.060	0.004	0.004	0.001	0.007	0.018	0.019

Table 4
Drilling Brine Composition
Westbay Well in Whale Tail Lake Talik
Whale Tail Project, Nunavut

Sample		Brine Fluid	Calculated Drilling Brine Port 6		Calculated Drilling Brine Port 4		Calculated Drilling Brine Port 3	
			Initial Brine	Maximum Brine	Initial Brine	Maximum Brine	Initial Brine	Maximum Brine
Date		17-Apr-16	21-Jul-16	21-Jul-16	24-Apr-16	27-Apr-16	02-Sep-16	02-Sep-16
Field measured parameters	Units							
Fluorescein Concentration	mg/L	512.70	138.00	158.10	512.70	341.90	445.90	437.20
Drilling Fluid Proportion		1.00	0.27	0.31	1.00	0.67	0.87	0.85
Formation Water Proportion		0.00	0.73	0.69	0.00	0.33	0.13	0.15
Initial Conductivity Reading	uS/cm	0	10240	12210	3810	19400	52280	53800
Dilution of Brine Factor in Port		0.00	0.06	0.07	0.02	0.11	0.30	0.31
Metals (dissolved)								
Aluminium (Al)	mg/L	0.498	0.0293	0.0349	0.0109	0.0555	0.1496	0.154
Antimony (Sb)	mg/L	0.0354	0.0021	0.0025	0.0008	0.0039	0.0106	0.0109
Silver (Ag)	mg/L	<0.0001	0.0	0.0	0.0	0.0	0.0	0.0
Arsenic (As)	mg/L	0.766	0.045	0.054	0.017	0.085	0.23	0.237
Barium (Ba)	mg/L	0.113	0.007	0.008	0.002	0.013	0.034	0.035
Berillium (Be)	mg/L	<0.0005	0.0	0.0	0.0	0.0	0.0	0.0
Bismuth (Bi)	mg/L	<0.0005	0.0	0.0	0.0	0.0	0.0	0.0
Boron (B)	mg/L	13.2	0.8	0.9	0.3	1.5	4.0	4.1
Cadmium (Cd)	mg/L	<0.00002	0.0	0.0	0.0	0.0	0.0	0.0
Chromium (Cr)	mg/L	<0.0006	0.0	0.0	0.0	0.0	0.0	0.0
Cobalt (Co)	mg/L	0.0406	0.0024	0.0028	0.0009	0.0045	0.0122	0.0126
Copper (Cu)	mg/L	0.0039	0.0002	0.0003	0.0001	0.0004	0.0012	0.0012
Tin (Sn)	mg/L	<0.001	0	0	0	0	0	0
Iron (Fe)	mg/L	2.6	0.15	0.18	0.06	0.29	0.78	0.8
Lithium (Li)	mg/L	34.52	2.03	2.42	0.76	3.85	10.37	10.67
Manganese (Mn)	mg/L	<0.0005	0	0	0	0	0	0
Mercury (Hg)	mg/L	0.0	0.00002	0.00003	0.00001	0.00004	0.00012	0.00012
Dissolved Mercury (Hg)	mg/L	-	0.00002	0.00003	0.00001	0.00004	0.00012	0.00012
Molybdenum (Mo)	mg/L	<0.0005	0	0	0	0	0	0
Nickel (Ni)	mg/L	1.35	0.08	0.09	0.03	0.15	0.41	0.42
Lead (Pb)	mg/L	<0.0003	0	0	0	0	0	0
Selenium (Se)	mg/L	3.83	0.23	0.27	0.08	0.43	1.15	1.18
Silica (Si)	mg/L	2.93	0.17	0.21	0.06	0.33	0.88	0.91
Strontium (Sr)	mg/L	656.0	38.61	46.03	14.36	73.14	197.1	202.83
Telluride (Te)	mg/L	<0.0005	0	0	0	0	0	0
Thallium (Tl)	mg/L	<0.002	0	0	0	0	0	0
Titanium (Ti)	mg/L	45.2	2.66	3.17	0.99	5.04	13.58	13.98
Uranium (U)	mg/L	-	0	0	0	0	0	0
Vanadium (V)	mg/L	<0.001	0	0	0	0	0	0
Zinc (Zn)	mg/L	<0.0005	0	0	0	0	0	0
QA/QC								
Calculated TDS (lab)	-	130500	-	-	-	-	-	-
Lab measured vs Calculated TDS	-	28%	-	-	-	-	-	-
Lab measured TDS vs Conductivity	-	0.67	-	-	-	-	-	-
Calculated TDS vs Calculated Conductivity	-	0.75	-	-	-	-	-	-

Table 5
Rock Formation Groundwater Quality Corrected to Remove Residual Drilling Water
Whale Tail Lake Talik
Whale Tail Project, Nunavut

Sample		Port 6				Port 4				Port 3			
Date		2-Aug-2016		13-Nov-2018		20-Jul-2016		11-Nov-2018		14-Sep-2016		12-Nov-2018	
Drilling Fluid Proportion		0.04	0.24	0.16		0.09	0.18	0.13		0.08	0.18	0.20	
Formation Water Proportion		0.96	0.76	0.84		0.91	0.82	0.87		0.92	0.82	0.80	
Sampling interval depth (metres along borehole)		274.0 m - 287.4 m				349.3 m - 359.1 m				381.3 m - 392.7 m			
Sampling interval vertical depth (metres)		257.7 m - 268.3 m				326.1 m - 335.2 m				356.0 m - 366.6 m			
Estimated concentration range (calculated)		minimum	maximum	minimum	maximum	minimum	maximum	minimum	maximum	minimum	maximum	minimum	maximum
Average Field measured parameters													
Fluoroscein	ppb	41.77		83.54		93.00		66.21		81.90		100.05	
Total dissolved solids	mg/L	-	-	4543		-	-	7275		-	-	3765	
pH	S.U.	-	-	6.36		-	-	7.50		-	-	8.35	
Conductivity	uS/cm	4610		9083		6650		14555		4450		7500	
Estimated Water Quality													
Conventional parameters													
Total dissolved solids	mg/L	3198	4042	4681	5171	3581	3966	7970	9945	3483	3918	<4980	<5100
pH	S.U.	7.41	7.27	6.50	6.57	7.87	7.82	6.88	6.91	7.96	7.91	7.31	7.41
Conductivity	uS/cm	4797	6042	8041	8496	5366	5938	13084	15511	5220	5866	<7350	<7530
Reported Hardness	mg $CaCO_3$/L	2397	3030	2883	3127	2627	2910	4169	5582	1680	1891	<2600	<2740
Alkalinity	mg $CaCO_3$/L	40	51	30	31	18	20	9	11	52	58	51	52
Bicarbonate (HCO3)	mg $CaCO_3$/L	40	51	31	32	18	20	11	12	52	58	60	61
Major Ions													
Calcium (Ca)	mg/L	960	1213	1071	1164	1032	1143	1563	2125	671	756	<1040	<1090
Magnesium (Mg)	mg/L	22	27	51	51	12	14	62	66	1	1	1	1
Potassium (K)	mg/L	8	10	<20	<20	38	42	67	67	16	18	<38	<40
Sodium (Na)	mg/L	232	293	287	293	267	296	341	365	306	344	285	313
Bromide (Br)	mg/L	25	32	34	37	32	35	51	77	22	25	<32.5	<32.7
Chloride (Cl)	mg/L	2089	2641	2453	2697	2582	2860	3818	5722	1714	1929	<2700	<2700
Fluoride (F)	mg/L	0.21	0.27	<1.0	<1.0	0.5	0.5	<1.0	<1.0	1.1	1.2	<1.0	<1.0
Sulphate (SO4)	mg SO_4/L	-	-	<15	<15	-	-	<15	<15	-	-	<15	<15
Nutrients													
Ammonia N (NH3+NH4)	mg N/L	-	-	<0.437	<0.443	-	-	0.180	0.181	-	-	0.169	0.173
Nitrates (NO3)	mg N/L	0.063	0.079	<0.25	<0.25	0.06	0.06	<0.25	<0.25	0.016	0.018	<0.25	<0.25
Nitrites (NO2)	mg N/L	0.010	0.013	<0.050	<0.050	0.011	0.012	<0.050	<0.050	0.038	0.043	<0.050	<0.050
Total Phosphorous (P)	mg P/L	0.021	0.026	<0.0043	<0.0043	0.011	0.012	0.01	0.01	0.049	0.055	0.01	0.01

Table 5
Rock Formation Groundwater Quality Corrected to Remove Residual Drilling Water
Whale Tail Lake Talik
Whale Tail Project, Nunavut

Sample		Port 6				Port 4				Port 3			
Date		2, Aug-2016		13-Nov-2018		20-Jul-2016		11-Nov-2018		14-Sep-2016		12-Nov-2018	
Drilling Fluid Proportion		0.04	0.24	0.16		0.09	0.18	0.13		0.08	0.18	0.20	
Formation Water Proportion		0.96	0.76	0.84		0.91	0.82	0.87		0.92	0.82	0.80	
Sampling interval depth (metres along borehole)		274.0 m - 287.4 m				349.3 m - 359.1 m				381.3 m - 392.7 m			
Sampling interval vertical depth (metres)		257.7 m - 268.3 m				326.1 m - 335.2 m				356.0 m - 366.6 m			
Estimated concentration range (calculated)		minimum	maximum	minimum	maximum	minimum	maximum	minimum	maximum	minimum	maximum	minimum	maximum
Dissolved Metals													
Aluminium (Al)	mg/L	<0.006	<0.006	<0.0050	<0.0050	-	-	0.000	0.008	-	-	<0.0115	<0.0126
Antimony (Sb)	mg/L	0.0002	0.0003	0.001	0.001	0.003	0.004	0.001	0.002	0.0026	0.0029	0.001	0.001
Silver (Ag)	mg/L	<0.0001	<0.0001	<0.00010	<0.00010	<0.0001	<0.0001	<0.00010	<0.00010	<0.0001	<0.0001	<0.00010	<0.00010
Arsenic (As)	mg/L	0.0050	0.0063	<0.0021	<0.0024	0.0031	0.0035	<0.0020	<0.0020	<0.0005	<0.0005	<0.0034	<0.0034
Barium (Ba)	mg/L	0.528	0.667	0.947	0.976	0.134	0.148	0.533	0.561	0.057	0.065	0.098	0.104
Beriilium (Be)	mg/L	<0.0005	<0.0005	<0.00050	<0.00050	<0.0005	<0.0005	<0.00050	<0.00050	<0.0005	<0.0005	<0.00050	<0.00050
Bismuth (Bi)	mg/L	<0.0005	<0.0005	<0.00050	<0.00050	<0.0005	<0.0005	<0.00050	<0.00050	<0.0005	<0.0005	<0.00050	<0.00050
Boron (B)	mg/L	0.30	0.38	0.24	0.28	0.58	0.64	0.82	1.05	0.53	0.60	0.28	0.33
Cadmium (Cd)	mg/L	-	0.000033	<0.000050	<0.000050	<0.00002	<0.00002	<0.000050	<0.000050	<0.00002	<0.00002	<0.000050	<0.000050
Chromium (Cr)	mg/L	0.0070	0.0089	<0.00050	<0.00050	0.0054	0.0060	<0.00050	<0.00050	0.0048	0.0055	<0.00050	<0.00050
Cobalt (Co)	mg/L	0.0015	0.0019	<0.000050	<0.000050	0.0017	0.0018	<0.000050	<0.000050	0.0011	0.0012	<0.000050	<0.000050
Copper (Cu)	mg/L	0.0055	0.0069	<0.00050	<0.00050	0.0020	0.0023	<0.00050	<0.00050	0.0046	0.0052	<0.00050	<0.00050
Tin (Sn)	mg/L	0.0010	<0.001	<0.0010	<0.0010	0.0011	0.0012	<0.0010	<0.0010	<0.001	<0.001	<0.0010	<0.0010
Iron (Fe)	mg/L	0.17	0.21	0.264	0.276	0.15	0.16	0.078	0.120	0.08	0.09	<0.018	<0.019
Lithium (Li)	mg/L	0.33	0.41	0.15	0.24	0.64	0.71	1.06	1.63	0.31	0.34	<0.749	<0.779
Manganese (Mn)	mg/L	0.04	0.05	0.115	0.116	0.022	0.024	0.093	0.096	0.008	0.009	0.022	0.023
Mercury (Hg)	mg/L	0.0008	0.0010	<0.000010	<0.000010	0.0028	0.0031	<0.000010	<0.000010	0.00215	0.00242	<0.000010	<0.000010
Dissolved Mercury (Hg)	mg/L	0.0005	0.0006	<0.000010	<0.000010	0.0031	0.0034	<0.000010	<0.000010	0.00217	0.00244	<0.000010	<0.000010
Molybdenum (Mo)	mg/L	0.02	0.02	0.029	0.031	0.0062	0.0068	0.013	0.013	0.019	0.021	0.018	0.019
Nickel (Ni)	mg/L	0.05	0.06	<0.00050	<0.00050	0.05	0.05	<0.00050	<0.00050	0.04	0.05	<0.00050	<0.00050
Lead (Pb)	mg/L	<0.0003	<0.0003	<0.00030	<0.00030	0.0027	0.0030	<0.00030	<0.00030	<0.0003	<0.0003	<0.00030	<0.00030
Selenium (Se)	mg/L	0.11	0.14	<0.0020	<0.0020	0.12	0.13	<0.0020	<0.0020	0.08	0.09	<0.0020	<0.0020
Silica (Si)	mg/L	4.00	5.06	3.19	3.31	4.18	4.63	2.48	2.63	4.29	4.82	3.51	3.51
Strontium (Sr)	mg/L	13.2	16.7	14.3	16.0	18.9	20.9	27.7	36.5	12.7	14.2	<16.9	<17.2
Telluride (Te)	mg/L	<0.0005	<0.0005	<0.00050	<0.00050	<0.0005	<0.0005	<0.00050	<0.00050	<0.0005	<0.0005	<0.00050	<0.00050
Thallium (Tl)	mg/L	<0.0008	<0.0008	<0.000050	<0.000050	<0.0008	<0.0008	<0.000050	<0.000050	<0.0008	<0.0008	<0.000050	<0.000050
Titanium (Ti)	mg/L	0.350	0.442	<0.0050	<0.0050	0.336	0.373	<0.0050	<0.0050	0.229	0.257	<0.0050	<0.0050
Uranium (U)	mg/L	<0.001	<0.001	0.025	0.026	<0.001	<0.001	0.051	0.052	0.064	0.072	0.085	0.090
Vanadium (V)	mg/L	0.002	0.002	<0.000050	<0.000050	<0.0005	<0.0005	<0.000050	<0.000050	<0.001	<0.001	0.00020	0.00020
Zinc (Zn)	mg/L	1.3	1.7	<0.00050	<0.00050	0.63	0.70	<0.00050	<0.00050	<0.0005	<0.0005	<0.00050	<0.00050

Table 6
QA/QC of Rock Formation Groundwater Quality
Whale Tail Lake Talik
Whale Tail Project, Nunavut

Sample			Part B					Part A			Part B		
Date			13-Nov-2018					11-Nov-2018			12-Nov-2018		
Certificate No			L2198327-1	L2198327-2	RPD			L2197641-3	L2197641-4	RPD	L2197641-5	L2197641-6	RPD
Sample ID	Method Detection Limit	Units	Zone 6	Zone 66		Method Detection Limit	Units	Zone 4	Zone 44		Zone 3	Zone 33	
Parameters													
Physical Tests (Water)													
Conductivity	2	uS/cm	8720	8780	1%	2	uS/cm	13900	14000	1%	7530	7550	2%
pH	0.1	pH	6.58	6.65	1%	0.1	pH	6.97	6.94	0%	7.40	7.50	1%
Total Suspended Solids	3	mg/L	8	10	13%	3	mg/L	24	20	18%	8	8	5%
Total Dissolved Solids	30	mg/L	5580	5410	3%	3	mg/L	9030	8820	2%	5100	4980	2%
Anions and Nutrients													
Alkalinity, Bicarbonate (as CaCO3)	1	mg/L	27	26	3%	1	mg/L	10	10	2%	51	50	1%
Alkalinity, Carbonate (as CaCO3)	1	mg/L	<1.0	<1.0	--	1	mg/L	<1.0	<1.0	--	<1.0	<1.0	--
Alkalinity, Hydroxide (as CaCO3)	1	mg/L	<1.0	<1.0	--	1	mg/L	<1.0	<1.0	--	<1.0	<1.0	--
Alkalinity, Total (as CaCO3)	1	mg/L	27	26	3%	1	mg/L	10	10	2%	51	50	1%
Ammonia, Total (as N)	0.005	mg/L	0.443	0.437	1%	0.005	mg/L	0.157	0.158	1%	0.139	0.136	2%
Bromide (Br)	2.5	mg/L	41	41	1%	0.05	mg/L	70	60	15%	33	33	1%
Chloride (Cl)	5	mg/L	3010	3060	2%	0.5	mg/L	5220	4530	14%	2700	2700	0%
Fluoride (F)	1	mg/L	<1.0	<1.0	--	0.02	mg/L	<1.0	<1.0	--	<1.0	<1.0	--
Nitrate (as N)	0.25	mg/L	<0.25	<0.25	--	0.005	mg/L	<0.25	<0.25	--	<0.25	<0.25	--
Nitrite (as N)	0.05	mg/L	<0.050	<0.050	--	0.001	mg/L	<0.050	<0.050	--	<0.050	<0.050	--
Phosphorus (P)-Total	0.002	mg/L	0.004	0.005	19%	0.002	mg/L	0.01	0.01	13%	0.006	0.008	+/- MDL
Sulfate (SO4)	15	mg/L	<15	<15	--	0.3	mg/L	<15	<15	--	<15	<15	--
Physical Tests													
Hardness (as CaCO3)	4.8	mg/L	3630	3670	0.3%	4.8	mg/L	5160	5150	0%	2600	2740	5%
Dissolved Metals													
Aluminum (Al)-Dissolved	0.005	mg/L	<0.0050	<0.0050	1%	0.005	mg/L	0.0085	0.0076	11%	0.0126	0.0115	9%
Antimony (Sb)-Dissolved	0.0005	mg/L	<0.00050	0.0005	+/- MDL	0.0005	mg/L	0.00163	0.00172	5%	0.00308	0.003	3%
Arsenic (As)-Dissolved	0.002	mg/L	0.0021	0.0024	13%	0.002	mg/L	<0.0020	<0.0020	--	0.0034	0.0034	0%
Barium (Ba)-Dissolved	0.001	mg/L	0.818	0.794	3%	0.001	mg/L	0.466	0.489	5%	0.0902	0.0854	5%
Beryllium (Be)-Dissolved	0.0005	mg/L	<0.00050	<0.00050	--	0.0005	mg/L	<0.00050	<0.00050	--	<0.00050	<0.00050	--
Bismuth (Bi)-Dissolved	0.0005	mg/L	<0.00050	<0.00050	--	0.0005	mg/L	<0.00050	<0.00050	--	<0.00050	<0.00050	--
Boron (B)-Dissolved	0.1	mg/L	0.36	0.35	3%	0.1	mg/L	0.9	0.95	5%	1.04	1.02	2%
Cadmium (Cd)-Dissolved	0.000005	mg/L	<0.000050	<0.000050	--	0.000005	mg/L	<0.000050	<0.000050	--	<0.000050	<0.000050	--
Calcium (Ca)-Dissolved	1	mg/L	1380	1380	0%	1	mg/L	1970	1970	0%	1040	1090	5%
Cesium (Cs)-Dissolved	0.0005	mg/L	<0.00050	<0.00050	--	0.0005	mg/L	0.00075	0.00074	1%	<0.00050	<0.00050	--
Chromium (Cr)-Dissolved	0.0005	mg/L	<0.00050	<0.00050	--	0.0005	mg/L	<0.00050	<0.00050	--	<0.00050	<0.00050	--
Cobalt (Co)-Dissolved	0.00005	mg/L	<0.000050	<0.000050	--	0.00005	mg/L	<0.000050	<0.000050	--	<0.000050	<0.000050	--
Copper (Cu)-Dissolved	0.0005	mg/L	<0.00050	<0.00050	--	0.0005	mg/L	<0.00050	<0.00050	--	<0.00050	<0.00050	--
Gallium (Ga)-Dissolved	0.0005	mg/L	<0.00050	<0.00050	--	0.0005	mg/L	<0.00050	<0.00050	--	<0.00050	<0.00050	--
Iron (Fe)-Dissolved	0.01	mg/L	0.251	0.256	2%	0.01	mg/L	0.112	0.105	6%	0.018	0.019	5%
Lead (Pb)-Dissolved	0.0003	mg/L	<0.00030	<0.00030	--	0.0003	mg/L	<0.00030	<0.00030	--	<0.00030	<0.00030	--
Lithium (Li)-Dissolved	0.02	mg/L	0.533	0.52	2%	0.02	mg/L	1.42	1.52	7%	0.779	0.749	4%
Magnesium (Mg)-Dissolved	1	mg/L	42.8	42.8	0%	1	mg/L	57.8	53.9	7%	1.2	1.2	0%
Manganese (Mn)-Dissolved	0.0002	mg/L	0.0961	0.097	1%	0.0002	mg/L	0.0836	0.0812	3%	0.0184	0.0181	2%
Mercury (Hg)-Dissolved	0.00001	mg/L	<0.000010	<0.000010	--	0.00001	mg/L	<0.000010	<0.000010	--	<0.000010	<0.000010	--
Molybdenum (Mo)-Dissolved	0.002	mg/L	0.0257	0.0245	5%	0.002	mg/L	0.0112	0.0116	4%	0.0154	0.0144	7%
Nickel (Ni)-Dissolved	0.0005	mg/L	<0.00050	<0.00050	--	0.0005	mg/L	<0.00050	<0.00050	--	<0.00050	<0.00050	--
Phosphorus (P)-Dissolved	0.05	mg/L	<0.050	<0.050	--	0.05	mg/L	<0.050	<0.050	--	<0.050	<0.050	--
Potassium (K)-Dissolved	20	mg/L	<20	<20	--	20	mg/L	67	66	2%	38	40	5%
Rhenium (Re)-Dissolved	0.0005	mg/L	<0.00050	<0.00050	--	0.0005	mg/L	<0.00050	<0.00050	--	<0.00050	<0.00050	--
Rubidium (Rb)-Dissolved	0.005	mg/L	0.0151	0.0146	3%	0.005	mg/L	0.0891	0.0814	9%	0.0549	0.0528	4%
Selenium (Se)-Dissolved	0.002	mg/L	<0.0020	<0.0020	--	0.002	mg/L	<0.0020	<0.0020	--	<0.0020	<0.0020	--
Silicon (Si)-Dissolved	1	mg/L	2.8	2.7	4%	1	mg/L	2.3	2.2	4%	3	3	0%
Silver (Ag)-Dissolved	0.0001	mg/L	<0.00010	<0.00010	--	0.0001	mg/L	<0.00010	<0.00010	--	<0.00010	<0.00010	--
Sodium (Na)-Dissolved	20	mg/L	253	250	1%	20	mg/L	309	320	3%	280	301	7%
Strontium (Sr)-Dissolved	0.05	mg/L	19.5	19.7	1%	0.05	mg/L	33.6	33.6	0%	16.9	17.2	2%
Sulfur (S)-Dissolved	5	mg/L	<5.0	<5.0	--	5	mg/L	<5.0	<5.0	--	<5.0	<5.0	--
Tellurium (Te)-Dissolved	0.0005	mg/L	<0.00050	<0.00050	--	0.0005	mg/L	<0.00050	<0.00050	--	<0.00050	<0.00050	--
Thallium (Tl)-Dissolved	0.00005	mg/L	<0.000050	<0.000050	--	0.00005	mg/L	<0.000050	<0.000050	--	<0.000050	<0.000050	--
Thorium (Th)-Dissolved	0.0005	mg/L	<0.00050	<0.00050	--	0.0005	mg/L	<0.00050	<0.00050	--	<0.00050	<0.00050	--
Tin (Sn)-Dissolved	0.001	mg/L	<0.0010	<0.0010	--	0.001	mg/L	<0.0010	<0.0010	--	<0.0010	<0.0010	--
Titanium (Ti)-Dissolved	0.005	mg/L	<0.0050	<0.0050	--	0.005	mg/L	<0.0050	<0.0050	--	<0.0050	<0.0050	--
Tungsten (W)-Dissolved	0.001	mg/L	0.0214	0.0208	3%	0.001	mg/L	0.0455	0.0443	3%	0.0722	0.0687	5%
Uranium (U)-Dissolved	0.00005	mg/L	<0.000050	<0.000050	--	0.00005	mg/L	<0.000050	<0.000050	--	0.00016	0.000144	11%
Vanadium (V)-Dissolved	0.0005	mg/L	<0.00050	<0.00050	--	0.0005	mg/L	<0.00050	<0.00050	--	<0.00050	<0.00050	--
Yttrium (Y)-Dissolved	0.0005	mg/L	<0.00050	<0.00050	--	0.0005	mg/L	<0.00050	<0.00050	--	<0.00050	<0.00050	--
Zinc (Zn)-Dissolved	0.003	mg/L	0.0244	0.023	6%	0.003	mg/L	0.0096	0.01	4%	<0.0030	<0.0030	--
Zirconium (Zr)-Dissolved	0.0005	mg/L	<0.00050	<0.00050	--	0.0005	mg/L	<0.00050	<0.00050	--	<0.00050	<0.00050	--
QA/QC													
Calculated TDS (lab)	-	mg/L	4779	4826	-	-	-	7743	7950	-	4165	4237	-
Lab measured vs Calculated TDS	-		156%	162%	-	-	-	154%	159%	-	148%	148%	-
Lab measured TDS vs conductivity	-	uS/cm	0.6	0.6	-	-	-	0.6	0.6	-	0.7	0.7	-

Notes
Concentrations are mg/L unless otherwise noted.
[1] Part F Item 2 of Meadowbank Water License. All regulated parameters for total concentration
RPD value exceeds 20%
FD = Field duplicate
RPD = relative percent difference
-- not calculated (one or both results below MDL)

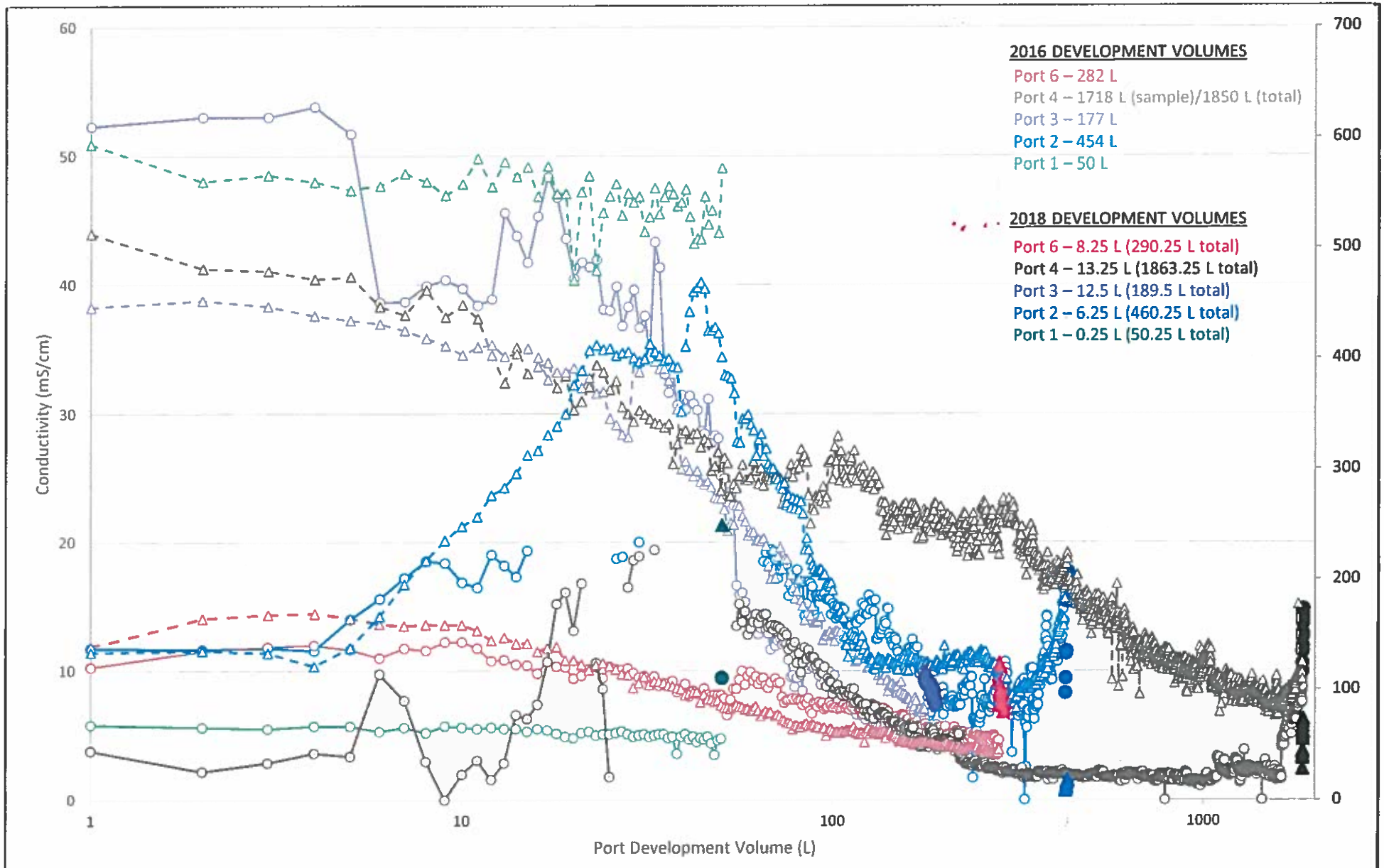

Notes:
2016 conductivity
2016 fluorescein
2018 conductivity
2018 fluorescein
Volumes reported at time of sample collection and/or end of development (Port 1, Port 4 - 1855 L only)

2016 Data: Port 6, Port 4, Port 3, Port 2 and Port 1
2018 Data: Port 6, Port 4, Port 3, Port 2 and Port 1

GOLDER

CLIENT	AGNICO EAGLE MINES LIMITED
CONSULTANT	
YYYY-MM-DD	2019-02-08
PREPARED	OH
DESIGN	--
REVIEW	VJB
APPROVED	VJB
PROJECT	2018 WESTBAY SYSTEM GROUNDWATER MONITORING INVESTIGATION
TITLE	2016 AND 2018 DEVELOPMENT RECORD
PROJECT No.	1789310-244
Rev	

FIGURE 1

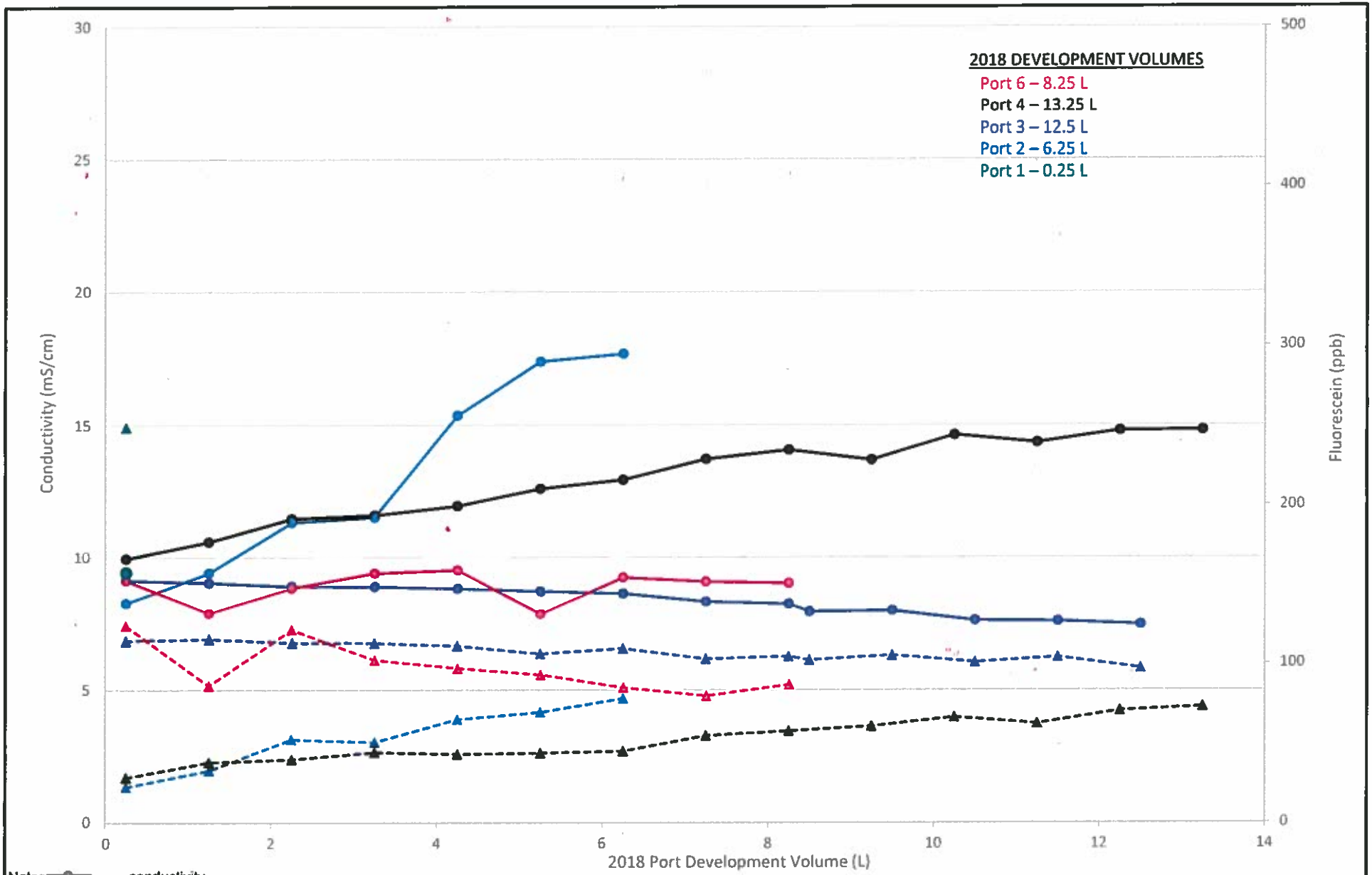

Notes: conductivity
fluorescein
Volumes reported at time of sample collection and/or end of development (for Port 1)

Colours Port 6, Port 4, Port 3, Port 2 and Port 1

CLIENT
AGNICO EAGLE MINES LIMITED

CONSULTANT
GOLDER

YYYY-MM-DD	2019-02-08
PREPARED	DH
DESIGN	–
REVIEW	VJB
APPROVED	VJB

PROJECT
2018 WESTBAY SYSTEM GROUNDWATER MONITORING INVESTIGATION

TITLE
2018 DEVELOPMENT RECORD

PROJECT No. Rev.
1789310-244

FIGURE 2

APPENDIX A

AMQ160626 Westbay System Installation Details

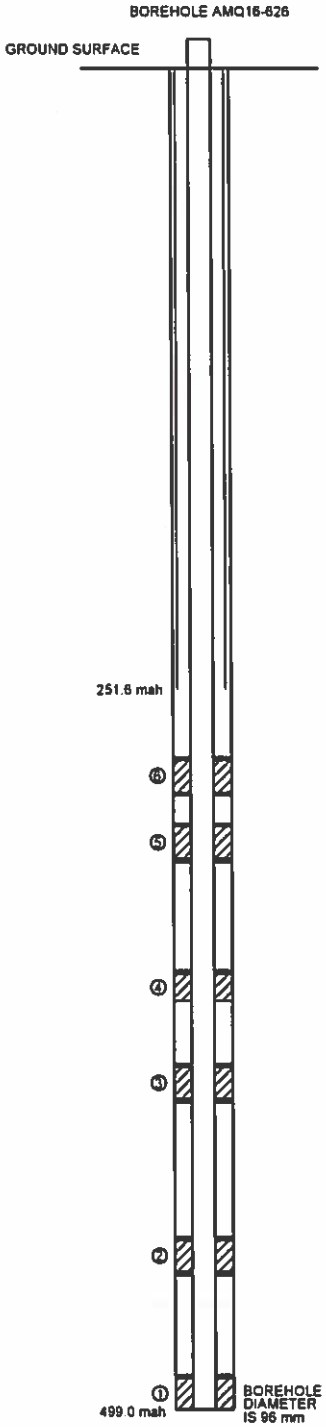

WESTBAY SYSTEM ZONE DEPTH SUMMARY						
ZONE	DEPTH ALONG HOLE			VERTICAL DEPTH		
	FROM (mah)	TO (mah)	LENGTH (m)	FROM (mbgs)	TO (mbgs)	THICKNESS (m)
6	276.0	287.4	11.4	257.7	268.3	10.6
5	298.9	310.3	11.4	279	289.7	10.6
4	349.3	359.1	9.8	326.1	335.2	9.1
3	381.3	392.7	11.4	356.0	366.6	10.6
2	440.8	452.2	11.4	411.5	422.2	10.6
1	488.1	499.0	10.9	455.7	465.9	10.2

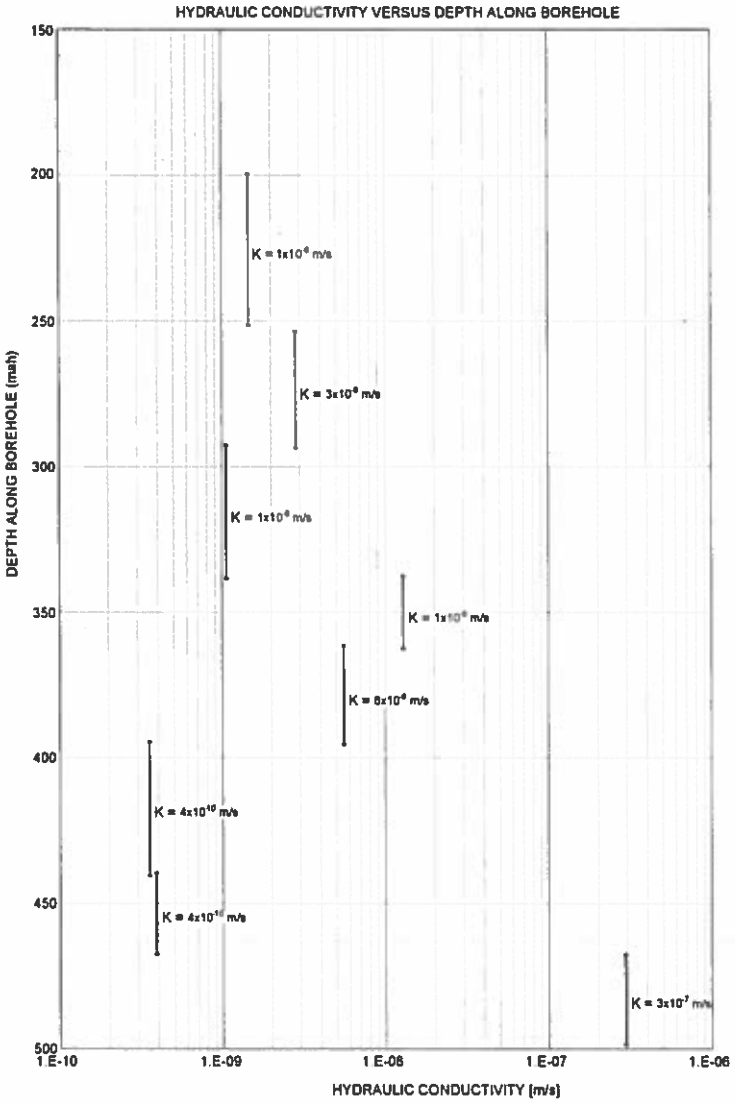

LEGEND

	PACKER	K	HYDRAULIC CONDUCTIVITY
①	WESTBAY MONITORING ZONE	mah	METRES ALONG BOREHOLE, RELATIVE TO GROUND SURFACE
	STEEL CASING	mbgs	METRES BELOW GROUND SURFACE
		m/s	METRES PER SECOND

NOTES

1. ALL UNITS ARE IN METERS UNLESS OTHERWISE NOTED
2. PERMAFROST ASSUMED 200 m ALONG HOLE ALIGNMENT.
3. DRILL RODS TO 251.6 m ALONG HOLE.
4. BOREHOLE LOCATED IN UTM NAD 83 ZONE 14, N =7255363.5 E = 607161.68 ELEVATION = 154.46 m.
5. AVERAGE BOREHOLE INCLINATION IS 69°.

NOT TO SCALE
SCHEMATIC ONLY

REV	DATE	REVISION DESCRIPTION	DES	CADD	CHK	
D	2016-07-06	ISSUED FOR FINAL	JJ	PP	DV	DC
A	2016-05-27	ISSUED FOR REVIEW	JJ	PP		

PROJECT
AGNICO EAGLE

AGNICO EAGLE MINES LIMITED
WHALE TAIL PIT PROJECT
NUNAVUT, CANADA

TITLE

AMQ16-626 WESTBAY SYSTEM INSTALLATION DETAILS

Golder Associates

PROJECT No.	1649355 4000.3000		FILE No.	1649355-4000-3000-03	
DESIGN	JJ	2016-07-06	SCALE	NOT TO SCALE	
CADD	PP	2016-07-06	FIGURE	3	
CHECK	DV	2016-07-06			
REVIEW	DC	2016-07-06			

\\golder.gds\ga\Nunavik\CAD-GIS\Client\Agnico_Eagle_Mines_LtdWhale_Tail\99_PROJECTS\1649355\02_PRODUCTION\4000\3000\DWG\1649355-4000-3000-03.dwg | Layout: AMQ16-626 WESTBAY SYSTEM INSTALLATION DETAILS | Modified: gmacuhesh 05/26/2016 1:35 PM | Plotted: gmacuhesh 07/06/2016

APPENDIX B

Westbay Instruments Mosdax Sampler Calibration Reports

MOSDAX Calibration Report 1: EMS - 1764 Module 323

Full Scale: 2000 (psia)

File: E:\DATA\CAL\0-2018\2000\26JAN2~1\01764

Pressure Reference: Paroscientific Model 42K-101 S/N 59937

Range: 2K PSI

Date of last reference to traceable standard: Oct 5 2017

EMS - 1764 Jan 26 17:09:52 2018
Range 1 Temp 3.1° C

Ref Pres (psia)	Error (psia)	(% FS)
14.817	0.208	0.010
193.345	-0.073	-0.004
393.618	-0.272	-0.014
589.887	-0.183	-0.009
787.108	-0.110	-0.006
992.089	-0.024	-0.001
1191.192	0.036	0.002
1390.713	0.133	0.007
1589.940	0.097	0.005
1781.966	0.014	0.001
1987.965	-0.329	-0.016
1817.144	-0.012	-0.001
1618.742	0.102	0.005
1413.125	0.180	0.009
1213.194	0.106	0.005
1009.488	0.089	0.004
807.541	-0.027	-0.001
606.650	-0.114	-0.006
406.828	-0.184	-0.009
205.695	-0.015	-0.001
14.824	0.214	0.011

EMS - 1764 Jan 26 07:09:09 2018
Range 2 Temp 10.1° C

Ref Pres (psia)	Error (psia)	(% FS)
14.763	0.210	0.011
193.566	-0.123	-0.006
392.913	-0.184	-0.009
591.481	-0.211	-0.011
790.656	-0.114	-0.006
990.073	0.058	0.003
1184.170	0.092	0.005
1382.638	0.117	0.006
1583.021	0.197	0.010
1783.679	0.027	0.001
1991.373	-0.178	-0.009
1816.737	0.061	0.003
1611.101	0.226	0.011
1410.177	0.278	0.014
1209.052	0.204	0.010
1008.134	0.118	0.006
809.316	-0.034	-0.002
608.601	-0.077	-0.004
406.467	-0.147	-0.007
205.759	-0.012	-0.001
14.783	0.231	0.012

EMS - 1764 Jan 26 02:21:39 2018
Range 3 Temp 19.9° C

Ref Pres (psia)	Error (psia)	(% FS)
14.745	0.228	0.011
193.251	-0.079	-0.004
392.313	-0.228	-0.011
591.070	-0.177	-0.009
790.016	-0.162	-0.008
988.877	-0.001	0.000
1189.677	-0.007	0.000
1383.376	0.058	0.003
1582.918	0.132	0.007
1783.642	-0.023	-0.001
1990.362	-0.278	-0.014
1807.379	-0.041	-0.002
1611.387	0.144	0.007
1410.184	0.103	0.005
1209.054	0.151	0.008
1007.771	0.068	0.003
807.386	-0.029	-0.001
608.200	-0.110	-0.005
407.925	-0.205	-0.010
206.304	-0.075	-0.004
14.730	0.212	0.011

EMS - 1764 Jan 25 20:49:38 2018
Range 4 Temp 29.9° C

Ref Pres (psia)	Error (psia)	(% FS)
14.664	0.129	0.006
193.289	-0.074	-0.004
392.551	-0.259	-0.013
590.683	-0.199	-0.010
790.879	-0.111	-0.006
989.404	-0.070	-0.003
1188.900	-0.088	-0.004
1383.144	0.006	0.000
1582.510	-0.017	-0.001
1783.117	-0.170	-0.008
1990.420	-0.360	-0.018
1817.923	-0.145	-0.007
1612.561	0.048	0.002
1409.796	0.050	0.003
1208.930	0.011	0.001
1007.679	0.001	0.000
807.799	-0.074	-0.004
607.517	-0.125	-0.006
406.301	-0.139	-0.007
205.701	-0.048	-0.002
14.686	0.149	0.007

EMS - 1764 Jan 25 15:45:50 2018
Range 5 Temp 39.9° C

Ref Pres (psia)	Error (psia)	(% FS)
14.630	0.147	0.007
193.274	-0.098	-0.005
393.384	-0.239	-0.012
590.646	-0.204	-0.010
792.587	-0.140	-0.007
989.121	-0.059	-0.003
1188.417	-0.084	-0.004
1390.226	0.040	0.002
1582.457	0.023	0.001
1783.077	-0.054	-0.003
1990.337	-0.125	-0.006
1809.812	-0.012	-0.001
1612.027	0.084	0.004
1410.656	0.064	0.003
1207.895	0.018	0.001
1007.484	0.004	0.000
807.295	-0.056	-0.003
608.401	-0.142	-0.007
406.285	-0.237	-0.012
205.685	-0.138	-0.007
14.645	0.098	0.005

Issued by

Westbay Instruments

MOSDAX Calibration Report 2: EMS - 1764 Module 323

Full Scale: 2000 (psia)

File: E:\DATA\CAL\0-2018\2000\26JAN2-1\01764

Pressure Reference: Paroscientific Model 42K-101 S/N 59937

Range: 2K PSI

Date of last reference to traceable standard: Oct 5 2017

Plot of Error vs. Reference Pressure

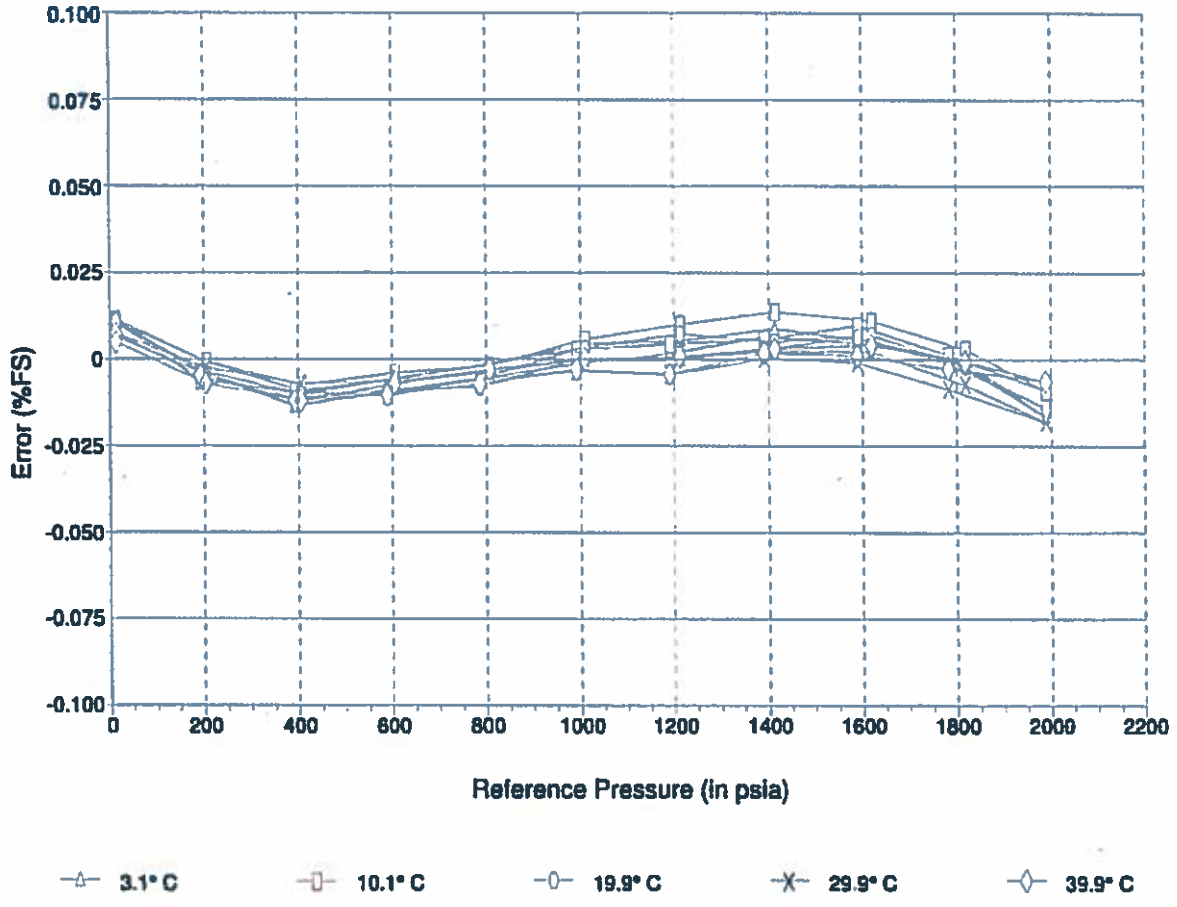

Comments

Issued by

Westbay Instruments

As Received MOSDAX Cal. Report 2: EMS - 1764 Module 323

Full Scale: 2000 (psia)

File: E:\DATA\CAL\0-2018\2000\26JAN2-1\01764

Pressure Reference: Paroscientific Model 42K-101 S/N 59937

Range: 2K PSI

Date of last reference to traceable standard: Oct 5 2017

Plot of Error vs. Reference Pressure

EMS - 1764 Module 323

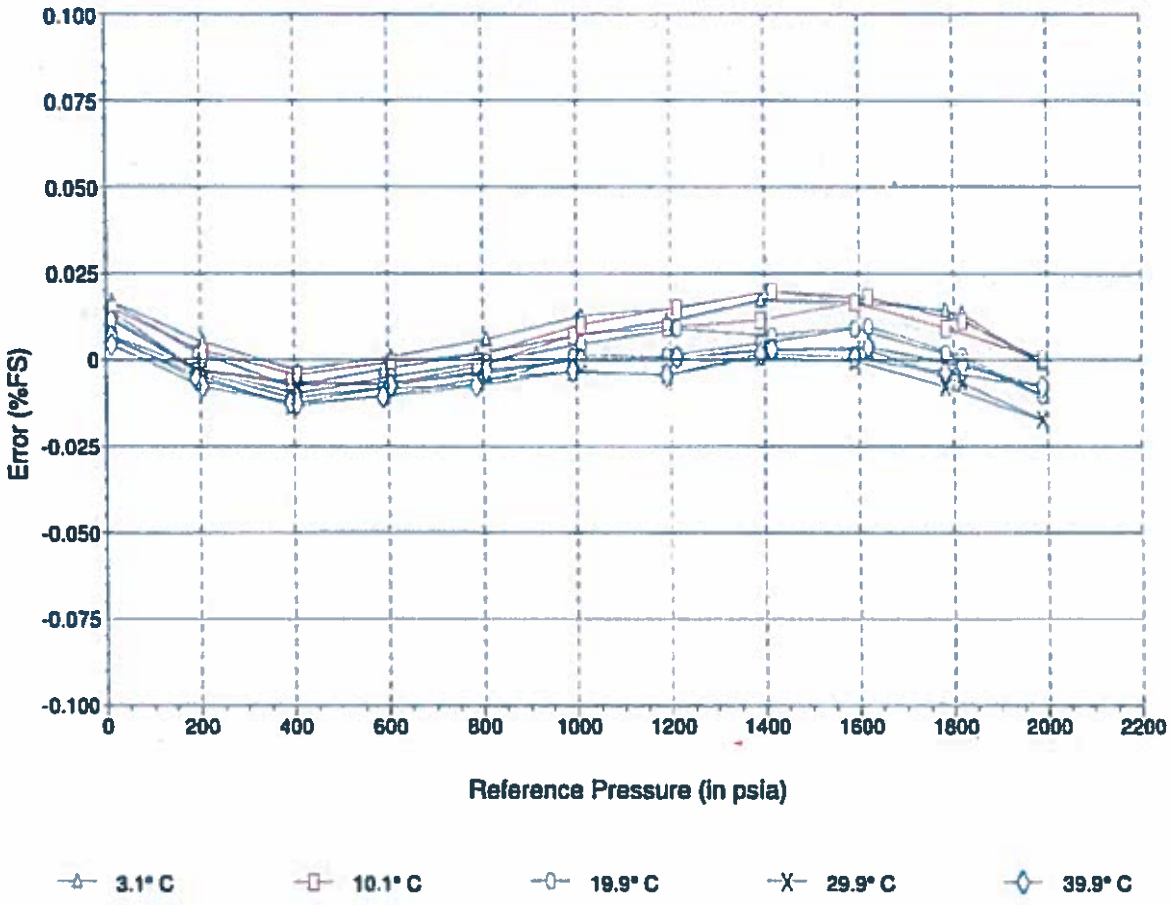

Comments

Issued by

Westbay Instruments

As Received MOSDAX Cal. Report 1: EMS - 1764 Module 323

Full Scale: 2000 (psia)

File: E:\DATA\CAL\0-2018\2000\25JAN2-1\01764

Pressure Reference: Paroscientific Model 42K-101 S/N 59937

Range: 2K PSI

Date of last reference to traceable standard: Oct 5 2017

EMS - 1764 Jan 26 17:09:52 2018 Range 1 Temp 3.1° C			EMS - 1764 Jan 26 07:09:09 2018 Range 2 Temp 10.1° C			EMS - 1764 Jan 26 02:21:39 2018 Range 3 Temp 19.9° C		
Ref Pres (psia)	Error (psia)	(% FS)	Ref Pres (psia)	Error (psia)	(% FS)	Ref Pres (psia)	Error (psia)	(% FS)
14.817	0.330	0.016	14.763	0.276	0.014	14.745	0.240	0.012
193.345	0.046	0.002	193.566	-0.061	-0.003	193.251	-0.068	-0.003
393.618	-0.152	-0.008	392.913	-0.123	-0.006	392.313	-0.217	-0.011
589.887	-0.055	-0.003	591.481	-0.147	-0.007	591.070	-0.165	-0.008
787.108	0.031	0.002	790.656	-0.043	-0.002	790.016	-0.146	-0.007
992.089	0.136	0.007	990.073	0.140	0.007	988.677	0.020	0.001
1191.192	0.219	0.011	1184.170	0.188	0.009	1189.677	0.022	0.001
1390.713	0.343	0.017	1382.638	0.231	0.012	1383.376	0.095	0.005
1589.940	0.337	0.017	1583.021	0.331	0.017	1582.918	0.179	0.009
1781.966	0.285	0.014	1783.679	0.185	0.009	1783.642	0.037	0.002
1987.965	-0.022	-0.001	1991.373	0.007	0.000	1990.362	-0.203	-0.010
1817.144	0.265	0.013	1816.737	0.223	0.011	1807.379	0.021	0.001
1618.742	0.348	0.017	1611.101	0.363	0.018	1611.387	0.194	0.010
1413.125	0.394	0.020	1410.177	0.394	0.020	1410.184	0.141	0.007
1213.194	0.296	0.015	1209.052	0.302	0.015	1209.054	0.180	0.009
1009.488	0.252	0.013	1008.134	0.201	0.010	1007.771	0.089	0.004
807.541	0.117	0.006	809.316	0.037	0.002	807.386	-0.013	-0.001
606.650	0.016	0.001	608.601	-0.013	-0.001	608.200	-0.098	-0.005
406.828	-0.062	-0.003	406.467	-0.087	-0.004	407.925	-0.194	-0.010
205.695	0.104	0.005	205.759	0.050	0.002	206.304	-0.064	-0.003
14.824	0.336	0.017	14.783	0.297	0.015	14.730	0.225	0.011

EMS - 1764 Jan 25 20:49:38 2018 Range 4 Temp 29.9° C			EMS - 1764 Jan 25 15:45:50 2018 Range 5 Temp 39.9° C		
Ref Pres (psia)	Error (psia)	(% FS)	Ref Pres (psia)	Error (psia)	(% FS)
14.664	0.116	0.006	14.630	0.132	0.007
193.289	-0.086	-0.004	193.274	-0.112	-0.006
392.551	-0.268	-0.013	393.384	-0.250	-0.013
590.683	-0.206	-0.010	590.646	-0.212	-0.011
790.879	-0.114	-0.006	792.587	-0.146	-0.007
989.404	-0.069	-0.003	989.121	-0.063	-0.003
1188.900	-0.084	-0.004	1188.417	-0.088	-0.004
1383.144	0.013	0.001	1390.226	0.034	0.002
1582.510	-0.007	0.000	1582.457	0.014	0.001
1783.117	-0.157	-0.008	1783.077	-0.071	-0.004
1990.420	-0.345	-0.017	1990.337	-0.153	-0.008
1817.923	-0.132	-0.007	1809.812	-0.030	-0.002
1612.561	0.056	0.003	1612.027	0.074	0.004
1409.796	0.058	0.003	1410.656	0.058	0.003
1208.930	0.015	0.001	1207.895	0.014	0.001
1007.679	0.001	0.000	1007.484	0.000	0.000
807.799	-0.077	-0.004	807.295	-0.062	-0.003
607.517	-0.131	-0.007	608.401	-0.150	-0.007
406.301	-0.148	-0.007	406.285	-0.249	-0.012
205.701	-0.059	-0.003	205.685	-0.152	-0.008
14.686	0.136	0.007	14.645	0.083	0.004

Issued by

Westbay Instruments

MOSDAX Calibration Report 1: EMS - 2652 Module 3008

Full Scale: 2000 (psia)

File: E:\DATA\CAL\0-2018\2000\2JUNE2-1\02652

Pressure Reference: Paroscientific Model 42K-101 S/N 59937

Range: 2K PSI

Date of last reference to traceable standard: Oct 5 2017

EMS - 2652 Jun 02 12:30:14 2018 Range 1 Temp 3.3° C			EMS - 2652 Jun 02 07:51:36 2018 Range 2 Temp 10.3° C			EMS - 2652 Jun 02 03:10:20 2018 Range 3 Temp 20.1° C		
Ref Pres (psia)	Error (psia)	(% FS)	Ref Pres (psia)	Error (psia)	(% FS)	Ref Pres (psia)	Error (psia)	(% FS)
14.846	-0.142	-0.007	14.855	-0.105	-0.005	14.842	-0.118	-0.006
192.843	-0.001	0.000	192.231	-0.010	-0.001	194.509	-0.104	-0.005
393.849	0.122	0.006	393.607	0.068	0.003	390.935	0.064	0.003
587.948	-0.023	-0.001	593.420	0.070	0.003	592.897	0.002	0.000
791.882	-0.022	-0.001	792.296	0.087	0.004	791.655	0.062	0.003
990.911	-0.057	-0.003	991.833	0.075	0.004	991.348	0.019	0.001
1190.327	-0.189	-0.009	1191.049	-0.061	-0.003	1190.921	-0.121	-0.006
1390.264	-0.181	-0.009	1390.953	-0.006	0.000	1390.842	-0.037	-0.002
1589.406	-0.082	-0.004	1589.174	0.014	0.001	1589.397	-0.028	-0.001
1781.525	0.044	0.002	1781.549	0.156	0.008	1781.207	0.088	0.004
1989.515	0.123	0.006	1989.230	0.324	0.016	1989.355	0.295	0.015
1818.398	0.071	0.004	1818.861	0.206	0.010	1816.258	0.129	0.006
1619.022	-0.012	-0.001	1618.518	0.147	0.007	1618.089	0.091	0.005
1412.880	-0.003	0.000	1415.894	0.075	0.004	1413.069	0.081	0.004
1211.907	-0.038	-0.002	1212.127	0.094	0.005	1212.924	0.023	0.001
1009.806	0.075	0.004	1010.514	0.213	0.011	1009.965	0.189	0.009
808.334	0.096	0.005	808.014	0.218	0.011	807.813	0.215	0.011
606.956	0.169	0.008	606.949	0.179	0.009	606.634	0.213	0.011
406.373	0.123	0.006	406.191	0.137	0.007	407.189	0.192	0.010
205.741	0.110	0.006	206.072	0.110	0.005	205.699	0.162	0.008
14.848	-0.083	-0.004	14.863	-0.040	-0.002	14.852	-0.051	-0.003

EMS - 2652 Jun 01 22:31:07 2018 Range 4 Temp 30.0° C			EMS - 2652 Jun 01 17:53:01 2018 Range 5 Temp 39.8° C		
Ref Pres (psia)	Error (psia)	(% FS)	Ref Pres (psia)	Error (psia)	(% FS)
14.847	-0.019	-0.001	14.838	-0.006	0.000
194.042	-0.002	0.000	194.229	0.072	0.004
393.209	0.097	0.005	393.823	0.095	0.005
593.265	0.087	0.004	592.922	0.099	0.005
792.056	0.052	0.003	792.743	0.066	0.003
991.614	0.043	0.002	991.261	0.057	0.003
1189.236	-0.151	-0.008	1190.280	-0.056	-0.003
1389.839	-0.128	-0.006	1389.590	-0.057	-0.003
1588.713	-0.048	-0.002	1588.437	0.020	0.001
1788.124	0.061	0.003	1789.309	0.187	0.009
1989.624	0.201	0.010	1989.755	0.368	0.018
1817.189	0.140	0.007	1818.126	0.224	0.011
1616.308	0.001	0.000	1615.388	0.129	0.006
1412.900	0.022	0.001	1413.930	0.177	0.009
1212.611	0.060	0.003	1208.395	0.080	0.004
1009.750	0.246	0.012	1009.785	0.309	0.015
808.478	0.183	0.009	808.128	0.308	0.015
606.817	0.225	0.011	606.791	0.317	0.016
406.966	0.233	0.012	407.604	0.144	0.007
205.745	0.163	0.008	206.494	0.092	0.005
14.853	-0.013	-0.001	14.839	-0.005	0.000

Issued by

Westbay Instruments

MOSDAX Calibration Report 2: EMS - 2652 Module 3008

Full Scale: 2000 (psia)

File E:\DATA\CAL\0-2018\2000\2JUNE2-1\02652

Pressure Reference: Paroscientific Model 42K-101 S/N 59937

Range: 2K PSI

Date of last reference to traceable standard: Oct 5 2017

Plot of Error vs. Reference Pressure

EMS - 2652 Module 3008

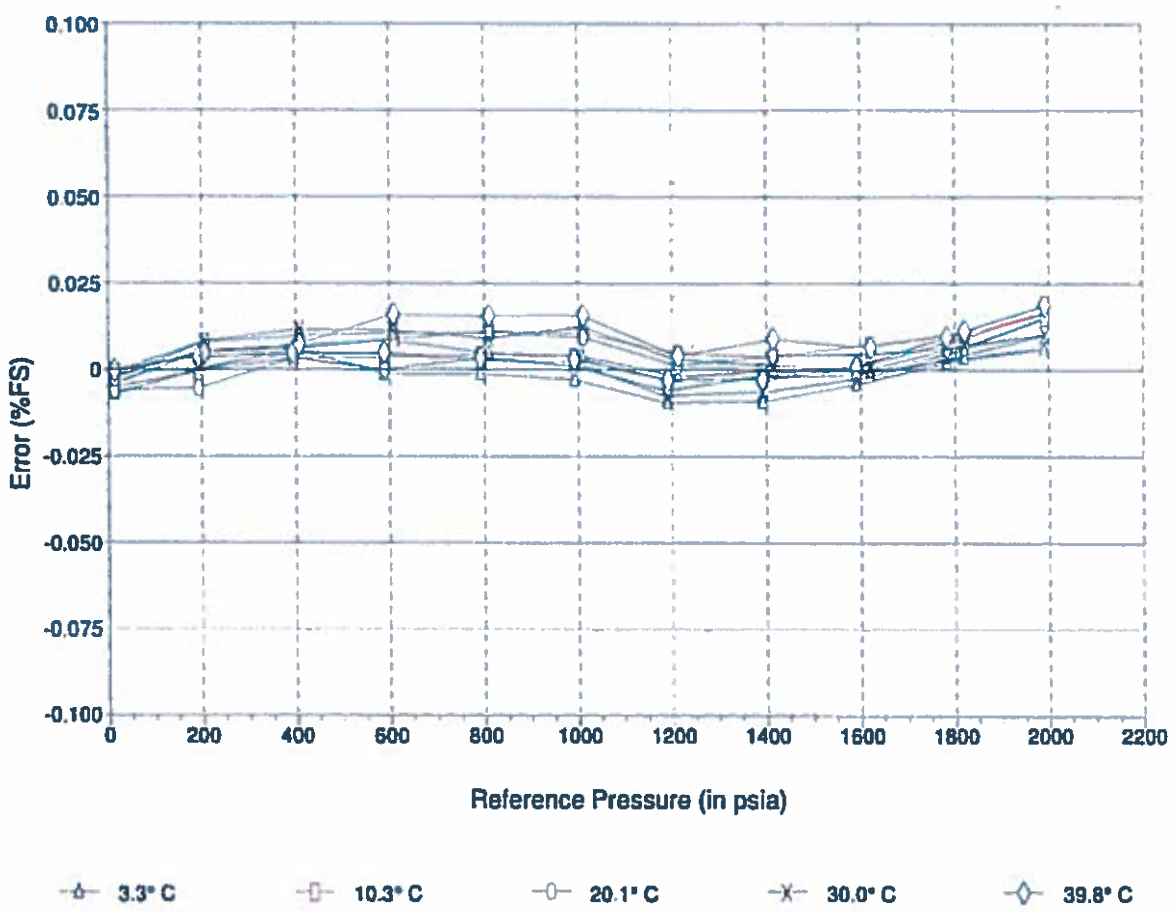

Comments

Issued by

Westbay Instruments

As Received MOSDAX Cal. Report 1: EMS - 2652 Module 3008

Full Scale: 2000 (psia)

File: E:\DATA\CAL\0-2018\200002\JUNE2-1\02652

Pressure Reference: Paroscientific Model 42K-101 S/N 59937

Range: 2K PSI

Date of last reference to traceable standard: Oct 5 2017

EMS - 2652 Jun 02 12:30:14 2018 Range 1 Temp 3.3° C			EMS - 2652 Jun 02 07:51:36 2018 Range 2 Temp 10.3° C			EMS - 2652 Jun 02 03:10:20 2018 Range 3 Temp 20.1° C		
Ref Pres (psia)	Error (psia)	(% FS)	Ref Pres (psia)	Error (psia)	(% FS)	Ref Pres (psia)	Error (psia)	(% FS)
14.846	0.013	0.001	14.855	0.042	0.002	14.842	0.032	0.002
192.843	0.170	0.008	192.231	0.155	0.008	194.509	0.061	0.003
393.849	0.313	0.016	393.607	0.255	0.013	390.935	0.244	0.012
587.948	0.190	0.009	593.420	0.277	0.014	592.897	0.196	0.010
791.882	0.218	0.011	792.296	0.315	0.016	791.655	0.268	0.013
990.911	0.211	0.011	991.833	0.321	0.016	991.348	0.236	0.012
1190.327	0.110	0.005	1191.049	0.204	0.010	1190.921	0.105	0.005
1390.264	0.152	0.008	1390.953	0.279	0.014	1390.842	0.196	0.010
1589.406	0.286	0.014	1589.174	0.318	0.016	1589.397	0.211	0.011
1781.525	0.449	0.022	1781.549	0.476	0.024	1781.207	0.331	0.017
1989.515	0.569	0.028	1989.230	0.682	0.033	1989.355	0.540	0.027
1818.398	0.484	0.024	1818.861	0.530	0.027	1816.258	0.372	0.019
1619.022	0.362	0.018	1618.518	0.453	0.023	1618.089	0.330	0.017
1412.880	0.333	0.017	1415.894	0.362	0.018	1413.069	0.314	0.016
1211.907	0.264	0.013	1212.127	0.362	0.018	1212.924	0.250	0.013
1009.806	0.346	0.017	1010.514	0.462	0.023	1009.965	0.407	0.020
808.334	0.338	0.017	808.014	0.447	0.022	807.813	0.422	0.021
606.956	0.385	0.019	606.949	0.388	0.019	606.634	0.408	0.020
406.373	0.315	0.016	406.191	0.325	0.016	407.189	0.373	0.019
205.741	0.282	0.014	206.072	0.277	0.014	205.699	0.328	0.016
14.848	0.072	0.004	14.863	0.107	0.005	14.852	0.098	0.005

EMS - 2652 Jun 01 22:31:07 2018 Range 4 Temp 30.0° C			EMS - 2652 Jun 01 17:53:01 2018 Range 5 Temp 39.8° C		
Ref Pres (psia)	Error (psia)	(% FS)	Ref Pres (psia)	Error (psia)	(% FS)
14.847	0.148	0.007	14.838	0.193	0.010
194.042	0.167	0.008	194.229	0.252	0.013
393.209	0.270	0.013	393.823	0.259	0.013
593.265	0.263	0.013	592.922	0.253	0.013
792.056	0.233	0.012	792.743	0.216	0.011
991.614	0.229	0.011	991.261	0.209	0.010
1189.236	0.040	0.002	1190.280	0.104	0.005
1389.839	0.070	0.003	1389.590	0.117	0.006
1588.713	0.156	0.008	1588.437	0.215	0.011
1788.124	0.271	0.014	1789.309	0.410	0.020
1989.624	0.418	0.021	1989.755	0.624	0.031
1817.189	0.351	0.018	1818.126	0.450	0.023
1616.308	0.205	0.010	1615.388	0.327	0.016
1412.900	0.220	0.011	1413.930	0.354	0.018
1212.611	0.252	0.013	1208.395	0.241	0.012
1009.750	0.432	0.022	1009.785	0.462	0.023
808.478	0.364	0.018	808.128	0.458	0.023
606.817	0.403	0.020	606.791	0.471	0.024
406.966	0.406	0.020	407.604	0.307	0.015
205.745	0.332	0.017	206.494	0.271	0.014
14.853	0.154	0.008	14.839	0.194	0.010

Issued by

Westbay Instruments

As Received MOSDAX Cal. Report 2: EMS - 2652 Module 3008

Full Scale: 2000 (psia)

File: E:\DATA\CAL\0 2018\20002\JUNE2 - 1\02652

Pressure Reference: Paroscientific Model 42K-101 S/N 59937

Range: 2K PSI

Date of last reference to traceable standard: Oct 5 2017

Plot of Error vs. Reference Pressure

EMS - 2652 Module 3008

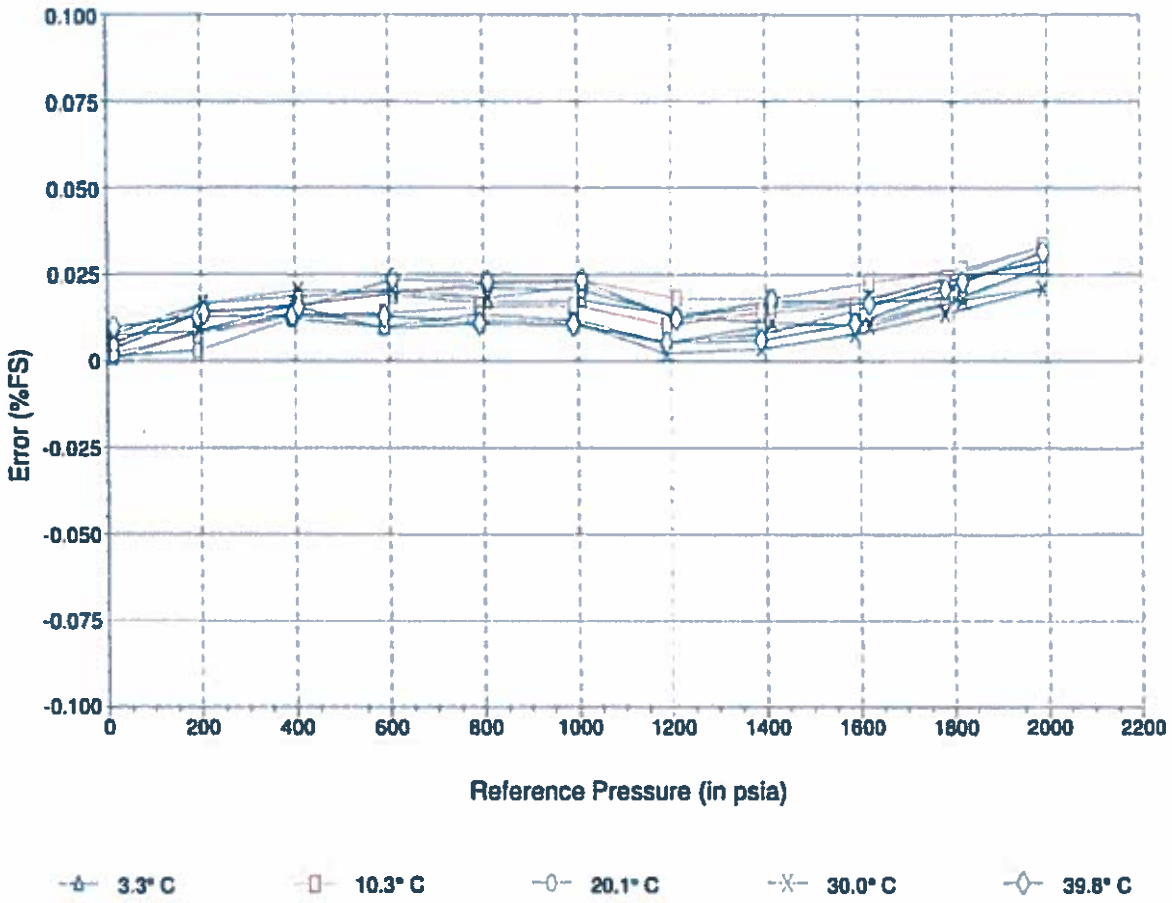

Comments

Issued by

Westbay Instruments

APPENDIX C

2018 Laboratory Certificates of Analysis

Golder Associates Ltd. (Ottawa)
ATTN: Dale Holtze
1931 Robertson Road
Ottawa ON K2H 5B7

Date Received: 16-NOV-18
Report Date: 22-NOV-18 16:58 (MT)
Version: FINAL REV. 2

Client Phone: 613-592-9600

Certificate of Analysis

Lab Work Order #: L2197641

Project P.O. #: NOT SUBMITTED
Job Reference: 1789310
C of C Numbers: 17-720417
Legal Site Desc:

Comments: ADDITIONAL 21-NOV-18 16:20
ADDITIONAL 19-NOV-18 17:56

Joanne Lee
Account Manager

[This report shall not be reproduced except in full without the written authority of the Laboratory.]

ALS ENVIRONMENTAL ANALYTICAL REPORT

Sample ID	L2197641-1	L2197641-2	L2197641-3	L2197641-4	L2197641-5
Description	GW	GW	GW	GW	GW
Sampled Date	10-NOV-18	10-NOV-18	11-NOV-18	11-NOV-18	12-NOV-18
Sampled Time	17:30	17:30	17:30	17:30	17:30
Client ID	ZONE 2	ZONE 22	ZONE 4	ZONE 44	ZONE 3
Grouping / **Analyte**					
SEAWATER					
Physical Tests Hardness (as CaCO3) (mg/L)	6260	6260	5160	5150	2600
Total Metals Aluminum (Al)-Total (mg/L)	0.118	0.126	0.0140	0.0139	0.0128
Antimony (Sb)-Total (mg/L)	0.00126	0.00129	0.00180	0.00186	0.00322
Arsenic (As)-Total (mg/L)	<0.0020	<0.0020	0.0021	0.0022	0.0032
Barium (Ba)-Total (mg/L)	0.102	0.0985	0.493	0.510	0.0918
Beryllium (Be)-Total (mg/L)	<0.00050	<0.00050	<0.00050	<0.00050	<0.00050
Bismuth (Bi)-Total (mg/L)	<0.00050	<0.00050	<0.00050	<0.00050	<0.00050
Boron (B)-Total (mg/L)	1.86	1.72	0.97	1.00	1.10
Cadmium (Cd)-Total (mg/L)	<0.000050	<0.000050	<0.000050	0.000055	<0.000050
Calcium (Ca)-Total (mg/L)	2710	2580	2040	1920	991
Cesium (Cs)-Total (mg/L)	0.00190	0.00184	0.00075	0.00077	<0.00050
Chromium (Cr)-Total (mg/L)	0.00246	0.00119	0.0130	0.0127	0.00999
Cobalt (Co)-Total (mg/L)	0.000120	0.000101	0.000237	0.000231	0.000166
Copper (Cu)-Total (mg/L)	0.00272	0.00303	0.00113	0.00102	<0.00050
Gallium (Ga)-Total (mg/L)	<0.00050	<0.00050	<0.00050	<0.00050	<0.00050
Iron (Fe)-Total (mg/L)	0.555	0.584	0.366	0.354	0.076
Lead (Pb)-Total (mg/L)	0.00460	0.00472	<0.00030	<0.00030	<0.00030
Lithium (Li)-Total (mg/L)	2.33	2.14	1.48	1.65	0.802
Magnesium (Mg)-Total (mg/L)	<1.0	<1.0	55.3	53.3	1.2
Manganese (Mn)-Total (mg/L)	0.0215	0.0228	0.0816	0.0752	0.0181
Mercury (Hg)-Total (mg/L)	<0.000010	<0.000010	<0.000010	<0.000010	<0.000010
Molybdenum (Mo)-Total (mg/L)	0.0096	0.0092	0.0130	0.0141	0.0172
Nickel (Ni)-Total (mg/L)	0.00276	0.00190	0.00818	0.00817	0.00703
Phosphorus (P)-Total (mg/L)	<0.050	<0.050	<0.050	<0.050	<0.050
Potassium (K)-Total (mg/L)	106	100	67.1	70.8	35.9
Rhenium (Re)-Total (mg/L)	<0.00050	<0.00050	<0.00050	<0.00050	<0.00050
Rubidium (Rb)-Total (mg/L)	0.171	0.171	0.0933	0.101	0.0559
Selenium (Se)-Total (mg/L)	<0.0020	<0.0020	<0.0020	<0.0020	<0.0020
Silicon (Si)-Total (mg/L)	3.2	3.6	2.2	1.9	2.7
Silver (Ag)-Total (mg/L)	0.00034	0.00038	<0.00010	<0.00010	<0.00010
Sodium (Na)-Total (mg/L)	379	372	326	318	275
Strontium (Sr)-Total (mg/L)	47.3	47.5	34.8	34.4	16.9
Sulfur (S)-Total (mg/L)	<5.0	<5.0	<5.0	<5.0	<5.0
Tellurium (Te)-Total (mg/L)	<0.00050	<0.00050	<0.00050	<0.00050	<0.00050
Thallium (Tl)-Total (mg/L)	<0.000050	<0.000050	<0.000050	<0.000050	<0.000050
Thorium (Th)-Total (mg/L)	<0.00050	<0.00050	<0.00050	<0.00050	<0.00050
Tin (Sn)-Total (mg/L)	<0.0010	<0.0010	<0.0010	<0.0010	<0.0010

* Please refer to the Reference Information section for an explanation of any qualifiers detected.

ALS ENVIRONMENTAL ANALYTICAL REPORT

	Sample ID	L2197641-6
	Description	GW
	Sampled Date	12-NOV-18
	Sampled Time	17:30
	Client ID	ZONE 33
Grouping	**Analyte**	
SEAWATER		
Physical Tests	Hardness (as CaCO3) (mg/L)	2740
Total Metals	Aluminum (Al)-Total (mg/L)	0.0126
	Antimony (Sb)-Total (mg/L)	0.00339
	Arsenic (As)-Total (mg/L)	0.0038
	Barium (Ba)-Total (mg/L)	0.0956
	Beryllium (Be)-Total (mg/L)	<0.00050
	Bismuth (Bi)-Total (mg/L)	<0.00050
	Boron (B)-Total (mg/L)	1.19
	Cadmium (Cd)-Total (mg/L)	<0.000050
	Calcium (Ca)-Total (mg/L)	1080
	Cesium (Cs)-Total (mg/L)	<0.00050
	Chromium (Cr)-Total (mg/L)	0.00674
	Cobalt (Co)-Total (mg/L)	0.000111
	Copper (Cu)-Total (mg/L)	<0.00050
	Gallium (Ga)-Total (mg/L)	<0.00050
	Iron (Fe)-Total (mg/L)	0.064
	Lead (Pb)-Total (mg/L)	<0.00030
	Lithium (Li)-Total (mg/L)	0.850
	Magnesium (Mg)-Total (mg/L)	1.2
	Manganese (Mn)-Total (mg/L)	0.0171
	Mercury (Hg)-Total (mg/L)	<0.000010
	Molybdenum (Mo)-Total (mg/L)	0.0184
	Nickel (Ni)-Total (mg/L)	0.00436
	Phosphorus (P)-Total (mg/L)	<0.050
	Potassium (K)-Total (mg/L)	39.7
	Rhenium (Re)-Total (mg/L)	<0.00050
	Rubidium (Rb)-Total (mg/L)	0.0564
	Selenium (Se)-Total (mg/L)	<0.0020
	Silicon (Si)-Total (mg/L)	2.8
	Silver (Ag)-Total (mg/L)	<0.00010
	Sodium (Na)-Total (mg/L)	300
	Strontium (Sr)-Total (mg/L)	17.2
	Sulfur (S)-Total (mg/L)	<5.0
	Tellurium (Te)-Total (mg/L)	<0.00050
	Thallium (Tl)-Total (mg/L)	<0.000050
	Thorium (Th)-Total (mg/L)	<0.00050
	Tin (Sn)-Total (mg/L)	<0.0010

* Please refer to the Reference Information section for an explanation of any qualifiers detected.

ALS ENVIRONMENTAL ANALYTICAL REPORT

Sample ID	L2197641-1	L2197641-2	L2197641-3	L2197641-4	L2197641-5
Description	GW	GW	GW	GW	GW
Sampled Date	10-NOV-18	10-NOV-18	11-NOV-18	11-NOV-18	12-NOV-18
Sampled Time	17:30	17:30	17:30	17:30	17:30
Client ID	ZONE 2	ZONE 22	ZONE 4	ZONE 44	ZONE 3
Grouping / **Analyte**					
SEAWATER					
Total Metals Titanium (Ti)-Total (mg/L)	0.0070	0.0075	<0.0050	<0.0050	<0.0050
Tungsten (W)-Total (mg/L)	0.0815	0.0854	0.0470	0.0462	0.0736
Uranium (U)-Total (mg/L)	0.000283	0.000304	<0.000050	<0.000050	0.000160
Vanadium (V)-Total (mg/L)	<0.00050	<0.00050	<0.00050	<0.00050	<0.00050
Yttrium (Y)-Total (mg/L)	<0.00050	<0.00050	<0.00050	<0.00050	<0.00050
Zinc (Zn)-Total (mg/L)	0.0374	0.0410	0.0625	0.0605	0.0395
Zirconium (Zr)-Total (mg/L)	<0.00050	<0.00050	<0.00050	<0.00050	<0.00050
Dissolved Metals Dissolved Mercury Filtration Location	FIELD	FIELD	FIELD	FIELD	FIELD
Dissolved Metals Filtration Location	FIELD	FIELD	FIELD	FIELD	FIELD
Aluminum (Al)-Dissolved (mg/L)	0.0219	0.0176	0.0085	0.0076	0.0126
Antimony (Sb)-Dissolved (mg/L)	0.00125	0.00128	0.00163	0.00172	0.00308
Arsenic (As)-Dissolved (mg/L)	<0.0020	<0.0020	<0.0020	<0.0020	0.0034
Barium (Ba)-Dissolved (mg/L)	0.0986	0.0996	0.466	0.489	0.0902
Beryllium (Be)-Dissolved (mg/L)	<0.00050	<0.00050	<0.00050	<0.00050	<0.00050
Bismuth (Bi)-Dissolved (mg/L)	<0.00050	<0.00050	<0.00050	<0.00050	<0.00050
Boron (B)-Dissolved (mg/L)	1.76	1.88	0.90	0.95	1.04
Cadmium (Cd)-Dissolved (mg/L)	<0.000050	<0.000050	<0.000050	<0.000050	<0.000050
Calcium (Ca)-Dissolved (mg/L)	2510	2510	1970	1970	1040
Cesium (Cs)-Dissolved (mg/L)	0.00189	0.00195	0.00075	0.00074	<0.00050
Chromium (Cr)-Dissolved (mg/L)	<0.00050	<0.00050	<0.00050	<0.00050	<0.00050
Cobalt (Co)-Dissolved (mg/L)	<0.000050	<0.000050	<0.000050	<0.000050	<0.000050
Copper (Cu)-Dissolved (mg/L)	<0.00050	<0.00050	<0.00050	<0.00050	<0.00050
Gallium (Ga)-Dissolved (mg/L)	<0.00050	<0.00050	<0.00050	<0.00050	<0.00050
Iron (Fe)-Dissolved (mg/L)	0.013	0.013	0.112	0.105	0.018
Lead (Pb)-Dissolved (mg/L)	<0.00030	<0.00030	<0.00030	<0.00030	<0.00030
Lithium (Li)-Dissolved (mg/L)	2.25	2.16	1.42	1.52	0.779
Magnesium (Mg)-Dissolved (mg/L)	<1.0	<1.0	57.8	53.9	1.2
Manganese (Mn)-Dissolved (mg/L)	0.0171	0.0164	0.0836	0.0812	0.0184
Mercury (Hg)-Dissolved (mg/L)	<0.000010	<0.000010	<0.000010	<0.000010	<0.000010
Molybdenum (Mo)-Dissolved (mg/L)	0.0090	0.0093	0.0112	0.0116	0.0154
Nickel (Ni)-Dissolved (mg/L)	0.00118	0.00122	<0.00050	<0.00050	<0.00050
Phosphorus (P)-Dissolved (mg/L)	<0.050	<0.050	<0.050	<0.050	<0.050
Potassium (K)-Dissolved (mg/L)	99	98	67	66	38
Rhenium (Re)-Dissolved (mg/L)	<0.00050	<0.00050	<0.00050	<0.00050	<0.00050
Rubidium (Rb)-Dissolved (mg/L)	0.173	0.174	0.0891	0.0914	0.0549
Selenium (Se)-Dissolved (mg/L)	<0.0020	<0.0020	<0.0020	<0.0020	<0.0020
Silicon (Si)-Dissolved (mg/L)	2.8	2.7	2.3	2.2	3.0

* Please refer to the Reference Information section for an explanation of any qualifiers detected.

ALS ENVIRONMENTAL ANALYTICAL REPORT

	Sample ID	L2197641-6
	Description	GW
	Sampled Date	12-NOV-18
	Sampled Time	17:30
	Client ID	ZONE 33
Grouping	**Analyte**	
SEAWATER		
Total Metals	Titanium (Ti)-Total (mg/L)	<0.0050
	Tungsten (W)-Total (mg/L)	0.0756
	Uranium (U)-Total (mg/L)	0.000164
	Vanadium (V)-Total (mg/L)	<0.00050
	Yttrium (Y)-Total (mg/L)	<0.00050
	Zinc (Zn)-Total (mg/L)	0.0477
	Zirconium (Zr)-Total (mg/L)	<0.00050
Dissolved Metals	Dissolved Mercury Filtration Location	FIELD
	Dissolved Metals Filtration Location	FIELD
	Aluminum (Al)-Dissolved (mg/L)	0.0115
	Antimony (Sb)-Dissolved (mg/L)	0.00300
	Arsenic (As)-Dissolved (mg/L)	0.0034
	Barium (Ba)-Dissolved (mg/L)	0.0854
	Beryllium (Be)-Dissolved (mg/L)	<0.00050
	Bismuth (Bi)-Dissolved (mg/L)	<0.00050
	Boron (B)-Dissolved (mg/L)	1.02
	Cadmium (Cd)-Dissolved (mg/L)	<0.000050
	Calcium (Ca)-Dissolved (mg/L)	1090
	Cesium (Cs)-Dissolved (mg/L)	<0.00050
	Chromium (Cr)-Dissolved (mg/L)	<0.00050
	Cobalt (Co)-Dissolved (mg/L)	<0.000050
	Copper (Cu)-Dissolved (mg/L)	<0.00050
	Gallium (Ga)-Dissolved (mg/L)	<0.00050
	Iron (Fe)-Dissolved (mg/L)	0.019
	Lead (Pb)-Dissolved (mg/L)	<0.00030
	Lithium (Li)-Dissolved (mg/L)	0.749
	Magnesium (Mg)-Dissolved (mg/L)	1.2
	Manganese (Mn)-Dissolved (mg/L)	0.0181
	Mercury (Hg)-Dissolved (mg/L)	<0.000010
	Molybdenum (Mo)-Dissolved (mg/L)	0.0144
	Nickel (Ni)-Dissolved (mg/L)	<0.00050
	Phosphorus (P)-Dissolved (mg/L)	<0.050
	Potassium (K)-Dissolved (mg/L)	40
	Rhenium (Re)-Dissolved (mg/L)	<0.00050
	Rubidium (Rb)-Dissolved (mg/L)	0.0528
	Selenium (Se)-Dissolved (mg/L)	<0.0020
	Silicon (Si)-Dissolved (mg/L)	3.0

* Please refer to the Reference Information section for an explanation of any qualifiers detected.

ALS ENVIRONMENTAL ANALYTICAL REPORT

Grouping	Analyte	Sample ID: L2197641-1 Description: GW Sampled Date: 10-NOV-18 Sampled Time: 17:30 Client ID: ZONE 2	L2197641-2 GW 10-NOV-18 17:30 ZONE 22	L2197641-3 GW 11-NOV-18 17:30 ZONE 4	L2197641-4 GW 11-NOV-18 17:30 ZONE 44	L2197641-5 GW 12-NOV-18 17:30 ZONE 3
SEAWATER						
Dissolved Metals	Silver (Ag)-Dissolved (mg/L)	<0.00010	<0.00010	<0.00010	<0.00010	<0.00010
	Sodium (Na)-Dissolved (mg/L)	353	368	309	320	280
	Strontium (Sr)-Dissolved (mg/L)	44.9	45.3	33.6	33.6	16.9
	Sulfur (S)-Dissolved (mg/L)	<5.0	<5.0	<5.0	<5.0	<5.0
	Tellurium (Te)-Dissolved (mg/L)	<0.00050	<0.00050	<0.00050	<0.00050	<0.00050
	Thallium (Tl)-Dissolved (mg/L)	<0.000050	<0.000050	<0.000050	<0.000050	<0.000050
	Thorium (Th)-Dissolved (mg/L)	<0.00050	<0.00050	<0.00050	<0.00050	<0.00050
	Tin (Sn)-Dissolved (mg/L)	<0.0010	<0.0010	<0.0010	<0.0010	<0.0010
	Titanium (Ti)-Dissolved (mg/L)	<0.0050	<0.0050	<0.0050	<0.0050	<0.0050
	Tungsten (W)-Dissolved (mg/L)	0.0806	0.0789	0.0455	0.0443	0.0722
	Uranium (U)-Dissolved (mg/L)	0.000235	0.000238	<0.000050	<0.000050	0.000160
	Vanadium (V)-Dissolved (mg/L)	<0.00050	<0.00050	<0.00050	<0.00050	<0.00050
	Yttrium (Y)-Dissolved (mg/L)	<0.00050	<0.00050	<0.00050	<0.00050	<0.00050
	Zinc (Zn)-Dissolved (mg/L)	<0.0030	<0.0030	0.0096	0.0100	<0.0030
	Zirconium (Zr)-Dissolved (mg/L)	<0.00050	<0.00050	<0.00050	<0.00050	<0.00050

* Please refer to the Reference Information section for an explanation of any qualifiers detected.

ALS ENVIRONMENTAL ANALYTICAL REPORT

	Sample ID	L2197641-6
	Description	GW
	Sampled Date	12-NOV-18
	Sampled Time	17:30
	Client ID	ZONE 33
Grouping	Analyte	
SEAWATER		
Dissolved Metals	Silver (Ag)-Dissolved (mg/L)	<0.00010
	Sodium (Na)-Dissolved (mg/L)	301
	Strontium (Sr)-Dissolved (mg/L)	17.2
	Sulfur (S)-Dissolved (mg/L)	<5.0
	Tellurium (Te)-Dissolved (mg/L)	<0.00050
	Thallium (Tl)-Dissolved (mg/L)	<0.000050
	Thorium (Th)-Dissolved (mg/L)	<0.00050
	Tin (Sn)-Dissolved (mg/L)	<0.0010
	Titanium (Ti)-Dissolved (mg/L)	<0.0050
	Tungsten (W)-Dissolved (mg/L)	0.0687
	Uranium (U)-Dissolved (mg/L)	0.000144
	Vanadium (V)-Dissolved (mg/L)	<0.00050
	Yttrium (Y)-Dissolved (mg/L)	<0.00050
	Zinc (Zn)-Dissolved (mg/L)	<0.0030
	Zirconium (Zr)-Dissolved (mg/L)	<0.00050

* Please refer to the Reference Information section for an explanation of any qualifiers detected.

ALS ENVIRONMENTAL ANALYTICAL REPORT

Sample ID	L2197641-1	L2197641-2	L2197641-3	L2197641-4	L2197641-5
Description	GW	GW	GW	GW	GW
Sampled Date	10-NOV-18	10-NOV-18	11-NOV-18	11-NOV-18	12-NOV-18
Sampled Time	17:30	17:30	17:30	17:30	17:30
Client ID	ZONE 2	ZONE 22	ZONE 4	ZONE 44	ZONE 3
Grouping / **Analyte**					
WATER					
Physical Tests					
Conductivity (uS/cm)	16700	16800	13900	14000	7530
pH (pH)	8.13	8.22	6.97	6.94	7.40
Total Suspended Solids (mg/L)	17.3	32.5	24.3	20.3	7.9
Total Dissolved Solids (mg/L)	10900	10800	9030	8820	5100
Anions and Nutrients					
Alkalinity, Bicarbonate (as CaCO3) (mg/L)	61.8	61.2	10.2	10.4	50.5
Alkalinity, Carbonate (as CaCO3) (mg/L)	<1.0	<1.0	<1.0	<1.0	<1.0
Alkalinity, Hydroxide (as CaCO3) (mg/L)	<1.0	<1.0	<1.0	<1.0	<1.0
Alkalinity, Total (as CaCO3) (mg/L)	61.8	61.2	10.2	10.4	50.5
Ammonia, Total (as N) (mg/L)	0.142	0.141	0.157	0.158	0.139
Bromide (Br) (mg/L)	76.1	76.8	69.7	60.1	32.7
Chloride (Cl) (mg/L)	5900 DLDS	5910 DLDS	5220 DLDS	4530 DLDS	2700 DLDS
Fluoride (F) (mg/L)	<1.0 DLDS	<1.0 DLDS	<1.0 DLDS	<1.0 DLDS	<1.0 DLDS
Nitrate (as N) (mg/L)	<0.25 DLDS	<0.25 DLDS	<0.25 DLDS	<0.25 DLDS	<0.25 DLDS
Nitrite (as N) (mg/L)	<0.050	<0.050	<0.050	<0.050	<0.050
Phosphorus (P)-Total (mg/L)	0.0120 DLDS	0.0132 DLDS	0.0067 DLDS	0.0059 DLDS	0.0061 DLDS
Sulfate (SO4) (mg/L)	<15	<15	<15	<15	<15

* Please refer to the Reference Information section for an explanation of any qualifiers detected.

ALS ENVIRONMENTAL ANALYTICAL REPORT

		Sample ID	L2197641-6
		Description	GW
		Sampled Date	12-NOV-18
		Sampled Time	17:30
		Client ID	ZONE 33
Grouping	Analyte		
WATER			
Physical Tests	Conductivity (uS/cm)	7350	
	pH (pH)	7.50	
	Total Suspended Solids (mg/L)	7.5	
	Total Dissolved Solids (mg/L)	4980	
Anions and Nutrients	Alkalinity, Bicarbonate (as CaCO3) (mg/L)	50.1	
	Alkalinity, Carbonate (as CaCO3) (mg/L)	<1.0	
	Alkalinity, Hydroxide (as CaCO3) (mg/L)	<1.0	
	Alkalinity, Total (as CaCO3) (mg/L)	50.1	
	Ammonia, Total (as N) (mg/L)	0.136	
	Bromide (Br) (mg/L)	32.5	
	Chloride (Cl) (mg/L)	2700	
	Fluoride (F) (mg/L)	<1.0 DLDS	
	Nitrate (as N) (mg/L)	<0.25 DLDS	
	Nitrite (as N) (mg/L)	<0.050 DLDS	
	Phosphorus (P)-Total (mg/L)	0.0082	
	Sulfate (SO4) (mg/L)	<15 DLDS	

* Please refer to the Reference Information section for an explanation of any qualifiers detected.

Reference Information

Qualifiers for Sample Submission Listed:

Qualifier	Description
WSMD	Water sample(s) for dissolved mercury analysis was not submitted in glass or PTFE container with HCl preservative. Results may be biased low.
WSMT	Water sample(s) for total mercury analysis was not submitted in glass or PTFE container with HCl preservative. Results may be biased low.

QC Samples with Qualifiers & Comments:

QC Type Description	Parameter	Qualifier	Applies to Sample Number(s)
Matrix Spike	Calcium (Ca)-Dissolved	MS-B	L2197641-1, -2, -3, -4, -5, -6
Matrix Spike	Sodium (Na)-Dissolved	MS-B	L2197641-1, -2, -3, -4, -5, -6
Matrix Spike	Strontium (Sr)-Dissolved	MS-B	L2197641-1, -2, -3, -4, -5, -6
Matrix Spike	Calcium (Ca)-Total	MS-B	L2197641-1, -2, -3, -4, -5, -6
Matrix Spike	Lithium (Li)-Total	MS-B	L2197641-1, -2, -3, -4, -5, -6
Matrix Spike	Potassium (K)-Total	MS-B	L2197641-1, -2, -3, -4, -5, -6
Matrix Spike	Rubidium (Rb)-Total	MS-B	L2197641-1, -2, -3, -4, -5, -6
Matrix Spike	Sodium (Na)-Total	MS-B	L2197641-1, -2, -3, -4, -5, -6
Matrix Spike	Strontium (Sr)-Total	MS-B	L2197641-1, -2, -3, -4, -5, -6

Qualifiers for Individual Parameters Listed:

Qualifier	Description
DLDS	Detection Limit Raised: Dilution required due to high Dissolved Solids / Electrical Conductivity.
MS-B	Matrix Spike recovery could not be accurately calculated due to high analyte background in sample.

Test Method References:

ALS Test Code	Matrix	Test Description	Method Reference**
ALK-TITR-VA	Water	Alkalinity Species by Titration	APHA 2320 Alkalinity

This analysis is carried out using procedures adapted from APHA Method 2320 "Alkalinity". Total alkalinity is determined by potentiometric titration to a pH 4.5 endpoint. Bicarbonate, carbonate and hydroxide alkalinity are calculated from phenolphthalein alkalinity and total alkalinity values.

BR-L-IC-N-VA	Water	Bromide in Water by IC (Low Level)	EPA 300.1 (mod)

Inorganic anions are analyzed by Ion Chromatography with conductivity and/or UV detection.

CL-L-IC-N-VA	Water	Chloride in Water by IC (Low Level)	EPA 300.1 (mod)

Inorganic anions are analyzed by Ion Chromatography with conductivity and/or UV detection.

EC-PCT-VA	Water	Conductivity (Automated)	APHA 2510 Auto. Conduc.

This analysis is carried out using procedures adapted from APHA Method 2510 "Conductivity". Conductivity is determined using a conductivity electrode.

EC-SCREEN-VA	Water	Conductivity Screen (Internal Use Only)	APHA 2510

Qualitative analysis of conductivity where required during preparation of other tests - e.g. TDS, metals, etc.

F-IC-N-VA	Water	Fluoride in Water by IC	EPA 300.1 (mod)

Inorganic anions are analyzed by Ion Chromatography with conductivity and/or UV detection.

HARDNESS-CALC-VA	Seawater	Hardness	APHA 2340B

Hardness (also known as Total Hardness) is calculated from the sum of Calcium and Magnesium concentrations, expressed in CaCO3 equivalents. Dissolved Calcium and Magnesium concentrations are preferentially used for the hardness calculation.

HG-DIS-C-CVAFS-VA	Seawater	Diss. Mercury in Seawater by CVAFS	PUGET SOUND PROTOCOLS, EPA 245.7

This analysis is carried out using procedures adapted from "Recommended Guidelines for Measuring Metals in Puget Sound Marine Water, Sediment, and Tissue Samples" prepared for the United States Environmental Protection Agency and the Puget Sound Water Quality Authority, 1995. The procedures may involve preliminary sample treatment by filtration (EPA Method 3005A) and involves a cold-oxidation of the acidified seawater sample using bromine monochloride prior to reduction of the sample with stannous chloride. Instrumental analysis is by cold vapour atomic fluorescence spectrophotometry or atomic absorption spectrophotometry (EPA Method 245.7).

HG-TOT-C-CVAFS-VA	Seawater	Total Mercury in Seawater by CVAFS	PUGET SOUND PROTOCOLS, EPA 245.7

This analysis is carried out using procedures adapted from "Recommended Guidelines for Measuring Metals in Puget Sound Marine Water, Sediment, and Tissue Samples" prepared for the United States Environmental Protection Agency and the Puget Sound Water Quality Authority, 1995. The procedure involves a cold-oxidation of the acidified seawater sample using bromine monochloride prior to reduction of the sample with stannous chloride. Instrumental analysis is by cold vapour atomic fluorescence spectrophotometry or atomic absorption spectrophotometry (EPA Method 245.7).

Reference Information

MET-D-L-HRMS-VA	Seawater	Diss. Metals in Seawater by HR-ICPMS	EPA 200.8

Trace metals in seawater are analyzed by high resolution inductively coupled plasma mass spectrometry (HR-ICPMS) based on US EPA Method 200.8, (Revision 5.5). The procedures may involve laboratory sample filtration based on APHA Method 3030B.

MET-T-L-HRMS-VA	Seawater	Tot. Metals in Seawater by HR-ICPMS	EPA 200.8

Trace metals in seawater are analyzed by high resolution inductively coupled plasma mass spectrometry (HR-ICPMS) based on US EPA Method 200.8, (Revision 5.5). The procedures may involve preliminary sample treatment by acid digestion based on APHA Method 3030E.

NH3-F-VA	Water	Ammonia in Water by Fluorescence	J. ENVIRON. MONIT., 2005, 7, 37-42, RSC

This analysis is carried out, on sulfuric acid preserved samples, using procedures modified from J. Environ. Monit., 2005, 7, 37 - 42, The Royal Society of Chemistry, "Flow-injection analysis with fluorescence detection for the determination of trace levels of ammonium in seawater", Roslyn J. Waston et al.

NO2-L-IC-N-VA	Water	Nitrite in Water by IC (Low Level)	EPA 300.1 (mod)

Inorganic anions are analyzed by Ion Chromatography with conductivity and/or UV detection.

NO3-L-IC-N-VA	Water	Nitrate in Water by IC (Low Level)	EPA 300.1 (mod)

Inorganic anions are analyzed by Ion Chromatography with conductivity and/or UV detection.

P-T-PRES-COL-VA	Water	Total P in Water by Colour	APHA 4500-P Phosphorus

This analysis is carried out using procedures adapted from APHA Method 4500-P "Phosphorus". Total Phosphorus is determined colourimetrically after persulphate digestion of the sample.
Samples with very high dissolved solids (i.e. seawaters, brackish waters) may produce a negative bias by this method. Alternate methods are available for these types of samples.

Arsenic (5+), at elevated levels, is a positive interference on colourimetric phosphate analysis.

PH-PCT-VA	Water	pH by Meter (Automated)	APHA 4500-H pH Value

This analysis is carried out using procedures adapted from APHA Method 4500-H "pH Value". The pH is determined in the laboratory using a pH electrode

It is recommended that this analysis be conducted in the field.

SO4-IC-N-VA	Water	Sulfate in Water by IC	EPA 300.1 (mod)

Inorganic anions are analyzed by Ion Chromatography with conductivity and/or UV detection.

TDS-LOW-VA	Water	Low Level TDS (3.0mg/L) by Gravimetric	APHA 2540C

This analysis is carried out using procedures adapted from APHA Method 2540 "Solids". Solids are determined gravimetrically. Total dissolved solids (TDS) are determined by filtering a sample through a glass fibre filter, TDS is determined by evaporating the filtrate to dryness at 180 degrees celsius.

TSS-VA	Water	Total Suspended Solids by Gravimetric	APHA 2540 D - GRAVIMETRIC

This analysis is carried out using procedures adapted from APHA Method 2540 "Solids". Solids are determined gravimetrically. Total Suspended Solids (TSS) are determined by filtering a sample through a glass fibre filter, TSS is determined by drying the filter at 104 degrees celsius.
Samples containing very high dissolved solid content (i.e. seawaters, brackish waters) may produce a positive bias by this method. Alternate analysis methods are available for these types of samples.

** ALS test methods may incorporate modifications from specified reference methods to improve performance.

The last two letters of the above test code(s) indicate the laboratory that performed analytical analysis for that test. Refer to the list below:

Laboratory Definition Code	Laboratory Location
VA	ALS ENVIRONMENTAL - VANCOUVER, BRITISH COLUMBIA, CANADA

Chain of Custody Numbers:

17-720417

Reference Information

GLOSSARY OF REPORT TERMS

Surrogate - A compound that is similar in behaviour to target analyte(s), but that does not occur naturally in environmental samples. For applicable tests, surrogates are added to samples prior to analysis as a check on recovery.
mg/kg - milligrams per kilogram based on dry weight of sample.
mg/kg wwt - milligrams per kilogram based on wet weight of sample.
mg/kg lwt - milligrams per kilogram based on lipid-adjusted weight of sample.
mg/L - milligrams per litre.
< - Less than.
D.L. - The reported Detection Limit, also known as the Limit of Reporting (LOR).
N/A - Result not available. Refer to qualifier code and definition for explanation.

Test results reported relate only to the samples as received by the laboratory.
UNLESS OTHERWISE STATED, ALL SAMPLES WERE RECEIVED IN ACCEPTABLE CONDITION.
Analytical results in unsigned test reports with the DRAFT watermark are subject to change, pending final QC review.

ALS Environmental
www.alsglobal.com

Chain of Custody (COC) / Analytical Request Form

Canada Toll Free: 1 800 668 9878

L2197641-COFC

COC Number: 17 - 720417

Page of

Report To	Contact and company name below will appear on the final report
Company:	Golder Associates Ltd.
Contact:	Dale Holtze
Phone:	613-592-9600
	Company address below will appear on the final report
Street:	1931 Robertson Road
City/Province:	Ottawa, ON
Postal Code:	K2H 5B7
Invoice To	Same as Report To [X] YES [ ] NO
	Copy of Invoice with Report [ ] YES [ ] NO
Company:	
Contact:	

Report Format / Distribution

Select Report Format: [X] PDF [X] EXCEL [ ] EDD (DIGITAL)

Quality Control (QC) Report with Report [ ] YES [ ] NO

[ ] Compare Results to Criteria on Report - provide details below if box checked

Select Distribution: [ ] EMAIL [ ] MAIL [ ] FAX

Email 1 or Fax: dholtze@golder.com

Email 2: valerie-bertrand@golder.com

Email 3:

Invoice Distribution

Select Invoice Distribution: [X] EMAIL [ ] MAIL [ ] FAX

Email 1 or Fax: dholtze@golder.com

Email 2:

Select Service Level Below - Contact your AM to confirm all E&P TATs (surcharges may apply)

Regular [R] [X] Standard TAT if received by 3 pm - business days - no surcharges apply

PRIORITY (Business Days): 4 day [P4-20%] [ ] 3 day [P3-25%] [ ] 2 day [P2-50%] [ ]

EMERGENCY: 1 Business day [E-100%] [ ] Same Day, Weekend or Statutory holiday [E2-200% (Laboratory opening fees may apply)] [ ]

Date and Time Required for all E&P TATs: dd-mmm-yy hh:mm

For tests that can not be performed according to the service level selected, you will be contacted.

Project Information

ALS Account # / Quote #: Q70883

Job #: ~~[illegible]~~ 1789310

PO / AFE:

LSD:

ALS Lab Work Order # (lab use only):

Oil and Gas Required Fields (client use)

AFE/Cost Center: PO#

Major/Minor Code: Routing Code:

Requisitioner:

Location:

ALS Contact: Joanne Lee Sampler: D. Holtze

Analysis Request

Indicate Filtered (F), Preserved (P) or Filtered and Preserved (F/P) below

ALS Sample # (lab use only)	Sample Identification and/or Coordinates (This description will appear on the report)	Date (dd-mmm-yy)	Time (hh:mm)	Sample Type	total metals	dissolved metals	total P	major ions	TDS, TSS	SAMPLES ON HOLD	Sample is hazardous (please provide further details)	NUMBER OF CONTAINERS
	Zone 2	10-Nov-18	17:30	GW	X	X	X	X	X			6
	Zone 22	10-Nov-18	17:30	↓	↓	↓	↓	↓	↓			↓
	Zone 4	11-Nov-18	17:30	↓	↓	↓	↓	↓	↓			↓
	Zone 44	11-Nov18	17:30	↓	↓	↓	↓	↓	↓			↓
	Zone 3	12-Nov-18	17:30	↓	↓	↓	↓	↓	↓			↓
	Zone 33	12-Nov-18	17:30	↓	↓	↓	↓	↓	↓			↓

Drinking Water (DW) Samples[1] (client use)

Are samples taken from a Regulated DW System? [ ] YES [X] NO

Are samples for human consumption/ use? [ ] YES [X] NO

Special Instructions / Specify Criteria to add on report by clicking on the drop-down list below (electronic COC only)

Elevated salt concentrations likely (Brine)
EC Zone 2+22 ~ 17.37 mS/cm
Zone 4+44 ~ 14.8 mS/cm Zone 3+33 ~ 7.5 mS/cm

SAMPLE CONDITION AS RECEIVED (lab use only)

Frozen [ ] SIF Observations Yes [ ] No [ ]

Ice Packs [X] Ice Cubes [ ] Custody seal intact Yes [X] No [ ]

Cooling Initiated [ ]

INITIAL COOLER TEMPERATURES °C: FINAL COOLER TEMPERATURES °C: 7

SHIPMENT RELEASE (client use)			INITIAL SHIPMENT RECEPTION (lab use only)			FINAL SHIPMENT RECEPTION (lab use only)		
Released by: Dale Holtze	Date: 2018-11-13	Time: 8:00	Received by:	Date:	Time:	Received by: A4 JC	Date: Nov 16/18	Time: 830AM

REFER TO BACK PAGE FOR ALS LOCATIONS AND SAMPLING INFORMATION

WHITE - LABORATORY COPY YELLOW - CLIENT COPY

Failure to complete all portions of this form may delay analysis. Please fill in this form LEGIBLY. By the use of this form the user acknowledges and agrees with the Terms and Conditions as specified on the back page of the white - report copy

1. If any water samples are taken from a Regulated Drinking Water (DW) System, please submit using an Authorized DW COC form

Golder Associates Ltd. (Ottawa)
ATTN: Dale Holtze
1931 Robertson Road
Ottawa ON K2H 5B7

Date Received: 19-NOV-18
Report Date: 22-NOV-18 17:29 (MT)
Version: FINAL

Client Phone: 613-592-9600

Certificate of Analysis

Lab Work Order #: L2198327

Project P.O. #: NOT SUBMITTED
Job Reference: 1789310
C of C Numbers: 18-1789310
Legal Site Desc:

Joanne Lee
Account Manager

[This report shall not be reproduced except in full without the written authority of the Laboratory.]

ALS ENVIRONMENTAL ANALYTICAL REPORT

Sample ID	L2198327-1	L2198327-2	L2198327-3	L2198327-4	
Description	Groundwater	Groundwater	Groundwater	Groundwater	
Sampled Date	13-NOV-18	13-NOV-18	13-NOV-18	13-NOV-18	
Sampled Time	17:00	17:00	15:00	15:30	
Client ID	ZONE 6	ZONE 66	EB	TB	
Grouping / **Analyte**					
SEAWATER					
Physical Tests Hardness (as CaCO3) (mg/L)	3630	3620	<4.8	<4.8	
Total Metals Aluminum (Al)-Total (mg/L)	0.0118	0.0127	<0.0050		
Antimony (Sb)-Total (mg/L)	<0.00050	<0.00050	<0.00050		
Arsenic (As)-Total (mg/L)	0.0024	0.0024	<0.0020		
Barium (Ba)-Total (mg/L)	0.859	0.894	<0.0010		
Beryllium (Be)-Total (mg/L)	<0.00050	<0.00050	<0.00050		
Bismuth (Bi)-Total (mg/L)	<0.00050	<0.00050	<0.00050		
Boron (B)-Total (mg/L)	0.41	0.40	<0.10		
Cadmium (Cd)-Total (mg/L)	<0.000050	<0.000050	<0.000050		
Calcium (Ca)-Total (mg/L)	1330	1370	<1.0		
Cesium (Cs)-Total (mg/L)	<0.00050	<0.00050	<0.00050		
Chromium (Cr)-Total (mg/L)	0.00383	0.00381	<0.00050		
Cobalt (Co)-Total (mg/L)	0.000072	0.000093	<0.000050		
Copper (Cu)-Total (mg/L)	<0.00050	<0.00050	<0.00050		
Gallium (Ga)-Total (mg/L)	<0.00050	<0.00050	<0.00050		
Iron (Fe)-Total (mg/L)	0.314	0.322	<0.010		
Lead (Pb)-Total (mg/L)	<0.00030	<0.00030	<0.00030		
Lithium (Li)-Total (mg/L)	0.558	0.563	<0.020		
Magnesium (Mg)-Total (mg/L)	40.6	39.8	<1.0		
Manganese (Mn)-Total (mg/L)	0.101	0.103	<0.00020		
Mercury (Hg)-Total (mg/L)	<0.000010	<0.000010	<0.000010		
Molybdenum (Mo)-Total (mg/L)	0.0279	0.0270	<0.0020		
Nickel (Ni)-Total (mg/L)	0.00288	0.00262	<0.00050		
Phosphorus (P)-Total (mg/L)	<0.050	<0.050	<0.050		
Potassium (K)-Total (mg/L)	9.7	10.1	<1.0		
Rhenium (Re)-Total (mg/L)	<0.00050	<0.00050	<0.00050		
Rubidium (Rb)-Total (mg/L)	0.0166	0.0164	<0.0050		
Selenium (Se)-Total (mg/L)	<0.0020	<0.0020	<0.0020		
Silicon (Si)-Total (mg/L)	2.6	2.5	<1.0		
Silver (Ag)-Total (mg/L)	<0.00010	<0.00010	<0.00010		
Sodium (Na)-Total (mg/L)	232	238	<1.0		
Strontium (Sr)-Total (mg/L)	18.1	18.6	<0.010		
Sulfur (S)-Total (mg/L)	<5.0	<5.0	<5.0		
Tellurium (Te)-Total (mg/L)	<0.00050	<0.00050	<0.00050		
Thallium (Tl)-Total (mg/L)	<0.000050	<0.000050	<0.000050		
Thorium (Th)-Total (mg/L)	<0.00050	<0.00050	<0.00050		
Tin (Sn)-Total (mg/L)	<0.0010	<0.0010	<0.0010		

* Please refer to the Reference Information section for an explanation of any qualifiers detected.

ALS ENVIRONMENTAL ANALYTICAL REPORT

Sample ID	L2198327-1	L2198327-2	L2198327-3	L2198327-4	
Description	Groundwater	Groundwater	Groundwater	Groundwater	
Sampled Date	13-NOV-18	13-NOV-18	13-NOV-18	13-NOV-18	
Sampled Time	17:00	17:00	15:00	15:30	
Client ID	ZONE 6	ZONE 66	EB	TB	
Grouping / **Analyte**					
SEAWATER					
Total Metals					
Titanium (Ti)-Total (mg/L)	<0.0050	<0.0050	<0.0050		
Tungsten (W)-Total (mg/L)	0.0214	0.0223	<0.0010		
Uranium (U)-Total (mg/L)	<0.000050	<0.000050	<0.000050		
Vanadium (V)-Total (mg/L)	<0.00050	<0.00050	<0.00050		
Yttrium (Y)-Total (mg/L)	<0.00050	<0.00050	<0.00050		
Zinc (Zn)-Total (mg/L)	0.109	0.113	<0.0030		
Zirconium (Zr)-Total (mg/L)	<0.00050	<0.00050	<0.00050		
Dissolved Metals					
Dissolved Mercury Filtration Location	FIELD	FIELD	FIELD	FIELD	
Dissolved Metals Filtration Location	FIELD	FIELD	FIELD	FIELD	
Aluminum (Al)-Dissolved (mg/L)	<0.0050	<0.0050	<0.0050	<0.0050	
Antimony (Sb)-Dissolved (mg/L)	<0.00050	0.00050	<0.00050	<0.00050	
Arsenic (As)-Dissolved (mg/L)	0.0021	0.0024	<0.0020	<0.0020	
Barium (Ba)-Dissolved (mg/L)	0.818	0.794	<0.0010	<0.0010	
Beryllium (Be)-Dissolved (mg/L)	<0.00050	<0.00050	<0.00050	<0.00050	
Bismuth (Bi)-Dissolved (mg/L)	<0.00050	<0.00050	<0.00050	<0.00050	
Boron (B)-Dissolved (mg/L)	0.36	0.35	<0.10	<0.10	
Cadmium (Cd)-Dissolved (mg/L)	<0.000050	<0.000050	<0.000050	<0.000050	
Calcium (Ca)-Dissolved (mg/L)	1380	1380	<1.0	<1.0	
Cesium (Cs)-Dissolved (mg/L)	<0.00050	<0.00050	<0.00050	<0.00050	
Chromium (Cr)-Dissolved (mg/L)	<0.00050	<0.00050	<0.00050	<0.00050	
Cobalt (Co)-Dissolved (mg/L)	<0.000050	<0.000050	<0.000050	<0.000050	
Copper (Cu)-Dissolved (mg/L)	<0.00050	<0.00050	<0.00050	<0.00050	
Gallium (Ga)-Dissolved (mg/L)	<0.00050	<0.00050	<0.00050	<0.00050	
Iron (Fe)-Dissolved (mg/L)	0.251	0.256	<0.010	<0.010	
Lead (Pb)-Dissolved (mg/L)	<0.00030	<0.00030	<0.00030	<0.00030	
Lithium (Li)-Dissolved (mg/L)	0.533	0.520	<0.020	<0.020	
Magnesium (Mg)-Dissolved (mg/L)	42.8	42.8	<1.0	<1.0	
Manganese (Mn)-Dissolved (mg/L)	0.0961	0.0970	<0.00020	<0.00020	
Mercury (Hg)-Dissolved (mg/L)	<0.000010	<0.000010	<0.000010	<0.000010	
Molybdenum (Mo)-Dissolved (mg/L)	0.0257	0.0245	<0.0020	<0.0020	
Nickel (Ni)-Dissolved (mg/L)	<0.00050	<0.00050	<0.00050	<0.00050	
Phosphorus (P)-Dissolved (mg/L)	<0.050	<0.050	<0.050	<0.050	
Potassium (K)-Dissolved (mg/L)	<20	<20	<20	<20	
Rhenium (Re)-Dissolved (mg/L)	<0.00050	<0.00050	<0.00050	<0.00050	
Rubidium (Rb)-Dissolved (mg/L)	0.0151	0.0146	<0.0050	<0.0050	
Selenium (Se)-Dissolved (mg/L)	<0.0020	<0.0020	<0.0020	<0.0020	
Silicon (Si)-Dissolved (mg/L)	2.8	2.7	<1.0	<1.0	

* Please refer to the Reference Information section for an explanation of any qualifiers detected.

ALS ENVIRONMENTAL ANALYTICAL REPORT

Sample ID	L2198327-1	L2198327-2	L2198327-3	L2198327-4	
Description	Groundwater	Groundwater	Groundwater	Groundwater	
Sampled Date	13-NOV-18	13-NOV-18	13-NOV-18	13-NOV-18	
Sampled Time	17:00	17:00	15:00	15:30	
Client ID	ZONE 6	ZONE 66	EB	TB	
Grouping **Analyte**					
SEAWATER					
Dissolved Metals Silver (Ag)-Dissolved (mg/L)	<0.00010	<0.00010	<0.00010	<0.00010	
Sodium (Na)-Dissolved (mg/L)	253	250	<20	<20	
Strontium (Sr)-Dissolved (mg/L)	19.5	19.7	<0.050	<0.050	
Sulfur (S)-Dissolved (mg/L)	<5.0	<5.0	<5.0	<5.0	
Tellurium (Te)-Dissolved (mg/L)	<0.00050	<0.00050	<0.00050	<0.00050	
Thallium (Tl)-Dissolved (mg/L)	<0.000050	<0.000050	<0.000050	<0.000050	
Thorium (Th)-Dissolved (mg/L)	<0.00050	<0.00050	<0.00050	<0.00050	
Tin (Sn)-Dissolved (mg/L)	<0.0010	<0.0010	<0.0010	<0.0010	
Titanium (Ti)-Dissolved (mg/L)	<0.0050	<0.0050	<0.0050	<0.0050	
Tungsten (W)-Dissolved (mg/L)	0.0214	0.0208	<0.0010	<0.0010	
Uranium (U)-Dissolved (mg/L)	<0.000050	<0.000050	<0.000050	<0.000050	
Vanadium (V)-Dissolved (mg/L)	<0.00050	<0.00050	<0.00050	<0.00050	
Yttrium (Y)-Dissolved (mg/L)	<0.00050	<0.00050	<0.00050	<0.00050	
Zinc (Zn)-Dissolved (mg/L)	0.0244	0.0230	<0.0030	<0.0030	
Zirconium (Zr)-Dissolved (mg/L)	<0.00050	<0.00050	<0.00050	<0.00050	

* Please refer to the Reference Information section for an explanation of any qualifiers detected.

ALS ENVIRONMENTAL ANALYTICAL REPORT

Grouping	Analyte	Sample ID: L2198327-1 Description: Groundwater Sampled Date: 13-NOV-18 Sampled Time: 17:00 Client ID: ZONE 6	Sample ID: L2198327-2 Description: Groundwater Sampled Date: 13-NOV-18 Sampled Time: 17:00 Client ID: ZONE 66	Sample ID: L2198327-3 Description: Groundwater Sampled Date: 13-NOV-18 Sampled Time: 15:00 Client ID: EB	Sample ID: L2198327-4 Description: Groundwater Sampled Date: 13-NOV-18 Sampled Time: 15:30 Client ID: TB
WATER					
Physical Tests	Conductivity (uS/cm)	8720	8780	<2.0	<2.0
	pH (pH)	6.58	6.65	5.76	5.98
	Total Suspended Solids (mg/L)	8.3	9.5	<3.0	<3.0
	Total Dissolved Solids (mg/L)	5580	5410	<3.0	<3.0
Anions and Nutrients	Alkalinity, Bicarbonate (as CaCO3) (mg/L)	27.2	26.4	<1.0	<1.0
	Alkalinity, Carbonate (as CaCO3) (mg/L)	<1.0	<1.0	<1.0	<1.0
	Alkalinity, Hydroxide (as CaCO3) (mg/L)	<1.0	<1.0	<1.0	<1.0
	Alkalinity, Total (as CaCO3) (mg/L)	27.2	26.4	<1.0	<1.0
	Ammonia, Total (as N) (mg/L)	0.443	0.437	<0.0050	<0.0050
	Bromide (Br) (mg/L)	40.9	41.4	<0.050	<0.050
	Chloride (Cl) (mg/L)	3010 DLDS	3060 DLDS	<0.50	<0.50
	Fluoride (F) (mg/L)	<1.0 DLDS	<1.0 DLDS	<0.020	<0.020
	Nitrate (as N) (mg/L)	<0.25 DLDS	<0.25 DLDS	<0.0050	<0.0050
	Nitrite (as N) (mg/L)	<0.050 DLDS	<0.050 DLDS	<0.0010	<0.0010
	Phosphorus (P)-Total (mg/L)	0.0043 DLDS	0.0052 DLDS	<0.0020	<0.0020
	Sulfate (SO4) (mg/L)	<15	<15	<0.30	<0.30

* Please refer to the Reference Information section for an explanation of any qualifiers detected.

Reference Information

Qualifiers for Sample Submission Listed:

Qualifier	Description
WSMD	Water sample(s) for dissolved mercury analysis was not submitted in glass or PTFE container with HCl preservative. Results may be biased low.

Qualifiers for Individual Samples Listed:

Sample Number	Client Sample ID	Qualifier	Description
L2198327-1	ZONE 6	WSMT	Water sample(s) for total mercury analysis was not submitted in glass or PTFE container with HCl preservative. Results may be biased low.
L2198327-2	ZONE 66	WSMT	Water sample(s) for total mercury analysis was not submitted in glass or PTFE container with HCl preservative. Results may be biased low.
L2198327-3	EB	WSMT	Water sample(s) for total mercury analysis was not submitted in glass or PTFE container with HCl preservative. Results may be biased low.

QC Samples with Qualifiers & Comments:

QC Type Description	Parameter	Qualifier	Applies to Sample Number(s)
Matrix Spike	Barium (Ba)-Dissolved	MS-B	L2198327-1, -2, -3, -4
Matrix Spike	Calcium (Ca)-Dissolved	MS-B	L2198327-1, -2, -3, -4
Matrix Spike	Sodium (Na)-Dissolved	MS-B	L2198327-1, -2, -3, -4
Matrix Spike	Strontium (Sr)-Dissolved	MS-B	L2198327-1, -2, -3, -4

Qualifiers for Individual Parameters Listed:

Qualifier	Description
DLDS	Detection Limit Raised: Dilution required due to high Dissolved Solids / Electrical Conductivity.
MS-B	Matrix Spike recovery could not be accurately calculated due to high analyte background in sample.

Test Method References:

ALS Test Code	Matrix	Test Description	Method Reference**
ALK-TITR-VA	Water	Alkalinity Species by Titration	APHA 2320 Alkalinity

This analysis is carried out using procedures adapted from APHA Method 2320 "Alkalinity". Total alkalinity is determined by potentiometric titration to a pH 4.5 endpoint. Bicarbonate, carbonate and hydroxide alkalinity are calculated from phenolphthalein alkalinity and total alkalinity values.

BR-L-IC-N-VA	Water	Bromide in Water by IC (Low Level)	EPA 300.1 (mod)

Inorganic anions are analyzed by Ion Chromatography with conductivity and/or UV detection.

CL-IC-N-VA	Water	Chloride in Water by IC	EPA 300.1 (mod)

Inorganic anions are analyzed by Ion Chromatography with conductivity and/or UV detection.

EC-PCT-VA	Water	Conductivity (Automated)	APHA 2510 Auto. Conduc.

This analysis is carried out using procedures adapted from APHA Method 2510 "Conductivity". Conductivity is determined using a conductivity electrode.

EC-SCREEN-VA	Water	Conductivity Screen (Internal Use Only)	APHA 2510

Qualitative analysis of conductivity where required during preparation of other tests - e.g. TDS, metals, etc.

F-IC-N-VA	Water	Fluoride in Water by IC	EPA 300.1 (mod)

Inorganic anions are analyzed by Ion Chromatography with conductivity and/or UV detection.

HARDNESS-CALC-VA	Seawater	Hardness	APHA 2340B

Hardness (also known as Total Hardness) is calculated from the sum of Calcium and Magnesium concentrations, expressed in $CaCO_3$ equivalents. Dissolved Calcium and Magnesium concentrations are preferentially used for the hardness calculation.

HG-DIS-C-CVAFS-VA	Seawater	Diss. Mercury in Seawater by CVAFS	PUGET SOUND PROTOCOLS, EPA 245.7

This analysis is carried out using procedures adapted from "Recommended Guidelines for Measuring Metals in Puget Sound Marine Water, Sediment, and Tissue Samples" prepared for the United States Environmental Protection Agency and the Puget Sound Water Quality Authority, 1995. The procedures may involve preliminary sample treatment by filtration (EPA Method 3005A) and involves a cold-oxidation of the acidified seawater sample using bromine monochloride prior to reduction of the sample with stannous chloride. Instrumental analysis is by cold vapour atomic fluorescence spectrophotometry or atomic absorption spectrophotometry (EPA Method 245.7).

HG-TOT-C-CVAFS-VA	Seawater	Total Mercury in Seawater by CVAFS	PUGET SOUND PROTOCOLS, EPA 245.7

This analysis is carried out using procedures adapted from "Recommended Guidelines for Measuring Metals in Puget Sound Marine Water, Sediment, and Tissue Samples" prepared for the United States Environmental Protection Agency and the Puget Sound Water Quality Authority, 1995. The procedure involves a cold-oxidation of the acidified seawater sample using bromine monochloride prior to reduction of the sample with stannous chloride. Instrumental analysis is by cold vapour atomic fluorescence spectrophotometry or atomic absorption spectrophotometry (EPA Method

Reference Information

245.7).

MET-D-L-HRMS-VA	Seawater	Diss. Metals in Seawater by HR-ICPMS	EPA 200.8

Trace metals in seawater are analyzed by high resolution inductively coupled plasma mass spectrometry (HR-ICPMS) based on US EPA Method 200.8, (Revision 5.5). The procedures may involve laboratory sample filtration based on APHA Method 3030B.

MET-T-L-HRMS-VA	Seawater	Tot. Metals in Seawater by HR-ICPMS	EPA 200.8

Trace metals in seawater are analyzed by high resolution inductively coupled plasma mass spectrometry (HR-ICPMS) based on US EPA Method 200.8, (Revision 5.5). The procedures may involve preliminary sample treatment by acid digestion based on APHA Method 3030E.

NH3-F-VA	Water	Ammonia in Water by Fluorescence	J. ENVIRON. MONIT., 2005, 7, 37-42, RSC

This analysis is carried out, on sulfuric acid preserved samples, using procedures modified from J. Environ. Monit., 2005, 7, 37 - 42, The Royal Society of Chemistry, "Flow-injection analysis with fluorescence detection for the determination of trace levels of ammonium in seawater", Roslyn J. Waston et al.

NO2-L-IC-N-VA	Water	Nitrite in Water by IC (Low Level)	EPA 300.1 (mod)

Inorganic anions are analyzed by Ion Chromatography with conductivity and/or UV detection.

NO3-L-IC-N-VA	Water	Nitrate in Water by IC (Low Level)	EPA 300.1 (mod)

Inorganic anions are analyzed by Ion Chromatography with conductivity and/or UV detection.

P-T-PRES-COL-VA	Water	Total P in Water by Colour	APHA 4500-P Phosphorus

This analysis is carried out using procedures adapted from APHA Method 4500-P "Phosphorus". Total Phosphorus is determined colourimetrically after persulphate digestion of the sample.
Samples with very high dissolved solids (i.e. seawaters, brackish waters) may produce a negative bias by this method. Alternate methods are available for these types of samples.

Arsenic (5+), at elevated levels, is a positive interference on colourimetric phosphate analysis.

PH-PCT-VA	Water	pH by Meter (Automated)	APHA 4500-H pH Value

This analysis is carried out using procedures adapted from APHA Method 4500-H "pH Value". The pH is determined in the laboratory using a pH electrode

It is recommended that this analysis be conducted in the field.

SO4-IC-N-VA	Water	Sulfate in Water by IC	EPA 300.1 (mod)

Inorganic anions are analyzed by Ion Chromatography with conductivity and/or UV detection.

TDS-LOW-VA	Water	Low Level TDS (3.0mg/L) by Gravimetric	APHA 2540C

This analysis is carried out using procedures adapted from APHA Method 2540 "Solids". Solids are determined gravimetrically. Total dissolved solids (TDS) are determined by filtering a sample through a glass fibre filter, TDS is determined by evaporating the filtrate to dryness at 180 degrees celsius.

TSS-VA	Water	Total Suspended Solids by Gravimetric	APHA 2540 D - GRAVIMETRIC

This analysis is carried out using procedures adapted from APHA Method 2540 "Solids". Solids are determined gravimetrically. Total Suspended Solids (TSS) are determined by filtering a sample through a glass fibre filter, TSS is determined by drying the filter at 104 degrees celsius.
Samples containing very high dissolved solid content (i.e. seawaters, brackish waters) may produce a positive bias by this method. Alternate analysis methods are available for these types of samples.

** ALS test methods may incorporate modifications from specified reference methods to improve performance.

The last two letters of the above test code(s) indicate the laboratory that performed analytical analysis for that test. Refer to the list below:

Laboratory Definition Code	Laboratory Location
VA	ALS ENVIRONMENTAL - VANCOUVER, BRITISH COLUMBIA, CANADA

Chain of Custody Numbers:

18-1789310

Reference Information

GLOSSARY OF REPORT TERMS

Surrogate - A compound that is similar in behaviour to target analyte(s), but that does not occur naturally in environmental samples. For applicable tests, surrogates are added to samples prior to analysis as a check on recovery.
mg/kg - milligrams per kilogram based on dry weight of sample.
mg/kg wwt - milligrams per kilogram based on wet weight of sample.
mg/kg lwt - milligrams per kilogram based on lipid-adjusted weight of sample.
mg/L - milligrams per litre.
< - Less than.
D.L. - The reported Detection Limit, also known as the Limit of Reporting (LOR).
N/A - Result not available. Refer to qualifier code and definition for explanation.

Test results reported relate only to the samples as received by the laboratory.
UNLESS OTHERWISE STATED, ALL SAMPLES WERE RECEIVED IN ACCEPTABLE CONDITION.
Analytical results in unsigned test reports with the DRAFT watermark are subject to change, pending final QC review.

L2198327-COFC

Chain of Custody / Analytical Request Form
Canada Toll Free: 1 800 668 9878
www.alsglobal.com

COC # 18-1789310

Page 1 of 1

Report To		Report Format / Distribution		Service Requested (Rush for routine analysis subject to availability)
Company:	GOLDER ASSOCIATES LTD	☑ Standard ☐ Other		◉ Regular (Standard Turnaround Times - Business Days)
Contact:	Dale Holtze	☑ PDF ☑ Excel ☐ Digital ☐ Fax		○ Priority (2-4 Business Days) - 50% Surcharge - Contact ALS to Confirm TAT
Address:	1931 Robertson Road	Email 1: dholtze@golder.com		○ Emergency (1-2 Bus. Days) - 100% Surcharge - Contact ALS to Confirm TAT
	Ottawa, ON K2H 5B7	Email 2: valerie_bertrand@golder.com		○ Same Day or Weekend Emergency - Contact ALS to Confirm TAT
Phone:	613-592-9600 Fax: 613-592-9601	Email 3:		
Invoice To	Same as Report ? ☑ Yes ☐ No	Client / Project Information		Analysis Request
Hardcopy of Invoice with Report?	☐ Yes ☐ No	Job #: 1789310		Please indicate below Filtered, Preserved or both (F, P, F/P)
Company:		PO / AFE:		
Contact:		LSD:		
Address:				
Phone:	Fax:	Quote #: Q70883		
Lab Work Order # (lab use only)		ALS Contact: Joanne Lee	Sampler: Dale Holtze	

Sample #	Sample Identification (This description will appear on the report)	Date (dd-mmm-yy)	Time (hh:mm)	Sample Type	DISSOLVED METALS	TOTAL METALS	TOTAL PHOSPHORUS	MAJOR IONS, TDS, TSS	24	EC	NH3	Anions	Number of Containers
	Zone 6 } 2 DAY RUSH	13-Nov-18	17:00	Groundwater									4
	Zone 66 } 2 DAY RUSH	13-Nov-18	17:00	Groundwater									4
	EB } Routine 5 days	13-Nov-18	15:00	Water									4
	TB } Routine 5 days	13-Nov-18	15:30	Water									3

Special Instructions / Regulations with water or land use (CCME-Freshwater Aquatic Life/BC CSR - Commercial/AB Tier 1 - Natural, etc) / Hazardous Details

SAMPLES 'ZONE 6' AND 'ZONE 66' HAVE ELEVATED TDS/CONDUCTIVTY. FIELD MEASURED CONDUCTIVITY RANGES BETWEEN 9 AND 9.1 mS/cm.

Failure to complete all portions of this form may delay analysis. Please fill in this form LEGIBLY.

By the use of this form the user acknowledges and agrees with the Terms and Conditions as provided on a separate Excel tab.

Also provided on another Excel tab are the ALS location addresses, phone numbers and sample container / preservation / holding time table for common analyses.

SHIPMENT RELEASE (client use)			SHIPMENT RECEPTION (lab use only)				SHIPMENT VERIFICATION (lab use only)			
Released by:	Date (dd-mmm-yy)	Time (hh-mm)	Received by:	Date:	Time:	Temperature:	Verified by:	Date:	Time:	Observations: Yes / No ? If Yes add SIF
Dale Holtze	14-Nov-18	8:00	PAVL	NOV 19	08:30	9.8 °C				

APPENDIX D

2016 Laboratory Certificate of Analysis – Brine Fluid

Multilab Val-d'Or

Certificat d'analyse

Client : **Agnico-Eagle CSD - Amaruq Study**

Responsable : Mme Odrée-Maude Vachon
Adresse : CSD

tél.: (819) 759-3555 ()
fax.: (000) 000-0000

Numéro de projet : V-52584

Lieu de prélèvement : Brine Fluid
Échantillon : Brine Fluid
Nom du préleveur : N/D
Type d'échantillon : Eau surface
Réseau:

Date de prélèvement : 17 avril 2016
Heure de prélèvement : N/D
Date de réception : 19 avril 2016

Certificat corrigé, remplace le certificat V-52584 émis le 09 mai 2016

Les résultats ne se rapportent qu'aux échantillons soumis pour analyse.

Les échantillons seront conservés pendant 30 jours à partir de la date du rapport à moins d'avis écrit du client.

Sauf indication contraire, tous les échantillons ont été reçus en bon état.
Toute reproduction, sinon en entier, est interdite sans l'autorisation écrite du laboratoire.

900, 5ième avenue
Val d'Or (Québec)
J9P 1B9
Téléphone : (819) 874-0350
Fax / Téléc: (819) 874-0360
E-mail: valdor@multilab-direct.com
Site web: www.multilab-direct.com

F-02-06
Version 3ième: 26/10/2005

Multilab Val-d'Or

Certificat d'analyse

Numéro de projet : V-52584

Échantillon : Brine Fluid — Date de prélèvement : 17 avril 2016

Lieu de prélèvement : Brine Fluid — Heure de prélèvement : N/D

Paramètres	Résultats	Méthode d'analyse	Date d'analyse
Aluminium (Al)	0.498 mg/L	Sous-traitance\Multilab Direct	20 avril 2016
Antimoine (Sb)	0.0354 mg/L	Sous-traitance\Multilab Direct	20 avril 2016
Argent (Ag)	<0.0001 mg/L	Sous-traitance\Multilab Direct	20 avril 2016
Arsenic (As)	0.7662 mg/L	Sous-traitance\Multilab Direct	20 avril 2016
Baryum (Ba)	0.1126 mg/L	Sous-traitance\Multilab Direct	20 avril 2016
Béryllium (Be)	<0.0005 mg/L	Sous-traitance\Multilab Direct	20 avril 2016
Bicarbonate (HCO3)	27 mg CaCO3/L	M-TIT-1.0	19 avril 2016
Bismuth (Bi)	<0.0005 mg/L	Sous-traitance\Multilab Direct	20 avril 2016
Bore (B)	13.2 mg/L	Sous-traitance\Multilab Direct	20 avril 2016
Bromures	1066 mg/L	Sous-traitance\Multilab Direct	22 avril 2016
Cadmium (Cd)	<0.00002 mg/L	Sous-traitance\Multilab Direct	20 avril 2016
Calcium (Ca)	42266 mg/L	Sous-traitance\Multilab Direct	20 avril 2016
Carbone inorganique total (C.I.T.	2.1 mg/L	M-COT-1.0	19 avril 2016
Carbone organique total (C.O.T.)	28.5 mg/L	M-COT-1.0	19 avril 2016
Chlorure (Cl)	83700 mg/L	Sous-traitance\Multilab Direct	29 avril 2016
Chrome (Cr)	<0.0006 mg/L	Sous-traitance\Multilab Direct	20 avril 2016
Cobalt (Co)	0.0406 mg/L	Sous-traitance\Multilab Direct	20 avril 2016
Conductivité	55420 µmhos/cm	M-TIT-1.0	19 avril 2016
Cuivre (Cu)	0.0039 mg/L	Sous-traitance\Multilab Direct	20 avril 2016
Dureté	105554 mg CaCO3/L	Sous-traitance\Multilab Direct	20 avril 2016
Étain (Sn)	<0.001 mg/L	Sous-traitance\Multilab Direct	20 avril 2016
Fer (Fe)	2.60 mg/L	Sous-traitance\Multilab Direct	22 avril 2016
Fluorures (F)	0.06 mg/L	Sous-traitance\Multilab Direct	27 avril 2016
Lithium (Li)	34.52 mg/L	Sous-traitance\Multilab Direct	22 avril 2016
Magnésium (Mg)	3.92 mg/L	Sous-traitance\Multilab Direct	20 avril 2016
Manganèse (Mn)	<0.0005 mg/L	Sous-traitance\Multilab Direct	20 avril 2016
Mercure (Hg)	0.00039 mg/L	Sous-traitance\Multilab Direct	21 avril 2016
Molybdene (Mo)	<0.0005 mg/L	Sous-traitance\Multilab Direct	20 avril 2016
NH3 (NH3 non-ionisé)	1.52 mg N/L	Sous-traitance\Multilab Direct	20 avril 2016
NH4	0.67 mg N/L	Sous-traitance\Multilab Direct	20 avril 2016
Nickel (Ni)	1.350 mg/L	Sous-traitance\Multilab Direct	20 avril 2016
Nitrates (NO3)	0.54 mg N/L	Sous-traitance\Multilab Direct	19 avril 2016
Nitrites (NO2)	0.06 mg N/L	Sous-traitance\Multilab Direct	21 avril 2016
pH	10.02	M-TIT-1.0	19 avril 2016
Plomb (Pb)	<0.0003 mg/L	Sous-traitance\Multilab Direct	20 avril 2016
Potassium (K)	1717 mg/L	Sous-traitance\Multilab Direct	20 avril 2016
Radium (RA 226)	<0.066 Becquerels/L	M-RA-2.0	02 mai 2016
Sélénium (Se)	3.83 mg/L	Sous-traitance\Multilab Direct	20 avril 2016
Silice (Si)	2.93 mg/L	Sous-traitance\Multilab Direct	20 avril 2016
Sodium (Na)	838 mg/L	Sous-traitance\Multilab Direct	20 avril 2016

Sauf indication contraire, tous les échantillons ont été reçus en bon état.
Toute reproduction, sinon en entier, est interdite sans l'autorisation écrite du laboratoire.

900, 5ième avenue
Val d'Or (Québec)
J9P 1B9
Téléphone : (819) 874-0350
Fax / Téléc: (819) 874-0360
E-mail: valdor@multilab-direct.com
Site web: www.multilab-direct.com

F-02-06
Version 3ième: 26/10/2005

Multilab Val-d'Or

Certificat d'analyse

Numéro de projet : V-52584

Échantillon : Brine Fluid — Date de prélèvement : 17 avril 2016

Lieu de prélèvement : Brine Fluid — Heure de prélèvement : N/D

Paramètres	Résultats	Méthode d'analyse	Date d'analyse
Solides dissous	36946 mg/L	M-TIT-1.0	19 avril 2016
Solides totaux	149736 mg/L	M-SOLI-1.0	27 avril 2016
Strontium (Sr)	656 mg/L	Sous-traitance\Multilab Direct	22 avril 2016
Tellure (Te)	<0.0005 mg/L	Sous-traitance\Multilab Direct	20 avril 2016
Thallium (Tl)	<0.002 mg/L	Sous-traitance\Multilab Direct	22 avril 2016
Titane (Ti)	45.2 mg/L	Sous-traitance\Multilab Direct	20 avril 2016
Uranium (U)	<0.001 mg/L	Sous-traitance\Multilab Direct	20 avril 2016
Vanadium (V)	<0.0005 mg/L	Sous-traitance\Multilab Direct	20 avril 2016
Zinc (Zn)	<0.001 mg/L	Sous-traitance\Multilab Direct	20 avril 2016
Alcalinité	145 mg CaCO3/L	M-TIT-1.0	20 avril 2016
Sulfate (SO4)	<0.6 mg SO4/L	Sous-traitance\Multilab Direct	12 mai 2016

Sauf indication contraire, tous les échantillons ont été reçus en bon état.
Toute reproduction, sinon en entier, est interdite sans l'autorisation écrite du laboratoire.

900, 5ième avenue
Val d'Or (Québec)
J9P 1B9
Téléphone : (819) 874-0350
Fax / Téléc : (819) 874-0360
E-mail : valdor@multilab-direct.com
Site web : www.multilab-direct.com

F-02-06
Version 3ième, 26/10/2005

Multilab Val-d'Or

Limite de détection rapportée

Numéro de projet : V-52584

Échantillon : Brine Fluid — Date de prélèvement : 17 avril 2016

Lieu de prélèvement : Brine Fluid — Heure de prélèvement : N/D

Paramètre	Valeur	Unité	Méthode	Accréditation
Aluminium (Al)	0.006	mg/L	Sous-traitance	
Antimoine (Sb)	0.0001	mg/L	Sous-traitance	Oui
Argent (Ag)	0.0001	mg/L	Sous-traitance	Oui
Arsenic (As)	0.0005	mg/L	Sous-traitance	Oui
Baryum (Ba)	0.0005	mg/L	Sous-traitance	Oui
Béryllium (Be)	0.0005	mg/L	Sous-traitance	
Bicarbonate (HCO3)	2	mg CaCO3/L	M-TIT-1.0	
Bismuth (Bi)	0.0005	mg/L	Sous-traitance	
Bore (B)	0.01	mg/L	Sous-traitance	Oui
Bromures	0.01	mg/L	Sous-traitance	
Cadmium (Cd)	0.00002	mg/L	Sous-traitance	Oui
Calcium (Ca)	0.03	mg/L	Sous-traitance	Oui
Carbone inorganique total (C.I.T.	0.2	mg/L	M-COT-1.0	--
Carbone organique total (C.O.T.)	0.2	mg/L	M-COT-1.0	Oui
Chlorure (Cl)	0.5	mg/L	Sous-traitance	Oui
Chrome (Cr)	0.0006	mg/L	Sous-traitance	Oui
Cobalt (Co)	0.0005	mg/L	Sous-traitance	
Conductivité	1	µmhos/cm	M-TIT-1.0	Oui
Cuivre (Cu)	0.0005	mg/L	Sous-traitance	Oui
Dureté	1	mg CaCO3/L	Sous-traitance	
Étain (Sn)	0.001	mg/L	Sous-traitance	Oui
Fer (Fe)	0.01	mg/L	Sous-traitance	Oui
Fluorures (F)	0.02	mg/L	Sous-traitance	Oui
Lithium (Li)	0.005	mg/L	Sous-traitance	
Magnésium (Mg)	0.02	mg/L	Sous-traitance	Oui
Manganèse (Mn)	0.0005	mg/L	Sous-traitance	Oui
Mercure (Hg)	0.00001	mg/L	Sous-traitance	Oui
Molybdene (Mo)	0.0005	mg/L	Sous-traitance	Oui
NH3 (NH3 non-ionisé)	0.01	mg N/L	Sous-traitance	-
NH4	0.01	mg N/L	Sous-traitance	-
Nickel (Ni)	0.0005	mg/L	Sous-traitance	Oui
Nitrates (NO3)	0.01	mg N/L	Sous-traitance	Oui
Nitrites (NO2)	0.01	mg N/L	Sous-traitance	Oui
pH			M-TIT-1.0	Oui
Plomb (Pb)	0.0003	mg/L	Sous-traitance	Oui
Potassium (K)	0.05	mg/L	Sous-traitance	
Radium (RA 226)	0.002	Becquerels/L	M-RA-2.0	Oui
Sélénium (Se)	0.001	mg/L	Sous-traitance	Oui
Silice (Si)	0.01	mg/L	Sous-traitance	
Sodium (Na)	0.05	mg/L	Sous-traitance	Oui

Sauf indication contraire, tous les échantillons ont été reçus en bon état.
Toute reproduction, sinon en entier, est interdite sans l'autorisation écrite du laboratoire.

900, 5ième avenue
Val d'Or (Québec)
J9P 1B9
Téléphone : (819) 874-0350
Fax / Téléc: (819) 874-0360
E-mail: valdor@multilab-direct.com
Site web: www.multilab-direct.com

F-02-06
Version 3ième, 26/10/2005

Multilab Val-d'Or

Limite de détection rapportée

Numéro de projet : V-52584

Échantillon : Brine Fluid — Date de prélèvement : 17 avril 2016

Lieu de prélèvement : Brine Fluid — Heure de prélèvement : N/D

Paramètre	Valeur	Unité	Méthode	Accréditation
Solides dissous	1	mg/L	M-TIT-1.0	
Solides totaux	2	mg/L	M-SOLI-1.0	Oui
Strontium (Sr)	0.005	mg/L	Sous-traitance	
Tellure (Te)	0.0005	mg/L	Sous-traitance	
Thallium (Tl)	0.002	mg/L	Sous-traitance	
Titane (Ti)	0.01	mg/L	Sous-traitance	
Uranium (U)	0.001	mg/L	Sous-traitance	
Vanadium (V)	0.0005	mg/L	Sous-traitance	Oui
Zinc (Zn)	0.001	mg/L	Sous-traitance	Oui
Alcalinité	2	mg CaCO3/L	M-TIT-1.0	
Sulfate (SO4)	0.6	mg SO4/L	Sous-traitance	Oui

Sauf indication contraire, tous les échantillons ont été reçus en bon état.
Toute reproduction, sinon en entier, est interdite sans l'autorisation écrite du laboratoire.

900, 5ième avenue
Val d'Or (Québec)
J9P 1B9
Téléphone : (819) 874-0350
Fax / Téléc: (819) 874-0360
E-mail: valdor@multilab-direct.com
Site web: www.multilab-direct.com

F-02-06
Version 3ième: 26/10/2005

Multilab Val-d'Or

Certificat contrôle qualité

Numéro de projet : V-52584

Échantillon : Brine Fluid — Date de prélèvement : 17 avril 2016

Lieu de prélèvement : Brine Fluid — Heure de prélèvement : N/D

Paramètres		
Alcalinité mg CaCO3/L	Nom Standard	STD alcalinité
	Valeur obtenue	144
	Justesse	99.3%
	Intervalle	123 - 167
Aluminium (Al) mg/L	Blanc	<0.006
	Nom Standard	DMR-0009-2016-Eu
	Valeur obtenue	6.82
	Justesse	92.9%
	Intervalle	5.10 - 7.64
Antimoine (Sb) mg/L	Blanc	<0.0001
	Nom Standard	DMR-0009-2016-Eu
	Valeur obtenue	0.2049
	Justesse	92.3%
	Intervalle	0.178 - 0.266
Argent (Ag) mg/L	Blanc	<0.0001
	Nom Standard	DMR-0009-2016-Ag
	Valeur obtenue	0.6004
	Justesse	82.9%
	Intervalle	0.579 - 0.869
Arsenic (As) mg/L	Blanc	<0.0005
	Nom Standard	DMR-0009-2016-Eu
	Valeur obtenue	0.2700
	Justesse	95.4%
	Intervalle	0.198 - 0.368
Baryum (Ba) mg/L	Blanc	<0.0005
	Nom Standard	DMR-0009-2016-Eu
	Valeur obtenue	2.572
	Justesse	94.2%
	Intervalle	1.94 - 2.92
Béryllium (Be) mg/L	Blanc	<0.0005
	Nom Standard	DMR-0009-2016-Eu
	Valeur obtenue	1.900
	Justesse	88.2%
	Intervalle	1.36 - 2.04
Bismuth (Bi) mg/L	Blanc	<0.0005
Bore (B) mg/L	Blanc	<0.01
	Nom Standard	DMR-0009-2016-Eu
	Valeur obtenue	3.43
	Justesse	83.7%
	Intervalle	2.36 - 3.54

Sauf indication contraire, tous les échantillons ont été reçus en bon état.
Toute reproduction, sinon en entier, est interdite sans l'autorisation écrite du laboratoire.

900, 5ième avenue
Val d'Or (Québec)
J9P 1B9
Téléphone : (819) 874-0350
Fax / Téléc : (819) 874-0360
E-mail: valdor@multilab-direct.com
Site web: www.multilab-direct.com

F-02-06
Version 3ième: 26/10/2005

Multilab Val-d'Or

Certificat contrôle qualité

Numéro de projet : V-52584

Échantillon : Brine Fluid — Date de prélèvement : 17 avril 2016

Lieu de prélèvement : Brine Fluid — Heure de prélèvement : N/D

Paramètres		
Bromures mg/L	Blanc	<0.01
	Nom Standard	DMR-0123-2016-Br
	Valeur obtenue	5.39
	Justesse	95.7%
	Intervalle	4.50 - 6.76
Cadmium (Cd) mg/L	Blanc	<0.00002
	Nom Standard	DMR-0009-2016-Eu
	Valeur obtenue	0.89802
	Justesse	99.8%
	Intervalle	0.720 - 1.080
Calcium (Ca) mg/L	Blanc	<0.03
	Nom Standard	DMR-0009-2016-Eu
	Valeur obtenue	17.1
	Justesse	98.3%
	Intervalle	13.9 - 20.9
Chlorure (Cl) mg/L	Blanc	<0.5
	Nom Standard	DMR-0175-2016-Cl
	Valeur obtenue	53.7
	Justesse	96.7%
	Intervalle	46 - 58
Chrome (Cr) mg/L	Blanc	<0.0006
	Nom Standard	DMR-0009-2016-Eu
	Valeur obtenue	4.115
	Justesse	98.4%
	Intervalle	3.24 - 4.86
Cobalt (Co) mg/L	Blanc	<0.0005
	Nom Standard	DMR-0009-2016-Eu
	Valeur obtenue	1.549
	Justesse	99.9%
	Intervalle	1.24 - 1.86
Conductivité µmhos/cm	Nom Standard	STD cond maison
	Valeur obtenue	1407
	Justesse	99.4%
	Intervalle	1203 - 1627
Cuivre (Cu) mg/L	Blanc	<0.0005
	Nom Standard	DMR-0009-2016-Eu
	Valeur obtenue	1.379
	Justesse	94.7%
	Intervalle	1.05 - 1.57
Étain (Sn) mg/L	Blanc	<0.001

Sauf indication contraire, tous les échantillons ont été reçus en bon état.
Toute reproduction, sinon en entier, est interdite sans l'autorisation écrite du laboratoire.

900, 5ième avenue
Val d'Or (Québec)
J9P 1B9
Téléphone : (819) 874-0350
Fax / Téléc: (819) 874-0360
E-mail: valdor@multilab-direct.com
Site web: www.multilab-direct.com

F-02-06
Version 3ième; 26/10/2005

Multilab Val-d'Or

Certificat contrôle qualité

Numéro de projet : V-52584

Échantillon : Brine Fluid — Date de prélèvement : 17 avril 2016

Lieu de prélèvement : Brine Fluid — Heure de prélèvement : N/D

Paramètres		
Fer (Fe) mg/L	Blanc	<0.01
	Nom Standard	DMR-0009-2016-Eu
	Valeur obtenue	16.0
	Justesse	88.1%
	Intervalle	11.4 - 17.2
Lithium (Li) mg/L	Blanc	<0.005
	Nom Standard	DMR-0009-2016-Eu
	Valeur obtenue	0.827
	Justesse	97.8%
	Intervalle	0.677 - 1.015
Magnésium (Mg) mg/L	Blanc	<0.02
	Nom Standard	DMR-0009-2016-Eu
	Valeur obtenue	8.04
	Justesse	89.4%
	Intervalle	5.82 - 8.72
Manganèse (Mn) mg/L	Blanc	<0.0005
	Nom Standard	DMR-0009-2016-Eu
	Valeur obtenue	3.781
	Justesse	97.2%
	Intervalle	3.11 - 4.67
Mercure (Hg) mg/L	Blanc	<0.00001
	Nom Standard	DMR-0123-2016-HgEu
	Valeur obtenue	0.00062
	Justesse	93.9%
	Intervalle	0.00040 - 0.00092
Molybdene (Mo) mg/L	Blanc	<0.0005
	Nom Standard	DMR-0009-2016-Eu
	Valeur obtenue	0.6382
	Justesse	90.1%
	Intervalle	0.566 - 0.850
Nickel (Ni) mg/L	Blanc	<0.0005
	Nom Standard	DMR-0009-2016-Eu
	Valeur obtenue	1.110
	Justesse	98.2%
	Intervalle	0.90 - 1.36
Nitrates (NO3) mg N/L	Blanc	<0.01
Nitrites (NO2) mg N/L	Blanc	<0.01
	Nom Standard	DMR-0175-2016-NO2
	Valeur obtenue	1.97
	Justesse	97.5%

Sauf indication contraire, tous les échantillons ont été reçus en bon état.
Toute reproduction, sinon en entier, est interdite sans l'autorisation écrite du laboratoire.

900, 5ième avenue
Val d'Or (Québec)
J9P 1B9
Téléphone : (819) 874-0350
Fax / Téléc (819) 874-0360
E-mail: valdor@multilab-direct.com
Site web: www.multilab-direct.com

F-02-06
Version 3ième: 26/10/2005

Multilab Val-d'Or

Certificat contrôle qualité

Numéro de projet : V-52584

Échantillon : Brine Fluid — Date de prélèvement : 17 avril 2016

Lieu de prélèvement : Brine Fluid — Heure de prélèvement : N/D

Paramètres		
	Intervalle	1.72 - 2.32
pH	Nom Standard	STD pH 7.0
	Valeur obtenue	7.01
	Justesse	99.9%
	Intervalle	6.96 - 7.04
Plomb (Pb) mg/L	Blanc	<0.0003
	Nom Standard	DMR-0009-2016-Eu
	Valeur obtenue	0.9397
	Justesse	96.6%
	Intervalle	0.727 - 1.091
Potassium (K) mg/L	Blanc	<0.05
	Nom Standard	DMR-0009-2016-Eu
	Valeur obtenue	20.2
	Justesse	89%
	Intervalle	14.6 - 21.8
Radium (RA 226) Becquerels/L	Blanc	<0.002
	Nom Standard	STD 45462
	Valeur obtenue	0.0700
	Justesse	85%
	Intervalle	0.0700 - 0.0948
Sélénium (Se) mg/L	Blanc	<0.001
	Nom Standard	DMR-0009-2016-Eu
	Valeur obtenue	1.33
	Justesse	98.5%
	Intervalle	1.08 - 1.62
Sodium (Na) mg/L	Blanc	<0.05
	Nom Standard	DMR-0009-2016-Eu
	Valeur obtenue	29.0
	Justesse	91%
	Intervalle	21.3 - 31.9
Solides totaux mg/L	Blanc	<2
	Nom Standard	DMR-0124-2016-3
	Valeur obtenue	289
	Justesse	99%
	Intervalle	243 - 329
Strontium (Sr) mg/L	Blanc	<0.005
	Nom Standard	DMR-0009-2016-Eu
	Valeur obtenue	1.25
	Justesse	97.7%
	Intervalle	1.02 - 1.54

Sauf indication contraire, tous les échantillons ont été reçus en bon état.
Toute reproduction, sinon en entier, est interdite sans l'autorisation écrite du laboratoire.

900, 5ième avenue
Val d'Or (Québec)
J9P 1B9
Téléphone : (819) 874-0350
Fax / Téléc (819) 874-0360
E-mail: valdor@multilab-direct.com
Site web: www.multilab-direct.com

F-02-06
Version 3ième: 26/10/2005

Multilab Val-d'Or

Certificat contrôle qualité

Numéro de projet : V-52584

Échantillon : Brine Fluid — Date de prélèvement : 17 avril 2016

Lieu de prélèvement : Brine Fluid — Heure de prélèvement : N/D

Paramètres		
Sulfate (SO4) mg SO4/L	Blanc	<0.6
	Nom Standard	DMR-0175-2016-SO4
	Valeur obtenue	71.2
	Justesse	93.7%
	Intervalle	60.3 - 73.7
Tellure (Te) mg/L	Blanc	<0.0005
Thallium (Tl) mg/L	Blanc	<0.002
	Nom Standard	Tl-S140909023-1000ppm
	Valeur obtenue	989
	Justesse	98.9%
	Intervalle	800 - 1200
Titane (Ti) mg/L	Blanc	<0.01
Uranium (U) mg/L	Blanc	<0.001
	Nom Standard	DMR-0009-2016-Eu
	Valeur obtenue	1.93
	Justesse	90.3%
	Intervalle	1.41 - 2.11
Vanadium (V) mg/L	Blanc	<0.0005
	Nom Standard	DMR-0009-2016-Eu
	Valeur obtenue	2.023
	Justesse	98.3%
	Intervalle	1.59 - 2.39
Zinc (Zn) mg/L	Blanc	<0.001
	Nom Standard	DMR-0009-2016-Eu
	Valeur obtenue	4.67
	Justesse	97.7%
	Intervalle	3.82 - 5.74

Sauf indication contraire, tous les échantillons ont été reçus en bon état.
Toute reproduction, sinon en entier, est interdite sans l'autorisation écrite du laboratoire.

900, 5ième avenue
Val d'Or (Québec)
J9P 1B9
Téléphone : (819) 874-0350
Fax / Téléc: (819) 874-0360
E-mail: valdor@multilab-direct.com
Site web: www.multilab-direct.com

F-02-06
Version 3ième; 26/10/2005

Multilab Val-d'Or

Informations supplémentaires

Numéro de projet : V-52584

Échantillon : Brine Fluid
Lieu de prélèvement : Brine Fluid

Date de prélèvement : 17 avril 2016
Heure de prélèvement : N/D

Méthode laboratoire	Méthode de référence
M-MET-3.0	MA.200-Mét. 1.2
M-TIT-1.0	MA.303-Titr Auto 2.0
M-CL-2.0	MA.300-Ions 1.3
M-CI-1.0	MA.300-Anions 1.0
M-NITR-2.0	MA.300-NO3 2.0
M-RA-2.0	APHA 7500-Ra B et EPA P.13 (EMSL-CI)
M-SOLI-1.0	MA.104-S.S. 1.1
M-SULF-2.0	MA.300-Ions 1.3

Sauf indication contraire, tous les échantillons ont été reçus en bon état.
Toute reproduction, sinon en entier, est interdite sans l'autorisation écrite du laboratoire.

900, 5ième avenue
Val d'Or (Québec)
J9P 1B9
Téléphone : (819) 874-0350
Fax / Téléc: (819) 874-0360
E-mail: valdor@multilab-direct.com
Site web: www.multilab-direct.com

F-02-06
Version 3ième: 26/10/2005

Haul Road Management Plan, Version 2

AGNICO EAGLE

MEADOWBANK DIVISION

Whale Tail Pit – Haul Road Management Plan

MARCH 2019

VERSION 2

TABLE OF CONTENTS

Table of Contents ii

Figures iii

Document Control iv

Executive Summary v

Acronyms vii

Section 1 • Introduction 8

Section 2 • Related Documents 11

Section 3 • Consultation 12

Section 4 • Measures to Prevent Permafrost Degradation 14

Section 5 • Borrow Pit Management 17

Section 6 • Traffic Management on the Haul Road 22

Section 7 • Inspection and Maintenance of The Whale Tail Pit HauL Road 25

Section 8 • Road Safety 29

Section 9 • Accidents, Spills, Malfunctions and Emergency Response 32

Section 10 • Wildlife Management 35

Section 11 • Closure and Reclamation 36

Section 12 ● References 38

FIGURES

Figure 1.1. Cross section view of the expanded Whale Tail Pit Haul Road..... 9

Figure 1.2 Whale Tail Pit Haul Road and location of existing borrow pits and quarries..... 10

Figure 4.1 Typical cross-section of Haul road on ice wedge and very thaw susceptible soil 15

Figure 4.2 Typical Cross-section of Haul road built over thaw susceptible soil..... 16

Figure 4.3 Typical section of Haul road built over soil relatively unsusceptible to freeze and thaw settlement..... 16

Figure 6.1 Design of traditional land use crossing at km 12.....23

TABLES

Table 5.1 Haul Road Borrow Pits, Quarries and Waste Rock Sources for Road Construction and maintenance 17

Table 8-1. Road Signage..... 30

DOCUMENT CONTROL

Version	Date	Section	Page	Revision
WT	June 15, 2016	All	All	Whale Tail Pit Haul Road Management Plan
1	August, 2018	All	All	Comprehensive review of the Whale Tail Pit Haul Road Management Plan
2	March, 2019	All	All	Comprehensive review following road expansion completed

Plan prepared by:

Agnico Eagle Mines Limited

Plan approved by:



Robin Allard
Environment General Supervisor

EXECUTIVE SUMMARY

Agnico Eagle Mine Limited – Meadowbank Division (Agnico Eagle) is developing the Whale Tail Pit Project (Project), a satellite deposit located on the Amaruq property, to extend mine operations and milling at Meadowbank Mine. Whale Tail Pit will be mined by truck-and-shovel operation and will require the hauling of material from the pit operations to the Meadowbank Mill.

For the purposes of this document, the Road Management Plan (RMP) applies to the Whale Tail Pit Haul Road from construction through post-closure.

The RMP was prepared as per Part B, conditions 14 and 15 of the Whale Tail Type A Water License 2AM-WTP1826. Other plans prepared for the Whale Tail Pit Haul Road include an Emergency Response and Spill Contingency Plan and the Interim Closure and Reclamation Plan.

Land and environmental management in the area of the road are generally governed by the provisions of the Nunavut Land Claims Agreement. A list of the current licences, permits, agreements, authorizations, and approvals for the approved Whale Tail Pit Haul Road are presented. Agnico Eagle has expended the road to be 9.6 m in width, with a bypass bay every 400 m to accommodate a single oversized vehicle along the approved 64.1 km alignment. Additional widening could be considered in the future should it be required for safety purposes.

The Whale Tail Pit Haul road will not be publicly accessible rather only used by Agnico Eagle employees and contractors; furthermore, it will continue to be used by the exploration division. Agnico Eagle will educate all its employees and those of its contractors on road safety before they first drive the road. Daily traffic on the road will transport ore to the Meadowbank Mill, equipment, supplies, fuel and personnel.

The RMP presents mitigation measures and protocols to be implemented during the expansion (construction of the haul road) and operations to protect wildlife, prevent permafrost degradation, control surface runoff and sedimentation. Agnico Eagle will put in place operational procedures for daily operation and maintenance of the road including, if deemed necessary, dust suppression, snow removal and de-icing. Unmanned but properly identified entry points will be installed at both ends of the road. There will be occasions when access to the Haul road needs to be curtailed for short time periods for special reasons, such as bad weather, unsafe road conditions, maintenance activity on the road, heavy project related truck traffic, movement of oversized loads, and/or presence of large numbers of caribou or other wildlife incidences on or adjacent to the road. The road could also be temporarily closed in the event of an incident, accident or other event requiring mitigation or response. Typically, these short-term closures will be required to ensure safety.

Protocols for accidents and anticipated use of police services are presented. Agnico Eagle has an established Emergency Response Team based at the Meadowbank Mine with trained first responders based at the Whale Tail Pit site whose combined responsibilities in part will include responding to

emergencies on the road in a timely manner. Agnico Eagle will also report all reportable scale incidents to the appropriate Government authority.

The Whale Tail Pit road will be decommissioned and reclaimed by Agnico Eagle when operations at Whale Tail Pit cease and when exploration on the Amaruq property fails to find sufficient ore resources to support mining. Closure and reclamation of the road would be initiated within a year following the completion of closure and reclamation of the Whale Tail Pit operations infrastructure, Amaruq camp and exploration sites.

This Plan will be updated as required to reflect any changes in operation or economic feasibility, and to incorporate new information or the latest technology, as appropriate.

ACRONYMS

Agnico Eagle	Agnico-Eagle Mines Limited
ARD/ML	Acid Rock Drainage/Metal Leaching
ATV	All-Terrain Vehicle
CIRNAC	Crown-Indigenous Relations and Northern Affairs Canada
CLARC	Community Lands and Resources Committee
DFO	Department of Fisheries and Oceans Canada
GN	Government of Nunavut
HTO	Hunters and Trappers' Organization
IOL	Inuit Owned Lands
KIA	Kivalliq Inuit Association
NIRB	Nunavut Impact Review Board
NLCA	Nunavut Land Claims Agreement
NTI	Nunavut Tunngavik Incorporated
NPC	Nunavut Planning Commission
NU	Nunavut
NWB	Nunavut Water Board
RCMP	Royal Canadian Mounted Police
RMP	Road Management Plan
TEMP	Terrestrial Ecosystem Management Plan
TSF	Tailings Storage Facilities
VEC	Valued Ecosystem Components
VESC	Valued Economic and Social Components

SECTION 1 • INTRODUCTION

1.1 Project Description

Agnico Eagle Mines Limited – Meadowbank Division (Agnico Eagle) is developing the Whale Tail Pit Project (Project), a satellite deposit on the Amaruq property, to continue mine operations and milling at Meadowbank Mine. The Whale Tail Project and the Whale Tail Pit Haul Road are subjected to the conditions presented in Nunavut Impact Review Board (NIRB) Whale Tail Project Certificate No.008, as well as in Nunavut Water Board (NWB) Type A Water License 2AM-WTP1826.

The Amaruq property is a 408 square kilometre (km^2) site located on Inuit Owned Land approximately 150 kilometres (km) north of the hamlet of Baker Lake and approximately 50 km northwest of Meadowbank Mine in the Kivalliq Region of Nunavut. The deposit will be mined as two open pits (i.e., Whale Tail Pit, and ore will be hauled to the approved infrastructure at Meadowbank Mine for milling.

For the purposes of this document, the Road Management Plan (RMP) applies to the Whale Tail Pit Haul Road from construction through post-closure. Agnico Eagle is expanding the road to be 9.6m in width, or more if required for safety reasons, with a bypass bay approximately every 400m depending on the topography and safety considerations to accommodate a single oversized vehicle along the approved 64.1 km alignment. All bridges from the Exploration Access Road will continue to be used and culverts will be extended to accommodate the hauling of ore from the Project to the Meadowbank Mill (refer to Figure 1.2).

The bridges and round culverts allow normal river and stream flow, and fish migration at road water crossings. The expansion to the Haul Road requires the use of approved quarries, approved borrow areas, associated short spur roads and Vault Pit as a Quarry. The haul road will be private and located on Crown Land and Inuit Owned Land. Figure 1.1 is a cross sectional view of the expanded road.

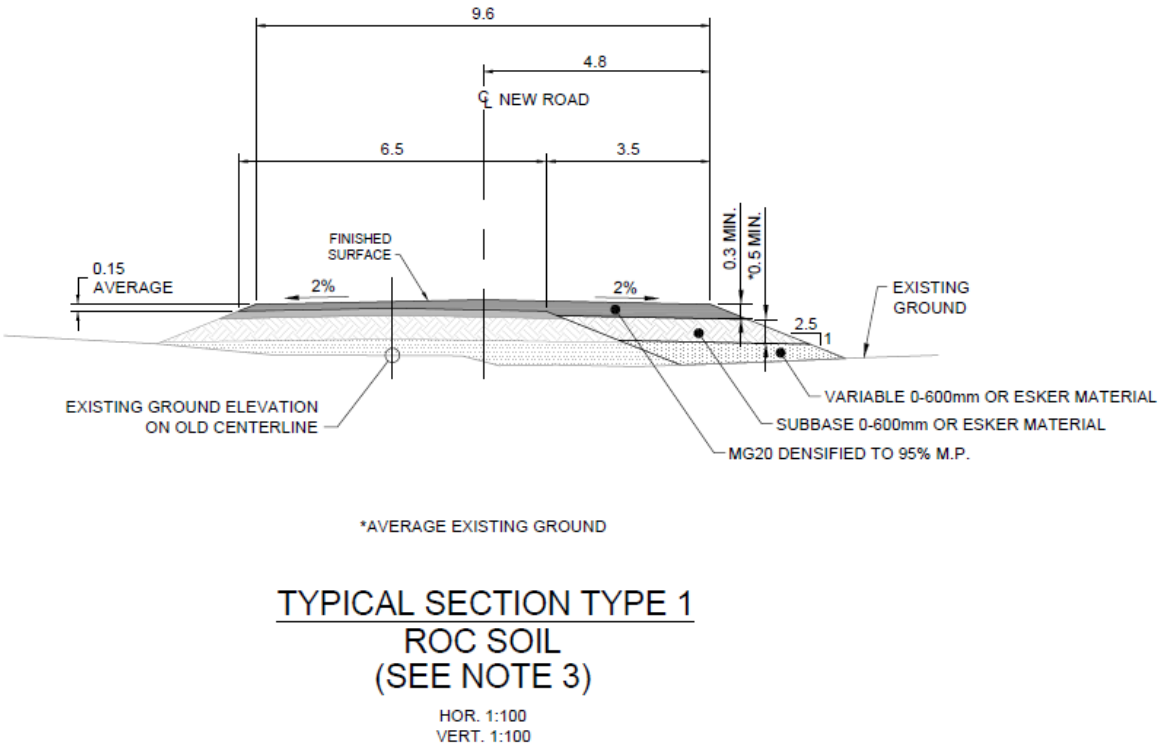

Figure 1.1. Cross section view of the expanded Whale Tail Pit Haul Road

The routing of the Whale Tail Pit road is shown on Figure 1.2.

The road is being constructed, inspected, and maintained by Agnico Eagle. Consequently, Agnico Eagle has sole responsibility for the construction, operation, and decommissioning of this road, including the road bed, bridges, culverts, borrow pits and quarries used in the construction of the road.

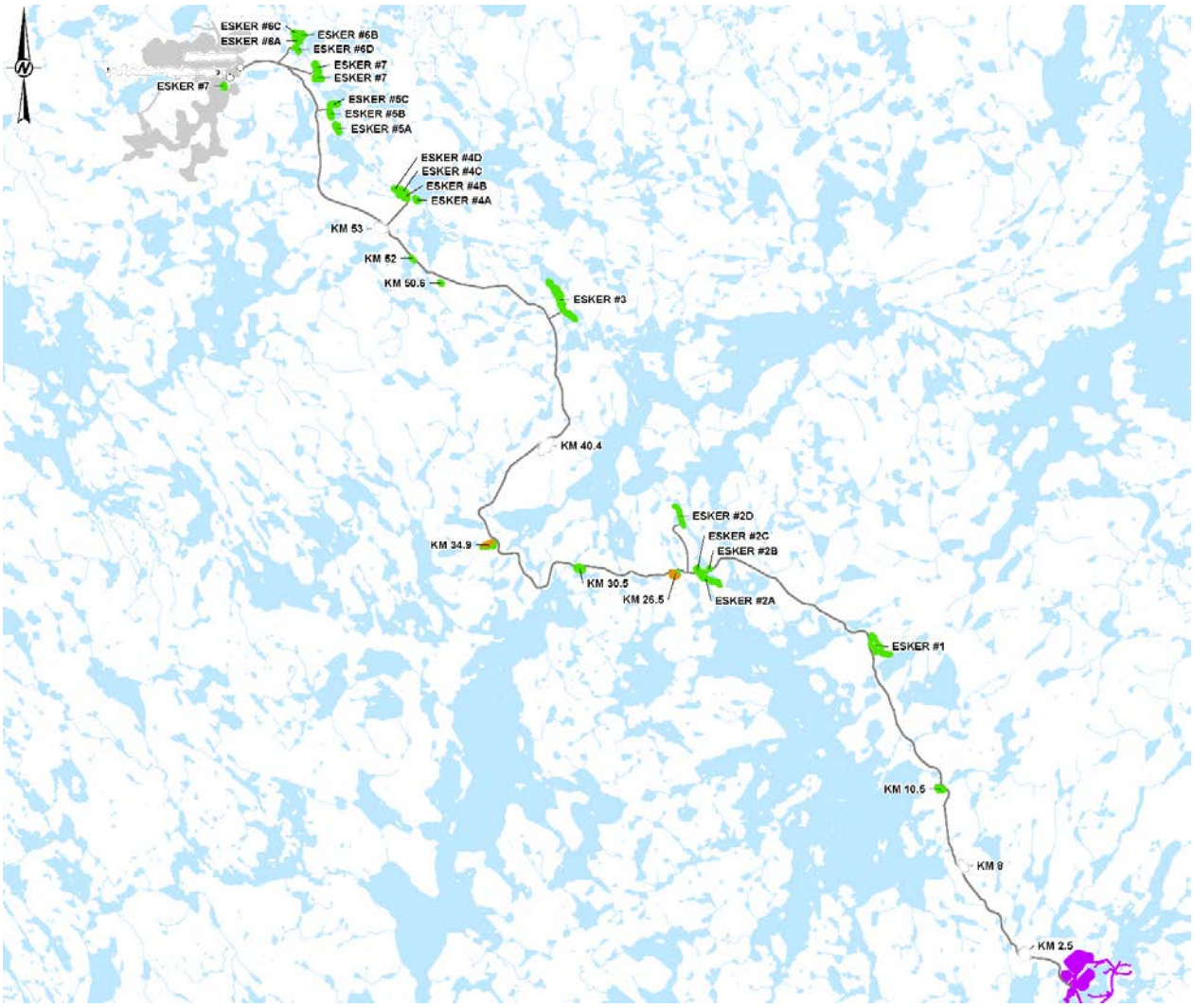

Figure 1.2 Whale Tail Pit Haul Road and location of existing borrow pits and quarries

SECTION 2 • RELATED DOCUMENTS

The specific plans that provided input to the Road Management Plan (RMP) and that are cited throughout this plan include the following:

- Emergency Response;
- Spill Contingency Plan;
- Terrestrial Ecosystem Management Plan; and
- Interim Whale Tail Pit Closure and Reclamation Plan.

The RMP is in effect for the expansion of the exploration access road to a haul road (construction), operation, and closure phases of the road. It will also be in effect during any periods of temporary closure of the Whale Tail Pit Haul Road.

SECTION 3 • CONSULTATION

Public consultation and engagement is a legal requirement in Nunavut, an industry best practice, and an important corporate commitment. Effective public consultation and engagement helps ensure that community members are informed and knowledgeable about proposed projects, that community support for those projects is more readily obtained, and sustainable development goals are achieved. A key goal of Agnico Eagle's public consultation and engagement program has been to ensure the Company obtains a "social licence to operate", by securing the support of a majority of residents from potentially impacted local communities.

To obtain this goal, a number of process goals have been followed:

- identification and prioritization of communities and community stakeholder groups;
- developing an understanding of key community and stakeholder views regarding the Project;
- addressing community and stakeholder issues and expectations;
- identifying current and historical patterns of land- and resource-use;
- identifying VECs and VSECs;
- determining criteria for evaluating the significance of potential impacts;
- deciding upon mitigating measures;
- formulating compensation packages where necessary;
- identifying and implementing monitoring measures, including post-project audits; and
- continuous improvement.

Since operation of the Meadowbank Mine began, Agnico Eagle has continued public consultation by meeting with employees, especially local employees that live throughout the Kivalliq, meeting in the communities with local stakeholders and regulatory agencies which has allowed a better general understanding of the rights, interests, values, aspirations, and concerns of the potentially affected stakeholders, with particular reference to the local population. Through this continued consultation Agnico Eagle has developed an operational culture that recognizes and respects these relevant interests in the planning and executing processes. A record of consultation that included the Whale Tail Pit Haul Road is provided in Volume 2 of the FEIS, Table 2-H (Agnico Eagle, 2016a). Agnico Eagle has and will continue to engage with regulatory agencies, the KIA and other stakeholders.

3.1 Road Use by Nunavummiut and Other Developers

The Whale Tail Pit Haul Road is a private road used solely by Agnico Eagle and its contractors. Agnico Eagle intends to keep the road closed for public use at this time. This is mainly due to the fact that the road is not entirely accessible from Baker Lake as there is restricted use near the Meadowbank mine site, which bisects the road. Agnico Eagle is unaware of any possible future developments in the vicinity of the Meadowbank Mine and Whale Tail Pit that could use the road.

However, it is Agnico Eagle's responsibility to decommission and reclaim the road once its activities in the area are completed. For a third party to take over the road(s), that third party would have to complete its own arrangements with the land owners (KIA and Crown) and then complete its own environmental screening/assessment and permitting process covering future use. Agnico Eagle does not own the land on which the access road is constructed on and, thus, cannot transfer future ownership or use privileges to any third party. Agnico Eagle must complete its obligation to decommission and reclaim the road unless directed otherwise by a combination of the landowners and other regulatory agencies who issued permits/authorizations for it.

SECTION 4 • MEASURES TO PREVENT PERMAFROST DEGRADATION

The Whale Tail Pit Haul Road has been designed with a minimum fill thickness to maintain permafrost conditions within the subgrade soils.

Mitigation and environmental design features to reduce the potential for permafrost degradation are as follows:

- The road alignment avoids, where possible, fine-grained, poorly drained, ice-rich, frost susceptible soil conditions due to susceptibility to thaw related settlement;
- Regions of high ground relief (higher elevations) were sought to provide better drainage conditions, to minimize the potential for snow drifting on the road and to avoid organic depressions and/or other poor ground conditions, which are more abundant in the low lying areas;
- Road fill material will be placed directly over the existing soil layer without cutting, stripping, or grubbing to avoid disturbing the subgrade soils;
- Only thick drifted snow will be removed before the road fills are placed;
- Road fill used will be dependent on the underlying ground conditions; these are:
  - Soils very susceptible to freeze and thaw induced settlement where thawing of the near-surface sub-grade is expected to result in significant strength loss and excessive settlements. The road fill thickness in this situation will be a minimum of 1 m plus sub-base[1], and will employ the use of geogrids, woven geotextiles and expanded polystyrene to protect the soil (see figure 4-1 for details);
  - Soils relatively susceptible to freeze and thaw induced settlement where thawing of the near-surface sub-grade is expected to result in significant strength loss and excessive settlements. Where appropriate, the road fill thickness in this situation will be a minimum of 1.5 metres plus sub-base and may also employ the use of geogrids and woven geotextiles over the soil (see figure 4-2 for details); and
  - Soils relatively unsusceptible to freeze and thaw settlement where thawing of the near-surface sub-grade is expected to result in minimal strength loss and tolerable settlements. In this situation the thickness of the roadbed will be a minimum of 0.9 metres plus subbase (see figure 4-3 for details).
- To prevent thawing of subgrade soils, to the greatest extent possible the road will be constructed in the winter when the subgrade soils are frozen.

[1] The thickness of the sub-base will be variable and will in part be dependent on the topography of the ground surface where the road is to be constructed.

The haul road, the road and its shoulders will be inspected weekly (at a minimum) during the summer period for evidence of seasonal freeze and thaw adjacent to the toe of the road embankment. Such movements are expected and may lead to longitudinal cracking and thaw settlement especially for portions of the road founded on thaw susceptible (ice rich) soils. When such areas are discovered, the affected area will be repaired using granular material obtained from a borrow pit. Agnico Eagle will maintain stockpiles of such material in select borrow pits that will remain open following completion of the road.

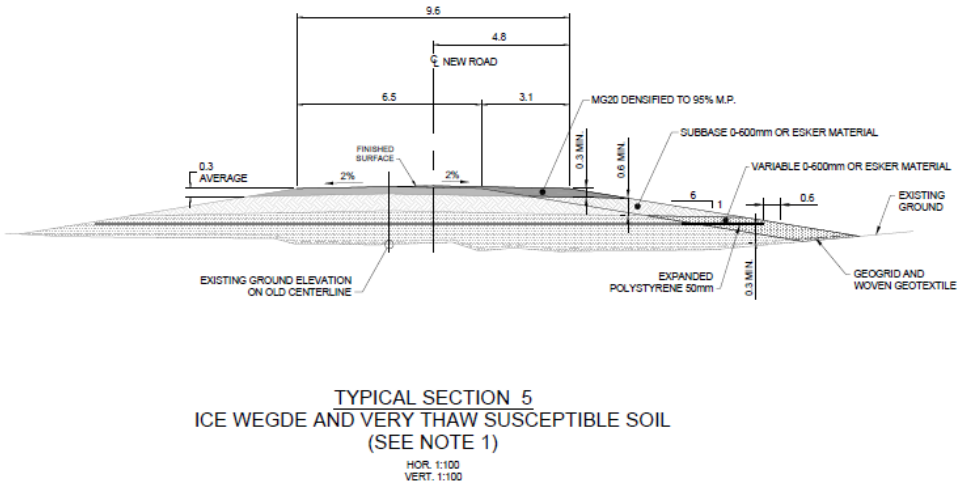

TYPICAL SECTION 5
ICE WEGDE AND VERY THAW SUSCEPTIBLE SOIL
(SEE NOTE 1)
HOR. 1:100
VERT. 1:100

Figure 4.1 Typical cross-section of Haul road on ice wedge and very thaw susceptible soil

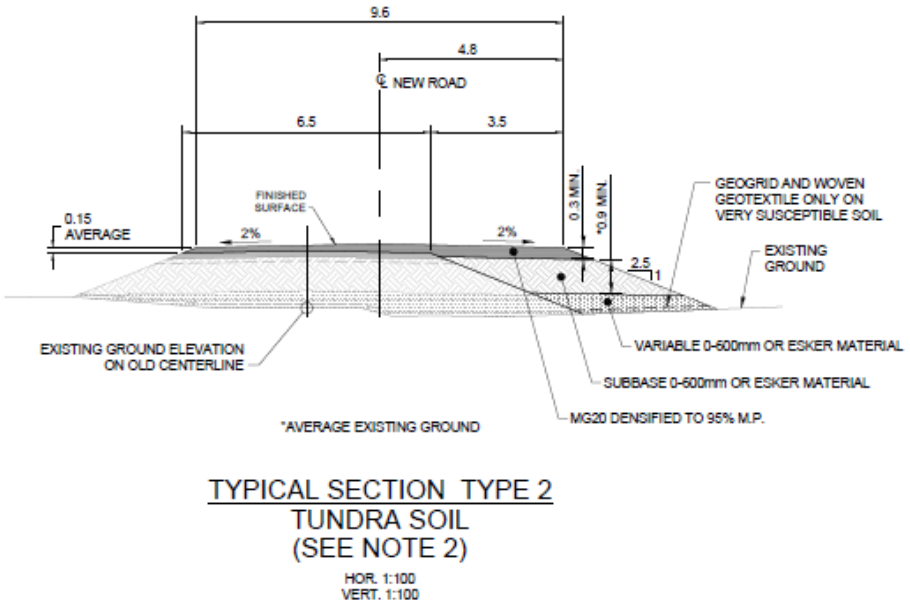

Figure 4.2 Typical Cross-section of Haul road built over thaw susceptible soil

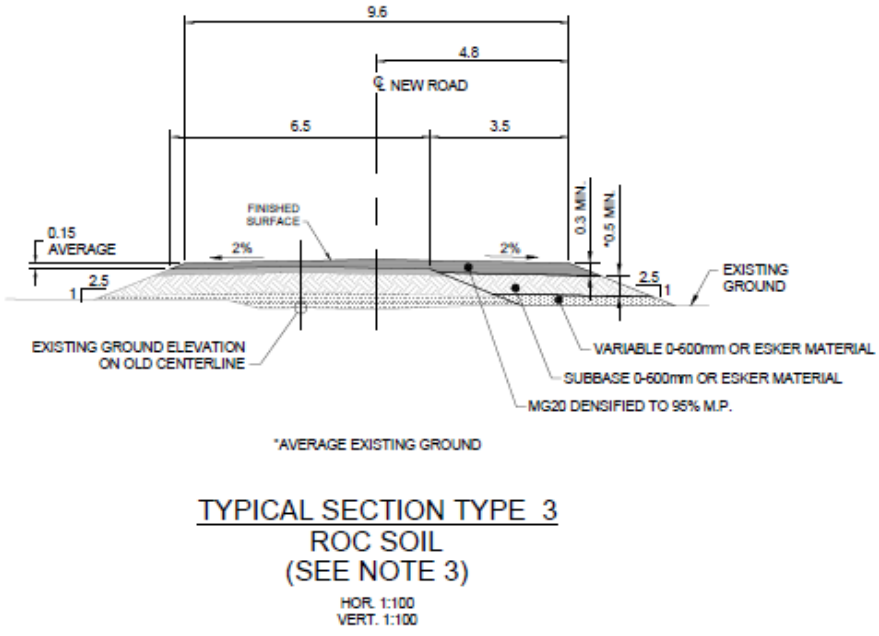

Figure 4.3 Typical section of Haul road built over soil relatively unsusceptible to freeze and thaw settlement

SECTION 5 • BORROW PIT MANAGEMENT

5.1 Open Pit and Borrow Pit Extraction Methods (including blasting if needed)

Table 6.1 presents the location and area of the approved borrow areas that was used to extract material for the expansion of 9 of the 6.5 m Amaruq exploration access road to the 9.5 m Whale Tail Pit Haul Road. Esker and quarry locations are presented in Table 5.1.

The excavation and material removal in the eskers were as follows: ripping frozen borrow area material will be attempted using a dozer. This loosens the material and allows it to be picked up using a loader or a hydraulic shovel. Should this fail, standard drill and blast procedures can be used. The sequence of steps under this circumstance follows that for waste rock from the Vault open pit. As for material in quarries, it will be extracted following standard drill and blast procedures.

Table 5.1 Haul Road Borrow Pits, Quarries and Waste Rock Sources for Road Construction and maintenance

ID Number	Land Ownership	Location UTM Zone 14 W	
		Easting (m)	Northing (m)
Vault Open Pit	Meadowbank Gold Mine (IOL)	640141	7221038
Esker 1	CL	633379	7232759
Esker 2	CL	626649	7235662
Esker 3	CL	621825	7247508
Esker 4	CL	614953	7250442
Esker 5	IOL	611936	7253888
Esker 6	IOL	610689	7256058
Esker 7	IOL	607799	7254627
Quarry km 10.50	IOL	635421	7227574
Quarry km 26.25	CL	625203	7235912
Quarry km 30.05	CL	621434	7236108
Quarry km 34.90	CL	618135	7237042
Quarry km 50.60	CL	616169	7247096
Quarry km 52.00	CL	615073	7248027

CL=Crown Land, IOL= Inuit Owned Land.

If deemed necessary, the design, size and shape of the blasts are planned with safety being the foremost consideration and best management practices for blast procedures will be followed. A

predetermined pattern of drill holes are drilled to a predetermined depth and filled with explosives. Prior to a blast, all personnel and equipment are moved to a safe distance from the blast area. The blast fragments the rock and/or frozen esker material which is then loaded into haul trucks using either a loader or by a hydraulic shovel. The truck drives to the end of the road where the rock/esker material is dumped. The final step is moving the rock/esker material into place using a dozer. This sequence is called a "drill, blast, load, haul, dump" sequence.

Approved ammonia management procedures at the Meadowbank Mine, will be adopted to ensure blasting practices monitor explosive quantities and blast performance to optimize the blasting practices while reducing impacts to nearby water quality from blast residue.

Some rock can be moved to a crusher to produce aggregate of various sizes[2]. Operations in the Vault open pit use explosives to break the rock. The crusher is to be located as far from water as possible and where it is best shielded from the prevailing wind, preferably behind a high wall so as to reduce the quantity of wind-blown dust and have as much dust as possible fall within the bounds of the borrow pit.

With the onset of winter, ramps will be built to the top of some eskers to obtain access to the borrow pit. The following summer the aggregate material will be allowed to thaw and subsequently be stripped using a dozer or loader. It should be possible to strip two layers over the summer period, each to a depth of approximately one metre. The material will be piled in mounds to allow drainage. Subsequently the mounded material will be easily handled at all times of the year[3]. If access to the esker borrow pits is delayed, other procedures will be used to access road building materials at all times of the year.

5.2 Borrow Pits Mitigation Measures

The ranking of mitigation options is as follows:

- **Avoidance** – using an alternate site to avoid the adverse effect all together. This is the most desirable;
- **Minimization** – taking actions to minimize and/or contain effects to the maximum extent possible during engineering design, construction, operation and closure;
- **Rectification** – taking actions to rehabilitate or restore the affected environment after the fact; and
- **Compensation** – this is used as a last resort to offset adverse environmental effects. This is the least desirable.

[2] Aggregate will only be produced if it is required in building or maintaining the road.

[3] This procedure will be used if time allows.

Best management practices will employ the following general mitigation measures for the borrow pits:

- Minimize the surface area of borrow pits;
- Locate borrow pits in well drained areas;
- Maintain a minimal distance of 31 meters between the borrow pits and waterbodies;
- Where possible, maintain the floor of the borrow pits slightly above the elevation of the surrounding area or blast with a sloped floor to drain water naturally to promote natural drainage patterns, to avoid creating ponds, and to prevent permafrost degradation in borrow pits;
- Prevent erosion and sedimentation through appropriate control measures such as silt fences;
- Carry out ARD/ML testing and water quality monitoring in support of mitigation measures;
- Protect archeological resources and mitigate as deemed appropriate by GN Cultural and Heritage department;
- Protect predatory mammal denning sites;
- If deemed necessary, maintain air quality through dust control/suppression;
- At the request of the NIRB and local stakeholders, as a safety measure, flag borrow areas and refuelling areas; and
- Use progressive reclamation in closing borrow pits that are no longer needed.

Where mitigation measures are not proving effective, adaptive management will be employed to address shortcomings.

5.3 Acid Rock Drainage and Metal Leaching

Geochemical testing was carried out to assess the chemical composition of the potential building material, its potential to generate acid rock drainage (ARD), and its potential to leach metals into the receiving environment upon exposure to ambient conditions. Sampling and testing prior to use of any borrow pit significantly reduced the risk of ARD/ML. Avoiding the use of undesirable or questionable road building materials ranks this mitigation measure as highly desirable.

To confirm that the best available road building materials are being used in constructing the road, additional samples will be collected during the construction of the road. Additionally, water quality monitoring will be carried out in confirming that the road building materials are not negatively affecting nearby water quality.

5.4 Management of Water Originating from Borrow Pits

While ARD/ML testing is a measure to avoid using questionable road building materials, water quality monitoring of seeps from borrow pits provides information on possible impacts on the environment should the water reach any nearby water bodies. A buffer of at least 31 m of undisturbed land is maintained between borrow pits and water bodies, and best management practices will prevent direct drainage. However, any significant seeps originating from the borrow pits that are likely to

reach receiving waters will be sampled and analyzed for a full suite of water quality parameters[4]. All surface runoff during the construction where flow may directly or indirectly enter a water body will be sampled for TSS as per the requirement of Part D, condition 13 of the Water License 2AM-WTP1826.

Any problematic water will be directed away from water bodies, or held if possible. If necessary, silt curtains will be used to control suspended sediments in water seeping from the borrow pits.

Although erosion is not expected to originate from water flow from borrow pits, any evidence of erosion will be repaired by placing rip-rap over the affected area, and measures will be taken to reduce the velocity of the water with, for example, silt curtains and/or small dikes, as per Part D, condition 11 of the Water License 2AM-WTP1826.

As per the quarry leases requirements (Item 17 of Quarry Permit KVCA15Q02, Item 17 of Quarry Permit KVCA15Q01, and Item 18 of Quarry Permit KVCA18Q01), a water monitoring plan will be prepared for quarries in which explosives are in use. Water will be sampled monthly and analyzed for a full suite of water quality parameters[4]. Prior to the tenth day of each month, a report will be submitted to the KIA indicating the water quality results. Water results shall be tabulated and compared to applicable CCME and MMER guidelines.

5.5 Management of Archaeological Resources at Borrow Pits

Borrow pits and quarries identified for material extraction were surveyed for archaeological resources. Areas selected avoid archaeological resources.

If any potential archaeological site is identified during the operation of any borrow pit, work will stop, a professional archaeologist will be consulted, and Culture and Heritage will be informed of the discovery. If an archaeological site or find is confirmed, the quarry/esker or borrow pit will not be developed or the site will be mitigated.

All road construction equipment will remain within the boundaries of the borrow pits to ensure any nearby archaeological site is not inadvertently damaged.

[4] Physical Parameters: pH (field and laboratory), temperature (field), alkalinity, bicarbonate, carbonate, electrical conductivity, hardness, hydroxide, ion balance, total dissolved solids, total suspended sediments
Nutrients: NH_4, NO_3, NO_2, PO_4
Major Ions: Ca, Cl, Mg, K, Na, SO_4
Trace Metals: Al, Sb, As, Ba, Be, B, Cd, Cr, Cu, Fe, Pb, Li, Mn, Hg, Mo, Ni, Se, Ag, Sr, Sn, Ti, U, V, Zn

5.6 Ground Ice and Permafrost Protection

The selected borrow pits sites are on well-drained esker deposits. All eskers have positive topography rising above the local setting. These types of granular deposits were selected because they are largely free of ground ice, thereby minimizing possible thaw settlement, which can result in erosion, slumping of side slopes, and an altered landscape that extends beyond the borrow pit.

Should permafrost degradation become evident, the area will be monitored and, if necessary, stabilized by covering the affected land with 1.0 to 1.5 m of granular material. This reclamation effort would allow the permafrost to move up into the material covering the area and stop any further permafrost degradation or prevent further melting of any ground ice. Inspections of borrow pits will continue after their closure at the end of construction.

Any significant seeps originating from the borrow pits as a result of ground ice, permafrost melting, or from precipitation events will be monitored if the water is likely to reach receiving waters[5].

[5] Shallow, standing water will not be collected as it poses little risk to the receiving environment.

SECTION 6 • TRAFFIC MANAGEMENT ON THE HAUL ROAD

All ore transportation to the Meadowbank Mill, backhauling of material, and resupply of required fuel, supplies, equipment and workers for the Whale Tail Pit will be transported via the Whale Tail Pit Haul Road. All drivers transporting these materials and personnel will either be Agnico Eagle employees or employees of contractors directly hired by Agnico Eagle. In order to operate vehicles on the haul road, they must possess the Meadowbank certification for the appropriate class of vehicle. Agnico Eagle will educate all its employees and all its contractor's employees on road safety rules during the safety induction training that occurs before they first drive the road. The safety rules[6] developed for the road will apply to Agnico Eagle employees and Agnico Eagle contractor employees. The Whale Tail Pit Haul Road will be closed for public use.

All Agnico Eagle and contractor's vehicles that travel routinely on the road will be equipped with a radio set to the requisite road frequency. Consequently, traffic on the road will always have radio contact with security, and other Agnico Eagle and contractor traffic. This system will be used to report any unusual conditions along the road such as location of other vehicles, presence of wildlife on the roadway, presence of non-Agnico Eagle traffic such as snowmobiles or ATVs crossing the road, any special road conditions, any special weather conditions, etc.

6.1 Intersection of Haul Road with Traditional Land Use Crossings

Two traditional land use crossing locations were identified during IQ/TK workshops and following meetings with the Hunters and Trappers Organization (HTO). A first location has been set at km 12. The crossing design is shown on Figure 6.1. More locations for Traditional Land Use Crossings will be identified in collaboration with the HTO. Haul traffic from the Whale Tail Pit to Meadowbank Mill will have the right-of-way. Traditional land users (i.e. hunters on ATVs or snowmobiles) crossing the Whale Tail Haul Road on identified ramps must yield to Haul Road Traffic; Haul Road Traffic approaching traditional land use crossings must be vigilant of the potential use by ATVs or snowmobiles. This intersection will have a stop sign on the traditional land use crossing locations to give way to the mine haul trucks. Hunters and traditional land users on snowmobiles or ATVs will have to stop, look both ways and yield to traffic before crossing the road. Traditional land use marked signs will be installed on the haul road to warn haul trucks and other vehicles on the road to ensure users protection and safety of traditional land users on ATVs or snowmobiles.

[6] See the Section 9 for complete details on safety measures proposed for the haul road.

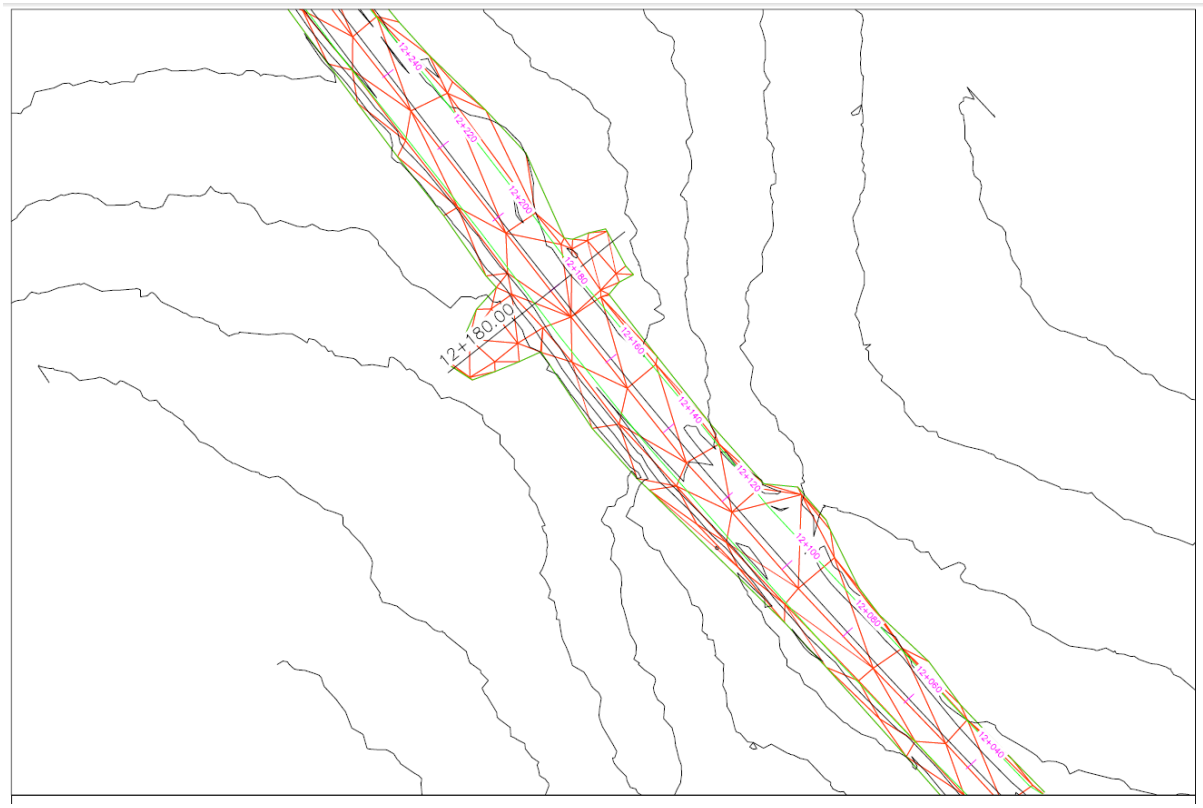

Figure 6.1. Design of traditional land use crossing at km 12

6.2 Other Access Control Procedures

There will be occasions when access to the Whale Tail Pit Haul Road will need to be curtailed for short time periods for special reasons, such as bad weather, unsafe road conditions, maintenance activity on the road, heavy operational related truck traffic, movement of oversized loads, and/or presence of large numbers of caribou on or adjacent to the road. The road could also be temporarily closed in the event of an incident, accident or other event requiring mitigation or response. Typically, these short-term closures will be required to ensure safety. During these times, the road access would be physically blocked at both ends of the road when appropriate.

6.3 Projected Whale Tail Traffic on the Whale Tail Pit Haul Road

The amount of traffic on the road will be continuous and may increase during different periods of the year. This will be highly dependent on the level of activity at the Whale Tail Pit or Exploration camp site and the time of year, such as summer when more traffic can be expected following the arrival of supplies and materials by sea). Weather will also directly influence use of the road (e.g. virtually no traffic is to be expected when the weather is bad).

Agnico Eagle and contractor vehicles expected to use the road will include, but not be limited to, long distance haul trucks, emulsion truck, pick-up trucks, cube vans, cargo trucks (to transport landfarm

material, sewage sludge, and exploration supplies), buses, fuel trucks, tractor-trailers, snowplows and graders.

Summer traffic is expected to be moderately higher than winter traffic as more contractual work can be expected over the summer, especially during the construction period at Whale Tail Pit. Hauling ore, backhauling material to Meadowbank, fuel deliveries and passenger van/bus traffic are not expected to vary a great deal between winter and summer.

SECTION 7 • INSPECTION AND MAINTENANCE OF THE WHALE TAIL PIT HAUL ROAD

Inspection precedes maintenance of the haul road. Agnico Eagle recognizes that a good inspection program will lead to the early identification of areas of the road where improvements are necessary. As per best practice management, the early resolution of any deficiencies will result in less ongoing maintenance and repair of the driving surface and to water crossings.

Agnico Eagle has sole responsibility for the ongoing inspection and maintenance of all of the components of the road, including the roadbed, bridges, circular corrugated culverts, and the borrow pits used in the construction, expansion and maintenance of the road. Agnico Eagle will apply the experience that it has gained from the ongoing operation of the Meadowbank All-weather Road, which has now been in operation since 2010. This experience will be applied in the planning of the day-to-day operation, inspection and maintenance of the Whale Tail Pit Haul Road. Agnico Eagle will have a road supervisor who will be responsible for the ongoing road inspection and maintenance of the road.

The road supervisor will conduct periodic inspections (minimally on a weekly basis) of the road to ensure that the road is maintained for safe travel of personnel, equipment, and supplies. Environment department also conduct weekly inspection of the road. These inspections will be recorded and any deficiency recorded and followed up by a corrective plan. These periodic inspections will include an inspection of the bridge abutments and a visual observation of the road surfaces to assess the status of the road's foundation.

During the summer period, the road surface will be maintained with gravel being spread as required and regular grading of the road. In the fall, winter and spring time the maintenance will be adjusted according to the weather conditions. Snow clearing along the road will be done to ensure that the road can be operated safely. The manner in which the snow is cleared will also take into account the road configuration to ensure that snow accumulation will not cause any particular problem during the freshet. Particular attention will be put on clearing adequately water crossings along the haul road to ensure proper flow and avoid blockage at freshet.

The entire road will be inspected for signs of accumulation of ponded water either on the road surface or along the sides of the road. Where noticed, the Agnico Eagle road supervisor will evaluate and monitor the accumulation to determine why water is accumulating in these areas. Based on these evaluations and to avoid erosion or washing out of the road, the road supervisor will take remedial action where and when necessary to correct the cause of such ponding, such as grading of the road surface to remove areas of ponding or installation of additional culverts if the road is causing excessive water ponding.

7.1 Watercourse Crossings Inspections and Maintenance

The watercourse crossing inspection and maintenance program has three main components:

- A regular inspection program to identify issues relating to watercourse crossings, such as structural integrity and hydraulic function;
- An event inspection program to track the impacts of large storm events on watercourse crossings, such as structural integrity and hydraulic function; and
- A culvert location inspection program to ensure that pipe or corrugated culverts have been installed in the right location with respect to the watercourse and that their capacity is adequate to ensure that the culvert(s) pass the water under all hydraulic conditions. In most cases for circular, corrugated culverts, they will be installed in multiples at different elevations at each stream crossing to ensure that these culverts can adequately pass normal summer flows as well as spring freshet and heavy rainfall flows.

7.1.1 Regular Crossing Inspection and Maintenance

Just prior to spring freshet, all culverts and stream crossings will be inspected to confirm that they are in good state to accommodate the rapid spring thaw that is seen in the north. During the freshet period, crossings inspections will be performed daily (mid-May thru June) and weekly during the remainder of the ice-free period prior to fall freeze-up (July through October) by the road supervisor and/or an environmental technician. An annual geotechnical inspection of the road will be conducted by a qualified engineer.

These inspection activities for each watercourse crossing will consist of:

- Visual inspection of its infrastructure to identify defects, cracks or any other risks to structural integrity. Particular attention will be paid to the inlet and outlet structures of culverts, and to bridge abutments and their foundations, as required;
- Visual inspection to identify sediment or other debris accumulation impeding the free flow of water through the crossings. Maintenance operations will consist of hand removal of accumulated debris and repairing damages as soon as possible;
- At the request of DFO, annually during the springtime, inspect flows at the embedded culvert at km 126.1 to ensure small bodied fish passage continues to be possible; and
- Visual inspection of upstream and downstream channel to identify bed erosion or scour around the watercourse crossing structure. Particular attention will be paid to abutments and their foundations as they will be vulnerable to scour and erosion during flood events. Particular attention will also be paid to potential sources of sediment transport at the crossing.

Inspection results will be recorded by Agnico Eagle to help track changes in conditions over time. Maintenance operations will consist of undertaking remediation of any detected problems and repairing damage as soon as possible.

7.1.2 Event Crossing Inspection and Maintenance

Inspection frequency will increase just after heavy or prolonged rainfall storm events. Visual inspection of each watercourse crossing will be completed to identify potential risks to the crossing's structural integrity, debris accumulation and whether erosion and scour have occurred. Water accumulation along the road will also be monitored. Results will be recorded by Agnico Eagle to help track changes in condition over time. The remediation of any detected problem and any necessary damage repairs will be undertaken as soon as possible, under the direction of Agnico Eagle's road supervisor.

7.1.3 Culvert Location Inspection

Following their installation, the circular, corrugated culvert crossings will be visually inspected to confirm they have been properly executed and installed. The culverts approved for extension with the haul road construction may be installed during winter conditions and thus it is possible that a culvert will not be sited correctly to pass all water through the road, which results in excessive water ponding against the road. The intent is to check for such conditions during the first snow melt and after rain events so that if deemed necessary, adjustments can be made accordingly. Although a conservative estimate of culverts has been installed, if deemed necessary following inspections additional culverts may be installed in locations that may not optimally route water flows.

7.2 Snow Removal and Snow Management

Sections of the road are expected to experience snow drifts because of strong winds over the winter period. As much as possible, this snow will be cleared to the downwind side of the road to limit the wind re-depositing the same snow on the cleared road. Routine spring snow management will include the removal of any snow that accumulates at bridges and culverts so that water at freshet can move freely through the circular culverts, and bridges. In the case of culverts, snow will be removed from both ends but not from the inside.

7.3 Dust Suppression

The amount of dust generated along a road is dependent on the material source used to surface the road, dryness of the road surface, the number of vehicles, weight and speed, and maintenance of the driving surface. Regular grading of the road combined with the addition of granular material from the eskers to the driving surface will be needed. This will improve road safety and also reduce the amount of dust. Dust will also be mitigated by maintaining posted speed limits.

In sections of the road or times identified by the Agnico Eagle road supervisor as being prone to high dust levels, where safe road visibility is impaired, or in areas where dust deposition is potentially impacting traditional land use, fish habitat and/or water quality, the road supervisor will arrange mitigation measures as appropriate and as per Part E, condition 12 of the Water Licence 2AM-WTP1826. This could involve actions such as grading of the road surface, placement of new coarser topping from eskers, and/or watering/ dust suppressant application of the road surface.

As per Part E, condition 1 of the Water License 2AM-WTP1826, the use of water for dust suppression on site and along the road shall not exceed a total of 45,750 m^3 per year. Water for dust suppression shall be from Nemo Lake and from pond along the Whale Tail Haul Road. As per Part I, condition 10 (f), the volume of fresh Water obtained for dust suppressant along the Whale Tail Pit Haul Road will be measured and recorded on a Monthly basis in cubic metres or as otherwise stated.

Based on the modelling of the dust emissions on the road, and the experience and monitoring data of the Meadowbank AWAR from Baker Lake to the mine site, use of chemical dust suppressants is not expected for the Whale Tail Pit Haul Road. However, if there are safety concerns or areas of particular interest, chemical dust suppressants may be only used as a last resort and only in accordance with the Environmental Guidance for Dust Suppression published by the Government of Nunavut Department of Environment (GN, 2014). Please refer to the Air Quality and Dustfall Monitoring Plan for more information regarding dust management.

SECTION 8 • ROAD SAFETY

Agnico Eagle security personnel along with Agnico Eagle's road supervisor will monitor activity on the Whale Tail Pit Haul Road through radio contact with drivers on the road, and through periodic patrols of the road. All Agnico Eagle and contractor vehicles that routinely travel on the road will be equipped with a radio set to the requisite road frequency. Consequently, all traffic on the road will always have radio contact with security and other road traffic. This system will be used to report any unusual conditions along the road such as the location of other Agnico Eagle and contractor vehicles, presence of wildlife on the roadway, presence of snowmobiles, any unsafe practices noticed, any special road conditions, any special weather conditions, etc.

The same safety rules that will apply to all users of the Whale Tail Pit Haul Road, these are:

- Maximum speed limits of 50 km/h;
- Use of seat belts by all drivers and passengers in pickup trucks, haul trucks, etc. is mandatory (bus passengers are an exception);
- Driving under the influence of alcohol or intoxicating drugs is prohibited;
- Wildlife has right-of-way on the road, and no harassment of wildlife is allowed;
- For their safety and protection, traditional land users and hunters are not permitted to drive on the haul road;
- All hunting activity must avoid shooting across the road and should respect a safe shooting distance from the road (suggested at 1 km)[7];
- Hunting is not allowed within 1 km of Meadowbank Mining, Whale Tail Pit, Whale Tail Pit Haul Road and the Amaruq Exploration Site;
- Traditional land users (i.e. hunters on ATVs or snowmobiles) crossing the haul road on identified crossing locations must yield to all Haul Road Traffic;
- Haul Road Traffic approaching traditional land use crossings must be vigilant of the potential use by ATVs or snowmobiles to ensure users protection and safety;
- Vehicles are not to park on the travel surface of the road but pull off the road at a safe location such as bypass pullouts to prevent accidents; and
- Signs will be posted warning of an entry/exit point[8].

[7] Winter travel between Gjoa Haven and Baker Lake may occur, which could lead to the road being crossed by ATVs or snowmobiles. Agnico Eagle will work with local hunters to ensure the preferred snowmobile crossing areas are well identified for both hunters and operators on the road.

[8].

8.1 Road Signage

Agnico Eagle will post appropriate road signs along the road in both English and Inuktitut. Typically, signs will advise drivers of the posted speed limit, of approaching bridges, of approaching curves, traditional land use crossings, and/or areas of lower visibility (blind hills or obstructed curves).

English and Inuktitut signs will be posted at the eastern and western ends of the road, at an appropriate mid-point to advise road operators that they are in a potentially hazardous area due to the presence of truck traffic.

Speed limit signs will be posted at intervals of approximately every 5 km along the road. Reflective flags will be installed along one side of the road to help drivers identify the road shoulder during blizzard, white out conditions or dense fog. Typically, these flags will be black in colour to help them stand out in white-out conditions, and are nominally set at intervals of 50 to 100 m apart. Kilometre markers will be posted at intervals of at least 1 km along the road.

A list of road signage is presented in Table 8-1.

Table 8.1. Road Signage

Element	Approximate Location
Safety precautions and users advice	At the eastern and western ends of the road, and at an appropriate mid-point along the road
Blind hill	200 m ahead of the beginning of a blind hill
Speed limit	Nominally at 5 km intervals
Curve	200 m ahead of a curve
Bridge announcement	200 m ahead of a bridge
Bridge side sign	On each side of the bridge
Traditional Land use crossing signs	At the crossing approach for haul road operators and well-marked stop signs at crossing approaches for ATV or snowmobile operators
Road Markers or flexible delineators (flags)	Nominally at 50 to 100m intervals
Kilometres markers	Nominally at 1 km intervals

8.2 Policing of Road Safety Rules

As a privately operated road, responsibility for "policing" will not fall under the Royal Canadian Mounted Police (RCMP). Responsibility for all operating and maintenance activity on the road will rest solely with Agnico Eagle. All Agnico Eagle employees and its contractors who will use the road will be required to take road safety training before being allowed to venture out on the road. Further, Agnico Eagle will concentrate on maintaining awareness among Agnico Eagle employees and contractors on the safe use of the road.

Agnico Eagle will use its road supervisor and site security to monitor what is occurring on the road. They will monitor activity on the road through periodic patrols of the road, and in conversation with drivers on the road at the time. Agnico Eagle will monitor speed limit infractions by direct observation of drivers seen to be driving too fast. Agnico Eagle will also rely on radio contact with all company and contractor vehicles on the road to monitor unsafe conditions or activity. Agnico Eagle does not have any special policing powers and cannot issue tickets or use other methods to address unsafe operation. Agnico Eagle can record unsafe practices, warn the person causing the infraction, and in severe or repeated cases of violation, in collaboration with the RCMP, will remove all privileges for future access to the road by an offending driver or hunter.

Regulatory inspectors can inspect the road and any associated infrastructure at will. Agnico Eagle will abide with the recommendations and directives provided by the inspectors.

However, it is worth noting that the *Criminal Code* of Canada applies to private roads. For example, if an accident were to occur on a road and alcohol was involved, that person could be charged by the RCMP.

SECTION 9 • ACCIDENTS, SPILLS, MALFUNCTIONS AND EMERGENCY RESPONSE

Emergency response is reactive, while prevention reduces the frequency of emergency responses. Agnico Eagle's emphasis will be on prevention, while at the same time keeping resources close at hand in order to respond to emergencies on the road in a timely manner.

Three possible causes of road emergencies are the road, vehicles and people. The interplay of these three elements leads to either safe use of the road or emergency responses. Agnico Eagle is fully responsible for the design, construction and maintenance of the road. Agnico Eagle will ensure that its vehicles and those of the contractors are in good working order before they venture out on the road. As well, Agnico Eagle will train its employees and contractors on road safety.

Agnico Eagle will lead by example in road safety. Agnico Eagle will train road users in road safety, shaping good driving practices and influencing behaviour on the road. Emphasis will be placed on the use of seat belts; observing posted speed limits; improving visibility for others by wearing reflective clothing at all times; dealing with driver inexperience, etc.

In urgent circumstances and where appropriate, Whale Tail Project operations will request assistance from other parties at the Meadowbank mine or in Baker Lake. However, based on Agnico Eagle's experience with the Meadowbank access and haul roads, Agnico Eagle does not believe that its Whale Tail Pit Haul Road will result in any increased demand on local public service providers (i.e., fire, police, ambulance, medical, and maintenance) in Baker Lake.

9.1 Accidents and Malfunctions

There will be accidents and malfunctions that occur on this road. Such unfortunate events are inevitable; no matter how much effort is devoted to preventing them. However, mitigation measures and response plans will be developed that can be applied to reduce the frequency and severity of such events. The types of events considered likely are as follows:

- Vehicle collisions that may result in personal injury and spillage of potential harmful materials such as fuel, lubricating fluids, antifreeze, etc.;
- Contact between vehicles and wildlife that may result in harm to wildlife, personal injury and spillage of potentially harmful materials, etc.;
- Single-vehicle accidents that may result in personal injury and spillage of potentially harmful materials;
- Risk of people getting stuck on the road in bad weather such as in heavy snow or whiteout conditions, or due to mechanical breakdown; and
- Spills of harmful materials onto the land or into water.

In an effort to prevent these occurrences, the road will be closed under poor weather or road conditions. Furthermore to improve the response in the event of an incident or accident, emergency

responders will be available at Meadowbank and at the Whale Tail site. Emergency spill response seacan are currently in place along the Whale Tail Haul Road at Km 125.5 and Km 147, between Whale Tail Pit and Meadowbank. More environmental sea can are planned to installed at Km 118, 130, 135, 139 and 160. Those sea can will be fully stocked with emergency response equipment and the road supervisor will have an emergency spill response kit in their vehicle.

All employees will be responsible to report, mitigate and clean up small spills. In the case of a larger spill, spill response will be implemented by the ERT based at Meadowbank and the environmental staff, who will advise, document, and report on initial response and clean-up actions. The Spill Contingency Plan will be activated in responding to a spill, as per Part H, condition 1 of Water License 2AM-WTP1826.

Agnico Eagle emergency response team (ERT) personnel are tasked with responding to any vehicle accident resulting in personal injury or spillage of harmful material. Agnico Eagle will initiate extraction and transport to medical assistance at Whale Tail Pit or the Meadowbank mine. In the event of serious injuries, the person or persons will be evacuated by air to the Baker Lake medical centre or a Winnipeg medical facility. The procedures in place in the Risk Management and Emergency Response Plan will be followed, as per Part H, condition 1 of Water License 2AM-WTP1826.

Agnico Eagle will report all reportable scale incidents to the appropriate Government authority (e.g., Mines Inspector, RCMP, Nunavut Water Board (NWB), NU Spill Line, Environment and Climate Change Canada, GN Department of Environment, Fisheries and Oceans Canada (DFO), KIA and Hamlet of Baker Lake).

The following actions are to be taken in the event of an accident on the road (including snowmobiles):

- Check the condition of people involved in the accident and provide immediate first aid if appropriate;
- Call the road or Mine Operations dispatch by radio and report the location and nature of the accident and indicate the type of assistance required (medical help, environmental cleanup, fire and/or mechanical help);
- Secure the accident site so that the vehicles do not continue to present a hazard to others. This may involve moving the vehicles to the nearest pull off in the event of a minor accident, or blocking off the road in both directions in the event of a more serious accident; and
- If safe to do so, secure the site to prevent continued spill or leakage of contaminants into the surrounding environment.

Upon receiving the accident call, the road dispatch will initiate the emergency response procedure passing along the information to the emergency response coordinator. The emergency response coordinator will then call out the required emergency response personnel to assist at the accident site.

Once the accident site is secured and all people requiring assistance have been removed to medical care, the emergency coordinator will turn the scene over to the Meadowbank Mine or Whale Tail Pit safety personnel so that an appropriate accident investigation can be initiated.

In the event of an incident involving contact with wildlife, the road dispatch will notify the site security personnel and the environmental representatives. Security and the site environmental team will then initiate an appropriate accident investigation. The Environmental Department will ensure that appropriate reporting of such incidents is made on a timely basis to the KIA, the Baker Lake HTO, and the GN Conservation Officer in Baker Lake. Any animal carcasses will be removed from the scene of the accident and will be incinerated or delivered to the GN officer.

In the event of a serious accident, the RCMP will be contacted and advised of the incident. The RCMP will then decide on whether they will become involved or take the lead on any subsequent accident investigation.

SECTION 10 • WILDLIFE MANAGEMENT

Wildlife is expected to occasionally be observed on or immediately next to the road. Caribou and other wildlife will have the right-of-way at all times. In case of problems (e.g. small herds or aggregations of caribou), the environmental department will be in charge of managing the situation and, with the collaboration of the security department, will advise road users by patrolling the road. Site personnel will notify and be notified by dispatch radio if any wildlife is observed on the road or if extra vigilance is needed along a specific area of the road.

The Terrestrial Ecosystem Management Plan has been updated to include adaptive management, mitigation, monitoring, and stakeholder engagement for the protection of wildlife habitat, ungulates, predatory mammals, small mammals and birds during the construction, operation and closure of the Whale Tail Pit Haul Road. The monitoring and management program described in the Terrestrial Ecosystem Management Plan will be implemented on the Whale Tail Pit Haul Road, and regularly reviewed and updated per discussions with the Terrestrial Advisory Group which includes representatives from the Government of Nunavut, Kivalliq Inuit Association and the Hunters and Trappers Organization of Baker Lake.

As per the Terrestrial Ecosystem Management Plan, the haul road embankment slopes will present an inclination of 4 horizontal: 1 vertical in order to facilitate wildlife crossing along the road, as well as for safety purposes, when possible

SECTION 11 • CLOSURE AND RECLAMATION

The Whale Tail Pit Haul Road will be decommissioned and reclaimed by Agnico Eagle if exploration on the Amaruq property fails to find sufficient ore resources to support mining, once post-closure monitoring requirements are completed for the Project, or if Agnico Eagle fails to obtain the necessary authorizations to proceed with further mining development. Closure and reclamation of the road would be initiated within a year following the completion of post-closure monitoring activities at the Project.

Specific details of the reclamation and closure activities are described in the Whale Tail Pit Interim Closure and Reclamation Plan.

Decommissioning of the road will be accomplished by loosening compacted surfaces, flattening side slopes, removing all culverts, and bridges, and other potential obstructions to drainages paths. The objective will be to make the road surface impassable by vehicular traffic by ripping the entire road bed and removing all bridges and culverts along the route.

The loosening of compacted surfaces will be accomplished by ripping of the roadbed utilizing a dozer with a “ripper” attachment on the back. Successive passes with the dozer longitudinally along the road bed will eliminate the level road surface and make travel difficult. It is anticipated that, in this way, the abandoned road will not be useable by wheeled vehicles (i.e. pick-up trucks). The road bed would still be useable by ATV or snowmobile and, thus, even after final reclamation, the reclaimed roadbed would offer similar passage as that which currently exists.

Road decommissioning works will be carried out as necessary to stabilize any slopes where potential for slope erosion may exist. Stabilization measures may require pulling back of side-cast fills on locally steep slopes or buttressing and/or re-contouring of steepened out slopes using non-acid generating material.

These measures would also be applicable to borrow pits located adjacent to the roadway that remained open following road construction. As much as practical, deactivated surfaces will be graded to blend with the existing topography.

To the extent practical, the reclamation would also restore the natural pre-road hydrology. Natural drainage courses would be restored primarily through the removal of all culverts and bridges, and through rehabilitation of channels and banks at the crossing sites. Cross-drain structures (cross-ditches) will also be installed where necessary between culvert sites. Where armouring rock (rip-rap) is required, this rock will be non ARD/ML for the protection of aquatic life. Where affected watercourses are fish bearing, the timing of work will have to be restricted to within the designated Fisheries and Oceans Canada fisheries work window. All in-stream works will be carried out using best management practices for erosion and sediment control.

Decommissioning of the road will start from the Whale Tail Pit road end of the road and progress southeast towards the Meadowbank mine. Stream crossings will be rehabilitated as they are encountered during the progression of the work.

11.1 Reclamation of Borrow Pits Sites

All borrow pit sources developed during the construction of the road will be selected to generate only non-acid generating/low metal leaching materials. Water quality monitoring and testing will be undertaken periodically during the construction and operational period of the road to measure the quality of water draining from the open borrow pit sites and from the road base materials.

The borrow pits will have gently sloping walls and be designed for positive drainage wherever possible. With prudent initial design, the borrow pits should require little reclamation following completion of the road. Loose material will be pulled to the floor of the borrow pit and the entrance blocked.

SECTION 12 ● REFERENCES

Crown-Indigenous Relations and Northern Affairs Canada (CIRNAC). 2008. Northern Land Use Guidelines, Pits and Quarries.

Agnico Eagle, 2018. Terrestrial Ecosystem Management Plan. Version 6. March 2019

Agnico Eagle, 2016a. Final Environment Impact Statement (FEIS) Volumes 1 to 8, Whale Tail Pit Project, Meadowbank Division.

Agnico Eagle 2016b. Amaruq Exploration Access Road Management Plan v 2. Agnico Eagle. June 2016.

Government of Nunavut, Department of Environment 2014. Guideline: Dust Suppression on Unpaved Roads

Nunamit Stantec Limited 2016. Archaeological Baseline Report. Agnico Eagle Mines: Meadowbank Division – Whale Tail Pit and Haul Road. Submitted to Agnico Eagle January 2016.

MEND 2009. Prediction Manual for Drainage Chemistry from Sulphidic Geological Materials. MEND Report 1.20.1, Natural Resources Canada.

Operational ARD-ML Sampling and Testing Plan – Whale Tail Pit, Version 4

AGNICO EAGLE

Meadowbank Division

Operational ARD-ML Sampling and Testing Plan – Whale Tail Pit Addendum

MARCH 2019
VERSION 4
WT023

EXECUTIVE SUMMARY

Agnico Eagle Mines Limited – Meadowbank Division (Agnico Eagle) will develop the Whale Tail Pit and Haul Road Project (Project), a satellite deposit located on the Amaruq property, to continue mine operations and milling at Meadowbank Mine.

The Amaruq property is a 408 square kilometre (km^2) site located on Inuit Owned Land approximately 150 kilometres (km) north of the hamlet of Baker Lake and approximately 50 km northwest of Meadowbank Mine in the Kivalliq Region of Nunavut. The deposit will be mined as an open pit (i.e., Whale Tail Pit), and ore will be hauled to the approved infrastructure at Meadowbank Mine for milling.

Mining facilities include accommodation buildings, two ore stockpiles, one overburden stockpile, one rock storage facility area planned to receive waste rock and waste overburden, a water management system that includes collection ponds, water diversion channels, and retention dikes/berms, and a waste water treatment plant.

Waste rock, overburden and lake sediment were sampled and tested as part of a geochemical program presented in Golder (2016). Among the 8 lithologies tested, 2 have low acid generating and metal leaching potential, while the remaining lithologies are either potentially acid generating and/or metal leaching rock. The overburden is non-potentially acid generating and non-metal leaching while the lake sediment is potentially acid generating and metal leaching. Testing will be completed on waste rock to identify material that is non-potentially acid generating and low leaching that can be used as construction and closure rock.

An approach is proposed to define if the waste rock lithologies can be used as construction/closure material or must be piled in the Whale Tail Waste Rock Storage Facility.

DOCUMENT CONTROL

Version	Date	Section	Page	Revision	Author
1	June 2016			The Operational ARD-ML Sampling and Testing Plan as Supporting Document for Type A Water Licence Application, submitted to Nunavut Water Board for review and approval	Golder Associates Ltd.
2	June 2018	All	All	Updated to address Term and Condition 8 (NIRB project certificate 008; March 15, 2018). Includes update to project nomenclature to reflect current usage.	Golder Associates Ltd.
3	November 2018	All	All	Update to address recommendation of CIRNAC and ECCC	Agnico Eagle
4	March 2019	All	All	2018 Annual report updated version	Agnico Eagle

TABLE OF CONTENT

EXECUTIVE SUMMARY ..... **i**

DOCUMENT CONTROL ..... **ii**

TABLE OF CONTENT ..... **iii**

Acronyms ..... **v**

Units ..... **v**

Section 1 • INTRODUCTION **1**

Section 2 • WASTE ROCK MANAGEMENT **3**

2.1 Lithologies 3

2.2 Waste Rock Segregation 3

2.2.1 Whale Tail Waste Rock Storage Facility Design 4

Section 3 • ASSESSMENT OF ARD/ML POTENTIAL AT WHALE TAIL PIT **5**

3.1 Field Sampling 5

3.2 Evaluation of ARD/ML Potential at Whale Tail Pit 6

3.2.1 ARD Testing and Classification of ARD Potential (PAG / NPAG) 6

3.2.2 Metal Leaching Potential Testing and Evaluation 7

3.2.3 Quality Assurance / Quality Control (QA/QC) 7

3.3 Waste Rock Delineation and Tracking 8

3.4 WRSF thermal cover material sampling/testing program 9

Section 4 • PLAN REVIEW, PERFORMANCE MONITORING & REPORTING **10**

4.1 Plan Review 10

4.2 Performance Monitoring 10

4.2.1 Water Quality Monitoring 10

4.2.2 Permafrost Development 10

Section 5 • ADAPTIVE MANAGEMENT **11**

5.1 Management Actions 11

Section 6 • REFERENCES **13**

Appendix A • Summary of the ARD/ML Potential of Whale Tail Mine Wastes **14**

Appendix B • Flow Chart for Waste Rock Delineation and Segregation 16

LIST OF TABLES

Table 2.0 Anticipated ARD/ML Potential of Waste Rock Types at Whale Tail (Golder 2016)..... 3

Table 3.0 Recommended Sampling Frequency by Rock Type..... 5

Table 3.1 ARD Classification of Whale Tail Pit Waste Rock and Overburden 7

Table 3.2 ARD Guidelines used to Classify Whale Tail Pit Waste Rock and Overburden..... 8

Table 5.1 Adaptive Management Actions Associated with the ARD/ML Plan 12

Table A.0-1 Summary of ARD/ML Potentials of Whale Tail Pit Waste Types 15

LIST OF FIGURES

Figure 1.1 Location of the Project 2

ACRONYMS

ABA	Acid-Base Accounting
Agnico Eagle	Agnico Eagle Mines Limited – Meadowbank Division
ARD	Acid Rock Drainage
HCT	Humidity Cell Test
LOM	Life of Mine
MEND	Mine Environment Neutral Drainage
MPA	Maximum Potential Acidity
ML	Metal (and arsenic) Leaching
NML	Not Metal Leaching
NIRB	Nunavut Impact Review Board
NWB	Nunavut Water Board
NP	Neutralization Potential
NPR	Net Potential Ratio
NPAG	Non-Potentially Acid Generating
PAG	Potentially Acid Generating
Project	Whale Tail Pit
QA/QC	Quality Assurance / Quality Control
SFE	Shake Flask Extraction
TDS	Total Dissolved Solids
TIC	Total Inorganic Carbon
WRSF	Waste Rock Storage Facility

UNITS

%	percent
kg	kilogram(s)
km	kilometer(s)
km^2	square kilometer(s)
mg/kg	milligram per kilogram
Mt	million tonne(s)
ppm	parts per million
t	tonne(s)
µg/g	micrograms per gram
wt%	weight percent

SECTION 1 • INTRODUCTION

Agnico Eagle Mines Limited – Meadowbank Division (Agnico Eagle) is proposing to develop Whale Tail Pit and Haul Road (Project), a satellite deposit located on the Amaruq property, to continue mine operations and milling at Meadowbank Mine. Agnico Eagle is seeking approval to extend Meadowbank Mine to include development of resources from Whale Tail Pit. Concurrent with the reconsideration of the Project Certificate by the Nunavut Impact Review Board (NIRB), Agnico Eagle is seeking an amendment to Meadowbank Mine Type A Water Licence (No. 2AM-MEA1525; NWB 2015) to include mining of Whale Tail Pit and construction and operations of associated infrastructure from the Nunavut Water Board (NWB).

The Amaruq property is a 408 square kilometre (km^2) site located on Inuit Owned Land approximately 150 kilometres (km) north of the hamlet of Baker Lake and approximately 50 km northwest of Meadowbank Mine in the Kivalliq Region of Nunavut. The deposit will be mined as an open pit (i.e., Whale Tail Pit), and ore will be hauled to the approved infrastructure at Meadowbank Mine for milling.

The general mine site location for the Project is presented in Figure 1.1.

This document presents an update to the Operational Acid Rock Drainage (ARD) and Metal Leaching (ML) Sampling and Testing Plan (Plan) to address NIRB Project Certificate 008 Term and Condition No. 8 (NIRB 2018), with the exception of thermal monitoring of waste rock, which will be covered in the Thermal Monitoring Plan (Agnico Eagle 2018). The Plan is closely associated with the Whale Tail Pit – Waste Rock Management Plan (Agnico Eagle 2018, Version 2) and the Water Management Plan (Agnico Eagle 2016).

The objectives of the Plan are to define the sampling, analysis, and testing procedures that are to be implemented to define the acid generating and metal leaching potential of waste rock for the Project. This characterization is to be used by mine staff to ensure that waste rock, overburden (till), and lake sediments are identified, managed, segregated and disposed of in an environmentally appropriate manner, as designated in the Plan. The Plan will also define if the waste rock, the overburden, and the lake sediment can be used as construction/closure material.

This Plan will be updated as required to reflect any changes in operation or economic feasibility occurs, and to incorporate new information and latest technology, where appropriate.

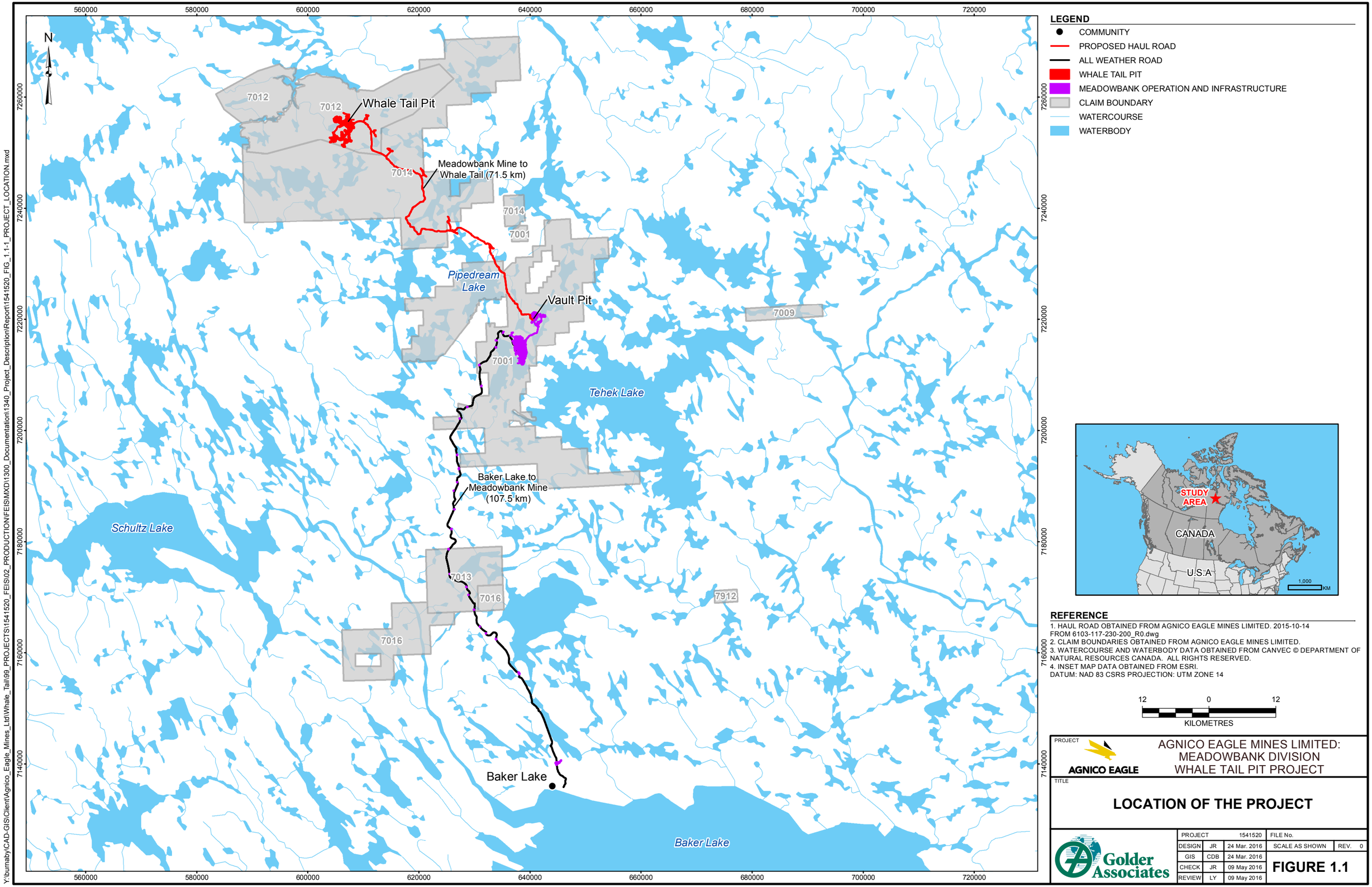

N
Whale Tail Pit
Meadowbank Mine to Whale Tail (71.5 km)
Vault Pit
Baker Lake to Meadowbank Mine (107.5 km)
Pipedream Lake
Tehek Lake
Schultz Lake
Baker Lake
7012
7014
7001
7009
7013
7016
7912
560000
580000
600000
620000
640000
660000
680000
700000
720000
7260000
7240000
7220000
7200000
7180000
7160000
7140000
LEGEND
COMMUNITY
PROPOSED HAUL ROAD
ALL WEATHER ROAD
WHALE TAIL PIT
MEADOWBANK OPERATION AND INFRASTRUCTURE
CLAIM BOUNDARY
WATERCOURSE
WATERBODY
STUDY AREA
CANADA
U.S.A
1,000
KM
REFERENCE
1. HAUL ROAD OBTAINED FROM AGNICO EAGLE MINES LIMITED. 2015-10-14 FROM 6103-117-230-200_R0.dwg
2. CLAIM BOUNDARIES OBTAINED FROM AGNICO EAGLE MINES LIMITED.
3. WATERCOURSE AND WATERBODY DATA OBTAINED FROM CANVEC © DEPARTMENT OF NATURAL RESOURCES CANADA. ALL RIGHTS RESERVED.
4. INSET MAP DATA OBTAINED FROM ESRI.
DATUM: NAD 83 CSRS PROJECTION: UTM ZONE 14
12 0 12
KILOMETRES
PROJECT
AGNICO EAGLE
AGNICO EAGLE MINES LIMITED: MEADOWBANK DIVISION WHALE TAIL PIT PROJECT
TITLE
LOCATION OF THE PROJECT
Golder Associates
PROJECT 1541520
FILE No.
DESIGN JR 24 Mar. 2016
SCALE AS SHOWN
REV. 0
GIS CDB 24 Mar. 2016
CHECK JR 09 May 2016
REVIEW LY 09 May 2016
FIGURE 1.1
Y:\burnaby\CAD-GIS\Client\Agnico_Eagle_Mines_Ltd\Whale_Tail\99_PROJECTS\1541520_FEIS\02_PRODUCTION\FEIS\MXD\1300_Documentation\1340_Project_Description\Report\1541520_FIG_1.1-1_PROJECT_LOCATION.mxd

SECTION 2 • WASTE ROCK MANAGEMENT

2.1 Lithologies

There are six major bedrock types (or lithologies) found at Whale Tail deposit: komatiite, greywacke, chert, iron formation, basalt, and diorite. Variable thicknesses of overburden and lake sediments are present which will be removed upon mining.

The ARD and ML potential of each waste rock lithology was evaluated through a static and kinetic testing program (Golder 2016) that is on-going. Details on the test methods used and results obtained are provided in Golder (2016; summarized in Appendix A). The anticipated ARD/ML potential for each rock type based on exploration drill core tests are shown in Table 2.1; it is noted that while the bulk of material from each lithology is PAG and/or ML, these lithologies do contain some material that is less reactive and non-potentially acid generating (NPAG) and/or non-metal leaching (NML).

Table 2.0 Anticipated ARD/ML Potential of Waste Rock Types at Whale Tail (Golder 2016)

Rock Type	Rock Unit Code	ARD Potential	ML Potential[1]	Tonnage (t)
Komatiite North	V4a – 0a	No	High	7,907,211
Komatiite South	V4a – 0b	No	Moderate	12,153,743
Greywacke Central	S3C – 3b	Yes	Variable	3,640,167
Greywacke South	S3S – 3b	No	Low	9,790,461
Greywacke North	S3N-3b	Variable	Variable	16,009,050
Chert	S10 – 3b	Yes	Variable	278,068
Iron Formation	S9E – 3b	No	High	8,958,267
Basalt	V3 – 1b	No	Moderate	2,344,027
Diorite	I2 – 8b	No	Low	628,264
Overburden	n.a.	No	Low[2]	5,666,408[3]
Lake sediment	n.a.	Yes	High[2]	

n.a. not applicable

[1] based on large column kinetic test results

[2] based on Shake Flask Extraction results

[3] Overburden and Lake sediment are considered as the same unit in the geological model

The NPAG waste rock tonnage required for the construction of the 4.7 m thermal cover of Whale Tail WRSF is 8,883,000 tonnes.

2.2 Waste Rock Segregation

Overburden generated from the Whale Tail Pit will be placed in the Whale Tail Waste Rock Storage Facility (WRSF). Characterization of ARD/ML potential in the excavated waste rock is required in order to properly segregate it for use or disposal, as follows:

- **General Construction and/or Closure** – Only rock that is NPAG and low leaching can be used for site construction, including dewatering dikes, and WRSF cover construction. It is the responsibility of the Geology Superintendent to ensure that all waste rock being used for

construction or reserved for future use during closure has been characterized and verified as being NPAG and low leaching.

- **Disposal** – All other waste rock (PAG and/or ML), as well as overburden, will be placed within the Whale Tail WRSF for permanent storage.

2.2.1 Whale Tail Waste Rock Storage Facility Design

The majority of waste rock generated at the Whale Tail site will be placed in the Whale Tail WRSF. Under the current plan, the Whale Tail WRSF has an area of approximately 110 hectares. Waste rock and overburden from the Whale Tail Pit not used for site development purposes will be trucked to the Whale Tail WRSF until the end of mine operations.

The Whale Tail WRSF is designed to minimize the potential for ARD and ML. The Whale Tail WRSF will be constructed to encapsulate potentially acid generating (PAG) and ML waste rock inside a layer of NPAG material as a control measure for ARD and ML. The NPAG rock that is placed on the top and sides of the storage pile is needed in the long term to host the thawed layer and prevent liquids from contacting the centre of the pile that contains PAG and ML waste rock. Presently it is anticipated that the cover design will be similar to the Meadowbank Portage WRSF. The cover will consist of a 4.7 m thick NPAG/NML waste rock layer on the top and edges of the facility. The cover is expected to maintain freezing conditions in the pile in the long-term. This rationale is based on results to date on thermal modelling that considers thermistor readings at the Portage waste rock pile (Golder 2018, in preparation). Rock oxidation can still occur in frozen material but will proceed at a slower rate than predicted by laboratory testing because of the cold temperature prevalent for much of the year. Permafrost will retain water as ice, so it was predicted that contaminants will not be transported away from the core of the WRSF in the long-term.

Monitoring will be conducted to measure temperatures throughout the waste rock pile, and to measure the depth of the annual surface thaw (see Section 4.2.2 and the Whale Tail Thermal Monitoring Plan). This information will be used to detail the rock cover design required to close the Whale Tail WRSF. Further information of the Whale Tail WRSF are provided in the Whale Tail Pit – Waste Rock Management Plan (Agnico Eagle 2018, Version 2).

SECTION 3 • ASSESSMENT OF ARD/ML POTENTIAL AT WHALE TAIL PIT

Sampling and testing of waste materials for ARD and ML will be conducted during mine operation in order to segregate suitable waste for use in construction and for closure (Section 2.2) from that which will report directly to the Whale Tail WRSF. This section discusses field sampling methods, analytical testing, ARD/ML evaluation criteria, and the delineation of waste rock.

Appendix B includes a flow diagram of the process to be followed for waste rock sampling, testing, and segregation.

3.1 Field Sampling

Drill holes will be sampled for testing as part of the ARD/ML evaluation (Section 3.2). Sampling will proceed according to the following guidelines that are currently utilized at Meadowbank Mine:

- The default sampling frequency is every fourth drill hole in each drill hole pattern. The shallow benches in Whale Tail Pit will be sampled at a frequency of one sample every two drill holes.
- Drill holes will be spaced to ensure an even distribution of samples throughout the planned blast area.
- Drill cuttings is collected and fully mixed in a sampling stainless steel tray placed beside the drill.
- The sampling stainless steel tray content will be transferred into a clean polyethylene plastic bag.
- Each sample will be collected from drill cuttings and will weigh at least 1 kilogram (kg).
- The samples will be labeled using a convention that is readily traceable back to the production drill hole numbers.

The Geology Superintendent will evaluate the default frequency based on the experience gained during the mining of the Whale Tail pit from previous drilling, sampling analysis results and visual inspections. The sampling frequency will be reviewed periodically and the rationale for any changes will be clearly documented and implemented only with the prior approval of the Nunavut Water Board.

Table 3.0 Recommended Sampling Frequency by Rock Type

Rock Type	Rock Unit Code	Sampling Frequency
Komatiite North	V4a – 0a	Every 4th hole
Komatiite South	V4a – 0b	Every 4th hole
Greywacke Central	S3C – 3b	Every 4th hole
Greywacke South	S3S – 3b	Every 4th hole
Chert	S10 – 3b	Every 4th hole
Iron Formation	S9E – 3b	Every 4th hole
Basalt	V3 – 1b	Every 4th hole
Diorite	I2 – 8b	Every 4th hole

3.2 Evaluation of ARD/ML Potential at Whale Tail Pit

The ARD and ML potential of all samples collected (Section 3.1) will be evaluated through laboratory testing, as described below.

3.2.1 ARD Testing and Classification of ARD Potential (PAG / NPAG)

The most conventional method of characterizing the ARD potential of waste rock is to classify it as PAG and NPAG based on the net potential ratio (NPR) value. The NPR is the ratio of the acid-buffering potential (neutralization potential or NP) and the acid generation (maximum potential acidity or MPA; assumed to be due to sulphide sulphur content, or total sulphur minus sulphate sulphur).

The Whale Tail Pit geochemical characterization study (Golder 2016) examined the use of carbonate NP as a surrogate for bulk NP using data obtained from exploration drilling (Golder 2016). The carbonate NP and bulk NP correlate well (R^2= 0.97), implying that NPR calculated using carbonate NP is a safe assessment of available buffering capacity. Further, MPA is calculated based on the total sulphur content of the samples (rather than sulphide content), which is conservative. This approach to ARD classification is based on observed trends in rock chemistry, mineralogy, and reactivity of neutralizing minerals (Golder 2016).

The Meadowbank onsite assay laboratory is equipped to analyze total sulphur and total inorganic carbon overnight for the samples of drill cuttings. Mine staff will use these results to calculate the NPR value for each sample as follows:

- Total sulphur is converted into **MPA** by multiplying the total sulphur wt% by 31.25, which yields an MPA value in kg $CaCO_3$ equivalent.
- Total inorganic carbon is similarly converted into a carbonate NP (**CaNP)** by multiplying the total wt% inorganic carbon (reported as %C) by 83.34 which yields an NP value in kg $CaCO_3$ equivalent.
- The carbonate NPR for the blast hole drill cutting sample is then calculated as **NPR = CaNP/MPA**.

This approach is consistent with the use of total sulphur and total inorganic carbon to calculate the MPA and CaNP of waste rock material for the Whale Tail Pit geochemical characterization study (Golder 2016).

The ARD potential of waste materials from Whale Tail Pit will be classified first based on total sulphur content and then using the NPR-based guidelines published by MEND (2009). Total sulphur will be used as an initial screening criteria to identify NPAG material, whereby a sample will be considered NPAG when it contains less than 0.1 wt% sulphur, regardless of the NP (Golder 2016). Where total sulphur is above 0.1%, the calculated carbonate NPR value will be used for sample classification, as summarized in Table 3.2.

Table 3.1 ARD Classification of Whale Tail Pit Waste Rock and Overburden

Total Sulphur Screening Criteria	NPR Screening Criteria (based on Carbonate NP)	ARD Potential
Total S < 0.1%	-	Non-potentially acid generating (PAG)
Total S > 0.1%	NPR > 2	
	1 ≤ NPR < 2	Uncertain or low acid generating potential
	NPR < 1	Potentially acid generating (PAG)

3.2.2 Metal Leaching Potential Testing and Evaluation

Waste rock materials can also potentially leach metals (and other elements) when they come into contact with water and air, which is referred to as ML potential and can occur even if the materials are non-acid generating. Arsenic is identified as a parameter of environmental interest based on laboratory leaching tests (Golder 2016).

The amount of arsenic released by leaching has been shown to be proportional to the total arsenic content of the sample (Golder 2016), whereby samples with total arsenic content below approximately 75 ppm (as µg/g or mg/kg) indicate a low potential to leach arsenic. This has been selected as a suitable identifier of arsenic leaching. Total arsenic will be analyzed at the Meadowbank on-site laboratory by hydride generation (Millennium Excalibur, PSA Analytical, 0.001 ppm detection limit), and arsenic leaching potential be inferred based on the total arsenic content.

A surface runoff water monitoring program will be implemented for the Project like it is at the other deposits of Meadowbank to detect ML in site contact waters. Further details on the water quality monitoring program are provided in Section 4.2.1.

3.2.3 Quality Assurance / Quality Control (QA/QC)

Samples from Whale Tail Pit will be subjected to the same quality assurance / quality control (QA/QC) program currently in use at Meadowbank, which includes the use of certified reference materials and duplicate analyses by an accredited external lab. Duplicate analyses include more complex testing described above for ARD classification (Acid Base Accounting or ABA), and metal leaching evaluation (bulk metal content and Shake Flask Extraction or SFE).

For the duplicate samples, the testing frequency of 75 samples per quarter that is currently in place at Meadowbank will be followed, however this frequency will be evaluated and altered as necessary as the database increases. A geostatistical approach will be considered to establish the number of QA/QC samples required by rock type to achieve statistical confidence.

Further, the duplicate test results will be used to confirm the total sulphur (0.1 %) and total arsenic (75 ppm) threshold values in place for waste classification. SFE results from the duplicate analyses will

be evaluated against the proposed Effluent Quality Criteria for arsenic (0.1 mg/L) and the 75 ppm value will be modified as necessary based on the results.

3.3 Waste Rock Delineation and Tracking

Following laboratory analysis, geology staff will classify waste rock into the following types of material as defined in Table 3.3.

Table 3.2 ARD Guidelines used to Classify Whale Tail Pit Waste Rock and Overburden

Waste Type	Criteria for Classification	Frequency of Outlying Data
NPAG/NML	Total S < 0.1% and/or NPR > 2 ***and*** Average Total Arsenic < 75 ppm	• No more than one PAG (S>0.1% and NPR<1) for every 8 NPAG samples. • No more than one uncertain sample (S>0.1% and 1≤NPR<2) for every 4 NPAG samples. • Average total arsenic value is below 75 ppm
PAG/ML	Total S > 0.1% and NPR < 2 ***and/or*** Average Total Arsenic > 75 ppm	• Two or more PAG (S>0.1% and NPR<1) for every 8 NPAG samples. • Two or more uncertain samples (S>0.1% and 1≤NPR<2) for every 4 NPAG samples. • Average total arsenic value is above 75 ppm

NPAG/NML waste can be used for construction (i.e. pads, roads, and dykes) and closure (i.e., Whale Tail WRSF cover material) while waste rock classified as PAG/ML must be stored in the Whale Tail WRSF. The criteria outlined in Table 3.3 can be re-evaluated when judged relevant by the Geology Superintendent in consultation with the mine engineer, as additional test data become available. The ARD/ML classification of all samples will be logged in a database for the Project, and will be available as required for annual reports or upon request. The rationale for any changes will be clearly documented and implemented only with the prior approval of the Nunavut Water Board.

NPR and total arsenic values will be transferred to the mine plans for each specific blast. Once blasting is complete the mine surveyor will identify the two waste categories: 1) suitable for capping and infrastructure (NPAG/NML) and 2) non-suitable material (PAG/NML-ML and NPAG/ML). Outlines from the drill pattern will be used to outline the respective dig limits in the open pit for each type of material. The different material types or packets will be identified in the field using stakes, wire flags and flagging tape so that each type of material can be excavated and sent to the appropriate destination (see Section 2.2).

Both waste types (1) NPAG/NML and 2) PAG/NML-ML and NPAG/ML) will be assigned a unique identification number and tracked in WENCO to their final location in the Whale Tail WRSF.

3.4 WRSF thermal cover material sampling/testing program

The sampling frequency proposed (every fourth hole) will result in 10's of thousands of samples tested to ensure non-PAG and non-metal leaching material is used for the thermal cover. This is far in excess of industry standards, but Agnico Eagle is committing to this sampling frequency to ensure clean cover material is used. In addition, the planned segregation program (Table 3.2) does not tolerate ARD generating material, further decreasing the chance for material with ARD-ML potential in the cover.

Despite the level of effort to segregate rock during mining, Agnico Eagle will also confirm the cover properties after placement. Sampling of cover material would include approximate 80 samples based on MEND (2009) guidance collected from well spaced locations from the sides on top layer of the cover.

Monitoring of thermal properties of the pile and water quality generated from run-off are also included in the monitoring plan (described in Section 4), with results from both used to validate prediction models and determine if any changes will be needed to ensure the cover functions as designed.

SECTION 4 • PLAN REVIEW, PERFORMANCE MONITORING & REPORTING

4.1 Plan Review

The Mine Geology Superintendent will be responsible for implementing the Operational ARD-ML Sampling and Testing Plan. The overall Plan is to be reviewed as required by the Geology Superintendent and updated if necessary to reflect any adaptive changes made in the Operational ARD-ML Sampling and Testing Plan. The changes should be made in consultation with the mine engineer and chief assayer. Revised versions should be sent according to the Distribution List.

4.2 Performance Monitoring

The Operational ARD-ML Sampling and Testing Plan is the primary tool to ensure that all overburden and waste rock generated during the Project is appropriately characterized and managed to prevent the future release of contaminants from the Whale Tail WRSF into the receiving environment.

In addition to the analytical QA/QC procedures outlined in Section 3.0, performance monitoring activities will include those activities outlined below.

4.2.1 Water Quality Monitoring

Water quality will be sampled and monitored by the Agnico Eagle in accordance with the Type A Water Licence. The details of this monitoring program are described in the Water Quality and Flow Management Plan (Agnico Eagle 2018b, Version 3). On-site monitoring locations for site contact water will include the Whale Tail WRSF drainage, the Attenuation Pond, Whale Tail Pit sumps, Industrial Sector and dewatering dikes. The data from this monitoring is to be provided to the NWB through annual reporting, as per the Type A Water Licence.

4.2.2 Permafrost Development

Thermistors will be installed within the Whale Tail WRSF to determine if permafrost formation is observed. More information is provided in the Thermal Monitoring Plan (Agnico Eagle 2018a). Thermal monitoring results are provided in Agnico Eagle's annual report submitted to the NWB.

SECTION 5 • ADAPTIVE MANAGEMENT

5.1 Management Actions

Adaptive management will be achieved through performance monitoring (Section 4) and management actions that will be implemented, should they be triggered. Action level responses taken during the year will be documented in Agnico Eagle's annual report submitted to the NWB.

Table 5.1 outlines the various adaptive management actions associated with the ARD/ML plan.

Table 5.1 Adaptive Management Actions Associated with the ARD/ML Plan

Thresholds	Mitigation Strategies	Potential Issues	Steps	Management Responses
Significant variations from model predictions are observed suggesting potential for ARD/ML Drainage	Use only NPAG/NML waste rock for site construction and closure	Observations of visible sulphide minerals or staining, inferring PAG rock was used in construction material across the site	• Notify management • Note location and estimate dimensions of potential PAG/ML material • Collect samples of material from the observed area for analysis (Section 3.2) • Review results; if samples are PAG/ML, establish a monitoring station down gradient of the location • Review water quality sampling; if elevated metal concentrations are detected, proceed to management response.	• Consider relocation of material to WRSF or cover with additional NPAG/NML rock if possible, otherwise investigate other mitigation strategies. • Review the application of the ARD/ML sampling plan (i.e. sampling frequency, total sulphur and total arsenic threshold value, and material classification)
	Confirm that waste rock being encountered exhibits the anticipated range of behaviour from baseline study	Higher proportion of waste rock is PAG/ML than anticipated	• Geology to document the location and classification of samples to identify trends outside the anticipated geochemical behaviour of the rock types • Notify management if unanticipated trends are observed	• Confirm the availability of sufficient NPAG/NML waste rock for closure • Confirm the availability of sufficient space in the WRSF for PAG/ML waste rock • Initiate a follow-up investigation to evaluate the implications
Significant variations from model predictions are observed in the water quality of the WRSF pond	Manage contact water quality to avoid exceedance to predicted levels	One contact water quality monitoring sample is different than predicted	• Collect and analyze follow up confirmation samples to confirm results • If confirmed, notify management	• Initiate an investigation to reduce the effects of contact water quality, if possible
		Water quality monitoring program identifies trends outside of those predicted, for a significant period of time (i.e. great than two months)	• Increase monitoring frequency • Notify management	• Investigate alternative strategies to control effects to water quality • Investigate strategies to reduce seepage and runoff from identified sources
	Use of thermal cover to minimize water in contact with PAG/ML rock in post-closure	Cover placement is incomplete or not of sufficient thickness	• Monitor the placement of cover material on the WRSF to ensure appropriate thickness of cover • Modify cover thickness with placement of additional material when thickness is not sufficient	• Waste Rock Facility Monitoring program to confirm completeness of cover on WRSF (Agnico Eagle 2018, Version 2)
		Thermal monitoring confirms that the waste rock cover freeze back is not occurring as anticipated	• Notify management	• Investigate effects of the different thermal regimes on water quality • Consider alternative strategies to mitigate impacts to water quality from the PAG/ML material in the WRSF

SECTION 6 • REFERENCES

Agnico Eagle. 2016. Water Management Plan. Volume 8, Appendix 8-B.2 of the Final Environmental Impact Statement and Type A Water Licence Amendments.

Agnico Eagle. 2018. Mine Waste Rock and Tailings Management Plan. Version 2.

Agnico Eagle. 2018a. Whale Tail Pit Project Thermal Monitoring Plan. Version 1.

Agnico Eagle. 2018b. Whale Tail Pit Water Quality and Flow Monitoring Plan. Version 3.

Golder (Golder Associates Ltd.). 2016. Evaluation of the Geochemical Properties of Waste Rock, Ore, Tailing, Overburden and Sediment from the Whale Tail Pit and Road Aggregate Materials, Agnico Eagle Mines, Meadowbank Division. Document No. 042. June 2016.

Golder. 2018, in preparation. Technical Memorandum: Whale Tail Pit Project Waste Rock Storage Facility Cover Thermal Assessment. Prepared for Agnico Eagle Mines Limited. Reference 1789310_177_TM.

NIRB (Nunavut Impact Review Board). 2018. NIRB Project Certificate [No. 008]. March 15, 2018.

NWB (Nunavut Water Board). 2015. Water Licence #2AM MEA1525, Meadowbank Mine. 48p. July 2015.

MEND (Mine Environment Neutral Drainage), 2009. Prediction Manual for Drainage Chemistry from Sulphidic Geologic Materials. MEND Report 1.20.1. Mining Environment Neutral Drainage Program, Natural Resources Canada. December 2009.

APPENDIX A • SUMMARY OF THE ARD/ML POTENTIAL OF WHALE TAIL MINE WASTES

The acid rock drainage (ARD) and metal leaching (ML) potential of waste material to be produced at Whale Tail Pit has been evaluated through both static and kinetic testing (Golder 2016). The static tests conducted for this purpose included the following:

- Mineralogy;
- Whole rock analysis;
- Elemental solid phase analysis (multi-acid digestion);
- Acid base accounting (ABA);
- Net acid generation tests; and
- Shake Flask Extraction.

Test methods and results are provided in (Golder 2016).

Kinetic testing was conducted on representative samples of waste rock from each lithology using standard 1 kg humidity cell tests, 12 to 60 kg composite column tests, a 40 kg composite submerged column, and two 8 kg field cells. Test methods are provided in (Golder 2016).

Table A.1 summarizes the ARD/ML potential for the overburden (till), lake sediments, and pit rock, based on the results of static and kinetic testing (Golder 2016). ARD potential was evaluated by comparing ABA results to the Canadian guidelines presented in MEND (2009). ML potential was evaluated based on exceedances in kinetic test leachate of the mean monthly Effluent Quality Criteria (EQC) developed for the Project as proposed in the Whale Tail water license application to the Nunavut Water Board (Agnico Eagle 2018b).

Table A.0-1 Summary of ARD/ML Potentials of Whale Tail Pit Waste Types

Waste Type	Unit	ARD Potential[1]			Effluent Quality Criteria Exceedances in Test Leachate[2]	ML Potential[2]
		% PAG	% Uncertain	% NPAG		
Komatiite North	V4a – 0a	5	-	95	As	High
Komatiite South	V4a – 0b	29	-	71	As	Moderate
Greywacke Central	S3C – 3b	58	29	13	As	Variable
Greywacke South	S3S – 3b	-	-	100	-	Low
Greywacke North	S3N – 3b	16.6	16.6	66.6	Ni	Variable
Chert	S10 – 3b	87	4	9	As	Variable
Iron Formation	S9E – 3b	27	4	69	As	High
Basalt	V3 – 1b	-	3	97	As	Moderate
Diorite	I2 – 8b	15	15	70	-	Low
Overburden	n.a.	-	-	100	Al, Cu, Fe	Low
Lake sediment	n.a.	100	-	-	Al, As, Fe, Ni	High

[1]Percentage of total samples analyzed (Golder 2016), where PAG = potentially acid-generating; NPAG = not potentially acid-generating
[2]Based on the results corresponding to the bulk column composite samples (Golder 2016) with the exception of diorite which is based on humidity cell test results and overburden and lake sediment which are based on SFE results
n.a. = not applicable; N/A= not analyzed

APPENDIX B • FLOW CHART FOR WASTE ROCK DELINEATION AND SEGREGATION

ARD/ML Plan Attachment B: Flow Chart

1896037/3200
October 2018

STEP 1: SAMPLE COLLECTION[1,2]

Responsibility: Geology Superintendent

1. Identify rock types to be excavated using block model
2. Define sample frequency per Table
3. Plan and map sample locations to ensure an even distribution throughout the planned blast area, sufficient for packet definition
4. Collect each sample from drill cuttings (>1 kg) and label using production drill hole numbers
5. Document for each sample:
   - Date
   - Blast pattern / GPS location
   - Sample ID
   - Rock Type
6. Submit samples to Assay Lab Manager for analysis.
   - Include documentation (Step 2)
   - CC the Environmental Coordinator on submission

Rock Type	Rock Unit Code	Sampling Frequency
Komatiite North	V4a – 0a	Every 4th hole
Komatiite South	V4a – 0b	Every 4th hole
Greywacke Central	S3C – 3b	Every 4th hole
Greywacke South	S3S – 3b	Every 4th hole
Greywacke North	S3N – 3b	Every 4th hole
Chert	S10 – 3b	Every 4th hole
Iron Formation	S9E – 3b	Every 4th hole
Basalt South	V3S – 1b	Every 4th hole
Basalt North / Gabbro	V3 – 1a / I3A	Every 4th hole
Diorite	I2 – 8b	Every 4th hole

STEP 2: LABORATORY ANALYSIS[1,2]

Responsibility: Assay Laboratory

1. Prep samples (crush and homogenize)
2a. Initiate on-site analysis:
   - Total Sulphur (S)
   - Total Inorganic Carbon (TIC)
   - Total Arsenic
3. Quarterly analysis (minimum of 75 duplicate samples). Send subset of samples to off-site laboratory for QA/QC:
   - Tests: ABA, Bulk Metals, SFE
   - Include Chain of Custody

Copy Environmental Coordinator on COC

STEP 3: DATA EVALUATION AND ROCK CLASSIFICATION[1]

Responsibility: Geology Superintendent

1. Compile on-site data with sample information:
   - Total Sulphur
   - Total Inorganic Carbon
   - Total Arsenic
   - Sample documentation
2. Compare Total Sulphur with Cut-off (0.1%)
3. Calculate CaNPR from Total Sulphur (S) and Total Inorganic Carbon (TIC) to determine ARD potential:

   CaNPR = [TIC%*83.34] / [S%*31.25]
4. Evaluate arsenic leaching potential with Total Arsenic (As)

Send compilation to Environmental Coordinator

- Total S < 0.1% **= NPAG**
- Total S > 0.1% *and* CaNPR>2 **= NPAG**
- Total S > 0.1% and 1≤ CaNPR<2 **= Uncertain**
- Total S > 0.1% and CaNPR<1 **=PAG**
- Total As < 75 ppm **=NML**
- Total As > 75 ppm **= ML**

NPAG/NML Samples | Uncertain Samples | PAG/ML Samples

Data QA/QC See Page 2 (reverse)

STEP 4: ROCK SEGREGATION AND MANAGEMENT[1]

Responsibility: Geology Superintendent, Engineering, Environmental Coordinator, Construction Supervisor

1. Log results in database. Map the distribution of samples and define the groups of material for each blast

NPAG and NML Material

- ≤1 PAG sample per 8 NPAG samples
- ≤1 Uncertain sample per 8 NPAG samples
- Average total arsenic <75 ppm

PAG and/or ML Material

- ≥2 PAG samples per 8 NPAG samples
- ≥2 Uncertain samples per 4 NPAG samples
- Average total arsenic >75 ppm

2. Field Segregation of Waste Types:
   - Outline dig limits using stakes, wire flags, and flagging tape
   - Track in WENCO
3. Record the following with each Packet:
   - Packet number
   - Sample Results (Total S, TIC, As, NPR)
   - Block model rock type
   - Final location in WRSF

No Restrictions for Re-Use as Construction and/ or Cover Material

Suitable for the following:
- Pads
- Roads
- Dykes
- WRSF sides and cover material

Not Approved for Re-Use; must be managed to control ARD/ML

Disposal and Management Requirements:
- Encapsulated within NPAG/NML rock that hosts the thawed layer, and encouraged to freeze
  - Placed on a pad of NPAG/NML rock
  - Placed in centre of the pad (≥4m from edge)
  - Covered with ≥4 m of NPAG/NML rock
- Placed away from permanent water contact
- Monitor temperature and seepage quality

Whale Tail WRSF
IVR WRSF
Waste Rock Exploration Pad

ARD/ML Plan Attachment B: Flow Chart

STEP 3a. DATA QA/QC – EXTERNAL LABORATORY
Responsibility: Geology Superintendent / Environmental Coordinator

1. Confirm ARD Potential using external lab results (ABA). Calculate NPR using the Total Sulphur and Total Inorganic Carbon reported by external lab to compare directly with Meadowbank assay lab data.

↓

2. Confirm arsenic leaching potential using external lab results.

Arsenic leaching potential is considered high if:

- Total arsenic > 75 mg/kg

and

- Leachable arsenic (SFE) > 0.1 mg/L

↓

3. Complete QA/QC of data against onsite results by calculating an RPD value. RPD values below 35% are considered acceptable[3].

↓

4. If the ARD and/or ML designation determined by the external lab data are different than that determined by the onsite lab, a more rigorous QA/QC program is required and refinements must be considered in the block model designation.

↓

5. If required, revisit the cut-off criteria for total arsenic based on updated leach test data.

LIST OF ACRONYMS

ARD: acid rock drainage
PAG: potentially acid generating
NPAG: not potentially acid generating
NPR: net potential ratio
ML: metal leaching
NML: not metal leaching
ABA: acid base accounting
Bulk metals: total metals by ICP
WRA: whole rock analysis
SFE: metal leaching by shake flask extraction
XRF: x-ray fluorescence
ppm = parts per million
S = sulphur
C = carbon
As = arsenic

LIST OF ANALYTES AT EXTERNAL LAB

ABA: acid base accounting by Modified Sobek method. Includes paste pH, Bulk NP, analysis of total S and Total C by C/S analyzer (LECO Furnace), Acid Leachable Sulphate and Sulphide by difference.

Bulk metals: trace metals scan by aqua regia digest and analysis by ICP-MS and ICP-OES. Includes Ag, Al, As, B, Ba, Be, Bi, Ca, Cd, Co, Cr, Cu, Fe, K, Li, Mg, Mn, Mo, Na, Ni, P, Pb, Sb, Se, Si, Sn, Sr, Ti, Tl, U, V, Zn

WRA: whole rock analysisor major oxides by Borate Fusion XRF. Includes SiO_2, Al_2O_3, Fe_2O_3, MgO, CaO, Na_2O, K_2O, TiO_2, P_2O_5, MnO, Cr_2O_3, V_2O_5, LOI

SFE: metal leaching by shake flask extraction, 24 hr leach extraction using DI water at 4:1 L/S ratio, and filtered leachate through 0.2 micron filter. Analysis of leachate includes pH, alkalinity, conductivity, anions (Cl, SO4, NO2, NO3, Br), ortho-phosphate, fluoride, mercury (by CVAAS), and trace metals by ICP-MS and ICP-OES (Ag, Al, As, B, Ba, Be, Bi, Ca, Cd, Co, Cr, Cu, Fe, K, Li, Mg, Mn, Mo, Na, Ni, P, Pb, Sb, Se, Si, Sn, Sr, Ti, Tl, U, V, Zn).

References:
1-*Operational ARD-ML Sampling and Testing Plan – Whale Tail Pit Addendum (Golder 2016)*
2- Procedure AMQ-ENV-PRO- Quarry and borrow pit ARD-ML Sampling for Construction
3-EPA Guidelines for Inorganic Data Review, 1994

Operation & Maintenance Manual - Sewage Treatment Plant (STP), Version 2

Operation & Maintenance Manual
Sewage Treatment Plant (STP)

Prepared by:
Agnico Eagle Mines Limited – Meadowbank Division – Whale Tail Pit Project

EXECUTIVE SUMMARY

Agnico Eagle has prepared the following document which summarizes the operational and maintenance procedures to be followed at the Sewage Treatment Plant (STP).

This report documents the stand alone Operation & Maintenance Manual – Sewage Treatment Plant, includes the following requirements:

- The manual was prepared in accordance with the "Guidelines for the Preparation of an Operation and Maintenance Manual for Sewage and Solid Waste Disposal Facilities in the Northwest Territories, 1996", and adapted for the use of a mechanical contact water treatment facility;
- The manual includes contingency measures in the event of a plant malfunction; and
- The manual includes sludge management procedures.

IMPLEMENTATION SCHEDULE

This Plan will be implemented upon Board approval and subject to any modifications proposed by the NWB as a result of the review and approval process.

DISTRIBUTION LIST

Agnico Eagle Internal:

- Energy & Infrastructures Services Superintendent
- Energy & Infrastructures Services General Foreman
- Environmental Superintendent
- Senior environmental Coordinator
- Environmental Compliance Counselor
- Sewage Treatment Plant Operator

DOCUMENT CONTROL

Version	Date (YMD)	Section	Page	Revision
1	2018/12/30			Operation and Maintenance Manual
2	2019/02/19			Comment from ECCC, CIRNAC

Prepared By:

Thomas Genty

Signature numérique de Thomas Genty
Date : 2019.02.18 12:00:47 -05'00'

Thomas Genty
Water treatment Specialist

REGISTERED PROFESSIONAL ENGINEER
I. GAGNON
LICENSEE
NT/NU
L3940
2019-02-18

Israel Gagnon
Mechanical Eng.

Approved by:

Alain Parent

Signature numérique de Alain Parent
DN : cn=Alain Parent
Date : 2019.02.18 15:50:46 -05'00'

Alain Parent
Amaruq project Construction Superintendent

TABLE OF CONTENTS

1 INTRODUCTION 7

1.1 Purpose 7
1.2 Brief Description of the Project 7
1.3 Contact Information 11

2 DESCRIPTION 12

2.1 Sewage Treatment Plant (STP) 12
2.1.1 Process summary 12
2.1.2 Process description 19
2.1.3 Sludge Management Strategy 20

3 OPERATION AND MAINTENANCE 21

3.1 Pumping 21
3.2 Sewage collection 21
3.3 Sludge disposal 21
3.4 Control 21
3.5 Reagents 22
3.6 Biological operation 23
3.7 Membranne operation 23
3.8 Membrane cleaning 24
3.9 Service water 24
3.10 Operationnal performance Targets 24
3.11 General Operation & Maintenance, Sampling Procedures and Frequency 25
3.12 Troubleshooting and Maintenance Procedures 27
3.13 Record Keeping 28
3.14 Safety Procedures For Operators 29
3.15 Controlling Access to the STP 29

4 EMERGENCY RESPONSE 30

4.1 Fire 30
4.2 Spill 30
4.3 Plant Malfunction 30

LIST OF FIGURES

Figure 1 – Site Layout 8
Figure 2 – Location of STP in the Whail Tail Camp 9
Figure 3 – General Arrangement of STP 10
Figure 4 – Flowsheet 14
Figure 5 – Oils and grease removal, screening and equalization's tank 15
Figure 6 – Biological treatment 16
Figure 7 – Post Biological treatment 17
Figure 8 – Membrane filtration step 18
Figure 9 – Membrane filtration concept 20

LIST OF APPENDICES

Appendix A: MSDS Sheets
Appendix B: Drawings
Appendix C: Operations and Maintenance Manual

1 INTRODUCTION

1.1 PURPOSE

This Sewage Treatment Plant (STP) Operation and Maintenance Manual (OMM) for the Whale Tail Gold Project (the Project) has been prepared based on the "*Guidelines for the Preparation of an Operation and Maintenance Manual for Sewage and Solid Waste Disposal Facilities in the Northwest Territories, 1996, prepared by the Department of Municipal and Community Affairs, NWT*". The OMM has been adapted for the use of a mechanical contact water treatment facility.

This manual is a component of the Whale Tail Environmental Management System. The objectives of this plan are summarized as follows:

1. To define the location, design and operating procedures to be used in the treatment of sewage generated at the Project; and
2. To provide monitoring requirements for the STP.

The STP purpose is to treat domestic sewage from the camp and adjacent building which are not connected to the STP directly (sucker truck will discharge sewage from this building directly into the STP).

1.2 BRIEF DESCRIPTION OF THE PROJECT

Agnico Eagle Mines Limited—Meadowbank Division (Agnico Eagle) is developing Whale Tail Pit and Haul Road Project, approximately 55 km north of the Meadowbank mine, on a satellite deposit located on the Amaruq property in the Kivalliq Region of Nunavut (65°24'25" N, 96°41'50" W), to extend mine operations and milling at Meadowbank Mine. The 99,878-hectare Amaruq property is located on Inuit-owned and federal crown land.

A conventional open pit mining operation is forecasted on the Whale Tail deposit. Access to the site is via a 64-kilometer road from Meadowbank mine. On-site facilities will include a power plant, maintenance facilities, tank farm for fuel storage, Arsenic water treatment plant, sewage treatment plant (STP), drinking water treatment plant, as well as accommodation and kitchen facilities for approximately 400 people.

Figures 1, 2 and 3 illustrate the location and general arrangement of the STP.

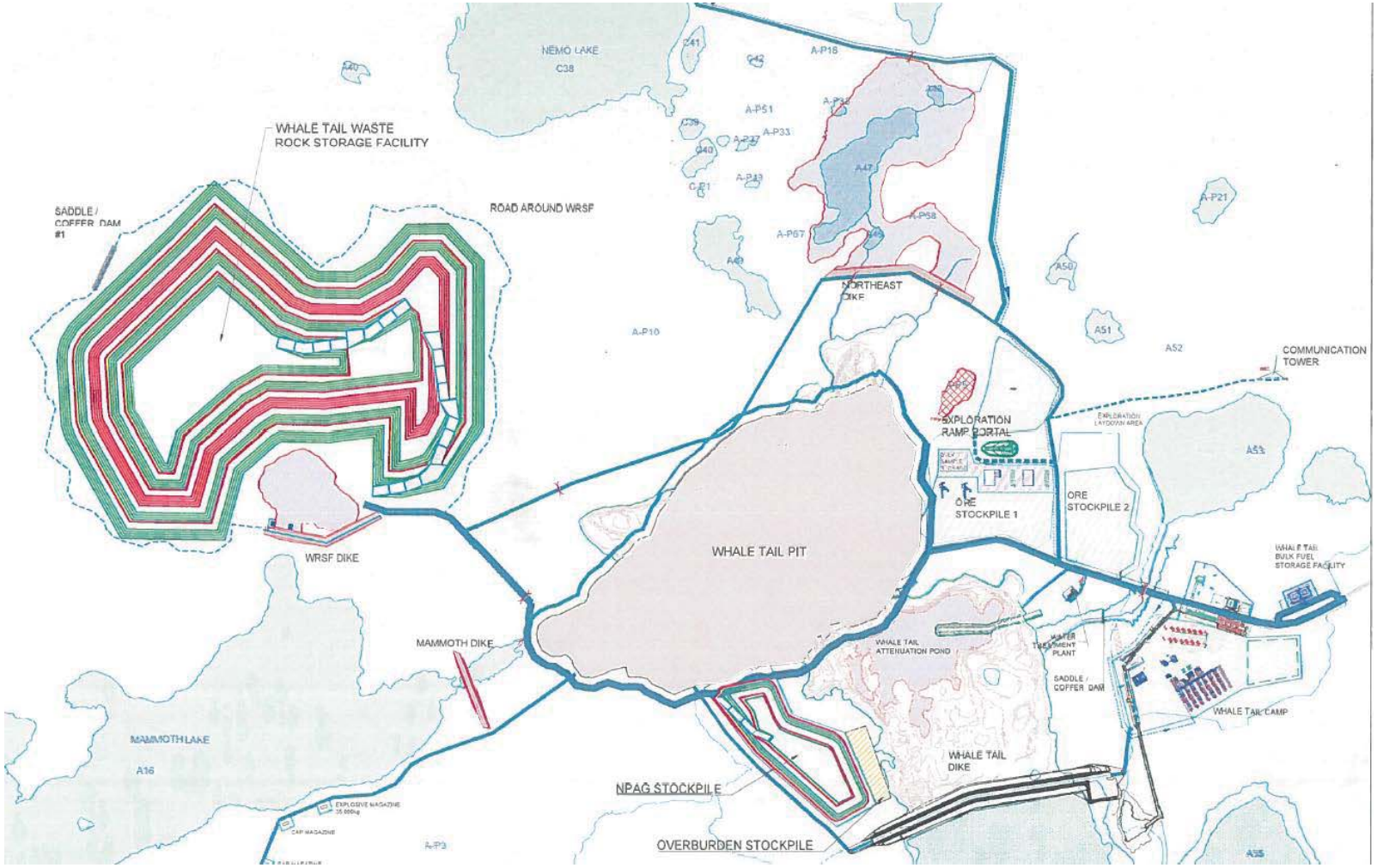

Figure 1 – Site Layout

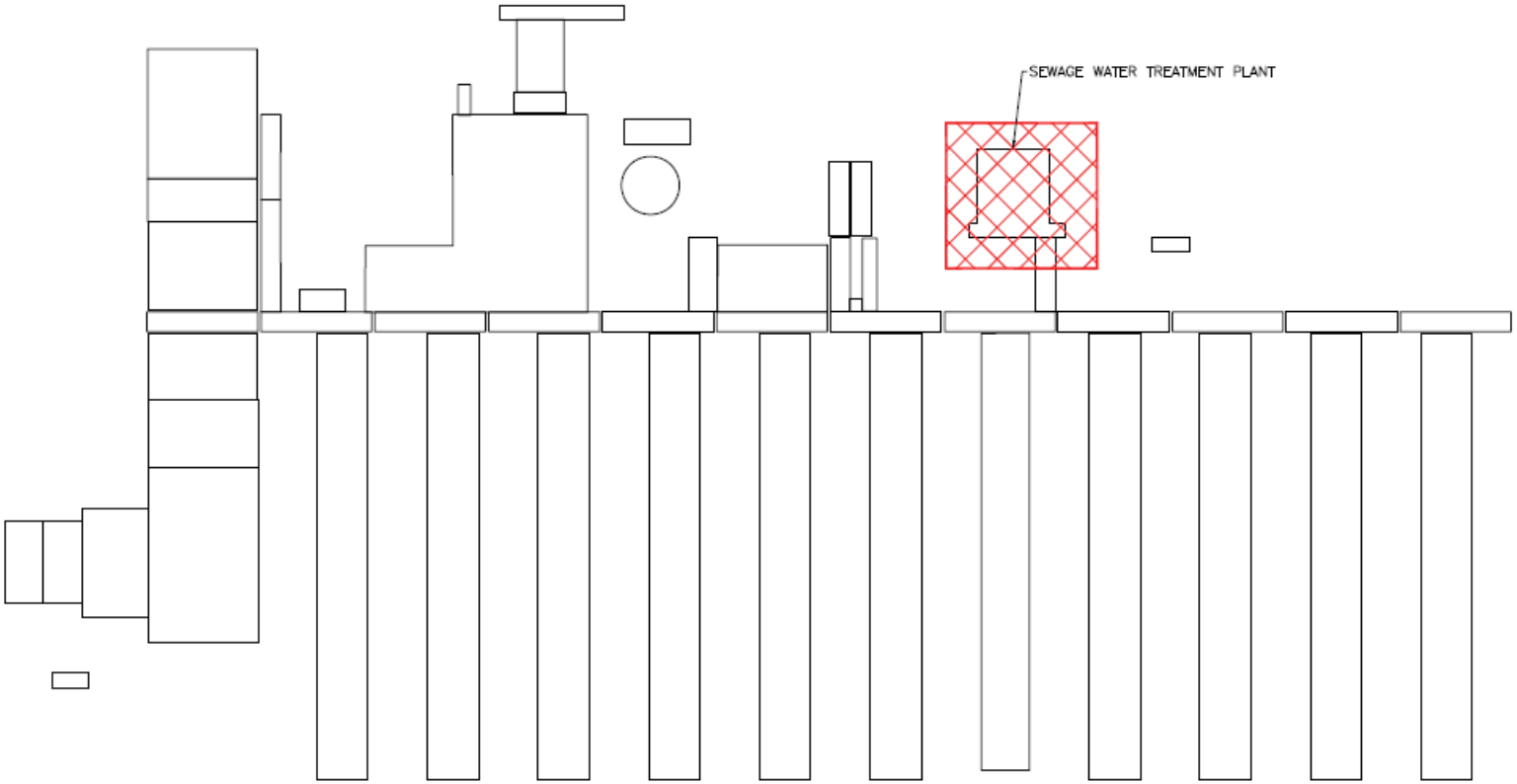

Figure 2 – Location of STP in the Whail Tail Camp

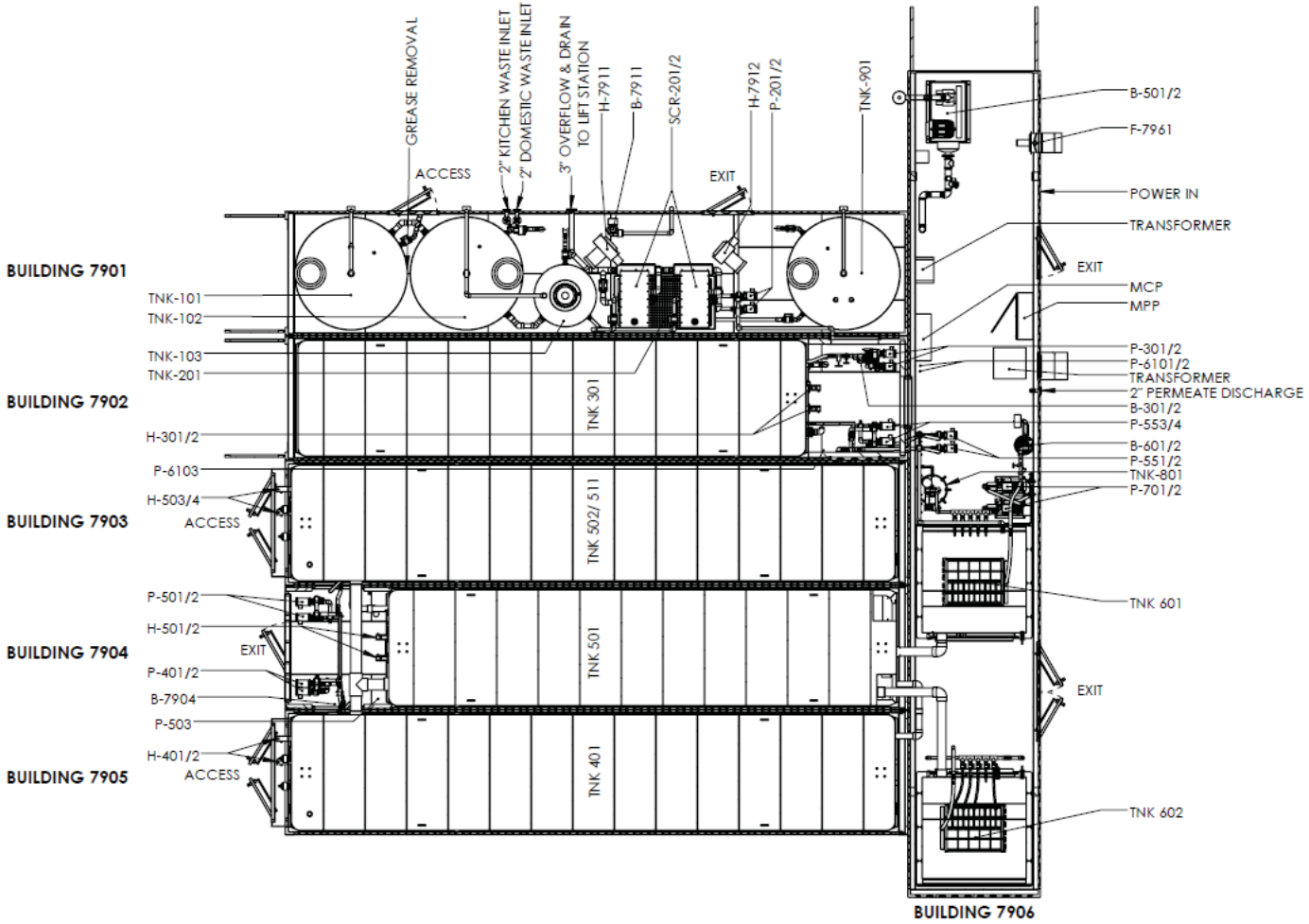

Figure 3 – General Arrangement of STP

1.3 CONTACT INFORMATION

The individuals responsible for the operation of the sewage treatment plant for the Project are the following:

Energy and Infrastructure Superintendent	819-856-3073
Energy and Infrastructure Supervisors	819 759-3555 ext 6731 or 6902

2 DESCRIPTION

2.1 SEWAGE TREATMENT PLANT (STP)

The plant is designed based on the occupation maximum of the camp for 400 persons (240L per day and per person). The design flows are presented in Table 1.

Table 1: Design flow rate

Parameters	Design Value	Unit
Per capita design flow	240	L/p/d
Number of persons	400	People
Average daily flow (ADF)	96	m^3/d
Maximum Daily Flow (MDF)	192	m^3/d
Peak Hourly Flow (PHF)	24	m^3/h
Overall time for speak to occur	2	hours
Maximum number of peak events per day	2	Qty

Table 2 presents the typical sewage composition used for the design (based on Meadowbank sewage quality).

Table 2: Sewage typical chemical composition

Parameters	Unit	Design Value
Biochemical Oxygen Demand (BOD_5)	mg/L	952
Total Suspended Solids (TSS)	mg/L	300
Total Kjeldahl Nitrogen (TKN)	mg/L	130
Ammonia nitrogen (NH_3-N)	mg/L	130
Oil and Grease	mg/L	30
pH	-	6 to 9.5
Water Temperature	^oC	10 to 25
Alkalinity	mg/L as $CaCO_3$	471.1

2.1.1 Process summary

The sewage treatment plant receives two streams of sewage as presented in Figure 4 (basic flowsheet of the STP). The first source is domestic sewage, which is fed directly to the fine screening process to remove any fibers or debris that might damage the membranes. The second source is kitchen sewage which is pre-treated in the oil and grease tanks to remove oil and grease prior to being fed into the fine

screens. The combined screened sewage is pumped to the equalization tank. The equalization tank buffers variability in the influent flow rate and concentrations of influent constituents, maintaining a consistent flow rate and sewage strength through the membrane bioreactor (MBR) system. Sewage is then pumped from the equalization tank to the pre-anoxic tank for denitrification.

In the pre-anoxic tank, screened sewage containing organics is combined with recycled mixed liquor from the aeration tank containing nitrates. Bacteria use some of the organics to drive the denitrification process, converting nitrate into nitrogen gas. This process occurs in an anoxic environment where there is minimal oxygen. As such a pump and eductors are used to mix the tank to prevent addition of oxygen. The denitrification process is used to meet the effluent nitrate operational target, reduce oxygen requirements and to recover alkalinity, thus reducing chemical consumption.

Mixed liquor from the anoxic tank flows by gravity to the first aerobic tank followed by the second aeration tank for aerobic biological degradation of the influent constituents (organics and ammonia). In the aerobic tanks, the nitrification process converts ammonia to nitrate in order to meet the effluent ammonia operational target. This process consumes alkalinity, so a caustic soda or soda ash dosing pump is used to control the pH. Additionally, liquid alum is dosed into the anoxic zone to precipitate phosphorus in order to meet the effluent phosphorus operational target. Mixed liquor flows by gravity from the second aeration tank to the post-anoxic tank for final denitrification polishing. In the post-anoxic tank there are minimal dissolved influent organics to drive the denitrification process. As such, an external carbon source in the form of MicroC is dosed to supplement the organics and drive the denitrification process.

Mixed liquor is pumped from the post-anoxic tank to the membrane tanks. The membrane tanks serve as additional volume for aerobic biological treatment to remove any excess MicroC (which would otherwise increase BOD in the effluent) and house the membrane filters used for solid-liquid separation. A treated effluent is drawn through the membranes by vacuum pumps.

Since the solid-liquid separation process results in an accumulation of solids in the membrane tank, the mixed liquor (containing both solids and filtrate) is continuously recycled to the first aeration tank. This prevents excessive solids build-up in the membrane tank, and maintains sufficient biomass in the anoxic and aeration tanks. The solids that accumulate in the system consist of biomass that has grown from the influent organics and ammonia, as well as non-biodegradable solids from the influent sewage. In order to maintain an optimal concentration of mixed liquor suspended solids (MLSS) (typically 10 g/L), a portion of the mixed liquor is periodically wasted by pumping from the Aeration Tank to the sludge holding tank. Wasted sludge in the sludge holding tank is thickened by decanting supernatant back to the screen tank. Thickened sludge accumulates in the sludge holding tanks until it is eventually pumped out for disposal.

The STP general flow diagram is illustrated in Figure 4 and Piping and Instrumentation Diagram (PID) in Figures 5 to 8. The following sections describe the STP components.

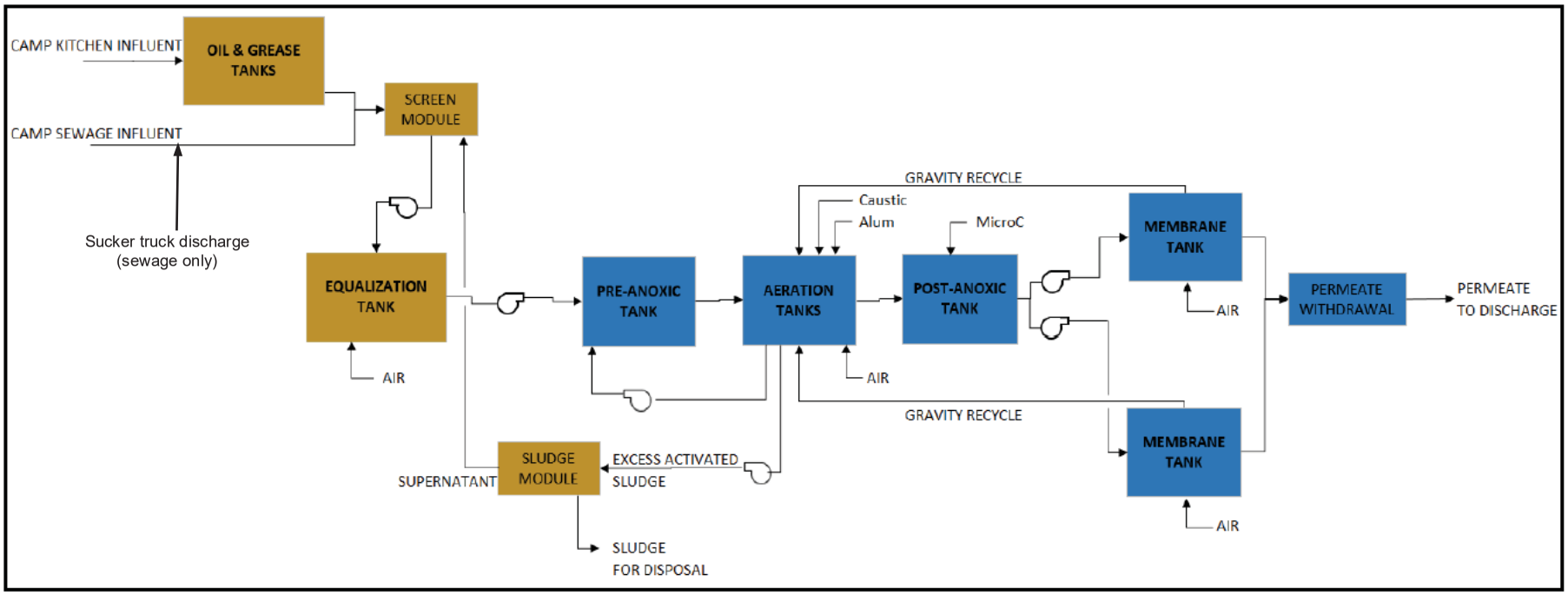

Figure 4 – Flowsheet

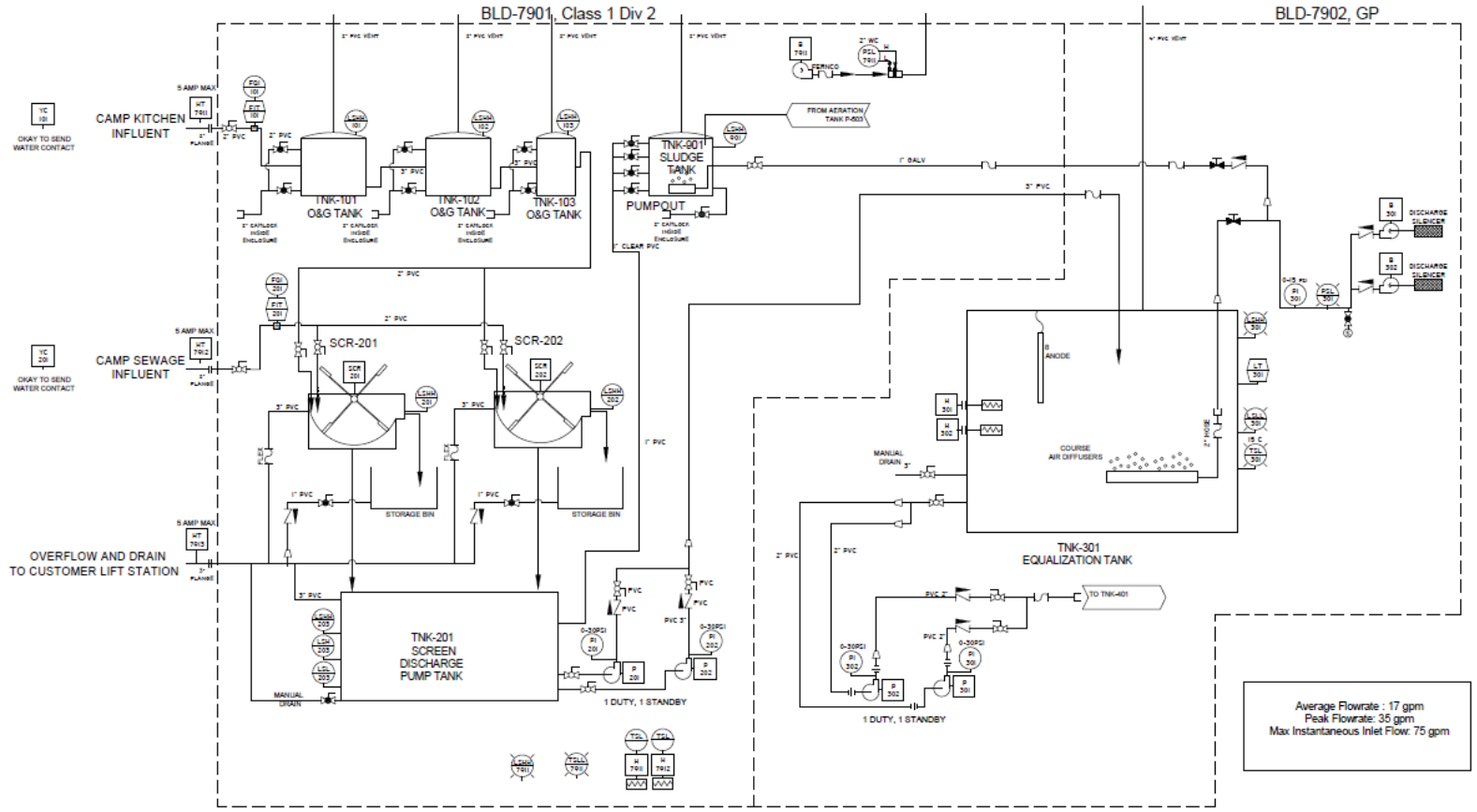

Figure 5 – Oils and grease removal, screening and equalization's tank

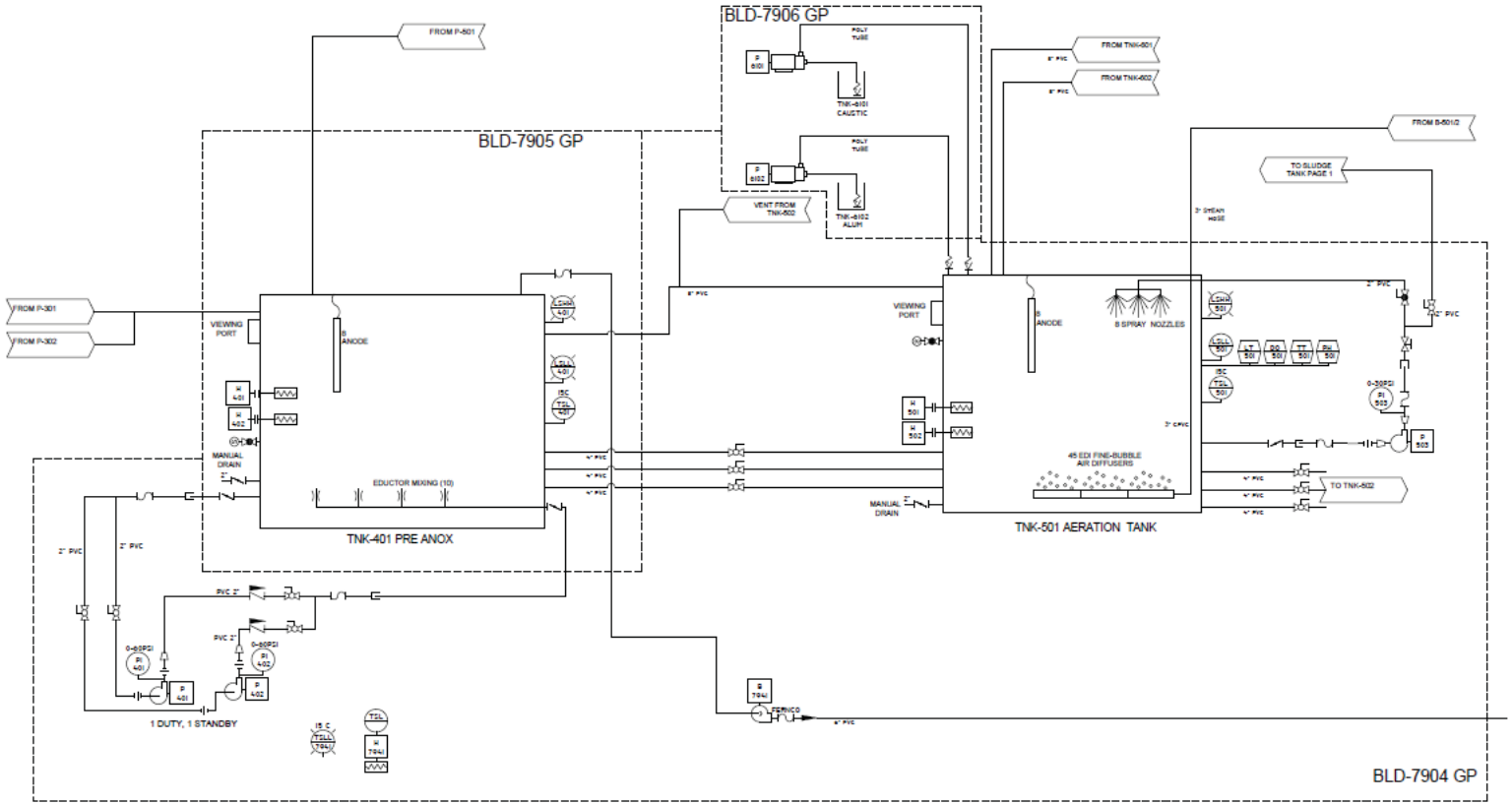

Figure 6 – Biological treatment

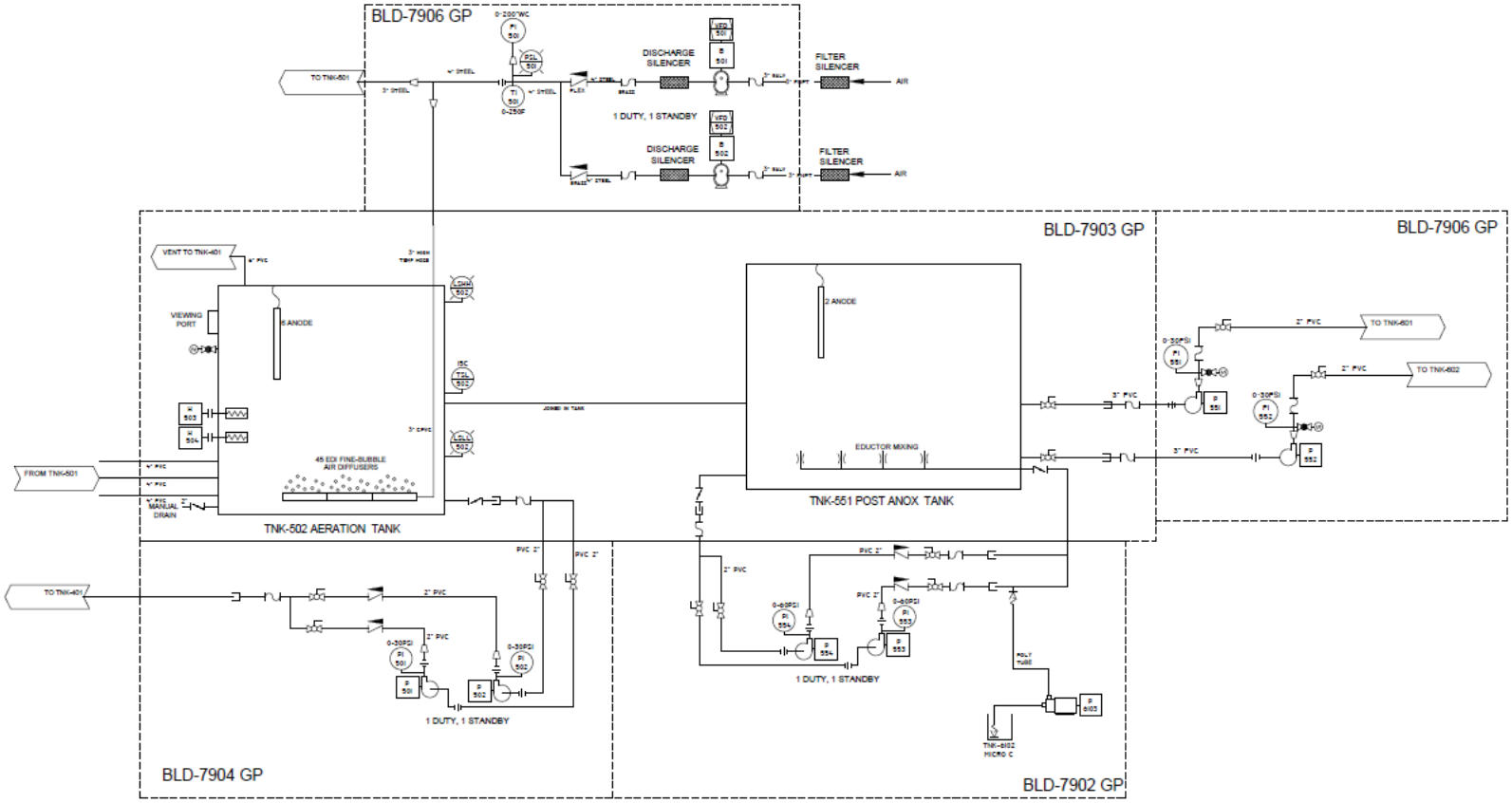

Figure 7 – Post Biological treatment

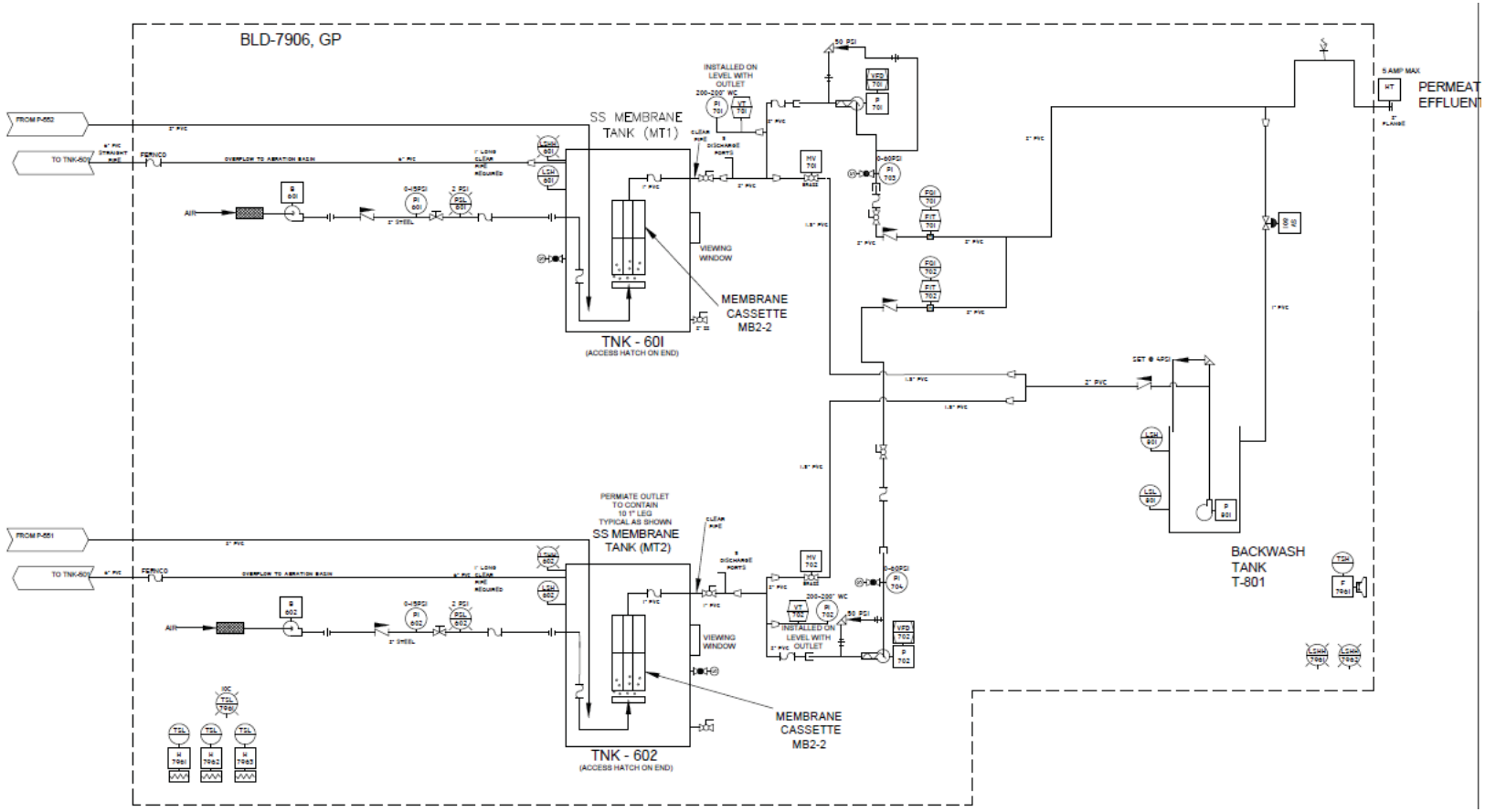

Figure 8 – Membrane filtration step

2.1.2 Process description

Oil and Grease (O/G) removal
Raw sewage from the kitchens entering the system can contain high levels of fats, oils and grease that can damage equipment and membranes downstream. To remove the oil and grease from the system a double trap grease interceptor is installed prior to the kitchen sewage entering the fine screen. Floating grease is removed via a vacuum truck hookup that will be used when the sludge tank is emptied. A pipe and vacuum truck hookup are also used to remove any debris that sunk to the bottom of the tanks. Vacuumed debris, oil and grease are to be disposed at the Meadowbank's tailings storage facility (TSF).

Fine Screening
Raw sewage entering the MBR system contains particulates and solids that could damage the equipment and membranes downstream. 0.5mm wedge wire fine screening protects the downstream equipment by removing large solids and fibrous material. Two screens are used for redundancy so that no unscreened influent enters the EQ tank. Redundant pumps are used to move the screened influent to the equalization tank.

Flow-Equalization
Throughout the day the flow and strength of the sewage will vary. To accommodate this, an equalization tank will buffer the flow and homogenize the loading. The equalization tank is aerated to maintain an aerobic environment to reduce odors and to maintain suspension of solids and pumps transfer sewage to biological treatment. This tank is provided with tank heaters. All wetted materials in this tank are either stainless steel or polypropylene to eliminate the possibility of corrosion. In addition, the tank has two liners, one primary, one secondary, with interstitial monitoring, providing the protection of a double wall tank.

Biological Treatment
In the anoxic zone, the pre-treated sewage is combined with return activated sludge from the aerobic tank and is kept mixed while maintaining a low level of dissolved oxygen (DO). Denitrification occurs as specific microorganisms convert nitrates to nitrogen gas – reducing the total nitrogen (TN) in the mixed liquor. Additionally, the anoxic stage optimizes the biological treatment process, which recovers alkalinity, aids in stabilizing pH, and improves energy efficiency by reducing overall aeration demand. In the aerobic zone, fine bubble diffusers create an aerobic environment where the organics contributing to biological oxygen demand (BOD) and ammonia are oxidized by the biology. Dissolved oxygen is continuously measured and aeration blowers controlled to maintain it in the range of 2 to 3 mg/L for process optimization and energy savings. In the post-anoxic zone, return activated sludge from the aerobic tank is kept mixed while maintaining a low level of dissolved oxygen (DO). The denitrification process continues in the post anoxic zone to reduce the TN even further.

Phosphorous Reduction
Chemical precipitation is used to remove inorganic phosphate. An aluminum sulphate or "Alum" solution is dosed into the mixed liquor causing dissolved phosphate to precipitate and coagulate. The suspended phosphate cannot pass through the Newterra MicroClearUltra Filtration membrane (UF), and the phosphate is eventually removed from the system as a solid with the waste activated sludge (WAS).

Membrane Filtration
After being treated biologically, the treated effluent is separated from the mixed liquor and solids by the Newterra MicroClear membrane modules and the permeate extraction system. The membrane

modules are continually air scoured to induce flow of mixed liquor over the flat sheet membrane surface and prevent fouling and buildup of solids on the membrane surface without the use of chemicals. The mixed liquor is then transferred to the inlet of the biological treatment to maintain even distribution of solids throughout the system and to introduce activated biology to the raw sewage. Newterra MicroClear membranes are produced with true ultrafiltration membrane material with 0.04 µm pore size, which blocks all bacteria and most viruses. Secondary disinfection is not required to exceed effluent requirements. Figure 9 presents a schematic view of the UF process.

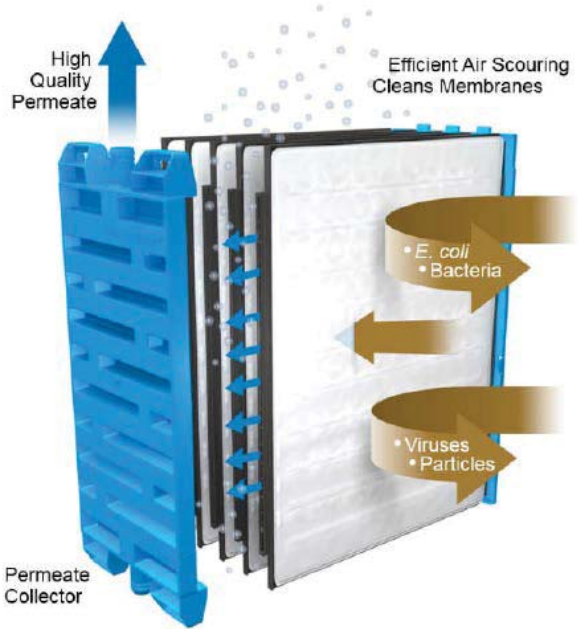

Figure 9 – Membrane filtration concept

2.1.3 Sludge Management Strategy

As solid-laden sewage enters the system and solid-free effluent is discharged, the suspended solids concentration in the mixed liquor suspended solids (MLSS) will increase. To maintain the proper level of MLSS, solids must be removed from the system as Waste Activated Sludge (WAS) which is mixed liquor discharged from the aerobic tank at approximately 0.8% dry. WAS is discharged to a tank for holding and decanting. The holding tank is aerated to maintain an aerobic environment to reduce odors. In the decanting process the WAS is allowed to settle and supernatant is pumped off, and returned to the MBR, thickening the sludge in the holding tank. By thickening the sludge to approximately 2% dry solids by weight, the total volume that must be disposed of is decreased, extending holding time and reducing operational costs. Level control in the tank indicates when the tank should be decanted or a vacuum truck should be scheduled to dispose of the WAS.

3 OPERATION AND MAINTENANCE

3.1 PUMPING

The system includes several pumps for the operation of the STP. All pumps are regularly inspected by the Operator who will ensure the pumps continue to operate efficiently and will address any deficiencies. If the pumps require maintenance, the Operator will report the situation and take appropriate action. Some of the pumps are installed with a standby unit that allows the Operator to switch from one pump to the other if necessary. In some specific situations, it may be necessary to temporarily shutdown the STP for servicing of the equipment.

A preventative maintenance program, as recommended by the pump supplier, will be followed to ensure the pumps are always kept in good working order.

3.2 SEWAGE COLLECTION

The sewage from the kitchen must pass through a grease trap (or similar facility for grease/fat removal). The large amount of oil and fat can harm treatment facility (e.g., clogging pumps and piping and cause foaming in the aeration tank). To avoid premature membrane fouling, maximum O/G concentrations should not exceed 30 mg/L.

The raw wastewater should not contain any of the following substances:

- Hydrocarbons – lubricants, gasoline, diesel, etc.;
- Paints, solvents, silica, silicon and polymers;
- Antibacterial solutions and products with quaternary ammonia;
- Large quantities of chemicals such as water softener, disinfectants, strong acids & alkalis, pesticides or photographic chemicals;
- Silicone based defoamers;
- Non-biodegradable solid waste (plastic, rubber products, disposable diapers, etc.);
- High amount of metals, such as iron, magnesium, calcium, barium and strontium.

3.3 SLUDGE DISPOSAL

Sludge will be disposed at Amaruq or Meadowbank site in the Waste Rock Storage Facility or the Tailings Storage Facility (Meadowbank only) or in a landfarm as a nutrient amendment as per the Water License Part F Item 3.

3.4 CONTROL

MBR (Membrane Bioreactor) treatment technology is an effective combination of an activated sludge biological treatment process with MBR membrane filtration technology. The STP can be operated in either manual or automatic mode. The system is designed to always run in auto mode. The manual option is provided mainly for maintenance purposes.

STP's control and automation system is based on several instruments measuring key parameter of the process, combined with a PLC. The STP don't require continuous operator intervention except for daily inspection and maintenance. The user interface can be accessed on-site from the control panel mounted touch-screen HMIs or remotely from a computer. Alarm messages can be set up to alert operators to issues.

The STP PLC is programmed to:

- Receive analogue and digital input signals from the switches and transmitters being controlled;
- Process the information using the structure and rules entered into the program;
- Generate outputs that control the equipment - turn equipment OFF or ON.
- Generate alarms if critical conditions are present
- Provide a HMI (Human Machine Interface) touch-screen for use of operator process monitoring and control.

More information are provided in the Operation and Maintenance Manual in Appendix.

3.5 REAGENTS

Some chemicals are required for treatment operation and also for Membrane cleaning. Chemicals will be used according to the MSDS recommendation. MSDS are provided in Appendix. Table 3 presents the estimated chemical consumption per year.

Table 3: Chemical consumption

Consumable		Usage Rate			
Purpose	Name	Value	Unit	Value	Unit
Supplemental Alkalinity	Dry Soda Ash	6.28	kg/d	2292	Kg/year
Phosphorus Removal	Liquid Alum, 48%	14.6	L/d	5346	L/year
Nitrate Removal	MicroC 2000	16.5	L/d	6025	L/year
Membrane Cleaning	Sodium Hyprochlorite, 12%	-	L/d	150	L/year

Sodium Carbonate (Soda Ash) is used for pH adjustment in case there is a deficiency in alkalinity in influent sewage and pH drops. It is hazardous in case of skin contact (irritant), of eye contact (irritant), of ingestion, of inhalation (lung irritant).

Sodium hypochlorite (NaOCl) and **Citric Acid** ($C_6H_8O_7$) are used for cleaning the membranes.

- Sodium hypochlorite is a common disinfectant, which can be an irritant or corrosive, depending on its concentration. It cannot be mixed with organics, ammonia compounds or acids. Contact with acids produces highly toxic chlorine gas. It has to be mixed only with pure water.
- Citric Acid is hazardous in case of skin contact (irritant, sensitizers), or ingestion, eye contact (irritant) and inhalation (lung irritants).

Aluminum Sulfate ($Al_2(SO_4)_3$) is used for Phosphorus Removal. Mild to moderate irritation can occur from unprotected contact. Aluminum is very poorly absorbed through the skin and toxic effects would not be expected following short-term skin contact. Inhalation of mists can be irritating to the respiratory tract and lungs.

MicroC 2000 is used for nitrate removal. Exposure to eyes may cause slight irritation. Exposure to Skin may cause slight irritation. Inhalation of high mist concentrations may cause irritation of respiratory tract.

3.6 BIOLOGICAL OPERATION

The following table presents target parameters required for a good operation of the STP.

Table 4: Biological system targets operational parameters

Parameter	Recommended	Range	Notes
MLSS (mg/L): Mixed Liquor Suspended Solids	10,000	8,000 – 15,000	Never operate the membranes if MLSS < 3,000 mg/l. Sludge wasting should be undertaken as required to maintain target MLSS
Temperature (°C)	15 - 35	10 – 35	Avoid sudden changes in temperature. Minimum operating temperature is 15 °C
pH	6.8 - 8.5	6.0 – 9.0	Membrane module can handle a change in pH. However it is recommended to keep pH between 6.8 - 8.5
Aeration Tank, DO (mg/L)	≥ 2.0	1.0 – 8.0	This can be maintained by adjusting the volume of air supplied to the aeration tank
Viscosity (mPa-s)	Not applicable	0 – 300	
Aeration Tank to Anoxic Tank Recirculation	400%	200 – 500%	
Membrane Tank to Aeration Tank Recirculation	400%	200 – 600%	
F:M (kg BOD/kg MLSS/d)	0.1	0.03 – 0.2	F:M = [Flow (m3/d) x BOD conc (mg/l)] / [Process volume (m3) x MLSS conc (mg/l)]
F:M (kg COD/kg MLSS/d)	0.15	0.05 – 0.3	F:M = [Flow (m3/d) x COD conc (mg/l)] / [Process volume (m3) x MLSS conc (mg/l)]
SRT : sludge retention time (days)	> 15	12 – 50	

3.7 MEMBRANE OPERATION

This section outlines the operating conditions that are required for proper sewage treatment, and longevity of the membranes.

Generally, the following points can be used to operate the MBR system properly:

- The MBR system is designed to treat wastewater with specified influent characteristics.
- Never operate the MBR tank below the minimum membrane submerged level. It is necessary to maintain a minimum of 250 mm liquid level above the membrane modules to ensure they are wet at all times and to allow for proper filtration.
- Always supply the required amount of air for scouring to the membrane module.
- Always filter sewage at or below design flow rate.
- Periodically, relax the membranes by ending filtration while allowing the membrane aeration scour to operate continuously and initiate backwash operation during membrane relaxation (default relaxation mode preset in PLC - permeation continues for 9 min and stops for 1 min).
- Always operate the MBR in accordance with the parameters listed in the supplier O&M Manual.
- Clean the membranes in-place with a dilute chemical in accordance with the supplier O&M Manual.

3.8 MEMBRANE CLEANING

In order to enhance life duration of the membrane, several cleaning are required as presented below.

In-situ Chemically Enhanced Backflush (CEB)
It is recommended that in-situ CEB be carried out before the trans membrane pressure (TMP) exceeds 0.25 bar (or permeability drops rapidly to 50 LMH/bar) This is typically done once every couple weeks/months depending on biomass characteristics and system operating condition. On certain occasions, membrane module/cassette may need to be physically inspected for membrane integrity if membrane permeability performance is not recovered after the cleaning (i.e., suspect of membrane deterioration). Hypochlorite is used for organic fooling and citric acid for inorganic acid.

Membrane Recovery Cleaning
The membrane recovery cleaning is to be done once a year at a minimum. On certain occasions, membrane cassette may need to be inspected for membrane integrity (suspect of membrane deterioration, membrane permeability performance does not recover after the cleaning, etc.).

- **Cleaning with High pH Solution:** This step is to be done if membrane fouling is a result of high fat, oil and grease. Sodium hydroxide can be used for this cleaning (400 mg/L, pH 12, 1 to 2 hours).
- **Cleaning with Sodium Hypochlorite** (500 mg/L free Cl_2, 12 hours)
- **Cleaning with Citric Acid** only in case of inorganic fouling (2 to 20 g/L during 2 h).
- **Checking Permeability.**

3.9 SERVICE WATER

For better cleaning performance, it is recommended to use:

- Potable water (permeate is acceptable if potable water is unavailable for the CEB cleaning),
- Water temperature is above 20^0C.

3.10 OPERATIONNAL PERFORMANCE TARGETS

The plant is designed to meet the following criteria presented in Table 5. Note that the treated water from STP is not directly discharged to the environment. The target concentrations presented in the following table for the treated water from STP, are set to limit effect on the receiving Environment after mixing with surface water into the Whale Tail attenuation pond and treatment in the AsWTP. There are no Water Licence criteria for the STP treated water. Reaching these values assure Agnico Eagle to operate the STP at a highest level of efficiency.

Table 5: STP treated water quality operational target

Parameters	Unit	Effluent
pH	s.u.	6.5 – 9.5
Oil, Grease	mg/L	<5
Biological Oxygen Demand (BOD)	mg/L	<25
Total Suspended Solids (TSS)	mg/L	<25
Total Kjeldahl Nitrogen (TKN)	mgN/L	-
Unionized Ammonia Nitrogen (NH3-N)	mgN/L	<1.25
Nitrate Nitrogen (NO3-N)	mgN/L	<5
Total Phosphorus (TP)	mgP/L	<0.5
Fecal Coliform	CFU/100 ml	<200
Total Residual Chlorine	mg/L	<0.02

3.11 GENERAL OPERATION & MAINTENANCE, SAMPLING PROCEDURES AND FREQUENCY

To ensure efficiency of STP, samples of water must be collected periodically. Table 6 presents sampling schedule to assess that STP performance comply with operational target values.

More samples can be taken at different locations in the plant to assess any default on STP operation.

Visual inspection is also important to verify STP operation. The following sign must be reported as soon as possible:

- **Plant Visual Checks Noise**
  During normal operation, there is a uniform humming sound at the plant. In case of an unusual noise, it could be an indication that the blower needs maintenance or repairs
- **Smell**
  The MBR is an aerobic system. During normal operation, the system has an earthy smell similar to that of a well-maintained compost pile. If other odors are noticed, the aeration process may not be operating or the system has been overloaded. Check the DO manually and the blower to verify the proper operation.
- **Effluent Aspect**
  Normally, the effluent is reasonably clear, colorless, and odorless. If the effluent becomes turbid, there is a pin hole in the membrane or a leakage in the piping. Take the unit out of operation and investigate. Check uniformity of membrane air distribution periodically to ensure air scouring is effective across all membrane plates.

Table 6: Monitoring program for operational efficiency assessment.

Parameters	Sewage	Aeration tank	Membrane tank	Effluent
Flow	daily			daily
Oil and Grease	As required			As required
Alkalinity	As required			
Biological Oxygen Demand	Weekly			Weekly
Total Suspended Solids	Weekly			Weekly
Total Kjeldahl Nitrogen / Total Nitrogen	Monthly			As required
Ammonia Nitrogen				As required
Nitrate				As required
Total Phosphorus	Weekly			Weekly
Mixed Liquor Suspended Solids (MLSS)			Weekly	
Mixed Liquor Volatile Suspended Solids (MLVSS)			As required	
Temperature		daily		
pH	As required	daily		Weekly
Dissolved Oxygen		daily		
Filterability			3 times weekly	
Turbidity				As required
Fecal Coliform / E-Coli				Weekly

Table 7 summarizes also Routine Operation and Maintenance Checkups. More details are provided in the supplier O&M Manual.

According to the water licence, Group 1 Parameters shall be analyzed four times per calendar year during operation and closure. The parameters are presented herein:

- pH, turbidity, hardness, alkalinity, chloride, fluoride, sulphate, total dissolved solids (TDS), total suspended solids (TSS), ammonia nitrogen, nitrite, nitrate, orthophosphate, total phosphorus, Total Metals (aluminum, arsenic, barium, cadmium, chromium, copper, iron, lead, manganese, mercury, molybdenum, nickel, selenium, silver, thallium and zinc).

Table 7: Routine Operation and Maintenance Checkups

Location	Item	Action	Comments
Grease trap	Periodic cleaning	As needed	Waste sent to Meadowbank TSF
Process	Visual check	Daily	Performance evaluation
	Flow rate in and out	Daily	
	Sampling	Daily / as requested	For water quality and performance evaluation
	Vacuum pressure on membrane	Daily	Evaluate Membrane fouling
Mechanical & process	Inspect Membrane	Weekly	
	Sensor cleaning and calibration	Weekly / yearly	
	Valves, fittings	Weekly	Prevent spill
	Membrane Cleaning	Quarterly/Yearly	Permeability recovery
	Aeration diffuser	Yearly	Process efficiency
	Pumps	Quarterly	Prevent spill
	Blower	Monthly	Process efficiency
	Screening device	Daily/ Weekly/ Quarterly	Prevent clogging, remove solid waste and dispose it
	Dosing pumps	Quarterly	Prevent spill
	Fan and heaters	Yearly	Health and safety of operator
Electrical	Leads	Quarterly	Health and safety of operator and Process efficiency
	Panel fan filter, inspection breaker, fuses, motor bold, clean dust	Monthly	Health and safety of operator Process efficiency
	PLC functionality	Weekly	Process efficiency

3.12 TROUBLESHOOTING AND MAINTENANCE PROCEDURES

MBR operation relies critically on the ability of the membrane unit to pass all flow incoming to the plant. If membrane permeability is impaired, the MBR plant cannot process all flow with potentially negative results even though effluent quality remains consistently high. Membrane fouling (and associated reduction of flux or increase of TMP) remains as an operational challenge.

Membrane fouling in MBR is a result of the interaction between the incoming water quality, mixed liquor filterability, system operation condition, and membrane material. There are four categories of membrane fouling.

Microbial/Biological Fouling
Microbial fouling is a result of the formation of biofilms on membrane surfaces. This structure protects bacterial cells from hydraulic shearing and from chemical attacks of biocides such as chlorine. Chemical cleaning would be required to restore permeability.

Particulate/Colloid Fouling
This type of fouling may be associated with high concentrations of colloidal solids present in mixed liquor. In most cases, particles and colloids do not really foul the membrane because the flux decline caused by their accumulation on the membrane surface is largely reversible by hydraulic cleaning measures such as backwash and air scouring. However, the accumulation of solids between the membranes can create increased membrane resistance to permeation and permanent physical membrane damage.

Inorganic Fouling
Inorganic fouling or precipitative fouling is caused by the accumulation of inorganic precipitates such as metal hydroxides, and “scales” on membrane surface or within pore structure. Chemical cleaning will be required in that case.

Organic Fouling
Organic fouling is the attachment of materials such as oil or grease to the membrane surface. Oil and grease trap will prevent this type of fouling and chemical cleaning is also achievable to restore permeability.

Excessive foaming (white foam accumulating over the liquid surface) in aeration and/or membrane tanks could also reduce performance of the STP. Remediation should be taken to eliminate foaming agent or restore design parameters of the plant.

Permeate bad quality can also indicate default in MBR membrane and operation.

Finally, biological system can also indicate default in operation.

- Black color of biomass indicates a lack of aeration,
- Increase of bacteria quantity in the reactor indicates a low sludge wasting,
- Unpleasant odor can indicate overload of the system, blower failure, etc.
- Water quality not achieved: Mixed liquor characteristics are not within proper operating standards.

Further details are available in the manufacturer’ operating manuals in Appendix.

3.13 RECORD KEEPING

Records of the operational, maintenance and sampling procedures will be kept daily in order to assist in the evaluation of the effectiveness of the STP.

The following will be recorded on a daily basis:

- Volume of effluent discharged to the whale tail attenuation pond;
- Sewage volume collected;
- Details of any maintenance undertaken at site;
- Volume of sewage sludge removed from the STP;
- Locations and methods of sewage sludge disposal;
- Water quality parameter results required to follow the STP performance.

The record sheets will be kept in the STP office.

3.14 SAFETY PROCEDURES FOR OPERATORS

Operators working in the STP facility must be trained prior to work so that they are aware of the health and safety risks as well as the operational procedures associated with the STP. The following are important safety considerations:

- The wastewater contains a mixture of viable bacteria and other biological organisms. A wastewater treatment plant poses a number of bacterial hazards and consequently potential health risk. Immunization protects operator against infection. The use of proper hygiene measures, protective equipment, good housekeeping and common sense prevent contact with pathogens. Ensure that hands are washed with an antibacterial soap and warm water and dried by disposable towels on a regular basis, especially prior eating. Do not expose cuts or open sores to wastewater. Any concern about possible infection should be brought to the attention of medical physician immediately.
- Follow local laws and regulations with respect to entering a confined space.
- Working within the plant, especially with chemicals, requires adequate personal protective equipment (PPE) for Operators. This includes wearing steel toed boots, hard hat, rubber aprons, safety glasses with side shields and gloves.
- Operators are required to conduct good housekeeping of the working area to minimize the risk of incidents.
- Lock-out/tag-out procedures must be applied when servicing equipment.
- The MSDS for reagents used in the STP will be readily available for the operator at all times.
- Eyewash stations are located within proximity of reagent systems in the STP.

3.15 CONTROLLING ACCESS TO THE STP

Access to the STP will be restricted to authorized personnel only. Signs will be posted at the STP entrance.

4 EMERGENCY RESPONSE

4.1 FIRE

In case of fire at the STP, the on-site emergency response team (ERT) will be notified as per Agnico Eagle's protocol. Instructions from the on-site emergency response team will be followed by all personnel at the STP. Further details of fire response are provided in the "*Risk Management & Emergency Response Plan*". The STP will include the necessary fire safety protection measures in accordance with the Nunavut and North West Territories Mine Act.

4.2 SPILL

In the event of a spill at the STP, the Environment Department will be notified immediately and provide support, as required. In the event of a large spill, the on-site ERT will be notified as per Agnico Eagle's protocol. Instructions from the ERT will be followed by all personnel at the STP. All spill will be reported and treated according to the "*Spill Contingency Plan".*

4.3 PLANT MALFUNCTION

If there is a major problem or failure in the STP it would be most likely due to changes in the influent (raw sewage) (i.e. high strength sewage (BOD high) killing bacteria in the STP) or membrane failure. In this case, there would be visible effluent problems (part of daily operational checks), poor water quality, and increased odours that the operator would note. If this occurs, a sample will be taken to try to determine the source of the problem.

The following other contingent measures can be applied by Agnico Eagle in the event of a malfunction at the STP:

- Cut back on allowable camp water until the malfunction is corrected and use the equalization tank to retard the peak flow;
- Shut down the malfunctioning unit until the malfunction is repaired and use only one of the two parallel units until repairs are completed (for equipment in parallel);
- Bypassing untreated STP influent around the malfunctioning unit. Sucker truck can collect sewage from the equalization tank and carry it to Meadowbank facilities. Sewage would then be stored into the Tailing storage facility or would be treated into the sewage treatment plant (STP) at Meadowbank depending on the available capacity remaining.
- Shut down temporarily all water use in the camp until the repairs are completed;

Appendix A: Reagent MSDS Sheets

SAFETY DATA SHEET

NC00525
MICROC 2000

Preparation Date: 09/Mar/2018 Version: 1

1. IDENTIFICATION

Product identifier

Product Name MICROC 2000

Other means of identification

Product Code(s) NC00525

Synonyms none

Recommended use of the chemical and restrictions on use

Recommended Use Reducing agent for biological purposes

Restricted Uses No information available

Initial Supplier Identifier
Univar Canada Ltd.
9800 Van Horne Way
Richmond, BC V6X 1W5
Telephone: 1-866-686-4827

Emergency telephone number

24 Hour Emergency Phone Number (CANUTEC): 1-888-226-8832 (1-888-CAN-UTEC)

2. HAZARD IDENTIFICATION

Hazardous Classification of the substance or mixture

none

Label elements

Hazard pictograms None

Hazard statements

SAFETY DATA SHEET

SDS00221
Sodium Hypochlorite 12%

Preparation Date: 09/Feb/2018 Version: 4

1. IDENTIFICATION

Product identifier

Product Name Sodium Hypochlorite 12%

Other means of identification

Product Code(s) SDS00221

Synonyms Sodium oxychloride; Soda bleach liquor; Javel water; Clorox; Javex.

Recommended use of the chemical and restrictions on use

Recommended Use Chemical intermediate Bleaching agent Laboratory reagent. Pulp and paper. Water treatment. Disinfectant

Restricted Uses No information available

Initial Supplier Identifier
Univar Canada Ltd.
9800 Van Horne Way
Richmond, BC V6X 1W5
Telephone: 1-866-686-4827

Emergency telephone number

24 Hour Emergency Phone Number (CANUTEC): 1-888-226-8832 (1-888-CAN-UTEC)

2. HAZARD IDENTIFICATION

Hazardous Classification of the substance or mixture

Corrosive to metals	Category 1
Skin corrosion/irritation	Category 1
Sub-category B	
Serious eye damage/eye irritation	Category 1

Label elements

Hazard pictograms



Signal Word: Danger

Hazard statements
May be corrosive to metals
Causes severe skin burns and eye damage

Precautionary Statements

Prevention
Do not breathe dust/fume/gas/mist/vapors/spray
Wash face, hands and any exposed skin thoroughly after handling
Wear protective gloves/protective clothing/eye protection/face protection

Immediately call a POISON CENTER or doctor
IF IN EYES: Rinse cautiously with water for several minutes. Remove contact lenses, if present and easy to do. Continue rinsing
IF ON SKIN (or hair): Take off immediately all contaminated clothing. Rinse skin with water or shower
Wash contaminated clothing before reuse
IF INHALED: Remove person to fresh air and keep comfortable for breathing
IF SWALLOWED: Rinse mouth. DO NOT induce vomiting

Storage
Store locked up
Store in a well-ventilated place. Keep container tightly closed

Disposal
Dispose of contents/container to an approved waste disposal plant

Very toxic to aquatic life with long lasting effects

3. COMPOSITION/INFORMATION ON INGREDIENTS

Substance

Not applicable.

Mixture

Chemical Name	CAS No	Weight-%	Synonyms
Water	7732-18-5	80 - 90%	Water
Sodium Hypochlorite, Solution	7681-52-9	10 - 20%	Sodium Hypochlorite, Solution

4. FIRST AID

Description of first aid measures

General advice
Immediate medical attention is required. Show this safety data sheet to the doctor in attendance.

Inhalation
Remove to fresh air. If breathing has stopped, give artificial respiration. Get medical attention immediately. Do not use mouth-to-mouth method if victim ingested or inhaled the substance; give artificial respiration with the aid of a pocket mask equipped with a one-way valve or other proper respiratory medical device. If breathing is difficult, (trained personnel should) give oxygen. Delayed pulmonary edema may occur.

Eye contact
Rinse immediately with plenty of water, also under the eyelids, for at least 15 minutes. Keep eye wide open while rinsing. Do not rub affected area. Remove contact lenses, if present and easy to do. Continue rinsing. Get immediate medical advice/attention.

Skin contact
Wash off immediately with soap and plenty of water while removing all contaminated clothes and shoes. Get immediate medical advice/attention.

Ingestion
Do NOT induce vomiting. Clean mouth with water and drink afterwards plenty of water. Never give anything by mouth to an unconscious person. Get immediate medical advice/attention.

Self-protection of the first aider
Ensure that medical personnel are aware of the material(s) involved, take precautions to protect themselves and prevent spread of contamination. Avoid contact with skin, eyes or clothing. Avoid direct contact with skin. Use barrier to give mouth-to-mouth resuscitation. Wear personal protective clothing (see section 8).

Most important symptoms and effects, both acute and delayed:
Causes irritation of the mouth, nose and throat. Corrosive Causes burns to the mouth, throat and stomach. May cause severe skin irritation. Corrosive to the respiratory passage. Corrosive to eye tissue and may cause severe damage and blindness. Causes vomiting, nausea, and diarrhea. Repeated and/or prolonged exposures may cause productive cough, running nose, bronchopneumonia, pulmonary edema (fluid build-up in lungs) and reduction of pulmonary function. Coma, shock and death may occur. May cause whitening or bleaching of the skin. If mixed with acids or warmed to temperatures greater than 40 °Celsius, Sodium hypochlorite solutions release chlorine gas. This gas can cause severe irritation of the nose and throat. Exposures to high levels of chlorine gas may result in severe lung damage. Prolonged contact may lead to burns and blisters and may aggravate dermatitis.

Indication of any immediate medical attention and special treatment needed:

Note to physicians
Due to the severely irritating or corrosive nature of the material, swallowing may lead to ulceration and inflammation of the upper alimentary tract with hemorrhage and fluid loss. Also, perforation of the esophagus or stomach may occur, leading to mediastinitis or peritonitis and the resultant complications.

5. FIRE-FIGHTING MEASURES

Suitable Extinguishing Media
Use extinguishing media appropriate for surrounding fire.

Specific hazards arising from the substance or mixture
Closed containers may explode in fire. Keep containers cool to prevent rupture and release of material. Spilled material may cause floors and contact surfaces to become slippery.

Hazardous combustion products
Chlorine. Oxides of sodium. Oxygen. When heated to decomposition, it emits acrid smoke and irritating fumes.

Special protective equipment for fire-fighters
Firefighters should wear self-contained breathing apparatus and full firefighting turnout gear. Use personal protection equipment.

6. ACCIDENTAL RELEASE MEASURES

Personal precautions, protective equipment and emergency procedures

Attention! Corrosive material. Avoid contact with skin, eyes or clothing. Ensure adequate ventilation. Use personal protective equipment as required. Evacuate personnel to safe areas. Keep people away from and upwind of spill/leak.

Environmental precautions

Prevent further leakage or spillage if safe to do so. Should not be released into the environment. Do not allow to enter into soil/subsoil. Prevent product from entering drains.

Methods and materials for containment and cleaning up

Prevent further leakage or spillage if safe to do so.

7. HANDLING AND STORAGE

Precautions for safe handling

For industrial use only. Handle and open containers with care. Avoid contact with eyes, skin and clothing. Do not ingest. Avoid inhalation of chemical. Empty containers may contain hazardous product residues. Keep the containers closed when not in use. Protect against physical damage. Use appropriate personnel protective equipment. When diluting, add this product to water in small amounts to avoid spattering. Never add water to this material.

Conditions for safe storage, including any incompatibilities

Store in a cool, dry, well ventilated area, away from heat and ignition sources. Keep away from direct sunlight. Do not freeze. Store away from organic chemicals, strong bases, metal powders, carbides, sulfides, and any readily oxidizable material. Storage area should be equipped with corrosion-resistant floors, sumps and should have controlled drainage to a recovery tank. Store below 29 °C. Store in a sealed polyethylene lined container.

8. EXPOSURE CONTROLS/PERSONAL PROTECTION

Control parameters

Exposure Limits This product, as supplied, does not contain any hazardous materials with occupational exposure limits established by the region specific regulatory bodies.

Chemical Name	Alberta OEL	British Columbia OEL	Ontario	Quebec OEL	Exposure Limit - ACGIH	Immediately Dangerous to Life or Health - IDLH
Water 7732-18-5	Not available	Not available	Not available	Not available	Not available	Not available
Sodium	Not available	Not available	Not available	Not available	Not available	Not available

Hypochlorite, Solution 7681-52-9						

Consult local authorities for recommended exposure limits

Appropriate engineering controls

Engineering controls
Local exhaust ventilation as necessary to maintain exposures to within applicable limits. Make up air should always be supplied to balance air exhausted (either generally or locally). Ventilation required when spraying or applying in a confined area. Ventilation should be explosion proof. Eliminate ignition sources.

Individual protection measures, such as personal protective equipment

Eye/face protection
Chemical safety goggles and/or full face shield to protect eyes and face, if product is handled such that it could be splashed into eyes.

Hand protection
Nitrile gloves. Neoprene gloves. Impervious gloves. Rubber gloves.

Skin and body protection
Neoprene coated apron or chemical resistant clothing. Impervious boots.

Respiratory protection
NIOSH approved supplied air respirator when airborne concentrations exceed exposure limits. Wear a NIOAH approved full facepiece respirator for acid gases or a self-contained breathing apparatus for air concentration levels up to 5 ppm.

General hygiene considerations
Avoid contact with skin, eyes or clothing. Wear suitable gloves and eye/face protection. Do not eat, drink or smoke when using this product. Remove and wash contaminated clothing and gloves, including the inside, before re-use. Contaminated work clothing should not be allowed out of the workplace. Regular cleaning of equipment, work area and clothing is recommended. Wash hands before breaks and immediately after handling the product.

9. PHYSICAL AND CHEMICAL PROPERTIES

Information on basic physical and chemical properties

Appearance

Physical state	Liquid
Color	Clear Green to yellow.
Odor	Chlorine
Odor threshold	No information available

PROPERTIES	**Values**	**Remarks • Method**
pH	11.5 - 13	
Melting point / freezing point	-25 °C / -13 °F	
Initial boiling point/boiling range	No data available	None known
Flash point	No data available	None known
Evaporation rate	No data available	None known
Flammability (solid, gas)	No data available	None known
Flammability Limit in Air		
Upper flammability limit:	No data available	
Lower flammability limit:	No data available	
Vapor pressure	17.5 mmHg	
Relative vapor density	No data available	None known

Specific Gravity	1.175	
Water solubility	Soluble in water	
Solubility in other solvents	No data available	
Partition coefficient	No data available	
Autoignition temperature	No data available	None known
Decomposition temperature	No data available	None known
Kinematic viscosity	No data available	None known
Dynamic viscosity	No data available	None known
Explosive properties	No information available.	
Oxidizing properties	No information available.	
Molecular weight	No information available	
VOC Percentage Volatility	No information available	
Liquid Density	No information available	
Bulk density	No information available	

10. STABILITY AND REACTIVITY

Reactivity/Chemical Stability
Unstable above 40°C / 104 °F.

Possibility of hazardous reactions
Hypochlorites may react with primary amines to form nitrogen trichloride which explodes spontaneously in air. Hypochlorite bleach reacts with urea to form nitrogen trichloride which explodes spontaneously in air. Some metals accelerate the decomposition of Sodium Hypochlorite. Nickel. Copper. Tin. Iron and its alloys. Manganese.

Hazardous polymerization
Will not occur.

Conditions to avoid
High temperatures. Exposure to light.

Incompatible materials
Strong oxidizers. Acids. Reducing agents. Ammonia. Metals.

Hazardous decomposition products
Chlorine. Oxides of sodium. Oxygen. When heated to decomposition, it emits acrid smoke and irritating fumes.

11. TOXICOLOGICAL INFORMATION

Information on likely routes of exposure

Inhalation
Causes irritation of the mouth, nose and throat. Corrosive to the respiratory passage. Repeated and/or prolonged exposures may cause productive cough, running nose, bronchopneumonia, pulmonary edema (fluid build-up in lungs) and reduction of pulmonary function. If mixed with acids or warmed to temperatures greater than 40 °Celsius, Sodium hypochlorite solutions release chlorine gas. This gas can cause severe irritation of the nose and throat. Exposures to high levels of chlorine gas may result in severe lung damage.

Eye contact
Corrosive to eye tissue and may cause severe damage and blindness.

Skin contact
Corrosive. May cause severe skin irritation. May cause whitening or bleaching of the skin. Prolonged contact may lead to burns and blisters and may aggravate dermatitis.

Ingestion
Causes burns to the mouth, throat and stomach. Corrosive. Causes vomiting, nausea, and diarrhea. Coma, shock and death may occur.

Information on toxicological effects

Symptoms
Corrosive effects on the skin and eyes may be delayed, and damage may occur without the sensation or onset of pain. Aspiration may cause lung damage.

Numerical measures of toxicity

Acute toxicity

The following values are calculated based on chapter 3.1 of the GHS document .

ATEmix (oral) 68,333.00 mg/kg
ATEmix (dermal) 83,417.00 mg/kg

Unknown acute toxicity No information available

Chemical Name	Oral LD50	Dermal LD50	Inhalation LC50
Water 7732-18-5	> 90 mL/kg (Rat)	Not available	Not available
Sodium Hypochlorite, Solution 7681-52-9	= 8.91 g/kg (Rat)	> 10000 mg/kg (Rabbit)	Not available

Delayed and immediate effects as well as chronic effects from short and long-term exposure

Skin corrosion/irritation
Corrosive. May cause severe skin irritation. May cause whitening or bleaching of the skin. Prolonged contact may lead to burns and blisters and may aggravate dermatitis.

Serious eye damage/eye irritation
Corrosive to eye tissue and may cause severe damage and blindness.

Respiratory or skin sensitization
No information available.

Germ cell mutagenicity
No information available.

Carcinogenicity
No information available.

The table below indicates whether each agency has listed any ingredient as a carcinogen.

Chemical Name	ACGIH	IARC	NTP	OSHA
Water 7732-18-5	Not available	Not available	Not available	Not available
Sodium Hypochlorite, Solution 7681-52-9	Not available	Group 3	Not available	Not available

Legend
IARC (International Agency for Research on Cancer)
Group 3 - Not Classifiable as to Carcinogenicity in Humans

Reproductive toxicity
No information available.

Specific target organ systemic toxicity - single exposure

No information available.

Specific target organ systemic toxicity - repeated exposure
No information available.

Aspiration hazard
No information available.

12. ECOLOGICAL INFORMATION

Ecotoxicity

.

Chemical Name	Ecotoxicity - Freshwater Algae Data	Ecotoxicity - Fish Species Data	Toxicity to microorganisms	Crustacea
Water 7732-18-5	Not available	Not available	Not available	Not available
Sodium Hypochlorite, Solution 7681-52-9	Not available	0.06 - 0.11 mg/L LC50 (Pimephales promelas) 96 h flow-through 4.5 - 7.6 mg/L LC50 (Pimephales promelas) 96 h static 0.4 - 0.8 mg/L LC50 (Lepomis macrochirus) 96 h static 0.28 - 1 mg/L LC50 (Lepomis macrochirus) 96 h flow-through 0.05 - 0.771 mg/L LC50 (Oncorhynchus mykiss) 96 h flow-through 0.03 - 0.19 mg/L LC50 (Oncorhynchus mykiss) 96 h semi-static 0.18 - 0.22 mg/L LC50 (Oncorhynchus mykiss) 96 h static	Not available	EC50: 0.033 - 0.044mg/L (48h, Daphnia magna)

Persistence and degradability No information available.

Bioaccumulation No information available.

Chemical Name	Partition coefficient
Water 7732-18-5	Not available
Sodium Hypochlorite, Solution 7681-52-9	Not available

Other adverse effects No information available.

13. DISPOSAL CONSIDERATIONS

Waste treatment methods

Dispose of in accordance with local regulations. Dispose of waste in accordance with environmental legislation.

Do not reuse empty containers.

14. TRANSPORT INFORMATION

TDG (Canada):

UN Number	UN1791
Shipping name	HYPOCHLORITE SOLUTION
Class	8
Packing Group	III
Marine pollutant	Not available.

DOT (U.S.)

UN Number	UN1791
Shipping name	HYPOCHLORITE SOLUTION
Class	8
Packing Group	III
Marine pollutant	Not available

15. REGULATORY INFORMATION

Safety, health and environmental regulations/legislation specific for the substance or mixture

NSF International

Certified to NSF/ANSI 60

Additional information
Maximum use for potable water 95 mg/L. Only products bearing the NSF Mark on the product, product packaging, and/or documentation shipped with the product are Certified.

U.S. Regulatory Rules

Chemical Name	CERCLA/SARA - Section 302:	SARA (311, 312) Hazard Class:	CERCLA/SARA - Section 313:
Water - 7732-18-5	Not Listed	Not Listed	Not Listed
Sodium Hypochlorite, Solution - 7681-52-9	Not Listed	Listed	Not Listed

International Inventories

TSCA	Complies
DSL/NDSL	Complies

Legend:
TSCA - United States Toxic Substances Control Act Section 8(b) Inventory
DSL/NDSL - Canadian Domestic Substances List/Non-Domestic Substances List

16. OTHER INFORMATION, INCLUDING DATE OF PREPARATION OF THE LAST REVISION

NFPA:	**Health hazards** 3	**Flammability** 0	**Instability** 0	**Physical and chemical properties** -
HMIS Health Rating:	**Health hazards** 3	**Flammability** 0	**Physical hazards** 0	**Personal protection** X

Legend Section 8: EXPOSURE CONTROLS/PERSONAL PROTECTION

TWA	TWA (time-weighted average)	STEL	STEL (Short Term Exposure Limit)
Ceiling	Maximum limit value	*	Skin designation

Prepared By: The Environment, Health and Safety Department of Univar Canada Ltd.

Preparation Date: 09/Feb/2018
Revision Date: 09/Feb/2018

Disclaimer

NOTICE TO READER:

Univar expressly disclaims all express or implied warranties of merchantability and fitness for a particular purpose, with respect to the product or information provided herein, and shall under no circumstances be liable for incidental or consequential damages.

Do not use ingredient information and/or ingredient percentages in this SDS as a product specification. For product specification information refer to a Product Specification Sheet and/or a Certificate of Analysis. These can be obtained from your local Univar Sales Office.

All information appearing herein is based upon data obtained from the manufacturer and/or recognized technical sources. While the information is believed to be accurate, Univar makes no representations as to its accuracy or sufficiency. Conditions of use are beyond Univar's control and therefore users are responsible to verify this data under their own operating conditions to determine whether the product is suitable for their particular purposes and they assume all risks of their use, handling, and disposal of the product, or from the publication or use of, or reliance upon, information contained herein. This information relates only to the product designated herein, and does not relate to its use in combination with any other material or in any other process.

©2015 Univar Inc. All rights reserved. Univar, the hexagon, the Univar logo and MasterLine are the registered trademarks of Univar Inc.

End of Safety Data Sheet

The mixture does not meet the criteria for classification.

Prevention
Wash hands thoroughly after handling
Wear protective gloves/protective clothing/eye protection/face protection
In case of inadequate ventilation wear respiratory protection

Response
Read the label and safety data sheet before use.
Flush eyes with plenty amounts of water.
If eye irritation persists: Get medical advice/attention
Wash skin with plenty of water.
If skin irritation occurs: Get medical advice/attention
Move person to fresh air.
Do NOT induce vomiting. Never give anything by mouth to an unconscious or convulsing person. Seek immediate medical attention. If vomiting occurs spontaneously, keep head below hips to prevent aspiration of liquid into the lungs.

Storage
Store in accordance with good industrial practices.

Disposal
Disposal of all wastes must be done in accordance with municipal, provincial and federal regulations

3. COMPOSITION/INFORMATION ON INGREDIENTS

Substance

Not applicable.

Mixture

Chemical Name	CAS No	Weight-%	Synonyms
Glycerine	56-81-5	70 - 80%	Glycerine
Water	7732-18-5	20 - 30%	Water
Sodium Chloride	7647-14-5	0 - 10%	Sodium Chloride
Methanol	67-56-1	0 - 10%	Methanol

4. FIRST AID

Description of first aid measures

Inhalation
Remove to fresh air.

Eye contact
Rinse thoroughly with plenty of water for at least 15 minutes, lifting lower and upper eyelids. Consult a physician.

Skin contact
Wash skin with soap and water.

Ingestion
Clean mouth with water and drink afterwards plenty of water.

Most important symptoms and effects, both acute and delayed:
May cause slight eye irritation Symptoms include pain, redness and tearing. May cause slight skin irritation. Prolonged or repeated contact may cause discomfort and local redness. High concentrations of mist or vapor may cause irritation of the respiratory tract. May be harmful if swallowed

Indication of any immediate medical attention and special treatment needed:

Note to physicians
Treatment based on sound judgment of physician and individual reactions of patient.

5. FIRE-FIGHTING MEASURES

Suitable Extinguishing Media
Use extinguishing agent suitable for type of surrounding fire. Water spray. Alcohol foam. Dry chemical or CO2. Water or Foam may cause frothing.

Specific hazards arising from the substance or mixture
No information available.

Hazardous combustion products
See section 10 for more information.

Special protective equipment for fire-fighters
Firefighters should wear self-contained breathing apparatus and full firefighting turnout gear. Use personal protection equipment.

6. ACCIDENTAL RELEASE MEASURES

Personal precautions, protective equipment and emergency procedures

Ensure adequate ventilation. Avoid breathing vapors or mists.

Environmental precautions

See Section 12 for additional Ecological Information.

Methods and materials for containment and cleaning up

Prevent further leakage or spillage if safe to do so. Eliminate all ignition sources.

7. HANDLING AND STORAGE

Precautions for safe handling

Handle in accordance with good industrial hygiene and safety practice. Avoid contact with skin, eyes or clothing. Avoid breathing vapors or mists. Keep away from heat, hot surfaces, sparks, open flames and other ignition sources. No smoking.

Conditions for safe storage, including any incompatibilities

Keep containers tightly closed in a cool, well-ventilated place. Keep away from sources of ignition.

8. EXPOSURE CONTROLS/PERSONAL PROTECTION

Control parameters

Exposure Limits .

Chemical Name	Alberta OEL	British Columbia OEL	Ontario	Quebec OEL	Exposure Limit - ACGIH	Immediately Dangerous to Life or Health - IDLH
Glycerine 56-81-5	TWA: 10 mg/m^3	TWA: 10 mg/m^3 TWA: 3 mg/m^3	Not available	TWA: 10 mg/m^3	Not available	Not available
Water 7732-18-5	Not available	Not available	Not available	Not available	Not available	Not available
Sodium Chloride 7647-14-5	Not available	Not available	Not available	Not available	Not available	Not available
Methanol 67-56-1	TWA: 200 ppm TWA: 262 mg/m^3 STEL: 250 ppm STEL: 328 mg/m^3 Skin	TWA: 200 ppm STEL: 250 ppm Skin	TWA: 200 ppm STEL: 250 ppm Skin	TWA: 200 ppm TWA: 262 mg/m^3 STEL: 250 ppm STEL: 328 mg/m^3 Skin	250 ppm STEL 200 ppm TLV-TWA	6000 ppm

Consult local authorities for recommended exposure limits

Appropriate engineering controls

Engineering controls
Showers
Eyewash stations
Ventilation systems.

Individual protection measures, such as personal protective equipment

Eye/face protection
Chemical goggles; also wear a face shield if splashing hazard exists.

Hand protection
Use gloves chemically resistant to this material, examples of preferred glove barrier materials include:. Nitrile gloves.

Skin and body protection
Skin contact should be prevented through the use of suitable protective clothing, gloves and footwear, selected for conditions of use and exposure potential. Consideration must be given both to durability as well as permeation resistance.

Respiratory protection
If exposure exceeds occupational exposure limits, use an appropriate NIOSH-approved respirator.

General hygiene considerations
Handle in accordance with good industrial hygiene and safety practice.

9. PHYSICAL AND CHEMICAL PROPERTIES

Information on basic physical and chemical properties

Appearance

Physical state	Liquid
Color	Light brown

Odor	MUSTY to Sweet
Odor threshold	No information available

PROPERTIES	Values	Remarks • Method
pH	4 - 11	
Melting point / freezing point	No data available	None known
Initial boiling point/boiling range	No data available	None known
Flash point	No data available	None known
Evaporation rate	No data available	None known
Flammability (solid, gas)	No data available	None known
Flammability Limit in Air		
Upper flammability limit:	No data available	
Lower flammability limit:	No data available	
Vapor pressure	No data available	None known
Relative vapor density	No data available	None known
Specific Gravity	1.225@ 20°C	
Water solubility	Soluble in water	
Solubility in other solvents	No data available	None known
Partition coefficient	No data available	
Autoignition temperature	No data available	None known
Decomposition temperature	No data available	None known
Kinematic viscosity	45 cPs @ 20C	
Dynamic viscosity	No data available	None known
Explosive properties	No information available.	
Oxidizing properties	No information available.	

Molecular weight	No information available
VOC Percentage Volatility	No information available
Liquid Density	No information available
Bulk density	10.22 lbs/gal

10. STABILITY AND REACTIVITY

Reactivity/Chemical Stability
Stable under normal conditions

Possibility of hazardous reactions
None under normal processing.

Conditions to avoid
Heat, flames and sparks.

Incompatible materials
Oxidizing agents. Nitric acid. Peroxides. Chromates.

Hazardous decomposition products
Oxides of carbon.

11. TOXICOLOGICAL INFORMATION

Information on likely routes of exposure

Inhalation
High concentrations of mist or vapor may cause irritation of the respiratory tract.

Eye contact
May cause slight eye irritation.

Skin contact
May cause slight skin irritation.

Ingestion
May be harmful if swallowed.

Information on toxicological effects

Symptoms
Prolonged exposure may cause headaches, nausea, dizziness, eye, skin and respiratory irritation.

Numerical measures of toxicity

Acute toxicity

The following values are calculated based on chapter 3.1 of the GHS document .

ATEmix (oral) 13,548.00 mg/kg
ATEmix (dermal) 13,903.00 mg/kg

Unknown acute toxicity No information available

Chemical Name	Oral LD50	Dermal LD50	Inhalation LC50
Glycerine 56-81-5	= 12600 mg/kg (Rat)	> 10 g/kg (Rabbit)	> 570 mg/m^3 (Rat) 1 h
Water 7732-18-5	> 90 mL/kg (Rat)	Not available	Not available
Sodium Chloride 7647-14-5	= 3 g/kg (Rat)	Not available	> 42 g/m^3 (Rat) 1 h
Methanol 67-56-1	= 6200 mg/kg (Rat)	= 15840 mg/kg (Rabbit)	= 22500 ppm (Rat) 8 h

Delayed and immediate effects as well as chronic effects from short and long-term exposure

Skin corrosion/irritation
May cause slight irritation with discomfort and local redness.

Serious eye damage/eye irritation
Symptoms include pain, redness and tearing.

Respiratory or skin sensitization
No information available.

Germ cell mutagenicity
No information available.

Carcinogenicity
No information available.

Chemical Name	ACGIH	IARC	NTP	OSHA
Glycerine 56-81-5	Not available	Not available	Not available	Not available
Water 7732-18-5	Not available	Not available	Not available	Not available
Sodium Chloride 7647-14-5	Not available	Not available	Not available	Not available
Methanol 67-56-1	Not available	Not available	Not available	Not available

Reproductive toxicity
No information available.

Specific target organ systemic toxicity - single exposure
No information available.

Specific target organ systemic toxicity - repeated exposure
No information available.

Aspiration hazard
No information available.

12. ECOLOGICAL INFORMATION

Ecotoxicity

.

Chemical Name	Ecotoxicity - Freshwater Algae Data	Ecotoxicity - Fish Species Data	Toxicity to microorganisms	Crustacea
Glycerine 56-81-5	Not available	51 - 57 mL/L LC50 (Oncorhynchus mykiss) 96 h static	Not available	Not available
Water 7732-18-5	Not available	Not available	Not available	Not available
Sodium Chloride 7647-14-5	Not available	5560 - 6080 mg/L LC50 (Lepomis macrochirus) 96 h flow-through 12946 mg/L LC50 (Lepomis macrochirus) 96 h static 6020 - 7070 mg/L LC50 (Pimephales promelas) 96 h static 7050 mg/L LC50 (Pimephales promelas) 96 h semi-static 6420 - 6700 mg/L LC50 (Pimephales promelas) 96 h static 4747 - 7824 mg/L LC50 (Oncorhynchus mykiss) 96 h flow-through	Not available	EC50: =1000mg/L (48h, Daphnia magna) EC50: 340.7 - 469.2mg/L (48h, Daphnia magna)
Methanol 67-56-1	Not available	28200 mg/L LC50 (Pimephales promelas) 96 h flow-through 100 mg/L LC50 (Pimephales promelas) 96 h static 19500 - 20700 mg/L LC50 (Oncorhynchus mykiss) 96 h flow-through 18 - 20 mL/L LC50 (Oncorhynchus mykiss) 96 h static 13500 - 17600 mg/L LC50 (Lepomis macrochirus) 96 h flow-through	Not available	Not available

Persistence and degradability No information available.

Bioaccumulation No information available.

Component Information

Chemical Name	Partition coefficient
Glycerine 56-81-5	-1.76
Water 7732-18-5	Not available
Sodium Chloride 7647-14-5	Not available
Methanol 67-56-1	-0.77

Other adverse effects No information available.

13. DISPOSAL CONSIDERATIONS

Waste treatment methods

Dispose of in accordance with local regulations. Dispose of waste in accordance with environmental legislation.

Do not reuse empty containers.

14. TRANSPORT INFORMATION

TDG (Canada):

UN Number	Not applicable
Shipping name	Not regulated
Class	Not applicable
Packing Group	Not applicable
Marine pollutant	Not available.

DOT (U.S.)

UN Number	Not applicable
Shipping name	Not regulated
Class	Not applicable
Packing Group	Not applicable
Marine pollutant	Not available

15. REGULATORY INFORMATION

Safety, health and environmental regulations/legislation specific for the substance or mixture

U.S. Regulatory Rules

Chemical Name	CERCLA/SARA - Section 302:	SARA (311, 312) Hazard Class:	CERCLA/SARA - Section 313:
Glycerine - 56-81-5	Not Listed	Not Listed	Not Listed
Water - 7732-18-5	Not Listed	Not Listed	Not Listed
Sodium Chloride - 7647-14-5	Not Listed	Not Listed	Not Listed
Methanol - 67-56-1	Not Listed	Listed	Listed

International Inventories

TSCA	Complies
DSL/NDSL	Complies

Legend:
TSCA - United States Toxic Substances Control Act Section 8(b) Inventory

DSL/NDSL - Canadian Domestic Substances List/Non-Domestic Substances List

16. OTHER INFORMATION, INCLUDING DATE OF PREPARATION OF THE LAST REVISION

NFPA:	**Health hazards** 0	**Flammability** 0	**Instability** 0	**Physical and chemical properties** -
HMIS Health Rating:	**Health hazards** 0	**Flammability** 0	**Physical hazards** 0	**Personal protection** X

Legend Section 8: EXPOSURE CONTROLS/PERSONAL PROTECTION

TWA	TWA (time-weighted average)	STEL	STEL (Short Term Exposure Limit)
Ceiling	Maximum limit value	*	Skin designation

Prepared By: The Environment, Health and Safety Department of Univar Canada Ltd.

Preparation Date: 09/Mar/2018
Revision Date: 09/Mar/2018

Disclaimer

NOTICE TO READER:

Univar expressly disclaims all express or implied warranties of merchantability and fitness for a particular purpose, with respect to the product or information provided herein, and shall under no circumstances be liable for incidental or consequential damages.

Do not use ingredient information and/or ingredient percentages in this SDS as a product specification. For product specification information refer to a Product Specification Sheet and/or a Certificate of Analysis. These can be obtained from your local Univar Sales Office.

All information appearing herein is based upon data obtained from the manufacturer and/or recognized technical sources. While the information is believed to be accurate, Univar makes no representations as to its accuracy or sufficiency. Conditions of use are beyond Univar's control and therefore users are responsible to verify this data under their own operating conditions to determine whether the product is suitable for their particular purposes and they assume all risks of their use, handling, and disposal of the product, or from the publication or use of, or reliance upon, information contained herein. This information relates only to the product designated herein, and does not relate to its use in combination with any other material or in any other process.

©2015 Univar Inc. All rights reserved. Univar, the hexagon, the Univar logo and MasterLine are the registered trademarks of Univar Inc.

End of Safety Data Sheet

SAFETY DATA SHEET

SDS00404
ALS Aluminum Sulphate

Preparation Date: 07/Nov/2017 Version: 3

1. IDENTIFICATION

Product identifier

Product Name ALS Aluminum Sulphate

Other means of identification

Product Code(s) SDS00404

Synonyms none

Recommended use of the chemical and restrictions on use

Recommended Use Water treatment (potable and waste water). Paper applications.

Restricted Uses No information available

Initial Supplier Identifier
Univar Canada Ltd.
9800 Van Horne Way
Richmond, BC V6X 1W5
Telephone: 1-866-686-4827

Emergency telephone number

24 Hour Emergency Phone Number (CANUTEC): 1-888-226-8832 (1-888-CAN-UTEC)

2. HAZARD IDENTIFICATION

Hazardous Classification of the substance or mixture

Corrosive to metals	Category 1
Serious eye damage/eye irritation	Category 1

Label elements

Hazard pictograms



Signal Word: Danger

Hazard statements
May be corrosive to metals
Causes serious eye damage

Precautionary Statements

Prevention
Wash face, hands and any exposed skin thoroughly after handling
Keep only in original container
Wear eye/face protection

Response

IF IN EYES: Rinse cautiously with water for several minutes. Remove contact lenses, if present and easy to do. Continue rinsing
If eye irritation persists: Get medical advice/attention
IF ON SKIN (or hair): Remove/Take off immediately all contaminated clothing. Rinse skin with water/shower
IF SWALLOWED: Call a POISON CENTER or doctor if you feel unwell
Rinse mouth

In case of fire: Use dry sand, dry chemical or alcohol-resistant foam to extinguish

Storage
Store locked up
Store in a well-ventilated place. Keep container tightly closed

Disposal
Disposal of all wastes must be done in accordance with municipal, provincial and federal regulations

Other Information
Unknown acute toxicity No information available

3. COMPOSITION/INFORMATION ON INGREDIENTS

Substance

Chemical Name	CAS No	Weight-%	Synonyms
Sulfuric acid, aluminum salt	10043-01-3	20 - 30%	Sulfuric acid, aluminum salt

4. FIRST AID

Description of first aid measures

General advice
Show this safety data sheet to the doctor in attendance.

Inhalation
Remove to fresh air.

Eye contact
Rinse thoroughly with plenty of water for at least 15 minutes, lifting lower and upper eyelids. Consult a physician.

Skin contact
Wash with soap and water. Take off contaminated clothing and wash before reuse. Get medical attention if irritation develops and persists.

Ingestion
Do NOT induce vomiting. Clean mouth with water and drink afterwards plenty of water. Never give anything by mouth to an unconscious person. Call a physician.

Most important symptoms and effects, both acute and delayed:
May cause digestive tract irritation. May cause respiratory tract irritation May cause moderate skin irritation. Direct contact may cause moderate irritation.

Indication of any immediate medical attention and special treatment needed:

Note to physicians
Treatment based on sound judgment of physician and individual reactions of patient.

5. FIRE-FIGHTING MEASURES

Suitable Extinguishing Media
Use extinguishing media appropriate for surrounding fire.

Specific hazards arising from the substance or mixture
Use water spray to cool fire-exposed containers and structures. Under fire conditions, toxic, corrosive fumes are emitted.

Hazardous combustion products
Thermal decomposition: after completely dry and heated to decomposition will produce sulphur oxides and aluminum oxides.

Special protective equipment for fire-fighters
Firefighters should wear self-contained breathing apparatus and full firefighting turnout gear. Use personal protection equipment.

6. ACCIDENTAL RELEASE MEASURES

Personal precautions, protective equipment and emergency procedures

Use personal protective equipment as required. Wash thoroughly after handling.

Environmental precautions

Prevent further leakage or spillage if safe to do so. Prevent from entering into soil, ditches, sewers, waterways and/or groundwater. Consult local authorities.

Methods and materials for containment and cleaning up

Small spills: soak up with absorbent material and scoop into containers. Large spills : prevent contamination of waterways. Dike and pump into suitable containers. Clean up residual with absorbent material, place in appropriate container and flush with water. Neutralize with lime or limestone powder.

7. HANDLING AND STORAGE

Precautions for safe handling

Empty containers may contain hazardous product residues. Use appropriate personnel protective equipment. Wash thoroughly after handling. Avoid contact with eyes, skin and clothing.

Conditions for safe storage, including any incompatibilities

Place away from incompatible materials. Containers of this material may be hazardous when empty since they retain product residues (vapors, liquid). Suitable material: Stainless steel, rubber-coated steel, plastic, plastic with fiberglass reinforcement. Unsuitable material: Common metal. Do not store in aluminum, copper, copper alloys and galvanized containers. Shelf life: 12 months in original, sealed container. Keep at temperatures between 0 and 30 °C. Reason: Quality.

8. EXPOSURE CONTROLS/PERSONAL PROTECTION

Control parameters

Exposure Limits .

Chemical Name	Alberta OEL	British Columbia OEL	Ontario	Quebec OEL	Exposure Limit - ACGIH	Immediately Dangerous to Life or Health - IDLH
Sulfuric acid, aluminum salt 10043-01-3	TWA: 2 mg/m^3	Not available	Not available	TWA: 2 mg/m^3	Not available	Not available

Consult local authorities for recommended exposure limits

Appropriate engineering controls

Engineering controls
Local exhaust ventilation as necessary to maintain exposures to within applicable limits.

Individual protection measures, such as personal protective equipment

Eye/face protection
Chemical goggles; also wear a face shield if splashing hazard exists.

Hand protection
Appropriate chemical resistant gloves should be worn.

Skin and body protection
Skin contact should be prevented through the use of suitable protective clothing, gloves and footwear, selected for conditions of use and exposure potential. Consideration must be given both to durability as well as permeation resistance.

Respiratory protection
If exposure exceeds occupational exposure limits, use an appropriate NIOSH-approved respirator.

General hygiene considerations
Handle in accordance with good industrial hygiene and safety practice.

9. PHYSICAL AND CHEMICAL PROPERTIES

Information on basic physical and chemical properties

Appearance

Physical state	Liquid
Color	Colorless Clear
Odor	Slight ACIDIC
Odor threshold	No information available

PROPERTIES	Values	Remarks • Method
pH	<2.5	
Melting point / freezing point	-13 °C / 9 °F	
Initial boiling point/boiling range	110 °C / 230 °F	None known
Flash point	No data available	None known
Evaporation rate	similar to water	
Flammability (solid, gas)	No data available	None known
Flammability Limit in Air		None known
Upper flammability limit:	No data available	
Lower flammability limit:	No data available	
Vapor pressure	40 mmHg @ 35°C	
Relative vapor density	No data available	None known
Specific Gravity	1.2 - 1.36	
Water solubility	Completely soluble	
Solubility in other solvents	No data available	
Partition coefficient	No data available	None known
Autoignition temperature	No data available	None known
Decomposition temperature	No data available	None known
Kinematic viscosity	No data available	None known
Dynamic viscosity	No data available	None known
Explosive properties	No information available.	
Oxidizing properties	Not oxidizing.	
Molecular weight	No information available	
VOC Percentage Volatility	No information available	
Liquid Density	No information available	
Bulk density	No information available	

10. STABILITY AND REACTIVITY

Reactivity/Chemical Stability
Stable under normal conditions

Possibility of hazardous reactions
No additional remark.

Conditions to avoid
Avoid contact with mineral acids, excessive heat and bases/alkalis.

Incompatible materials
Metals such as iron or steel which are subject to corrosion. Carbon steel, aluminum, carbon, brasses and nylon.

Hazardous decomposition products

Thermal decomposition: after completely dry and heated to decomposition will produce sulphur oxides and aluminum oxides. Decomposition : 650 °C/ 1202 °F.

11. TOXICOLOGICAL INFORMATION

Information on likely routes of exposure

Inhalation
May cause respiratory tract irritation.

Eye contact
Direct contact may cause moderate irritation.

Skin contact
May cause moderate skin irritation.

Ingestion
May cause digestive tract irritation.

Information on toxicological effects

Symptoms
No additional information available.

Numerical measures of toxicity

Acute toxicity

The following values are calculated based on chapter 3.1 of the GHS document .
ATEmix (oral) 1,930.00 mg/kg

Unknown acute toxicity No information available

Chemical Name	Oral LD50	Dermal LD50	Inhalation LC50
Sulfuric acid, aluminum salt 10043-01-3	= 1930 mg/kg (Rat)	Not available	Not available

Delayed and immediate effects as well as chronic effects from short and long-term exposure

Skin corrosion/irritation
May cause moderate skin irritation.

Serious eye damage/eye irritation
Direct contact may cause moderate irritation.

Respiratory or skin sensitization
No information available.

Germ cell mutagenicity
No information available.

Carcinogenicity
No information available.

Chemical Name	ACGIH	IARC	NTP	OSHA
Sulfuric acid, aluminum salt 10043-01-3	Not available	Not available	Not available	Not available

Reproductive toxicity
No information available.

Specific target organ systemic toxicity - single exposure
No information available.

Specific target organ systemic toxicity - repeated exposure
No information available.

Aspiration hazard
No information available.

12. ECOLOGICAL INFORMATION

Ecotoxicity
May lower pH of waterways and adversely effect aquatic life.

Chemical Name	Ecotoxicity - Freshwater Algae Data	Ecotoxicity - Fish Species Data	Toxicity to microorganisms	Crustacea
Sulfuric acid, aluminum salt 10043-01-3	Not available	Not available	Not available	Not available

Persistence and degradability No information available.

Bioaccumulation No information available.

Chemical Name	Partition coefficient
Sulfuric acid, aluminum salt 10043-01-3	Not available

Other adverse effects No information available.

13. DISPOSAL CONSIDERATIONS

Waste treatment methods

Dispose of in accordance with local regulations. Dispose of waste in accordance with environmental legislation.

Do not reuse empty containers.

14. TRANSPORT INFORMATION

TDG (Canada):

UN Number	UN3264
Shipping name	CORROSIVE LIQUID, ACIDIC, INORGANIC, N.O.S. (ALUMINUM SULPHATE)
Class	8
Packing Group	III
Marine pollutant	Not available.

DOT (U.S.)

UN Number	UN3264
Shipping name	CORROSIVE LIQUID, ACIDIC, INORGANIC, N.O.S. (ALUMINUM SULPHATE)
Class	8

Packing Group	III
Marine pollutant	Not available

15. REGULATORY INFORMATION

Safety, health and environmental regulations/legislation specific for the substance or mixture

NSF International



Additional information
Maximum use for potable water 400 mg/L. Only products bearing the NSF Mark on the product, product packaging, and/or documentation shipped with the product are Certified.

U.S. Regulatory Rules

Chemical Name	CERCLA/SARA - Section 302:	SARA (311, 312) Hazard Class:	CERCLA/SARA - Section 313:
Sulfuric acid, aluminum salt - 10043-01-3	Not Listed	Listed	Not Listed

International Inventories

TSCA	Complies
DSL/NDSL	Complies

Legend:
TSCA - United States Toxic Substances Control Act Section 8(b) Inventory
DSL/NDSL - Canadian Domestic Substances List/Non-Domestic Substances List

16. OTHER INFORMATION, INCLUDING DATE OF PREPARATION OF THE LAST REVISION

NFPA:	**Health hazards** 1	**Flammability** 0	**Instability** 0	**Physical and chemical properties** -
HMIS Health Rating:	**Health hazards** 1	**Flammability** 0	**Physical hazards** 0	**Personal protection** X

Legend Section 8: EXPOSURE CONTROLS/PERSONAL PROTECTION

TWA	TWA (time-weighted average)	STEL	STEL (Short Term Exposure Limit)
Ceiling	Maximum limit value	*	Skin designation

Prepared By: The Environment, Health and Safety Department of Univar Canada Ltd.

Preparation Date: 07/Nov/2017
Revision Date: 07/Nov/2017

Disclaimer
NOTICE TO READER:
Univar expressly disclaims all express or implied warranties of merchantability and fitness for a particular purpose, with respect to the product or information provided herein, and shall under no circumstances be liable for incidental or consequential damages.

Do not use ingredient information and/or ingredient percentages in this SDS as a product specification. For

product specification information refer to a Product Specification Sheet and/or a Certificate of Analysis. These can be obtained from your local Univar Sales Office.

All information appearing herein is based upon data obtained from the manufacturer and/or recognized technical sources. While the information is believed to be accurate, Univar makes no representations as to its accuracy or sufficiency. Conditions of use are beyond Univar's control and therefore users are responsible to verify this data under their own operating conditions to determine whether the product is suitable for their particular purposes and they assume all risks of their use, handling, and disposal of the product, or from the publication or use of, or reliance upon, information contained herein. This information relates only to the product designated herein, and does not relate to its use in combination with any other material or in any other process.

©2015 Univar Inc. All rights reserved. Univar, the hexagon, the Univar logo and MasterLine are the registered trademarks of Univar Inc.

End of Safety Data Sheet

SAFETY DATA SHEET

SDS00256
SODA ASH 58% DENSE

Preparation Date: 10/Jan/2018 Version: 2

1. IDENTIFICATION

Product identifier

Product Name SODA ASH 58% DENSE

Other means of identification

Product Code(s) SDS00256

Synonyms Sodium carbonate, anhydrous. Carbonic acid, disodium salt; Disodium carbonate; Soda ash

Recommended use of the chemical and restrictions on use

Recommended Use Soda salts. Manufacture of glass. Soap Cleaners and water softeners. Pulp and paper. Photographical agent. Water treatment. pH adjustment

Restricted Uses No information available

Initial Supplier Identifier
Univar Canada Ltd.
9800 Van Horne Way
Richmond, BC V6X 1W5
Telephone: 1-866-686-4827

Emergency telephone number

24 Hour Emergency Phone Number (CANUTEC): 1-888-226-8832 (1-888-CAN-UTEC)

2. HAZARD IDENTIFICATION

Hazardous Classification of the substance or mixture

Serious eye damage/eye irritation	Category 1
Specific target organ toxicity (single exposure)	Category 3

Label elements

Hazard pictograms



Signal Word: Danger

Hazard statements
Causes serious eye damage
May cause respiratory irritation

Precautionary Statements

Prevention
Do not breathe dust/fume/gas/mist/vapors/spray
Wash face, hands and any exposed skin thoroughly after handling
Wear protective gloves/protective clothing/eye protection/face protection

IF IN EYES: Rinse cautiously with water for several minutes. Remove contact lenses, if present and easy to do. Continue rinsing
IF ON SKIN (or hair): Take off immediately all contaminated clothing. Rinse skin with water or shower
IF INHALED: Remove person to fresh air and keep comfortable for breathing
IF SWALLOWED: Rinse mouth. DO NOT induce vomiting

Storage
Store locked up
Store in a well-ventilated place. Keep container tightly closed

Disposal
Disposal of all wastes must be done in accordance with municipal, provincial and federal regulations

Direct skin contact may cause slight or mild, transient irritation. Ingestion may cause gastrointestinal irritation, nausea, vomiting and diarrhea.

Unknown acute toxicity No information available

3. COMPOSITION/INFORMATION ON INGREDIENTS

Substance

Chemical Name	CAS No	Weight-%	Synonyms
Sodium Carbonate	497-19-8	90 - 100%	Sodium Carbonate

4. FIRST AID

Description of first aid measures

General advice
Immediate medical attention is required. Show this safety data sheet to the doctor in attendance.

Inhalation
Remove to fresh air. If breathing has stopped, give artificial respiration. Get medical attention immediately. Do not use mouth-to-mouth method if victim ingested or inhaled the substance; give artificial respiration with the aid of a pocket mask equipped with a one-way valve or other proper respiratory medical device. If breathing is difficult, (trained personnel should) give oxygen. Delayed pulmonary edema may occur.

Eye contact
Rinse immediately with plenty of water, also under the eyelids, for at least 15 minutes. Keep eye wide open while rinsing. Do not rub affected area. Remove contact lenses, if present and easy to do. Continue rinsing. Get immediate medical advice/attention.

Skin contact
Wash off immediately with soap and plenty of water while removing all contaminated clothes and shoes. Get immediate medical advice/attention.

Ingestion
Do NOT induce vomiting. Clean mouth with water and drink afterwards plenty of water. Never give anything by mouth to an unconscious person. Get immediate medical advice/attention.

Self-protection of the first aider
Ensure that medical personnel are aware of the material(s) involved, take precautions to protect themselves and prevent spread of contamination. Avoid contact with skin, eyes or clothing. Avoid direct contact with skin. Use barrier to give mouth-to-mouth resuscitation. Wear personal protective clothing (see section 8).

Most important symptoms and effects, both acute and delayed:
May cause gastrointestinal irritation, nausea, vomiting and diarrhea. May cause severe eye irritation. Symptoms include redness, swelling, itching and pain. Material is irritating to mucous membrane and upper respiratory tract. Exposure can cause coughing, chest pains and difficulty in breathing Effects may include pain, marked redness and swelling.

Indication of any immediate medical attention and special treatment needed:

Note to physicians
Treatment based on sound judgment of physician and individual reactions of patient.

5. FIRE-FIGHTING MEASURES

Suitable Extinguishing Media
Use extinguishing media appropriate for surrounding fire. Does not burn.

Specific hazards arising from the substance or mixture
Not flammable.

Hazardous combustion products
Carbon dioxide. Decomposition temperature: >400°C / 752 °F.

Special protective equipment for fire-fighters
Firefighters should wear self-contained breathing apparatus and full firefighting turnout gear. Use personal protection equipment.

6. ACCIDENTAL RELEASE MEASURES

Personal precautions, protective equipment and emergency procedures

Attention! Corrosive material. Avoid contact with skin, eyes or clothing. Ensure adequate ventilation. Use personal protective equipment as required. Evacuate personnel to safe areas. Keep people away from and upwind of spill/leak.

Environmental precautions

Prevent further leakage or spillage if safe to do so. Should not be released into the environment. Do not allow to enter into soil/subsoil. Prevent product from entering drains.

Methods and materials for containment and cleaning up

Stop leak if you can do it without risk. Shovel, sweep up or use industrial vacuum cleaner to pick up. Sweep up and place in an appropriate closed container. Avoid raising dust.

7. HANDLING AND STORAGE

Precautions for safe handling

Use good personal hygiene. Avoid prolonged contact with eyes or prolonged skin contact. Avoid breathing in dust. When dissolving, add to water cautiously while stirring; solutions can get hot.

Conditions for safe storage, including any incompatibilities

Store in a cool, dry, well ventilated area. Prolonged storage may cause product to cake and become damp from atmospheric moisture. Store away from acids.

8. EXPOSURE CONTROLS/PERSONAL PROTECTION

Control parameters

Exposure Limits This product, as supplied, does not contain any hazardous materials with occupational exposure limits established by the region specific regulatory bodies.

Chemical Name	Alberta OEL	British Columbia OEL	Ontario	Quebec OEL	Exposure Limit - ACGIH	Immediately Dangerous to Life or Health - IDLH
Sodium Carbonate 497-19-8	Not available	Not available	Not available	Not available	Not available	Not available

Consult local authorities for recommended exposure limits

Appropriate engineering controls

Engineering controls
Local exhaust ventilation as necessary to maintain exposures to within applicable limits.

Individual protection measures, such as personal protective equipment

Eye/face protection
Safety glasses with side shields or chemical goggles.

Hand protection
Appropriate chemical resistant gloves should be worn. Break through time >8 hours. Butyl rubber gloves. Natural rubber gloves. Neoprene gloves. Nitrile gloves. Polyvinylchloride (PVC) gloves. Viton gloves. Silver Shield (R). NOTICE: The selection of a specific glove for a particular application and duration of use in a workplace should also take into account all relevant workplace factors such as, but not limited to: Other chemicals which may be handled, physical requirements (cut/puncture protection, dexterity, thermal protection), potential body reactions to glove materials as well as the instructions/specifications provided by the glove supplier.

Skin and body protection
As a minimum, wear long-sleeve shirts, trousers, and gloves for routine product use.

Respiratory protection
For dusty or misty conditions, wear NIOSH-approved dust or mist respirator.

General hygiene considerations
Avoid contact with skin, eyes or clothing. Wear suitable gloves and eye/face protection. Do not eat, drink or smoke when using this product. Remove and wash contaminated clothing and gloves, including the inside, before re-use. Contaminated work clothing should not be allowed out of the workplace. Regular cleaning of equipment, work area and clothing is recommended. Wash hands before breaks and immediately after handling the product.

9. PHYSICAL AND CHEMICAL PROPERTIES

Information on basic physical and chemical properties

Appearance	
Physical state	Solid
Color	White
Odor	Odorless
Odor threshold	No information available

PROPERTIES	Values	Remarks • Method
pH	11.3-11.4 (1% solution), 11.6 (5% solution), 11.7 (10% solution) @ 20°C	
Melting point / freezing point	851 °C / 1563.8 °F	
Initial boiling point/boiling range	No data available	None known
Flash point	No data available	None known
Evaporation rate	No data available	None known
Flammability (solid, gas)	No data available	None known
Flammability Limit in Air		
Upper flammability limit:	No data available	
Lower flammability limit:	No data available	
Vapor pressure	No data available	None known
Relative vapor density	No data available	None known
Specific Gravity	2.533 @ 20°C	
Water solubility	Soluble in water	
Solubility in other solvents	No data available	
Partition coefficient	No data available	
Autoignition temperature	No data available	None known
Decomposition temperature	>400°C/752°F	
Kinematic viscosity	No data available	None known
Dynamic viscosity	No data available	None known
Explosive properties	No information available.	
Oxidizing properties	No information available.	

Molecular weight	105.99
VOC Percentage Volatility	No information available
Liquid Density	No information available
Bulk density	No information available

10. STABILITY AND REACTIVITY

Reactivity/Chemical Stability
Stable

Possibility of hazardous reactions
Contact with acids will release carbon dioxide gas. Can react violently with red hot aluminum metal; fluorine gas; lithium; and 2,4,6-trinitrotoluene.

Hazardous polymerization
Will not occur.

Conditions to avoid
Hygroscopic (absorbs moisture from the air). Simultaneous exposure to soda ash and lime dusts (CaO). In the presence of moisture (i.e. perspiration) the two materials combine to form corrosive caustic soda (NaOH) which may cause burns.

Incompatible materials
Acids. Soda Ash is corrosive to aluminum, lead, and zinc and zinc brasses when in solution and to aluminum when high humidity is present. Silver nitrate. Magnesium. Fluorine. Lithium. Calcium hypochlorite.

Hazardous decomposition products
Carbon dioxide. Decomposition temperature: >400°C / 752 °F.

11. TOXICOLOGICAL INFORMATION

Information on likely routes of exposure

Inhalation
Material is irritating to mucous membrane and upper respiratory tract. Exposure can cause coughing, chest pains and difficulty in breathing.

Eye contact
Causes serious eye damage. Effects may include pain, marked redness and swelling.

Skin contact
Symptoms include redness, swelling, itching and pain.

Ingestion
May cause gastrointestinal irritation, nausea, vomiting and diarrhea.

Information on toxicological effects

Symptoms
Excessive contact may produce "soda ulcers" on hands and perforation of the nasal septum. Sensitivity reactions may occur from prolonged and repeated exposure.

Numerical measures of toxicity

Acute toxicity

The following values are calculated based on chapter 3.1 of the GHS document .
ATEmix (oral) 4,098.00 mg/kg

Unknown acute toxicity No information available

Chemical Name	Oral LD50	Dermal LD50	Inhalation LC50
Sodium Carbonate 497-19-8	= 4090 mg/kg (Rat)	Not available	= 2300 mg/m³ (Rat) 2 h

Delayed and immediate effects as well as chronic effects from short and long-term exposure

Skin corrosion/irritation
Symptoms include redness, swelling, itching and pain.

Serious eye damage/eye irritation
Causes serious eye damage. Effects may include pain, marked redness and swelling.

Respiratory or skin sensitization

No information available.

Germ cell mutagenicity
No information available.

Carcinogenicity
No information available.

Chemical Name	ACGIH	IARC	NTP	OSHA
Sodium Carbonate 497-19-8	Not available	Not available	Not available	Not available

Reproductive toxicity
No information available.

Specific target organ systemic toxicity - single exposure
May cause respiratory irritation.

Specific target organ systemic toxicity - repeated exposure
No information available.

Aspiration hazard
No information available.

12. ECOLOGICAL INFORMATION

Ecotoxicity

.

Chemical Name	Ecotoxicity - Freshwater Algae Data	Ecotoxicity - Fish Species Data	Toxicity to microorganisms	Crustacea
Sodium Carbonate 497-19-8	Not available	310 - 1220 mg/L LC50 (Pimephales promelas) 96 h static 300 mg/L LC50 (Lepomis macrochirus) 96 h static	Not available	EC50: =265mg/L (48h, Daphnia magna)

Persistence and degradability No information available.

Bioaccumulation No information available.

Chemical Name	Partition coefficient
Sodium Carbonate 497-19-8	Not available

Other adverse effects No information available.

13. DISPOSAL CONSIDERATIONS

Waste treatment methods

Disposal of all wastes must be done in accordance with municipal, provincial and federal regulations.

Do not reuse empty containers.

14. TRANSPORT INFORMATION

TDG (Canada):

UN Number	Not applicable
Shipping name	Not regulated
Class	Not applicable
Packing Group	Not applicable
Marine pollutant	Not available.

DOT (U.S.)

UN Number	Not applicable
Shipping name	Not regulated
Class	Not applicable
Packing Group	Not applicable
Marine pollutant	Not available

15. REGULATORY INFORMATION

Safety, health and environmental regulations/legislation specific for the substance or mixture

NSF International

Certified to NSF/ANSI 60

Additional information
Only products bearing the NSF Mark on the product, product packaging, and/ordocumentation shipped with the product are Certified. Maximum use of potable water 100 mg/L.

U.S. Regulatory Rules

Chemical Name	CERCLA/SARA - Section 302:	SARA (311, 312) Hazard Class:	CERCLA/SARA - Section 313:
Sodium Carbonate - 497-19-8	Not Listed	Not Listed	Not Listed

International Inventories

TSCA	Complies
DSL/NDSL	Complies

Legend:
TSCA - United States Toxic Substances Control Act Section 8(b) Inventory
DSL/NDSL - Canadian Domestic Substances List/Non-Domestic Substances List

16. OTHER INFORMATION, INCLUDING DATE OF PREPARATION OF THE LAST REVISION

NFPA:	**Health hazards** 3	**Flammability** 0	**Instability** 0	**Physical and chemical properties** -
HMIS Health Rating:	**Health hazards** 3	**Flammability** 0	**Physical hazards** 0	**Personal protection** X

Legend Section 8: EXPOSURE CONTROLS/PERSONAL PROTECTION

TWA	TWA (time-weighted average)	STEL	STEL (Short Term Exposure Limit)
Ceiling	Maximum limit value	*	Skin designation

Prepared By: The Environment, Health and Safety Department of Univar Canada Ltd.

Preparation Date: 10/Jan/2018
Revision Date: 10/Jan/2018

Disclaimer

NOTICE TO READER:

Univar expressly disclaims all express or implied warranties of merchantability and fitness for a particular purpose, with respect to the product or information provided herein, and shall under no circumstances be liable for incidental or consequential damages.

Do not use ingredient information and/or ingredient percentages in this SDS as a product specification. For product specification information refer to a Product Specification Sheet and/or a Certificate of Analysis. These can be obtained from your local Univar Sales Office.

All information appearing herein is based upon data obtained from the manufacturer and/or recognized technical sources. While the information is believed to be accurate, Univar makes no representations as to its accuracy or sufficiency. Conditions of use are beyond Univar's control and therefore users are responsible to verify this data under their own operating conditions to determine whether the product is suitable for their particular purposes and they assume all risks of their use, handling, and disposal of the product, or from the publication or use of, or reliance upon, information contained herein. This information relates only to the product designated herein, and does not relate to its use in combination with any other material or in any other process.

©2015 Univar Inc. All rights reserved. Univar, the hexagon, the Univar logo and MasterLine are the registered trademarks of Univar Inc.

End of Safety Data Sheet

MATERIAL SAFETY DATA SHEET

Revision date: *06/15/2011* **Revision number:** *3*

1. PRODUCT AND COMPANY IDENTIFICATION

Product Name BioRemove 5895

Contact Manufacturer
Novozymes Biologicals Inc.
5400 Corporate Circle
Salem, VA, USA 24153

Information Telephone Number 1-540-389-9361

Emergency Telephone Number 1-800-424-9300 (Chemtrec) 24 hours every day

Health Hazard	1
Fire Hazard	0
Reactivity	0

2. HAZARDS IDENTIFICATION

CAUTION

Emergency Overview

Contact may cause eye and skin irritation

Appearance Opaque **Physical State** Liquid **Odor** Slight fermentation odor

Potential Health Effects

Principle Routes of Exposure Eye contact, Skin contact, Inhalation

Acute Effects

Eyes May cause slight irritation
Skin Substance may cause slight skin irritation
Inhalation May cause irritation of respiratory tract
Ingestion Ingestion may cause gastrointestinal irritation, nausea, vomiting and diarrhoea

Chronic Effects

Chronic Toxicity No information available

See Section 11 for additional Toxicological information.

Aggravated Medical Conditions No information available

Potential Environmental Effects There is no known ecological information for this product
See Section 12 for additional Ecological information

3. COMPOSITION/INFORMATION ON INGREDIENTS

Hazardous Components

Chemical Name	CAS-No	Weight %
Water	7732-18-5	95-100%
Viable Bacteria Cultures	Not Applicable	1-5%

Ingredients not listed are either non-hazardous or under reportable concentrations

4. FIRST AID MEASURES

Eye Contact Rinse thoroughly with plenty of water for at least 15 minutes and consult a physician

Skin Contact Wash off immediately with soap and plenty of water

Inhalation Move to fresh air

Ingestion Clean mouth with water and afterwards drink plenty of water

Notes to Physician Treat symptomatically

5. FIRE-FIGHTING MEASURES

Flammable Properties	Slightly flammable according to HMIS criteria
Suitable Extinguishing Media	Use water spray, alcohol-resistant foam, dry chemical or carbon dioxide.
Unsuitable Extinguishing Media	None
Hazardous Combustion Products	None
Specific Hazards Arising from the Chemical	May cause allergic respiratory reaction.
Protective Equipment and Precautions for Firefighters	Self-contained breathing apparatus and standard turn-out apparel

6. ACCIDENTAL RELEASE MEASURES

Personal Precautions	For personal protection see section 8
Environmental Precautions	Spilled preparation should be removed immediately to avoid formation of dust from dried preparation. Take up by mechanical means preferably by a vacuum cleaner equipped with a high efficiency filter. Flush remainder carefully with plenty of water. Avoid splashing and high pressure washing (avoid formation of aerosols). Ensure sufficient ventilation. Wash contaminated clothing. .
Methods for cleaning up	Avoid formation of dust and aerosols Spilled preparation should be removed immediately to avoid formation of dust from dried preparation. Take up by mechanical means preferably by a vacuum cleaner equipped with a HEPA (High Efficiency Particulate Air) filter. Flush remainder carefully with plenty of water. Avoid splashing, high pressure washing or compressed air cleaning to avoid formation of aerosols. Ensure sufficient ventilation. Wash contaminated clothing.

For personal protection see section 8

7. HANDLING AND STORAGE

Handling	Avoid formation of dust and aerosols Ensure adequate ventilation
General Precautions	The Substance should be handled under conditions of good industrial hygiene and in conformity with any local regulations in order to avoid unnecessary exposure..
Storage	Keep tightly closed in a dry and cool place.
Temperature	Keep in a dry, cool and well-ventilated place.
Storage Conditions	In unbroken packaging - dry and protect from the sun. The product has been formulated for optimal stability. Extended storage or adverse conditions such as higher temperatures or higher humidity may lead to a higher dosage requirement.
Conditions To Avoid	Avoid Temperatures above 45 C to preserve biological stability. Avoid freezing temperatures. Strong Acids or alkali compounds may inactivate biological cultures. Avoid strong oxidizing agents.
Incompatible Materials	Strong acids or alkali compounds may inactivate biological cultures

8. EXPOSURE CONTROLS / PERSONAL PROTECTION

Occupational exposure controls

Engineering Controls	Ensure adequate ventilation, especially in confined areas Maintain good conditions of industrial hygiene. Some processes may require enclosures, local exhaust ventilation, or other engineering controls to control airborne levels. Additional handling and healthy/safety information is available upon request

Personal Protective Equipment

Respiratory Protection	In case of insufficient ventilation wear suitable respiratory equipment that meets HEPA/P100 specifications
Eye Protection	Safety glasses with side-shields
Skin Protection	Long sleeved clothing
Hand Protection	Protective gloves
General Hygiene Considerations	Handle in accordance with good industrial hygiene and safety practices
Environmental exposure controls	Local authorities should be advised if significant spillages cannot be contained

9. PHYSICAL AND CHEMICAL PROPERTIES

Appearance	Opaque
Physical State	Liquid
Odor	Slight fermentation odor
pH	7.0-8.0
Boiling Point/Range	No information available
Melting Point/Range	No information available
Flash Point	No information available
Flammability (solid, gas)	No information available
Explosive Properties	No information available
Oxidizing Properties	No information available
Vapor Pressure	No information available
Relative density	No data available
Solubility	No information available
Partition Coefficient (n-octanol/water)	No information available

The physical data presented above are typical values and should not be construed as a specification

10. STABILITY AND REACTIVITY

Chemical stability	Stable under recommended storage conditions
Conditions to Avoid	Stable under normal conditions Excessive temperature variations below 32F or above 155F
Materials to avoid	None
Hazardous Decomposition Products	None
Possibility of Hazardous Reactions	None

11. TOXICOLOGICAL INFORMATION

Acute Toxicity

Ingestion, LD50 Rat Oral (mg/kg):	Not Determined
Inhalation, LC50 Rat inhalation (mg/l/4hr)	Not Determined
Skin, LD50 Rat Dermal (mg/kg)	Not Determined
Eye Irritation	Not Determined

Chronic Toxicity

Sensitization	According to our experience and to the information provided to us, the product does not have any harmful effects if it is used and handled as specified

This product is formulated using a range of microorganisms specially selected from the natural environment

12. ECOLOGICAL INFORMATION

Ecotoxicity

This product is not expected to pose an environmental hazard. No Toxicity Data is available specifically for soil organisms, plants and terrestrial animals.

Environmental Effects	The data available do not support any environmental hazard
Persistence/Degradability	The organic components of the product are biodegradable.
Bioaccumulative Potential	According to experience not expected
Mobility	Not available
Other adverse effects	No known effect

13. DISPOSAL CONSIDERATIONS

Waste Disposal Method	Dispose of contents/container in accordance with local regulation.
Contaminated Packaging	Dispose of wastes in an approved waste disposal facility.

14. TRANSPORT INFORMATION

Transport Regulations	Not dangerous goods
IMDG/IMO	Not regulated
RID	Not regulated
ADR	Not regulated
ICAO	Not regulated
IATA	Not regulated
DOT	Not regulated

15. REGULATORY INFORMATION

International Inventories

TSCA	Complies
PICCS	Complies
KECL	Complies
ENCS	Complies
CHINA	Complies
AICS	Complies
DSL/NDSL	Complies

USA, Federal Regulations

SARA 313
Section 313 of Title III of the Superfund Amendments and Reauthorization Act of 1986 (SARA). This product does not contain any chemicals which are subject to the reporting requirements of the Act and 40 CFR Part 372.

SARA 311/312 Hazardous Categorization

Acute Health Hazard	No
Chronic Health Hazard	No
Fire Hazard	No
Sudden Release of Pressure Hazard	No
Reactive Hazard	No

USA, State Regulations

California Proposition 65 This product contains the following Proposition 65 chemicals:

Canada

WHMIS Hazard Class Controlled product hazard class D2 A (respiratory sensitizer)

WHMIS Statement This product has been classified in accordance with the hazard criteria of the Controlled Products Regulations (CPR) and the SDS contains all the information required by the CPR.

16. OTHER INFORMATION

Disclaimer

The information provided on this MSDS is correct to the best of our knowledge, information and belief at the date of its publication. The information given is designed only as a guide for safe handling, use, processing, storage, transportation, disposal and release and is not to be considered as a warranty or quality specification. The information relates only to the specific material designated and may not be valid for such material used in combination with any other material or in any process, unless specified in the text. Furthermore, as the conditions of use are beyond the control of Novozymes, it is the responsibility of the customer to determine the conditions of safe use of these products.



Report version 1 / ANSI / English

End of Material Safety Data Sheet

Appendix B: Drawings

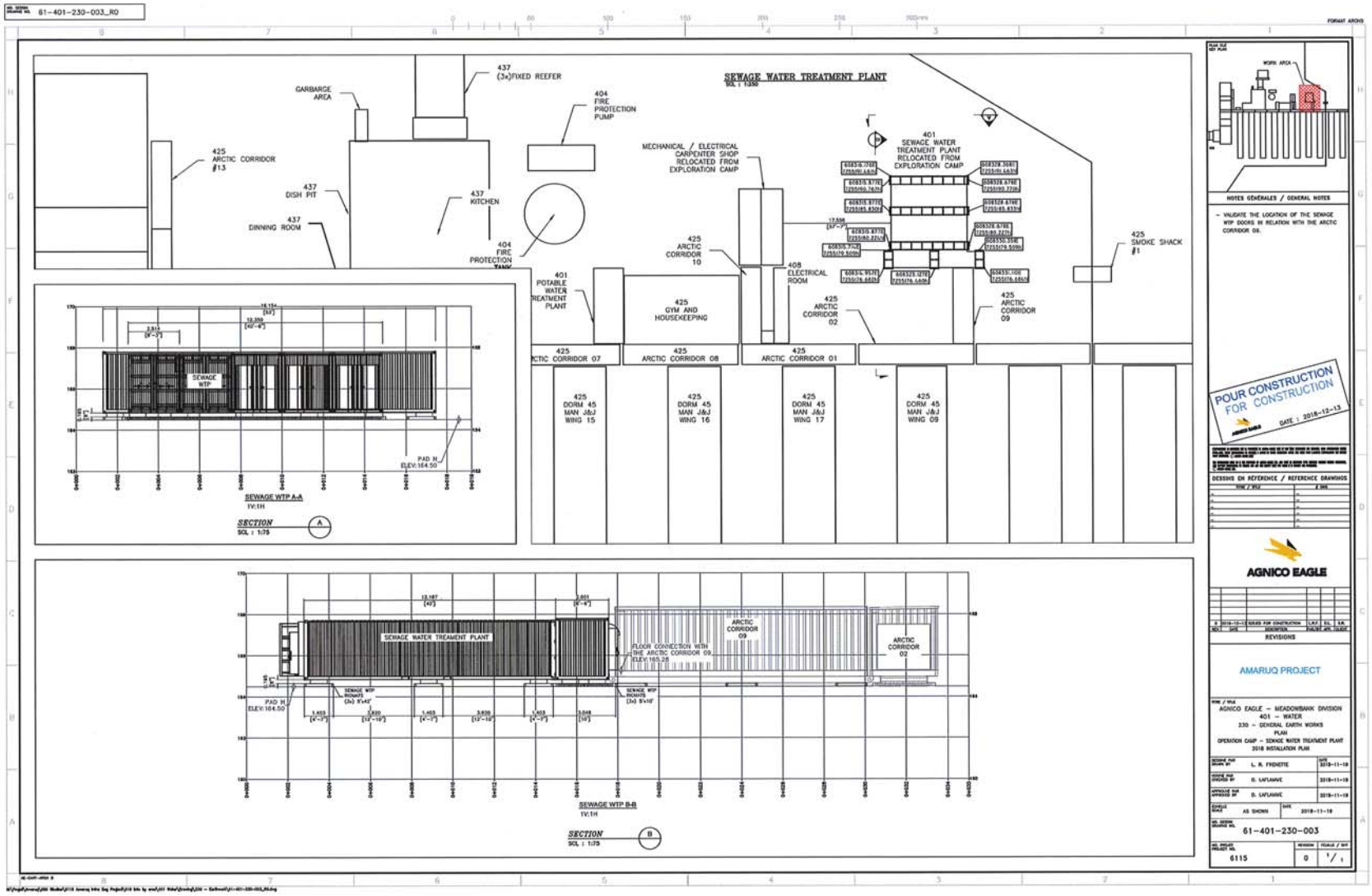

61-401-230-003_R0
FORMAT ARCHS
SEWAGE WATER TREATMENT PLANT
SCL : 1:250
GARBARGE AREA
437 (3x)FIXED REEFER
404 FIRE PROTECTION PUMP
425 ARCTIC CORRIDOR #13
437 DISH PIT
437 KITCHEN
437 DINNING ROOM
404 FIRE PROTECTION TANK
MECHANICAL / ELECTRICAL CARPENTER SHOP RELOCATED FROM EXPLORATION CAMP
401 SEWAGE WATER TREATMENT PLANT RELOCATED FROM EXPLORATION CAMP
425 ARCTIC CORRIDOR 10
408 ELECTRICAL ROOM
425 SMOKE SHACK #1
401 POTABLE WATER TREATMENT PLANT
425 GYM AND HOUSEKEEPING
425 ARCTIC CORRIDOR 02
425 ARCTIC CORRIDOR 09
425 ARCTIC CORRIDOR 07
425 ARCTIC CORRIDOR 08
425 ARCTIC CORRIDOR 01
425 DORM 45 MAN J&J WING 15
425 DORM 45 MAN J&J WING 16
425 DORM 45 MAN J&J WING 17
425 DORM 45 MAN J&J WING 09
SEWAGE WTP
PAD H ELEV:164.50
SEWAGE WTP A-A
1V:1H
SECTION A
SCL : 1:75
SEWAGE WATER TREAMENT PLANT
ARCTIC CORRIDOR 09
ARCTIC CORRIDOR 02
FLOOR CONNECTION WITH THE ARCTIC CORRIDOR 09 ELEV:165.28
SEWAGE WTP RICHARDS (3x) 5'x42'
SEWAGE WTP RICHARDS (3x) 5'x10'
PAD H ELEV:164.50
SEWAGE WTP B-B
1V:1H
SECTION B
SCL : 1:75
WORK AREA
NOTES GÉNÉRALES / GENERAL NOTES
- VALIDATE THE LOCATION OF THE SEWAGE WTP DOORS IN RELATION WITH THE ARCTIC CORRIDOR 09.
POUR CONSTRUCTION
FOR CONSTRUCTION
DATE : 2018-12-13
DESSINS EN RÉFÉRENCE / REFERENCE DRAWINGS
AGNICO EAGLE
REVISIONS
AMARUQ PROJECT
AGNICO EAGLE – MEADOWBANK DIVISION
401 – WATER
230 – GENERAL EARTH WORKS
PLAN
OPERATION CAMP – SEWAGE WATER TREATMENT PLANT
2018 INSTALLATION PLAN
L. R. FRENETTE
D. LAFLAMME
D. LAFLAMME
AS SHOWN
2018-11-19
61-401-230-003
6115
0
1/1

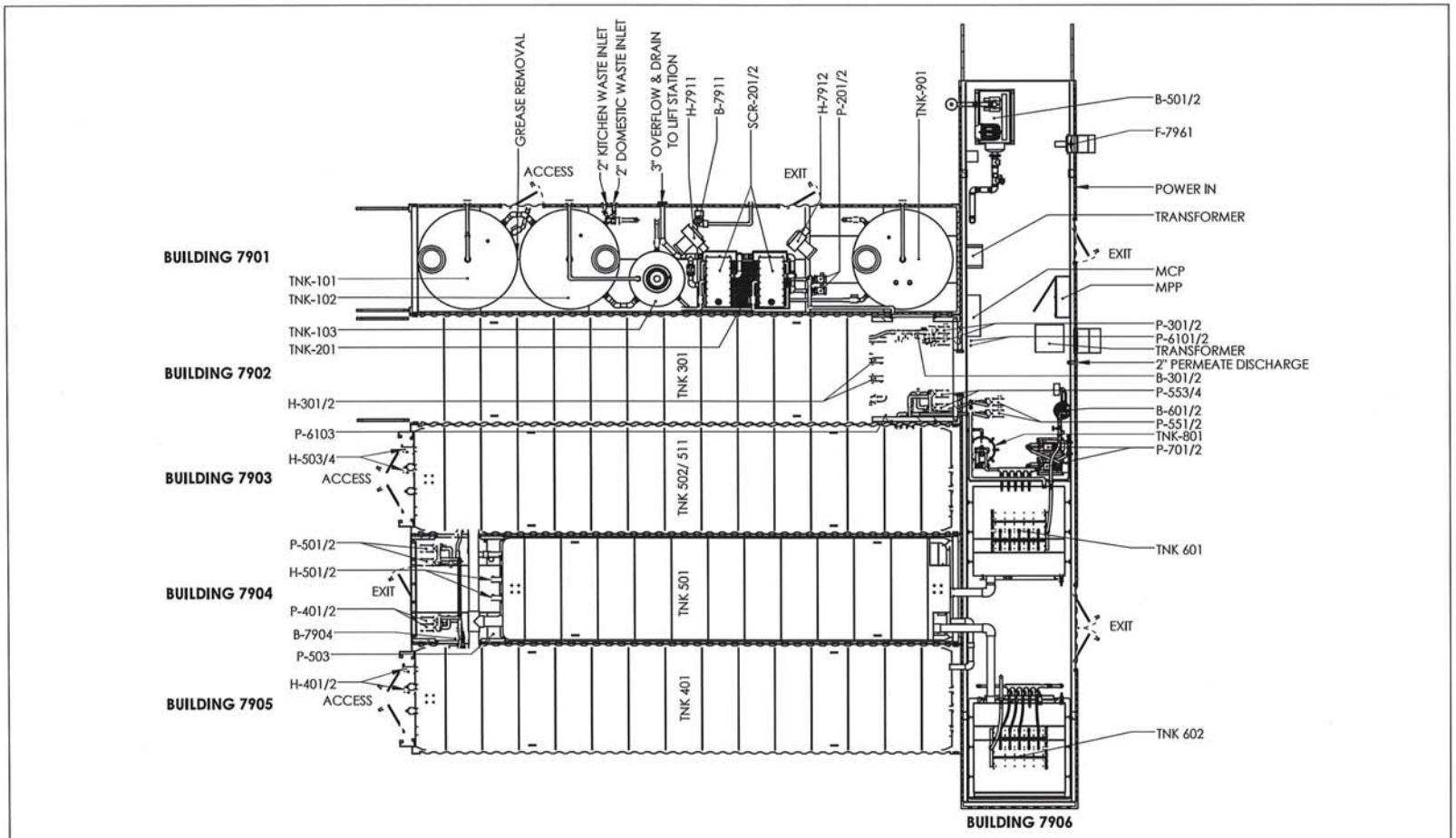

GENERAL TOLERANCES
.XX ± 1/8"
.XXX ± 1/16"
UNLESS OTHERWISE SPECIFIED DIMENSIONS ARE IN INCHES

THIS INFORMATION IS THE PROPERTY OF newterra AND CANNOT BE REUSED OR REPRODUCED WITHOUT WRITTEN CONSENT.

LEVEL	DATE	BY	REVISION
C1	11/08/17	AH	AS BUILT
B1	07/06/17	GH	FOR PRODUCTION
B	06/06/17	GH	FOR PRODUCTION
A2	25/05/17	GH	REVISED LAYOUT
A	19/05/2017	GH	FOR REVIEW

DWG. NO:
PROJECT NUMBER: 1704432
TITLE: SYSTEM LAYOUT
CUSTOMER: AGNICO EAGLE
DRAWN BY: GH
DATE: 19/05/17
SHEET 1 OF 4

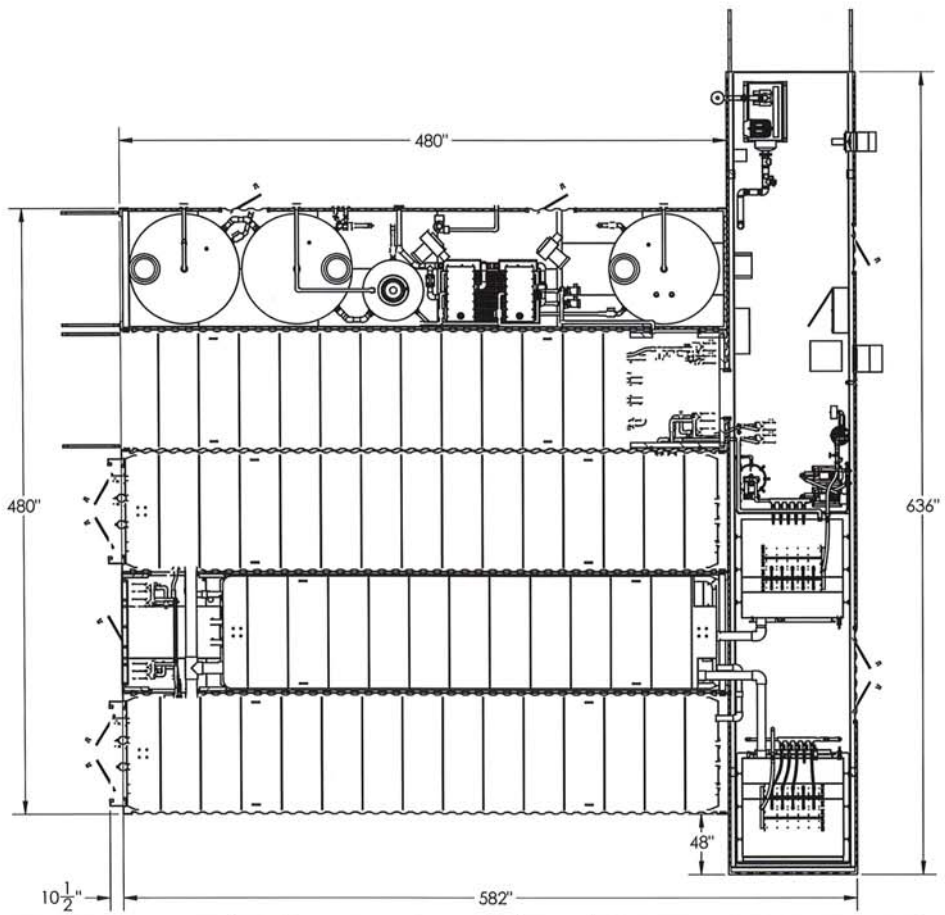

GENERAL TOLERANCES
.XX ± 1/8"
.XXX ± 1/16"
UNLESS OTHERWISE SPECIFIED
DIMENSIONS ARE IN INCHES

newterra

THIS INFORMATION IS THE PROPERTY OF newterra AND CANNOT BE REUSED OR REPRODUCED WITHOUT WRITTEN CONSENT.

LEVEL	DATE	BY	REVISION
C1	11/08/17	AH	AS BUILT
B1	07/06/17	GH	FOR PRODUCTION
B	06/06/17	GH	FOR PRODUCTION
A2	25/05/17	GH	REVISED LAYOUT
A	19/05/2017	GH	FOR REVIEW

DWG. NO: 1704432
TITLE: SYSTEM LAYOUT
CUSTOMER: AGNICO EAGLE
DRAWN BY: GH
DATE: 19/05/17
SHEET 2 OF 4

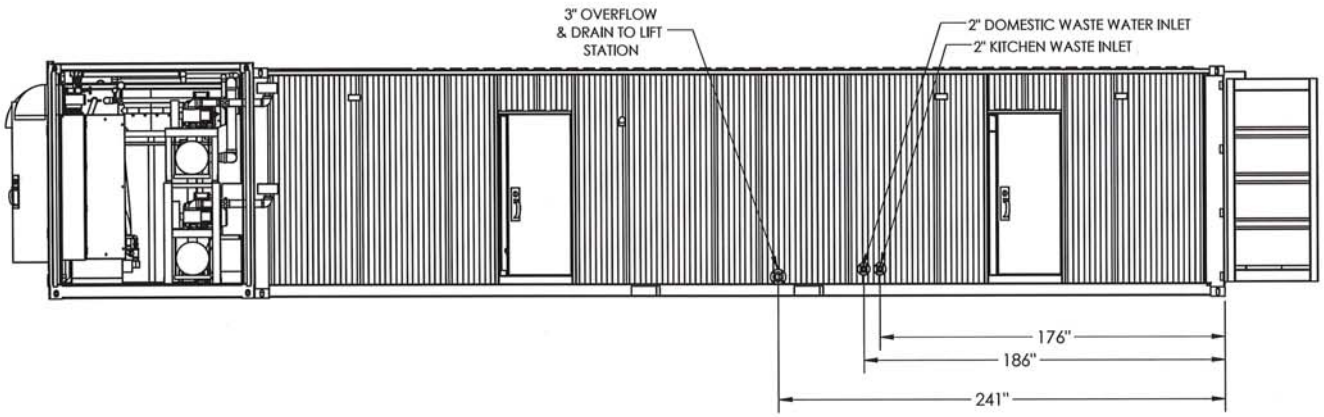

GENERAL TOLERANCES
.XX ± 1/8"
.XXX ± 1/16"
UNLESS OTHERWISE SPECIFIED DIMENSIONS ARE IN INCHES

newterra

THIS INFORMATION IS THE PROPERTY OF newterra AND CANNOT BE REUSED OR REPRODUCED WITHOUT WRITTEN CONSENT.

LEVEL	DATE	BY	REVISION
C1	11/08/17	AH	AS BUILT
B1	07/06/17	GH	FOR PRODUCTION
B	06/06/2017	GH	FOR PRODUCTION

DWG. NO:
PROJECT NUMBER: 1704432
TITLE: SYSTEM LAYOUT
CUSTOMER: AGNICO EAGLE
DRAWN BY: GH
DATE: 06/06/17
SHEET 3 OF 4

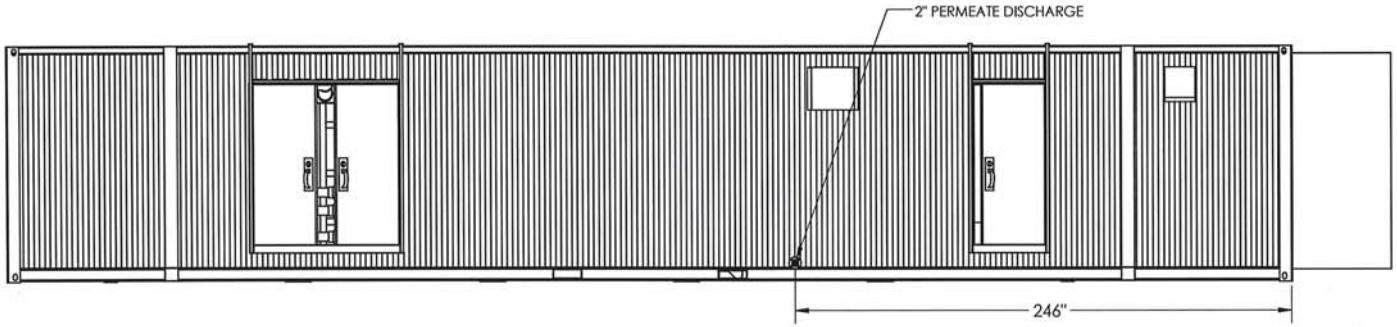

GENERAL TOLERANCES
.XX ± 1/8"
.XXX ± 1/16"
UNLESS OTHERWISE SPECIFIED DIMENSIONS ARE IN INCHES

THIS INFORMATION IS THE PROPERTY OF newterra AND CANNOT BE REUSED OR REPRODUCED WITHOUT WRITTEN CONSENT.

LEVEL	DATE	BY	REVISION
C1	11/08/17	AH	AS BUILT
B1	07/06/17	GH	FOR PRODUCTION
B	06/08/2017	GH	FOR PRODUCTION

DWG. NO:
PROJECT NUMBER: 1704432
TITLE: SYSTEM LAYOUT
CUSTOMER: AGNICO EAGLE
DRAWN BY: GH
DATE: 06/06/17
SHEET 4 OF 4

NO. DESSIN
DRAWING NO. 61-460-270-201-1_R0

FORMAT ARCH D

PART	QUANTITY	LENGTH	UNIT	DESCRIPTION	ORDER
1	1	± 3 360	FT	PIPING HDPE DR17 3 PO INSULATE	OC - 703225
2	8	-	EA	ELBOW 90° - 3" HDPE DR17 FLANGED ENDS	OC - 707903
-	8	-	EA	ELBOW 90° - 3" HDPE DR17 COMPLETE INSULATION KIT	OC - 707903
3	1	± 110	FT	PIPING HDPE DR17 3 PO INSULATE	OC - 703225
4	1	± 430	FT	PIPING HDPE DR17 3 PO INSULATE	OC - 703225
5	1	± 45	FT	PIPING HDPE DR17 3 PO INSULATE	OC - 703225
6	2	± 2.5	FT	PIPING HDPE DR17 3 PO INSULATE	OC - 703225
7	1	± 17	FT	PIPING HDPE DR17 3 PO INSULATE	OC - 703225
8	1	± 12	FT	PIPING HDPE DR17 3 PO INSULATE	OC - 703225
9	1	-	EA	REDUCER 3" TO 2" HDPE DR11 FLANGED ENDS	OC - 707903
-	64	-	EA	3" HDPE DR17 COMPLETE SLIPJOINT 2.5" INSULATION KIT	OC - 707903
-	49	-	EA	FLANGE ADAPTER 3" HDPE DR17	OC - 707903
-	49	-	EA	FLANGE RING CLASS150 FOR 3" HDPE DR17 STUB END	OC - 707903
-	16	-	EA	FLANGE ADAPTER 3" HDPE DR17 COMPLETE 2.5" INSULATION KIT	OC - 707903
-	33	-	EA	3" RED RUBBER FULL FACED GASKET 1/8"	OC - 707903
-	132	-	EA	5/8" UNC GRADE 5 BOLT - 4" LENGTH (3" FLANGE)	OC - 707903
-	132	-	EA	5/8" UNC GRADE 5 NUT	OC - 707903
-	264	-	EA	5/8" WASHER 1/8" THICK	OC - 707903
-	-	-	EA	10 FEET 5/8" UNC ROD	OC - 707903

NOTE: ALL LENGTH AND QUANTITY NEED TO BE VALIDATED ON CONSTRUCTION SITE.

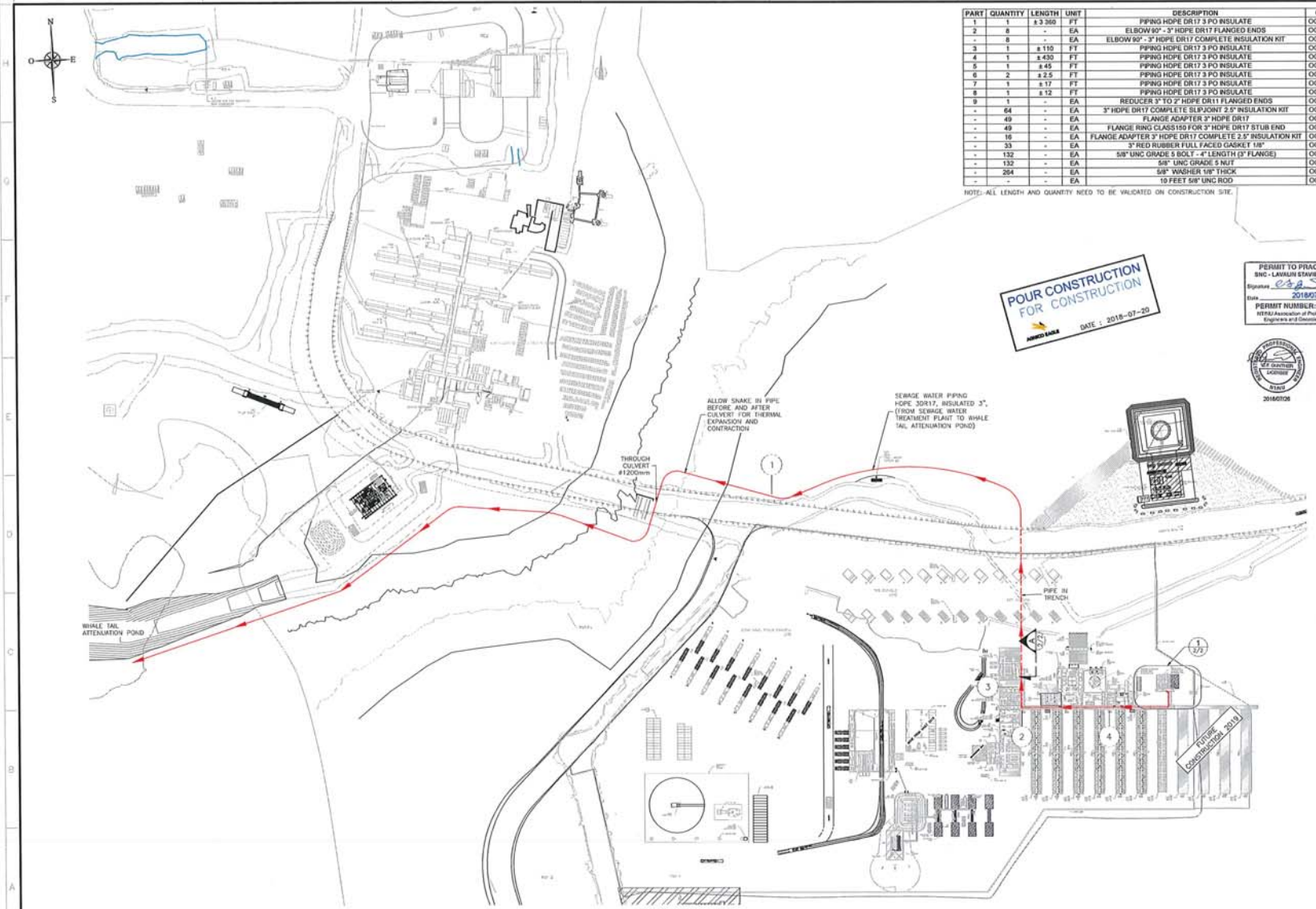

PLAN VIEW
SCL: N.T.S.

POUR CONSTRUCTION
FOR CONSTRUCTION
AGNICO EAGLE
DATE : 2018-07-20

PERMIT TO PRACTICE
SNC - LAVALIN STAVIBEL INC.
Signature
Date 2018/07/26
PERMIT NUMBER: P 718
NT/NU Association of Professional Engineers and Geoscientists

2018/07/26

PLAN CLÉ
KEY PLAN



NOTES GÉNÉRALES / GENERAL NOTES

1. ALL LENGTH AND QUANTITY NEED TO BE VALIDATED ON CONSTRUCTION SITE.

——— PIPING ON GROUND
- - - - - - PIPING IN TRENCH

THE DESIGN AND MATERIALS ON THIS DRAWING ARE ASSUMED BY AGNICO EAGLE.

SNC-LAVALIN
SNC-Lavalin Stavibel Inc.
155, rue Gamble Ouest
Rouyn-Noranda (Québec) J9X 3N7
Tél. : 819 764-5181 Fax : 819 797-0158
www.snclavalin.com

Project # : 644819-0000

DESSINS EN RÉFÉRENCE / REFERENCE DRAWINGS

TITRE / TITLE	# DWG
-	-
-	-
-	-
-	-
-	-
-	-

AGNICO EAGLE

NO.	DATE	DESCRIPTION	DESSINÉ PAR/DRAWN BY	C.H.D.	C.I.D.	A.P.A.
0	2018-07-20	ISSUED FOR CONSTRUCTION				

REVISIONS

TITRE / TITLE
AGNICO EAGLE – WHALE TAIL (AMARUQ)
460 – SEWAGE WATER TREATMENT PLANT
270 – PIPING
PLAN VIEW
SEWAGE WATER PIPING (ROUTING)
FROM TREATMENT PLANT TO ATTENUATION POND

DESSINÉ PAR / DRAWN BY	NICOLAS BORDELEAU G., TECH.	DATE 2018-06-12
VÉRIFIÉ PAR / CHECKED BY	KEVEN PLANTE-MARQUIS, ING.	2018-07-20
APPROUVÉ PAR / APPROVED BY	CHRISTIAAN VAN GUNTHER, ING.	2018-07-20
ÉCHELLE / SCALE	N.T.S.	DATE 2017-12-01

NO. DESSIN / DRAWING NO. 61-460-270-201

NO. PROJET / PROJECT NO.	REVISION	FEUILLE / SHT
6115	0	1/1

AE-GAR-460X 0

N:\Projet\Amaruq\200 Studies\810 Amaruq Infra Eng Project\For approval\Plan & profile\61-460-270-201-1_R0.dwg

NO. DESSIN DRAWING NO. 61-460-270-201-1_R0

FORMAT ARCH D

POUR CONSTRUCTION
FOR CONSTRUCTION
AGNICO EAGLE
DATE : 2018-07-20

PART	QUANTITY	LENGTH	UNIT	DESCRIPTION	ORDER
1	1	± 3 360	FT	PIPING HDPE DR17 3 PO INSULATE	OC - 703225
2	8	-	EA	ELBOW 90° - 3" HDPE DR17 FLANGED ENDS	OC - 707903
-	8	-	EA	ELBOW 90° - 3" HDPE DR17 COMPLETE INSULATION KIT	OC - 707903
3	1	± 110	FT	PIPING HDPE DR17 3 PO INSULATE	OC - 703225
4	1	± 430	FT	PIPING HDPE DR17 3 PO INSULATE	OC - 703225
5	1	± 45	FT	PIPING HDPE DR17 3 PO INSULATE	OC - 703225
6	2	± 2.5	FT	PIPING HDPE DR17 3 PO INSULATE	OC - 703225
7	1	± 17	FT	PIPING HDPE DR17 3 PO INSULATE	OC - 703225
8	1	± 12	FT	PIPING HDPE DR17 3 PO INSULATE	OC - 703225
9	1	-	EA	REDUCER 3" TO 2" HDPE DR11 FLANGED ENDS	OC - 707903
-	64	-	EA	3" HDPE DR17 COMPLETE SLIPJOINT 2.5" INSULATION KIT	OC - 707903
-	49	-	EA	FLANGE ADAPTER 3" HDPE DR17	OC - 707903
-	49	-	EA	FLANGE RING CLASS150 FOR 3" HDPE DR17 STUB END	OC - 707903
-	16	-	EA	FLANGE ADAPTER 3" HDPE DR17 COMPLETE 2.5" INSULATION KIT	OC - 707903
-	33	-	EA	3" RED RUBBER FULL FACED GASKET 1/8"	OC - 707903
-	132	-	EA	5/8" UNC GRADE 5 BOLT - 4" LENGTH (3" FLANGE)	OC - 707903
-	132	-	EA	5/8" UNC GRADE 5 NUT	OC - 707903
-	264	-	EA	5/8" WASHER 1/8" THICK	OC - 707903
-	-	-	EA	10 FEET 5/8" UNC ROD	OC - 707903

NOTE: ALL LENGTH AND QUANTITY NEED TO BE VALIDATED ON CONSTRUCTION SITE.

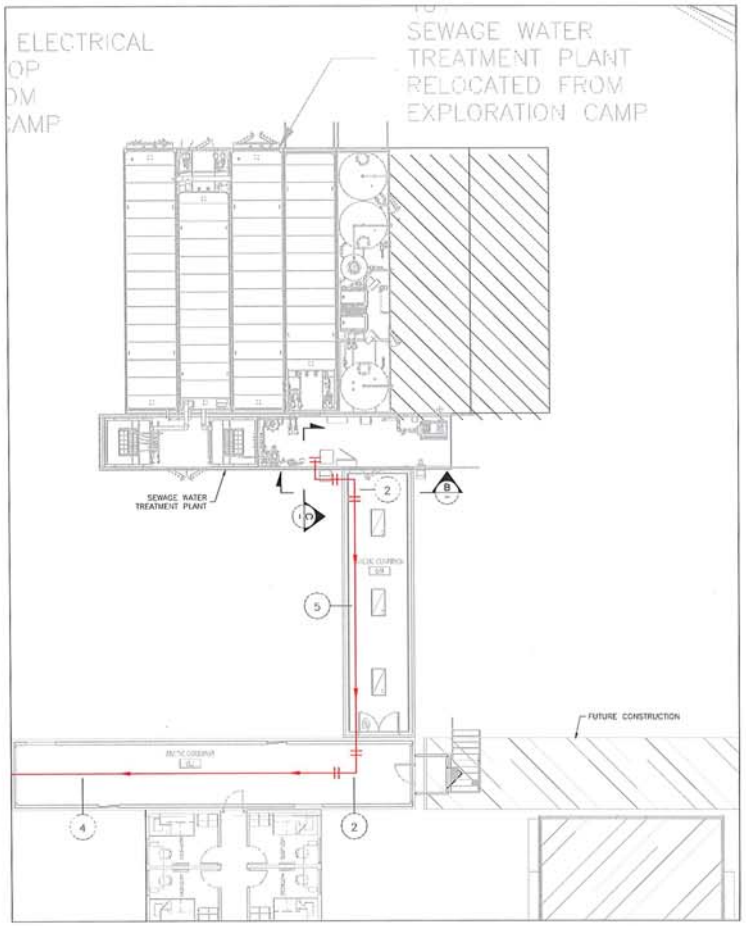

DETAIL
SCALE: N.T.S.
1
1/2

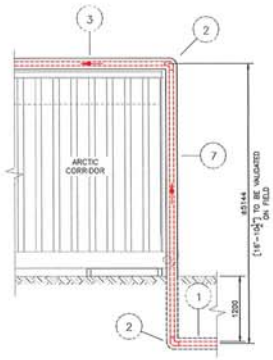

SECTION
SCL. N.T.S.
A
1/2

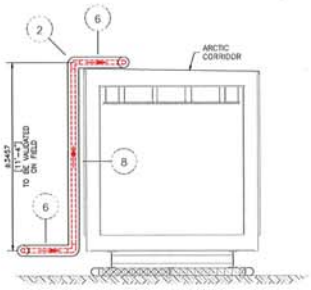

SECTION
SCL. N.T.S.
B
-

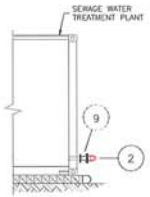

SECTION
SCL. N.T.S.
C
-

PERMIT TO PRACTICE
SNC-LAVALIN STAVIBEL INC.
Signature
Date 2018/07/26
PERMIT NUMBER: P 718
NT/NU Association of Professional Engineers and Geoscientists

2018/07/26



NOTES GÉNÉRALES / GENERAL NOTES

1. ALL LENGTH AND QUANTITY NEED TO BE VALIDATED ON CONSTRUCTION SITE.

——— PIPING ON GROUND
- - - - - - PIPING IN TRENCH

THE DESIGN AND MATERIALS ON THIS DRAWING ARE ASSUMED BY AGNICO EAGLE.

SNC-LAVALIN
SNC-Lavalin Stavibel inc.
135, rue Gamble Ouest
Rouyn-Noranda (Québec) J9X 2R7
Tél. : 819 763-5181 Fax : 819 797-0708
www.snclavalin.com

Project # : 644819-0000

DESSINS EN RÉFÉRENCE / REFERENCE DRAWINGS

NUMÉRO / TITLE	# DWG
-	-
-	-
-	-
-	-
-	-
-	-

AGNICO EAGLE

REV.	DATE	DESCRIPTION	DRAWN	APP.	CLIENT
0	2018-07-20	ISSUED FOR CONSTRUCTION	N.B.G.	E.J.G.	K.P.M.

REVISIONS

TITRE / TITLE

AGNICO EAGLE – WHALE TAIL (AMARUQ)
460 – SEWAGE WATER TREATMENT PLANT
270 – PIPING
DETAILS & SECTIONS
SEWAGE WATER PIPING (ROUTING)
FROM TREATMENT PLANT TO ATTENUATION POND

DESSINÉ PAR / Drawn BY	NICOLAS BORDELEAU G., TECH.	DATE 2018-06-12
VÉRIFIÉ PAR / CHECKED BY	KEVEN PLANTE-MARQUIS, ING.	2018-07-20
APPROUVÉ PAR / APPROVED BY	CHRISTIAN WH GUNTHER, ING.	2018-07-20
ÉCHELLE / SCALE	N.T.S.	DATE 2017-12-01

NO. DESSIN / DRAWING NO. 61-460-270-201

NO. PROJET / PROJECT NO.	REVISION	FEUILLE / SHT
6115	0	2 / 2

AE-GWT-460H 0

N:\Projet\Amaruq\6000 Studies\6115 Amaruq Infra Eng Project\For approval\Plot & scale\61-460-270-201-1_R0.dwg

VALVES AND PIPING

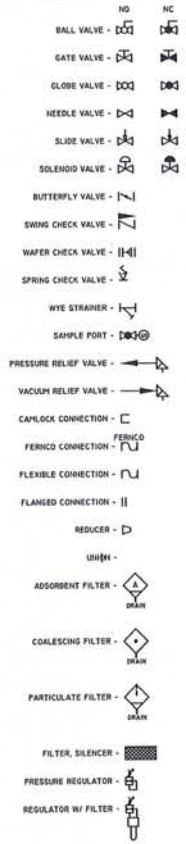

EQUIPMENT

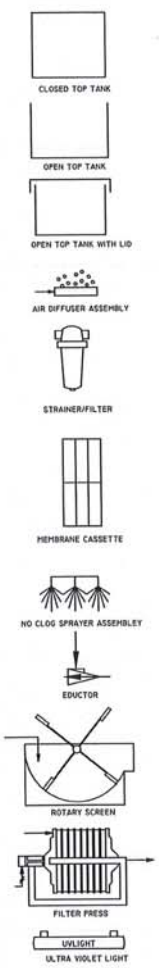

EQUIPMENT

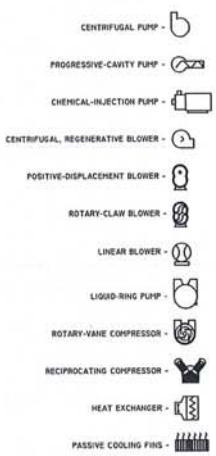

EQUIPMENT

AV - ACTUATED VAVLE
B - BLOWER
F - FAN
H - HEATER
MBR - MEMBRANE BIOLOGICAL REACTOR
MV - MODULATED VALVE
P - PUMP
SV - SOLENOID VALVE
TNK - TANK
UV - ULTRA VIOLET LIGHT
VFD - VARIABLE FREQUENCY DRIVE

FLOW MEASUREMENT

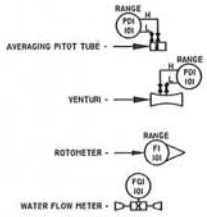

INSTRUMENT DESIGNATION

	INPUT	1ST MODIFIER	2ND MODIFIER	3RD MODIFIER	OUTPUT	1ST MODIFIER	
A							A
B						BLOWER	B
C	CYCLE					COMPRESSOR	C
D		DIFFERENTIAL				AIR DRYER	D
E							E
F	FLOW					FAN	F
G	GAS (LEL)		GAUGE				G
H				HIGH	HAND	HEATER	H
I	CURRENT		INDICATOR				I
J							J
K							K
L	LEVEL			LOW			L
M					MOTORIZED		M
N							N
O							O
P	PRESSURE				PNEUMATIC	PUMP	P
Q		QUANTITY					Q
R							R
S	SPEED		SWITCH		SOLENOID		S
T	TEMPERATURE		TRANSMITTER				T
U							U
V						VALVE	V
W							W
X							X
Y							Y
Z	POSITION						Z

SYSTEM POSITION DESIGNATION

1000 - LIFT STATION
2000 - INLET SCREEN
3000 - EQUALIZATION TANK
4901 - SCREEN DISCHARGE PUMP TANK
5000 - AERATION TANK
5500 - SLUDGE HOLDING TANK
6000 - MBR TANK
6100 - CHEMICAL INJECTION
7000 - PERMEATE
7500 - UV LIGHT
7900 - BUILDING,TRAILER OR SKID
8000 - DISCHARGE TANK
8200 - CONTROL PANEL
8300 - TELEMETRY
9900 - EXTRAS

INSTRUMENT IDENTIFICATION

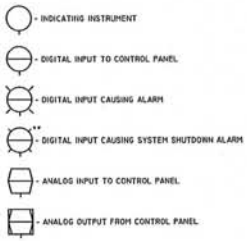

EXAMPLE

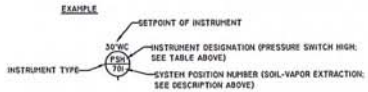



NOTES

newterra

PHONE:
(800) 420-4056

www.newterra.com

LEVEL	REVISION	DATE (mm/dd/yy)	BY
D	T-401 MIX PIPE SIZE	10/10/17	JJK
C	AS-BUILT	13/08/17	JJK
B	PRODUCTION	06/06/17	JJK
A2	SUBMITTAL REVISIONS	26/05/17	JJK
A	SUBMITTAL	23/05/17	JJK

PROJECT NUMBER: 1704432

TITLE AND LOCATION: P&ID AMARUQ MINE

CUSTOMER: AGNICO EAGLE MINE

DRAWN BY: MH | DATE: | SHEET: 4 | SHEETS: 4

THIS INFORMATION IS THE PROPERTY OF newterra AND CANNOT BE REUSED OR REPRODUCED WITHOUT THE WRITTEN CONSENT OF newterra

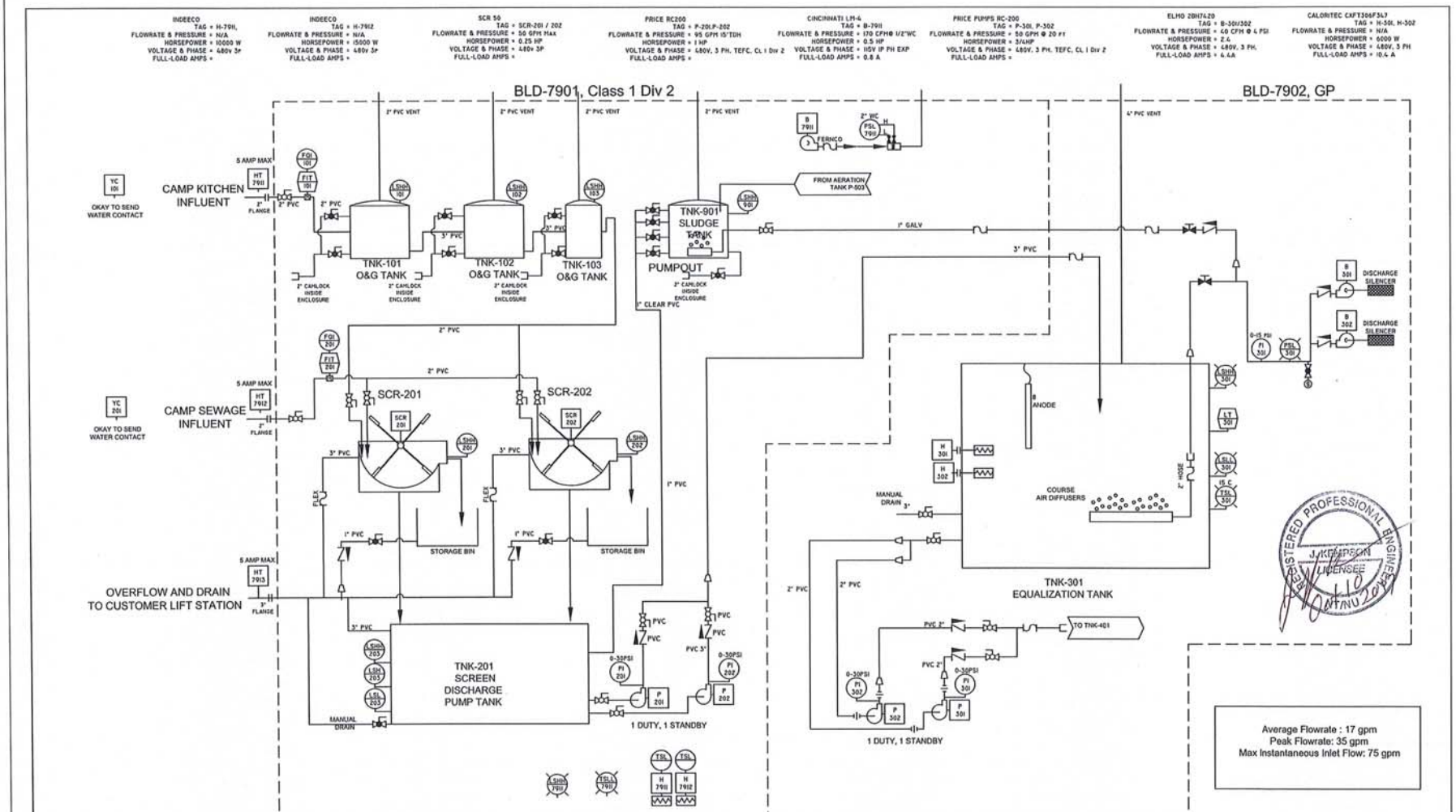

NOTES

IS INPUT WIRING TO BE WIRED FOR OUTDOORS, ACCORDING CEC FOR HAZARDOUS LOCATIONS.

WIRING TO BE CLASS I DIVISION 2, AS PER THE CEC.

newterra

PHONE: (800) 420-4056

www.newterra.com

LEVEL	REVISION	DATE (mm/dd/yy)	BY
D	T-401 MIX PIPE SIZE	10/10/17	JJK
C	AS-BUILT	13/08/17	JJK
B	PRODUCTION	06/06/17	JJK
A2	SUBMITTAL REVISIONS	26/05/17	JJK
A	SUBMITTAL	23/05/17	JJK

PROJECT NUMBER: 1704432

TITLE AND LOCATION: P&ID AMARUQ MINE

CUSTOMER: AGNICO EAGLE MINE

DRAWN BY: MH | DATE: | SHEET 1 | SHEETS 4

THIS INFORMATION IS THE PROPERTY OF newterra AND CANNOT BE REUSED OR REPRODUCED WITHOUT THE WRITTEN CONSENT OF newterra

PRICE PUMPS RC-200
TAG = P-601,602
FLOWRATE & PRESSURE = 300 GPM @ 60 FT
HORSEPOWER = 5HP
VOLTAGE & PHASE = 480V, 3 PH, TEFC, CL 1 Div 2
FULL-LOAD AMPS =

CALORITEC CXFT306F347H83
TAG = H-601,602,501,502
FLOWRATE & PRESSURE = N/A
HORSEPOWER = 6000 W
VOLTAGE & PHASE = 480V, 3 PH
FULL-LOAD AMPS = 10.4 A

CINCINNATI LM6
TAG = B-794I
FLOWRATE & PRESSURE = 700 CFM@ 2"WC
HORSEPOWER = 1.5 HP
VOLTAGE & PHASE = 480V 3P PH
FULL-LOAD AMPS =

OMELLET OAC649088L
TAG = H-794I
FLOWRATE & PRESSURE = N/A
HORSEPOWER = 4800 W
VOLTAGE & PHASE = 480 V, 1 PH
FULL-LOAD AMPS = 8.34

PRICE PUMPS RC-200
TAG = P-503
FLOWRATE & PRESSURE = 50 GPM @ 10 FT
HORSEPOWER = 1/4 HP
VOLTAGE & PHASE = 480V, 3 PH, TEFC, CL 1 Div 2
FULL-LOAD AMPS =

PROMINENT BETA 4
TAG = P-601, 602
FLOWRATE & PRESSURE = 3.2 GPH@58PSI
HORSEPOWER = N/A
VOLTAGE & PHASE = 120 V, 1 PH
FULL-LOAD AMPS = N/A

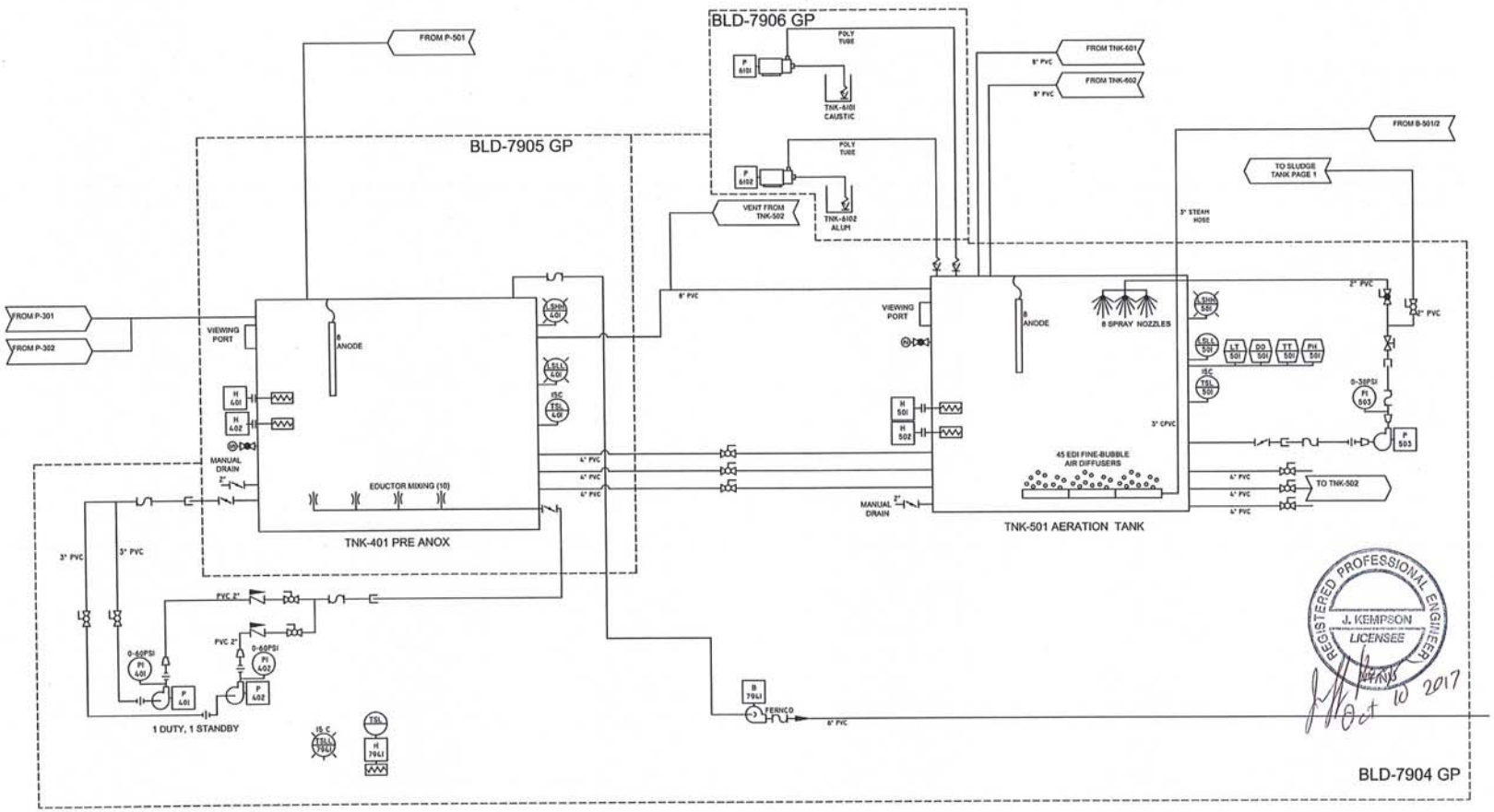

REGISTERED PROFESSIONAL ENGINEER
J. KEMPSON
LICENSEE
Oct 10 2017

NOTES

newterra

PHONE: (800) 420-4056
www.newterra.com

LEVEL	REVISION	DATE (mm/dd/yy)	BY
D	T-401 MIX PIPE SIZE	10/10/17	JJK
C	AS-BUILT	13/08/17	JJK
B	PRODUCTION	06/06/17	JJK
A2	SUBMITTAL REVISIONS	26/05/17	JJK
A	SUBMITTAL	23/05/17	JJK

PROJECT NUMBER: 1704432
TITLE AND LOCATION: P&ID AMARUQ MINE
CUSTOMER: AGNICO EAGLE MINE
DRAWN BY: MH
DATE:
SHEET: 2
SHEETS: 4

THIS INFORMATION IS THE PROPERTY OF newterra AND CANNOT BE REUSED OR REPRODUCED WITHOUT THE WRITTEN CONSENT OF newterra

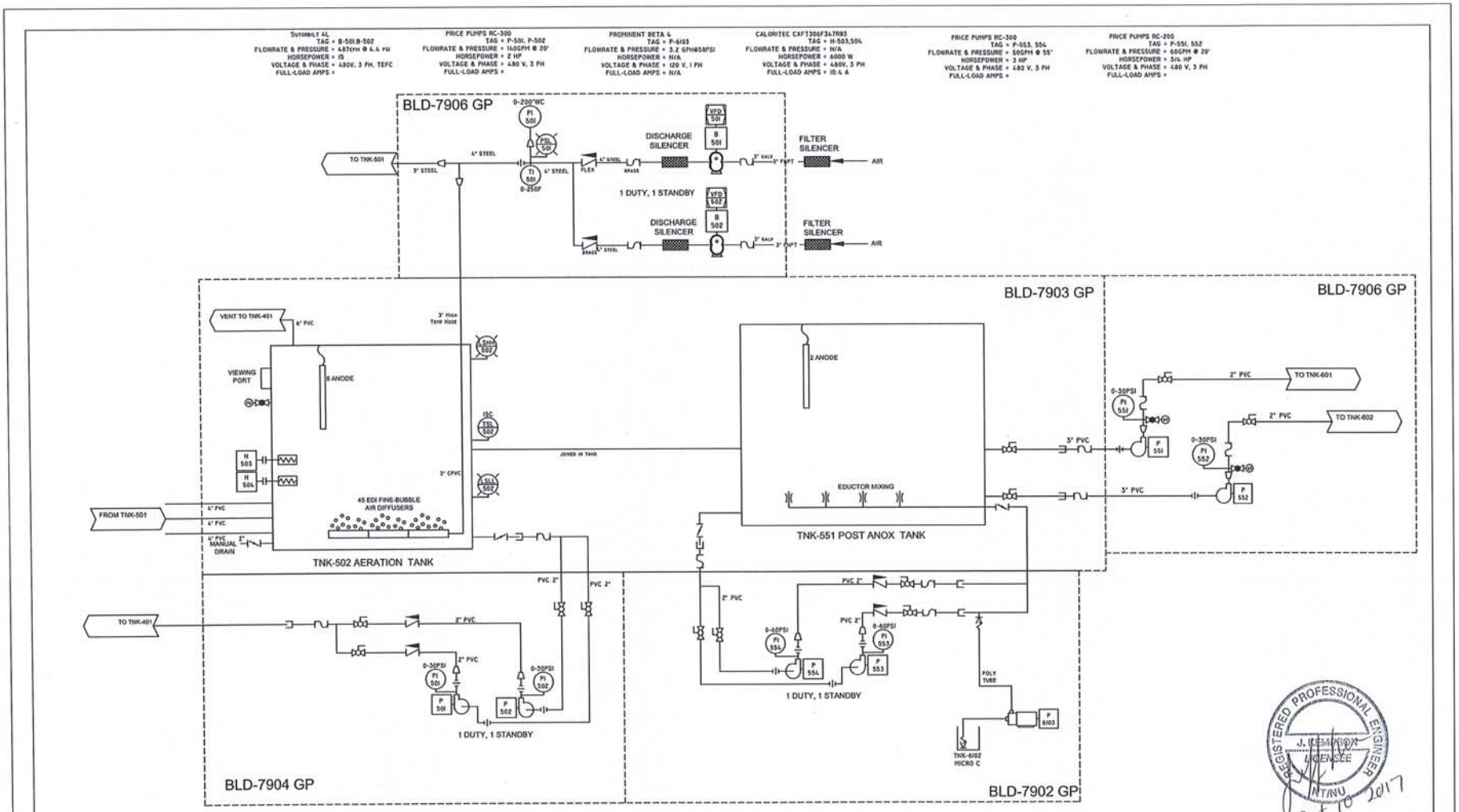

REGISTERED PROFESSIONAL ENGINEER
J. KEMPTON
LICENSEE
NT/NU
Oct 10 2017

NOTES

newterra

PHONE: (800) 420-4056

www.newterra.com

LEVEL	REVISION	DATE (mm/dd/yy)	BY
D	T-401 MIX PIPE SIZE	10/10/17	JJK
C	AS-BUILT	13/08/17	JJK
B	PRODUCTION	06/06/17	JJK
A2	SUBMITTAL REVISIONS	26/05/17	JJK
A	SUBMITTAL	23/05/17	JJK

PROJECT NUMBER: 1704432

TITLE AND LOCATION: P&ID AMARUQ MINE

CUSTOMER: AGNICO EAGLE MINE

DRAWN BY: MH | DATE: | SHEET: 3 | SHEETS: 4

THIS INFORMATION IS THE PROPERTY OF newterra AND CANNOT BE REUSED OR REPRODUCED WITHOUT THE WRITTEN CONSENT OF newterra

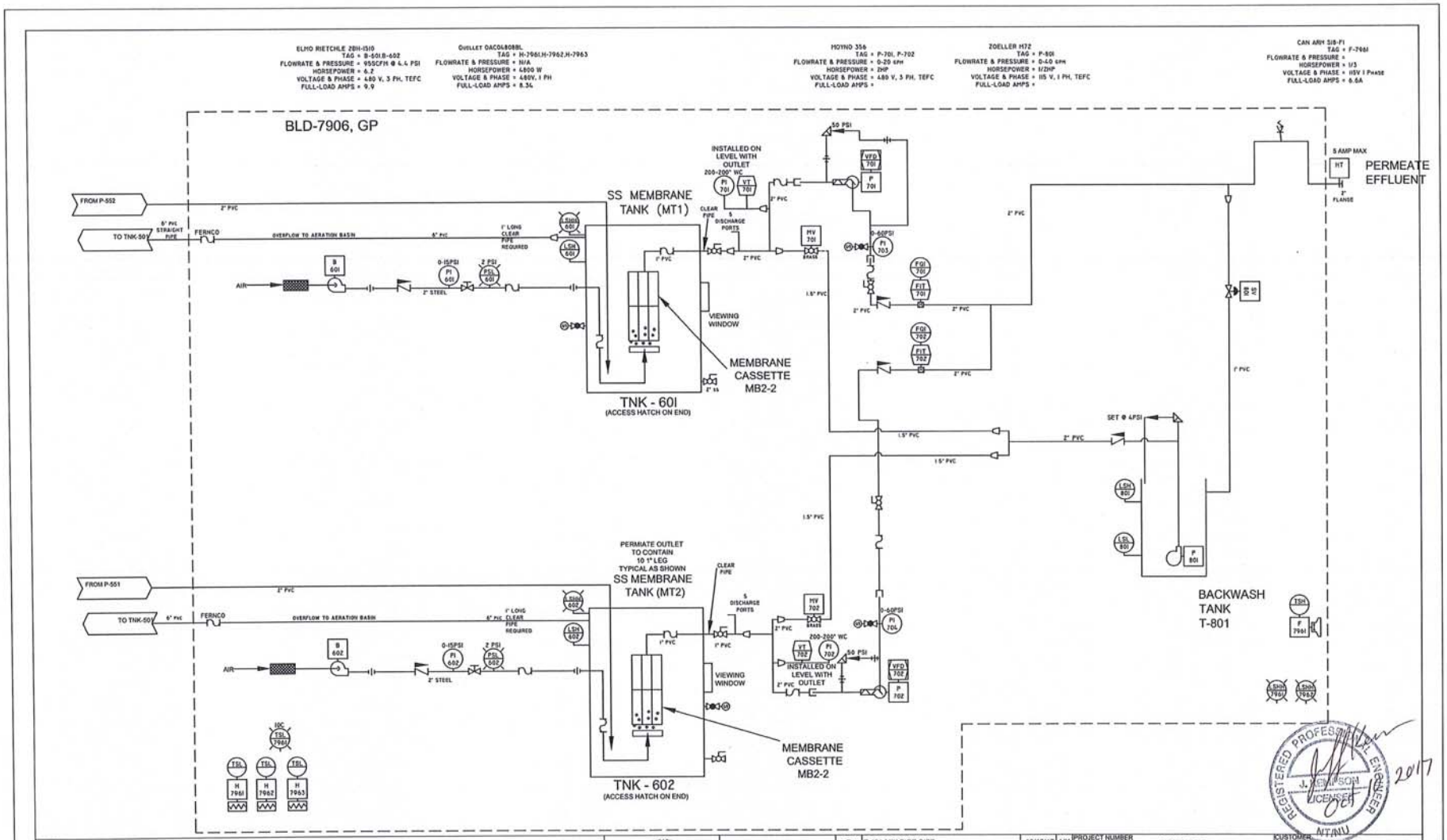

NOTES

newterra

PHONE:
(800) 420-4056
www.newterra.com

LEVEL	REVISION	DATE (mm/dd/yy)	BY
D	T-401 MIX PIPE SIZE	10/10/17	JJK
C	AS-BUILT	13/08/17	JJK
B	PRODUCTION	06/06/17	JJK
A2	SUBMITTAL REVISIONS	26/05/17	JJK
A	SUBMITTAL	23/05/17	JJK

PROJECT NUMBER: 1704432

TITLE AND LOCATION: P&ID AMARUQ MINE

CUSTOMER: AGNICO EAGLE MINE

DRAWN BY: MH | DATE: | SHEET: 4 | SHEETS: 4

THIS INFORMATION IS THE PROPERTY OF newterra AND CANNOT BE REUSED OR REPRODUCED WITHOUT THE WRITTEN CONSENT OF newterra

Appendix C: Newterra Operation and Maintenance Manual

newterra ltd.
1291 California Avenue, Brockville, ON K6V 5W3
(800) 420-4056 / www.newterra.com

newterra MBR Wastewater Treatment Plant

OPERATION AND MAINTENANCE MANUAL

System:	**newterra MBR WWTP**
Location:	**Amaruq mine, Kivalliq District of Nunavut**
Client:	**Agnico Eagle**
Project:	**1704432**
Rev.:	**1**
Date:	**August 2017**

All rights reserved. No part of this document may be reproduced or transmitted in any form or by any means, electronic, mechanical, photocopying, recording, or otherwise, without prior written permission of **newterra** ltd.

newterra ltd.
1291 California Avenue, Brockville, ON K6V 5W3
(800) 420-4056 / www.newterra.com

© 2017 by **newterra**, ltd.
All rights reserved. No part of this document may be reproduced or transmitted in any form or by any means, electronic, mechanical, photocopying, recording, or otherwise, without prior written permission of **newterra** ltd.

newterra ltd.
1291 California Avenue, Brockville, ON K6V 5W3
(800) 420-4056 / www.newterra.com

TABLE OF CONTENTS

1.0 INTRODUCTION 8

2.0 SAFETY 10
2.1 Introduction 10
2.2 Personal Protective Equipment (PPE) 11
2.2.1 Head protection 11
2.2.2 Eye and Face Protection 11
2.2.3 Foot Protection 12
2.2.4 Hand Protection 12
2.2.5 Body Protection 12
2.2.6 Hearing Protection 13
2.3 Bacterial Safety 13
2.4 Chemical Safety 13
2.5 Electrical Safety 14
2.5.1 Lockout Procedures 14
2.6 Confined Spaces 15
2.7 Fire Safety 16
2.8 Responsibility for Safety 16
2.8.1 Management 16
2.8.2 Worker 16
2.8.3 Plant Safety – Simple Rules to Follow 17
2.9 Hazard Warning Signs/Symbols 18
2.10 First aid 19
2.10.1 CPR Poster 20

3.0 WASTEWATER TREATMENT PLANT DESIGN BASIS 22
3.1 newterra MicroClear™ MBR Process Specification 22
3.2 MicroClear™ MB2-2 Membrane Module Characteristics 23
3.3 MicroClear™ MCXL Membrane Cassette Characteristics 23
3.4 Influent/Effluent Wastewater Characteristics 24
3.5 Estimated Chemical Consumption 24
3.6 Prohibited Items 25
3.7 Removal of Oily Materials 25
3.8 MicroClear™ Membrane Compatibility Chart 26

4.0 PLANT INSTALLATION, INSPECTION, AND TESTING 28
4.1 System Overview 28
4.2 Site Conditions Requirements 29
4.3 Inspection upon Delivery 29
4.4 Plant Initial Set up 30
4.4.1 Installation Checklist 30
4.4.1.1 Customer's Scope List 30
4.4.1.2 Civil Checklist 31
4.4.1.2 Electrical Checklist 31
4.4.1.3 Mechanical Checklist 32
4.4.2 System Electrical Specifications 32
4.5 Plant Initial Testing 33
4.5.1 Dry Test 33

© 2017 by **newterra**, ltd.
All rights reserved. No part of this document may be reproduced or transmitted in any form or by any means, electronic, mechanical, photocopying, recording, or otherwise, without prior written permission of **newterra** ltd.

newterra ltd.
1291 California Avenue, Brockville, ON K6V 5W3
(800) 420-4056 / www.newterra.com

4.5.2 Hydraulic Test 33
4.5.2.1 EQ, Anox and Aeration Tanks 34
4.5.2.2 Membrane Tank 34
4.5.2.3 O&G and 901 Tanks 35

5.0 OPERATION OF NEWTERRA MICROCLEAR™ MBR 36
5.1 Control System – Main SCADA Control, PLCs and HMIs 36
5.1.2 HMI Control Screen 36
5.1.3 HOA (Hand/Off/Auto) Screen 38
5.1.4 Process Screens 39
5.1.5 HMI Alarm Screen 41
5.2 WWTP Buildings/Utilities 43
5.2.1 Power Supply 43
5.2.2 E-Stop 43
5.2.3 Building Temperature Control 43
5.2.3.1 Logic 43
5.2.3.2 Alarms 44
5.2.4 Ventilation 44
5.2.4.1 Logic 44
5.2.4.2 Alarms 44
5.3 Process Narrative 45
5.4 Kitchen Inlet Module (TNK-101/2/3) Module 47
5.4.1 Function 47
5.4.2 Inputs 47
5.4.3 Setpoints 48
5.4.4 Logic 48
5.4.5 Alarms 48
5.5 Fine Screens (SCR-201/202) Module 49
5.5.1 Function 49
5.5.2 Inputs 49
5.5.3 Setpoints 50
5.5.4 Logic 50
5.5.5 Alarms 50
5.6 Equalization Tank (TNK-301) Module 51
5.6.1 Function 51
5.6.2 Inputs 51
5.6.3 Setpoints 52
5.6.4 Logic 52
5.6.5 Alarms 53
5.7 Pre-Anox Tank (TNK-401) Module 54
5.7.1 Function 54
5.7.2 Inputs 54
5.7.3 Setpoints 55
5.7.4 Logic 55
5.7.5 Alarms 55
5.8 Aeration Tanks (TNK-501/502) - Biological Treatment Module 56
5.8.1 Function 56
5.8.2 Inputs 57
5.8.3 Setpoints 57
5.8.4 Logic 58

© 2017 by **newterra**, ltd.
All rights reserved. No part of this document may be reproduced or transmitted in any form or by any means, electronic, mechanical, photocopying, recording, or otherwise, without prior written permission of **newterra** ltd.

newterra ltd.
1291 California Avenue, Brockville, ON K6V 5W3
(800) 420-4056 / www.newterra.com

5.8.5 Alarms 60
5.9 Post-Anox Tank (TNK-551) Module 61
5.9.1 Function 61
5.9.2 Inputs 61
5.9.3 Setpoints 61
5.9.4 Logic 62
5.9.5 Alarms 62
5.10 Membrane and Permeate Module 63
5.10.1 Function 63
5.10.2 Inputs 64
5.10.3 Setpoints 64
5.10.4 Logic 66
5.10.5 Alarms 68
5.10.6 Blower Control 69
5.10.7 CIP Cleaning 69
5.11 Sludge Holding Tank Module (TNK-901) 70
5.11.1 Function 70
5.11.2 Inputs 70
5.11.3 Setpoints 71
5.11.4 Logic 71
5.11.5 Alarms 71
5.12 Setpoints 72
5.12.1 PLC Date & Time 72
5.12.2 Factory Defaults 73
5.13 Statistics 73
5.14 PLC Status 74

6.0 PLANT START-UP, OPERATING GUIDELINES AND MONITORING 76
6.1 MBR Plant Start-Up 76
6.1.1 Mechanical & Electrical Start-up Procedure 76
6.1.2 Process Start-up 76
6.2 MBR System Operating Guidelines and Monitoring 81
6.2.1 Operating Guidelines 81
6.2.1.1 Membrane Filtration Operational Conditions 82
6.2.1.2 MBR – Recommended Biological Operational Conditions 83
6.2.2 Sampling 84
6.2.2.1 Filterability Test 85
6.2.3 Suggested Test Equipment for Monitoring 86
6.2.3.1 Filterability - Laboratory Glassware and Filter Paper 86
6.2.3.2 Turbidity, Phosphorus - Hach DR900 (and reagents) 87
6.2.3.3 DO and pH - Hach HQ40d with probe or Equivalent 87
6.2.3.4 Sludge Settling - Settleometer 88
6.2.3.5 TSS - Aysix model 3150 hand held TSS meter or Equivalent 88
6.2.3.6 Hach CEL Advanced Wastewater Laboratory 88
6.2.4 Record Keeping 89
6.2.5 Process Trending 89

7.0 SYSTEM MAINTENANCE 90
7.1 Plant Visual Checks 90
7.1.1 Air Scouring Patterns in Membrane Tanks 91

© 2017 by **newterra**, ltd.
All rights reserved. No part of this document may be reproduced or transmitted in any form or by any means, electronic, mechanical, photocopying, recording, or otherwise, without prior written permission of **newterra** ltd.

newterra ltd.
1291 California Avenue, Brockville, ON K6V 5W3
(800) 420-4056 / www.newterra.com

7.2 Schedule for Routine Operation and Maintenance Checkups 92
7.3 MBR Membrane Cleaning 97
7.3.1 Membrane In-situ Chemically Enhanced Backflush (CEB) 97
7.3.1.1 Procedure – Backwash Solution Preparation 98
7.3.1.2 Procedure – Organic Fouling Solution 99
7.3.1.3 Procedure – Organic Fouling Solution 100
7.3.1.4 Procedure 100
7.3.2 Membrane Recovery Cleaning 101
7.3.2.1 Step 1 - Preparation 102
7.3.2.2 Step 2 – Cleaning with High pH Solution 102
7.3.2.3 Step 3 - Cleaning with Sodium Hypochlorite (NaOCl) 103
7.3.2.4 Step 4 - Cleaning with Citric Acid 104
7.3.2.5 Step 5 - Resume normal operation 104
7.3.2.6 Step 6 - Checking Permeability 104
7.3.3 Membrane Physical Check 105
7.4 Sludge Decanting (TNK-901) 108
7.5 Trouble Shooting 109
7.5.1 MBR Membrane Fouling 109
7.5.1.1 Microbial/Biological Fouling 109
7.5.1.2 Particulate/colloid Fouling 109
7.5.1.3 Inorganic Fouling 110
7.5.1.4 Organic Fouling 110
7.5.1.5 Fouling Prevention 111
7.5.1.5 MBR WWTP Fouling Control & Troubleshooting Chart 112
7.5.1.5.1 Air Scouring 112
7.5.2 MBR Alarm Trouble Shooting 114
7.5.3 MBR Process Trouble Shooting 119
7.5.3.1 Biological System 119
7.5.3.2 Foaming 121
7.5.3.3 Permeate 122
7.5.3.4 Membrane air system 124
7.5.3.5 Membrane Cleaning 124
7.5.3.6 Mechanical / Electrical Issues 125
7.5.4 P-201/2, 301/2, 401/2, 501/2, 553/4, 551/2 - Trouble Shooting 126
7.5.5 P-701/702 Trouble Shooting 127
7.5.6 P-801 Trouble Shooting 128
7.5.7 B-501/502 - Trouble Shooting 128
7.5.8 B-301/302, B-601/602 - Trouble Shooting 129
7.5.9 LT-301/501 - Trouble Shooting 130
7.5.10 PH-501 - Trouble Shooting 135
7.5.11 MV-701/702 - Trouble Shooting 137

8.0 SHUT DOWN 139
8.1 MBR Temporary Shut Down 139
8.2 MBR Permanent Shut Down / Winterizing 139
8.2.1 Process Shut Down Procedure 139
8.2.2 Cleaning - General 139
8.2.3 Membranes 139
8.3 General Components 141
8.4 Blowers – B-501/502 143

© 2017 by **newterra**, ltd.
All rights reserved. No part of this document may be reproduced or transmitted in any form or by any means, electronic, mechanical, photocopying, recording, or otherwise, without prior written permission of **newterra** ltd.

newterra ltd.
1291 California Avenue, Brockville, ON K6V 5W3
(800) 420-4056 / www.newterra.com

8.4 Chemical Dosing Pumps – P-6101/6102/6103 144

9.0 SERVICE & SUPPORT 146
9.1 Commissioning and Start-up 146
9.1.1 Startup/Commissioning 146
9.1.2 Training 146
9.2 Post commissioning Services 147
9.2.1 Technical Support 147
9.2.2 Spare Parts 147
9.2.3 Assistance in telemetry control and monitoring 148
9.2.4 Site visits and system audits 149

10.0 WARRANTY 150

List of Appendices

Appendix A Drawings
Appendix B Packing Slips
Appendix C Commissioning Checklists
Appendix D Recommended Spare Parts List
Appendix E Technical Specs and Brochures for Parts and Equipment
Appendix F Material Safety Data Sheets
Appendix G Glossary & Terms
Appendix H Biological Treatment & Monitoring Parameters
Appendix I Process and Chemicals Dosage Calculations
Appendix J newterra MicroClear™ Membrane Cleaning Log Sheet
Appendix K Control Narrative

© 2017 by **newterra**, ltd.
All rights reserved. No part of this document may be reproduced or transmitted in any form or by any means, electronic, mechanical, photocopying, recording, or otherwise, without prior written permission of **newterra** ltd.

newterra ltd.
1291 California Avenue, Brockville, ON K6V 5W3
(800) 420-4056 / www.newterra.com

1.0 INTRODUCTION

The purpose of this manual is to provide necessary information for the Installation, Operation and Maintenance of the Wastewater Treatment Plant equipment.

ATTENTION	**The newterra MicroClear™ MBR wastewater treatment plant (WWTP) functions optimally if the operating procedures described in this manual are followed. If you have any questions after reading through this manual, please contact newterra ltd.**

- This O&M Manual must be kept on-site and available to employees at all time.
- It is IMPERATIVE that employees read the manual BEFORE working in the plant.
- Employees must read ***Section 2*** – Health and Safety.
- Technical Support Department contacts are provided in ***Section 9***.



WARNING: ***Failure to comply with the instructions provided in this manual can cause equipment & property damage or severe personal injury, and will render the warranty null and void.***

© 2017 by **newterra**, ltd.
All rights reserved. No part of this document may be reproduced or transmitted in any form or by any means, electronic, mechanical, photocopying, recording, or otherwise, without prior written permission of **newterra** ltd.

newterra ltd.
1291 California Avenue, Brockville, ON K6V 5W3
(800) 420-4056 / www.newterra.com

© 2017 by **newterra**, ltd.
All rights reserved. No part of this document may be reproduced or transmitted in any form or by any means, electronic, mechanical, photocopying, recording, or otherwise, without prior written permission of **newterra** ltd.

newterra ltd.
1291 California Avenue, Brockville, ON K6V 5W3
(800) 420-4056 / www.newterra.com

2.0 SAFETY

2.1 Introduction

This section provides general personal and environmental safety information for newterra MBR WWTP operators.

Always refer to local codes and regulations.

Specific equipment and parts safety information can be found in Appendix E. Material Safety Data Sheets (MSDSs) include detailed information regarding health & safety of chemicals used in wastewater treatment process and are presented in Appendix F. These are sample MSDS sheets and need to be replaced by the actual vendor MSDS sheets.
Information and guidelines outlined in this manual **must** be followed at all times prior to system installation and during operation and maintenance.

ESSENTIAL FOR SAFE OPERATION:

- Installation and operation of the newterra system must only be carried out by **trained and qualified** personnel.
- All necessary **safety precautions must** be carefully exercised, including but not limited to proper use of personal protective equipment considering given working environment and conditions.
- All **electrical installations and troubleshooting must** only be carried out by licensed electricians.
- All **plumbing work must** only be carried out by licensed plumbers or qualified personnel.
- Please keep in mind that trees and shrubs taller than two meters located in close proximity to the newterra system may become a safety concern at the time of installation or service.

DEFINITION OF SAFETY AND WARNING SIGNS USED IN THE MANUAL



ATTENTION SYMBOL

Special attention is required to ensure compliance with instructions concerning correct operating sequences to prevent damage to the plant or its function.



GENERAL WARNING SIGN

This symbol accompanies all important instructions or warnings associated with risks of injury as well as possible equipment damage.

© 2017 by **newterra**, ltd.
All rights reserved. No part of this document may be reproduced or transmitted in any form or by any means, electronic, mechanical, photocopying, recording, or otherwise, without prior written permission of **newterra** ltd.

newterra ltd.
1291 California Avenue, Brockville, ON K6V 5W3
(800) 420-4056 / www.newterra.com

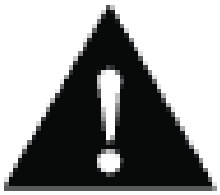

WARNING

CRITICAL WARNING SIGN

Warns against an unsafe situation or practice associated with severe injury as well as major equipment damage.

2.2 Personal Protective Equipment (PPE)

Personal protective equipment (PPE) refers to protective clothing, gloves, helmets, goggles, or other garments or equipment designed to protect the wearer's body from injury or infection. The hazards addressed by protective equipment include physical, electrical, heat, chemicals, biohazards, and airborne particulate matter. ”Protective clothing" is applied to traditional categories of clothing, and "protective gear" applies to items such as pads, guards, shields, masks, and others.

The purpose of personal protective equipment is to reduce employee exposure to hazards when engineering and administrative controls are not feasible or effective to reduce these risks to acceptable levels. PPE is needed when there are hazards present. PPE has the serious limitation that it does not eliminate the hazard at source and may result in employees being exposed to the hazard if the equipment fails.
The following list includes the minimum scope of PPE that should be available to system operators:

2.2.1 Head protection

Hard hats, bump caps, or helmets are types of protection that should be considered if there is a hazard of head injury. Head injuries can occur under various circumstances including as the result of a slip or fall, working in confined areas or where there are low ceilings, where there may be falling objects. Hard hats should be worn at all times when overhead work is being conducted.

2.2.2 Eye and Face Protection

Eye protection with side shields should be used at all times while inside the newterra system as there may be a danger of flying objects, particles, liquids, sprays or other matter entering the eyes. Protection can take many forms including:

- safety glasses,
- goggles, or
- full face protection. This should be used if handling chemicals, waste product or working around pressurized lines (air of liquid).

© 2017 by **newterra**, ltd.
All rights reserved. No part of this document may be reproduced or transmitted in any form or by any means, electronic, mechanical, photocopying, recording, or otherwise, without prior written permission of **newterra** ltd.

newterra ltd.
1291 California Avenue, Brockville, ON K6V 5W3
(800) 420-4056 / www.newterra.com

2.2.3 Foot Protection

Foot protection should be used at all times within the newterra system. Foot protection is usually in the form of steel-toed work boots, with a steel shank to protect the bottom of the foot from puncture wounds. In wet environments, steel-toed boots that are waterproof and slip-resistant may be necessary.

2.2.4 Hand Protection

Hand protection should be worn within the newterra system. The workplace can create many hazards for hands, whether from chemicals, cuts or burns. No single glove can provide appropriate protection for every work situation, so it is important to assess the risk for each task and select a glove that provides specialized protection.

The following is a list of gloves and their suggested appropriate application:

- Coated fabric gloves: This type of glove can provide protection against some moderate concentrated chemicals. They can be used in laboratory work provided they are strong enough to protect against the specific chemical being handled.
- Rubber, plastic or synthetic gloves: These types of glove can be used when cleaning or working with oils, solvents and other chemicals.
- Leather gloves: These should be used when welding, as the leather can resist sparks and moderate heat. The risk of cuts and abrasions also can be minimized by wearing leather gloves.
- Kevlar gloves: These have a wide variety of industrial applications. They are cut- and abrasion-resistant and provide protection against both heat and cold.
- Chemical/liquid-resistant gloves: Several types of gloves help protect against specific chemicals:
    - Butyl rubber gloves: nitric acid, sulfuric acid, hydrochloric acid and peroxide
    - Natural latex/rubber gloves: water solutions or acids, alkalis, salts, and ketones
    - Neoprene gloves: hydraulic fluids, gasoline, alcohols and organic acids
    - Nitrile rubber gloves: chlorinated solvents

2.2.5 Body Protection

Body protection may be required in various situations including dusty environments or when spraying liquid pesticides or handling dangerous chemicals. The hazard to be controlled will determine the type of protection that is most appropriate, for example, an apron, coveralls or a full rain suit. As a minimum, the operator should be wearing work coveralls.

© 2017 by **newterra**, ltd.
All rights reserved. No part of this document may be reproduced or transmitted in any form or by any means, electronic, mechanical, photocopying, recording, or otherwise, without prior written permission of **newterra** ltd.

2.2.6 Hearing Protection

Hearing protection should be worn in work environments where noise levels exceed 85 decibels – such as around blowers and air compressors. There are many types of hearing protection, including earplugs or muffs. Hearing protection that is suitable for the work environment and provides adequate noise reduction should be chosen. Disposable ear plugs or headset style are acceptable.

2.3 Bacterial Safety

The wastewater contains a mixture of viable bacteria and other biological organisms. A wastewater treatment plant poses a number of bacterial hazards and consequently potential health risk. Immunization protects operator against infection. The use of proper hygiene measures, protective equipment, good housekeeping and common sense prevent contact with pathogens.

These measures prevent infection!



Ensure that hands are washed with an antibacterial soap and warm water and dried by disposable towels on a regular basis, especially prior eating!
Do not expose cuts or open sores to wastewater!
Use personal protective equipment (PPE) at all times in wastewater treatment facility!
Any concern about possible infection should be brought to the attention of medical physician immediately!

2.4 Chemical Safety

The following chemicals are used in operation of newterra MBR WWTP:

- **Sodium Carbonate (Soda Ash)** is used for pH adjustment, in case there is a deficiency in alkalinity in influent sewage and pH drops. It is hazardous in case of skin contact (irritant), of eye contact (irritant), of ingestion, of inhalation (lung irritant).
- **Sodium hypochlorite (NaOCl)** and **Citric Acid ($C_6H_8O_7$)** are used for cleaning the membranes.
    - **Sodium hypochlorite (NaOCl)** is a common disinfectant, which can be an irritant or corrosive, depending on its concentration. It cannot be mixed with organics, ammonia compounds or acids. ***Contact with acids produces highly toxic chlorine gas***. ***It has to be mixed only with pure water.***
    - **Citric Acid ($C_6H_8O_7$)** is hazardous in case of skin contact (irritant, sensitizer), or ingestion, eye contact (irritant) and inhalation (lung irritant).

© 2017 by **newterra**, ltd.
All rights reserved. No part of this document may be reproduced or transmitted in any form or by any means, electronic, mechanical, photocopying, recording, or otherwise, without prior written permission of **newterra** ltd.

newterra ltd.
1291 California Avenue, Brockville, ON K6V 5W3
(800) 420-4056 / www.newterra.com

- **Aluminium Sulphate ($Al_2(SO_4)_3$)** is used for Phosphorus Removal. Mild to moderate irritation can occur from unprotected contact. Aluminum is very poorly absorbed through the skin and toxic effects would not be expected following short-term skin contact. Inhalation of mists can be irritating to the respiratory tract and lungs.

- **MicroC 2000** is used for nitrate removal.
  - Exposure to eyes may cause slight irritation
  - Exposure to Skin may cause slight irritation
  - Inhalation of high mist concentrations may cause irritation of respiratory tract.

When handling chemicals, it is important to wear proper personal protective equipment such as chemical goggles with combination full face shield, protective clothing with chemical splash apron and chemical-resistant rubber gloves.



The above descriptions are preliminary warnings only. The MSDSs for each of the chemicals should be consulted prior to using or handling any of the chemicals.
Sample MSDSs for chemicals used in the PWTP process can be found in Appendix F of this Manual.



WARNING

Mixing chemicals can result in dangerous reactions, including violent splashing, fires, explosions and release of toxic gases!
Chemicals should only be used for their intended uses!

2.5 Electrical Safety

Power may be supplied to control panels from various sources. Even if the disconnect is in the OFF position, certain electrical components inside the panel may be energized and servicing should not be conducted unless all incoming power is disconnected. Refer to the electrical drawings in Appendix A of this manual.

Ensure that the system is properly grounded before applying power to the system. Installation and servicing is only to be performed by **qualified authorized personnel**.

2.5.1 Lockout Procedures

Lockout procedures must be followed prior to performing mechanical or electrical maintenance to ensure that equipment has been de-energized. All relevant local guidelines and procedures must be applied. The person who locked out the device, should be the only person to remove the lockout.

© 2017 by **newterra**, ltd.
All rights reserved. No part of this document may be reproduced or transmitted in any form or by any means, electronic, mechanical, photocopying, recording, or otherwise, without prior written permission of **newterra** ltd.

newterra ltd.
1291 California Avenue, Brockville, ON K6V 5W3
(800) 420-4056 / www.newterra.com

When equipment is to be locked out, employers, supervisors and workers should follow accepted lockout principles, including:

- Pre-planning for the lockout by identifying all energy sources, switches, etc.
- Where lockout is complex, a written sequence in checklist form should be prepared for equipment access, lockout/tagout, clearance, release and start-up.
- All workers affected by the lockout should be notified.
- Equipment should be shut down by normal means by turning of switches and closing valves etc.
- Equipment should be isolated from energy sources by disconnecting or blocking the sources of energy.
- Lockout and tag the energy isolating devices by padlock or some other locking device that the worker has control over as well as a tag indicating that the equipment has been shut down.
- Verify that all energy sources have been isolated by attempting to cycle the equipment prior to working on it.
- When work is completed, release equipment from lockout.
- Test equipment

2.6 Confined Spaces

"**confined space**" means a fully or partially enclosed space:

- that is not both designed and constructed for continuous human occupancy, and
- in which atmospheric hazards may occur because of its construction, location or contents or because of work that is done in it.

If you have a space that is fully or partially enclosed, the two conditions – (a) and (b) above – must both apply before the space can be considered a "confined space".

"**atmospheric hazards**" means:

- the accumulation of flammable, combustible or explosive agents,
- an oxygen content in the atmosphere that is less than 19.5 per cent or more than 23 per cent by volume, or
- the accumulation of atmospheric contaminants, including gases, vapours, fumes, dusts or mists, that could,
    - result in acute health effects that pose an immediate threat to life, or
    - interfere with a person's ability to escape unaided from a confined space.

Follow local laws and regulations with respect to entering a confined space.

© 2017 by **newterra**, ltd.
All rights reserved. No part of this document may be reproduced or transmitted in any form or by any means, electronic, mechanical, photocopying, recording, or otherwise, without prior written permission of **newterra** ltd.

If a workplace includes a confined space that workers may enter to perform work, it is highly recommended that written program for the confined space is developed and maintained in accordance with this local regulations and policies before a worker enters the confined space. A confined space program is a written document that would include: a method for recognizing each confined space to which the program applies; a method for assessing the hazards to which workers may be exposed; a method for the development of confined space entry plans; a method for training workers; and, an entry permit system.

2.7 Fire Safety

Exposed hot surfaces can create potential burn/ignition hazards. Blowers and air compressors compress ambient air, causing heat to be generated. This heat can bring the temperature of the air compressor head and blower piping to a level that can cause burns to exposed flesh.
Follow local laws and regulations with respect to Fire Safety and regulations.

2.8 Responsibility for Safety

2.8.1 Management

Management is responsible for providing a safe working environment. This is accomplished partly by:

- Ensuring that all facilities and equipment are built and maintained in accordance with the appropriate safety standards
- Providing adequate funds for equipment and plant maintenance
- Establishing, promoting, and enforcing a ***safety policy***
- Establishing a safety training program
- Supplying easy accessible eyewash and first-aid stations and proper personal protective equipment (PPE) for personnel servicing wastewater treatment facility.

2.8.2 Worker

- To develop a positive and professional attitude towards safety.
- To avoid mistakes caused by indifference to safety, poor work habits, lack of attentiveness, rushing the job, failure to observe established safety procedures and poor physical condition.



***Remember the "ABC" of accident prevention*:**
ALWAYS BE CAREFUL!!!

© 2017 by **newterra**, ltd.
All rights reserved. No part of this document may be reproduced or transmitted in any form or by any means, electronic, mechanical, photocopying, recording, or otherwise, without prior written permission of **newterra** ltd.

newterra ltd.
1291 California Avenue, Brockville, ON K6V 5W3
(800) 420-4056 / www.newterra.com

In addition to ***"being careful"***, it is the responsibility of all workers to:

- Work in accordance with established safety procedures
- Follow the established safety rules
- Wear appropriate personal protective equipment (PPE)
- Report all accidents, no matter how minor
- Report potential safety hazards
- Participate in safety programs

2.8.3 Plant Safety – Simple Rules to Follow



Common sense plays a very important part in the safe operation of any type of plant!

- Wear the appropriate personal protective equipment at all times.
- Keep walkways clear of snow and ice, and loose objects such as pails, shovels, tools, etc.
- Clean up spills of oil, grease, chemicals, or other substances immediately.
- Keep all tools and similar equipment clean, in good condition, and properly stored when not in use.
- Replace all manhole covers, access trap doors, etc. as soon as possible. Erect a safety barrier if it is necessary to leave the opening uncovered.
- Wear a safety belt whenever there is the possibility of falling even a short distance, or when working over water.
- Lock out and tag electrical equipment before working on it or the associated equipment.
- Ensure that moving machinery is properly guarded. Wear ear protection in noisy environments.
- Ensure that fire-fighting equipment is in good working condition.

© 2017 by **newterra**, ltd.
All rights reserved. No part of this document may be reproduced or transmitted in any form or by any means, electronic, mechanical, photocopying, recording, or otherwise, without prior written permission of **newterra** ltd.

2.9 Hazard Warning Signs/Symbols

Below is a sample of possible hazard warning signs/symbols that may be provided with the newterra system. It is recommended that the operator become familiar with the warning signs in the system.



© 2017 by **newterra**, ltd.
All rights reserved. No part of this document may be reproduced or transmitted in any form or by any means, electronic, mechanical, photocopying, recording, or otherwise, without prior written permission of **newterra** ltd.

newterra ltd.
1291 California Avenue, Brockville, ON K6V 5W3
(800) 420-4056 / www.newterra.com

2.10 First aid

First aid is emergency care given immediately to an injured person. The purpose of first aid is to minimize injury and future disability. In serious cases, first aid may be necessary to keep the victim alive.

It often consists of a one-time, short-term treatment and requires little technology or training to administer. First aid can include cleaning minor cuts, scrapes, or scratches; treating a minor burn; applying bandages and dressings; drinking fluids to relieve heat stress, etc.

Operators must know the location of emergency telephone number(s), First Aid Kits, emergency eye wash stations and first aid attendant(s).

In over 98% of locations in the United States and Canada, dialing "9-1-1" from any telephone will link the caller to an emergency dispatch office—called a Public-Safety Answering Point (PSAP) by the telecom industry—which can send emergency responders to the caller's location in an emergency. In approximately 96 percent of the U.S., the Enhanced 9-1-1 system automatically pairs caller numbers with a physical address.

Follow local laws and regulations with respect to First Aid procedures and reporting.

© 2017 by **newterra**, ltd.
All rights reserved. No part of this document may be reproduced or transmitted in any form or by any means, electronic, mechanical, photocopying, recording, or otherwise, without prior written permission of **newterra** ltd.

newterra ltd.
1291 California Avenue, Brockville, ON K6V 5W3
(800) 420-4056 / www.newterra.com

2.10.1 CPR Poster

CPR for an Adult or Child

1

- Check the scene to ensure it is safe. If it is safe to do so, check the person and the person's ABCs (Airway, Breathing, Circulation).
- Call EMS/9-1-1 and get an AED or have someone else do this.



2

- Place the heel of one hand on the middle of the chest. Place the other hand on top.
- Do 30 compressions. Push hard, push fast.



3

- Open the airway by tilting the head back and lifting the chin. Pinch the nostrils closed and give 2 breaths.
- Repeat the cycle of 30 compressions and 2 breaths.
- Continue CPR until an AED arrives or more advanced care takes over.



The information on this poster does not replace formal First Aid & CPR training.

To find a Red Cross First Aid course in your area scan the QR code, or:
redcross.ca/firstaid | 1.877.356.3226

CANADIAN RED CROSS

© 2017 by **newterra**, ltd.
All rights reserved. No part of this document may be reproduced or transmitted in any form or by any means, electronic, mechanical, photocopying, recording, or otherwise, without prior written permission of **newterra** ltd.

newterra ltd.
1291 California Avenue, Brockville, ON K6V 5W3
(800) 420-4056 / www.newterra.com

© 2017 by **newterra**, ltd.
All rights reserved. No part of this document may be reproduced or transmitted in any form or by any means, electronic, mechanical, photocopying, recording, or otherwise, without prior written permission of **newterra** ltd.

newterra ltd.
1291 California Avenue, Brockville, ON K6V 5W3
(800) 420-4056 / www.newterra.com

3.0 WASTEWATER TREATMENT PLANT DESIGN BASIS

This section presents the design basis of the newterra MicroClear™ Membrane Bioreactor (MBR) Wastewater Treatment Plant (WWTP), including the influent constituent loading rates, hydraulic capacity and specifications for the membrane module and cassettes used. This section also includes a list of prohibited chemicals that should not be added to the influent wastewater and chemicals that should not come in contact with the membranes. The system is designed to meet effluent discharge criteria presented in this section below.

3.1 newterra MicroClear™ MBR Process Specification

Design loading	**SI Units**
Design Hydraulic Load	96 m^3/d
Organic Load	87.1 kgBOD/d
TKN Load	12.5 kgTKN/d
Phosphorus Load	1.15 kgTP/d
Process Tanks	**SI Units**
Three (3) Oil & Grease Tanks (TNK-101/TNK-102/TNK-103) with a total volume	12 m^3
One (1) Equalization Tank (TNK-301) with effective volume	40 m^3
One (1) Pre-Anoxic Tank (TNK-401) with effective volume	46 m^3
Two (2) Aeration Tanks (TNK-501/TNK-502) with total effective volume	76.5 m^3
One (1) Post-Anoxic Tank (TNK-401) with effective volume	8.6 m^3
Two (2) Membrane Tanks (TNK-601/TNK-602) each with effective volume	8.0 m^3
Two (2) Sludge Holding Tank (TNK-901) each with effective volume	7.0 m^3
Membrane Bioreactor (MBR) including anoxic tanks, aeration tanks and membrane tanks - total effective volume	**147.1 m^3**
Design Hydraulic Retention Time (HRT)	36.8 h
Sludge Age	26.5 d
Mixed Liquor Return Ratio - from Membrane Tank to Aerobic Tanks	5 x
Mixed Liquor Return Ratio - from Aerobic Tanks to Pre-Anoxic Tank	8 x
Design net flux (average)	13 LMH
Design Sludge Wasting Rate	5.36 m^3/d
Minimum design operating temp	**10 °C**

© 2017 by **newterra**, ltd.
All rights reserved. No part of this document may be reproduced or transmitted in any form or by any means, electronic, mechanical, photocopying, recording, or otherwise, without prior written permission of **newterra** ltd.

newterra ltd.
1291 California Avenue, Brockville, ON K6V 5W3
(800) 420-4056 / www.newterra.com

3.2 MicroClear™ MB2-2 Membrane Module Characteristics

MicroClear™ MB2-2 membrane module	SI Units
MB2-2 modules in MBR	2
MCXL cassettes in MB2-2 module	20
Total Area of MB2-2 module	160 m^2
MB2-2 Module Dimensions (L x W x H)	1.302 m x 1.124 m x 1.379 m
Housing materials	Stainless steel

3.3 MicroClear™ MCXL Membrane Cassette Characteristics

MicroClear™ MCXL membrane cassette	
Membrane Material	Polyethersulfone (PES)
Individual Cassette Area	8 m^2
Pore Size	0.04 µm
Cut Off	150 kDalton
Filtration Pressure	0.1 – 0.25 bar
Backwash Pressure	0.07 – 0.1 bar
Cassette Dimension	0.416 m x 0.209 m x 0.490 m

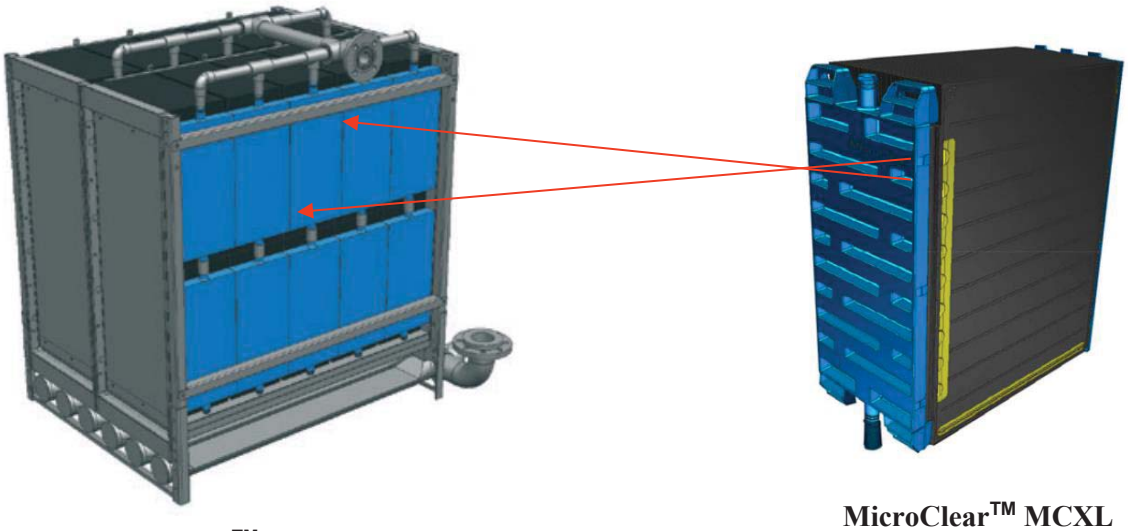

MicroClear™ MB2-2 membrane module

MicroClear™ MCXL membrane cassette

© 2017 by **newterra**, ltd.
All rights reserved. No part of this document may be reproduced or transmitted in any form or by any means, electronic, mechanical, photocopying, recording, or otherwise, without prior written permission of **newterra** ltd.

newterra ltd.
1291 California Avenue, Brockville, ON K6V 5W3
(800) 420-4056 / www.newterra.com

3.4 Influent/Effluent Wastewater Characteristics

The newterra MBR shall treat wastewater from the mine camp with the following characteristics upon entering the newterra MBR.

Parameters	Unit	Influent*	Effluent
pH	s.u.	6 - 9	6.5 – 8.5
Fat, Oil, Grease (FOG)	mg/L	< 30	< 5
Biological Oxygen Demand (BOD)	mg/L	907.5	< 25
Total Suspended Solids (TSS)	mg/L	262.5	< 25
Total Kjeldahl Nitrogen (TKN)	mgN/L	130	-
Unionized Ammonia Nitrogen (NH_3-N)	mgN/L	-	< 1.25
Nitrate Nitrogen (NO_3-N)	mgN/L	-	< 5
Total Phosphorus (TP)	mgP/L	12	< 0.5
Fecal Coliform	CFU/100mL	-	< 200**
Total Residual Chlorine	mg/L	-	< 0.02
Alkalinity (assumed)	mg/L as $CaCO_3$	471	-
Total Dissolved Solids(TDS)	mg/L	< 1,200	-

3.5 Estimated Chemical Consumption

Consumable		Usage Rate			
Purpose	Name	Value	Unit	Value	Unit
Supplemental Alkalinity	**Dry Soda Ash**	6.28	kg/d	2292	kg/year
Phosphorus Removal	**Liquid Alum, 48%**	14.6	L/d	5346	L/year
Nitrate Removal	**MicroC 2000**	16.5	L/d	6025	L/year
Membrane Cleaning	**Sodium Hypochlorite, 12%**	-	L/d	150	L/year

© 2017 by **newterra**, ltd.
All rights reserved. No part of this document may be reproduced or transmitted in any form or by any means, electronic, mechanical, photocopying, recording, or otherwise, without prior written permission of **newterra** ltd.

newterra ltd.
1291 California Avenue, Brockville, ON K6V 5W3
(800) 420-4056 / www.newterra.com

3.6 Prohibited Items

The raw wastewater should not contain any of the following substances:

- Hydrocarbons – lubricants, gasoline, diesel, etc.;
- Paints, solvents, silica, silicones and polymers;
- Antibacterial solutions, and products with quaternary ammonia;
- Large quantities of chemicals such as water softener, disinfectants, strong acids & alkalis, pesticides or photographic chemicals;
- Silicone based defoamers;
- Non-biodegradable solid waste (plastic, rubber products, disposable diapers, etc.);
- High amount of metals, such as iron, magnesium, calcium, barium and strontium.



TOXIC MATERIALS SHOULD NOT BE THROWN INTO THE DRAIN!

3.7 Removal of Oily Materials

The wastewater must pass through a grease trap (or similar facility for grease/fat removal), if there is kitchen usage onsite. The large amount of oil and fat can harm treatment facility (e.g., clogging pumps and piping and cause foaming in the aeration tank). To avoid premature membrane fouling, maximum FOG concentrations should not exceed 30 mg/L.



Fats, oils and grease (FOG) must be removed prior to MBR. Removing of FOG significantly reduces membrane fouling, foaming potential and increases aeration efficiency.

The raw wastewater should also comply with the following compatibility chart. The lipophilic substances concentration must be lower than **50 mg/L.**

© 2017 by **newterra**, ltd.
All rights reserved. No part of this document may be reproduced or transmitted in any form or by any means, electronic, mechanical, photocopying, recording, or otherwise, without prior written permission of **newterra** ltd.

newterra ltd.
1291 California Avenue, Brockville, ON K6V 5W3
(800) 420-4056 / www.newterra.com

3.8 MicroClear™ Membrane Compatibility Chart

Group	Substances	Compatibility
Chlorinated solvents	Methylene Chloride, Chloroform, Carbon Tetrachloride, Chlorobezene, Trichloroethane (<1%)	**Not recommended**
Esters	Ethyl Acetate, Butyl Acetate, Butyl Acrylate (<1%)	**Not recommended**
Ethers	Ethyl Ether, Polyethylene Oxide (<1%)	**Not recommended**
H_2O_2	<2000 ppm	Very good
Inorganic acids	HF, HCl, H_2SO_4	pH 0 - 14
Ketones	Acetone, Methyl Ethyl Ketone	**Not recommended**
NaOCl	100,000 ppm x h	Very good
Organic acids	Sulfamic Acid, Formic Acid, Oleic Acid, Sulfonic Acid, Acetic Acid, Acrylic Acid, Lactic Acid	pH 0 - 14
Phenols		**Not recommended**
Silicones		**Not recommended**
Alcohols	Ethanol, Butanol, Isopropranol (<50%)	Good
Aldehydes	Formaldehyde (<1%)	Very good
Alkali		pH 0 - 14
	Dimethyl Formamide, Dimethyl, Acetamid Dioxane, N-Methyl, Pyrrolidone, Tetramethyl Acetamide	**Not recommended**
Aprotic Solvents	Benzene, Toluene, Xylene, Anthracene, Naphatalene, Gasoline	**Not recommended**
Aromatic hydrocarbon	Methoxyethanol, Ethoxyethanol, Buthoxyethanol	unknown

© 2017 by **newterra**, ltd.
All rights reserved. No part of this document may be reproduced or transmitted in any form or by any means, electronic, mechanical, photocopying, recording, or otherwise, without prior written permission of **newterra** ltd.

newterra ltd.
1291 California Avenue, Brockville, ON K6V 5W3
(800) 420-4056 / www.newterra.com

© 2017 by **newterra**, ltd.
All rights reserved. No part of this document may be reproduced or transmitted in any form or by any means, electronic, mechanical, photocopying, recording, or otherwise, without prior written permission of **newterra** ltd.

newterra ltd.
1291 California Avenue, Brockville, ON K6V 5W3
(800) 420-4056 / www.newterra.com

4.0 PLANT INSTALLATION, INSPECTION, AND TESTING

4.1 System Overview

The **newterra** MicroClear™ MBR WWTP is 96m3/day MBR for for the Amaruq Mine located in Nunavut. The system consists of five (5) modified 40 foot High Cube ISO shipping containers and one (1) modified 53 foot High Cube ISO shipping container. See below. .

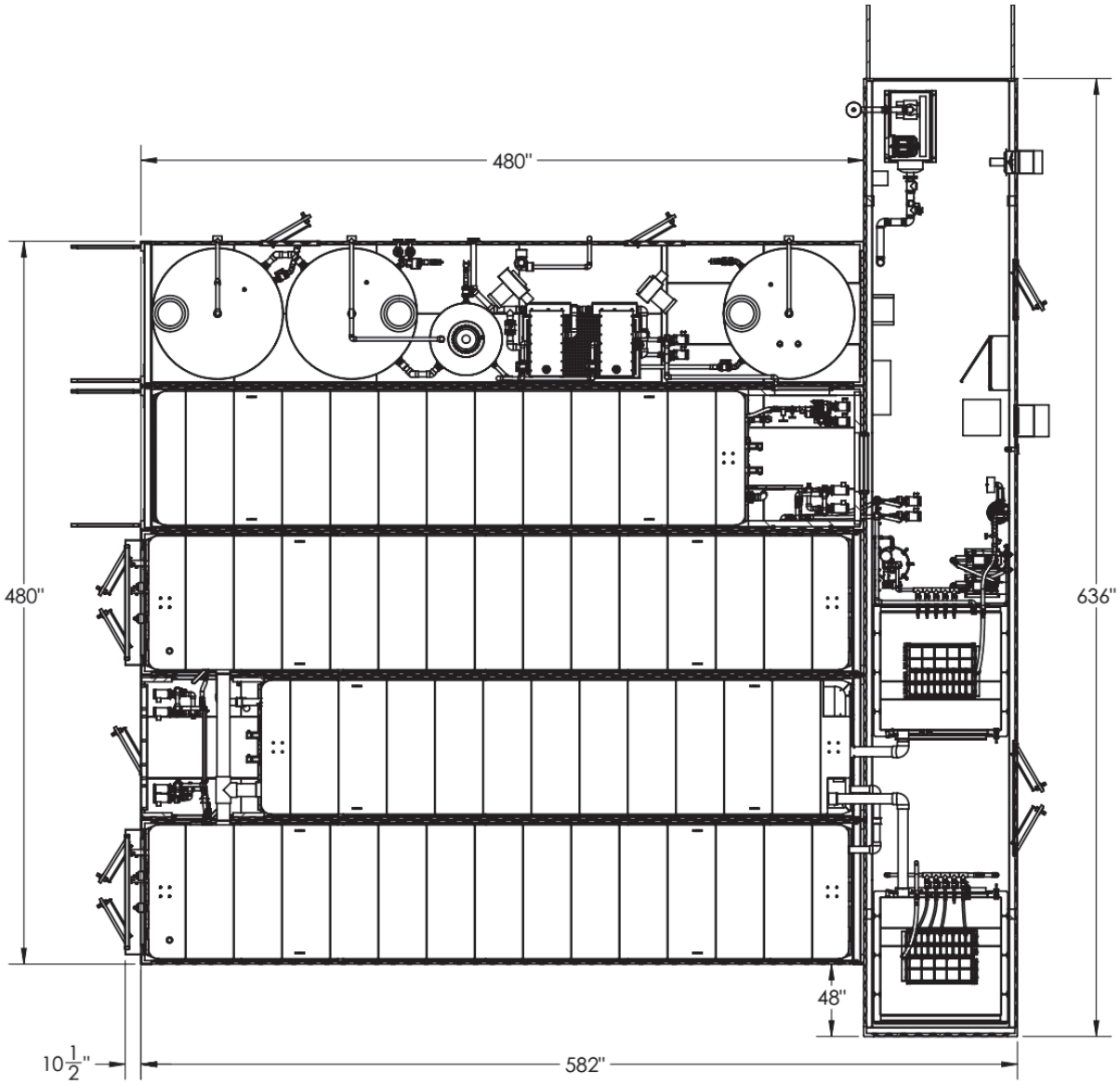

© 2017 by **newterra**, ltd.
All rights reserved. No part of this document may be reproduced or transmitted in any form or by any means, electronic, mechanical, photocopying, recording, or otherwise, without prior written permission of **newterra** ltd.

4.2 Site Conditions Requirements

- Installation site for the **newterra** MicroClear™ MBR WWTP should be close to the sewer drain and have a sufficient power source (refer to Electrical Drawings in Appendices B-F).
- Location must permit easy access for equipment capable of transporting, offloading, and handling of the designed loads.
- There should be adequate space around the containers for safe operation and maintenance.
- The firm base (foundation) must be built to support the full operating weight of the plant to prevent buildings from shifting and pipe/electrical conduit connection failure – pilings are recommended.



The firm base for the container must be level and must be capable of supporting the operating weight.

WARNING: ***Always check with the local utility companies for the location of water lines, electrical and telephone cables, or any additional hazards below grade, prior to excavation. Failure to do so could result in severe bodily injury or death.***

4.3 Inspection upon Delivery

The **newterra** MicroClear™ MBR WWTP is carefully manufactured, checked, and tested at the manufacturing plant. All equipment is pre-wired, pre-piped, mounted inside the enclosures and factory tested. Upon receiving the system, please perform the following:

- Place the container onto the prepared firm base to avoid sagging, equipment vibration, and shifting. When lifting the containers, ensure that lifting equipment is clear of overhead obstructions such as power lines, trees or rooftops. Be careful during this procedure!
- Be careful when offloading the containers to prevent damage to the internal pipe work.
- Check the containers for any signs of shipping damages.

© 2017 by **newterra**, ltd.
All rights reserved. No part of this document may be reproduced or transmitted in any form or by any means, electronic, mechanical, photocopying, recording, or otherwise, without prior written permission of **newterra** ltd.

newterra ltd.
1291 California Avenue, Brockville, ON K6V 5W3
(800) 420-4056 / www.newterra.com

- Inspect the containers to ensure that no components or parts are missing (refer to the Packing List – see Appendix B). Also, inspect for visual damage of the tanks, pumps, blowers, piping, and control panel.

- If the containers, equipment inside and any parts shipped loose are free of damage, proceed with the installation.

For any damages or loss of equipment, **please notify newterra ltd. at (800) 420-4056 immediately.**

4.4 Plant Initial Set up

WARNING: ***The installer must ensure that the installation site is safe from hazards. These could include excavations left open overnight, debris left lying around, and tanks & equipment not properly blocked. Provisions must be made to eliminate the potential hazards by roping off and proper shoring around the excavations, cleaning up at the end of each workday, and proper storage of equipment. Failure to do so could result in severe injury or death.***

4.4.1 Installation Checklist

At Appendix C is the installation and commissioning checklist for the system. Below is a summary of installation activities.

4.4.1.1 Customer's Scope List

- Placement and anchoring (if required) of equipment
- Interconnecting piping supply and installation
- Interconnecting electrical and controls supply and installation including connection inside newterra's control panel
- Electrical power supply to our electrical panel, lightning, grounding, etc.
- Permitting
- Potable water supply to the plant site for plant hydraulic test during startup
- Seed sludge
- Wastewater testing
- Chemicals supply and storage
- Treated effluent and waste sludge disposal
- All site civil work including design

© 2017 by **newterra**, ltd.
All rights reserved. No part of this document may be reproduced or transmitted in any form or by any means, electronic, mechanical, photocopying, recording, or otherwise, without prior written permission of **newterra** ltd.

newterra ltd.
1291 California Avenue, Brockville, ON K6V 5W3
(800) 420-4056 / www.newterra.com

4.4.1.2 Civil Checklist

- Ensure that a potable water supply is available (used for hydraulic testing during start-up, membrane cleaning, washing hands and for performing onsite testing).
- Ensure availability of on-site emergency eyewash station and personal protection equipment.
- Remove hatch covers from the interconnecting ports.
- All doors are closing, latching and locking
- Weather stripping has been installed around each door
- Door sweeps have been installed on each door
- Louvers and hoods have been installed and sealed
- Install Liquid Rubber Container Seal as per drawing at Appendix C.

4.4.1.2 Electrical Checklist

- Connect electrical power to the Main Disconnect from available source ensuring correct phase rotation (See Electrical Drawings at Appendix A for power source specifications).
- Connect electrical power to the Control Panel (See System Layout drawing in Appendices A for locations)
- Ensure that proper electrical grounding and lightning protection is available.
- Switch Main Switch Panel's isolator to the ON position.
- Check all internal lighting and heating for correct operation.
- Install packed external lighting into brackets above the doorways.
- All internal electrical connections have been terminated
- Confirm Phase Monitor is not in alarm
- Site voltage measured:
    - L1/L2 - L2/L3 - L3/L1 - L1/GRD - L2/GRD - L3/GRD:
- Check field wiring and piping as per drawings
- Check panel for loose wiring, Correct as required
- Check voltage on AC transformer
- Check voltage on DC transformer
- Check I.S. barrier is grounded as per input drawing

© 2017 by **newterra**, ltd.
All rights reserved. No part of this document may be reproduced or transmitted in any form or by any means, electronic, mechanical, photocopying, recording, or otherwise, without prior written permission of **newterra** ltd.

newterra ltd.
1291 California Avenue, Brockville, ON K6V 5W3
(800) 420-4056 / www.newterra.com

4.4.1.3 Mechanical Checklist

- All hoses and mechanical connections have been hooked up
- Ensure all unions and fittings are tight, as some are loosened to prevent stress in shipping
- Check alignment of motors, Correct as required
- Check all motor belt tensions, Correct as required
- Check alignment of pulleys for all belt driven blowers
- Verify membrane modules are secure within the membrane tanks – i.e. verify wheel chocks are in the correct location and that there is no lateral movement (less than an inch) of the membrane modules on the wheel tracks in the tanks.
- Confirm Tank Diffusers and Educators have not moved during shipping
- Calibrate pH sensor

4.4.2 System Electrical Specifications

Verify site power per system design criteria. Additional detail is at Appendix A.

ELECTRICAL SPECIFICATIONS	
VOLTAGE	600V
PHASE	3Ø
FREQUENCY	60 Hz
FULL LOAD AMPS	172A
MAIN DISCONNECT SIZE	400A - FUSED @ 250A
SCCR SYMMETRICAL (kAMPS)	10
SYSTEM APPROVAL AND CLASSIFICATION	cMET - CL1Div2
PANEL APPROVAL AND CLASSIFICATION	cMETus to UL698A

Please refer to the as-built electrical drawings in Appendices A of this manual.

ATTENTION	**Only trained and certified electricians should make the electrical connections.**

© 2017 by **newterra**, ltd.
All rights reserved. No part of this document may be reproduced or transmitted in any form or by any means, electronic, mechanical, photocopying, recording, or otherwise, without prior written permission of **newterra** ltd.

newterra ltd.
1291 California Avenue, Brockville, ON K6V 5W3
(800) 420-4056 / www.newterra.com

4.5 Plant Initial Testing

The newterra MicroClear™ MBR WWTP (except the membrane modules) undergoes electrical and leakage tests in our manufacturing facility prior to shipment; however, fittings could shift during shipment, so it is our standard practice to perform initial testing on the plant after installation, including **dry and hydraulic tests.**

The following subsection is presented for one single process train; if multiple trains are provided, performing the dry test and hydraulic test for each train is identical.

4.5.1 Dry Test

The following tasks have to be performed **before** potable water is introduced into the system:

- Ensure that all tanks are clean and free of any dirt or debris (this is to prevent obstruction or damage to the piping, pumps, and membranes).
- Ensure that all connections have been provided and joints have been tightened.
- Check the placement of the air diffusers in the equalization tank(s) and the aeration tank(s) if incorrectly positioned, proper adjustment has to be performed.
- Ensure that a functional check of the electrical and control system has been performed (please refer to the newterra Commissioning Checklist presented in Appendix H).
- Confirm heater/fan and air conditioner operations

4.5.2 Hydraulic Test

The hydraulic test is performed using potable water to:

- Check for and fix any leakage;
- Check the setting of level switches/transmitters;
- Check the hydraulic flow through the plant;
- Check if all the ancillary equipment and controls of the plant function as per design;
- Recalibrate instruments (if applicable);
- Perform clean water test on membranes.
- Perform clean water test on the chemical distribution system.

© 2017 by **newterra**, ltd.
All rights reserved. No part of this document may be reproduced or transmitted in any form or by any means, electronic, mechanical, photocopying, recording, or otherwise, without prior written permission of **newterra** ltd.

newterra ltd.
1291 California Avenue, Brockville, ON K6V 5W3
(800) 420-4056 / www.newterra.com

4.5.2.1 EQ, Anox and Aeration Tanks

- Fill the tanks in order - TNK-301, 401, 501, 502, 551, 601, 602 with potable water, run the pumps and check for any signs of leakage.
- Perform electrical and instrumentation (E&I) functional checks and adjustment of level switches.
- Turn on the air blower(s) for the blower(s) for aeration tank(s), and check for:
    - Buoyancy of air diffusers and if this occurs, empty the tank and fix;
    - Air leakages: if this occurs, tighten up the fittings;
- Manually check water temperature and DO (dissolved oxygen): with a hand-held DO meter and adjust air flow to keep it up to 0.5 – 1 mg/L for equalization tank(s) and 2 - 3 mg/L for aeration tank(s); check the DO readings on the touch screen.
- DO Control System: check automatic ON/OFF of Aeration Tank air blowers at low and high settings of DO without the return of aerated water from the membrane tanks to aeration tanks (i.e. turn off transfer pump(s) from aeration tank(s) to membrane tank(s) and turn of recirculation pump(s) from membrane tank(s) to aeration tank(s), if included), and record blower ON/OFF duration.

4.5.2.2 Membrane Tank

- Enable membrane operation using the HMI
- Start the transfer pump(s) from the aeration tank(s) to the membrane tank(s) and fill the membrane tank(s) with potable water.
- Start the air blowers for the membrane tank(s) and check for an even distribution of air across the membrane filter area and air bubble uniformity above the membrane module/cassette.
- Check hydraulic flow pattern through the membranes and between membrane module/ cassette and tank wall.
- Make a clean copy of the **Clean Water Testing Sheet** presented in **Appendix J** of this O&M Manual.
- Record all checked parameters in the **Clean Water Testing Sheet.**
- Start the permeate (vacuum) pumps.
- Record the vacuum (TMP) on the gauge(s) on the permeate line [for clean water could be 0.05 to 0.07 bar (20” to 29” WC)].
- Record water temperature and DO with a hand-held DO meter.
- Gradually increase the permeate flow while recording the vacuum (TMP) on the gauges up to the anticipated peak wastewater flow.

Forward a complete **Clean Water Testing Sheet** to **newterra** for analysis.

© 2017 by **newterra**, ltd.
All rights reserved. No part of this document may be reproduced or transmitted in any form or by any means, electronic, mechanical, photocopying, recording, or otherwise, without prior written permission of **newterra** ltd.

newterra ltd.
1291 California Avenue, Brockville, ON K6V 5W3
(800) 420-4056 / www.newterra.com

4.5.2.3 O&G and 901 Tanks

- Fill the tanks in order - TNK-101, 102, 103 and 901 with potable water, run the pumps and check for any signs of leakage.
- Confirm diffuser operation in TNK-901. Adjust as necessary.

© 2017 by **newterra**, ltd.
All rights reserved. No part of this document may be reproduced or transmitted in any form or by any means, electronic, mechanical, photocopying, recording, or otherwise, without prior written permission of **newterra** ltd.

5.0 OPERATION of newterra MicroClear™ MBR

MBR (Membrane Bioreactor) treatment technology is an effective combination of an activated sludge biological treatment process with MicroClear MBR membrane filtration technology.

This section provides a description of the treatment process and how it is controlled. For a more complete understanding, review the **Process & Instrumentation Diagram** and **System Layout** provided in **Appendix A** of this manual as well. The detailed Control Narrative with factory setpoints, alarms and logic, please see **Appendix K**.

Most of the equipment in the **newterra** WWTP can be operated in either manual or automatic mode. The system is designed to always run in auto mode. The manual option is provided mainly for maintenance purposes.

5.1 Control System – Main SCADA Control, PLCs and HMIs

The **newterra** MicroClear™ MBR is controlled by a PLC (Programmable Logic Controller). The system is programmed to:

- Receive analog and digital input signals from the switches and transmitters being controlled;
- Process the information using the structure and rules entered into the program;
- Generate outputs that control the equipment - turn equipment OFF or ON.
- Generate alarms if critical conditions are present
- Provide a HMI (Human Machine Interface) touch-screen for ease of operator process monitoring and control.

5.1.2 HMI Control Screen

An example of an HMI Control Screen is provided below:



© 2017 by **newterra**, ltd.
All rights reserved. No part of this document may be reproduced or transmitted in any form or by any means, electronic, mechanical, photocopying, recording, or otherwise, without prior written permission of **newterra** ltd.

System Operation

- (RUNNING/STOPPED) Indicates whether the system is currently in the **RUN** mode or turned off
- **START** button puts the system in **RUN** mode as long as there are no alarms preventing the start up of the system
- **STOP** button stops the system operation
- **RESET** button is used to clear alarms after they have been addressed
- Clarifier blowers, equalization tank blowers and the building fan if on, continue to run even after the **STOP** button has been pressed

The MBR will always remain in auto run mode, unless the kill switch is pressed or power is down.

The MBR will automatically restart after power failure.

A menu to navigate through the process and data information screens is provided at the bottom right corner of the HMI screen.

When the **MENU** button is pressed, it shows a list of individual screens with a scroll bar.

- To go to any of the listed screens, touch the icon.
- To go back to the main screen, touch the **X** button.



© 2017 by **newterra**, ltd.
All rights reserved. No part of this document may be reproduced or transmitted in any form or by any means, electronic, mechanical, photocopying, recording, or otherwise, without prior written permission of **newterra** ltd.



Screen-shots presented in this manual are for example only and may not be representative of ideal operation.

5.1.3 HOA (Hand/Off/Auto) Screen

This screen displays all devices controlled by the PLC. Under normal operation (auto mode), all devices are set in the AUTO position.

- Each PLC controlled motor or valve in the system has a Hand/Off/Auto (HOA) Switch to control its operation.
- The HAND (H) position of a switch is used for testing and troubleshooting of the system. As a safety precaution to prevent damage to equipment, the equipment will operate for two minutes in hand mode and will then turn OFF and revert to the (O) position. Operators must be present when equipment is operated in the manual mode.



© 2017 by **newterra**, ltd.
All rights reserved. No part of this document may be reproduced or transmitted in any form or by any means, electronic, mechanical, photocopying, recording, or otherwise, without prior written permission of **newterra** ltd.

5.1.4 Process Screens

The main process screens are accessed from the main menu of the HMI control screen. These process screens are:

- Inlet
- EQ & Anox
- Aeration
- MBR

Note: In the following sections are the detailed descriptions of the main processes.



Switches are indicated on the HMI as follows:

- LSHH – level switch high high
- LSH – level switch high
- LSLL – level switch low low
- TSLL – temperature switch low low
- LSL – level switch low
- PSL – pressure switch low

Status of the switches are indicated as follows:

Grey when **OFF**
Green when **ON**
RED when in Alarm

© 2017 by **newterra**, ltd.
All rights reserved. No part of this document may be reproduced or transmitted in any form or by any means, electronic, mechanical, photocopying, recording, or otherwise, without prior written permission of **newterra** ltd.

newterra ltd.
1291 California Avenue, Brockville, ON K6V 5W3
(800) 420-4056 / www.newterra.com

Tank levels are indicated by level switch positions and percent full values where level transmitters are provided. For example, the following screen shows LSLL as green, LSHH as grey and the percent full as 44.1% in TNK-501. This indicates that the tank is 44.1% full, and the water level is above LSLL and below LSHH.

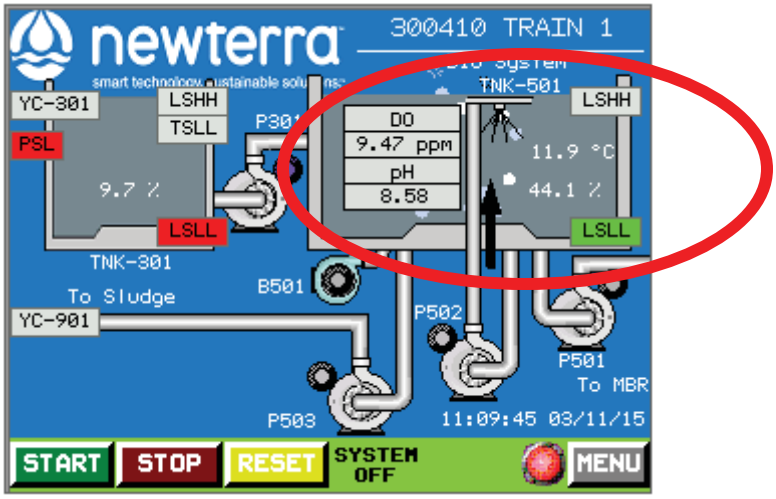

NOTE: Touching a device on the process screen will open an HOA popup for that device.

- The device status indicator color coding is as follows:

Indicator Color	Operational Status
Yellow	Manual operation
Orange	Interlock
Red	Failure
Green	ON / OK
Purple	Interlock / Communication failure
Pink	Unknown
Black	Faulty contactor
Grey	Off

© 2017 by **newterra**, ltd.
All rights reserved. No part of this document may be reproduced or transmitted in any form or by any means, electronic, mechanical, photocopying, recording, or otherwise, without prior written permission of **newterra** ltd.

newterra ltd.
1291 California Avenue, Brockville, ON K6V 5W3
(800) 420-4056 / www.newterra.com

5.1.5 HMI Alarm Screen

- When the **ALARMS** button is flashing red, it indicates an alarm is present in the system. Press the **ALARMS** button to be routed to the Active Alarms Screen.
- To clear alarms, first press the yellow **RESET** button then press the flashing **ALARMS** button to verify that the condition causing the alarm has been cleared.

All alarms are visually indicated on a beacon stack on the roof of the exterior of the container and an alarm light on the system control panel:

- Green – System OK
- Red Solid – Warning Alarm
- Red Flashing – Critical Alarm
- No Light – Loss of Power

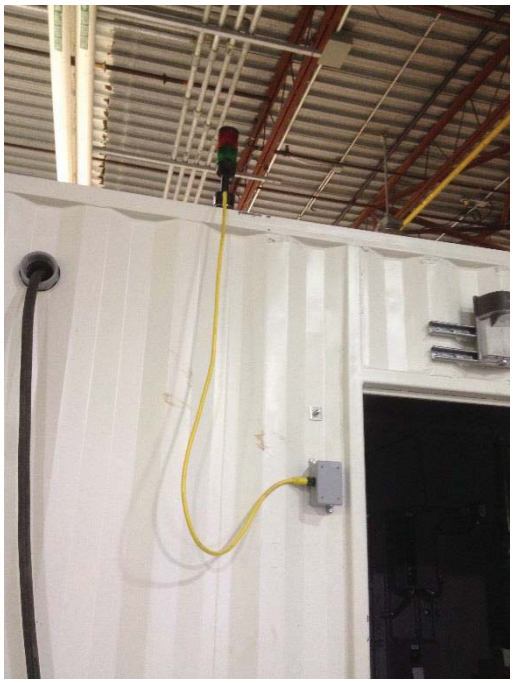

© 2017 by **newterra**, ltd.
All rights reserved. No part of this document may be reproduced or transmitted in any form or by any means, electronic, mechanical, photocopying, recording, or otherwise, without prior written permission of **newterra** ltd.

newterra ltd.
1291 California Avenue, Brockville, ON K6V 5W3
(800) 420-4056 / www.newterra.com

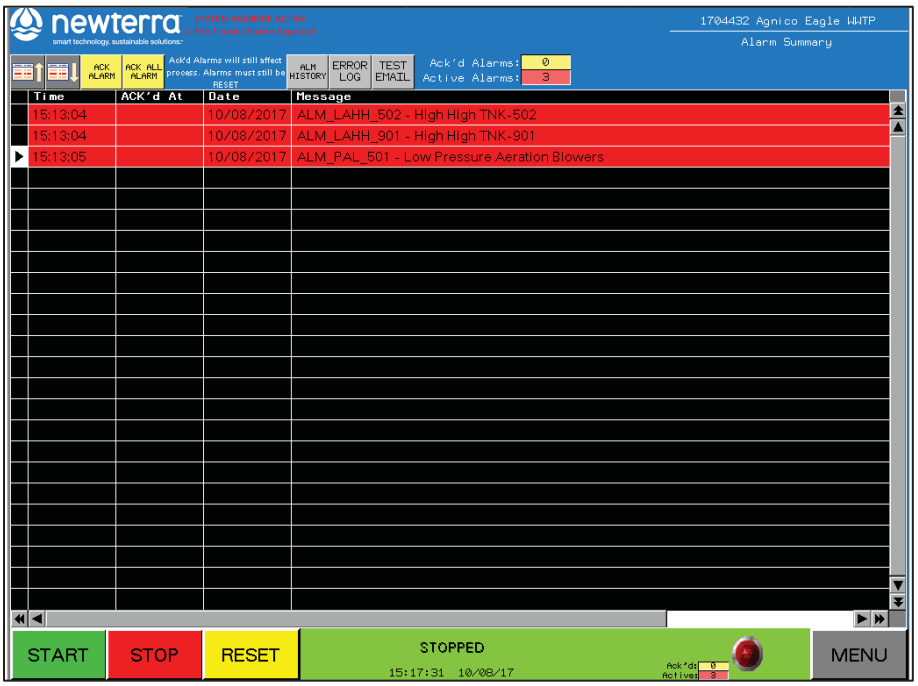



NOTE: All high level alarms (identified as LSHH on P&ID and HMI) indicate a critical situation for imminent tank overflow and could result in pump(s) shutting off to avoid overflow situations.

© 2017 by **newterra**, ltd.
All rights reserved. No part of this document may be reproduced or transmitted in any form or by any means, electronic, mechanical, photocopying, recording, or otherwise, without prior written permission of **newterra** ltd.

newterra ltd.
1291 California Avenue, Brockville, ON K6V 5W3
(800) 420-4056 / www.newterra.com

5.2 WWTP Buildings/Utilities

5.2.1 Power Supply

A power monitor has been installed in the main power distribution panel to ensure proper power and phase rotation is delivered to the system.

Alarms

Alarm	Alarm Description	Actuation Control	Delay	Self Resetting (Y)
ESA-8201	Emergency Stop Alarm	ESA-8201 = Active	Immediate	Y
PWR-FAIL	Power Failure		Immediate	Y
PLC FLT	PLC Fault Detected		Immediate	Y
PWR FLT	Phase Monitor Fault	JA-8201 = Active	Immediate	Y

5.2.2 E-Stop

Emergency stop buttons are located:



- On the Main Control Panel in each of the Screen Buildings
- On the Control Panel installed in each process train
- On the Main Control Panel in the Sludge Building
- Main Control Panel in each of the Receiving Stations
- There is an E-Stop PLC alarm if pressed.

5.2.3 Building Temperature Control

The electric heaters respond to the temperature set point set on the individual heater TSL temperature switches. If the building temperature falls below the temperature switch settings, electric heaters will turn on.

5.2.3.1 Logic

TAG	Description	Control Logic	Output Type
H-7911	Building Heater	Always on internally controlled	Direct (not PLC controled)
H-7912	Building Heater	Always on internally controlled	Direct (not PLC controled)
H-7941	Building Heater	Always on internally controlled	Direct (not PLC controled)
H-7961	Building Heater	Always on internally controlled	Direct (not PLC controled)
H-7962	Building Heater	Always on internally controlled	Direct (not PLC controled)
H-7963	Building Heater	Always on internally controlled	Direct (not PLC controled)

© 2017 by **newterra**, ltd.
All rights reserved. No part of this document may be reproduced or transmitted in any form or by any means, electronic, mechanical, photocopying, recording, or otherwise, without prior written permission of **newterra** ltd.

newterra ltd.
1291 California Avenue, Brockville, ON K6V 5W3
(800) 420-4056 / www.newterra.com

5.2.3.2 Alarms

Alarm	Alarm Description	Actuation Control	Delay	Self Resetting (Y)
TALL-7911	Temperature Alarm Low Low	TSLL-7911 = Active	5s	Y
TALL-7941	Temperature Alarm Low Low	TSLL-7941 = Active	5s	Y
TALL-7961	Low Low Temp Aalrm	LSLL-7961 = Active		

5.2.4 Ventilation

A single fan (F-7963) located in the MBR Process container acts to exhaust the container during the warmer months. Temperature is monitored by the temperature sensor and a high setpoint turns the exhaust fan on. There are also exhaust blowers to de-rate classified areas.

5.2.4.1 Logic

Tag / Mode	Description	Control Logic	Output Type	HOA Control
B-7911	Ventilation Blower	The continuous ventilation blower will always be ON. This blower is used as means to de-rate the screen building to a Class 1 Division 2 area. Air exchanges must be a minimum of 12 per hour,	Direct (not PLC controled)	
B-7941	Aeration Exhaust Blower	On when B-501/502 is on OR B-601/602 is on	Discrete	Auto
F-7963	Building Fan	Always on controlled by Wall Mount Termostat	Direct (not PLC controled)	

5.2.4.2 Alarms

Alarm	Alarm Description	Actuation Control	Delay	Self Resetting (Y)	Notes
PAL-7911	Pressure Alarm Low	PSL-7911 = InActive	5s	Y	Alarm indicates possible continuous ventilation failure, indicating risk that the room may become Class 1 Division 1 rated.

© 2017 by **newterra**, ltd.
All rights reserved. No part of this document may be reproduced or transmitted in any form or by any means, electronic, mechanical, photocopying, recording, or otherwise, without prior written permission of **newterra** ltd.

newterra ltd.
1291 California Avenue, Brockville, ON K6V 5W3
(800) 420-4056 / www.newterra.com

5.3 Process Narrative

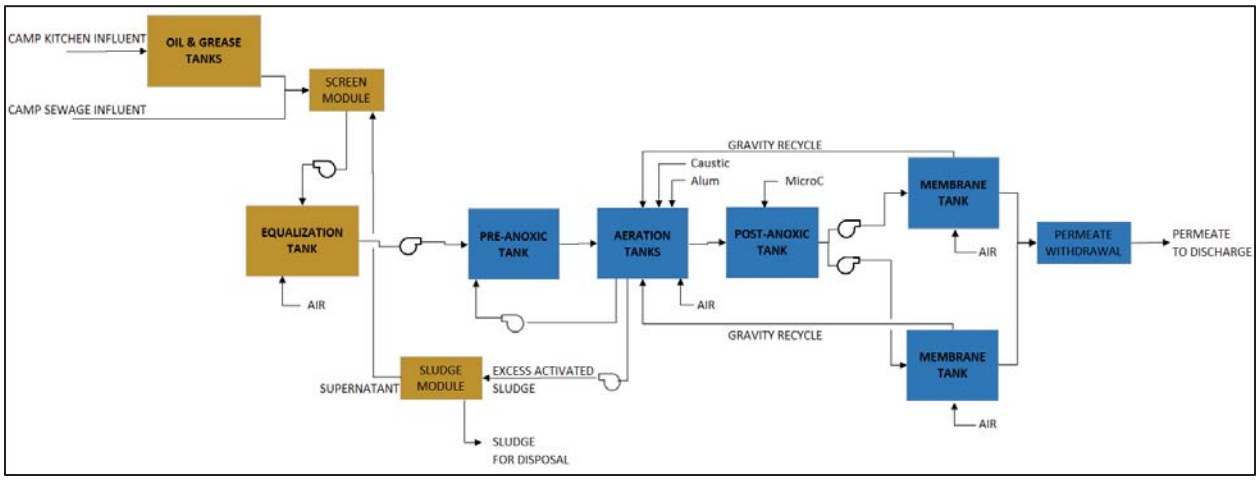

The wastewater treatment plant receives two streams of wastewater. The first source is domestic wastewater, which is fed directly to the fine to remove any fibers or debris that might damage the membranes. The second source is kitchen wastewater which is pre-treated in the oil and grease tanks to remove oil and grease prior to being fed into the fine screens. The combined screened wastewater is pumped to the equalization tank (TNK-301). The equalization tank buffers variability in the influent flow rate and concentrations of influent constituents, maintaining a consistent flow rate and wastewater strength through the MBR system. Wastewater is then pumped from the equalization tank to the pre-anoxic tank (TNK-401) for denitrification.

In the pre-anoxic tank screen wastewater containing organics is combined with recycled mixed liquor from the aeration tank containing nitrates. Bacteria use some of the organics to drive the denitrification process, converting nitrate into nitrogen gas. This process occurs in an anoxic environment where there is minimal oxygen. As such a pump and eductors are used to mix the tank to prevent addition of oxygen. The denitrification process is used to meet the effluent nitrate limit, reduce oxygen requirements and to recover alkalinity, thus reducing chemical consumption.

Mixed liquor from the anoxic tank flows by gravity to the first aerobic tank (TNK-501) followed by the second aeration tank (TNK-502) for aerobic biological degradation of the influent constituents (organics and ammonia). In the aerobic tanks the nitrification process converts ammonia to nitrate in order to meet the effluent ammonia limit. This process consumes alkalinity, so a caustic dosing pump is used to control the pH. Additionally, liquid alum is dosed into the anoxic zone to precipitate phosphorus in order to meet the effluent phosphorus limit. Mixed liquor flows by gravity from the second aeration tank to the post-anoxic tank (TNK-551) for final denitrification polishing. In the post-anoxic tank there are minimal dissolved influent organics to drive the denitrification process. As such, an external carbon source in the form of Micro C is dosed to supplement the organics and drive the denitrification process.

© 2017 by **newterra**, ltd.
All rights reserved. No part of this document may be reproduced or transmitted in any form or by any means, electronic, mechanical, photocopying, recording, or otherwise, without prior written permission of **newterra** ltd.

newterra ltd.
1291 California Avenue, Brockville, ON K6V 5W3
(800) 420-4056 / www.newterra.com

Mixed liquor is pumped from the post-anoxic tank to the membrane tanks (TNK-601 and TNK-602). The membrane tanks serve as additional volume for aerobic biological treatment to remove any excess MicroC (which would other cause BOD in the effluent) and house the membrane filters used for solid-liquid separation. Treated effluent is drawn through the membranes by vacuum pumps.

Since the solid-liquid separation process results in an accumulation of solids in the membrane tank, the mixed liquor (containing both solids and filtrate) is continuously recycled to the first aeration tank (TNK-501). This prevents excessive solids build-up in the membrane tank, and maintains sufficient biomass in the anoxic and aeration tanks. The solids that accumulate in the system consist of biomass that have grown from the influent organics and ammonia, as well as non-biodegradable solids from the influent wastewater. In order to maintain an optimal concentration of mixed liquor suspended solids (MLSS) (typically 10 g/L), a portion of the mixed liquor is periodically wasted by pumping from the Aeration Tank (TNK-501) to the sludge holding tank (TNK-901). Wasted sludge in the sludge holding tank is thickened by decanting supernatant back to the screen tank. Thickened sludge accumulates in the sludge holding tanks until it is eventually pumped out for disposal.

© 2017 by **newterra**, ltd.
All rights reserved. No part of this document may be reproduced or transmitted in any form or by any means, electronic, mechanical, photocopying, recording, or otherwise, without prior written permission of **newterra** ltd.

newterra ltd.
1291 California Avenue, Brockville, ON K6V 5W3
(800) 420-4056 / www.newterra.com

5.4 Kitchen Inlet Module (TNK-101/2/3) Module

A schematic of the Kitchen Inlet Module is located on the INLET HMI screen and shown below.

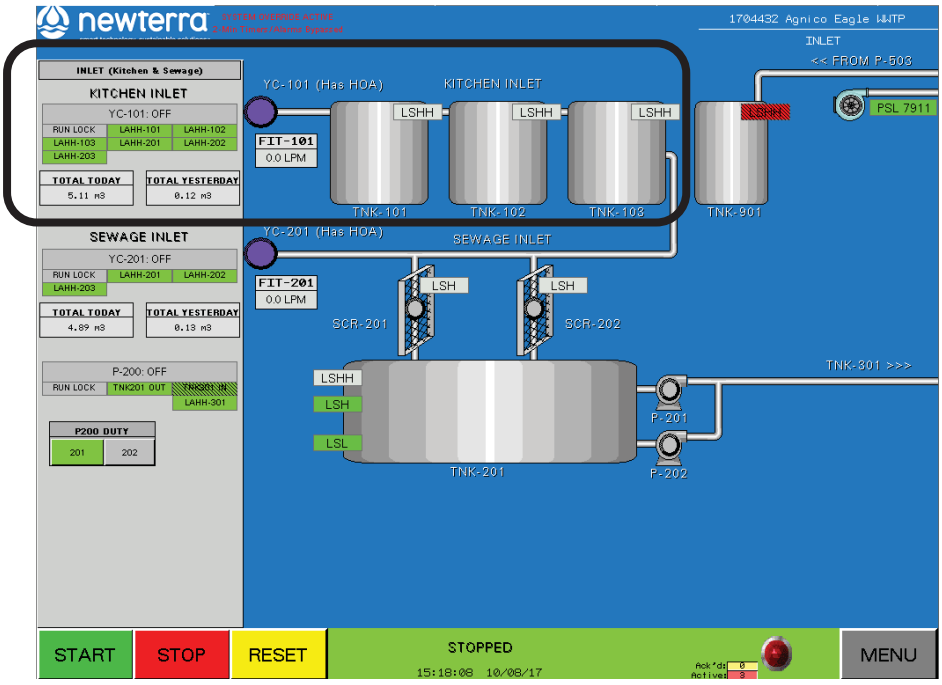

5.4.1 Function

The Waste Water Treatment Plant accepts waste water from the local kitchen which contains kitchen oils and greases. These need to be removed prior to being fed into the fine screens. This is done by using TNK-101/2/3 as grease traps. The kitchen waste water enters TNK-101, the solid food particles sink to the bottom, while lighter grease and oil floats to the top. The relatively grease-free water is then fed into TNK-102 where the process is repeated to further separate the oils and greases from the waste water. The same applies to TNK-103. The waste water is then fed to the fine screens.

5.4.2 Inputs

TAG	Description	Input Type	HMI Display Units	Device Range and Units	Device Span/PLC Scale	Datalog (Y)	Trending (Y)
FIT-101	Flow Indicating Transmitter	Analog	GPM	0-760lpm	0-760lpm	Y	Y
FQI-101	Flow Totalizer	Discrete N.O.	Pulse/Gal	1 liter/ Pulse			
LSHH-101	Level Switch High High	Discrete N.C.					
LSHH-102	Level Switch High High	Discrete N.C.					
LSHH-103	Level Switch High High	Discrete N.C.					

© 2017 by **newterra**, ltd.
All rights reserved. No part of this document may be reproduced or transmitted in any form or by any means, electronic, mechanical, photocopying, recording, or otherwise, without prior written permission of **newterra** ltd.

newterra ltd.
1291 California Avenue, Brockville, ON K6V 5W3
(800) 420-4056 / www.newterra.com

5.4.3 Setpoints

Tag	Description	Factory Setpoint	Setpoint Range and Units	Setpoint Change Control	Alarm setpoint (Y/N)
FTAH-101-SP	Flow Transmitter Alarm High Setpoint	75	0-200 GPM	Open	Y

5.4.4 Logic

TAG	Description	Control Logic	Alarm Interactions	HOA Control
YC-101	Ready Contact	On when LSHH-101 / 102 / 103 and LSHH-201 / 202 and LSHH-203 are not ON	All LSHH's in the inlet area	HOA

5.4.5 Alarms

Alarm	Alarm Description	Actuation Control	Delay	Self Resetting (Y)
FTAH-101	Flow Transmitter Alarm High	FIT-101 > FTAH-101-SP	60s	
LAHH-101	Level Alarm High High	LSHH-101 = Active	5s	Y
LAHH-102	Level Alarm High High	LSHH-102 = Active	5s	Y
LAHH-103	Level Alarm High High	LSHH-103 = Active	5s	Y

© 2017 by **newterra**, ltd.
All rights reserved. No part of this document may be reproduced or transmitted in any form or by any means, electronic, mechanical, photocopying, recording, or otherwise, without prior written permission of **newterra** ltd.

newterra ltd.
1291 California Avenue, Brockville, ON K6V 5W3
(800) 420-4056 / www.newterra.com

5.5 Fine Screens (SCR-201/202) Module

A schematic of the Fine Screens are located on the INLET HMI screen and shown below.

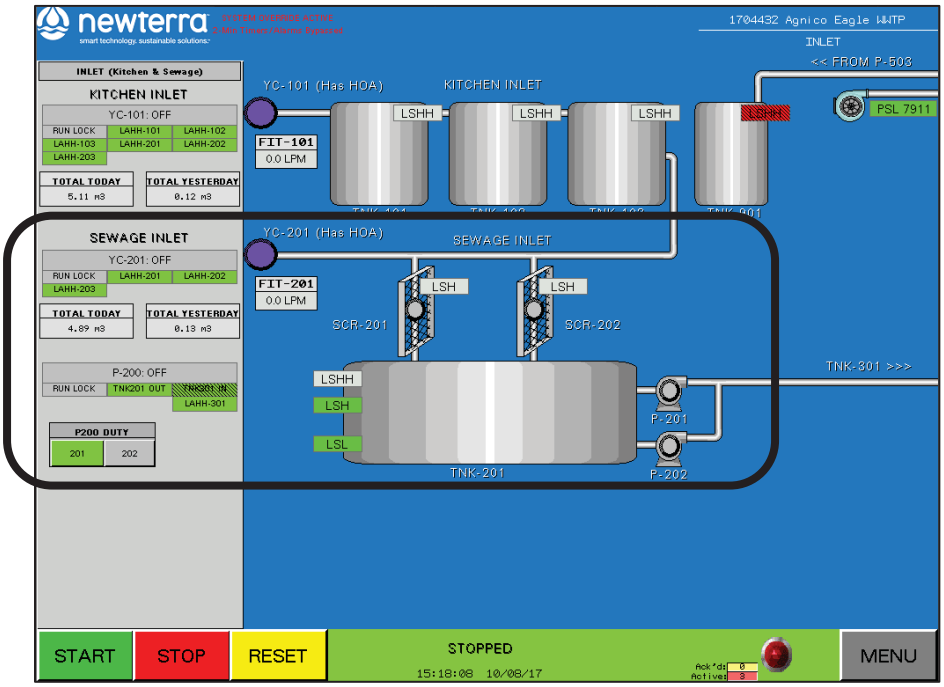

5.5.1 Function

Camp domestic and kitchen wastewater is into the fine screens (SCR-201/202). The screening process is provided to remove hair, and fibrous materials from the supplied wastewater that might damage the membranes. The screening are collected in burlap bags that need to be removed daily. The waste water is then pumped to the EQ Tank.

5.5.2 Inputs

TAG	Description	Input Type	HMI Display Units	Device Range and Units	Device Span/PLC Scale	Datalog (Y)	Trending (Y)
FIT-201	Flow Indicating Transmitter	Analog	GPM	0-760lpm	0-760lpm	Y	Y
FQI-201	Flow Totalizer	Discrete N.O.	Pulse/Gal	1 liter/ Pulse			
LSHH-201	Level Switch High High	Discrete N.C.					
LSHH-202	Level Switch High High	Discrete N.C.					
LSHH-203	Level Switch High High	Discrete N.C.					
LSH-203	Level Switch High	Discrete N.C.					
LSL-203	Level Switch Low Low	Discrete N.O.					

© 2017 by **newterra**, ltd.
All rights reserved. No part of this document may be reproduced or transmitted in any form or by any means, electronic, mechanical, photocopying, recording, or otherwise, without prior written permission of **newterra** ltd.

newterra ltd.
1291 California Avenue, Brockville, ON K6V 5W3
(800) 420-4056 / www.newterra.com

5.5.3 Setpoints

TAG	Description	Factory Setpoint	Setpoint Range and Units	Setpoint Change Control	Alarm setpoint (Y/N)
FTAH-201-SP	Flow Transmitter Alarm High Setpoint	75	0-200 GPM	Open	Y

5.5.4 Logic

TAG	Description	Control Logic	Alarm Interactions	Output Type	Hour Meter	HOA Control
YC-201	Ready Contact	On when LSH-201 / 202 and LSHH-203 are not ON				HOA
SCR-201	Inlet Screen	The inlet screen will be ON when influent flow is detected via flow transmitter FIT-201. The screen will run for 1 minute after influent flow has stopped via flow transmitter FIT-201. If the high high level switch LSHH-201 on the screen is ON then the inlet screen SCR-201 will be ON.		Discrete	Y	HOA
SCR-202	Inlet Screen	Same as SCR-201		Discrete	Y	HOA
P-201	Screen Transfer Pump	The pump will be ON when the LSH-203 turn on as long as LT-301 < LTH-301-sp setpoint the pump will turn off when the LSL-201 turns off	LAHH-301	Discrete	Y	HOA
P-202	Screen Transfer Pump	This pump runs duty standby with P-201 with a 5:1 rato	LAHH-301	Discrete	Y	HOA

5.5.5 Alarms

Alarm	Alarm Description	Actuation Control	Delay	Self Resetting (Y)
FTAH-201	Flow Transmitter Alarm High	FIT-201 > FTAL-201-SP	60s	
LAHH-201	Level Alarm High High	LSHH-201 = Active	5s	Y
LAHH-202	Level Alarm High High	LSHH-202 = Active	5s	Y
LAHH-203	Level Alarm High High	LSHH-203 = Active	5s	Y

© 2017 by **newterra**, ltd.
All rights reserved. No part of this document may be reproduced or transmitted in any form or by any means, electronic, mechanical, photocopying, recording, or otherwise, without prior written permission of **newterra** ltd.

newterra ltd.
1291 California Avenue, Brockville, ON K6V 5W3
(800) 420-4056 / www.newterra.com

5.6 Equalization Tank (TNK-301) Module

A schematic of the Equalization Tank (TNK-301) is located on the EQ & PRE-ANOXIC HMI screen and shown below.

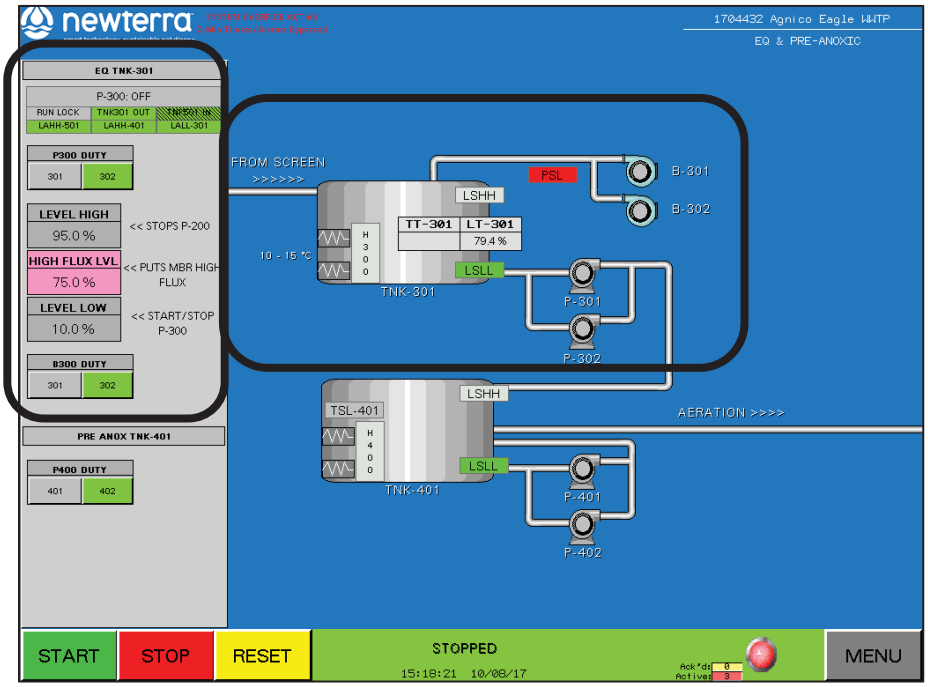

5.6.1 Function

The EQ Tank (TNK-301) buffers variability in the influent flow rate to maintain a consistent flow rate through the membranes and to reduce concentration fluctuations of influent constituents (i.e. BOD, TSS etc.) through the MBR treatment system. Wastewater entering the newterra MBR will first have undergone pre-treatment by fine screens and grease traps (kitchen waste). The waste water is then pumped to the Pre-Anox Tank.

5.6.2 Inputs

Tag	Description	Input Type	HMI Display Units	Device Range and Units	Device Span/PLC Scale	Datalog (Y)	Trending (Y)	Notes
LSHH-301	Level Switch High High	Discrete N.C.						
LT-301	Level Transmitter	Analog	%	0-10 ftWC	0-10 ftWC	Y	Y	
TT-301	Temperature Transmitter	Analog	°C	0-100c	0-100c	n	n	Added to System
LSLL-301	Level Switch Low Low	Discrete N.O.						Must be above all immersion heaters in Tank
PSL-301	Pressure Switch Low	Discrete N.C.		9-85"WC				

© 2017 by **newterra**, ltd.
All rights reserved. No part of this document may be reproduced or transmitted in any form or by any means, electronic, mechanical, photocopying, recording, or otherwise, without prior written permission of **newterra** ltd.

newterra ltd.
1291 California Avenue, Brockville, ON K6V 5W3
(800) 420-4056 / www.newterra.com

5.6.3 Setpoints

Tag	Description	Factory Setpoint	Setpoint Range and Units	Setpoint Change Control	Alarm setpoint (Y/N)	Notes
LTL-301-SP	Level Transmitter Low Setpoint	10%	0-100%	Open		
LTHFLUX-301-SP	High Flux Level Setting	50%	0-100%			Puts the MBR Permeate pumps into High Flux Mode
LTH-301-SP	Level Transmitter High Setpoint	80%	50-100%	Open		

5.6.4 Logic

Tag	Description	Control Logic	Alarm Interactions	Output Type	Hour Meter	HOA Control
H-301	Tank Heater	On when TT-301 < 10C Off when TT-301 >15C	LALL-301	Discrete		
H-302	Tank Heater	Same as H-301	LALL-301	Discrete		
P-301	EQ Transfer Pump	The EQ pump will be ON when the EQ level transmitter LT-301 > LTL-301-SP and the aeration tank level transmitter LT-501 < LTH-501-SP The EQ pump will be OFF when the EQ level transmitter LT-301 < LTL-301-SP OR LSLL-301 = InActive OR the aeration tank level transmitter LT-501 > LTH-501-SP OR LSHH-401 is active Runs Duty with P-302 as Standby	Turns OFF LAHH-501 LAHH-401 LALL-301	Discrete	Y	HOA
P-302	EQ Transfer Pump	This pump runs duty standby with P-201 with a 5:1 rato		Discrete	Y	HOA
B-301	EQ Blower	The EQ blower will be ON when the System is in Run & LSLL-301 is active.		Discrete	Y	HOA
B-302	EQ Blower	Runs Duty standby with B-301 switching every 120 hours		Discrete	Y	HOA

© 2017 by **newterra**, ltd.
All rights reserved. No part of this document may be reproduced or transmitted in any form or by any means, electronic, mechanical, photocopying, recording, or otherwise, without prior written permission of **newterra** ltd.

newterra ltd.
1291 California Avenue, Brockville, ON K6V 5W3
(800) 420-4056 / www.newterra.com

5.6.5 Alarms

Alarm	Alarm Description	Actuation Control	Delay	Self Resetting (Y)
LAHH-301	Level Alarm High High	LSHH-301 = Active	5s	Y
LALL-301	Level Alarm Low Low	LSLL-301 = Off	5s	Y

© 2017 by **newterra**, ltd.
All rights reserved. No part of this document may be reproduced or transmitted in any form or by any means, electronic, mechanical, photocopying, recording, or otherwise, without prior written permission of **newterra** ltd.

newterra ltd.
1291 California Avenue, Brockville, ON K6V 5W3
(800) 420-4056 / www.newterra.com

5.7 Pre-Anox Tank (TNK-401) Module

A schematic of the Pre-Anox Tank (TNK-401) is located on the EQ & PRE-ANOXIC HMI screen and shown below.

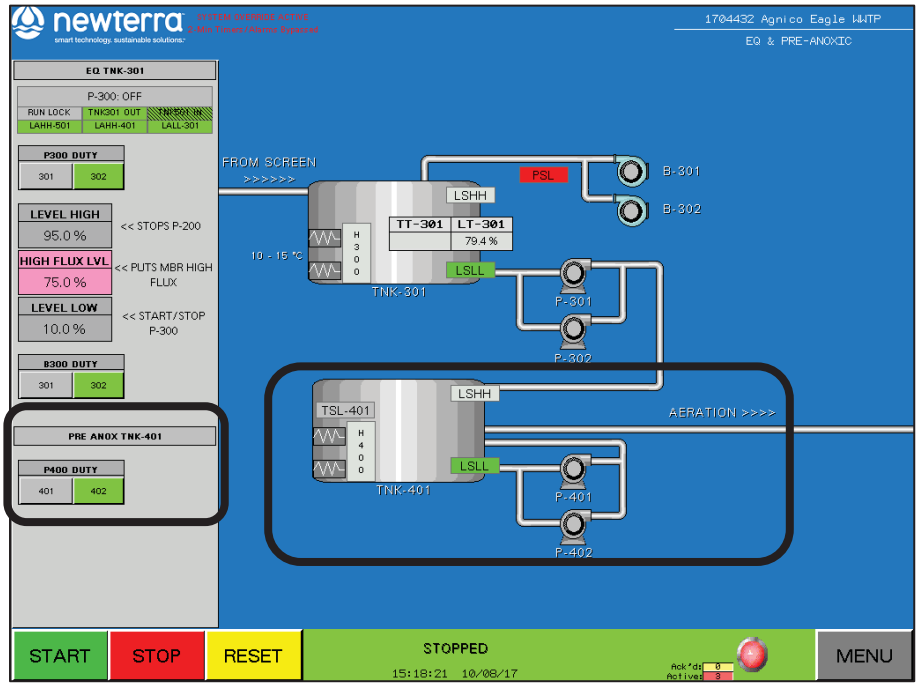

5.7.1 Function

In the pre-anoxic tank (TNK-401), the wastewater containing organics is combined with recycled mixed liquor from the aeration tank containing nitrates. Bacteria use some of the organics to drive the denitrification process, converting nitrate into nitrogen gas. This process occurs in an anoxic environment where there is minimal oxygen. As such, a pump and eductors are used to mix the tank to prevent addition of oxygen. The denitrification process is used to meet the effluent nitrate limit, reduce oxygen requirements and to recover alkalinity, thus reducing chemical consumption.

5.7.2 Inputs

Tag	Description	Input Type
LSHH-401	Level Switch High High	Discrete N.C.
TSL-401	Temperature Switch Low	Discrete N.C.
LSLL-401	Level Switch Low Low	Discrete N.O.

© 2017 by **newterra**, ltd.
All rights reserved. No part of this document may be reproduced or transmitted in any form or by any means, electronic, mechanical, photocopying, recording, or otherwise, without prior written permission of **newterra** ltd.

newterra ltd.
1291 California Avenue, Brockville, ON K6V 5W3
(800) 420-4056 / www.newterra.com

5.7.3 Setpoints

None

5.7.4 Logic

Tag	Description	Control Logic	Alarm Interactions	Output Type	Hour Meter	HOA Control
P-401	Pre-Anox Mixing Pump	The pump will be ON when the System is in Run & LSLL-401 is active.	LALL-401 PUMP IS OFF	Discrete	Y	HOA
P-402	Pre-Anox Mixing Pump	Runs Duty standby with P-401 switching every 120 hours		Discrete	Y	HOA
H-401	Tank Heater	On when TSL-401 is OFF	LALL-401	Discrete		
H-402	Tank Heater	On when TSL-401 is OFF	LALL-401	Discrete		

5.7.5 Alarms

Alarm	Alarm Description	Actuation Control	Delay	Self Resetting (Y)
LAHH-401	Level Alarm High High	LSHH-401 = Active	5s	Y
LALL-401	Level Alarm Low Low	LSLL-401 = OFF	5s	Y

© 2017 by **newterra**, ltd.
All rights reserved. No part of this document may be reproduced or transmitted in any form or by any means, electronic, mechanical, photocopying, recording, or otherwise, without prior written permission of **newterra** ltd.

newterra ltd.
1291 California Avenue, Brockville, ON K6V 5W3
(800) 420-4056 / www.newterra.com

5.8 Aeration Tanks (TNK-501/502) - Biological Treatment Module

The schematic of the Aeration Tanks (TNK-501/502) is located on the AERATION HMI screen and shown below.

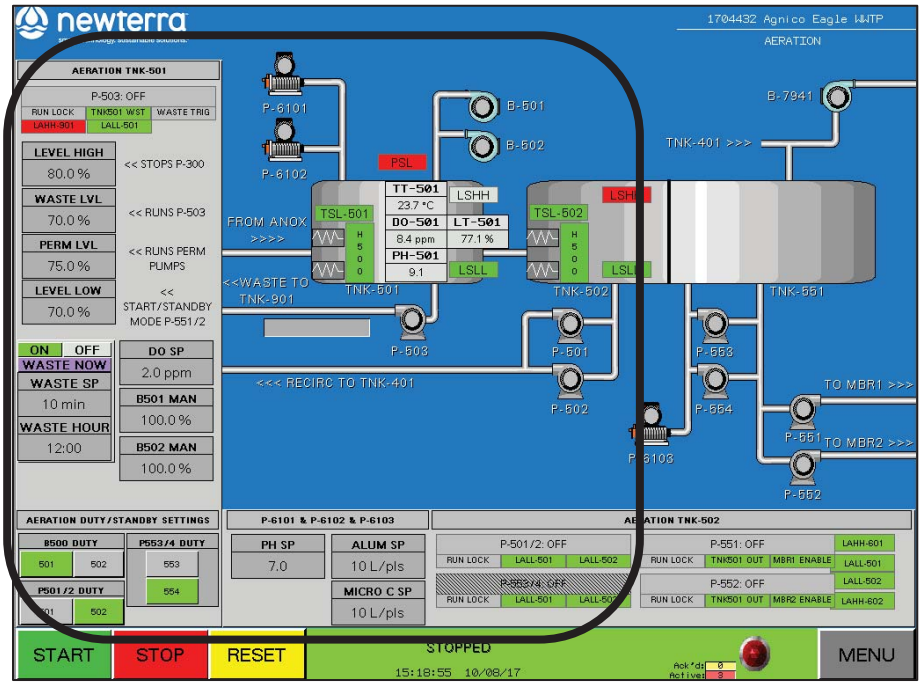

5.8.1 Function

Mixed liquor from the anoxic tank (TNK-401) flows by gravity to the first aerobic tank (TNK-501) followed by the second aeration tank (TNK-502) for aerobic biological degradation of the influent constituents (organics and ammonia). In the aerobic tanks (TNK-501/502), the nitrification process converts ammonia to nitrate in order to meet the effluent ammonia limit. This process consumes alkalinity, so caustic is dosed into TNK-501 (by pump P-6101) to control the pH. Additionally, liquid alum is dosed (by pump P-6102) into the anoxic zone to precipitate phosphorus in order to meet the effluent phosphorus limit.

pH measured by a pH probe (PH-501) in TNK-501.

Blowers (B-501/502) supply air to the submerged fine-bubble diffusers to ensure sufficient dissolved oxygen (DO) is available for biological oxidation and to keep solids in the water suspended. Dissolved Oxygen (DO) is measured by a DO Probe (DO-501) in TNK-501.

In order to maintain an optimal concentration of mixed liquor suspended solids (MLSS) (typically 10 g/L), a portion of the mixed liquor is periodically wasted by pumping from the Aeration Tank (TNK-501) to the sludge holding tank (TNK-901) by P-503.

© 2017 by **newterra**, ltd.
All rights reserved. No part of this document may be reproduced or transmitted in any form or by any means, electronic, mechanical, photocopying, recording, or otherwise, without prior written permission of **newterra** ltd.

newterra ltd.
1291 California Avenue, Brockville, ON K6V 5W3
(800) 420-4056 / www.newterra.com

5.8.2 Inputs

Tag	Description	Input Type	HMI Display Units	Device Range and Units	Datalog (Y)	Trending (Y)
LSHH-501	Level Switch High High	Discrete N.C.				
LSLL-501	Level Switch Low Low	Discrete N.O.				
PH-501	pH Transmitter	Analog		0-14 pH	Y	Y
DO-501	Dissolved Oxygen Transmitter	Modbus	ppm	0-10	Y	Y
TT-501	Temperature Transmitter	Modbus	°C	0-100		
LT-501	Level Transmitter	Analog	%	0-10 ft	Y	Y
PSL-501	Pressure Switch Low	Discrete N.C.		9-85"WC		
LSHH-502	Level Switch High High	Discrete N.C.				
LSLL-502	Level Switch Low Low	Discrete N.O.				
TSL-502	Temperature Switch Low	Discrete N.C.				

5.8.3 Setpoints

Tag	Description	Factory Setpoint	Setpoint Range and Units	Setpoint Change Control	Alarm setpoint (Y/N)
LTL-501-SP	Level Transmitter Low Setpoint	70%	0-100%	Open	
LTH-501-SP	Level Transmitter High Setpoint	80%	0-100%	Open	
LT501-SLUDGE-SP	Waste Level for P-503	75%	0-100%	Open	
LT501-PERM-SP	Level Control for Permeate Pumps	75%	0-100%	Open	
P503 WASTE HOUR	When P-503 will waste	12pm	0-23		
P503 WASTE SP	Time that P-503 wastes for	10min	0-99		
PH-501-SP	pH Normal Setpoint	7 pH	6-8pH	Open	
PHAH-501-SP	pH Alarm High Setpoint	8 pH	7 - 14 pH	Open	Y

© 2017 by **newterra**, ltd.
All rights reserved. No part of this document may be reproduced or transmitted in any form or by any means, electronic, mechanical, photocopying, recording, or otherwise, without prior written permission of **newterra** ltd.

newterra ltd.
1291 California Avenue, Brockville, ON K6V 5W3
(800) 420-4056 / www.newterra.com

Tag	Description	Factory Setpoint	Setpoint Range and Units	Setpoint Change Control	Alarm setpoint (Y/N)
PHAL-501-SP	pH Alarm Low Setpoint	6 pH	0-7 pH	Open	Y
DO-501-SP	Dissolved Oxygen Normal Setpoint	2 ppm	0-6 ppm	Open	
B500 I SP	Integral Gain setting DO PID Loop	10s	0-99		
B500 P SP	Proportional Gain setting DO PID Loop	100%	0-99		
B501 MAN SP	Manual Speed B-501	50%	0-100		
B502 MAN SP	Manual Speed B-502	50%	0-100		
DOAL-501-SP	Dissolved Oxygen Alarm Low Setpoint	0.5 ppm	0-6 ppm	Open	Y
ALUM DOSE	Alum Dose setting (xGal per Pulse)	10 Gallons	0-99 Gallons	Open	
MICROC DOSE	Micro C Dose setting (xGal per Pulse)	10 Gallons	0-99 Gallons	Open	
TALL-501-SP	Temperature Alarm Low Low	10 deg C	5 - 25 deg C	Password	Y
TTL-501-SP	Temperature Transmitter Low Setpoint	15 deg C	5-25 deg C	Open	
PAL-501-SP	Pressure Alarm Low Setpoint	28"WC (1PSIG)		On Device	Y
TALL-502-SP	Temperature Alarm Low Low	10 deg C	5 - 25 deg C	Password	Y

5.8.4 Logic

Tag	Description	Control Logic	Alarm Interactions	Output Type	Hour Meter	HOA Control
P-6102	Alum Dosing Pump	Alum Dosing Pump P-6102 be ON when FIT-701 has reached a user adjustable volume of permeate via FT-701-DOSE setpoint. P-6102 will be ON for one pulse.		Discrete		HOA
P-6101	Caustic Dosing Pump	Caustic Dosing Pump P-6101 will be ON when PH-501 < PH-501-SP. The pump will be ON for 30s and OFF for 30s and will operate in pause mode		Discrete		HOA
H-501	Tank Heater	On when TSL-501 is OFF	LALL-501	Discrete		

© 2017 by **newterra**, ltd.
All rights reserved. No part of this document may be reproduced or transmitted in any form or by any means, electronic, mechanical, photocopying, recording, or otherwise, without prior written permission of **newterra** ltd.

newterra ltd.
1291 California Avenue, Brockville, ON K6V 5W3
(800) 420-4056 / www.newterra.com

Tag	Description	Control Logic	Alarm Interactions	Output Type	Hour Meter	HOA Control
H-502	Tank Heater	On when TSL-501 is OFF	LALL-501	Discrete		
P-503	Waste Activated Sludge Pump	The waste activated sludge pump will be ON at time of day setting SLUDGE-WASTE-TOD IF level switch LT501-SLUDGE-SP	LAHH-901: Pump will be OFF	Discrete		HOA
H-503	Tank Heater	On when TSL-502 is OFF	LALL-502	Discrete		
H-504	Tank Heater	On when TSL-502 is OFF	LALL-502	Discrete		
P-501	Aeration Recirc Pump	The pump will run as long as LSLL-501 is Active	LALL-502: Pump will be OFF	Discrete	Y	HOA
P-502	Aeration Recirc Pump	Runs Duty standby with p-501 switching every 120 hours		Discrete	Y	HOA
B-501	Aeration Tank Aeration Blower	ON - AlwaysRuns via PID loop to maintain DO-501-SPRuns Duty/Standby 120 hours with B-502.		Direct	Y	HOA
B-502	Aeration Tank Aeration Blower	Runs via same logic as B-501. Runs Duty/Standby every 120 hours with B-501.		Direct	Y	HOA

© 2017 by **newterra**, ltd.
All rights reserved. No part of this document may be reproduced or transmitted in any form or by any means, electronic, mechanical, photocopying, recording, or otherwise, without prior written permission of **newterra** ltd.

newterra ltd.
1291 California Avenue, Brockville, ON K6V 5W3
(800) 420-4056 / www.newterra.com

5.8.5 Alarms

Alarm	Alarm Description	Actuation Control	Delay	Self Resetting (Y)
LAHH-501	Level Alarm High High	LSHH-501 = Active	5s	Y
LAHH-502	Level Alarm High High	LSHH-501 = Active	5s	Y
PHAH-501	pH Alarm High	pH-501 > PHAH-501-SP	60s	
PHAL-501	pH Alarm Low	pH-501 < PHAL-501-SP	60s	
DOAL-501	Dissolved Oxygen Alarm Low	DO-501 < DOAL-501-SP	15m	
DOALL-501	Dissolved Oxygen Alarm Low Low	DO-501 < DOAL-501-SP	4hrs	
TTAL-501	Low Temp TNK-501	TT-501<TTAL-501-SP		
PAL-501	Pressure Alarm Low	PSL-501 = InActive	5s	Y
VFDA-501	VFD Fault			
VFDA-502	VFD Fault			
LALL-501	Low Low Level TNK-501	LSLL-501 = OFF		
LALL-502	Low Low Level TNK-502	LSLL-502 = OFF		

© 2017 by **newterra**, ltd.
All rights reserved. No part of this document may be reproduced or transmitted in any form or by any means, electronic, mechanical, photocopying, recording, or otherwise, without prior written permission of **newterra** ltd.

5.9 Post-Anox Tank (TNK-551) Module

The schematic of the Post-Anox Tank (TNK-551) is located on the AERATION HMI screen and shown below.

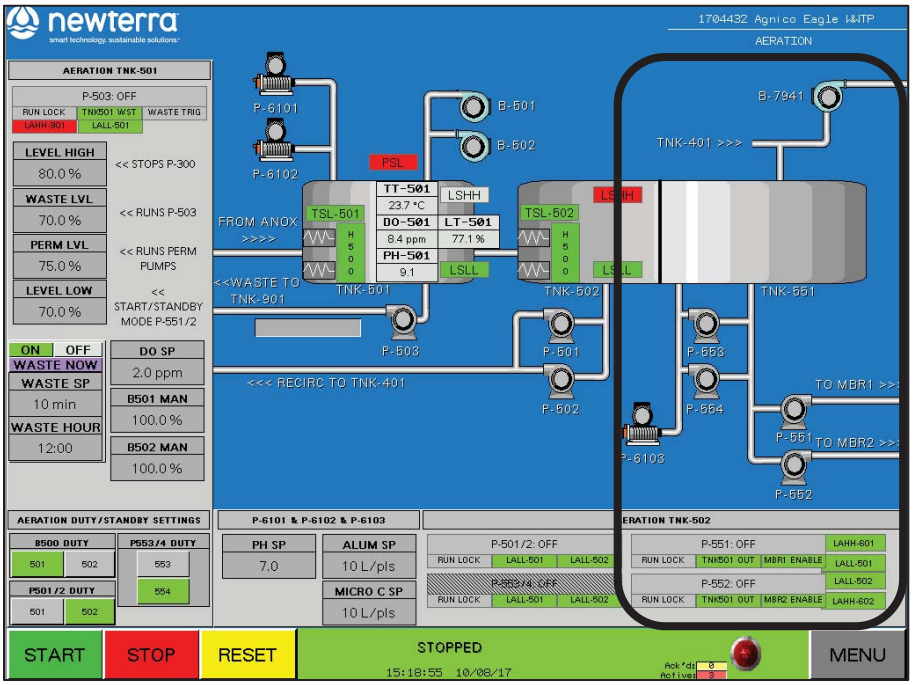

5.9.1 Function

Mixed liquor flows by gravity from the second aeration tank (TNK-502) to the post-anoxic tank (TNK-551) for final denitrification polishing. In the post-anoxic tank, there are minimal dissolved influent organics to drive the denitrification process. As such, an external carbon source in the form of Micro C is dosed (by P-6103) to supplement the organics and drive the denitrification process.

5.9.2 Inputs

None

5.9.3 Setpoints

None

© 2017 by **newterra**, ltd.
All rights reserved. No part of this document may be reproduced or transmitted in any form or by any means, electronic, mechanical, photocopying, recording, or otherwise, without prior written permission of **newterra** ltd.

newterra ltd.
1291 California Avenue, Brockville, ON K6V 5W3
(800) 420-4056 / www.newterra.com

5.9.4 Logic

Tag	Description	Control Logic	Alarm Interactions	Output Type	Hour Meter	HOA Control
P-553	Post Anox Mix Pump	The pump will run as long as LSLL-501 is Active	LALL-501: Pump will be OFF	Discrete	Y	HOA
P-554	Post Anox Mix Pump	Runs Duty standby with p-501 switching every 120 hours		Discrete	Y	HOA
P-6103	Micro C Dosing Pump	Dosing Pump will be ON when FIT-701 or FT-702 has reached a user adjustable volume of permeate via DOSE setpoint.		Discrete		HOA
P-551	Aeration Transfer Pump Feed to MBR-1	The aeration pump will feed MBR tank T-601. The pump will be ON when level transmitter LT-501 > LTL-501-SP and LSLL-501 = Active and LSLL-502 = Active and MBR-1 is Enabled. The aeration pump will be cycle ON/OFF when LT-501 < LTL-501-SP and be OFF if LSLL-501 = InActive OR LSLL-502 = InActive	LAHH-601: Pump will be OFF MBR-1 Disabled	Discrete	Y	HOA
P-552	Aeration Transfer Pump Feed to MBR-2	The aeration pump will feed MBR tank T-602. The pump will be ON when level transmitter LT-501 > LTL-501-SP and LSLL-501 = Active and LSLL-502 = Active and MBR-2 is Enabled. The aeration pump will cycle ON/OFF when LT-501 < LTL-501-SP and be OFF if LSLL-501 = InActive OR LSLL-502 = InActive	LAHH-602: Pump will be OFF MBR-2 Disabled	Discrete	Y	HOA

5.9.5 Alarms

None

© 2017 by **newterra**, ltd.
All rights reserved. No part of this document may be reproduced or transmitted in any form or by any means, electronic, mechanical, photocopying, recording, or otherwise, without prior written permission of **newterra** ltd.

newterra ltd.
1291 California Avenue, Brockville, ON K6V 5W3
(800) 420-4056 / www.newterra.com

5.10 Membrane and Permeate Module

The schematic of the Membrane (TNK-601/602) and Permeate (P-701/702) Module is located on the MBR 1 & MBR 2 HMI screen and shown below.

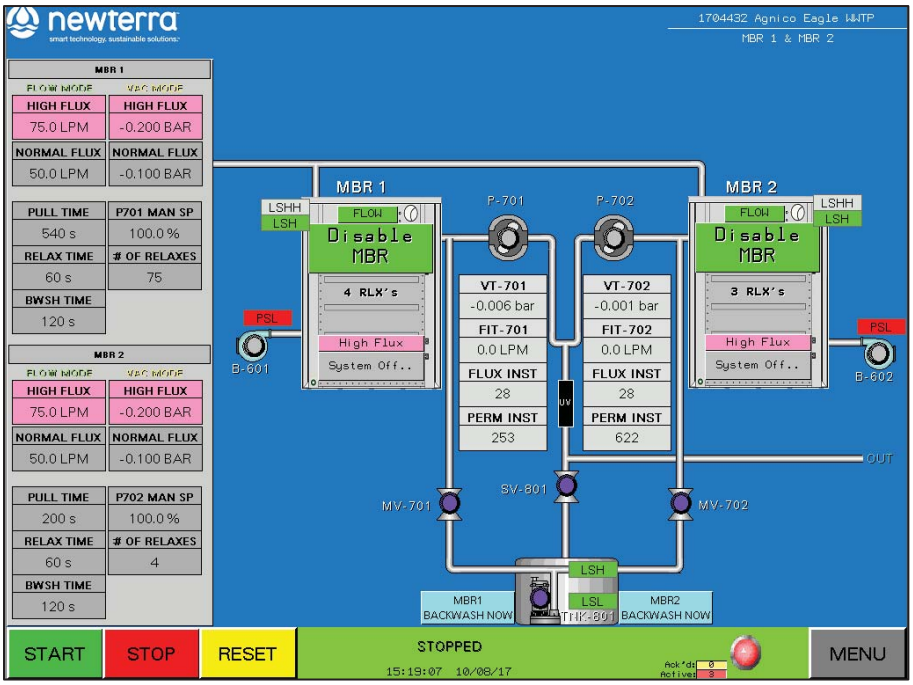

5.10.1 Function

Mixed liquor filtration and supplemental biological oxidation.

Since the solid-liquid separation process results in an accumulation of solids in the membrane tank, the mixed liquor (containing both solids and filtrate) is continuously recycled to the first aeration tank (TNK-501). This prevents excessive solids build-up in the membrane tank, and maintains sufficient biomass in the anoxic and aeration tanks. The solids that accumulate in the system consist of biomass that have grown from the influent organics and ammonia, as well as non-biodegradable solids from the influent wastewater.

Vacuum pumps (P-701 and P-702) draw the water through the membranes under a low vacuum of 0.07 to 0.25 bar.

© 2017 by **newterra**, ltd.
All rights reserved. No part of this document may be reproduced or transmitted in any form or by any means, electronic, mechanical, photocopying, recording, or otherwise, without prior written permission of **newterra** ltd.

newterra ltd.
1291 California Avenue, Brockville, ON K6V 5W3
(800) 420-4056 / www.newterra.com

5.10.2 Inputs

Tag	Description	Input Type	HMI Display Units	Device Range and Units	Datalog (Y)	Trending (Y)
LSHH-601	Level Switch High High	Discrete N.C.				
LSH-601	Level Switch High	Discrete N.O.				
LSHH-602	Level Switch High High	Discrete N.C.				
LSH-602	Level Switch High	Discrete N.O.				
PSL-601	Pressure Switch Low	Discrete N.C.		9-85"WC		
PSL-602	Pressure Switch Low	Discrete N.C.		9-85"WC		
VT-701	Vacuum Transmitter	Analog	Bar	-1.0 - 1.0 Bar	Y	Y
VT-702	Vacuum Transmitter	Analog	Bar	-1.0 - 1.0 Bar	Y	Y
VFD-701	VFD Status	Communcation				
VFD-702	VFD Status	Communcation				
FIT-701	Flow Indicating Transmitter	Analog	GPM	0-300lpm	Y	Y
FQI-701	Flow Totalizer	Discrete N.O.	Pulse/Gal	1liter / Pulse		
FIT-702	Flow Indicating Transmitter	Analog	GPM	0-300lpm	Y	Y
FQI-702	Flow Totalizer	Discrete N.O.	Pulse/Gal	1liter / Pulse		
LSH-801	Level Switch High	Discrete N.C.				
LSL-801	Level Switch Low Low	Discrete N.O.				

5.10.3 Setpoints

Tag	Description	Factory Setpoint	Setpoint Range and Units	Setpoint Change Control	Alarm setpoint (Y/N)	Notes
VT-701-SP	MBR-1 Vac Mode Permeate Setpoint	-0.1 bar	-0.2 - 0 bar	Open		
VT-701-HFSP	MBR-1 Vac Mode Permeate High Flux Setpoint	-0.15 bar	-0.2 - 0 bar	Open		
VTAH-701-SP	MBR-1 Vacuum Transmitter Alarm High	-0.3 bar	-0.3 - 0 bar	Open	Y	
VT-702-SP	MBR-2 Vac Mode Permeate Setpoint	-0.1 bar	-0.2 - 0 bar	Open		
VT-702-HFSP	MBR-2 Vac Mode Permeate High Flux Setpoint	-0.15 bar	-0.2 - 0 bar	Open		

© 2017 by **newterra**, ltd.
All rights reserved. No part of this document may be reproduced or transmitted in any form or by any means, electronic, mechanical, photocopying, recording, or otherwise, without prior written permission of **newterra** ltd.

newterra ltd.
1291 California Avenue, Brockville, ON K6V 5W3
(800) 420-4056 / www.newterra.com

Tag	Description	Factory Setpoint	Setpoint Range and Units	Setpoint Change Control	Alarm setpoint (Y/N)	Notes
VTAH-702-SP	MBR-2 Vacuum Transmitter Alarm High	-0.3 bar	-0.3 - 0 bar	Open	Y	
FT-701-SP	MBR-1 Flow Mode Permeate Setpoint	60 GPM	0-200	Open		
FT-701-HFSP	MBR-1 Flow Mode Permeate High Flux Setpoint	75%	0-200	Open		
FTAH-701-SP	MBR-1 Flow Transmitter Alarm High Setpoint	100	0-200	Open	Y	
FTAL-701-SP	MBR-1 Flow Transmitter Alarm Low Setpoint	10	0-200	Open	Y	
FT-702-SP	MBR-2 Flow Mode Permeate Setpoint	60 GPM	0-200	Open		
FT-702-HFSP	MBR-2 Flow Mode Permeate High Flux Setpoint	75GPM	0-200	Open		
FTAH-702-SP	MBR-2 Flow Transmitter Alarm High Setpoint	100	0-200	Open	Y	
FTAL-702-SP	MBR-2 Flow Transmitter Alarm Low Setpoint	10	0-200	Open	Y	
BKWSH-TIME-SP	Backwash Time Setpoint	120s	0-999 s	Open		
RELAX-SP	Number of Relaxes Before Backwash	6	0-999	Open		
PERM-PULL-TIME	Permeate Pull Time	9m	0-30m	Open		
RELAX-TIME	Membrane Relax Time	60s	0-999 s	Open		
FLUX-SP	High Flux Setpoint	75%	50-100%	Open		Reading based on LT-301
SLUDGE-WASTE-TOD	Time of Day to Start Sludge Wasting	23hr	0-23 hr	Open		
SLUDGE-WASTE-TIME	Duration of Sludge Wasting	60m	0-1000m	Open		

© 2017 by **newterra**, ltd.
All rights reserved. No part of this document may be reproduced or transmitted in any form or by any means, electronic, mechanical, photocopying, recording, or otherwise, without prior written permission of **newterra** ltd.

newterra ltd.
1291 California Avenue, Brockville, ON K6V 5W3
(800) 420-4056 / www.newterra.com

5.10.4 Logic

Tag	Description	Control Logic	Alarm Interactions	Output Type	Hour Meter
B-601	MBR Tank Blower	The membrane tank blower will be ON when the System is in Run. And the MBR 1 is enabled	MBR-1 Disabled	Discrete	Y
B-602	MBR Tank Blower	The membrane tank blower will be ON when the System is in Run. And the MBR 2 is enabled	MBR-2 Disabled	Discrete	Y
P-701	Permeate Transfer Pump	The permeate pump will be ON when MBR-1 is Enabled & level switch LSH-601 = Active & LT-501 > LT501-PERM-SP The Pump will perform a PULL/RELAX Cycle. The pump will be ON for the duration specified by the PERM-PULL-TIME setpoint and then be OFF for the duration of the RELAX-TIME setpoint. This will generate one PULL/RELAX Cycle. The VFD Speed of the pump will operate based on the following: In FLOW MODE: The VFD Speed will operate based on a PID loop to maintain the flowrate setpoint FT-701-SP. IF the vacuum transmitter VT-701 > -0.25 bar then the pump will switch to VAC MODE. IF the level transmitter LT-301 > FLUX-SP, the pump will run via PID loop to maintain a high flow setpoint FT-701-HFSP In VAC MODE: The VFD Speed will operate based on a PID loop to maintain the vacuum setpoint VT-701-SP. IF the level transmitter LT-301 > FLUX-SP, the pump will run via PID loop to maintain a high flow setpoint VT-701-HFSP P-701 will be OFF if P-501 is OFF.	VFDA-701: Pump Will be Off	Communication	Y

© 2017 by **newterra**, ltd.
All rights reserved. No part of this document may be reproduced or transmitted in any form or by any means, electronic, mechanical, photocopying, recording, or otherwise, without prior written permission of **newterra** ltd.

newterra ltd.
1291 California Avenue, Brockville, ON K6V 5W3
(800) 420-4056 / www.newterra.com

Tag	Description	Control Logic	Alarm Interactions	Output Type	Hour Meter
P-702	Permeate Transfer Pump	The permeate pump will be ON when MBR-2 is Enabled & level switch LSH-602 = Active & & LT-501 > LT501-PERM-SP The Pump will perform a PULL/RELAX Cycle. The pump will be ON for the duration specified by the PERM-PULL-TIME setpoint and then be OFF for the duration of the RELAX-TIME setpoint. This will generate one PULL/RELAX Cycle. The VFD Speed of the pump will operate based on the following: In FLOW MODE: The VFD Speed will operate based on a PID loop to maintain the flowrate setpoint FT-702-SP. IF the vacuum transmitter VT-702 > -0.25 bar then the pump will switch to VAC MODE. IF the level transmitter LT-301 > FLUX-SP, the pump will run via PID loop to maintain a high flow setpoint FT-702-HFSP In VAC MODE: The VFD Speed will operate based on a PID loop to maintain the vacuum setpoint VT-702-SP. IF the level transmitter LT-301 > FLUX-SP, the pump will run via PID loop to maintain a high flow setpoint VT-702-HFSP P-702 will be OFF if P-502 is OFF.	VFDA-703: Pump Will be Off	Communication	Y
SV-801	Clean In Place Tank Fill Solenoid Valve	The Solenoid Valve SV-801 will be Open (Energized) when level switch LSH-801 is InActive and MBR-1 OR MBR-2 are not in Backwash. The Solenoid Valve SV-801will be Closed (De-Engergized) when LSH-801 is Active or IF MBR-1 OR MBR-2 are in Backwash.		Discrete	
MV-701	Backwash Actuated Valve	A Backwash is enabled once the permeate pumps for MBR-1 reach the number of PULL/RELAX cycles designated by the RELAX-SP on the HMI.the The actuated valve will be OPEN when MBR-1 is in Backwash and level switch LSH-801 is Active. If MBR-2 is already in backwash, MBR-1 will complete 1 additional PULL/RELAX Cycle before starting a Backwash Cycle.		Discrete	
MV-702	Backwash Actuated Valve	A Backwash is enabled once the permeate pumps for MBR-2 reach the number of PULL/RELAX cycles designated by the RELAX-SP on the HMI. the The actuated valve will be OPEN when MBR-2 is in Backwash and level switch LSH-801 is Active. If MBR-2 is already in backwash, MBR-1 will complete 1 additional PULL/RELAX Cycle before starting a Backwash Cycle.		Discrete	

© 2017 by **newterra**, ltd.
All rights reserved. No part of this document may be reproduced or transmitted in any form or by any means, electronic, mechanical, photocopying, recording, or otherwise, without prior written permission of **newterra** ltd.

newterra ltd.
1291 California Avenue, Brockville, ON K6V 5W3
(800) 420-4056 / www.newterra.com

Tag	Description	Control Logic	Alarm Interactions	Output Type	Hour Meter
P-801	Backwash Transfer Pump	The backwash transfer pump will be ON when MBR-1 OR MBR-2 are in Backwash and level switch LSH-801 is Active The backwash transfer pump will be OFF after the duration of BKWSH-TIME-SP OR level switch LSL-801 becomes InActive.		Discrete	

5.10.5 Alarms

Alarm	Alarm Description	Actuation Control	Delay	Email Notification (Y)	Self Resetting (Y)
LAHH-601	Level Alarm High High	LSHH-601 = Active	5s		Y
LAHH-602	Level Alarm High High	LSHH-602 = Active	5s		Y
PAL-601	Pressure Alarm Low	PSL-601 = InActive	5s		Y
PAL-602	Pressure Alarm Low	PSL-602 = InActive	5s		Y
VTAH-701	Vacuum Transmitter Alarm High	VT-701 < VTAH-701-SP	5s		Y
VTAH-702	Vacuum Transmitter Alarm High	VT-702 < VTAH-702-SP	5s		Y
VFDA-701	VFD Fault				
VFDA-702	VFD Fault				
FTAH-701	Flow Transmitter Alarm High	FIT-701 > FTAH-701-SP	60s		
FTAL-701	Flow Transmitter Alarm Low	FIT-701 < FTAL-701-SP	60s		
FTAH-702	Flow Transmitter Alarm High	FIT-702 > FTAH-702-SP	60s		
FTAL-702	Flow Transmitter Alarm Low	FIT-702 < FTAL-702-SP	60s		

© 2017 by **newterra**, ltd.
All rights reserved. No part of this document may be reproduced or transmitted in any form or by any means, electronic, mechanical, photocopying, recording, or otherwise, without prior written permission of **newterra** ltd.

newterra ltd.
1291 California Avenue, Brockville, ON K6V 5W3
(800) 420-4056 / www.newterra.com

5.10.6 Blower Control

	**Blower for scouring air must be on 24/7, as failure of air supply can lead to clogging of the air diffusers and membranes.**

5.10.7 CIP Cleaning

Note: At design flow when the membrane discharge vacuum exceeds 0.2 bar (80" WC), as transmitted by VT-701, VT-702 and indicated locally at PI-701, PI-702, it is necessary to take the membrane tank offline for CIP cleaning. See **Section 7** for instructions on CIP cleaning.

© 2017 by **newterra**, ltd.
All rights reserved. No part of this document may be reproduced or transmitted in any form or by any means, electronic, mechanical, photocopying, recording, or otherwise, without prior written permission of **newterra** ltd.

newterra ltd.
1291 California Avenue, Brockville, ON K6V 5W3
(800) 420-4056 / www.newterra.com

5.11 Sludge Holding Tank Module (TNK-901)

A schematic of the Sludge Holding Tanks is located on the INLET HMI screen is shown below.

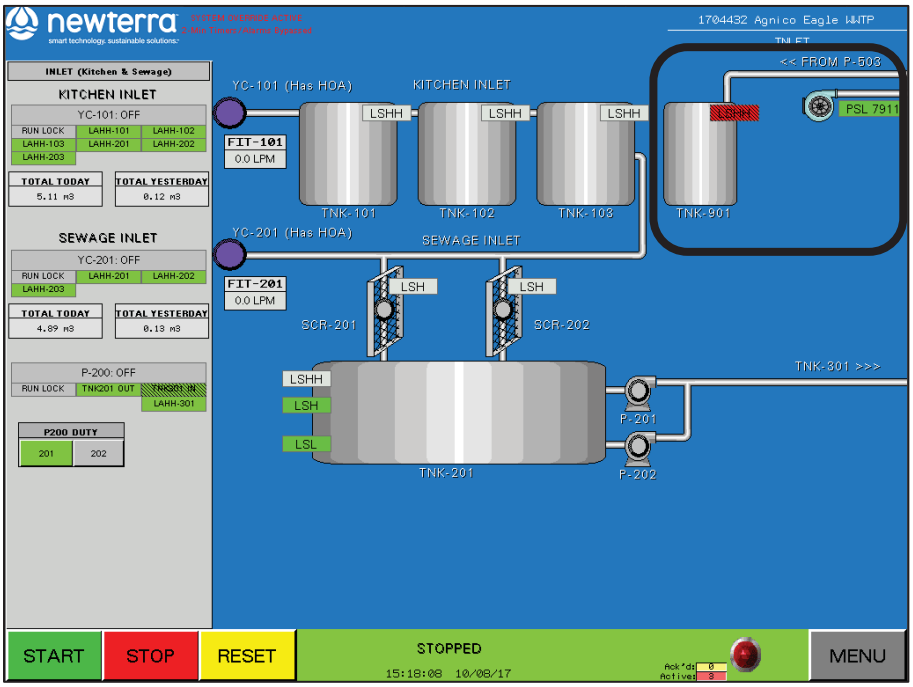

5.11.1 Function

To store and thicken waste activated sludge for later disposal off site.

In order to maintain an optimal concentration of mixed liquor suspended solids (MLSS) (typically 10 g/L), a portion of the mixed liquor is periodically wasted by pumping from the Aeration Tank (TNK-501) to the sludge holding tank (TNK-901). Wasted sludge in the sludge holding tank is thickened by decanting supernatant back to the screen tank. Thickened sludge accumulates in the sludge holding tanks until it is eventually pumped out for disposal.

5.11.2 Inputs

Tag	Description	Input Type
LSHH-901	Level Switch High High	Discrete N.C.

© 2017 by **newterra**, ltd.
All rights reserved. No part of this document may be reproduced or transmitted in any form or by any means, electronic, mechanical, photocopying, recording, or otherwise, without prior written permission of **newterra** ltd.

newterra ltd.
1291 California Avenue, Brockville, ON K6V 5W3
(800) 420-4056 / www.newterra.com

5.11.3 Setpoints

Tag	Description	Factory Setpoint	Setpoint Range and Units	Setpoint Change Control	Alarm setpoint (Y/N)
P503 WASTE HOUR	When P-503 will waste	12pm	0-23		
P503 WASTE SP	Time that P-503 wastes for	10min	0-99		

5.11.4 Logic

Tag	Description	Control Logic	Alarm Interactions	Output Type	Hour Meter	HOA Control
P-503	Waste Activated Sludge Pump	The waste activated sludge pump will be ON at time of day setting SLUDGE-WASTE-TOD IF level switch LT501-SLUDGE-SP	LAHH-901: Pump will be OFF	Discrete		HOA

5.11.5 Alarms

Alarm	Alarm Description	Actuation Control	Delay	Self Resetting (Y)
LAHH-901	Level Alarm High High	LSHH-901 = Active	5s	Y

© 2017 by **newterra**, ltd.
All rights reserved. No part of this document may be reproduced or transmitted in any form or by any means, electronic, mechanical, photocopying, recording, or otherwise, without prior written permission of **newterra** ltd.

newterra ltd.
1291 California Avenue, Brockville, ON K6V 5W3
(800) 420-4056 / www.newterra.com

5.12 Setpoints

The system Setpoints can be accessed from the SETPOINTS menu option.

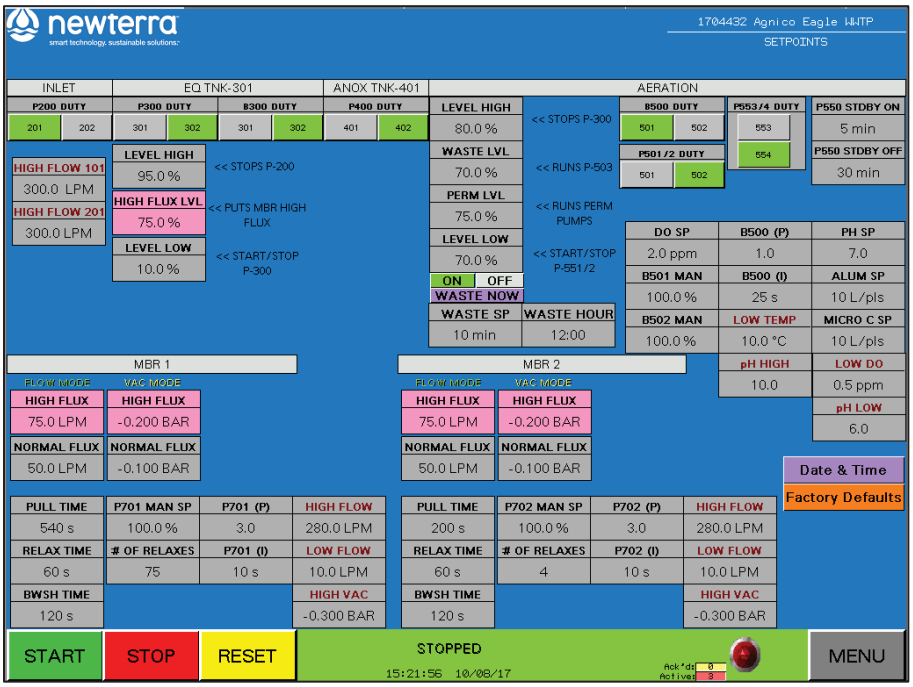

5.12.1 PLC Date & Time

The PLC Time and Date can be adjusted from the SETPOINTS HMI screen. Below is an example of the screen that will appear for the operator.



© 2017 by **newterra**, ltd.
All rights reserved. No part of this document may be reproduced or transmitted in any form or by any means, electronic, mechanical, photocopying, recording, or otherwise, without prior written permission of **newterra** ltd.

newterra ltd.
1291 California Avenue, Brockville, ON K6V 5W3
(800) 420-4056 / www.newterra.com

5.12.2 Factory Defaults

The Factory Defaults (setpoints) can be restored to the WWTP by pressing the Factory Default button from the SETPOINTS HMI screen. A confirmation screen will appear to the operator. See below. A listing of WWTP Factory Default values (setpoints) are at Appendix K.



5.13 Statistics

The system statistics can be accessed from the STATS menu option. Influent and Process Flow totals as well as motor run times are provided at this screen.

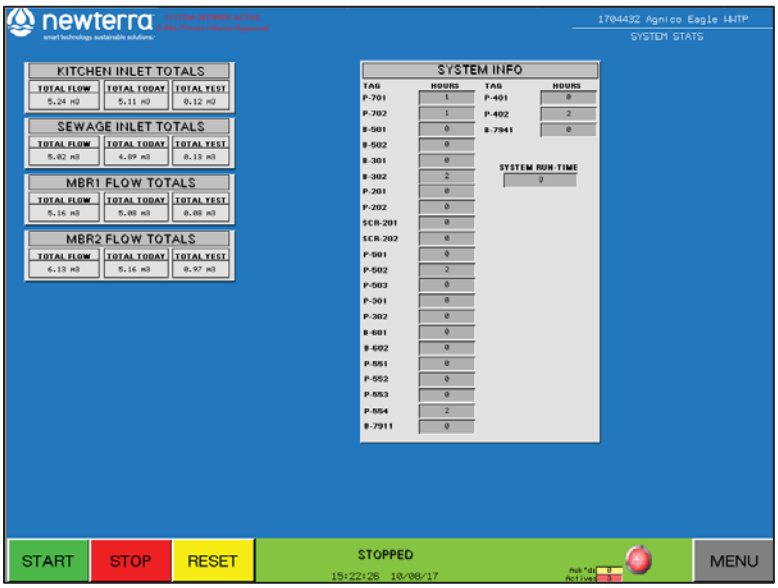

© 2017 by **newterra**, ltd.
All rights reserved. No part of this document may be reproduced or transmitted in any form or by any means, electronic, mechanical, photocopying, recording, or otherwise, without prior written permission of **newterra** ltd.

5.14 PLC Status

The system PLC status can be accessed from the SYSTEM INFO menu option.

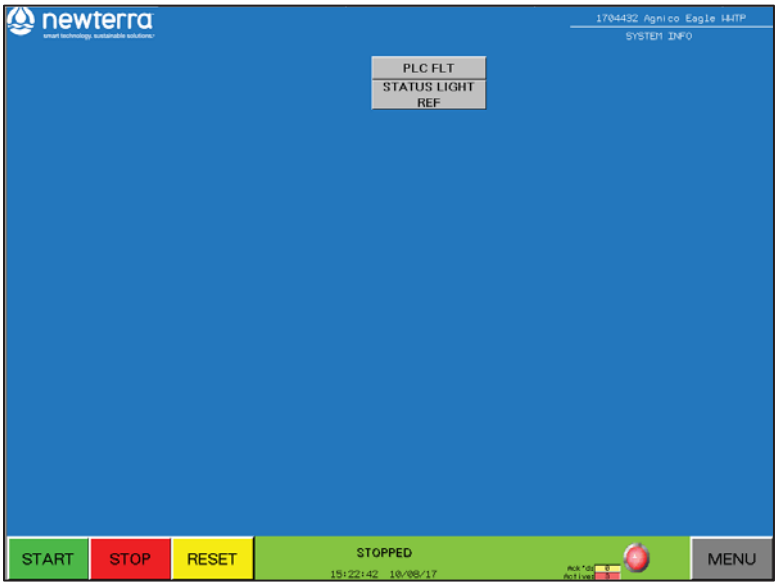

© 2017 by **newterra**, ltd.
All rights reserved. No part of this document may be reproduced or transmitted in any form or by any means, electronic, mechanical, photocopying, recording, or otherwise, without prior written permission of **newterra** ltd.

newterra ltd.
1291 California Avenue, Brockville, ON K6V 5W3
(800) 420-4056 / www.newterra.com

© 2017 by **newterra**, ltd.
All rights reserved. No part of this document may be reproduced or transmitted in any form or by any means, electronic, mechanical, photocopying, recording, or otherwise, without prior written permission of **newterra** ltd.

newterra ltd.
1291 California Avenue, Brockville, ON K6V 5W3
(800) 420-4056 / www.newterra.com

6.0 PLANT START-UP, OPERATING GUIDELINES AND MONITORING

6.1 MBR Plant Start-Up

6.1.1 Mechanical & Electrical Start-up Procedure

- If the system is being started for the first time, work your way through the **newterra Commissioning Checklist** presented in **Appendix C** of this O&M Manual.
- If the kill switch on the panel (red mushroom shaped button) is pulled out, then push it in to confirm that the MBR system is off.
- Push the reset button on the operator interface to reset all alarms.
- Make sure there are no obstructions over any moving parts, for example a jacket laying on a belt drive.
- Put all HAND/OFF/AUTO switches to AUTO **(A)** mode.
- Pull the kill Button (red button on panel) out to start the process.
- Push the start button on the Operator Interface.

6.1.2 Process Start-up

NOTE: Sludge from a nearby wastewater treatment plant can be used to start up another system if the treatment process is similar (i.e. nitrification, de-nitrification etc.).

1. Introduce the seed bacteria and fill the aeration tank according to one of the following two methods specific to the type of seed used:

Sludge Seed

a. Calculate the volume of seed sludge required to ensure that there is a minimum of 3,000 mg/L MLSS in the MBR system. The volume of seed sludge required can be calculated with the following formula.

$$V_s = \frac{3000 \times V_t}{MLSS_s}$$

Vs: Total volume of seed sludge for MBR system (m3)
Vt: Total effective volume of process tanks in MBR system (see section 3 of the manual) (m3)
MLSSs: MLSS concentration of seed sludge from a treatment system with similar processes (nitrification, de-nitrification etc.) (mg/L)

© 2017 by **newterra**, ltd.
All rights reserved. No part of this document may be reproduced or transmitted in any form or by any means, electronic, mechanical, photocopying, recording, or otherwise, without prior written permission of **newterra** ltd.

newterra ltd.
1291 California Avenue, Brockville, ON K6V 5W3
(800) 420-4056 / www.newterra.com

Arrange for delivery of fresh seed sludge from an activated sludge system employing a suspended growth type process. If it is possible, obtain seed sludge from a facility treating similar wastewater and operated with similar processes (nitrification etc).

b. If possible drain the water used for clean water testing from the aeration tank. This will minimize dilution of the seed bacteria.

c. Pump seed sludge through the screen module to remove any debris that might damage the membranes. This can usually be done by slowly dumping the seed into the closest lift station. Ensure screen process and feed pumps to aeration tank are in “AUTO” mode.

d. If a primary clarifier is included and there is a screen between the aeration tank and membrane tank: Add seed sludge directly to the aeration tank.

e. Once aeration tank liquid level has filled above 30% with seed sludge, turn aeration tank blowers to “AUTO” mode.

f. Continue adding remaining seed sludge.

g. Once all seed sludge has been pumped into the aeration tank take note of the liquid level. If the aeration tank is full then continue to Step 2. If the aeration tank is not full then continue to fill the aeration tank 15% of its total volume per day using raw wastewater. This is to avoid shocking the bacteria with excess BOD, reducing the risk of forming foam causing bacteria and reducing the impact of un-metabolized BOD on the membranes.

Dry Seed

a. If possible drain the water in the aeration tank used for clean water test. This will minimize dilution of the seed bacteria.

b. Turn screen module and feed pump(s) to aeration tank to “AUTO”.

c. Allow aeration tank to fill to 30% with raw wastewater, and then turn off screen module and feed pump(s).
d. Remove the access cover from the aeration tank.

e. Adjust the DO probe and pH probe positioning in the aeration tank until both probes are submerged in the wastewater.

f. Turn aeration tank blowers to “HAND” to ensure vigorous mixing when adding dry seed bacteria. Note: When set to “HAND” the blowers will only run for 2 minutes. If this time runs out before all the dry bacteria have been added, then the blowers must be set to “OFF” and then back to “HAND”.

© 2017 by **newterra**, ltd.
All rights reserved. No part of this document may be reproduced or transmitted in any form or by any means, electronic, mechanical, photocopying, recording, or otherwise, without prior written permission of **newterra** ltd.

newterra ltd.
1291 California Avenue, Brockville, ON K6V 5W3
(800) 420-4056 / www.newterra.com

g. Slowly add 25% of the supplied heterotrophic dry seed bacteria through the view port). The following quantities in Table 1 are typically shipped with standard camp systems, if the current system is not on this list please consult with a Process Engineer:

Table 1 - Seed bacteria quantities per standard camp model

Standard Camp Model	Dry Bacteria (Bioremove 5190) (lbs)	Nitrifying Bacteria (Bioremove 5895) (lbs)
50 Man	50	10
100 Man	50	10
300 Man	75	20
600 Man	75	20
1000 Man	100	30

h. Turn aeration tank blowers to “AUTO”.

i. Continue adding raw wastewater and dry seed bacteria according to the schedule outlined in Table 2 below:

Table 2 - Dry seed and wastewater dosing schedule

Day	Daily Wastewater Flowrate (% of Aeration Tank Volume)	Aeration Tank Fill Level (%)	Dry (heterotrophic) Seed to be Added (% of Total Supplied)
1	30%	30%	25%
2	10%	40%	20%
3	10%	50%	15%
4	15%	65%	10%
5	15%	80%	10%
6	15%	95%	10%
7	5%	100%	10%

j. As the aeration tank fills, continue to adjust the positioning of the DO and pH probes accordingly.

2. Once the aeration tank is full (liquid level >80%) the remaining equipment in the system can be started. Turn all equipment (except sludge wasting/processing equipment) to “AUTO”. Set the permeate flow rate at a value to achieve a flux of 6.5 lmh initially.

   Convert flux (lmh) to flow rate (lpm) as follows:

$$Flow\ rate\ (lpm) = \frac{Flux\ (lmh) * membrane\ surface\ area\ (m^2)}{60\ \left(\frac{min}{h}\right)}$$

   **** Verify the membrane cassette model – MCXL2 = 8 m^2 of surface area

3. Continue increasing the flux rate everyday according to the schedule in below.

© 2017 by **newterra**, ltd.
All rights reserved. No part of this document may be reproduced or transmitted in any form or by any means, electronic, mechanical, photocopying, recording, or otherwise, without prior written permission of **newterra** ltd.

newterra ltd.
1291 California Avenue, Brockville, ON K6V 5W3
(800) 420-4056 / www.newterra.com

NOTE: Day 1 refers to the day that the aeration tank is full. If dry seed was used this will be day 7. If nitrifying bacteria were provided begin dosing into the aeration tank according to the schedule in below.

Flux and nitrifying bacteria dosing schedule

Day	Flux (lmh)	Nitrifying Bacteria to be Added (% of Total Provided) [If Provided]
1	6.5	20%
2	6.9	20%
3	7.4	20%
4	7.9	20%
5	8.4	20%
6	9.0	-
7	9.6	-
8	10.2	-
9	10.9	-
10	11.6	-
11	12.4	-
12	13.2	-
13	14.1	-
14	15.1	-
15	16.1	-
16	17.1	-
17	18.0	-
18	18.0	-
19	18.0	-
20	18.0	-
21	18.0	-
22	18.0	-
23	18.0	-

4. Foaming may occur during start-up, which is normal. Foaming can be caused by a number of factors. Typically during start-up foaming is a result of a high food (BOD) to microorganism (F/M) ratio. This promotes the growth of long chained filamentous bacteria that increases the surface tension resulting in strong, long lasting foam. As the quantity of biomass builds, and the sludge age increases the normal non-filamentous bacteria will dominate, and the foam should subside. In the meantime foaming can be addressed by spraying water, food based defoamer (silicone based defoamer is strictly prohibited) addition, or aeration minimization in the aeration tank. Check for signs of toxicity and excessive fat, oil and grease.

5. If a defoamer is required, consult with a process engineer for recommendation of an acceptable antifoaming agent and dosing quantities.

© 2017 by **newterra**, ltd.
All rights reserved. No part of this document may be reproduced or transmitted in any form or by any means, electronic, mechanical, photocopying, recording, or otherwise, without prior written permission of **newterra** ltd.

newterra ltd.
1291 California Avenue, Brockville, ON K6V 5W3
(800) 420-4056 / www.newterra.com

6. Monitor the pH throughout the start-up process. An observed decline in pH is an indication that the nitrifying bacteria are beginning to remove ammonia. It is important, however, that the pH does not drop too low, as this can cause biological activity to be inhibited, which can then result in severe membrane fouling. During start-up it is beneficial to operate at a pH between 7.0 and 7.5 to ensure optimal performance and growth of bacteria.

   The pH should be maintained between 6.5 and 8.0 during normal operation.

ATTENTION	**It is advisable to start the MBR system with a minimum MLSS concentration of 3,000 mg/L to minimize foaming. The seed sludge should come from a plant which has a screen of 2 mm. It is critical to screen the seed sludge with 2 mm perforated screen prior to seeding for membrane protection.**

ATTENTION	**No untreated wastewater should enter the membrane tank. Make sure wastewater is completely biologically treated before it gets to the membrane tank**

© 2017 by **newterra**, ltd.
All rights reserved. No part of this document may be reproduced or transmitted in any form or by any means, electronic, mechanical, photocopying, recording, or otherwise, without prior written permission of **newterra** ltd.

newterra ltd.
1291 California Avenue, Brockville, ON K6V 5W3
(800) 420-4056 / www.newterra.com

6.2 MBR System Operating Guidelines and Monitoring

6.2.1 Operating Guidelines

This section outlines the operating conditions that are required for proper wastewater treatment, and longevity of the membranes. For instructions on how to control the system using the touch screen HMI, see **Section 5**. The operators are expected to run the MBR system at all times in accordance with the maintenance, operational procedures and details specified in this manual. The following two tables provide operating parameters that can be easily maintained, and define the range of operating values.

There may be situations where the system needs to operate outside of the conditions covered in this manual. If these conditions develop, please consult newterra ltd. to discuss operation and methods to optimize performance.

Generally, the following points can be used to operate the MBR system properly:

- The MBR system is designed to treat wastewater with specified influent characteristics.
- Never operate the MBR tank below the minimum membrane submerged level. It is necessary to maintain a minimum of 250 mm liquid level above the membrane modules to ensure they are wet at all times and to allow for proper filtration.
- Always supply the required amount of air for scouring to the membrane module.
- Always filter wastewater at or below design flow rate.
- Periodically, relax the membranes by ending filtration while allowing the membrane aeration scour to operate continuously and initiate backwash operation during membrane relaxation (default relaxation mode preset in PLC - permeation continues for 9 min and stops for 1 min).
- Always operate the MBR in accordance with the parameters listed in the following tables.
- Clean the membranes in-place with a dilute chemical in accordance with **Section 7** of the O&M Manual.

© 2017 by **newterra**, ltd.
All rights reserved. No part of this document may be reproduced or transmitted in any form or by any means, electronic, mechanical, photocopying, recording, or otherwise, without prior written permission of **newterra** ltd.

newterra ltd.
1291 California Avenue, Brockville, ON K6V 5W3
(800) 420-4056 / www.newterra.com

6.2.1.1 Membrane Filtration Operational Conditions

Parameter	Recommended Value	Notes
Diffuser Relaxation	10 minutes/day	Effluent filtration must be turned off, blower shuts down for 10 mins/day
Relax Time	1 min/10 min	Filtration must be off and blower are operating continuously
Backwashing	48 cycles	Built-in backwash mode during relaxation mode
In-situ Chemically Enhanced Backwash (CEB)	500 ppm as NaOCl	Requires 3 L to fully backwash one MCXL cassette. Frequency of CEB may vary. Refer to Membrane Cleaning Section 7.3 for cleaning procedure.
TMP	< 0.2 bar (2.9 psi)	Membranes to be cleaned once the TMP exceeds 0.2 bar (2.9 psi)

© 2017 by **newterra**, ltd.
All rights reserved. No part of this document may be reproduced or transmitted in any form or by any means, electronic, mechanical, photocopying, recording, or otherwise, without prior written permission of **newterra** ltd.

newterra ltd.
1291 California Avenue, Brockville, ON K6V 5W3
(800) 420-4056 / www.newterra.com

6.2.1.2 MBR – Recommended Biological Operational Conditions

Parameter	Recommended	Range	Notes
MLSS (mg/L)	10,000	8,000 – 15,000	Never operate the membranes if MLSS < 3,000 mg/l. Sludge wasting should be undertaken as required to maintain target MLSS
Temperature (°C)	15 - 35	10 – 35	Avoid sudden changes in temperature. Minimum operating temperature is 15 °C
pH (s.u.)	6.8 - 8.5	6.0 – 9.0	Membrane module can handle a change in pH, however it is recommended to keep pH between 6.8 - 8.5
Aeration Tank, DO (mg/L)	≥ 2.0	1.0 – 8.0	This can be maintained by adjusting the volume of air supplied to the aeration tank
Viscosity (mPa-s)	Not applicable	0 – 300	–
Aeration Tank to Anoxic Tank Recirculation	400%	200 – 500%*	Only applies if an anoxic tank is included. *The recycle ratio is a function of effluent NO_3-N/TN limit
Membrane Tank to Aeration Tank Recirculation	400%	200 – 600%	–
F:M (kg BOD/kg MLSS/d)	0.1	0.03 – 0.2	F:M = [Flow (m^3/d) x BOD conc (mg/l)] / [Process volume (m^3) x MLSS conc (mg/l)]
F:M (kg COD/kg MLSS/d)	0.15	0.05 – 0.3	F:M = [Flow (m^3/d) x BOD conc (mg/l)] / [Process volume (m^3) x MLSS conc (mg/l)]
SRT	> 15	12 – 50	

Process Troubleshooting Guide is presented in Section 7 of this O&M Manual.

© 2017 by **newterra**, ltd.
All rights reserved. No part of this document may be reproduced or transmitted in any form or by any means, electronic, mechanical, photocopying, recording, or otherwise, without prior written permission of **newterra** ltd.

newterra ltd.
1291 California Avenue, Brockville, ON K6V 5W3
(800) 420-4056 / www.newterra.com

6.2.2 Sampling

To ensure accurate system monitoring and the validity of laboratory test data, samples must be collected as outlined below. These are only recommended guidelines. It is imperative that scheduled testing protocols are performed in compliance with local regulatory agency requirements. Composite samples of the MBR systems may need to be sent out to a certified laboratory for testing, based on the local regulatory requirements.

Monitoring and Testing Requirements

Parameter***	Influent	Aeration Tank	Membrane Tank	MBR Effluent
Flow rate	D (PLC)			D (PLC)
Fat, Oil and Grease (FOG)	AR			AR
Alkalinity	AR			
Biological Oxygen Demand (BOD)	W			W
Total Suspended Solids (TSS)	W			W
Total Kjeldahl Nitrogen / Total Nitrogen (TKN / TN)	M			AR
Ammonia Nitrogen(NH_4-N)				AR
Nitrate Nitrogen (NO_3-N)				AR
Total Phosphorus (TP)	W			W
Mixed Liquor Suspended Solids (MLSS)			W	
Mixed Liquor Volatile Suspended Solids (MLVSS)			AR*	
Temperature		D (PLC)		
pH	AR	D (PLC)		W
Dissolved Oxygen (DO)		D (PLC)		
Filterability			TW	
Turbidity				AR**
Fecal Coliform / *E-Coli*				W

Legend: D = daily; W = weekly; TW = three times weekly; M = monthly; AR = as required.
* If MLVSS /MLSS ratio of a minimum of 0.7 is detected, MLVSS testing can be done periodically, on an “as required” basis.

**The effluent should be routinely checked for any signs of problem. Normally, the effluent is reasonably clear, colourless, and odourless. If the effluent becomes turbid, testing should be carried out required.

© 2017 by **newterra**, ltd.
All rights reserved. No part of this document may be reproduced or transmitted in any form or by any means, electronic, mechanical, photocopying, recording, or otherwise, without prior written permission of **newterra** ltd.

newterra ltd.
1291 California Avenue, Brockville, ON K6V 5W3
(800) 420-4056 / www.newterra.com

*** Explanation and definition of abbreviations, acronyms and terms used in the manual are presented in **Appendix G – Glossary & Terms and Appendix H – Biological Treatment & Monitoring Parameters.**

6.2.2.1 Filterability Test

The objective of the filterability test is to evaluate the condition of the working biomass. This is assessed by measuring the volume of filtrate passing through the filter paper. If filtrate is greater than 10 mL/10 min, then biomass filterability is acceptable; however, if it is less than 10 mL/10 min, modifications to the plant operating condition are required to prevent premature membrane fouling. See the Membrane Fouling Troubleshooting Guidelines table in Section 7.6.1 to determine the cause of the low filterability and how to correct operation to improve the filterability.

Laboratory Glassware and Filter Paper

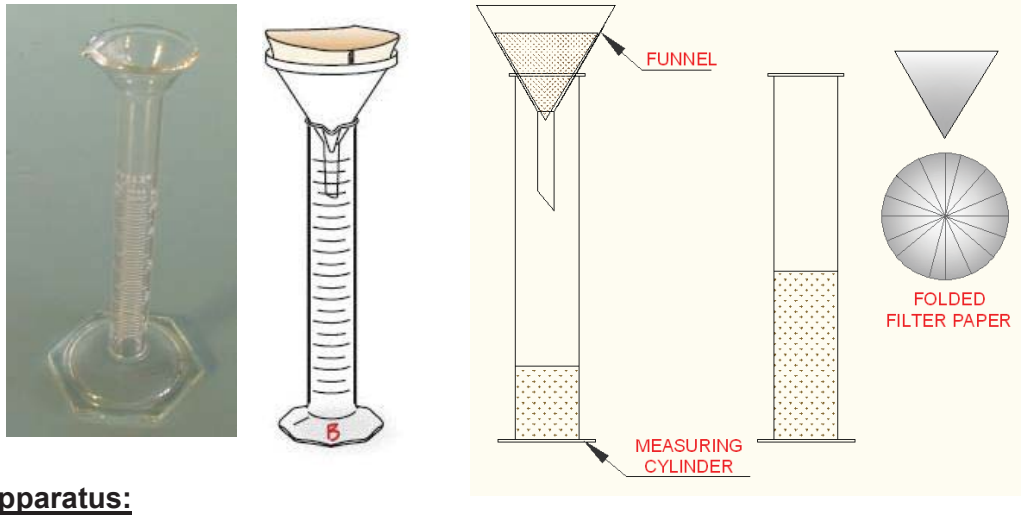

Apparatus:

Filterability Kit is distributed by **newterra ltd (Part # 24146).**

Measurement Procedure:

1. Pleat filter paper by folding in half, quarters etc.
2. Line the funnel with pleated filter paper and place the funnel in the graduated cylinder.
3. Collect 50 mL of activated sludge sample in a beaker and stir.
4. Pour the 50 mL sample into the funnel.
5. Start timer when the first drop of water filtered through the filter paper.
6. After 10 minutes of filtration, record the level of filtrate in the graduated cylinder.

© 2017 by **newterra**, ltd.
All rights reserved. No part of this document may be reproduced or transmitted in any form or by any means, electronic, mechanical, photocopying, recording, or otherwise, without prior written permission of **newterra** ltd.

newterra ltd.
1291 California Avenue, Brockville, ON K6V 5W3
(800) 420-4056 / www.newterra.com

Filterability (FT)	Action	State of urgency
> 10 ml	Excellent, no action req'	
5 - 10 ml	Tweak process operation	
< 5 ml	Process adjustment req	**Contact newterra ltd.**

6.2.3 Suggested Test Equipment for Monitoring

The following test equipment's will assist in the monitoring of the MWWTP but are not provided with the system.

6.2.3.1 Filterability - Laboratory Glassware and Filter Paper

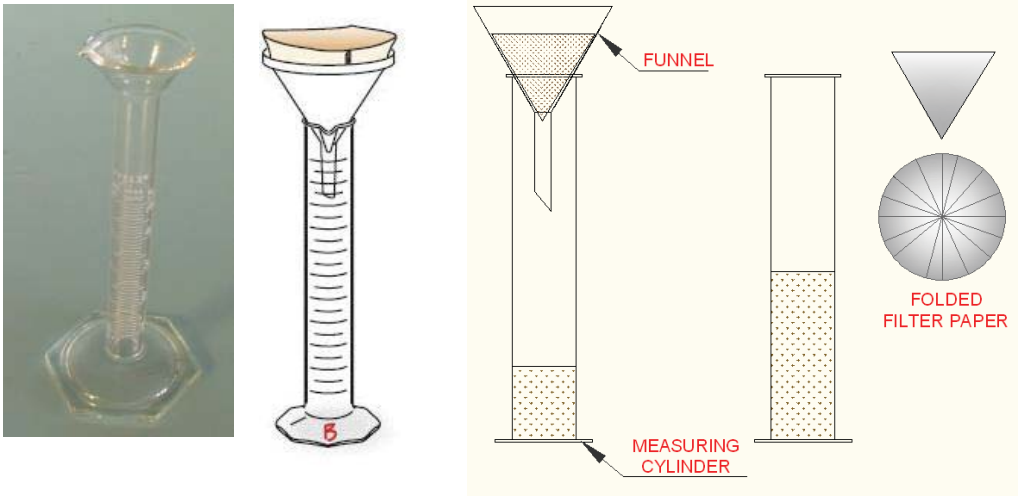

Apparatus:

- Filter paper - AMD Manufacturing, Part Number NO5C 18.5CM or equivalent;
- Funnel (75 mm diameter recommended);
- 50 mL graduated cylinder - Cole-Parmer Graduated Cylinder, Part Number RK-06134-67 or equivalent;
- Beaker (min 100 ml size) and stir rod
- Watch with seconds display or equivalent

© 2017 by **newterra**, ltd.
All rights reserved. No part of this document may be reproduced or transmitted in any form or by any means, electronic, mechanical, photocopying, recording, or otherwise, without prior written permission of **newterra** ltd.

newterra ltd.
1291 California Avenue, Brockville, ON K6V 5W3
(800) 420-4056 / www.newterra.com

6.2.3.2 Turbidity, Phosphorus - Hach DR900 (and reagents)



The hand-held DR 900 allows quick and easy access to most-used testing methods. This colorimeter is waterproof, dustproof and field durable. With an intuitive user interface, easy data transfer abilities, and the ability to test up to 90 of the most commonly tested water methods.

6.2.3.3 DO and pH - Hach HQ40d with probe or Equivalent



Designed for water applications, the Hach HQ40d portable meter is an advanced meter. HQd™ meters connect with smart probes that automatically recognize the testing parameter, calibration history, and method settings to minimize errors and setup time.
Portable meter measures critical water quality parameters - without the need for multiple instruments.
Intuitive user interface for simple operation and accurate results.
Meter kit includes field case, 4 AA batteries, protective meter glove, power adapter, USB/DC power adapter for data transfer, quick-start guide, user manual, and documentation CD.
DO and pH probes required.

© 2017 by **newterra**, ltd.
All rights reserved. No part of this document may be reproduced or transmitted in any form or by any means, electronic, mechanical, photocopying, recording, or otherwise, without prior written permission of **newterra** ltd.

6.2.3.4 Sludge Settling - Settleometer



The ability to observe and measure the rate and characteristics of solids separation is essential to control biological treatment processes that produce sludge.

6.2.3.5 TSS - Aysix model 3150 hand held TSS meter or Equivalent



Portable Suspended Solids Analyser

6.2.3.6 Hach CEL Advanced Wastewater Laboratory



Includes the DR 900 Colorimeter, HQd multi-meter with pH probe, reagent sets, apparatus, illustrated instrument and procedures manuals, and a rugged carrying case

© 2017 by **newterra**, ltd.
All rights reserved. No part of this document may be reproduced or transmitted in any form or by any means, electronic, mechanical, photocopying, recording, or otherwise, without prior written permission of **newterra** ltd.

newterra ltd.
1291 California Avenue, Brockville, ON K6V 5W3
(800) 420-4056 / www.newterra.com

6.2.4 Record Keeping

An essential component of quality control in any facility is sound record keeping. A log book covering the entire treatment system performance should be maintained, updated, and readily accessible to all operators. The log book should be used to record observations, set point alterations, and unusual conditions.

For each wet chemistry parameter analysis, a separate work-sheet has to be prepared. Work-sheet data for at least the previous year should be kept for possible consultation.

The second step in quality control is to train all operators to follow an established procedure for each test. Identical samples should be periodically tested for any parameter by different operators, and the variability among results should be compared. Consistent variability in results may lead to the technique improvement of operators.

Duplicate analysis of a sample should also regularly be done. And, split samples should regularly be sent to an outside accredited laboratory and analysis results should be compared with those done in-house.

In addition to summary sheets, it is highly recommended that data should be entered into prepared Excel spread-sheets. Spread-sheets greatly aid in the data presentation and manipulation, and would be of immeasurable value when report writing is required.

6.2.5 Process Trending

Other than pre-planned process changes or major upsets, process modifications should be based on trends shown in the process data. A trend is nothing more than an indication of real change in a process parameter over time. A trend chart is simply a graph of data being trended.

As the graph changes, upward or downward trends are detectable. Smoothing trends by graphing the 3-, 7-, or 30-day average of the data allows the trend to be shown more clearly. Because the individual data point may be questionable, the actual value of data point are less important compared with the trend regarding the process monitoring.

Trend graphs are a part of the Excel data spread-sheet; the operator can trend and analyse many parameters in just a few minutes in order to assess process performance.
When a trend is identified, its indication to the process can be evaluated, and corrective action may be carried out, if needed. Statistically, the more data points there are in a trend chart, the more reliable the trend.

© 2017 by **newterra**, ltd.
All rights reserved. No part of this document may be reproduced or transmitted in any form or by any means, electronic, mechanical, photocopying, recording, or otherwise, without prior written permission of **newterra** ltd.

7.0 SYSTEM MAINTENANCE

	**ATTENTION: MAINTENANCE SHOULD BE PERFORMED ONLY BY TRAINED PERSONNEL!** **When providing maintenance or cleaning the plant, avoid direct contact with wastewater, organic materials, etc.** **Always wear protective clothing, e.g. waterproof, protective gear, boots, and gloves to keep these materials from body. Wear face and eye protection as required by health & safety protocols and standards, especially when handling chemicals.**

CAUTION: Shut off all electrical power before working on the mechanical or electrical equipment.

The system should be routinely checked for any signs of operational problems. Such problems could include, but are not necessarily limited to, abnormally high peak flows, unpleasant odour, and diffuser clogging, and so on.

7.1 Plant Visual Checks

Noise	During normal operation, there is a uniform humming sound at the plant. In case of an unusual noise, it could be an indication that the blower needs maintenance or repairs.
Smell	The MicroClear™ MBR is an aerobic system. During normal operation, the system has an earthy smell similar to that of a well-maintained compost pile. If other odours are noticed, the aeration process may not be operating or the system has been overloaded. Check the DO manually and the blower to verify proper operation.
Sight	Normally, the effluent is reasonably clear, colourless, and odourless. If the effluent becomes turbid, there is a pin hole in the membrane or a leakage in the piping. Take the unit out of operation and investigate. **Check uniformity of membrane air distribution periodically to ensure air scouring is effective across all membrane plates.**

© 2017 by **newterra**, ltd.
All rights reserved. No part of this document may be reproduced or transmitted in any form or by any means, electronic, mechanical, photocopying, recording, or otherwise, without prior written permission of **newterra** ltd.

newterra ltd.
1291 California Avenue, Brockville, ON K6V 5W3
(800) 420-4056 / www.newterra.com

7.1.1 Air Scouring Patterns in Membrane Tanks

Membrane air scouring check is an essential routine maintenance procedure for **newterra** MBR WWTP to ensure membranes are receiving effective physical cleaning. Air scouring has to be observed for uniformity of bubbling action all across the membrane module/cassette on regular basis.

A visual inspection of the aeration patterns should be performed with the liquid level 2-3" (5 – 7.5 cm) above the top row of membranes and looking thru the tank viewport or inspection opening (see below).



Proper air scouring in membrane tank



Uneven aeration in membrane tank

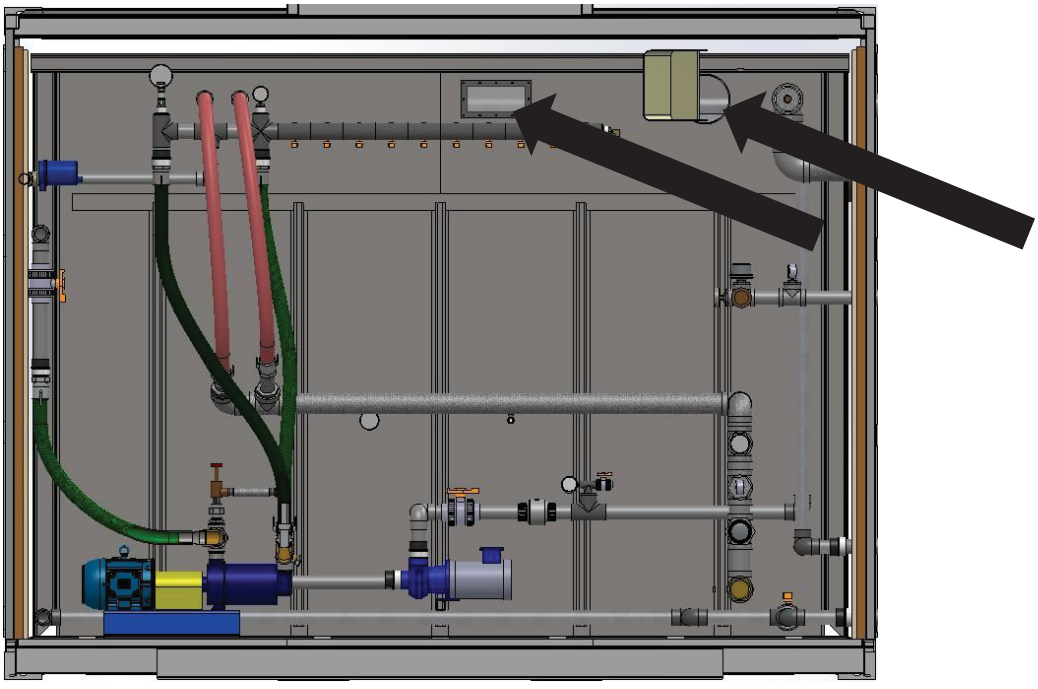

© 2017 by **newterra**, ltd.
All rights reserved. No part of this document may be reproduced or transmitted in any form or by any means, electronic, mechanical, photocopying, recording, or otherwise, without prior written permission of **newterra** ltd.

newterra ltd.
1291 California Avenue, Brockville, ON K6V 5W3
(800) 420-4056 / www.newterra.com

It is easy to observe aeration patterns through the clear window in the membrane tank(s). Operator should note any unusual patterns of air distribution. The visual inspection should also be performed before any membrane cassettes are removed from the membrane tank(s). Operator has to check for:

- damage of air diffusers - if this occurs, empty the tank and fix the diffuser;
- air leakages - if this occurs, tighten up the fittings.

If there is insufficient air scouring, localized dewatering (**clogging, sludging, caking and plugging**) may occur and may in turn lead to membrane fouling.

7.2 Schedule for Routine Operation and Maintenance Checkups

Location	Item	Day	Week	Month	Quarter	Year	Comments
Grease Traps	**TNK-101/102/103** **Grease traps must be cleaned whenever the grease film is approx. 1 foot thick in any tank. An unmaintained grease trap does not stop any grease waste from entering the WWTP system.**						Remove vac out grease film from top of tanks and any food particles from the bottom of tanks.
PROCESS	**Perform visual check**	X					Refer to Plant Visual Checks
	Record permeate flow rate	X					
	Record DO in the aeration tank	X					
	Record pH in the aeration tank	X					
	Record vacuum pressure at the membranes	X					Normal range: 0.07 – 0.25 bar (28” -100” WC)
Note: When the vacuum at the membranes reaches 0.25 bar/3.5 psig/100" WC), it may be necessary to stop the permeation and perform recovery cleaning (please see Section 7.6.1 for membrane fouling troubleshooting and subsection 7.3 for membrane cleaning procedures)							
MECHANICAL & PROCESS	**Inspect membranes and permeate withdrawal system**		**X**				1 hour
	Clean the DO sensor – DO-501 Replace DO probe every second year in accordance with vendor manual.		**X**				In accordance with vendor manual in Appendix E
	Clean and calibration (as required) PH-501					X	In accordance with vendor manual in Appendix E

© 2017 by **newterra**, ltd.
All rights reserved. No part of this document may be reproduced or transmitted in any form or by any means, electronic, mechanical, photocopying, recording, or otherwise, without prior written permission of **newterra** ltd.

newterra ltd.
1291 California Avenue, Brockville, ON K6V 5W3
(800) 420-4056 / www.newterra.com

Location	Item	Day	Week	Month	Quarter	Year	Comments
MECHANICAL & PROCESS	**Inspect and maintain valves & fittings for leaks.**		**X**				
	Membrane in-situ cleaning				X		2-4 hours
	Remove membrane module for mechanical cleaning and inspection					X	Drain membrane tank. Roll out membrane cassette. Remove membranes and inspect. (1 -2 days)
	Remove, inspect and maintain diffusers in aeration and membrane tanks					X	This involves a complete draining of tanks (1-2 days). In accordance with vendor manual in Appendix E
	P-201/202, 301/302, 401/402, 501/502, 553/554, 551/552 – Price Pumps **-General Condition (Temperature, Unusual Noises or Vibrations, Cracks, Leaks, Loose Hardware, Etc.)** **- Pump Performance (Gauges, Speed, Flow)** **-Clean electrical motor and keep ventilation openings clear**				**X**		See vendor manual at Appendix E.
	P-701/702 – Permeate Pumps **-General Condition (Temperature, Unusual Noises or Vibrations, Cracks, Leaks, Loose Hardware, Etc.)** **- Pump Performance (Gauges, Speed, Flow)** **-Clean electrical motor and keep ventilation openings clear** **-Do Not let the pump run dry!**				**X**		See vendor manual at Appendix E.

© 2017 by **newterra**, ltd.
All rights reserved. No part of this document may be reproduced or transmitted in any form or by any means, electronic, mechanical, photocopying, recording, or otherwise, without prior written permission of **newterra** ltd.

newterra ltd.
1291 California Avenue, Brockville, ON K6V 5W3
(800) 420-4056 / www.newterra.com

Location	Item	Day	Week	Month	Quarter	Year	Comments
MECHANICAL & PROCESS	**P-801 – Backwash Pump** **-General Condition (Temperature, Unusual Noises or Vibrations, Cracks, Leaks, Loose Hardware, Etc.)** **- Pump Performance (Gauges, Speed, Flow)**						Submersible pumps contain oils which becomes pressurized and hot under operating conditions - allow 2½ hours after disconnecting before attempting service.
	B-301/302 , 601/602 – EQ and Membrane Tank Blowers **-Clean electrical motor and keep ventilation openings clear** **-Check inlet filter. Clean or replace as necessary.**			**X** **X**			In accordance with vendor manual in Appendix E
	B-501/502 – Aeration Tank Blowers **-Clean electrical motor and keep ventilation openings clear** **- Check V-belts for tightness** **- Check and add fresh oil as required to maintain proper level.** **- Change blower oil.** **-Check inlet filter. Clean or replace as necessary.**		**X** **X**	**X** **X**		**X**	In accordance with vendor manual in Appendix E Semi-annual
	SCR-101/102 **-Inspect inspecting the unit for blockages and general cleaning. Inspection doors are located on the cover guard and screen body. Washing the screen with high water pressure may be necessary.**	**X**					

© 2017 by **newterra**, ltd.
All rights reserved. No part of this document may be reproduced or transmitted in any form or by any means, electronic, mechanical, photocopying, recording, or otherwise, without prior written permission of **newterra** ltd.

Location	Item	Day	Week	Month	Quarter	Year	Comments
	-Check for wear on the brushes and give the unit a thorough cleaning each week will ensure maximum efficiency. **-Check the oil level in the motor. Grease the bearings with the appropriate grease. Making adjustments to the brushes to maximize contact with perforated sheet.**		**X**	**X**			
	P-6101/6102/6103 – Dosing Pumps **-Check the metering diaphragm for damage** **-Check that the hydraulic lines are fixed firmly to the liquid end.** **-Check that the suction valve and discharge valve are fitted tightly.** **-Check the tightness of the entire liquid end - particularly around the leakage hole** **-Check that the flow is correct: Allow the pump to prime briefly - turn the multifunctional switch briefly to "Test"** **-Check that the electrical connections are intact.** **-Check the integrity of the housing.** **-Check that the dosing head screws are tight.**				**X**		In accordance with vendor manual in Appendix E
	Container Fans **-Dust and dirt on the exterior surface of the motor, fan panel and the entire fan wheel should be removed.** **-Inspect of all fasteners to ensure they have not loosened due to vibration.**					**X**	In accordance with vendor manual in Appendix E

© 2017 by **newterra**, ltd.
All rights reserved. No part of this document may be reproduced or transmitted in any form or by any means, electronic, mechanical, photocopying, recording, or otherwise, without prior written permission of **newterra** ltd.

newterra ltd.
1291 California Avenue, Brockville, ON K6V 5W3
(800) 420-4056 / www.newterra.com

Location	Item	Day	Week	Month	Quarter	Year	Comments
	Container Heaters **Once a year, remove the dust accumulation inside the heater using a vacuum cleaner or compressed air. Cleaning should be done while the heater is disconnected from the supply circuit.**					**X**	In accordance with vendor manual in Appendix E
ELECTRICAL	**Check electrical leads**				X		
	Check panel fan filter and replace/clean as necessary.			X			
	Inspect and maintain breakers, fuses, resets and anodes			X			
	Check motor mounting bolts			X			
	Clean dust away from electric motor			X			
	Check PLC and control panel functionality		X				



All connections (hoses, hose clamps, camlocks) have to be checked periodically (on a monthly basis) to make sure all of them are in good condition with no leaks.

© 2017 by **newterra**, ltd.
All rights reserved. No part of this document may be reproduced or transmitted in any form or by any means, electronic, mechanical, photocopying, recording, or otherwise, without prior written permission of **newterra** ltd.

newterra ltd.
1291 California Avenue, Brockville, ON K6V 5W3
(800) 420-4056 / www.newterra.com

7.3 MBR Membrane Cleaning

7.3.1 Membrane In-situ Chemically Enhanced Backflush (CEB)



Chemical cleaning is only to be carried out by qualified and trained personnel! Chemicals can lead to serious injuries. Always wear personal protective equipment (PPE) when handling chemicals! Obey the chemical safety handling procedure as listed in the Material Safety Data Sheets.

It is recommended that in-situ CEB be carried out before the TMP exceeds 0.25 bar (or permeability drops rapidly to 50 LMH/bar) This is typically done once every couple weeks/months depending on biomass characteristics and system operating condition.

On certain occasions, membrane module/cassette may need to be physically inspected for membrane integrity if membrane permeability performance is not recovered after the cleaning (i.e., suspect of membrane deterioration); please refer to subsection **7.3.3**.



The maximum backflush pressure of MicroClear™ MCXL filter is 0.1 bar or equivalent to a 100 cm water line. Only use gravity force to perform the backflush.

Note: Membrane have a maximum active chlorine tolerance of 100,000 ppm.h.

For better cleaning performance, it is recommended:

- Potable water (permeate is acceptable if potable water is unavailable)
- Water temperature is above 20 ^{0}C (better cleaning efficiency if water temperature ranges from 20 to 30 ^{0}C)

© 2017 by **newterra**, ltd.
All rights reserved. No part of this document may be reproduced or transmitted in any form or by any means, electronic, mechanical, photocopying, recording, or otherwise, without prior written permission of **newterra** ltd.

7.3.1.1 Procedure – Backwash Solution Preparation

Note: It is recommended that only one membrane module at a time be cleaned (backwash).

Prepare the backwash solution as follows:

1) If backwash tank TNK-801 is empty:
    a. Ensure membrane is enabled and pulling, and turn SV-801 solenoid valves on hand ("H") until backwash tank is filled with required volume for chemical backwash (3L per cassette X 20 cassettes per module = 60 L OR approx. 1/4 capacity of TNK-801). Note TNK-801 capacity is 272L.
    b. Turn SV-801 series solenoid valves off ("O")

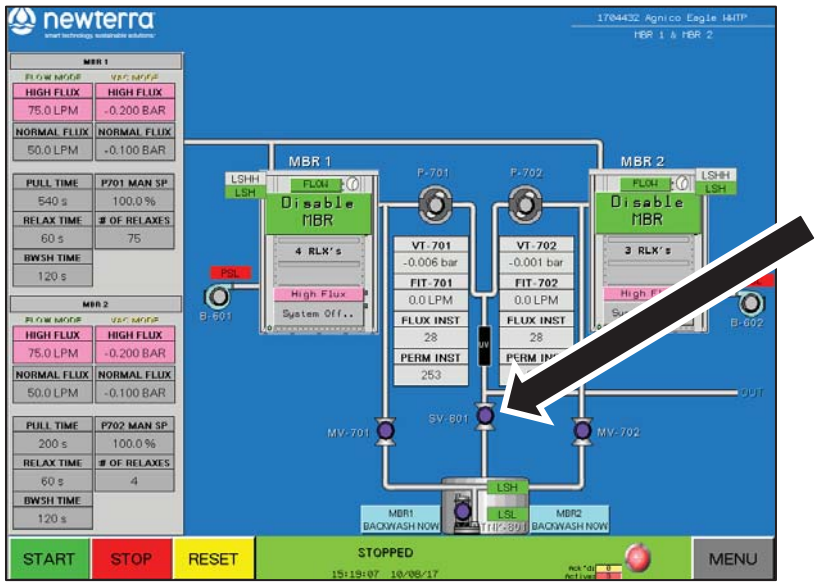

    c. Skip to step 3

© 2017 by **newterra**, ltd.
All rights reserved. No part of this document may be reproduced or transmitted in any form or by any means, electronic, mechanical, photocopying, recording, or otherwise, without prior written permission of **newterra** ltd.

2) If backwash tank TNK-801 is full:

   a. Disable membrane by holding down the disable membrane button for about 5 seconds

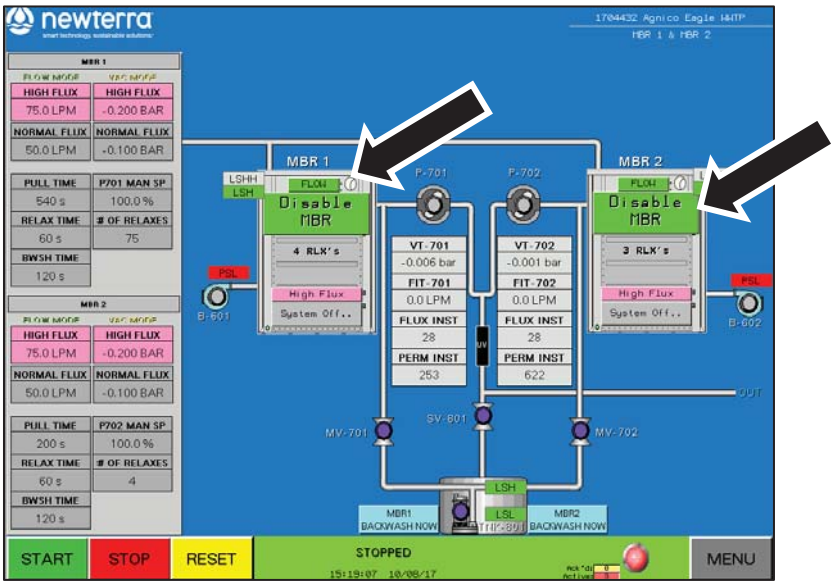

   b. Turn SV-801 solenoid valves to off (“O”)

   c. Turn MV-701/702 (depending on the membranes to be cleaned) motorized valves to hand (“H”)

   d. Turn pump P-801 to hand (“H”) until the backwash tank has drained to the required volume for chemical backwash (3L per cassette X 20 cassettes per module = 60 L OR approx. 1/4 capacity of TNK-801) – the exact volume can be determined by backwash tank level drop. Note TNK-801 capacity is 272L.

   e. Turn P-801 to off (“O”)

7.3.1.2 Procedure – Organic Fouling Solution

Organic Fouling - NaOCl: 500 mg/L solution (acceptable range of 200 to 1000 mg/L). Used for removal of organic fouling, which is the most common type of fouling in MBRs.

Volume of concentrated NaOCl required can be calculated with the following formula,

$$V_x = \frac{V_m \times 0.05}{C_s}$$

$\boldsymbol{V_m}$: Volume of the solution (Gallon, or Litre), equal to 3 L multiplying the number of MCXL cassettes 20 (60L per module);
$\boldsymbol{C_s}$: Concentrated NaOCl concentration (%)
$\boldsymbol{V_x}$: Volume of concentrated NaOCl required (Gallon, or Litre)

© 2017 by **newterra**, ltd.
All rights reserved. No part of this document may be reproduced or transmitted in any form or by any means, electronic, mechanical, photocopying, recording, or otherwise, without prior written permission of **newterra** ltd.

newterra ltd.
1291 California Avenue, Brockville, ON K6V 5W3
(800) 420-4056 / www.newterra.com

7.3.1.3 Procedure – Organic Fouling Solution

Inorganic Fouling - Citric Acid: 2 g/L solution (up to 20 g/L). Used for removal of inorganic fouling. This is typically only required for systems treating water with a high hardness.

Rinse membrane filter and backwash tank thoroughly with potable water to completely remove NaOCl solution before treatment with citric acid. Mixing NaOCl with citric acid releases toxic chlorine gas!

7.3.1.4 Procedure

1) Ensure MV-701/2 series motorized valves and SV-801 solenoid valve are set to off (“O”). The system is now ready for a chemical backwash. Note: only one membrane module should be backwashed at a time. The modules can be isolated by closing the permeate valves (there are valves per module)



2) Turn off all blowers in the membrane tank to be backwashed (B-601)
3) Turn the MV-701/702 motorized valve to hand (“H”) then turn pump P-801 to hand (“H”) until the backwash tank has drained.
4) Turn pump P-801 to off (“O”) and then turn the MV-701/702 motorized valve to off (“O”).
5) Let membranes soak for 45 mins or so.
6) After soaking membranes, turn the blowers back on (B-601) and allow blowers to scour for ~15 minutes.
7) After the 15 minute scour turn all valves and pump back to auto (“A”)
8) Turn SV-801 solenoid valves to off (“O”)

© 2017 by **newterra**, ltd.
All rights reserved. No part of this document may be reproduced or transmitted in any form or by any means, electronic, mechanical, photocopying, recording, or otherwise, without prior written permission of **newterra** ltd.

9) Enable membranes by holding down the enable membrane button for about 5 seconds
10) Allow membranes to permeate for 5 minutes, and then turn SV-801 solenoid valves back to auto (“A”)
11) Record TMP and flux, and ensure that the permeability has recovered
12) Repeat procedure for the second membrane module.

7.3.2 Membrane Recovery Cleaning

The membrane recovery cleaning is to be done once a year at a minimum. On certain occasions, membrane cassette may need to be inspected for membrane integrity (suspect of membrane deterioration, membrane permeability performance does not recover after the cleaning, etc.).



Disable operation of the membrane tank by pressing the disable membrane button on the screen.

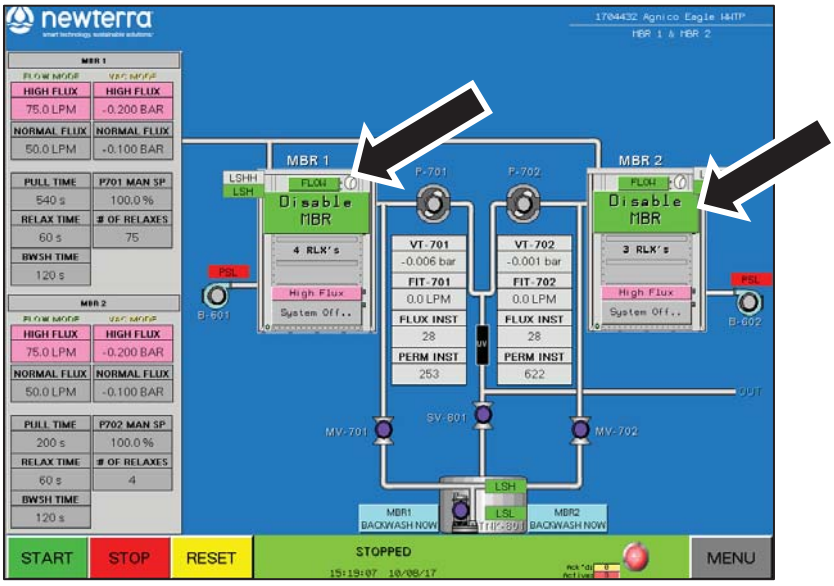

For better cleaning performance, it is recommended:

- Potable water is used
- Water temperature is above 20 ^{0}C (better cleaning efficiency if water temperature ranges from 20 to 30 ^{0}C)

© 2017 by **newterra**, ltd.
All rights reserved. No part of this document may be reproduced or transmitted in any form or by any means, electronic, mechanical, photocopying, recording, or otherwise, without prior written permission of **newterra** ltd.

newterra ltd.
1291 California Avenue, Brockville, ON K6V 5W3
(800) 420-4056 / www.newterra.com

7.3.2.1 Step 1 - Preparation

1. Turn off air scour – B-601/602

2. Drain all mixed liquor from the membrane.

3. Open the MBR tank hatch. Clean (wash down) the membrane tank with water and vacuum out the dirty liquid. Close the MBR tank hatch.

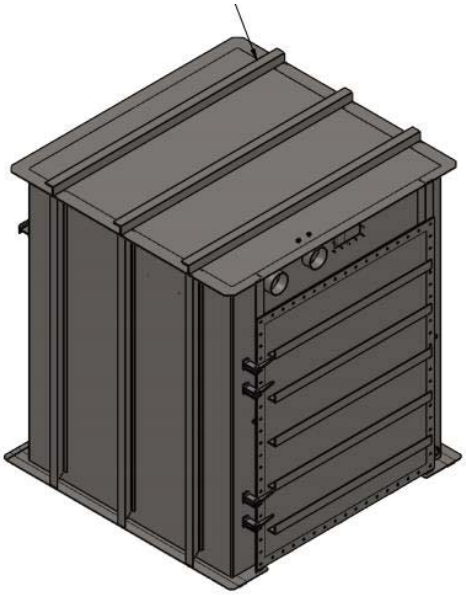

4. Fill the membrane tank with potable water until the membranes are completely covered. The membrane tank (TNK-601/2) holds approx. 8.0 m3 / 6000L.

7.3.2.2 Step 2 – Cleaning with High pH Solution

This step is to be done if membrane fouling is a result of high FOG. Note: FOG in influent wastewater should be maintained below 30 mg/L.

5. Confirm that the membrane tank (TNK-601/2) has been cleaned and refilled with water (Section 7.3.2.1).

6. Add a suitable chemical – normally caustic soda (Sodium hydroxide (NaOH)) - to the membrane tank to raise the pH to 12.

    a. Volume of NaOH required can be calculated as follows. A starting dose for NaOH would be 400 mg/L. For example: if using a 50% solution of sodium hydroxide, approximately 0.5 L of solution would be required per m3 of membrane tank. Additional NaOH may be required depending on the alkalinity of the water. The operator should measure pH after addition of 400 mg/L and add more until the pH is 12.

© 2017 by **newterra**, ltd.
All rights reserved. No part of this document may be reproduced or transmitted in any form or by any means, electronic, mechanical, photocopying, recording, or otherwise, without prior written permission of **newterra** ltd.

newterra ltd.
1291 California Avenue, Brockville, ON K6V 5W3
(800) 420-4056 / www.newterra.com

b. TNK-601 holds approx. 8 m3 or 8000L.

7. Turn on air scour for 2 min to mix the solution and turn it off during membrane soak.

8. Allow membranes to soak for 1 to 2 hours.

9. Drain spent solution.

7.3.2.3 Step 3 - Cleaning with Sodium Hypochlorite (NaOCl)

1. Turn off air scour

2. Confirm that the membrane tank (TNK-601) has been cleaned and refilled with water (Section 7.3.2.1).

3. Add NaOCl into the membrane tank to a concentration of 500 mg/L as free chlorine (max. 1,000 mg/L). Turn on air scour for 2 min to mix the solution and turn it off during membrane soak.

   Volume of NaOCl required can be calculated with the following formula:

$$V_x = \frac{V_m \times 0.05}{C_s}$$

   $\boldsymbol{V_m}$: Volume of membrane tank - TNK-601 holds approx. 8.0 m3 / 8000L.
   $\boldsymbol{C_s}$: NaOCl concentration (%)
   $\boldsymbol{V_x}$: Volume of NaOCl required (m3 or Litre)

4. Keep the membranes soaked for 8 to 12 hours in the NaOCl solution (longer soak time required if severe fouling is evident).

5. Drain spent NaOCl solution.

6. Rinse membrane filter thoroughly with potable water by filling and draining the entire tank. Rinse waters are drained to the sump/recycle back to the headwork.

7. Repeat step 6 to ensure all NaOCl has been thoroughly removed.

© 2017 by **newterra**, ltd.
All rights reserved. No part of this document may be reproduced or transmitted in any form or by any means, electronic, mechanical, photocopying, recording, or otherwise, without prior written permission of **newterra** ltd.

newterra ltd.
1291 California Avenue, Brockville, ON K6V 5W3
(800) 420-4056 / www.newterra.com

7.3.2.4 Step 4 - Cleaning with Citric Acid

This step is only required in case of inorganic fouling caused by the high hardness. The recommended concentration is 2 g/L solution (up to 20 g/L).



Rinse membrane filter thoroughly with potable water to completely remove NaOCl solution before treatment with citric acid. Mixing NaOCl with citric acid releases toxic chlorine gas!

1. Turn off air scour
2. Confirm that the membrane tank (TNK-601) has been cleaned and refilled with water (Section 7.3.2.1).
3. Add Critic Acid into the membrane tank to a concentration of 2 g/L solution (up to 20 g/L) – reducing the membrane tank to a pH of 2.0.
    a. Volume of Critic Acid required can be calculated as follows. A starting dose for Critic Acid would be 2g/L (up to 20g/L). For example: if using a 50% solution of Critic Acid, approximately 3.2 L of solution would be required per m3 of membrane tank. Additional Critic Acid may be required depending on the alkalinity of the water. The operator should measure pH after addition of 2g/L and add more until the pH is 2.
    b. TNK-601 holds approx. 8 m3 or 6000L.
4. Keep the membranes soaked in the citric acid solution for 2 hours (longer soak time required if severe fouling is evident).
5. Drain spent citric acid solution, rinse membranes thoroughly with potable water and drain all the rinse waters. Spent citric acid solution and rinse waters are drained.

7.3.2.5 Step 5 - Resume normal operation

Turn all equipment back to Automatic mode “A”, and enable the membranes.

7.3.2.6 Step 6 - Checking Permeability

Normal permeability after cleaning: 200 to 300 LMH/bar.

Repeat the cleaning procedures If normal permeability is not achieved.

© 2017 by **newterra**, ltd.
All rights reserved. No part of this document may be reproduced or transmitted in any form or by any means, electronic, mechanical, photocopying, recording, or otherwise, without prior written permission of **newterra** ltd.

newterra ltd.
1291 California Avenue, Brockville, ON K6V 5W3
(800) 420-4056 / www.newterra.com

Note: Membrane maintenance (CEB) and recovery cleaning has to be recorded according to Membrane Cleaning Log Sheet presented in Appendix J of the manual.

7.3.3 Membrane Physical Check



***WARNING**: A membrane cassette that has been in operation weighs more than dry membrane cassette before installation.*
Failure to comply with the instructions provided in this manual can cause equipment & property damage or severe personal injury, and will render the warranty null and void.

To removing membrane module from membrane tank

This procedure is required if the membranes are being inspected as part of routine maintenance for physical check or being replaced.



Once membrane inspection or replacement has begun, it must be completed promptly. It is important that the membranes DO NOT DRY OUT OR FREEZE during this procedure.

1. Confirm that the eStop switch on the main panel is pushed in. Confirm that the Main Disconnect is ON. Stop the system operations by using the HMI screen button.

2. Empty the MBR tank (TNK-601) via the tank drain valve or recycle back to Aeration Tank using P-601.

3. Open the MBR tank hatch.

4. Wash remainder of waste water in the tank with reuse water and vacuum out.

5. Install the cassette rails and Disconnect the permeate hoses from the top of the membranes.

6. Slide out the cassette and further clean the membranes.

Membrane module replacement - ***If membranes require changing*** verify membrane modules are secured within the membrane tanks after re-installing the new modules – i.e. verify wheel chocks are in the correct location and that there is no lateral movement (less than an inch) of the membrane modules on the wheel tracks in the tank.

7. Remove the membranes from the cassette. NOTE. The membranes are triple stacked. The bottom membrane has a plug in the bottom opening. Do not remove this plug. Note the membrane orientations for re-installation. The membranes are joined together with either a PVC union with two O-Rings on each side OR clear PVC hose and hose clamps.

© 2017 by **newterra**, ltd.
All rights reserved. No part of this document may be reproduced or transmitted in any form or by any means, electronic, mechanical, photocopying, recording, or otherwise, without prior written permission of **newterra** ltd.

newterra ltd.
1291 California Avenue, Brockville, ON K6V 5W3
(800) 420-4056 / www.newterra.com

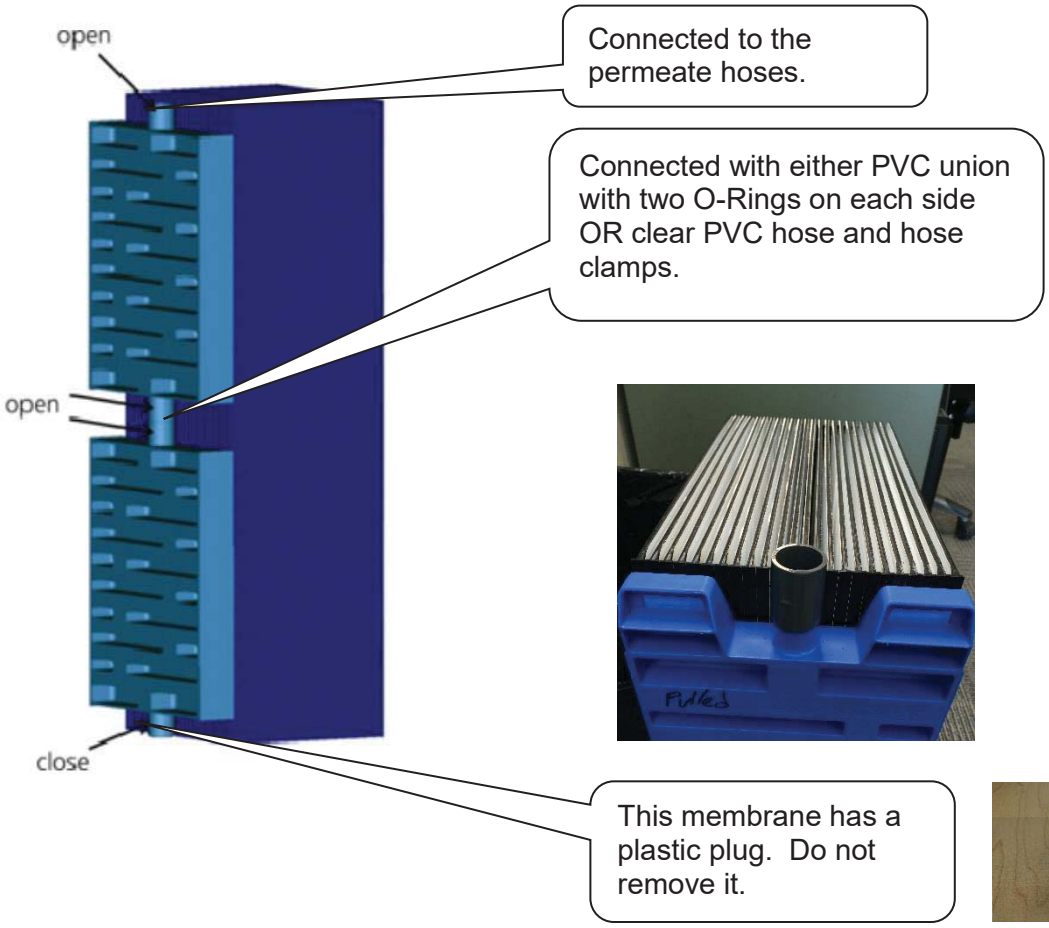

8. After membranes are separated, wash with clean water. Remove the blue backing plate and gently separate the membrane plates and clean with water to remove any debris. Replace backing plate.

© 2017 by **newterra**, ltd.
All rights reserved. No part of this document may be reproduced or transmitted in any form or by any means, electronic, mechanical, photocopying, recording, or otherwise, without prior written permission of **newterra** ltd.





9. Place bottom membrane cassettes in the MBR tank and then integrate top membranes into the triple stack configuration. Slide in the cassette and reconnect the permeate hoses. Close the MBR tank door and start system operation.

© 2017 by **newterra**, ltd.
All rights reserved. No part of this document may be reproduced or transmitted in any form or by any means, electronic, mechanical, photocopying, recording, or otherwise, without prior written permission of **newterra** ltd.

newterra ltd.
1291 California Avenue, Brockville, ON K6V 5W3
(800) 420-4056 / www.newterra.com

7.4 Sludge Decanting (TNK-901)

In order to maintain an optimal concentration of mixed liquor suspended solids (MLSS) (typically 10 g/L), a portion of the mixed liquor is periodically wasted by pumping from the Aeration Tank (TNK-501) to the sludge holding tank (TNK-901). Wasted sludge in the sludge holding tank is thickened by decanting supernatant back to the screen tank. Thickened sludge accumulates in the sludge holding tanks until it is eventually pumped out for disposal.

Excess sludge will be wasted by P-503 from the Aeration Tank (TNK-501) every 10 mins at noon. See below.

Tag	Description	Factory Setpoint	Setpoint Range and Units
P503 WASTE HOUR	When P-503 will waste	12pm	0-23
P503 WASTE SP	Time that P-503 wastes for	10min	0-99

In order to decant the water from the sludge, the air to TNK-901 diffuser must be turned off. See valve location below.

After the sludge has settled, that the operator would open the appropriate valve on TNK-901 to decent off the water.

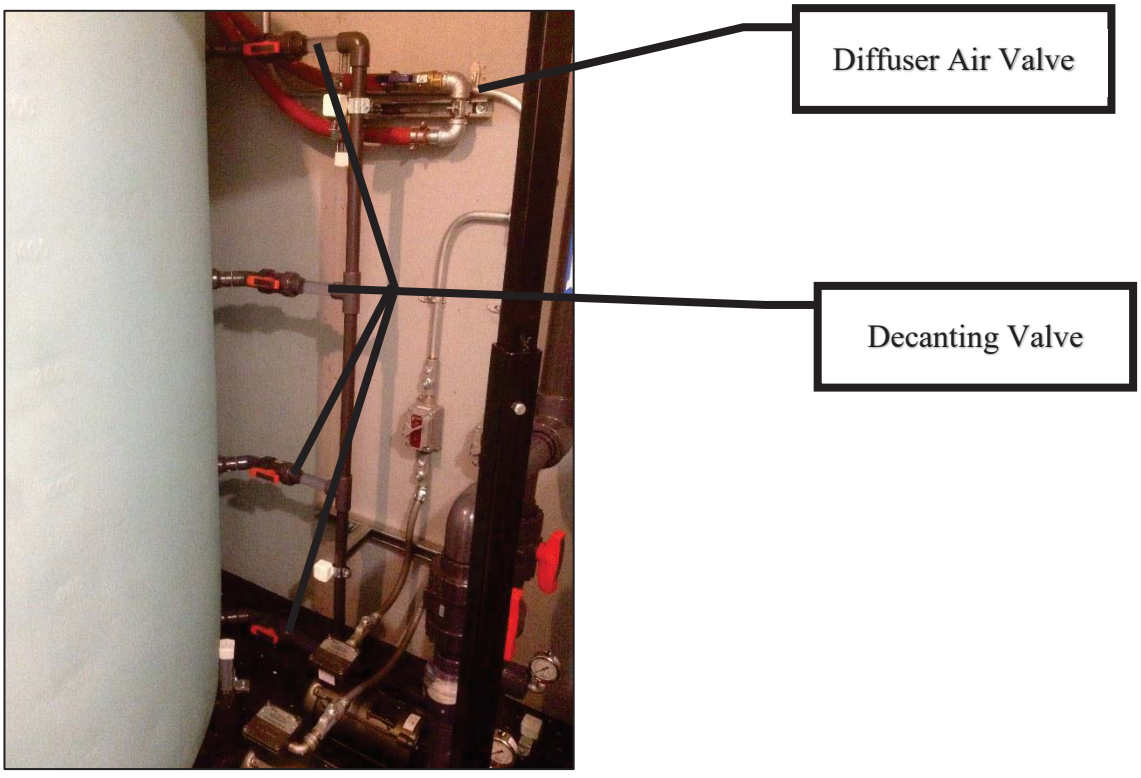

© 2017 by **newterra**, ltd.
All rights reserved. No part of this document may be reproduced or transmitted in any form or by any means, electronic, mechanical, photocopying, recording, or otherwise, without prior written permission of **newterra** ltd.

newterra ltd.
1291 California Avenue, Brockville, ON K6V 5W3
(800) 420-4056 / www.newterra.com

7.5 Trouble Shooting

7.5.1 MBR Membrane Fouling

Introduction

MBR operation relies critically on the ability of the membrane unit to pass all flow incoming to the plant. If membrane permeability is impaired, the MBR plant cannot process all flow with potentially catastrophic results even though effluent quality remains consistently high. This contrasts with typical operation of activated sludge system where the plant hydraulic capacity is rarely exceed but effluent quality is much more variable. Hence, membrane fouling (and associated reduction of flux or increase of TMP) remains as an operational challenge.

Membrane Fouling in MBR is a result of the interaction between the incoming water quality, mixed liquor filterability, system operation condition, and membrane material. There are four categories of membrane fouling. They are microbial fouling, particle/colloids fouling, inorganic fouling, and organic fouling. A brief description on the nature of fouling and control measures is summarized below.

7.5.1.1 Microbial/Biological Fouling

Microbial fouling is a result of formation of biofilms on membrane surfaces. Living materials, such as bacteria, fungus and algae, or soluble microbial products (SMP) and extracellular polymetric substances (EPS) bound to the activated sludge attach to the membrane; they start to multiple and produce EPS to form a viscous, slimy, hydrated gel. EPS typically consists of heteropolysaccharides and have high negative charge density. This gel structure protects bacterial cells from hydraulic shearing and from chemical attacks of biocides such as chlorine.

7.5.1.2 Particulate/colloid Fouling

This type of fouling may be associated with high concentrations of colloidal solids present in mixed liquor. In most cases, particles and colloids do not really foul the membrane because the flux decline caused by their accumulation on the membrane surface is largely reversible by hydraulic cleaning measures such as backwash and air scouring. However, the accumulation of solids between the membranes can create increased membrane resistance to permeation and permanent physical membrane damage.

To distinguish the different fouling phenomena, particles and colloids here are referred to biologically inert particles and colloids that are inorganic in nature.

© 2017 by **newterra**, ltd.
All rights reserved. No part of this document may be reproduced or transmitted in any form or by any means, electronic, mechanical, photocopying, recording, or otherwise, without prior written permission of **newterra** ltd.

newterra ltd.
1291 California Avenue, Brockville, ON K6V 5W3
(800) 420-4056 / www.newterra.com

7.5.1.3 Inorganic Fouling

Inorganic fouling or precipitative fouling is caused by the accumulation of inorganic precipitates such as metal hydroxides, and “scales” on membrane surface or within pore structure. Precipitates are formed when the concentration of chemical species exceeding their saturation concentrations. Scale can be caused by high pH and extremely hard feed water. For the ultrafiltration (UF) membranes in our MBR system, inorganic fouling can exist most likely due to interactions between ions and other fouling materials (i.e., organic polymers) via chemical bonding.

7.5.1.4 Organic Fouling

Organic fouling is the attachment of materials such as oil or grease to the membrane surface. It is common in MBR systems used for treating industrial effluent. Organic fouling often leads to surface and internal pore fouling. More importantly, organic fouling progressively leads to biological fouling (i.e., biofilm growth/build up on membrane surface). Sometimes the adsorption process is irreversible when the organic substances are hydrophobic or positively charged polymers with high molecular weight. Such organic substances including organics present as an emulsion must be removed in the pretreatment.

The following pictures are examples of clean membranes





The following pictures are examples of fouled membranes

© 2017 by **newterra**, ltd.
All rights reserved. No part of this document may be reproduced or transmitted in any form or by any means, electronic, mechanical, photocopying, recording, or otherwise, without prior written permission of **newterra** ltd.

newterra ltd.
1291 California Avenue, Brockville, ON K6V 5W3
(800) 420-4056 / www.newterra.com






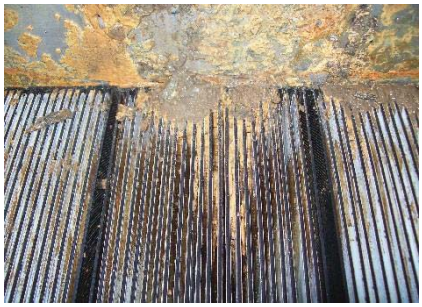

7.5.1.5 Fouling Prevention

Control of fouling and clogging in practice is generally limited to six main strategies:

1. Applying appropriate pretreatment to the feed water. Fine screen helps to eliminate the build-up of trash, hair, lint and other fibrous materials, and decrease the risk of solids accumulation.

2. Maintaining operation within the design conditions, such as HRT, SRT, MLSS, temp, BOD/COD loading, pH, DO, F/ M ratio. Sludge wasting is a key in controlling the target operating SRT (typically ≥ 15 day) in the system. Table F.1 shows some examples.

Relationship between various operating parameters and their effect on membrane fouling

Parameter	**Effect on membrane fouling**
MLSS concentration ↑ **or** ↓	Fouling potential ↑
SRT ↑ **or** ↓	Fouling potential ↑
HRT ↓	Fouling potential ↑
Temperature ↓	Viscosity ↑ **=>** membrane permeability ↓
Filamentous bacteria ↑	Viscosity ↑ **=>** membrane permeability ↓
Air scour intensity ↑	membrane permeability ↑
EPS ↑	Fouling rate ↑
SMP ↑	Fouling potential ↑

© 2017 by **newterra**, ltd.
All rights reserved. No part of this document may be reproduced or transmitted in any form or by any means, electronic, mechanical, photocopying, recording, or otherwise, without prior written permission of **newterra** ltd.

newterra ltd.
1291 California Avenue, Brockville, ON K6V 5W3
(800) 420-4056 / www.newterra.com

3. Employing appropriate physical or chemical cleaning protocols. For example, sodium hypochlorite and citric acid solutions are used to remove organic and inorganic foulants respectively.

4. Chemically or biochemically modifying the mixed liquor, such as addition of coagulants and powdered activated carbon (mostly in industrial effluent).

5. Reducing the flux. Particulate/colloid fouling is "reversible" in the sense that a reduction of the forward flux (through lowering of the membrane flux or solids concentration) or an increase of backwash intensity restores membrane permeability.

6. Ensure sufficient air scouring is being maintained to slough off excessive biofilm layer on the membrane surface.

7.5.1.5 MBR WWTP Fouling Control & Troubleshooting Chart

Combination of membrane physical cleaning operations as air **scouring, backwashing and relaxation** are efficient in membrane fouling control.

7.5.1.5.1 Air Scouring

Aeration generates a shear stress at the membrane surface, which provides a scouring action and reduces membrane cake fouling.

Membrane air scouring check is essential procedure for newterra MBR WWTP. Air scour has to be observed for uniformity of bubbling action all across the membrane module/cassette on regular basis. It is easy to observe through clear window in membrane tank. Operator should note any unusual patterns of air distribution. Operator has to check for:

- damage of air diffusers and if this occurs, empty the tank and fix the diffuser;
- air leakages: if this occurs, tighten up the fittings.

If there is insufficient air scouring, localized dewatering (**clogging, sludging, caking and plugging**) may occur and as a result, membrane fouling occurs.



Proper air scouring in membrane tank



Uneven aeration in membrane tank

© 2017 by **newterra**, ltd.
All rights reserved. No part of this document may be reproduced or transmitted in any form or by any means, electronic, mechanical, photocopying, recording, or otherwise, without prior written permission of **newterra** ltd.

newterra ltd.
1291 California Avenue, Brockville, ON K6V 5W3
(800) 420-4056 / www.newterra.com

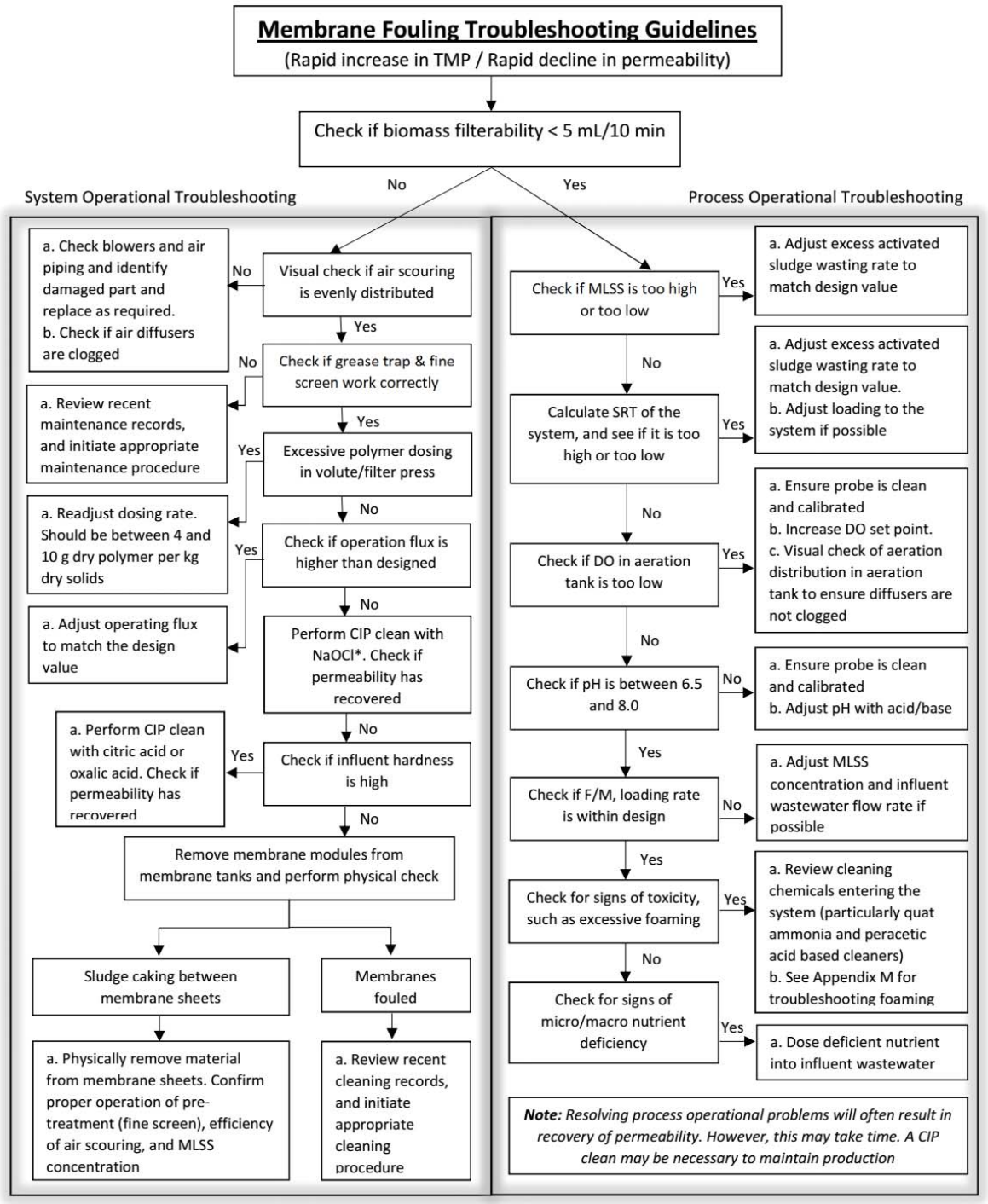

© 2017 by **newterra**, ltd.
All rights reserved. No part of this document may be reproduced or transmitted in any form or by any means, electronic, mechanical, photocopying, recording, or otherwise, without prior written permission of **newterra** ltd.

newterra ltd.
1291 California Avenue, Brockville, ON K6V 5W3
(800) 420-4056 / www.newterra.com

7.5.2 MBR Alarm Trouble Shooting

Alarm Name	Alarm Location	Alarm Description	Beacon Status	Troubleshooting Recommendation	Remedy Action
PLC ALM	CP	SHUTDOWN PLC Fault	FLASH	Turn off entire system. Wait 10 seconds before restoring power.	Please contact newterra -PLC problem
PWR FAIL ALM	CP	WARNING, Power Fail	SOLID	Power has failed to the unit	Press Reset
ESTOP ALM	Panel	E-Stop	FLASH	Check all locations of E-Stop Buttons to ensure they are not pushed in.	Pull out E-Stop
TALL-201	Clarifier	Temperature alarm low low	FLASH	Check for building heater malfunction. Assess influent water temperature	Replace heater. Take action to increase influent water temperature.
B-201/ B-202 Fail	Clarifier	Blower B-201/B-202 has potentially failed	FLASH	Check blower for failure. Check breaker	Replace blower B-201/B-202.
LAHH-401	SCREEN DISCHARGE	High high level alarm in Screen Module discharge tank	FLASH	Potential discharge tank pump P-401/P-402 failure Check Breaker	Replace pump
P-401 or P-402 FAIL	SCREEN PUMP	P-401/P-402 has potentially failed	FLASH	P-401/P-402 for failure. Check Breaker	Replace pump P-401/P-402

© 2017 by **newterra**, ltd.
All rights reserved. No part of this document may be reproduced or transmitted in any form or by any means, electronic, mechanical, photocopying, recording, or otherwise, without prior written permission of **newterra** ltd.

newterra ltd.
1291 California Avenue, Brockville, ON K6V 5W3
(800) 420-4056 / www.newterra.com

Alarm Name	Alarm Location	Alarm Description	Beacon Status	Troubleshooting Recommendation	Remedy Action
SCN-401 Or SCN-402 FAIL	SCREEN	Potential screen paddle wheel motor failure.	FLASH	Check screen motor for failure. Check Breaker	Replace motor
LAHH-301	EQ Tank	Level Alarm High High, EQ Tank	FLASH	Investigate if pump P-301, P-302 has failed, or system is receiving higher than design flow, or membrane is fouling.	Replace pump, divert flow, perform membrane chemical cleaning.
LALL-301	EQ TANK	Low Low Level Alarm	WARN	Check for level transmitter operation or upstream pipe obstruction or pump failure.	Clear obstruction or repair/replace faulty equipment.
P-301 or P-302 FAIL	EQ PUMP	Pump P-301 has potentially failed	FLASH	Check pump P-301 or P-302 for failure or if it is unplugged. Check Breaker	Plug in or replace pump P-301 or P-302.
PAL-301	EQ TANK	Pressure Alarm low on air inlet to EQ Tanks	FLASH	Check if blower B-301 or B-302 have failed. Check Breaker	Replace blowers if required.
LAHH-501 or LAHH-502	AERATION TANK	High High level alarm in Aeration Tank	FLASH	Check pump P-501/P-502 for failure	Replace faulty pump
LALL-501	AERATION TANK	Low Low Level Alarm	WARN	Check level in the tank and ensure Level switch or transmitter is functioning correctly.	Clear obstruction or repair/ replace faulty equipment

© 2017 by **newterra**, ltd.
All rights reserved. No part of this document may be reproduced or transmitted in any form or by any means, electronic, mechanical, photocopying, recording, or otherwise, without prior written permission of **newterra** ltd.

newterra ltd.
1291 California Avenue, Brockville, ON K6V 5W3
(800) 420-4056 / www.newterra.com

Alarm Name	Alarm Location	Alarm Description	Beacon Status	Troubleshooting Recommendation	Remedy Action
PHAL-501	AERATION TANKAERATION TANK	Low pH AlarmLow low in Aeration Tank	WARN WARN	Check if caustic injection system is working and or needs refill Check if the pH probe is fouled or if the probe requires calibration. Check setpoint temperature.	Replace caustic injection system or refill. Clean pH probe. Calibrate pH probe. Adjust set point temperature.
PHAH-501	AERATION TANKAERATION TANK	High pH alarm	WARN WARN	Check if caustic injection system is malfunctioning or if PH probe is calibrated or fouled.	Replace caustic soda injection. Calibrate pH probe or clean sensor
DOAL-501	AERATION TANKAERATION TANK	Dissolved Oxygen Alarm low	WARN WARN	Investigate if there is septic smell & check the mixing pattern. If system smells septic with no uniform mixing, air diffuser might be clogged, blowers may not work or plant is overloaded. Ensure DO probe is calibrated and clean.	Increase aeration rate to maintain DO above 1.5 mg/L, or replace clogged diffuser, or change blower, or calibrate or clean DO probe. Replace caustic soda injection. Calibrate pH probe or clean sensor
P-501 or P-502 FAIL	AERATION TANK	Pump P-501 or P-502 has potentially failed	FLASH WARN	Check pump P-501 or P-502 for failure. Check Breaker	Replace pump P-501 or P-502.

© 2017 by **newterra**, ltd.
All rights reserved. No part of this document may be reproduced or transmitted in any form or by any means, electronic, mechanical, photocopying, recording, or otherwise, without prior written permission of **newterra** ltd.

newterra ltd.
1291 California Avenue, Brockville, ON K6V 5W3
(800) 420-4056 / www.newterra.com

Alarm Name	Alarm Location	Alarm Description	Beacon Status	Troubleshooting Recommendation	Remedy Action
P-503 FAIL	AERATION TANK	Pump P-503 has potentially failed	FLASH FLASH	Check pump P-503 for failure. Check Breaker	Replace pump P-503
PAL-501	AERATION	Blower motor tripped off on overload Pressure	WARN FLASH FLASH	Check blower air line equipment and blower motor Check if 500 series blowers have failed	Replace faulty equipment Replace blowers if required
PAL-601 or PAL-602	MEMBRANE TANK	Pressure Alarm low on air inlet to correspondi ng Membrane Tank. Blower motor tripped off on overload	FLASH WARN	Check if blower B-601 or B-602 has failed. Check blower air line equipment and blower motor	Replace blower if required. Replace faulty equipment.
LAHH-601 or LAHH-602	MEMBRANE TANK	High High level alarm in Membrane	FLASH WARN	Check pump P-601 for failure	Replace pump P-601 Replace faulty equipment
FLT-701 or 702	PERM VFD 1 or 2	VFD Fault	FLASH WARN	Check VFD fault	Replace pump and VFD Replace faulty equipment
VTAL-701 or 702	MEMBRANE 1 or TANK 2	Low vacuum alarm on permeate line from MBR1 or MBR2	FLASH WARN	Check for vacuum leak and membrane or pump fail	Repair and replace as required

© 2017 by **newterra**, ltd.
All rights reserved. No part of this document may be reproduced or transmitted in any form or by any means, electronic, mechanical, photocopying, recording, or otherwise, without prior written permission of **newterra** ltd.

newterra ltd.
1291 California Avenue, Brockville, ON K6V 5W3
(800) 420-4056 / www.newterra.com

Alarm Name	Alarm Location	Alarm Description	Beacon Status	Troubleshooting Recommendation	Remedy Action
VTAH-701 or 702	MEMBRANE 1 or TANK 2	High vacuum alarm on permeate line from MBR1 or MBR2	FLASH WARN	Check for closed valve on permeate side or check membranes for severe fouling	Open valve or clean membranes Repair and replace as required
FTAL-701 or 702	MEMBRANE 1 or TANK 2	Low permeate flow alarm on permeate line from MBR1 or MBR2	FLASH WARN	Check for closed valve or permeate pump failure Check for closed valve on permeate side or check membranes for severe fouling	Open valve or repair/ replace permeate pump Open valve or clean membranes Repair and replace as required
FTAH-701 or 702	MEMBRANE 1 or TANK 2	High permeate flow alarm on permeate line from MBR1 or MBR2	FLASH WARN	Check for vacuum leak or membrane failure and operation of permeate pump	Repair and replace as required Open valve or repair/ replace permeate pump Open valve or clean membranes
UVA-811 or 812	PERM	UV-811 or UV-812 has failed.	FLASH WARN	Check if UV lamp has failed	Change UV lamp
UVA-BOTH	PERMEATE	UV-light 811 and UV-812 have failed	FLASH WARN	Check if UV lamp has failed Check if UV lamp has failed Check if UV lamp has failed	Change UV lamp Change UV lamp Change UV lamp Repair and replace as required
BACKWASH1 or BACKWASH2 FAILED	BACKWASH PERM1 or PERM2	Backwash to TNK-601 or TNK-602 failed	FLASH WARN	Backwash did not complete – system skipped backwash	Check function of back-wash pump and valve

© 2017 by **newterra**, ltd.
All rights reserved. No part of this document may be reproduced or transmitted in any form or by any means, electronic, mechanical, photocopying, recording, or otherwise, without prior written permission of **newterra** ltd.

newterra ltd.
1291 California Avenue, Brockville, ON K6V 5W3
(800) 420-4056 / www.newterra.com

Alarm Name	Alarm Location	Alarm Description	Beacon Status	Troubleshooting Recommendation	Remedy Action
P-901 FAIL	MEMBRANE PERM 1	Pump P-901 has potentially failed	FLASH WARN	Check pump P-901 for failure Check for vacuum leak or membrane failure and operation of permeate pump	Replace pump P-901 Repair and replace as required
TALL-7901	BLDG-7901	Low low Temperature alarm for building	FLASH WARN	Check if electric heaters have failed or if BLDG door is open	Repair or replace heater(s) if required. Repair and replace as required
B-7901 FAIL	AIR EXCHANGE BLDG-7901	Potential blower failure	FLASH WARN	Check motor breaker	Turn breaker on

7.5.3 MBR Process Trouble Shooting

The following **newterra MicroClear™ MBR WWTP troubleshooting guide** can be used as a quick reference. If any of the problems discussed in this section or other difficulties persist, consult **newterra** ltd.

7.5.3.1 Biological System

Condition	Possible Cause	Potential Remedies
Mixed liquor is black or dark brown	Insufficient aeration is supplied for mixed liquor and/or plant is under-loading	Increase aeration rate and keep it above 1 mg/L Waste more sludge Increase influent feed rate if required
Mixed liquor concentration is too high or too low	Sludge wasting rates are incorrect	Review operation of the activated sludge process and revise the sludge wasting rates as necessary
No mixing in tanks	Blowers failure	Check for electrical/blower failure, and replace blowers as necessary

© 2017 by **newterra**, ltd.
All rights reserved. No part of this document may be reproduced or transmitted in any form or by any means, electronic, mechanical, photocopying, recording, or otherwise, without prior written permission of **newterra** ltd.

newterra ltd.
1291 California Avenue, Brockville, ON K6V 5W3
(800) 420-4056 / www.newterra.com

Condition	Possible Cause	Potential Remedies
Unpleasant odour from tanks	Mechanical/electrical failure, e.g. blower and air piping are not operating correctly	Ensure good order of mechanical/electrical components
	System is overloading	Check the maximum flow and BOD loading rate to the MBR unit to see whether it is within the limits as per design specification Check the quality and contents of the flow into the MBR unit for any abnormal or prohibited substances
Effluent quality does not meet discharge criteria	Mixed liquor characteristics are not within proper operating standards	Improve the process operating conditions of the activated sludge system (confirm operating SRT and loading is within design and no present of toxic compounds)

© 2017 by **newterra**, ltd.
All rights reserved. No part of this document may be reproduced or transmitted in any form or by any means, electronic, mechanical, photocopying, recording, or otherwise, without prior written permission of **newterra** ltd.

newterra ltd.
1291 California Avenue, Brockville, ON K6V 5W3
(800) 420-4056 / www.newterra.com

7.5.3.2 Foaming

Condition	Possible Cause	Potential Remedies
Excessive foaming (white foam accumulating over the liquid surface) in aeration and/or membrane tanks	Influent inhibition/biomass toxicity occurs	Check the quality and contents of the flow into the MBR system for any abnormal or prohibited substances
	MBR system is overloading	Check the flow rates, BOD/COD loading and F:M ratio and then reduce flow/loading and/or increases MLSS concentration accordingly
	Mixed liquor characteristics are not within proper operating standards	Improve the operating conditions of the activated sludge system
	Membrane air scour system is over aerating	Review operation of the membrane scour system
	Foam control strategies are not operating correctly	Review foam removal equipment, anti-foam chemical dosing system (if applicable)
	MBR system are undergoing start-up	Remove foam and use approved defoamer as necessary (consult **newterra** Ltd);
		Control foam and ensure sprayer pump is running at all time during start-up,
		Ensure that MLSS concentration is increased, after start-up is completed

© 2017 by **newterra**, ltd.
All rights reserved. No part of this document may be reproduced or transmitted in any form or by any means, electronic, mechanical, photocopying, recording, or otherwise, without prior written permission of **newterra** ltd.

newterra ltd.
1291 California Avenue, Brockville, ON K6V 5W3
(800) 420-4056 / www.newterra.com

7.5.3.3 Permeate

Condition	Possible Cause	Potential Remedies
Cloudy permeate (The permeate turbidity or TSS is above the specific setpoint)	Faulty operation of instrumentation	Confirm proper operation of control systems and instrumentation, clean, replace, recalibrate as required
	Membrane cassette sheets are damaged	Take out membranes and visually inspect the individual membrane sheets, and repair or replace the membrane sheets as necessary
	Membrane module assembly are damaged	Identify damaged part, e.g. leaking tube, pipe, O-ring, gasket, and replace as required
	Permeate piping leak	Identify the leak and repair as required, e.g. tighten connections
Lower permeate flow than expected	Mechanical equipment failure	Ensure proper operation of permeate pumps
	Incorrect operation of permeate piping and valves	Check permeate piping for leaks
High TMP and lower permeability than expected	Membrane sludging	Confirm proper operation of pretreatment Take out membranes and visually inspect the individual membrane sheet. Remove sludge material from membrane sheets**
	Mixed liquor characteristics are contributing to poor filterability	Test the filterability of the mixed liquor; review and improve operating conditions of the activated sludge system as necessary
	Desired operating flux or flowrate is higher than design	Adjust operational flux or flowrate to match the design flux or flowrate

© 2017 by **newterra**, ltd.
All rights reserved. No part of this document may be reproduced or transmitted in any form or by any means, electronic, mechanical, photocopying, recording, or otherwise, without prior written permission of **newterra** ltd.

newterra ltd.
1291 California Avenue, Brockville, ON K6V 5W3
(800) 420-4056 / www.newterra.com

Condition	Possible Cause	Potential Remedies
	Membrane surface is fouled	Review recent cleaning records, and initiate appropriate cleaning procedure
	MLSS is too high, SRT is too low or insufficient dissolved oxygen in aerobic zone	Improve the characteristics of sludge by adjusting the activated sludge process operation
Uneven permeate and/or MLSS flow between membrane tanks	More recent completion of maintenance or recovery cleanings for one of the membrane tank	Review membrane cleaning records
	Uneven flow distribution to each membrane tank	Confirm proper operation of flow distribution system (pumps/control valves, etc)

© 2017 by **newterra**, ltd.
All rights reserved. No part of this document may be reproduced or transmitted in any form or by any means, electronic, mechanical, photocopying, recording, or otherwise, without prior written permission of **newterra** ltd.

newterra ltd.
1291 California Avenue, Brockville, ON K6V 5W3
(800) 420-4056 / www.newterra.com

7.5.3.4 Membrane air system

Condition	Possible Cause	Potential Remedies
Uneven aeration of membrane module	Membrane diffuser clogging; Loose air piping connections	Wash or clean the diffusers Tighten pipe connections
Uneven aeration in membrane tank	Membrane diffusers or membrane modules are not level	Level the equipment
Air scour rate fails to reach the specified values	Improper operation of membrane blowers and/or air scour system, malfunctioning diffusers	Repair or replace the blowers Review and repair air piping as necessary Repair the diffusers

7.5.3.5 Membrane Cleaning

Condition	Possible Cause	Potential Remedies
Increased frequency of cleaning	Mixed liquor characteristics are contributing to poor filterability Improper operation of membrane cleaning Membrane operate at higher flux than designed	Test the filterability of the mixed liquor Review and improve operating conditions of the activated sludge system as necessary Confirm cleaning is done correctly, such as controls, cleaning cycles or durations, chemical concentration, and dosing system Review MBR flow records
Cleaning fails to recover flux, permeability of membranes	Improper operation of membrane cleaning Improper operation of permeate pumps, piping, and control valves Irrecoverable fouling of membranes	Confirm cleaning is operated correctly, such as controls, cleaning cycles or durations, and chemical concentration etc. Repair equipment as necessary Review operating history with the goal of identifying contributing factors to fouling;

© 2017 by **newterra**, ltd.
All rights reserved. No part of this document may be reproduced or transmitted in any form or by any means, electronic, mechanical, photocopying, recording, or otherwise, without prior written permission of **newterra** ltd.

newterra ltd.
1291 California Avenue, Brockville, ON K6V 5W3
(800) 420-4056 / www.newterra.com

Condition	Possible Cause	Potential Remedies
		Perform membrane autopsy on membrane cassettes

7.5.3.6 Mechanical / Electrical Issues

Condition	Possible Cause	Potential Remedies
Indicator light at the control panel is on.	Air intake is blocked	Clean intake screens on blower housing Check air filter on blower for blockage
	Air discharge or vent line is blocked	Check discharge line and vent line visually or with drain cleaning equipment for obstructions
	MBR is flooded	Determine the cause of flooding, e.g., line obstruction, high flows, etc., and fix it
	Blower failed	Determine if blower failure was caused by an obstructed intake or discharge line Investigate overheating (i.e. internal thermal overload protection), short-circuiting, or other electrical failure, and mechanical failure (i.e. bearing failure) and correct it
Wastewater is backing up	Obstruction in the incoming sewer	Check the inlet pipe leading to the MBR visually or with drain-cleaning equipment
	Obstruction in the discharge piping	Check the permeate piping and later field piping visually or with drain-cleaning equipment
	Pumps failed	Check the operation of pumps as per pump manufacturer's specifications
	Flow rate to the MBR is too high	Check if the maximum flow rate to the MBR is within the limits as per design specification
Blower/pump not working	Fuse blown	Electrician to check
	Motor is overloading	Electrician to check
	Power failed	Electrician to check
System not in run mode	Kill switches are mistakenly pushed in	Ensure kill switches (on control panel/wall) are not pressed;
	Power failure/outage	Electrician to check

© 2017 by **newterra**, ltd.
All rights reserved. No part of this document may be reproduced or transmitted in any form or by any means, electronic, mechanical, photocopying, recording, or otherwise, without prior written permission of **newterra** ltd.

newterra ltd.
1291 California Avenue, Brockville, ON K6V 5W3
(800) 420-4056 / www.newterra.com

7.5.4 P-201/2, 301/2, 401/2, 501/2, 553/4, 551/2 - Trouble Shooting

TROUBLESHOOTING

1. Pump fails to build head pressure:

Check for:

a. Pump not primed.

b. Incorrect pump rotation.

c. Driver speed too low.

d. Suction line restricted.

e. Driver failure.

f. Plugged or damaged impeller.

g. Pump or impeller undersized.

h. Pump cavitation.

i. Improper impeller clearance.

2. Pump fails to provide enough flow rate.

Check for:

a. System resistance too high.

b. Pump undersized.

c. Pump not primed.

d. Driver speed too low.

e. Poor suction conditions.

f. Improper impeller clearance.

3. Excessive noise or vibration during operation.

Check for:

a. Motor bearing failing.

b. Pump cavitation.

c. Improper impeller clearance.

4. Leaking mechanical seal.

Check for:

a. Improper assembly.

b. Worn or cracked seal faces.

c. Abrasive material in fluid.

d. Liquid flashing at seal faces (Fluid temperature too high).

e. Seal pressure rating too low for the service.

f. Chemical attack of seal components.

g. Seal operated dry or with a liquid having poor lubricating properties.

5. Pump gradually loses pressure and head.

Check for:

a. Increasing temperature causing cavitation or liquid vaporization.

b. Driver failure.

c. Suction lift too high.

d. Air entering suction line.

6. Motor overheating.

Check for:

a. Excessive flow and amp draw (Throttle discharge).

b. Low voltage or frequency.

c. Flow rate too low with resulting heat rise.

d. Bearing failure.

e. System temperature too high.

© 2017 by **newterra**, ltd.
All rights reserved. No part of this document may be reproduced or transmitted in any form or by any means, electronic, mechanical, photocopying, recording, or otherwise, without prior written permission of **newterra** ltd.

newterra ltd.
1291 California Avenue, Brockville, ON K6V 5W3
(800) 420-4056 / www.newterra.com

7.5.5 P-701/702 Trouble Shooting

TROUBLESHOOTING

WARNING: Before making adjustments, disconnect power source and thoroughly bleed pressure from system prior to disassembly. Failure to do so could lead to electric shock or serious bodily harm.

Failure To Pump.

1. Motor will not start: Check power supply. Voltage must be ± 10% of nameplate rating when motor is in locked rotor condition. Check for faulty capacitor on 1 phase Models.
2. Motor runs and thermally kicks out: Check for excessive discharge pressure. Check for defective centrifugal switch on 1 phase Models. Increase ventilation to motor. Do not use less than #14 wire size.
3. Stator torn; possible excessive pressure: Replace stator, check pressure at discharge port.
4. Flexible joint broken; possible excessive pressure:

   Replace joint, check pressure at discharge port.
5. Wrong rotation (3 phase only): Rotation must be clockwise when facing pump from motor end. Reverse the connections of any two line leads to the motor.
6. Excessive suction lift or vacuum.

Pump Overloads.

1. Excessive discharge pressure: Check pressure at discharge port for maximum ratings given in Table 1.
2. Fluid viscosity too high: Limit fluid viscosity to 100 CP or 500 SSU.

Noisy Operation.

1. Excessive suction lift or vacuum: Maximum suction lift is 25 feet for water.
2. Suction line too small: Check pipe size. Be sure lines are free from obstructions.
3. Pump Cavitates: Pump speed is 1725 rpm. Viscosity of fluid should not exceed 100 CP or 500 SSU.
4. Flexible joint worn: Replace joint. Check pressure at discharge port.
5. Insufficient mounting: Mount to be secure to a firm base. Vibration induced noise can be reduced by using mount pads and short sections of hose on suction and discharge ports.

Seal Leakage.

1. Leakage at startup: If leakage is slight, allow pump to run several hours to let faces run in.
2. Persistent seal leakage: Faces may be cracked from freezing or thermal shock. Replace seal.

Pump Will Not Prime.

1. Air leak on suction side: Check pipe connections.

© 2017 by **newterra**, ltd.
All rights reserved. No part of this document may be reproduced or transmitted in any form or by any means, electronic, mechanical, photocopying, recording, or otherwise, without prior written permission of **newterra** ltd.

newterra ltd.
1291 California Avenue, Brockville, ON K6V 5W3
(800) 420-4056 / www.newterra.com

7.5.6 P-801 Trouble Shooting

CONDITION	COMMON CAUSES
A. Pump will not start or run.	Check fuse, low voltage, overload open, open or incorrect wiring, open switch, impeller or seal bound mechanically, defective capacitor or relay when used, motor or wiring shorted. Float assembly held down. Switch defective, damaged, or out of adjustment.
B. Motor overheats and trips overload or blows fuse.	Incorrect voltage, negative head (discharge open lower than normal) impeller or seal bound mechanically, defective capacitor or relay, motor shorted.
C. Pump starts and stops too often.	Float tight on rod, check valve stuck or none installed in long distance line, overload open, level switch(s) defective, sump pit too small.
D. Pump will not shut off.	Debris under float assembly, float or float rod bound by pit sides or other, switch defective, damaged or out of adjustment.
E. Pump operates but delivers little or no water.	Check strainer housing, discharge pipe, or if check valve is used vent hole must be clear. Discharge head exceeds pump capacity. Low or incorrect voltage. Incorrect motor rotation. Capacitor defective. Incoming water containing air or causing air to enter pumping chamber.
F. Drop in head and/or capacity after a period of use.	Increased pipe friction, clogged line or check valve. Abrasive material and adverse chemicals could possibly deteriorate impeller and pump housing. Check line. Remove base and inspect.

7.5.7 B-501/502 - Trouble Shooting

PROBLEM	POSSIBLE CAUSES	SOLUTION
Knocking	1. Unit out of time. 2. Distortion due to improper mounting or pipe strains. 3. Excessive pressure differential. 4. Worn gears. 5. Worn bearings.	1. Re-time impellers 2. Check mounting alignment and relieve pipe strains. 3. Reduce to manufacturer's recommended pressure. Examine relief valve, re-set if necessary. 4. Replace timing gears. 5. Replace bearings..
Excessive blower temperature.	1. Too much oil in gear case. 2. Too low operating speed. 3. Dirty air Filter. 4. Clogged filter or muffler. 5. Excessive pressure differential. 6. Worn impeller clearances. 7. Internal contact.	1. Reduce oil level. 2. Increase blower speed. 3. Clean or replace air filter 4. Remove cause of obstruction. 5. Reduce pressure differential across the blower. 6. Replace impeller. 7. Correct clearances.
Impeller end or tip drag.	1. Insufficient assembled clearances. 2. Case or frame distortion. 3. Excessive operating pressure. 4. Excessive operating temperature.	1. Correct clearances. 2. Check mounting and pipe strain. 3. Remove cause. 4. Remove cause
Lack of volume.	1. Slipping belts. 2. Worn clearances. 3. Dirty air filter	1. Tighten belts. 2. Re-establish proper clearances. 3. Clean or replace air filter.
Excessive bearing or gear wear.	1. Improper lubrication.	1. Correct lubrication level. Replace dirty oil.
Loss of oil.	1. Headplate, gear case or drive cover vents plugged. 2. Worn Seal.	1. Clean vents. 2. Replace seals.

© 2017 by **newterra**, ltd.
All rights reserved. No part of this document may be reproduced or transmitted in any form or by any means, electronic, mechanical, photocopying, recording, or otherwise, without prior written permission of **newterra** ltd.

newterra ltd.
1291 California Avenue, Brockville, ON K6V 5W3
(800) 420-4056 / www.newterra.com

7.5.8 B-301/302, B-601/602 - Trouble Shooting

Fault	Cause	Remedy	Carried out by
Motor does not start; no motor noise.	At least two power supply leads interrupted.	Eliminate interruption by fuses, terminals or power supply cables.	Electrician
Motor does not start; humming noise..	One power supply lead interrupted.	Eliminate interruption by fuses, terminals or power supply cables.	Electrician
	Impeller is jammed.	Open vacuum pump/compressor cover, remove foreign body, clean.	Service*)
		Check or correct impeller gap setting if necessary.	Service
	Impeller defective.	Replace impeller.	Service*)
	Rolling bearing on drive motor side or vacuum pump/compressor side defective.	Replace motor bearing or vacuum pump/compressor bearing.	Service*)
Protective motor switch trips when motor is switched on. Power consumption too high.	Winding short-circuit.	Have winding checked.	Electrician
	Motor overloaded. Throttling does not match specification on rating plate.	Reduce throttling.	Service*)
		Clean filters, mufflers and connection pipes if necessary.	Service*)
	Compressor is jammed.	See fault: "Motor does not start; humming noise." with cause: "Impeller is jammed.".	Service*)
Pump-motor unit does not generate any or generates insufficient pressure difference.	Leak in system.	Seal leak in the system.	Operator
	Wrong direction of rotation.	Reverse direction of rotation by interchanging two connecting leads.	Electrician
	Incorrect frequency (on pump-motor units with frequency converter).	Correct frequency.	Electrician
	Shaft seal defective.	Replace shaft seal.	Service*)
	Different density of pumped gas.	Take conversion of pressure values into account. Inquire with Service Department.	Service
	Change in blade profile due to soiling.	Clean impeller, check for wear and replace if necessary.	Service*)
Abnormal flow noises.	Flow speed too high.	Clean pipes. Use pipe with larger cross-section if necessary.	Operator
	Muffler soiled.	Clean muffler inserts, check condition and replace if necessary.	Service*)
Abnormal running noise.	Ball bearing lacking grease or defective.	Regrease or replace ball bearing.	Service*)
Compressor leaky.	Seals on muffler defective.	Check muffler seals and replace if necessary.	Service*)
	Seals in motor area defective.	Check motor seals and replace if necessary.	Service

*) Only when the maintenance manual is at hand: rectification by the operator.

© 2017 by **newterra**, ltd.
All rights reserved. No part of this document may be reproduced or transmitted in any form or by any means, electronic, mechanical, photocopying, recording, or otherwise, without prior written permission of **newterra** ltd.

newterra ltd.
1291 California Avenue, Brockville, ON K6V 5W3
(800) 420-4056 / www.newterra.com

7.5.9 LT-301/501 - Trouble Shooting

1.	**Symptom**:	***Transducer fails to give output of any kind.***
	Procedure:	Isolate the problem to either the transducer or the power supply/readout. See the Quick Check Procedures (above) for this check. If it can be determined that the transducer is no longer operable, remove it from service for further analysis. If the transducer output falls within the limits described above, the fault lies somewhere else in your system.
2.	**Symptom**:	***Transducer has failed and has been removed for analysis.***
	Procedure:	Inspect the cable for physical damage. Cuts in the cable jacket can result in liquid incursion into the transducer housing, which can cause permanent damage. If operational, the cable can be repaired by using a splice kit (P/N 830) supplied by Pressure Systems. Inspect the transducer housing. It should be intact and free of corrosion. If the outer surface of the transducer is pitted, this could be an indication of galvanic corrosion caused by stray ground currents. If this is the case, the transducer will probably require replacement. If the external case exhibits none of these characteristics, carefully unscrew the nosepiece and look into the pressure sensing end of the transducer. The concentric rings of the sensing diaphragm should be visible. If they are not, it could be that residue has accumulated on the diaphragm, preventing it from responding properly to pressure changes. The transducer can be cleaned by gently swishing the transducer back and forth in a bucket of warm, soapy water until the residue softens and washes off. (See **Cleaning Your Transducer**, page 8.) ***Under no circumstances should any object or tool be used to remove residue from the sensing diaphragm or else permanent damage will be done.*** If cleaning the diaphragm does not solve the problem, the transducer should be returned to the factory for repair or replacement.
3.	**Symptom**:	***Transducer develops a negative offset and gets worse over time (actual level exceeds specified level).***
	Procedure:	This may be a sign that moisture has entered the reference (vent) tube in the cable and is inside the transducer housing. This is usually the result of not maintaining the desiccant vent filter or of operating the transducer without a desiccant filter or aneroid bellows. If caught early enough, the transducer can be saved by coiling the cable and transducer in a pan and baking it in an oven at 50°C (122°F) for a minimum of 2 hours. *Be careful that the oven temperature does not exceed 50°C (122°F)* or both the transducer and the cable can be damaged. **Alternatively**, suspend both the cable and transducer in a vertical position (with vent tube down), overnight to allow water to drain from the transducer and vent tube.

© 2017 by **newterra**, ltd.
All rights reserved. No part of this document may be reproduced or transmitted in any form or by any means, electronic, mechanical, photocopying, recording, or otherwise, without prior written permission of **newterra** ltd.

newterra ltd.
1291 California Avenue, Brockville, ON K6V 5W3
(800) 420-4056 / www.newterra.com

4. **Symptom:** ***Transducer suddenly fails during or just after a nearby lightning event.***

   Procedure: This failure is usually caused by overvoltage due to ground transients resulting from a direct or indirect lightning event. These transients can travel distances of a mile or more. The transducer may be returned to the factory for repair and optional retrofit of our ***lightning protection system.*** This system carries a lifetime warranty against transducer damage due to lightning.

5. **Symptom:** ***Transducer response to pressure/level input changes becomes sluggish.***

   Procedure: This is usually a sign that the sensing end of the transducer has become fouled with residue. The transducer must be removed from service and the sensing diaphragm cleaned as described in Item 2, (warm, soapy water). If fouling persists, the transducer may be replaced with a Series 705 or Series 750 (non-fouling) transducer, which is specifically designed for trouble-free operation in a high residue environment.

6. **Symptom:** ***Output reading is within limits but "freezes" at one point.***

   Procedure: In certain environments "crust" may form over the sensing diaphragm, preventing the sensor from identifying change in level. Removing the transducer from service and cleaning it (as described in Item 2) will generally solve the problem. To combat marine growth, you might try wrapping the transducer with copper wire similar to that found in wire scouring pads for cleaning dishes. Marine growth occurs on the copper and eventually erodes the copper and drops off or the copper is manually removed during routine maintenance. Alternatively, there are various companies that will impregnate/coat the 316 stainless steel with anti-fouling chemicals of coatings. Level transducers temporarily removed from the well or sump should not be stored dry, but should be stored in a bucket of fresh water in order to prevent "crust" formation.

7. **Symptom:** ***Readings increase very slowly over time***.

   Procedure: Our cable is shipped coiled and consequently takes time to straighten when installed. Attaching a weight to the transducer (e.g., one of our sacrificial anodes) will help. To prevent cable stretch with lengths greater than 200 feet (60 m), secure the Kevlar fibers (just under the cable jacket) to your junction box or other secure object.

8. **Symptom:** ***No electrical output from your transducer.***

   Procedure: Check all electrical connections to ensure they are correct and secure. Double check your power supply or use a battery (as described previously) to ensure the transducer is getting power. If all checks OK, the problem could be a circuit board or the sensor in your transducer. The unit must be returned to the factory for evaluation. The most probable cause of this type of failure is damage to the submersible cable jacket allowing water to leak down the cable and into the transducer housing or lightning damage.

© 2017 by **newterra**, ltd.
All rights reserved. No part of this document may be reproduced or transmitted in any form or by any means, electronic, mechanical, photocopying, recording, or otherwise, without prior written permission of **newterra** ltd.

newterra ltd.
1291 California Avenue, Brockville, ON K6V 5W3
(800) 420-4056 / www.newterra.com

9.	**Symptom:**	***Formation of marine growth on a submersible transducer.***
	Procedure:	Certain transducer construction materials, for example, 316 stainless steel, attract marine life (snails) and algae. Clean the transducer diaphragm by soaking it in a bucket of warm water with a non-aggressive cleaning solution. You can also coat the transducer with marine grease. This may be the most effective and inexpensive way to protect your transducer.
10.	**Symptom:**	***Submersible transducer exhibits corrosion or pitting on body or diaphragm***
	Procedure:	Dissimilar metals (for example, your transducer housing and your pump housing) in an electrolytic environment (fluid in your well) can lead to *galvanic corrosion* of the metal that is nearer the anodic end of the galvanic series. Likewise, a voltage potential between the ground wire of the transducer and the ground of other equipment in the well can lead to *galvanic corrosion*. Installation of a P/N 820 or 825 sacrificial anode will help protect your transducer from *galvanic corrosion*. Our sacrificial anodes are made of a zinc alloy that, being nearer the anodic end of the galvanic series than the 316 stainless steel or titanium housing of the transducer, will corrode before the transducer.
11.	**Symptom:**	***The transducer is buried in dirt or silt and the readings seem to be erroneous.***
	Procedure:	Use of a piezometer nosepiece in this application would help. This nosepiece can be easily installed in the field and features a very fine screen to keep dirt from fouling the diaphragm, but allows the diaphragm to sense moisture levels.
12.	**Symptom:**	***Transducer has an offset error.***
	Procedure:	Our submersible transducers perform best when the sensing end is pointing in a downward manner. Keep in mind that you can experience offset error due to the position sensitivity or orientation change of the sensor. Offset errors are more prominent in low pressure applications with the sensing end of the transducer lying flat or pointing upward.

© 2017 by **newterra**, ltd.
All rights reserved. No part of this document may be reproduced or transmitted in any form or by any means, electronic, mechanical, photocopying, recording, or otherwise, without prior written permission of **newterra** ltd.

newterra ltd.
1291 California Avenue, Brockville, ON K6V 5W3
(800) 420-4056 / www.newterra.com

13. Symptom: ***I am testing a Series 700 4-20mA sensor for use with our data logger. On page A-2 of the KPSI Level and Pressure Transducers User's Manual, I see the standard 4-20mA configuration. Does the recording channel of my data logger become the mA meter?***

Procedure: Most data loggers cannot measure current (mA) directly. When this is the case a load resistor must be used to convert the current (mA) output into an appropriate voltage. If the User's Manual for your particular instrument does not illustrate a preferred method for recording current (mA) data then you should attach your transducer signal wires to your data logger in the following manner.

Transducer red wire **+** Data Logger Excitation Terminal
(The minimum excitation for a Series 700 Transducer is 9VDC)
Transducer black wire **–** Data Logger signal input (+) terminal

Attach a Load resistor between the Data Logger signal input (+) terminal and the Data Logger signal input (-) terminal.

Attach a separate piece of wire between the Data Logger signal input (-) and analog ground.

In this configuration you will turn your data logger into a milliammeter. The size of your load resistor can be calculated in the following manner.

D/0.02=R

Where:

Data logger input range = D
Full scale output of transducer = 0.02 A (20 mA)
Load Resistor Value = R

Pick an appropriate standard value

250 Ohms results in 1 to 5 VDC at 4 and 20 mADC
125 Ohms results in 0.5 to 2.5 VDC (500 to 2500 mVDC) at 4 and 20 mADC

At this point the discussion needs to address IR loss (voltage drop) in series circuits. Note that Series 700 transducers need a minimum of 9 VDC to operate correctly. When the transducer is operating correctly it will output a current which, when driven through a resistor, will generate some amount of voltage drop. If the resistor value is 250 Ohms then the voltage measured across that resistor will be 0.004 A * 250 Ohms = 1.000 VDC and 0.020 A * 250 Ohms = 5 VDC. Notice that, if the available voltage from the data logger is12 VDC then 12 VDC - 5 VDC = 7 VDC which is less than the voltage required by the transducer to operate. If this scenario were to occur the transducer would actually stop functioning correctly when its output reached 12 mADC (50% of transducer full scale range). In this case the appropriate choice for a load resistor value is 125 Ohms.

© 2017 by **newterra**, ltd.
All rights reserved. No part of this document may be reproduced or transmitted in any form or by any means, electronic, mechanical, photocopying, recording, or otherwise, without prior written permission of **newterra** ltd.

newterra ltd.
1291 California Avenue, Brockville, ON K6V 5W3
(800) 420-4056 / www.newterra.com

14. Symptom: ***I have a Series 700 4-20mA transducer rated for 7.5 PSIG attached to a pressure source that is outputting 7.5 PSIG. With 20VDC being supplied I am getting 19.94 mA. I can't find the upper range allowance for the sensor, but this seems low to me. Does this mA reading fall into the acceptable range for the transducer with the settings I've specified?***

Procedure: When evaluating a transducer it is sometimes convenient to make some broad generalizations in order to rapidly determine the condition of the unit. In general, transducers that output a 4-20 mADC signal have a 16 mADC span (4 - 20 = 16). If the transducers accuracy is reported as being some percentage of its full-scale range then the following table could be used in conjunction with the instructional notations to determine whether a more detailed analysis of data quality is required.

Model	Accuracy	Accuracy in mADC
700	1.00%FS	±0.16 ma
710	0.50%FS	±0.08 ma
720	0.25%FS	±0.05 ma
730	0.10%FS	±0.016 ma
735	0.05%FS	±0.008 ma

In order to approximately determine how many milliamps a transducer should output at a given depth.

1. Determine the depth (in feet) at which the transducer is sited.
2. Divide the depth value (from step 1) by the transducer full-scale range (in feet). - Record the value.
3. Multiply the value calculated in step 2 by 16 (the transducer span in milliamps).
4. Add 4 to the product of step 3. This is the approximate value in milliamps that should be output by the transducer at its current depth.

In order to approximately determine the depth of a transducer (in feet) using a given value of milliamps.

1. Divide the full-scale range of the transducer (in feet) by 16. Record this value.
2. Subtract 4 from the milliamp output of the transducer. Record this value
3. Multiply the result of step one by the result of step 2. This is the approximate depth at which the transducer is sited.

If the resulting numbers are reasonably close to some verified value for current water depth, then the unit is functioning. In order to determine the quality of measurement, additional steps need to be performed.

© 2017 by **newterra**, ltd.
All rights reserved. No part of this document may be reproduced or transmitted in any form or by any means, electronic, mechanical, photocopying, recording, or otherwise, without prior written permission of **newterra** ltd.

newterra ltd.
1291 California Avenue, Brockville, ON K6V 5W3
(800) 420-4056 / www.newterra.com

7.5.10 PH-501 - Trouble Shooting

Fault reporting and troubleshooting

Display	Description / cause	Status[1]	Mode[2]	Measured variable output[3]	Correction variable output[4]
pH/mV RANGE ↓	Input voltage too low	Error	Basic load	Fault current	-
pH/mV RANGE ↑	Input voltage too high	Error	Basic load	Fault current	-
T RANGE ↓	Measured temperature beneath measuring range	Error	Basic load	Fault current	Fault current
T RANGE ↑	Measured temperature above measuring range	Error	Basic load	Fault current	Fault current
CAL ERROR	No valid user calibration exists	Error	-	-	-
NO PROBE	If activated: pH sensor monitoring outputs: no sensor	Error	Basic load	Fault current	-
PROBE ERR	If activated: pH sensor monitoring outputs: sensor break	Error	Basic load	Fault current	-
CHECK-TIME	Control checkout time elapsed	Error	Basic load	Fault current	-
mA RANGE ↑	mA output current has an upper limit	Error	-	-	-

© 2017 by **newterra**, ltd.
All rights reserved. No part of this document may be reproduced or transmitted in any form or by any means, electronic, mechanical, photocopying, recording, or otherwise, without prior written permission of **newterra** ltd.

newterra ltd.
1291 California Avenue, Brockville, ON K6V 5W3
(800) 420-4056 / www.newterra.com

Display	Description / cause	Status[1]	Mode[2]	Measured variable output[3]	Correction variable output[4]
mA RANGE ↓	mA output current has a lower limit	Error	-	-	-
LIMIT ↑	Measured variable exceeds upper set limit	Warning	-	-	-
LIMIT ↓	Measured variable falls below lower set limit	Warning	-	-	-
T LIMIT ↑	Correction variable exceeds upper set limit	Warning	-	-	-
T LIMIT ↓	Correction variable falls below lower set limit	Warning	-	-	-
LIMIT ERR	Set checkout time for monitoring the measurement variable limits has elapsed	Error	Stop	Fault current	-
TLIMITERR	Set checkout time for monitoring the correction variable limits has elapsed	Error	Stop	Fault current	Fault current
NO CAL	No valid user calibration exists	Warning	-	-	-
CONTACTIN	If activated: Power relay is activated in *'PAUSE/HOLD'*	Error	-	-	-

1 = *[Status]* Error status after occurrence of the fault (error means: alarm relay deactivates, "*" is displayed before the error message, can be acknowledged with OK)

© 2017 by **newterra**, ltd.
All rights reserved. No part of this document may be reproduced or transmitted in any form or by any means, electronic, mechanical, photocopying, recording, or otherwise, without prior written permission of **newterra** ltd.

newterra ltd.
1291 California Avenue, Brockville, ON K6V 5W3
(800) 420-4056 / www.newterra.com

2 = *[Mode]* Resulting controller mode (relates to control variable and thus, as necessary, mA output)

3 = *[Measured variable output]* Consequence for the current output, if this is set as *'a measured variable output'*

4 = *[Correction variable output]* Consequence for the current output, if this is set as *'a correction variable output'*

7.5.11 MV-701/702 - Trouble Shooting

Conditions	Possibilities	Solutions
Motor does not operate	1. Is the supplied power and voltage correct? 2. Any blisters on the capacitor? 3. Are the gear trains free?	1. Checking by meter. 2. If so replace. 3. Remove motor to check.
Motor stops running	1. Is power supply short circuited? 2. Any foreign objects in flow stream?	1. Check wiring. 2. Check for obstructions.
Unable to fully open/close	1. Loose/Misaligned cam? 2. Bent valve stem? 3. Mechanical stop adjustment incorrect?	1. Adjust/Tighten using spanner. 2. Replace valve stem. 3. Check position of stops.
Valve stops operating when motor is running.	1. Gear worn out? 2. Sleeve adapter worn out or broken? 3. Broken valve stem or actuator transmission shaft?	1. Replace gear. 2. Replace sleeve adapter. 3. Replace valve stem or actuator transmission shaft.
Abnormal control for operating two or more actuators simultaneously.	1. Controlling circuit connects in tandem or parallel?	1. Please refer to the wiring diagram.
Motor overheats.	1. Is the voltage correct? 2. Is valve too tight to operate? 3. High working frequency? 4. Is motor stem or bearing binding?	1. Checking by meter. 2. Replace valve. 3. Check duty cycle. 4. Replace the binding parts.
Abnormal on/off angle on 3-phase voltage.	1. Wrong phase wiring?	1. Change phase wiring.
Occasional on/off actuator failure.	1. Simultaneous input power on/off.	1. Check if the selection switch is normal.
Vibration when valve is closed.	1. Motor brake spring fatigued or Teflon worn?	1. Replace spring or Teflon.

© 2017 by **newterra**, ltd.
All rights reserved. No part of this document may be reproduced or transmitted in any form or by any means, electronic, mechanical, photocopying, recording, or otherwise, without prior written permission of **newterra** ltd.

newterra ltd.
1291 California Avenue, Brockville, ON K6V 5W3
(800) 420-4056 / www.newterra.com

© 2017 by **newterra**, ltd.
All rights reserved. No part of this document may be reproduced or transmitted in any form or by any means, electronic, mechanical, photocopying, recording, or otherwise, without prior written permission of **newterra** ltd.

newterra ltd.
1291 California Avenue, Brockville, ON K6V 5W3
(800) 420-4056 / www.newterra.com

8.0 SHUT DOWN

8.1 MBR Temporary Shut Down

A temporary shutdown for a few days requires continuous aeration of the biomass to keep the DO level at least 2 mg/L and continuous biomass recycle between the bioreactors.

8.2 MBR Permanent Shut Down / Winterizing

Permanent shut down is required if system operation stops for at least 2 weeks without inflow. Permanent shut down includes the following procedure:

8.2.1 Process Shut Down Procedure

- Conduct a “Backwash Now” operation on the system
- Stop influent flow into the System
- Ensure all pumps are in the “OFF” position using the HOA HMI screen
- Ensure all Blowers are in the “AUTO” position using the HOA HMI screen. This is to be done until a vacuum truck can be provided or contracted locally to clean out the tanks.
- Ensure all automated valves are in the “OFF” position using the HOA HMI screen.
- Ensure that the MBR is disabled using the HMI screen button
- Conduct all maintenance procedures on Section 7 Table – regardless of schedule time

8.2.2 Cleaning - General

- Conduct general system interior cleaning
- Open all tanks, wash out with a garden hose and Vacuum out.
- Clean all sensors and level switches

8.2.3 Membranes

- Ensure that the membrane tanks (TNK-601/602) are drained before opening the membrane tanks.
- Open TNK-601/602 doors with hand/power tools.



© 2017 by **newterra**, ltd.
All rights reserved. No part of this document may be reproduced or transmitted in any form or by any means, electronic, mechanical, photocopying, recording, or otherwise, without prior written permission of **newterra** ltd.

newterra ltd.
1291 California Avenue, Brockville, ON K6V 5W3
(800) 420-4056 / www.newterra.com

- Using a garden hose, wash the inside of the tanks and vac out any remaining waste water. **DO NOT USE A PRESSURE WASHER!**
- Disconnect the permeate hoses from the top of membrane the membrane stack.
- Remove the membranes from the membrane frame using hand tools.



- **CAUTION** – the membranes are contaminated with waste water. PPE required.
- **NOTE**. The membranes are double stacked. The bottom membrane has a plug in the bottom opening. Do not remove this plug. Note the membrane orientations for re-installation. The membranes are joined together with either a PVC union with two O-Rings on each side OR clear PVC hose and hose clamps.

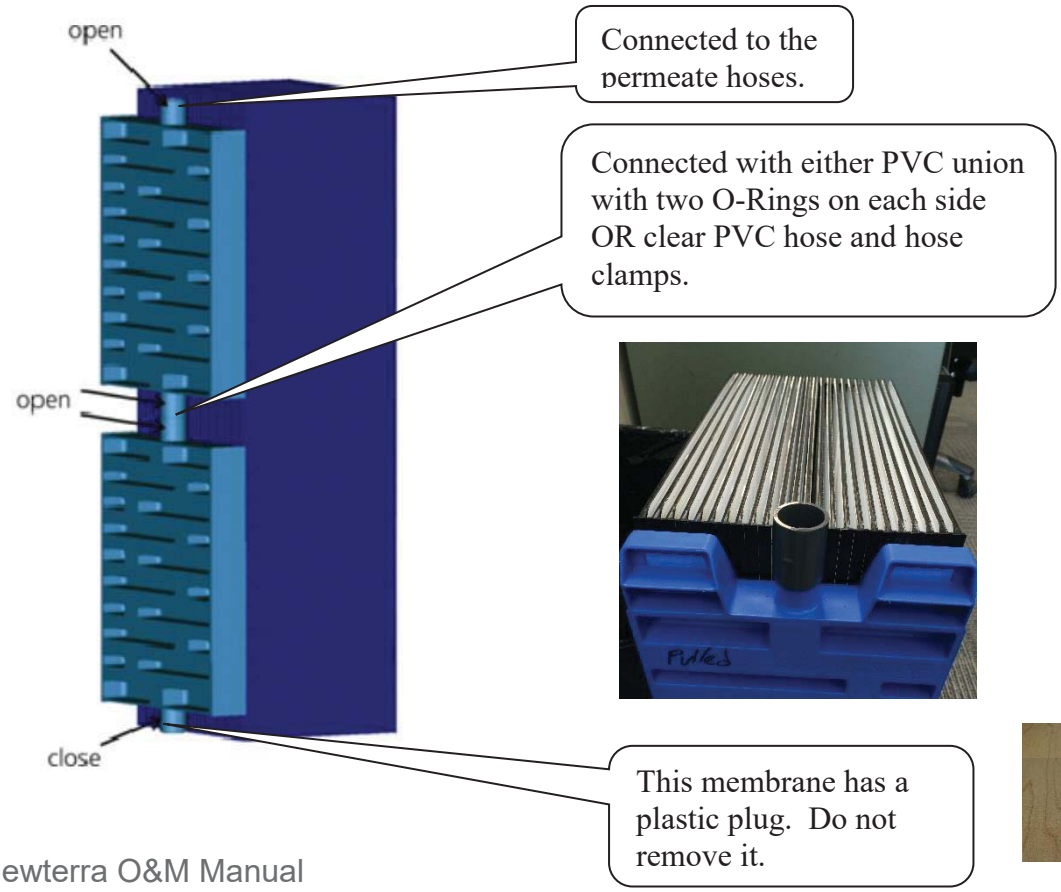

© 2017 by **newterra**, ltd.
All rights reserved. No part of this document may be reproduced or transmitted in any form or by any means, electronic, mechanical, photocopying, recording, or otherwise, without prior written permission of **newterra** ltd.

newterra ltd.
1291 California Avenue, Brockville, ON K6V 5W3
(800) 420-4056 / www.newterra.com

- After membranes are separated, wash with clean water. Remove the blue backing plate and gently separate the membrane plates and clean with water to remove any debris.





- Replace backing plate and let the membranes dry out.
- Shrink wrap the membrane cassettes in multiple film layers and seal the membranes cassettes with tape. Note and mark which membranes have the bottom plug in them.
- Store the preserved membrane cassettes at room temperature (never expose the membrane cassettes to frost, dust, or direct sunlight).

8.3 General Components

- Conduct all preventative maintenance as listed in Section 7.
- Drain/Vacuum Out and wash out all tanks.
- Clean and Wash out SCR-201/202
- Disassemble all PVC ball valves and drain any water inside (open and close to ensure trapped water escapes).
- Leave all valves ½ open during reinstallation
- Open all drain valves and leave open.
- Find all check valves and make sure water is not being held by valve (Wet/Dry Vac works well here).
- Drain / remove all pumps from tanks, ensure no water is left inside the pump.
- Use RV Antifreeze that is suitable for potable water systems
    - Refill any check valve

© 2017 by **newterra**, ltd.
All rights reserved. No part of this document may be reproduced or transmitted in any form or by any means, electronic, mechanical, photocopying, recording, or otherwise, without prior written permission of **newterra** ltd.

- Dump in 2 (qty) 4-L bottles in each tank

- Remove power from system.
- Double check and ensure that there is no water left in any pipes, fittings etc. If it is not possible to remove the water fill with antifreeze.
- Drain the chemical tanks and dispose of chemicals in accordance with manufacturer's recommendations and local regulations.
- Remove pH (PH-501) and DO (DO-501) probes from TNK-501 and store with membranes in a heated area ensure probes are kept wet.

- **NOTE: Remove DO probe tip from the DO sensor (DO-501) in accordance with vendor directions in Appendix E and store in the calibration chamber with the storage cap attached with a few drops of clean water. Store with the membranes in a heated area and ensure probe tip is kept wet.**

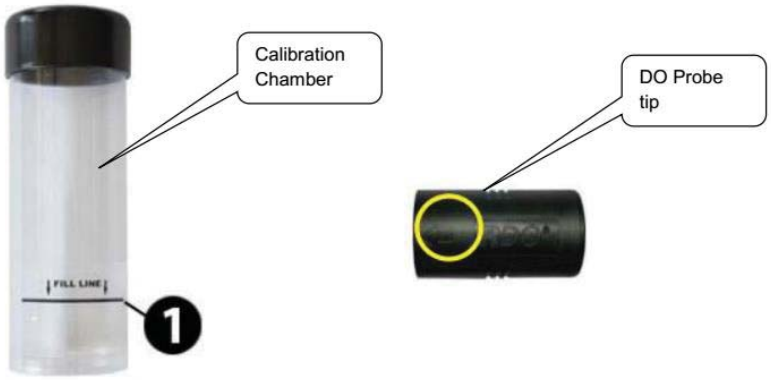

© 2017 by **newterra**, ltd.
All rights reserved. No part of this document may be reproduced or transmitted in any form or by any means, electronic, mechanical, photocopying, recording, or otherwise, without prior written permission of **newterra** ltd.

newterra ltd.
1291 California Avenue, Brockville, ON K6V 5W3
(800) 420-4056 / www.newterra.com

8.4 Blowers – B-501/502

STORAGE

Your Gardner Denver Blower was packaged at the factory with adequate protection to permit normal storage for up to six (6) months.

If the unit is to be stored under adverse conditions or for extended periods of time, the following additional measures should be taken to prevent damage.

1. Store the blower in a clean, dry, heated (if possible) area.
2. Make certain inlet and discharge air ports are tightly covered to prevent foreign material from entering the air box.
3. All exposed, non-painted surfaces should be protected against rust and corrosion.
4. Provide adequate protection to avoid accidental mechanical damage.
5. In high humidity or corrosive environments, additional measures may be required to prevent rusting of the blower internal surfaces.
6. To prevent rusting of gears, bearings, etc., the oil reservoirs may be filled with normal operating oil.

⚠ CAUTION
Before running the blower, drain the oil and replace to the proper operating level with clean, fresh lubricant.

7. Rotate the blower shaft (10 to 25 turns) weekly during storage. Inspect the blower shaft (near the shaft seal area) monthly and spray with rust inhibitor if needed.
8. For long term storage (over six (6) months), contact Gardner Denver Compressor Division Customer Service for recommendations.

REMOVING PROTECTIVE MATERIALS

The shaft extension is protected with rust inhibitor which can be removed with any standard solvent.

⚠ CAUTION
Follow the safety directions of the solvent manufacturer.

Blower inlet and outlet are temporarily capped to keep out dirt and other contaminants during shipment. These covers must be removed before start-up.

The internal surfaces of all Sutorbilt units are mist sprayed with a rust preventative to protect the machine during shipment. Remove this film upon initial startup, using any commercial safety solvent. Position the blower so that the inlet and discharge connections are in the vertical position (vertical airflow). On vertically mounted units, it will be necessary to lay the unit on its side supporting the ends of the unit so as not to restrict the port on the bottom side. Place a shallow pan on the under side of the unit. With the blower disconnected from power, spray the solvent in the top port, rotating the impellers by spinning the shaft manually. Continue this procedure until the unit is visibly clean.

⚠ WARNING
Rotating components will cause severe injury in case of personal contact. Keep hands and loose clothing away from blower inlet and discharge ports.

© 2017 by **newterra**, ltd.
All rights reserved. No part of this document may be reproduced or transmitted in any form or by any means, electronic, mechanical, photocopying, recording, or otherwise, without prior written permission of **newterra** ltd.

8.4 Chemical Dosing Pumps – P-6101/6102/6103

1. Disconnect the pump from the mains power supply.
2. Empty the liquid end by turning the pump upside down and allowing the feed chemical to run out.
3. Flush the liquid end with a suitable medium; flush the dosing head thoroughly when using hazardous feed chemicals!

© 2017 by **newterra**, ltd.
All rights reserved. No part of this document may be reproduced or transmitted in any form or by any means, electronic, mechanical, photocopying, recording, or otherwise, without prior written permission of **newterra** ltd.

newterra ltd.
1291 California Avenue, Brockville, ON K6V 5W3
(800) 420-4056 / www.newterra.com

© 2017 by **newterra**, ltd.
All rights reserved. No part of this document may be reproduced or transmitted in any form or by any means, electronic, mechanical, photocopying, recording, or otherwise, without prior written permission of **newterra** ltd.

newterra ltd.
1291 California Avenue, Brockville, ON K6V 5W3
(800) 420-4056 / www.newterra.com

9.0 SERVICE & SUPPORT

9.1 Commissioning and Start-up

newterra MicroClear™ MBR System's **commissioning & start-up** is the last step of the **newterra** project execution process.

As part of your order, the following on site services will be provided by experienced factory trained newterra representative:

- Includes five (5) 8-hour days of onsite startup/commissioning by one (1) factory trained newterra representative
- Includes five (5) 8-hour days of onsite training by one (1) factory trained newterra representative

9.1.1 Startup/Commissioning

Typical System Startup/Commissioning includes the following:

- Equipment checks - Electrical, mechanical, and controls
- Functional test - Equipment and control system
- Hydraulic test
- Operation during plant seeding

9.1.2 Training

On-site operator training including the following topics:

- General MBR theory & process
- Specific system instruction
    - Components
    - Controls and operating philosophy
    - Alarms and alarm troubleshooting
    - Maintenance
    - Troubleshooting
    - MBR fouling control (Biology, physical, and chemical)

© 2017 by **newterra**, ltd.
All rights reserved. No part of this document may be reproduced or transmitted in any form or by any means, electronic, mechanical, photocopying, recording, or otherwise, without prior written permission of **newterra** ltd.

newterra ltd.
1291 California Avenue, Brockville, ON K6V 5W3
(800) 420-4056 / www.newterra.com

9.2 Post commissioning Services

A comprehensive range of post commissioning services are available from **newterra** beyond system design and installation. Specific services include:

- Technical support (including after-hours emergency telephone support).
- Spare parts order and delivery.
- Training program.
- Plant optimization and upgrades.
- Telemetry control and monitoring.
- Assistance in preparing system performance reports (process data monitoring & analysis).
- Preventive maintenance cleaning (including membrane cleaning).
- System audits for reviewing the performance and efficiency of all MBR subsystems..

9.2.1 Technical Support

Technical support is available to assist in troubleshooting of **newterra** MBR systems during normal working hours 8:30 am to 5:00 pm (Eastern Time Zone for **newterra** ltd.). Telephone service is available via **1.800.420.4056**.

Emergency **24/7 telephone technical support –** This will be activated upon subscribing to **newterra's** 24/7 technical support service. If a problem cannot be resolved through telephone or e-mail support, **newterra** technicians and engineers are available for site visits.

9.2.2 Spare Parts

newterra has spare parts to provide quick response to any critical system breakdown. Contact **newterra** parts department at **1.800.420.4056.**

All parts and components associated with **newterra** MBR Systems are available from within service departments and manufacturing facilities of **newterra** ltd across Canada and abroad.

Potentially required spare parts are:

- membrane modules/membrane cassettes;
- parts for repair/replacement (valves, transmitters, switches, gauges, pH & DO probes, pump motors, analyzers, PLC components, fuses, etc.);
- maintenance spare parts (air blowers, air filters, pumps, immersion heaters, chemical metering pumps, etc.).

© 2017 by **newterra**, ltd.
All rights reserved. No part of this document may be reproduced or transmitted in any form or by any means, electronic, mechanical, photocopying, recording, or otherwise, without prior written permission of **newterra** ltd.

newterra ltd.
1291 California Avenue, Brockville, ON K6V 5W3
(800) 420-4056 / www.newterra.com

9.2.3 Assistance in telemetry control and monitoring

newterra SITE-LINK is a customized software program and hardware configuration which provides a real-time link to a treatment system via cellular modem or customer supplied internet connection using our secure Site-Link Server.

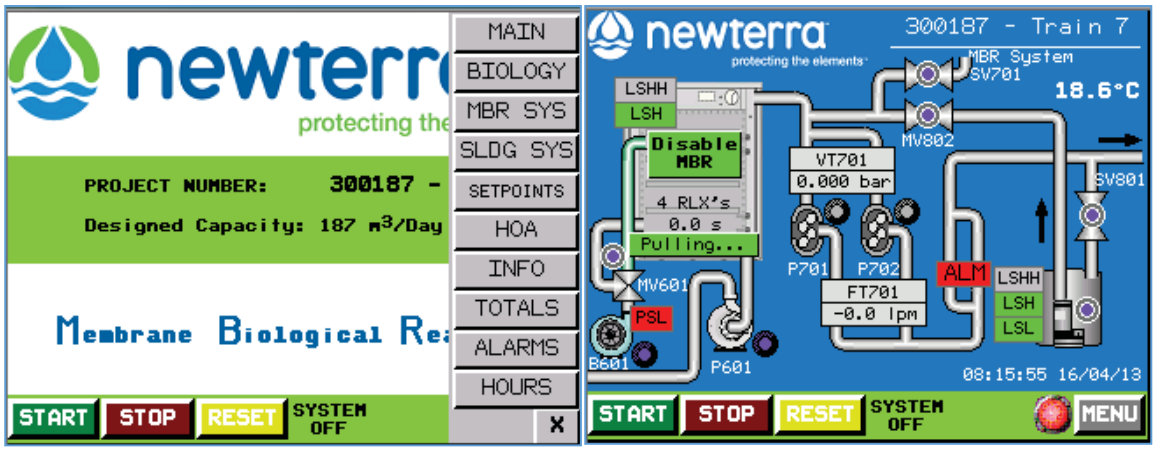

newterra Site-Link comes with the following customizable features:

- Customized P&ID layout with system status
- Start/Stop/Reset of system
- Manual control of all system components
- Data logging downloads in .csv format†
- Daily system status reports (E-Monitor)
- Alarm history including current alarm status
- Hour meters for applicable equipment
- Customization of all system set points†
- Live and historical trending
- Immediate text & email on alarm (E-Alarm)

†certain restrictions apply

The basic system requires that the customer provide a standard computer network cable to the control panel. If the customer's computer network is accessible to the internet, this system can also be monitored from any internet enabled computer. Static IP is not required but is recommended and must be provided by customer.

This system is not available if customer supplied internet connection or cellular service is not available at the site. During internet outages, reports cannot be sent and system status cannot be monitored remotely.

© 2017 by **newterra**, ltd.
All rights reserved. No part of this document may be reproduced or transmitted in any form or by any means, electronic, mechanical, photocopying, recording, or otherwise, without prior written permission of **newterra** ltd.

newterra ltd.
1291 California Avenue, Brockville, ON K6V 5W3
(800) 420-4056 / www.newterra.com

9.2.4 Site visits and system audits

Site visits and system audits can be arranged at an additional cost. Contact **newterra** for all financial aspects of **newterra** initial and post-commissioning services.

During a system audit, technical reviews of the performance of all **newterra** MBR subsystems and the efficiency of the biological process can be performed. Based on the site visit and agenda discussed with the client, we can assist in:

- Maintenance coordination and scheduling, including membrane maintenance and cleaning.
- Validation of chemical dosing settings.
- MBR System inspection for the proper operation of the membrane system in accordance with the O&M manual; equipment calibration, process optimization and upgrades.
- Continued on-site operator training and coaching.

© 2017 by **newterra**, ltd.
All rights reserved. No part of this document may be reproduced or transmitted in any form or by any means, electronic, mechanical, photocopying, recording, or otherwise, without prior written permission of **newterra** ltd.

newterra ltd.
1291 California Avenue, Brockville, ON K6V 5W3
(800) 420-4056 / www.newterra.com

10.0 WARRANTY

General Warranty Statement

1. **newterra** warrants and guarantees products of its manufacture against defective workmanship or material for a period of one year from the date of notice of readiness to ship.
2. This warranty is expressly and strictly limited to replacing, without charge, any part or parts which prove to **newterra**'s satisfaction upon examination, to have been defective in design, material or workmanship, and which have not been neglected, abused or misapplied, provided the buyer gives **newterra** immediate written notice upon discovery of any claimed defect.
3. During the warranty period, parts will be shipped as necessary with instructions to replace, which can be further elaborated over phone or email; visit(s) of our technician to site can be covered if there is a service agreement in place; otherwise, actual charges will be quoted to the owner at that time, if required.
4. **newterra** will also guarantee component parts manufactured by others to the extent of the guarantee made by the manufacturer of such equipment. In any case, guarantees on specific components will be extended a minimum of one year from date of notice of readiness to ship.

Warranty Exclusions

1. Warranty coverage does not include:
   - Freight, labor, travel, and living expenses associated with parts replacement
   - Normal maintenance items such as lubrication, fan belts, and cleaning of the equipment
   - System parts damaged as a result of customer changes to the system and/or PLC program without the written consent of **newterra**.
2. In the event that the customer, or any contractor employed by the customer, contracts an outside company, other than **newterra** for modification of system equipment, without knowledge of **newterra**, the warranty in that case may become null & void.
3. In the event that the customer, or any installation contractor employed by the customer, contracts outside **newterra** for installation work or erection of quoted equipment, the customer shall assume full responsibility for said contract.

Warranty Validation and Conditions

1. **newterra** highly recommends that the system be started up by a **newterra** factory trained technician to ensure the correct installation and trouble-free startup. The startup checklist provided in the O&M manual must be completed and returned to **newterra** to validate your equipment warranty which begins on the date of shipment from the factory.
2. In the event that the system is commissioned by a certified technician that is not an employee of **newterra**, the Startup Checklist must be returned to **newterra** within 15 days of the completion of startup

© 2017 by **newterra**, ltd.
All rights reserved. No part of this document may be reproduced or transmitted in any form or by any means, electronic, mechanical, photocopying, recording, or otherwise, without prior written permission of **newterra** ltd.

newterra ltd.
1291 California Avenue, Brockville, ON K6V 5W3
(800) 420-4056 / www.newterra.com

APPENDIX A

Drawings

© 2017 by **newterra**, ltd.
All rights reserved. No part of this document may be reproduced or transmitted in any form or by any means, electronic, mechanical, photocopying, recording, or otherwise, without prior written permission of **newterra** ltd.

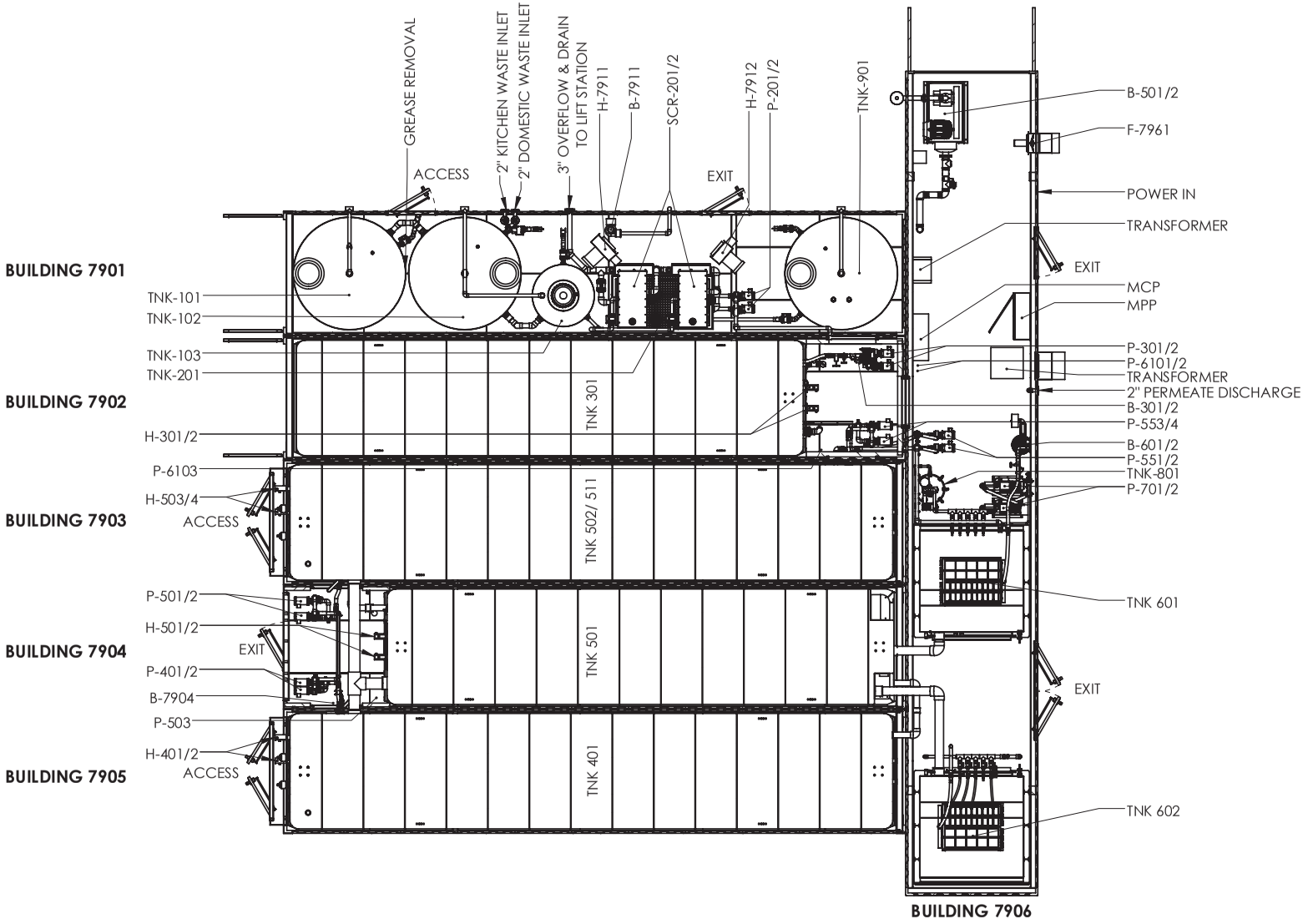

GENERAL TOLERANCES
.XX ± 1/8 "
.XXX ± 1/16 "
UNLESS OTHERWISE SPECIFIED DIMENSIONS ARE IN INCHES

THIS INFORMATION IS THE PROPERTY OF newterra AND CANNOT BE REUSED OR REPRODUCED WITHOUT WRITTEN CONSENT.

LEVEL	DATE	BY	REVISION
C1	11/08/17	AH	AS BUILT
B1	07/06/17	GH	FOR PRODUCTION
B	06/06/17	GH	FOR PRODUCTION
A2	25/05/17	GH	REVISED LAYOUT
A	19/05/2017	GH	FOR REVIEW

DWG. NO:

PROJECT NUMBER: 1704432

TITLE: SYSTEM LAYOUT

CUSTOMER: AGNICO EAGLE

DRAWN BY: GH

DATE: 19/05/17

SHEET 1 OF 4

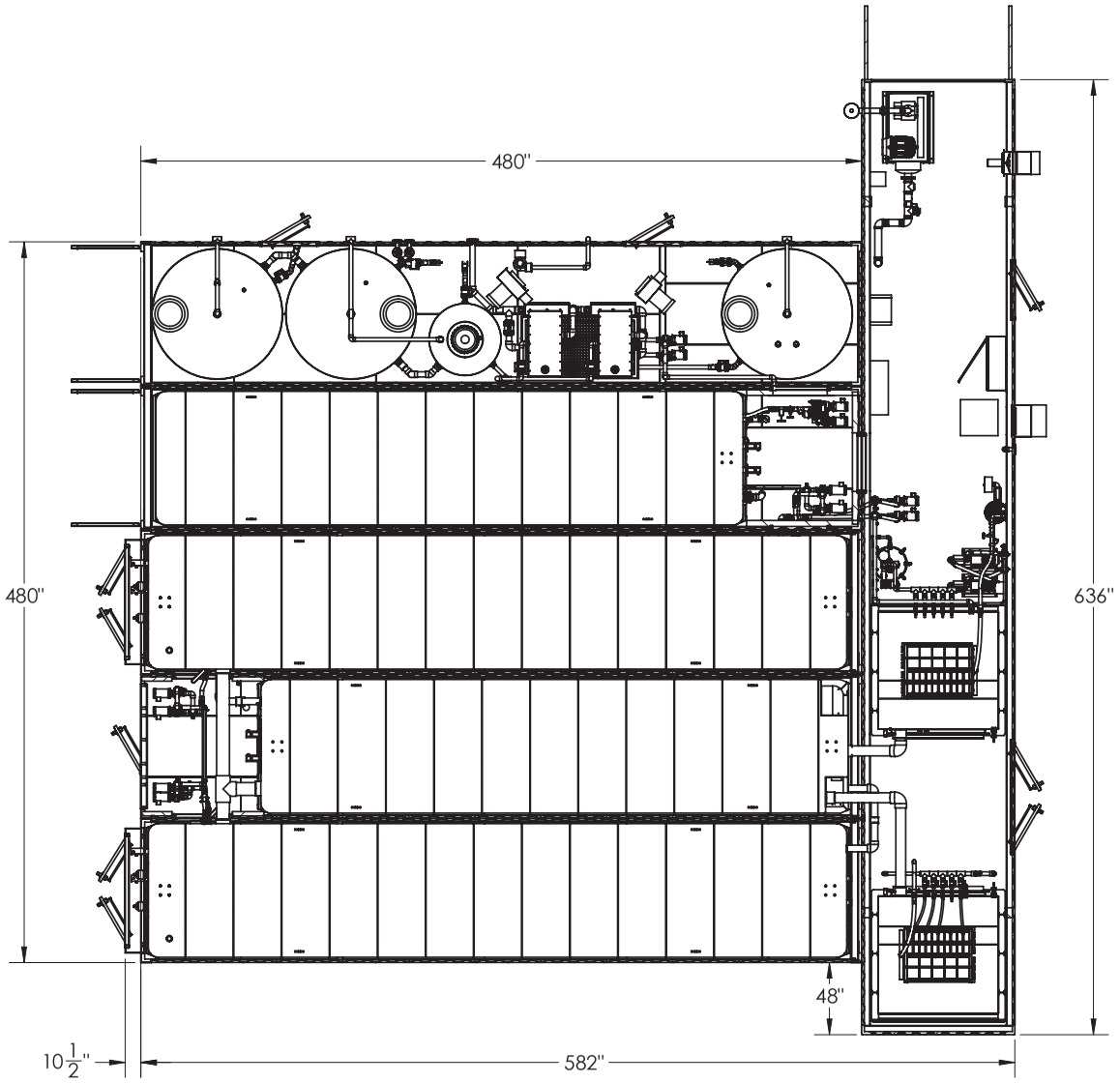

GENERAL TOLERANCES
.XX ± 1/8"
.XXX ± 1/16"
UNLESS OTHERWISE SPECIFIED DIMENSIONS ARE IN INCHES

THIS INFORMATION IS THE PROPERTY OF newterra AND CANNOT BE REUSED OR REPRODUCED WITHOUT WRITTEN CONSENT.

LEVEL	DATE	BY	REVISION
C1	11/08/17	AH	AS BUILT
B1	07/06/17	GH	FOR PRODUCTION
B	06/06/17	GH	FOR PRODUCTION
A2	25/05/17	GH	REVISED LAYOUT
A	19/05/2017	GH	FOR REVIEW

DWG. NO:

PROJECT NUMBER: 1704432

TITLE: SYSTEM LAYOUT

CUSTOMER: AGNICO EAGLE

DRAWN BY: GH

DATE: 19/05/17

SHEET 2 OF 4

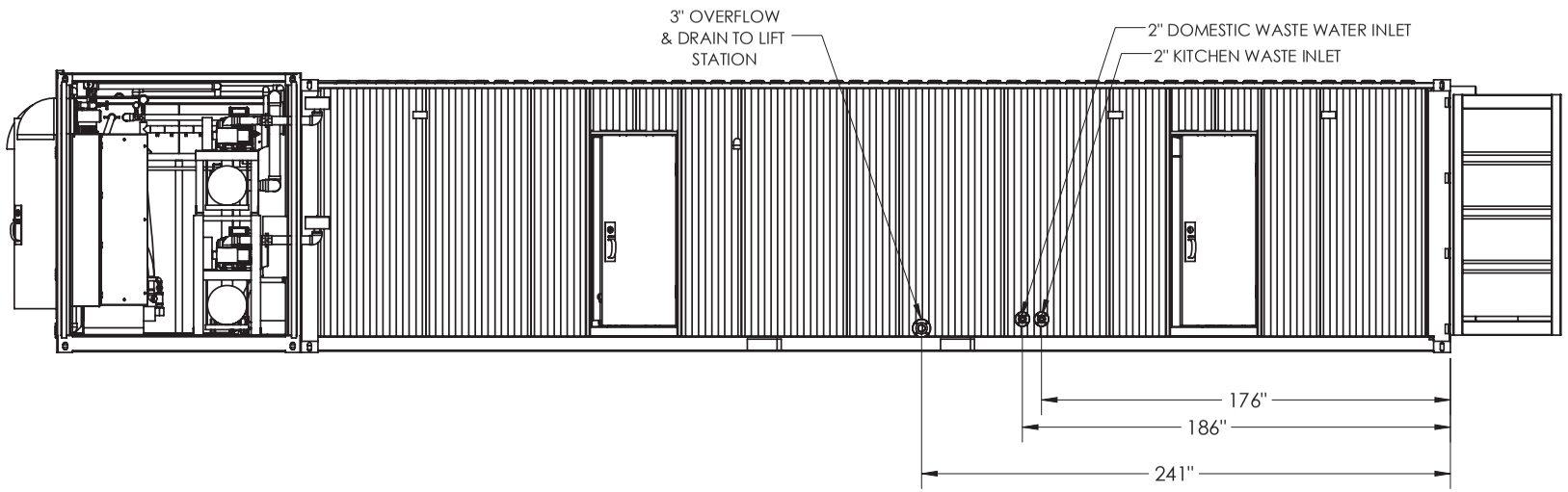

GENERAL TOLERANCES
.XX ± 1/8 "
.XXX ± 1/16 "
UNLESS OTHERWISE SPECIFIED DIMENSIONS ARE IN INCHES

THIS INFORMATION IS THE PROPERTY OF newterra AND CANNOT BE REUSED OR REPRODUCED WITHOUT WRITTEN CONSENT.

LEVEL	DATE	BY	REVISION
C1	11/08/17	AH	AS BUILT
B1	07/06/17	GH	FOR PRODUCTION
B	06/08/2017	GH	FOR PRODUCTION

DWG. NO:
PROJECT NUMBER: 1704432
TITLE: SYSTEM LAYOUT
CUSTOMER: AGNICO EAGLE
DRAWN BY: GH
DATE: 06/06/17
SHEET 3 OF 4

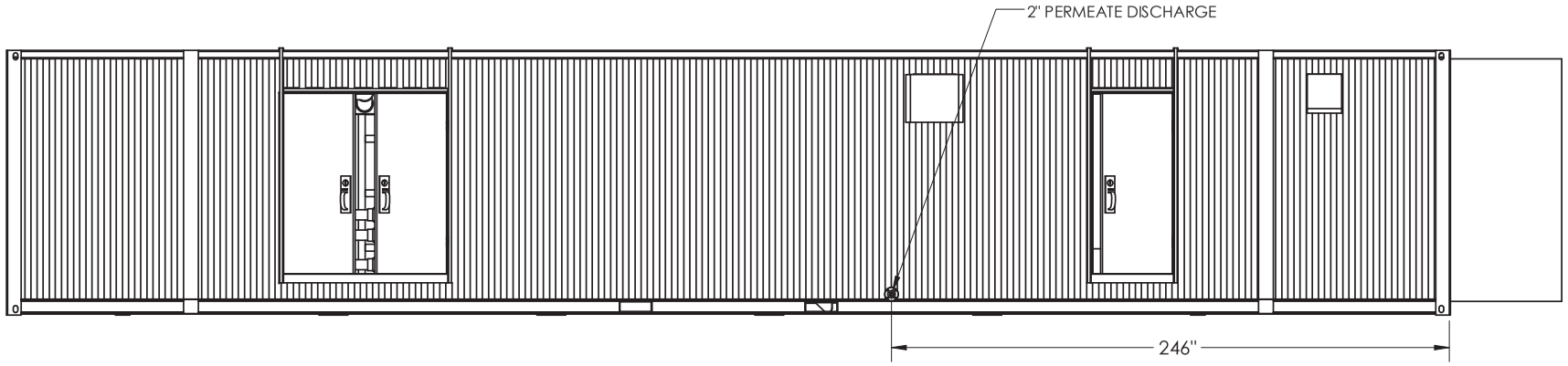

GENERAL TOLERANCES
.XX ± 1/8 "
.XXX ± 1/16 "
UNLESS OTHERWISE SPECIFIED DIMENSIONS ARE IN INCHES

THIS INFORMATION IS THE PROPERTY OF newterra AND CANNOT BE REUSED OR REPRODUCED WITHOUT WRITTEN CONSENT.

LEVEL	DATE	BY	REVISION
C1	11/08/17	AH	AS BUILT
B1	07/06/17	GH	FOR PRODUCTION
B	06/06/2017	GH	FOR PRODUCTION

DWG. NO:

PROJECT NUMBER: 1704432

TITLE: SYSTEM LAYOUT

CUSTOMER: AGNICO EAGLE

DRAWN BY: GH

DATE: 06/06/17

SHEET 4 OF 4

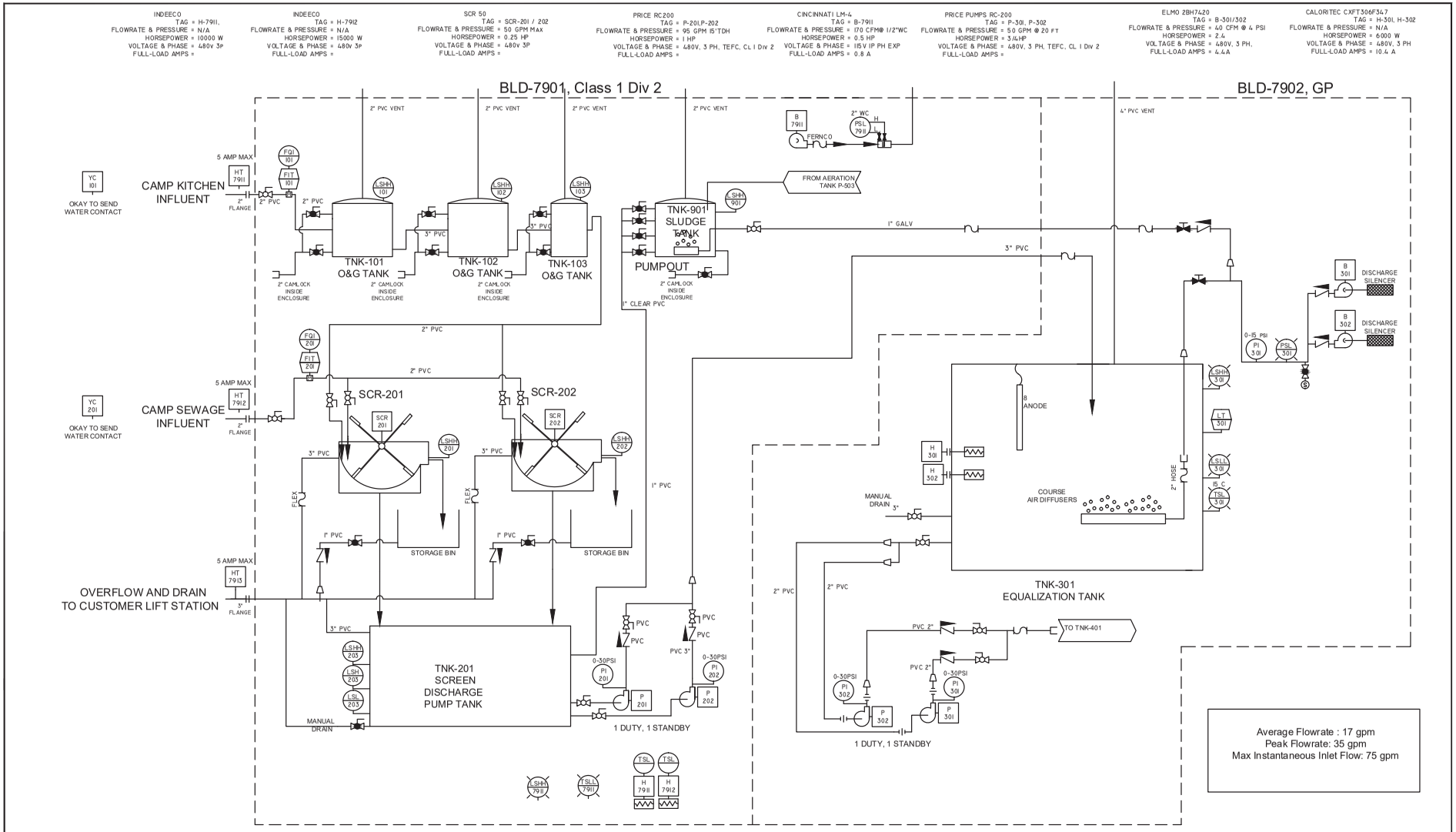

NOTES

IS INPUT WIRING TO BE WIRED FOR OUTDOORS, ACCORDING CEC FOR HAZARDOUS LOCATIONS.

WIRING TO BE CLASS I DIVISION 2, AS PER THE CEC.

newterra

PHONE: (800) 420-4056

www.newterra.com

LEVEL	REVISION	DATE (mm/dd/yy)	BY
C	AS-BUILT	13/08/17	JJK
B	PRODUCTION	06/06/17	JJK
A2	SUBMITTAL REVISIONS	26/05/17	JJK
A	SUBMITTAL	23/05/17	JJK

PROJECT NUMBER: 1704432

TITLE AND LOCATION: P&ID AMARUQ MINE

CUSTOMER: AGNICO EAGLE MINE

DRAWN BY: MH | DATE: | SHEET: 1 | SHEETS: 4

THIS INFORMATION IS THE PROPERTY OF newterra AND CANNOT BE REUSED OR REPRODUCED WITHOUT THE WRITTEN CONSENT OF newterra

PRICE PUMPS RC-200
TAG = P-401,402
FLOWRATE & PRESSURE = 300 GPM @ 60 FT
HORSEPOWER = 5HP
VOLTAGE & PHASE = 480V, 3 PH, TEFC, CL I Div 2
FULL-LOAD AMPS =

CALORITEC CXFT306F347R83
TAG = H-401,402,501,502
FLOWRATE & PRESSURE = N/A
HORSEPOWER = 6000 W
VOLTAGE & PHASE = 480V, 3 PH
FULL-LOAD AMPS = 10.4 A

CINCINNATI LM6
TAG = B-7941
FLOWRATE & PRESSURE = 700 CFM@ 2"WC
HORSEPOWER = 1.5 HP
VOLTAGE & PHASE = 480V 3P PH
FULL-LOAD AMPS =

OUELLET OAC04808BL
TAG = H-7941
FLOWRATE & PRESSURE = N/A
HORSEPOWER = 4,800 W
VOLTAGE & PHASE = 480 V, 1 PH
FULL-LOAD AMPS = 8.34

PRICE PUMPS RC-200
TAG = P-503
FLOWRATE & PRESSURE = 50 GPM @ 10 FT
HORSEPOWER = 1/4 HP
VOLTAGE & PHASE = 480V, 3 PH, TEFC, CL I Div 2
FULL-LOAD AMPS =

PROMINENT BETA 4
TAG = P-6101, 6102
FLOWRATE & PRESSURE = 3.2 GPH@58PSI
HORSEPOWER = N/A
VOLTAGE & PHASE = 120 V, 1 PH
FULL-LOAD AMPS = N/A

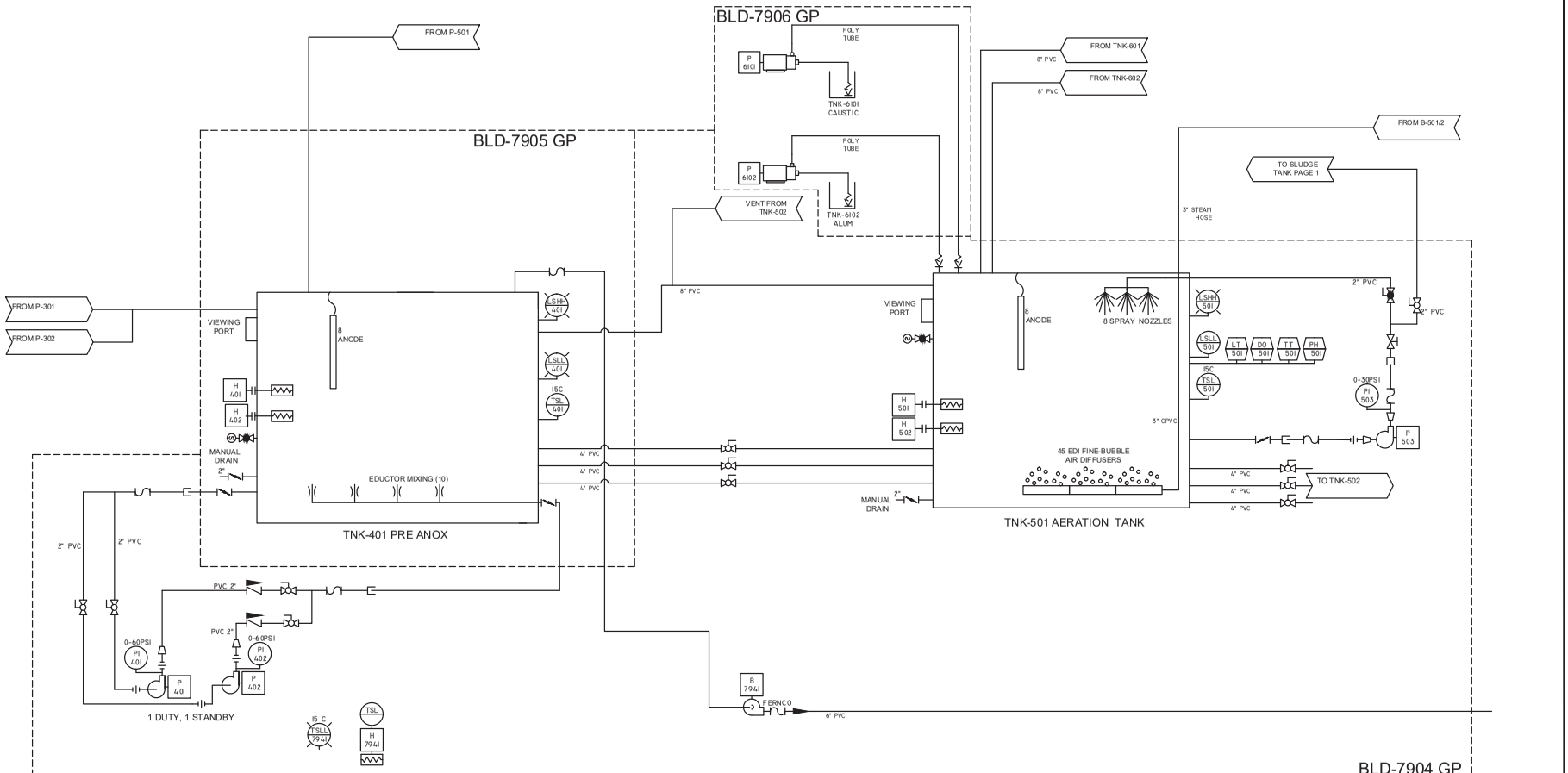

NOTES

newterra
PHONE: (800) 420-4056
www.newterra.com

LEVEL	REVISION	DATE (mm/dd/yy)	BY
C	AS-BUILT	13/08/17	JJK
B	PRODUCTION	06/06/17	JJK
A2	SUBMITTAL REVISIONS	26/05/17	JJK
A	SUBMITTAL	23/05/17	JJK

PROJECT NUMBER: 1704432
TITLE AND LOCATION: P&ID AMARUQ MINE
CUSTOMER: AGNICO EAGLE MINE
DRAWN BY: MH
DATE:
SHEET: 2
SHEETS: 4

THIS INFORMATION IS THE PROPERTY OF newterra AND CANNOT BE REUSED OR REPRODUCED WITHOUT THE WRITTEN CONSENT OF newterra

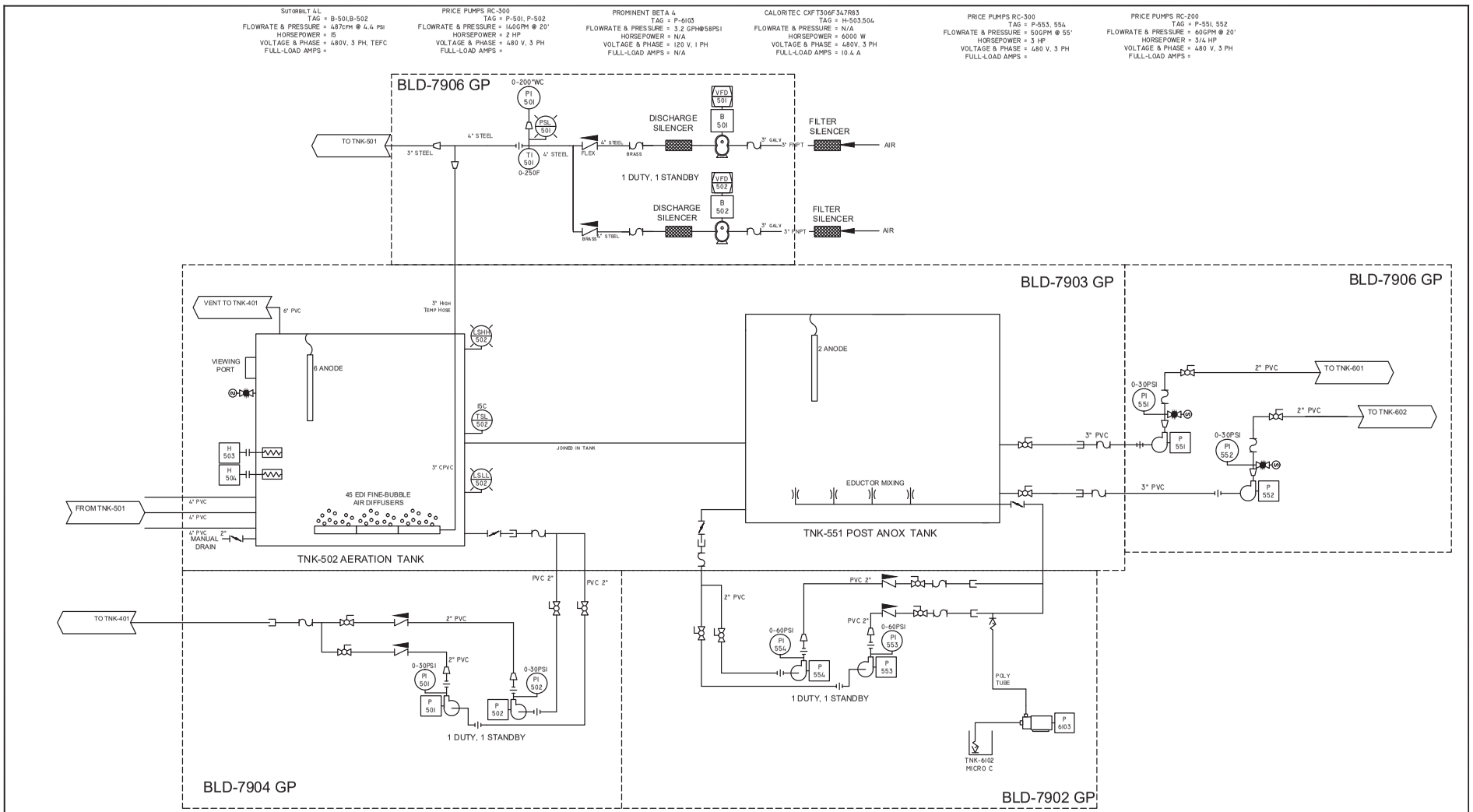

NOTES

newterra

PHONE:
(800) 420-4056

www.newterra.com

LEVEL	REVISION	DATE (mm/dd/yy)	BY
C	AS-BUILT	13/08/17	JJK
B	PRODUCTION	06/06/17	JJK
A2	SUBMITTAL REVISIONS	26/05/17	JJK
A	SUBMITTAL	23/05/17	JJK

PROJECT NUMBER: 1704432

TITLE AND LOCATION: P&ID AMARUQ MINE

CUSTOMER: AGNICO EAGLE MINE

DRAWN BY: MH | DATE: | SHEET: 3 | SHEETS: 4

THIS INFORMATION IS THE PROPERTY OF newterra AND CANNOT BE REUSED OR REPRODUCED WITHOUT THE WRITTEN CONSENT OF newterra

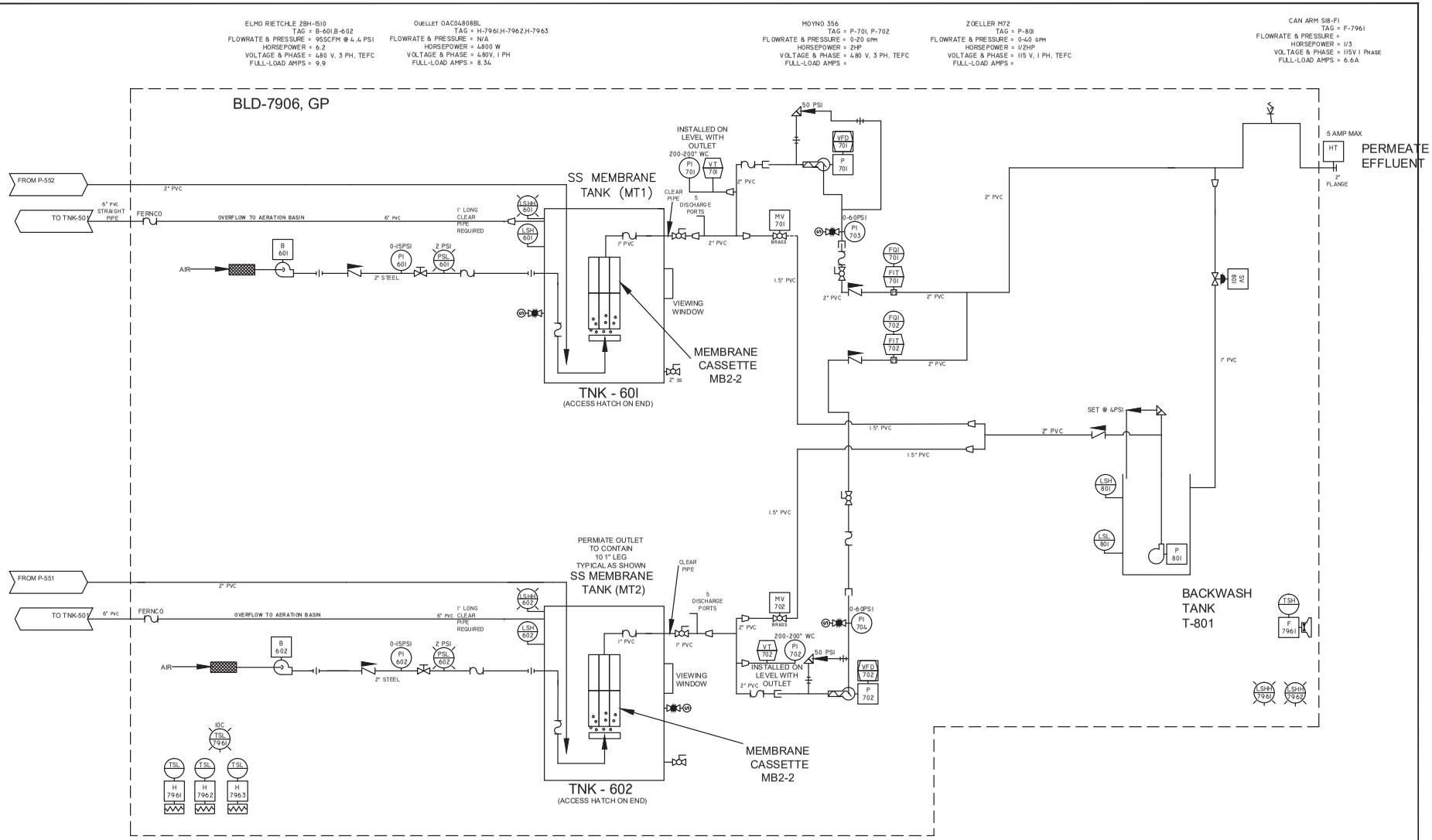

NOTES

newterra

PHONE: (800) 420-4056

www.newterra.com

LEVEL	REVISION	DATE (mm/dd/yy)	BY
C	AS-BUILT	13/08/17	JJK
B	PRODUCTION	06/06/17	JJK
A2	SUBMITTAL REVISIONS	26/05/17	JJK
A	SUBMITTAL	23/05/17	JJK

PROJECT NUMBER: 1704432

TITLE AND LOCATION: P&ID AMARUQ MINE

CUSTOMER: AGNICO EAGLE MINE

DRAWN BY: MH | DATE: | SHEET: 4 | SHEETS: 4

THIS INFORMATION IS THE PROPERTY OF newterra AND CANNOT BE REUSED OR REPRODUCED WITHOUT THE WRITTEN CONSENT OF newterra

VALVES AND PIPING

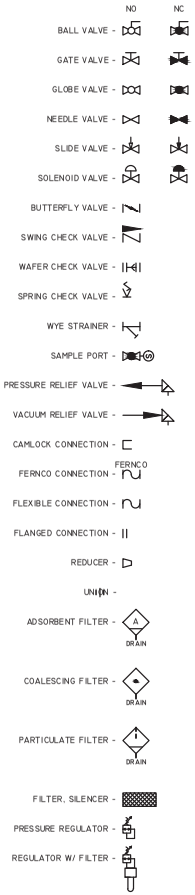

EQUIPMENT



EQUIPMENT

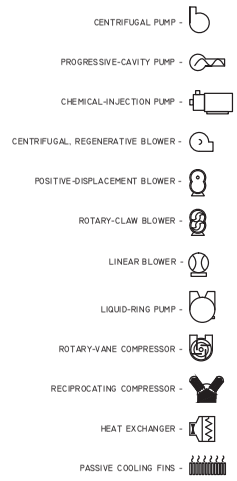

EQUIPMENT

AV - ACTUATED VAVLE
B - BLOWER
F - FAN
H - HEATER
MBR - MEMBRANE BIOLOGICAL REACTOR
MV - MODULATED VALVE
P - PUMP
SV - SOLENOID VALVE
TNK - TANK
UV - ULTRA VIOLET LIGHT
VFD - VARIABLE FREQUENCY DRIVE

FLOW MEASUREMENT

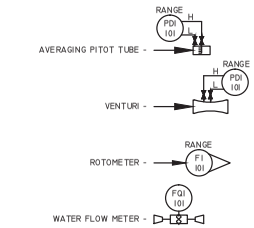

INSTRUMENT DESIGNATION

	INPUT	1ST MODIFIER	2ND MODIFIER	3RD MODIFIER	OUTPUT	1ST MODIFIER	
A							A
B						BLOWER	B
C	CYCLE					COMPRESSOR	C
D		DIFFERENTIAL				AIR DRYER	D
E							E
F	FLOW					FAN	F
G	GAS (LEL)		GAUGE				G
H				HIGH	HAND	HEATER	H
I	CURRENT		INDICATOR				I
J							J
K							K
L	LEVEL			LOW			L
M					MOTORIZED		M
N							N
O							O
P	PRESSURE				PNEUMATIC	PUMP	P
Q		QUANTITY					Q
R							R
S	SPEED		SWITCH		SOLENOID		S
T	TEMPERATURE		TRANSMITTER				T
U							U
V						VALVE	V
W							W
X							X
Y							Y
Z	POSITION						Z

INSTRUMENT IDENTIFICATION

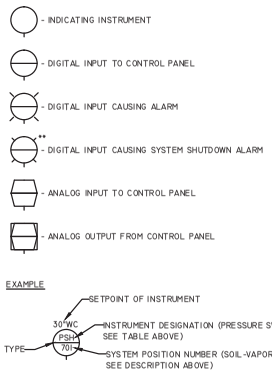

SYSTEM POSITION DESIGNATION

1000 - LIFT STATION
2000 - INLET SCREEN
3000 - EQUALIZATION TANK
4901 - SCREEN DISCHARGE PUMP TANK
5000 - AERATION TANK
5500 - SLUDGE HOLDING TANK
6000 - MBR TANK
6100 - CHEMICAL INJECTION
7000 - PERMEATE
7500 - UV LIGHT
7900 - BUILDING,TRAILER OR SKID
8000 - DISCHARGE TANK
8200 - CONTROL PANEL
8300 - TELEMETRY
9900 - EXTRAS

NOTES

newterra

PHONE:
(800) 420-4056

www.newterra.com

LEVEL	REVISION	DATE (mm/dd/yy)	BY
C	AS-BUILT	13/08/17	JJK
B	PRODUCTION	06/06/17	JJK
A2	SUBMITTAL REVISIONS	26/05/17	JJK
A	SUBMITTAL	23/05/17	JJK

PROJECT NUMBER: 1704432

TITLE AND LOCATION: P&ID AMARUQ MINE

CUSTOMER: AGNICO EAGLE MINE

DRAWN BY: MH | DATE: | SHEET: 4 | SHEETS: 4

THIS INFORMATION IS THE PROPERTY OF newterra AND CANNOT BE REUSED OR REPRODUCED WITHOUT THE WRITTEN CONSENT OF newterra

Project:

1704432 - AGNICO EAGLE MINE - C

newterra®

clean water. modular solutions. simple.™

Contents:

2	SYSTEM SPECIFICATIONS
3	LEGEND, ELECTRICAL
4	SINGLE LINE DIAGRAM, SHEET 1 OF 3
5	SINGLE LINE DIAGRAM, SHEET 2 OF 3
6	SINGLE LINE DIAGRAM, SHEET 3 OF 3
7	PLC/COMMUNICATION LAYOUT
8	PANEL LAYOUTS
9	SPARE SHEET
10	600V/480V POWER, DISTRIBUTION
11	480V POWER DISTRIBUTION, SHEET 1 OF 4
12	480V POWER DISTRIBUTION, SHEET 2 OF 4
13	480V POWER DISTRIBUTION, SHEET 3 OF 4
14	480V POWER DISTRIBUTION, SHEET 4 OF 4
15	SPARE SHEET
16	LV DISTRIBUTION PANEL, SHEET 1 OF 2
17	LV DISTRIBUTION PANEL, SHEET 2 OF 2
18	SPARE SHEET
19	MCP - 120VAC, CONTROL POWER
20	MCP - 24VDC, CONTROL POWER
21	MCP DISCRETE INPUTS, SHEET 1 OF 4
22	MCP DISCRETE INPUTS, SHEET 2 OF 4
23	MCP DISCRETE INPUTS, SHEET 3 OF 4
24	MCP DISCRETE INPUTS, SHEET 4 OF 4
25	MCP DISCRETE OUTPUTS, SHEET 1 OF 2
26	MCP DISCRETE OUTPUTS, SHEET 2 OF 2
27	MCP ANALOG INPUTS, SHEET 1 OF 2
28	MCP ANALOG INPUTS, SHEET 2 OF 2
29	MCP ANALOG OUTPUTS, DO/IT, PROBE & CUSTOMER CONNECTIONS
30	SPARE SHEET
31	MCP PANEL LAYOUT
32	MCP PANEL LAYOUT, TOP
33	MCP PANEL LAYOUT, BOTTOM
34	MPP 120VAC & 24VDC, CONTROL POWER
35	MPP OTB I/O, DISCRETE INPUTS/OUTPUTS
36	MPP DISCRETE INPUTS, SHEET 1 OF 2
37	MPP DISCRETE INPUTS, SHEET 2 OF 2
38	MPP DISCRETE INPUTS, & OUTPUTS
39	MPP RELAY OUTPUTS
40	MPP SPARE SHEET
41	MPP PANEL LAYOUT
42	MPP PANEL LAYOUT, TOP
43	MPP PANEL LAYOUT, MIDDLE
44	MPP PANEL LAYOUT, BOTTOM
45	JUNCTION BOX LAYOUTS, JB-7901'S
46	JUNCTION BOX LAYOUTS, JB-7902'S
47	JUNCTION BOX LAYOUTS, JB-7904'S
48	MPP BILL OF MATERIAL, MODULE 8201 - SHEET 1 OF 2
49	MPP BILL OF MATERIAL, MODULE 8201 - SHEET 2 OF 2
50	MCP BILL OF MATERIAL, MODULE 8202 - SHEET 1 OF 3
51	MCP BILL OF MATERIAL, MODULE 8202 - SHEET 2 OF 3
52	MCP BILL OF MATERIAL, MODULE 8202 - SHEET 3 OF 3
53	JB-7901-AC BILL OF MATERIAL, MODULE 8203 - SHEET 1 OF 11
54	JB-7901-DC BILL OF MATERIAL, MODULE 8203 - SHEET 2 OF 11
55	JB-7901-HV BILL OF MATERIAL, MODULE 8203 - SHEET 3 OF 11
56	JB-7901-IS BILL OF MATERIAL, MODULE 8203 - SHEET 4 OF 11
57	JB-7901OS-AC BILL OF MATERIAL, MODULE 8203 - SHEET 5 OF 11
58	JB-7902-AC BILL OF MATERIAL, MODULE 8203 - SHEET 6 OF 11
59	JB-7902-DC BILL OF MATERIAL, MODULE 8203 - SHEET 7 OF 11
60	JB-7902-HV BILL OF MATERIAL, MODULE 8203 - SHEET 8 OF 11
61	JB-7904-AC BILL OF MATERIAL, MODULE 8203 - SHEET 9 OF 11
62	JB-7904-DC BILL OF MATERIAL, MODULE 8203 - SHEET 10 OF 11
63	JB-7904-HV BILL OF MATERIAL, MODULE 8203 - SHEET 11 OF 11
64	BLD-7901 BILL OF MATERIAL, MODULE 8901 - SHEET 1 OF 2
65	BLD-7901 BILL OF MATERIAL, MODULE 8901 - SHEET 2 OF 2
66	BLD-7902 BILL OF MATERIAL, MODULE 8902
67	BLD-7904 BILL OF MATERIAL, MODULE 8904 - SHEET 1 OF 2
68	BLD-7904 BILL OF MATERIAL, MODULE 8904 - SHEET 2 OF 2
69	BLD-7905 BILL OF MATERIAL, MODULE 8905
70	BLD-7906 BILL OF MATERIAL, MODULE 8906 - SHEET 1 OF 2
71	BLD-7906 BILL OF MATERIAL, MODULE 8906 - SHEET 2 OF 2

THIS INFORMATION IS THE PROPERTY OF newterra ltd. AND CANNOT BE REUSED OR REPRODUCED WITHOUT THE WRITTEN CONSENT OF newterra ltd.

ELECTRICAL SPECIFICATIONS	
VOLTAGE	600V
PHASE	3Ø
FREQUENCY	60 Hz
FULL LOAD AMPS	172A
MAIN DISCONNECT SIZE	400A - FUSED @ 250A
SCCR SYMMETRICAL (kAMPS)	10
SYSTEM APPROVAL AND CLASSIFICATION	cMET - CL1Div2
PANEL APPROVAL AND CLASSIFICATION	cMETus to UL698A

WIRE LEGEND

BLACK: POWER
RED: 120VAC CONTROL
WHITE: NEUTRAL
BLUE: +24VDC & IS WIRING
BLU/WHT: 0VDC
YELLOW: INTERLOCKS

NOTES:

1325 CALIFORNIA AVE.
BROCKVILLE, ONTARIO
CANADA K6V 5Y6
PHONE: (613)498-1876
www.newterra.com

LEVEL	REVISION	DATE (dd/mm/yy)	BY
C	AS BUILT	14/08/17	DMB
B	FOR PRODUCTION	31/05/17	DMB
A1	FOR REVIEW	23/05/17	DMB
A	FOR SUBMITTAL	12/05/17	DMB

PROJ. NO: 1704432
TITLE AND LOCATION: SYSTEM SPECIFICATIONS

CUSTOMER: AGNICO EAGLE 600 MAN AMARUQ MINE

DRAWN BY:	DATE:	SHEET:	SHEETS:
DMB	08/05/17	2	71

1704432 - AGNICO EAGLE MINE - C

THIS INFORMATION IS THE PROPERTY OF newterra ltd.. AND CANNOT BE REUSED OR REPRODUCED WITHOUT THE WRITTEN CONSENT OF newterra ltd.

FLOW SWITCH, NORMALLY CLOSED

FLOW SWITCH, NORMALLY OPEN

FLOAT SWITCH, NORMALLY CLOSED

FLOAT SWITCH, NORMALLY OPEN

LIMIT SWITCH, NORMALLY CLOSED

LIMIT SWITCH, NORMALLY OPEN

PRESSURE SWITCH, CHANGE OVER CONTACTS

PRESSURE SWITCH, NORMALLY CLOSED OPENS ON PRESSURE INCREASE

PRESSURE SWITCH, NORMALLY OPEN CLOSES ON PRESSURE INCREASE

TEMPERATURE SWITCH, CHANGE OVER CONTACTS

TEMPERATURE SWITCH, NORMALLY CLOSED OPENS ON TEMPERATURE INCREASE

TEMPERATURE SWITCH, NORMALLY OPEN CLOSES ON TEMPERATURE INCREASE

PROXIMITY SWITCH, NORMALLY CLOSED

PROXIMITY SWITCH, NORMALLY OPEN

METAL OXIDE VARISTOR
MOV

S7296
DIODE

TANDEM TERMINAL BLOCK

PANEL TERMINAL BLOCK

JUNCTION BOX TERMINAL BLOCK

CUSTOMER TERMINAL BLOCK

FUSED TERMINAL BLOCK

TOGGLE SWITCH, NORMALLY OPEN

TOGGLE SWITCH, CHANGE OVER CONTACTS, 3 WAY

PUSH BUTTON, NORMALLY CLOSED

PUSH BUTTON, NORMALLY OPEN

PUSH BUTTON, NORMALLY CLOSED MUSHROOM HEAD

SELECTOR SWITCH, 2 POSITION
2 NORMALLY OPEN

SELECTOR SWITCH, 3 POSITION
2 NORMALLY OPEN

PILOT LIGHT, X=COLOR

COLOR CODE
A - AMBER
B - BLUE
G - GREEN
R - RED
W - WHITE

PILOT LIGHT, PUSH-TO-TEST
X=COLOR

BEACON LIGHT
X=COLOR

CONTACT, NORMALLY CLOSED

CONTACT, NORMALLY OPEN

TIME DELAY CONTACT, INSTANTANEOUS OPEN
TIMED CLOSED ON DE-ENERGIZE

TIME DELAY CONTACT, INSTANTANEOUS CLOSE
TIMED OPEN ON DE-ENERGIZE

TIME DELAY CONTACT, INSTANTANEOUS OPEN
TIMED CLOSE ON ENERGIZE

TIME DELAY CONTACT, INSTANTANEOUS CLOSE
TIMED OPEN ON ENERGIZE

COIL - RELAY, CONTACTOR
TIMER, MOTOR STARTER

ANNUNCIATOR, BELL

ANNUNCIATOR, HORN

ANNUNCIATOR, BUZZER

BATTERY

TRANSMITTER, 2 WIRE
LOOP POWERED

INTRINSICALLY SAFE BARRIERS
(NOT TO SCALE)

4CHANNEL DISCRETE

2 CHANNEL ANALOG

NETWORK SWITCH -ETHERNET
(NOT REPRESENTATIVE OF ALL TYPES)
(NOT TO SCALE)

PANEL METER
AM=AMMETER
VM=VOLT METER

ETM
ELAPSED TIME METER

CURRENT TRANSFORMER

GROUND

INSTRUMENTATION
GROUND

SOLENOID

CURRENT SWITCH

FUSED DISCONNECT
X=AMP RATING

FUSE, X=AMP RATING

CIRCUIT BREAKER
X=AMP RATING

COMBINATION STARTER
X - X AMP=CURRENT RANGE

CONTACTOR

DISTRIBUTION BLOCK

X HP
X FLA
X AWG
3 PHASE MOTOR

X kW
X AMP
X AWG
3 PHASE HEATER

RECEPTACLE, SINGLE OUTLET

RECEPTACLE, DUPLEX

TRANSFORMER
CONTROL POWER
(NOT REPRESENTATIVE OF ALL TYPES)

TRANSFORMER
DISTRIBUTION/LIGHTING
(NOT REPRESENTATIVE OF ALL TYPES)

120VAC
24VDC
72Wat
DC POWER SUPPLY
(NOT REPRESENTATIVE OF ALL TYPES)

REACTOR

COIL: *LOCATION*
4 POLE RELAY
CROSS REFERENCES

LOCATION
COMBINATION STARTER
CROSS REFERENCES

VARIABLE FREQUENCY DRIVE
(NOT REPRESENTATIVE OF ALL TYPES)
(NOT TO SCALE)

GENERAL PURPOSE WIRING
EXTERNAL TO PANEL

CL1Div2 WIRING
EXTERNAL TO PANEL

WIRING BY OTHERS
EXTERNAL TO PANEL

USA 3 PHASE
POWER WIRING COLOR CODE

480V	208/230V(HIGH LEG)
PHASE A - BROWN	PHASE A - BLACK
PHASE B - ORANGE	PHASE B - RED(ORG)
PHASE C - YELLOW	PHASE C - BLUE

CANADIAN 3 PHASE
POWER WIRING COLOR CODE

PHASE A - RED
PHASE B - BLACK
PHASE C - BLUE

WIRE LEGEND

BLACK:	POWER
RED:	120VAC CONTROL
WHITE:	NEUTRAL
BLUE:	+24VDC & IS WIRING
BLU/WHT:	0VDC
YELLOW:	INTERLOCKS

NOTES:

1.

newterra

1325 CALIFORNIA AVE.
BROCKVILLE, ONTARIO
CANADA K6V 5Y6
PHONE: (613)498-1876
www.newterra.com

LEVEL	REVISION	DATE (dd/mm/yy)	BY
C	AS BUILT	14/08/17	DMB
B	FOR PRODUCTION	31/05/17	DMB
A1	FOR REVIEW	23/05/17	DMB
A	FOR SUBMITTAL	12/05/17	DMB

PROJ. NO: 1704432

TITLE AND LOCATION: LEGEND ELECTRICAL

CUSTOMER: AGNICO EAGLE 600 MAN AMARUQ MINE

DRAWN BY:	DATE:	SHEET:	SHEETS:
DMB	08/05/17	3	71

1704432 - AGNICO EAGLE MINE - C

THIS INFORMATION IS THE PROPERTY OF newterra ltd.. AND CANNOT BE REUSED OR REPRODUCED WITHOUT THE WRITTEN CONSENT OF newterra ltd.

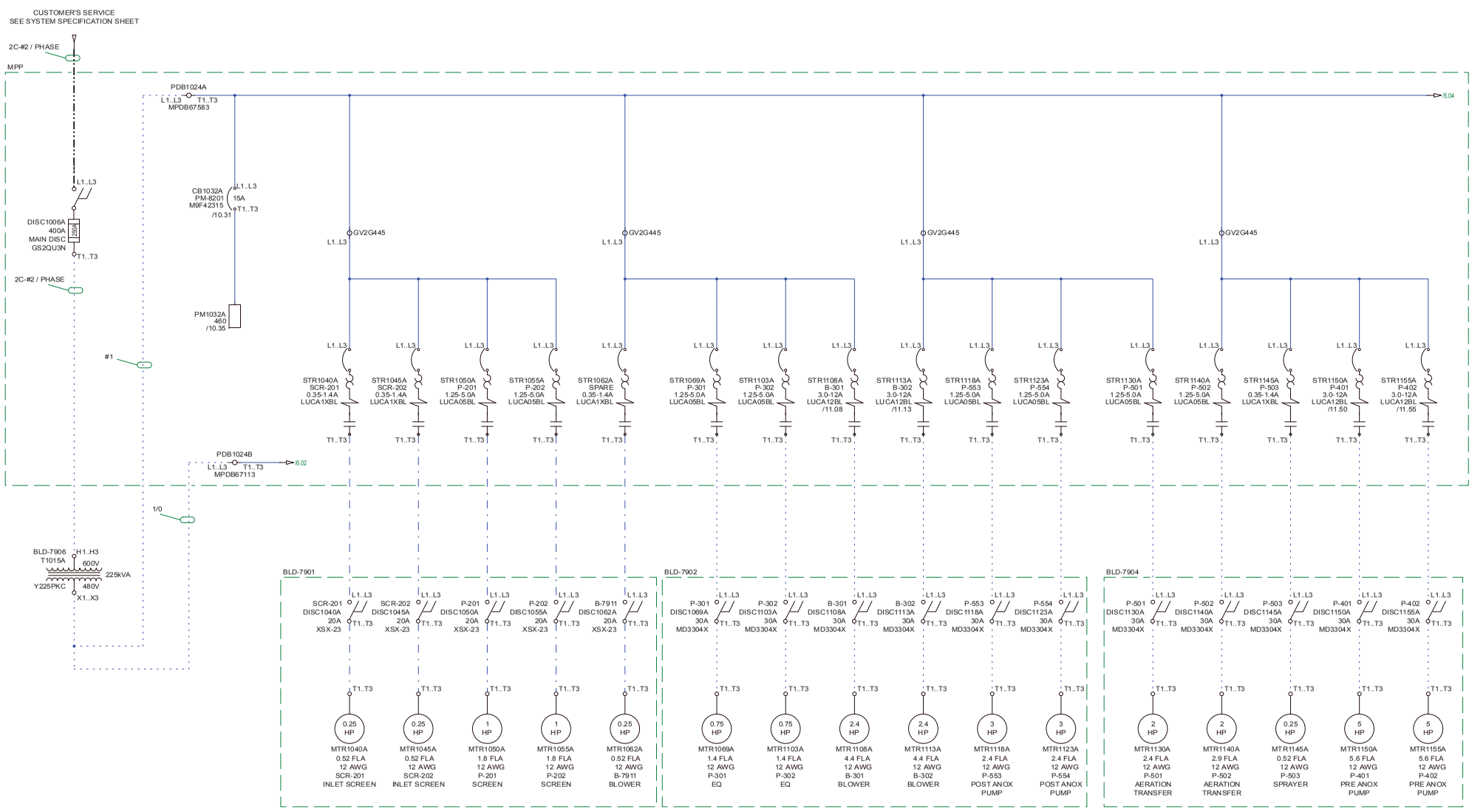

WIRE LEGEND

BLACK:	POWER
RED:	120VAC CONTROL
WHITE:	NEUTRAL
BLUE:	+24VDC & IS WIRING
BLU/WHT:	0VDC
YELLOW:	INTERLOCKS

NOTES:

1.

newterra

1325 CALIFORNIA AVE.
BROCKVILLE, ONTARIO
CANADA K6V 5Y6
PHONE: (613)498-1876
www.newterra.com

LEVEL	REVISION	DATE (dd/mm/yy)	BY
C	AS BUILT	14/08/17	DMB
B	FOR PRODUCTION	31/05/17	DMB
A1	FOR REVIEW	23/05/17	DMB
A	FOR SUBMITTAL	12/05/17	DMB

PROJ. NO: 1704432

TITLE AND LOCATION: SINGLE LINE DIAGRAM SHEET 1 OF 3

CUSTOMER: AGNICO EAGLE 600 MAN AMARUQ MINE

DRAWN BY:	DATE:	SHEET:	SHEETS:
DMB	08/05/17	4	71

1704432 - AGNICO EAGLE MINE - C

THIS INFORMATION IS THE PROPERTY OF newterra AND CANNOT BE REUSED OR REPRODUCED WITHOUT THE WRITTEN CONSENT OF newterra

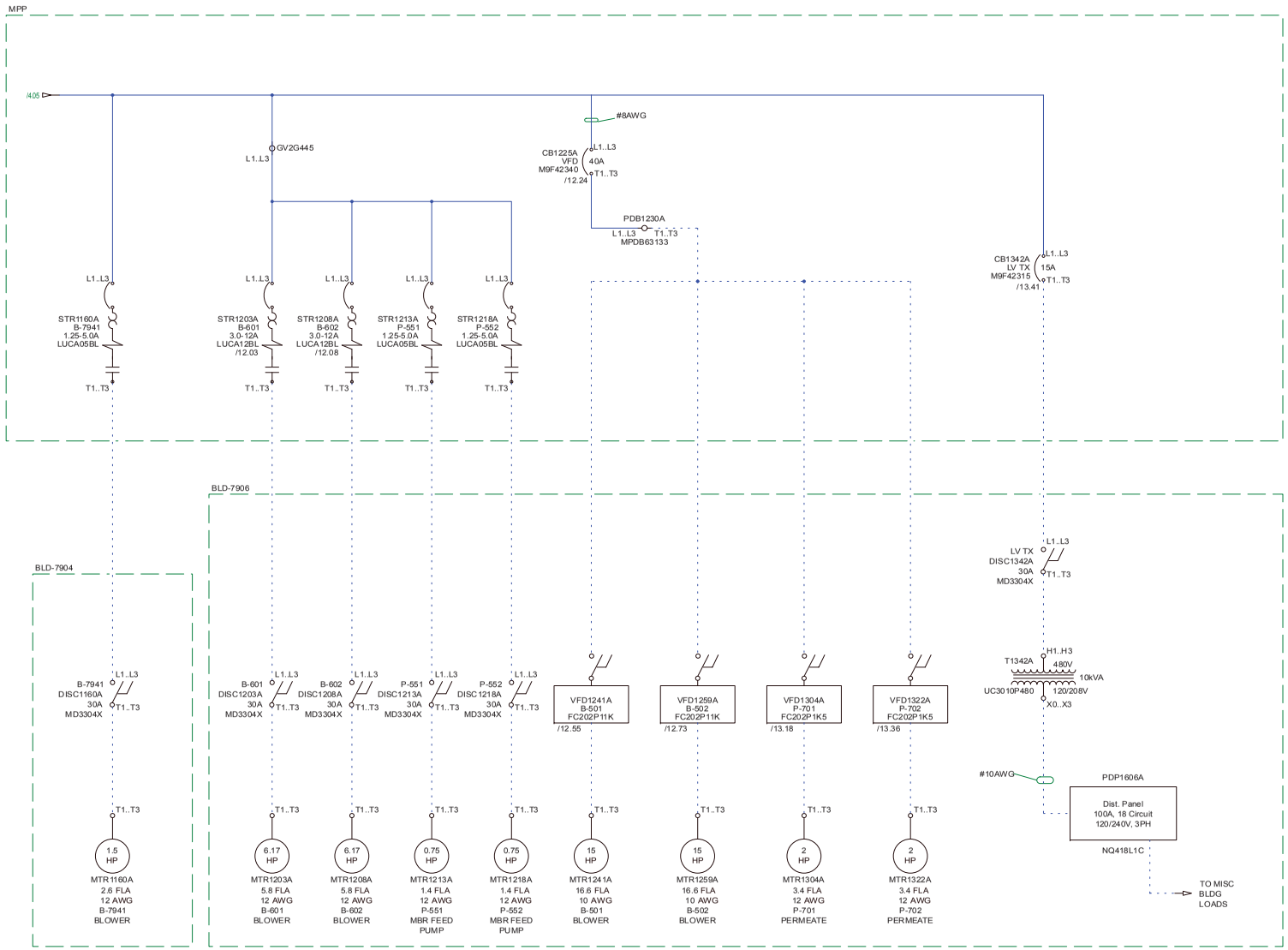

WIRE LEGEND

BLACK:	POWER
RED:	120VAC CONTROL
WHITE:	NEUTRAL
BLUE:	+24VDC & IS WIRING
BLU/WHT:	0VDC
YELLOW:	INTERLOCKS

NOTES:

1.

1325 CALIFORNIA AVE.
BROCKVILLE, ONTARIO
CANADA K6V 5Y6
PHONE: (613)498-1876
www.newterra.com

LEVEL	REVISION	DATE (dd/mm/yy)	BY
C	AS BUILT	14/08/17	DMB
B	FOR PRODUCTION	31/05/17	DMB
A1	FOR REVIEW	23/05/17	DMB
A	FOR SUBMITTAL	12/05/17	DMB

PROJ. NO: 1704432

TITLE AND LOCATION: SINGLE LINE DIAGRAM SHEET 2 OF 3

CUSTOMER: AGNICO EAGLE 600 MAN AMARUQ MINE

DRAWN BY:	DATE:	SHEET:	SHEETS:
DMB	08/05/17	5	71

1704432 - AGNICO EAGLE MINE - C

THIS INFORMATION IS THE PROPERTY OF newterra AND CANNOT BE REUSED OR REPRODUCED WITHOUT THE WRITTEN CONSENT OF newterra

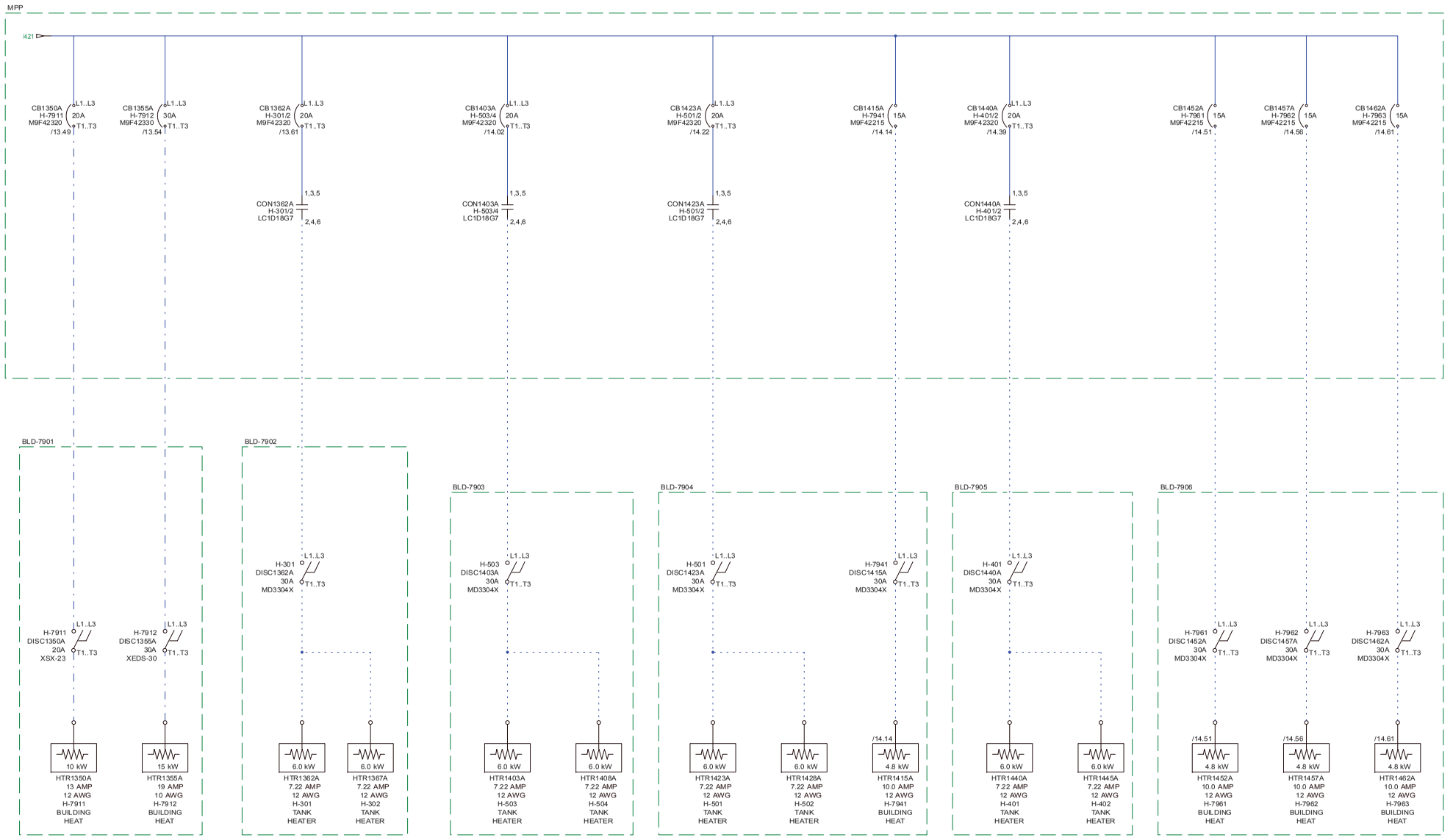

WIRE LEGEND

BLACK:	POWER
RED:	120VAC CONTROL
WHITE:	NEUTRAL
BLUE:	+24VDC & IS WIRING
BLU/WHT:	0VDC
YELLOW:	INTERLOCKS

NOTES:

1.

newterra

1325 CALIFORNIA AVE.
BROCKVILLE, ONTARIO
CANADA K6V 5Y6
PHONE: (613)498-1876
www.newterra.com

LEVEL	REVISION	DATE (dd/mm/yy)	BY
C	AS BUILT	14/08/17	DMB
B	FOR PRODUCTION	31/05/17	DMB
A1	FOR REVIEW	23/05/17	DMB
A	FOR SUBMITTAL	12/05/17	DMB

PROJ. NO: 1704432

TITLE AND LOCATION: SINGLE LINE DIAGRAM SHEET 3 OF 3

CUSTOMER: AGNICO EAGLE 600 MAN AMARUQ MINE

DRAWN BY:	DATE:	SHEET:	SHEETS:
DMB	10/05/17	6	71

1704432 - AGNICO EAGLE MINE - C

THIS INFORMATION IS THE PROPERTY OF newterra AND CANNOT BE REUSED OR REPRODUCED WITHOUT THE WRITTEN CONSENT OF newterra

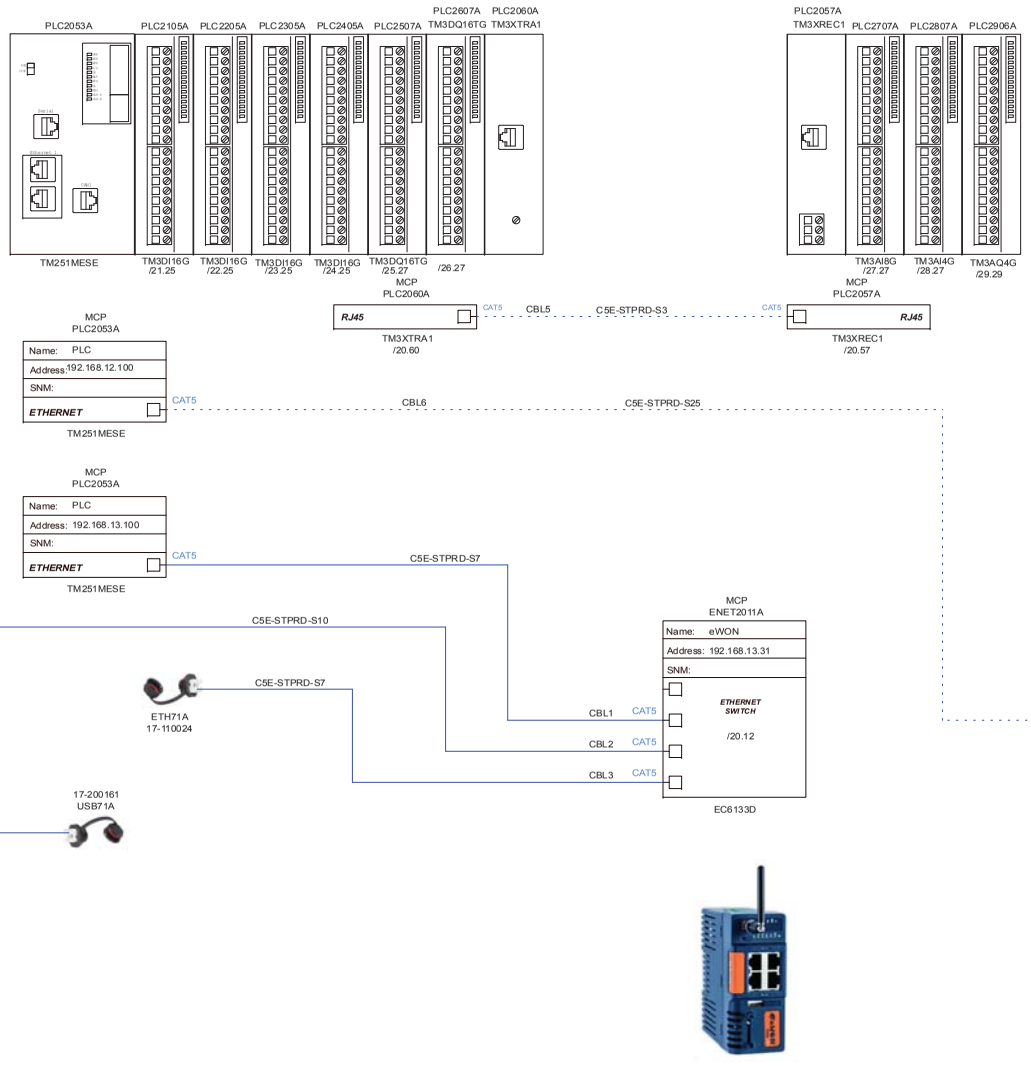

WIRE LEGEND

BLACK:	POWER
RED:	120VAC CONTROL
WHITE:	NEUTRAL
BLUE:	+24VDC & IS WIRING
BLU/WHT:	0VDC
YELLOW:	INTERLOCKS

NOTES:

1.

newterra

1325 CALIFORNIA AVE.
BROCKVILLE, ONTARIO
CANADA K6V 5Y6
PHONE: (613)498-1876
www.newterra.com

LEVEL	REVISION	DATE (dd/mm/yy)	BY
C	AS BUILT	14/08/17	DMB
B	FOR PRODUCTION	31/05/17	DMB
A1	FOR REVIEW	23/05/17	DMB
A	FOR SUBMITTAL	12/05/17	DMB

PROJ. NO: 1704432

TITLE AND LOCATION: PLC/COMMUNICATION LAYOUT

CUSTOMER: AGNICO EAGLE 600 MAN AMARUQ MINE

DRAWN BY:	DATE:	SHEET:	SHEETS:
DMB	08/05/17	7	71

1704432 - AGNICO EAGLE MINE - C

THIS INFORMATION IS THE PROPERTY OF newterra ltd.. AND CANNOT BE REUSED OR REPRODUCED WITHOUT THE WRITTEN CONSENT OF newterra ltd.

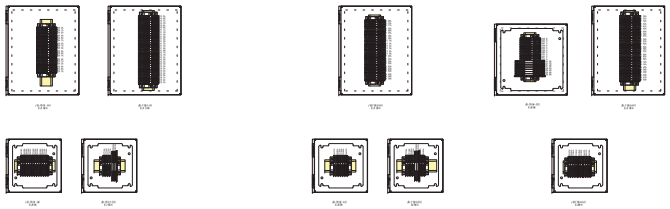

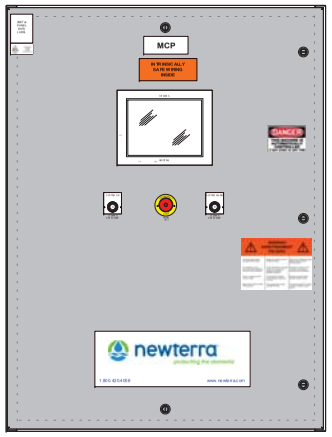

PANEL OUTER DOOR

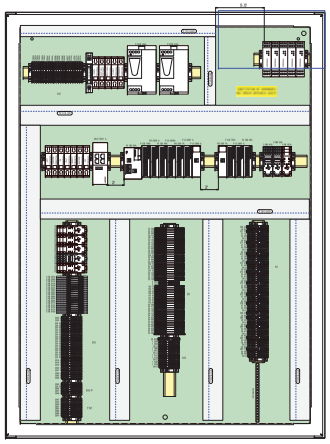

MCP
ENABLEMENT 20Y
PANEL INTERIOR



PANEL OUTER DOOR

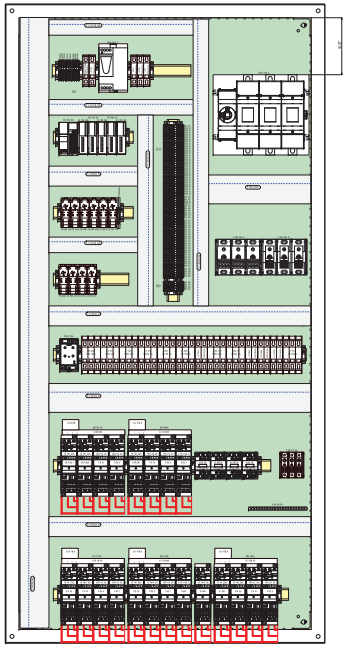

MPP
ENABLEMENT 20Y
PANEL INTERIOR

WIRE LEGEND

BLACK:	POWER
RED:	120VAC CONTROL
WHITE:	NEUTRAL
BLUE:	+24VDC & IS WIRING
BLU/WHT:	0VDC
YELLOW:	INTERLOCKS

NOTES:

1.

newterra

1325 CALIFORNIA AVE.
BROCKVILLE, ONTARIO
CANADA K6V 5Y6
PHONE: (613)498-1876
www.newterra.com

LEVEL	REVISION	DATE (dd/mm/yy)	BY
C	AS BUILT	14/08/17	DMB
B	FOR PRODUCTION	31/05/17	DMB
A1	FOR REVIEW	23/05/17	DMB
A	FOR SUBMITTAL	12/05/17	DMB

PROJ. NO: 1704432

TITLE AND LOCATION: PANEL LAYOUTS

CUSTOMER: AGNICO EAGLE 600 MAN AMARUQ MINE

DRAWN BY:	DATE:	SHEET:	SHEETS:
DMB	08/05/17	8	71

1704432 - AGNICO EAGLE MINE - C

THIS INFORMATION IS THE PROPERTY OF newterra ltd.. AND CANNOT BE REUSED OR REPRODUCED WITHOUT THE WRITTEN CONSENT OF newterra ltd.

9 01
9 02
9 03
9 04
9 05
9 06
9 07
9 08
9 09
9 10
9 11
9 12
9 13
9 14
9 15
9 16
9 17
9 18
9 19
9 20
9 21
9 22
9 23
9 24
9 25
9 26
9 27
9 28
9 29
9 30
9 31
9 32
9 33
9 34
9 35
9 36
9 37

INTENTIONALLY BLANK

WIRE LEGEND

BLACK:	POWER
RED:	120VAC CONTROL
WHITE:	NEUTRAL
BLUE:	+24VDC & IS WIRING
BLU/WHT:	0VDC
YELLOW:	INTERLOCKS

NOTES:

1.

1325 CALIFORNIA AVE.
BROCKVILLE, ONTARIO
CANADA K6V 5Y6
PHONE: (613)498-1876
www.newterra.com

LEVEL	REVISION	DATE (dd/m/m/yy)	BY
C	AS BUILT	14/08/17	DMB
B	FOR PRODUCTION	31/05/17	DMB
A1	FOR REVIEW	23/05/17	DMB
A	FOR SUBMITTAL	12/05/17	DMB

PROJ. NO: 1704432

TITLE AND LOCATION: SPARE SHEET

CUSTOMER: AGNICO EAGLE 600 MAN AMARUQ MINE

DRAWN BY:	DATE:	SHEET:	SHEETS:
DMB	08/05/17	9	71

1704432 - AGNICO EAGLE MINE - C

THIS INFORMATION IS THE PROPERTY OF newterra AND CANNOT BE REUSED OR REPRODUCED WITHOUT THE WRITTEN CONSENT OF newterra

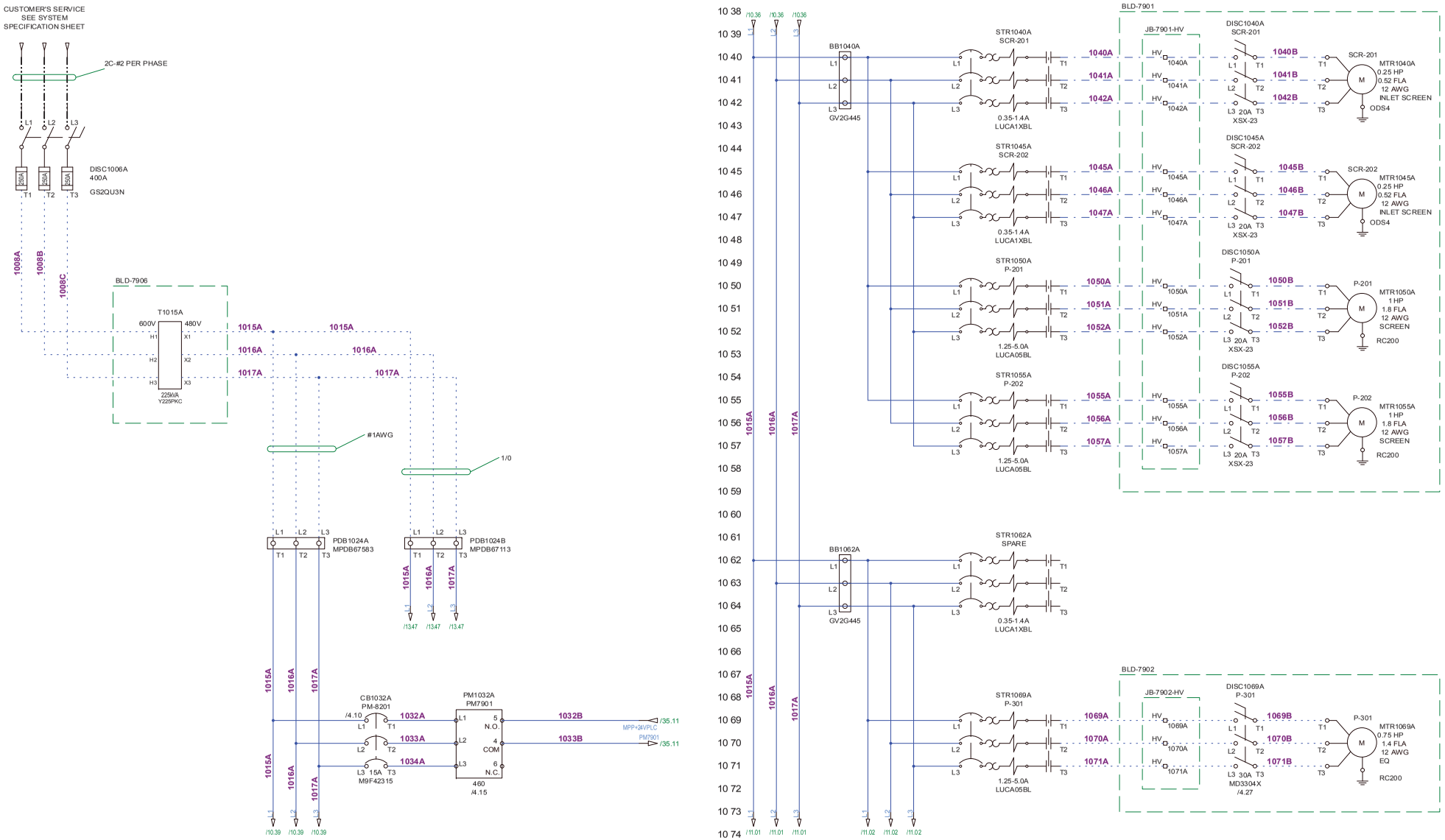

WIRE LEGEND

BLACK:	POWER
RED:	120VAC CONTROL
WHITE:	NEUTRAL
BLUE:	+24VDC & IS WIRING
BLU/WHT:	0VDC
YELLOW:	INTERLOCKS

NOTES:

1. USE CANADIAN WIRING CODE

newterra

1325 CALIFORNIA AVE.
BROCKVILLE, ONTARIO
CANADA K6V 5Y6
PHONE: (613)498-1876
www.newterra.com

LEVEL	REVISION	DATE (dd/mm/yy)	BY
C	AS BUILT	14/08/17	DMB
B	FOR PRODUCTION	31/05/17	DMB
A1	FOR REVIEW	23/05/17	DMB
A	FOR SUBMITTAL	12/05/17	DMB

PROJ. NO: 1704432

TITLE AND LOCATION: 600V/480V POWER DISTRIBUTION MPP

CUSTOMER: AGNICO EAGLE 600 MAN AMARUQ MINE

DRAWN BY:	DATE:	SHEET:	SHEETS:
DMB	08/05/17	10	71

1704432 - AGNICO EAGLE MINE - C

THIS INFORMATION IS THE PROPERTY OF newterra ltd.. AND CANNOT BE REUSED OR REPRODUCED WITHOUT THE WRITTEN CONSENT OF newterra ltd.

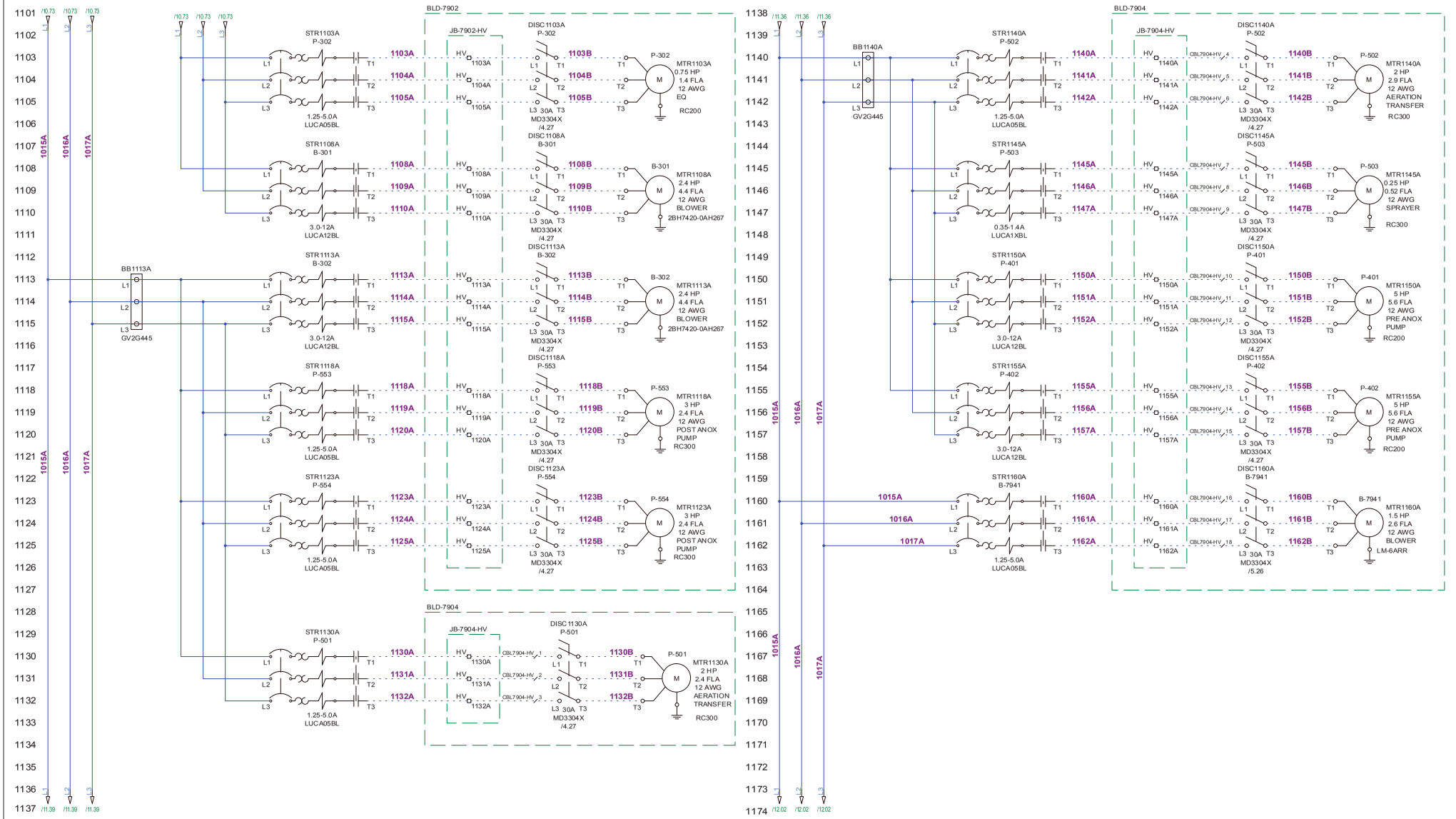

WIRE LEGEND

BLACK:	POWER
RED:	120VAC CONTROL
WHITE:	NEUTRAL
BLUE:	+24VDC & IS WIRING
BLU/WHT:	0VDC
YELLOW:	INTERLOCKS

NOTES:

1. USE CANADIAN WIRING CODE

newterra

1325 CALIFORNIA AVE.
BROCKVILLE, ONTARIO
CANADA K6V 5Y6
PHONE: (613)498-1876
www.newterra.com

LEVEL	REVISION	DATE (dd/mm/yy)	BY
C	AS BUILT	14/08/17	DMB
B	FOR PRODUCTION	31/05/17	DMB
A1	FOR REVIEW	23/05/17	DMB
A	FOR SUBMITTAL	12/05/17	DMB

PROJ. NO: 1704432

TITLE AND LOCATION: 480V POWER DISTRIBUTION SHEET 1 OF 4 MPP

CUSTOMER: AGNICO EAGLE 600 MAN AMARUQ MINE

DRAWN BY:	DATE:	SHEET:	SHEETS:
DMB	08/05/17	11	71

1704432 - AGNICO EAGLE MINE - C

THIS INFORMATION IS THE PROPERTY OF newterra ltd.. AND CANNOT BE REUSED OR REPRODUCED WITHOUT THE WRITTEN CONSENT OF newterra ltd.

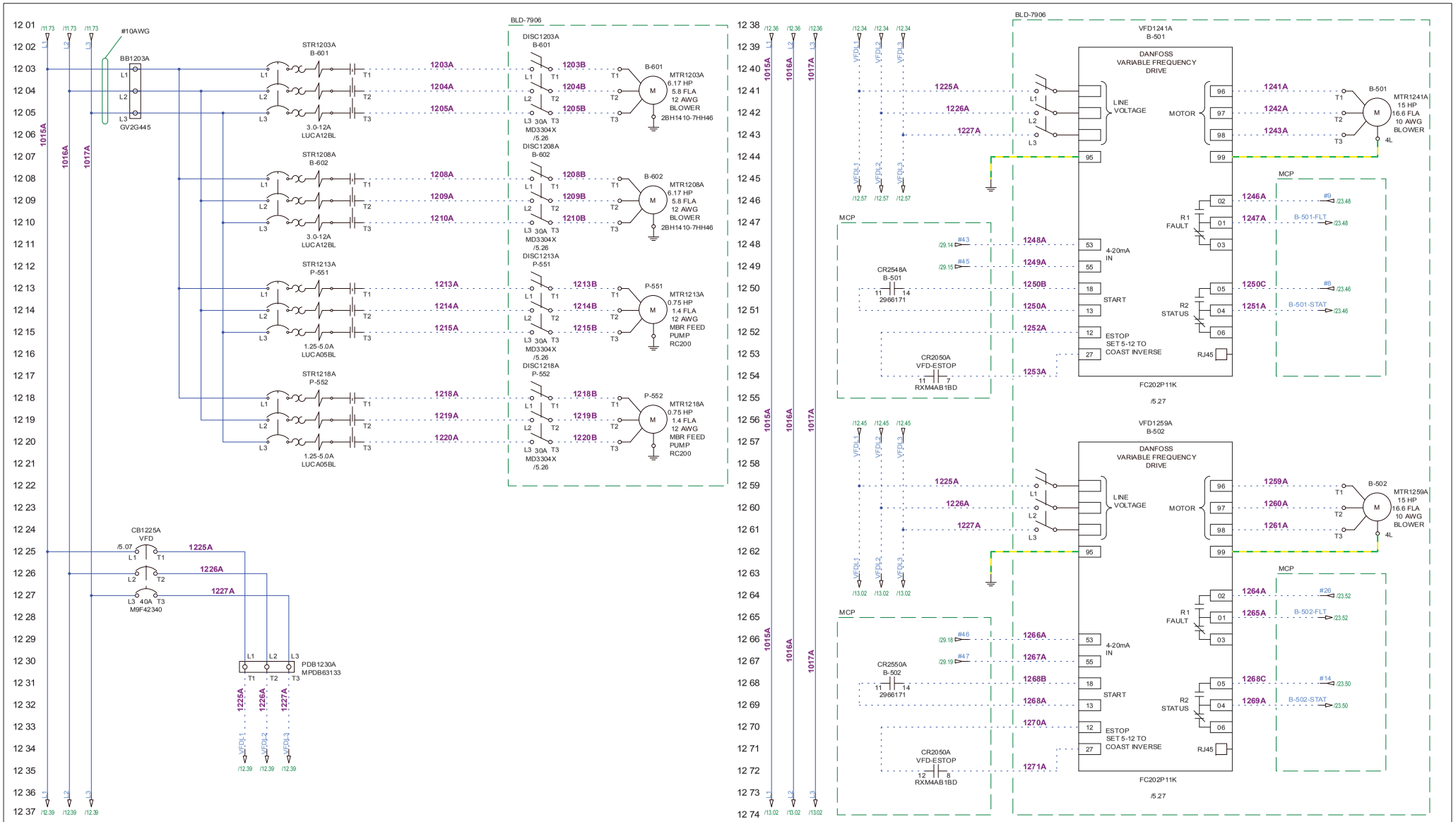

WIRE LEGEND

BLACK:	POWER
RED:	120VAC CONTROL
WHITE:	NEUTRAL
BLUE:	+24VDC & IS WIRING
BLU/WHT:	0VDC
YELLOW:	INTERLOCKS

NOTES:

1. USE CANADIAN WIRING CODE

1325 CALIFORNIA AVE.
BROCKVILLE, ONTARIO
CANADA K6V 5Y6
PHONE: (613)498-1876
www.newterra.com

LEVEL	REVISION	DATE (dd/mm/yy)	BY
C	AS BUILT	14/08/17	DMB
B	FOR PRODUCTION	31/05/17	DMB
A1	FOR REVIEW	23/05/17	DMB
A	FOR SUBMITTAL	12/05/17	DMB

PROJ. NO: 1704432

TITLE AND LOCATION: 480V POWER DISTRIBUTION SHEET 2 OF 4 MPP

CUSTOMER: AGNICO EAGLE 600 MAN AMARUQ MINE

DRAWN BY:	DATE:	SHEET:	SHEETS:
DMB	08/05/17	12	71

1704432 - AGNICO EAGLE MINE - C

THIS INFORMATION IS THE PROPERTY OF newterra ltd.. AND CANNOT BE REUSED OR REPRODUCED WITHOUT THE WRITTEN CONSENT OF newterra ltd.

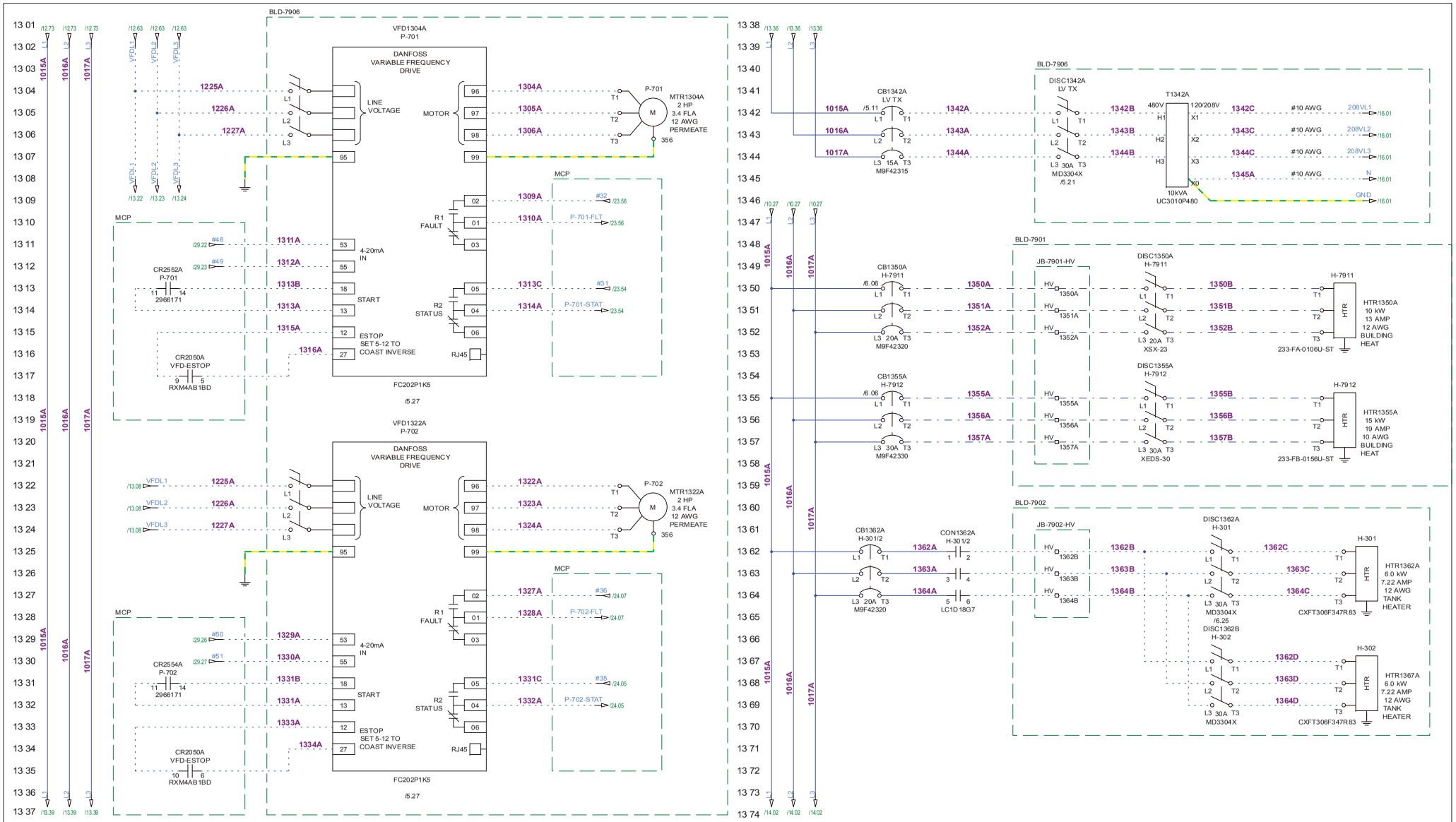

WIRE LEGEND

BLACK:	POWER
RED:	120VAC CONTROL
WHITE:	NEUTRAL
BLUE:	+24VDC & IS WIRING
BLU/WHT:	0VDC
YELLOW:	INTERLOCKS

NOTES:

1. USE CANADIAN WIRING CODE

newterra

1325 CALIFORNIA AVE.
BROCKVILLE, ONTARIO
CANADA K6V 5Y6
PHONE: (613)498-1876
www.newterra.com

LEVEL	REVISION	DATE (dd/mm/yy)	BY
C	AS BUILT	14/08/17	DMB
B	FOR PRODUCTION	31/05/17	DMB
A1	FOR REVIEW	23/05/17	DMB
A	FOR SUBMITTAL	12/05/17	DMB

PROJ. NO: 1704432

TITLE AND LOCATION: 480V POWER DISTRIBUTION SHEET 3 OF 4 MPP

CUSTOMER: AGNICO EAGLE 600 MAN AMARUQ MINE

DRAWN BY:	DATE:	SHEET:	SHEETS:
DMB	10/05/17	13	71

1704432 - AGNICO EAGLE MINE - C

THIS INFORMATION IS THE PROPERTY OF newterra ltd.. AND CANNOT BE REUSED OR REPRODUCED WITHOUT THE WRITTEN CONSENT OF newterra ltd.

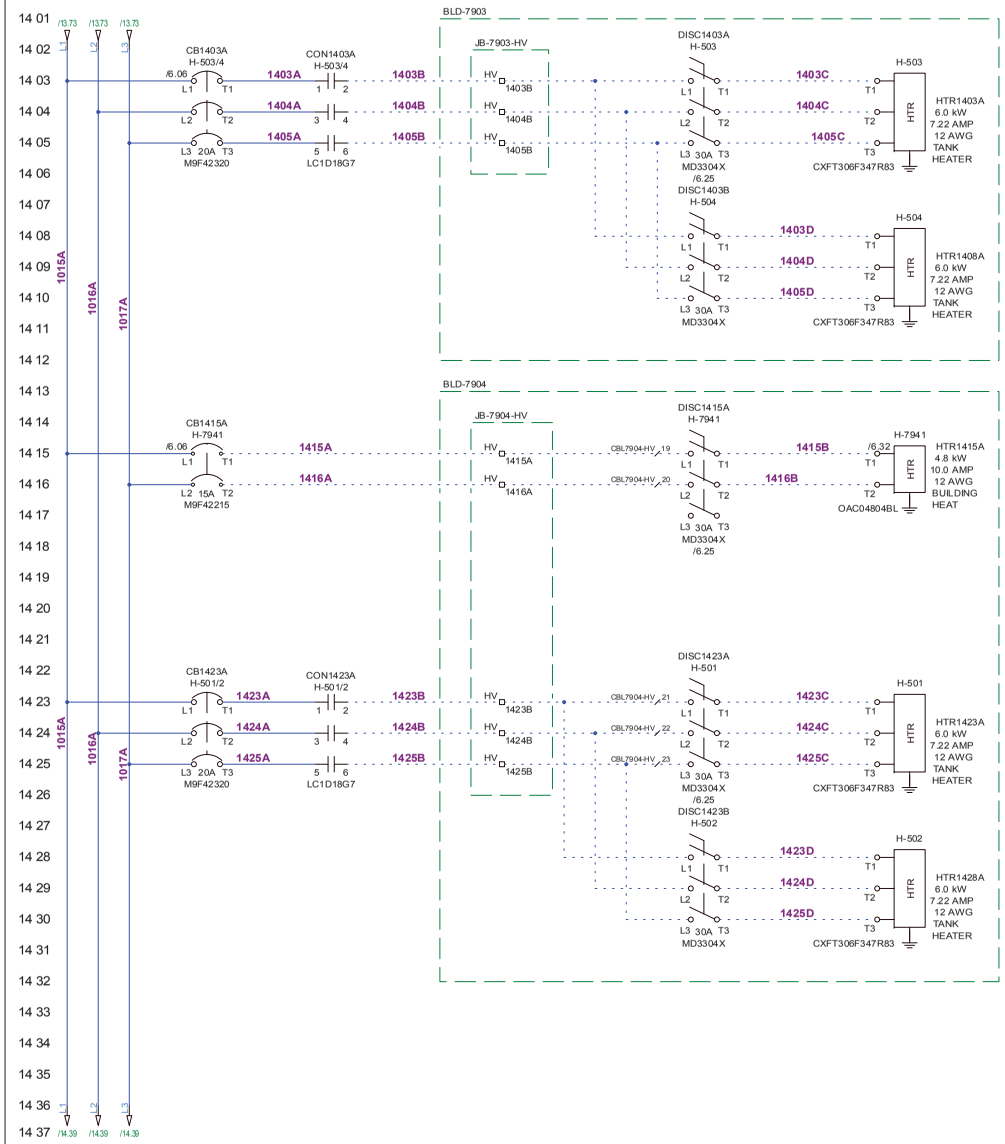

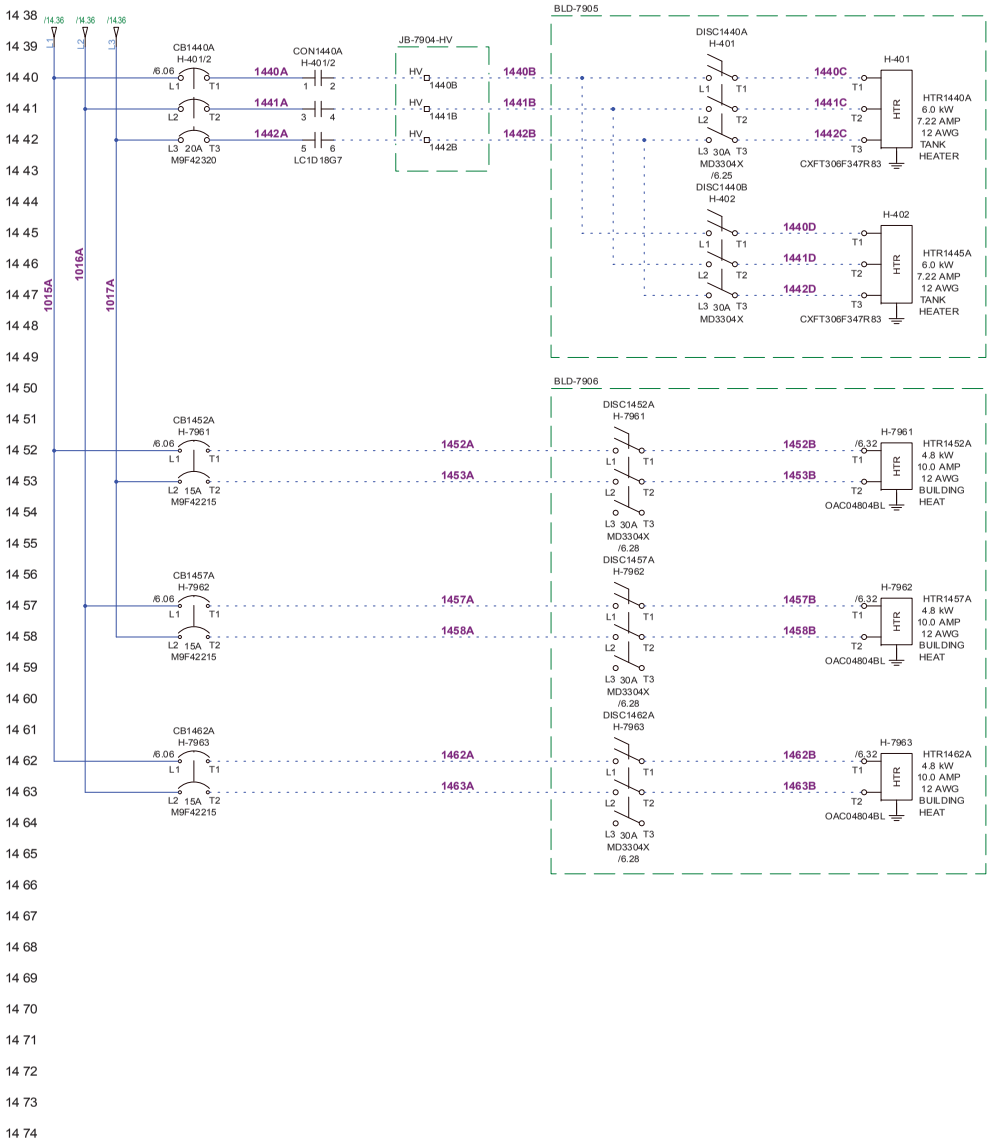

WIRE LEGEND

BLACK:	POWER
RED:	120VAC CONTROL
WHITE:	NEUTRAL
BLUE:	+24VDC & IS WIRING
BLU/WHT:	0VDC
YELLOW:	INTERLOCKS

NOTES:

1. USE CANADIAN WIRING CODE

3. DEVICES IN BLD-7903 ARE ONLY REQUIRED FOR THE 400 MAN OPTION. IF THE 400 MAN IS NOT REQUIRED, STOP WIRING AT BASE OF P2019A CONNECTOR.
4. USE TANDEM FERRULES FOR CONNECTING WIRES TO DISTRIBUTION LUG

1325 CALIFORNIA AVE.
BROCKVILLE, ONTARIO
CANADA K6V 5Y6
PHONE: (613)498-1876
www.newterra.com

LEVEL	REVISION	DATE (dd/mm/yy)	BY
C	AS BUILT	14/08/17	DMB
B	FOR PRODUCTION	31/05/17	DMB
A1	FOR REVIEW	23/05/17	DMB
A	FOR SUBMITTAL	12/05/17	DMB

PROJ. NO: 1704432

TITLE AND LOCATION: 480V POWER DISTRIBUTION SHEET 4 OF 4 MPP

CUSTOMER: AGNICO EAGLE 600 MAN AMARUQ MINE

DRAWN BY:	DATE:	SHEET:	SHEETS:
DMB	08/05/17	14	71

1704432 - AGNICO EAGLE MINE - C

THIS INFORMATION IS THE PROPERTY OF newterra ltd.. AND CANNOT BE REUSED OR REPRODUCED WITHOUT THE WRITTEN CONSENT OF newterra ltd.

15 01
15 02
15 03
15 04
15 05
15 06
15 07
15 08
15 09
15 10
15 11
15 12
15 13
15 14
15 15
15 16
15 17
15 18
15 19
15 20
15 21
15 22
15 23
15 24
15 25
15 26
15 27
15 28
15 29
15 30
15 31
15 32
15 33
15 34
15 35
15 36
15 37

INTENTIONALLY BLANK

WIRE LEGEND

BLACK:	POWER
RED:	120VAC CONTROL
WHITE:	NEUTRAL
BLUE:	+24VDC & IS WIRING
BLU/WHT:	0VDC
YELLOW:	INTERLOCKS

NOTES:

1. USE CANADIAN WIRING CODE

1325 CALIFORNIA AVE.
BROCKVILLE, ONTARIO
CANADA K6V 5Y6
PHONE: (613)498-1876
www.newterra.com

LEVEL	REVISION	DATE (dd/m/m/yy)	BY
C	AS BUILT	14/08/17	DMB
B	FOR PRODUCTION	31/05/17	DMB
A1	FOR REVIEW	23/05/17	DMB
A	FOR SUBMITTAL	12/05/17	DMB

PROJ. NO: 1704432

TITLE AND LOCATION: SPARE SHEET

MPP

CUSTOMER: AGNICO EAGLE 600 MAN AMARUQ MINE

DRAWN BY:	DATE:	SHEET:	SHEETS:
DMB	23/05/17	15	71

1704432 - AGNICO EAGLE MINE - C

THIS INFORMATION IS THE PROPERTY OF newterra AND CANNOT BE REUSED OR REPRODUCED WITHOUT THE WRITTEN CONSENT OF newterra

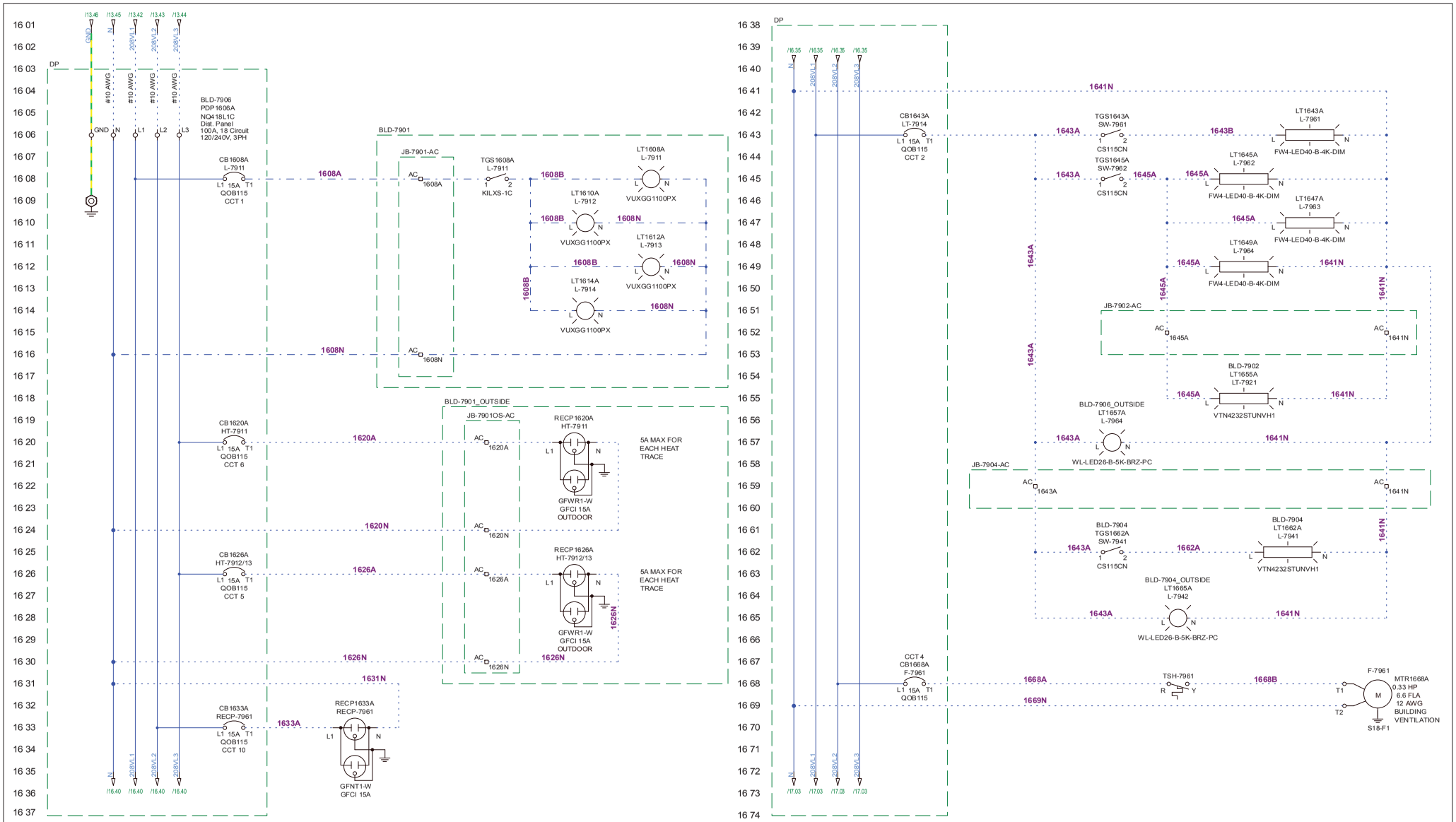

WIRE LEGEND

BLACK:	POWER
RED:	120VAC CONTROL
WHITE:	NEUTRAL
BLUE:	+24VDC & IS WIRING
BLU/WHT:	0VDC
YELLOW:	INTERLOCKS

NOTES:

1. FOLLOW CANADIAN COLOUR CODE FOR POWER WIRING (SEE SHEET 3 - LEGEND)
2. WIRE SIZE IS #12 AWG FOR POWER UNLESS OTHERWISE SPECIFIED

newterra

1325 CALIFORNIA AVE.
BROCKVILLE, ONTARIO
CANADA K6V 5Y6
PHONE: (613)498-1876
www.newterra.com

LEVEL	REVISION	DATE (dd/mm/yy)	BY
C	AS BUILT	14/08/17	DMB
B	FOR PRODUCTION	31/05/17	DMB
A1	FOR REVIEW	23/05/17	DMB
A	FOR SUBMITTAL	12/05/17	DMB

PROJ. NO: 1704432

TITLE AND LOCATION:
LV DISTRIBUTION PANEL
SHEET 1 OF 2
BLD-7906

CUSTOMER:
AGNICO EAGLE
600 MAN AMARUQ MINE

DRAWN BY:	DATE:	SHEET:	SHEETS:
DMB	08/05/17	16	71

1704432 - AGNICO EAGLE MINE - C

THIS INFORMATION IS THE PROPERTY OF newterra ltd.. AND CANNOT BE REUSED OR REPRODUCED WITHOUT THE WRITTEN CONSENT OF newterra ltd.

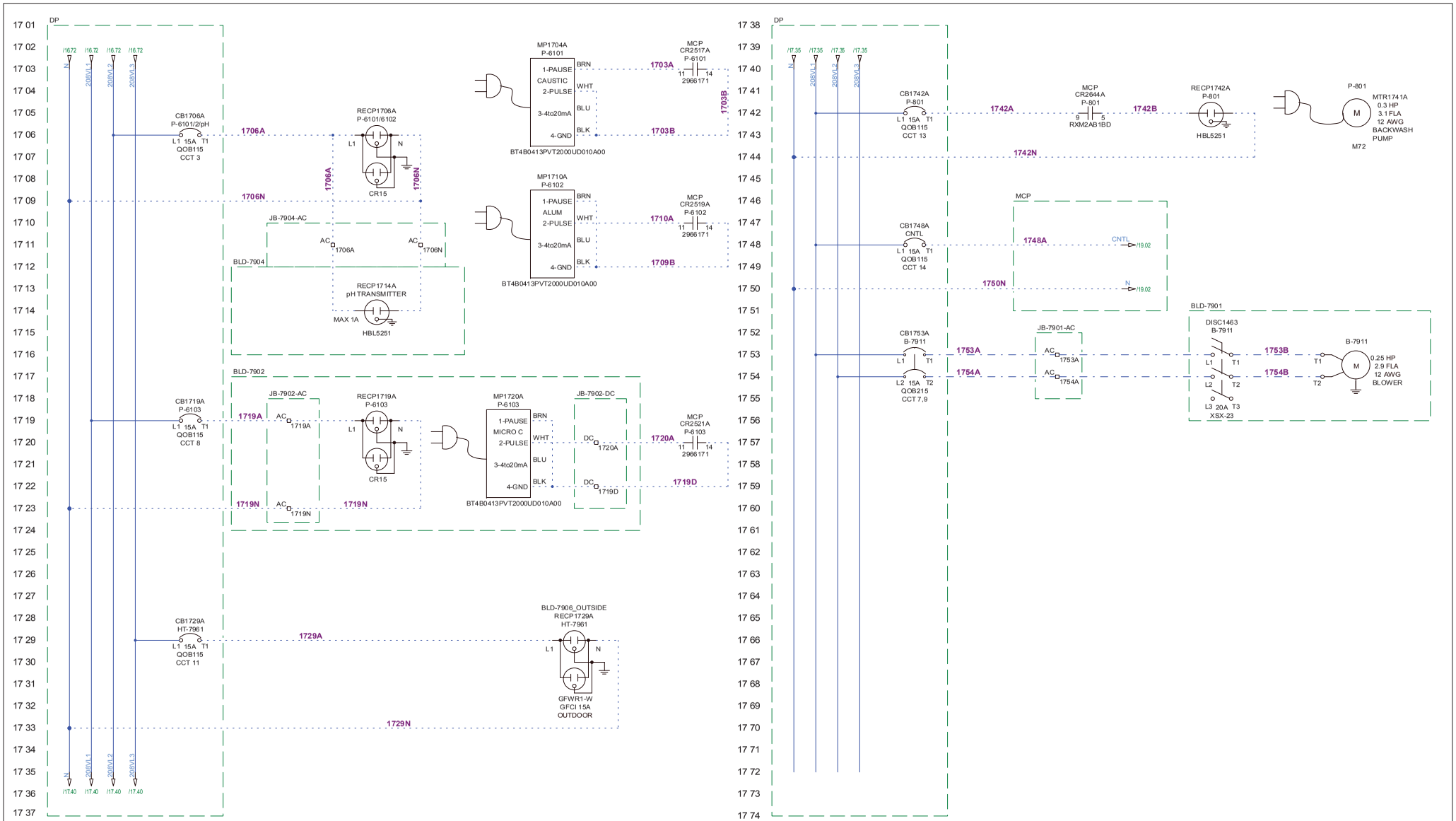

WIRE LEGEND

BLACK:	POWER
RED:	120VAC CONTROL
WHITE:	NEUTRAL
BLUE:	+24VDC & IS WIRING
BLU/WHT:	0VDC
YELLOW:	INTERLOCKS

NOTES:

1. FOLLOW CANADIAN COLOUR CODE FOR POWER WIRING (SEE SHEET 3 - LEGEND)
2. WIRE SIZE IS #12 AWG FOR POWER UNLESS OTHERWISE SPECIFIED

newterra

1325 CALIFORNIA AVE.
BROCKVILLE, ONTARIO
CANADA K6V 5Y6
PHONE: (613)498-1876
www.newterra.com

LEVEL	REVISION	DATE (dd/mm/yy)	BY
C	AS BUILT	14/08/17	DMB
B	FOR PRODUCTION	31/05/17	DMB
A1	FOR REVIEW	23/05/17	DMB
A	FOR SUBMITTAL	12/05/17	DMB

PROJ. NO: 1704432

TITLE AND LOCATION:
LV DISTRIBUTION PANEL
SHEET 2 OF 2
BLD-7906

CUSTOMER:
AGNICO EAGLE
600 MAN AMARUQ MINE

DRAWN BY:	DATE:	SHEET:	SHEETS:
DMB	08/05/17	17	71

1704432 - AGNICO EAGLE MINE - C

THIS INFORMATION IS THE PROPERTY OF newterra ltd.. AND CANNOT BE REUSED OR REPRODUCED WITHOUT THE WRITTEN CONSENT OF newterra ltd.

18 01
18 02
18 03
18 04
18 05
18 06
18 07
18 08
18 09
18 10
18 11
18 12
18 13
18 14
18 15
18 16
18 17
18 18
18 19
18 20
18 21
18 22
18 23
18 24
18 25
18 26
18 27
18 28
18 29
18 30
18 31
18 32
18 33
18 34
18 35
18 36
18 37

INTENTIONALLY BLANK

18 38
18 39
18 40
18 41
18 42
18 43
18 44
18 45
18 46
18 47
18 48
18 49
18 50
18 51
18 52
18 53
18 54
18 55
18 56
18 57
18 58
18 59
18 60
18 61
18 62
18 63
18 64
18 65
18 66
18 67
18 68
18 69
18 70
18 71
18 72
18 73
18 74

INTENTIONALLY BLANK

WIRE LEGEND

BLACK:	POWER
RED:	120VAC CONTROL
WHITE:	NEUTRAL
BLUE:	+24VDC & IS WIRING
BLU/WHT:	0VDC
YELLOW:	INTERLOCKS

NOTES:

1.

1325 CALIFORNIA AVE.
BROCKVILLE, ONTARIO
CANADA K6V 5Y6
PHONE: (613)498-1876
www.newterra.com

LEVEL	REVISION	DATE (dd/mm/yy)	BY
C	AS BUILT	14/08/17	DMB
B	FOR PRODUCTION	31/05/17	DMB
A1	FOR REVIEW	23/05/17	DMB
A	FOR SUBMITTAL	12/05/17	DMB

PROJ. NO: 1704432

TITLE AND LOCATION: SPARE SHEET

BLD-7906

CUSTOMER: AGNICO EAGLE 600 MAN AMARUQ MINE

DRAWN BY:	DATE:	SHEET:	SHEETS:
DMB	29/05/17	18	71

1704432 - AGNICO EAGLE MINE - C

THIS INFORMATION IS THE PROPERTY OF newterra ltd.. AND CANNOT BE REUSED OR REPRODUCED WITHOUT THE WRITTEN CONSENT OF newterra ltd.

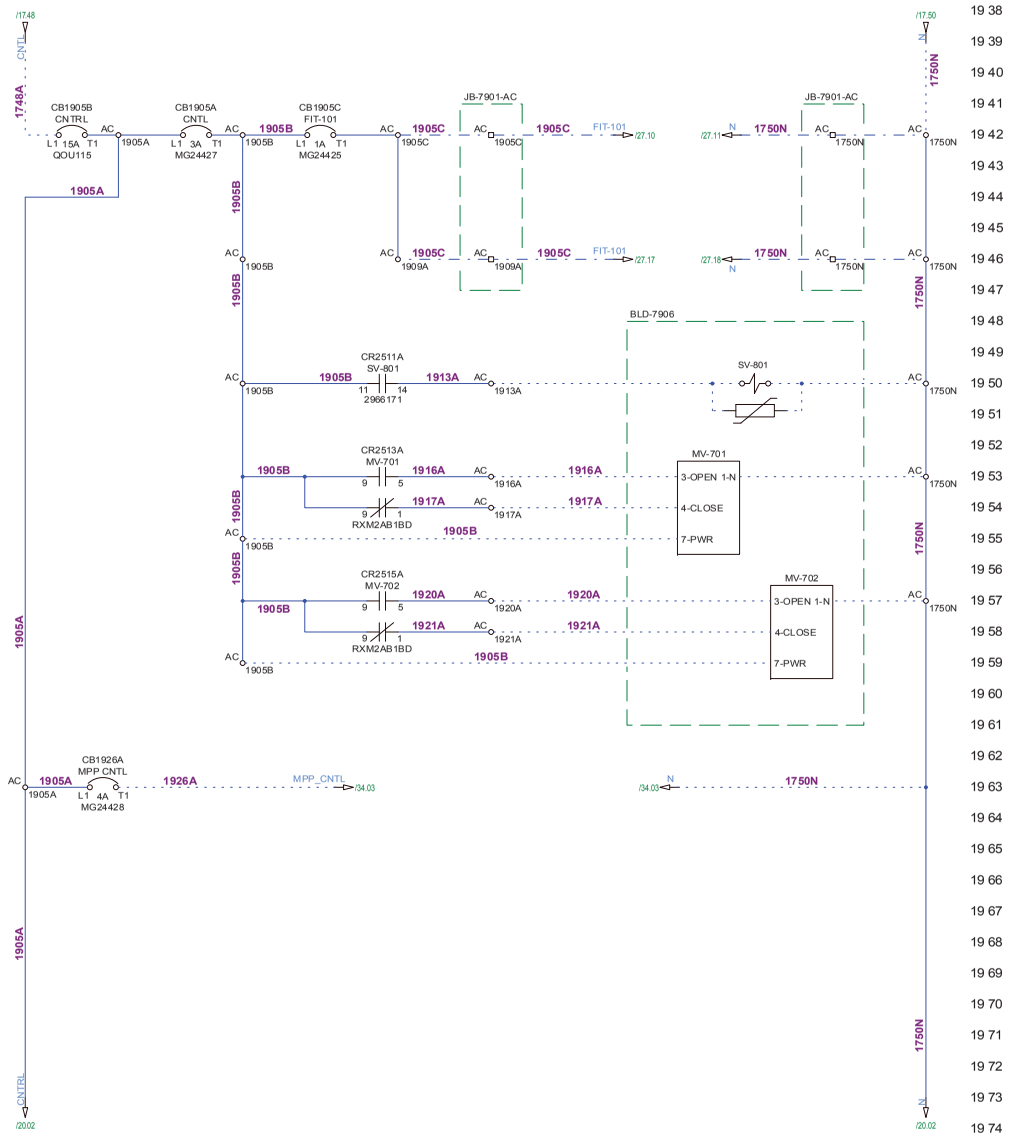

INTENTIONALLY BLANK

WIRE LEGEND

BLACK:	POWER
RED:	120VAC CONTROL
WHITE:	NEUTRAL
BLUE:	+24VDC & IS WIRING
BLU/WHT:	0VDC
YELLOW:	INTERLOCKS

NOTES:

1. FOLLOW CANADIAN COLOUR CODE FOR POWER WIRING (SEE SHEET 3 - LEGEND)
2. WIRE SIZE IS #12 AWG FOR POWER UNLESS OTHERWISE SPECIFIED

newterra

1325 CALIFORNIA AVE.
BROCKVILLE, ONTARIO
CANADA K6V 5Y6
PHONE: (613)498-1876
www.newterra.com

LEVEL	REVISION	DATE (dd/mm/yy)	BY
C	AS BUILT	14/08/17	DMB
B	FOR PRODUCTION	31/05/17	DMB
A1	FOR REVIEW	23/05/17	DMB
A	FOR SUBMITTAL	12/05/17	DMB

PROJ. NO: 1704432

TITLE AND LOCATION: MCP - 120VAC CONTROL POWER
MCP

CUSTOMER: AGNICO EAGLE 600 MAN AMARUQ MINE

DRAWN BY:	DATE:	SHEET:	SHEETS:
DMB	08/05/17	19	71

1704432 - AGNICO EAGLE MINE - C

THIS INFORMATION IS THE PROPERTY OF newterra ltd.. AND CANNOT BE REUSED OR REPRODUCED WITHOUT THE WRITTEN CONSENT OF newterra ltd.

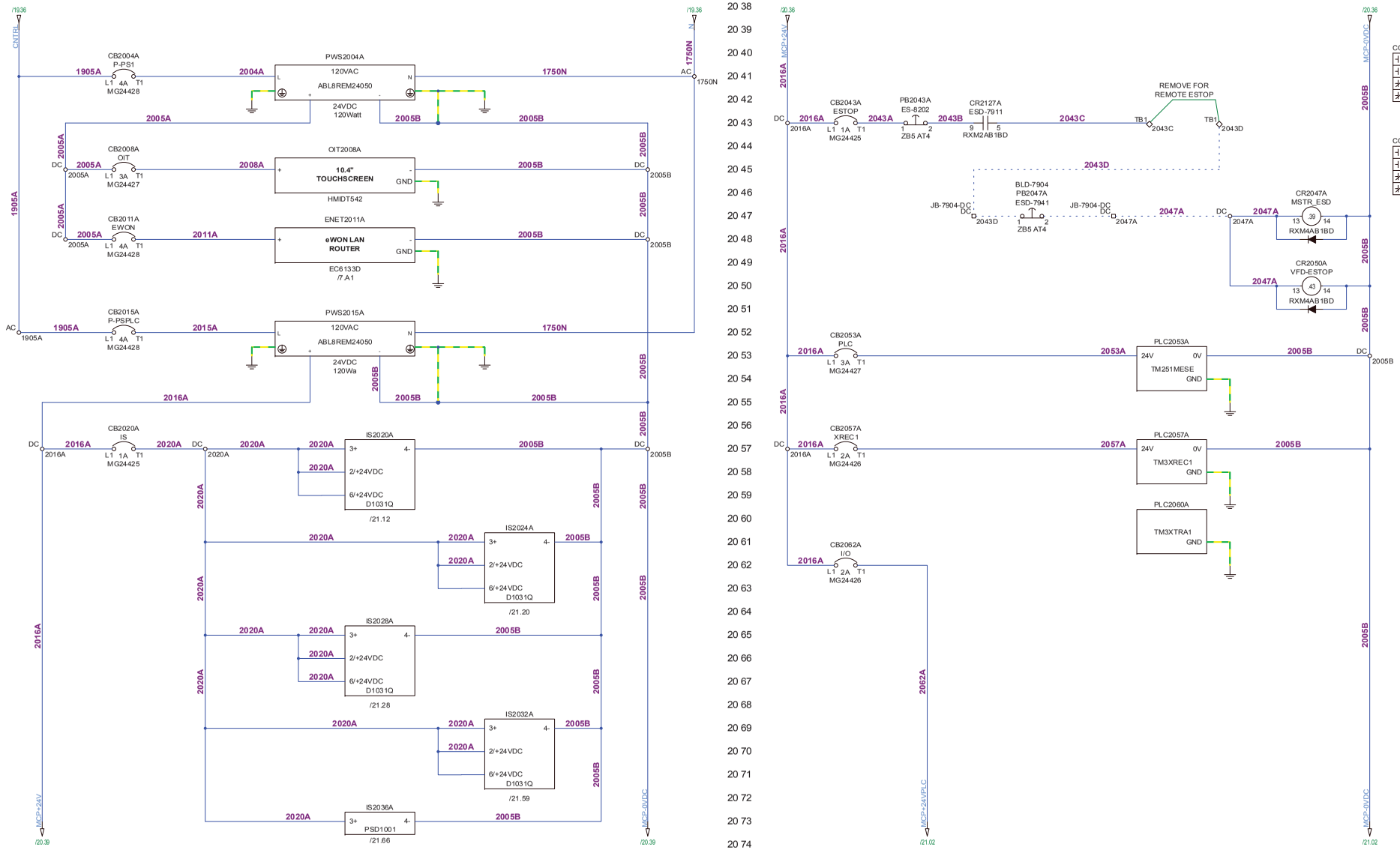

WIRE LEGEND

BLACK:	POWER
RED:	120VAC CONTROL
WHITE:	NEUTRAL
BLUE:	+24VDC & IS WIRING
BLU/WHT:	0VDC
YELLOW:	INTERLOCKS

NOTES:

1. FOLLOW CANADIAN COLOUR CODE FOR POWER WIRING (SEE SHEET 3 - LEGEND)
2. WIRE SIZE IS #12 AWG FOR POWER UNLESS OTHERWISE SPECIFIED

newterra

1325 CALIFORNIA AVE.
BROCKVILLE, ONTARIO
CANADA K6V 5Y6
PHONE: (613)498-1876
www.newterra.com

LEVEL	REVISION	DATE (dd/mm/yy)	BY
C	AS BUILT	14/08/17	DMB
B	FOR PRODUCTION	31/05/17	DMB
A1	FOR REVIEW	23/05/17	DMB
A	FOR SUBMITTAL	12/05/17	DMB

PROJ. NO: 1704432

TITLE AND LOCATION: MCP - 24VDC CONTROL POWER MCP

CUSTOMER: AGNICO EAGLE 600 MAN AMARUQ MINE

DRAWN BY:	DATE:	SHEET:	SHEETS:
DMB	08/05/17	20	71

1704432 - AGNICO EAGLE MINE - C

THIS INFORMATION IS THE PROPERTY OF newterra ltd.. AND CANNOT BE REUSED OR REPRODUCED WITHOUT THE WRITTEN CONSENT OF newterra ltd.

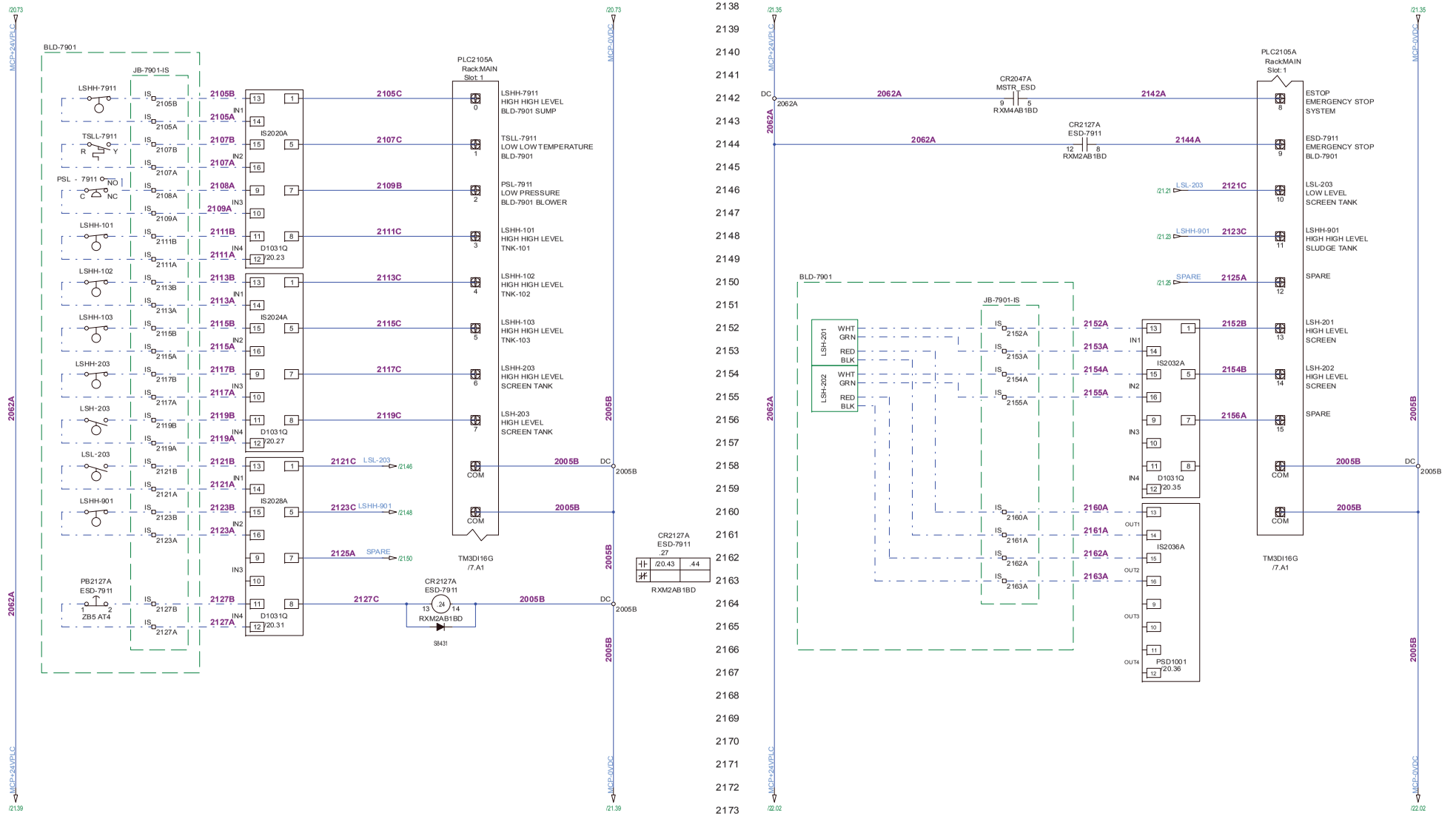

WIRE LEGEND

BLACK:	POWER
RED:	120VAC CONTROL
WHITE:	NEUTRAL
BLUE:	+24VDC & IS WIRING
BLU/WHT:	0VDC
YELLOW:	INTERLOCKS

NOTES:

1.

newterra

1325 CALIFORNIA AVE.
BROCKVILLE, ONTARIO
CANADA K6V 5Y6
PHONE: (613)498-1876
www.newterra.com

LEVEL	REVISION	DATE (dd/mm/yy)	BY
C	AS BUILT	14/08/17	DMB
B	FOR PRODUCTION	31/05/17	DMB
A1	FOR REVIEW	23/05/17	DMB
A	FOR SUBMITTAL	12/05/17	DMB

PROJ. NO: 1704432

TITLE AND LOCATION: MCP DISCRETE INPUTS SHEET 1 OF 4 MCP

CUSTOMER: AGNICO EAGLE 600 MAN AMARUQ MINE

DRAWN BY:	DATE:	SHEET:	SHEETS:
DMB	08/05/17	21	71

1704432 - AGNICO EAGLE MINE - C

THIS INFORMATION IS THE PROPERTY OF newterra ltd.. AND CANNOT BE REUSED OR REPRODUCED WITHOUT THE WRITTEN CONSENT OF newterra ltd.

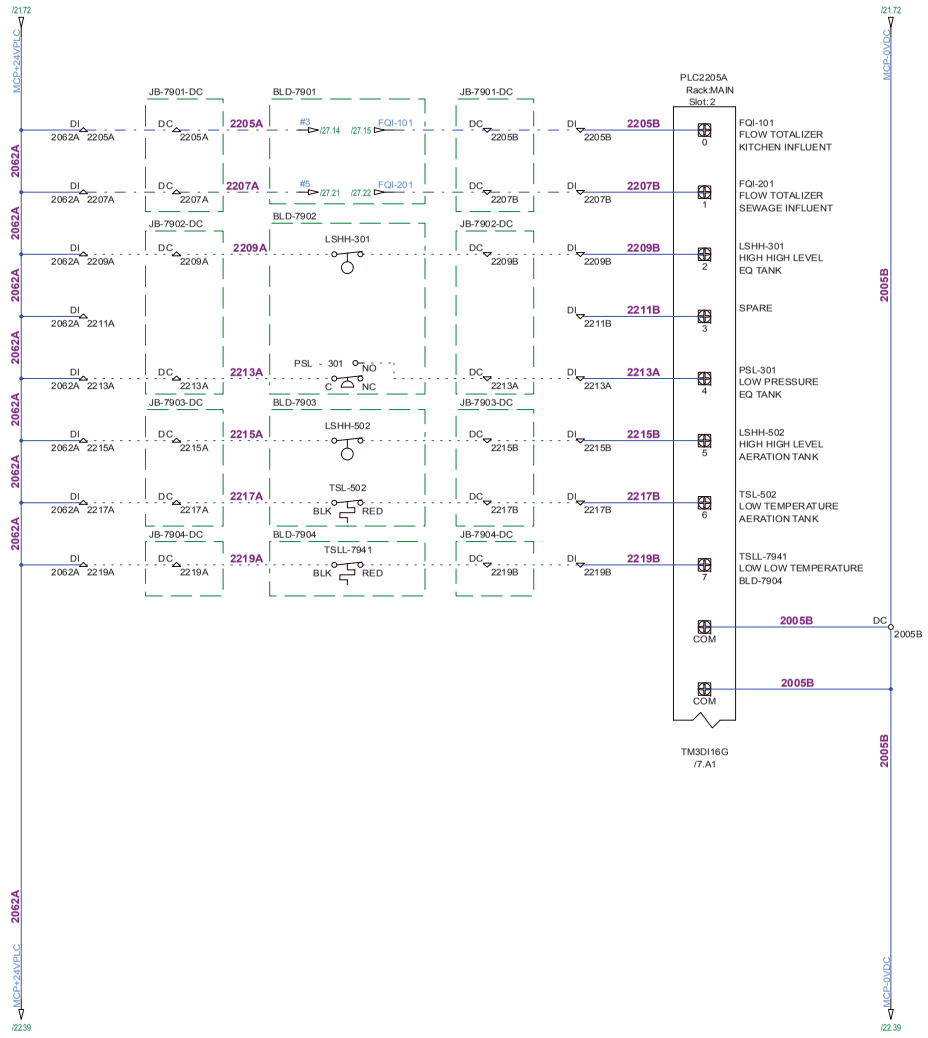

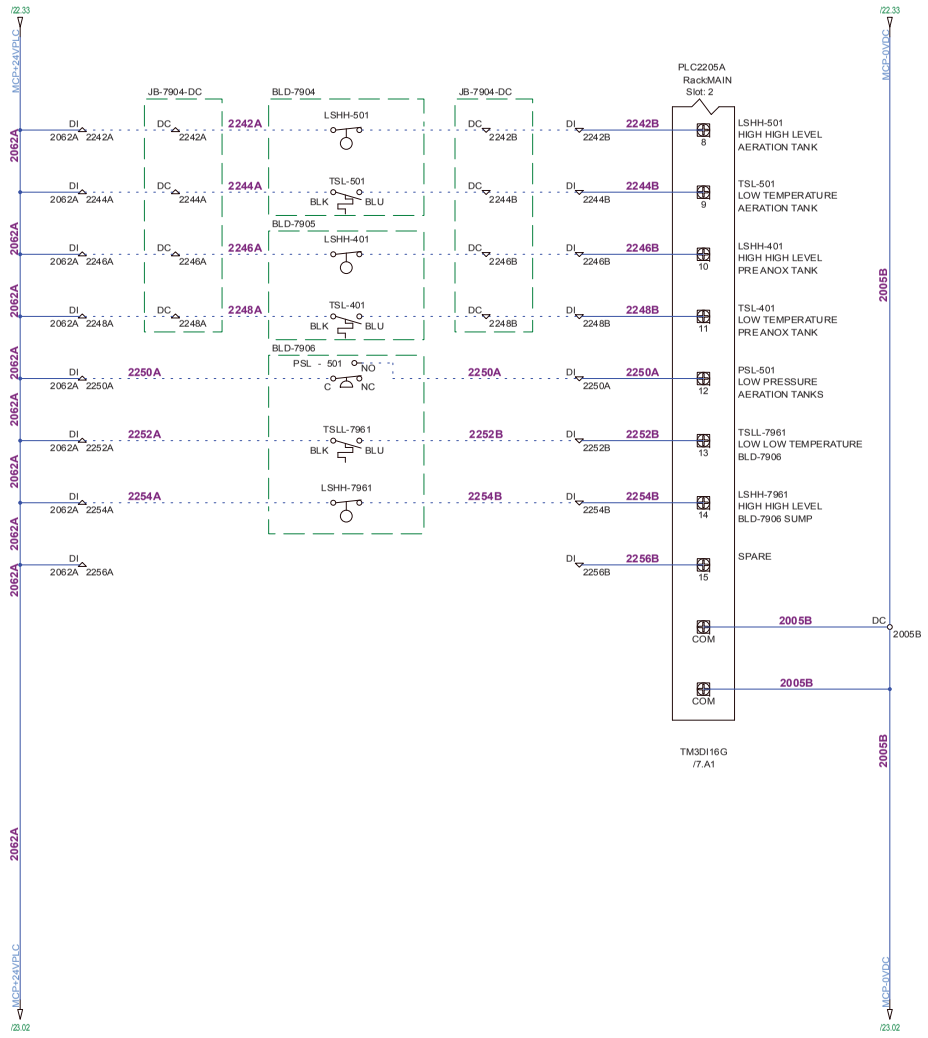

WIRE LEGEND

BLACK:	POWER
RED:	120VAC CONTROL
WHITE:	NEUTRAL
BLUE:	+24VDC & IS WIRING
BLU/WHT:	0VDC
YELLOW:	INTERLOCKS

NOTES:

1. FOLLOW CANADIAN COLOUR CODE FOR POWER WIRING (SEE SHEET 3 - LEGEND)
2. WIRE SIZE IS #12 AWG FOR POWER UNLESS OTHERWISE SPECIFIED

1325 CALIFORNIA AVE.
BROCKVILLE, ONTARIO
CANADA K6V 5Y6
PHONE: (613)498-1876
www.newterra.com

LEVEL	REVISION	DATE (dd/mm/yy)	BY
C	AS BUILT	14/08/17	DMB
B	FOR PRODUCTION	31/05/17	DMB
A1	FOR REVIEW	23/05/17	DMB
A	FOR SUBMITTAL	12/05/17	DMB

PROJ. NO: 1704432

TITLE AND LOCATION:
MCP DISCRETE INPUTS
SHEET 2 OF 4
MCP

CUSTOMER:
AGNICO EAGLE
600 MAN AMARUQ MINE

DRAWN BY:	DATE:	SHEET:	SHEETS:
DMB	08/05/17	22	71

1704432 - AGNICO EAGLE MINE - C

THIS INFORMATION IS THE PROPERTY OF newterra ltd.. AND CANNOT BE REUSED OR REPRODUCED WITHOUT THE WRITTEN CONSENT OF newterra ltd.

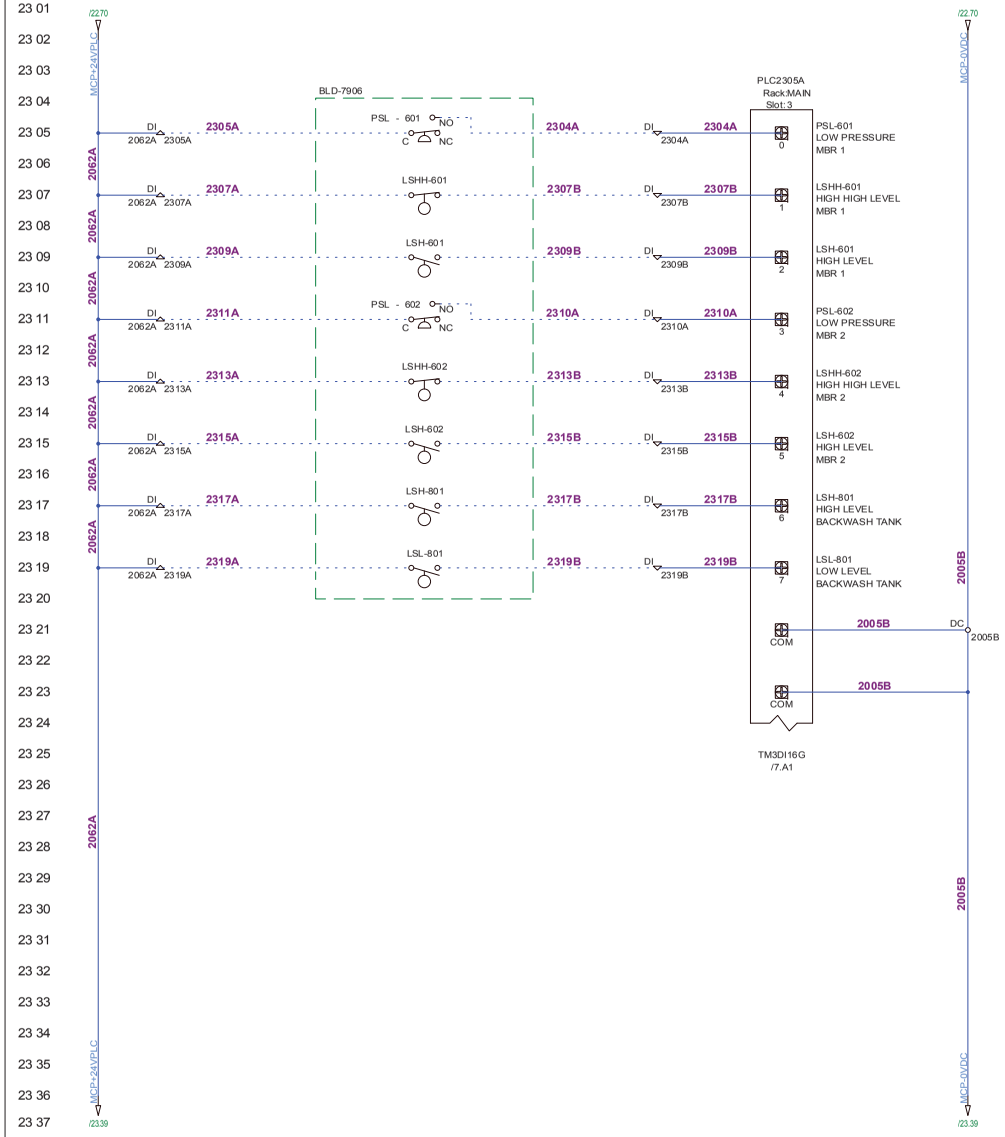

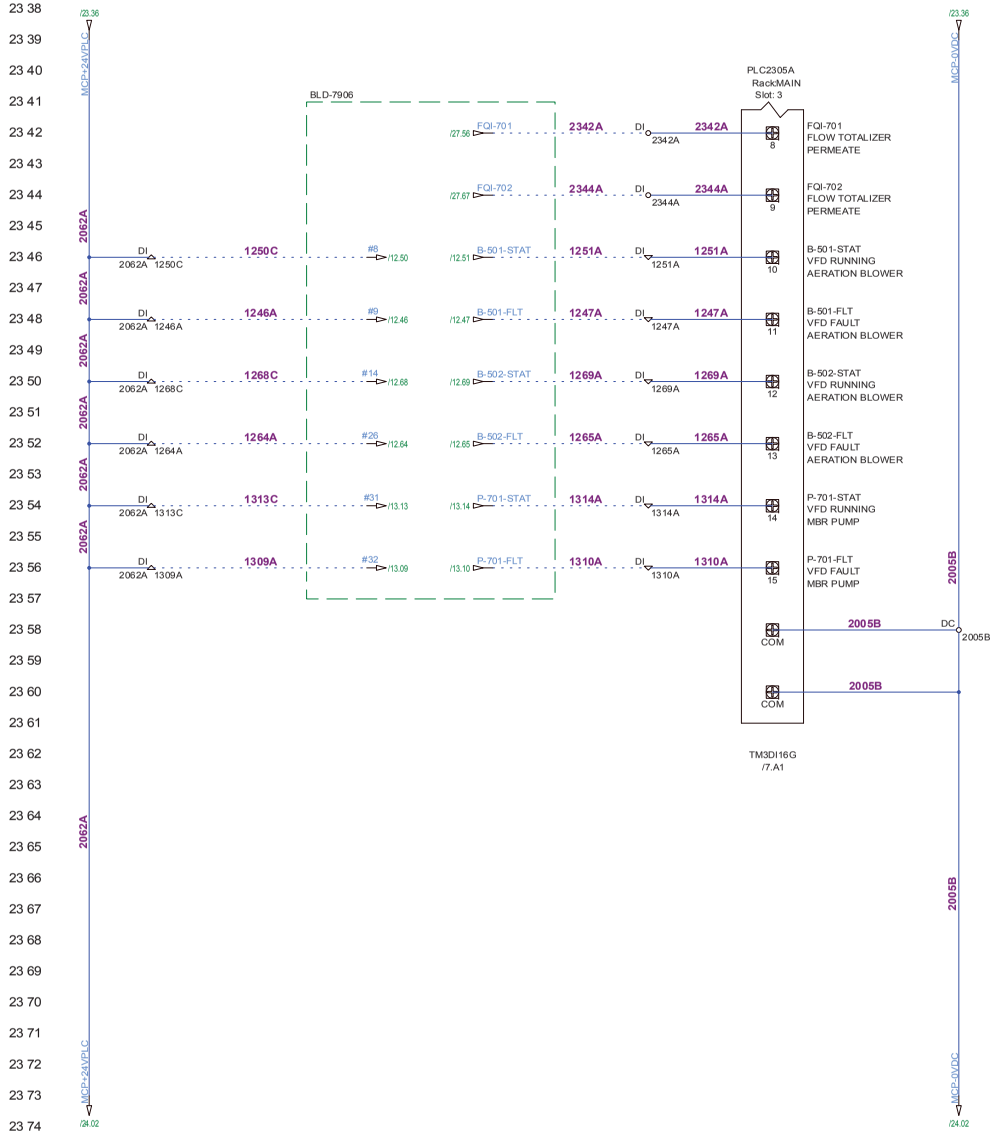

WIRE LEGEND

BLACK:	POWER
RED:	120VAC CONTROL
WHITE:	NEUTRAL
BLUE:	+24VDC & IS WIRING
BLU/WHT:	0VDC
YELLOW:	INTERLOCKS

NOTES:

1.

1325 CALIFORNIA AVE.
BROCKVILLE, ONTARIO
CANADA K6V 5Y6
PHONE: (613)498-1876
www.newterra.com

LEVEL	REVISION	DATE (dd/mm/yy)	BY
C	AS BUILT	14/08/17	DMB
B	FOR PRODUCTION	31/05/17	DMB
A1	FOR REVIEW	23/05/17	DMB
A	FOR SUBMITTAL	12/05/17	DMB

PROJ. NO: 1704432

TITLE AND LOCATION: MCP DISCRETE INPUTS SHEET 3 OF 4 MCP

CUSTOMER: AGNICO EAGLE 600 MAN AMARUQ MINE

DRAWN BY:	DATE:	SHEET:	SHEETS:
DMB	08/05/17	23	71

1704432 - AGNICO EAGLE MINE - C

THIS INFORMATION IS THE PROPERTY OF newterra ltd.. AND CANNOT BE REUSED OR REPRODUCED WITHOUT THE WRITTEN CONSENT OF newterra ltd.

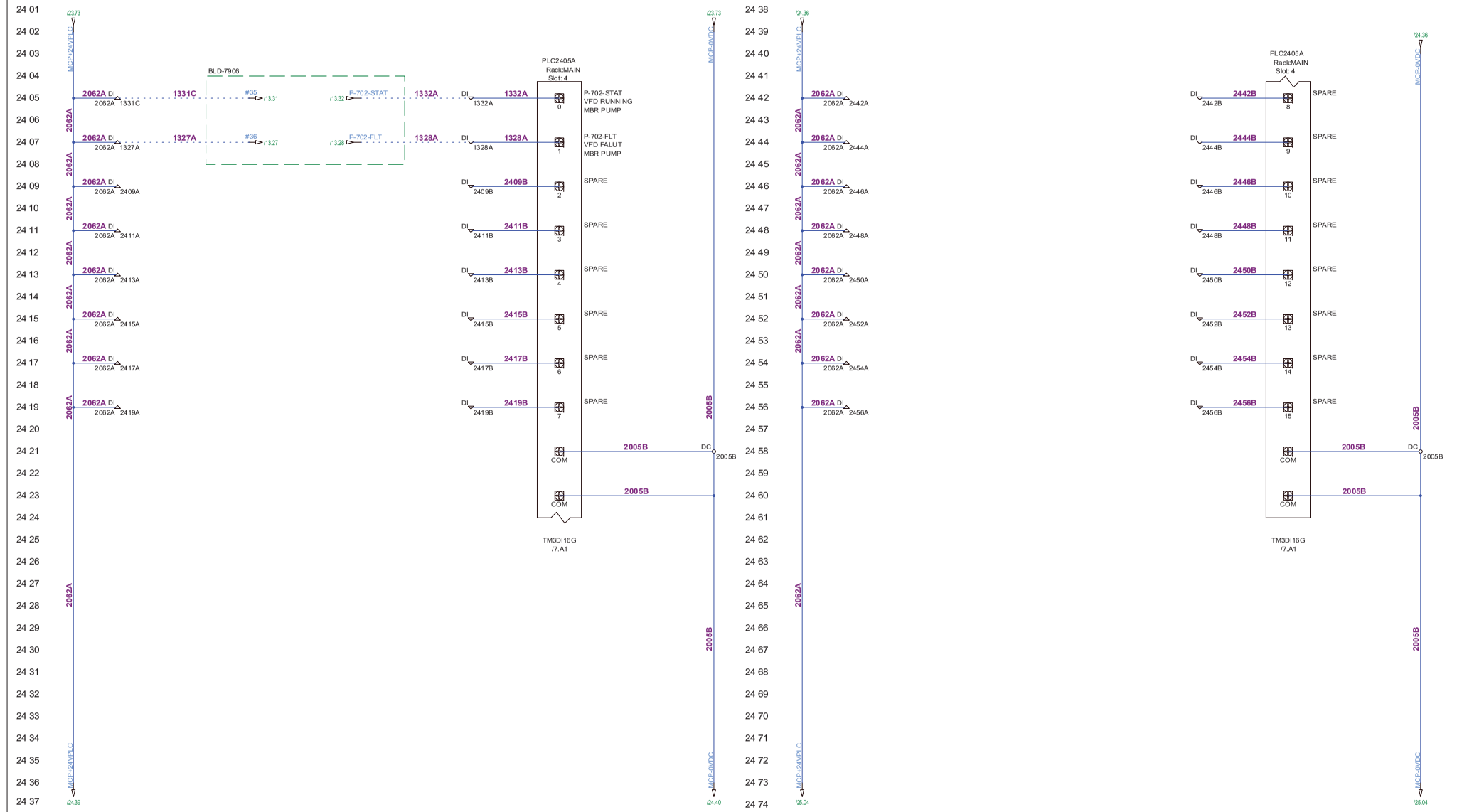

WIRE LEGEND

BLACK:	POWER
RED:	120VAC CONTROL
WHITE:	NEUTRAL
BLUE:	+24VDC & IS WIRING
BLU/WHT:	0VDC
YELLOW:	INTERLOCKS

NOTES:

1.

newterra

1325 CALIFORNIA AVE.
BROCKVILLE, ONTARIO
CANADA K6V 5Y6
PHONE: (613)498-1876
www.newterra.com

LEVEL	REVISION	DATE (dd/mm/yy)	BY
C	AS BUILT	14/08/17	DMB
B	FOR PRODUCTION	31/05/17	DMB
A1	FOR REVIEW	23/05/17	DMB
A	FOR SUBMITTAL	12/05/17	DMB

PROJ. NO: 1704432

TITLE AND LOCATION:
MCP DISCRETE INPUTS
SHEET 4 OF 4
MCP

CUSTOMER:
AGNICO EAGLE
600 MAN AMARUQ MINE

DRAWN BY:	DATE:	SHEET:	SHEETS:
DMB	25/05/17	24	71

1704432 - AGNICO EAGLE MINE - C

THIS INFORMATION IS THE PROPERTY OF newterra ltd.. AND CANNOT BE REUSED OR REPRODUCED WITHOUT THE WRITTEN CONSENT OF newterra ltd.

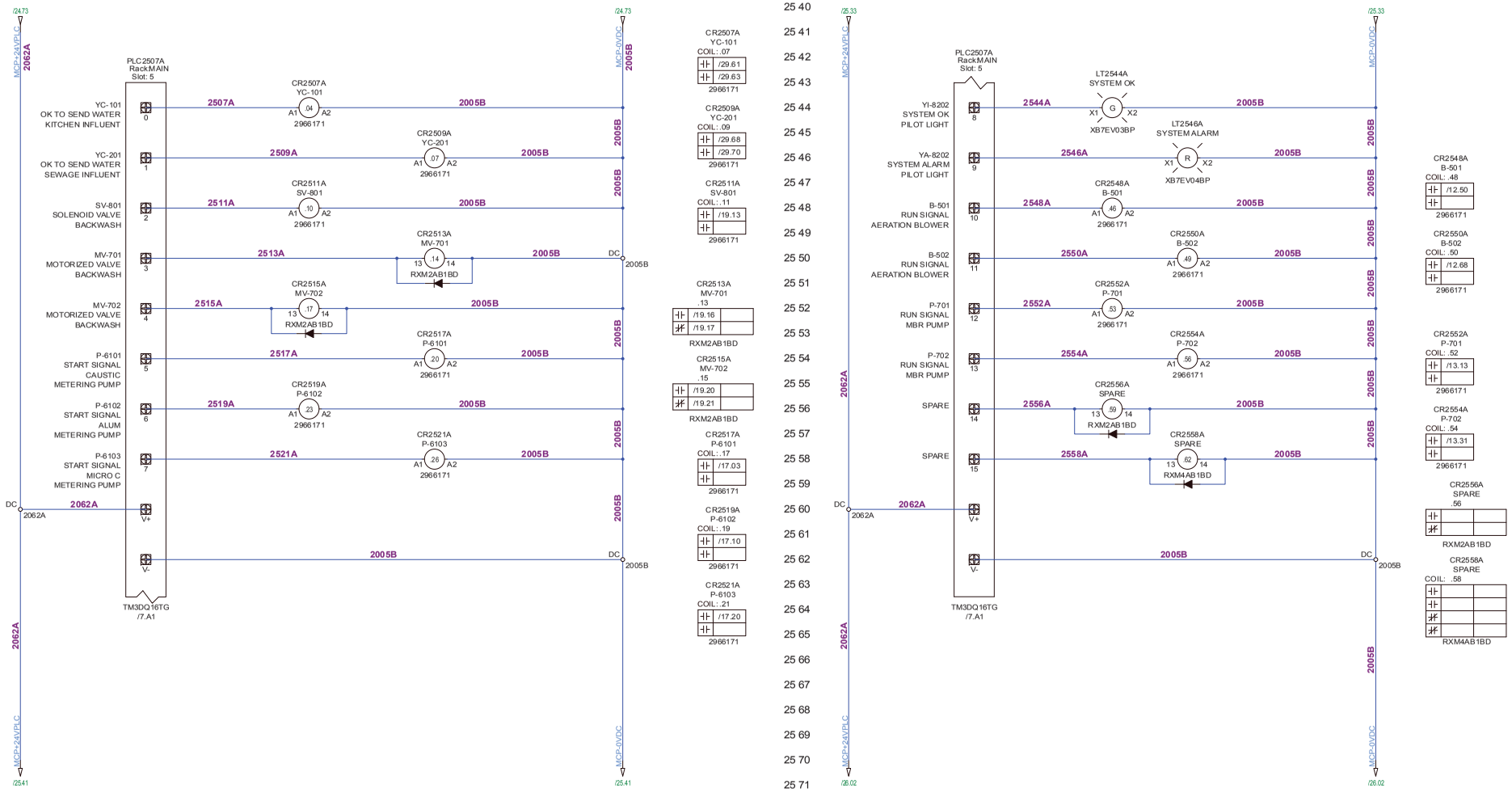

WIRE LEGEND

BLACK:	POWER
RED:	120VAC CONTROL
WHITE:	NEUTRAL
BLUE:	+24VDC & IS WIRING
BLU/WHT:	0VDC
YELLOW:	INTERLOCKS

NOTES:

1. FOLLOW CANADIAN COLOUR CODE FOR POWER WIRING (SEE SHEET 3 - LEGEND)
2. WIRE SIZE IS #12 AWG FOR POWER UNLESS OTHERWISE SPECIFIED

newterra

1325 CALIFORNIA AVE.
BROCKVILLE, ONTARIO
CANADA K6V 5Y6
PHONE: (613)498-1876
www.newterra.com

LEVEL	REVISION	DATE (dd/mm/yy)	BY
C	AS BUILT	14/08/17	DMB
B	FOR PRODUCTION	31/05/17	DMB
A1	FOR REVIEW	23/05/17	DMB
A	FOR SUBMITTAL	12/05/17	DMB

PROJ. NO: 1704432

TITLE AND LOCATION:
MCP DISCRETE OUTPUTS
SHEET 1 OF 2
MCP

CUSTOMER:
AGNICO EAGLE
600 MAN AMARUQ MINE

DRAWN BY:	DATE:	SHEET:	SHEETS:
DMB	08/05/17	25	71

1704432 - AGNICO EAGLE MINE - C

THIS INFORMATION IS THE PROPERTY OF newterra ltd.. AND CANNOT BE REUSED OR REPRODUCED WITHOUT THE WRITTEN CONSENT OF newterra ltd.

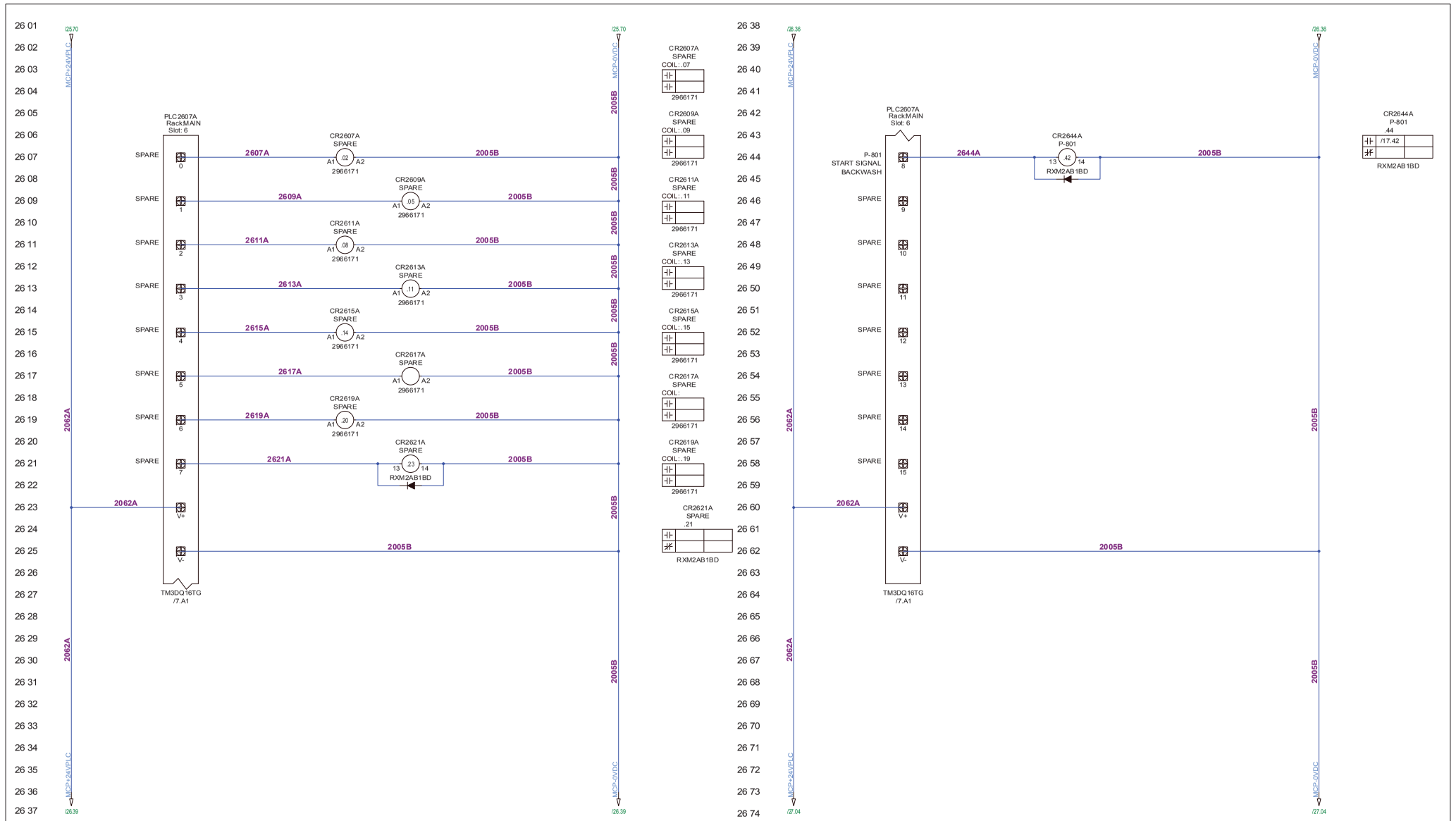

WIRE LEGEND

BLACK:	POWER
RED:	120VAC CONTROL
WHITE:	NEUTRAL
BLUE:	+24VDC & IS WIRING
BLU/WHT:	0VDC
YELLOW:	INTERLOCKS

NOTES:

1.

newterra

1325 CALIFORNIA AVE.
BROCKVILLE, ONTARIO
CANADA K6V 5Y6
PHONE: (613)498-1876
www.newterra.com

LEVEL	REVISION	DATE (dd/mm/yy)	BY
C	AS BUILT	14/08/17	DMB
B	FOR PRODUCTION	31/05/17	DMB
A1	FOR REVIEW	23/05/17	DMB
A	FOR SUBMITTAL	12/05/17	DMB

PROJ. NO: 1704432

TITLE AND LOCATION: MCP DISCRETE OUTPUTS SHEET 2 OF 2 MCP

CUSTOMER: AGNICO EAGLE 600 MAN AMARUQ MINE

DRAWN BY:	DATE:	SHEET:	SHEETS:
DMB	25/05/17	26	71

1704432 - AGNICO EAGLE MINE - C

THIS INFORMATION IS THE PROPERTY OF newterra ltd.. AND CANNOT BE REUSED OR REPRODUCED WITHOUT THE WRITTEN CONSENT OF newterra ltd.

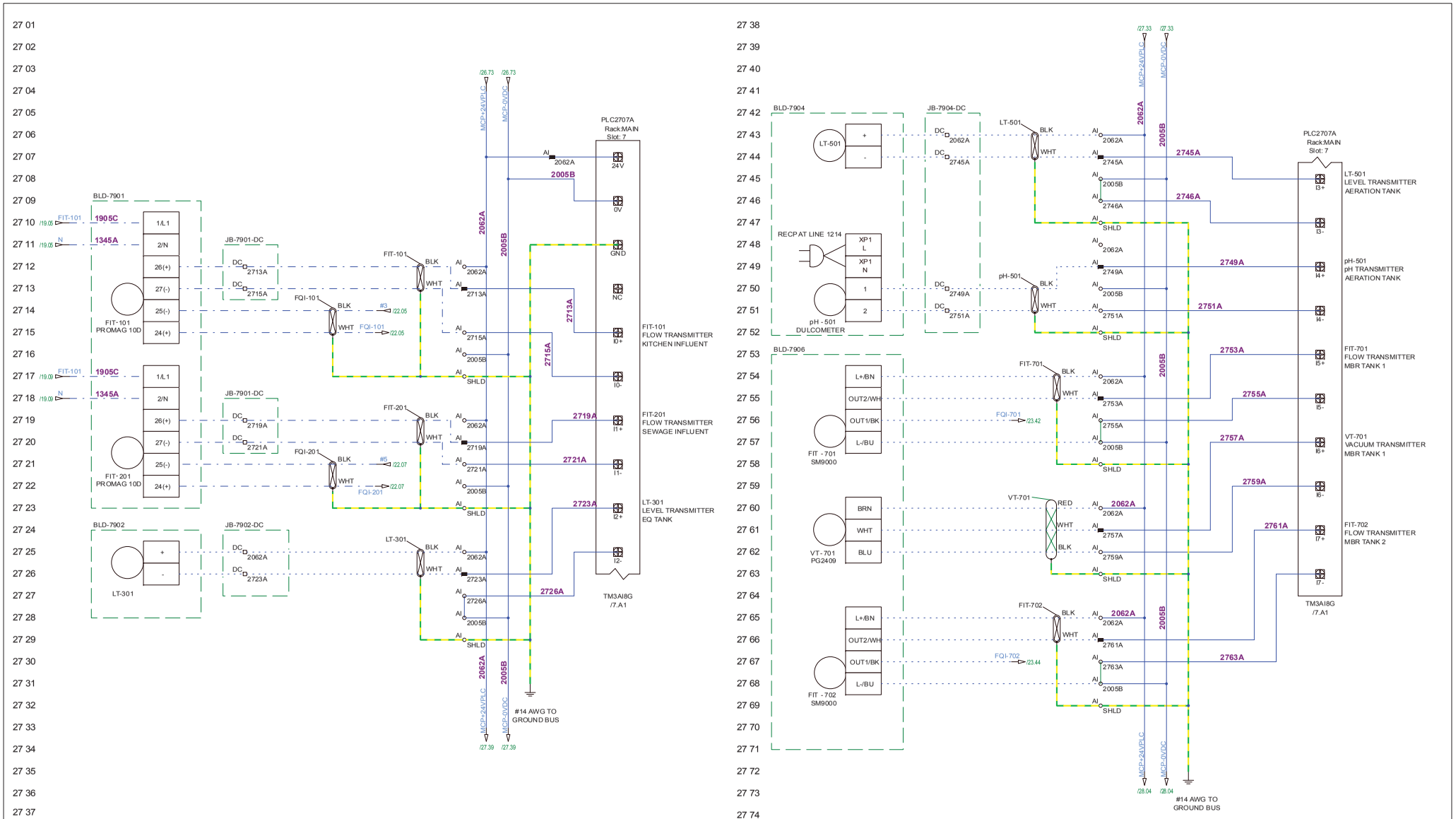

WIRE LEGEND

BLACK:	POWER
RED:	120VAC CONTROL
WHITE:	NEUTRAL
BLUE:	+24VDC & IS WIRING
BLU/WHT:	0VDC
YELLOW:	INTERLOCKS

NOTES:

1. FOLLOW CANADIAN COLOUR CODE FOR POWER WIRING (SEE SHEET 3 - LEGEND)
2. WIRE SIZE IS #12 AWG FOR POWER UNLESS OTHERWISE SPECIFIED

newterra

1325 CALIFORNIA AVE.
BROCKVILLE, ONTARIO
CANADA K6V 5Y6
PHONE: (613)498-1876
www.newterra.com

LEVEL	REVISION	DATE (dd/mm/yy)	BY
C	AS BUILT	14/08/17	DMB
B	FOR PRODUCTION	31/05/17	DMB
A1	FOR REVIEW	23/05/17	DMB
A	FOR SUBMITTAL	12/05/17	DMB

PROJ. NO: 1704432

TITLE AND LOCATION: MCP ANALOG INPUTS SHEET 1 OF 2 MCP

CUSTOMER: AGNICO EAGLE 600 MAN AMARUQ MINE

DRAWN BY:	DATE:	SHEET:	SHEETS:
DMB	08/05/17	27	71

1704432 - AGNICO EAGLE MINE - C

THIS INFORMATION IS THE PROPERTY OF newterra ltd.. AND CANNOT BE REUSED OR REPRODUCED WITHOUT THE WRITTEN CONSENT OF newterra ltd.

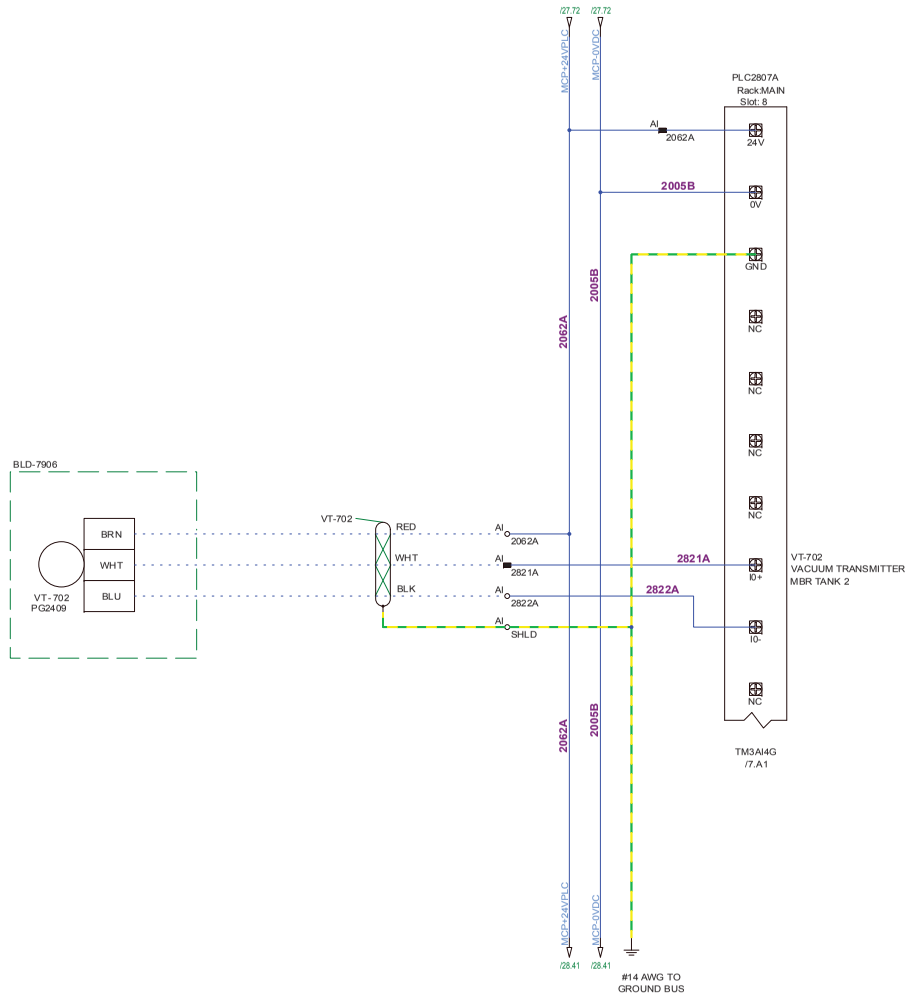

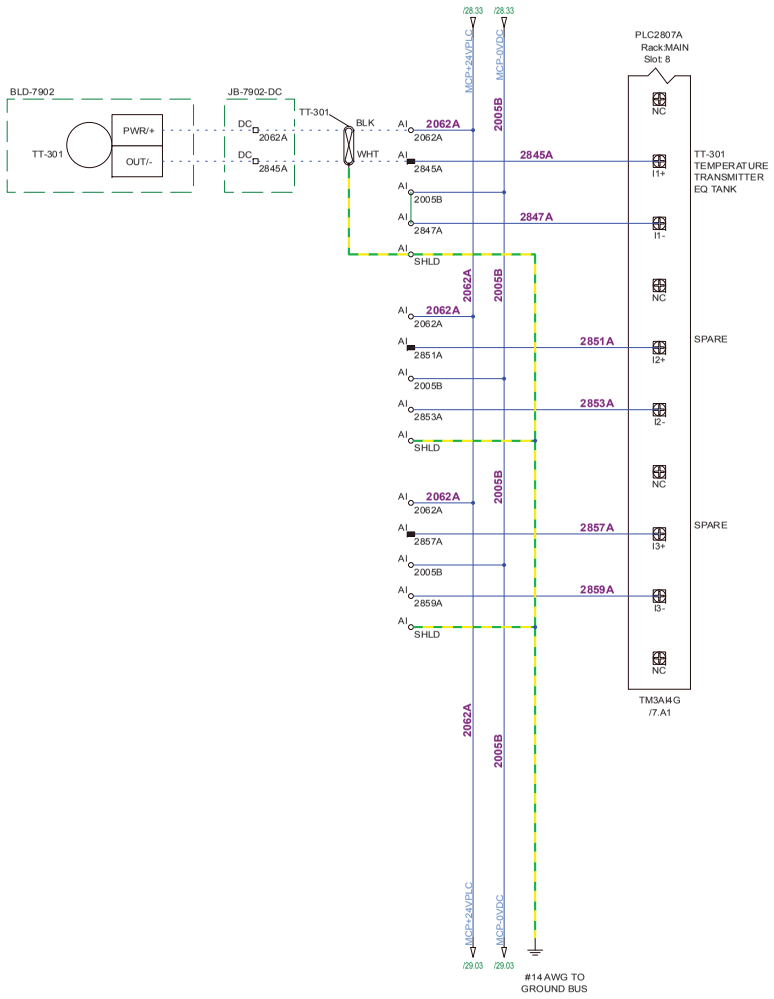

WIRE LEGEND

BLACK:	POWER
RED:	120VAC CONTROL
WHITE:	NEUTRAL
BLUE:	+24VDC & IS WIRING
BLU/WHT:	0VDC
YELLOW:	INTERLOCKS

NOTES:

1.

newterra

1325 CALIFORNIA AVE.
BROCKVILLE, ONTARIO
CANADA K6V 5Y6
PHONE: (613)498-1876
www.newterra.com

LEVEL	REVISION	DATE (dd/mm/yy)	BY
C	AS BUILT	14/08/17	DMB
B	FOR PRODUCTION	31/05/17	DMB
A1	FOR REVIEW	23/05/17	DMB
A	FOR SUBMITTAL	12/05/17	DMB

PROJ. NO: 1704432

TITLE AND LOCATION:
MCP ANALOG INPUTS
SHEET 2 OF 2
MCP

CUSTOMER:
AGNICO EAGLE
600 MAN AMARUQ MINE

DRAWN BY:	DATE:	SHEET:	SHEETS:
DMB	29/05/17	28	71

1704432 - AGNICO EAGLE MINE - C

THIS INFORMATION IS THE PROPERTY OF newterra ltd.. AND CANNOT BE REUSED OR REPRODUCED WITHOUT THE WRITTEN CONSENT OF newterra ltd.

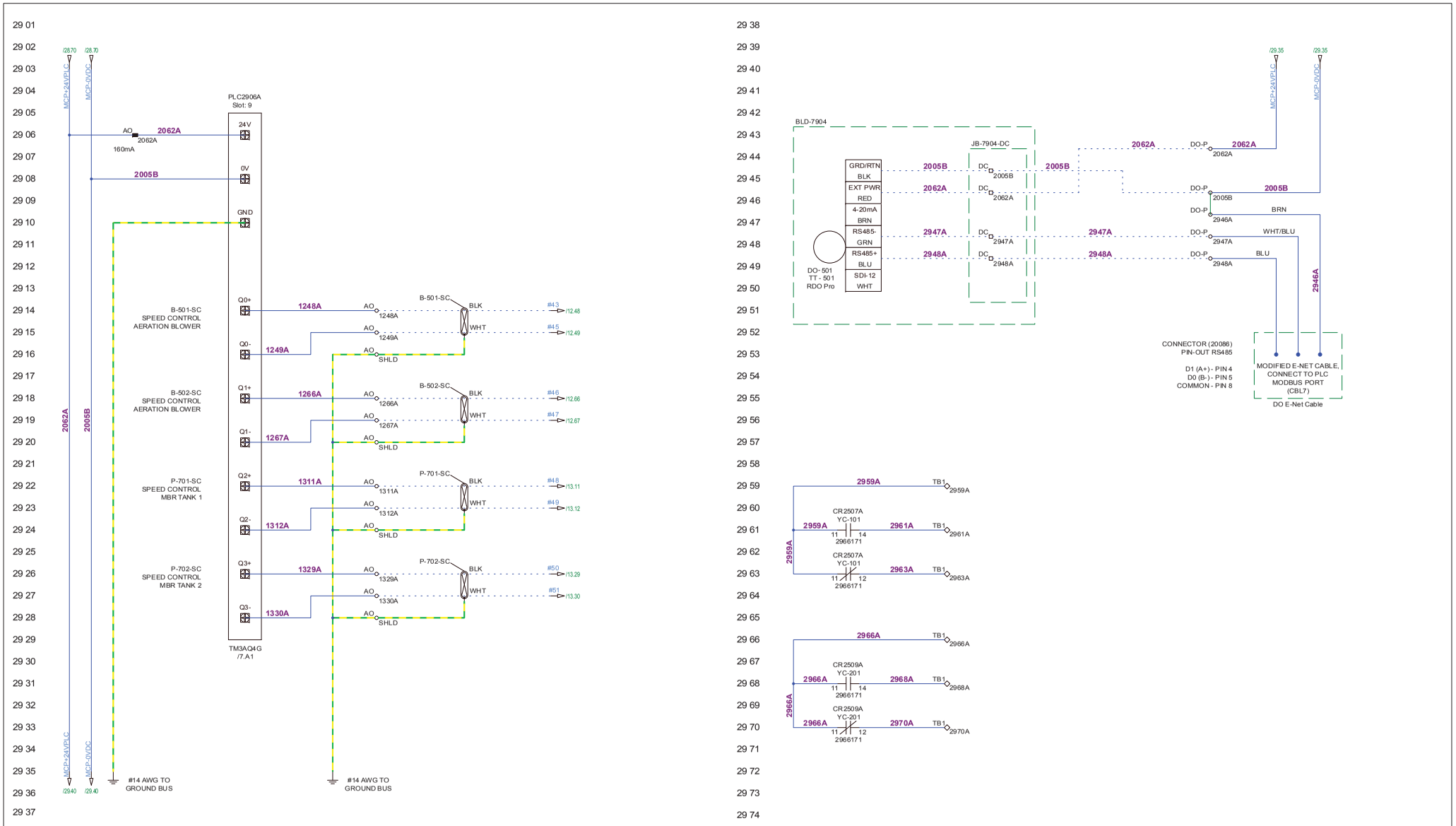

WIRE LEGEND

BLACK:	POWER
RED:	120VAC CONTROL
WHITE:	NEUTRAL
BLUE:	+24VDC & IS WIRING
BLU/WHT:	0VDC
YELLOW:	INTERLOCKS

NOTES:

1.

newterra

1325 CALIFORNIA AVE.
BROCKVILLE, ONTARIO
CANADA K6V 5Y6
PHONE: (613)498-1876
www.newterra.com

LEVEL	REVISION	DATE (dd/mm/yy)	BY
C	AS BUILT	14/08/17	DMB
B	FOR PRODUCTION	31/05/17	DMB
A1	FOR REVIEW	23/05/17	DMB
A	FOR SUBMITTAL	12/05/17	DMB

PROJ. NO: 1704432

TITLE AND LOCATION:
MCP ANALOG OUTPUTS, DO/TT
PROBE & CUSTOMER CONNECTIONS
MCP

CUSTOMER:
AGNICO EAGLE
600 MAN AMARUQ MINE

DRAWN BY:	DATE:	SHEET:	SHEETS:
DMB	29/05/17	29	71

1704432 - AGNICO EAGLE MINE - C

THIS INFORMATION IS THE PROPERTY OF newterra ltd.. AND CANNOT BE REUSED OR REPRODUCED WITHOUT THE WRITTEN CONSENT OF newterra ltd.

30 01
30 02
30 03
30 04
30 05
30 06
30 07
30 08
30 09
30 10
30 11
30 12
30 13
30 14
30 15
30 16
30 17
30 18
30 19
30 20
30 21
30 22
30 23
30 24
30 25
30 26
30 27
30 28
30 29
30 30
30 31
30 32
30 33
30 34
30 35
30 36
30 37

INTENTIONALLY BLANK

30 38
30 39
30 40
30 41
30 42
30 43
30 44
30 45
30 46
30 47
30 48
30 49
30 50
30 51
30 52
30 53
30 54
30 55
30 56
30 57
30 58
30 59
30 60
30 61
30 62
30 63
30 64
30 65
30 66
30 67
30 68
30 69
30 70
30 71
30 72
30 73
30 74

INTENTIONALLY BLANK

WIRE LEGEND

BLACK:	POWER
RED:	120VAC CONTROL
WHITE:	NEUTRAL
BLUE:	+24VDC & IS WIRING
BLU/WHT:	0VDC
YELLOW:	INTERLOCKS

NOTES:

1.

newterra

1325 CALIFORNIA AVE.
BROCKVILLE, ONTARIO
CANADA K6V 5Y6
PHONE: (613)498-1876
www.newterra.com

LEVEL	REVISION	DATE (dd/mm/yy)	BY
C	AS BUILT	14/08/17	DMB
B	FOR PRODUCTION	31/05/17	DMB
A1	FOR REVIEW	23/05/17	DMB
A	FOR SUBMITTAL	12/05/17	DMB

PROJ. NO: 1704432

TITLE AND LOCATION: SPARE SHEET

MCP

CUSTOMER: AGNICO EAGLE 600 MAN AMARUQ MINE

DRAWN BY:	DATE:	SHEET:	SHEETS:
DMB	29/05/17	30	71

1704432 - AGNICO EAGLE MINE - C

THIS INFORMATION IS THE PROPERTY OF newterra ltd.. AND CANNOT BE REUSED OR REPRODUCED WITHOUT THE WRITTEN CONSENT OF newterra ltd.

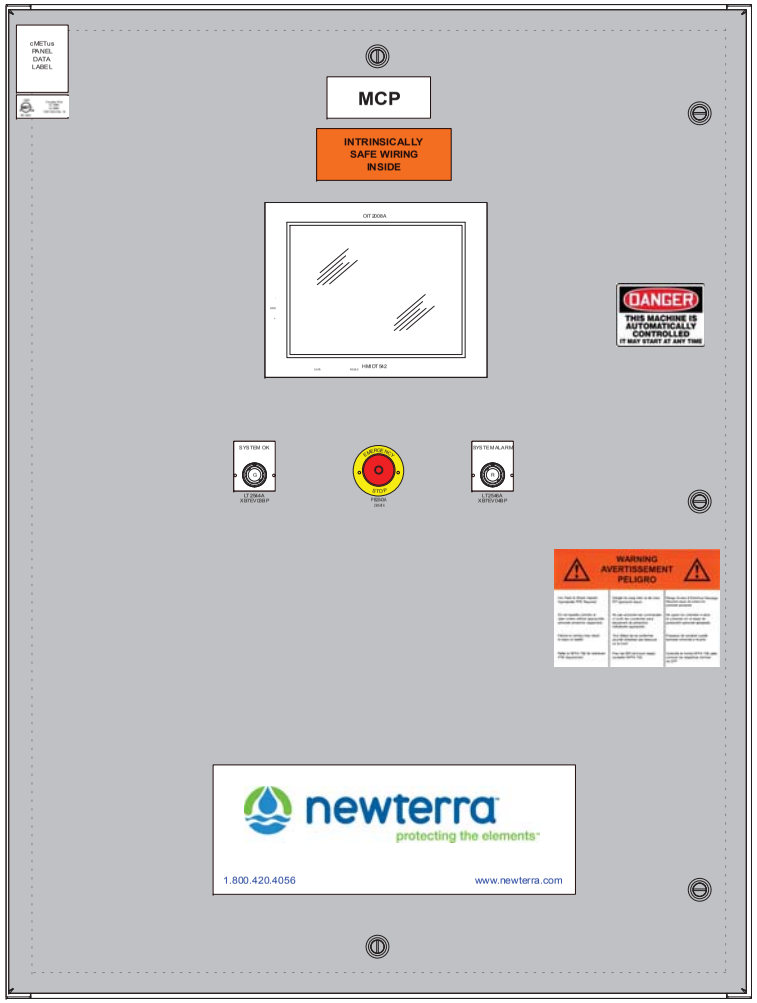

PANEL OUTER DOOR

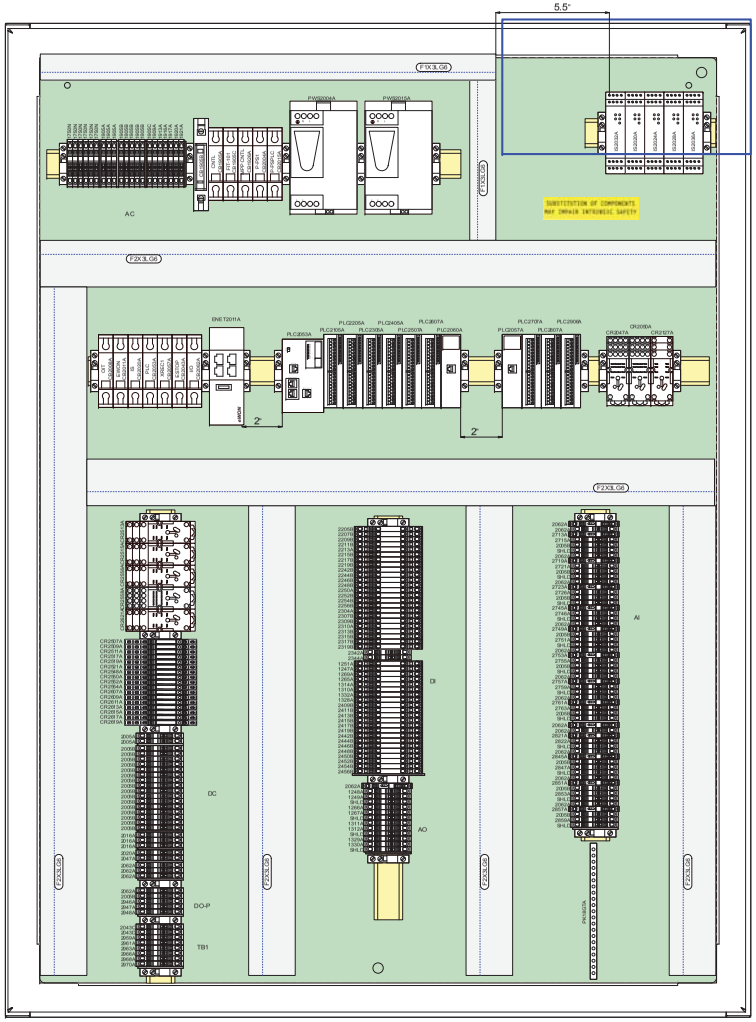

MCP
EN4SD483612GY
PANEL INTERIOR

WIRE LEGEND

BLACK:	POWER
RED:	120VAC CONTROL
WHITE:	NEUTRAL
BLUE:	+24VDC & IS WIRING
BLU/WHT:	0VDC
YELLOW:	INTERLOCKS

NOTES:

1325 CALIFORNIA AVE.
BROCKVILLE, ONTARIO
CANADA K6V 5Y6
PHONE: (613)498-1876
www.newterra.com

LEVEL	REVISION	DATE (dd/mm/yy)	BY
C	AS BUILT	14/08/17	DMB
B	FOR PRODUCTION	31/05/17	DMB
A1	FOR REVIEW	23/05/17	DMB
A	FOR SUBMITTAL	12/05/17	DMB

PROJ. NO: 1704432

TITLE AND LOCATION: MCP PANEL LAYOUT

MCP

CUSTOMER: AGNICO EAGLE 600 MAN AMARUQ MINE

DRAWN BY:	DATE:	SHEET:	SHEETS:
DMB	08/05/17	31	71

1704432 - AGNICO EAGLE MINE - C

THIS INFORMATION IS THE PROPERTY OF newterra ltd.. AND CANNOT BE REUSED OR REPRODUCED WITHOUT THE WRITTEN CONSENT OF newterra ltd.

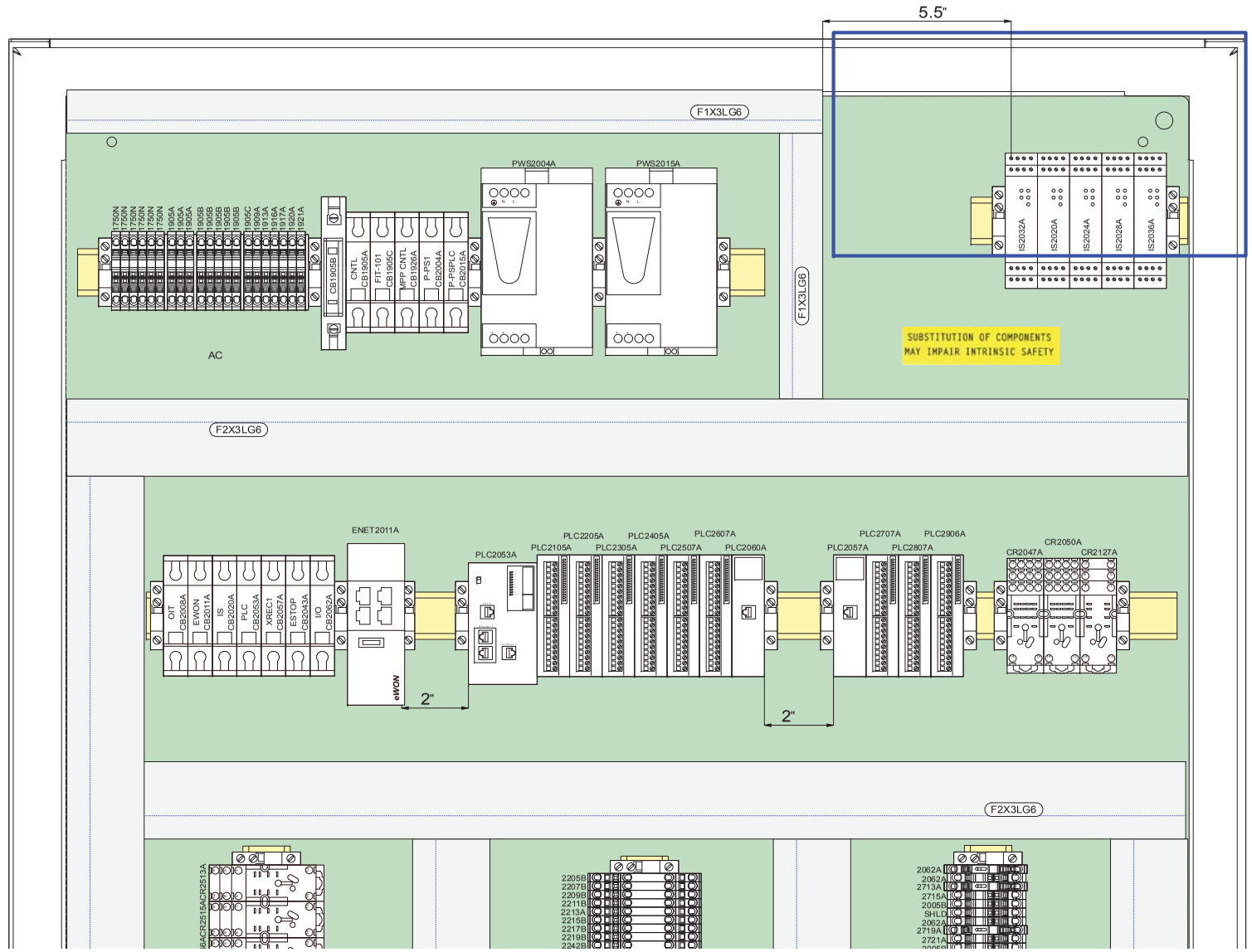

WIRE LEGEND

BLACK:	POWER
RED:	120VAC CONTROL
WHITE:	NEUTRAL
BLUE:	+24VDC & IS WIRING
BLU/WHT:	0VDC
YELLOW:	INTERLOCKS

NOTES:

newterra

1325 CALIFORNIA AVE.
BROCKVILLE, ONTARIO
CANADA K6V 5Y6
PHONE: (613)498-1876
www.newterra.com

LEVEL	REVISION	DATE (dd/mm/yy)	BY
C	AS BUILT	14/08/17	DMB
B	FOR PRODUCTION	31/05/17	DMB
A1	FOR REVIEW	23/05/17	DMB
A	FOR SUBMITTAL	12/05/17	DMB

PROJ. NO: 1704432

TITLE AND LOCATION: MCP PANEL LAYOUT TOP MCP

CUSTOMER: AGNICO EAGLE 600 MAN AMARUQ MINE

DRAWN BY:	DATE:	SHEET:	SHEETS:
DMB	08/05/17	32	71

1704432 - AGNICO EAGLE MINE - C

THIS INFORMATION IS THE PROPERTY OF newterra ltd.. AND CANNOT BE REUSED OR REPRODUCED WITHOUT THE WRITTEN CONSENT OF newterra ltd.

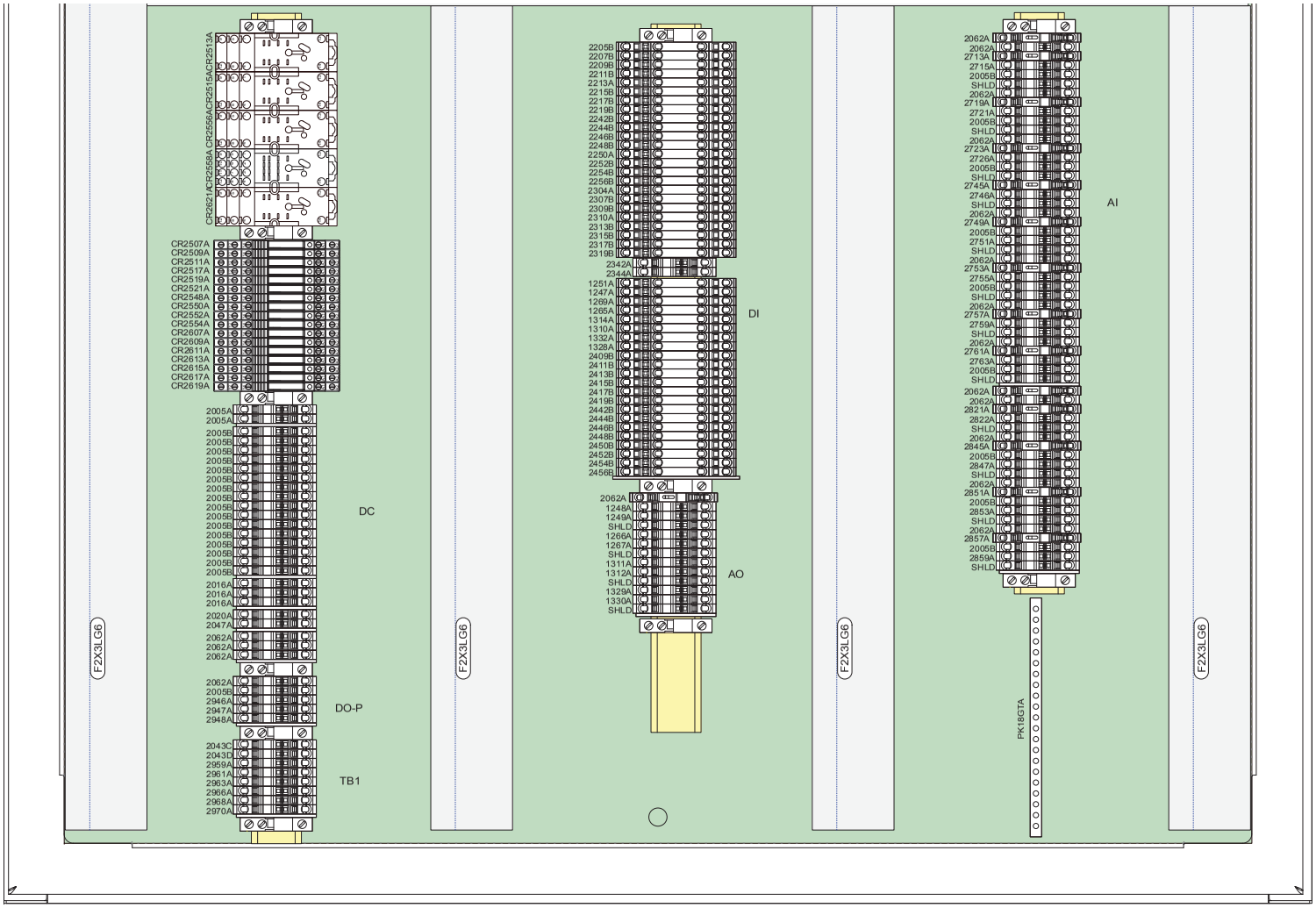

MCP

EN4SD483612GY

WIRE LEGEND

BLACK:	POWER
RED:	120VAC CONTROL
WHITE:	NEUTRAL
BLUE:	+24VDC & IS WIRING
BLU/WHT:	0VDC
YELLOW:	INTERLOCKS

NOTES:

newterra

1325 CALIFORNIA AVE.
BROCKVILLE, ONTARIO
CANADA K6V 5Y6
PHONE: (613)498-1876
www.newterra.com

LEVEL	REVISION	DATE (dd/mm/yy)	BY
C	AS BUILT	14/08/17	DMB
B	FOR PRODUCTION	31/05/17	DMB
A1	FOR REVIEW	23/05/17	DMB
A	FOR SUBMITTAL	12/05/17	DMB

PROJ. NO: 1704432

TITLE AND LOCATION: MCP PANEL LAYOUT BOTTOM MCP

CUSTOMER: AGNICO EAGLE 600 MAN AMARUQ MINE

DRAWN BY:	DATE:	SHEET:	SHEETS:
DMB	08/05/17	33	71

1704432 - AGNICO EAGLE MINE - C

THIS INFORMATION IS THE PROPERTY OF newterra ltd.. AND CANNOT BE REUSED OR REPRODUCED WITHOUT THE WRITTEN CONSENT OF newterra ltd.

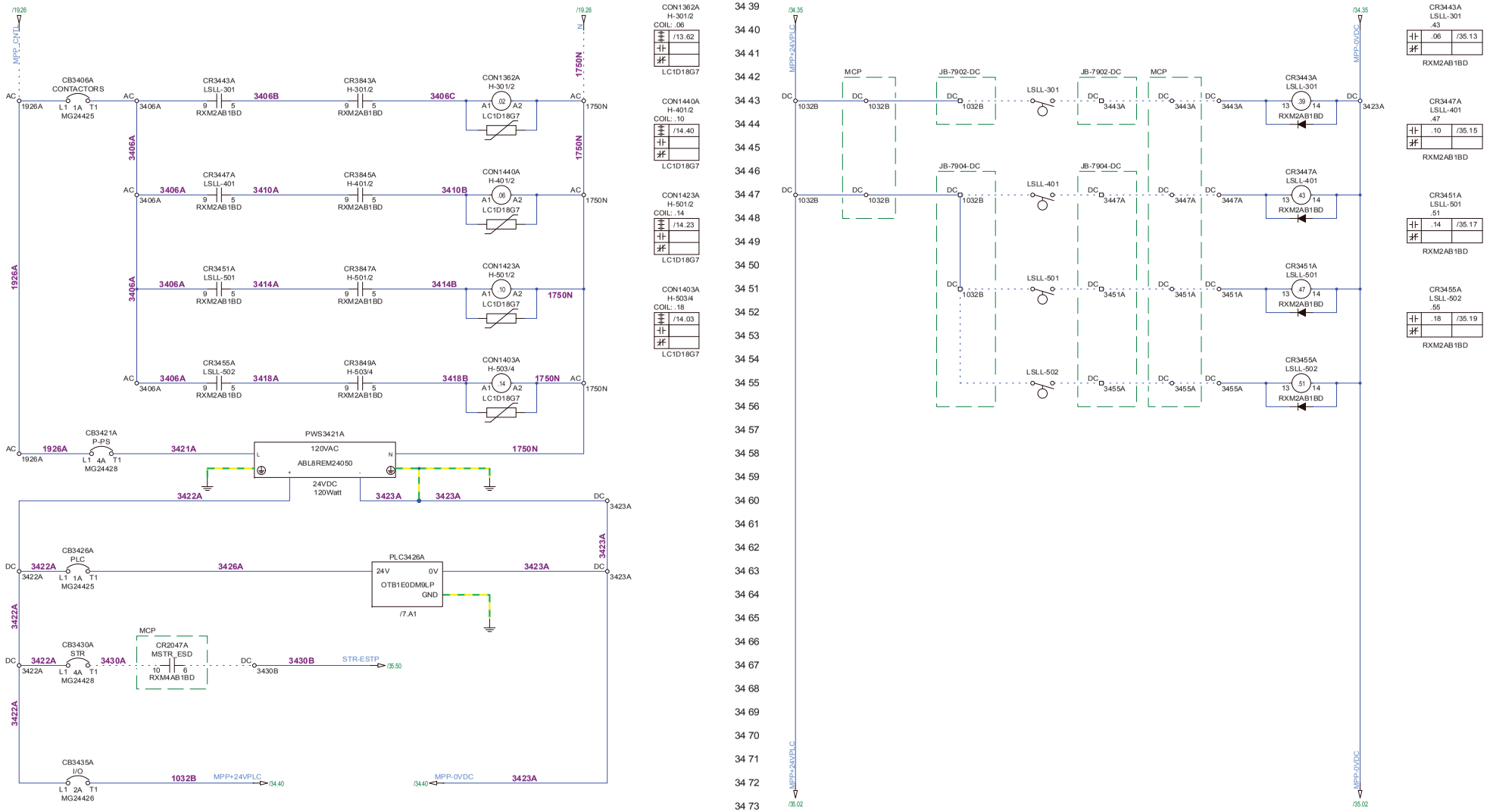

WIRE LEGEND

BLACK:	POWER
RED:	120VAC CONTROL
WHITE:	NEUTRAL
BLUE:	+24VDC & IS WIRING
BLU/WHT:	0VDC
YELLOW:	INTERLOCKS

NOTES:

1. FOLLOW CANADIAN COLOUR CODE FOR POWER WIRING (SEE SHEET 3 - LEGEND)
2. WIRE SIZE IS #12 AWG FOR POWER UNLESS OTHERWISE SPECIFIED

1325 CALIFORNIA AVE.
BROCKVILLE, ONTARIO
CANADA K6V 5Y6
PHONE: (613)498-1876
www.newterra.com

LEVEL	REVISION	DATE (dd/mm/yy)	BY
C	AS BUILT	14/08/17	DMB
B	FOR PRODUCTION	31/05/17	DMB
A1	FOR REVIEW	23/05/17	DMB
A	FOR SUBMITTAL	12/05/17	DMB

PROJ. NO: 1704432

TITLE AND LOCATION: MPP 120VAC & 24VDC CONTROL POWER MPP

CUSTOMER: AGNICO EAGLE 600 MAN AMARUQ MINE

DRAWN BY:	DATE:	SHEET:	SHEETS:
DMB	08/05/17	34	71

1704432 - AGNICO EAGLE MINE - C

THIS INFORMATION IS THE PROPERTY OF newterra ltd.. AND CANNOT BE REUSED OR REPRODUCED WITHOUT THE WRITTEN CONSENT OF newterra ltd.

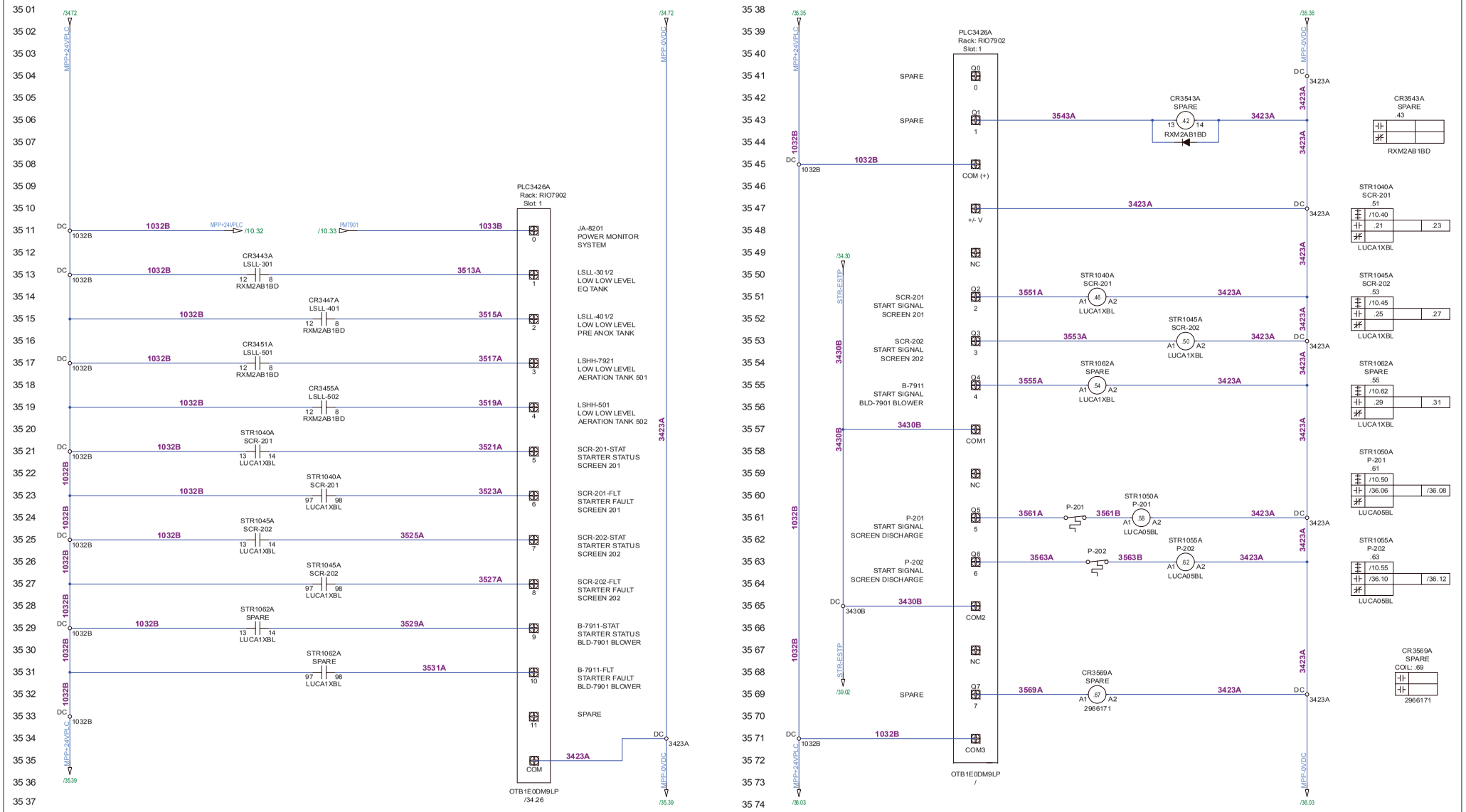

WIRE LEGEND

BLACK:	POWER
RED:	120VAC CONTROL
WHITE:	NEUTRAL
BLUE:	+24VDC & IS WIRING
BLU/WHT:	0VDC
YELLOW:	INTERLOCKS

NOTES:

1. FOLLOW CANADIAN COLOUR CODE FOR POWER WIRING (SEE SHEET 3 - LEGEND)
2. WIRE SIZE IS #12 AWG FOR POWER UNLESS OTHERWISE SPECIFIED

newterra

1325 CALIFORNIA AVE.
BROCKVILLE, ONTARIO
CANADA K6V 5Y6
PHONE: (613)498-1876
www.newterra.com

LEVEL	REVISION	DATE (dd/mm/yy)	BY
C	AS BUILT	14/08/17	DMB
B	FOR PRODUCTION	31/05/17	DMB
A1	FOR REVIEW	23/05/17	DMB
A	FOR SUBMITTAL	12/05/17	DMB

PROJ. NO: 1704432

TITLE AND LOCATION:
MPP OTB I/O
DISCRETE INPUTS/OUTPUTS
MPP

CUSTOMER:
AGNICO EAGLE
600 MAN AMARUQ MINE

DRAWN BY:	DATE:	SHEET:	SHEETS:
DMB	08/05/17	35	71

1704432 - AGNICO EAGLE MINE - C

THIS INFORMATION IS THE PROPERTY OF newterra ltd.. AND CANNOT BE REUSED OR REPRODUCED WITHOUT THE WRITTEN CONSENT OF newterra ltd.

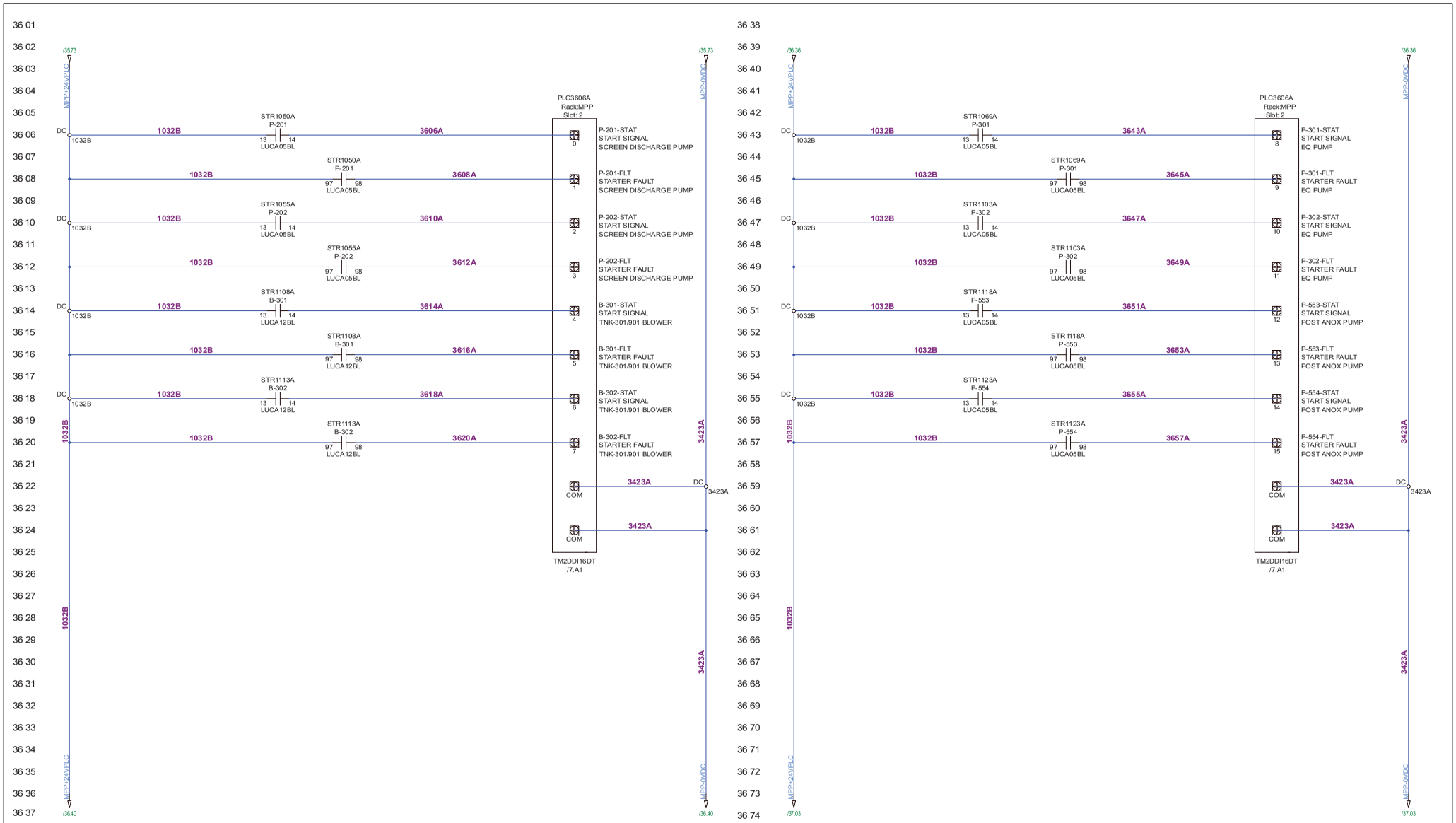
/3573
MPP+24VPLC
DC
1032B
STR1050A
P-201
13 14
LUCA05BL
3606A
PLC3606A
Rack:MPP
Slot: 2
0
P-201-STAT
START SIGNAL
SCREEN DISCHARGE PUMP
97 98
3608A
1
P-201-FLT
STARTER FAULT
SCREEN DISCHARGE PUMP
STR1055A
P-202
3610A
2
P-202-STAT
START SIGNAL
SCREEN DISCHARGE PUMP
3612A
3
P-202-FLT
STARTER FAULT
SCREEN DISCHARGE PUMP
STR1108A
B-301
LUCA12BL
3614A
4
B-301-STAT
START SIGNAL
TNK-301/901 BLOWER
3616A
5
B-301-FLT
STARTER FAULT
TNK-301/901 BLOWER
STR1113A
B-302
3618A
6
B-302-STAT
START SIGNAL
TNK-301/901 BLOWER
3620A
7
B-302-FLT
STARTER FAULT
TNK-301/901 BLOWER
3423A
COM
TM2DDI16DT
/7.A1
/3640
/3573
MPP-0VDC
/3640
/3573
/3640
/3573
/3640
/3573

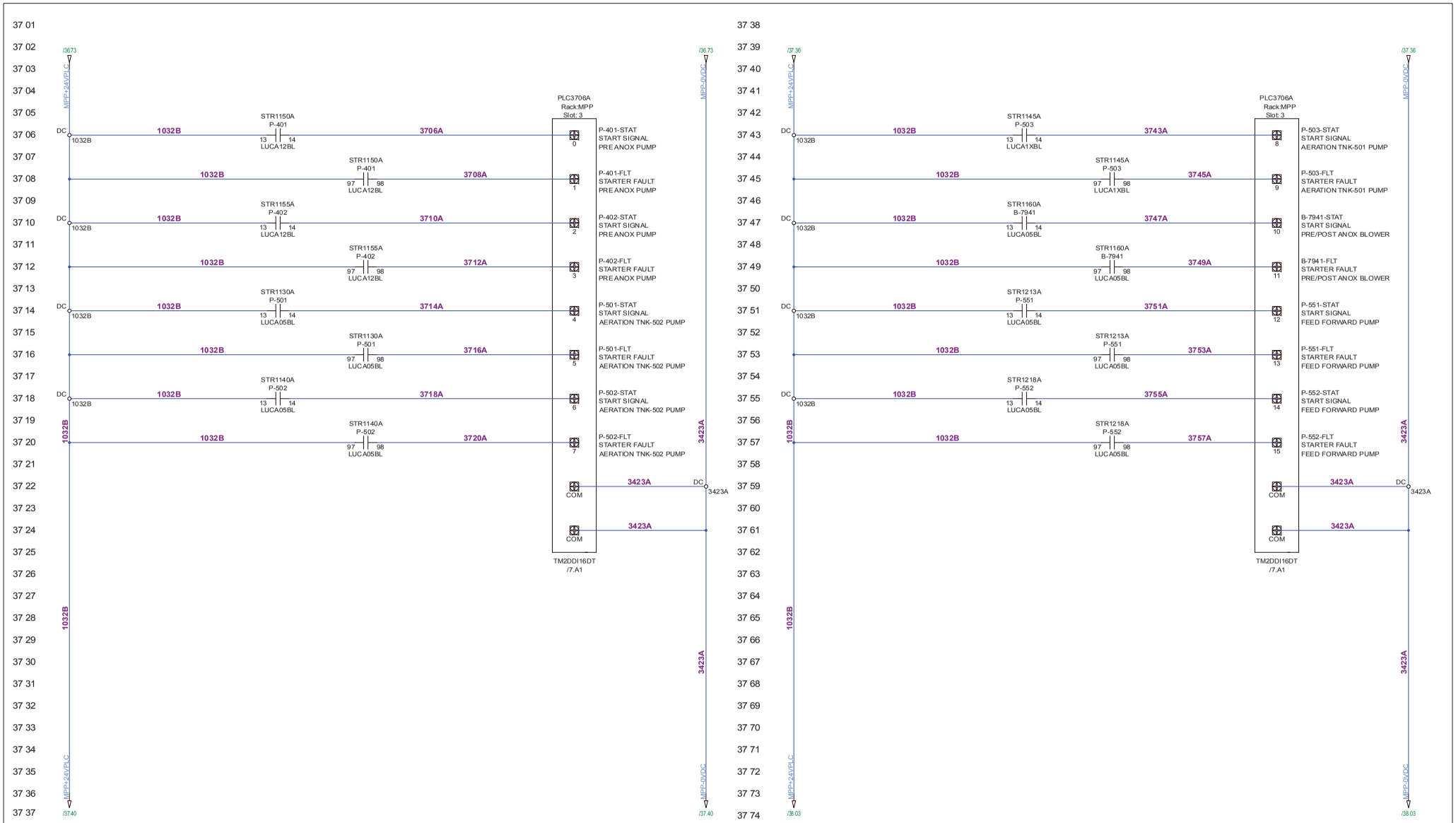

WIRE LEGEND

BLACK:	POWER
RED:	120VAC CONTROL
WHITE:	NEUTRAL
BLUE:	+24VDC & IS WIRING
BLU/WHT:	0VDC
YELLOW:	INTERLOCKS

NOTES:

1.

newterra

1325 CALIFORNIA AVE.
BROCKVILLE, ONTARIO
CANADA K6V 5Y6
PHONE: (613)498-1876
www.newterra.com

LEVEL	REVISION	DATE (dd/mm/yy)	BY
C	AS BUILT	14/08/17	DMB
B	FOR PRODUCTION	31/05/17	DMB
A1	FOR REVIEW	23/05/17	DMB
A	FOR SUBMITTAL	12/05/17	DMB

PROJ. NO: 1704432

TITLE AND LOCATION:
MPP DISCRETE INPUTS
SHEET 2 OF 2
MPP

CUSTOMER:
AGNICO EAGLE
600 MAN AMARUQ MINE

DRAWN BY:	DATE:	SHEET:	SHEETS:
DMB	29/05/17	37	71

1704432 - AGNICO EAGLE MINE - C

THIS INFORMATION IS THE PROPERTY OF newterra ltd.. AND CANNOT BE REUSED OR REPRODUCED WITHOUT THE WRITTEN CONSENT OF newterra ltd.

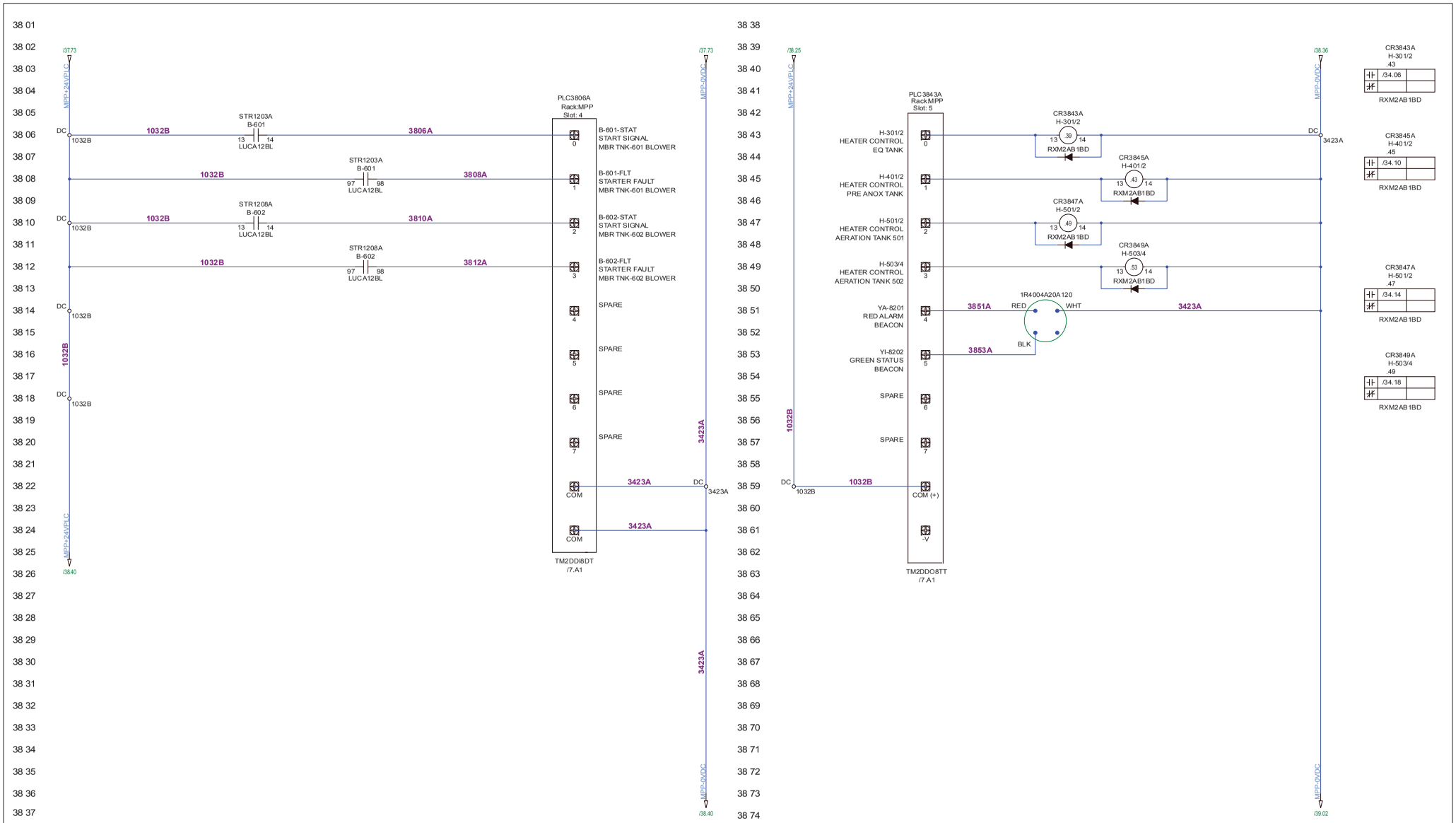

WIRE LEGEND

BLACK:	POWER
RED:	120VAC CONTROL
WHITE:	NEUTRAL
BLUE:	+24VDC & IS WIRING
BLU/WHT:	0VDC
YELLOW:	INTERLOCKS

NOTES:

1.

1325 CALIFORNIA AVE.
BROCKVILLE, ONTARIO
CANADA K6V 5Y6
PHONE: (613)498-1876
www.newterra.com

LEVEL	REVISION	DATE (dd/mm/yy)	BY
C	AS BUILT	14/08/17	DMB
B	FOR PRODUCTION	31/05/17	DMB
A1	FOR REVIEW	23/05/17	DMB
A	FOR SUBMITTAL	12/05/17	DMB

PROJ. NO: 1704432

TITLE AND LOCATION: MPP DISCRETE INPUTS & OUTPUTS MPP

CUSTOMER: AGNICO EAGLE 600 MAN AMARUQ MINE

DRAWN BY:	DATE:	SHEET:	SHEETS:
DMB	29/05/17	38	71

1704432 - AGNICO EAGLE MINE - C

THIS INFORMATION IS THE PROPERTY OF newterra ltd.. AND CANNOT BE REUSED OR REPRODUCED WITHOUT THE WRITTEN CONSENT OF newterra ltd.

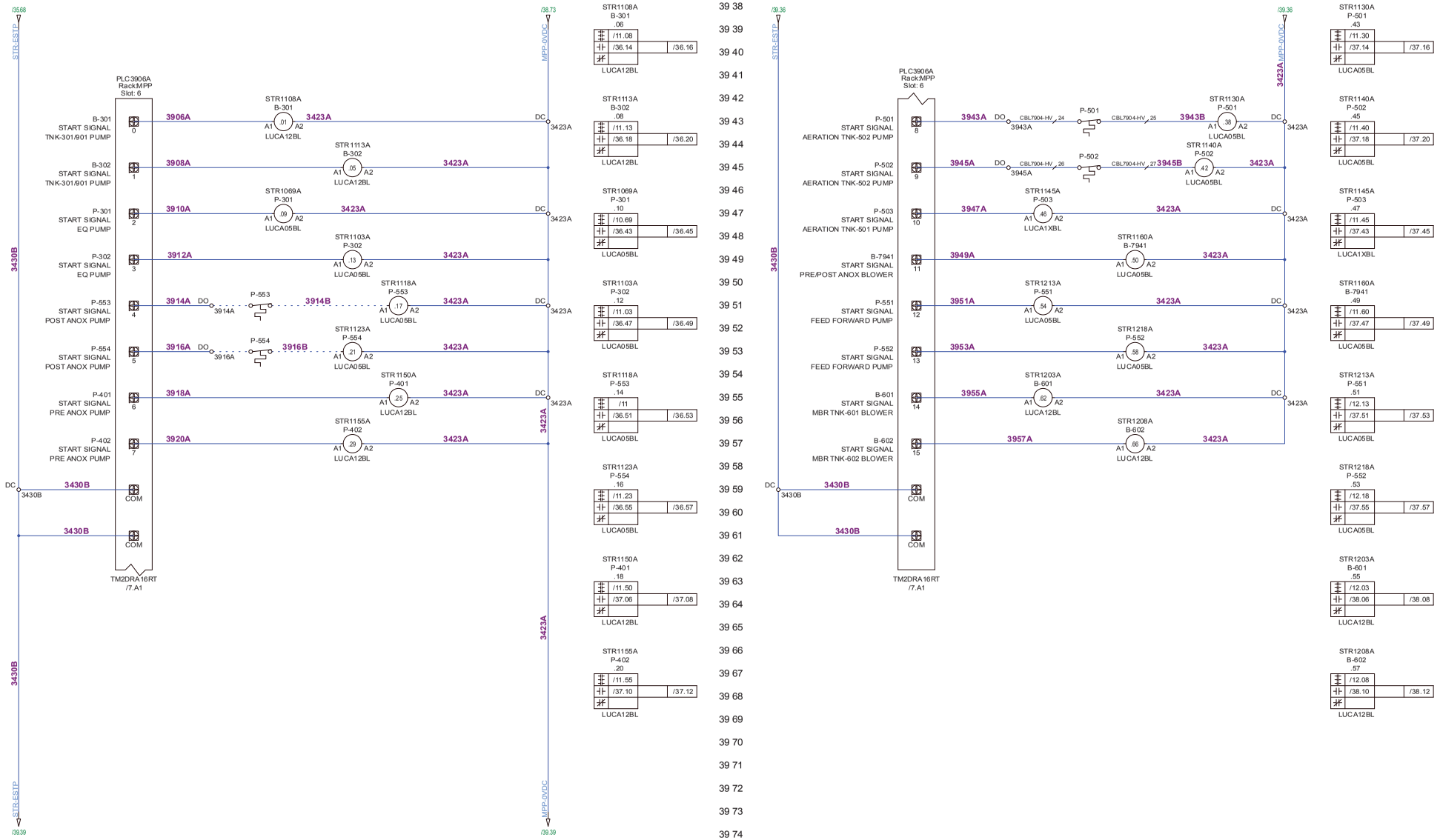

WIRE LEGEND

BLACK:	POWER
RED:	120VAC CONTROL
WHITE:	NEUTRAL
BLUE:	+24VDC & IS WIRING
BLU/WHT:	0VDC
YELLOW:	INTERLOCKS

NOTES:

1.

1325 CALIFORNIA AVE.
BROCKVILLE, ONTARIO
CANADA K6V 5Y6
PHONE: (613)498-1876
www.newterra.com

LEVEL	REVISION	DATE (dd/mm/yy)	BY
C	AS BUILT	14/08/17	DMB
B	FOR PRODUCTION	31/05/17	DMB
A1	FOR REVIEW	23/05/17	DMB
A	FOR SUBMITTAL	12/05/17	DMB

PROJ. NO: 1704432

TITLE AND LOCATION: MPP RELAY OUTPUTS

MPP

CUSTOMER: AGNICO EAGLE 600 MAN AMARUQ MINE

DRAWN BY:	DATE:	SHEET:	SHEETS:
DMB	08/05/17	39	71

1704432 - AGNICO EAGLE MINE - C

THIS INFORMATION IS THE PROPERTY OF newterra ltd.. AND CANNOT BE REUSED OR REPRODUCED WITHOUT THE WRITTEN CONSENT OF newterra ltd.

40 01
40 02
40 03
40 04
40 05
40 06
40 07
40 08
40 09
40 10
40 11
40 12
40 13
40 14
40 15
40 16
40 17
40 18
40 19
40 20
40 21
40 22
40 23
40 24
40 25
40 26
40 27
40 28
40 29
40 30
40 31
40 32
40 33
40 34
40 35
40 36
40 37

INTENTIONALLY BLANK

40 38
40 39
40 40
40 41
40 42
40 43
40 44
40 45
40 46
40 47
40 48
40 49
40 50
40 51
40 52
40 53
40 54
40 55
40 56
40 57
40 58
40 59
40 60
40 61
40 62
40 63
40 64
40 65
40 66
40 67
40 68
40 69
40 70
40 71
40 72
40 73
40 74

INTENTIONALLY BLANK

WIRE LEGEND

BLACK:	POWER
RED:	120VAC CONTROL
WHITE:	NEUTRAL
BLUE:	+24VDC & IS WIRING
BLU/WHT:	0VDC
YELLOW:	INTERLOCKS

NOTES:

1. FOLLOW CANADIAN COLOUR CODE FOR POWER WIRING (SEE SHEET 3 - LEGEND)
2. WIRE SIZE IS #12 AWG FOR POWER UNLESS OTHERWISE SPECIFIED

newterra

1325 CALIFORNIA AVE.
BROCKVILLE, ONTARIO
CANADA K6V 5Y6
PHONE: (613)498-1876
www.newterra.com

LEVEL	REVISION	DATE (dd/mm/yy)	BY
C	AS BUILT	14/08/17	DMB
B	FOR PRODUCTION	31/05/17	DMB
A1	FOR REVIEW	23/05/17	DMB
A	FOR SUBMITTAL	12/05/17	DMB

PROJ. NO: 1704432

TITLE AND LOCATION: MPP SPARE SHEET

MPP

CUSTOMER: AGNICO EAGLE 600 MAN AMARUQ MINE

DRAWN BY:	DATE:	SHEET:	SHEETS:
DMB	08/05/17	40	71

1704432 - AGNICO EAGLE MINE - C

THIS INFORMATION IS THE PROPERTY OF newterra ltd.. AND CANNOT BE REUSED OR REPRODUCED WITHOUT THE WRITTEN CONSENT OF newterra ltd.



PANEL OUTER DOOR

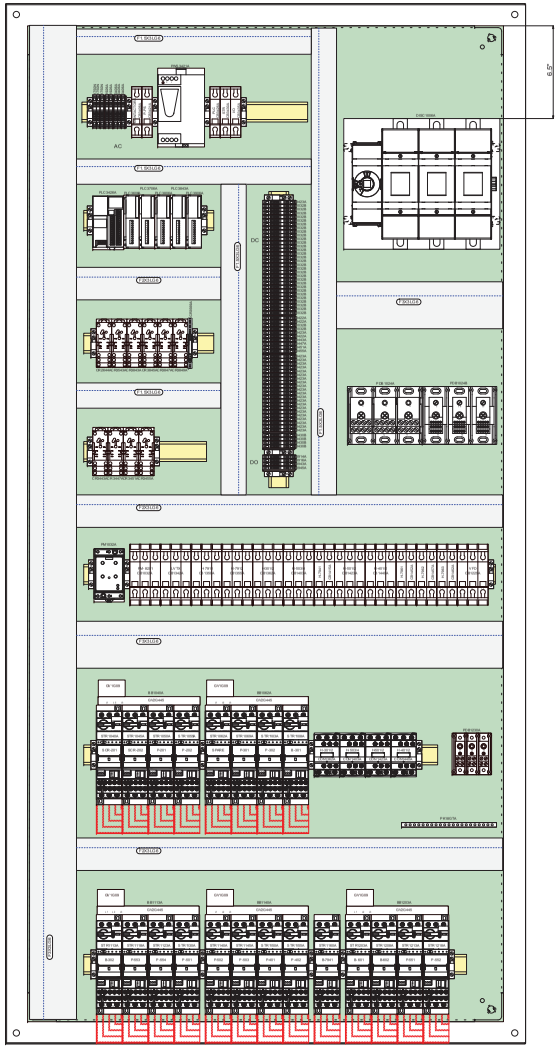

MPP
EN4SD723612GY
PANEL INTERIOR

WIRE LEGEND

BLACK:	POWER
RED:	120VAC CONTROL
WHITE:	NEUTRAL
BLUE:	+24VDC & IS WIRING
BLU/WHT:	0VDC
YELLOW:	INTERLOCKS

NOTES:

newterra

1325 CALIFORNIA AVE.
BROCKVILLE, ONTARIO
CANADA K6V 5Y6
PHONE: (613)498-1876

www.newterra.com

LEVEL	REVISION	DATE (dd/mm/yy)	BY
C	AS BUILT	14/08/17	DMB
B	FOR PRODUCTION	31/05/17	DMB
A1	FOR REVIEW	23/05/17	DMB
A	FOR SUBMITTAL	12/05/17	DMB

PROJ. NO: 1704432

TITLE AND LOCATION: MPP PANEL LAYOUT

MPP

CUSTOMER: AGNICO EAGLE 600 MAN AMARUQ MINE

DRAWN BY:	DATE:	SHEET:	SHEETS:
DMB	08/05/17	41	71

1704432 - AGNICO EAGLE MINE - C

THIS INFORMATION IS THE PROPERTY OF newterra ltd.. AND CANNOT BE REUSED OR REPRODUCED WITHOUT THE WRITTEN CONSENT OF newterra ltd.

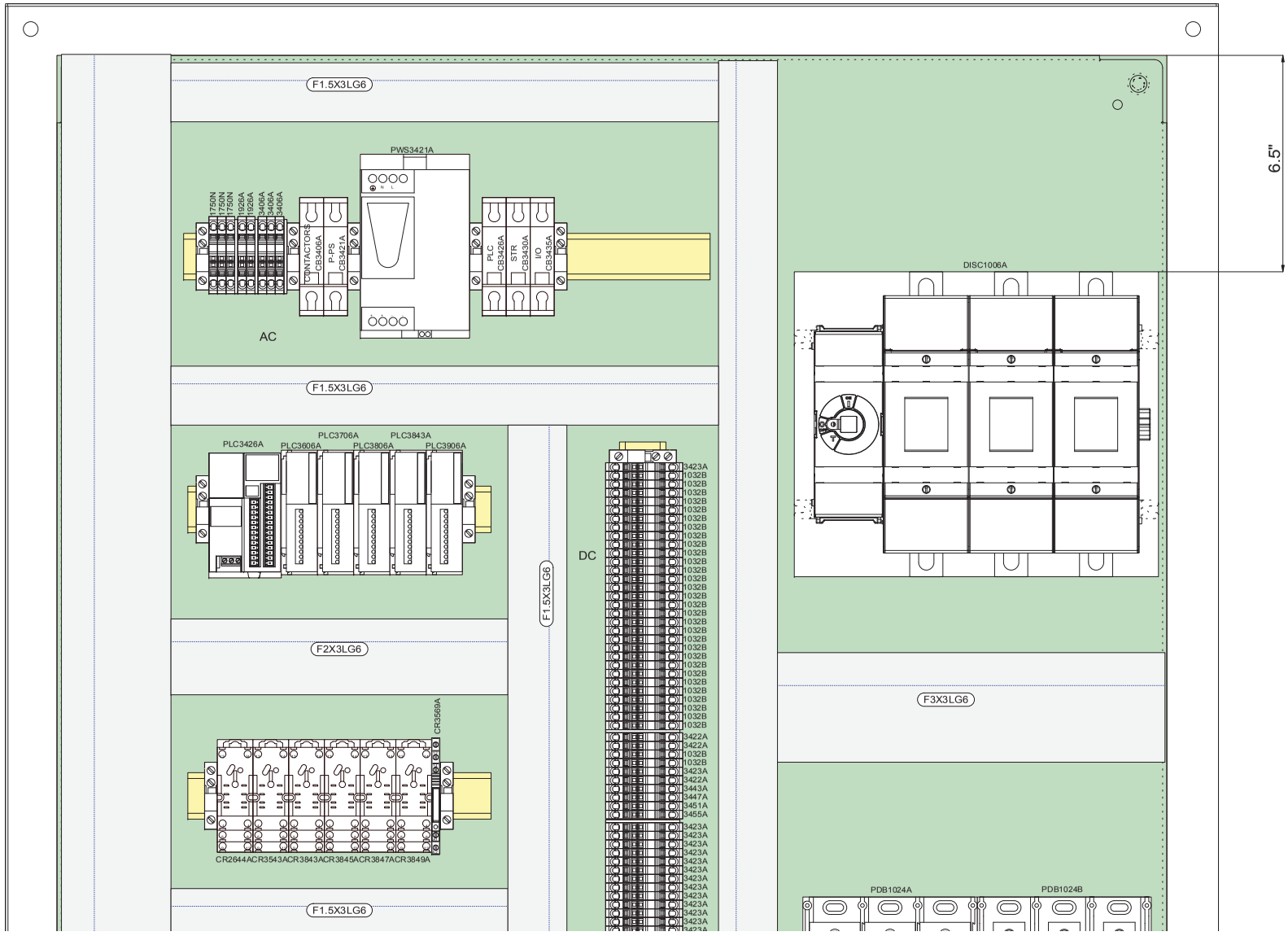

WIRE LEGEND

BLACK:	POWER
RED:	120VAC CONTROL
WHITE:	NEUTRAL
BLUE:	+24VDC & IS WIRING
BLU/WHT:	0VDC
YELLOW:	INTERLOCKS

NOTES:

1.

newterra

1325 CALIFORNIA AVE.
BROCKVILLE, ONTARIO
CANADA K6V 5Y6
PHONE: (613)498-1876
www.newterra.com

LEVEL	REVISION	DATE (dd/mm/yy)	BY
C	AS BUILT	14/08/17	DMB
B	FOR PRODUCTION	31/05/17	DMB
A1	FOR REVIEW	23/05/17	DMB
A	FOR SUBMITTAL	12/05/17	DMB

PROJ. NO: 1704432

TITLE AND LOCATION:
MPP PANEL LAYOUT
TOP
MPP

CUSTOMER:
AGNICO EAGLE
600 MAN AMARUQ MINE

DRAWN BY:	DATE:	SHEET:	SHEETS:
DMB	08/05/17	42	71

1704432 - AGNICO EAGLE MINE - C

THIS INFORMATION IS THE PROPERTY OF newterra ltd.. AND CANNOT BE REUSED OR REPRODUCED WITHOUT THE WRITTEN CONSENT OF newterra ltd.

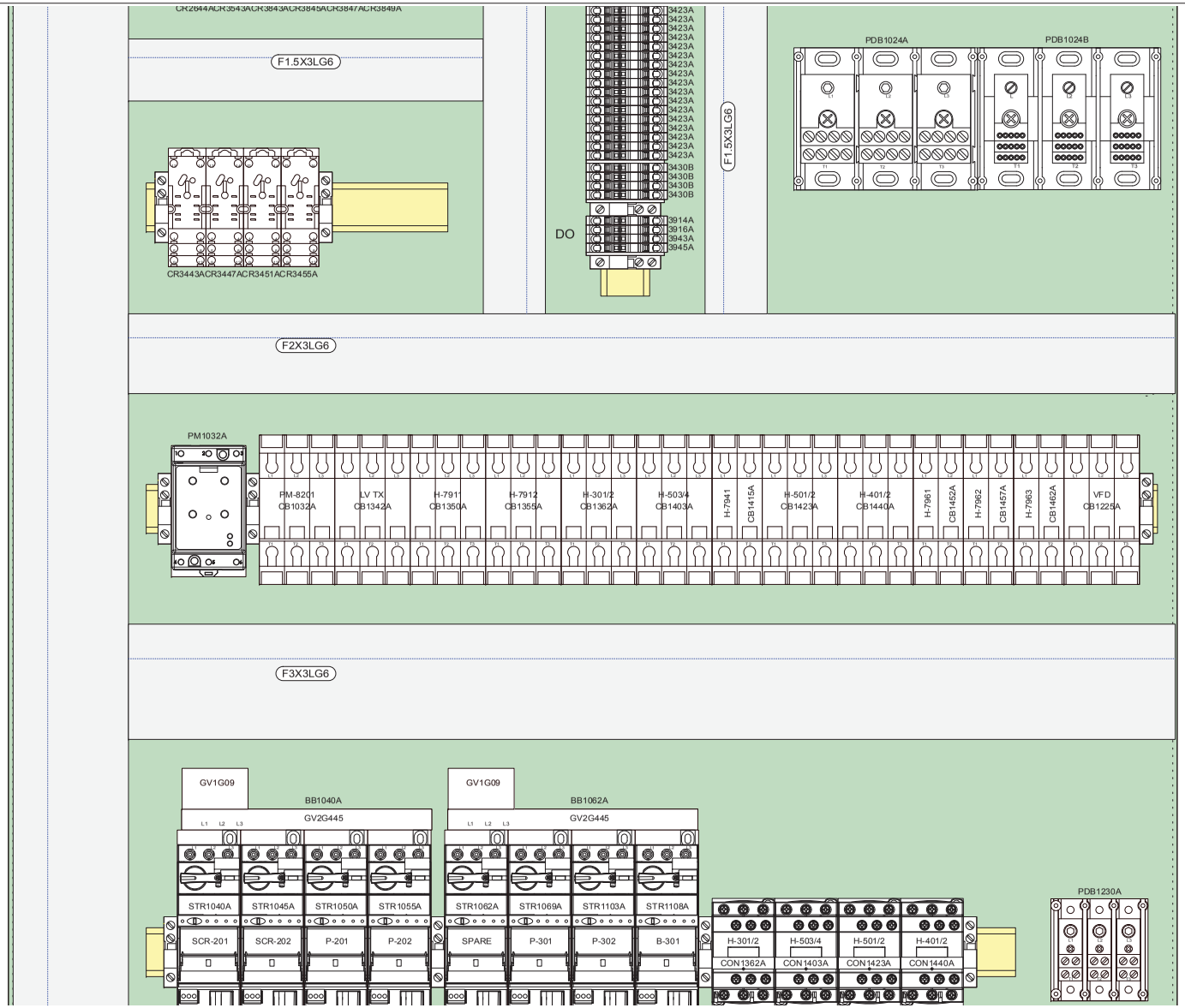

WIRE LEGEND

BLACK:	POWER
RED:	120VAC CONTROL
WHITE:	NEUTRAL
BLUE:	+24VDC & IS WIRING
BLU/WHT:	0VDC
YELLOW:	INTERLOCKS

NOTES:

1.

newterra

1325 CALIFORNIA AVE.
BROCKVILLE, ONTARIO
CANADA K6V 5Y6
PHONE: (613)498-1876
www.newterra.com

LEVEL	REVISION	DATE (dd/mm/yy)	BY
C	AS BUILT	14/08/17	DMB
B	FOR PRODUCTION	31/05/17	DMB
A1	FOR REVIEW	23/05/17	DMB
A	FOR SUBMITTAL	12/05/17	DMB

PROJ. NO: 1704432

TITLE AND LOCATION: MPP PANEL LAYOUT MIDDLE MPP

CUSTOMER: AGNICO EAGLE 600 MAN AMARUQ MINE

DRAWN BY:	DATE:	SHEET:	SHEETS:
DMB	08/05/17	43	71

1704432 - AGNICO EAGLE MINE - C

THIS INFORMATION IS THE PROPERTY OF newterra ltd.. AND CANNOT BE REUSED OR REPRODUCED WITHOUT THE WRITTEN CONSENT OF newterra ltd.



MPP
EN4SD723612GY
PANEL INTERIOR

WIRE LEGEND

BLACK:	POWER
RED:	120VAC CONTROL
WHITE:	NEUTRAL
BLUE:	+24VDC & IS WIRING
BLU/WHT:	0VDC
YELLOW:	INTERLOCKS

NOTES:

1325 CALIFORNIA AVE.
BROCKVILLE, ONTARIO
CANADA K6V 5Y6
PHONE: (613)498-1876
www.newterra.com

LEVEL	REVISION	DATE (dd/mm/yy)	BY
C	AS BUILT	14/08/17	DMB
B	FOR PRODUCTION	31/05/17	DMB
A1	FOR REVIEW	23/05/17	DMB
A	FOR SUBMITTAL	12/05/17	DMB

PROJ. NO: 1704432

TITLE AND LOCATION: MPP PANEL LAYOUT BOTTOM MPP

CUSTOMER: AGNICO EAGLE 600 MAN AMARUQ MINE

DRAWN BY:	DATE:	SHEET:	SHEETS:
DMB	08/05/17	44	71

1704432 - AGNICO EAGLE MINE - C

THIS INFORMATION IS THE PROPERTY OF newterra ltd.. AND CANNOT BE REUSED OR REPRODUCED WITHOUT THE WRITTEN CONSENT OF newterra ltd.

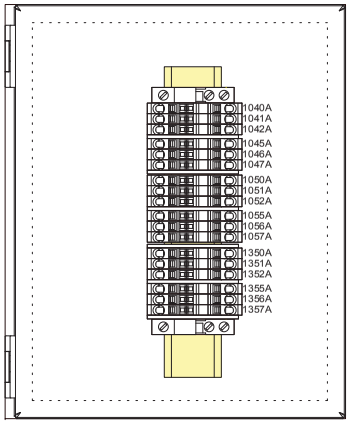

JB-7901-HV
EJ1084

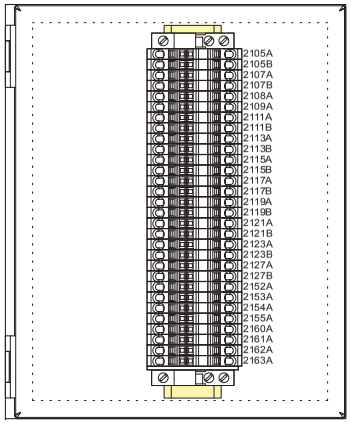

JB-7901-IS
EJ1084

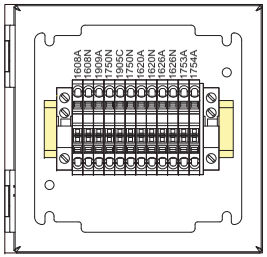

JB-7901-AC
EJ664

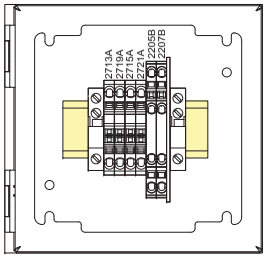

JB-7901-DC
EJ664

WIRE LEGEND

BLACK:	POWER
RED:	120VAC CONTROL
WHITE:	NEUTRAL
BLUE:	+24VDC & IS WIRING
BLU/WHT:	0VDC
YELLOW:	INTERLOCKS

NOTES:

1.

1325 CALIFORNIA AVE.
BROCKVILLE, ONTARIO
CANADA K6V 5Y6
PHONE: (613)498-1876
www.newterra.com

LEVEL	REVISION	DATE (dd/mm/yy)	BY
C	AS BUILT	14/08/17	DMB
B	FOR PRODUCTION	31/05/17	DMB
A1	FOR REVIEW	23/05/17	DMB
A	FOR SUBMITTAL	12/05/17	DMB

PROJ. NO: 1704432

TITLE AND LOCATION: JUNCTION BOX LAYOUTS JB-7901'S

CUSTOMER: AGNICO EAGLE 600 MAN AMARUQ MINE

DRAWN BY:	DATE:	SHEET:	SHEETS:
DMB	30/05/17	45	71

1704432 - AGNICO EAGLE MINE - C

THIS INFORMATION IS THE PROPERTY OF newterra ltd.. AND CANNOT BE REUSED OR REPRODUCED WITHOUT THE WRITTEN CONSENT OF newterra ltd.

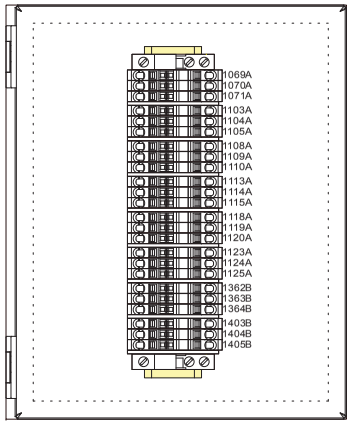

JB-7902-HV
EJ1084

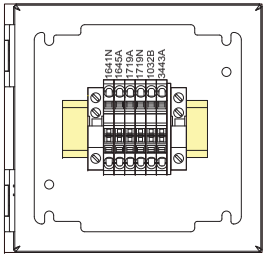

JB-7902-AC
EJ664

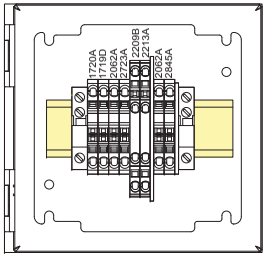

JB-7902-DC
EJ664

WIRE LEGEND

BLACK:	POWER
RED:	120VAC CONTROL
WHITE:	NEUTRAL
BLUE:	+24VDC & IS WIRING
BLU/WHT:	0VDC
YELLOW:	INTERLOCKS

NOTES:

1.

1325 CALIFORNIA AVE.
BROCKVILLE, ONTARIO
CANADA K6V 5Y6
PHONE: (613)498-1876
www.newterra.com

LEVEL	REVISION	DATE (dd/mm/yy)	BY
C	AS BUILT	14/08/17	DMB
B	FOR PRODUCTION	31/05/17	DMB
A1	FOR REVIEW	23/05/17	DMB
A	FOR SUBMITTAL	12/05/17	DMB

PROJ. NO: 1704432

TITLE AND LOCATION: JUNCTION BOX LAYOUTS JB-7902'S

CUSTOMER: AGNICO EAGLE 600 MAN AMARUQ MINE

DRAWN BY:	DATE:	SHEET:	SHEETS:
DMB	30/05/17	46	71

1704432 - AGNICO EAGLE MINE - C

THIS INFORMATION IS THE PROPERTY OF newterra ltd.. AND CANNOT BE REUSED OR REPRODUCED WITHOUT THE WRITTEN CONSENT OF newterra ltd.

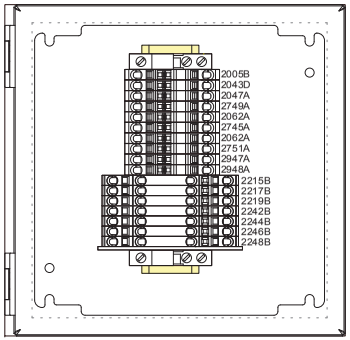

JB-7904-DC
EJ884

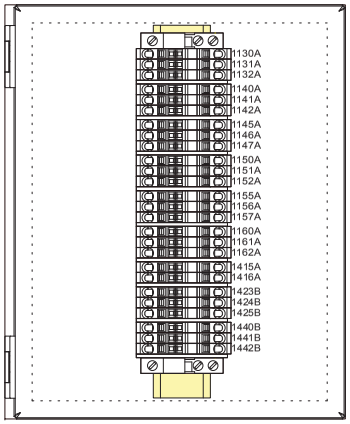

JB-7904-HV
EJ1084

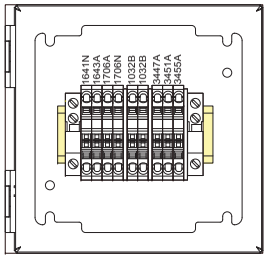

JB-7904-AC
EJ664

WIRE LEGEND

BLACK:	POWER
RED:	120VAC CONTROL
WHITE:	NEUTRAL
BLUE:	+24VDC & IS WIRING
BLU/WHT:	0VDC
YELLOW:	INTERLOCKS

NOTES:

1.

1325 CALIFORNIA AVE.
BROCKVILLE, ONTARIO
CANADA K6V 5Y6
PHONE: (613)498-1876
www.newterra.com

LEVEL	REVISION	DATE (dd/mm/yy)	BY
C	AS BUILT	14/08/17	DMB
B	FOR PRODUCTION	31/05/17	DMB
A1	FOR REVIEW	23/05/17	DMB
A	FOR SUBMITTAL	12/05/17	DMB

PROJ. NO: 1704432

TITLE AND LOCATION: JUNCTION BOX LAYOUTS JB-7904'S

CUSTOMER: AGNICO EAGLE 600 MAN AMARUQ MINE

DRAWN BY:	DATE:	SHEET:	SHEETS:
DMB	30/05/17	47	71

1704432 - AGNICO EAGLE MINE - C

THIS INFORMATION IS THE PROPERTY OF newterra ltd.. AND CANNOT BE REUSED OR REPRODUCED WITHOUT THE WRITTEN CONSENT OF newterra ltd.

MPP - Bill of Materials

Qty	APES#	Part Number	Description	Manufacturer	Device Designation(s)
1	37557	2QPL	Pad Lockable Qurater Turn Latch	Hammond	MPP
1	18396	460	190-480V, 3PH Power/Phase Monitor	Symcom	PM1032A
25	23745	800886	End Bracket - DIN Rail	Phoenix Contact	TB1, TB5, TB13, TB14, TB15, TB17, TB19, TB20, TB21, TB22, TB23, TB24,
					TB25, TB26, TB27, TB28, TB31, TB34, TB38, TB39, TB40, TB41, TB42, TB43,
					TB44
8	19168	0801733	Steel mounting rail; 35x7,5 mm, 1 mm thick; perforated	Phoenix Contact	TS1, TS5, TS6, TS7, TS8, TS9, TS10, TS11
1	23751	2966171	Relay, SPDT, 24VDC Coil	Phoenix Contact	CR3569A
7	23742	3030420	End Plate - 30A Feed Thru	Phoenix Contact	TB16, TB30, TB32, TB33, TB35, TB36, TB37
69	23738	3031377	Terminal, Blue, 28-12AWG, 30A, 600V	Phoenix Contact	AC(3), DC(66)
5	23740	3037151	Terminal, Red, 28-12AWG, 30A, 600V	Phoenix Contact	AC(5)
1	35707	ABL8REM24050	24VDC Power Supply, 120W, 5A	Schneider Electric	PWS3421A
3	12404	AJT250	Fuse,GLD AJT250250A 600V Time Delay, Class J	Ferraz Shawmut	DISC1006A(3)
1	24694	Arc Flash	Panel Label - Arc Flash Tri-lingual	Panel	8.11D
5	27397	C1.5LG6	Wire Duct Cover, 1.5", Grey	Panduit	WD8, WD9, WD10, WD12, WD16
3	27399	C2LG6	Wire Duct Cover, 2", Grey	Panduit	WD7, WD13, WD15
3	27405	C3LG6	Wire Duct Cover, 3", Grey	Panduit	WD1, WD4, WD11
1	38090	EN4SD723612GY	72" x 36" x 12" NEMA4 Steel Enclosure	Hammond	MPP
1	38041	EP7236	72" x 36" Backplate	Hammond	MPP
1	37558	EZPMFHD	Mounting Feet, Zinc, Set of 4	Hammond	MPP
5	27396	F1.5X3LG6	Wire Duct, 1.5"x3", Grey, Narrow Finger	Panduit	WD8, WD9, WD10, WD12, WD16
3	27398	F2X3LG6	Wire Duct, 2"x3", Grey, Narrow Finger	Panduit	WD7, WD13, WD15
3	27404	F3X3LG6	Wire Duct, 3"x3", Grey, Narrow Finger	Panduit	WD1, WD4, WD11
1	27929	GS1AW503	Terminal Lug, 2@#2AWG-600MCM, for use in 400A,600A,800A	Schneider Electric	DISC1006A
1	27712	GS2AE2	Shaft for Rotary Thru Door Handle	Schneider Electric	DISC1905
1	27713	GS2AH140	Through Door Rotary Handle	Schneider Electric	DISC1905
1	27928	GS2AP53	Terminal Shroud Kit 400A	Schneider Electric	DISC1006A
1	27927	GS2QU3N	Internal Fusible switch, 400A, Class J	Schneider Electric	DISC1006A
6	17158	GV1G09	Combination Starter, Busbar Top Mount	Schneider Electric	BB1040A, BB1062A, BB1113A, BB1140A, BB1203A, STR1160A
5	22546	GV2G445	Busbar 4 TeSysU Starters, #6AWG 63A MAX	Schneider Electric	BB1040A, BB1062A, BB1113A, BB1140A, BB1203A
4	10254	LC1D18G7	Contactor (TeSys D) Non-Reversing, 18A(AC3) 125A(AC1), 3-Pole (3 NO)	Schneider Electric	CON1362A, CON1403A, CON1423A, CON1440A
15	37367	LU9BN11C	TeSysU Prewired Coil Connection, Front Connection	Schneider Electric	STR1040A, STR1045A, STR1050A, STR1055A, STR1069A, STR1103A, STR1108A,
					STR1113A, STR1118A, STR1123A, STR1130A, STR1140A, STR1145A, STR1203A,
					STR1208A

NOTES:

1325 CALIFORNIA AVE.
BROCKVILLE, ONTARIO
CANADA K6V 5Y6
PHONE: (613)498-1876
www.newterra.com

LEVEL	REVISION	DATE (dd/mm/yy)	BY
C	AS BUILT	14/08/17	DMB
B	FOR PRODUCTION	31/05/17	DMB
A1	FOR REVIEW	23/05/17	DMB
A	FOR SUBMITTAL	12/05/17	DMB

PROJ. NO: 1704432

TITLE AND LOCATION:
MPP BILL OF MATERIAL
MODULE 8201 - SHEET 1 OF 2

CUSTOMER:
AGNICO EAGLE
600 MAN AMARUQ MINE

DRAWN BY:	DATE:	SHEET:	SHEETS:
DMB	31/05/17	48	71

1704432 - AGNICO EAGLE MINE - C

THIS INFORMATION IS THE PROPERTY OF newterra ltd.. AND CANNOT BE REUSED OR REPRODUCED WITHOUT THE WRITTEN CONSENT OF newterra ltd.

MPP - Bill of Materials

Qty	APES#	Part Number	Description	Manufacturer	Device Designation(s)
21	19269	LUA1C20	Combination Starter, 1NO Ready, 1NO Fault Aux. Contact Module	Schneider Electric	STR1040A, STR1045A, STR1050A, STR1055A, STR1062A, STR1069A, STR1103A,
					STR1108A, STR1113A, STR1118A, STR1123A, STR1130A, STR1140A, STR1145A,
					STR1150A, STR1155A, STR1160A, STR1203A, STR1208A, STR1213A, STR1218A
21	19264	LUB12	Combination Starter, 12A Power Base, 3/7.5/10HP	Schneider Electric	STR1040A, STR1045A, STR1050A, STR1055A, STR1062A, STR1069A, STR1103A,
					STR1108A, STR1113A, STR1118A, STR1123A, STR1130A, STR1140A, STR1145A,
					STR1150A, STR1155A, STR1160A, STR1203A, STR1208A, STR1213A, STR1218A
4	19503	LUCA1XBL	Combination Starter, TeSysU Standard Control Unit 0.35-1.4A, 24VDC coil	Schneider Electric	STR1040A, STR1045A, STR1062A, STR1145A
11	21191	LUCA05BL	Combination Starter, TeSysU Standard Control Unit 1.25-5.0A, 24V/60mA DC coil	Schneider Electric	STR1050A, STR1055A, STR1069A, STR1103A, STR1108A, STR1113A, STR1130A,
					STR1140A, STR1160A, STR1213A, STR1218A
6	22706	LUCA12BL	Combination Starter, TeSysU Standard Control Unit 3-12A, 24V/60mA DC coil	Schneider Electric	STR1118A, STR1123A, STR1150A, STR1155A, STR1203A, STR1208A
4	38092	M9F42215	Breaker, Multi9, 480/277V 15 AMP 2P C Trip Curve, 10k SCCR	Schneider Electric	CB1415A, CB1452A, CB1457A, CB1462A
2	38069	M9F42315	Breaker, Multi9 480/277V 15 AMP 3P C Trip Curve, 10k SCCR	Schneider Electric	CB1032A, CB1342A
5	38070	M9F42320	Breaker, Multi9 480/277V 20 AMP 3P C Trip Curve, 10k SCCR	Schneider Electric	CB1350A, CB1362A, CB1403A, CB1423A, CB1440A
1	38071	M9F42330	Breaker, Multi9 480/277V 30 AMP 3P C Trip Curve, 10k SCCR	Schneider Electric	CB1355A
2	38136	MG24425	Breaker, 240V 1 AMP 1P C	Schneider Electric	CB3406A, CB3426A
1	38137	MG24426	Breaker, 240V 2 AMP 1P C	Schneider Electric	CB3435A
1	38138	MG24427	Breaker, 240V 3 AMP 1P C	Schneider Electric	CB3421A
1	38139	MG24428	Breaker, 240V 4 AMP 1P C	Schneider Electric	CB3430A
2	26722	MPDB67113	Power Block, 175A 1Pri 12Sec Aluminum, 2/0-#14Pri #10-14Sec	MERSEN	PDB1024A, PDB1024B
6	26741	MPDBC6667	Power Block, MPDBC6667 safety cover,	MERSEN	PDB1024A(3), PDB1024B(3)
1	36638	NT-CV-12	Panel Label - newterra Decal	Panel	8.11E
1	36639	NT-PS	Panel Label - newterra Sticker	Panel	8.11F
1	36316	OTB1E0DM9LP	OTB RIO Adapter, Ethernet	Schneider Electric	PLC3426A
1	10586	PK18GTA	NQ Panelboard Ground Bus	Schneider Electric	GB1
10	22324	RXM2AB1BD	Relay, SQT RXM2AB1BD, Miniature Relay 2PDT 24 VDC	Schneider Electric	CR3443A, CR3447A, CR3451A, CR3455A, CR3541A, CR3543A, CR3843A, CR3845A,
					CR3847A, CR3849A
10	22326	RXZE2S108M	Relay, SQT RXZE2S108M, Base/Socket for RXM2 2P Relays	Schneider Electric	CR3443A, CR3447A, CR3451A, CR3455A, CR3541A, CR3543A, CR3843A, CR3845A,
					CR3847A, CR3849A
1	36317	TM2DDI8DT	TM2 8 point DI Expansion Module	Schneider Electric	PLC3806A
2	37596	TM2DDI16DT	TM2 16 point DI Expansion Module	Schneider Electric	PLC3606A, PLC3706A
1	38119	TM2DDO8TT	TM2 8 point DO Expansion Module, Removable Terminal Blocks	Schneider Electric	PLC3843A
1	38209	TM2DRA16RT	TM2 16RO Expansion Module	Schneider Electric	PLC3906A

NOTES:

1325 CALIFORNIA AVE.
BROCKVILLE, ONTARIO
CANADA K6V 5Y6
PHONE: (613)498-1876
www.newterra.com

LEVEL	REVISION	DATE (dd/mm/yy)	BY
C	AS BUILT	14/08/17	DMB
B	FOR PRODUCTION	31/05/17	DMB
A1	FOR REVIEW	23/05/17	DMB
A	FOR SUBMITTAL	12/05/17	DMB

PROJ. NO: 1704432

TITLE AND LOCATION: MPP BILL OF MATERIAL MODULE 8201 - SHEET 2 OF 2

CUSTOMER: AGNICO EAGLE 600 MAN AMARUQ MINE

DRAWN BY:	DATE:	SHEET:	SHEETS:
DMB	31/05/17	49	71

1704432 - AGNICO EAGLE MINE - C

THIS INFORMATION IS THE PROPERTY OF newterra ltd.. AND CANNOT BE REUSED OR REPRODUCED WITHOUT THE WRITTEN CONSENT OF newterra ltd.

MCP - Bill of Materials

Qty	APES#	Part Number	Description	Manufacturer	Device Designation(s)
1	37557	2QPL	Pad Lockable Qurater Turn Latch	Hammond	MCP
1	26829	8GB_Micro	8GB Micro USB Key	Generic	OIT2008A
1	26511	17-200161	USB TypeA F-F Bulkhead Connector	Conec	USB71A
1	20698	20698	Mounting Bracket, Antenna & Surge Protector		ENET2011A
27	23745	800886	End Bracket - DIN Rail	Phoenix Contact	TB2, TB3, TB4, TB5, TB6, TB10, TB11, TB12, TB13, TB14, TB15, TB16, TB37,
					TB38, TB39, TB42, TB43, TB44, TB45, TB46, TB47, TB52, TB54, TB57, TB58,
					TB59, TB65
6	19168	0801733	Steel mounting rail; 35x7,5 mm, 1 mm thick; perforated	Phoenix Contact	TS1, TS2, TS3, TS8, TS9, TS10
17	23751	2966171	Relay, SPDT, 24VDC Coil	Phoenix Contact	CR2507A, CR2509A, CR2511A, CR2517A, CR2519A, CR2521A, CR2548A, CR2550A,
					CR2552A, CR2554A, CR2607A, CR2609A, CR2611A, CR2613A, CR2615A, CR2617A,
					CR2619A
14	23742	3030420	End Plate - 30A Feed Thru	Phoenix Contact	TB29, TB31, TB33, TB34, TB49, TB50, TB55, TB56, TB60, TB61, TB62, TB63,
					TB64, TB66
1	23748	3030747	End Plate - Double Feed Thru	Phoenix Contact	TB48
10	23737	3031364	Terminal, Grey, 28-12AWG, 30A, 600V	Phoenix Contact	AC(6), AO(4)
83	23738	3031377	Terminal, Blue, 28-12AWG, 30A, 600V	Phoenix Contact	AI(44), AO(8), DC(26), DO-P(5)
48	35073	3031432	Terminal, Double, 28-10AWG, 30A, 600V, Blue	Phoenix Contact	DI(48)
15	29545	3036369	Fused Terminal, 28-10AWG, 6.3A, 500V	Phoenix Contact	AI(14), AO
8	23741	3037148	Terminal, Yellow, 28-12AWG, 30A, 600V	Phoenix Contact	TB1(8)
15	23740	3037151	Terminal, Red, 28-12AWG, 30A, 600V	Phoenix Contact	AC(15)
2	35707	ABL8REM24050	24VDC Power Supply, 120W, 5A	Schneider Electric	PWS2004A, PWS2015A
1	24694	Arc Flash	Panel Label - Arc Flash Tri-lingual	Panel	8.11C
2	27402	C1LG6	Wire Duct Cover, 1", Grey	Panduit	WD2, WD11
6	27399	C2LG6	Wire Duct Cover, 2", Grey	Panduit	WD1, WD3, WD8, WD9, WD10, WD12
1	27949	C5E-STPRD-S3	Red Industrial Ethernet Cable, RJ45, 3ft, STP	Canada Computer	CBL5
2	27950	C5E-STPRD-S7	Industrial Ethernet Cable, RJ45, 7ft, STP	Canada Computer	CBL1, CBL3
1	27951	C5E-STPRD-S10	Industrial Ethernet Cable, RJ45, 10ft, STP	Canada Computer	CBL2
1	27953	C5E-STPRD-S25	Industrial Ethernet Cable, RJ45, 25ft, STP	Canada Computer	CBL6
4	12475	D1031Q	4Ch Discrete, Transistor Output, Intrinsically Safe Barrier	GM International	IS2020A, IS2024A, IS2028A, IS2032A
1	24602	E100502	Industrial RJ45 Jack	Belden	ETH71A
1	29140	EC6133D	eWON Cosy 131 LAN/Cell Router, 24VDC Power	eWON	ENET2011A
1	37906	EN4SD483612GY	48" x 36" x 12" NEMA4 Steel Enclosure	Hammond	MCP
1	37907	EP4836	48" x 36" Backplate	Hammond	MCP

NOTES:

newterra

1325 CALIFORNIA AVE.
BROCKVILLE, ONTARIO
CANADA K6V 5Y6
PHONE: (613)498-1876
www.newterra.com

LEVEL	REVISION	DATE (dd/mm/yy)	BY
C	AS BUILT	14/08/17	DMB
B	FOR PRODUCTION	31/05/17	DMB
A1	FOR REVIEW	23/05/17	DMB
A	FOR SUBMITTAL	12/05/17	DMB

PROJ. NO: 1704432

TITLE AND LOCATION: MCP BILL OF MATERIAL
MODULE 8202 - SHEET 1 OF 3

CUSTOMER: AGNICO EAGLE
600 MAN AMARUQ MINE

DRAWN BY:	DATE:	SHEET:	SHEETS:
DMB	30/05/17	50	71

1704432 - AGNICO EAGLE MINE - C

THIS INFORMATION IS THE PROPERTY OF newterra ltd.. AND CANNOT BE REUSED OR REPRODUCED WITHOUT THE WRITTEN CONSENT OF newterra ltd.

MCP - Bill of Materials

Qty	APES#	Part Number	Description	Manufacturer	Device Designation(s)
1	37558	EZPMFHD	Mounting Feet, Zinc, Set of 4	Hammond	MCP
2	27400	F1X3LG6	Wire Duct, 1"x3", Grey, Narrow Finger	Panduit	WD2, WD11
6	27398	F2X3LG6	Wire Duct, 2"x3", Grey, Narrow Finger	Panduit	WD1, WD3, WD8, WD9, WD10, WD12
14	20369	GSB1/10	Fuse,GLD GSB1/10100mA 250V Fast Acting, Miniature 5x20mm	Ferraz Shawmut	AI(14)
1	36555	GSB16/100	Fuse, 160mA 250V Fast Acting, Miniature 5x20mm	Ferraz Shawmut	AO
1	20569	GW195-180-SM-NM	Cellular Modem Antenna Cable - 15Ft. N-Male to SMA-Male	Airlink_Communications	ENET2011A
1	36126	HMIDT542	Touchscreen, 10.4" TOUCH SMART DISPLAY	Schneider Electric	OIT2008A
1	36124	HMIG3U	HMI Linux Processor, for use with HMIDT smart displays	Schneider Electric	OIT2008A
1	26892	IS Wiring Inside	Panel Label - IS Wiring Inside	Panel	8.11A
4	38136	MG24425	Breaker, 240V 1 AMP 1P C	Schneider Electric	CB1905C, CB1909A, CB2020A, CB2043A
2	38137	MG24426	Breaker, 240V 2 AMP 1P C	Schneider Electric	CB2057A, CB2062A
5	38138	MG24427	Breaker, 240V 3 AMP 1P C	Schneider Electric	CB1905A, CB2004A, CB2008A, CB2015A, CB2053A
2	38139	MG24428	Breaker, 240V 4 AMP 1P C	Schneider Electric	CB1926A, CB2011A
1	36639	NT-PS	Panel Label - newterra Sticker	Panel	8.11D
1	10586	PK18GTA	NQ Panelboard Ground Bus	Schneider Electric	GB1
1	23504	PSD1001	4Ch Power Supply, 15V - 20mA	GM International	IS2036A
1	11482	QOU1PA	Breaker Lock for 1 pole QOU breakers	Schneider Electric	CB1905B
1	10270	QOU115	Breaker, SQD QOU115 1240V 15A 1P DIN Mount, 10k SCCR	Schneider Electric	CB1905B
5	22324	RXM2AB1BD	Relay, SQT RXM2AB1BD, Miniature Relay 2PDT 24 VDC	Schneider Electric	CR2127A, CR2513A, CR2515A, CR2556A, CR2621A
2	21888	RXM4AB1BD	Relay, SQT RXM4AB1BD, Miniature Relay, 4PDT, 24 VDC, 6A contacts	Schneider Electric	CR2050A, CR2558A
1	21887	RXM4AB1F7	Relay, SQT RXM4AB1F7, Miniature Relay, 4PDT, 120VAC, 6A contacts	Schneider Electric	CR2047A
5	22326	RXZE2S108M	Relay, SQT RXZE2S108M, Base/Socket for RXM2 2P Relays	Schneider Electric	CR2127A, CR2513A, CR2515A, CR2556A, CR2621A
3	21889	RXZE2S114M	Relay, SQT RXZE2S114M, Base/Socket for RXM4 4P Relays	Schneider Electric	CR2047A, CR2050A, CR2558A
1	26891	Substitution of IS	Panel Label - Substitution of IS Components	Panel	8.11B
1	36089	TM3AI4G	TM3 4-channel AI Expansion Module	Schneider Electric	PLC2807A
1	36090	TM3AI8G	TM3 8-channel AI Expansion Module	Schneider Electric	PLC2707A
1	36543	TM3AQ4G	TM3 4-channel AO Expansion Module	Schneider Electric	PLC2906A
4	36087	TM3DI16G	TM3 16DI Expansion Module	Schneider Electric	PLC2105A, PLC2205A, PLC2305A, PLC2405A
2	36088	TM3DQ16TG	TM3 16DO Expansion Module	Schneider Electric	PLC2507A, PLC2607A
1	36558	TM3XREC1	TME Bus Receiver Module	Schneider Electric	PLC2057A
1	36557	TM3XTRA1	TME Bus Transmitter Module	Schneider Electric	PLC2060A
1	28484	TM251MESE	M251 Controller, Dual Ethernet	Schneider Electric	PLC2053A
1	24550	USB_A-A	6ft, USB MaleA/MaleA	Generic	CBL4

NOTES:

newterra

1325 CALIFORNIA AVE.
BROCKVILLE, ONTARIO
CANADA K6V 5Y6
PHONE: (613)498-1876
www.newterra.com

LEVEL	REVISION	DATE (dd/mm/yy)	BY
C	AS BUILT	14/08/17	DMB
B	FOR PRODUCTION	31/05/17	DMB
A1	FOR REVIEW	23/05/17	DMB
A	FOR SUBMITTAL	12/05/17	DMB

PROJ. NO: 1704432

TITLE AND LOCATION: MCP BILL OF MATERIAL
MODULE 8202 - SHEET 2 OF 3

CUSTOMER: AGNICO EAGLE
600 MAN AMARUQ MINE

DRAWN BY:	DATE:	SHEET:	SHEETS:
DMB	30/05/17	51	71

1704432 - AGNICO EAGLE MINE - C

THIS INFORMATION IS THE PROPERTY OF newterra ltd.. AND CANNOT BE REUSED OR REPRODUCED WITHOUT THE WRITTEN CONSENT OF newterra ltd.

MCP - Bill of Materials

Qty	APES#	Part Number	Description	Manufacturer	Device Designation(s)
1	25880	WMLPVDB800	Cellular Modem Antenna, N-Female, White	Airlink_Communications	ENET2011A
1	21650	XB7EV03BP	Button, XB7EV03GP, GREEN LED PILOT LIGHT 24VDC	Schneider Electric	LT2544A
1	21649	XB7EV04BP	Button, XB7EV03GP, RED LED PILOT LIGHT 24VDC	Schneider Electric	LT2546A
1	14607	ZB5 AT4	Button, ZB5 AT4, E-Stop Button	Schneider Electric	PB2043A
1	14611	ZB5 AZ102	Button, ZB5 AZ102, Collar with 1 NC Contact Block	Schneider Electric	PB2043A
1	23054	ZBY9330	ESTOP Label	Schneider Electric	PB2043A

NOTES:

newterra

1325 CALIFORNIA AVE.
BROCKVILLE, ONTARIO
CANADA K6V 5Y6
PHONE: (613)498-1876
www.newterra.com

LEVEL	REVISION	DATE (dd/mm/yy)	BY
C	AS BUILT	14/08/17	DMB
B	FOR PRODUCTION	31/05/17	DMB
A1	FOR REVIEW	23/05/17	DMB
A	FOR SUBMITTAL	12/05/17	DMB

PROJ. NO: 1704432

TITLE AND LOCATION: MCP BILL OF MATERIAL
MODULE 8202 - SHEET 3 OF 3

CUSTOMER: AGNICO EAGLE
600 MAN AMARUQ MINE

DRAWN BY:	DATE:	SHEET:	SHEETS:
DMB	30/05/17	52	71

1704432 - AGNICO EAGLE MINE - C

THIS INFORMATION IS THE PROPERTY OF newterra ltd.. AND CANNOT BE REUSED OR REPRODUCED WITHOUT THE WRITTEN CONSENT OF newterra ltd.

JB-7901-AC - Bill of Materials

Qty	APES#	Part Number	Description	Manufacturer	Device Designation(s)
2	23745	800886	End Bracket - DIN Rail	Phoenix Contact	TB1, TB3
1	19168	0801733	Steel mounting rail; 35x7,5 mm, 1 mm thick; perforated	Phoenix Contact	TS1
1	23742	3030420	End Plate - 30A Feed Thru	Phoenix Contact	TB2
3	23737	3031364	Terminal, Grey, 28-12AWG, 30A, 600V	Phoenix Contact	AC(3)
3	23740	3037151	Terminal, Red, 28-12AWG, 30A, 600V	Phoenix Contact	AC(3)
1	37975	EJ664	6" x 6" x 4" NEMA4 Steel Enclosure, Hinged Cover	Hammond	JB-7901-AC

NOTES:

newterra

1325 CALIFORNIA AVE.
BROCKVILLE, ONTARIO
CANADA K6V 5Y6
PHONE: (613)498-1876
www.newterra.com

LEVEL	REVISION	DATE (dd/mm/yy)	BY
C	AS BUILT	14/08/17	DMB
B	FOR PRODUCTION	31/05/17	DMB
A1	FOR REVIEW	23/05/17	DMB
A	FOR SUBMITTAL	12/05/17	DMB

PROJ. NO: 1704432

TITLE AND LOCATION: JB-7901-AC BILL OF MATERIAL MODULE 8203 - SHEET 1 OF 11

CUSTOMER: AGNICO EAGLE 600 MAN AMARUQ MINE

DRAWN BY:	DATE:	SHEET:	SHEETS:
DMB	30/05/17	53	71

1704432 - AGNICO EAGLE MINE - C

THIS INFORMATION IS THE PROPERTY OF newterra ltd.. AND CANNOT BE REUSED OR REPRODUCED WITHOUT THE WRITTEN CONSENT OF newterra ltd.

JB-7901-DC - Bill of Materials

Qty	APES#	Part Number	Description	Manufacturer	Device Designation(s)
2	23745	800886	End Bracket - DIN Rail	Phoenix Contact	TB4, TB5
1	19168	0801733	Steel mounting rail; 35x7,5 mm, 1 mm thick; perforated	Phoenix Contact	TS2
1	23748	3030747	End Plate - Double Feed Thru	Phoenix Contact	TB1
4	23738	3031377	Terminal, Blue, 28-12AWG, 30A, 600V	Phoenix Contact	DC(4)
2	35073	3031432	Terminal, Double, 28-10AWG, 30A, 600V, Blue	Phoenix Contact	DC(2)
1	37975	EJ664	6" x 6" x 4" NEMA4 Steel Enclosure, Hinged Cover	Hammond	JB-7901-DC

NOTES:

newterra

1325 CALIFORNIA AVE.
BROCKVILLE, ONTARIO
CANADA K6V 5Y6
PHONE: (613)498-1876
www.newterra.com

LEVEL	REVISION	DATE (dd/mm/yy)	BY
C	AS BUILT	14/08/17	DMB
B	FOR PRODUCTION	31/05/17	DMB
A1	FOR REVIEW	23/05/17	DMB
A	FOR SUBMITTAL	12/05/17	DMB

PROJ. NO: 1704432

TITLE AND LOCATION: JB-7901-DC BILL OF MATERIAL MODULE 8203 - SHEET 2 OF 11

CUSTOMER: AGNICO EAGLE 600 MAN AMARUQ MINE

DRAWN BY:	DATE:	SHEET:	SHEETS:
DMB	30/05/17	54	71

1704432 - AGNICO EAGLE MINE - C

THIS INFORMATION IS THE PROPERTY OF newterra ltd.. AND CANNOT BE REUSED OR REPRODUCED WITHOUT THE WRITTEN CONSENT OF newterra ltd.

JB-7901-HV - Bill of Materials

Qty	APES#	Part Number	Description	Manufacturer	Device Designation(s)
2	23745	800886	End Bracket - DIN Rail	Phoenix Contact	TB4, TB11
1	19168	0801733	Steel mounting rail; 35x7,5 mm, 1 mm thick; perforated	Phoenix Contact	TS2
7	23742	3030420	End Plate - 30A Feed Thru	Phoenix Contact	TB1, TB5, TB6, TB7, TB8, TB9, TB10
21	23740	3037151	Terminal, Red, 28-12AWG, 30A, 600V	Phoenix Contact	HV(21)
1	38220	EJ1084	10" x 8" x 4" NEMA4 Steel Enclosure, Hinged Cover	Hammond	JB-7901-HV

NOTES:

newterra

1325 CALIFORNIA AVE.
BROCKVILLE, ONTARIO
CANADA K6V 5Y6
PHONE: (613)498-1876
www.newterra.com

LEVEL	REVISION	DATE (dd/mm/yy)	BY
C	AS BUILT	14/08/17	DMB
B	FOR PRODUCTION	31/05/17	DMB
A1	FOR REVIEW	23/05/17	DMB
A	FOR SUBMITTAL	12/05/17	DMB

PROJ. NO: 1704432

TITLE AND LOCATION: JB-7901-HV BILL OF MATERIAL MODULE 8203 - SHEET 3 OF 11

CUSTOMER: AGNICO EAGLE 600 MAN AMARUQ MINE

DRAWN BY:	DATE:	SHEET:	SHEETS:
DMB	30/05/17	55	71

1704432 - AGNICO EAGLE MINE - C

THIS INFORMATION IS THE PROPERTY OF newterra ltd.. AND CANNOT BE REUSED OR REPRODUCED WITHOUT THE WRITTEN CONSENT OF newterra ltd.

JB-7901-IS - Bill of Materials

Qty	APES#	Part Number	Description	Manufacturer	Device Designation(s)
2	23745	800886	End Bracket - DIN Rail	Phoenix Contact	TB12, TB14
1	19168	0801733	Steel mounting rail; 35x7,5 mm, 1 mm thick; perforated	Phoenix Contact	TS3
1	23742	3030420	End Plate - 30A Feed Thru	Phoenix Contact	TB13
30	23738	3031377	Terminal, Blue, 28-12AWG, 30A, 600V	Phoenix Contact	IS(30)
1	38220	EJ1084	10" x 8" x 4" NEMA4 Steel Enclosure, Hinged Cover	Hammond	JB-7901-IS

NOTES:

1325 CALIFORNIA AVE.
BROCKVILLE, ONTARIO
CANADA K6V 5Y6
PHONE: (613)498-1876
www.newterra.com

LEVEL	REVISION	DATE (dd/mm/yy)	BY
C	AS BUILT	14/08/17	DMB
B	FOR PRODUCTION	31/05/17	DMB
A1	FOR REVIEW	23/05/17	DMB
A	FOR SUBMITTAL	12/05/17	DMB

PROJ. NO: 1704432

TITLE AND LOCATION: JB-7901-IS BILL OF MATERIAL
MODULE 8203 - SHEET 4 OF 11

CUSTOMER: AGNICO EAGLE
600 MAN AMARUQ MINE

DRAWN BY:	DATE:	SHEET:	SHEETS:
DMB	30/05/17	56	71

1704432 - AGNICO EAGLE MINE - C

THIS INFORMATION IS THE PROPERTY OF newterra ltd.. AND CANNOT BE REUSED OR REPRODUCED WITHOUT THE WRITTEN CONSENT OF newterra ltd.

JB-7901OS-AC - Bill of Materials

Qty	APES#	Part Number	Description	Manufacturer	Device Designation(s)
2	23745	800886	End Bracket - DIN Rail	Phoenix Contact	TB5, TB8
1	19168	0801733	Steel mounting rail; 35x7,5 mm, 1 mm thick; perforated	Phoenix Contact	TS3
1	23742	3030420	End Plate - 30A Feed Thru	Phoenix Contact	TB7
2	23737	3031364	Terminal, Grey, 28-12AWG, 30A, 600V	Phoenix Contact	AC(2)
2	23740	3037151	Terminal, Red, 28-12AWG, 30A, 600V	Phoenix Contact	AC(2)
1	37975	EJ664	6" x 6" x 4" NEMA4 Steel Enclosure, Hinged Cover	Hammond	JB-7901OS-AC

NOTES:

1325 CALIFORNIA AVE.
BROCKVILLE, ONTARIO
CANADA K6V 5Y6
PHONE: (613)498-1876
www.newterra.com

LEVEL	REVISION	DATE (dd/mm/yy)	BY
C	AS BUILT	14/08/17	DMB
B	FOR PRODUCTION	31/05/17	DMB
A1	FOR REVIEW	23/05/17	DMB
A	FOR SUBMITTAL	12/05/17	DMB

PROJ. NO: 1704432

TITLE AND LOCATION: JB-7901OS-AC BILL OF MATERIAL
MODULE 8203 - SHEET 5 OF 11

CUSTOMER: AGNICO EAGLE
600 MAN AMARUQ MINE

DRAWN BY:	DATE:	SHEET:	SHEETS:
DMB	30/05/17	57	71

1704432 - AGNICO EAGLE MINE - C

THIS INFORMATION IS THE PROPERTY OF newterra ltd.. AND CANNOT BE REUSED OR REPRODUCED WITHOUT THE WRITTEN CONSENT OF newterra ltd.

JB-7902-AC - Bill of Materials

Qty	APES#	Part Number	Description	Manufacturer	Device Designation(s)
2	23745	800886	End Bracket - DIN Rail	Phoenix Contact	TB6, TB10
1	19168	0801733	Steel mounting rail; 35x7,5 mm, 1 mm thick; perforated	Phoenix Contact	TS4
1	23742	3030420	End Plate - 30A Feed Thru	Phoenix Contact	TB9
4	23737	3031364	Terminal, Grey, 28-12AWG, 30A, 600V	Phoenix Contact	AC(4)
2	23740	3037151	Terminal, Red, 28-12AWG, 30A, 600V	Phoenix Contact	AC(2)
1	37975	EJ664	6" x 6" x 4" NEMA4 Steel Enclosure, Hinged Cover	Hammond	JB-7902-AC

NOTES:

1325 CALIFORNIA AVE.
BROCKVILLE, ONTARIO
CANADA K6V 5Y6
PHONE: (613)498-1876
www.newterra.com

LEVEL	REVISION	DATE (dd/mm/yy)	BY
C	AS BUILT	14/08/17	DMB
B	FOR PRODUCTION	31/05/17	DMB
A1	FOR REVIEW	23/05/17	DMB
A	FOR SUBMITTAL	12/05/17	DMB

PROJ. NO: 1704432

TITLE AND LOCATION: JB-7902-AC BILL OF MATERIAL
MODULE 8203 - SHEET 6 OF 11

CUSTOMER: AGNICO EAGLE
600 MAN AMARUQ MINE

DRAWN BY:	DATE:	SHEET:	SHEETS:
DMB	30/05/17	58	71

1704432 - AGNICO EAGLE MINE - C

THIS INFORMATION IS THE PROPERTY OF newterra ltd.. AND CANNOT BE REUSED OR REPRODUCED WITHOUT THE WRITTEN CONSENT OF newterra ltd.

JB-7902-DC - Bill of Materials

Qty	APES#	Part Number	Description	Manufacturer	Device Designation(s)
2	23745	800886	End Bracket - DIN Rail	Phoenix Contact	TB11, TB13
1	19168	0801733	Steel mounting rail; 35x7,5 mm, 1 mm thick; perforated	Phoenix Contact	TS5
1	23748	3030747	End Plate - Double Feed Thru	Phoenix Contact	TB12
4	23738	3031377	Terminal, Blue, 28-12AWG, 30A, 600V	Phoenix Contact	DC(4)
3	35073	3031432	Terminal, Double, 28-10AWG, 30A, 600V, Blue	Phoenix Contact	DC(3)
1	37975	EJ664	6" x 6" x 4" NEMA4 Steel Enclosure, Hinged Cover	Hammond	JB-7902-DC

NOTES:

1325 CALIFORNIA AVE.
BROCKVILLE, ONTARIO
CANADA K6V 5Y6
PHONE: (613)498-1876
www.newterra.com

LEVEL	REVISION	DATE (dd/mm/yy)	BY
C	AS BUILT	14/08/17	DMB
B	FOR PRODUCTION	31/05/17	DMB
A1	FOR REVIEW	23/05/17	DMB
A	FOR SUBMITTAL	12/05/17	DMB

PROJ. NO: 1704432

TITLE AND LOCATION: JB-7902-DC BILL OF MATERIAL
MODULE 8203 - SHEET 7 OF 11

CUSTOMER: AGNICO EAGLE
600 MAN AMARUQ MINE

DRAWN BY:	DATE:	SHEET:	SHEETS:
DMB	30/05/17	59	71

1704432 - AGNICO EAGLE MINE - C

THIS INFORMATION IS THE PROPERTY OF newterra ltd.. AND CANNOT BE REUSED OR REPRODUCED WITHOUT THE WRITTEN CONSENT OF newterra ltd.

JB-7902-HV - Bill of Materials

Qty	APES#	Part Number	Description	Manufacturer	Device Designation(s)
2	23745	800886	End Bracket - DIN Rail	Phoenix Contact	TB15, TB17
1	19168	0801733	Steel mounting rail; 35x7,5 mm, 1 mm thick; perforated	Phoenix Contact	TS4
8	23742	3030420	End Plate - 30A Feed Thru	Phoenix Contact	TB16, TB18, TB19, TB20, TB21, TB22, TB23, TB24
24	23740	3037151	Terminal, Red, 28-12AWG, 30A, 600V	Phoenix Contact	HV(24)
1	38220	EJ1084	10" x 8" x 4" NEMA4 Steel Enclosure, Hinged Cover	Hammond	JB-7902-HV

NOTES:

newterra

1325 CALIFORNIA AVE.
BROCKVILLE, ONTARIO
CANADA K6V 5Y6
PHONE: (613)498-1876
www.newterra.com

LEVEL	REVISION	DATE (dd/mm/yy)	BY
C	AS BUILT	14/08/17	DMB
B	FOR PRODUCTION	31/05/17	DMB
A1	FOR REVIEW	23/05/17	DMB
A	FOR SUBMITTAL	12/05/17	DMB

PROJ. NO: 1704432

TITLE AND LOCATION: JB-7902-HV BILL OF MATERIAL MODULE 8203 - SHEET 8 OF 11

CUSTOMER: AGNICO EAGLE 600 MAN AMARUQ MINE

DRAWN BY:	DATE:	SHEET:	SHEETS:
DMB	30/05/17	60	71

1704432 - AGNICO EAGLE MINE - C

THIS INFORMATION IS THE PROPERTY OF newterra ltd.. AND CANNOT BE REUSED OR REPRODUCED WITHOUT THE WRITTEN CONSENT OF newterra ltd.

JB-7904-AC - Bill of Materials

Qty	APES#	Part Number	Description	Manufacturer	Device Designation(s)
2	23745	800886	End Bracket - DIN Rail	Phoenix Contact	TB14, TB15
1	19168	0801733	Steel mounting rail; 35x7,5 mm, 1 mm thick; perforated	Phoenix Contact	TS6
3	23742	3030420	End Plate - 30A Feed Thru	Phoenix Contact	TB11, TB16, TB17
2	23737	3031364	Terminal, Grey, 28-12AWG, 30A, 600V	Phoenix Contact	AC(2)
7	23740	3037151	Terminal, Red, 28-12AWG, 30A, 600V	Phoenix Contact	AC(7)
1	37975	EJ664	6" x 6" x 4" NEMA4 Steel Enclosure, Hinged Cover	Hammond	JB-7904-AC

NOTES:

1325 CALIFORNIA AVE.
BROCKVILLE, ONTARIO
CANADA K6V 5Y6
PHONE: (613)498-1876
www.newterra.com

LEVEL	REVISION	DATE (dd/mm/yy)	BY
C	AS BUILT	14/08/17	DMB
B	FOR PRODUCTION	31/05/17	DMB
A1	FOR REVIEW	23/05/17	DMB
A	FOR SUBMITTAL	12/05/17	DMB

PROJ. NO: 1704432

TITLE AND LOCATION: JB-7904-AC BILL OF MATERIAL MODULE 8203 - SHEET 9 OF 11

CUSTOMER: AGNICO EAGLE 600 MAN AMARUQ MINE

DRAWN BY:	DATE:	SHEET:	SHEETS:
DMB	30/05/17	61	71

1704432 - AGNICO EAGLE MINE - C

THIS INFORMATION IS THE PROPERTY OF newterra ltd.. AND CANNOT BE REUSED OR REPRODUCED WITHOUT THE WRITTEN CONSENT OF newterra ltd.

JB-7904-DC - Bill of Materials

Qty	APES#	Part Number	Description	Manufacturer	Device Designation(s)
2	23745	800886	End Bracket - DIN Rail	Phoenix Contact	TB18, TB20
1	19168	0801733	Steel mounting rail; 35x7,5 mm, 1 mm thick; perforated	Phoenix Contact	TS5
1	23748	3030747	End Plate - Double Feed Thru	Phoenix Contact	TB19
14	23738	3031377	Terminal, Blue, 28-12AWG, 30A, 600V	Phoenix Contact	DC(14)
7	35073	3031432	Terminal, Double, 28-10AWG, 30A, 600V, Blue	Phoenix Contact	DC(7)
1	38221	EJ884	8" x 8" x 4" NEMA4 Steel Enclosure, Hinged Cover	Hammond	JB-7904-DC

NOTES:

newterra

1325 CALIFORNIA AVE.
BROCKVILLE, ONTARIO
CANADA K6V 5Y6
PHONE: (613)498-1876
www.newterra.com

LEVEL	REVISION	DATE (dd/mm/yy)	BY
C	AS BUILT	14/08/17	DMB
B	FOR PRODUCTION	31/05/17	DMB
A1	FOR REVIEW	23/05/17	DMB
A	FOR SUBMITTAL	12/05/17	DMB

PROJ. NO: 1704432

TITLE AND LOCATION: JB-7904-DC BILL OF MATERIAL
MODULE 8203 - SHEET 10 OF 11

CUSTOMER: AGNICO EAGLE
600 MAN AMARUQ MINE

DRAWN BY:	DATE:	SHEET:	SHEETS:
DMB	30/05/17	62	71

1704432 - AGNICO EAGLE MINE - C

THIS INFORMATION IS THE PROPERTY OF newterra ltd.. AND CANNOT BE REUSED OR REPRODUCED WITHOUT THE WRITTEN CONSENT OF newterra ltd.

JB-7904-HV - Bill of Materials

Qty	APES#	Part Number	Description	Manufacturer	Device Designation(s)
2	23745	800886	End Bracket - DIN Rail	Phoenix Contact	TB21, TB23
1	19168	0801733	Steel mounting rail; 35x7,5 mm, 1 mm thick; perforated	Phoenix Contact	TS6
9	23742	3030420	End Plate - 30A Feed Thru	Phoenix Contact	TB22, TB24, TB25, TB26, TB27, TB28, TB29, TB30, TB31
26	23740	3037151	Terminal, Red, 28-12AWG, 30A, 600V	Phoenix Contact	HV(26)
1	38220	EJ1084	10" x 8" x 4" NEMA4 Steel Enclosure, Hinged Cover	Hammond	JB-7904-HV

NOTES:

newterra

1325 CALIFORNIA AVE.
BROCKVILLE, ONTARIO
CANADA K6V 5Y6
PHONE: (613)498-1876
www.newterra.com

LEVEL	REVISION	DATE (dd/mm/yy)	BY
C	AS BUILT	14/08/17	DMB
B	FOR PRODUCTION	31/05/17	DMB
A1	FOR REVIEW	23/05/17	DMB
A	FOR SUBMITTAL	12/05/17	DMB

PROJ. NO: 1704432

TITLE AND LOCATION: JB-7904-HV BILL OF MATERIAL MODULE 8203 - SHEET 11 OF 11

CUSTOMER: AGNICO EAGLE 600 MAN AMARUQ MINE

DRAWN BY:	DATE:	SHEET:	SHEETS:
DMB	30/05/17	63	71

1704432 - AGNICO EAGLE MINE - C

THIS INFORMATION IS THE PROPERTY OF newterra ltd.. AND CANNOT BE REUSED OR REPRODUCED WITHOUT THE WRITTEN CONSENT OF newterra ltd.

BLD-7901 - Bill of Materials

Qty	APES#	Part Number	Description	Manufacturer	Device Designation(s)
1	19534	KIL SWB1	1/2" Dead End Box	Killark	TGS1608A
1	19533	KILXS-1C	NEMA7, 1P, 20A Switch	Killark	TGS1608A
4	18642	VUXGG1100PX	100W Incandescent, Medium Base, CL1Div2	Killark	LT1608A, LT1610A, LT1612A, LT1614A
1	22112	XEDS-30	Unfused Disconnect, CL1Div1&2, 30A, 20HP@480V	Killark	DISC1355A
6	26831	XSX-23	Unfused Disconnect, CL1Div1&2, 20A, 10HP@600V	Killark	DISC1040A, DISC1045A, DISC1050A, DISC1055A, DISC1062A, DISC1350A
1	14607	ZB5 AT4	Button, ZB5 AT4, E-Stop Button	Schneider Electric	PB2127A
1	14611	ZB5 AZ102	Button, ZB5 AZ102, Collar with 1 NC Contact Block	Schneider Electric	PB2127A
1	23054	ZBY9330	ESTOP Label	Schneider Electric	PB2127A

NOTES:

1325 CALIFORNIA AVE.
BROCKVILLE, ONTARIO
CANADA K6V 5Y6
PHONE: (613)498-1876
www.newterra.com

LEVEL	REVISION	DATE (dd/mm/yy)	BY
C	AS BUILT	14/08/17	DMB
B	FOR PRODUCTION	31/05/17	DMB
A1	FOR REVIEW	23/05/17	DMB
A	FOR SUBMITTAL	12/05/17	DMB

PROJ. NO: 1704432

TITLE AND LOCATION: BLD-7901 BILL OF MATERIAL
MODULE 8901 - SHEET 1 OF 2

CUSTOMER: AGNICO EAGLE
600 MAN AMARUQ MINE

DRAWN BY:	DATE:	SHEET:	SHEETS:
DMB	30/05/17	64	71

1704432 - AGNICO EAGLE MINE - C

THIS INFORMATION IS THE PROPERTY OF newterra ltd.. AND CANNOT BE REUSED OR REPRODUCED WITHOUT THE WRITTEN CONSENT OF newterra ltd.

BLD-7901_OUTSIDE - Bill of Materials

Qty	APES#	Part Number	Description	Manufacturer	Device Designation(s)
2	36085	GFWR1-W	GFCI 15A, 125V Duplex Receptacle, Weather Resistant, White	Leviton	RECP1620A, RECP1626A

NOTES:

1325 CALIFORNIA AVE.
BROCKVILLE, ONTARIO
CANADA K6V 5Y6
PHONE: (613)498-1876
www.newterra.com

LEVEL	REVISION	DATE (dd/mm/yy)	BY
C	AS BUILT	14/08/17	DMB
B	FOR PRODUCTION	31/05/17	DMB
A1	FOR REVIEW	23/05/17	DMB
A	FOR SUBMITTAL	12/05/17	DMB

PROJ. NO: 1704432

TITLE AND LOCATION: BLD-7901 BILL OF MATERIAL
MODULE 8901 - SHEET 2 OF 2

CUSTOMER: AGNICO EAGLE
600 MAN AMARUQ MINE

DRAWN BY:	DATE:	SHEET:	SHEETS:
DMB	30/05/17	65	71

1704432 - AGNICO EAGLE MINE - C

THIS INFORMATION IS THE PROPERTY OF newterra ltd.. AND CANNOT BE REUSED OR REPRODUCED WITHOUT THE WRITTEN CONSENT OF newterra ltd.

BLD-7902 - Bill of Materials

Qty	APES#	Part Number	Description	Manufacturer	Device Designation(s)
8	26830	MD3304X	Unfused Disconnect, 30A, 25HP@600V	Schneider Electric	DISC1069A, DISC1103A, DISC1108A, DISC1113A, DISC1118A, DISC1123A,
					DISC1362A, DISC1403A

NOTES:

1325 CALIFORNIA AVE.
BROCKVILLE, ONTARIO
CANADA K6V 5Y6
PHONE: (613)498-1876
www.newterra.com

LEVEL	REVISION	DATE (dd/mm/yy)	BY
C	AS BUILT	14/08/17	DMB
B	FOR PRODUCTION	31/05/17	DMB
A1	FOR REVIEW	23/05/17	DMB
A	FOR SUBMITTAL	12/05/17	DMB

PROJ. NO: 1704432

TITLE AND LOCATION: BLD-7902 BILL OF MATERIAL MODULE 8902

CUSTOMER: AGNICO EAGLE 600 MAN AMARUQ MINE

DRAWN BY:	DATE:	SHEET:	SHEETS:
DMB	30/05/17	66	71

1704432 - AGNICO EAGLE MINE - C

THIS INFORMATION IS THE PROPERTY OF newterra ltd.. AND CANNOT BE REUSED OR REPRODUCED WITHOUT THE WRITTEN CONSENT OF newterra ltd.

BLD-7904 - Bill of Materials

Qty	APES#	Part Number	Description	Manufacturer	Device Designation(s)
1	23293	20RC15/10	Receptacle Cover, PVC Single Cover		RECP1714A
1	23789	CR15	15A, 125V Duplex Receptacle, Commercial Grade	Hubbell	RECP1706A
1	12567	CS115CN	1P Switch, 15A, 120V, Commercial	Leviton	TGS1662A
1	22672	FSC10	PVC FSC Box, 1 Gang	Royal Pipe Systems	TGS1662A
1	23791	HBL5251	15A, 125V, Single Receptacle, Heavy Duty	Hubbell	RECP1714A
8	26830	MD3304X	Unfused Disconnect, 30A, 25HP@600V	Schneider Electric	DISC1130A, DISC1140A, DISC1145A, DISC1150A, DISC1155A, DISC1160A,
					DISC1415A, DISC1423A
1	26171	RTSC15/10	PVC Switch Cover, 1 Gang	Royal Pipe Systems	TGS1662A
1	14607	ZB5 AT4	Button, ZB5 AT4, E-Stop Button	Schneider Electric	PB2047A
1	14611	ZB5 AZ102	Button, ZB5 AZ102, Collar with 1 NC Contact Block	Schneider Electric	PB2047A
1	23054	ZBY9330	ESTOP Label	Schneider Electric	PB2047A

NOTES:

newterra

1325 CALIFORNIA AVE.
BROCKVILLE, ONTARIO
CANADA K6V 5Y6
PHONE: (613)498-1876
www.newterra.com

LEVEL	REVISION	DATE (dd/mm/yy)	BY
C	AS BUILT	14/08/17	DMB
B	FOR PRODUCTION	31/05/17	DMB
A1	FOR REVIEW	23/05/17	DMB
A	FOR SUBMITTAL	12/05/17	DMB

PROJ. NO: 1704432

TITLE AND LOCATION: BLD-7904 BILL OF MATERIAL MODULE 8904 - SHEET 1 OF 2

CUSTOMER: AGNICO EAGLE 600 MAN AMARUQ MINE

DRAWN BY:	DATE:	SHEET:	SHEETS:
DMB	30/05/17	67	71

1704432 - AGNICO EAGLE MINE - C

THIS INFORMATION IS THE PROPERTY OF newterra ltd.. AND CANNOT BE REUSED OR REPRODUCED WITHOUT THE WRITTEN CONSENT OF newterra ltd.

BLD-7904_OUTSIDE - Bill of Materials

Qty	APES#	Part Number	Description	Manufacturer	Device Designation(s)
1	38204	WL-LED26-B-5K-BRZ-PC	Wall Pack, 24W LED c/w PhotoEye	RAB Design	LT1665A

NOTES:

1325 CALIFORNIA AVE.
BROCKVILLE, ONTARIO
CANADA K6V 5Y6
PHONE: (613)498-1876
www.newterra.com

LEVEL	REVISION	DATE (dd/mm/yy)	BY
C	AS BUILT	14/08/17	DMB
B	FOR PRODUCTION	31/05/17	DMB
A1	FOR REVIEW	23/05/17	DMB
A	FOR SUBMITTAL	12/05/17	DMB

PROJ. NO: 1704432

TITLE AND LOCATION: BLD-7904 BILL OF MATERIAL
MODULE 8904 - SHEET 2 OF 2

CUSTOMER: AGNICO EAGLE
600 MAN AMARUQ MINE

DRAWN BY:	DATE:	SHEET:	SHEETS:
DMB	30/05/17	68	71

1704432 - AGNICO EAGLE MINE - C

THIS INFORMATION IS THE PROPERTY OF newterra ltd.. AND CANNOT BE REUSED OR REPRODUCED WITHOUT THE WRITTEN CONSENT OF newterra ltd.

BLD-7905 - Bill of Materials

Qty	APES#	Part Number	Description	Manufacturer	Device Designation(s)
1	26830	MD3304X	Unfused Disconnect, 30A, 25HP@600V	Schneider Electric	DISC1440A

BLD-7906 - Bill of Materials

Qty	APES#	Part Number	Description	Manufacturer	Device Designation(s)
1	23293	20RC15/10	Receptacle Cover, PVC Single Cover		RECP1742A
2	12567	CS115CN	1P Switch, 15A, 120V, Commercial	Leviton	TGS1643A, TGS1649A
2	38093	FC202P1K5	Variable Frequency Drive, Danfoss FC202 P1K5, VFD 480V 2HP, 3.4A 3PH, IP55, w/ L	Danfoss	VFD1304A, VFD1322A
2	38094	FC202P11K	Variable Frequency Drive, Danfoss FC202 P11K, VFD 480V 15HP, 21A 3PH, IP55, w/ L	Danfoss	VFD1241A, VFD1259A
2	22672	FSC10	PVC FSC Box, 1 Gang	Royal Pipe Systems	TGS1643A, TGS1649A
4	38205	FW4-LED40-B-4K-DIM	Flourescent Light, Vaportight 4Ft, LED 40W, 120-277V	RAB Design	LT1643A, LT1645A, LT1647A, LT1649A
1	10185	GFNT1-W	GFCI 15A, 125V Duplex Receptacle, White	Leviton	RECP1633A
1	23791	HBL5251	15A, 125V, Single Receptacle, Heavy Duty	Hubbell	RECP1742A
8	26830	MD3304X	Unfused Disconnect, 30A, 25HP@600V	Schneider Electric	DISC1203A, DISC1208A, DISC1213A, DISC1218A, DISC1342A, DISC1452A,
					DISC1457A, DISC1462A
1	20775	MH32	18 Circuit NQ Tub, NEMA1	Schneider Electric	PDP1606A
1	20814	NC26S	18 Circuit NQ/NF Trim	Schneider Electric	PDP1606A
1	20896	NQ418L1C	Distribution Panel, 120/240V, 3Ph, 100A Cu Bus, 18 Circuit	Schneider Electric	PDP1606A
11	19029	QOB115	Breaker, SQD QOB115 120V 15A Bolt On, 10k SCCR	Schneider Electric	CB1608A, CB1620A, CB1626A, CB1633A, CB1643A, CB1668A, CB1706A, CB1719A,
					CB1729A, CB1742A, CB1748A
1	19340	PK12GTA	NQ Panelboard Ground Bus	Schneider Electric	PDP1606A
2	26171	RTSC15/10	PVC Switch Cover, 1 Gang	Royal Pipe Systems	TGS1643A, TGS1645A
1	25526	UC3010P480	Dist. Transformer, 10kVA, 480V:120/208V	BeMag	T1342A
1	38182	Y225PKC	Autotransformer, 225kVA, 600V:480, 480:380V, 50/60Hz	Hammond	T1015A

NOTES:

newterra

1325 CALIFORNIA AVE.
BROCKVILLE, ONTARIO
CANADA K6V 5Y6
PHONE: (613)498-1876
www.newterra.com

LEVEL	REVISION	DATE (dd/mm/yy)	BY
C	AS BUILT	14/08/17	DMB
B	FOR PRODUCTION	31/05/17	DMB
A1	FOR REVIEW	23/05/17	DMB
A	FOR SUBMITTAL	12/05/17	DMB

PROJ. NO: 1704432

TITLE AND LOCATION: BLD-7906 BILL OF MATERIAL
MODULE 8906 - SHEET 1 OF 2

CUSTOMER: AGNICO EAGLE
600 MAN AMARUQ MINE

DRAWN BY:	DATE:	SHEET:	SHEETS:
DMB	30/05/17	70	71

1704432 - AGNICO EAGLE MINE - C

THIS INFORMATION IS THE PROPERTY OF newterra ltd.. AND CANNOT BE REUSED OR REPRODUCED WITHOUT THE WRITTEN CONSENT OF newterra ltd.

BLD-7906_OUTSIDE - Bill of Materials

Qty	APES#	Part Number	Description	Manufacturer	Device Designation(s)
1	36085	GFWR1-W	GFCI 15A, 125V Duplex Receptacle, Weather Resistant, White	Leviton	RECP1729A
1	38204	WL-LED26-B-5K-BRZ-PC	Wall Pack, 24W LED c/w PhotoEye	RAB Design	LT1657A

NOTES:

1325 CALIFORNIA AVE.
BROCKVILLE, ONTARIO
CANADA K6V 5Y6
PHONE: (613)498-1876
www.newterra.com

LEVEL	REVISION	DATE (dd/mm/yy)	BY
C	AS BUILT	14/08/17	DMB
B	FOR PRODUCTION	31/05/17	DMB
A1	FOR REVIEW	23/05/17	DMB
A	FOR SUBMITTAL	12/05/17	DMB

PROJ. NO: 1704432

TITLE AND LOCATION: BLD-7906 BILL OF MATERIAL
MODULE 8906 - SHEET 2 OF 2

CUSTOMER: AGNICO EAGLE
600 MAN AMARUQ MINE

DRAWN BY:	DATE:	SHEET:	SHEETS:
DMB	30/05/17	71	71

1704432 - AGNICO EAGLE MINE - C

THIS INFORMATION IS THE PROPERTY OF newterra ltd.. AND CANNOT BE REUSED OR REPRODUCED WITHOUT THE WRITTEN CONSENT OF newterra ltd.

newterra ltd.
1291 California Avenue, Brockville, ON K6V 5W3
(800) 420-4056 / www.newterra.com

APPENDIX B

Packing Slip

© 2017 by **newterra**, ltd.
All rights reserved. No part of this document may be reproduced or transmitted in any form or by any means, electronic, mechanical, photocopying, recording, or otherwise, without prior written permission of **newterra** ltd.

Project Packing List

PMProjNum **1704432**

Agnico Eagle - Amaruq Mine WWTP

Shipping Notes:

Tag	Part Number	Part Description	Req Rec PO #	EngMemo Line
0	24612	Container, 40' x 8' x 9'6", Once Use, High Cu	1	---
7901	ea	30,480kg rated, Forklift Pockets, CSC Plate,	1	
	Type: I	ABS/BV/LR Certs. Steel Checkerplate ---	1704432-0001	1
10	10959	Junction Box, PVC, 6" x 6" x 4"	5	Added by production team
	ea		5	
	Type: I	Junction Box, PVC, 6" x 6" x 4"	1704432-9999	###
10	37975	Junction Box, 6" x 6" x 4", Hammond EJ664	1	Added by production team
	ea	with Back Panel and Hinged Lid, NEMA 4	1	
	Type: I	Junction Box, 6" x 6" x 4", Hammond EJ664	1704432-9999	###
10	P1128	Elbow, 45deg, PVC 40, 4", SxS, 417-040G	1	Added by production team
	ea		1	
	Type: I	Elbow, 45deg, PVC 40, 4", SxS, 417-040G	1704432-9999	####
10	37795	Sealant, MetalSafe, Liquid Rubber, Black 3.7	6	---
-	ea		6	
	Type: P	---	1704432-0134	1
10	37796	Sealant, Polyurethane, Self Leveling, Grey 8	8	---
-	ea		8	
	Type: P	---	1704432-0131	1
10	29551	Insulation, Backer Rod, 7/8" x 15'	10	---
-	ea		10	
	Type: P	---	1704432-0131	2
10	37794	Insulation, Backer Rod, 3/8" x 30'	10	---
-	ea		10	
	Type: P	---	1704432-0131	3
10	22772	Foam, Spray, Tiger Foam, 200BF, Fast Rise	2	---
-	ea		2	
	Type: P	---	1704432-0131	4
10	21768	Chemical, Bacteria, Dry for Start Up, 25lbs p	5	---
-	pail	25 lb per pail (Buy in Pail Quantities)	5	
	Type: I	BI-CHEM CWT Blend CAN product BioRem ---	1704432-0143	1
10	37797	Tape, Seam, 4" x 50', Paintable	1	---
4	ea		1	
	Type: P	---	1704432-0134	2

Tag	Part Number	Part Description	Req Rec PO #	EngMemo Line
15	27536	Weather Barrier, Blueskin, 9" x 50' Roll	4	---
-	ea		0	
	Type: P	---		0
15	38671	3/4" copper pipe insulation foam 6' long	20	---
-	ea		0	
	Type: P	---		0
15	38672	Insulation, rigid foam sheet, 3", R10, codebo	10	---
-	ea	Blue Styrefoam	0	
	Type: P	---		0
15	10088	Elbow, 90deg, PVC 40, 6", SxS, 406-060G	2	---
-	ea		0	
	Type: I	---	1704432-0170	1
15	16240	Pipe, PVC 40 (Clear), 6"	4	---
-	ft	10ft Length, 40-060CL	0	
	Type: X	---		0
15	P1188	Flexible Coupling, 6" x 6"	4	---
-	ea		0	
	Type: I	---	1704432-0170	2
15	9998	Misc Part, Parts not included in purchasing	6	---
-	ea		0	
	Type: P	Aeration connection pipes 3 - Pre to Air 3 - Air to air		0
15	9998	Misc Part, Parts not included in purchasing	4	---
-	ea		0	
	Type: P	vent stack		0
15	9998	Misc Part, Parts not included in purchasing	2	---
-	ea		0	
	Type: P	MBR Overflow Pipes		0
15	9998	Misc Part, Parts not included in purchasing	1	---
7902	ea		0	
	Type: P	container 7902		0
15	9998	Misc Part, Parts not included in purchasing	1	---
7903	ea		0	
	Type: P	Container 7903		0
15	9998	Misc Part, Parts not included in purchasing	1	---
7904	ea		0	
	Type: P	Container 7904		0

Tag	Part Number	Part Description	Req Rec PO #	EngMemo Line
15	9998	Misc Part, Parts not included in purchasing	1	---
7905	ea		0	
	Type: P	Container 7905		0
100	P1128	Elbow, 45deg, PVC 40, 4", SxS, 417-040G	1	Added by production team
	ea		1	
	Type: I	Elbow, 45deg, PVC 40, 4", SxS, 417-040G	1704432-9999	###
500	10951	Elbow, 45deg, PVC 40, 6", SxS, 417-060G	1	---
-	ea		1	
	Type: I	---	1704432-0089	22
500	M1489	Filter, Silencer, Solberg, FS-230P-300	2	---
B501/2	ea	3"	2	
	Type: P	---	1704432-0091	1
500	36870	Transmitter, pH, Prominent pH Sensor PHER	1	MBR
PH-501	ea	requires probe holder p/n 36871	1	
	Type: P	-	1704432-0071	4
6100	15871	Spill Containment, Single Drum, Eagle 1633	3	---
-	ea		3	
	Type: P	---	1704432-0161	1
6100	19891	Pump, Metering, Misc	1	---
P-610X	ea	See Description for part details	1	
	Type: P	- BT4B0708PVT2000UD010A01 Flow: 1.88GPH / 7.10L/H Pressure: 102PSI / 07BAR Options Included: - dosing head material PV PVDF - sealmaterial T st.diaphragm w. PTFE seal - execution of dosing head 2 w. Bleed.v. , w/o. valvespr. - hydraulic-connection 0 standard-connection - execution 0 Hous.RAL5003/hoodRAL2003 - Logo 0 w. PM-Logo - type of voltage U universal 100-240 V - cable and plug D 2m USA 115 V - relay function 0 without relay - supplies 1 STDR. FV,IV,TB for PP, PV, NP - control system type 0 without lock - control version A external analog 0-20mA/4-20mA - Remote stop 0 Pause break con., Niv. break - auxiliar frequency 1 external callable frequency	1704432-0162	1
6100	25823	Pump, Metering, Parts, Multi-function Valve	3	---
p-610x	ea	PVDF, 87PSIG Size 2	3	
	Type: P	740427 ---	1704432-0162	2

Tag	Part Number	Part Description	Req Rec PO #	EngMemo Line
7906	20890	Container, Misc	1	---
7906	ea	See description	1	
	Type: P	53 foot Hi Cube Strong Industrial Steel Used Shipping Container As-is Where-is	1704432-0027	1
7906	24305	Hood, Louver, 21"	1	---
7906	ea	Fits 18" Louver	1	
	Type: I	---	1704432-0049	84
7906	24547	Hood, Fan, 15"	1	---
f7961	ea	Fits 12" Fan	1	
	Type: I	---	1704432-0049	83

newterra ltd.
1291 California Avenue, Brockville, ON K6V 5W3
(800) 420-4056 / www.newterra.com

APPENDIX C

Testing Checklists/Pre-Commissioning Test Checklist

© 2017 by **newterra**, ltd.
All rights reserved. No part of this document may be reproduced or transmitted in any form or by any means, electronic, mechanical, photocopying, recording, or otherwise, without prior written permission of **newterra** ltd.

1291 California Avenue, P.O. Box 1517
Brockville, ON, K6V 5Y6
T: 800.420.4056 F: 289.203.1319

Pre-Commissioning Checklist – 1704432

Please note that **newterra** has a limited number of Technicians. In order to successfully support your startup, **newterra** requires that the Pre-Commissioning Checklist be returned at least 10 business days prior to mobilizing a Technician to site (subject to Technician availability). **newterra** will not mobilize to site until the Pre-Commissioning Checklist has been executed and returned to service@newterra.com. Or by Fax to: 289.203.1319.

If newterra startup activities are delayed due to lack of site readiness then there may be additional charges associated with overtime and/ or additional days on site.

newterra highly recommends that the system is started by a factory trained startup technician to ensure the long term success of your project. We understand that this may not always be feasible in which case we would require a highly skilled technician capable of troubleshooting both mechanical and electrical aspects of a process treatment system and be familiar with our manual, equipment and capable of training the operator on operating and maintenance requirements of the treatment system.

The purpose of this report is to ensure that the customer is prepared for startup.

Checklist	Customer Initial	newterra Initial
Complete a visual inspection of all units when placed on the pad. **Record any damage to the systems that may have occurred during shipping and provide photos to newterra.		
Verify that system has been installed on a solid, level area		
Verify that system has been installed in accordance with the system layout drawing.		
Verify that the required approvals are in place to allow the system to discharge air and water.		
Verify site power is installed to the control panel and necessary electrical approvals have been completed.		
Verify that all high voltage wiring is completed and wired according to the Field Aid/ project O&M manual.		
Verify that all low voltage wiring is completed and wired according to the Field Aid/ project O&M manual.		
Verify that all process piping has been installed and terminated.		
Verify that all field piping is completed and wells are connected to the operating system.		
Verify that a phone line is installed and activated for alarm autodialer, if required.		
Please read through the packing list (located in the manual) and ensure the correct equipment was delivered.		
There are some items that have shipped loose with your system that will need to be installed prior to start up, these may include exterior components such as stacks, filters and hoods. Sufficient hardware should have been supplied to facilitate installation.		
Some unions in the system may have been loosened for shipment. This is done to prevent damaging susceptible equipment, especially flow meters. All unions in the systems should be checked and tightened.		

1291 California Avenue, P.O. Box 1517
Brockville, ON, K6V 5Y6
T: 800.420.4056 F: 289.203.1319

Any external equipment such as tanks, well pumps, oxidizers, etc. need to be installed, plumbed and wired prior to start up.		
Some items may have been secured with brackets or tie downs for shipment – ensured these have been removed (eg. reciprocating compressors/ stacked blowers).		
In colder climates, if you do not plan on starting up the system before the winter months, please refer to your O&M manual for instructions on extended shutdowns. It is imperative that the correct measures be taken to prevent freezing water from damaging your system.		
If the system has been winterized, ensure all anti-freeze has been drained and disposed of in accordance with local regulations.		
Email pictures of power connection, site piping connections and installed equipment to service@newterra.com.		

MBR Specific Checks	**Customer Initial**	**newterra Initial**
Verify that Ethernet network is installed and activated if required.		
If Ethernet is to be used on site please provide 2 Static IP Addresses ____.____.____.____ ____.____.____.____		
Verify fresh water is available for Wet Test.		
Is waste activated sludge from an operating WWTP available for start-up (Seed Sludge)		
Verify Sufficient amount of sewage is available to start system (Check with newterra to determine actual amounts required).		

RO Specific Checks	**Customer Initial**	**newterra Initial**
Ensure all tanks are clean and free of dirt and debris		
Verify that a Fresh Water supply is installed to system.		
Ensure that the necessary chemicals for system operation and cleaning are available for use for starting the installation and commissioning phase.		
Verify the feed water quality		
Verify building process flow and instrumentation matches P&ID drawing. Check off drawing components against actual		
DO NOT LOAD THE MEMBRANES UNTIL DIRECTED as all system inlet piping must be flushed thoroughly before it is connected to the RO system.		

newterra
clean water. modular solutions. simple.
1291 California Avenue, P.O. Box 1517
Brockville, ON, K6V 5Y6
T: 800.420.4056 F: 289.203.1319

DA Specific Checks	Customer Initial	newterra Initial
GENERAL INSTALLATION		
Stainless Steel nameplate present, visible and contains make and model information in agreement with vendor drawings		
Vessel Saddles Bolted To Structural Steel		
Vessel Properly Insulated for Personnel Protection at a minimum		
Access Platform Properly installed for full access to heater section		
Vessel Manway Gaskets appear to be undamaged		
VESSEL INTERNALS		
Heater Section Tray Assemblies Properly fastened and have been installed per the O & M manual.		
Equalizer connection to storage tank is unobstructed by any shipping materials		
Spray Nozzles appear unobstructed and undamaged by shipping		
PIPING		
Pipes properly insulated for Personnel protection at a minimum		
Relief valve installed and discharge piping run to roof		
Piping systems properly flushed		
Vent Valve is installed and fully open for initial vessel fill		
Steam Control Valve and Muffling plate installed as per drawings		
Low pressure steam trap isolated and discharge piped to flash separator		
Low pressure flash steam lines installed and isolated for initial testing		
Vacuum breaker installed per manufacturer's instructions		
Overflow trap installed with discharge piped to Blowdown Tank		
Condensate control valve installed and isolated for initial testing		
Strainer within condensate control valve station installed and cleaned		
Makeup control valve installed and isolated for initial testing		
Strainer within makeup control valve station installed and cleaned		
Level bridle and gauge glass column installed as per manufacturer's drawings. Vessel isolation valves closed for initial fill.		
Sight glass sections installed with proper washers and do not have any apparent cracks or defects.		
Level switches installed at proper heights relative to the vessel according to the manufacturer's drawings		
Level transmitter properly installed as per instrument installation detail IS-8308		
Pressure transmitter is properly installed as per instrument installation detail IS-8127		
Pressure and temperature Gauges installed with isolation valves as needed.		
Deaerator Steam flow transmitter properly installed as per instrumentation installation detail IS-8308		
Vessel Drain valve installed and fully closed for initial fill		

1291 California Avenue, P.O. Box 1517
Brockville, ON, K6V 5Y6
T: 800.420.4056 F: 289.203.1319

Chemical feed connection valved and capped. Proper chemical feed is not required at this stage of commissioning		
All remaining spare connections on the storage tank and heater section should be tightly secured with a blind flange.		
CONTROL AND POWER WIRING		
120 volt power is run to Deaerator control panel		
Three Level switches are wired back to Deaerator Control Panel		
Pressure Transmitter is wired back to Deaerator Control Panel		
Level Transmitter is wired back to Deaerator Control Panel		
Steam Pressure Control Valve is wired back to Deaerator Control Panel		
Makeup Water Control Valve is wired back to Deaerator Control Panel		
Deaerator Steam flow transmitter is wired back to existing panel.		

Comments:
Note any deficiencies or damage to the system on arrival.

1291 California Avenue, P.O. Box 1517
Brockville, ON, K6V 5Y6
T: 800.420.4056 F: 289.203.1319

In the event additional parts are required to be sent for commissioning, please provide a shipping address, contact name and cell number

_____

_____

_____

Provide a list of PPE required or any additional Health and Safety or training requirements that will be required for site access.

_____

_____

_____

_____

Site Address: _____

Onsite Contact Name & Cell Number: _____

Customer Sign-off: _____Date: _____

newterra clean water. modular solutions. simple.	Installation Checklist		
	Has Acceptance Criteria Been Met (Yes/No)	*Details*	*Initial/Date*
Misc			
Confirm that all items have been received in accordance witht the packing list			
All items are undamaged. Any damages are to be reported to newterra as soon as possible.			
Inspect all exterior of containers and note any damages, Take pictures of any damages and report to the newterra project manager as sooon as possible.			
Inspect WWTP placement location and confirm that it is firm and level. It not report to the newterra project manager as soon as possible. WWTP needs to be firm and level otherwise the operation of the WWTP can be compromised.			
Containers may be placed in a on-site storage location until ready for placement. Containers should be placed and installed before freezing temperatures			
Civil			
Placement of container on site. 6 containers. After container placement, inspct for any damages and take pictures. Report damages to newterra project manager.		Lifting - crane equiv required to move container. Fine placement via forklifts or equiv. Firm/Level base for containers See Appendix A of this manual for container layout	
Install Liquid Rubber Container Seal as per attached drawing.			
Electrical			

newterra clean water. modular solutions. simple.	Installation Checklist		
	Has Acceptance Criteria Been Met (Yes/No)	*Details*	*Initial/Date*
Site power has been connected and verified as per system design criteria			
All internal electrical connections have been terminated			
Confirm Phase Monitor is not in alarm			
Site voltage measured:		L1/L2:	
		L2/L3:	
		L3/L1:	
		L1/GRD:	
		L2/GRD:	
		L3/GRD:	
Check field wiring and piping as per drawings at Appendix A of the O&M Manual			
Check panel for loose wiring, Correct as required			
Check voltage on AC transformer			
Check voltage on DC transformer			
Check I.S. barrier is grounded as per input drawing			
All customer wiring has been completed in accordance with the electrical drawing in Appendix A.			
Mechanical			
Connect all internal piping and hose connections between the containers and external piping hook ups as per P&ID at Appendix A.			

newterra clean water. modular solutions. simple.	Installation Checklist		
	Has Acceptance Criteria Been Met (Yes/No)	*Details*	*Initial/Date*
Inspect the EQ, Pre-Anox, Aeration and Post-Anox Tanks and install anodes. Confirm that the tanks are clean and diffusers & hose connecting are secure.			
Inspect MBR tanks and removing transportation securing straps. Ensuring all hoses and fittings are tight and connected.			
MBR tank - Ensure that the membranes have not moved or shifted in the cassette. Re-secure as necessary. Ensure that the diffusers have not shitfted and are secure. Re-secure as necessary.			
Inspect the screens (SCR-201/202) and ensure that the rotating brushes are still aligned. Adjust as necessary.			
Inspect TNK-101/102/103, TNK-201 & TNK-6101/6102 and ensure that they are clean and free of any debris.			
Ensure all unions and fittings are tight, as some are loosened to prevent stress in shipping			
Check alignment of motors, Correct as required			
Check all motor belt tensions, Correct as required			
Check alignment of pulleys for all belt driven blowers			
Install the permeate header to the membrane tank and connect all piping/hoses.			

newterra clean water. modular solutions. simple.	Installation Checklist		
	Has Acceptance Criteria Been Met (Yes/No)	*Details*	*Initial/Date*
Ensure that the backwash tank (TNK-801) and sludge tank (TNK-901) are clean and free of debris. Clean as necessary.			

Installation Acceptance Sign-Off Form

1704432 - Amaruq Mine WWTP

newterra is pleased to announce that the Installation phase of 1704432, has successfully been completed. In order to move to the Commissioning phase, a visual inspection and walkthrough of the plant will be required, followed by signoff of this document. Installation signoff will be conditional on the completion of items listed in a Punchlist created during this walkthrough.

	Installation Signoff		Customer Acceptance
Name:	_____	**Name:**	_____
Company:	_____	**Company:**	_____
Date:	_____	**Date:**	_____
Signature:	_____	**Signature:**	_____

newterra clean water. modular solutions. simple.	Commissioning Checklist		
	Has Acceptance Criteria Been Met (Yes/No)	*Details*	*Initial/Date*
Ensure availability of on-site emergency eyewash station and personal protection equipment.			
Ensure that all tanks are clean and free of any dirt or debris (this is to prevent obstruction or damage to the piping, pumps, and membranes).			
Ensure that all connections have been provided and joints have been tightened.			
Check the placement of the air diffusers in the equalization tank(s) and aeration tank(s) if incorrectly positioned, proper adjustment has to be performed.			
Verify membrane modules are secure within the membrane tanks and that there is no lateral movement (less than an inch) of the membrane modules			
Verify building process flow and instrumentation matches P&ID drawing. Check off drawing components against actual (preferably with the customer present). Ensure this document is placed in the commissioning binder			

Commissioning Checklist

	Has Acceptance Criteria Been Met (Yes/No)	*Details*	*Initial/Date*
Measure and Verify influent characterisitics and record.			
Confirm that the custoomers piping and lectrical connections to the WWTP are complete			
Confirm if any grinder pumps are upstream of the WWTP. Advise the newterra project manager as soon as possible.			
Have all rotating equipment oiled and greased as per manufactured recommendations			
Fill system with water and check for leaks (liquid and vapor) by filling the EQ tank first and then process the water thru the system by tank			
Check rotation of all motors that were field wired			
Ensure that proper electrical grounding and lightning protection installed by customer			

Parameters	Unit	Influent*	Effluent
pH	s.u.	6 - 9	6.5 – 8.5
Fat, Oil, Grease (FOG)	mg/L	< 30	< 5
Biological Oxygen Demand (BOD)	mg/L	907.5	< 25
Total Suspended Solids (TSS)	mg/L	262.5	< 25
Total Kjeldahl Nitrogen (TKN)	mgN/L	130	-
Unionized Ammonia Nitrogen (NH_3-N)	mgN/L	-	< 1.25
Nitrate Nitrogen (NO_3-N)	mgN/L	-	< 5
Total Phosphorus (TP)	mgP/L	12	< 0.5
Fecal Coliform	CFU/100mL	-	< 200**
Total Residual Chlorine	mg/L	-	< 0.02
Alkalinity (assumed)	mg/L as $CaCO_3$	471	-
Total Dissolved Solids(TDS)	mg/L	< 1,200	-

newterra clean water. modular solutions. simple.	Commissioning Checklist		
	Has Acceptance Criteria Been Met (Yes/No)	*Details*	*Initial/Date*
Check voltage + amperage + name plate info against mechanical test record on all motors **NOT** recorded in FAT. Please include this in the commissioning binder			
Fill out mechanical test record on each motor and check amperage and voltage. Document amperage on the System test records in the operating manual in the Field test load section			
Check overload settings for all motors			
Test position of ball float switches for proper start/stop level as per the P&ID and control narrative in this manual and observed on the HMI.			
Check that PLC Run light is on and no alarm lights are present on the PLC			
Wet test all control inputs and outputs (See Device Verification section in this checklist)			
Test analogue inputs (See Device Verification section in this checklist)			
Wet test all shut down alarms (See Control Narrative at Appendix K in this manual)			
Manually test all permeate stopping alarms(See Control Narrative at Appendix K in this manual)			
Test vacuum and pressure relief valve			
Check the setting of level switches/transmitters			
Check the hydraulic flow through the plant			
Check if all the ancillary equipment and controls of the plant function as per design			
Fill the system with potable water using the inlet and confirm piping & repair any leaks.			

newterra clean water. modular solutions. simple.	Commissioning Checklist		
	Has Acceptance Criteria Been Met (Yes/No)	*Details*	*Initial/Date*
Confirm heater and fan operation in the screen container.			
Fill TNK-101/102/103 and check for leaks. FIT-101 operations. Confirm operation of all level switches			
Confirm operation of SCR-201/202 and pump P-201/202. Check for leaks and repair as necessary. Confirm operation of FIT-201. Confirm operation of all level switches			
Fill EQ Tank (TNK-501), check for leaks. Confirm tank heater operation. Confirm LT-301 operation via the HMI display for values. Confirm operation of P-301/302 Confirm B-301/302 operation and Check for o Buoyancy of air diffusers and if this occurs, empty the tank and fix; o Air leakages: if this occurs, tighten up the fittings;			
Confirm operation of H-301/302, TSLL-301 and all level switches			
Fill Pre-Anox tank with water (TNK-401) and confirm operation of educators and P-401/402			
Confirm operation of H-401/402, TSL-401 and all level switches			

newterra clean water. modular solutions. simple.	Commissioning Checklist		
	Has Acceptance Criteria Been Met (Yes/No)	*Details*	*Initial/Date*
Fill Aeration Tanks (TNK-501/502), check for leaks. Confirm tank heater operation. Confirm LT-501/DO-501/PH-501 operation via the HMI display for values. Confirm operation of P-501/502/503. Confirm operation of the sprayer. Confirm operation of B-501/502 and Check for o Buoyancy of air diffusers and if this occurs, empty the tank and fix; o Air leakages: if this occurs, tighten up the fittings;			
Confirm operation of H-501/502/503/504, TSL-501/502 and all level switches			
Fill Post Post-Anox Tank (TNK-551) with water and check for leaks. Conform operation of P-554/555. Confirm operation of educators. Confirm operation of P-551/552			
Fill MBR tanks with water (TNK-601/602) and check for leaks. Confirm level switch operation. Confirm operation of B-601/602, confirm all level switch operation, and Check for o Buoyancy of air diffusers and if this occurs, empty the tank and fix; o Air leakages: if this occurs, tighten up the fittings;			
Perform electrical and instrumentation (E&I) functional checks and adjustment of level switches.			

newterra clean water. modular solutions. simple.	Commissioning Checklist		
	Has Acceptance Criteria Been Met (Yes/No)	*Details*	*Initial/Date*
Turn on the air blower(s) for the equalization tank(s) and blower(s) for aeration tank(s), and check for: o Buoyancy of air diffusers and if this occurs, empty the tank and fix; o Air leakages: if this occurs, tighten up the fittings;			
Manually check water temperature and DO (dissolved oxygen): with a hand-held DO meter and adjust air flow to keep it up to 0.5 – 1 mg/L for equalization tank(s) and 2 - 3 mg/L for aeration tank(s); check the DO readings on the touch screen.			
DO Control System: check automatic ON/OFF of Aeration Tank air blowers at low and high settings of DO without the return of aerated water from the membrane tanks to aeration tanks (i.e. turn off transfer pump(s) from aeration tank(s) to membrane tank(s) and turn of recirculation pump(s) from membrane tank(s) to aeration tank(s), if included), and record blower ON/OFF duration.			
Fill membrane Tank, check for leaks. Confirm operation of P-601/701/702/801/6101/6102. Perform manual backwash to confirm operation. Check for o Buoyancy of air diffusers and if this occurs, empty the tank and fix; o Air leakages: if this occurs, tighten up the fittings;			

newterra clean water. modular solutions. simple.	Commissioning Checklist		
	Has Acceptance Criteria Been Met (Yes/No)	*Details*	*Initial/Date*
Confirm operation of all container fan and heaters.			
Fill sludge holding tank with water. Confirm diffuser operation and level switch operation. Confirm P-901 operation.			
Introduce seed sludge from cusomer thru the influent and process. See Section 6 of the manual for the procedure. If seed sludge is unavailable, then use dry bacteria.			

newterra clean water. modular solutions. simple.	Membrane Inspection (Clean Water)		
	Has Acceptance Criteria Been Met (Yes/No)	*Details*	*Initial/Date*
Inspect membrane module that all bolts are secure			
Ensure all hose clamps are secure			
Fill tank until membranes are completely submerged, re-check bubble pattern			
Enable membrane operation from the PLC screen			
Start the transfer pump(s) from the Post Anox tank(s) to the membrane tank(s) and fill the membrane tank(s) with potable water.			
Start the air blowers for the membrane tank(s) and check for an even distribution of air across the membrane filter area and air bubble uniformity above the membrane module/cassette.			
Check hydraulic flow pattern through the membranes and between membrane module/ cassette and tank wall.			
Make a clean copy of the Clean Water Testing Sheet presented in Appendix K of this O&M Manual.			
Record all checked parameters in the Clean Water Testing Sheet:			
Pre-prime the permeate pumps according to manufacturer'smfg instructions			
Start the permeate (vacuum) pumps.			

newterra clean water. modular solutions. simple.	Membrane Inspection (Clean Water)		
	Has Acceptance Criteria Been Met (Yes/No)	*Details*	*Initial/Date*
Record and set the initial vacuum settings on the system to determine correct TMP of the membranes. This step is required based on the Vacuum transmitter located higher than the water level.			
Record the vacuum (TMP) on the gauge(s) on the permeate line [for clean water could be 0.05 to 0.07 bar (20" to 29" WC)].			
Record water temperature and DO with a hand-held DO meter.			
Gradually increase the permeate flow while recording the vacuum (TMP) on the gauges up to the anticipated peak wastewater flow.			
Ensure membrane module is securely fastened to membrane tank and no movement is detected. Ensure wheels are chocked to prevent membrane module movement during operation			

newterra clean water. modular solutions. simple.	Full Automatic System Test		
	Has Acceptance Criteria Been Met (Yes/No)	*Details*	*Initial/*
Record Membrane Performance after 3 min at the design flow for each membrane cassette with clean water record findings in 'MBR Test Preformance' data sheet			
Introduce Waste Activated Sludge (inject slowly through normal waste water inlet, always pre-screen)		Sludge Obtained From: MLSS:	
Record Membrane Performance after 3 min at the design flow for each membrane cassette in 'MBR Preformance' data sheet			

newterra
clean water. modular solutions. simple.

Membrane Performance (test)

MBR Number	Flow	Flux	Permeability	Date	Operator Initials

Influent-Effluent

1 Confirm Influent/Effluent parameters - below are the design parameters.

Parameters	Unit	Influent*	Effluent
pH	s.u.	6 - 9	6.5 – 8.5
Fat, Oil, Grease (FOG)	mg/L	< 30	< 5
Biological Oxygen Demand (BOD)	mg/L	907.5	< 25
Total Suspended Solids (TSS)	mg/L	262.5	< 25
Total Kjeldahl Nitrogen (TKN)	mgN/L	130	-
Unionized Ammonia Nitrogen (NH_3-N)	mgN/L	-	< 1.25
Nitrate Nitrogen (NO_3-N)	mgN/L	-	< 5
Total Phosphorus (TP)	mgP/L	12	< 0.5
Fecal Coliform	CFU/100mL	-	< 200**
Total Residual Chlorine	mg/L	-	< 0.02
Alkalinity (assumed)	mg/L as $CaCO_3$	471	-
Total Dissolved Solids(TDS)	mg/L	< 1,200	-

	newterra clean water. modular solutions. simple.	**Influent-Effluent**	
2	Record here the actual influent and effluent valves from lab testing		

newterra
clean water. modular solutions. simple.

Device Verification Checklist

Device Tag	Device Type	Operation Verified	Notes	Train 1	Train 2
FIT-201	Flow Transmitter				
FIT-202	Flow Transmitter				
SCR-201	rotary brush screen				
SCR-202	rotary brush screen				
LSHH-201	Level Switch				
LSHH-202	Level Switch				
LSHH-101	Level Switch				
LSHH-102	Level Switch				
LSHH-103	Level Switch				
LSHH-203	Level Switch				
LSH-203	Level Switch				
LSL-203	Level Switch				
P-201	Pump				
P-202	Pump				
H-7911	Container heaters				
H-7912	Container heaters				
TSL-7911	Temperature low level				
LSHH-7911	Level Switch				
B-7911 and PDS-7911	Blower				
EQ Tank diffuser Grid	diffusers				
B-302/301 and PSL-301	Blower				
LSHH-301	Level Switch				
LSLL-301	Level Switch				
LT-301	Level Transmitter				
TSLL-301	Temperature sensor				
H-301 and H-302	Tank heater				
P-301/302	Pump				
Pre-Anox Educator					
H-7941 and TSLL-7901	Container heater				
P-401 and P-402					
H-401 and H-402	Tank heaters				
LSHH-401	Level Switch				
LSLL-401	Level Switch				
TSL-401	Temperature Sensor				
B-7941	Blower				
Aeration Tank diffuser grid	diffusers - TNK-501				
H-501/502	Tank heater				
LSLL-501	level switch				
TSL-501	temperature sensor				
LSHH-501	level switch				
LT-501	level transmitter				
DO-501	DO sensor				
PH-501	PH sensor				
P-501	pump				
P-502	pump				
P-503	pump				

Device Tag	Device Type	Operation Verified	Notes	Train 1	Train 2
B-501/502 and PSL-501	blower				
P-6101	Soda Ash/Caustic dosing pump				
P-6102	Alum dosing pump				
Aeration Tank diffuser grid	diffusers - TNK-502				
H-503/504	Tank heater				
LSLL-502	level switch				
TSL-501	temperature sensor				
LSHH-502	level switch				
Educators	Post-Anox Educators TNK-551				
P-553/554	Pumps				
P-551/552	Pumps				
P-6103	MicroC dosing				
B-601 and PSL-601	MBR Blower				
LSHH-601	Level Switch				
LSH-601	Level Switch				
MBR tank diffuser grid	diffusers - TNK-601				
P-701	permeate pump				
VT-701	Vacuum transmitter				
MV-701	Soleniod valve				
FIT-701	flow transmitter				
B-602 and PSL-602	MBR Blower				
LSHH-602	Level Switch				
LSH-602	Level Switch				
MBR tank diffuser grid	diffusers - TNK-602				
P-702	permeate pump				
VT-702	Vacuum transmitter				
MV-702	Motorized valve				
FIT-702	flow transmitter				
SV-801	Backwash valve				
P-801	backwash pump				
LSH-801	Level Switch				
LSL-801	Level Switch				
SV-801	Soleniod valve				
H-7961	container heaters				
H-7962	container heaters				
H-7963	container heaters				
TSL-7961	Temperature sensor				
F-7961	Container fan				
LSHH-7961	Level Switch				
LSHH-7962	Level Switch				
LSHH-901	level switch				
sludge inlet tank diffuser grid	diffusers - TNK-901				

Commissioning Acceptance Sign-Off Form

1704432 - Amaruq Mine WWTP

Newterra is pleased to announce that the Commissioning phase of 1704432 - Amaruq Mine WWTP, has successfully been completed. In order to move to the Training phase, a visual inspection and walkthrough of the plant will be required, followed by signoff of this document. Commissioning signoff will be conditional on the completion of items listed in the Punchlist created during this walkthrough.

	Installation Signoff		Customer Acceptance
Name:	_____	**Name:**	_____
Company:	_____	**Company:**	_____
Date:	_____	**Date:**	_____
Signature:	_____	**Signature:**	_____

newterra smart technology. sustainable solutions.™	Customer Training Checklist		
	Has Acceptance Criteria Been Met (Yes/No)	*Details*	*Initial/Date*
Review the operating manual with the customer explaining the various components of the manual and sources of information.			
Review the startup and shutdown procedure with operator.			
Review operation of treatment system and describe the maintenance required for each piece of equipment.			
Describe operation of panel and panel components.			
Run through complete logic and alarm sequence with customer			
Train customer to troubleshoot alarms based on input conditions to the PLC or relays in the panel.			
Discuss the operating logic with the customer so they understand how the system is configured to work.			
Have customer/operator sign training sheet			
Note name of individual and company with whom logic was reviewed:			

Training Completion Sign-Off Form

1704432 - Amaruq Mine WWTP

Newterra is pleased to announce that the training of the following operator(s) has been sucessfully completed:

	Installation Signoff		Customer Acceptance
Name:		**Name:**	
Company:		**Company:**	
Date:		**Date:**	
Signature:		**Signature:**	

COMPONENT	LONG SIDE (40') QTY.	SHORT SIDE (8') QTY.	VERTICAL (9' 6") QTY.
LIQUID RUBBER (37795)	2 (7.0L)	1 (1.40L)	1 (1.70L)
TAPE (37797)	1 (40')	1 (8')	1 (9' 6")
POLYURETHANE SEALANT (37796)	2 (1.0L)	1 (0.40L)	-
7/8" BACKER ROD (29551)	-	1 (8')	-
3/8" BACKER ROD (37794)	2 (40')	-	1 (9' 6")
SPRAY FOAM (22772)	-	1 (1.33 ft^3)	-

NOTE:

QUANTITIES OF COMPONENTS LISTED ARE FOR A SINGLE SEAL IN THE DIRECTION SPECIFIED.

A COMPLETE SEAL OF A MULTI-CONTAINER SYSTEM MAY REQUIRE THE SUMMATION OF MULTIPLE SEALS IN MULTIPLE DIRECTIONS.

THIS TABLE IS TO GIVE ROUGH ESTIMATES ON THE QUANTITIES REQUIRED.

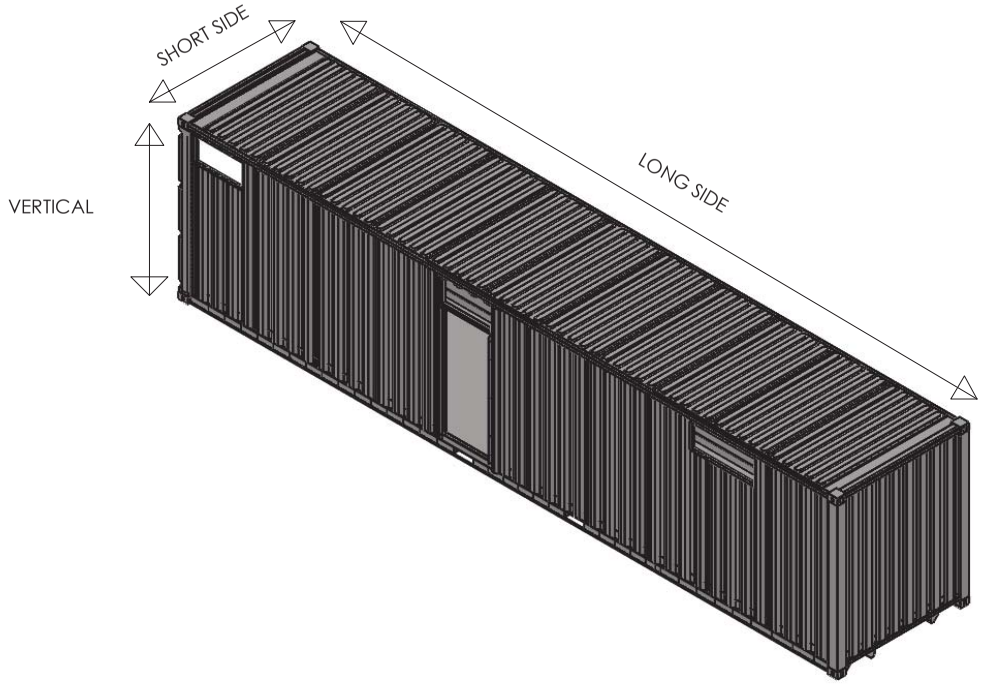

GENERAL TOLERANCES
.XX ± 1/8"
.XXX ± 1/16"
UNLESS OTHERWISE SPECIFIED DIMENSIONS ARE IN INCHES

THIS INFORMATION IS THE PROPERTY OF newterra AND CANNOT BE REUSED OR REPRODUCED WITHOUT WRITTEN CONSENT.

LEVEL	DATE	BY	REVISION
B1	27/02/17	GH	FOR PRODUCTION - REVISED SEALING METHOD
B	11 Nov 2015	OM	FOR PRODUCTION
A1	26 Aug 2015	OM	FOR REVIEW
A	22 July 2015	OM	FOR REVIEW

DWG. NO:
PROJECT NUMBER:
TITLE: LIQUID RUBBER CONTAINER SEAL
CUSTOMER: newterra
DRAWN BY: OM
DATE: 22 July 2015
SHEET 1 OF 7

CONTAINERS JOINED AT LONG SIDE

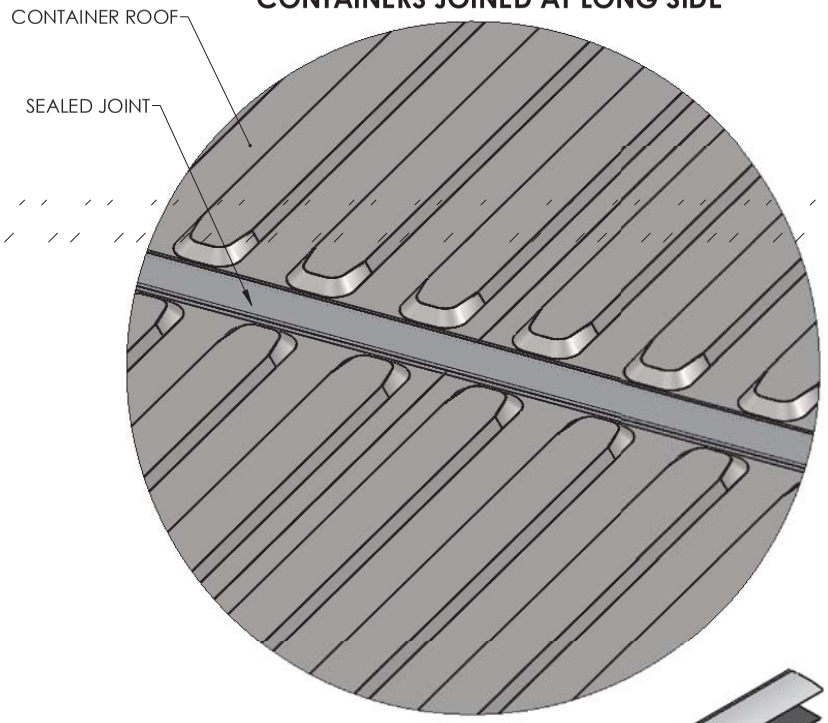

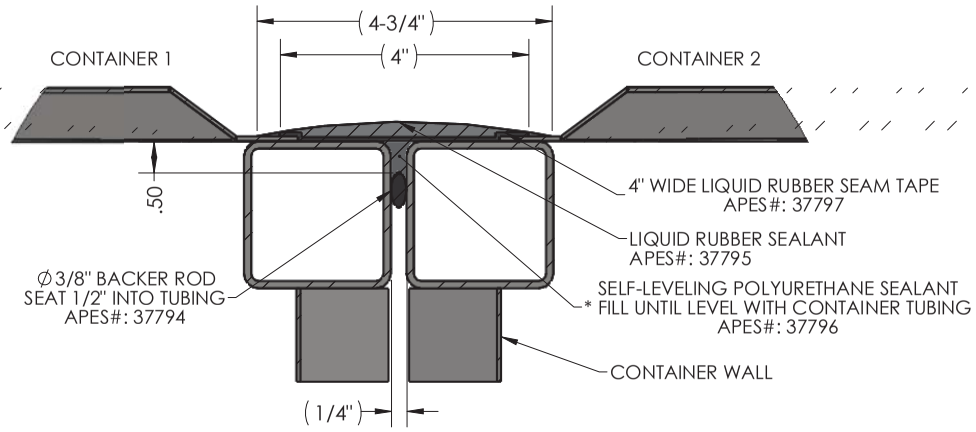

SECTION A-A
CONTAINERS JOINED ALONG LONG SIDE
SCALE 1 : 2

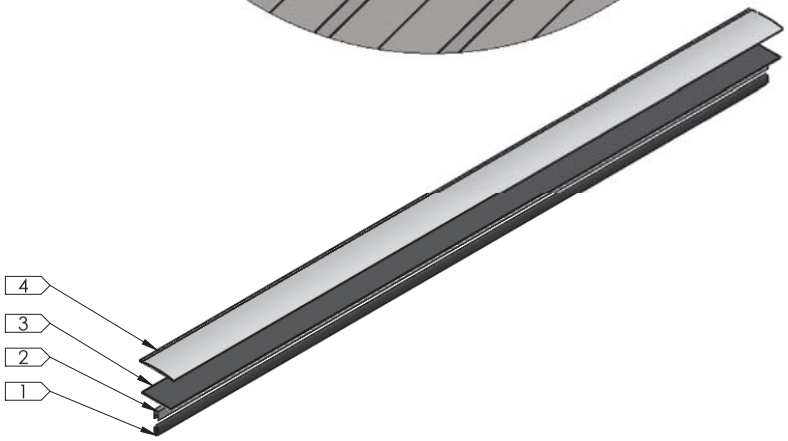

TYPICAL STEPS FOR SEALING LONG SIDE OF CONTAINER JOINTS

1. PUSH BACKER ROD INTO GAP BETWEEN CONTAINER TUBING; 1/2" DOWN.
2. APPLY SELF LEVELING POLYURETHANE SEALANT ON TOP OF BACKER ROD UNTIL LEVEL WITH TUBING.
3. APPLY LIQUID RUBBER TAPE CENTERED OVER GAP, 4" WIDE. ENSURE SMOOTH TIGHT TO SURFACE SEAL.
4. APPLY LIQUID RUBBER SEALANT WITH A MINIMUM CENTERED WIDTH OVER THE GAP OF 4 3/4". ENSURE NONE OF THE TAPE IS VISIBLE AFTER THIS APPLICATION.

GENERAL TOLERANCES
.XX ± 1/8"
.XXX ± 1/16"
UNLESS OTHERWISE SPECIFIED DIMENSIONS ARE IN INCHES

THIS INFORMATION IS THE PROPERTY OF newterra AND CANNOT BE REUSED OR REPRODUCED WITHOUT WRITTEN CONSENT.

LEVEL	DATE	BY	REVISION
B1	27/02/17	GH	FOR PRODUCTION - REVISED SEALING METHOD
B	11 Nov 2015	OM	FOR PRODUCTION
A1	26 Aug 2015	OM	FOR REVIEW
A	22 July 2015	OM	FOR REVIEW

DWG. NO:
PROJECT NUMBER:
TITLE: LIQUID RUBBER CONTAINER SEAL
CUSTOMER: newterra
DRAWN BY: OM
DATE: 22 July 2015
SHEET 2 OF 7

CONTAINERS JOINED ALONG SHORT SIDE - BARN DOOR END TO BARN DOOR END

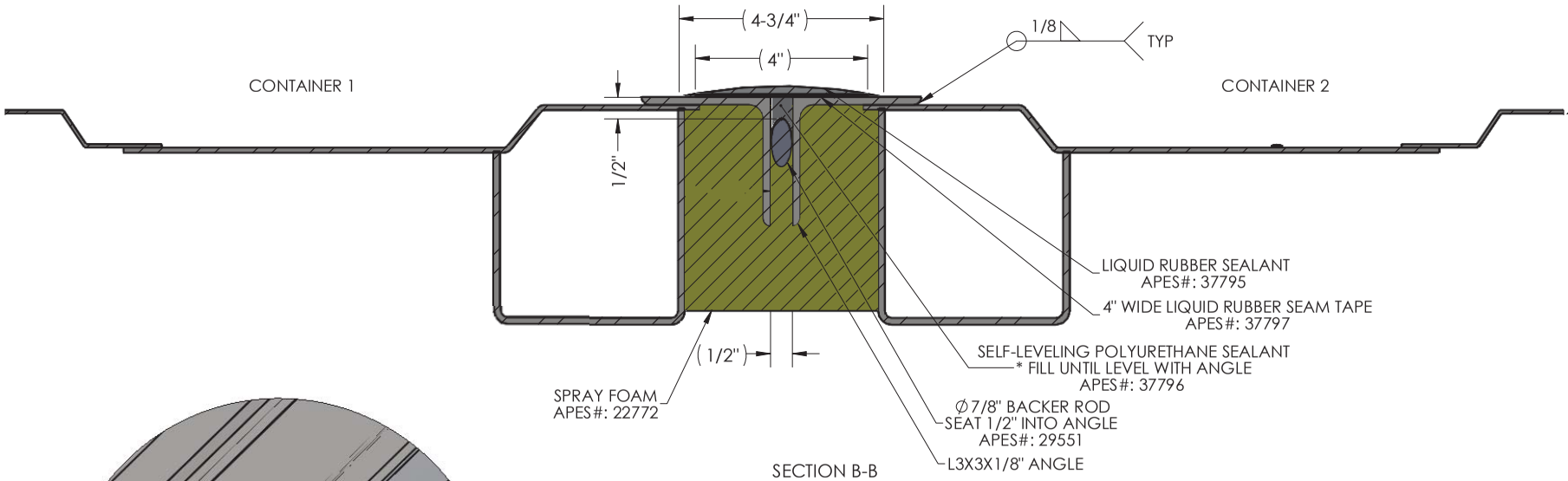

SECTION B-B
CONTAINERS JOINED ALONG SHORT SIDE - BARN DOOR END TO BARN DOOR END
SCALE 1 : 2.5

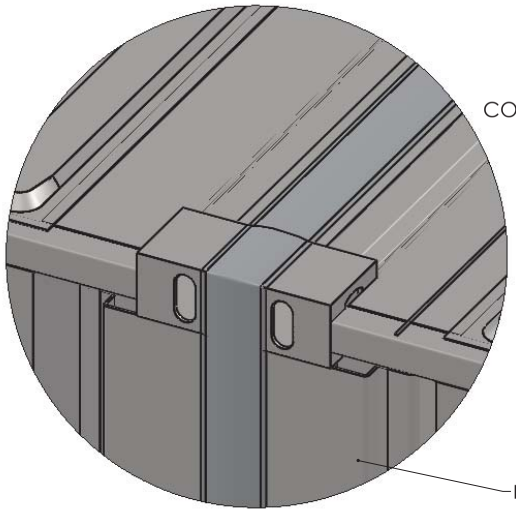

STEPS FOR SEALING SHORT SIDE OF CONTAINERS:

1. PERFORM STEPS 1-4 OF TYPICAL SEALING OUTLINED ON PAGE 1 ON TOP OF CONTAINERS.
2. FILL UNDERSIDE AS SHOWN WITH SPRAY FOAM WHEN POLYURETHANE LEVELING SEALANT HAS SET.
3. FOLLOW STEPS 3 & 4 AND ADD SPRAY FOAM TO BARN DOOR END VERTICAL SEALS.

GENERAL TOLERANCES
.XX ± 1/8 "
.XXX ± 1/16 "
UNLESS OTHERWISE SPECIFIED DIMENSIONS ARE IN INCHES

THIS INFORMATION IS THE PROPERTY OF newterra AND CANNOT BE REUSED OR REPRODUCED WITHOUT WRITTEN CONSENT.

LEVEL	DATE	BY	REVISION
B1	27/02/17	GH	FOR PRODUCTION - REVISED SEALING METHOD
B	11 Nov 2015	OM	FOR PRODUCTION
A1	26 Aug 2015	OM	FOR REVIEW
A	22 July 2015	OM	FOR REVIEW

DWG. NO:
PROJECT NUMBER:
TITLE: LIQUID RUBBER CONTAINER SEAL
CUSTOMER: newterra
DRAWN BY: OM
DATE: 22 July 2015
SHEET 3 OF 7

CONTAINERS JOINED ON BOTH LONG AND SHORT SIDES

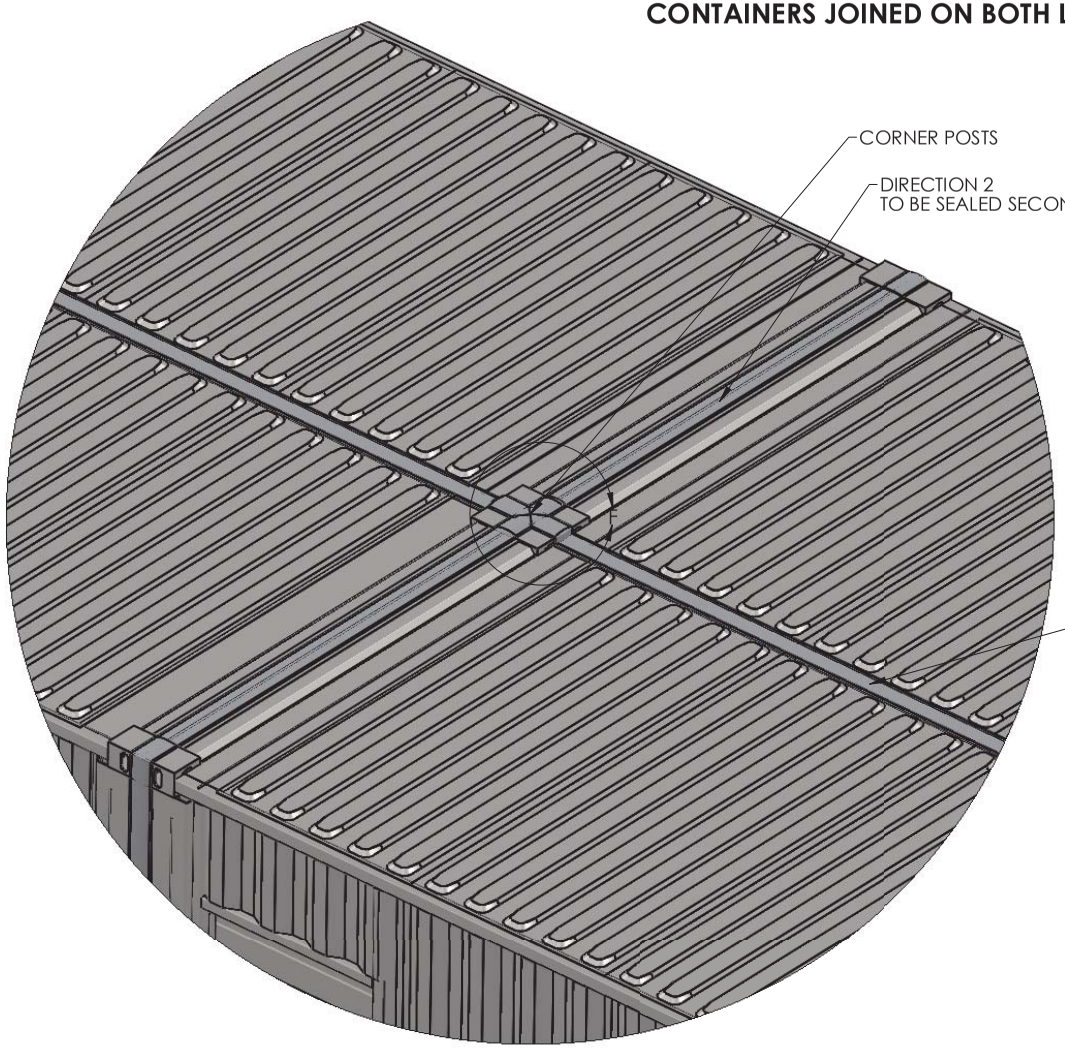

STEPS FOR SEALING ABOVE CONTAINERS JOINED IN BOTH DIRECTIONS:

1. CLEAN AND PRIME AREA
2. PERFORM STEPS 1 TO 4 OF TYPICAL SEALING ORDER OUTLINED ON PAGE 1 IN DIRECTION 1 - ALONG LONG SIDE FIRST WITH ∅3/8" BACKER ROD.
3. PERFORM STEPS 1 TO 4 OF TYPICAL SEALING ORDER OUTLINED ON PAGE 1 IN DIRECTION 2 - ALONG THE SHORT SIDE WITH ∅7/8" BACKER ROD.
4. PERFORM STEPS 3 & 4 WHEN SEALING CORNER POST JOINTS. (TAPE AND LIQUID RUBBER).

NOTE: WHEN SEALING DIRECTION 1 & 2 CONTINUE WRAP OF TAPE AND RUBBER ACROSS THE CORNER POSTS.

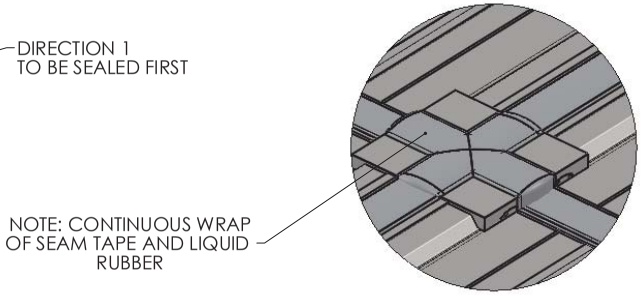

DETAIL F
CORNER POST JOINTS
SCALE 1 : 10

GENERAL TOLERANCES
.XX ± 1/8 "
.XXX ± 1/16 "
UNLESS OTHERWISE SPECIFIED DIMENSIONS ARE IN INCHES

THIS INFORMATION IS THE PROPERTY OF newterra AND CANNOT BE REUSED OR REPRODUCED WITHOUT WRITTEN CONSENT.

LEVEL	DATE	BY	REVISION
B1	27/02/17	GH	FOR PRODUCTION - REVISED SEALING METHOD
B	11 Nov 2015	OM	FOR PRODUCTION
A1	26 Aug 2015	OM	FOR REVIEW
A	22 July 2015	OM	FOR REVIEW

DWG. NO:
PROJECT NUMBER:
TITLE: LIQUID RUBBER CONTAINER SEAL
CUSTOMER: newterra
DRAWN BY: OM
DATE: 22 July 2015
SHEET 4 OF 7

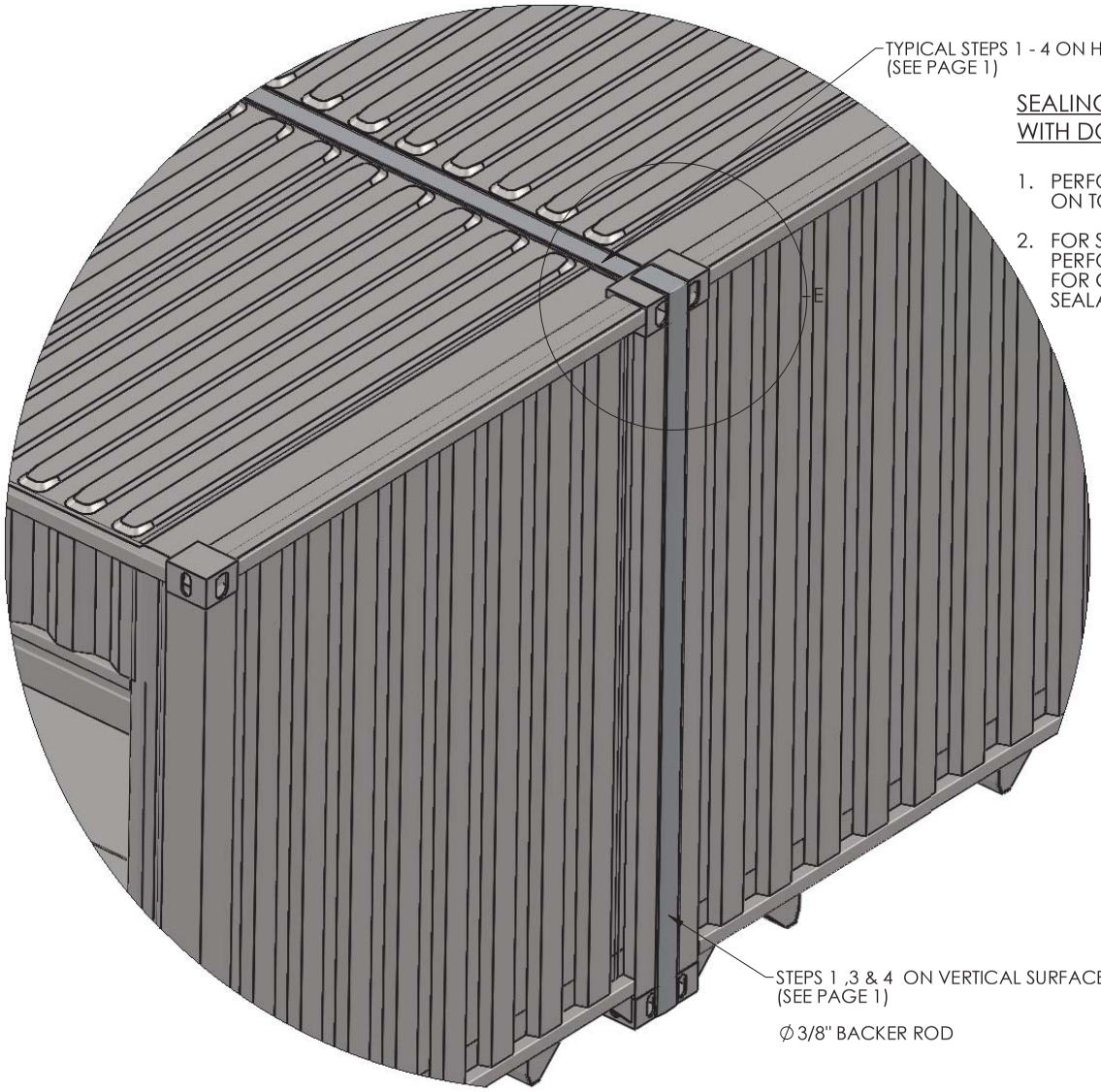

SEALING ABOVE CONTAINERS JOINED ON LONG SIDE WITH DOORWAY / PATH THROUGH CLOSE TO CONTAINERS END

1. PERFORM STEPS 1-4 OF TYPICAL SEALING ORDER OUTLINED ON PAGE 1 ON TOP OF CONTAINERS.
2. FOR SEALING VERTICAL AREA:
   PERFORM STEPS 3 & 4 ON CORNER POSTS.
   FOR GAP USE STEPS 1, 3 & 4 WITH ∅3/8" BACKER ROD. IGNORE USE OF POLYURETHANE SEALANT.

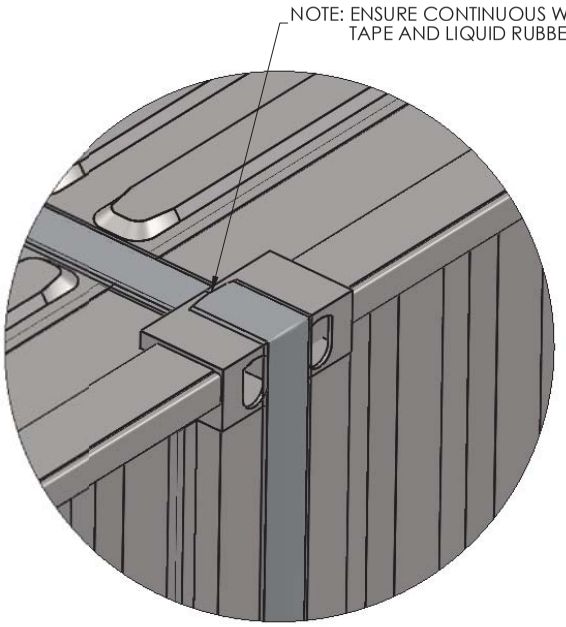

DETAIL E
SCALE 1 : 8

GENERAL TOLERANCES
.XX ± 1/8 "
.XXX ± 1/16 "
UNLESS OTHERWISE SPECIFIED DIMENSIONS ARE IN INCHES

THIS INFORMATION IS THE PROPERTY OF newterra AND CANNOT BE REUSED OR REPRODUCED WITHOUT WRITTEN CONSENT.

LEVEL	DATE	BY	REVISION
B1	27/02/17	GH	FOR PRODUCTION - REVISED SEALING METHOD
B	11 Nov 2015	OM	FOR PRODUCTION
A1	26 Aug 2015	OM	FOR REVIEW
A	22 July 2015	OM	FOR REVIEW

DWG. NO:
PROJECT NUMBER:
TITLE: LIQUID RUBBER CONTAINER SEAL
CUSTOMER: newterra
DRAWN BY: OM
DATE: 22 July 2015
SHEET 5 OF 7

INSIDE SEALING OF WALKWAYS

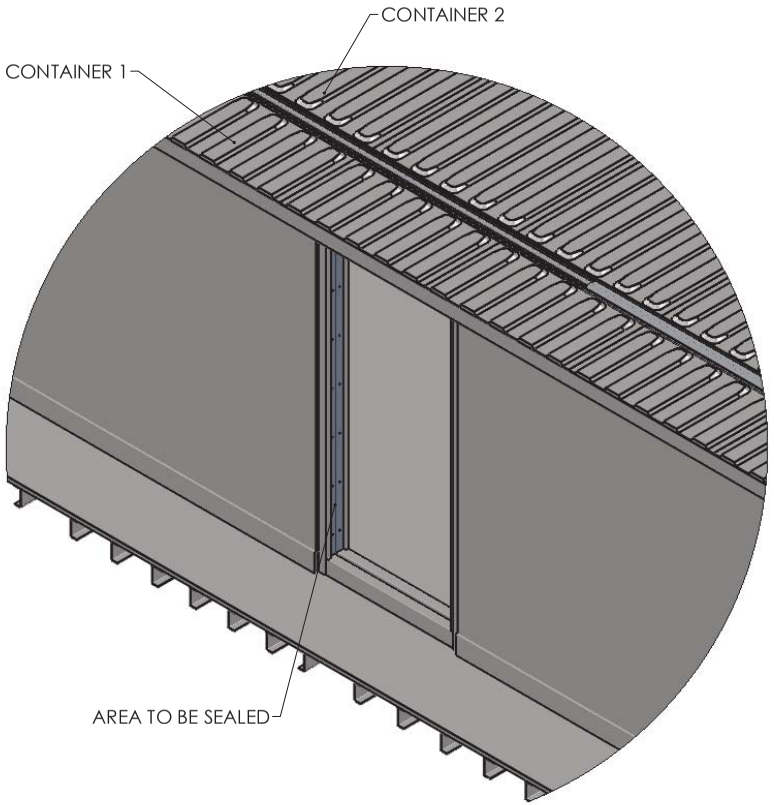

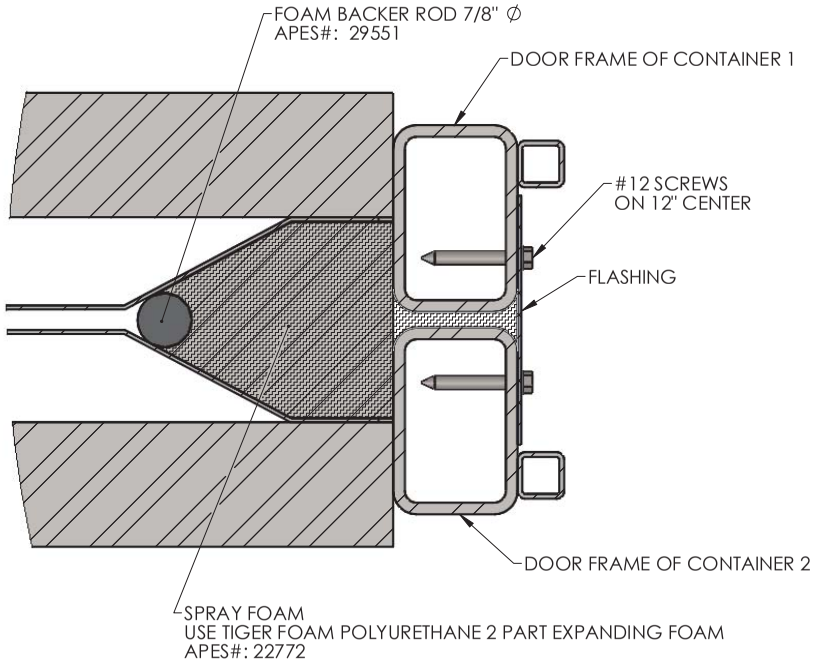

DETAIL D
DOORWAYS SEALING
SCALE 1 : 2

GENERAL TOLERANCES
.XX ± 1/8 "
.XXX ± 1/16 "
UNLESS OTHERWISE SPECIFIED DIMENSIONS ARE IN INCHES

THIS INFORMATION IS THE PROPERTY OF newterra AND CANNOT BE REUSED OR REPRODUCED WITHOUT WRITTEN CONSENT.

LEVEL	DATE	BY	REVISION
B1	27/02/17	GH	FOR PRODUCTION - REVISED SEALING METHOD
B	11 Nov 2015	OM	FOR PRODUCTION
A1	26 Aug 2015	OM	FOR REVIEW
A	22 July 2015	OM	FOR REVIEW

DWG. NO:
PROJECT NUMBER:
TITLE: LIQUID RUBBER CONTAINER SEAL
CUSTOMER: newterra
DRAWN BY: OM
DATE: 22 July 15
SHEET 6 OF 7

newterra ltd.
1291 California Avenue, Brockville, ON K6V 5W3
(800) 420-4056 / www.newterra.com

APPENDIX D

Recommended Spare parts List

© 2017 by **newterra**, ltd.
All rights reserved. No part of this document may be reproduced or transmitted in any form or by any means, electronic, mechanical, photocopying, recording, or otherwise, without prior written permission of **newterra** ltd.

1704432 - AGNICO EAGLE MINE - A1

Qty	Category	Spare/ Maintenance	newterra#	Description
1	**Electrical**	**Spare**	10270	Breaker, SQD QOU115 1240V 15A 1P DIN Mount, 10k SCCR
1	**Electrical**	**Spare**	11482	Breaker Lock for 1 pole QOU breakers
3	**Electrical**	**Spare**	12404	Fuse,GLD AJT250250A 600V Time Delay, Class J
1	**Electrical**	**Spare**	12475	4Ch Discrete, Transistor Output, Intrinsically Safe Barrier
1	**Electrical**	**Spare**	12547	Contactor (TeSys D) Non-Reversing, 9A(AC3) 125A(AC1), 3-Pole (3 NO)
1	**Electrical**	**Spare**	17158	Combination Starter, Busbar Top Mount
1	**Electrical**	**Spare**	18396	190-480V, 3PH Power/Phase Monitor
4	**Electrical**	**Spare**	18642	100W Incandescent, Medium Base, CL1Div2
5	**Electrical**	**Spare**	19029	Breaker, SQD QOB115 120V 15A Bolt On, 10k SCCR
1	**Electrical**	**Spare**	19264	Combination Starter, 12A Power Base, 3/7.5/10HP
1	**Electrical**	**Spare**	19269	Combination Starter, 1NO Ready, 1NO Fault Aux. Contact Module
1	**Electrical**	**Spare**	19503	Combination Starter, TeSysU Standard Control Unit 0.35-1.4A, 24VDC coil
5	**Electrical**	**Spare**	20369	Fuse,GLD GSB1/10100mA 250V Fast Acting, Miniature 5x20mm
1	**Electrical**	**Spare**	21191	Combination Starter, TeSysU Standard Control Unit 1.25-5.0A, 24V/60mA DC coil
1	**Electrical**	**Spare**	21887	Relay, SQT RXM4AB1F7, Miniature Relay, 4PDT, 120VAC, 6A contacts
1	**Electrical**	**Spare**	21888	Relay, SQT RXM4AB1BD, Miniature Relay, 4PDT, 24 VDC, 6A contacts
1	**Electrical**	**Spare**	21889	Relay, SQT RXZE2S114M, Base/Socket for RXM4 4P Relays
2	**Electrical**	**Spare**	22324	Relay, SQT RXM2AB1BD, Miniature Relay 2PDT 24 VDC
2	**Electrical**	**Spare**	22326	Relay, SQT RXZE2S108M, Base/Socket for RXM2 2P Relays
1	**Electrical**	**Spare**	22546	Busbar 4 TeSysU Starters, #6AWG 63A MAX
1	**Electrical**	**Spare**	22706	Combination Starter, TeSysU Standard Control Unit 3-12A, 24V/60mA DC coil
1	**Electrical**	**Spare**	23504	4Ch Power Supply, 15V - 20mA
4	**Electrical**	**Spare**	23751	Relay, SPDT, 24VDC Coil
1	**Electrical**	**Spare**	26829	8GB Micro USB Key
1	**Electrical**	**Spare**	28484	M251 Controller, Dual Ethernet
1	**Electrical**	**Spare**	29140	eWON Cosy 131 LAN/Cell Router, 24VDC Power
2	**Electrical**	**Spare**	35707	24VDC Power Supply, 120W, 5A
1	**Electrical**	**Spare**	36087	TM3 16DI Expansion Module
1	**Electrical**	**Spare**	36088	TM3 16DO Expansion Module
1	**Electrical**	**Spare**	36089	TM3 4-channel AI Expansion Module
1	**Electrical**	**Spare**	36090	TM3 8-channel AI Expansion Module
1	**Electrical**	**Spare**	36126	Touchscreen, 10.4" TOUCH SMART DISPLAY
1	**Electrical**	**Spare**	36316	OTB RIO Adapter, Ethernet
1	**Electrical**	**Spare**	36317	TM2 8 point DI Expansion Module

Qty	Category	Spare/ Maintenance	newterra#	Description
1	**Electrical**	**Spare**	36543	TM3 4-channel AO Expansion Module
1	**Electrical**	**Spare**	36555	Fuse, 160mA 250V Fast Acting, Miniature 5x20mm
1	**Electrical**	**Spare**	36557	TME Bus Transmitter Module
1	**Electrical**	**Spare**	36558	TME Bus Receiver Module
1	**Electrical**	**Spare**	37596	TM2 16 point DI Expansion Module
1	**Electrical**	**Spare**	37906	48" x 36" x 12" NEMA4 Steel Enclosure
1	**Electrical**	**Spare**	38069	Breaker, Multi9 480/277V 15 AMP 3P C Trip Curve, 10k SCCR
1	**Electrical**	**Spare**	38070	Breaker, Multi9 480/277V 20 AMP 3P C Trip Curve, 10k SCCR
1	**Electrical**	**Spare**	38071	Breaker, Multi9 480/277V 30 AMP 3P C Trip Curve, 10k SCCR
1	**Electrical**	**Spare**	38092	Breaker, Multi9, 480/277V 15 AMP 2P C Trip Curve, 10k SCCR
1	**Electrical**	**Spare**	38093	Variable Frequency Drive, Danfoss FC202 P1K5, VFD 480V 2HP, 3.4A 3PH, IP55, w/ Line Side Fusible Disc
1	**Electrical**	**Spare**	38094	Variable Frequency Drive, Danfoss FC202 P11K, VFD 480V 15HP, 21A 3PH, IP55, w/ Line Side Fusible Disc
2	**Electrical**	**Spare**	38136	Breaker, 240V 1 AMP 1P C
2	**Electrical**	**Spare**	38137	Breaker, 240V 2 AMP 1P C
2	**Electrical**	**Spare**	38138	Breaker, 240V 3 AMP 1P C
2	**Electrical**	**Spare**	38139	Breaker, 240V 4 AMP 1P C
2	**Electrical**	**Spare**	38204	Wall Pack, 24W LED c/w PhotoEye
1	**Electrical**	**Spare**	38209	TM2 16RO Expansion Module
1	**Mechanical**	**Spare**	9999	Pump, Metering, Prominent, Rebuild Kit, BT4B0708PVT2000UD010A01, Flow: 1.88GPH / 7.10L/H, Pressure: 102PSI / 07BAR
1	**Mechanical**	**Spare**	11518	Blower, Sutorbilt, Model 4L-RHC
1	**Mechanical**	**Maintenance**	11529	Filter, Element, Solberg, 30P, Paper element, for newterra PN M1096
1	**Mechanical**	**Spare**	11772	Blower, Part, Belt drive, 15hp
1	**Mechanical**	**Maintenance**	11792	Filter, Element, Solberg, 230P, Paper element for newterra PN M1489
1	**Mechanical**	**Maintenance**	12014	Filter, Element, Solberg, 18P, Paper element, for newterra PN M1406
1	**Mechanical**	**Spare**	12026	Motor, Teco, 1hp, 1800rpm, 143T
1	**Mechanical**	**Maintenance**	12930	Oil, Blower, Aeon PD blower oil
1	**Mechanical**	**Spare**	15185	Motor, Teco, 15hp, 3600rpm, 254T
1	**Mechanical**	**Spare**	16196	Gauge, Pressure, 0-15psi, Indumart, P16T2-FG-15
5	**Mechanical**	**Spare**	16202	Gauge, Pressure, 0-30psi, Indumart, P16T2-FG-30
4	**Mechanical**	**Spare**	19279	Switch, Level, Mech Float, Narrow Angle, N.C., YEL
2	**Mechanical**	**Spare**	21552	Switch, Level, Tether Weight
10	**Mechanical**	**Spare**	21828	Anode, Magnesium, mounted on wire with washer
1	**Mechanical**	**Spare**	23439	Transmitter, Pressure, KPSI 750 series 0-10ft H20
1	**Mechanical**	**Spare**	24163	Heater, Immersion, Caloritech 6KW 460V 3ph
1	**Mechanical**	**Spare**	25747	Blower, Cincinnati LM-4, 4.3" X 2.9" Width Alum wheel
1	**Mechanical**	**Spare**	27810	Transmitter, Pressure/ Vacuum, IFM efector
1	**Mechanical**	**Spare**	28469	Pump, Centrifugal, Price Pumps Type 26 EPR Seal 0542
1	**Mechanical**	**Spare**	28617	Pump, Centrifugal, Price Pump 1/4hp 460V 3ph 1800RPM

Qty	Category	Spare/ Maintenance	newterra#	Description
1	**Mechanical**	**Spare**	28620	Pump, Centrifugal, Price Pump 2hp 460V 3ph 3600RPM
1	**Mechanical**	**Spare**	28712	Flow meter, IFM efector, SM9000, Magnetic flow meter
1	**Mechanical**	**Spare**	29263	Pump, Centrifugal, Price Pump 3/4hp 460V 3ph 3600RPM
1	**Mechanical**	**Spare**	33737	Switch, Level, Ultrasonic, Flowline, LU10-1405
8	**Mechanical**	**Spare**	35983	#10 Stainless Back 3" Trim, 16" Length, 0.5 Black Poly Brush
1	**Mechanical**	**Spare**	36395	Pump, Sump, Zoeller N72 Non-Automatic Operation
1	**Mechanical**	**Spare**	36870	Transmitter, pH, Prominent pH Sensor PHER 112SE
1	**Mechanical**	**Spare**	36973	Pump, Centrifugal, Price, Misc
2	**Mechanical**	**Spare**	37662	Valve, Ball, PVC, 2", True-Union, FPM O-rings
1	**Mechanical**	**Spare**	38186	Pump, Centrifugal, Price Pump 1hp 460V 3ph 3600RPM
1	**Mechanical**	**Spare**	38219	Gear Motor, 230/460V 50/60 3P, 60/50hz 1/4hp
1	**Mechanical**	**Spare**	38596	Transmitter, Dissolved Oxygen, Optical, RDO PRO-X, Sensor Cap Replacement Kit, 0088720
1	**Mechanical**	**Spare**	M1254	Pump, Progressive Cavity, Moyno, 35601
4	**Mechanical**	**Spare**	M1343	Switch, Level, Mech Float, Narrow Angle, N.O., Blue

newterra ltd.
1291 California Avenue, Brockville, ON K6V 5W3
(800) 420-4056 / www.newterra.com

APPENDIX E

Technical Specs and Brochures for Parts and Equipment

© 2017 by **newterra**, ltd.
All rights reserved. No part of this document may be reproduced or transmitted in any form or by any means, electronic, mechanical, photocopying, recording, or otherwise, without prior written permission of **newterra** ltd.

TAG	newterra Part Number	Part Description	Extended Part Description	Page
-	21299	Valve, Relief, Back Pressure, Kunkle, 1", Liquid Service	Set @ 50 PSI, 0019-E01-MG0050	E-8
-	M1096	Filter, Silencer, Solberg, FS-30P-200		E-40
-	M1406	Filter, Silencer, Solberg, FS-18P-150	1	E-40
B-301/2	25404	Blower, Elmo, 2BH7420-0AH267 2.4HP	230/460V 3ph	E-45
B-501/2	11518	Blower, Sutorbilt, Model 4L-RHC	Orientation: Horizontal (Flow Down) Driven Shaft Position: RHC (Right Hand Central) Flow Requirement: 487 scfm Altitude: 100' Inlet Pressure: Outlet Pressure:4.4 Inlet Air Temp: 68 Discharge Air Temp: 126 Noise: RPM: 3352 Horsepower Consumed:13.2 Motor Included with Package Blower calculation sheet and blower curve supplied by Engineering	E-73
B-501/2	15185	Motor, Teco, 15hp, 3600rpm, 254T	208-230/460, 3ph, CSA/UR	E-73
B-501/2	38094	VFD, Danfoss 15HP, 380-480Vac, IP55	p/n: FC202P11KT4E55H2XGX3SXSXXXXAXBXCXXXXDX	E-159
B-501/2	M1489	Filter, Silencer, Solberg, FS-230P-300	3"	E-249
B601/2	21232	Blower, Elmo G200 2BH-1510-7HH56-Z	230/460V 3P 6.2 HP	E-251
B-7911	25747	Blower, Cincinnati LM-4, 4.3" X 2.9" Width Alum wheel	Arrangement #4, Direct Drive, bottom discharge c/w	E-283
B7914	22618	Blower, Cincinnati, LM-6, Direct drive	- Cast Aluminum Housing -6.3 x 2.5 STEELWheel - Slip fit inlet - Slip fit discharge - Motor base - 1.5hp, 460V, 3ph, 60Hz, 3600 rpm, TEFC, CCW/TH 769CFM @ 2.25	E-283
DO-501	27325	Transmitter, Dissolved Oxygen, Optical	RDO Pro-x (10m cable)	E-298
F-7961	M1072	Fan, Building, 12", 1/4hp, 1750rpm, 120V, 1ph, TEAO	CSA Approved, S12-E1	E-328

TAG	newterra Part Number	Part Description	Extended Part Description	Page
FM 701 702	28712	Flow meter, IFM efector, SM9000, Magnetic flow meter	G2 connection 0 -300 L/min	E-336
FT-102/2	27200	Flow meter, Endress, Promag 10D50 2"	10D50-4LGA1RA0B4AAM1 Compact head	E-381
H	24384	Heater, Forced Air, Ouellet, 4.8kW, OAC04804BL	460V 1ph	E-521
H-301/302 H-401/402 H-501/502 H-503/504	24163	Heater, Immersion, Caloritech 6KW 460V 3ph	3" Flanged Heater with Moisture Resistant Term Box	E-525
H-7911	38187	Heater, Forced Air, Indeeco, 15KW, 233 Series	480V/3ph. EXP, 1/4HP Fan, w thermostat SIZE 2	E-526
H-7912	38188	Heater, Forced Air, Indeeco, 10KW, 233 Series	480V/3ph. EXP, 1/4HP Fan, w thermostat	E-526
HMI	26421	HMI, HMIGTO5310	10.4" TFT Color Touchscreen, Ethernet, USB, Serial	E-534
LS	19279	Switch, Level, Mech Float, Narrow Angle, N.C., YEL	N/C, Yellow float	E-684
LS	M1343	Switch, Level, Mech Float, Narrow Angle, N.O., Blue	Tilt Float Level Switch w 40' cable	E-684
LS-101/2/3	19279	Switch, Level, Mech Float, Narrow Angle, N.C., YEL	N/C, Yellow float	E-684
LSHH	12351	Switch, Level, Almeg, Vertical, ATB3-48B	1/4NPT	E-687
LSHH- 101.102/103 LSHH-301 LSHH-401 LSHH-501 LSHH-502 LSHH-601/602	19279	Switch, Level, Mech Float, Narrow Angle, N.C., YEL	N/C, Yellow float	E-684
LSHH-7901	12351	Switch, Level, Almeg, Vertical, ATB3-48B	1/4NPT	E-687
LSLL-301/401/ 501/502	M1108	Switch, Level, Mech Float, Wide Angle, N.O., Red	13A, SPST, N/O, Red	E-684
LT-301/501	23439	Transmitter, Pressure, KPSI 750 series 0-10ft H20	Part Number 750S14D4A004.334000.000B10015B	E-688
M-701/702	24353	Valve, Actuated Ball Valve 1.5" Brass 2 way	w/ limit switches PMP electric Actuator 120V OM-1	E-722
MCP	28484	PLC, TM251MESE	M251 Controller 2 Ethernet port	E-739
MCP	29140	Modem/Router, EC6133D	eWON Cosy 131 Ethernet plus with GSM 3G+	E-851

TAG	newterra Part Number	Part Description	Extended Part Description	Page
Membranes	28424	Membrane, Microclear Cassette, MCXL2 - Type M	surface area is 8 m2	E-881
Membranes	36037	MBR, Air Diffuser, FLEXAIR 91 1105 T SERIES		E-900
MPP	18396	Motor Saver, 460 w/Diagnostic 3ph	Finger Safe, DIN Rail Mountable	E-920
P-201/2	38186	Pump, Centrifugal, Price Pump 1hp 460V 3ph 3600RPM	PN: RC200AI-300-26566-100-36-3X6	E-928
P-301/2	29263	Pump, Centrifugal, Price Pump 3/4hp 460V 3ph 3600RPM	PN: RC200AI-250-26566-75-36-3T7	E-928
P-401/2	36973	Pump, Centrifugal, Price, Misc	RC300AI-4.33-26566-500-36-3T7 200GPM @ 60 FEET PRESSURE 3600RPM 5HP TEFC 460v3P	E-928
P-501/2	28620	Pump, Centrifugal, Price Pump 2hp 460V 3ph 3600RPM	PN: RC200AI-388-26566-200-36-3T6	E-928
P503	28617	Pump, Centrifugal, Price Pump 1/4hp 460V 3ph 1800RPM	PN: RC200AI-388-26566-25-18-3T6	E-928
P-551/2	29263	Pump, Centrifugal, Price Pump 3/4hp 460V 3ph 3600RPM	PN: RC200AI-250-26566-75-36-3T7	E-928
P-553/4	28620	Pump, Centrifugal, Price Pump 2hp 460V 3ph 3600RPM	PN: RC200AI-388-26566-200-36-3T6	E-928
P-6101,2,3	21192	Pump, Metering, Prominent, Misc	BT4B0708PVT2000UD010A01 Flow: 1.88GPH / 7.10L/H Pressure: 102PSI / 07BAR	E-947
P-610x	25823	Pump, Metering, Parts, Multi-function Valve	PVDF, 87PSIG Size 2	E-1063
P-701/2	38093	VFD, Danfoss 2HP, 380-480Vac, IP55	p/n: FC202P1K5T4E55H2XGX3SXSXXXXAXBXCXXXXDX	E-159
P-701/702	12026	Motor, Teco, 1hp, 1800rpm, 143T	208-230/460V, 3ph, CSA/UR	E-1091
P-701/702	M1254	Pump, Progressive Cavity, Moyno, 35601	15gpm@25psi, 1200rpm, NPSH: 2 feet	E-1125
P-801	36395	Pump, Sump, Zoeller N72 Non-Automatic Operation	All Plastic Construction	E-1129
PH-501	27936	Transmitter, pH, Prominent Dulcometer pH or ORP	4-20mA output, 7781499	E-1145
PI-201/2	16202	Gauge, Pressure, 0-30psi, Indumart, P16T2-FG-30	SS, brass internals, Glyc. Filled, bottom mount	E-1249

TAG	newterra Part Number	Part Description	Extended Part Description	Page
PI-301	16196	Gauge, Pressure, 0-15psi, Indumart, P16T2-FG-15	SS, brass internals, Glyc. Filled, bottom mount	E-1249
PI-301/2	16202	Gauge, Pressure, 0-30psi, Indumart, P16T2-FG-30	SS, brass internals, Glyc. Filled, bottom mount	E-1249
PI-401/2	16202	Gauge, Pressure, 0-30psi, Indumart, P16T2-FG-30	SS, brass internals, Glyc. Filled, bottom mount	E-1249
PI-501/2	16202	Gauge, Pressure, 0-30psi, Indumart, P16T2-FG-30	SS, brass internals, Glyc. Filled, bottom mount	E-1249
PI-551/2	16202	Gauge, Pressure, 0-30psi, Indumart, P16T2-FG-30	SS, brass internals, Glyc. Filled, bottom mount	E-1249
PI-553/554 PI-703/704	16203	Gauge, Pressure, 0-60psi, Indumart, P16T2-FG-60	SS, brass internals, Glyc. Filled, bottom mount	E-1249
PI-601/602	30098	Gauge, Pressure, 0-15psi, Indumart, P16K2-FG-15		E-1249
PSL-301	10218	Switch, Pressure, 1823-2	0.5-2" wc, Dwyer, Nema 1	E-1250
PSL501	10547	Switch, Pressure, 1823-40	5-44" wc, Dwyer, Nema 1	E-1250
PSL-601/2	10547	Switch, Pressure, 1823-40	5-44" wc, Dwyer, Nema 1	E-1250
PSL-7911	10218	Switch, Pressure, 1823-2	0.5-2" wc, Dwyer, Nema 1	E-1250
PSL-7911	12877	Meter, Flow, Pitot Tube, 4"	Multi-Point Averaging	E-1254
SCR-201/2	33737	Switch, Level, Ultrasonic, Flowline, LU10-1405	Long Style	E-1257
SCR-201/2	35907	Filter, Rotary screen, Newterra 17" wide SCR-50	0.5mm Wedge Wire	E-1277
SCR-201/2	38219	Gear Motor, 230/460V 50/60 3P, 60/50hz 1/4hp	SK1SI63/H10-56C-63L/4 FRD DIV2 NSD+ 400:1 Nord Gear, 4.3 RPM, CSA CL1 DIV2	E-1278
TNK-101/2	26009	Tank, Closed Top, Cylindrical, 2100 gal, Norwesco - no drain	87dia 89 tall, 1.9sg, Heavy Walled, blue	E-1348
TNK-103	23980	Tank, closed top, cylindrical, ACO CT-450-DT	450 Imp. Gal., 16" lid with locking strap	E-1364
TNK-201	38224	Tank, Open Top, Rectangular, 192 gal	540 US Gal 72x36x48	E-1365
TNK-401/502	38229	Eductor Mixing, Elmridge ME20P	Poly Pro 3/4" inlet	E-1366

TAG	newterra Part Number	Part Description	Extended Part Description	Page
TNK-801	21203	Tank, Open Top, Cylindrical, 60 Imp gal, OT-60	Aco Tanks With Lid, 22x44 270Liter	E-1368
TNK-901	26009	Tank, Closed Top, Cylindrical, 2100 gal, Norwesco - no drain	87dia 89 tall, 1.9sg, Heavy Walled, blue	E-1348
TSL-301/401/ 501/502	15653	Switch, Temperature, Probe, A19AAF-12C	25-225 deg F, 10 foot Capillary Tube	E-1369
TSLL/TSH	10515	Switch, Temperature Thermostat, CN TF115-001	40F to 100F / 5C to 40C dial	E-1371
TSLL7911	10515	Switch, Temperature Thermostat, CN TF115-001	40F to 100F / 5C to 40C dial	E-1371
TSLL-7941	10515	Switch, Temperature Thermostat, CN TF115-001	40F to 100F / 5C to 40C dial	E-1371
VT-701 702	27810	Transmitter, Pressure/ Vacuum, IFM efector	PG2409 Scale -14.5- 14.5 PSI 4-20mA	E-1375

Valve, Relief, Back Pressure, Kunkle, 1", Liquid Service
Set @ 50 PSI, 0019-E01-MG0050

KUNKLE ...ty and Relief Products



tyco Flow Control

Kunkle is either a trademark or registered trademark of Tyco International Services AG or its affiliates in the United States and/or other countries. All other brand names, product names, or trademarks belong to their respective holders.

Copyright © 2011 Tyco Flow Control. All rights reserved.

Contents

Definitions and Commonly Used Terms 3
ASME Codes 4
ASME Code Requirements 5
General Safety and Relief Valve Information 6
Safety and Relief Valve Pointers 7
Safety and Relief Valve Principles of Operation 8-9
Ordering Information 9
Valve Selection 10
Valve Selection Guide 11-13
Valve Sizing Overview and Coefficient Method 14
Sizing Formulas 15
Sizing Coefficient Method 16
Sizing Table A 17
Sizing Table B 18-19
Sizing Table C and D 20
Physical Properties 21-25
Conversion Factors 26-27
Installation 28-29
Maintenance 30
Guarantee 30
Terms and Conditions of Sale 31-32

Copyright © 2011 Tyco Flow Control. All rights reserved.

Definitions and Commonly Used Terms

A.S.M.E.
American Society of Mechanical Engineers.

A.P.I.
American Petroleum Institute

PRV
Relief Valve, Safety Valve, Safety Relief Valve.

Back Pressure
The pressure that exists at the outlet of a pressure relief device as a result of the pressure in the discharge system. It is the sum of the superimposed and built-up back pressures.

Built-up Back Pressure
The increase in pressure in the discharge header that develops as a result of flow after the pressure relief device opens.

Blowdown
The difference in pressure between the opening pressure and reclose pressure. May be expressed in percent of set pressure or "psig."

Body/Nozzle/Seat
The stationary seating surface, the inlet.

Cap
The pressure screw cover and/or lever housing. May be screwed, bolted, packed, or plain lever.

Chatter
Abnormal, rapid reciprocating movement of the disc on the seat of a pressure relief valve.

Coefficient of Discharge
The ratio of the measured relieving capacity to the theoretical relieving capacity.

Disc
The moveable seating surface.

Gag
A device attached to a safety or safety relief valve that prevents it from opening at the set pressure.

Guide
That portion of the valve used to guide the disc.

Lift
The distance between the seat and disc seating surfaces when the valve is in the full open position.

MAWP
Maximum allowable working pressure. This data is found on the pressure vessel nameplate and is the maximum pressure at which the lowest set safety valve must be set (stamped).

N.B.
National Board of Boiler and Pressure Vessel Inspectors.

Operating Pressure
The gauge pressure at which a pressure vessel is maintained in normal operation. The operating pressure should not be in excess of 90 percent of the PRV set pressure.

Accumulation
The permitted increase in pressure developed after the valve has opened. Usually expressed in percentage, maximum allowable accumulations are established by applicable codes for operating and fire contingencies.

Pre-open/Warn
An audible or visual discharge at a pressure slightly lower than the set pressure. Warns the operator that the valve is about to operate.

Pressure Relief Device
A device actuated by inlet static pressure and designed to open during an emergency or abnormal condition to prevent a rise of internal fluid pressure in excess of a specified value. The device may also be designed to prevent excessive internal vacuum. The device may be a pressure relief valve, a non-reclosing pressure relief device, or a vacuum relief valve.

psia
Pounds per square inch absolute or absolute pressure. Absolute pressure is equal to gauge pressure plus atmospheric pressure (14.7 psi [1.01 barg] at sea level).

psig
Pounds per square inch gauge or gauge pressure. Differential pressure across the valve, equal to absolute pressure inside the pressure vessel minus atmospheric pressure (14.7 psi [1.01 barg] at sea level).

Relief Valve
A spring-loaded pressure relief valve actuated by the static pressure upstream of the valve. The valve opens normally in proportion to the pressure increase over the opening pressure. A relief valve is used primarily with incompressible fluids (liquids).

Safety Relief Valve
A spring-loaded pressure relief valve that may be used as either a safety or relief valve depending on the application.

Safety Valve
A spring-loaded pressure relief valve actuated by the static pressure upstream of the valve and characterized by rapid opening or pop action. A safety valve is normally used with compressible fluids.

Set Pressure
The gauge pressure at which a safety valve visibly and audibly opens or at which a relief valve discharges a 1" long unbroken stream of liquid.

Spindle/Stem
The rod connecting to the disc.

Stamped Capacity
The rated relieving capacity that appears on the device nameplate. The stamped capacity is based on the set pressure or burst pressure plus the allowable overpressure for compressible fluids and the differential pressure for incompressible fluids.

Superimposed Back Pressure
The static pressure that exists at the outlet of a pressure relief device at the time the device is required to operate. It is the result of pressure in the discharge system coming from other sources and may be constant or variable.

Warn Ring or Regulator Ring
The control ring which surrounds the seat, used to control preopen and blowdown.

Yoke/Bonnet
The portion of a safety/relief valve that surrounds the spring; the spring housing.

Copyright © 2011 Tyco Flow Control. All rights reserved.

ASME Codes

The ASME (American Society of Mechanical Engineers) boiler and pressure vessels code requirements for overpressure protection as they relate to Kunkle products is as follows:

ASME Section I

This code applies to boilers where steam or other vapor is generated at a pressure of 15 psig [1.03 barg] or greater and high temperature water boilers intended for operation at pressures exceeding 160 psig [11.03 barg] and/or temperatures exceeding 250°F [121°C].

Boiler Pressure Accumulation

No more than 6 percent above the highest pressure at which any valve is set, or no more than 6 percent above MAWP.

Set Pressure

The set pressure of a one valve installation cannot be higher than the MAWP. The set pressure of the second or other valves in a multiple valve installation can be up to 3 percent above the MAWP. The complete range of valve settings for multiple valve installations cannot be greater than 10 percent of the highest set pressure. For high temperature water boilers, this 10 percent range may be exceeded.

ASME Section IV

This code applies to steam boilers operating at pressures not greater than 15 psig [1.03 barg] and hot water heating boilers operating at pressures not greater than 160 psig [11.03 barg] and/or temperatures not exceeding 250°F [121°C].

Steam Boilers

Valve capacity must be selected to prevent the boiler pressure from rising more than 5 psig [0.35 barg] above the MAWP.

Hot Water Boilers

Safety valve must be set to relieve at a pressure not greater than the MAWP of the boiler. If more than one safety valve is used, the secondary valve(s) may be set up to 6 psig [0.41 barg] above the MAWP for boilers with MAWPs up to and including 60 psig [4.13 barg], and 5 percent for boilers with MAWPs greater than 60 psig [4.13 barg]. Capacity must be selected to prevent the pressure from rising more than 10 percent above the set pressure of the highest set valve if more than one valve is used.

Tanks/Heat Exchangers High Temperature Water-to-Water Heat Exchangers

Valve(s) must be set at a pressure not greater than the MAWP and with sufficient capacity to prevent the pressure from increasing more than 10 percent above the MAWP.

Steam to Hot Water Supply

Valve(s) must be a least 1" [25 mm] diameter with set pressure not greater than MAWP of the tank.

High Temperature Water to Steam Heat Exchanger

Valve(s) must be set at a pressure not greater than 15 psig [1.03 barg] and with sufficient capacity to prevent the pressure from rising more than 5 psig [0.35 barg] above the MAWP.

ASME Section VIII

This code applies to unfired pressure vessels with an inside diameter larger than 6" [130 mm] and designed for use at or above 15 psig [1.03 barg]. Valve(s) must prevent the pressure from rising more than 10 percent or 3 psig [0.21 barg], whichever is greater, above the MAWP. For a single valve installation, the set pressure may not be greater than the MAWP. For multiple valve installations, the first valve cannot be set higher than the MAWP, but the other valves can be set up to 5 percent above the MAWP. The pressure rise for multiple valve installations can be 16 percent or 4 psig [0.27 barg], whichever is greater. When the vessel is exposed to an external heat source, such as fire, the pressure rise can be 21 percent above the MAWP.

Notes

1. MAWP - Maximum allowable working pressure.
2. Information stated above is based on latest code at time of publication.

Copyright © 2011 Tyco Flow Control. All rights reserved.

ASME Codes – Requirements

National Board

Kunkle valves are manufactured at facilities that meet the manufacturing requirements of the ASME Sections I, IV, and VIII codes for pressure relief valves. Valves that have the relief capacity certified by the National Board of Boiler and Pressure Vessel Inspectors bear the following code symbol stamp on the nameplate and the letters NB. Most Kunkle Valves have NB certified capacities.

Code Stamps

"V"  - applies to all ASME Section I valves

"HV"  - applies to all ASME Section IV valves

"UV"  - applies to all ASME Section VIII valves

Notes

1. Information stated above is based on latest code at time of publication.
2. Non-code liquid valves are capacity rated at 25 percent overpressure.
3. Non-code air/gas/vapor and steam valves are capacity rated at 10 percent overpressure.

Power Boiler - Section I - Code "V"

Set Pressure psig	[barg]	Set Pressure Tolerance	Blowdown
15 – 66	[1.03 – 4.55]		2 – 4 psig [0.14 – 0.28 barg]
67 – 100	[4.62 – 6.90]		2 psi [0.14 barg] - 6%
101 - 250	[6.96 - 17.24]		2% - 6%
251 – 374	[17.31 – 25.79]		2% - 15 psig [1.03 barg]
375 – 1000	[25.86 – 68.96]		2% - 4%
15 – 69	[1.03 – 4.75]	±2 psig [±0.14 barg]	
70 – 300	[4.83 – 20.69]	±3%	
301 – 1000	[20.95 – 68.96]	±10% psig [±0.69 barg]	
1001 and up	[69.03 and up]	±1%	

1. Overpressure would be 2 psig [0.14 barg] for pressures between 15 psig [1.03 barg] and 70 psig [4.83 barg]. Pressures above 70 psig [4.83 barg] would have an overpressure of 3%.
2. Maximum blowdown for "Special Use" Section I is 10%.

Heating Boiler - Section IV - Code "HV"

	Set Pressure psig	[barg]	Set Pressure Tolerance	Blowdown	Overpressure
15 psig Steam	15	[1.03]	±2 psig [±0.14 barg]	2 – 4 psig [0.14 – 0.28 barg]	5 psig [0.34 barg]
Hot Water	15 – 60	[1.03 – 4.14]	±3 psig [±0.21 barg]	N/A	10%
Hot Water	61 – 160	[4.20 – 11.0]	±5%	N/A	10%

Unfired Pressure Vessel - Section VIII - Code "UV"

Set Pressure psig	[barg]	Set Pressure Tolerance	Blowdown	Overpressure
15 – 30	[1.03 – 2.07 barg]	±2 psig [±0.14 barg]	N/A	3 psig [0.21 barg]
31 – 70	[2.14 – 4.83 barg]	±2 psig [±0.14 barg]	N/A	10%
71 and up	[4.90 barg and up]	±3%	N/A	10%

Non-code Set Pressure Tolerance

Set Pressure, psig [barg]	Set Pressure Tolerance, psig [barg]
Below 15 psig [1.03 barg] to 10 psig [0.69 barg]	+/- 2.0 psig [±0.14 barg]
Below 10 psig [0.69 barg] to 5.0 psig [0.34 barg]	+/- 1.0 psig [±0.07 barg]
Below 5.0 psig [0.34 barg] to 0.0 psig [0.0 barg]	+/- 0.5 psig [±0.003 barg]
Below 0.0-inch Hg [0.0 mb] to 10-inch Hg [337 mb]	+/- 1.0-inch Hg [±33.7 mb]
Below 10-inch Hg [337 mb] to 20-inch Hg [674 mb]	+/- 2.0-inch Hg [±67.4 mb]
Below 20-inch Hg [674 mb]	+/- 4.0-inch Hg [±134.8 mb]

Copyright © 2011 Tyco Flow Control. All rights reserved.

General Safety and Relief Valve Information

Kunkle Factory Standard Seat Tightness

Code Section	Service	Performance Standard
I and VIII	Steam	No visible leakage for 15 seconds at 20% below nameplate set pressure or at 5 psig [0.35 barg] below nameplate set pressure, whichever is greater.
VIII	Air/Gas	No audible leakage for 15 seconds at 20% below nameplate set pressure or at 5 psig [0.35 barg] below nameplate set pressure, whichever is greater.
IV and VIII	Liquid	No visible leakage for 30 seconds at 20% below nameplate set pressure or at 5 psig [0.35 barg] below nameplate set pressure, whichever is greater.
IV	Steam	No visible leakage for 30 seconds at 12 psig [0.83 barg].

API - 527 Seat Tightness

Model	Code Section	Service	Performance Standard
300/600 6000 900	I and VIII	Steam	API 527 - No visible leakage for 1 minute at 10% below nameplate set pressure or 5 psig [0.35 barg] below nameplate set pressure, whichever is greater.
6010 (O-ring seat) 916/917 (soft seat) 918/919 (soft seat)	VIII	Air/Gas	API 527 - Bubble-tight for 1 minute at 10% below nameplate set pressure or 5 psig [0.35 barg] below nameplate set pressure, whichever is greater.
910/912 911/913	VIII	Air/Gas	API 527 - D and E orifice: 40 bubbles/min, F thru J orifice: 20 bubbles/min at 10% below nameplate set pressure or 5 psig [0.35 barg] below nameplate set pressure, whichever is greater.
916/917 (soft seat) 918/919 (soft seat)	VIII	Liquid	API 527 - No leakage for 1 minute at 10% below nameplate set pressure, or 5 psig [0.35 barg] below nameplate set pressure, whichever is greater.
910/912 911/913	VIII	Liquid	API 527 - 10 cc/h for inlet sizes less than 1" or 10 cc/h/in of inlet valve size for inlet sizes 1" and larger at 10% below nameplate set pressure or 5 psig [0.35 barg] below nameplate set pressure, whichever is greater.

Note

API 527 is not available on air service for:

a. Plain lever "J" orifice Models 900 and 6000.
b. Plain lever Model 900 above 444 psig [30.6 barg] set pressure.

The terms "safety valve" and "relief valve" are frequently used interchangeably. This is satisfactory to the extent that both safety and relief valves of the spring-loaded type are similar in external appearance and both serve the broad general purpose of limiting media (liquid or gaseous) pressures by discharging some of the pressurized liquid or gas. Some authorities restrict "safety valves" to those installed on boilers, superheaters, and fired vessels - all others being classified as relief valves. We prefer, however, to define them briefly as follows:

Safety valves are used on gaseous service (which include air and steam). Their design always includes a huddling chamber which utilizes the expansion forces of these gases to effect quick opening (popping) and closing actions. The difference between the opening and closing pressures is termed "blowdown," and for Section I and IV steam safety valves blowdown limitations are carefully stated in the ASME Power Boiler Code. Relief valves are normally used for liquid service although safety valves may be so used. Ordinarily, relief valves do not have an accentuated huddling chamber nor a regulator ring for varying or adjusting blowdown. They therefore operate with a semi-modulating action in proportion to the system pressure. Such relieving action is desirable to protect piping systems from water hammer.

Copyright © 2011 Tyco Flow Control. All rights reserved.

Safety and Relief Valve Pointers

1. ASME Codes require that steam and air safety valves have test levers, although levers may be omitted on valves used in hazardous or toxic gas service.
2. Steam safety valves may be used for air service but not vice versa. Liquid valves should be used on liquid only.
3. Safety/relief valves should be installed vertically with the drain holes open or piped to a convenient location.
4. The inlet to and outlet from a safety/relief valve must be at least as large as the valve connections.
5. Every safety/relief valve is individually tested and set by Kunkle.
6. In the event you have safety/relief valve problems, first check the accuracy and cleanliness of pressure gauges and then refer to "Recommended Installation" for help in determining the cause of your problem. Feel free to consult your sales representative.
7. When ordering, we need to know size, type of connections, model number, pressure setting, required relieving capacity, and service media, or advise your complete requirements so that we can make a selection for you.
8. Following are procedures on the operation and testing of safety/relief valves:
   A. Avoid excessive operation of the safety/relief valve as even one opening can provide a means for leakage. Safety/relief valves should be operated only often enough to assure that they are in good working order.
   B. Test the valve by raising the operating pressure to the set pressure of the safety/relief valve, allowing it to open and reset as it would in normal service.
   C. Do not hand operate the valve with less than 75 percent of the stamped set pressure exerted on the underside of the disc. When hand operating, be sure to hold the valve in an open position long enough to purge accumulated foreign material from the seat area and then allow the valve to snap shut.

Copyright © 2011 Tyco Flow Control. All rights reserved.

Safety and Relief Valve Principles of Operation

Kunkle direct spring operated pressure relief valves consist of a nozzle threaded into a cast body housing which is flanged to a pressurized system. A disc is held against the nozzle by a spring, which is contained in a bonnet. The spring is adjusted by a compression screw to permit the calibration of opening or set pressure.

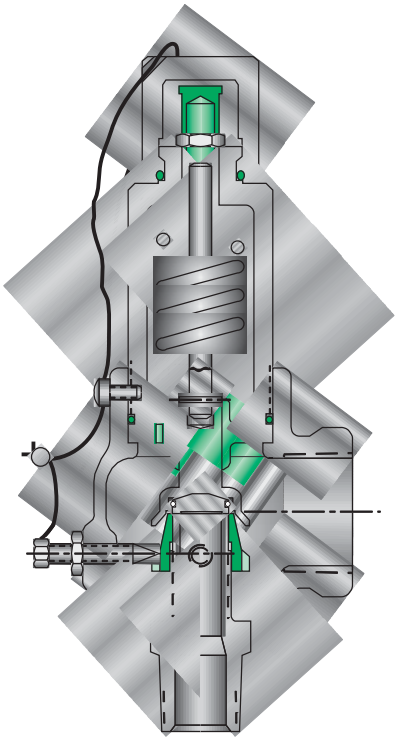

An adjustable nozzle ring, threaded onto the nozzle, controls the geometry of the fluid exit control chamber (huddling chamber). The huddling chamber geometry is very important in controlling valve opening and closing pressures, and stability of operation. The nozzle ring is locked into position by a ring pin assembly. A cap attached to the top of the bonnet seals the internal calibration adjustments. Refer to the illustration above for the location of these important components.

Under normal system operation the valve remains in the closed position because the spring force (Fs) is greater than the system pressure acting on the internal nozzle seating area (PA). If system pressure increases to a point when these forces are equal, the valve begins to simmer. The disc lifts and fluid flows through the valve. When pressure in the system returns to a safe level, the valve closes.

Just prior to reaching set point, the pressure relief valve leaks system fluid into the huddling chamber. The fluid now acts on a larger area of the disc inside the huddling chamber (PAh), causing the valve to experience an instantaneous increase in the opening force. Refer to the Figure on page 7 to see relationship between Nozzle Area (A) and the Huddling Chamber Area (Ah). System pressure acting on the larger area will suddenly open the pressure relief valve at a rapid rate.

Although the opening is rapid and dramatic, the valve does not open fully at set point. The system pressure must increase above the set point to open the valve to its full lift and full capacity position. Maximum lift and certified flow rates will be achieved within the allowable limits (overpressure) established by various codes and standards. All pressure relief valves are allowed an overpressure allowance to reach full rated flow.

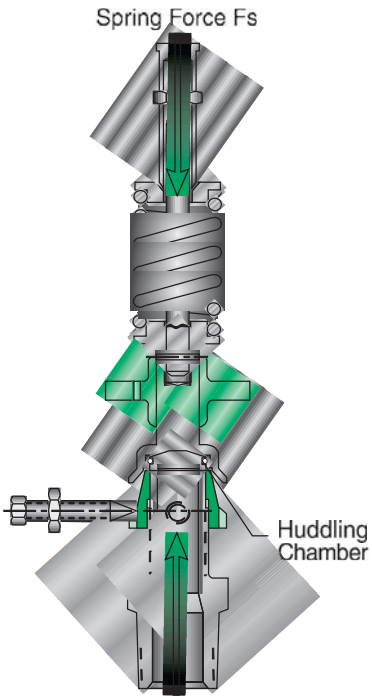

Copyright © 2011 Tyco Flow Control. All rights reserved.

Safety and Relief Valve Principles of Operation

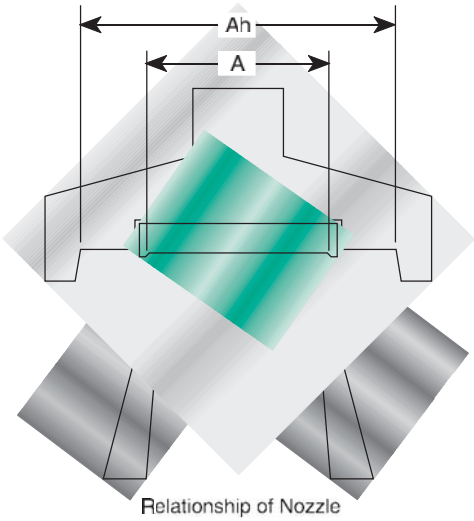

Relationship of Nozzle Area to Huddling Chamber Area

Once the valve has controlled the pressure excursion, system pressure will start to reduce. Since the huddling chamber area is now controlling the exit fluid flow, system pressure must reduce below the set point before the spring force is able to close the valve. The difference between the set pressure and the closing pressure is called blowdown, and is usually expressed as a percentage of set pressure. Refer to code for appropriate blowdown.

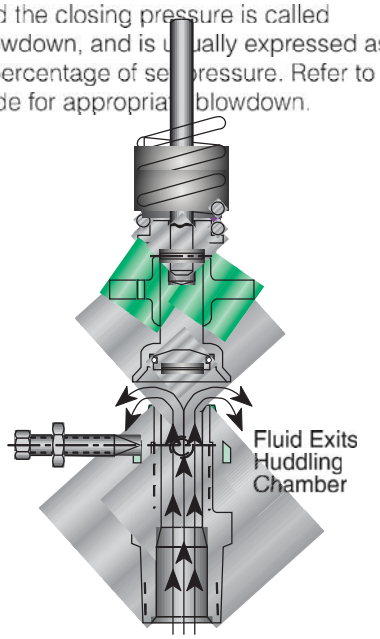

Valve Opens, Force P_{Ah} Acting on Disc

The nozzle ring adjustment changes the shape and volume of the huddling chamber, and its position will affect both the opening and closing characteristics of the valve. When the nozzle ring is adjusted to its top position, the huddling chamber is restricted to its maximum. This ring position will usually make the valve pop very distinctly with a minimum simmer (leakage before opening), but the blowdown will increase. When the nozzle ring is lowered to its lowest position, minimal restriction to the huddling chamber occurs. At this position, simmer increases and the blowdown decreases. The final ring position is somewhere between these two extremes to provide acceptable performance.

Liquid Service Operation

On liquid service, a different dynamic situation exists. Liquids do not expand when flowing across orifices, and a small amount of fluid flow across the nozzle will produce a large local pressure drop at the nozzle orifice. This local pressure drop causes the spring to reclose the valve if the fluid flow is minimal. Liquids leaking into the huddling chamber can quickly drain out by gravity and prevent fluid pressure from building up on the secondary area of the huddling chamber. Liquid relief valves are thus susceptible to a phenomenon called chatter, especially at low fluid flow rates. Chatter is the rapid opening and closing of the pressure relief valve and is often destructive in nature.

Since no visible or audible pop is heard at set point, liquid set pressure is defined as the pressure when the first heavy flow occurs (first steady vertical flow).

Ordering Information

Purchase orders must show the Size, Model Number, Set Pressure, and Service. (Include flange rating with size when applicable.)

1. To make a proper catalog selection, the following information will be needed:
   - A. Connection sizes (in and out), and types (male, female, flanged; 125#, 150#, 250#, 300#, etc.)
   - B. Material of construction
     - a. Bronze
     - b. Iron
     - c. Steel
     - d. Stainless Steel or other
   - C. Pressure setting
   - D. Service (steam, air, gas, etc., including any applicable codes or standards)
   - E. Capacity required, if available
   - F. Unusual conditions (temperature, location, etc.)

     Be sure to use the capacity correction factors for superheated steam, liquid overpressure (10 percent), air-gas temperature and density correction.
   - G. If valve is to be "equal to" another brand, provide nameplate information or specification data from brand being replaced.
2. Ordering data for replacement valves may be obtained from the valve nameplate or stamping.

Copyright © 2011 Tyco Flow Control. All rights reserved.

Valve Selection

The most critical consideration when selecting a pressure relief valve is that the valve will be capable of passing the maximum expected flow capacity. To properly select a relief valve the user must first determine the following:

1. The set pressure at which the valve is to operate. This pressure is based on the pressure limits of the system and the applicable codes. The set pressure of the primary pressure relief valve must not exceed the maximum allowable pressure of the system, but should be at least 10 percent above the maximum operating pressure.
2. The physical properties of the fluid media to be relieved. Capacity values are given in the Kunkle catalogs based on air, saturated steam, and water. Kunkle valves will relieve many other fluids, but information such as molecular weight, specific gravity, viscosity, ratio of specific heats, compressibility factor, and process temperature may be necessary to insure accurate valve selection.
3. The required relieving capacity. The ASME Boiler and Pressure Vessel Code, American Petroleum Institute Recommended Practices, and other applicable standards have many rules for obtaining the required relieving capacity and should be referenced when making this determination. The user must consider all sources of pressure generation in the system that will be protected by the pressure relief valve. Examples of pressure generation sources are pumps, heat input that may cause the system fluid to boil or expand, etc. The pressure relief valve(s) selected must exceed the worst case source of flow generation to prevent the system pressure from exceeding acceptable limits.

Once the previous information has been collected, the pressure relief valve may be sized by using the capacity charts (included in each model's catalog sheet) or by performing sizing calculations (see Valve Sizing, pages 14-25). The user will also want to consider other important factors such as:

- Connection size and type. This information is given in the Valve Selection Guide and in each of the Model Catalog sheets. Please note that the inlet to and outlet from a pressure relief valve must be at least as large as the valve connections to prevent valve malfunction.
- Pipe Size. Connection pipe sizes should not be determined by equipment connections, but rather by the relieving capacity of the PRV.
- Applicable code compliance. The ASME Code Summary section gives important information about pressure relief valves from the code. Pressure relief valve users are strongly encouraged to reference the full version of the code for important rules that may not be included in this manual.
- Maximum allowable seat leakage. The General Safety and Relief Valve Information (page 6) section of this manual shows the leakage acceptance criteria applied to each Kunkle valve. Pressure relief valve users should keep in mind that if "zero leakage" is a requirement, a soft seated valve must be selected.
- Environmental conditions. Environmental conditions play a significant role in how pressure relief valves operate. Extremely high ambient temperatures may affect the set pressure of the valve, extremely low temperatures combined with moisture can cause valves to "freeze up" and prevent proper operation, and vibration may severely shorten the service life of the valve. The Valve Selection Guide (pages 11-13) in this manual has general information on the pressure and temperature limits for each valve series. For specific model limitations refer to the individual model catalog. For vibration service, please contact your local Kunkle representative for assistance.
- Valve options. Each Kunkle model is offered with useful options such as pressure tight caps, lift lever options, or vibration dampening preparation. When selecting valve options, keep in mind that there are code requirements that may dictate what options may be used. For instance the ASME code dictates that all air, steam and hot water (140°F+[60°C+]) pressure relief valves must be equipped with a lift lever. Refer to the individual model catalogs for listings of available options.
- Installation space. The individual model catalogs show envelope dimensions for each configuration and size.

For assistance on valve sizing and selection, please contact your local sales representative.

Copyright © 2011 Tyco Flow Control. All rights reserved.

Valve Selection Guide

(For specific minimum/maximum temperature/pressure ranges refer to individual product sections.)

Steam (ASME Section I - Power Boilers)

Model(s)	Material		Connections		Inlet Size Range		Min/Max[1] Press.		Min/Max Temp.	
	Body	Trim	NPT	FLGD	in	[mm]	psig	[barg]	°F	[°C]
300, 600	CS	SS		X	1¼ - 6"	[31.75 - 152.4]	15/1000	[1.0/69]	-20/800	[-29/427]
920, 921, 927 (special use – 10% blowdown)	CS	SS	X		½ - 2"	[12.7 - 50.8]	15/1400	[1.0/96.5]	-20/800	[-29/427]
6010, 6021, 6121, 6182 6186, 6221, 6283	Bronze	Brass	X		½ - 2½"	[12.7 - 63.5]	3/250	[0.69/17.2]	-60/406	[-51/208]
6030, 6130, 6230	Bronze	SS	X		½ - 2½"	[12.7 - 63.5]	3/300	[0.69/20.7]	-60/425	[-51/219]
6252	Iron	SS	X	X	1½ - 6"	[38.1 - 152.4]	10/250	[0.69/17.2]	-20/406	[-29/208]

Steam (ASME Section VIII - Unfired Steam Equipment)

1 and 2	Bronze	Brass	X		½ - 1"	[12.7 - 25.4]	5/250	[0.34/17.2]	-60/406	[-51/208]
264, 265	CS	SS	X		½ - 1"	[12.7 - 25.4]	4/3300	[0.28/227.6]	-20/750	[-29/399]
266, 267	SS	SS	X		½ - 1"	[12.7 - 25.4]	4/3300	[0.28/227.6]	-20/750	[-29/399]
300, 600	CS	SS		X	1¼ - 6"	[31.75 - 152.4]	15/1000	[1.0/69]	-20/750	[-29/399]
910	CS	SS	X	O	½ - 2"	[12.7 - 50.8]	3/1400	[0.21/96.5]	-20/800	[-29/427]
911	SS	SS	X	O	½ - 2"	[12.7 - 50.8]	3/1400	[0.21/96.5]	-320/800	[-195/427]
912	Bronze	Brass	X		½ - 2"	[12.7 - 50.8]	3/250	[0.21/17.2]	-320/406	[-195/208]
913	Bronze	SS	X		½ - 2"	[12.7 - 50.8]	3/300	[0.21/20.7]	-320/425	[-195/219]
6010, 6021, 6121, 6182, 6186, 6221, 6283	Bronze	Brass	X		½ - 2½"	[12.7 - 63.5]	3/250	[0.21/17.2]	-60/406	[-51/208]
6030, 6130, 6230	Bronze	SS	X		½ - 2½"	[12.7 - 63.5]	3/300	[0.21/20.7]	-60/425	[-51/219]
6252	Iron	SS	X	X	1½ - 6"	[38.1 - 152.4]	10/250	[0.69/17.2]	-20/406	[-29/208]

Steam (ASME Section IV - Low Pressure Steam Heating Boilers)

930	Iron	Bronze	X		2 - 3"	[50.8 - 76.2]	15 only	[1.0]	250 only	[122]
6933, 6934	Bronze	Brass	X		½ - 2"	[12.7 - 50.8]	15 only	[1.0]	250 only	[122]
6935	Bronze	SS	X		½ - 2"	[12.7 - 50.8]	15 only	[1.0]	250 only	[122]
6254	Iron	SS	X	X	1½ - 6"	[38.1 - 152.4]	15 only	[1.0]	250 only	[122]

Steam (Non-code)[2]

40R, 40RL	SS	SS	X		½ - ¾"	[12.7 - 19.05]	1/400	[0.07/27.6]	-60/850	[-51/454]

X = Standard O = Optional

Notes

1. Set pressures less than 15 psig [1.0 barg] are non-code only.
2. See also ASME Section VIII steam valves for non-code steam applications.

Copyright © 2011 Tyco Flow Control. All rights reserved.

Valve Selection Guide

(For specific minimum/maximum temperature/pressure ranges refer to individual product sections.)

Air/Gas (ASME Section VIII)

Model(s)	Material		Connections		Inlet Size Range		Min/Max[3] Press.		Min/Max[4] Temp.	
	Body	Trim	NPT	FLGD	in	[mm]	psig	[barg]	°F	[°C]
1 and 2	Brass	Brass	X		1/2 - 1"	[12.7 - 25.4]	5/250	[0.34/17.2]	-60/406	[-51/208]
30	Brass	Brass	X		1/4"	[6.35]	60/4000	[4.1/275.8]	20/300	[-6.6/150]
189	Bronze	SS	X		1/2 - 3/4"	[12.7 - 19.05]	1000/2500	[69/344.8]	-320/350	[-195/177]
264, 265	CS	SS	X		1/2 - 1"	[12.7 - 25.4]	4/3300	[0.28/227.6]	-20/750	[-29/399]
266, 267	SS	SS	X		1/2 - 1"	[12.7 - 25.4]	4/3300	[0.28/227.6]	-20/750	[-29/399]
300, 600	CS	SS		X	1 1/4 - 6"	[31.75 - 152.4]	15/1000	[1.0/69]	-20/800	[-195/427]
330[5]	Aluminum	SS	X		1/4"	[6.35]	1000/5500	[69/379.3]	-20/185	[-29/85]
330S, 333S[5]	Aluminum	SS			1/4"	[6.35]	2000/6500	[138/448.3]	-20/185	[-29/85]
337	Iron	Bronze	X		2 - 3"	[50.8 - 76.2]	1/60	[0.07/4.14]	-20/406	[-29/208]
338	Aluminum	Brass	X		2"	[50.8]	5/30	[0.3/2.07]	-30/400	[-34/204]
363	Bronze	SS	X		1/2 - 3/4"	[12.7 - 19.05]	50/1000	[3.4/69]	-320/350	[-195/177]
389	SS	SS	X		1/2 - 3/4"	[12.7 - 19.05]	50/2500	[3.4/172.4]	-320/350	[-195/177]
541 (Buna disc), 542 (Viton® disc), 548 (SS disc)	Brass	Brass	X		1/4 - 1/2"	[6.35 - 12.7]	3/400	[0.21/27.6]	-20/400	[-29/204]
910, 916 (soft seat)[4]	CS	SS	X	O	1/2 - 2"	[12.7 - 50.8]	3/1400	[0.21/96.5]	-20/800	[-29/427]
911, 917 (soft seat)[4]	SS	SS	X	O	1/2 - 2"	[12.7 - 50.8]	3/1400	[0.21/96.5]	-320/800	[-195/427]
912, 918 (soft seat)[4]	Bronze	Brass	X		1/2 - 2"	[12.7 - 50.8]	3/300	[0.21/20.7]	-320/406	[-195/208]
913, 919 (soft seat)[4]	Bronze	SS	X		1/2 - 2"	[12.7 - 50.8]	3/1400	[0.21/96.5]	-320/425	[-195/219]
6010, 6121, 6182 6186, 6221, 6283[1]	Bronze	Brass	X		1/2 - 2 1/2"	[12.7 - 63.5]	3/250	[0.21/17.2]	-60/406	[-51/208]
6030, 6130, 6320	Bronze	SS	X		1/2 - 2 1/2"	[12.7 - 63.5]	3/300	[0.21/20.7]	-60/425	[-51/219]
6252	Iron	SS	X	X	1 1/2 - 6"	[38.1 - 152.4]	10/250	[0.69/17.2]	-20/406	[-29/208]

Air/Gas[2] (Non-code)

230 (Kynar® seat)	Aluminum	SS	X		1/4"	[6.35]	300/1500	[20.7/103.4]	-20/185	[-29/85]
803 (Kynar® seat)	Aluminum	SS	X		1/4"	[6.35]	1000/6000	[69/413.8]	-20/185	[-29/85]
818 (Teflon® seat)	CS	SS/Brass	X		2"	[50.8]	120/150	[8.3/10.3]	-20/300	[-29/150]

Air/Gas (Vacuum) in Hg [mm Hg]

215V	Iron	Bronze	X		2 - 3"	[50.8 - 76.2]	2/29	[50/736]	-20/406	[-29/208]
910, 916 (soft seat)[4]	CS	SS	X	O	1/2 - 2"	[12.7 - 50.8]	6/29	[152/736]	-20/800	[-29/427]
911, 917 (soft seat)[4]	SS	SS	X	O	1/2 - 2"	[12.7 - 50.8]	6/29	[152/736]	-320/800	[-195/427]
912, 918 (soft seat)[4]	Bronze	Brass	X		1/2 - 2"	[12.7 - 50.8]	6/29	[152/736]	-320/406	[-195/208]
913, 919 (soft seat)[4]	Bronze	SS	X		1/2 - 2"	[12.7 - 50.8]	6/29	[152/736]	-320/425	[-195/219]

X = Standard O = Optional

Notes

1. Soft seat available on some models.
2. See also Section VIII air valves for non-code air/gas applications.
3. Set pressures less than 15 psig [1.0 barg] are non-code only.
4. Temperature limits of soft seats determine operating limits of valve.
5. Kynar® or Urethane Seat.

Copyright © 2011 Tyco Flow Control. All rights reserved.

Valve Selection Guide

(For specific minimum/maximum temperature/pressure ranges refer to individual product sections.)

Model(s)	Material Body	Material Trim	Connections NPT	Connections FLGD	Inlet Size Range in	Inlet Size Range [mm]	Min/Max[1] Press. psig	Min/Max[1] Press. [barg]	Min/Max[2] Temp. °F	Min/Max[2] Temp. [°C]
Liquid (ASME Section IV - Hot Water Boilers)										
537 (soft seat)	Iron/Bronze		Brass	X	3/4 - 2"	[19.05 - 50.8]	15/160	[1.0/11]	-20/250	[-29/121]
Liquid (ASME Section VIII)										
910, 916 (soft seat)[2]	CS	SS	X	O	1/2 - 2"	[12.7 - 50.8]	3/1400	[0.21/96.5]	-20/800	[-29/427]
911, 917 (soft seat)[2]	SS	SS	X	O	1/2 - 2"	[12.7 - 50.8]	3/1400	[0.21/96.5]	-320/800	[-195/427]
912, 918 (soft seat)[2]	Bronze	Brass	X		1/2 - 2"	[12.7 - 50.8]	3/300	[0.21/20.7]	-320/406	[-195/208]
913, 919 (soft seat)[2]	Bronze	SS	X		1/2 - 2"	[12.7 - 50.8]	3/1400	[0.21/96.5]	-320/425	[-195/219]
Liquid (Non-code)										
19, 20	Bronze	Bronze	X	O	1/2 - 3"	[12.7 - 76.2]	1/300	[0.07/20.7]	-60/406	[-51/208]
19M, 20M	Bronze	SS	X	O	2 1/2 - 3"	[63.5 - 76.2]	1/500	[0.07/34.5]	-60/406	[-51/208]
71S	Iron	SS	X		1/2 - 2"	[12.7 - 50.8]	1/250	[0.07/17.2]	-20/406	[-29/208]
171, 171P	CS	SS	X		1/2 - 2"	[12.7 - 50.8]	1/400	[0.07/27.6]	-20/550	[-29/288]
171S	SS	SS	X		1/2 - 2"	[12.7 - 50.8]	1/400	[0.07/27.6]	-20/550	[-29/288]
91	Iron	Bronze	X	X	1 1/2 - 6"	[38.1 - 152.4]	5/400	[0.34/27.6]	-20/406	[-29/208]
218,228	Iron	Bronze	X		3, 4, and 6"	[76.2 - 152.4]	60/200	[4.1/13.8]	-20/406	[-29/208]
140	SS	SS	X		3/8 - 1/2"	[9.5 - 12.7]	10/300	[0.69/20.7]	-60/406	[-51/208]
264, 265	CS	SS	X		1/2 - 1"	[12.7 - 25.4]	4/3300	[0.28/227.6]	-20/750	[-29/399]
266, 267	SS	SS	X		1/2 - 1"	[12.7 - 25.4]	4/3300	[0.28/227.6]	-20/750	[-29/399]
910, 916 (soft seat)[2]	CS	SS	X	O	1/2 - 2"	[12.7 - 50.8]	3/1400	[0.21/96.5]	-20/800	[-29/427]
911, 917 (soft seat)[2]	SS	SS	X	O	1/2 - 2"	[12.7 - 50.8]	3/1400	[0.21/96.5]	-320/800	[-195/427]
912, 918 (soft seat)[2]	Bronze	Brass	X		1/2 - 2"	[12.7 - 50.8]	3/300	[0.21/20.7]	-320/406	[-195/208]
913, 919 (soft seat)[2]	Bronze	SS	X		1/2 - 2"	[12.7 - 50.8]	3/1400	[0.21/96.5]	-320/425	[-195/219]
Liquid - Underwriters Laboratories (UL) For Oil Services										
200A	Bronze	Brass	X		3/4 - 1 1/2"	[19.05 - 38.1]	1/200	[0.07/13.8]	-60/406	[-51/208]
200H	Bronze	SS	X	O	3/4 - 2"	[19.05 - 50.8]	1/200	[0.07/13.8]	-60/406	[-51/208]
Liquid - Underwriters Laboratories (UL) and Factory Mutual Research (FM) For Fire Pump Water Relief										
218, 228	Iron	Bronze	X	X	3, 4 and 6"	[76.2 - 152.4]	60/200	[4.1/13.8]	-20/406	[-29/208]
918 (soft seat)[2, 3]	Bronze	Brass	X		3/4 - 1"	[19.05 - 25.4]	60/250	[4.1/17.2]	-20/406	[-29/208]
Other - Drip Pan Elbow										
299	Iron	N/A	X	X	2 - 8"	[50.80 - 203.2]	N/A	N/A	-20/406	[-29/208]

X = Standard O = Optional

Notes

1. Set pressures below 15 psig [1.0 barg] are non-code only.
2. Temperature limits of soft seats determine operating limits of valve.
3. FM Approved only.

Copyright © 2011 Tyco Flow Control. All rights reserved.

Valve Sizing

After the required relieving capacity has been determined, the pressure relief valve may be sized by using the capacity charts that are included in each model's catalog sheet. The capacities given in those charts may be adjusted for special conditions such as fluid density and temperature by using the correction factors given in Tables B through D (pages 18-20). Valves may also be sized by performing sizing calculations per the formulas (pages 15 and 16) in this section.

Most Kunkle valves may be sized by using the "Coefficient Method" (listed below). These valves typically are high lift valves where the nozzle bore is the flow controlling orifice. This calculation method involves selecting the valve model and corresponding flow coefficient and orifice area from Table A (page 16) and then using the capacity formula (page 14) for the service in which the valve will function.

Kunkle Models 30, 541, 542, and 548 use the "Slope Method" for sizing calculations. These valves are typically low lift valves, where the annular orifice between the disc and the nozzle seat is the flow controlling orifice. These models are characterized by having a linear increase in capacity with respect to inlet pressure. The "slope" defines this direct relationship of inlet pressure to capacity. Consult your sales representative for sizing assistance.

Kunkle Models 1, 2, 19, 20, 200, 71S, 171, 171S, 91, 218, 228, and 140 use the "KA Method" for sizing calculations. This method is similar to the slope method, in that it is used for low lift valves and is empirically derived. The major difference is that the relationship between inlet pressure and capacity is not linear. These valves are characterized by having low lift that varies with inlet pressure, which makes the flow controlling orifice area indeterminate. Consult your sales representative for sizing assistance.

IV-A Coefficient Method

Follow these steps for calculating what orifice size is necessary to flow the required capacity:

1. Select the Model Family that you are interested in from the Valve Selection Guide (pages 10-13).
2. From Table A (page 17), record the Flow Coefficient (K_d) corresponding to the service in which the valve will operate.
3. Select the proper formula(s) for the service in which the valve will operate. Calculate the minimum required orifice area.
4. Select the Orifice/Size Designation from Table A (page 17) that has a Flow Area closest to, but not less than the minimum required orifice area calculated in step 3.

Copyright © 2011 Tyco Flow Control. All rights reserved.

Valve Sizing

U.S. Units | **Metric Units**

Steam - Sections I, IV and VIII (15 psig and above)

$$A = \frac{W}{51.5\ K_d\ P_1\ K_{sh}}$$

$$A = \frac{W}{52.5\ K_d\ P_1\ K_{sh}}$$

Steam - Non Code (less than 15 psig)

$$A = \frac{W}{735\ F_2\ K_d}\sqrt{\frac{TZ}{M\ P_1\ (P_1 - P_2)}}$$

$$A = \frac{W}{558\ F_2\ K_d}\sqrt{\frac{TZ}{M\ P_1\ (P_1 - P_2)}}$$

Air - Section VIII (15 psig and above)

$$A = \frac{V\sqrt{MTZ}}{6.32\ C\ K_d\ P_1}$$

Volumetric Flow

$$A = \frac{V\sqrt{MTZ}}{17.02\ C\ K_d\ P_1}$$

Volumetric Flow

$$A = \frac{W}{C\ K_d\ P_1}\sqrt{\frac{TZ}{M}}$$

Mass Flow

$$A = \frac{1.316W}{C\ K_d\ P_1}\sqrt{\frac{TZ}{M}}$$

Mass Flow

Air - Non-Code (less than 15 psig)

$$A = \frac{V}{4645.2\ F_2\ K_d}\sqrt{\frac{MTZ}{P_1\ (P_1 - P_2)}}$$

$$A = \frac{V}{12503\ F_2\ K_d}\sqrt{\frac{MTZ}{P_1\ (P_1 - P_2)}}$$

Liquid - Section VIII (15 psig and above)

$$A = \frac{Q}{38\ K_d}\sqrt{\frac{G}{(1.1\ p_1 - p_2)}}$$

$$A = \frac{Q}{5.094\ K_d}\sqrt{\frac{G}{(1.1\ p_1 - p_2)}}$$

Liquid - Non-Code

$$A = \frac{Q}{38\ K_d}\sqrt{\frac{G}{(1.25\ p_1 - p_2)}}$$

$$A = \frac{Q}{5.094\ K_d}\sqrt{\frac{G}{(1.25\ p_1 - p_2)}}$$

F_2 - Coefficient of Subcritical Flow

$$F_2 = \sqrt{\left(\frac{k}{k-1}\right)\left(r\right)^{2/k}\left[\frac{1 - r^{(k-1)/k}}{1 - r}\right]}$$

Note

1. Consult your sales representative for sizing assistance for product groups: Fig. 1 and 2; Fig. 19, 20, 200; Fig. 30; Fig. 71S, 171, 171S; Fig. 91, 218, 228; Fig. 140; and Fig. 541, 542 and 548.

Copyright © 2011 Tyco Flow Control. All rights reserved.

Valve Sizing

Sizing Coefficient Method

A = Required effective discharge area of the valve, in^2 [cm^2]

W = Mass Flow Rate, lb/hr [kg/hr]

V = Volumetric Flow Rate (gases, vapors) in SCFM [Nm^3/hr] at standard atmospheric conditions of 14.7 psia and 60°F [1.013 bara/0°C]

Q = Volumetric Flow Rate (liquids) in GPM [m^3/hr] at standard atmospheric conditions of 14.7 psia and 70°F [1.013 bara/21°C]

K_d = ASME Flow Coefficient of Discharge

P_1 = See chart below

P_2 = Atmospheric Pressure = 14.7 psia

p_1 = Set Pressure (psig)

p_2 = Back Pressure (psig)

F_2 = Coefficient of Subcritical Flow

k = Ratio of Specific Heat - 1.31 for Steam, 1.4 for Air

r = Ratio of Back Pressure to Upstream Relieving Pressure = P_2/P_1

M = Molecular Weight of Process Medium

T = Relieving Temperature, °R = °F + 460 [°K = °C + 273]

Z = Compressibility Factor (assume Z = 1 if unknown)

C = Gas Constant based on k (if unknown, use C = 315)

G = Specific Gravity of process fluid at 70°F [21°C]

K_{sh} = Superheat Steam Correction Factor

Allowable Overpressure

Designation	Section	Definition
P_1	Section I Steam (15 psig and above)	Set pressure + 3% or 2 psi overpressure (whichever is greater) + 14.7 psia
P_1	Section IV Steam (15 psig and above)	Set pressure + 5 psi overpressure + 14.7 psia for Low Pressure Steam Boilers
P_1	Section IV Hot Water (15 psig and above)	Set pressure + 10% overpressure + 14.7 psia for Hot Water Boilers
P_1	Non-Code Steam (below 15 psig)	Set pressure + 10% overpressure + 14.7 psia
P_1	Section VIII Steam (15 psig and above)	Set pressure + 10% or 3 psi overpressure (whichever is greater) + 14.7 psia
P_1	Non-Code Air (below 15 psig)	Set pressure + 10% overpressure + 14.7 psia
P_1	Section VIII Air (15 psig and above)	Set pressure + 10% or 3 psi overpressure (whichever is greater) + 14.7 psia
P_1	Non-Code Liquid (below 15 psig)	Set pressure (psig)
P_1	Section VIII Liquid (15 psig and above)	Set pressure (psig)

Copyright © 2011 Tyco Flow Control. All rights reserved.

Valve Sizing

Table A

Model Family	Orifice/Size Designation	Flow Area in²	Flow Area [cm²]	Flow Coefficient (K_d) Non-Code and ASME Section VIII Air/Gas and Steam	ASME Section I Steam	ASME Section IV Steam	Non-Code and ASME Section VIII Liquid
189	C	0.034	[0.219]	0.874			
	D	0.034	[0.219]	0.874			
264	C	0.110	[0.710]	0.766			0.408
	D	0.110	[0.710]	0.766			0.408
	E	0.110	[0.710]	0.766			0.408
337	H	1.838	[11.858]	0.860			
	J	2.786	[17.974]	0.860			
	K	4.037	[26.045]	0.860			
537	D	0.533	[3.439]			0.806	
	E	0.833	[5.374]			0.806	
	G	1.767	[11.400]			0.806	
	H	3.142	[20.271]			0.806	
910	D	0.121	[0.781]	0.878	0.878		0.710
	E	0.216	[1.394]	0.878	0.878		0.710
	F	0.337	[2.174]	0.878	0.878		0.710
	G	0.553	[3.568]	0.878	0.878		0.710
	H	0.864	[5.574]	0.878	0.878		0.710
	J	1.415	[9.129]	0.878	0.878		0.710
930	H	5.080	[32.774]			0.818	
	J	6.350	[40.968]			0.818	
	K	7.620	[49.161]			0.818	
6010	D	0.121	[0.781]	0.878	0.878	0.878	
	E	0.216	[1.394]	0.878	0.878	0.878	
	F	0.337	[2.174]	0.878	0.878	0.878	
	G	0.553	[3.568]	0.878	0.878	0.878	
	H	0.864	[5.574]	0.878	0.878	0.878	
	J	1.415	[9.129]	0.878	0.878	0.878	
6252	J	1.414	[9.123]	0.878	0.878	0.878	
	K	2.022	[13.045]	0.878	0.878	0.878	
	L	3.138	[20.245]	0.878	0.878	0.878	
	M	3.960	[25.548]	0.878	0.878	0.878	
	N	4.774	[30.800]	0.878	0.878	0.878	
	P	7.018	[45.277]	0.878	0.878	0.878	
	Q	12.155	[78.419]	0.878	0.878	0.878	
	R	17.600	[113.548]	0.878	0.878	0.878	

Copyright © 2011 Tyco Flow Control. All rights reserved.

Valve Sizing

Table B - Steam Super Heat Correction Factor, K_{sh}

Set Pressure psig	[barg]	Saturated Steam Temp. °F	[°C]	Total Steam Temperature °F [°C] 280 [138]	300 [149]	320 [160]	340 [171]	360 [182]	380 [193]	400 [205]	420 [216]	440 [227]	460 [238]	480 [249]	500 [260]	520 [271]	540 [282]	560 [293]
15	[1.03]	250	[121]	1.00	1.00	1.00	.99	.99	.98	.98	.97	.96	.95	.94	.93	.92	.91	.90
20	[1.38]	259	[126]	1.00	1.00	1.00	.99	.99	.98	.98	.97	.96	.95	.94	.93	.92	.91	.90
40	[2.76]	287	[142]		1.00	1.00	1.00	.99	.99	.98	.97	.96	.95	.94	.93	.92	.91	.90
60	[4.14]	308	[153]			1.00	1.00	.99	.99	.98	.97	.96	.95	.94	.93	.92	.91	.90
80	[5.52]	324	[162]				1.00	1.00	.99	.99	.98	.97	.96	.94	.93	.92	.91	.90
100	[6.90]	338	[170]					1.00	1.00	.99	.98	.97	.96	.95	.94	.93	.92	.91
120	[8.27]	350	[177]					1.00	1.00	.99	.98	.97	.96	.95	.94	.93	.92	.91
140	[9.65]	361	[183]						1.00	1.00	.99	.98	.96	.95	.94	.93	.92	.91
160	[11.0]	371	[188]						1.00	1.00	.99	.98	.97	.95	.94	.93	.92	.91
180	[12.4]	380	[193]							1.00	.99	.98	.97	.96	.95	.93	.92	.91
200	[13.8]	388	[198]							1.00	.99	.99	.97	.96	.95	.93	.92	.91
220	[15.2]	395	[202]							1.00	1.00	.9	.98	.96	.95	.94	.93	.92
240	[16.6]	403	[206]								1.00	.99	.98	.97	.95	.94	.93	.92
260	[17.9]	409	[210]								1.00	.99	.98	.97	.96	.94	.93	.92
280	[19.3]	416	[213]								1.00	1.00	.98	.97	.96	.95	.93	.92
300	[20.7]	422	[217]									1.00	.99	.98	.96	.95	.93	.92
350	[24.1]	436	[225]									1.00	1.00	.99	.96	.96	.94	.93
400	[27.6]	448	[231]										1.00	.99	.96	.96	.95	.93
450	[31.0]	460	[238]											1.00	.96	.96	.96	.94
500	[34.5]	470	[243]											1.00	.96	.96	.96	.94
550	[37.9]	480	[249]												.97	.97	.97	.95
600	[41.4]	489	[254]												.97	.97	.97	.97
650	[44.8]	497	[258]													1.00	.99	.97
700	[48.3]	506	[263]													1.00	.99	.97
750	[51.7]	513	[267]													1.00	1.00	.98
800	[55.2]	520	[271]														1.00	.99
850	[58.6]	527	[275]														1.00	.99
900	[62.1]	533	[278]														1.00	1.00
950	[65.5]	540	[282]															1.00
1000	[69.0]	546	[286]															1.00
1050	[72.4]	552	[289]															1.00
1100	[75.9]	558	[292]															
1150	[79.3]	563	[295]															
1200	[82.7]	569	[298]															

Note

Revised capacity for "Super Heat Steam:" multiply capacity of Valve x Factor noted above.

Copyright © 2011 Tyco Flow Control. All rights reserved.

Valve Sizing

Table B - Steam Super Heat Correction Factor, K_{sh}

Set Pressure psig	[barg]	Saturated Steam Temp. °F	[°C]	Total Steam Temperature °F [°C] 580 [305]	600 [316]	620 [326]	640 [338]	660 [349]	680 [360]	700 [371]	720 [382]	740 [393]	760 [405]	780 [416]	800 [427]	900 [482]	1000 [537]	1100 [593]
15	[1.03]	250	[121]	.89	.88	.87	.86	.86	.85	.84	.83	.83	.82	.81	.81	.78	.75	.72
20	[1.38]	259	[126]	.89	.88	.87	.86	.86	.85	.84	.83	.83	.82	.81	.81	.78	.75	.72
40	[2.40]	287	[142]	.89	.88	.87	.87	.86	.85	.84	.84	.83	.82	.82	.81	.78	.75	.72
60	[4.14]	308	[153]	.89	.88	.87	.87	.86	.85	.84	.84	.83	.82	.82	.81	.78	.75	.72
80	[5.52]	324	[162]	.89	.89	.88	.87	.86	.85	.84	.84	.83	.82	.82	.81	.78	.75	.72
100	[6.90]	338	[170]	.90	.89	.88	.87	.86	.85	.85	.84	.83	.82	.82	.81	.78	.75	.72
120	[8.27]	350	[177]	.90	.89	.88	.87	.86	.85	.85	.84	.83	.82	.82	.81	.78	.75	.72
140	[9.65]	361	[183]	.90	.89	.88	.87	.86	.85	.85	.84	.83	.82	.82	.81	.78	.75	.72
160	[11.0]	371	[188]	.90	.89	.88	.87	.86	.86	.85	.84	.83	.82	.82	.81	.78	.75	.72
180	[12.4]	380	[193]	.90	.89	.88	.87	.86	.86	.85	.84	.83	.82	.82	.81	.78	.75	.72
200	[13.8]	388	[198]	.90	.89	.88	.87	.86	.86	.85	.84	.83	.83	.82	.81	.78	.75	.72
220	[15.2]	395	[201]	.91	.90	.89	.88	.87	.86	.85	.84	.8	.83	.82	.81	.78	.75	.72
240	[16.6]	403	[206]	.91	.90	.89	.88	.87	.86	.85	.84	.84	.83	.82	.81	.78	.75	.72
260	[17.9]	409	[209]	.91	.90	.89	.88	.87	.86	.85	.85	.84	.83	.82	.81	.78	.75	.72
280	[19.3]	416	[213]	.91	.90	.91	.88	.87	.86	.85	.85	.84	.83	.82	.82	.78	.75	.72
300	[20.7]	422	[217]	.91	.90	.89	.88	.87	.86	.86	.85	.84	.83	.82	.82	.78	.75	.72
350	[24.1]	436	[224]	.92	.91	.90	.89	.88	.87	.86	.85	.84	.83	.83	.82	.78	.76	.72
400	[27.6]	448	[231]	.92	.91	.90	.89	.88	.87	.86	.85	.84	.84	.83	.82	.79	.76	.72
450	[31.0]	460	[238]	.93	.92	.91	.89	.88	.87	.86	.86	.85	.84	.83	.82	.79	.76	.72
500	[34.5]	470	[243]	.93	.92	.91	.90	.89	.88	.87	.86	.85	.84	.83	.82	.79	.76	.73
550	[37.9]	480	[249]	.94	.92	.91	.90	.89	.88	.87	.86	.85	.84	.83	.82	.79	.76	.73
600	[41.4]	489	[254]	.94	.93	.92	.90	.89	.88	.87	.86	.85	.84	.84	.83	.79	.76	.73
650	[44.8]	497	[258]	.95	.94	.92	.91	.90	.89	.87	.86	.86	.85	.84	.83	.79	.76	.73
700	[48.3]	506	[263]	.96	.94	.93	.91	.90	.89	.88	.87	.86	.85	.84	.83	.79	.76	.73
750	[51.7]	513	[267]	.96	.95	.93	.92	.90	.89	.88	.87	.86	.85	.84	.83	.79	.76	.73
800	[55.2]	520	[271]	.97	.95	.94	.92	.91	.90	.88	.87	.86	.85	.84	.84	.80	.76	.73
850	[58.6]	527	[275]	.98	.96	.94	.93	.92	.90	.89	.88	.87	.86	.85	.84	.80	.76	.73
900	[62.1]	533	[278]	.99	.97	.95	.93	.92	.90	.89	.88	.87	.86	.85	.84	.80	.77	.73
950	[65.5]	540	[282]	.99	.97	.95	.94	.92	.91	.89	.88	.87	.86	.85	.84	.80	.77	.73
1000	[69.0]	546	[286]	.99	.98	.96	.94	.93	.91	.90	.89	.87	.86	.85	.84	.80	.77	.73
1050	[72.4]	552	[289]	1.00	.99	.97	.95	.93	.92	.90	.89	.88	.87	.86	.85	.80	.77	.73
1100	[75.9]	558	[292]	1.00	.99	.98	.95	.94	.92	.91	.89	.88	.87	.86	.85	.81	.77	.73
1150	[79.3]	563	[295]	1.00	.99	.98	.96	.94	.92	.91	.90	.88	.87	.86	.85	.81	.77	.73
1200	[82.7]	569	[298]	1.00	.99	.98	.97	.95	.93	.91	.90	.89	.87	.86	.85	.81	.77	.73

Note

Revised capacity for "Super Heat Steam:" multiply capacity of Valve x Factor noted above.

Copyright © 2011 Tyco Flow Control. All rights reserved.

Valve Sizing

Table C - Air and Gas Temperature Correction Factors

Temperature °F	Tc	Temperature °F	Tc	Temperature °F	Tc	Temperature °F	Tc
0	1.062	90	0.972	260	0.849	440	0.760
10	1.051	100	0.964	280	0.838	460	0.752
20	1.041	120	0.947	300	0.828	480	0.744
30	1.030	140	0.931	320	0.817	500	0.737
40	1.020	160	0.916	340	0.806	550	0.718
50	1.009	180	0.902	360	0.796	600	0.701
60	1.000	200	0.888	380	0.787	650	0.685
70	0.991	220	0.874	400	0.778	700	0.669
80	0.981	240	0.862	420	0.769	750	0.656

For temperatures other than 60°F at valve inlet, multiply standard SCFM by Tc.

Table D - Gas and Liquid Relative Density Correction Factors

Specific Gravity	Dc	Specific Gravity	Dc	Specific Gravity	Dc	Specific Gravity	Dc
0.07	3.770	0.60	1.290	1.05	0.975	1.70	0.768
0.08	3.530	0.65	1.240	1.10	0.955	1.80	0.745
0.09	3.333	0.70	1.195	1.15	0.933	1.90	0.725
0.10	3.160	0.75	1.155	1.20	0.913	2.00	0.707
0.20	2.240	0.80	1.117	1.25	0.895	2.50	0.633
0.30	1.825	0.85	1.085	1.30	0.877	3.00	0.577
0.40	1.580	0.90	1.055	1.40	0.845	3.50	0.535
0.50	1.414	0.95	1.025	1.50	0.817	4.00	0.500
0.55	1.350	1.00	1.000	1.60	0.791	4.50	0.471

For a specific gravity other than air or water (=1.0), multiply CFM or GPM by Dc.

Copyright © 2011 Tyco Flow Control. All rights reserved.

Valve Sizing

Physical Properties

Gas or Vapor	M Molecular Weight	k Specific Heat Ratio	C Gas Constant
Acetone	58.08	1.12	329
Acetylene (Ethyne)	26.04	1.26	343
Air	28.97	1.40	356
Ammonia, Anhydrous	17.03	1.31	348
Argon	39.95	1.67	378
Benzene (Benzol or Benzole)	78.11	1.12	329
Boron Trifluoride	67.82	1.20	337
Butadiene-1,3 (Divinyl)	54.09	1.12	329
Butane-n (Normal Butane)	58.12	1.09	326
Butylene (1-Butene)	56.11	1.11	328
Carbon Dioxide	44.01	1.29	346
Carbon Disulfide (C. Bisulfide)	76.13	1.21	33
Carbon Monoxide	28.01	1.40	356
Carbon Tetrachloride	153.82	1.11	328
Chlorine	70.91	1.36	353
Chloromethane (Methyl Chloride)	50.49	1.28	345
Cyclohexane	84.16	1.09	326
Cyclopropane (Trimethylene)	42.08	1.11	328
Decane-n	142.29	1.04	320
Diethylene Glycol (DEG)	106.17	1.07	323
Dimethyl Ether (Methyl Ether)	46.07	1.11	328
Dowtherm A	165.00	1.05	321
Dowtherm E	147.00	1.00	315
Ethane	30.07	1.19	336
Ethyl Alcohol (Ethanol)	46.07	1.13	330
Ethylene (Ethene)	28.05	1.24	341
Ethylene Glycol	62.07	1.09	326
Ethylene Oxide	44.05	1.21	338
Fluorocarbons:			
12, Dichlorodifluoromethane	120.93	1.14	331
13, Chlorotrifluoromethane	104.47	1.17	334
13B1, Bromotrifluoromethane	148.93	1.14	331
22, Chlorodifluoromethane	86.48	1.18	335
115, Chloropentafluoroethane	154.48	1.08	324
Glycerine (Glycerin or Glycerol)	92.10	1.06	322
Helium	4.00	1.67	378
Heptane	100.21	1.05	321

Copyright © 2011 Tyco Flow Control. All rights reserved.

Valve Sizing

Physical Properties

Gas or Vapor	M Molecular Weight	k Specific Heat Ratio	C Gas Constant
Hexane	86.18	1.06	322
Hydrogen	2.02	1.41	357
Hydrogen Chloride, Anhydrous	36.46	1.41	357
Hydrogen Sulfide	34.08	1.32	349
Isobutane (2-Methylpropane)	58.12	1.10	327
Isoprene (2-Methyl-1, 3 Butadiene)	68.12	1.09	326
Isopropyl Alcohol (Isopropanol)	60.10	1.09	326
Krypton	83.80	1.71	380
Methane	16.04	1.31	348
Methyl Alcohol (Methanol)	32.04	1.20	337
Methylamines, Anhydrous			
Monomethylamine (Methylamine)	31.06	1.02	317
Dimethylamine	45.08	1.15	332
Trimethylamine	59.11	1.18	335
Methyl Mercapton (Methanethiol)	48.11	1.20	337
Naphthalene (Napthaline)	128.17	1.07	323
Natural Gas (specific gravity = 0.60)	17.40	1.27	344
Neon	20.18	1.64	375
Nitrogen	28.01	1.40	356
Nitrous Oxide	44.01	1.30	347
Octane	114.23	1.05	321
Oxygen	32.00	1.40	356
Pentane	72.15	1.07	323
Propadiene (Allene)	40.07	1.69	379
Propane	44.10	1.13	330
Propylene (Propene)	42.08	1.15	332
Propylene Oxide	58.08	1.13	330
Styrene	104.15	1.07	323
Sulfur Dioxide	64.06	1.28	345
Sulfur Hexafluoride	146.05	1.09	326
Steam	18.02	1.31	348
Toluene (Toluol or Methylbenzene)	92.14	1.09	326
Triethylene Glycol (TEG)	150.18	1.04	320
Vinyl Chloride Monomer (VCM)	62.50	1.19	336
Xenon	131.30	1.65	376
Xylene (p-Xylene)	106.17	1.07	323

Copyright © 2011 Tyco Flow Control. All rights reserved.

Valve Sizing

Physical Properties

Liquid	G Specific Gravity Water = 1	°F	°C
Acetaldehyde	0.779	68	20
Acetic Acid	1.051	68	20
Acetone	0.792	68	20
Ammonia, Anhydrous	0.666	68	20
Automotive Crankcase and Gear Oils:			
SAE-5W Through SAE 150	0.88-0.94	60	15.6
Beer	1.01	60	15.6
Benzene (Benzol)	0.880	68	20
Boron Trifluoride	1.57	-148	-100
Butadiene - 1, 3	0.622	68	20
Butane-n (Normal Butane)	0.579	68	20
Butylene (1-Butene)	0.600	68	20
Carbon Dioxide	1.03	-4	-20
Carbon Disulfide (C. Bisulfide)	1.27	68	20
Carbon Tetrachloride	1.60	68	20
Chlorine	1.42	68	20
Chloromethane (Methyl Chloride)	0.921	68	20
Crude Oils:			
32.6 Deg API	0.862	60	15.6
35.6 Deg API	0.847	60	15.6
40 Deg API	0.825	60	15.6
48 Deg API	0.79	60	15.6
Cyclohexane	0.780	68	20
Cyclopropane (Trimethylene)	0.621	68	20
Decane-n	0.731	68	20
Diesel Fuel Oils	0.82-0.95	60	15.6
Diethylene Glycol (DEG)	1.12	68	20
Dimethyl Ether (Methyl Ether)	0.663	68	20
Dowtherm A	0.998	68	20
Dowtherm E	1.087	68	20
Ethane	0.336	68	20
Ethyl Alcohol (Ethanol)	0.79	68	20
Ethylene (Ethene)	0.569	-155	-104
Ethylene Glycol	1.115	68	20
Ethylene Oxide	0.901	68	20

Copyright © 2011 Tyco Flow Control. All rights reserved.

Valve Sizing

Physical Properties

Liquid	G Specific Gravity Water = 1	°F	°C
Fluorocarbons:			
R12, Dichlorodifluoromethane	1.34	68	20
R13, Chlorotrifluoromethane	0.916	68	20
R13B1, Bromotrifluoromethane	1.58	68	20
R22, Chlorodifluoromethane	1.21	68	20
R115, Chloropentafluoromethane	1.31	68	20
Fuel Oils, Nos. 1, 2, 3, 5 and 6	0.82-0.95	60	15.6
Gasolines	0.68-0.74	60	15.6
Glycerine (Glycerin or Glycerol)	1.26	68	20
Heptane	0.685	68	20
Hexane	0.660	68	20
Hydrochloric Acid	1.64	60	15.6
Hydrogen Sulfide	0.78	68	20
Isobutane (2-Methylpropane)	0.558	68	20
Isoprene (2-Methyl - 1, 3-Butadiene)	0.682	68	20
Isopropyl Alcohol (Isopropanol)	0.786	68	20
Jet Fuel (average)	0.82	60	15.6
Kerosene	0.78-0.82	60	15.6
Methyl Alcohol (Methanol)	0.792	68	20
Methylamines, Anhydrous:			
Monomethylamine (Methylamine)	0.663	68	20
Dimethylamine	0.656	68	20
Trimethylamine	0.634	68	20
Methyl Mercapton (Methanethiol)	0.870	68	20
Nitric Acid	1.50	60	15.6
Nitrous Oxide	1.23	-127	-88.5
Octane	0.703	68	20
Pentane	0.627	68	20
Propadiene (Allene)	0.659	-30	-34.4
Propane	0.501	68	20
Propylene (Propene)	0.514	68	20
Propylene Oxide	0.830	68	20
Styrene	0.908	68	20
Sulfur Dioxide	1.43	68	20

Copyright © 2011 Tyco Flow Control. All rights reserved.

Valve Sizing

Physical Properties

Liquid	G Specific Gravity Water = 1	°F	°C
Sulfur Hexafluoride	1.37	68	20
Sulfuric Acid:			
95–100%	1.839	68	20
60%	1.50	68	20
20%	1.14	68	20
Toluene (Toluol or Methylbenzene)	0.868	68	20
Triethylene Glycol (TEG)	1.126	68	20
Vinyl Chloride Monomer (VCM)	0.985	-4	-20
Water, fresh	1.00	68	20
Water, sea	1.03	68	20
Xylene (p-Xylene)	0.862	68	20

Sizing - Determining K_v and K_w

U.S. Units

$$R = \frac{V_L\,(2{,}800\ G)}{\mu\sqrt{A}}$$

or

$$R = \frac{12{,}700\ V_L}{U\sqrt{A}}$$

Metric Units

$$R = \frac{31{,}313\ V_L\ G}{\mu\sqrt{A}}$$

Determining K_v

V_L = Flow rate at the flowing temperature, in U.S. gpm [m³/hr]

V_L = Flow rate at the flowing temperature, in U.S. gpm [m³/hr]

G = Specific gravity of liquid at flowing temperature referred to water = 1.00 at 70°F [21°C]

μ = Absolute viscosity at the flowing temperature, in centipoises

A = Effective discharge area, in square inches [cm²] (from manufacturer's standard orifice areas)

U = Viscosity at the flowing temperature, in Saybolt Universal seconds

After the value of R is determined, the factor K_V is obtained from the graph. Factor K_V is applied to correct the "preliminary required discharge area." If the corrected area exceeds the "chosen standard orifice area," the calculations should be repeated using the next larger standard orifice size.

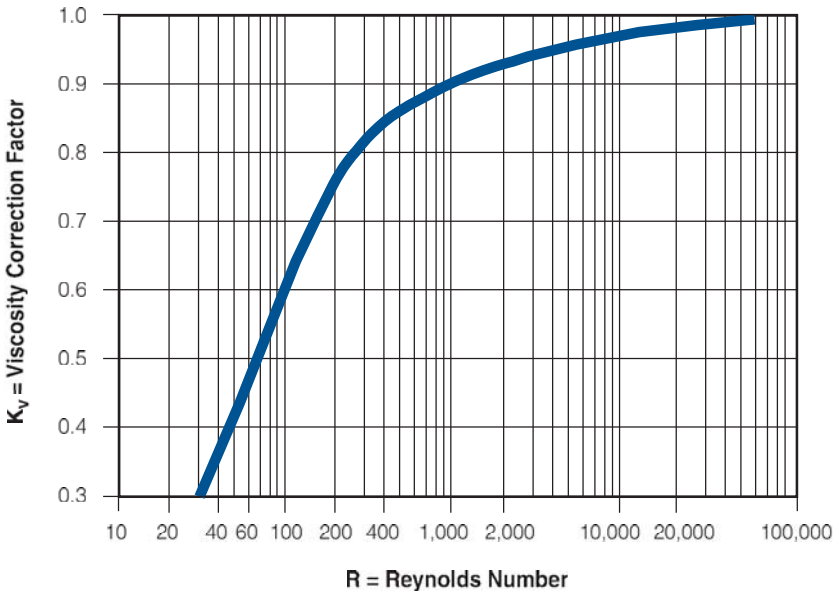

Copyright © 2011 Tyco Flow Control. All rights reserved.

Conversion Factors

Absolute Viscosity

Given	To find desired value, multiply "Given" value by factor below			
	poise	Centipoise	$\frac{gm}{cm-sec}$	$\frac{lb}{ft-sec}$
poise	—	100	1	0.0672
centipoise	0.01	—	0.01	0.000672
$\frac{gm}{cm-sec}$	1	100	—	0.0672
$\frac{lb}{ft-sec}$	14.88	1488	14.88	—

Notes

1. Kinematic viscosity x specific gravity = absolute viscosity.
2. Centistokes x specific gravity = centipoise.
3. Saybolt Second Universal (SSU) x 0.216 x specific gravity = centipoise.

Kinematic Viscosity

Given	To find desired value, multiply "Given" value by factor below			
	stoke	Centistoke	$\frac{cm^2}{sec}$	$\frac{ft^2}{sec}$
stoke	—	100	1	0.001076
centistoke	0.01	—	0.01	1.076 x 10-5
$\frac{cm2}{sec}$	1	100	—	0.001076
$\frac{ft2}{sec}$	929.0	92900	929.0	—

Liquid Flow Conversions

Given	To find desired value, multiply "Given" value by factor below				
	l/hr	gpm - US	gpm - Imp	barrels/day	m^3/hr
l/hr (litres/hour)	—	0.00440	0.003666	0.1510	0.0010
gpm (US gallons per minute)	227.1	—	0.8327	34.29	0.2271
gpm (Imperial gallons per minute)	272.8	1.201	—	41.18	0.2728
barrels/day (petroleum - 42 US gallons)	6.624	0.02917	0.02429	—	0.006624
$m^3$3/hr (cubic meters per hour)	1000	4.403	3.666	151.0	—
m^3/s (cubic meters per second)	3.6×10^6	0.02917	0.02429	—	0.006624
kg/hr (kilograms per hour)	$\frac{1}{G}$	$\frac{1}{227.1G}$	$\frac{1}{272.8G}$	$\frac{0.151}{G}$	$\frac{1}{1000G}$
lb/hr (pounds per hour)	$\frac{1}{2.205G}$	$\frac{1}{500.8G}$	$\frac{1}{601.5G}$	$\frac{1}{14.61G}$	$\frac{1}{2205G}$

Note

1. G = Specific gravity of liquid at its relieving temperature compared to that of water at 68°F [20°C], where $G_{water} = 1.00$.

Copyright © 2011 Tyco Flow Control. All rights reserved.

Conversion Factors

Notes

1. M = Molecular weight of vapor or gas.
2. Volumetric flow (per time unit of hour or minute as shown) in standard cubic feet per minute at 14.7 psia [1.013 bara], 60°F [16°C].
3. Weight flow in pounds per hour.
4. Weight flow in kilograms per hour.
5. Volumetric flow (per time unit of hour or minute as shown) at 1.013 bara 32°F [0°C]. This represents the commercial standard, known as the Normal Temperature and Pressure (NTP).

   Conversions from one volumetric flow rate to another or to weight flow (and vice versa) may only be done when the volumetric flow is expressed in the standard conditions shown above. If flows are expressed at temperature or pressure bases that differ from those listed above, they must first be converted to the standard base.

Gas Flow Conversions

Given	To find desired value, multiply "Given" value by factor below					
	SCFM	SCFH	lb/hr	[kg/hr]	[Nm³/hr]	[Nm³/min]
scfm[2]	—	60	$\frac{M}{6.32}$	$\frac{M}{13.93}$	1.608	0.0268
scfh[2]	0.01677	—	$\frac{M}{379.2}$	$\frac{M}{836.1}$	0.0268	0.000447
lb/hr[3] or #/hr[3]	$\frac{6.32}{M}$	$\frac{379.2}{M}$	—	0.4536	$\frac{10.17}{M}$	$\frac{0.1695}{M}$
kg/hr[4]	$\frac{13.93}{M}$	$\frac{836.1}{M}$	2.205	—	$\frac{22.40}{M}$	$\frac{0.3733}{M}$
Nm³/hr[5]	0.6216	37.30	$\frac{M}{10.17}$	$\frac{M}{22.40}$	—	0.01667
Nm³/min[5]	37.30	2238	5.901 M	2.676 M	60	—

If flow is expressed in actual volume, such as cfm (cubic feet per minute) or acfm (actual cfm) as is often done for compressors, where the flow is described as displacement or swept volume, the flow may be converted to scfm as follows (or from flow expressed in m³/hr to Nm³/hr).

Inch-Pound Units

$$SCFM = \left(\begin{matrix}cfm \\ or \\ acfm\end{matrix}\right) x \frac{14.7 + p}{14.7} \times \frac{520}{460 + t}$$

Where:

p = gauge pressure of gas or vapor in psig

t = temperature of gas or vapor in °F

Metric Units

$$Nm^3/hr = m^3hr = x \frac{1.013 + p}{1.013} \times \frac{273}{273 + t}$$

Where:

p = gauge pressure of gas or vapor in barg

t = temperature of gas or vapor in °C

Notes

1. Also expressed as kp/cm² and kgf/cm².
2. Normal Temperature and Pressure (NTP) Conditions are, at sea level, equal to 1.013 bara or 1.033 kg/cm² (kilograms force per square centimeter absolute) at a base temperature of 32°F [0°C]. This differs slightly from Metric Standard Conditions (MSC), which uses 1.013 bara 60°F [15°C] for the base temperature.
3. Inch-Pound Standard Conditions are, at sea level, equal to 14.7 psia (pounds force per square inch absolute), rounded up from 14.696 psia, and at a base temperature of 60°F [16°C].

Pressure Conversion

Given	To find desired value, multiply "Given" value by factor below			
	kPa	psig	kg/cm²	barg
kPa (kilopascal)	—	0.1450	0.0102	0.0100
psig (pounds/in²)[3]	6.895	—	0.0703	0.06895
kg/cm²[1][1](kilograms/cm²)	98.07	14.22	—	0.9807
barg	100.00	14.50	1.020	—

Area Conversion

Given	To find desired value, multiply "Given" value by factor below			
	in²	ft²	mm²	cm²
in²	—	0.006944	645.16	6.4516
cm²	0.155	1.076×10^{-3}	100	—
ft²	144	—	92900	929
mm²	0.00155	1.076×10^{-5}	—	0.01

Temperature Conversion

Degrees Celsius (°C)	Degrees Fahrenheit (°F)
C + 273.15 = K (Kelvin)	F + 459.67 = R (Rankine)
(C x 1.8) + 32 = F (Fahrenheit)	(F - 32) x 0.556 = C (Celsius)

Copyright © 2011 Tyco Flow Control. All rights reserved.

Installation

1. Before installing a new safety/relief valve, we recommend that a pipe tap be used to assure clean-cut and uniform threads in the vessel opening and to allow for normal hand engagement followed by a half to one turn by wrench.
2. Install the valve in a vertical position so that discharge piping and code required drains can be properly piped to prevent build-up of back pressure and accumulation of foreign material around the valve seat area.
3. Avoid over-tightening as this can distort safety/relief valve seats. One need only remember that as the vessel and valve are heated, the expansion involved will grasp the valve more firmly.
4. When installing flange connected valves, use new gaskets and draw the mounting bolts down evenly.
5. Do not use the valve outlet or cap as a lever for installation. Use only flat jawed wrenches on the flats provided.
6. Avoid excessive "popping" of the safety/relief valve as even one opening can provide a means for leakage. Safety/relief valves should be operated only often enough to assure that they are in good working order.
7. Avoid wire, cable, or chain pulls for attachment to levers that do not allow a vertical pull. The weight of these devices should not be directed to the safety/relief valve.
8. Avoid having the operating pressure too near the safety/relief valve set pressure. A very minimum differential of 5 psig or 10 percent (whichever is greater) is recommended. An even greater differential is desirable, when possible, to assure better seat tightness and valve longevity. Safety/relief valves in high-temperature hot water and organic fluid service are more susceptible to damage and leakage than safety valves for steam. It is recommended that the maximum allowable working pressure of the boiler and the safety/relief valve setting be selected substantially higher than the operating pressure. A differential of 30-40 percent is recommended.
9. Avoid discharge piping where its weight is carried by the safety/relief valve. Even though supported separately, changes in temperature alone can cause piping strain. We recommend that drip pan elbows or flexible connections be used wherever possible (see Type A, B, C Installation, page 29).
10. Apply a moderate amount of pipe compound to male threads only, leaving the first thread clean. Compound applied to female threads or used to excess can find its way into the valve, causing leakage.

Copyright © 2011 Tyco Flow Control. All rights reserved.

Installation

Recommended Discharge Installation

Type "A" Installation

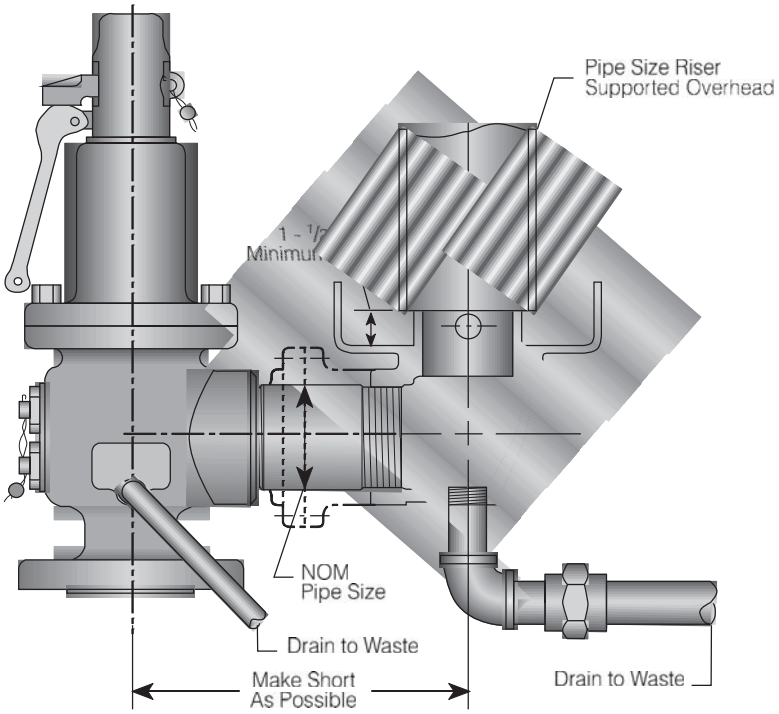

Type "B" Installation

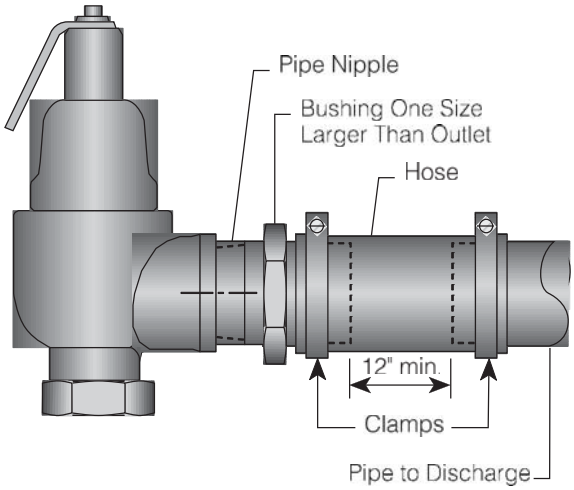

Type "C" Installation

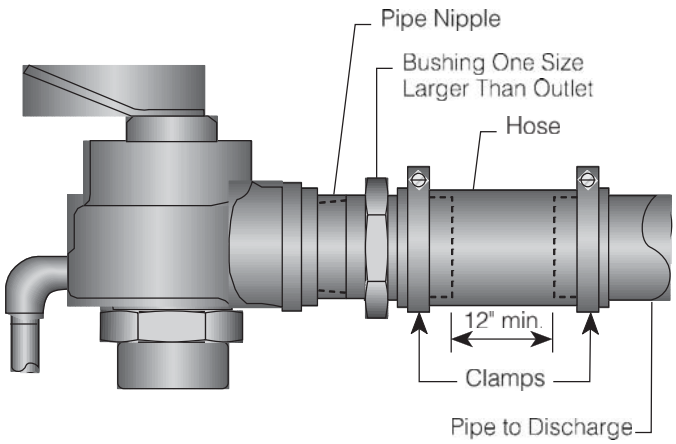

Copyright © 2011 Tyco Flow Control. All rights reserved.

Maintenance

1. Develop a regular program of visual inspection, looking for clogged drains and discharge pipe, dirt build-up in and around the valve seat and broken or missing parts.
2. Test the valve every two to six months (depending on valves' age and condition) preferably by raising the system pressure to the valves set pressure or operating the hand lever (see #3 in Operation).
3. Do not paint, oil, or otherwise cover any interior or working parts of any safety valve. They do not require any lubrication or protective coating to work properly.

When safety/relief valves require repair, service adjustments, or set pressure changes, work shall be accomplished by the manufacturer, or holders of "V," "UV," and/or "VR" stamps.

Guarantee

Tyco Valves & Controls LP, Black Mountain (Kunkle) warrants only that the goods delivered hereunder when paid for and properly installed, operated, and maintained shall be free from defects in material and workmanship under normal use and service for a period of twelve (12) months from the date of installation by the first user of such goods or eighteen (18) months from date of shipment from the factory, whichever period shall be first completed. The warranty hereunder granted does not apply to products or components (such as electric or pneumatic mechanisms) manufactured by other companies or to any goods manufactured by Tyco Valves & Controls LP, Black Mountain (Kunkle) that have been subjected to misuse, improper installation, improper storage or protection prior to installation or use, negligence by buyer or user, accident, corrosion, chemical attack, or misapplication, or that have been modified or repaired by unauthorized persons. Tyco Valves & Controls LP, Black Mountain's (Kunkle) obligation and buyer's remedy under this warranty are limited to: (a) correction, repair, or replacement, at Tyco Valves & Controls LP, Black Mountain's (Kunkle) option, of any defective unit of goods or (b) refund to buyer of the purchase price allocable to the defective unit of goods if Tyco Valves & Controls LP, Black Mountain (Kunkle) is unable to repair, replace or correct such defect in a reasonable time. Tyco Valves & Controls LP, Black Mountain's (Kunkle) liability under this warranty is conditioned upon buyer giving Tyco Valves & Controls LP, Black Mountain (Kunkle) immediate (but in any event within five (5) working days) written notice of any such defect. Any goods repaired or replaced hereunder shall continue to be warranted for the remainder of the unexpired warranty period, if any. Any repair or replacement of defective goods or parts shall, at Tyco Valves & Controls LP, Black Mountain's (Kunkle) option, occur at its plant in Black Mountain, North Carolina and Tyco Valves & Controls LP, Black Mountain (Kunkle) shall reimburse buyer all reasonable freight costs incurred in transporting defective goods or parts to and from Tyco Valves & Controls LP, Black Mountain's (Kunkle) plant in the event of a valid warranty claim. In the event Tyco Valves & Controls LP, Black Mountain (Kunkle) elects to provide replacement goods or parts to buyer to repair defective goods, buyer agrees to install sold replacement parts or goods at its cost and, further, Tyco Valves & Controls LP, Black Mountain (Kunkle) shall in no event be liable for any labor or material costs of buyer with respect to de-installing or repairing defective goods or installing replacement parts or goods. Tyco Valves & Controls LP, Black Mountain (Kunkle) shall have the option of requiring the return of the defective goods or parts thereof, transportation prepaid, to establish the claim. Tyco Valves & Controls LP, Black Mountain (Kunkle) shall not be held liable for damages caused by delays in repair or replacement of any defective items. Certification by a separate writing as to compliance with specifications, blueprints, part numbers, quality tests or otherwise will not create any warranty by or obligation of Tyco Valves & Controls LP, Black Mountain (Kunkle) The provisions in Tyco Valves & Controls LP, Black Mountain's (Kunkle) literature and specifications are descriptive only, unless expressly stated as warranties. Except for the limited express warranty set forth in this section, Tyco Valves & Controls LP, Black Mountain (Kunkle) expressly disclaims all warranties, express and implied, oral and written, including, without limitation, any warranties regarding services rendered ancillary hereto, and the implied warranties of merchantability and fitness for a particular purpose, whether arising from statute, common law, civil code, custom or otherwise. Tyco Valves & Controls LP, Black Mountain's (Kunkle) warranty obligations and buyer's remedies for breach of warranty, except as to title, are solely and exclusively as stated in this section. No modification or addition to this document with respect to the foregoing warranty by Tyco Valves & Controls LP, Black Mountain (Kunkle), either before or after execution of this document, shall be made except in writing by the President, Vice President, or Director, Sales and Marketing of Tyco Valves & Controls LP, Black Mountain (Kunkle).

Copyright © 2011 Tyco Flow Control. All rights reserved.

Terms and Conditions of Sales

1. Offer or Acceptance. If this document constitutes an offer to sell by Seller (sometimes referred to as 'Tyco Valves & Controls LP, Black Mountain (Kunkle)'), Seller's offer is expressly subject to Buyer's acceptance of all the terms and conditions contained herein and no other, unless otherwise mutually agreed to by both Seller and Buyer in a writing signed by both parties, and any response by Buyer which constitutes additional or different terms shall not operate as an acceptance if such acceptance would vary, delete or add to the terms and conditions contained herein. If this document constitutes an acceptance by Seller of Buyer's offer to buy the goods or services specified on the face hereof, such acceptance is expressly subject to all the terms and conditions contained herein and no others, unless otherwise mutually agreed to by both Seller and Buyer in a writing signed by both parties. Any of Buyer's proposed terms and conditions which are in addition to or different from those contained herein are hereby objected to and shall be of no effect. Buyer will in any event be deemed to have assented to all terms and conditions contained herein if any part of the goods sold hereunder are accepted.
2. Shipping Dates. The shipping dates, if any, set forth herein are approximate and are not guaranteed. Seller shall not be liable for any loss or damage for delay, non-delivery or other impairment of performance due to the actions or inactions of government, military authority, or Buyer, or by any reason of "force major," which shall be deemed to mean all other causes whatsoever not reasonably within the control of Seller, including, but not limited to, acts of God, war, riot, sabotage, fires, floods, strikes, lockouts or other industrial disturbances, delays of carriers, and inability to secure materials, fuel labor, transportation or manufacturing facilities at Seller's expected prices. Any delay resulting from any such cause shall extend shipping dates correspondingly. Seller shall in no event be liable for any special, incidental or consequential damages arising from delay irrespective of the reason thereof, and receipt by Buyer shall constitute acceptance of delivery and waiver of any claims due to delay. Should delivery be delayed due to Buyer's actions or inactions, or should delivery be delayed at the request of Buyer, the selling price of the goods shall automatically escalate at the rate of two percent [2%] per month for the duration of the delay or in an amount equal to Seller's increased cost, whichever is greater.
3. Drawings. If drawings are submitted herewith they are submitted only to show the general style, arrangement and approximate dimensions of the goods offered. No work is to be based on drawings unless the drawings are certified. Dimensional drawings certified by Seller will be furnished if agreed. In no event will manufacturing or proprietary drawings be supplied.
4. Risk of Loss. Buyer bears the risk of loss for damage to or destruction of the goods from and after the time same said goods are delivered either to the carrier for shipment to Buyer or to the Buyer, whichever occurs first, and regardless of whether or not Buyer may have the right to reject or revoke acceptance of said goods.
5. Shipment. If delivery specified is F.O.B. Seller's plant with freight allowed, Buyer shall pay to Seller, in addition to the purchase price, any and all transportation charges (including insurance).
6. Taxes. In addition to any prices specified herein, Buyer shall pay the gross amount of any present or future sales, use, excise, value-added, or other tax (whether federal, state, local or foreign) applicable to the price, sale, possession, or delivery of any goods or services furnished hereunder or to the use thereof by Buyer, or Buyer shall furnish Seller with a tax-exemption certificate acceptable to the levying taxing authority.
7. Payments. Buyer shall make payment in full for all goods ordered hereunder prior to shipment to Buyer, unless Buyer has entered into and agreed to Seller's Standard Credit Application and Agreement, in which event such Agreement is incorporated herein by reference and made a part hereof, unless and until such Agreement is terminated. The prices specified are in USA currency.
8. Warranties; Remedies. Tyco Valves & Controls LP, Black Mountain (Kunkle) warrants only that the goods delivered hereunder when paid for and properly installed, operated, and maintained shall be free from defects in material and workmanship under normal use and service for a period of twelve (12) months from the date of installation by the first user of such goods or eighteen (18) months from date of shipment from the factory, whichever period shall be first completed. The warranty hereunder granted does not apply to products or components (such as electric or pneumatic mechanisms) manufactured by other companies or to any goods manufactured by Tyco Valves & Controls LP, Black Mountain (Kunkle) that have been subjected to misuse, improper installation, improper storage or protection prior to installation or use, negligence by Buyer or user, accident, corrosion, chemical attack or misapplication, or that have been modified or repaired by unauthorized persons. Tyco Valves & Controls LP, Black Mountain's (Kunkle) obligation and Buyer's remedy under this warranty are limited to: (a) correction, repair, or replacement, at Tyco Valves & Controls LP, Black Mountain's (Kunkle) option, of any defective unit of goods or (b) refund to Buyer of the purchase price allocable to the defective unit of goods if Tyco Valves & Controls LP, Black Mountain (Kunkle) is unable to repair, replace or correct such defect in a reasonable time. Tyco Valves & Controls LP, Black Mountain's (Kunkle) liability under this warranty is conditioned upon Buyer giving Tyco Valves & Controls LP, Black Mountain (Kunkle), immediate (but in any event within five (5) working days) written notice of any such defect. Any goods repaired or replaced of defective goods or parts shall, at Tyco Valves & Controls LP, Black Mountain's (Kunkle) option, occur at its plant in Houston, Texas and Tyco Valves & Controls LP, Black Mountain (Kunkle) shall reimburse Buyer all reasonable freight costs incurred in transporting defective goods or parts to and from Tyco Valves & Controls LP, Black Mountain's (Kunkle) plant in the event of a valid warranty claim. In the event Tyco Valves & Controls LP, Black Mountain (Kunkle) elects to provide replacement good or parts to buyer to repair defective goods, Buyer agrees to install said replacement parts or goods at its cost and, further, Tyco Valves & Controls LP, Black Mountain (Kunkle), shall in no event be liable for any labor or material costs of Buyer with respect to de-installing or repairing defective goods or installing replacement parts or goods. Tyco Valves & Controls LP, Black Mountain (Kunkle) shall have the option of requiring the return of the defective goods or parts thereof, transportation prepaid, to establish the claim. Tyco Valves & Controls LP, Black Mountain (Kunkle) shall not be held liable for damages caused by delays in repair or replacement of any defective items. Certification by a separate writing as to compliance with specifications, blueprints, part numbers, quality test or otherwise will not create any warranty by or obligation of Tyco Valves & Controls LP, Black Mountain (Kunkle). The provisions in Tyco Valves & Controls LP, Black Mountain's (Kunkle) literature and specifications are descriptive only unless expressly stated as warranties. EXCEPT FOR THE LIMITED EXPRESS WARRANTY SET FORTH IN THIS SECTION, KUNKLE EXPRESSLY DISCLAIMS ALL WARRANTIES, EXPRESS AND IMPLIED, ORAL AND WRITTEN, INCLUDING, WITHOUT LIMITATION, AND FITNESS FOR A PARTICULAR PURPOSE, WHETHER ARISING FROM STATUTE, COMMON LAW, CIVIL CODE, CUSTOM OR OTHERWISE. KUNKLE'S WARRANTY OBLIGATIONS AND BUYER'S REMEDIES FOR BREACH OF WARRANTY, EXCEPT AS TO TITLE, ARE SOLELY AND EXCLUSIVELY AS STATED IN THIS SECTION. No modification or addition to this document with respect to the foregoing warranty by Tyco Valves & Controls LP, Black Mountain (Kunkle) either before or after execution of this document, shall be made except in writing by the President or a Vice President of Tyco Valves & Controls LP, Black Mountain (Kunkle).
9. Limitation of Liability. In any event, the total liability of Tyco Valves & Controls LP, Black Mountain (Kunkle) arising from any cause of action or claim whatsoever, whether (a) in contract, (b) in tort, (including negligence, whether sole, joint, contributory, concurrent or antipollution law or regulation), (c) connected with any toxic or hazardous substance or constituent, (d) arising out of any representation or instruction, or under any warranty, (e) or otherwise, arising out of, connected with, or resulting from the design, manufacture, sale, resale, delivery, repair, replacement or use of any goods or the furnishing of any service shall in no event exceed the price allocable to and paid to Tyco Valves & Controls LP, Black Mountain (Kunkle) for the individual unit of goods or services or part thereof which gives rise to the cause of action or claim. In no event shall Tyco Valves & Controls LP, Black Mountain (Kunkle) or its affiliates be liable for any special, indirect, incidental or consequential damages whenever occurring including, but not limited to, damages for loss of use of plant or property, damage to or destruction of equipment, downtime cost, cost of capital, economic loss, loss of good will, labor cost, loss of profits or revenues, or claims resulting from

Copyright © 2011 Tyco Flow Control. All rights reserved.

Terms and Conditions of Sales

contracts between Buyer, its customers and/or suppliers, regardless of whether any of the foregoing arises from this document or Tyco Valves & Controls LP, Black Mountain (Kunkle) by any human being for personal injury or wrongful death. Tyco Valves & Controls LP, Black Mountain (Kunkle) and Buyer acknowledge and agree that the exclusions of remedies and limitations of liability and damages herein reflect a bargained-for allocation and limitation of risk, liability and damages. Tyco Valves & Controls LP, Black Mountain (Kunkle) will not defend, indemnify or hold harmless Buyer or others for any claim, expense or liability. This Section shall apply notwithstanding any other provision of this document.

10. Limitation of Liability to Third-Party Purchases. Prior to Buyer's transfer or sale of any goods sold pursuant hereto, or the transfer or sale of any interest in such goods, Buyer shall notify the Transferee of the full text of Sections 8 and 9 hereof in writing and shall provide Seller with written acknowledgment and acceptance by the transferee of the terms of Sections 8 and 9 hereof. Further, Buyer shall incorporate verbatim Sections 8 and 9 hereof in any contract between Buyer and any Transferee concerning any such transfer or sale. Buyer shall also include a written copy of Section 8 and 9 hereof with any goods covered hereby that are transferred or sold to a transferee. IF TRANSFER IS MADE CONTRARY TO THE PROVISIONS OF THIS SECTION 10, BUYER SHALL, IN ADDITION TO ANY OTHER LEGAL OR EQUITABLE RIGHTS OF SELLER, INDEMNIFY SELLER AGAINST ANY LIABILITIES, CLAIMS, COSTS, DAMAGES AND ATTORNEY'S FEES INCURRED BY SELLER IN EXCESS OF THOSE SET FORTH IN SECTIONS 8 AND 9 HEREOF. This Section 10 shall apply notwithstanding any other provisions of this document.
11. Returns; Cancellations. No goods may be returned except on prior written approval of Seller. Orders placed with and accepted by Seller may not be canceled except with the written consent of Seller prior to shipment and Buyer's acceptance of Seller's cancellation charges which shall protect Seller against all costs and losses. Seller shall have the right to cancel the sale of any or all of the goods sold hereunder, without liability to Buyer except for the refund of monies already paid hereunder, the event manufacture or sale of the goods is or becomes technically or economically impractical.
12. Product Modification. Seller reserves the right to discontinue the manufacture of, or charge or modify the design and/or construction of goods sold pursuant to this document for the purpose of product improvement, without incurring any obligation to Buyer with respect thereto.
13. Patents. Seller agrees as its option, to defend at its safe cost and expense, and to pay any damages and cost awarded against Buyer, from any claim, suit or proceeding against Buyer to the extent such claim, suit or proceeding is based on an allegation that goods manufactured by Seller and delivered to Buyer hereunder infringe any United Sates letter patent, provided: (1) Seller is notified promptly in writing by Buyer of any such claim, suit or proceeding; (2) Seller is given information and assistance by Buyer as may be requested by Seller; and (3) Seller is given full authority (including authority to settle) by Buyer to conduct such defense as Seller deems appropriate. Seller's obligation under this Section does not apply to any goods the designs, instructions and/or specifications for which are partially or completely supplied by Buyer or to any claim, suit or proceeding in which the allegec infringement results from alteration of goods, use of goods for purposes other than those for which the goods were intended, or use of the goods in combination with products not manufactured by Seller. If in any suit covered by this Section, the use of goods is enjoined, Seller shall at its option and sole cost and expense either: (a) procure for Buyer the right to continue using the goods; (b) replace the goods with non-infringing goods; (c) modify the goods to be non-infringing; or (d) refund to Buyer the purchase price of the goods and transportation costs related thereto. Seller shall have no liability with respect to patent or trademark rights of countries foreign to the USA. The foregoing shall be Seller's sole and entire liability for patent infringement by the goods furnished pursuant hereto.
14. Data. Buyer agrees that all drawings, prints and other technical material (collectively 'Materials') which Seller provides to Buyer, whether prepared by Seller or by third parties under contract to Seller, contain data which embody trade secrets and confidential know-how of commercial value to Seller or to third parties under contract to Seller. Buyer agrees that Buyer and its agents and employees; (a) will keep confidential all such Materials; (b) will not disclose such Materials to any other person, corporate division or entity, except to employees of Buyer who need such Materials in order to perform Buyer's obligations hereunder; (c) will not use such Materials, except in connection with goods supplied hereunder; and (d) will not sell, lease, loan or permit any other person, corporate division or entity to use such Materials for any purpose, without Seller's prior written consent. Nothing herein shall restrict use of data or information available to the general public.
15. Applicable Law; Section Headlines. This document shall be deemed to have been executed and entered into the State of Texas, USA, and this document, and its formation, operation and performance, shall be governed, construed, performed and enforced in accordance with the substantive laws of the State of Texas, USA. The parties hereto agree that any civil action or lawsuit arising out of this document or the subject matter hereof shall be brought and maintained solely in state or federal courts located in Harris County, Texas, USA, and Buyer and Seller each hereby consents and submits to the personal jurisdiction of said courts. Any action or claim in any part arising out of or related to this document or the subject matter hereof, may be commenced or brought within one (1) year from the date the claim or action shall first arise or accrue, or be barred forever. The Section headings herein contained are for ease of reference only and shall not be construed to be part of this document.
16. Merger. Seller and Buyer agree that there are no understandings, agreements, representations or warranties between or by either of them, either oral or written, relative to the goods or services sold, pursuant hereto, including any made in or implied from past dealings, relative to the goods or services sold pursuant hereto, except those that are fully expressed herein. The provisions of this document supercede and control any previous understanding or agreement between the parties with respect to the subject matter hereof and this document is an expression of the complete and final understanding of the parties. Any representation, promise, course of dealing or trade usage not contained or referenced herein will not be binding on the parties hereto. Seller's branch managers or sales representatives, distributors, and dealers appointed by Seller are not authorized to make modifications, waivers or changes in or to these terms and conditions of sale. Buyer represents and agrees that it is Buyer's sole obligation and responsibility to determine the suitability of the goods for Buyer's use and application and any statements made by Seller's salespersons are opinion only and not representations or warranties of Seller and will not be relied on by the Buyer.

KUNKLE
953 Old U.S. Highway 70
Black Mountain, North Carolina 28711-2549
Customer Service Phone: 1-828-669-3700
www.kunklevalve.com

Tyco Flow Control (TFC) provides the information herein in good faith but makes no representation as to its comprehensiveness or accuracy. This data sheet is intended only as a guide to TFC products and services. Individuals using this data sheet must exercise their independent judgment in evaluating product selection and determining product appropriateness for their particular purpose and system requirements. TFC MAKES NO REPRESENTATIONS OR WARRANTIES, EITHER EXPRESS OR IMPLIED, INCLUDING WITHOUT LIMITATION ANY WARRANTIES OF MERCHANTABILITY OR FITNESS FOR A PARTICULAR PURPOSE WITH RESPECT TO THE INFORMATION SET FORTH HEREIN OR THE PRODUCT(S) TO WHICH THE INFORMATION REFERS. ACCORDINGLY, TFC WILL NOT BE RESPONSIBLE FOR DAMAGES (OF ANY KIND OR NATURE, INCLUDING INCIDENTAL, DIRECT, INDIRECT, OR CONSEQUENTIAL DAMAGES) RESULTING FROM THE USE OF OR RELIANCE UPON THIS INFORMATION. Patents and Patents Pending in the U.S.and foreign countries. Tyco reserves the right to change product designs and specifications without notice. All registered trademarks are the property of their respective owners. Printed in the USA.

Copyright © 2011 Tyco Flow Control. All rights reserved.

SMALL COMPACT FILTER SILENCERS
w/ "Hockey Puck" *Patented* Element
"FS" Series 1/4" - 1" BSPT

APPLICATIONS & EQUIPMENT

- Industrial & Severe Duty
- Piston Compressors
- Screw Compressors
- Blowers - Side Channel & Roots
- Hydraulic Breathers – fine filtration
- Engines
- Construction\Contractor Industry
- Workshop
- Medical\Dental Industry
- Hobby
- Pneumatic Conveying
- Waste Water Aeration
- Nailers and Staplers

FEATURES & SPECIFICATIONS

- Patented high grade element w/**Built-in** Butterfly gasket seal
  Creates positive seal between housing hemispheres
  New seal with each element, Minimizes parts
- Fully drawn weatherhood - no welds to rust or vibrate apart
- Tubular silencing design - tube is positioned to maximize attenuation and air flow while minimizing pressure drop
- Durable **Compact** carbon steel construction with black powder coated finish
- Ability to mount vertically, horizontally
- Polyester: 99%+ removal efficiency standard to 5 micron
- Paper: 99%+ removal efficiency standard to 2 micron
- Interchangeable media: Polyester, Paper, HEPA
- Temp (continuous): min -26°C (-15°F) max 104°C (220°F)
- Filter change out differential: 255-380 mm H_2O over initial delta P
- A single noise attenuation graph is insufficient; please inquire for your specific requirement

OPTIONS (Inquiries Encouraged)

- Various media available
- Epoxy coated housings
- Straight Through Design (Vertical)
- Custom connections

CONFIGURATION



DRAWING

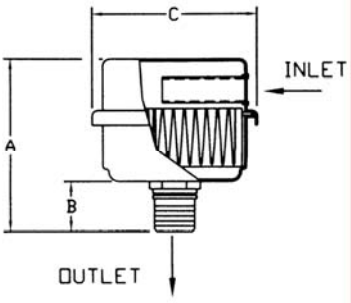

Dimension tolerance ± 6 mm

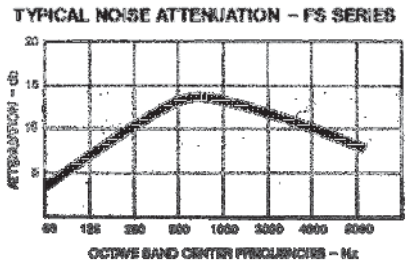

- Noise attenuation may vary due to the wide range of applications and machines

I = Industrial Duty S = Severe Duty

	with Polyester Element	with Paper Element	BSPT Outlet	DIMENSIONS - mm A	B	C	Rated Flow m^3/h Piston	Screw, Blower, Fan	Element Rating	No. of Silencing Tubes	Approx. Wt. Kg
I	FS-05-025	FS-04-025	1/4"	70	16	64	7	7	14	1	0.11
I	FS-05-038	FS-04-038	3/8"	70	16	64	10	14	14	1	0.11
S	FS-07-038	FS-06-038	3/8"	90	16	83	14	14	20	1	0.23
I	FS-05-050	FS-04-050	1/2"	76	22	64	10	14	14	1	0.11
I	FS-07-050	FS-06-050	1/2"	97	22	83	17	20	20	1	0.23
S	FS-11-050	FS-10-050	1/2"	105	22	105	20	20	60	1	0.45
I	FS-07-075	FS-06-075	3/4"	106	32	83	20	20	20	1	0.23
I	FS-11-075	FS-10-075	3/4"	114	32	105	34	43	60	1	0.45
I	FS-11-100	FS-10-100	1"	114	32	105	43	60	60	1	0.45

Note: Model offerings and design parameters may change without notice.

1151 Ardmore Ave. ♦ Itasca, IL 60143 USA
Tel: +1 630 616 4900 ♦ Fax: +1 630 773 2643
E-mail: sales@solbergmfg.com ♦ Web Site: www.solbergmfg.com

SMALL COMPACT FILTER SILENCERS
w/ Standard Filter Design
"FS" Series 1/2" - 3" BSPT

APPLICATIONS & EQUIPMENT

- Industrial & Severe Duty
- Piston Compressors
- Screw Compressors
- Blowers - Side Channel & Roots
- Hydraulic Breathers – fine filtration
- Engines
- Construction\Contractor Industry
- Workshop
- Medical\Dental Industry
- Pneumatic Conveying
- Waste Water Aeration
- Nailers and Staplers
- Vacuum Vent Breathers

FEATURES & SPECIFICATIONS

- Fully drawn weatherhood - no welds to rust or vibrate apart
- Tubular silencing design - tube is positioned to maximize attenuation and air flow while minimizing pressure drop
- Durable carbon steel construction with baked enamel finish and powder coated weatherhood
- Polyester: 99%+ removal efficiency standard to 5 micron
- Paper: 99%+ removal efficiency standard to 2 micron
- Interchangeable media: Polyester, Paper, HEPA
- Several element sizes available per given connection (safety factor)
- Temp (continuous): min -26°C (-15°F) max 104°C (220°F)
- Filter change out differential: 255-380 mm H_2O over initial delta P
- Pressure drop graphs available upon request

OPTIONS (Inquiries Encouraged)

- 1/8" tap holes
- Pressure Drop Indicator
- Available in ***Stainless Steel***
- Epoxy coated housings
- Various media available
- Custom connections, MPT

CONFIGURATION



DRAWING

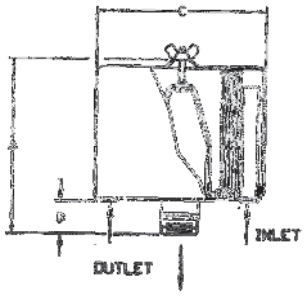

Dimension tolerance ± 6 mm

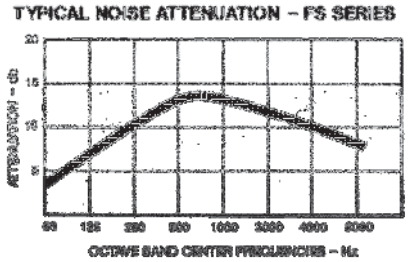

- Noise attenuation may vary due to the wide range of applications and machines

I = Industrial Duty S = Severe Duty

	with Polyester Element	with Paper Element	BSPT Outlet	DIMENSIONS - mm A	B	C	Rated Flow m^3/h Piston	Screw, Blower, Fan	Element Rating	No. of Silencing Tubes	Approx. Wt. Kg
I	FS-15-050	FS-14-050	1/2"	102	38	152	17	17	60	1	0.8
I	FS-15-075	FS-14-075	3/4"	102	38	152	34	43	60	2	0.9
I	FS-15-100	FS-14-100	1"	102	38	152	43	60	60	3	0.9
S	FS-19P-100	FS-18P-100	1"	168	41	152	60	94	170	3	1.4
I	FS-19P-126	FS-18P-126	1 1/4"	168	41	152	94	119	170	5	1.5
I	FS-19P-151	FS-18P-151	1 1/2"	168	41	152	119	145	170	5	2
I	FS-31P-201	FS-30P-201	2"	184	57	254	145	230	332	5	4
S	FS-231P-201	FS-230P-201	2"	311	57	254	230	230	510	5	6
I	FS-31P-251	FS-30P-251	2 1/2"	191	64	254	170	332	332	5	4
S	FS-231P-251	FS-230P-251	2 1/2"	318	64	254	332	332	510	9	7
I	FS-231P-301	FS-230P-301	3"	330	76	254	340	510	510	9	7

Note: Model offerings and design parameters may change without notice.

1151 Ardmore Ave. ♦ Itasca, IL 60143 USA
Tel: +1 630 616 4900 ♦ Fax: +1 630 773 2643
E-mail: sales@solbergmfg.com ♦ Web Site: www.solbergmfg.com

COMPACT FILTER SILENCERS

"FS" Series 3" - 6" BSPT

APPLICATIONS & EQUIPMENT

- Industrial & Severe Duty
- Blowers - Side Channel & Roots
- Piston Compressors
- Screw Compressors
- Hydraulic Breathers – fine filtration
- Engines
- Fans
- Construction\Contractor Industry
- Medical
- Pneumatic Conveying
- Waste Water Aeration
- Sparging
- Factory Air
- Vacuum Vent Breathers

FEATURES & SPECIFICATIONS

- Fully drawn weatherhood - no welds to rust or vibrate apart
- Tubular silencing design - tube is positioned to maximize attenuation and air flow while minimizing pressure drop
- Durable carbon steel construction with gray baked enamel finish and powder coated weatherhood
- Low pressure drop center bracket and outlet pipe design
- 1/8" tap hole
- Polyester: 99%+ removal efficiency standard to 5 micron
- Paper: 99%+ removal efficiency standard to 2 micron
- Interchangeable media: Polyester, Paper, HEPA
- Several element sizes available per given connection (safety factor)
- Temp (continuous): min -26°C (-15°F) max 104°C (220°F)
- Filter change out differential: 255-380mm H_2O over initial delta P
- Pressure drop graphs available upon request

OPTIONS (Inquiries Encouraged)

- Various media available
- Pressure Drop Indicator
- Epoxy coated housings
- Available in ***Stainless Steel***
- Custom connections, NPT
- Side Access QB Series Filters for space restricted enclosures (Selected models)

CONFIGURATION



DRAWING

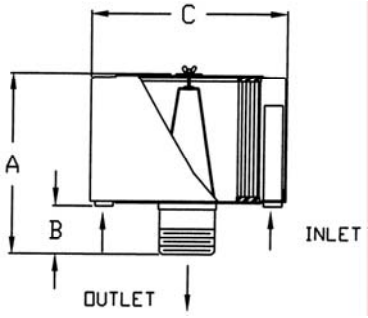

Dimension tolerance ± 6 mm

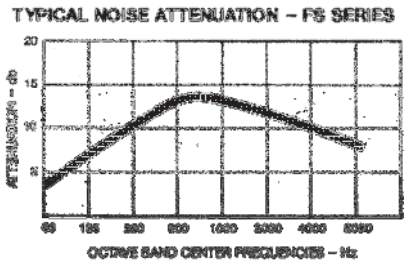

- Noise attenuation may vary due to the wide range of applications and machines

I = Industrial Duty S = Severe Duty E = Extreme Duty

	with Polyester Element	with Paper Element	BSPT Outlet	DIMENSIONS - mm A	B	C	Rated Flow m^3/h Piston	Screw, Blower, Fan	Element Rating	No. of Silencing Tubes	Approx. Wt. Kg
S	FS-235P-301	FS-234P-301	3"	330	76	406	340	510	970	9	13
S	FS-245P-301	FS-244P-301	3"	330	76	406	340	510	1500	9	14
E	FS-275P-301	FS-274P-301	3"	330	76	406	340	510	1870	9	15
I	FS-235P-401	FS-234P-401	4"	356	102	406	510	885	970	9	14
S	FS-245P-401	FS-244P-401	4"	356	102	406	765	885	1500	9	14
E	FS-275P-401	FS-274P-401	4"	356	102	406	765	885	1870	9	15
I	FS-245P-501	FS-244P-501	5"	356	102	406	850	1360	1500	14	15
S	FS-275P-501	FS-274P-501	5"	356	102	406	1105	1360	1870	14	16
I	FS-275P-601	FS-274P-601	6"	394	133	406	1105	1870	1870	18	17

Note: Model offerings and design parameters may change without notice.

1151 Ardmore Ave. • Itasca, IL 60143 USA
Tel: +1 630 616 4900 • Fax: +1 630 773 2643
E-mail: sales@solbergmfg.com • Web Site: www.solbergmfg.com

COMPACT FILTER SILENCERS

"FS" Series DN80 - DN150 PN10 Pattern Flange

APPLICATIONS & EQUIPMENT

- Industrial & Severe Duty
- Blowers - Side Channel & Roots
- Piston Compressors
- Screw Compressors
- Hydraulic Breathers – fine filtration
- Engines
- Fans
- Construction\Contractor Industry
- Medical
- Pneumatic Conveying
- Waste Water Aeration
- Sparging
- Factory Air
- Vacuum Vent Breathers

FEATURES & SPECIFICATIONS

- Fully drawn weatherhood - no welds to rust or vibrate apart
- Tubular silencing design - tube is positioned to maximize attenuation and air flow while minimizing pressure drop
- Durable carbon steel construction with gray baked enamel finish and powder coated weatherhood
- Low pressure drop center bracket and outlet pipe design
- 1/8" tap hole
- Polyester: 99%+ removal efficiency standard to 5 micron
- Paper: 99%+ removal efficiency standard to 2 micron
- Interchangeable media: Polyester, Paper, HEPA
- Several element sizes available per given connection (safety factor)
- Temp (continuous): min -26°C (-15°F) max 104°C (220°F)
- Filter change out differential: 255-380 mm H_2O over initial delta P
- Pressure drop graphs available upon request

OPTIONS (Inquiries Encouraged)

- Various media available
- Pressure Drop Indicator
- Epoxy coated housings
- Available in ***Stainless Steel***
- Custom connections, NPT
- Side Access QB Series Filters for space restricted enclosures (Selected models)

CONFIGURATION



DRAWING

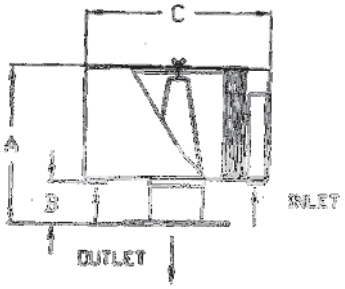

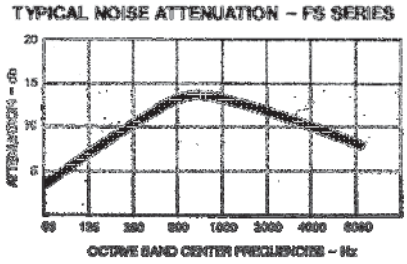

- Noise attenuation may vary due to the wide range of applications and machines

I = Industrial Duty S = Severe Duty E = Extreme Duty

Dimension tolerance ± 6 mm

	with Polyester Element	with Paper Element	Flange Outlet	DIMENSIONS - mm A	B	C	Rated Flow m^3/h Piston	Screw, Blower, Fan	Element Rating	No. of Silencing Tubes	Approx. Wt. Kg
S	FS-235P-DN80	FS-234P-DN80	DN80	330	76	406	340	510	970	9	13
S	FS-245P-DN80	FS-244P-DN80	DN80	330	76	406	340	510	1500	9	14
E	FS-275P-DN80	FS-274P-DN80	DN80	330	76	406	340	510	1870	9	15
I	FS-235P-DN100	FS-234P-DN100	DN100	356	102	406	510	885	970	9	15
S	FS-245P-DN100	FS-244P-DN100	DN100	356	102	406	765	885	1500	9	16
E	FS-275P-DN100	FS-274P-DN100	DN100	356	102	406	765	885	1870	9	18
I	FS-245P-DN125	FS-244P-DN125	DN125	356	102	406	850	1360	1500	14	17
S	FS-275P-DN125	FS-274P-DN125	DN125	356	102	406	1105	1360	1870	14	18
I	FS-275P-DN150	FS-274P-DN150	DN150	394	133	406	1105	1870	1870	18	19

PN10 Pattern Flg	DIMENSIONS - mm O.D.	B.C.	B.H.	No. of Holes	Thickness Flg - mm
DN80	200	160	18	8	10
DN100	220	180	18	8	10
DN125	250	210	18	8	10
DN150	285	240	22	8	10

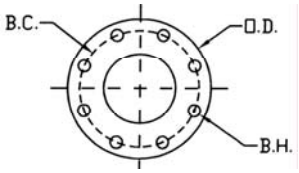

Note: Model offerings and design parameters may change without notice.

1151 Ardmore Ave. ♦ Itasca, IL 60143 USA
Tel: +1 630 616 4900 ♦ Fax: +1 630 773 2643
E-mail: sales@solbergmfg.com ♦ Web Site: www.solbergmfg.com

“BIG BOY” FILTER SILENCERS

"FS" Series DN200-DN300 PN10 Pattern Flange

APPLICATIONS & EQUIPMENT

- Industrial & Severe Duty
- Blowers - Side Channel & Roots
- Piston Compressors
- Screw Compressors
- Hydraulic Breathers – fine filtration
- Engines
- Fans
- Construction Industry
- Medical
- Pneumatic Conveying
- Waste Water Aeration
- Sparging
- Cement
- Power Plants
- Vacuum Vent Breathers

FEATURES & SPECIFICATIONS

- Tubular silencing design - tube is positioned to maximize attenuation and air flow while minimizing pressure drop
- Durable carbon steel construction with gray baked enamel finish
- Low pressure drop center bracket and outlet pipe design
- 1/8” tap hole
- Polyester: 99%+ removal efficiency standard to 5 micron
- Paper: 99%+ removal efficiency standard to 2 micron
- Several element sizes available per given connection (safety factor)
- Interchangeable media: Polyester, Paper, HEPA
- Temp (continuous): min -26°C (-15°F) max 104°C (220°F)
- Filter change out differential: 255-380 mm H_2O over initial delta P
- Pressure drop graphs available upon request

OPTIONS (Inquiries Encouraged)

- Various media available
- Pressure Drop Indicator
- Epoxy coated housings
- Available in ***Stainless Steel***
- Custom connections, NPT
- Side Access QB Series Filters for space restricted enclosures (Selected models)

CONFIGURATION



DRAWING

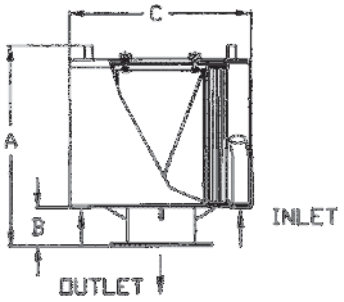

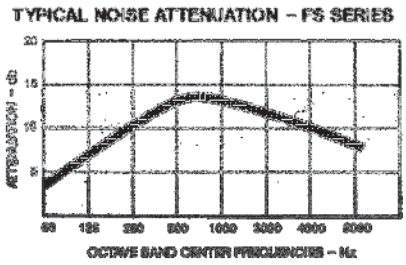

- Noise attenuation may vary due to the wide range of applications and machines

I = Industrial Duty S = Severe Duty E = Extreme Duty

Dimension tolerance ± 6 mm

	with Polyester Element	with Paper Element	Flange Outlet	DIMENSIONS - mm A	B	C	Rated Flow m^3/h Piston	Screw, Blower, Fan	Element Rating	No. of Silencing Tubes	Approx. Wt. Kg
I	FS-377P-DN200	FS-376P-DN200	DN200	584	152	572	2450	3060	3105	12	54
S	FS-385P-DN200	FS-384P-DN200	DN200	584	152	724	2450	3060	5605	12	56
E	FS-485P-DN200	FS-484P-DN200	DN200	787	152	724	3060	3060	8000	12	62
I	FS-385P-DN250	FS-384P-DN250	DN250	584	152	724	3060	5610	5610	16	59
S	FS-485P-DN250	FS-484P-DN250	DN250	787	152	724	4420	5610	8000	16	64
E	FS-685P-DN250	FS-384P(2)-DN250	DN250	965	152	724	4900	5610	11220	16	74
I	FS-385P-DN300	FS-384P-DN300	DN300	584	152	724	4420	5610	5610	24	61
S	FS-485P-DN300	FS-484P-DN300	DN300	787	152	724	4420	7990	8000	24	70
E	FS-685P-DN300	FS-384P(2)-DN300	DN300	965	152	724	5950	7990	11220	24	79
E	FS-485P(2)-DN300	FS-484P(2)-DN300	DN300	1346	152	724	7345	7990	16000	24	88

PN10 Pattern Flg	DIMENSIONS - mm O.D.	B.C.	B.H.	No. of Holes	Thickness Flg - mm
DN200	340	295	22	8	14
DN250	395	350	22	12	14
DN300	445	400	22	12	14

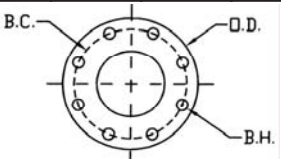

Note: Model offerings and design parameters may change without notice.

1151 Ardmore Ave. ♦ Itasca, IL 60143 USA
Tel: +1 630 616 4900 ♦ Fax: +1 630 773 2643
E-mail: sales@solbergmfg.com ♦ Web Site: www.solbergmfg.com

B-301/2 - Blower, Elmo, 2BH7420-0AH267 2.4HP

Contents

1 Safety 3
1.1 Definitions 3
1.1.1 Safety alert symbol 3
1.1.2 Signal words 3
1.2 General safety precautions 3
1.3 Residual risks 6
2 Intended Use 7
3 Technical Data 8
3.1 Mechanical data 8
3.2 Electrical data 11
3.3 Operating conditions 11
4 Transport and Handling 12
5 Installation 13
5.1 Installation 14
5.2 Electrical connection (motor) 16
5.3 Connecting pipes/hoses (vacuum pump/compressor) 18
5.3.1 Inlet connection 19
5.3.2 Discharge connection 19
5.3.3 Procedure when connecting pipes/hoses 19
6 Commissioning 20
6.1 Preparation 20
6.2 Start-up and shut-down 22
7 Operation 22
8 Shut-Down and Longer Standstills 22
8.1 Preparing for shut-down or longer standstill 22
8.2 Storage conditions 23
9 Servicing 23
9.1 Repairs/troubleshooting 24
9.2 Service/After-sales service 25
9.3 Decontamination and Declaration of Clearance 25
10 Disposal 25
11 Explosion-Protected Design 25
EU declaration of conformity 26
Form for statement on safety 27

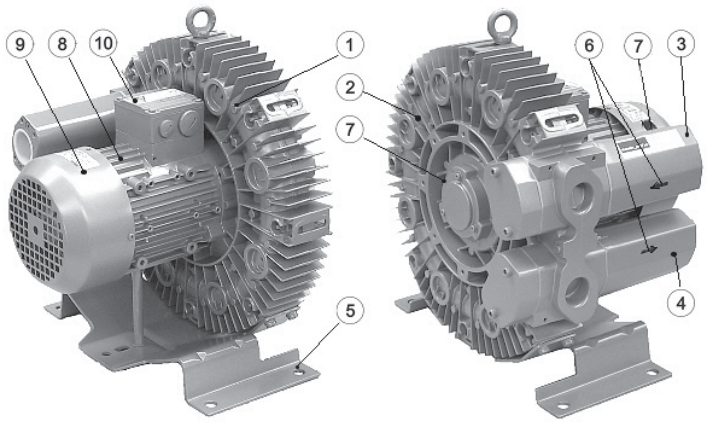

Fig. 1: Design of gas-ring vacuum pump/compressor

1 Vacuum pump/compressor housing
2 Vacuum pump/compressor cover
3 Inlet connection with muffler
4 Discharge connection with muffler
5 Base
6 Flow direction arrow
7 Rotating direction arrow
8 Drive motor
9 Fan guard (over external fan)
10 Terminal box

© 2009 Gardner Denver Deutschland GmbH · Industriestraße 26 · 97616 Bad Neustadt · Germany

Replication, distribution and / or editing of this document and the use and distribution of its content is prohibited unless explicitly permitted. Violation obligates compensation for damages.
All rights reserved in case of the issue of a patent, utility patent or design patent.

1 Safety

1.1 Definitions

To point out dangers and important information, the following signal words and symbols are used in these operating instructions:

1.1.1 Safety alert symbol

The **safety alert symbol** ⚠ is located in the safety precautions in the highlighted heading field on the left next to the signal word (DANGER, WARNING, CAUTION).

Safety precautions **with** a safety alert symbol indicate a danger of **injuries**.

Be sure to follow these safety precautions to protect against **injuries or death**!

Safety precautions **without** a safety alert symbol indicate a danger of **damage**.

1.1.2 Signal words

DANGER
WARNING
CAUTION
NOTICE
NOTE

The **signal words** are located in the safety precautions in the highlighted heading field.

They follow a certain hierarchy and indicate (in conjunction with the safety alert symbol, see Chapter 1.1.1) the **seriousness of the danger** and the **type of warning.**

See the following explanations:

 © Gardner Denver Deutschland GmbH

1.3 Residual risks

 © Gardner Denver Deutschland GmbH

2 Intended Use

These operating instructions

- apply to gas-ring vacuum pumps/compressors of the G-BH7 series, models 2BH72, 2BH73, 2BH74, 2BH75 and 2BH76,
- contains instructions concerning transport and handling, installation, commissioning, operation, shut-down, storage, servicing and disposal of the G-BH7,
- must be completely read and understood by all operating and servicing personnel before beginning to work with or on the G-BH7,
- must be strictly observed,
- must be available at the site of operation of the G-BH7.

About the operating and servicing personnel of the G-BH7

- These persons must be trained and authorized for the work to be carried out.
- Work on electrical installations may be carried out by trained and authorized electricians only.

The G-BH7s

- are pump-motor units for generating vacuum or gauge pressure;
- are used to **extract, pump and compress the following gases**:
  - Air,
  - Non-flammable, non-aggressive, non-toxic and non-explosive gases or gas-air mixtures.
  - For differing gases/gas-air mixtures, inquire with the Service Department.
- are equipped with one of the following kind of drive motors:
  - 3-phase AC drive motor with a standard or explosion-protected design
  - Single-phase AC drive motor

  These operating instructions apply **only to** pump-motor units with a **standard design**.

  For the explosion-protected design

3 Technical Data

3.1 Mechanical data

Weight

Single-impeller design		
Model	**Weight**	
	[kg] approx.	**[lbs] approx.**
2BH7210-0..1.-.	**16**	35
2BH7310-0..1.-.	**16**	35
2BH7310-0..2.-.	**17**	38
2BH7410-0..1.-.	**23**	51
2BH7510-0..1.-.	**26**	57
2BH7510-0..2.-.	**29**	64
2BH7610-0..1.-.	**32**	71
2BH7610-0..3.-.	**35**	77

Two-impeller design		
Model	**Weight**	
	[kg] approx.	**[lbs] approx.**
2BH7220-0..2.-.	**24**	53
2BH7220-0..5.-.	**28**	62
2BH7320-0..5.-.	**30**	66
2BH7420-0..2.-.	**33**	73
2BH7420-0..5.-.	**39**	86
2BH7520-0..2.-.	**40**	88
2BH7520-0..7.-.	**51**	112
2BH7620-0..3.-.	**48**	106
2BH7620-0..5.-.	**65**	143

Three-impeller design		
Model	**Weight**	
	[kg] approx.	**[lbs] approx.**
2BH7530-0..8.-.	**68**	150
2BH7630-0..6.-.	**94**	207

Minimum distances

Minimum distance to fan guard (for sucking in cooling air):

Model	[mm] approx.	[inches] approx.
2BH72	**34**	1.34
2BH73	**34**	1.34
2BH74	**52**	2.05
2BH75	**52**	2.05
2BH76	**53**	2.09

Minimum distance to face of vacuum pump/compressor cover:

Model	[mm] approx.	[inches] approx.
2BH7…	**30**	1.18

Vibrations

The following table provides information on the maximum permissible loading due to vibrations.

Model	Vibration velocity V_{eff}	
	[mm/s] ≤	**[ft/s] ≤**
2BH72.. - 2BH75..	**3.0**	0.010
2BH76..	**3.5**	0.011

© Gardner Denver Deutschland GmbH

Noise level

Measuring-surface sound-pressure level as per EN ISO 3744, measured at a distance of **1 m** [3.28 ft] at an operating point of approximately 2/3 of the permissible total pressure difference with the lines connected without a vacuum or pressure relief valve, tolerance ±3 dB (A).

Single-impeller design

Model	1-m measuring-surface sound pressure level L [dB (A)]	
	50 Hz	60 Hz
2BH7210-0..1.-.	70	70
2BH7310-0..1.-.		70
2BH7310-0..2.-.		70
2BH7410-0..1.-.		70
2BH7510-0..1.-.		70
2BH7510-0..2.-.		70
2BH7610-0..1.-.		71
2BH7610-0..3.-.		71

Two-impeller design

Model	1-m measuring-surface sound pressure level L [dB (A)]	
	50 Hz	60 Hz
2BH7220-0..2.-.	70	70
2BH7220-0..5.-.		70
2BH7320-0..5.-.		70
2BH7420-0..2.-.		70
2BH7420-0..5.-.		70
2BH7520-0..2.-.		70
2BH7520-0..7.-.		71
2BH7620-0..3.-.		71
2BH7620-0..5.-.		72

Three-impeller design

Model	1-m measuring-surface sound pressure level L [dB (A)]	
	50 Hz	60 Hz
2BH7530-0..8.-.	67	73
2BH7630-0..6.-.	77	80

Temperature increase

The information listed in the following tables corresponds to the heating of vacuum pump/compressor housings and the air exiting compared to the ambient temperature during operation with a permissible total pressure difference and an air pressure of **1,013 mbar** [14.7 psi]. At lower air pressures these values increase.

Single-impeller design

Model	Temperature increase			
	ΔT [K] approx.		Δϑ [F] approx.	
	50 Hz	60 Hz	50 Hz	60 Hz
2BH7210-0..1.-.	**52**	**61**	94	110
2BH7310-0..1.-.	**61**	**61**	110	110
2BH7310-0..2.-.	**81**	**86**	146	155
2BH7410-0..1.-.	**90**	**101**	162	182
2BH7510-0..1.-.	**93**	**111**	167	200
2BH7510-0..2.-.	**120**	**112**	216	202
2BH7610-0..1.-.	**118**	**124**	212	223
2BH7610-0..3.-.	**118**	**124**	212	223

Two-impeller design

Model	Temperature increase			
	ΔT [K] approx.		Δϑ [F] approx.	
	50 Hz	60 Hz	50 Hz	60 Hz
2BH7220-0..2.-.	**55**	**77**	99	139
2BH7220-0..5.-.	**74**	**110**	133	198
2BH7320-0..5.-.	**81**	**124**	146	223
2BH7420-0..2.-.	**89**	**80**	160	144
2BH7420-0..5.-.	**121**	**117**	218	211
2BH7520-0..2.-.	**89**	**102**	160	184
2BH7520-0..7.-.	**125**	**110**	225	198
2BH7620-0..3.-.	**124**	**126**	223	227
2BH7620-0..5.-.	**124**	**128**	223	230

Three-impeller design

Model	Temperature increase			
	ΔT [K] approx.		Δϑ [F] approx.	
	50 Hz	60 Hz	50 Hz	60 Hz
2BH7530-0..8.-.	**120**	**120**	216	216
2BH7630-0..6.-.	**120**	**120**	216	216

Tightening torques for screw connections

The following values apply if no other information is available.

With non-electrical connections, property classes of 8.8 and 8 or higher as per ISO 898-1 are assumed.

 © Gardner Denver Deutschland GmbH

3.2 Electrical data

See rating plate.

3.3 Operating conditions

Temperatures

Temperature of pumped gases:	max. permissible temperature: **+40°C** [+104°F] Nominal value: **+15°C** [+59°F] Pump-motor units for higher fluid temperatures on request.
Ambient temperature (standard design)[1]:	max. permissible temperature: **+40°C** [+104°F] min. permissible temperature: **-15°C** [+5°F] Nominal value: **+25°C** [+77°F] Ambient temperatures between **25°C** [+77°F] and **40°C** [+104°F] affect the permissible total pressure difference (see Section "Permissible total pressure difference"). At higher temperatures the winding may be damaged and the grease change interval may be shortened.

Pressures

Min. inlet pressure:	See rating plate.
Max. discharge pressure during compressor operation:	See rating plate.
Max. permissible pressure in pump-motor unit:	**2.5 bar abs.** [36.2 psia] At this pressure the operation of the pump-motor unit may be considerably impaired. Provide a corresponding protective device (e.g. pressure relief valve) if necessary.
Permissible total pressure difference:	The total pressure difference specified on the rating plate only applies under the following conditions: • Ambient temperature: **25°C** [77°F]. • Inlet temperature (temperature of pumped gases at inlet connection): **15°C** [59°F]. • Pressure: during vacuum-pump operation: **1,013 mbar** [14.7 psia] at discharge connection; during compressor operation: **1,013 mbar** [14.7 psia] at inlet connection; At an ambient temperature of **40°C** [104°F] the total pressure difference specified on the rating plate must be reduced by 10%. If the ambient temperature is between **25°C** [77°F] and **40°C** [104°F], then the total pressure difference specified on the rating plate must be reduced linearly to the temperature by between 0 and 10 %.

Installation altitude

Max. of **1,000 m** [3,280 ft] above sea level.

When installing the pump-motor unit at an altitude of more than **1,000 m** [3,280 ft] above sea level, first inquire with the Service department.

[1] For design with frequency converter, see separate operating instructions.

4 Transport and Handling

 © Gardner Denver Deutschland GmbH

5 Installation

The pump-motor unit is ready to connect on delivery.

However, if the time from delivery to commissioning of the pump-motor unit exceeds a certain period, the lubrication of the rolling bearings must be renewed.
See Chapter 8.2, "Storage conditions", Section "Lubrication of rolling bearings after longer storage", Pg. 23 for information on this topic.

Carry out the following work to install the pump-motor unit:

- Installation and securing,
- Attachment of the included loose muffler if necessary,
- Attachment of threaded flange or hose flange (available as accessories) for the connection of inlet or discharge pipe to the muffler,
- Electrical connection,
- Connection of inlet and discharge connection to the system.

5.1 Installation

 © Gardner Denver Deutschland GmbH

Components for reducing noise on the pump-motor unit:

- **Mufflers** (included as standard equipment): On delivery the pump-motor units are equipped with attached mufflers as standard. The noise radiation is considerably reduced by the mufflers. See Fig. 2 to Fig. 4, Pg. 18 ff.
- **Additional mufflers** (available as an option): The additional mufflers enable a further noise reduction. They may only be used with free entry and exit of gases, i.e. with direct intake out of or direct feeding into the atmosphere **without piping**.
- **Noise protection hoods** (available as an option): Noise protection hoods are suitable for installation in rooms and in the open. They reduce both the total sound pressure level and tonal components that are perceived as particularly annoying.

Installation variants/axis position:

Basically, when installing the pump-motor unit, the following variants are possible with a different axis position (horizontal or vertical):

- Horizontal installation
- Vertical installation on the vacuum pump/compressor cover ("cover installation")
- Vertical mounting on the wall.

Basically, all variants are possible with all models.

However, a distinction must be made between a design with and a design without a **condensed water opening** for the axis position:

- The pump-motor units without a condensed water opening can be installed and secured in any axis position.
- The pump-motor unit with a condensed water opening may only be installed and secured horizontally with the base at the bottom.

Horizontal installation

Screw the base of the pump-motor unit to the surface with suitable mounting elements.

Proceed as follows:

- Provide the base of the pump-motor unit with mounting holes.
- Select the suitable screw type.
- Screw the base of the pump-motor unit to the surface with the screws.
  When doing so, be sure to provide **all** mounting holes with screws!

Vertical installation on the vacuum pump/compressor cover ("cover installation")

With vertical installation of the pump-motor unit with the vacuum pump/compressor cover facing downward, rubber feet must be used.

Proceed as follows:

- The rubber feet are available as accessories. They are delivered in a set of 3.
  On the upper section they are provided with stud bolts and on the lower section with a threaded hole.
- Mount the rubber feet on the pump-motor unit: Screw the stud bolts of the rubber feed into the holes on the face of the vacuum pump/compressor cover and tighten them.
- Mount the pump-motor unit together with the rubber feet on the installation surface:
  Select suitable mounting elements for the threaded hole.
  Screw the rubber feet to the surface or foundation via the threaded hole.

Vertical mounting on the wall

With vertical mounting of the pump-motor unit on the wall, the pump-motor unit is mounted via the holes in the base.

Proceed as follows:

- Position the pump-motor unit as close to the wall as possible on a stable supporting plate with sufficient load-bearing capacity.
  The pump-motor unit must be positioned with the base toward the wall.
- Provide the base of the pump-motor unit with mounting holes.
- Select the suitable screw type.
- Screw the base of the pump-motor unit to the wall with the screws.
  When doing so, be sure to provide **all** mounting holes with screws!
- Remove the supporting plate.

Eye bolt:

Following installation, the eye bolt must be either firmly tightened or removed.

5.2 Electrical connection (motor)

 © Gardner Denver Deutschland GmbH

- For the tightening torques for terminal board connections (except terminal strips), see Chapter 3.1, "Mechanical data", Section "Tightening torques for screw connections", Pg. 10.
- For terminals with clamping straps (e.g. as per DIN 46282), the conductors must be inserted so that approximately the same clamping height results on both sides of the bar. Individual conductors must therefore be bent into a U-shape or connected with a cable lug (DIN 46234).

This also applies to:

- the protective conductor,
- the outer ground conductor.

Both conductors can be recognized from their color (green/yellow).

5.3 Connecting pipes/hoses (vacuum pump/compressor)

Mufflers:

The pump-motor units are delivered with mufflers (indicated with arrows in the following illustrations) for the inlet and discharge connections as standard equipment.

With **single-impeller pump-motor units**, the mufflers are already mounted on delivery.

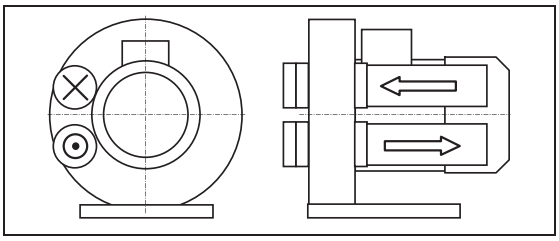

Fig. 2: 2BH721 ... 2BH761 (single-impeller pump-motor units)

With **two-impeller and three-impeller pump-motor units**, the inlet-side muffler is included loose for packaging-related reasons and must be mounted by the operator.

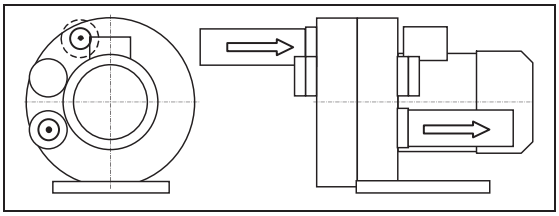

Fig. 3: 2BH722 ... 2BH762 (two-impeller pump-motor units with two-stage design)

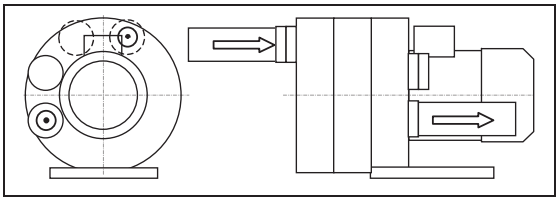

Fig. 4: 2BH723 ... 2BH763 (three-impeller pump-motor units with three-stage design)

 © Gardner Denver Deutschland GmbH

6 Commissioning

 © Gardner Denver Deutschland GmbH

6.2 Start-up and shut-down

Start-up

- Open shut-off device in intake/discharge pipe.
- Switch on power supply for drive motor.

Shut-down:

- Switch off power supply for drive motor.
- Close shut-off device in intake/discharge pipe.

7 Operation

 © Gardner Denver Deutschland GmbH

- Provide mufflers on inlet and discharge side with sealing plugs.

8.2 Storage conditions

To prevent standstill damage during storage, the environment must provide the following conditions:

- dry,
- dust-free,
- low-vibration (effective value of vibration speed $v_{eff} \leq 2.8$ mm/s).
- Ambient temperature: max. **+40°C** [+104°F].

9.1 Repairs/troubleshooting

Fault	Cause	Remedy	Carried out by
Motor does not start; no motor noise.	At least two power supply leads interrupted.	Eliminate interruption by fuses, terminals or power supply cables.	Electrician
Motor does not start; humming noise.	One power supply lead interrupted.	Eliminate interruption by fuses, terminals or power supply cables.	Electrician
	Impeller is jammed.	Open vacuum pump/compressor cover, remove foreign body, clean.	Service*)
		Check or correct impeller gap setting if necessary.	Service
	Impeller defective.	Replace impeller.	Service*)
	Rolling bearing on drive motor side or vacuum pump/compressor side defective.	Replace motor bearing or vacuum pump/compressor bearing.	Service*)
Protective motor switch trips when motor is switched on. Power consumption too high.	Winding short-circuit.	Have winding checked.	Electrician
	Motor overloaded. Throttling does not match specification on rating plate.	Reduce throttling.	Service*)
		Clean filters, mufflers and connection pipes if necessary.	Service*)
	Compressor is jammed.	See fault: "Motor does not start; humming noise" with cause: "Impeller is jammed.".	Service*)
Pump-motor unit does not generate any or generates insufficient pressure difference.	Leak in system.	Seal leak in the system.	Operator
	Wrong direction of rotation.	Reverse direction of rotation by interchanging two connecting leads.	Electrician
	Incorrect frequency (on pump-motor units with frequency converter).	Correct frequency.	Electrician
	Shaft seal defective.	Replace shaft seal.	Service*)
	Different density of pumped gas.	Take conversion of pressure values into account. Inquire with Service Department.	Service
	Change in blade profile due to soiling.	Clean impeller, check for wear and replace if necessary.	Service*)
Abnormal flow noises.	Flow speed too high.	Clean pipes. Use pipe with larger cross-section if necessary.	Operator
	Muffler soiled.	Clean muffler inserts, check condition and replace if necessary.	Service*)
Abnormal running noise.	Ball bearing lacking grease or defective.	Regrease or replace ball bearing.	Service*)
Compressor leaky.	Seals on muffler defective.	Check muffler seals and replace if necessary.	Service*)
	Seals in motor area defective.	Check motor seals and replace if necessary.	Service

*) Only when the maintenance manual is at hand: rectification by the operator.

 © Gardner Denver Deutschland GmbH

9.2 Service/After-sales service

Our Service is available for work (in particular the installation of spare parts, as well as maintenance and repair work), not described in these operating instruction.

A list of spare parts with an exploded drawing is available on the Internet at www.gd-elmorietschle.com.

Observe the following when **returning** pump-motor unit:

- The pump-motor unit must be delivered complete, i.e. not dismantled.
- The pump-motor unit may not present a danger to the workshop personnel.
  If the pump-motor unit has come into contact with dangerous substances, then the procedure described in Chapter 9.3, "Decontamination and Declaration of Clearance", Pg. 25, must be used.
- The original rating plate of the pump-motor unit must be properly mounted, intact and legible.
  All warranty claims are voided for pump-motor units delivered for a damage expertise without the original rating plate or with a destroyed original rating plate.
- In case of warranty claims, the manufacturer must be informed of the operating conditions, operating duration etc. and additional detailed information provided on request if necessary.

9.3 Decontamination and Declaration of Clearance

EU declaration of conformity

Manufacturer:	Gardner Denver Deutschland GmbH Industriestraße 26 97616 Bad Neustadt • Germany
Representative for the compilation of technical documents:	Holger Krause Industriestraße 26 97616 Bad Neustadt • Germany
Description and identification of the machine:	Vacuum pumps/Compressors (Side channel blower) Series G-BH7 Types 2BH72..-.....-. 2BH73..-.....-. 2BH74..-.....-. 2BH75..-.....-. 2BH76..-.....-.

The machine described above meets the following applicable Community harmonisation legislation:

2006/42/EC	European Parliament and Council Directive 2006/42/EC from 17th May 2006 on machinery and amending Directive 95/16/EC.
2004/108/EC*)	Directive 2004/108/EC of the European Parliament and Council from 15th December 2004 for the application of the legal regulations of the EU member states concerning electrical devices and repealing Directive 89/336/EEC

Harmonised standards applied:

EN 1012-1:2010	Compressors and vacuum pumps - Safety requirements - Part 1: Compressors
EN 1012-2:1996 +A1:2009	Compressors and vacuum pumps - Safety requirements - Part 2: Vacuum pumps
EN ISO 12100:2010	Safety of machinery - General principles for design - Risk assessment and risk reduction (ISO 12100:2010)
EN 60204-1:2006	Safety of machinery - Electrical equipment of machines Part 1: General requirements IEC 60204-1:2005 (amended)
EN 60034-1:2010/ AC:2010	Rotating electrical machines - Part 1: Rating and performance IEC 60034-1:2010 (amended)

Bad Neustadt, 18.04.2012
(Place and date of issue)

Andreas Bernklau, product management/attorney
(Name and function)

Dr. Rudi Dittmar, development
(Name and function)

*) Only applicable for version with frequency converter 2FC

664.44436.40.000

© Gardner Denver Deutschland GmbH

Statement on health safety and on the protection of the environment

- For the safety of our employees and to comply with statutory requirements on handling substances harmful to the health and the environment, this statement must be enclosed, fully completed, with **each** unit/system sent.
- **Without the fully completed statement, repair/disposal is not possible and delays are unavoidable!**
- The statement is to be completed and signed by suitably qualified, authorised personnel at the operating organisation.
- In the case of shipment to Germany, the statement is to be completed in German or English.
- The statement is to be attached to the outside of the packing on shipment.
- If necessary, the carrier is to be informed.

1. **Product designation (type):** .....
2. **Serial number (no. BN):** .....
3. **Reason for sending:** .....
4. **The unit/system**
   has **not** come into contact with hazardous substances. There will be **no** hazards for personnel or the environment during repair/disposal. Continue with "6. Legally binding statement“
   has come into contact with hazardous substances. Continue with "5. Information on the contamination“
5. **Information on the contamination** (if necessary provide more information on an additional sheet)
   The unit/system was used in the following application:

   .....
   and has come into contact with the following classifiable substances or substances presenting a hazard to health/environment:

Trade name:	Chemical designation:	Hazardous substance class:	Properties (e.g. toxic, inflammable, caustic, radioactive):

   The unit/system has been emptied in accordance with the operating instructions, flushed and cleaned externally.

   Safety data sheets in accordance with the applicable regulations are enclosed (sheet).

   The following safety precautions are necessary for handling (e.g. personal protective equipment):

   .....

   .....
6. **Legally binding statement**
   I herewith guarantee that the details specified are true and complete and that I, as signatory, am in a position to judge that this is so.
   We are aware that we are liable to the contractor for any damages arising from incomplete or incorrect specifications. We are obliged to indemnify the contractor against claims for damages by third parties arising from incomplete or incorrect specifications. We are aware that, irrespective of this statement, we are directly liable to third parties - in particular including the contractor's employees tasked with repair/disposal.

Company/institute: .....

Name, position: ..... Phone: .....

Street: ..... Fax: .....

Post code, city: .....

Country: ..... Stamp:

Date, signature: .....

© Gardner Denver Deutschland GmbH
P.O. box 1510
97605 Bad Neustadt
Phone: +49 7622 392 0
Fax: +49 7622 392 300
E-mail: er.de@gardnerdenver.com
Internet: www.gd-elmorietschle.com
610.44436.40.000
Edition: 04.2012
English

AIRCOM TECHNOLOGIES inc.

16781, Hymus, Kirkland (Québec) H9H 3L4
T.: 514 695-4740 F.: 514 695-0581
www.aircom.ca info@aircom.ca

Pression & Vide • Pressure & Vacuum

B-501/2 - Blower, Sutorbilt, Model 4L-RHC, Orientation: Horizontal (Flow Down) Driven Shaft Position: RHC (Right Hand Central) Flow Requirement: 487 scfm

OPERATION & MAINTENANCE MANUAL

AIRCOM PACKAGE

WITH

SUTORBILT

POSITIVE DISPLACEMENT BLOWER

YOUR REFERENCE: PO # 1704432-0008 (Blower) & 1704432-0009 (Package)

OUR REFERENCE: 222850 & 222851

TABLE OF CONTENTS

	ITEM
Package drawing(s) including scope of supply …….…… ……..…	1
Drive (belt or coupling) data sheet(s)…….……	2
Blower performance data sheet(s)……..	3
Motor manual(s) / data sheet(s)…..…..… ……..…….……..….	4
Gardner Denver blower parts list, operating and service manual …….…...	5
Maintenance data sheet – Spare parts list ……..…	6

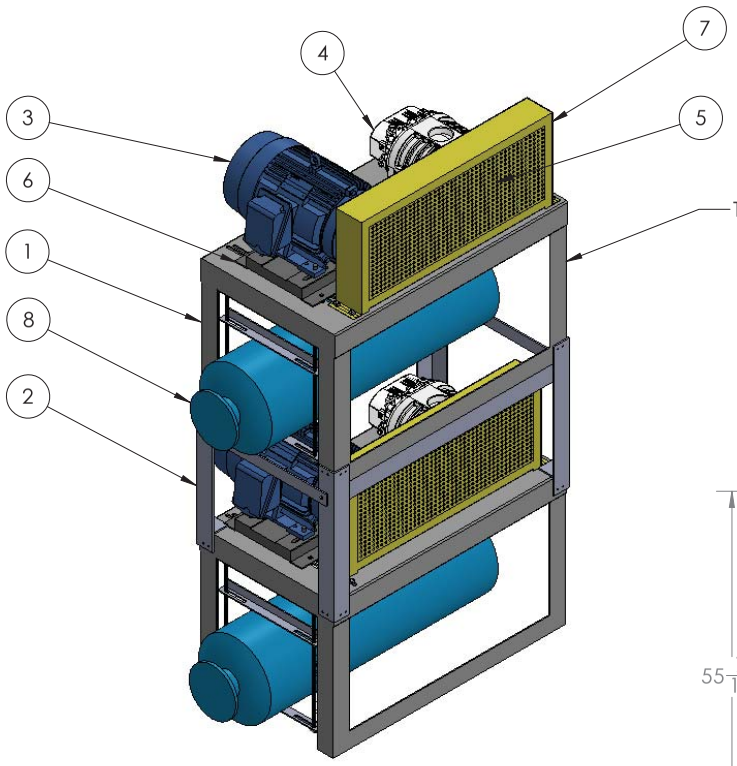

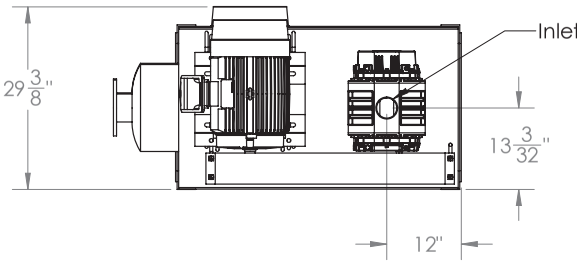

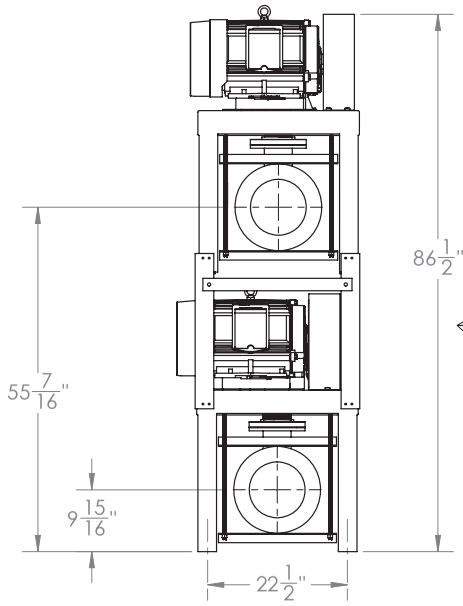

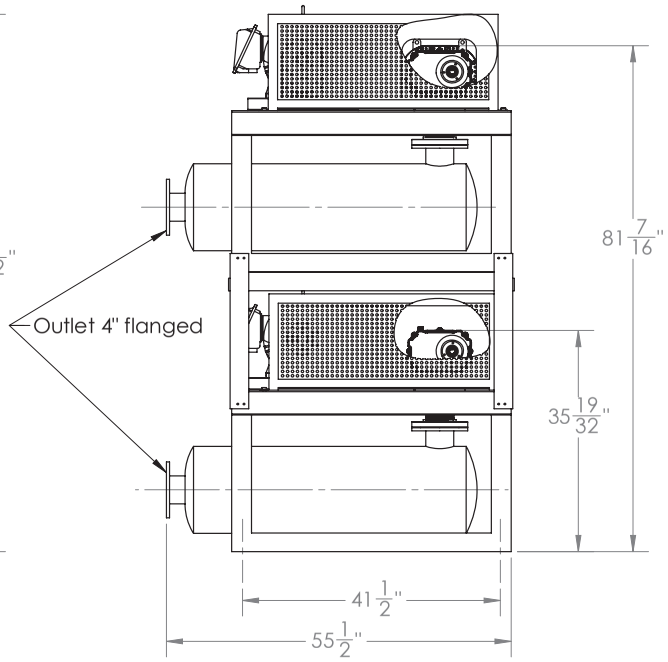

ITEM NO.	DESCRIPTION	QTY.
1	Elevated base, Steel	2
2	Extension base, Steel	1
3	Motor,15HP (supplied by Newterra)	2
4	Blower, Sutorbilt, Model 4L	2
5	Belt Drive 15HP	2
6	Motor slide base	2
7	Guard for belt drive, Steel	2
8	Silencer, URBY4 4in flanged	2

UNLESS OTHERWISE SPECIFIED:
DIMENSIONS ARE IN INCHES
TOLERANCES:
FRACTIONAL ±
ANGULAR: MACH ± BEND ±
TWO PLACE DECIMAL ±
THREE PLACE DECIMAL ±
INTERPRET GEOMETRIC TOLERANCING PER:
MATERIAL
FINISH
NEXT ASSY | USED ON
APPLICATION | DO NOT SCALE DRAWING

	NAME	DATE
DRAWN	Alex C.	01/06/2017
CHECKED		
ENG APPR.		
MFG APPR.		
Q.A.		

COMMENTS:

AIRCOM TECHNOLOGIES

TITLE:
Blower Package
Sutorbilt 4L Stacked

SIZE	DWG. NO.	REV
B	0960	1

SCALE: 1:20 | WEIGHT: | SHEET 1 OF 1

E-75

Maska Pulleys Inc.
180, Boul. Gagnon, Ste-Claire
Qc, Canada G0R 2V0
Tel:(418)883-4322 Fax:(418)883-5015
www.maskapulleys.com

Selection Parameters

Family: Classic & Narrow belts drives

Shaft diameter Driver: 1-5/8 Inch
Shaft diameter Driven: 7/8 Inch
Service Factor: 1.4
Driver power: 13.3 hp
Rpm Driver: 3525
Rpm Driven: 3364 **Tolerance:** -0% +3%
Center distance : Minimum: 23.5 Inch
Maximum: 24.5 Inch
Belts: A,AX,B,BX,C,CX,3V,3VX,5V,5VX,8V

Max. Hub Load: 9999
Rim Speed min.: 900 FPM
Rim Speed max.: 6500 FPM
Nbr of Grooves min.: 1
Nbr of Grooves max.: 15

Pitch Diameter (Inch)

	Min.	Max.
Driver	0.50	71.00
Driven	0.50	71.00

Actual Drive Values

Maximum number of results: 20

Rpm: 3417
Service Factor: 1.55
BeltSpeed (fpm): 5859
List Price: 194.90
Center distance (Inch): 23.6
Power/Belt (hp): 10.3
Deflection (inch): 0.37
Deflection Force (lbs): 3.1
Hub Loads (lbs): 130

Driver Sheave: 2B64

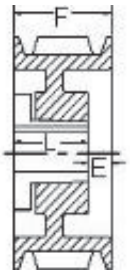

List Price: 68.00
Weight: 7.35 lbs

D.D. A or 4L Belt: 6.00"
D.D. B or 5L Belt: 6.40"
E: 7/16"
F: 1 3/4"
L: 1 5/16"
O.D.: 6.75"

Constuction type: Web

Driver Bushing: SDSX1-5/8

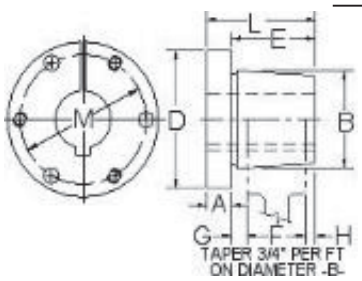

List Price: 17.30
Weight: 1.10 lbs

A: 7/16"
B: 2 3/16"
D: 3 3/16"
E: 7/8"
F: 3/4"
G: 1/4"
H: -1/8"
Keyseat: 3/8 x 3/16"
L: 1 5/16"
M: 2 11/16"

Set screw - Dimensions: 1/4-20 UNC x 1/4
Product specifications: Standard with set screw over keyway.
Hex bolt: 3=1/4-20 UNC x 1-3/8

Driven Sheave: 2MBL69

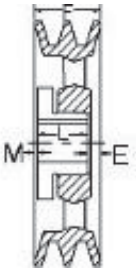

List Price: 64.60
Weight: 6.55 lbs

D.D. A or 4L Belt: 6.2"
D.D. B or 5L Belt: 6.6"
E: 1/16"
F: 1 3/4"
L: 1 11/32"
M: 11/32"
O.D.: 6.95"

Constuction type: Arms

Recommended Drive Selections are designed for use with Maska components (sheaves, bushings and V-belts) which meet or exceed MPTA & RMA standards. The use of lesser quality products could affect life expectancy of drive.Selections and Pricing are as accurate as possible. Maska is not responsible for ANY pricing or design errors.Price shown are for standard products only. For non-standard products or products that need dynamic balancing, contact Maska for pricing.

Driven Bushing: LX7/8

List Price: 9.00
Weight: 0.90 lbs

Set screw - Dimensions: 1-8UNCx1-1/2
Hex bolt: 2 = 1/4-20UNC X 7/8

A: 11/32"
B: 1 5/8"
D: 2 1/2"
E: 1"
F: 29/32"
G: 3/16"
H: -3/32"
Keyseat: 3/16 x 3/32"
L: 1 11/32"
M: 2"

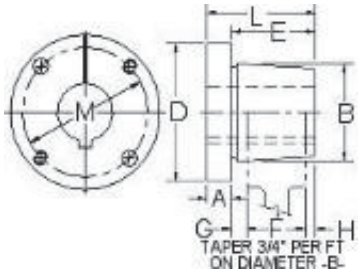

Belts: VBA65 (Qty:2)

List Price: 18.00
Weight: 0.30 lbs

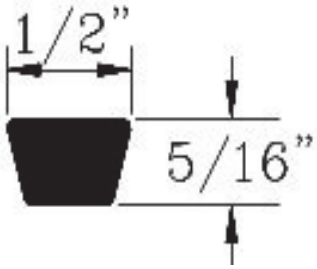

Recommended Drive Selections are designed for use with Maska components (sheaves, bushings and V-belts) which meet or exceed MPTA & RMA standards. The use of lesser quality products could affect life expectancy of drive.Selections and Pricing are as accurate as possible. Maska is not responsible for ANY pricing or design errors.Price shown are for standard products only. For non-standard products or products that need dynamic balancing, contact Maska for pricing.

QuickPik™

Sutorbilt Legend - 4L

Product Information

CORRECTED VALUES	ORIGINAL UNITS	ENGLISH UNITS	METRIC UNITS
Ambient Pressure	100 ALTI-FT	14.642 PSIA	1.01 bar a
Elevation	100 ALTI-FT	100 ALTI-FT	30 alti-m
Inlet Pressure	14.642 PSIA	0.000 PSIG	0 bar g
Inlet Pressure Loss	0.3 PSIG	0.300 PSIG	0.021 bar g
Inlet Temp	68 F	68 °F	20 °C
Inlet Flow	487 SCFM	499 ICFM	848 m³/h
Discharge Pressure	4.4 PSIG	4.400 PSIG	0.303 bar g
Discharge Pressure Loss	0.2 PSIG	0.200 PSIG	0.014 bar g
MEASURED VALUES	**ORIGINAL UNITS**	**ENGLISH UNITS**	**METRIC UNITS**
Speed	3364 RPM	3364 RPM	3364 RPM
RPM % Of Max	93	93	93
Power	13.3 HP	13.3 HP	9.9 kW
Discharge Temp	126 °F	126 °F	52 °C
Temp % of Max	48	48	48
Noise	88 dBa	88 dBa	88 dBa
Pressure % of Max	70	70	70



PHYSICAL	
Weight	155 lbs.
Gear Diameter / Center Distance	4 in.
Connection Size	3i/3d in.
Case Length	8 in.
WR^2	0.924 lb-ft^2
Orientation	horizontal
PERFORMANCE	
Max Delta P	7 PSI
Max Temp	260 °F
Max Speed	3600 RPM
Min Speed	955 RPM
Max Case Pressure	25 PSIG
Max Delta T	160 °F

QuickPik™

AMBIENT GAS PARAMETERS	ENGLISH UNITS	METRIC UNITS
Molecular Weight	28.866 lbm/lbmol	28.866 kg/kgmol
R Value	53.523 ft.lbf/lbm.R	0.288 kJ/kg.K
Density	0.075 lbm/ft ^{3}	1.196 kg/m^3

GAS MIX:	VOL
Air	100%

Performance Curves

Temperature Rise

DEFINED CONDITIONS
58 F

RPM
3364

Published Data
Defined Conditions

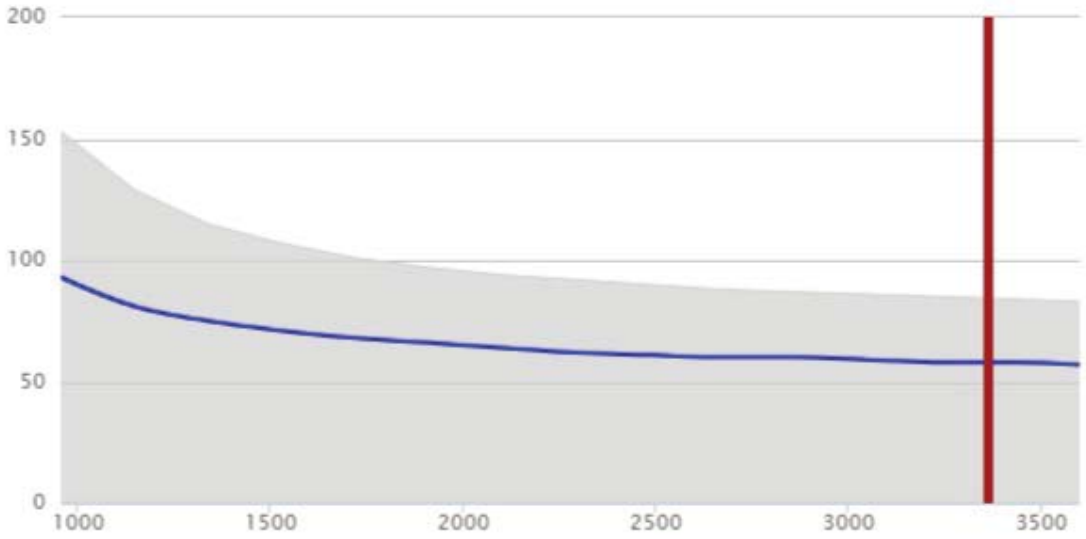

Flow

DEFINED CONDITIONS
487 SCFM

RPM
3364

Published Data
Defined Conditions

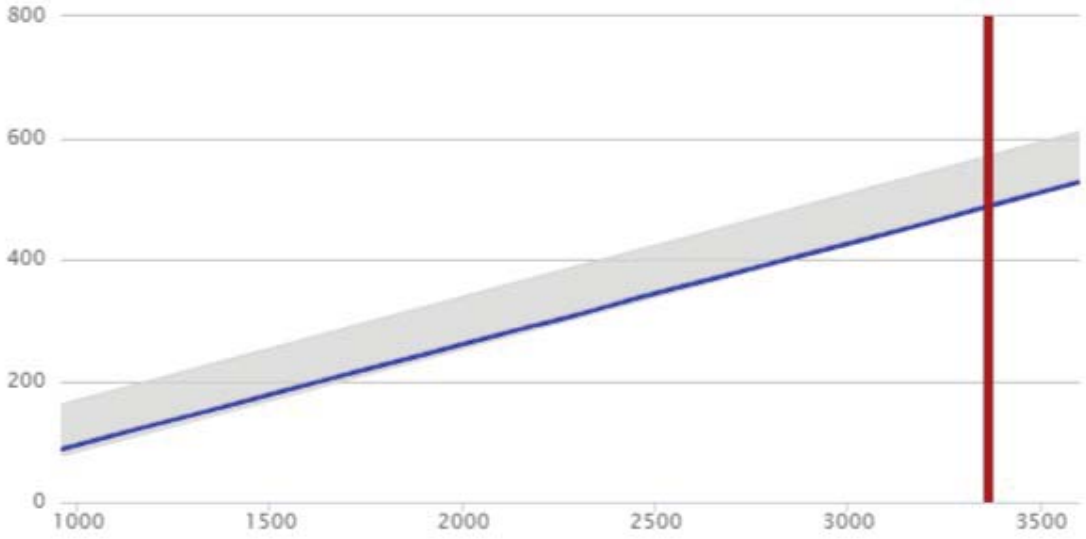

QuickPik™

Performance Curves

Power

DEFINED CONDITIONS
13.3 HP

RPM
3364

Published Data
Defined Conditions

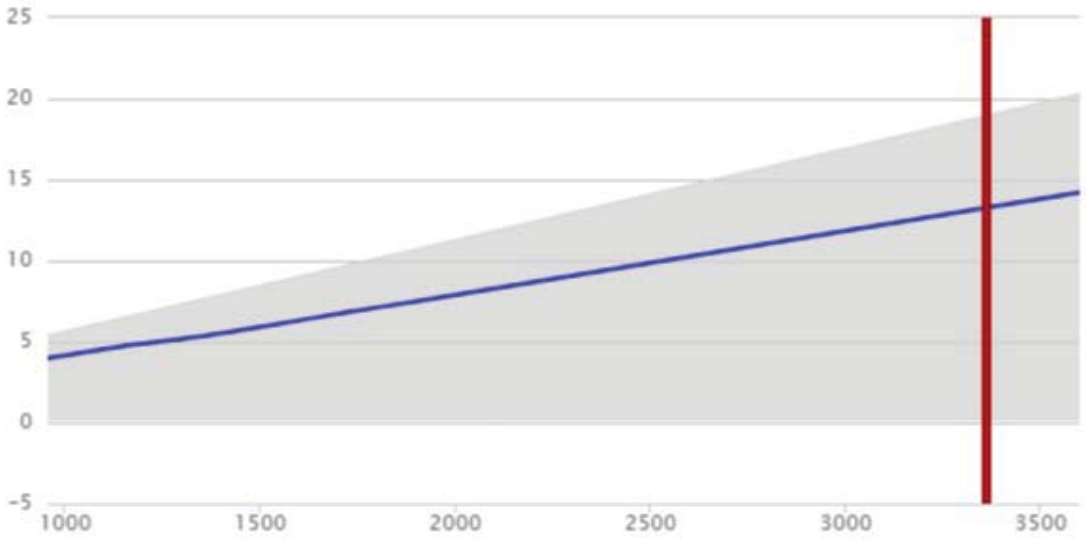

Torque

DEFINED CONDITIONS
20.8 ft-lb

RPM
3364

Published Data
Defined Conditions

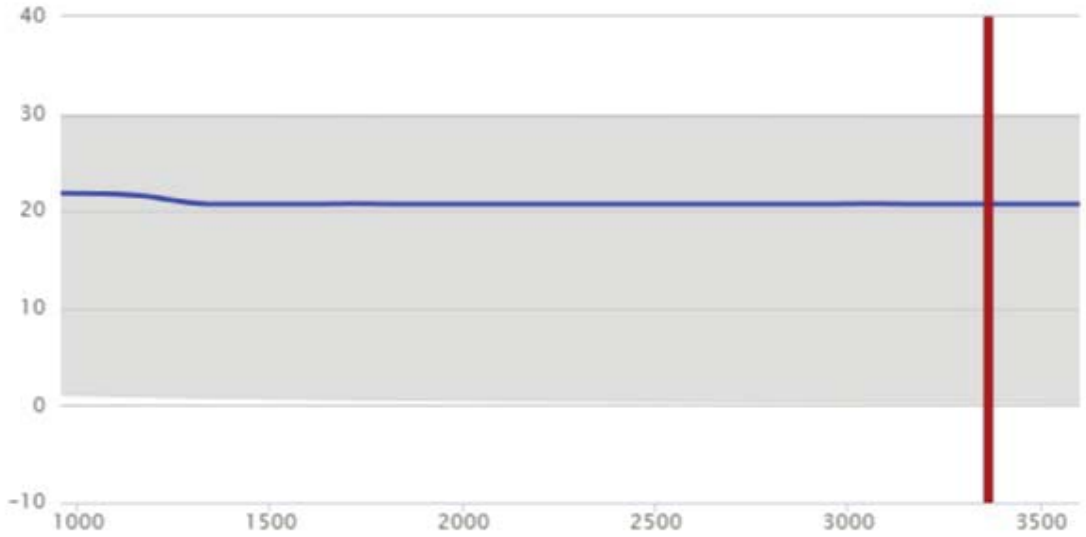

Gardner Denver

PARTS LIST OPERATING AND SERVICE MANUAL

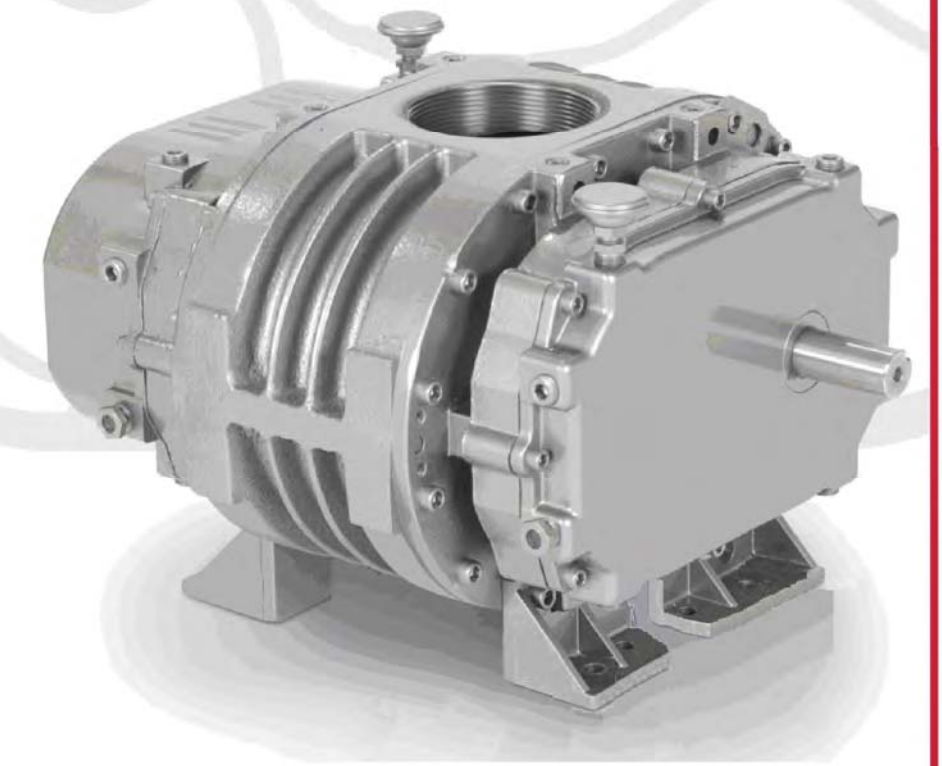

LEGEND
"R" SERIES BLOWERS

3" – 5" GEAR DIAMETER

Models
GAB_ _ R _
GAC_ _ R _
GAE_ _ R _

ENERGY STAR PARTNER

SB-7-632
Version 05
July 8, 2015

MAINTAIN BLOWER RELIABILITY AND PERFORMANCE
WITH GENUINE GARDNER DENVER
PARTS AND SUPPORT SERVICES

Factory genuine parts, manufactured to design tolerances, are developed for optimum dependability - - - specifically for your blower. Design and material innovations are born from years of experience with hundreds of different blower applications. When you specify factory genuine parts you are assured of receiving parts that incorporate the most current design advancements manufactured in our state-of-the-art blower factory under exacting quality standards.

Your AUTHORIZED DISTRIBUTOR offers all the backup you require. A worldwide network of authorized distributors provides the finest product support in the blower industry.

1. Trained technical representatives to assist you in selecting the correct replacement parts.

2. Complete inventory of new machines and new, genuine factory parts.

3. A full line of factory tested AEON® PD blower lubricants, specifically formulated for optimum performance in all blowers.

4. Authorized distributor service technicians are factory-trained and skilled in blower maintenance and repair. They are ready to respond and assist you by providing fast, expert maintenance and repair service.

INSTRUCTIONS FOR DETERMINING BLOWER CONFIGURATION

1. Face the blower drive shaft.
2. In a **VERTICAL** configuration, air flow is horizontal.
3. In a **HORIZONTAL** configuration, air flow is vertical.
4. In a vertical configuration, a **BOTTOM HAND** exists when the drive shaft is below the horizontal center line of the blower. A **TOP HAND** exits when the drive shaft is above the horizontal center line of the blower.
5. In a horizontal configuration, a **RIGHT HAND** exists when the drive shaft is to the right of the vertical center line of the blower. A **LEFT HAND** exists when the drive shaft is to the left of the vertical center line of the blower.

INSTRUCTIONS FOR ORDERING REPAIR PARTS

For pricing, and ordering information contact your nearest AUTHORIZED FACTORY DISTRIBUTOR. When ordering parts, specify Blower **MODEL** and **SERIAL NUMBER** (see nameplate on unit).

Rely upon the knowledge and experience of your AUTHORIZED DISTRIBUTOR and let them assist you in making the proper parts selection for your blower.

To Contact Gardner Denver or locate your local distributor:
Visit: www.contactgd.com/mobile

Or

Call: (217)222-5400

GARDNER DENVER LUBRICANT ORDER INFORMATION

Re-order Part Numbers for Factory Recommended Lubricants.

Gear and Drive End

AEON PD Synthetic Lubricant, AEON PD-XP—Extreme Duty Synthetic Lubricant or AEON PD-FG—Food Grade Synthetic Lubricant

AEON PD Synthetic Lubricant

Description	Part Number
1 Quart	28G23
Case/12Quarts	28G24
1 Gallon Container	28G40
Case/6 Gallons	28G41
5 Gallon Pail	28G25
55 Gallon Drum	28G28

AEON PD-XD – Extreme Duty Synthetic Lubricant

Description	Part Number
1 Quart	28G46
Case/12Quarts	28G47
1 Gallon Container	28G42
Case/6 Gallons	28G43
5 Gallon Pail	28G44
55 Gallon Drum	28G45

AEON PD-FG – Food Grade Synthetic Lubricant

Description	Part Number
1 Quart	28H97
Case/12Quarts	28H98
1 Gallon Container	28H333
Case/6 Gallons	28H334
5 Gallon Pail	28H99
55 Gallon Drum	28H100

Drive End

AEON PD Grease

Description	Part Number
Case/10 Tubes (14oz/Tube	28H283

Call your local Gardner Denver Distributor to place your order for Gardner Denver lubricants. Your Authorized Gardner Denver Distributor is:

FOREWORD

Sutorbilt® blowers are the result of advanced engineering and skilled manufacturing. To be assured of receiving maximum service from this machine, the owner must exercise care in its operation and maintenance. This manual is written to give the operator and maintenance department essential information for day-to-day operation, maintenance and adjustment. Careful adherence to these instructions will result in economical operation and minimum downtime.

⚠ DANGER
Danger is used to indicate the presence of a hazard which will cause severe personal injury, death, or substantial property damage if the warning is ignored.

⚠ WARNING
Warning is used to indicate the presence of a hazard which can cause severe personal injury, death, or substantial property damage if the warning is ignored.

⚠ CAUTION
Caution is used to indicate the presence of a hazard which will or can cause minor personal injury or property damage if the warning is ignored.

NOTICE
Notice is used to notify people of installation, operation or maintenance information which is important but not hazard-related.

SAFETY PRECAUTIONS

Safety is everybody's business and is based on your use of good common sense. All situations or circumstances cannot always be predicted and covered by established rules. Therefore, use your past experience, watch out for safety hazards and be cautious. Some general safety precautions are given below:

⚠ DANGER

Failure to observe these notices could result in injury to or death of personnel.

- **Keep fingers and clothing away from revolving fan, drive coupling, etc.**
- **Do not use the air discharge from this unit for breathing – not suitable for human consumption.**
- **Do not loosen or remove the oil filler plug, drain plugs, covers or break any connections, etc., in the blower air or oil system until the unit is shut down and the air pressure has been relieved.**
- **Electrical shock can and may be fatal.**
- **Blower unit must be grounded in accordance with the National Electrical Code. A ground jumper equal to the size of the equipment ground conductor must be used to connect the blower motor base to the unit base.**
- **Open main disconnect switch, tag and lockout before working on the control.**
- **Disconnect the blower from its power source, tag and lockout before working on the unit – this machine may be automatically controlled and may start at any time.**

⚠ WARNING

Failure to observe these notices could result in damage to equipment.

- **Stop the unit if any repairs or adjustments on or around the blower are required.**
- **Disconnect the blower from its power source, tag and lockout before working on the unit – this machine maybe automatically controlled and may start at any time.**
- **Do not exceed the rated maximum speed shown on the nameplate.**
- **Do not operate unit if safety devices are not operating properly. Check periodically. Never bypass safety devices.**

TABLE OF CONTENTS

Maintain Blower Reliability And Performance 2

Foreword 4

Safety Precautions..... 5

Sutorbilt Legend Series Blowers Matrix/Menu 8

Introduction..... 9

Section 1, Equipment Check..... 10

Section 2, Installation..... 12

Section 3, Lubrication 17

Section 4, Operation 22

Section 5, Special Tools Required 25

Section 6, Disassembly Instructions..... 27

Section 7, Assembly Instructions..... 31

Section 8, Parts List..... 39 thru 62

INDEX

Aeon PD Extreme Duty Lubricant....20
Aeon PD Food Grade Lubricant....20
Aeon PD Synthetic Lubricant....20
Air Filters And Filter Silencers....16
Assembly Instructions, Section 7....31

Blower Startup Checklist....23

Disassembly Instructions, Section 6....27
Drive End Lubrication....17, 18
Drive Installation....13

Equipment Check, Section 1....10

Foundations....12

Gear End Lubrication....18

Installation, Section 2....12
Installing The Timing Gears....36
Introduction....9

Limitations....22
Location....12

Lubrication, Section 3....17

Mechanical Seals Only....31, 32
Mounting Configurations....12

Operation, Section 4....22

Parts List, Section 8....39
Piping....14

Recommended Lubricant....20
Removing Protective Materials....10
Repositioning The Mounting Feet....12

Safety Precautions....5
Safety Precautions....24

Section 7
Assembly Instructions....31
Setting Impeller End Clearance With Mechanical Seals....35
Setting Impeller End Clearances....34

Special Tools Required Section 5....25
Storage....10

Trouble Shooting....24

Warranty....63

LIST OF ILLUSTRATIONS

FIGURE 2-1 – BLOWER MOUNTING CONFIGURATION....13
FIGURE 2-2 – BELT DRIVE OVERHUNG LOAD CALCULATIONS....15

FIGURE 3-1 - LUBRICATION....17
FIGURE 3-2 – APPROXIMATE OIL CAPACITIES....18
FIGURE 3-3 – AEON PD SYNTHETIC LUBRICANT....20
FIGURE 3-4 – SYNTHETIC LUBRICANT CHART....20
FIGURE 3-5 – LUBRICATION RECOMMENDATION....21

FIGURE 4-1 – MAXIMUM / MINIMUM OPERATING LIMITATIONS....22

FIGURE 5-1 – PULLER PLATE....25
FIGURE 5-2 – SEAL DRIVE....25
FIGURE 5-3 – MECHANICAL SEAL INSTALLATION TOOL....26
FIGURE 5-4 – BEARING PRESS TOOL – MECHANICAL SEAL UNITS....26

FIGURE 6-1 – DISASSEMBLY ILLUSTRATIONS....27
FIGURE 6-2 – DISASSEMBLY ILLUSTRATIONS....27
FIGURE 6-3 – DISASSEMBLY ILLUSTRATIONS....28
FIGURE 6-4 – DISASSEMBLY ILLUSTRATIONS....28
FIGURE 6-5 – DISASSEMBLY ILLUSTRATIONS....28
FIGURE 6-6 – DISASSEMBLY ILLUSTRATIONS....29

FIGURE 7-1 – ASSEMBLY ILLUSTRATIONS....31
FIGURE 7-2 – ASSEMBLY ILLUSTRATIONS....32
FIGURE 7-3 – ASSEMBLY ILLUSTRATIONS....32
FIGURE 7-4 – ASSEMBLY ILLUSTRATIONS....33
FIGURE 7-5 – ASSEMBLY ILLUSTRATIONS....34
FIGURE 7-6 – ASSEMBLY ILLUSTRATIONS....34
FIGURE 7-7 – ASSEMBLY ILLUSTRATIONS....34
FIGURE 7-8 – ASSEMBLY ILLUSTRATIONS....37
FIGURE 7-9 – TORQUE FT LBS....38

SUTORBILT LEGEND SERIES BLOWERS
MATRIX/MENU

NOTICE TO CUSTOMER – To find the construction options for Your blower unit, FILL IN THE BALANCE OF LETTERS OR NUMBERS FROM YOUR UNIT NAMEPLATE

	G	A				R	
COLUMN NUMBER:	1	2	3	4	5	6	7

FOLLOW THE LINE DOWN AND OVER FROM EACH SPACE THUS FILLED IN TO FIND THE APPROPRICATE CONSTRUCTION OPTION WITH WHICH YOUR MACHINE IS EQUIPPED.

COLUMN 1 – BASIC DESIGNATOR

COLUMN 2 – PRODUCT FAMILY

COLUMN 3 – GEAR DIAMETER

B	3”	E	5”
C	4”		

COLUMN 4 – CASE LENGTH

- L - Low Pressure
- M - Medium Pressure
- H - High Pressure

COLUMN 5 – CONFIGURATION

- A Vertical-Top Hand -Central Timed
- B Vertical-Bottom Hand – Central Timed
- C Horizontal – Left Hand – Central Timed
- D Horizontal – Right Hand – Central Timed

COLUMN 6 – DESIGN VERSION

COLUMN 7 – ADDITIONAL DESCRIPTION

	SEALS	CLEARANCES	LUBRICATION
A.	Lip	Standard	Grease-Splash
B.	Mechanical	Standard	Grease-Splash
C.	Lip	High Temperature	Grease-Splash
D.	Lip	Standard	Dual-Splash
E.	Mechanical	Standard	Dual-Splash
F.	Lip	High Temperature	Dual-Splash
G.	Mechanical	High Temperature	Dual-Splash

INTRODUCTION
YOUR KEY TO TROUBLE FREE SERVICE

Thank you for investing in Gardner Denver quality. The Gardner Denver reputation for rugged dependability has been earned by over 50 years of service in demanding, industrial operations where downtime cannot be tolerated and efficient blower performance is expected.

Your Gardner Denver Sutorbilt blower is a precision engineered blower that has been carefully manufactured and thoroughly tested at the state-of the art Gardner Denver Blower Factory in Sedalia, Missouri.

As with other precision machinery, there are several relatively simple installation, operation and maintenance procedures that you must observe to assure optimum blower performance. There is no guesswork in the manufacture of your highly advanced Sutorbilt blower and there must be none in preparing the blower to get the job done in the field.

The purpose of this manual is to help you properly install, operate and maintain your Sutorbilt blower. It is essential that you review all sections of this manual in preparation for installing your blower. Follow the instructions for installing your blower. Follow the instructions carefully and you will be rewarded with trouble-free Gardner Denver Sutorbilt service year in and year out.

SECTION 1
EQUIPMENT CHECK

Before uncrating, check the packing slip carefully to be sure all the parts have been received. All accessories are listed as separate items on the packing slip, and small important accessories such as relief valves can be overlooked or lost. After every item on the packing slip has been checked off, uncrate carefully.

NOTICE
Register a claim with the carrier for lost or damaged equipment.

⚠WARNING
Customers are cautioned to provide adequate protection, warning and safety equipment necessary to protect personnel against hazards involved in installation and operation of this equipment in the system or facility.

STORAGE

Your Gardner Denver Blower was packaged at the factory with adequate protection to permit normal storage for up to six (6) months.

If the unit is to be stored under adverse conditions or for extended periods of time, the following additional measures should be taken to prevent damage.

1. Store the blower in a clean, dry, heated (if possible) area.
2. Make certain inlet and discharge air ports are tightly covered to prevent foreign material from entering the air box.
3. All exposed, non-painted surfaces should be protected against rust and corrosion.
4. Provide adequate protection to avoid accidental mechanical damage.
5. In high humidity or corrosive environments, additional measures may be required to prevent rusting of the blower internal surfaces.
6. To prevent rusting of gears, bearings, etc., the oil reservoirs may be filled with normal operating oil.

⚠CAUTION
Before running the blower, drain the oil and replace to the proper operating level with clean, fresh lubricant.

7. Rotate the blower shaft (10 to 25 turns) weekly during storage. Inspect the blower shaft (near the shaft seal area) monthly and spray with rust inhibitor if needed.
8. For long term storage (over six (6) months), contact Gardner Denver Compressor Division Customer Service for recommendations.

REMOVING PROTECTIVE MATERIALS

The shaft extension is protected with rust inhibitor which can be removed with any standard solvent.

⚠CAUTION
Follow the safety directions of the solvent manufacturer.

Blower inlet and outlet are temporarily capped to keep out dirt and other contaminants during shipment. These covers must be removed before start-up.

The internal surfaces of all Sutorbilt units are mist sprayed with a rust preventative to protect the machine during shipment. Remove this film upon initial startup, using any commercial safety solvent. Position the blower so that the inlet and discharge connections are in the vertical position (vertical airflow). On vertically mounted units, it will be necessary to lay the unit on its side supporting the ends of the unit so as not to restrict the port on the bottom side. Place a shallow pan on the under side of the unit. With the blower disconnected from power, spray the solvent in the top port, rotating the impellers by spinning the shaft manually. Continue this procedure until the unit is visibly clean.

⚠WARNING
Rotating components will cause severe injury in case of personal contact. Keep hands and loose clothing away from blower inlet and discharge ports.

SECTION 2
INSTALLATION

LOCATION

Install the blower in a well lit, clean dry place with plenty of room for inspection and maintenance.

FOUNDATIONS

For permanent installation we recommend concrete foundations be provided, and the equipment should be grouted to the concrete. It is necessary that a suitable base be used, such as a steel combination base under blower and motor, or a separate sole plate under each. Before grouting, equipment must be leveled, free of all strains, and anchored so no movement will occur during setting of grout. After grout has completely hardened, a recheck is necessary to compensate for shrinkage, etc. If required, add shims under blower feet after final tightening of foundation anchor bolts to remove strain from the blower housing.

Where jack screws or wedges are used during grouting, they must be backed off and wedges removed before final tightening of anchor bolts. Refer to grouting instructions.

Where a concrete foundation is not feasible, care must be taken to insure that equipment is firmly anchored to adequate structural members, restricting movement and vibration.

MOUNTING CONFIGURATIONS

The blower flex-mount design enables horizontal and vertical mounting configurations with top or bottom hand, right or left hand shaft positioning. The units are center timed allowing rotation in either direction (refer to Figure 2-1).

REPOSITIONING THE MOUNTING FEET.

1. Position the mounting feet to the desired location and snug the capscrew.
2. Place the blower on its feet on a flat surface.
3. Loosen mounting feet capscrews and level unit up. The bench or blower base flatness should be within .002 of an inch.

NOTICE
If the unit is not flat within .002 of an inch, it will be necessary to shim the blower feet at installation.

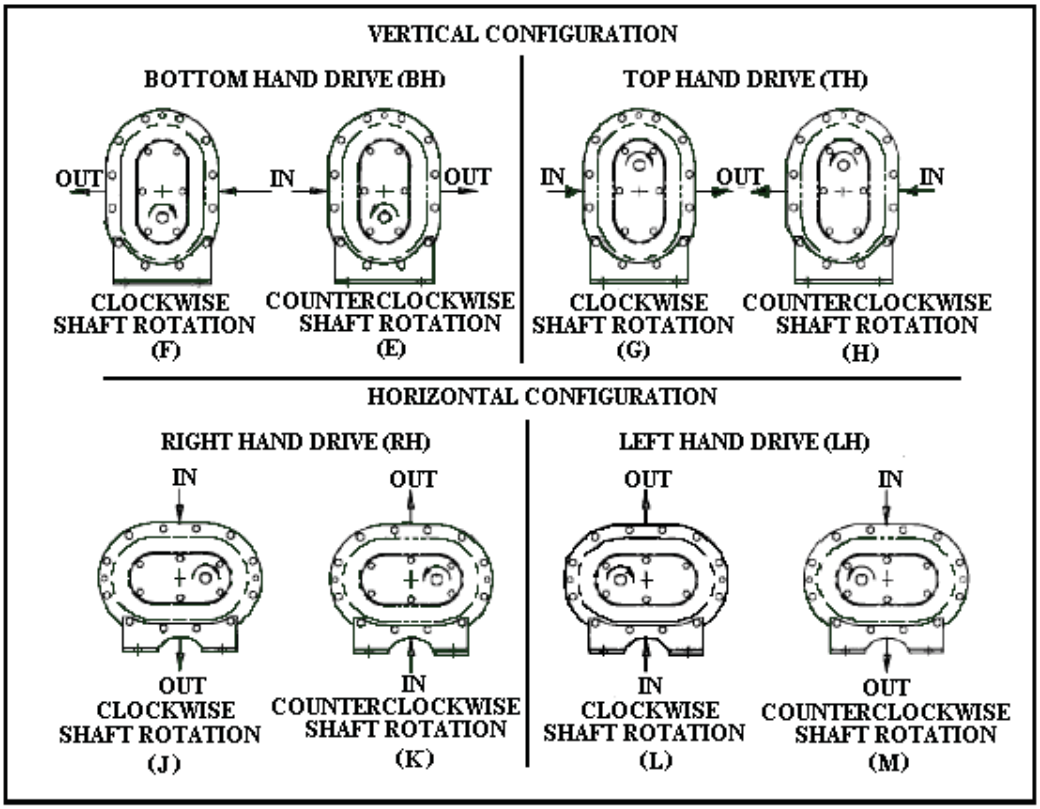

FIGURE 2-1 – BLOWER MOUNTING CONFIGURATIONS

4. Secure the mounting feet capscrews to the torque value in Figure 7-9, page 38.

NOTICE
When changing mounting configuration, it may be necessary to reposition breather/oil fill (B), oil level gauge (H) and drain plug (A). Refer to Figure 3-1, page 17, for correct location.

DRIVE INSTALLATION

When selecting a V-belt drive, check to be sure the shaft overhung load limitation is not exceeded. Refer to FIGURE 2-2, page 15, for overhung load calculations and limitations.

Belt drives must be carefully aligned. Motor and blower pulleys must be parallel to each other and in the same plane within 1/32 inch. Belt tension should be carefully adjusted to the belt manufacturer's recommendation using a belt tension gauge. Check tension frequently during the first day of operation.

⚠WARNING
Over tightening belts leads to heavy bearing loads and premature failure.

On the direct connected units, alignment and lubrication of couplings to specifications of the coupling manufacturer is very important. When mounted drives are supplied from the factory proper alignment has been established before shipment. However, during shipping, handling and installation, it is likely that the alignment has been disturbed and final adjustment must be made before startup.

⚠WARNING

Exceeding overhung load limitations leads to unwarrantable premature bearing failure and shaft breakage.

The location of the sheave on the blower shaft greatly affects the stress in the shaft. The optimum blower sheave positioning is as close as possible to the blower drive cover, not to exceed dimension "C" in Drive Shaft Illustration, FIGURE 2-2, page 15

The calculated shaft moment must not exceed the maximum allowable moment listed in Maximum Allowable Moment Chart, FIGURE 2-2 page 15. If the calculated shaft moment exceed the maximum allowable moment:

- Increase Sheave Diameters to Reduce Belt Pull
- Use Jackshaft Drive
- Use Direct Coupled or Gearbox Drive

To calculate shaft moment for a given V-Belt Drive Arrangement:

1. Use the formula for Calculation of Belt Pull, FIGURE 2-2, page 15, to calculate belt pull. Refer to Arc of Contact Factor Chart, Figure 2-2, page 15.
2. Insert the calculated belt pull into the formula for Calculation of Shaft Moment, FIGURE 2-2, page 15 to arrive at the calculated shaft moment.

PIPING

Inlet and discharge connections on all blowers are large enough to handle maximum volume with minimum friction loss. Reducing the pipe diameter on either inlet or discharge will only create additional line loss and increase the overall pressure differential. Excessive weight of piping and fittings will cause internal misalignment and premature wear. Never allow the blower to carry the weight of the pipe. If possible, a spool or sleeve-type expansion joint should be installed between the unit and the piping. Where a flexible connection is not practical, the weight of the rigid connection must be separately supported.

All system piping must be cleaned internally before connecting to the blower.

⚠WARNING

Sutorbilt blowers are shipped dry from the factory. Do not attempt to operate the blower before following proper lubrication instructions. Permanent damage to the gears, bearings and seals will occur.

Gear Diameter (Inches)	GREASE SPLASH Dimensions (Inches)			Maximum Allowable Moment (LB-IN)
	A	B	C (Max)	
3	2.88	.85	.38	385
4	3.49	1.10	.38	490
5	3.90	1.40	.38	1245

MAXIMUM ALLOWABLE MOMENT

Gear Diameter (Inches)	DUAL SPLASH LUBE Dimensions (Inches)			Maximum Allowable Moment (LB-IN)
	A	B	C (Max)	
3	3.07	1.18	.25	385
4	3.62	1.27	.25	650
5	3.85	1.39	.25	1370

MAXIMUM ALLOWABLE MOMENT

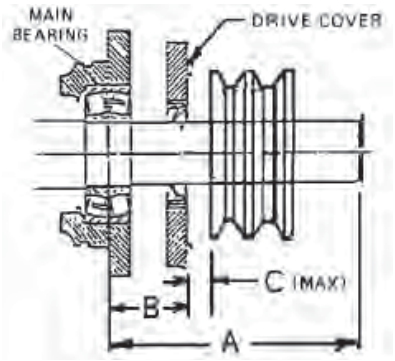

Z	Ac	Z	Ac	Z	Ac	Z	Ac	Z	Ac	Z	Ac
0.000	1.000	0.250	0.966	0.500	0.926	0.750	0.879	1.000	0.823	1.250	0.751
0.025	0.997	0.275	0.962	0.525	0.922	0.775	0.874	1.025	0.816	1.275	0.742
0.050	0.994	0.300	0.958	0.550	0.917	0.800	0.869	1.050	0.810	1.300	0.734
0.075	0.990	0.325	0.954	0.575	0.913	0.825	0.864	1.075	0.803	1.325	0.725
0.100	0.987	0.350	0.951	0.600	0.908	0.850	0.858	1.100	0.796	1.350	0.716
0.125	0.983	0.375	0.947	0.625	0.904	0.875	0.852	1.125	0.789	1.375	0.706
0.150	0.980	0.400	0.943	0.650	0.899	0.900	0.847	1.150	0.782	1.400	0.697
0.175	0.977	0.425	0.939	0.675	0.894	0.925	0.841	1.175	0.774	1.425	0.687
0.200	0.973	0.450	0.935	0.700	0.889	0.950	0.835	1.200	0.767		
0.225	0.969	0.475	0.930	0.725	0.884	0.975	0.829	1.225	0.759		

ARC OF CONTACT FACTORS

$$\text{Belt Pull} = \left[\frac{2.5 - Ac}{Ac}\right] \times \left[\frac{125954 \times Hp \times S.F.}{D \times RPM}\right]$$

Key:
- Ac = Arc of Contact Factor (Refer to Arc of Contact Factor Chart above)
- Hp = Blower Horsepower for Operating Conditions
- S.F. = Actual Drive Service Factor
- D = Blower Sheave Pitch Diameter in Inches
- RPM = Blower Sheave Speed
- Z = $\left[\frac{\text{Large Sheave Pitch Diameter (in)} - \text{Small Sheave Pitch Diameter (in)}}{\text{Sheave Center Distance (in)}}\right]$

CALCULATION OF BELT PULL

$$\text{Shaft Moment (LB-IN)} = \text{Belt Pull} \times \left[B + C + \left(\frac{\text{Sheave Width}}{2}\right)\right]$$

CALCULATION OF SHAFT MOMENT

FIGURE 2-2 – BELT DRIVE OVERHUNG LOAD CALCULATIONS

AIR FILTERS AND FILTER SILENCERS

⚠WARNING

Servicing the air filters is one of the most important maintenance operations to be performed to insure long blower life.

Servicing frequency of filter elements is not time predictable. A differential pressure indicator, with a continuous gauge reading, should be installed across the inlet filter. It will tell how much of the service life of the filter element has been used. It will also eliminate both premature filter servicing and premature blower failure due to a plugged filter when the filter pressure drop is used to establish maintenance points. In all cases refer to the filter manufacturer's service instructions. Due to the many types of filters, it is not practical to give specific instructions covering all models.

NOTICE

No matter what type of filter is used, always make sure all seats, gaskets, clamps and hose connections on the filter and inlet line are absolutely air tight. Each time the filter is serviced, inspect interior of the blower for dirt.

SECTION 3
LUBRICATION

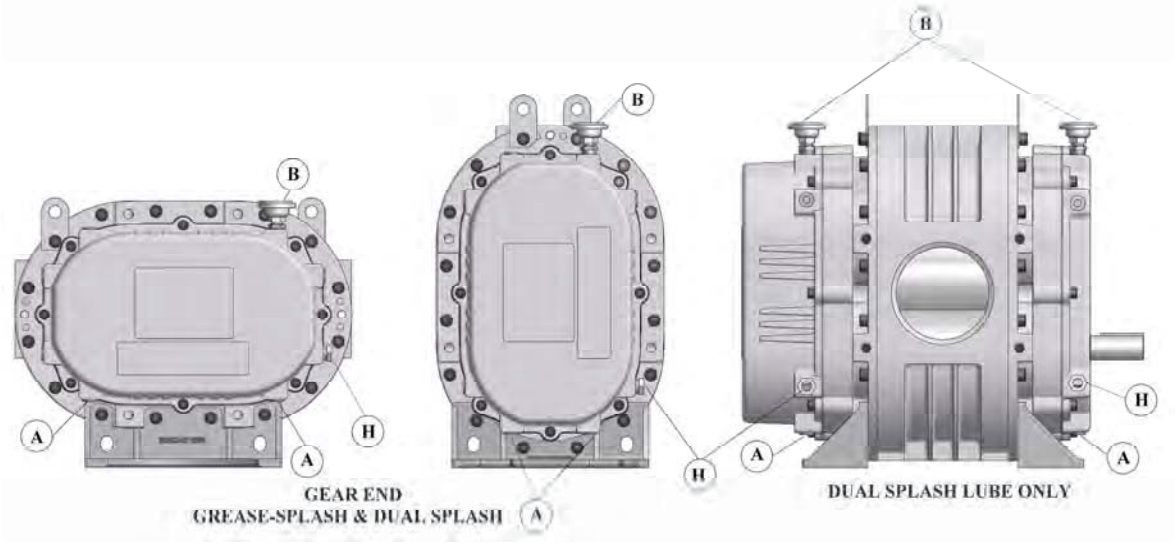

A. OIL DRAIN PLUG
B. BREATHER/OIL FILL
C. GREASE FITTING
E. GREASE VENTS
H. OIL LEVEL GAUGE

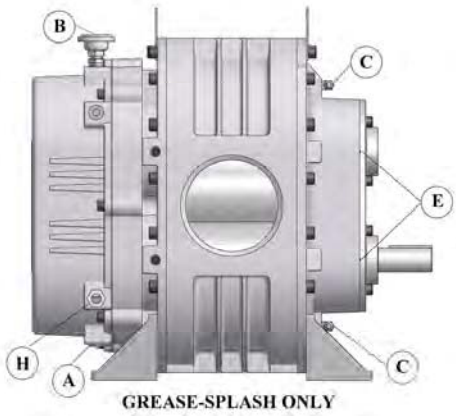

FIGURE 3-1 - LUBRICATION

DRIVE END LUBRICATION (For Grease – Splash Lube Blowers)

Drive end bearings are grease lubricated at the factory with Lithium Complex based grease. **For relubrication, use Gardner Denver AEON PD Grease, Part Number 28H283.** AEON PD Grease is a high temperature, high performance grease that is formulated with antiwear additives to provide superior service under the severe operating conditions of positive displacement blowers. It contains rust inhibitors which provide excellent protection against rust and corrosion.
If you choose not to use AEON PD Grease, select compatible base grease. The grease should be NLGI Grade 2 EP, contain rust inhibitors, and be suitable for blower discharge temperatures up to 350° F (177° C). Completely clean or purge the factory--filled grease from the blower. **Do not mix different types of grease as they may not be compatible. Substitutions may cause early bearing failure.**

Re-grease bearings every 500 hours of operation. Lubricate each bearing through the grease fittings located at C in FIGURE 3-1 (2 places). When re-greasing, the old grease will be forced out of the vents (E in FIGURE 3-1). To prevent damage to seals, these vents must be open at all times.

⚠ WARNING
Do not over--grease bearings as this could cause premature bearing failure.

DRIVE END LUBRICATION (For Dual Splash Lube Blowers)

At the drive end, the bearings are lubricated by the slinger, which must be on the lowest rotor when in a vertical configuration.

Approximate oil sump capacities are listed in Figure 3-2.

NOTICE
Machines are shipped without oil in the sump. Do not operate before adding lubricant.

Lubrication Instructions

Filling procedure
Refer to Figure 3-1, page 17. Remove the breather (B) from the drive cover. Add oil to the drive sump until oil reaches the center of the oil level gauge (H). Secure breather (B) in the drive cover.

Add fresh oil as required to maintain proper level. The oil level should be at the middle of the sight glass when the machine is not operating. Refer to Figure 3-2, for approximate oil capacities.

Legend "R" Series, Grease-Splash Lube Blower Oil Capacities

		Approximate Sump capacity in pints or ounces					
		Vertical Configuration			Horizontal Configuration		
Series	**Gear Diameter (in)**	**Gear End**	**Drive End**	**Total**	**Gear End**	**Drive End**	**Total**
3	3.5	0.6 PT (9 oz.)	grease	0.6 PT (9 oz.)	1.1 PT (18 oz.)	grease	1.1 PT (18 oz.)
4	4	0.9 PT (14 oz.)	grease	0.9 PT (14 oz.)	1.5 PT (24 oz.)	grease	1.5 PT (24 oz.)
5	5	1.1 PT (18 oz.)	grease	1.1 PT (18 oz.)	2.5 PT (40 oz.)	grease	2.5 PT (40 oz.)

Note: Quantities are for purchase estimates only.

Legend "R" Series, Dual Splash Lube Blower Oil Capacities

		Approximate Sump capacity in pints or ounces					
		Vertical Configuration			Horizontal Configuration		
Series	**Gear Diameter (in)**	**Gear End**	**Drive End**	**Total**	**Gear End**	**Drive End**	**Total**
3	3.5	0.6 PT (9 oz.)	0.3 PT (5 oz.)	0.9 PT (14 oz.)	1.1 PT (18 oz.)	0.6 PT (9 oz.)	1.7 PT (27 oz.)
4	4	0.9 PT (14 oz.)	0.4 PT (6 oz.)	1.3 PT (20 oz.)	1.5 PT (24 oz.)	0.7 PT (11 oz.)	2.2 PT (35 oz.)
5	5	1.1 PT (18 oz.)	0.6 PT (9 oz.)	1.7 PT (27 oz.)	2.5 PT (40 oz.)	1.2 PT (19.1 oz)	3.7 PT (59.1 oz.)

Note: Quantities are for purchase estimates only.

FIGURE 3-2 – APPROXIMATE OIL CAPACITIES

GEAR END LUBRICATION (For Grease – Splash Lube and Dual Splash Lube Blowers)
At the gear end, the timing gear teeth are lubricated by being partially submerged in oil. The gear teeth serve as oil slingers for gear end bearings.

Approximate oil sump capacities are listed in Figure 3-2.

⚠WARNING

Do not overfill as this will tend to cause excessive heating of the gears and may damage the unit.

NOTICE

Machines are shipped without oil in the sump. Do not operate before adding lubricant.

LUBRICATION INSTRUCTIONS

Filling procedure Refer to FIGURE 3-1, page 17. Remove the breather (B) from the gear cover. Add oil to the gear case until oil reaches the center of the oil level gauge (H). Secure breather (B) in the gear cover.

Add fresh oil as required to maintain proper level. The oil level should be at the middle of the sight glass when the machine is not operating. Refer to Figure 3-2, page 18, for approximate oil capacities.

RECOMMENDED LUBRICANT

AEON PD Synthetic Blower Lubricant is recommended. Refer to FIGURE 3-3, for AEON PD, AEON PD-FG (Food Grade) and AEON PD-XD (Extreme Duty) part numbers. Order AEON PD from your Gardner Denver Distributor or call Gardner Denver directly.

Convenient Package Sizes	AEON PD Part No.	AEON PD-FG Part No.	AEON PD-XD Part No.
1 quart	28G23	28H97	28G46
Case 12 quarts	28G24	28H98	28G47
1 gallon	28G40	28H333	28G42
Case 6 gallons	28G41	28H334	28G43
5 gallon pail	28G25	28H99	28G44
55 gallon drum	28G28	28H100	28G45

FIGURE 3-3 – AEON PD SYNTHETIC LUBRICANT

AEON PD is formulated especially for positive displacement blower service to provide maximum blower protection at any temperature. One fill of AEON PD will last a minimum of 4 times longer than a premium mineral oil. Refer to FIGURE 3-4.

		Ambient Temperatures			
		Less than 10° F	10°F to 32°F	32°F to 90°F	Greater than 90°F
Blower Discharge Temperature	Less than 32°F	AEON PD AEON PD-FG	AEON PD AEON PD-FG		
	32° F to 100° F	AEON PD AEON PD-FG	AEON PD AEON PD-FG	AEON PD AEON PD-FG	
	100° F to 225°F	AEON PD AEON PD-FG	AEON PD AEON PD-FG	AEON PD AEON PD-FG	AEON PD AEON PD-FG
	225° F to 300° F	AEON PD AEON PD-FG	AEON PD AEON PD-FG	AEON PD AEON PD-FG	AEON PD XD
	Greater than 300°F			AEON PD XD	AEON PD XD

FIGURE 3-4 – SYNTHETIC LUBRICANT CHART

AEON PD Synthetic Lubricant should be drained after 6000 hours of operation. Re-fill with fresh AEON PD oil. If mineral oil is used, perform the above oil change maintenance every 1500 hours. Recommended service intervals are for normal blower operating conditions. Severe operating conditions may warrant more frequent oil changes. Laboratory analysis of lubricant should be used to help determine the optimum oil change interval.

For best performance and equipment protection, use AEON PD Synthetic Lubricant, which has been specifically formulated for positive displacement blowers. If you choose not to use AEON PD Synthetic Blower Lubricant, select an oil with rust and oxidation inhibitors, anti-foam additives, and the viscosities listed in FIGURE 3-5. Do not use an oil that contains EP additives.

NOTICE
Flush the oil whenever a change is made from one type of oil to another.

Drain the current lubricant as thoroughly as possible. Refill with the new lubricant. Fill to normal level of the blower, which is at the middle of the sight glass when the machine is not operating. Run the blower for one hour. Shut off the blower and drain the lubricant completely. Refill the blower again with the new lubricant.

Blower Discharge Temperature	Ambient Temperature			
	Less than 10° F*	10° F to 32° F**	32° F to 90° F	Greater than 90° F
Less than 32° F (0° C)	ISO 100	ISO 100		
32° F to 100° F (0° C to 38° C)	ISO 100	ISO 100	ISO 150	
100° F to 225° F (38° C to 105° C)	ISO 100	ISO 100	ISO 150	ISO 220
225° F to 300° F (105° C to 149° C)	ISO 150	ISO 150	ISO 220	ISO 220
Greater than 300° F (149° C)			***	***

* For ambient temperatures less than 10° F, but not less than –20° F, the use of oil sump heaters, heated enclosures or synthetic lubricant is required.

** For ambient temperatures 10° F to 32° F, the use of oil sump heaters, heated enclosures or synthetic lubricant is recommended.

*** The lubricant viscosity must be 70 SUS minimum at the lubricant operating temperature.

The pour point of the lubricant should be at least 5° to 10° F below the minimum expected ambient temperature.

For continuous operation, where the lubricant temperature exceeds 200° F, synthetic lubricant is recommended.

FIGURE 3-5 – LUBRICATION RECOMMENDATION

SECTION 4
OPERATION

Future operating problems can be avoided if proper precautions are observed when the equipment is first put into service.

Before starting under power, the blower should be turned over by hand to make certain there is no binding or internal contact.

Each size blower has limits on pressure differential, running speed and discharge temperature which must not be exceeded. These limits are shown in "Maximum Operating Limitations", FIGURE 4-1, below.

⚠WARNING

Operating beyond the specified operating limitations will result in damage to the unit.

It is important that the pressures and temperatures are measured directly at the ports of the blower to avoid error that may be caused by intervening pipe runs, fittings, etc.

Relief valves must be used to protect against excessive pressure or vacuum conditions. These valves should be tested at initial startup to be sure they are adjusted to relieve at or below the maximum pressure differential rating of the blower.

NOTICE

Relief valves should be placed as close as possible to the blower inlet or discharge.

In some instances, pressure may be relieved at a lower point than the blower maximum in order to protect the motor or the equipment served by the blower.

Discharge temperature switches are recommended to protect against excessive inlet restriction or inlet temperatures. Check valves in the discharge line on pressure blowers and in the inlet line on vacuum blowers are recommended to protect the blower from motoring backwards when shut down under load.

LIMITATIONS

For information regarding limitations, refer to FIGURE 4-1, below.

MAXIMUM / MINIMUM OPERATING LIMITATIONS

SIZE	MAX. RPM	MIN. RPM VERT.	MIN RPM HORIZ.	MAX. PRESSURE PSI	MAX VAC IN HG	MAX. TEMPERATURE RISE ° F	MAX. DISCHARGE TEMPERATURE ° F
3LR	3600	1528	1091	7	14	160	260
3MR	3600	1528	1091	12	15	180	280
3HR	3600	1528	1091	15	16	220	320
4LR	3600	1337	955	7	14	160	260
4MR	3600	1337	955	10	16	185	285
4HR	3600	1337	955	15	16	210	310
5LR	2850	1070	764	7	14	160	260
5MR	2850	1070	764	13	16	180	280
5HR	2850	1070	764	15	16	200	300

DO NOT EXCEED THESE LIMITS

NOTICE

Blower speed, line losses, elevation, and increased inlet temperatures will affect the maximum operating limitations. The minimum RPM for the blowers is based on lubrication only. The blowers may only be operated down to the minimum RPM, when the temperature rise and discharge temperature are below the maximum limitations as shown.

FIGURE 4-1 – MAXIMUM / MINIMUM OPERATING LIMITATIONS

BLOWER STARTUP CHECKLIST

This startup procedure should be followed during the initial installation and after any shutdown periods or after the blower has been worked on or moved to new location. It is suggested that the steps be followed in sequence and checked off (√) in the boxes provided.

- ☐ 1. Check the unit and all piping for foreign material and clean if required.
- ☐ 2. Check the flatness of the feet and the alignment of the drive. Feet that are bolted down in a bind can cause housing distortion and internal rubbing. Misaligned V-drives can cause the rotors to rub against the headplates and cause a reduction in the volumetric efficiency of the unit. Misaligned couplings can ruin bearings.
- ☐ 3. If the blower is V-belt driven, check the belt tension and alignment. Over-tensioned belts create heavy bearing/shaft loads which lead to premature failure.
- ☐ 4. Be sure adequate drive guards are in place to protect the operator from severe personal injury and incidental contact.
- ☐ 5. Check the unit for proper lubrication. Proper oil level cannot be over-emphasized. Too little oil will ruin bearings and gears. Too much oil will cause overheating and can ruin gears and cause other damage. Insure that grease lubricated bearings are properly lubricated.
- ☐ 6. With motor electrical power locked out and disconnected, turn the drive shaft by hand to be certain the impellers do not bind.
- ☐ 7. “Jog” the unit with the motor a few times to check that rotation is in the proper direction, and to be certain it turns freely and smoothly.
- ☐ 8. The internal surfaces of all Sutorbilt units are mist sprayed with a rust preventive to protect the machine during the shipping and installation period. This film should be removed upon initial startup.
- ☐ 9. Start the unit and operate 15 minutes at no load. During this time, check for hot spots and other indications of interference.
- ☐ 10. Apply the load and observe the operation of the unit for one hour. Check frequently during the first day of operation.
- ☐ 11. If malfunctions occur, do not continue to operate. Problems such as knocking rotors can cause serious damage if the unit is operated without correction.

SAFETY PRECAUTIONS

1. Do not operate blower with open inlet or outlet port.
2. Do not exceed specified vacuum or pressure limitations.
3. Do not operate above or below recommended blower speed range.
4. Blower is not to be used where non-sparking equipment is specified.
5. Do not operate without belt guard or coupling shield.



Do not exceed sheave or coupling manufacturer's rim speed limit.

6. The blower and blower discharge piping may be extremely hot and cause skin burns on contact.

TROUBLE SHOOTING

No matter how well the equipment is designed and manufactured, there may be times when servicing will be required due to normal wear, the need for adjustment, or various external causes. Whenever equipment needs attention, the operator or repairman should be able to locate the cause and correct the trouble quickly. The Trouble Shooting Chart below is provided to assist the mechanic in those respects.

PROBLEM	POSSIBLE CAUSES	SOLUTION
Knocking	1. Unit out of time. 2. Distortion due to improper mounting or pipe strains. 3. Excessive pressure differential. 4. Worn gears. 5. Worn bearings.	1. Re-time impellers 2. Check mounting alignment and relieve pipe strains. 3. Reduce to manufacturer's recommended pressure. Examine relief valve, re-set if necessary. 4. Replace timing gears. 5. Replace bearings..
Excessive blower temperature.	1. Too much oil in gear case. 2. Too low operating speed. 3. Dirty air Filter. 4. Clogged filter or muffler. 5. Excessive pressure differential. 6. Worn impeller clearances. 7. Internal contact.	1. Reduce oil level. 2. Increase blower speed. 3. Clean or replace air filter 4. Remove cause of obstruction. 5. Reduce pressure differential across the blower. 6. Replace impeller. 7. Correct clearances.
Impeller end or tip drag.	1. Insufficient assembled clearances. 2. Case or frame distortion. 3. Excessive operating pressure. 4. Excessive operating temperature.	1. Correct clearances. 2. Check mounting and pipe strain. 3. Remove cause. 4. Remove cause
Lack of volume.	1. Slipping belts. 2. Worn clearances. 3. Dirty air filter	1. Tighten belts. 2. Re-establish proper clearances. 3. Clean or replace air filter.
Excessive bearing or gear wear.	1. Improper lubrication.	1. Correct lubrication level. Replace dirty oil.
Loss of oil.	1. Headplate, gear case or drive cover vents plugged. 2. Worn Seal.	1. Clean vents. 2. Replace seals.

ORDER SPECIAL TOOLS BY PART NUMBER. SEE PAGE 2 FOR ORDERING INSTRUCTIONS.

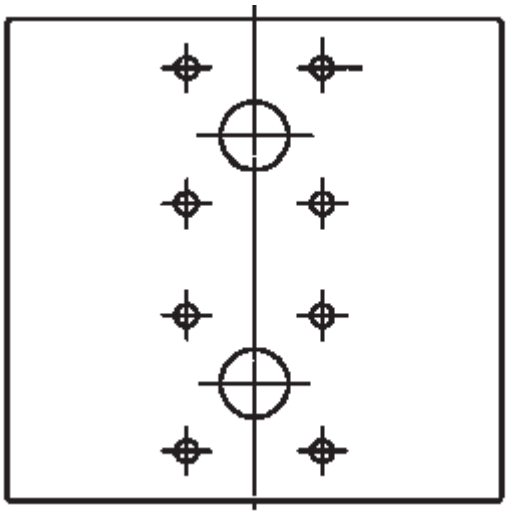

Unit Size	Part Number
3”	201GAA340
4”	202GAA340
5”	203GAA340

FIGURE 5-1 – PULLER PLATE

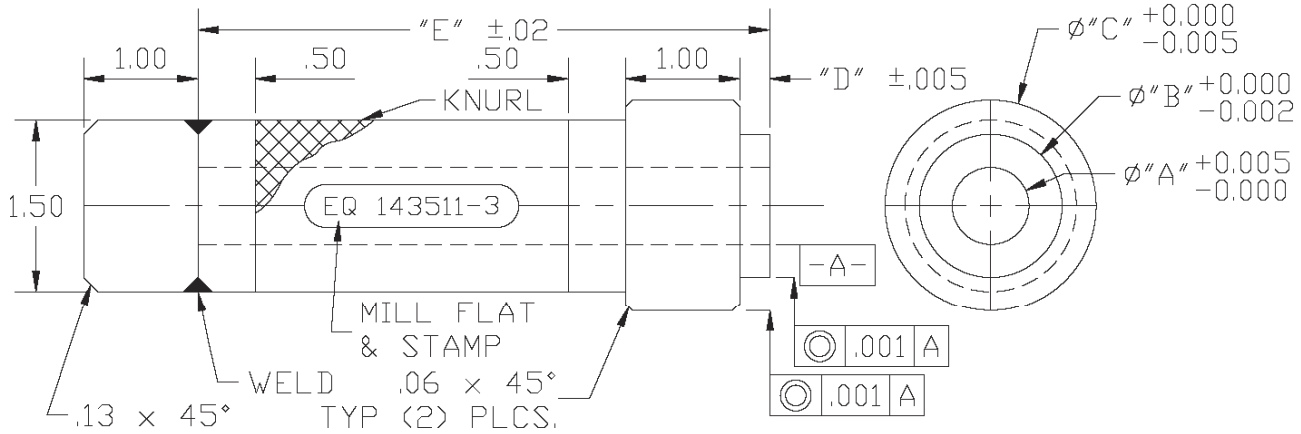

PART NO.	SIZE	"A"	"B"	"C"	"D"	"E"
EQ 143511-3	3"	.790	1.435	2.044	.335	5.50
EQ 143511-4	4"	1.000	1.624	2.436	.395	6.25
EQ 143511-5	5"	1.184	2.247	2.829	.695	7.00

FIGURE 5-2 – SEAL DRIVE

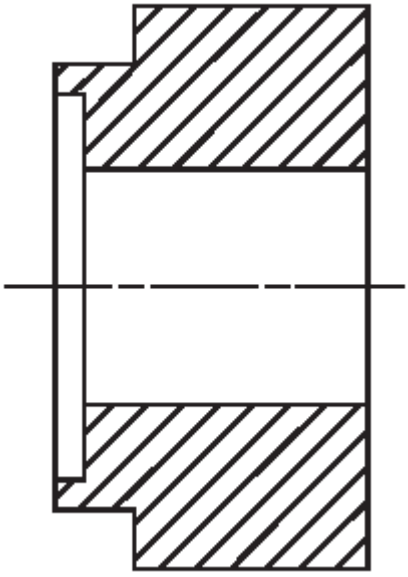

Unit Size	Part Number
3”	205GAA074
4”	206GAA074
5”	207GAA074

FIGURE 5-3 – MECHANICAL SEAL INSTALLATION TOOL

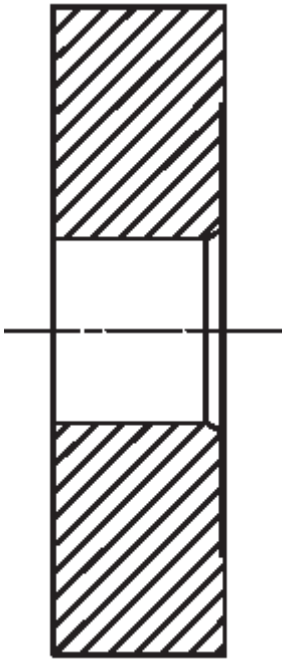

Unit Size	Part Number
3”	201GAA074
4”	202GAA074
5”	203GAA074

FIGURE 5-4 – BEARING PRESS TOOL – MECHANICAL SEAL UNITS

SECTION 6
DISASSEMBLY INSTRUCTIONS

NOTICE
Numbers in parentheses ( ) refer to key numbers in assembly drawings on pages 39 and 43.

1. Drain oil from gear case by removing drain plug (2).
2. Remove the socket head bolts (5) from the gear cover (3).
3. Remove the gear cover from the gear headplate.

NOTICE
The cover and gear headplate gasket tends to bond tightly to both surfaces. After socket head bolt removal, it is sometimes necessary to take a ball peen hammer and a blunt chisel and drive off the cover.

IMPORTANT:

MARK ALL PARTS WITH A CENTER PUNCH SO THEY CAN BE REASSEMBLED IN THE SAME POSITION (IMPELLERS, HEADPLATES, AND GEARS).

4. If the timing gears appear undamaged, the gear backlash must be checked to see if the gears can be salvaged.
   - A. Mount a magnetic base dial indicator on the gear headplate (see FIGURE 6-1).
   - B. Lock one impeller stationary by wedging a feeler gauge between the impeller and the headplate.
   - C. The tip of the indicator should be placed at the center of the contact surface on a tooth of the gear on the free shaft.
   - D. Rock the impeller back and forth by hand and read the total rotational movement to the nearest .0005 inches. Do this at four gear mesh positions 90 degrees apart.
   - E. Permissible gear backlash is shown below.

GEAR DIA.	GEAR BACKLASH
3”	.0015 - .0025
4”	.0015 - .0025
5”	.002 - .003

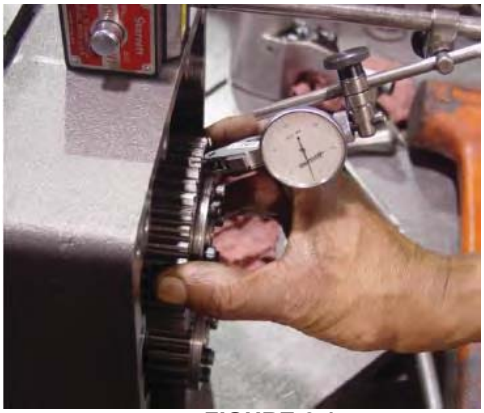

FIGURE 6-1



FIGURE 6-2



FIGURE 6-3

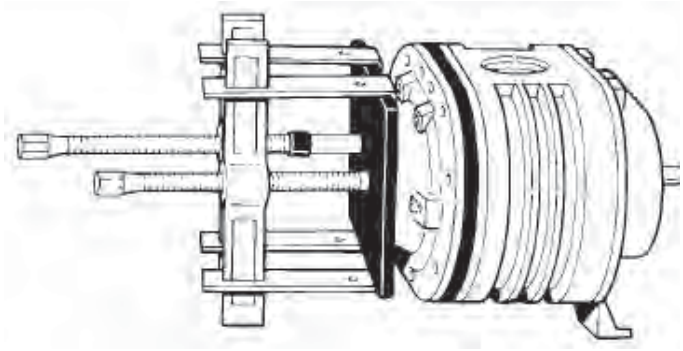

FIGURE 6-4

NOTICE
If backlash is above the specified limit, the gears are not necessarily unusable. Excessive play could be caused by worn bearings.

5. If timing gears appear to be reusable, match marktiming gear toothmesh by making small punch marks on the ends of meshing gear teeth with a pin punch and hammer (see FIGURE 6-2, page 27). The impeller tip to valley (throat) and the case to headplates should also be matchmarked to facilitate blower reassembly.
6. Remove all cap screws from both gear locking assemblies (see FIGURE 6-3). Thread 3 of these cap screws into the threaded holes in the outer ring of each locking assembly. Tighten the screws evenly to remove the locking assembly from each gear. Remove the gears (9) from both rotor shafts.

NOTICE
Blowers with mechanical seals have two wavy washers (28) located between the bearings and the cover on the drive end.

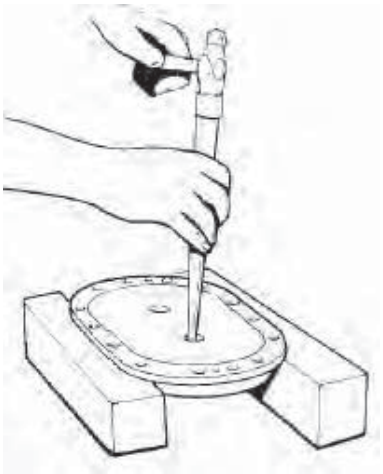

FIGURE 6-5

7. Remove the socket head cap screws (30) from the drive end bearing cover (29) and remove the cover. Support the external surface of the drive end cover near the oil seal with blocks of wood. Drive the oil seal from the cover using a hammer and punch. Discard the seal as it will not be reused. Replace oil seals each time the drive end cover is removed.

   For Dual Splash Version
   Remove the socket cap screws (84) from each slinger and remove slingers.

   For Dual Splash Version with Mechanical Seal
   Remove the socked cap screws (84) from each slinger and remover slingers. Remove flat head cap screws (86) from wavy spring retainer plates and remove retainer plate and wavy spring.

8. Remove mounting foot (17) from the drive headplate (24) by removing the capscrews (16).
9. Remove the capscrews (21) which secure the drive headplate (24) to the impeller case (22).
10. Using the puller plate shown on page 25, bolt to the drive headplate using the tapped holes on used to secure the drive cover.
11. Install a gear puller to each shaft and attach puller arms to the plate. Turn each puller only half a revolution at a time keeping the advance of the shafts as uniform as possible (see Figure 6-4). After the headplate has been removed, detach the puller plate.
12. Remove the two drive end bearings (35 and 80 for dual splash lube) or (14 and 35 for grease) from the drive headplate (24) using a ball peen hammer and punch (see Figure 6-5, page 28).

⚠ CAUTION
Exercise care not to damage the headplate bearing bores when removing bearings.

13. The oil seals can now be driven out of the drive headplate with hammer and punch (see Figure 6-5, page 28). Discard the seals as they will not be reused. Replace oil seals each time the headplate is removed.

   For Mechanical Seal Version
   Remove mechanical seal from the drive headplate.

NOTICE
Seals and bearings should be replaced during overhaul as a matter of service policy.

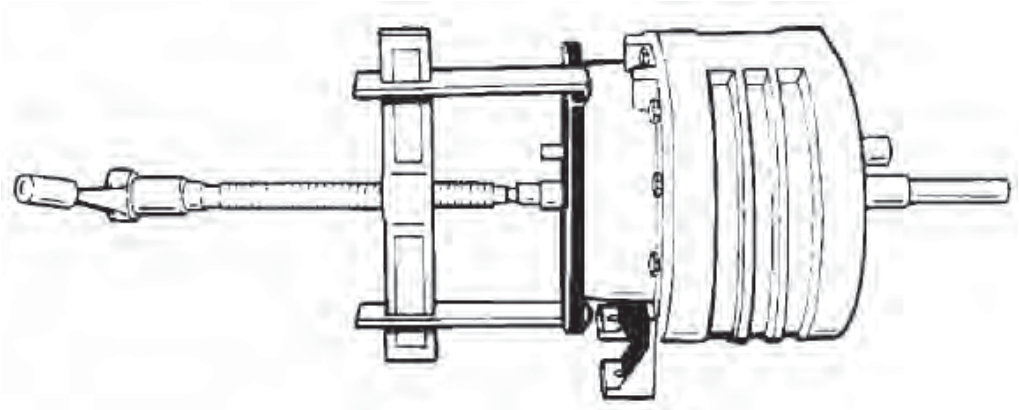

FIGURE 6-6

14. Remove the four bearing retaining screws (10), and washers (12) from the gear headplate.

    For Mechanical Seal Version
    Remove bearing retainer plate by removing 8 screws.

15. Attach puller plate to the gear headplate using the tapped holes on the bearing housing.

16. Install a gear puller to one of the shafts and attach puller arms to the plate (see Figure 6-6).

17. Remove mounting foot (17) from the gear headplate by removing 4 capscrews (16).

18. Push the impeller shaft through the gear headplate and remove the impeller assembly(23) (see Figure 6-6). Remove the other impeller assembly following the same procedure.

19. Remove the cap screws (21) securing the gear headplate to the impeller case. Located near each dowel pin on the headplate is a threaded hole. Insert a 5/16-18 UNC capscrew into each of the threaded holes. Tighten the screws evenly until the headplate separates from the impeller case.

20. Remove the two gear and bearings (14) from the gear headplate (18) as done in step 12.

21. Remove the oil seals (15) from gear headplate (19) as done in step 13.

SECTION 7
ASSEMBLY INSTRUCTIONS

NOTICE
Numbers in parentheses ( ) refer to key numbers in assembly drawings on pages 39 and 43.

1. Make sure all metallic parts are clean and free of any nicks or burrs.
2. Lubricate the outside diameter of the lip seal (15) with a light oil or grease. Install seals in both the drive headplate (24) and gear headplate (18). Use the seal driver (Figure 5-2). The seal lip should always face towards the bearing or lubricant. New seals should be installed each time the headplate is removed.

NOTICE
Make sure seals are fully seated. Use extreme care when installing.

MECHANICAL SEALS ONLY

A. Lightly coat the headplate bores with assembly lubricant.

B. Refer to Figure 7-1. Install mechanical seal (A) into the headplate bore (C) using a press and the correct driver shown on page 26. Drive the seal securely on to its seat.

⚠ CAUTION
Use extreme care when installing seals in the headplate bores. Do not attempt to install the mechanical seals without the use of a press. Blows from a hammer or mallet can damage the fragile seal surface. Too much force can crush the seal casing. Make certain the seal is properly seated and undamaged before proceeding.

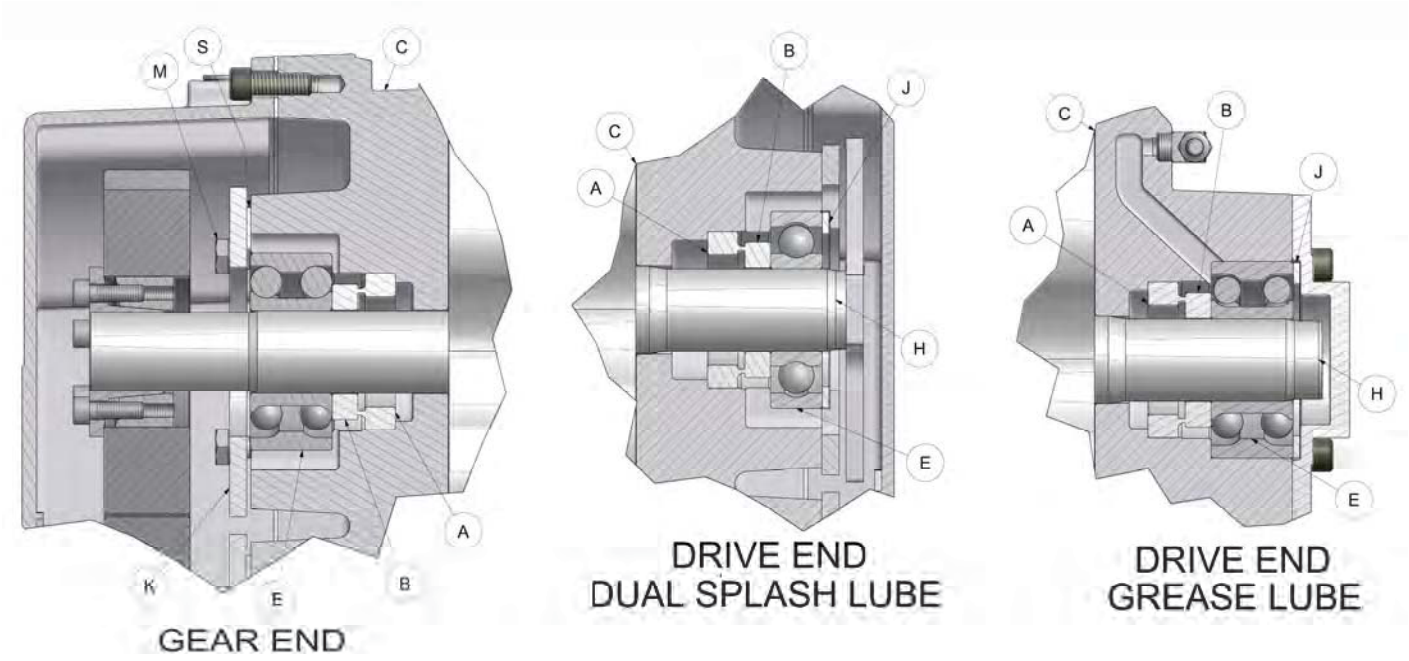

FIGURE 7-1



FIGURE 7-2

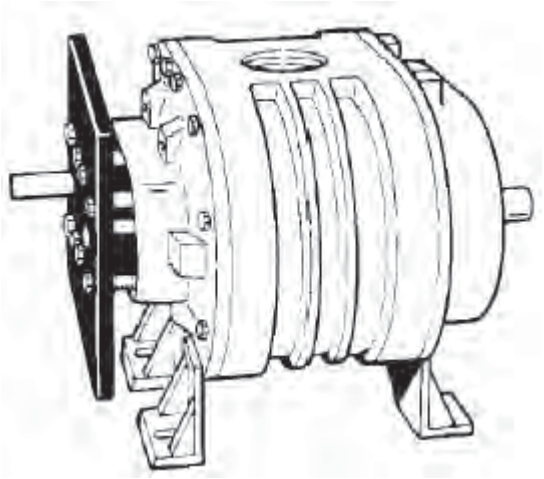

FIGURE 7-3

3. Assemble gear headplate (18) and mounting foot (17) to the impeller case with cap screws (21) and where the mounting foot is secured to the headplate use capscrews (16). The two positioning dowel pins (19) will ensure proper alignment of the headplate and impeller case. Also secure lifting lugs using capscrews (21) (see exploded assembly drawing on page 39. Refer to Figure 7-9, page 38, for torque specifications.

⚠ CAUTION
Seals are delicate; use extreme care when installing impeller shafts in the headplate bores. A piece of light shim stock wrapped around the shaft keyway will prevent cutting the seal lip.

4. Apply a light oil or grease on the shaft seal areas and the bearing areas. Insert impellers into the gear headplate using the same headplate bores as used in the original assembly.
5. Position blower so that impellers are vertical, with the drive end on top. It will be necessary to use blocks in order for the unit to set level. Measure the total end clearance using a depth micrometer (see Figure 7-2).

NOTICE
If more than .007" shim is required, put .007" on the drive end and the remaining on the gear end.

If total clearance is not within the limits specified in Figure 7-4, page 33, it may be necessary to shim the case to obtain the proper total end clearance. The shim should be placed between the drive headplate and impeller case.

6. Assemble drive headplate (24) to impeller case as in step 3 with the gear headplate. If shims were required, place shims between drive headplate and impeller case.

MECHANICAL SEALS ONLY

A. Refer to Figure 7-1, page 31. Lightly coat the impeller shaft (H) and the inside diameter of the mating ring (B) with assembly lubricant.

B. Install the mating ring (B) on the shaft only far enough to get the bearing (E) started on the shaft.

⚠ CAUTION
Do not drive the mating ring down to the mechanical seal, as this can damage the seal.

C. Lightly lubricate the bearing inner race (E) with a light oil or grease.

D. Using a press, install the bearing on the shaft with the bearing driver shown on page 24.

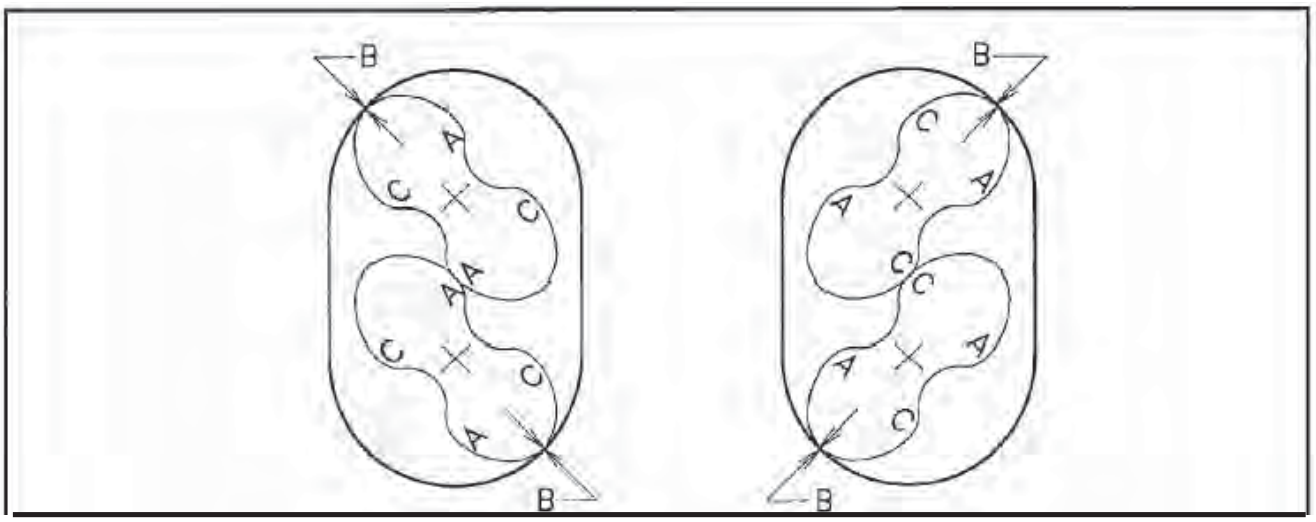

INTERNAL CLEARANCES FOR STANDARD UNITS ONLY

	3H	3M	3L	4H	4M	4L	5H	5M	5L
TOTAL END CLEARANCE	0.007-0.011			0.007-0.011			0.007-0.011		
IMPELLER TO GEAR HEADPLATE	0.003-0.005			0.003-0.005			0.003-0.005		
IMPELLER TIMING (A-A) (C-C)	0.005-0.007	.006-.008		0.006-0.008	.007-.010		.007-.010	.008-.010	
TIP TO CASE CLEARANCE (B-B)	0.002 min.			0.002 min.			0.002 min.		

FIGURE 7-4

The bearing driver will position the mating ring (B) to the correct depth with respect to the mechanical seal (A).

7. Apply a light oil to the drive headplate bearing bore, bearing inside diameter, and shaft seat. Install the drive end bearings (14and 35 for grease) or (80 and 35 for dual splash lube) as far as possible without force.
8. Attach the puller plate shown on page 25, to the drive headplate using the tapped holes used on the drive headplate (see FIGURE 7-3, page 32). Tighten the bolts so that the advance of the bearings stay as uniform as possible. Bearings should be pressed until flush with the drive headplate.
9. Lubricate the gear end bearing fits with a light oil as described previously. Install gear end bearings (14) as far as possible without force. Use the plate, used to install the drive end bearings, to press the bearings on the shafts as described in Step 8. Press bearings into the gear headplate until completely seated in the bearing bore.

NOTICE
Bearings will not be flush with gear headplate bores when completely seated.

10. Impellers should now be checked for free axial movement by hitting the ends of the impeller shafts with the palm of your hand.
11. Push the impellers against the gear headplate and recheck the total end clearance between the drive headplate and the impellers (see FIGURE 7-4).
    A. If total end clearance is insufficient, loosen impeller case to headplate bolts on either headplate, and move the headplate away from the case far enough to insert a paper shim in the amount equal to the insufficient clearance. Retighten case bolts and again check the total end clearance. Refer to FIGURE 7-4 for correct clearance.
    B. Excessive end clearances normally will require new impeller assemblies, but in some circumstances the impeller case can be removed and reduced in width by machining off the amount of excess clearance.
    C. Apply Loctite 246 on the 4 bearing retaining screws. Install 4 bearing screws and washers into the gear end headplate. Tighten screws evenly to the torque value given in FIGURE 7-9.

For Mechanical Seal Version

Install 8 bearing retaining screws and washers into the gear bearing retainer plates. Tighten screws evenly.

12.

A. Dual Splash Version

Install slingers on both shafts. Hold .31" +/_.01" gap between face of the bearing and back of the slingers. Rotate slingers approximately 90 degree apart, apply Loctite 246 on the socket cup screw and tight. Recommended torque is 3-3.5 FT-LBS. (See FIGURE 7-5).

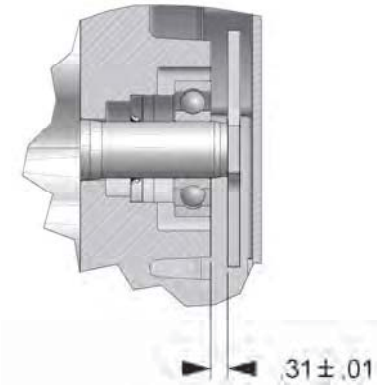

Figure 7-5

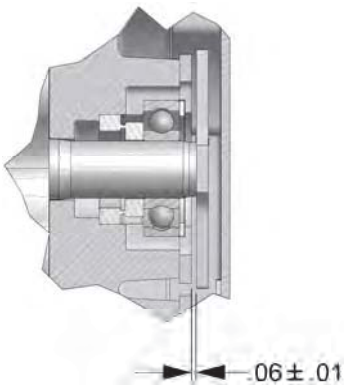

Figure 7-6

B. For Dual Splash Version with Mechanical Seal

Install slingers on both shafts. Hold .06"+_.01" gap between wavy spring retainer plates and back of the slingers. Rotate slingers approximately 90 degree apart, apply Loctite 246 on the socket cup screw and tight. Recommended torque is 3-3.5 FT-LBS. (See FIGURE 7-6).

13. **SETTING IMPELLER END CLEARANCES**

Refer to FIGURE 7-7, page 34. The outer races of the gear end bearings are clamped against the headplate (F) by the bearing retaining screws or by bearing retainer plate (mechanical seal version) (B).

This is referred to as the "fixed end". The interference fit between the shaft and the bearing inner race (H) keeps the shaft from moving axially. Adjustment is by movement of the shaft through the gear end bearing inner race (H).

A. Check the total end clearance by adding the clearance between the impellers and the drive headplate to the clearance between the impellers and the gear headplate.

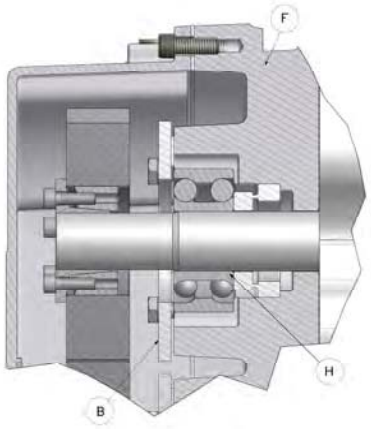

Figure 7-7

NOTICE
Check the clearance over the entire width of the impeller and consider the tightest spot.

B. Divide the end clearance by 3 and distribute approximately 1/3 on the gear end and the remaining 2/3 on the drive end.
C. To move the impeller assembly toward the drive end, lightly tap the shaft at the gear end with a soft face mallet.

D. To move the impeller assembly toward the gear end, lightly tap the shaft at the drive end with a soft face mallet.

E. To set the fixed end, insert the feeler gauge in the amount specified in FIGURE 7-4, page 33, between the headplate and the impeller at the gear end.

F. Tap lightly until the feeler gauge is snug. Adjust both impellers using the same procedure. Rotate the impellers checking for clearance through a complete revolution.

SETTING IMPELLER END CLEARANCE WITH MECHANICAL SEALS

Refer to FIGURE 7-1, page 31. The gear end bearings are held in position by the force created by the wavy spring (J) on the drive end and the bearing retainer (K) on the gear end. This is referred to as the fixed end. The interference fit between the shaft (H) and the bearing inner race (E) keeps the shaft from moving axially.

End clearance adjustment is by movement of the bearing retainer (K). Tightening the bearing retainer screws (M) moves the bearing to load the wavy spring (J), and the impeller is forced toward the drive end. Relaxing the screws allows the wavy spring to return the impeller toward the gear end.

A. Assemble drive cover to drive headplate. Refer to Step 15 with the exception of the use of wavy springs (J) installed between the drive end bearings and the wavy spring retainer plates.

B. Back out retainer screws (M) until both impellers are tight against the gear headplate.

C. With feeler gauge, measure the clearance between each impeller and the drive headplate. This value is the total end clearance.

D. Measure the clearance between the gear headplate and bearing retainer (K) at point (S).

E. Subtract 1/3 of the total end clearance from the clearance measured at point (S). This value is the amount of shim (13) that should be placed between the retainer and the headplate at point (S).

F. Tighten the bearing retainer screws (M) to the torque value given in FIGURE 7-9, page 38. With the retainer screws secure, approximately 1/3 of the total end clearance should be on the gear end and the remaining 2/3 on the drive end.

1. INSTALLING THE TIMING GEARS

If reusing the timing gears, the gears should be returned to their original positions.

A. Obtain 2 gear locking assemblies. Clean the inside and outside diameters of both locking assemblies. Clean the inside diameter of 2 gears. Clean the outside diameter of the both rotor shafts. Lightly oil the surfaces that have been cleaned. Note: DO NOT USE MOLYBDENUM DISULFIDE, MOLYKOTOE, OR ANY OTHER SIMILAR LUBRICANTS.

B. Slide a locking assembly into a gear. Install the gear and locking ring assembly onto the idler rotor shaft. Push the locking assembly firmly until flush with the end of the idler rotor shaft and hand tighten the 7 cap screws. Align and adjust the connections.

C. Use a torque wrench to tighten the screws to 75 in. lbs. in a diametrically opposite sequence. Ensure that none of the screws will turn when 75 in. lbs. is applied to them a second time.

D. Tighten the screws further to 150 in. lbs. in a diametrically opposite sequence. Ensure that none of the screws will turn when 150 in. lbs. is applied to them a second time.

E. Slide the second locking assembly into a gear. Install the gear and locking ring assembly onto the drive rotor shaft. Note the circular mark on each gear indicates the position of the largest runout. These marks must be 180 degrees apart when the gears are installed.

F. Push the locking assembly firmly until flush with the end of drive rotor shaft and hand tighten all cap screws but leave them loose enough that the gear can be rotated on the shaft.

G. The first step in setting the interlobe clearance is to measure the total clearance between two meshing lobes. This is accomplished by determining the maximum feeler gauge thickness that will fit between the rotor lobes near the pitch diameter. The clearance should be measured along the entire length of the meshing lobes. This measurement should be taken for each of the 2 interlobe meshes. The location of the smallest total interlobe clearance should be marked on the rotor lobes. Refer to diagram in FIGURE 7-4, page 33. Use feeler gauges to check clearances between impeller lobes at positions A—A and C—C. Add the clearances, and divide the total clearance evenly between A—A and C—C.

H. Rotate the rotors until the two lobes that have the smallest total interlobe clearance (as determined in step G) are visible through the discharge port. Lock the idler rotor from turning by wedging a shop rag between the tip of a lobe and the air cylinder. Insert feeler gauges with a thickness equal to the half clearance (determined in step G) between the drive rotor and the idler rotor lobe. Pull the drive rotor tight against the feeler gauges (drive rotor, feeler gauges, and idler rotor must be tight against each other). While holding the drive rotor tight against the feeler gages rotate (in the direction that the rotor turns) the gear on the drive rotor until a tooth on it contacts a tooth on the gear on the idler rotor. Hand tighten the 7 capscrews in the drive gear locking assembly. Align and adjust the connection.

I. Use a torque wrench to tighten the screws to 75 in. lbs in a diametrically opposite sequence. Ensure that none of the screws will turn when 75 in. lbs is applied to them a second time.

J. Tighten the screws further to 150 in. lbs in a diametrically opposite sequence. Ensure that none of the screws will turn when 150 in. lbs is applied to them a second time.

K. Check gear backlash four places at 90 degree intervals as described in the disassembly procedure (Item 4).

⚠ CAUTION

These impeller-to-impeller and impeller-to-case clearances are extremely critical. Even though the blower may turn freely by hand when cold, under operating conditions, the parts expand, and the rotors are subject to slight defection.

If the clearances are not sufficient, the impellers may contact each other or the housing with destructive results. If the clearances are too great, the blower may not develop the pressure or airflow that is required to perform its function.

14. Impeller tip to case clearance should be checked at this time by inserting the correct thickness feeler gauge between the tip and the case and rotating the impeller (see FIGURE 7-4, page 34). Repeat the procedure on both impellers.

NOTICE

When checking the tip to case clearance, move the feeler gauge over the entire length of the impeller to ensure that the tips do not bind along their length.



FIGURE 7-8

NOTICE

Replacement gears have minimum backlash marks on the outside diameter of the gear face. These marks should be located 180 degrees from each other (see FIGURE 7-8).

NOTICE

The gear used for adjustment should be flush with its mate on completion of the timing.

NOTICE

If any of the four gear backlash readings are not within the specified limits, the gears must be replaced.

15. Replace drive shaft oil seal (31) in the drive end cover (29). The seal lip should always face towards the bearing or lubricant.

Grease Units

Pack bearing cavities with recommended grease and secure drive cover with socket head cap screws (30) to drive headplate.

Dual Splash Units

Install drive end gasket (7). Gently slide the drive end cover (29) over the drive shaft and tap cover down over dowel pins until flush. Install and tighten drive cover bolts (30).

Refer to FIGURE 7-9, for torque specifications.

⚠ CAUTION
Exercise care not to damage the seal lip as it passes over the shaft keyway.

16. Assemble the gear cover (3) and gasket (7) to the gear headplate (18) using socket head screw (5). Tighten the capscrews alternately and evenly. Refer to FIGURE 7-9 for torque specifications.

17. Place the blower on its feet on a flat surface. Loosen cap screws (16) and level the unit up. The bench or blower base flatness should be within .002 of an inch. Re-tighten cap screws (16) to the specification in FIGURE 7-9.

NOTICE
If the unit is not flat within .002 of an inch, it will be necessary to shim the blower feet at installation.

	GEAR DIAMETER		
FASTENERS	**3**	**4**	**5**
CAPSCREW (21)	23 – 30	42 – 45	42 – 45
CAPSCREW (16)	23 – 30	42 – 45	42 – 45
SOCKET HD CAPSCREW (5)	6 – 8	16 – 18	11 – 13
SOCKET HD CAPSCREW (30)	6 – 8	16 – 18	11 – 13
CAPSCREW (10)	6 – 8	38 – 42	38 – 42

NOTE: ( ) DENOTES ITEMS IN EXPLODED VIEW DRAWINGS ON PAGES 39 AND 43.

FIGURE 7-9 – TORQUE (FT-LBS)

SECTION 8
PARTS LIST

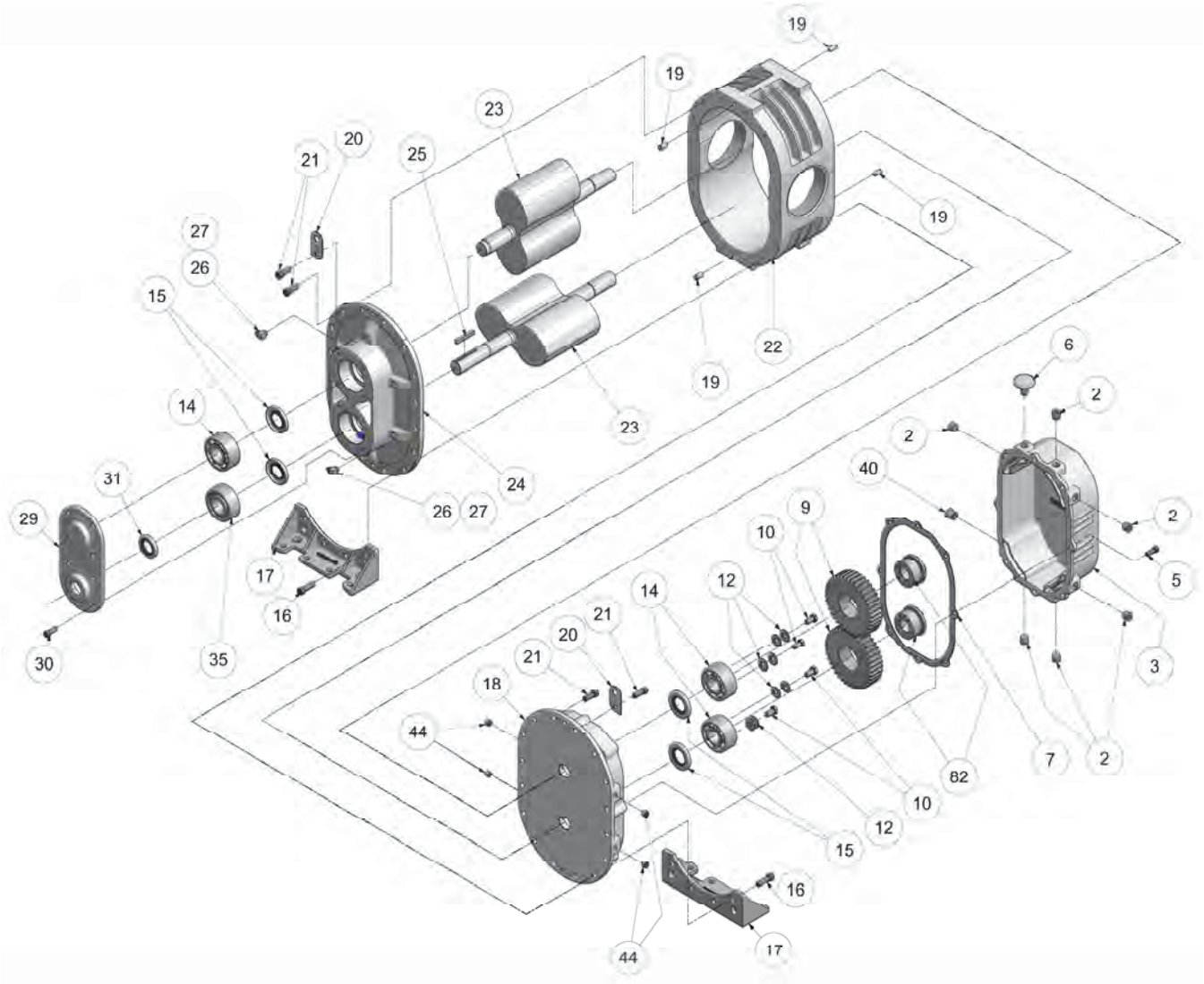

Order by Part Number and Description. Reference Numbers are for your convenience only.

Model GAB Lip Seal — Grease Splash Lube

Ref. No.	Description	No. Req'd	Size – 3H GABH_R Δ Δ= (A or C)	Size – 3M GABM_R Δ Δ= (A or C)	Size -- 3L GABL_R Δ Δ= (A or C)
2	Plug	6	64AC2	64AC2	64AC2
3	Gear Case	1	303GAB602	303GAB602	303GAB602
5	Screw	8	75P7	75P7	75P7
6	Breather	1	5L358	5L358	5L358
* 7	Gasket	1	300GAB715	300GAB715	300GAB715
9	Gear Kit	1	300GAB6008	300GAB6008	300GAB6008
* 10	Screws	4	75A33P	75A33P	75A33P
12	Washer	4	95A2	95A2	95A2
* 14	Ball Bearing	3	12BA143	12BA143	12BA143
* 15	Oil Seal	4	900891030601	900891030601	900891030601
16	Screw	4	75P56	75P56	75P56
17	Foot – Vert. & Horiz.	2	303GAB166	303GAB166	303GAB166
18	Bearing Housing Gear End	1	302GAB006	302GAB006	302GAB006
19	Dowel Pin	4	62M48	62M48	62M48
20	Lifting Lug	2	200GAA451	200GAA451	200GAA451
21	Screw	20	75P55	75P55	75P55
22	Impeller Case	1	900873034301	900873033801	900873034201
23	Rotor Group				
	3" Standard Clearances	1	307GAB4028	309GAB4028	308GAB4028
	3" High Temperature Clearances	1	To be assigned	To be assigned	To be assigned
24	Bearing Housing Drive End	1	900873033501	900873033501	900873033501
25	Key-Square	1	900639910304	900639910304	900639910304
26	Pipe Fitting	2	40E9	40E9	40E9
27	Cap	2	40P58	40P58	40P58
29	Drive Cover	1	900873033701	900873033701	900873033701
30	Screw	6	75P22	75P22	75P22
* 31	Oil Seal	1	60DD725	60DD725	60DD725
* 35	Bearing – Roller	1	12BA153	12BA153	12BA153
40	Oil Level Gauge	1	40P82	40P82	40P82
44	Screw	4	76F1	76F1	76F1
** 45	Paint, Bulk, GDP188, Aluminum	0.125	28H284	28H284	28H284
** 54	Shim Case .0025/.0035"	1	200GAB732	200GAB732	200GAB732
** 55	Shim Case .010"	1	201GAB732	201GAB732	201GAB732
** 56	Shim Case .0015/.002"	1	202GAB732	202GAB732	202GAB732
82	Locking Assembly	2	22G45	22G45	22G45
** 105	Overhaul Kit 3" R VERS Lip Seal, Grease Splash Lube	1	302GAB6010	302GAB6010	302GAB6010
** 900	Group-Indent & Instruction Legend Series 3" R VERS	1	303GAB4011	303GAB4011	303GAB4011

* INCLUDED IN OVERHAUL KIT.
** NOT SHOWN ON ILLUSTRATION.

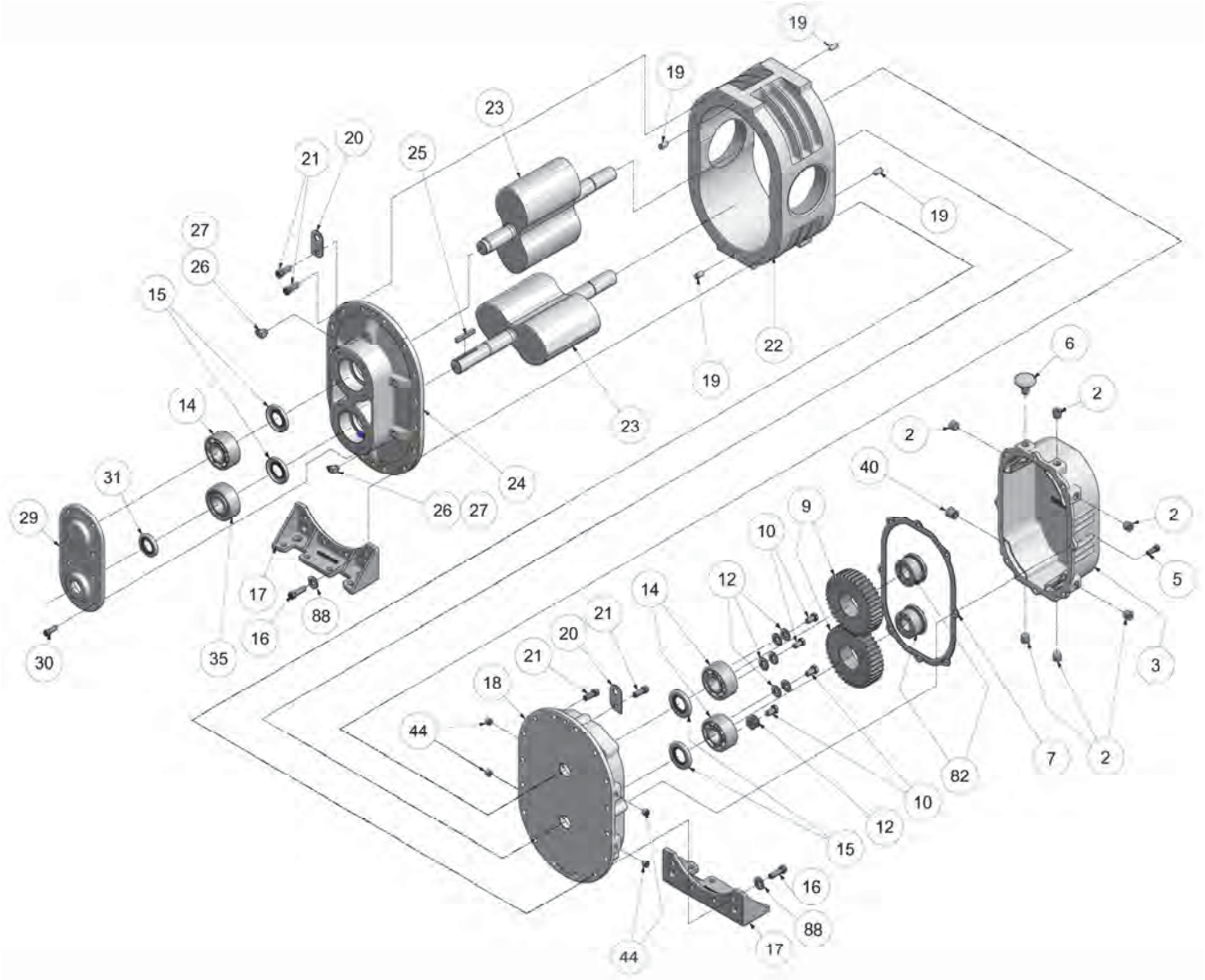
19
19
23
20
21
25
19
27
26
15
22
19
6
2
14
23
2
40
31
24
26
27
2
29
9
10
5
17
88
14
12
21
16
20
3
30
35
21
18
44
7
2
82
10
12
15
16
88
17
44

Order by Part Number and Description. Reference Numbers are for your convenience only.

Model GAC Lip Seal — Grease Splash Lube

Ref. No.	Description	No. Req'd	Size – 4H GACH_R Δ Δ= (A or C)	Size – 4M GACM_R Δ Δ= (A or C)	Size -- 4L GACL_R Δ Δ= (A or C)
2	Plug	6	64AC3	64AC3	64AC3
3	Gear Case	1	304GAC602	304GAC602	304GAC602
5	Screw	8	75P40	75P40	75P40
6	Breather	1	5L359	5L359	5L359
* 7	Gasket	1	301GAC715	301GAC715	301GAC715
9	Gear Kit	1	300GAC6008	300GAC6008	300GAC6008
* 10	Screws	4	655ED03P	655ED03P	655ED03P
12	Washer	8	95A3	95A3	95A3
* 14	Ball Bearing	3	12BA144	12BA144	12BA144
* 15	Oil Seal	4	60DD630	60DD630	60DD630
16	Screw	8	75P56	75P56	75P56
17	Foot – Vert. & Horiz.	2	300GAC166	300GAC166	300GAC166
18	Bearing Housing Gear End	1	302GAC006	302GAC006	302GAC006
19	Dowel Pin	4	62M48	62M48	62M48
20	Lifting Lug	2	200GAA451	200GAA451	200GAA451
21	Screw	16	75P55	75P55	75P55
22	Impeller Case	1	900883042201	900883041801	900883042001
23	Rotor Group				
	4" Standard Clearances	1	307GAC4028	306GAC4028	305GAC4028
	4" High Temperature Clearances	1	To be assigned	To be assigned	To be assigned
24	Bearing Housing Drive End	1	300GAC006	300GAC006	300GAC006
25	Key-Square	1	900639910304	900639910304	900639910304
26	Pipe Fitting	2	40E9	40E9	40E9
27	Cap	2	40P58	40P58	40P58
29	Drive Cover	1	900883040301	900883040301	900883040301
30	Screw	8	75P189	75P189	75P189
* 31	Oil Seal	1	60DD716	60DD716	60DD716
* 35	Bearing – Roller	1	12BA154	12BA154	12BA154
40	Oil Level Gauge	1	40P34	40P34	40P34
44	Screw	4	76F1	76F1	76F1
** 45	Paint, Bulk, GDP188, Aluminum	0.125	28H284	28H284	28H284
** 54	Shim Case .0025/.0035"	1	200GAC732	200GAC732	200GAC732
** 55	Shim Case .010"	1	201GAC732	201GAC732	201GAC732
** 56	Shim Case .0015/.002"	1	202GAC732	202GAC732	202GAC732
82	Locking Assembly	2	22G44	22G44	22G44
88	Washer	4	95A3	95A3	95A3
** 105	Overhaul Kit 4" R VERS Lip Seal, Grease Splash Lube	1	300GAC6010	300GAC6010	300GAC6010
** 900	Group-Indent & Instruction Legend Series 4" R VERS	1	201GAC4011	201GAC4011	201GAC4011

* INCLUDED IN OVERHAUL KIT.
** NOT SHOWN ON ILLUSTRATION.

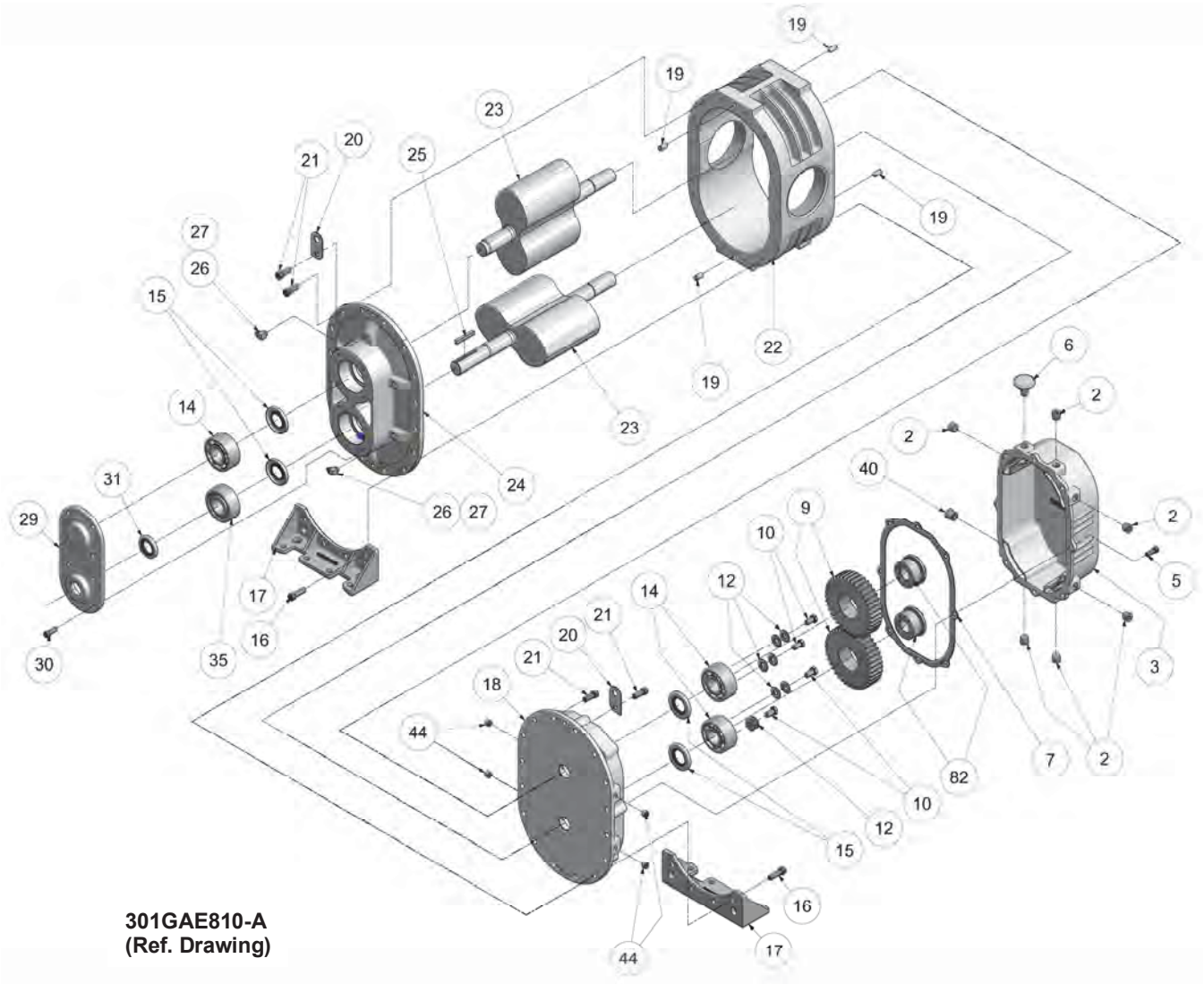

301GAE810-A
(Ref. Drawing)

Order by Part Number and Description. Reference Numbers are for your convenience only.

Model GAE Lip Seal Grease Splash Lube

Ref. No.	Description	No. Req'd	Size – 5H GAEH_R Δ Δ= (A or C)	Size – 5M GAEM_R Δ Δ= (A or C)	Size -- 5L GAEL_R Δ Δ= (A or C)
2	Plug	6	64AC3	64AC3	64AC3
3	Gear Case	1	304GAE602	304GAE602	304GAE602
5	Screw	8	75P40	75P40	75P40
6	Breather	1	5L359	5L359	5L359
* 7	Gasket	1	300GAE715	300GAE715	300GAE715
9	Gear Kit	1	300GAE6008	300GAE6008	300GAE6008
* 10	Screws	4	655ED03P	655ED03P	655ED03P
12	Washer	8	95A3	95A3	95A3
* 14	Ball Bearing	3	8500397	8500397	8500397
* 15	Oil Seal	4	60DD714	60DD714	60DD714
16	Screw	8	75P56	75P56	75P56
17	Foot – Vert. & Horiz.	2	300GAE166	300GAE166	300GAE166
18	Bearing Housing Gear End	1	301GAE006	301GAE006	301GAE006
19	Dowel Pin	4	62M48	62M48	62M48
20	Lifting Lug	2	200GAA451	200GAA451	200GAA451
21	Screw	24	75P55	75P55	75P55
22	Impeller Case	1	900883051701	900883051801	900883051901
23	Rotor Group				
	5" Standard Clearances	1	327GAE4028	326GAE4028	325GAE4028
	5" High Temperature Clearances	1	To be assigned	To be assigned	To be assigned
24	Bearing Housing Drive End	1	206GAE006	206GAE006	206GAE006
25	Key-Square	1	900639910305	900639910305	900639910305
26	Pipe Fitting	2	40E9	40E9	40E9
27	Cap	2	40P58	40P58	40P58
29	Drive Cover	1	900883050401	900883050401	900883050401
30	Screw	8	75P189	75P189	75P189
* 31	Oil Seal	1	60DD726	60DD726	60DD726
* 35	Bearing – Roller	1	12BA155	12BA155	12BA155
40	Oil Level Gauge	1	40P34	40P34	40P34
44	Screw	4	76F92	76F92	76F92
** 45	Paint, Bulk, GDP188, Aluminum	0.125	28H284	28H284	28H284
** 54	Shim Case .0025/.0035"	1	200GAE732	200GAE732	200GAE732
** 55	Shim Case .010"	1	201GAE732	201GAE732	201GAE732
** 56	Shim Case .0015/.002"	1	202GAE732	202GAE732	202GAE732
82	Locking Assembly	2	22G43	22G43	22G43
** 105	Overhaul Kit 5" R VERS Lip Seal, Grease Splash Lube	1	300GAE6010	300GAE6010	300GAE6010
** 900	Group-Indent & Instruction Legend Series 5" R VERS	1	205GAE4011	205GAE4011	205GAE4011

* INCLUDED IN OVERHAUL KIT.
** NOT SHOWN ON ILLUSTRATION.

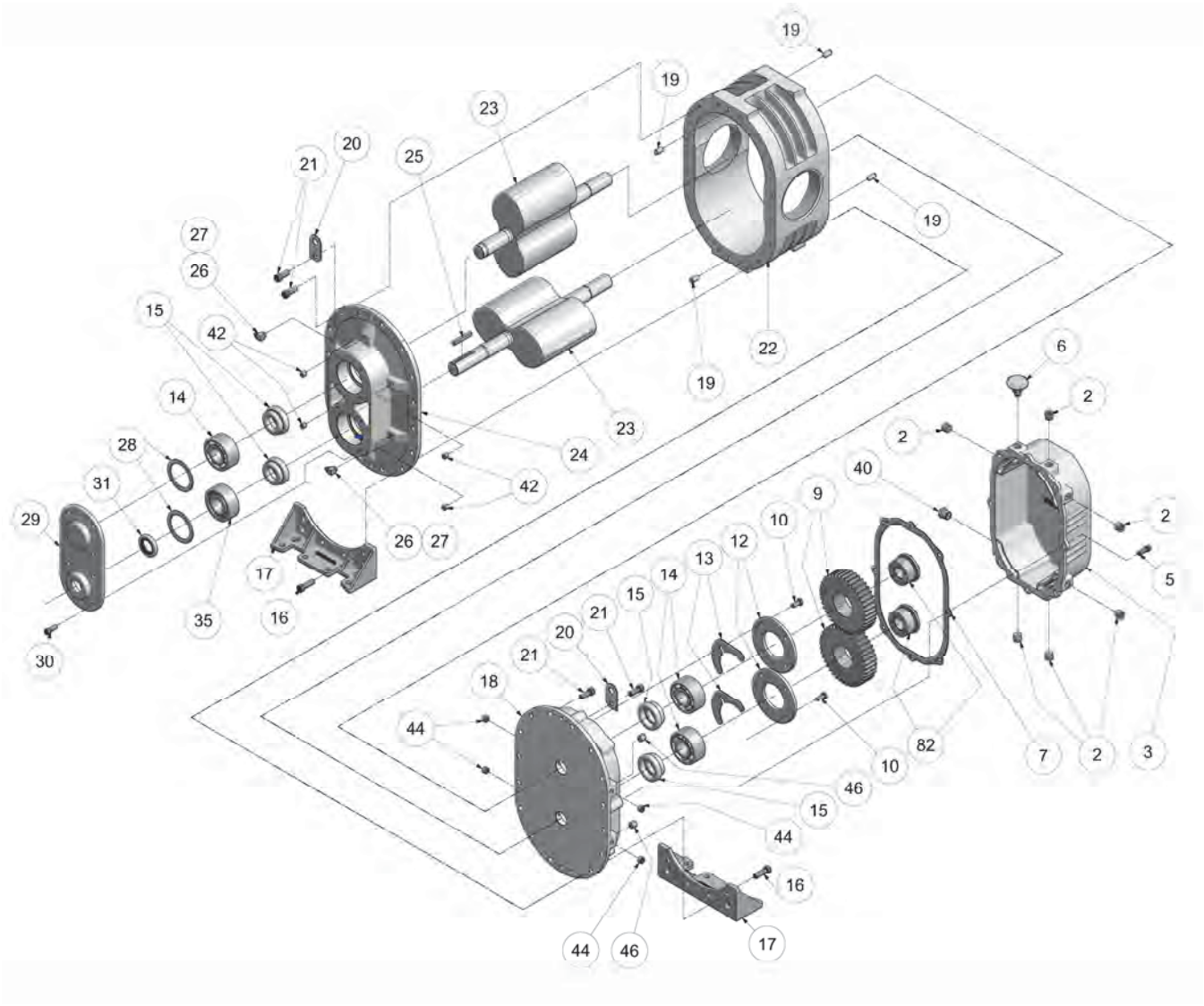
19
19
23
20
21
25
19
27
26
15
42
22
19
6
14
23
2
28
24
2
31
42
40
29
26
27
9
10
2
12
13
17
14
5
15
35
16
21
20
21
30
18
44
82
10
7
2
3
46
15
44
16
44
46
17

Order by Part Number and Description. Reference Numbers are for your convenience only.

Model GAB Mechanical Seal Grease Splash Lube

Ref. No.	Description	No. Req'd	Size – 3H GABH_RB	Size – 3M GABM_RB	Size -- 3L GABL_RB
2	Plug	6	64AC2	64AC2	64AC2
3	Gear Case	1	303GAB602	303GAB602	303GAB602
5	Screw	8	75P7	75P7	75P7
6	Breather	1	5L358	5L358	5L358
* 7	Gasket	1	300GAB715	300GAB715	300GAB715
9	Gear Kit	1	300GAB6008	300GAB6008	300GAB6008
* 10	Screws	4	75A33P	75A33P	75A33P
12	Bearing Retainer	2	300GAB205	300GAB205	300GAB205
* 13	Shim Set	1	900881032200	900881032200	900881032200
* 14	Ball Bearing	3	12BA143	12BA143	12BA143
* 15	Mechanical Seal	4	900871020003	900871020003	900871020003
16	Screw	4	75P56	75P56	75P56
17	Foot – Vert. & Horiz.	2	303GAB166	303GAB166	303GAB166
18	Bearing Housing Gear End	1	304GAB006	304GAB006	304GAB006
19	Dowel Pin	4	62M48	62M48	62M48
20	Lifting Lug	2	200GAA451	200GAA451	200GAA451
21	Screw	20	75P55	75P55	75P55
22	Impeller Case	1	900873034301	900873033801	900873034201
23	Rotor Group				
	3" Standard Clearances	1	307GAB4028	309GAB4028	308GAB4028
	3" High Temperature Clearances	1	To be assigned	To be assigned	To be assigned
24	Bearing Housing Drive End	1	900883030301	900883030301	900883030301
25	Key-Square	1	900639910304	900639910304	900639910304
26	Pipe Fitting	2	40E9	40E9	40E9
27	Cap	2	40P58	40P58	40P58
* 28	Wavy Spring	2	900669170203	900669170203	900669170203
29	Drive Cover	1	900873033701	900873033701	900873033701
30	Screw	6	75P22	75P22	75P22
* 31	Oil Seal	1	60DD725	60DD725	60DD725
* 35	Bearing – Roller	1	12BA153	12BA153	12BA153
40	Oil Level Gauge	1	40P82	40P82	40P82
42	Plug	4	64AC1	64AC1	64AC1
44	Screw	4	76F1	76F1	76F1
** 45	Paint, Bulk, GDP188, Aluminum	0.125	28H284	28H284	28H284
46	Plug	4	64AC1	64AC1	64AC1
** 54	Shim Case .0025/.0035"	1	200GAB732	200GAB732	200GAB732
** 55	Shim Case .010"	1	201GAB732	201GAB732	201GAB732
** 56	Shim Case .0015/.002"	1	202GAB732	202GAB732	202GAB732
82	Locking Assembly	2	22G45	22G45	22G45
** 105	Overhaul Kit 3" R VERS Mechanical Seal, Grease Splash Lube	1	303GAB6010	303GAB6010	303GAB6010
** 900	Group-Indent & Instruction Legend Series 3" R VERS	1	303GAB4011	303GAB4011	303GAB4011

* INCLUDED IN OVERHAUL KIT.
** NOT SHOWN ON ILLUSTRATION

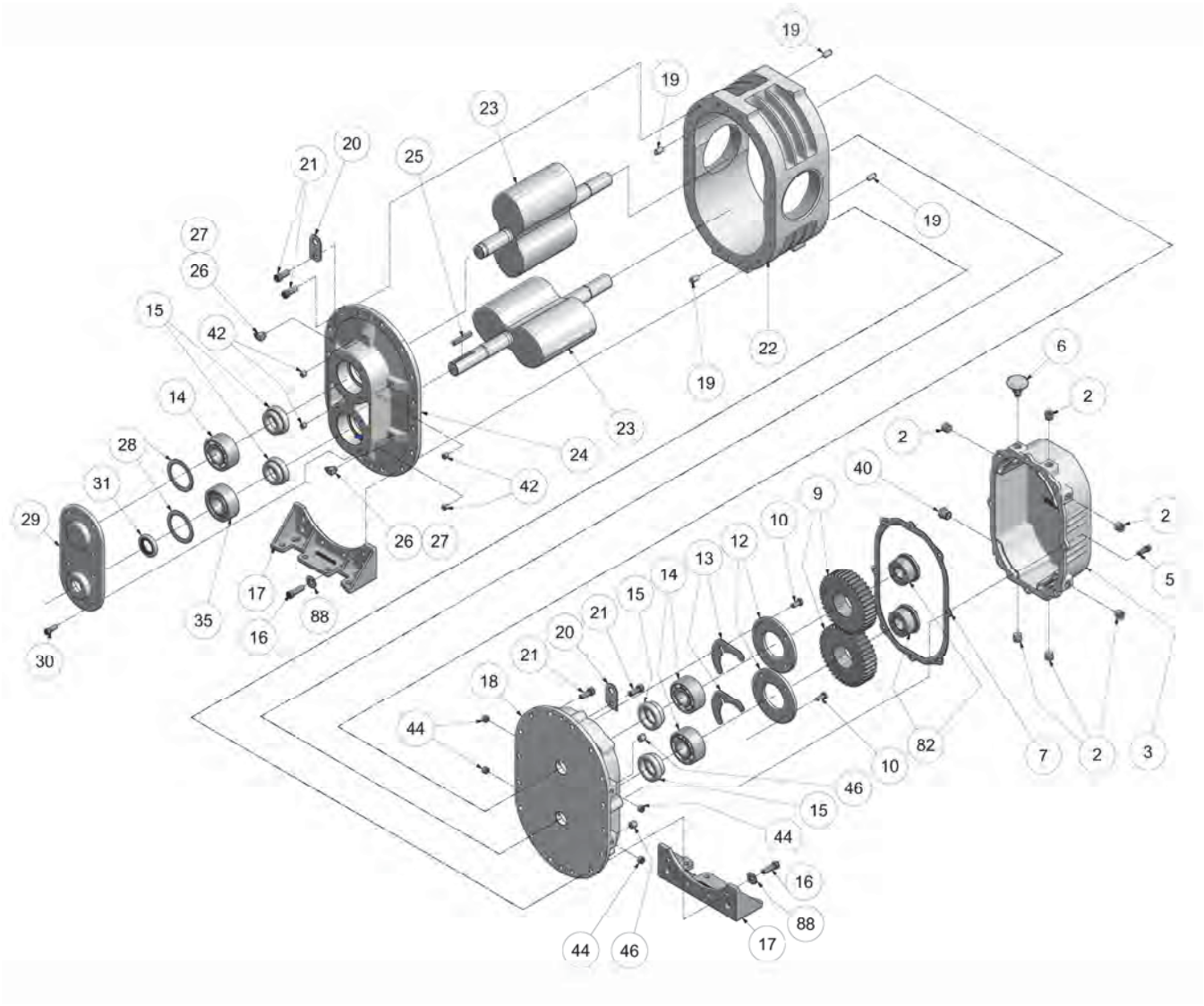
19
19
23
20
21
25
19
27
26
15
42
22
19
6
14
23
2
28
24
2
31
42
40
29
26
27
9
10
2
12
13
5
17
14
15
88
35
21
16
20
21
30
18
44
82
10
7
2
3
46
15
44
16
88
44
46
17

Order by Part Number and Description. Reference Numbers are for your convenience only.

Model GAC Mechanical Seal Grease Splash Lube

Ref. No.	Description	No. Req'd	Size – 4H GACH_RB	Size – 4M GACM_RB	Size -- 4L GACL_RB
2	Plug	6	64AC3	64AC3	64AC3
3	Gear Case	1	304GAC602	304GAC602	304GAC602
5	Screw	8	75P40	75P40	75P40
6	Breather	1	5L359	5L359	5L359
* 7	Gasket	1	301GAC715	301GAC715	301GAC715
9	Gear Kit	1	300GAC6008	300GAC6008	300GAC6008
* 10	Screws	8	75A33P	75A33P	75A33P
12	Bearing Retainer	2	900883040201	900883040201	900883040201
* 13	Shim Set	1	900881042900	900881042900	900881042900
* 14	Ball Bearing	3	12BA144	12BA144	12BA144
* 15	Mechanical Seal	4	900871020004	900871020004	900871020004
16	Screw	8	75P56	75P56	75P56
17	Foot – Vert. & Horiz.	2	300GAC166	300GAC166	300GAC166
18	Bearing Housing Gear End	1	304GAC006	304GAC006	304GAC006
19	Dowel Pin	4	62M48	62M48	62M48
20	Lifting Lug	2	200GAA451	200GAA451	200GAA451
21	Screw	16	75P55	75P55	75P55
22	Impeller Case	1	900883042201	900883041801	900883042001
23	Rotor Group				
	4" Standard Clearances	1	307GAC4028	306GAC4028	305GAC4028
	4" High Temperature Clearances	1	To be assigned	To be assigned	To be assigned
24	Bearing Housing Drive End	1	900883041201	900883041201	900883041201
25	Key-Square	1	900639910304	900639910304	900639910304
26	Pipe Fitting	2	40E9	40E9	40E9
27	Cap	2	40P58	40P58	40P58
* 28	Wavy Spring	2	900669170304	900669170304	900669170304
29	Drive Cover	1	900883040301	900883040301	900883040301
30	Screw	8	75P189	75P189	75P189
* 31	Oil Seal	1	60DD716	60DD716	60DD716
* 35	Bearing – Roller	1	12BA154	12BA154	12BA154
40	Oil Level Gauge	1	40P34	40P34	40P34
42	Plug	4	64AC1	64AC1	64AC1
44	Screw	4	76F1	76F1	76F1
** 45	Paint, Bulk, GDP188, Aluminum	0.125	28H284	28H284	28H284
46	Plug	4	64AC1	64AC1	64AC1
** 54	Shim Case .0025/.0035"	1	200GAC732	200GAC732	200GAC732
** 55	Shim Case .010"	1	201GAC732	201GAC732	201GAC732
** 56	Shim Case .0015/.002"	1	202GAC732	202GAC732	202GAC732
82	Locking Assembly	2	22G44	22G44	22G44
88	Washer	4	95A3	95A3	95A3
** 105	Overhaul Kit 4" R VERS Mechanical Seal, Grease Splash Lube	1	302GAC6010	302GAC6010	302GAC6010
** 900	Group-Indent & Instruction Legend Series 4" R VERS	1	201GAC4011	201GAC4011	201GAC4011

* INCLUDED IN OVERHAUL KIT.
** NOT SHOWN ON ILLUSTRATION

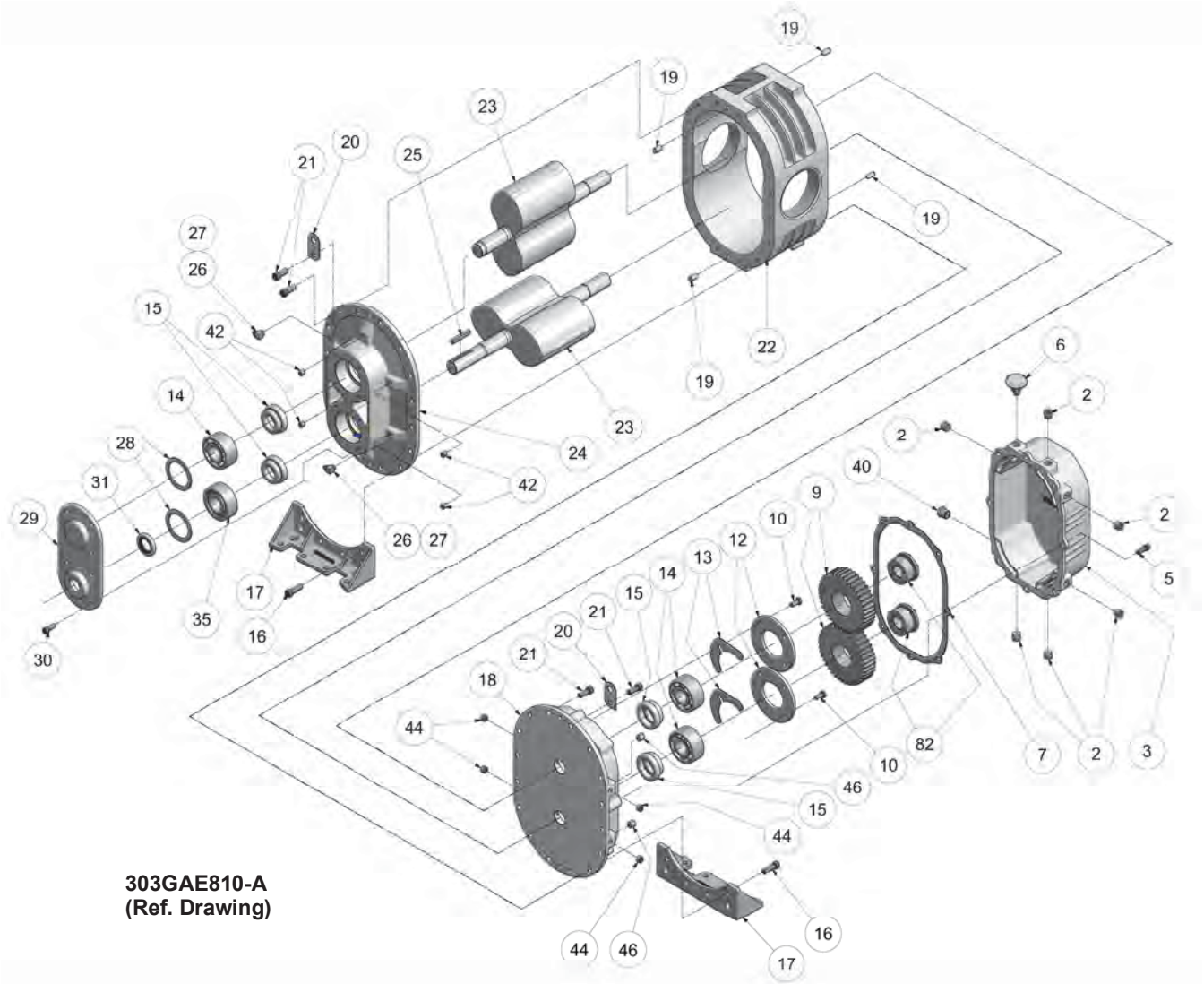

303GAE810-A
(Ref. Drawing)

Order by Part Number and Description. Reference Numbers are for your convenience only.

Model GAE Mechanical Seal Grease Splash Lube

	Ref. No.	Description	No. Req'd	Size – 5H GAEH_RB	Size – 5M GAEM_RB	Size -- 5L GAEL_RB
	2	Plug	6	64AC3	64AC3	64AC3
	3	Gear Case	1	304GAE602	304GAE602	304GAE602
	5	Screw	8	75P40	75P40	75P40
	6	Breather	1	5L359	5L359	5L359
*	7	Gasket	1	300GAE715	300GAE715	300GAE715
	9	Gear Kit	1	300GAE6008	300GAE6008	300GAE6008
*	10	Screws	8	75A33P	75A33P	75A33P
	12	Bearing Retainer	2	900883050501	900883050501	900883050501
*	13	Shim Set	1	900881052900	900881052900	900881052900
*	14	Ball Bearing	3	8500397	8500397	8500397
*	15	Mechanical Seal	4	900871020005	900871020005	900871020005
	16	Screw	8	75P56	75P56	75P56
	17	Foot – Vert. & Horiz.	2	300GAE166	300GAE166	300GAE166
	18	Bearing Housing Gear End	1	303GAE006	303GAE006	303GAE006
	19	Dowel Pin	4	62M48	62M48	62M48
	20	Lifting Lug	2	200GAA451	200GAA451	200GAA451
	21	Screw	24	75P55	75P55	75P55
	22	Impeller Case	1	900883051701	900883051801	900883051901
	23	Rotor Group				
		5" Standard Clearances	1	327GAE4028	326GAE4028	325GAE4028
		5" High Temperature Clearances	1	To be assigned	To be assigned	To be assigned
	24	Bearing Housing Drive End	1	207GAE006	207GAE006	207GAE006
	25	Key-Square	1	900639910305	900639910305	900639910305
	26	Pipe Fitting	2	40E9	40E9	40E9
	27	Cap	2	40P58	40P58	40P58
*	28	Wavy Spring	2	900669170405	900669170405	900669170405
	29	Drive Cover	1	900883050401	900883050401	900883050401
	30	Screw	8	75P189	75P189	75P189
*	31	Oil Seal	1	60DD726	60DD726	60DD726
*	35	Bearing – Roller	1	12BA155	12BA155	12BA155
	40	Oil Level Gauge	1	40P34	40P34	40P34
	42	Plug	4	64AC1	64AC1	64AC1
	44	Screw	4	76F92	76F92	76F92
**	45	Paint, Bulk, GDP188, Aluminum	0.125	28H284	28H284	28H284
	46	Plug	4	64AC2	64AC2	64AC2
**	54	Shim Case .0025/.0035"	1	200GAE732	200GAE732	200GAE732
**	55	Shim Case .010"	1	201GAE732	201GAE732	201GAE732
**	56	Shim Case .0015/.002"	1	202GAE732	202GAE732	202GAE732
	82	Locking Assembly	2	22G43	22G43	22G43
**	105	Overhaul Kit 5" R VERS Mechanical Seal, Grease Splash	1	302GAE6010	302GAE6010	302GAE6010
**	900	Group-Indent & Instruction Legend Series 5" R VERS	1	205GAE4011	205GAE4011	205GAE4011

* INCLUDED IN OVERHAUL KIT.
** NOT SHOWN ON ILLUSTRATION

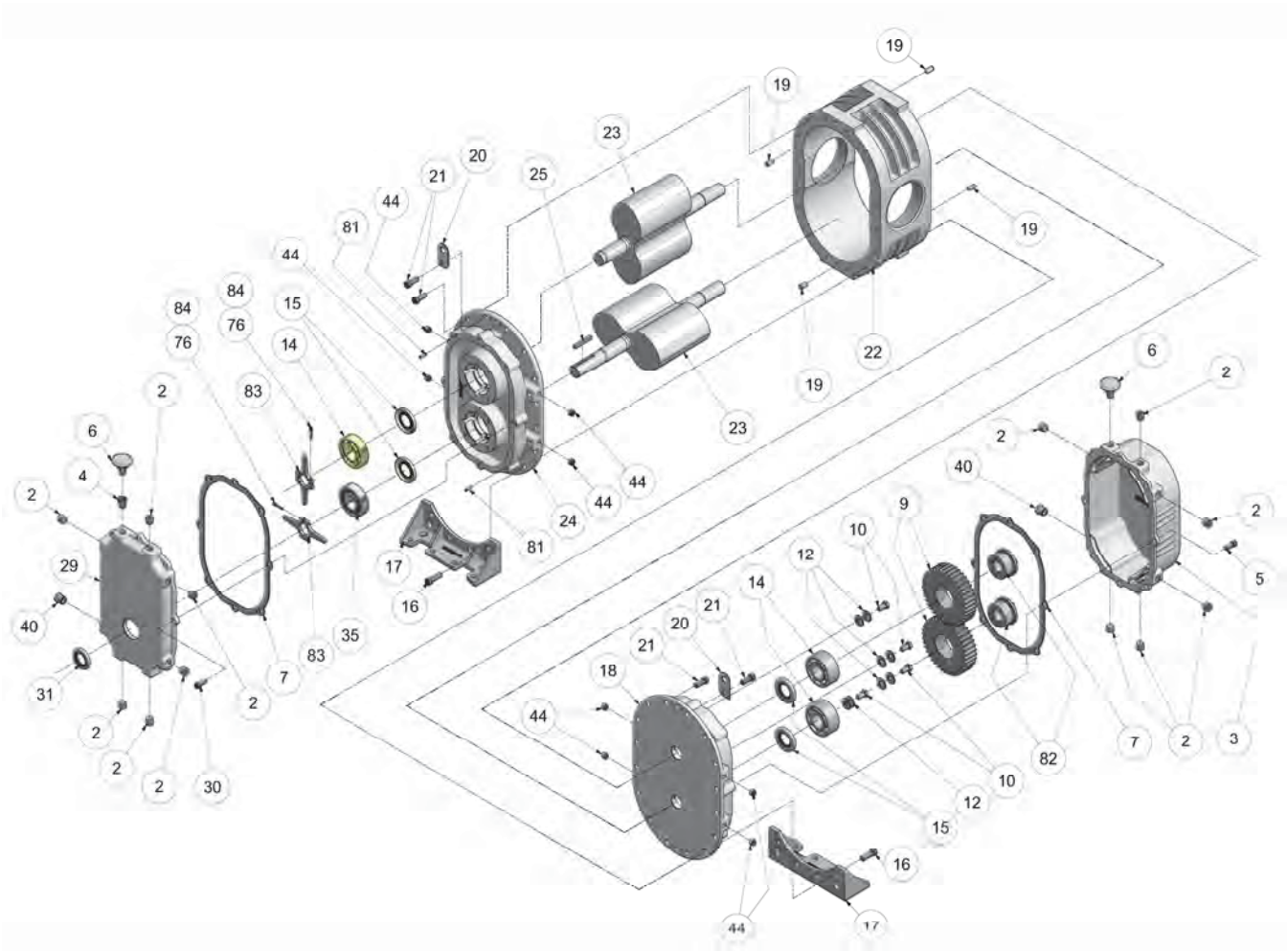
19
19
23
20
21
25
44
81
44
84
84
76
76
15
14
83
2
6
4
2
29
40
31
2
2
2
2
30
7
83
35
17
16
81
24
44
44
23
19
22
19
19
6
2
2
40
2
5
9
10
12
14
21
20
21
18
44
10
12
15
16
44
17
82
7
2
3

Order by Part Number and Description. Reference Numbers are for your convenience only.

Model GAB Lip Seal Dual Splash Lube

	Ref. No.	Description	No. Req'd	Size – 3H GABH_R △ △= (D or F)	Size – 3M GABM_R △ △= (D or F)	Size -- 3L GABL_R △ △= (D or F)
	2	Plug	12	64AC2	64AC2	64AC2
	3	Gear Case	1	303GAB602	303GAB602	303GAB602
	5	Screw	8	75P7	75P7	75P7
	6	Breather	2	5L358	5L358	5L358
*	7	Gasket	2	300GAB715	300GAB715	300GAB715
	9	Gear Kit	1	300GAB6008	300GAB6008	300GAB6008
*	10	Screws	4	75A33P	75A33P	75A33P
	12	Washer	8	95A2	95A2	95A2
*	14	Ball Bearing	3	12BA143	12BA143	12BA143
*	15	Oil Seal	4	900891030601	900891030601	900891030601
	16	Screw	4	75P56	75P56	75P56
	17	Foot – Vert. & Horiz.	2	303GAB166	303GAB166	303GAB166
	18	Bearing Housing Gear End	1	302GAB006	302GAB006	302GAB006
	19	Dowel Pin	4	62M48	62M48	62M48
	20	Lifting Lug	2	200GAA451	200GAA451	200GAA451
	21	Screw	20	75P55	75P55	75P55
	22	Impeller Case	1	900873034301	900873033801	900873034201
	23	Rotor Group				
		3" Standard Clearances	1	307GAB4028	309GAB4028	308GAB4028
		3" High Temperature Clearances	1	To be assigned	To be assigned	To be assigned
	24	Bearing Housing Drive End	1	303GAB006	303GAB006	303GAB006
	25	Key-Square	1	900639910304	900639910304	900639910304
	29	Drive Cover	1	302GAB477	302GAB477	302GAB477
	30	Screw	8	75P7	75P7	75P7
*	31	Oil Seal	1	60DD725	60DD725	60DD725
*	35	Bearing – Spherical	1	12BA153	12BA153	12BA153
	40	Oil Level Gauge	2	40P82	40P82	40P82
	44	Screw	8	76F1	76F1	76F1
**	45	Paint, Bulk, GDP188, Aluminum	0.125	28H284	28H284	28H284
**	54	Shim Case .0025/.0035"	1	200GAB732	200GAB732	200GAB732
**	55	Shim Case .0010"	1	201GAB732	201GAB732	201GAB732
**	56	Shim Case .0015/.002"	1	202GAB732	202GAB732	202GAB732
	76	Compound, Loctite	50	25BC877	25BC877	25BC877
	81	Dowel Pin	2	62M13	62M13	62M13
	82	Locking Assembly	2	22G45	22G45	22G45
	83	Slinger	2	300GAB173	300GAB173	300GAB173
	84	Screw	2	75LM13	75LM13	75LM13
**	105	Overhaul Kit 3" R VERS Lip Seal, Dual Splash Lube	1	301GAB6010	301GAB6010	301GAB6010
**	900	Group-Indent & Instruction Legend Series 3" R VERS	1	303GAB4011	303GAB4011	303GAB4011

* INCLUDED IN OVERHAUL KIT.
** NOT SHOWN ON ILLUSTRATION

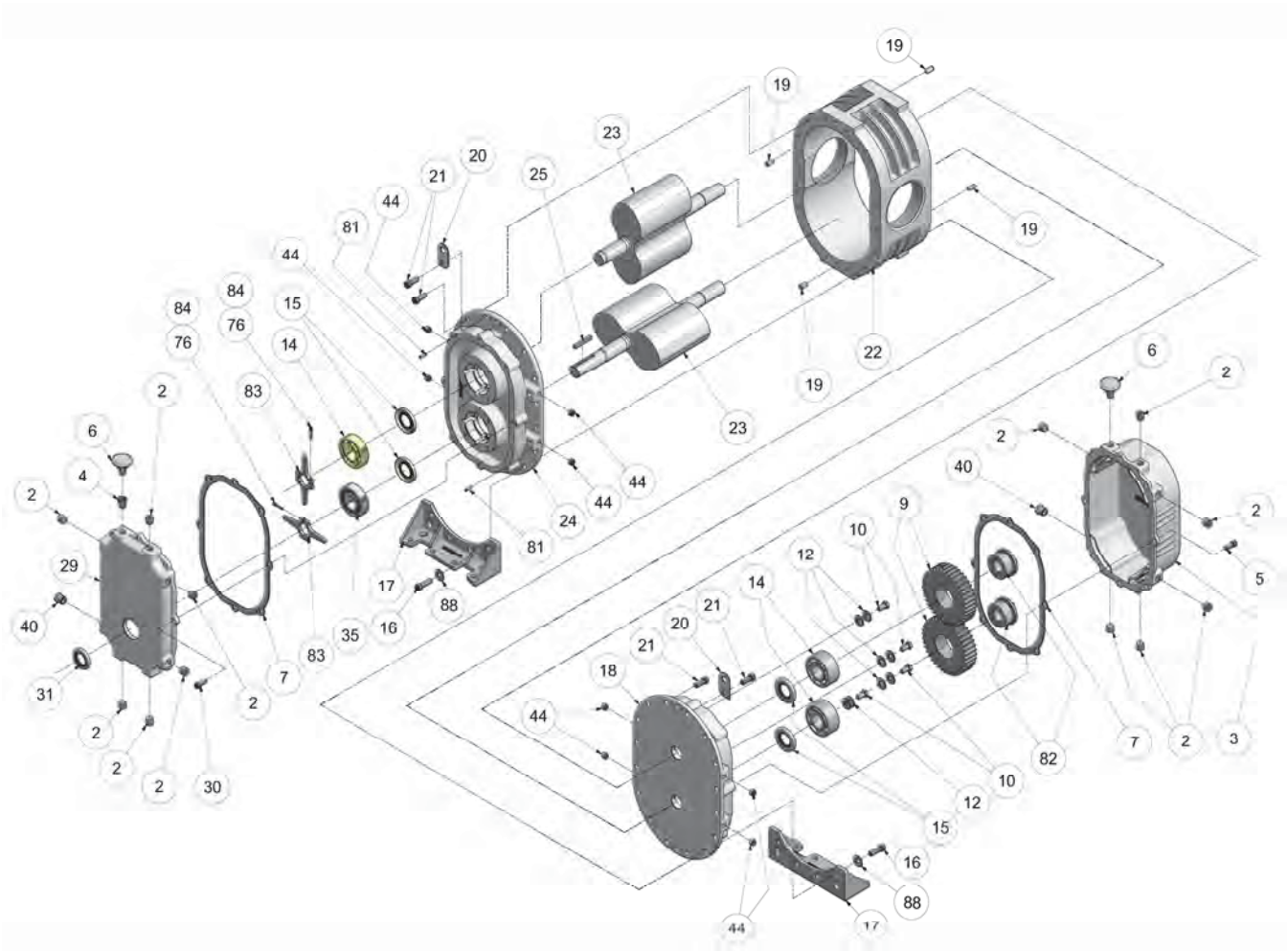
19
19
23
20
21
25
44
81
44
84
84
76
76
15
14
83
2
6
4
2
29
40
31
2
2
2
2
30
7
83
35
16
17
88
81
24
44
44
23
19
22
19
19
6
2
2
40
2
5
9
10
12
14
21
20
21
18
44
10
12
15
16
88
44
82
7
2
3

Order by Part Number and Description. Reference Numbers are for your convenience only.

Model GAC Lip Seal Dual Splash Lube

Ref. No.	Description	No. Req'd	Size – 4H GACH_R Δ Δ= (D or F)	Size – 4M GACM_R Δ Δ= (D or F)	Size -- 4L GACL_R Δ Δ= (D or F)
2	Plug	12	64AC3	64AC3	64AC3
3	Gear Case	1	304GAC602	304GAC602	304GAC602
5	Screw	8	75P40	75P40	75P40
6	Breather	2	5L359	5L359	5L359
* 7	Gasket	2	301GAC715	301GAC715	301GAC715
9	Gear Kit	1	300GAC6008	300GAC6008	300GAC6008
* 10	Screws	4	655ED03P	655ED03P	655ED03P
12	Washer	8	95A3	95A3	95A3
* 14	Ball Bearing	3	12BA144	12BA144	12BA144
* 15	Oil Seal	4	60DD630	60DD630	60DD630
16	Screw	8	75P56	75P56	75P56
17	Foot – Vert. & Horiz.	2	300GAC166	300GAC166	300GAC166
18	Bearing Housing Gear End	1	302GAC006	302GAC006	302GAC006
19	Dowel Pin	4	62M48	62M48	62M48
20	Lifting Lug	2	200GAA451	200GAA451	200GAA451
21	Screw	16	75P55	75P55	75P55
22	Impeller Case	1	900883042201	900883041801	900883042001
23	Rotor Group				
	4" Standard Clearances	1	307GAC4028	306GAC4028	305GAC4028
	4" High Temperature Clearances	1	To be assigned	To be assigned	To be assigned
24	Bearing Housing Drive End	1	303GAC006	303GAC006	303GAC006
25	Key-Square	1	900639910304	900639910304	900639910304
29	Drive Cover	1	302GAC477	302GAC477	302GAC477
30	Screw	8	75P40	75P40	75P40
* 31	Oil Seal	1	60DD716	60DD716	60DD716
* 35	Bearing – Spherical	1	12BA255	12BA255	12BA255
40	Oil Level Gauge	2	40P34	40P34	40P34
44	Screw	8	76F1	76F1	76F1
** 45	Paint, Bulk, GDP188, Aluminum	0.125	28H284	28H284	28H284
** 54	Shim Case .0025/.0035"	1	200GAC732	200GAC732	200GAC732
** 56	Shim Case .0015/.002"	1	202GAC732	202GAC732	202GAC732
76	Compound, Loctite	50	25BC877	25BC877	25BC877
81	Dowel Pin	2	62M13	62M13	62M13
82	Locking Assembly	2	22G44	22G44	22G44
83	Slinger	2	300GAC173	300GAC173	300GAC173
84	Screw	2	75LM14	75LM14	75LM14
88	Washer	4	95A3	95A3	95A3
** 105	Overhaul Kit 4" R VERS Lip Seal, Dual Splash Lube	1	301GAC6010	301GAC6010	301GAC6010
** 900	Group-Indent & Instruction Legend Series 4" R VERS	1	201GAC4011	201GAC4011	201GAC4011

* INCLUDED IN OVERHAUL KIT.
** NOT SHOWN ON ILLUSTRATION

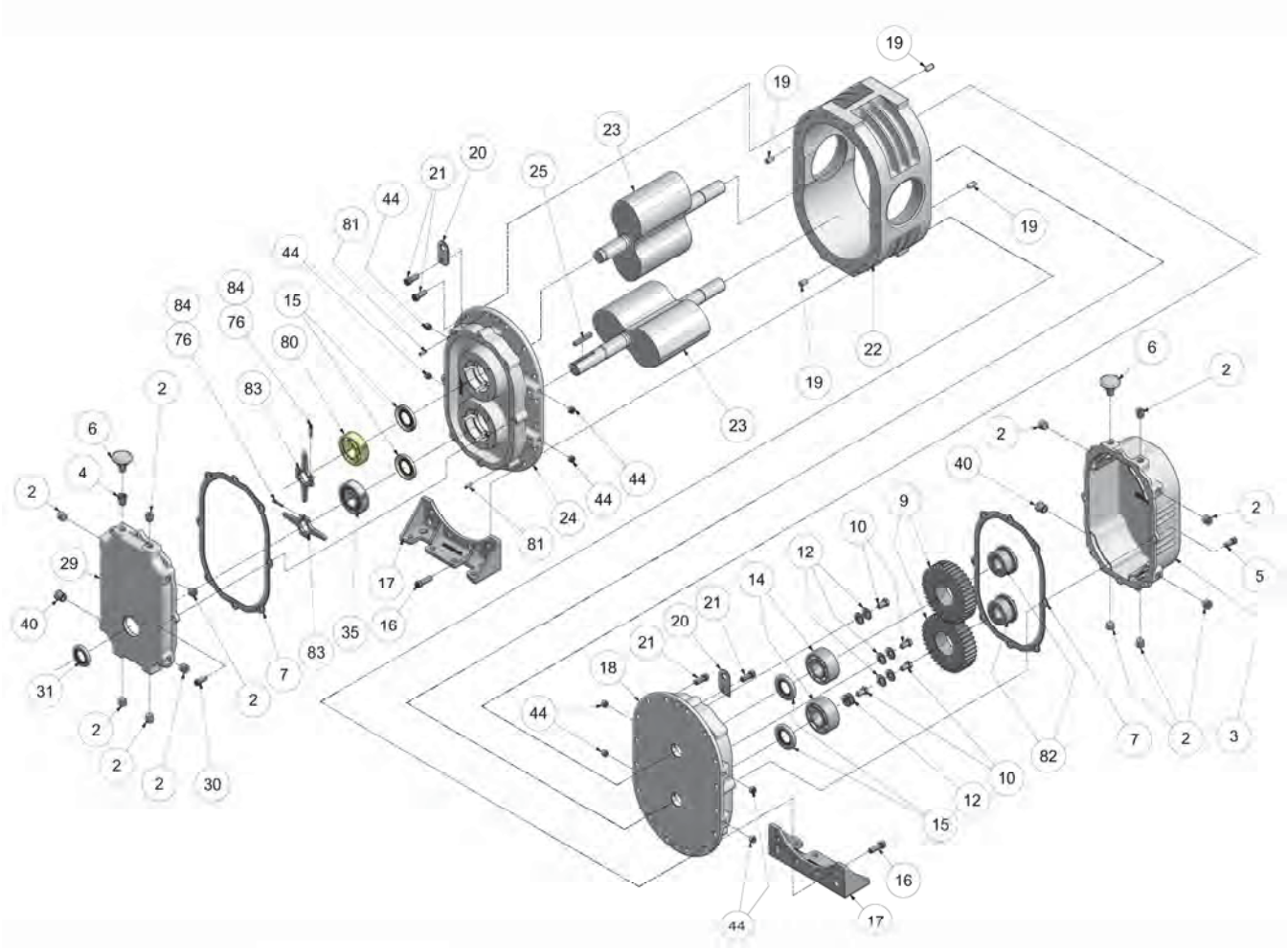

300GAE810-A
(Ref. Drawing)

Order by Part Number and Description. Reference Numbers are for your convenience only.

Model GAE Lip Seal — Dual Splash Lube

Ref. No.	Description	No. Req'd	Size – 5H GAEH_R Δ Δ= (D or F)	Size – 5M GAEM_R Δ Δ= (D or F)	Size -- 5L GAEL_R Δ Δ= (D or F)
2	Plug	12	64AC3	64AC3	64AC3
3	Gear Case	1	304GAE602	304GAE602	304GAE602
5	Screw	8	75P40	75P40	75P40
6	Breather	2	5L359	5L359	5L359
* 7	Gasket	2	300GAE715	300GAE715	300GAE715
9	Gear Kit	1	300GAE6008	300GAE6008	300GAE6008
* 10	Screws	4	655ED03P	655ED03P	655ED03P
12	Washer	8	95A3	95A3	95A3
* 14	Ball Bearing	2	8500397	8500397	8500397
* 15	Oil Seal	4	60DD714	60DD714	60DD714
16	Screw	8	75P56	75P56	75P56
17	Foot – Vert. & Horiz.	2	300GAE166	300GAE166	300GAE166
18	Bearing Housing Gear End	1	301GAE006	301GAE006	301GAE006
19	Dowel Pin	4	62M48	62M48	62M48
20	Lifting Lug	2	200GAA451	200GAA451	200GAA451
21	Screw	24	75P55	75P55	75P55
22	Impeller Case	1	900883051701	900883051801	900883051901
23	Rotor Group				
	5" Standard Clearances	1	327GAE4028	326GAE4028	325GAE4028
	5" High Temperature Clearances	1	To be assigned	To be assigned	To be assigned
25	Key-Square	1	900639910305	900639910305	900639910305
29	Drive Cover	1	300GAE477	300GAE477	300GAE477
30	Screw	8	75P40	75P40	75P40
* 31	Oil Seal	1	60DD726	60DD726	60DD726
* 35	Bearing – Spherical	1	12BA253	12BA253	12BA253
40	Oil Level Gauge	2	40P34	40P34	40P34
44	Screw	8	76F92	76F92	76F92
** 45	Paint, Bulk, GDP188, Aluminum	0.125	28H284	28H284	28H284
** 54	Shim Case .0025/.0035"	1	200GAE732	200GAE732	200GAE732
** 55	Shim Case .010"	1	201GAE732	201GAE732	201GAE732
** 56	Shim Case .0015/.002"	1	202GAE732	202GAE732	202GAE732
76	Compound, Loctite	5	25BC877	25BC877	25BC877
* 80	Bearing – Conrad	1	12BA254	12BA254	12BA254
81	Dowel Pin	2	62M13	62M13	62M13
82	Locking Assembly	2	22G43	22G43	22G43
83	Slinger	2	300GAE173	300GAE173	300GAE173
84	Screw	2	75LM14	75LM14	75LM14
** 105	Overhaul Kit 5" R VERS Lip Seal, Dual Splash Lube	1	301GAE6010	301GAE6010	301GAE6010
** 900	Group-Indent & Instruction Legend Series 5" R VERS	1	205GAE4011	205GAE4011	205GAE4011

* INCLUDED IN OVERHAUL KIT.
** NOT SHOWN ON ILLUSTRATION

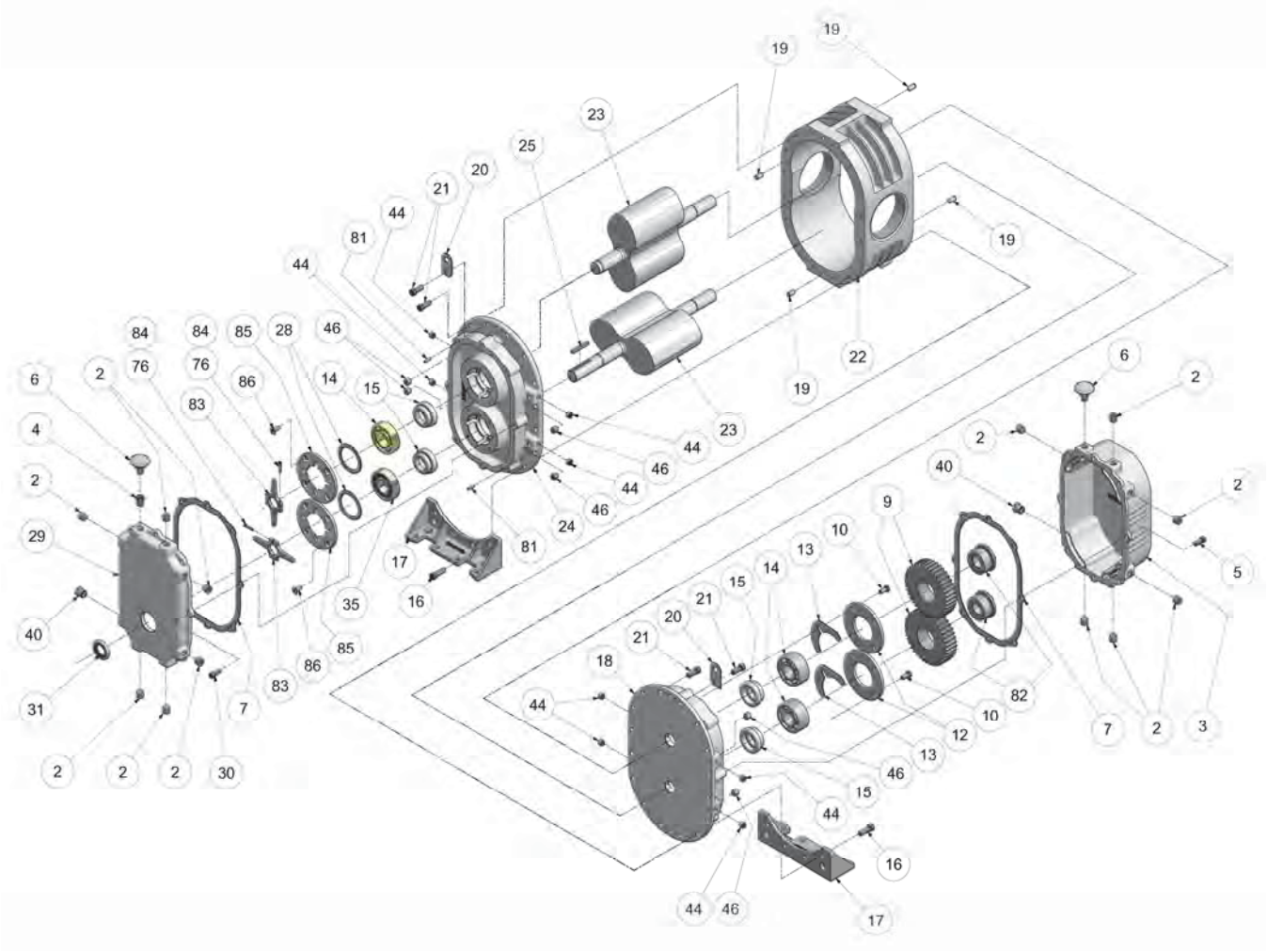
19
19
23
25
20
21
44
81
44
84
84
85
28
46
76
76
86
14
15
6
2
83
4
2
29
40
31
2
2
2
30
7
83
86
85
35
17
16
81
24
46
44
46
44
23
19
22
19
19
6
2
2
40
2
2
5
9
10
13
14
15
21
20
21
18
44
82
10
12
13
46
15
44
16
44
46
17
7
2
3

Order by Part Number and Description. Reference Numbers are for your convenience only.

Model GAB Mechanical Seal Dual Splash Lube

Ref. No.	Description	No. Req'd	Size – 3H GABH_R △ △= (E or G)	Size – 3M GABM_R △ △= (E or G)	Size -- 3L GABL_R △ △= (E or G)
2	Plug	12	64AC2	64AC2	64AC2
3	Gear Case	1	303GAB602	303GAB602	303GAB602
5	Screw	8	75P7	75P7	75P7
6	Breather	2	5L358	5L358	5L358
* 7	Gasket	2	300GAB715	300GAB715	300GAB715
9	Gear Kit	1	300GAB6008	300GAB6008	300GAB6008
* 10	Screws	4	75A33P	75A33P	75A33P
12	Bearing Retainer	2	300GAB205	300GAB205	300GAB205
* 13	Shim Set	1	900881032200	900881032200	900881032200
* 14	Ball Bearing	3	12BA143	12BA143	12BA143
* 15	Mechanical Seal	4	900871020003	900871020003	900871020003
16	Screw	4	75P56	75P56	75P56
17	Foot – Vert. & Horiz.	2	303GAB166	303GAB166	303GAB166
18	Bearing Housing Gear End	1	304GAB006	304GAB006	304GAB006
19	Dowel Pin	4	62M48	62M48	62M48
20	Lifting Lug	2	200GAA451	200GAA451	200GAA451
21	Screw	20	75P55	75P55	75P55
22	Impeller Case	1	900873034301	900873033801	900873034201
23	Rotor Group				
	3" Standard Clearances	1	307GAB4028	309GAB4028	308GAB4028
	3" High Temperature Clearances	1	To be assigned	To be assigned	To be assigned
24	Bearing Housing Drive End	1	305GAB006	305GAB006	305GAB006
25	Key-Square	1	900639910304	900639910304	900639910304
* 28	Wavy Spring	2	900669170203	900669170203	900669170203
29	Drive Cover	1	302GAB477	302GAB477	302GAB477
30	Screw	6	75P7	75P7	75P7
* 31	Oil Seal	1	60DD725	60DD725	60DD725
* 35	Bearing – Spherical	1	12BA153	12BA153	12BA153
40	Oil Level Gauge	2	40P82	40P82	40P82
44	Screw	8	76F1	76F1	76F1
** 45	Paint, Bulk, GDP188, Aluminum	0.125	28H284	28H284	28H284
46	Plug	8	64AC1	64AC1	64AC1
** 54	Shim Case .0025/.0035"	1	200GAB732	200GAB732	200GAB732
** 55	Shim Case .010"	1	201GAB732	201GAB732	201GAB732
** 56	Shim Case .0015/.002"	1	202GAB732	202GAB732	202GAB732
76	Compound, Loctite	50	25BC877	25BC877	25BC877
81	Dowel Pin	2	62M13	62M13	62M13
82	Locking Assembly	2	22G45	22G45	22G45
83	Slinger	2	300GAB173	300GAB173	300GAB173
84	Screw	2	75LM13	75LM13	75LM13
85	Bearing Retainer	2	300GAB205	300GAB205	300GAB205
86	Screw	8	75LM214	75LM214	75LM214
** 105	Overhaul Kit 3" R VERS Mechanical Seal Dual, Splash	1	304GAB6010	304GAB6010	304GAB6010
** 900	Group-Indent & Instruction Legend Series 3" R VERS	1	303GAB4011	303GAB4011	303GAB4011

* INCLUDED IN OVERHAUL KIT.
** NOT SHOWN ON ILLUSTRATION

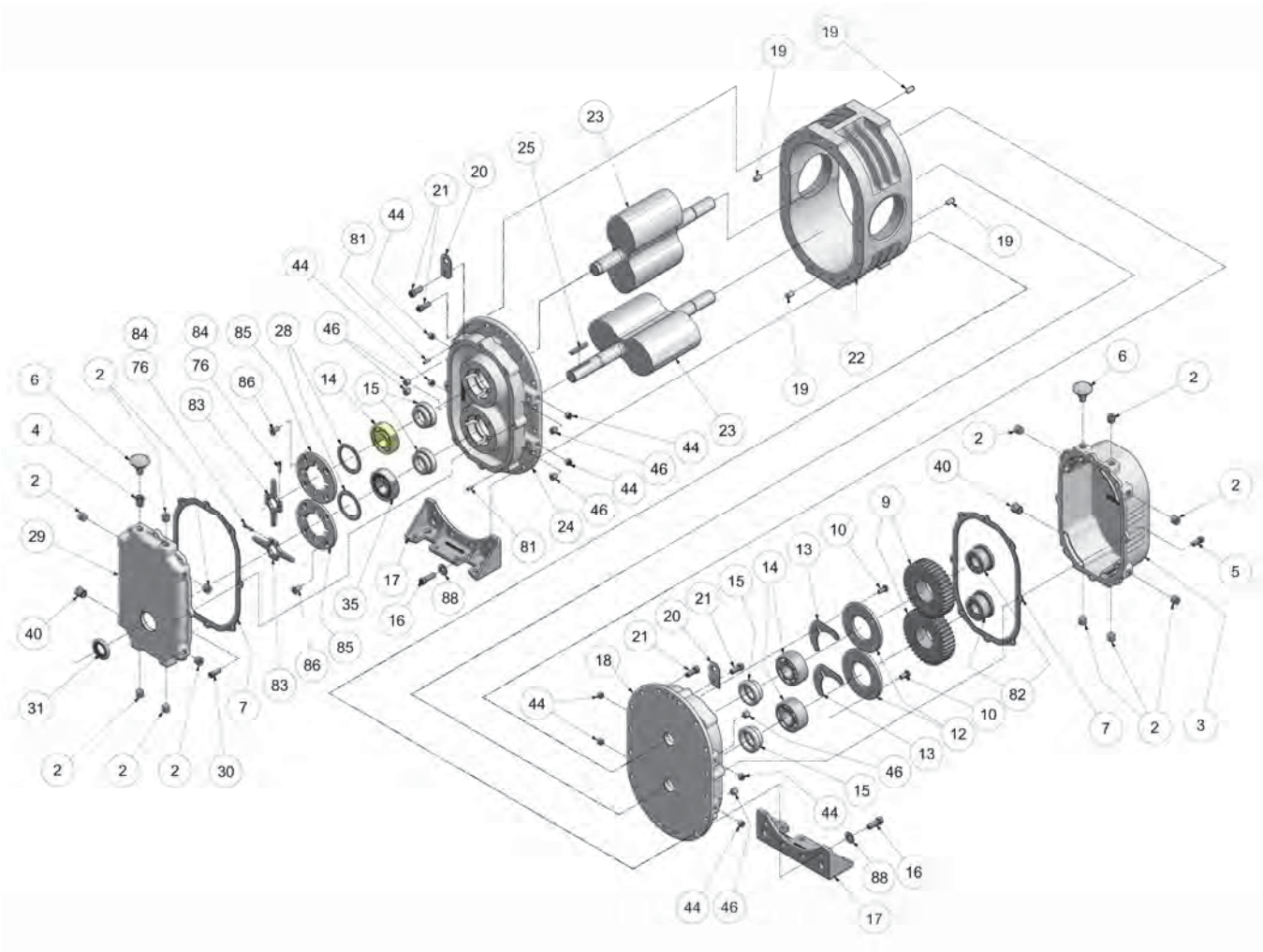
19
19
23
25
20
21
44
81
44
19
84
84
85
28
46
76
76
6
2
86
14
15
83
22
19
6
2
4
23
44
2
46
40
2
44
2
46
9
29
24
81
10
13
5
17
88
14
15
35
16
21
20
40
21
85
18
86
83
82
31
7
44
10
12
7
2
3
13
2
2
2
30
46
15
44
88
16
44
46
17

Order by Part Number and Description. Reference Numbers are for your convenience only.

Model GAC Mechanical Seal Dual Splash Lube

Ref. No.	Description	No. Req'd	Size – 4H GACH_R △ △= (E or G)	Size – 4M GACM_R △ △= (E or G)	Size -- 4L GACL_R △ △= (E or G)
2	Plug	12	64AC3	64AC3	64AC3
3	Gear Case	1	304GAC602	304GAC602	304GAC602
5	Screw	8	75P40	75P40	75P40
6	Breather	2	5L359	5L359	5L359
* 7	Gasket	2	301GAC715	301GAC715	301GAC715
9	Gear Kit	1	300GAC6008	300GAC6008	300GAC6008
* 10	Screws	8	75A33P	75A33P	75A33P
12	Bearing Retainer	2	900883040201	900883040201	900883040201
* 13	Shim Set	1	900881052900	900881052900	900881052900
* 14	Ball Bearing	3	12BA144	12BA144	12BA144
* 15	Mechanical Seal	4	900871020004	900871020004	900871020004
16	Screw	8	75P56	75P56	75P56
17	Foot – Vert. & Horiz.	2	300GAC166	300GAC166	300GAC166
18	Bearing Housing Gear End	1	304GAC006	304GAC006	304GAC006
19	Dowel Pin	4	62M48	62M48	62M48
20	Lifting Lug	2	200GAA451	200GAA451	200GAA451
21	Screw	16	75P55	75P55	75P55
22	Impeller Case	1	900883042201	900883041801	900883042001
23	Rotor Group				
	4" Standard Clearances	1	307GAC4028	306GAC4028	305GAC4028
	4" High Temperature Clearances	1	To be assigned	To be assigned	To be assigned
24	Bearing Housing Drive End	1	305GAC006	305GAC006	305GAC006
25	Key-Square	1	900639910304	900639910304	900639910304
* 28	Wavy Spring	2	900669170304	900669170304	900669170304
29	Drive Cover	1	302GAC477	302GAC477	302GAC477
30	Screw	8	75P40	75P40	75P40
* 31	Oil Seal	1	60DD716	60DD716	60DD716
* 35	Bearing – Spherical	1	12BA255	12BA255	12BA255
40	Oil Level Gauge	2	40P34	40P34	40P34
44	Screw	8	76F1	76F1	76F1
** 45	Paint, Bulk, GDP188, Aluminum	0.125	28H284	28H284	28H284
46	Plug	8	64AC1	64AC1	64AC1
** 54	Shim Case .0025/.0035"	1	200GAC732	200GAC732	200GAC732
** 56	Shim Case .0015/.002"	1	202GAC732	202GAC732	202GAC732
76	Compound, Loctite	50	25BC877	25BC877	25BC877
81	Dowel Pin	2	62M13	62M13	62M13
82	Locking Assembly	2	22G44	22G44	22G44
83	Slinger	2	300GAC173	300GAC173	300GAC173
84	Screw	2	75LM14	75LM14	75LM14
85	Bearing Retainer	2	300GAC205	300GAC205	300GAC205
86	Screw	8	75LM214	75LM214	75LM214
88	Washer	4	95A3	95A3	95A3
** 105	Overhaul Kit 4" R VERS Mechanical Seal, Dual Splash	1	303GAC6010	303GAC6010	303GAC6010
** 900	Group-Indent & Instruction Legend Series 4" R VERS	1	201GAC4011	201GAC4011	201GAC4011

* INCLUDED IN OVERHAUL KIT.
** NOT SHOWN ON ILLUSTRATION

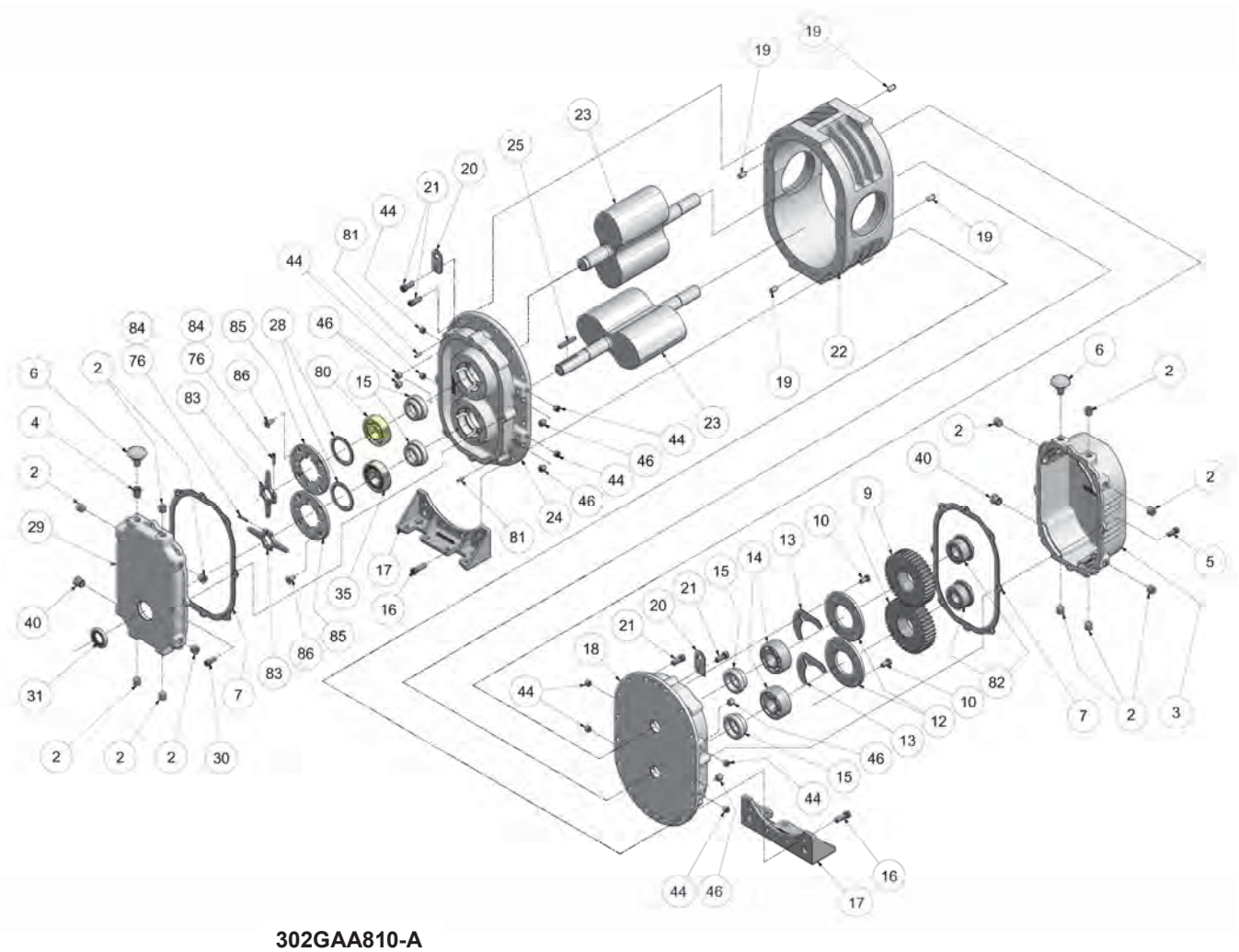

302GAA810-A
(Ref. Drawing)

Order by Part Number and Description. Reference Numbers are for your convenience only.

Model GAE Mechanical Seal Dual Splash Lube

Ref. No.	Description	No. Req'd	Size – 5H GAEH_R Δ Δ= (E or G)	Size – 5M GAEM_R Δ Δ= (E or G)	Size -- 5L GAEL_R Δ Δ= (E or G)
2	Plug	12	64AC3	64AC3	64AC3
3	Gear Case	1	304GAE602	304GAE602	304GAE602
5	Screw	8	75P40	75P40	75P40
6	Breather	2	5L359	5L359	5L359
* 7	Gasket	2	300GAE715	300GAE715	300GAE715
9	Gear Kit	1	300GAE6008	300GAE6008	300GAE6008
* 10	Screws	8	75A33P	75A33P	75A33P
12	Bearing Retainer	2	900883050501	900883050501	900883050501
* 13	Shim Set	1	900881052900	900881052900	900881052900
* 14	Ball Bearing	2	8500397	8500397	8500397
* 15	Mechanical Seal	4	900871020005	900871020005	900871020005
16	Screw	8	75P56	75P56	75P56
17	Foot – Vert. & Horiz.	2	300GAE166	300GAE166	300GAE166
18	Bearing Housing Gear End	1	303GAE006	303GAE006	303GAE006
19	Dowel Pin	4	62M48	62M48	62M48
20	Lifting Lug	2	200GAA451	200GAA451	200GAA451
21	Screw	24	75P55	75P55	75P55
22	Impeller Case	1	900883051701	900883051801	900883051901
23	Rotor Group				
	5" Standard Clearances	1	327GAE4028	326GAE4028	325GAE4028
	5" High Temperature Clearances	1	To be assigned	To be assigned	To be assigned
24	Bearing Housing Drive End	1	304GAE006	304GAE006	304GAE006
25	Key-Square	1	900639910305	900639910305	900639910305
* 28	Wavy Spring	2	900669170405	900669170405	900669170405
29	Drive Cover	1	300GAE477	300GAE477	300GAE477
30	Screw	8	75P40	75P40	75P40
* 31	Oil Seal	1	60DD726	60DD726	60DD726
* 35	Bearing – Spherical	1	12BA253	12BA253	12BA253
40	Oil Level Gauge	2	40P34	40P34	40P34
44	Screw	8	76F92	76F92	76F92
** 45	Paint, Bulk, GDP188, Aluminum	0.125	28H284	28H284	28H284
46	Plug	8	64AC2	64AC2	64AC2
** 54	Shim Case .0025/.0035"	1	200GAE732	200GAE732	200GAE732
** 55	Shim Case .010"	1	201GAE732	201GAE732	201GAE732
** 56	Shim Case .0015/.002"	1	202GAE732	202GAE732	202GAE732
76	Compound, Loctite	5	25BC877	25BC877	25BC877
* 80	Bearing – Conrad	1	12BA254	12BA254	12BA254
81	Dowel Pin	2	62M13	62M13	62M13
82	Locking Assembly	2	22G43	22G43	22G43
83	Slinger	2	300GAE173	300GAE173	300GAE173
84	Screw	2	75LM14	75LM14	75LM14
85	Bearing Retainer	2	300GAE205	300GAE205	300GAE205
86	Screw	8	75LM214	75LM214	75LM214
** 105	Overhaul Kit 5" R VERS Mechanical Seal, Dual	1	303GAE6010	303GAE6010	303GAE6010
** 900	Group-Indent & Instruction Legend Series 5" R	1	205GAE4011	205GAE4011	205GAE4011

* INCLUDED IN OVERHAUL KIT.
** NOT SHOWN ON ILLUSTRATION

Gardner Denver

WARRANTY
SUTORBILT BLOWERS
Legend SERIES

GENERAL PROVISIONS AND LIMITATIONS

Gardner Denver (the "Com pany") warrants to each original retail purchaser ("Purchaser") of its products from the Company or its authorized distributor that such products are, at the time of delivery to the Purchaser, made with good material and workmanship. No warranty is made with respect to:

1. Any product which has been repaired or altered in such a way, in the Company's judgment, as to affect the product adversely.
2. Any product which has, in the Company's judgment, been subject to negligence, accident, improper storage, or improper installation or application.
3. Any product which has not been operated or maintained in accordance with the recommendations of the Company.
4. Components or accessories manufactured, warranted and serviced by others.
5. Any reconditioned or prior owned product.

Claims for items described in (4) above should be submitted directly to the manufacturer.

WARRANTY PERIOD

The Company's obligation under this warranty is limited to repairing or, at its option, replacing, during normal business hours at an authorized service facility of the Company, any part which in its judgment proved not to be as warranted within the applicable Warranty Period as follows.

BARE BLOWERS

Basic grease lubricated bare blowers, consisting of all parts within, are warranted for 18 months from date of initial use or 24 months from date of shipment to the first purchaser, whichever occurs first. Basic dual splash lubricated bare blowers, consisting of all parts within, are warranted for 24 months from date of initial use or 30 months from date of shipment to the first purchaser, whichever occurs first. Any disassembly or partial disassembly of the blower, or failure to return the "unopened" blower per Company instructions, will be cause for denial of warranty.

OTHER COMPONENTS

All other components are warranted for 12 months from date of initial use or 18 months from date of shipment to first purchaser, whichever comes first. The Company reserves the right to withdraw the Warranty where evidence indicates application outside the stated performance area, or where there is evidence of abuse.

LABOR TRANSPORTATION AND INSPECTION

The Company will provide labor, by Company representative or authorized service personnel, for repair or replacement of any product or part thereof which in the Company's judgment is proved not to be as warranted. Labor shall be limited to the amount specified in the Company's labor rate schedule.

Labor costs in excess of the Company rate schedules caused by, but not limited to, location or inaccessibility of equipment, or labor provided by unauthorized service personnel is not provided by this warranty.

All costs of transportation of product, labor or parts claimed not to be as warranted and, of repaired or replacement parts to or from such service facilities shall be borne by the Purchaser. The Company may require the return of any part claimed not to be as warranted to one of its facilities as designated by the Company, transportation prepaid by Purchaser, to establish a claim under this warranty. Replacement parts provided under the terms of the warranty are warranted for the remainder of the Warranty Period of the product upon which installed to the same extent as if such parts were original components.

DISCLAIMER

THE FOREGOING WARRANTY IS EXCLUSIVE AND IT IS EXPRESSLY AGREED THAT, EXCEPT AS TO TITLE, THE COMPANY MAKES NO OTHER WARRANTIES, EXPRESSED, IMPLIED OR STATUTORY, INCLUDING ANY IMPLIED WARRANTY OF MERCHANTABILITY.

THE REMEDY PROVIDED UNDER THIS WARRANTY SHALL BE THE SOLE, EXCLUSIVE AND ONLY REMEDY AVAILABLE TO THE PURCHASER AND IN NO CASE SHALL THE COMPANY BE SUBJECT TO ANY OTHER OBLIGATIONS OR LIABILITIES. UNDER NO CIRCUMSTANCES SHALL THE COMPANY BE LIABLE FOR ANY SPECIAL, INDIRECT, INCIDENTAL OR CONSEQUENTIAL DAMAGES, EXPENSES, LOSSES OR DELAYS HOWSOEVER CAUSED.

No statement, representation, agreement, or understanding, oral or written, made by any agent, distributor, representative, or employee of the Company which is not contained in this Warranty will be binding upon the Company unless made in writing and executed by an officer of the Company.

This warranty shall not be effective as to any claim which is not presented within 30 days after the date upon which the product is claimed not to have been as warranted. Any action for breach of this warranty must be commenced within one year after the date upon which the cause of action occurred.

Any adjustment made pursuant to this warranty shall not be construed as an admission by the Company that any product was not as warranted.

COPYRIGHT© 2008 Gardner Denver, Inc.

NOTES

NOTES

Gardner Denver®

For additional information, contact your local representative or visit:
www.contactgd.com/mobile

©2015 Gardner Denver, Inc. Printed in U.S.A.

ENERGY STAR PARTNER

Member

NTTC

Please recycle after use.

NOTES

MAINTENANCE DATA SHEET

FOR POSITIVE DISPLACEMENT BLOWER

-

SPARE PARTS

MODEL: Sutorbilt 4L, GACLBRA (modified to horizontal)
SERIAL NUMBER: S520806 & S520818

MAINTENANCE FOR ONE UNIT

Item	**Type / Part number**	**Qty.**	**Maintenance /Replacement**	**Unit price**
Oil / Blower gear side *	AEON PD*	1.5 pt.	6000 hours	34$ for 1 L, 365 $ for 12x1L
Grease / Blower drive side	28H282	**	500 hours	34$ for 14 oz.
Overhaul Kit***	300GAC6010	1	When needed	428$
Belts	VBA65	2	When needed	24$

* AEON PD is synthetic oil with superior properties than mineral oil. If mineral oil is used instead of AEON PD oil, replacement must be done after 500 hours.

** Fill with new grease until old grease is flushed.

*** Overhaul kit consist of bearings, seals, gaskets, shims, taper pins and bearing retainer screws.

Conditions : CAD Dollar, net 30, taxes extra, price valid for 2017, minimum order of 75 $, FOB Montreal, PQ.

B-501/2	38094	VFD, Danfoss 15HP, 380-480Vac, IP55	p/n: FC202P11KT4E55H2XGX3SXSXXXXAXBXCXXXXDX
P-701/2	38093	VFD, Danfoss 2HP, 380-480Vac, IP55	p/n: FC202P1K5T4E55H2XGX3SXSXXXXAXBXCXXXXDX

Operating Guide

VLT® AQUA Drive FC 202

0.25–90 kW





Contents

1 Introduction 4
- 1.1 Purpose of the Operating Guide 4
- 1.2 Additional Resources 4
- 1.3 Manual and Software Version 4
- 1.4 Product Overview 4
- 1.5 Approvals and Certifications 8
- 1.6 Disposal 8

2 Safety 9
- 2.1 Safety Symbols 9
- 2.2 Qualified Personnel 9
- 2.3 Safety Precautions 9

3 Mechanical Installation 11
- 3.1 Unpacking 11
- 3.2 Installation Environments 11
- 3.3 Mounting 12

4 Electrical Installation 14
- 4.1 Safety Instructions 14
- 4.2 EMC-compliant Installation 14
- 4.3 Grounding 14
- 4.4 Wiring Schematic 16
- 4.5 Access 18
- 4.6 Motor Connection 18
- 4.7 AC Mains Connection 19
- 4.8 Control Wiring 19
  - 4.8.1 Control Terminal Types 19
  - 4.8.2 Wiring to Control Terminals 21
  - 4.8.3 Enabling Motor Operation (Terminal 27) 21
  - 4.8.4 Voltage/Current Input Selection (Switches) 22
  - 4.8.5 RS485 Serial Communication 22
- 4.9 Installation Check List 23

5 Commissioning 24
- 5.1 Safety Instructions 24
- 5.2 Applying Power 24
- 5.3 Local Control Panel Operation 24
  - 5.3.1 Graphic Local Control Panel Layout 24
  - 5.3.2 Parameter Settings 26

Danfoss A/S © 10/2016 All rights reserved.

5.3.3 Uploading/Downloading Data to/from the LCP 26
5.3.4 Changing Parameter Settings 26
5.3.5 Restoring Default Settings 26
5.4 Basic Programming 27
5.4.1 Commissioning with SmartStart 27
5.4.2 Commissioning via [Main Menu] 27
5.4.3 Asynchronous Motor Set-up 28
5.4.4 PM Motor Setup in VVC+ 28
5.4.5 SynRM Motor Set-up with VVC+ 29
5.4.6 Automatic Energy Optimization (AEO) 30
5.4.7 Automatic Motor Adaptation (AMA) 30
5.5 Checking Motor Rotation 31
5.6 Local-control Test 31
5.7 System Start-up 31
6 Application Set-up Examples 32
7 Maintenance, Diagnostics, and Troubleshooting 36
7.1 Maintenance and Service 36
7.2 Status Messages 36
7.3 Warning and Alarm Types 38
7.4 List of Warnings and Alarms 39
7.5 Troubleshooting 46
8 Specifications 49
8.1 Electrical Data 49
8.1.1 Mains Supply 1x200–240 V AC 49
8.1.2 Mains Supply 3x200–240 V AC 50
8.1.3 Mains Supply 1x380–480 V AC 52
8.1.4 Mains Supply 3x380–480 V AC 53
8.1.5 Mains Supply 3x525–600 V AC 57
8.1.6 Mains Supply 3x525–690 V AC 61
8.2 Mains Supply 64
8.3 Motor Output and Motor Data 64
8.4 Ambient Conditions 65
8.5 Cable Specifications 65
8.6 Control Input/Output and Control Data 65
8.7 Connection Tightening Torques 68
8.8 Fuses and Circuit Breakers 69
8.9 Power Ratings, Weight, and Dimensions 76
9 Appendix 78

 Danfoss A/S © 10/2016 All rights reserved.

9.1 Symbols, Abbreviations, and Conventions 78
9.2 Parameter Menu Structure 78

Index 84

Danfoss A/S © 10/2016 All rights reserved.

1

1 Introduction

1.1 Purpose of the Operating Guide

This operating guide provides information for safe installation and commissioning of the frequency converter.

The operating guide is intended for use by qualified personnel.
Read and follow the instructions to use the frequency converter safely and professionally, and pay particular attention to the safety instructions and general warnings. Always keep this operating guide available with the frequency converter.

VLT® is a registered trademark.

1.2 Additional Resources

Other resources are available to understand advanced frequency converter functions and programming.

- The *VLT® AQUA Drive FC 202 Programming Guide* provides greater detail on working with parameters and many application examples.
- The *VLT® AQUA Drive FC 202 Design Guide* provides detailed information about capabilities and functionality to design motor control systems.
- Instructions for operation with optional equipment.

Supplementary publications and manuals are available from Danfoss. See *www.vlt-drives.danfoss.com/Support/Technical-Documentation/* for listings.

1.3 Manual and Software Version

This manual is regularly reviewed and updated. All suggestions for improvement are welcome.

Table 1.1 shows the manual version and the corresponding software version.

Edition	Remarks	Software version
MG20MDxx	The parameter list is updated to reflect software version 2.6x. Editorial update.	2.6x

Table 1.1 Manual and Software Version

1.4 Product Overview

1.4.1 Intended Use

The frequency converter is an electronic motor controller intended for:

- Regulation of motor speed in response to system feedback or to remote commands from external controllers. A power drive system consists of the frequency converter, the motor, and equipment driven by the motor.
- System and motor status surveillance.

Depending on configuration, the frequency converter can be used in standalone applications or form part of a larger appliance or installation.

The frequency converter is allowed for use in residential, industrial, and commercial environments in accordance with local laws, standards, and emission limits as described in the design guide.

Single-phase frequency converters (S2 and S4) installed in the EU
The following limitations apply:

- Units with an input current below 16 A and an input power above 1 kW (1.5 hp) are only intended for professional use in trades, professions, or industries and not for sale to the general public.
- Designated application areas are public pools, public water supplies, agriculture, commercial buildings, and industries. All other single-phase units are only intended for use in private low-voltage systems interfacing with public supply only at a medium or high-voltage level.
- Operators of private systems must ensure that the EMC environment complies with IEC 610000-3-6 and/or the contractual agreements.

NOTICE

In a residential environment, this product can cause radio interference, in which case supplementary mitigation measures may be required.

Foreseeable misuse
Do not use the frequency converter in applications, which are non-compliant with specified operating conditions and environments. Ensure compliance with the conditions specified in *chapter 8 Specifications*.

Danfoss A/S © 10/2016 All rights reserved.

1.4.2 Features

The VLT® AQUA Drive FC 202 is designed for water and wastewater applications. The range of standard and optional features includes:

- Cascade control.
- Dry run detection.
- End-of-curve detection.
- SmartStart.
- Motor alternation.
- Deragging.
- 2-step ramps.
- Flow confirmation.
- Check valve protection.
- Safe Torque Off.
- Low flow detection.
- Pre/post lubrication.
- Pipe fill mode.
- Sleep mode.
- Real-time clock.
- User-configurable info texts.
- Warnings and alarms.
- Password protection.
- Overload protection.
- Smart logic control.
- Dual power rating (high/normal overload).

Danfoss A/S © 10/2016 All rights reserved.

1

1.4.3 Exploded Views

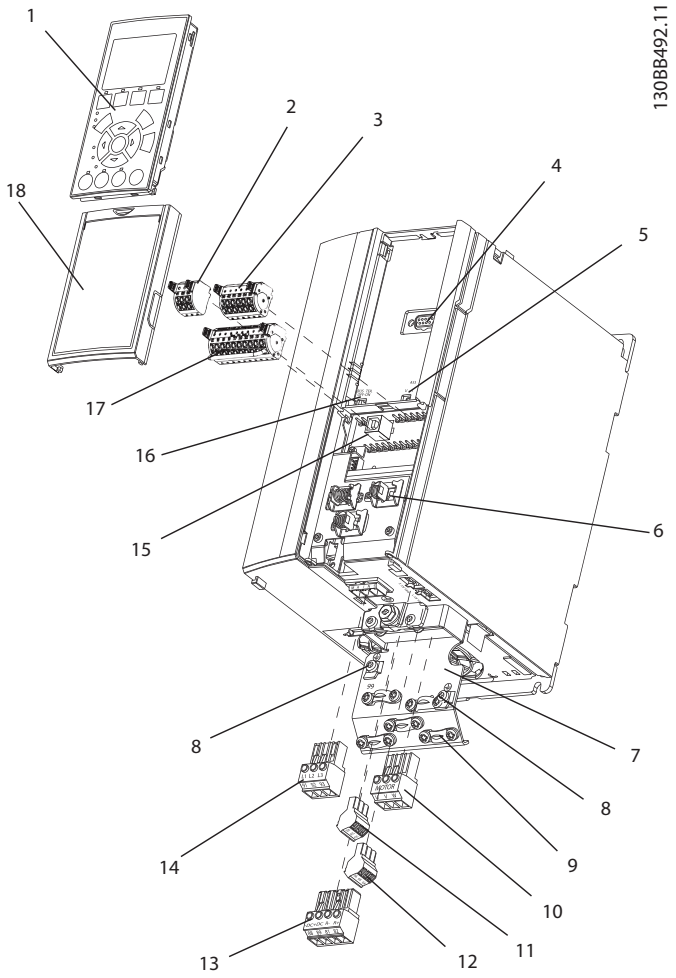

1	Local control panel (LCP)	10	Motor output terminals 96 (U), 97 (V), 98 (W)
2	RS485 fieldbus connector (+68, -69)	11	Relay 2 (01, 02, 03)
3	Analog I/O connector	12	Relay 1 (04, 05, 06)
4	LCP input plug	13	Brake (-81, +82) and load sharing (-88, +89) terminals
5	Analog switches (A53), (A54)	14	Mains input terminals 91 (L1), 92 (L2), 93 (L3)
6	Cable shield connector	15	USB connector
7	Ground termination plate	16	Fieldbus terminal switch
8	Grounding clamp (PE)	17	Digital I/O and 24 V supply
9	Shielded cable grounding clamp and strain relief	18	Cover

Illustration 1.1 Exploded View Enclosure Size A, IP20

Danfoss A/S © 10/2016 All rights reserved.

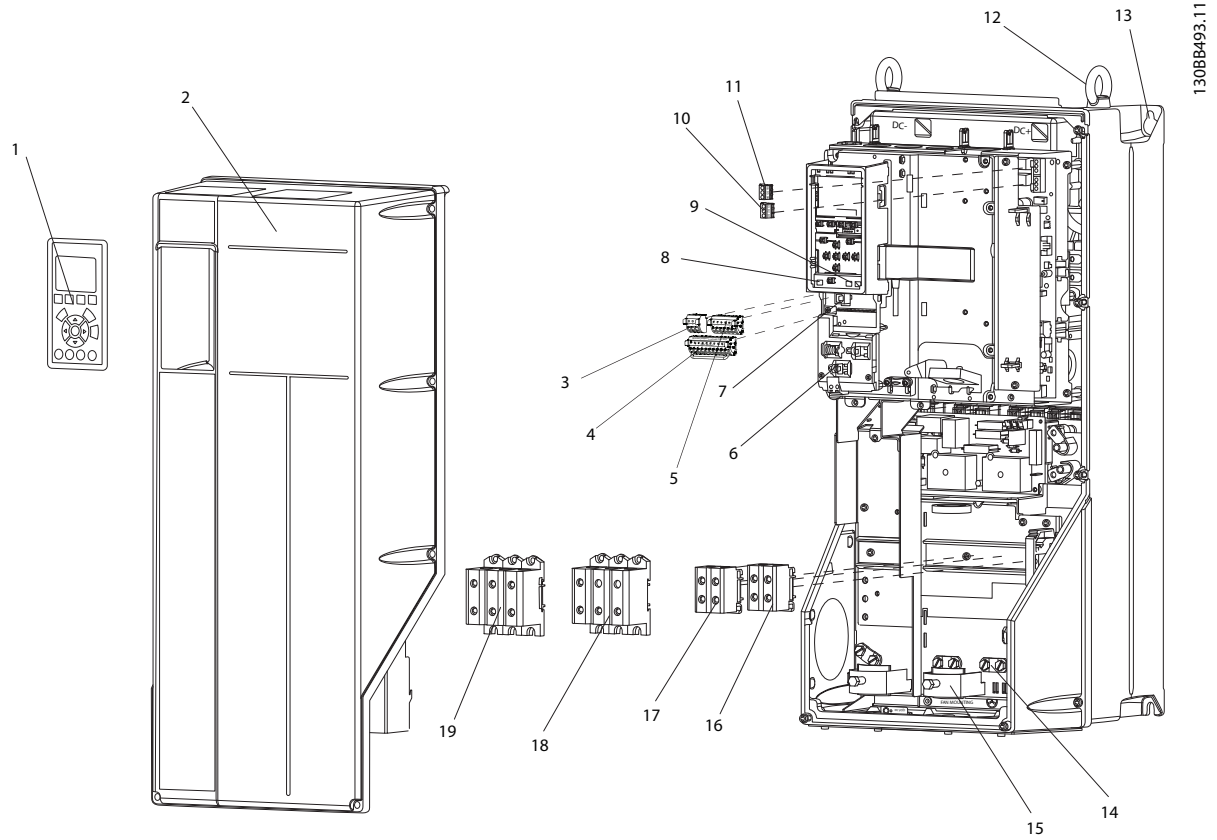

1	Local control panel (LCP)	11	Relay 2 (04, 05, 06)
2	Cover	12	Lifting ring
3	RS485 fieldbus connector	13	Mounting slot
4	Digital I/O and 24 V supply	14	Grounding clamp (PE)
5	Analog I/O connector	15	Cable shield connector
6	Cable shield connector	16	Brake terminal (-81, +82)
7	USB connector	17	Load sharing terminal (DC bus) (-88, +89)
8	Fieldbus terminal switch	18	Motor output terminals 96 (U), 97 (V), 98 (W)
9	Analog switches (A53), (A54)	19	Mains input terminals 91 (L1), 92 (L2), 93 (L3)
10	Relay 1 (01, 02, 03)	–	–

Illustration 1.2 Exploded View Enclosure Sizes B and C, IP55 and IP66

Danfoss A/S © 10/2016 All rights reserved.

1

Illustration 1.3 is a block diagram of the internal components of the frequency converter.

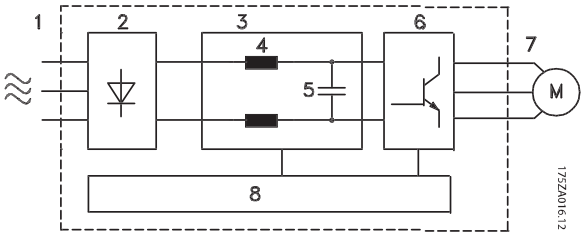

Area	Title	Functions
1	Mains input	• 3-phase AC mains supply to the frequency converter.
2	Rectifier	• The rectifier bridge converts the AC input to DC current to supply inverter power.
3	DC bus	• The intermediate DC bus circuit handles the DC current.
4	DC reactors	• Filter the intermediate DC circuit voltage. • Prove mains transient protection. • Reduce RMS current. • Raise the power factor reflected back to the line. • Reduce harmonics on the AC input.
5	Capacitor bank	• Stores the DC power. • Provides ride-through protection for short power losses.
6	Inverter	• Converts the DC into a controlled PWM AC waveform for a controlled variable output to the motor.
7	Output to motor	• Regulated 3-phase output power to the motor.
8	Control circuitry	• Input power, internal processing, output, and motor current are monitored to provide efficient operation and control. • User interface and external commands are monitored and performed. • Status output and control can be provided.

Illustration 1.3 Frequency Converter Block Diagram

1.4.4 Enclosure Sizes and Power Ratings

For enclosure sizes and power ratings of the frequency converters, refer to *chapter 8.9 Power Ratings, Weight, and Dimensions*.

1.5 Approvals and Certifications

Table 1.2 Approvals and Certifications

More approvals and certifications are available. Contact the local Danfoss partner. Frequency converters of enclosure size T7 (525–690 V) are UL certified for only 525–600 V.

The frequency converter complies with UL 508C thermal memory retention requirements. For more information, refer to the section *Motor Thermal Protection* in the product-specific *design guide*.

For compliance with the European Agreement concerning International Carriage of Dangerous Goods by Inland Waterways (ADN), refer to *ADN-compliant Installation* in the product-specific design guide.

1.6 Disposal

Do not dispose of equipment containing electrical components together with domestic waste.
Collect it separately in accordance with local and currently valid legislation.

Danfoss A/S © 10/2016 All rights reserved.

2 Safety

2.1 Safety Symbols

The following symbols are used in this guide:

⚠WARNING

Indicates a potentially hazardous situation that could result in death or serious injury.

⚠CAUTION

Indicates a potentially hazardous situation that could result in minor or moderate injury. It can also be used to alert against unsafe practices.

NOTICE

Indicates important information, including situations that can result in damage to equipment or property.

2.2 Qualified Personnel

Correct and reliable transport, storage, installation, operation, and maintenance are required for the trouble-free and safe operation of the frequency converter. Only qualified personnel are allowed to install and operate this equipment.

Qualified personnel are defined as trained staff, who are authorized to install, commission, and maintain equipment, systems, and circuits in accordance with pertinent laws and regulations. Also, the qualified personnel must be familiar with the instructions and safety measures described in this manual.

2.3 Safety Precautions

⚠WARNING

HIGH VOLTAGE

Frequency converters contain high voltage when connected to AC mains input, DC supply, or load sharing. Failure to perform installation, start-up, and maintenance by qualified personnel can result in death or serious injury.

- **Only qualified personnel must perform installation, start-up, and maintenance.**

⚠WARNING

UNINTENDED START

When the frequency converter is connected to AC mains, DC supply, or load sharing, the motor may start at any time. Unintended start during programming, service, or repair work can result in death, serious injury, or property damage. The motor can start via an external switch, a fieldbus command, an input reference signal from the LCP, or after a cleared fault condition.

To prevent unintended motor start:

- **Disconnect the frequency converter from the mains.**
- **Press [Off/Reset] on the LCP before programming parameters.**
- **Completely wire and assemble the frequency converter, motor, and any driven equipment before connecting the frequency converter to AC mains, DC supply, or load sharing.**

⚠WARNING

DISCHARGE TIME

The frequency converter contains DC-link capacitors, which can remain charged even when the frequency converter is not powered. High voltage can be present even when the warning LED indicator lights are off. Failure to wait the specified time after power has been removed before performing service or repair work can result in death or serious injury.

- **Stop the motor.**
- **Disconnect AC mains and remote DC-link power supplies, including battery back-ups, UPS, and DC-link connections to other frequency converters.**
- **Disconnect or lock PM motor.**
- **Wait for the capacitors to discharge fully. The minimum duration of waiting time is specified in *Table 2.1*.**
- **Before performing any service or repair work, use an appropriate voltage measuring device to make sure that the capacitors are fully discharged.**

Danfoss A/S © 10/2016 All rights reserved.

2

Voltage [V]	Minimum waiting time (minutes)		
	4	7	15
200–240	0.25–3.7 kW (0.34–5 hp)	–	5.5–45 kW (7.5–60 hp)
380–480	0.37–7.5 kW (0.5–10 hp)	–	11–90 kW (15–121 hp)
525–600	0.75–7.5 kW (1–10 hp)	–	11–90 kW (15–121 hp)
525–690	–	1.1–7.5 kW (1.5–10 hp)	11–90 kW (15–121 hp)

Table 2.1 Discharge Time

⚠WARNING

LEAKAGE CURRENT HAZARD

Leakage currents exceed 3.5 mA. Failure to ground the frequency converter properly can result in death or serious injury.

- **Ensure the correct grounding of the equipment by a certified electrical installer.**

⚠WARNING

EQUIPMENT HAZARD

Contact with rotating shafts and electrical equipment can result in death or serious injury.

- **Ensure that only trained and qualified personnel perform installation, start-up, and maintenance.**
- **Ensure that electrical work conforms to national and local electrical codes.**
- **Follow the procedures in this guide.**

⚠WARNING

UNINTENDED MOTOR ROTATION WINDMILLING

Unintended rotation of permanent magnet motors creates voltage and can charge the unit, resulting in death, serious injury, or equipment damage.

- **Ensure that permanent magnet motors are blocked to prevent unintended rotation.**

⚠CAUTION

INTERNAL FAILURE HAZARD

An internal failure in the frequency converter can result in serious injury when the frequency converter is not properly closed.

- **Ensure that all safety covers are in place and securely fastened before applying power.**

Danfoss A/S © 10/2016 All rights reserved.

3 Mechanical Installation

3.1 Unpacking

3.1.1 Items Supplied

Items supplied may vary according to product configuration.

- Make sure the items supplied and the information on the nameplate correspond to the order confirmation.
- Check the packaging and the frequency converter visually for damage caused by inappropriate handling during shipment. File any claim for damage with the carrier. Retain damaged parts for clarification.

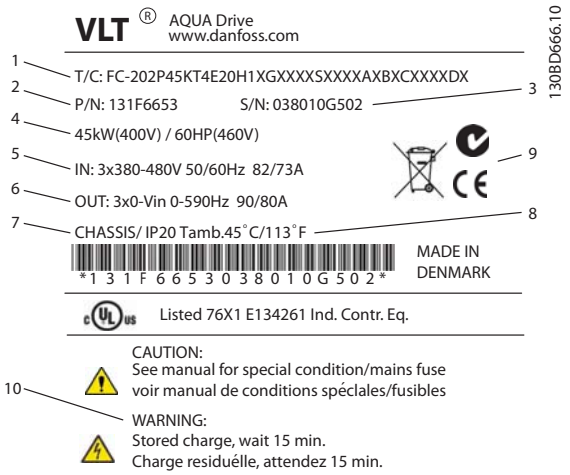

1	Type code
2	Ordering number
3	Serial number
4	Power rating
5	Input voltage, frequency, and current (at low/high voltages)
6	Output voltage, frequency, and current (at low/high voltages)
7	Enclosure type and IP rating
8	Maximum ambient temperature
9	Certifications
10	Discharge time (Warning)

Illustration 3.1 Product Nameplate (Example)

NOTICE

Do not remove the nameplate from the frequency converter. Removing the nameplate voids the warranty.

3.1.2 Storage

Ensure that the requirements for storage are fulfilled. Refer to *chapter 8.4 Ambient Conditions* for further details.

3.2 Installation Environments

NOTICE

In environments with airborne liquids, particles, or corrosive gases, ensure that the IP/type rating of the equipment matches the installation environment. Failure to meet requirements for ambient conditions can reduce the lifetime of the frequency converter. Ensure that requirements for air humidity, temperature, and altitude are met.

Vibration and shock

The frequency converter complies with requirements for units mounted on the walls and floors of production premises, and in panels bolted to walls or floors.

For detailed ambient conditions specifications, refer to *chapter 8.4 Ambient Conditions*.

Danfoss A/S © 10/2016 All rights reserved.

3

3.3 Mounting

NOTICE

Improper mounting can result in overheating and reduced performance.

Cooling

- Ensure that top and bottom clearance for air cooling is provided. See *Illustration 3.2* for clearance requirements.

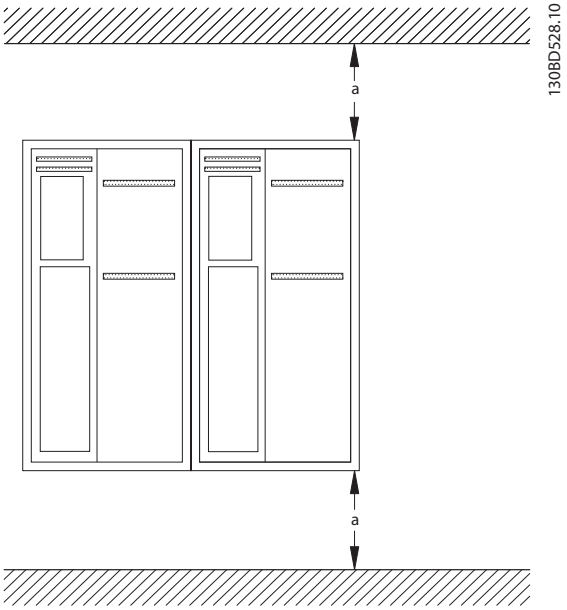

Enclosure	A2–A5	B1–B4	C1, C3	C2, C4
a [mm (in)]	100 (3.9)	200 (7.9)	200 (7.9)	225 (8.9)

Illustration 3.2 Top and Bottom Cooling Clearance

Lifting

- To determine a safe lifting method, check the weight of the unit, see *chapter 8.9 Power Ratings, Weight, and Dimensions*.
- Ensure that the lifting device is suitable for the task.
- If necessary, plan for a hoist, crane, or forklift with the appropriate rating to move the unit.
- For lifting, use the hoist rings on the unit, when provided.

Mounting

1. Ensure that the strength of the mounting location supports the unit weight. The frequency converter allows side-by-side installation.
2. Locate the unit as near to the motor as possible. Keep the motor cables as short as possible.
3. Mount the unit vertically to a solid flat surface or to the optional backplate to provide cooling airflow.
4. Use the slotted mounting holes on the unit for wall mounting, when provided.

Mounting with backplate and railings

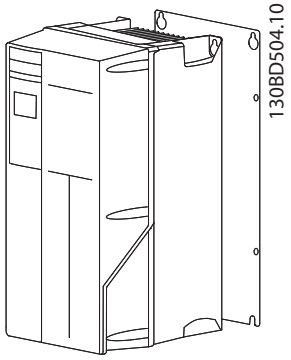

Illustration 3.3 Proper Mounting with Backplate

NOTICE

A backplate is required when mounted on railings.

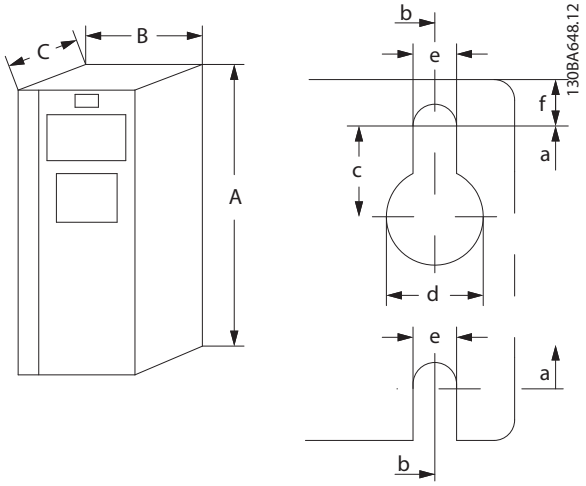

Illustration 3.4 Top and Bottom Mounting Holes (See *chapter 8.9 Power Ratings, Weight, and Dimensions*)

Danfoss A/S © 10/2016 All rights reserved.

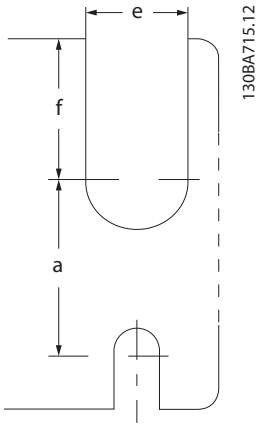

Illustration 3.5 Top and Bottom Mounting Holes (B4, C3, and C4)

Danfoss A/S © 10/2016 All rights reserved.

4 Electrical Installation

4.1 Safety Instructions

See *chapter 2 Safety* for general safety instructions.

4

⚠WARNING

INDUCED VOLTAGE

Induced voltage from output motor cables that run together can charge equipment capacitors, even with the equipment turned off and locked out. Failure to run output motor cables separately or to use shielded cables could result in death or serious injury.

- **Run output motor cables separately, or**
- **Use shielded cables.**

⚠CAUTION

SHOCK HAZARD

The frequency converter can cause a DC current in the PE conductor. Failure to follow the recommendation may lead to the RCD not providing the intended protection.

- **When a residual current-operated protective device (RCD) is used for protection against electrical shock, only an RCD of Type B is allowed on the supply side.**

Overcurrent protection

- Extra protective equipment, such as short-circuit protection or motor thermal protection between frequency converter and motor, is required for applications with multiple motors.
- Input fusing is required to provide short circuit and overcurrent protection. If not factory-supplied, the installer must provide fuses. See maximum fuse ratings in *chapter 8.8 Fuses and Circuit Breakers*.

Wire type and ratings

- All wiring must comply with local and national regulations regarding cross-section and ambient temperature requirements.
- Power connection wire recommendation: Minimum 75 °C (167 °F) rated copper wire.

See *chapter 8.1 Electrical Data* and *chapter 8.5 Cable Specifications* for recommended wire sizes and types.

4.2 EMC-compliant Installation

To obtain an EMC-compliant installation, follow the instructions provided in *chapter 4.3 Grounding*, *chapter 4.4 Wiring Schematic*, *chapter 4.6 Motor Connection*, and *chapter 4.8 Control Wiring*.

4.3 Grounding

⚠WARNING

LEAKAGE CURRENT HAZARD

Leakage currents exceed 3.5 mA. Failure to ground the frequency converter properly could result in death or serious injury.

- **Ensure the correct grounding of the equipment by a certified electrical installer.**

For electrical safety

- Ground the frequency converter in accordance with applicable standards and directives.
- Use a dedicated ground wire for input power, motor power, and control wiring.
- Do not ground 1 frequency converter to another in a daisy-chain fashion (see *Illustration 4.1*).
- Keep the ground wire connections as short as possible.
- Follow motor manufacturer wiring requirements.
- Minimum cable cross-section: 10 mm^2 (7 AWG). Separately terminate 2 ground wires, both complying with the dimension requirements.

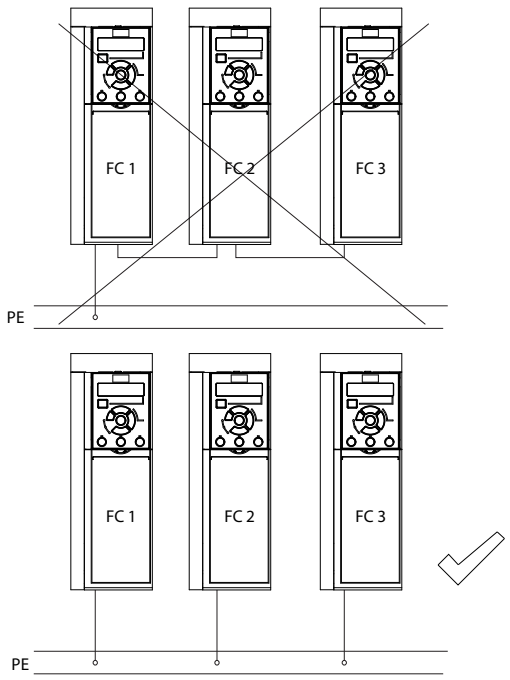

Illustration 4.1 Grounding Principle

Danfoss A/S © 10/2016 All rights reserved.

For EMC-compliant installation

- Establish electrical contact between the cable shield and the frequency converter enclosure by using metal cable glands or by using the clamps provided on the equipment (see *chapter 4.6 Motor Connection*).
- Use high-strand wire to reduce burst transient.
- Do not use pigtails.

NOTICE

POTENTIAL EQUALIZATION

Risk of burst transient when the ground potential between the frequency converter and the control system is different. Install equalizing cables between the system components. Recommended cable cross-section: 16 mm^2 (6 AWG).

Danfoss A/S © 10/2016 All rights reserved.

4

4.4 Wiring Schematic

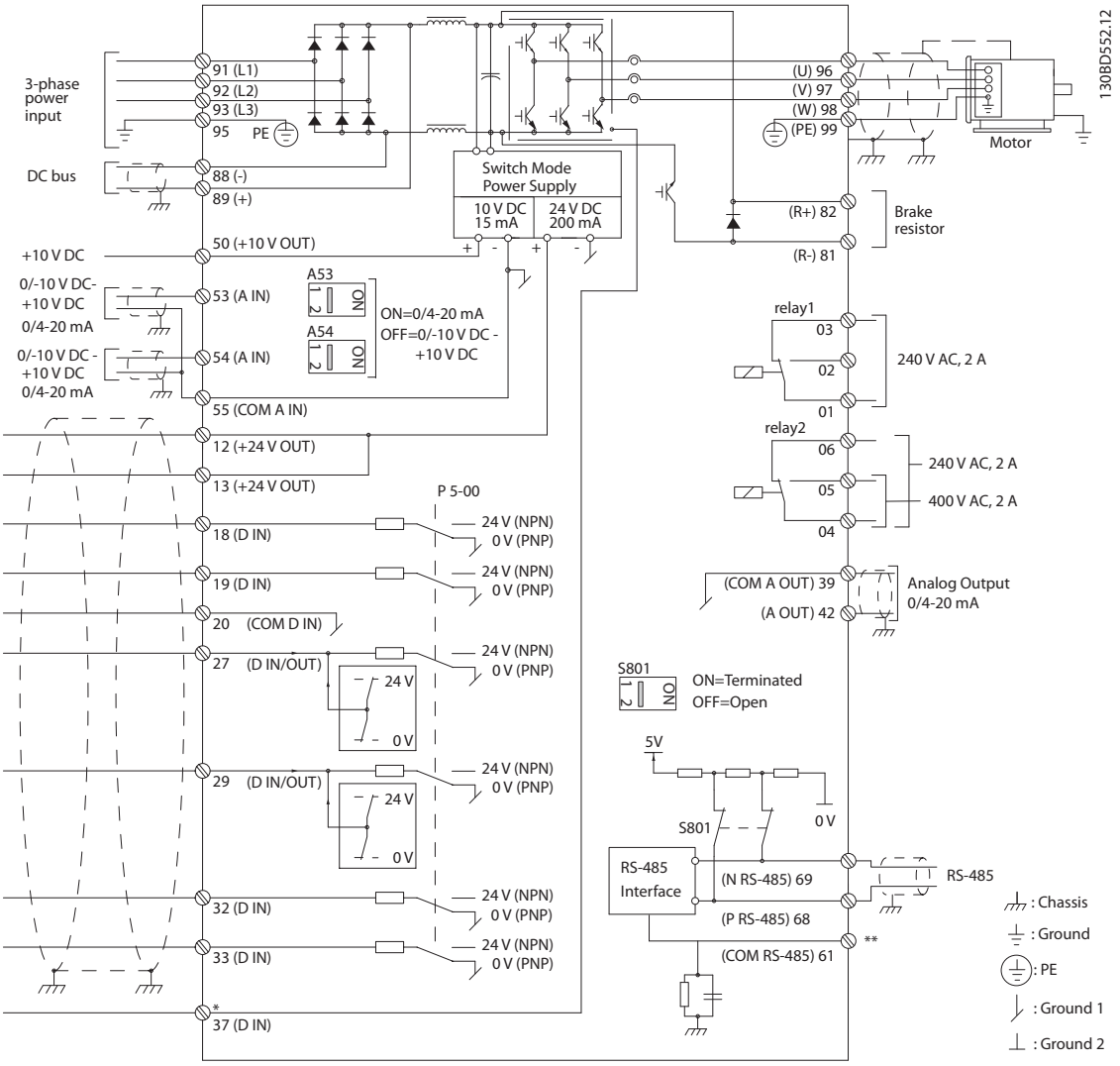

Illustration 4.2 Basic Wiring Schematic

A=Analog, D=Digital

*Terminal 37 (optional) is used for Safe Torque Off. For Safe Torque Off installation instructions, refer to the *VLT® Frequency Converters - Safe Torque Off Operating Guide*.

**Do not connect cable shield.

NOTICE

Actual configurations vary with unit types and optional equipment.

Danfoss A/S © 10/2016 All rights reserved.

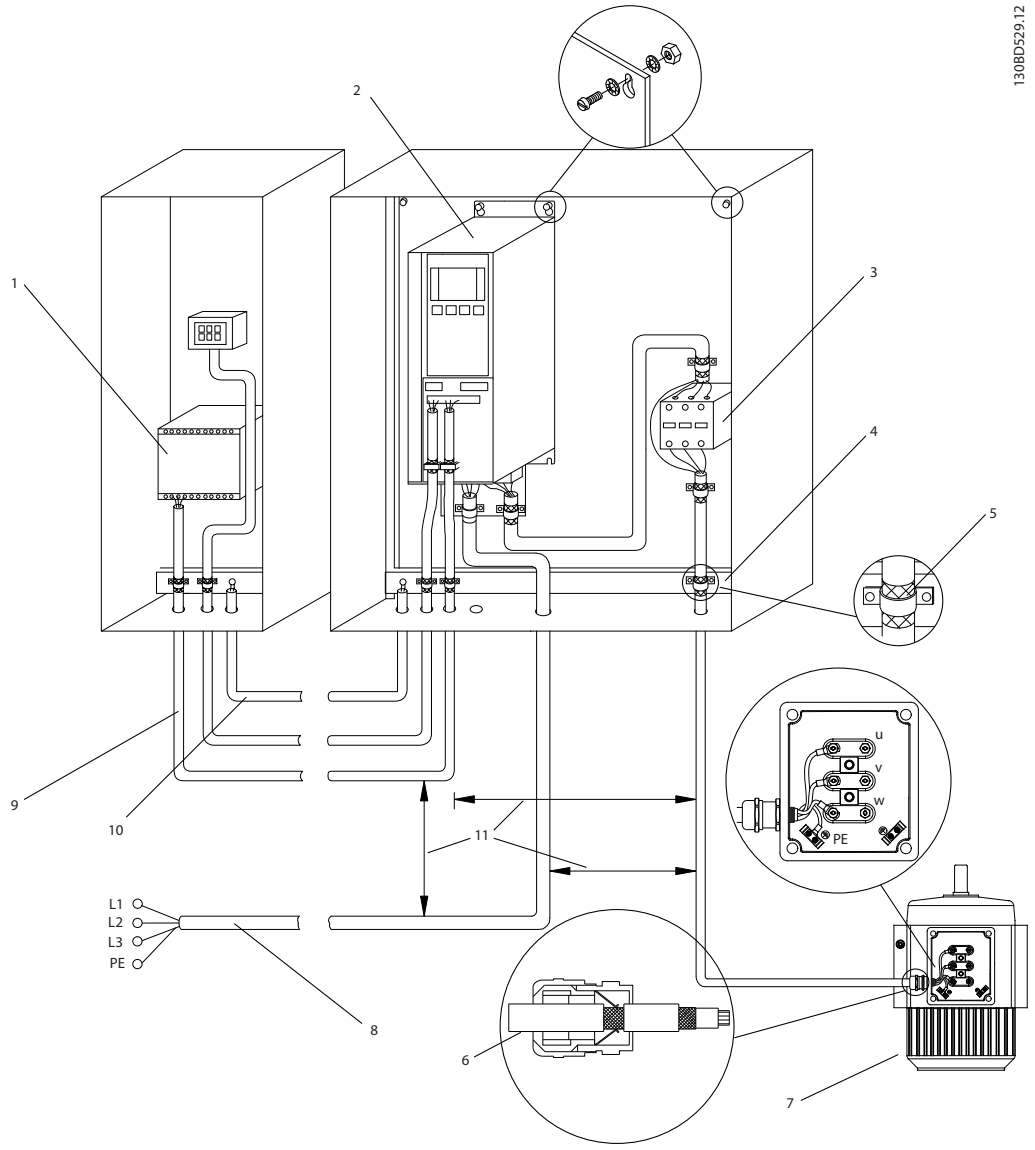

1	PLC	6	Cable gland
2	Frequency converter	7	Motor, 3-phase, and PE
3	Output contactor	8	Mains, 3-phase, and reinforced PE
4	Grounding rail (PE)	9	Control wiring
5	Cable insulation (stripped)	10	Equalizing minimum 16 mm^2 (5 AWG)

Illustration 4.3 EMC-compliant Connection of Mains

NOTICE

EMC INTERFERENCE

Use shielded cables for motor and control wiring and separate cables for input power, motor wiring, and control wiring. Failure to isolate power, motor, and control cables can result in unintended behavior or reduced performance. Minimum clearance requirement between power, motor, and control cables is 200 mm (7.9 in).

Danfoss A/S © 10/2016 All rights reserved.

4

4.5 Access

1. Remove the cover with a screwdriver (See *Illustration 4.4*) or by loosening the attaching screws (See *Illustration 4.5*).

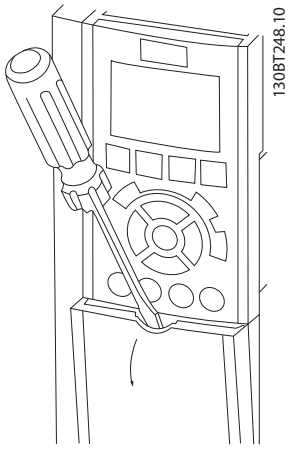

Illustration 4.4 Access to Wiring for IP20 and IP21 Enclosures

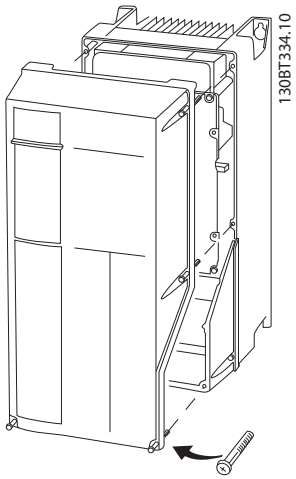

Illustration 4.5 Access to Wiring for IP55 and IP66 Enclosures

Tighten the cover screws using the tightening torques specified in *Table 4.1*.

Enclosure	IP55	IP66
A4/A5	2 (18)	2 (18)
B1/B2	2.2 (19)	2.2 (19)
C1/C2	2.2 (19)	2.2 (19)
No screws to tighten for A2/A3/B3/B4/C3/C4.		

Table 4.1 Tightening Torques for Covers [N•m (in-lb)]

4.6 Motor Connection

⚠WARNING

INDUCED VOLTAGE

Induced voltage from output motor cables that run together can charge equipment capacitors, even with the equipment turned off and locked out. Failure to run output motor cables separately or use shielded cables could result in death or serious injury.

- Run output motor cables separately, or
- Use shielded cables.
- Comply with local and national electrical codes for cable sizes. For maximum wire sizes, see *chapter 8.1 Electrical Data*.
- Follow motor manufacturer wiring requirements.
- Motor wiring knockouts or access panels are provided at the base of IP21 (NEMA1/12) and higher units.
- Do not wire a starting or pole-changing device (for example Dahlander motor or slip ring asynchronous motor) between the frequency converter and the motor.

Procedure

1. Strip a section of the outer cable insulation.
2. Position the stripped wire under the cable clamp to establish mechanical fixation and electrical contact between the cable shield and ground.
3. Connect the ground wire to the nearest grounding terminal in accordance with the grounding instructions provided in *chapter 4.3 Grounding*, see *Illustration 4.6*.
4. Connect the 3-phase motor wiring to terminals 96 (U), 97 (V), and 98 (W), see *Illustration 4.6*.
5. Tighten the terminals in accordance with the information provided in *chapter 8.7 Connection Tightening Torques*.

Danfoss A/S © 10/2016 All rights reserved.

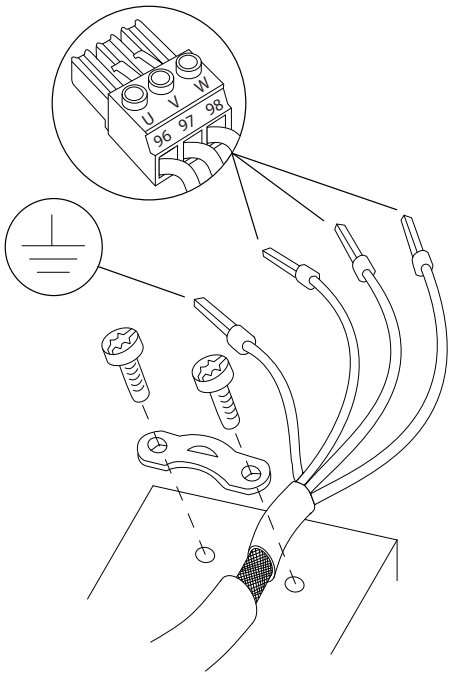

130BD531.10

Illustration 4.6 Motor Connection

Illustration 4.7 shows mains input, motor, and grounding for basic frequency converters. Actual configurations vary with unit types and optional equipment.

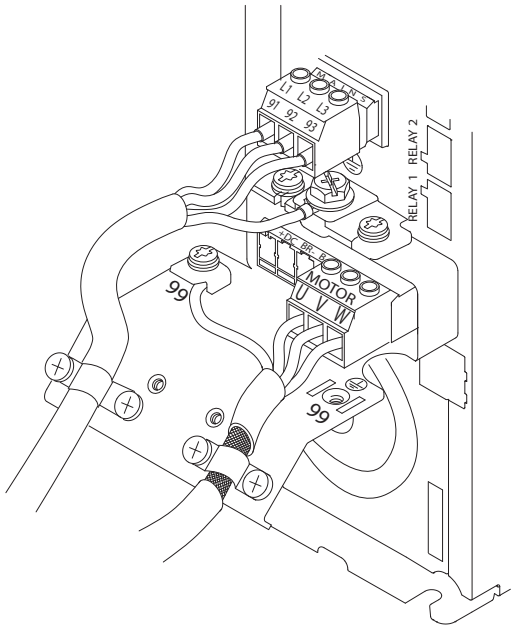

130BF948.10

Illustration 4.7 Example of Motor, Mains, and Ground Wiring

4.7 AC Mains Connection

- Size the wiring based on the input current of the frequency converter. For maximum wire sizes, see *chapter 8.1 Electrical Data*.
- Comply with local and national electrical codes for cable sizes.

Procedure

1. Connect the 3-phase AC input power wiring to terminals L1, L2, and L3 (see *Illustration 4.7*).
2. Depending on the configuration of the equipment, connect the input power to the mains input terminals or the input disconnect.
3. Ground the cable in accordance with the grounding instructions provided in *chapter 4.3 Grounding*.
4. When supplied from an isolated mains source (IT mains or floating delta) or TT/TN-S mains with a grounded leg (grounded delta), ensure that *parameter 14-50 RFI Filter* is set to *[0] Off* to avoid damage to the DC link and to reduce ground capacity currents in accordance with IEC 61800-3.

4.8 Control Wiring

- Isolate the control wiring from the high-power components in the frequency converter.
- When the frequency converter is connected to a thermistor, ensure that the thermistor control wiring is shielded and reinforced/double insulated. A 24 V DC supply voltage is recommended. See *Illustration 4.8*.

4.8.1 Control Terminal Types

Illustration 4.8 and *Illustration 4.9* show the removable frequency converter connectors. Terminal functions and default settings are summarized in *Table 4.2*.

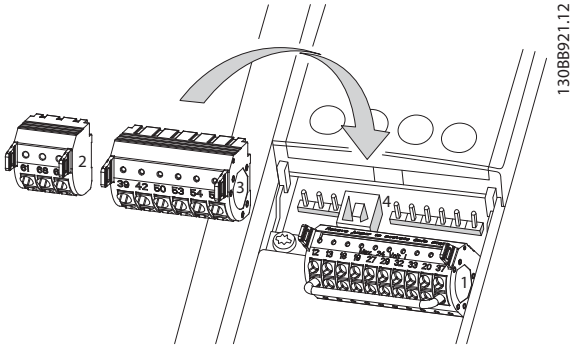

130BB921.12

Illustration 4.8 Control Terminal Locations

Danfoss A/S © 10/2016 All rights reserved.

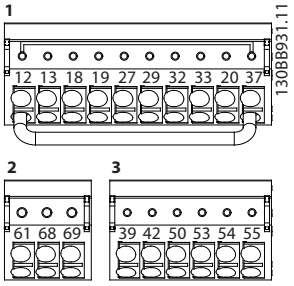

Illustration 4.9 Terminal Numbers

- **Connector 1** provides:
  - 4 programmable digital inputs terminals.
  - 2 extra digital terminals programmable as either input or output.
  - 24 V DC terminal supply voltage.
  - Optional customer supplied 24 V DC voltage.
- **Connector 2** terminals (+)68 and (-)69 are for an RS485 serial communication connection.
- **Connector 3** provides:
  - 2 analog inputs.
  - 1 analog output.
  - 10 V DC supply voltage.
  - Commons for the inputs and output.
- **Connector 4** is a USB port available for use with the MCT 10 Set-up Software.

Terminal description			
Terminal	**Parameter**	**Default setting**	**Description**
Digital Inputs/Outputs			
12, 13	–	+24 V DC	24 V DC supply voltage for digital inputs and external transducers. Maximum output current 200 mA for all 24 V loads.

Terminal description			
Terminal	**Parameter**	**Default setting**	**Description**
18	*Parameter 5 -10 Termina l 18 Digital Input*	*[8] Start*	Digital inputs.
19	*Parameter 5 -11 Termina l 19 Digital Input*	*[0] No operation*	
32	*Parameter 5 -14 Termina l 32 Digital Input*	*[0] No operation*	
33	*Parameter 5 -15 Termina l 33 Digital Input*	*[0] No operation*	
27	*Parameter 5 -12 Termina l 27 Digital Input*	*[2] Coast inverse*	For digital input or output. Default setting is input.
29	*Parameter 5 -13 Termina l 29 Digital Input*	*[14] Jog*	
20	–	–	Common for digital inputs and 0 V potential for 24 V supply.
37	–	Safe Torque Off (STO)	Safe input (optional). Used for STO.
Analog Inputs/Outputs			
39	–	–	Common for analog output
42	*Parameter 6 -50 Termina l 42 Output*	Speed 0 – High Limit	Programmable analog output. 0–20 mA or 4–20 mA at a maximum of 500 Ω
50	–	+10 V DC	10 V DC analog supply voltage for potenti-ometer or thermistor. 15 mA maximum
53	*Parameter group 6-1* Analog Input 53*	Reference	Analog input. For voltage or current. Switches A53 and A54 select mA or V.
54	*Parameter group 6-2* Analog Input 54*	Feedback	
55	–	–	Common for analog input
Serial Communication			

Danfoss A/S © 10/2016 All rights reserved.

Terminal description			
Terminal	Parameter	Default setting	Description
61	–	–	Integrated RC-Filter for cable shield. ONLY for connecting the shield if EMC problems occur.
68 (+)	*Parameter group 8-3* FC Port Settings*	–	RS485 Interface. A control card switch is provided for termination resistance.
69 (-)	*Parameter group 8-3* FC Port Settings*	–	
Relays			
01, 02, 03	*Parameter 5 -40 Function Relay* [0]	*[9] Alarm*	Form C relay output. For AC or DC voltage and resistive or inductive loads.
04, 05, 06	*Parameter 5 -40 Function Relay* [1]	*[5] Running*	

Table 4.2 Terminal Description

Extra terminals

- 2 form C relay outputs. Location of the outputs depends on frequency converter configuration.
- Terminals on built-in optional equipment. See the manual provided with the equipment option.

4.8.2 Wiring to Control Terminals

Control terminal connectors can be unplugged from the frequency converter for ease of installation, as shown in *Illustration 4.10*.

NOTICE

Keep control wires as short as possible and separate from high-power cables to minimize interference.

1. Open the contact by inserting a small screwdriver into the slot above the contact and push the screwdriver slightly upwards.

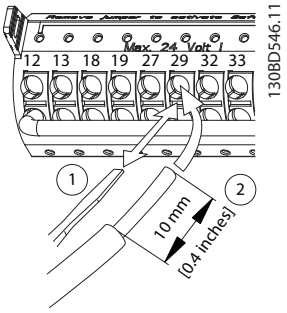

Illustration 4.10 Connecting Control Wires

2. Insert the bare control wire into the contact.
3. Remove the screwdriver to fasten the control wire into the contact.
4. Ensure that the contact is firmly established and not loose. Loose control wiring can be the source of equipment faults or less than optimal operation.

See *chapter 8.5 Cable Specifications* for control terminal wiring sizes and *chapter 6 Application Set-up Examples* for typical control wiring connections.

4.8.3 Enabling Motor Operation (Terminal 27)

A jumper wire is required between terminal 12 (or 13) and terminal 27 for the frequency converter to operate when using factory default programming values.

- Digital input terminal 27 is designed to receive 24 V DC external interlock command.
- When no interlock device is used, wire a jumper between control terminal 12 (recommended) or 13 to terminal 27. The jumper provides an internal 24 V signal on terminal 27.
- When the status line at the bottom of the LCP reads *AUTO REMOTE COAST*, it indicates that the unit is ready to operate but is missing an input signal on terminal 27.
- When factory installed optional equipment is wired to terminal 27, do not remove that wiring.

Danfoss A/S © 10/2016 All rights reserved.

4

4.8.4 Voltage/Current Input Selection (Switches)

The analog input terminals 53 and 54 allow setting of input signal to voltage (0–10 V) or current (0/4–20 mA).

Default parameter setting

- Terminal 53: Speed reference signal in open loop (see *parameter 16-61 Terminal 53 Switch Setting*).
- Terminal 54: Feedback signal in closed loop (see *parameter 16-63 Terminal 54 Switch Setting*).

NOTICE

Disconnect power to the frequency converter before changing switch positions.

1. Remove the LCP (see *Illustration 4.11*).
2. Remove any optional equipment covering the switches.
3. Set switches A53 and A54 to select the signal type. U selects voltage, I selects current.

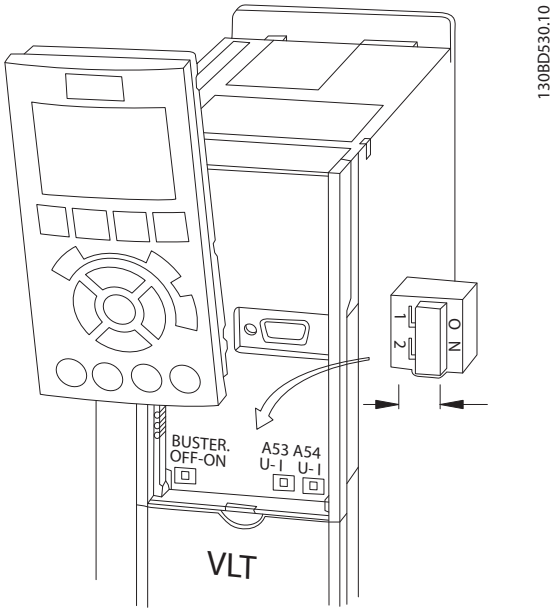

Illustration 4.11 Location of Terminal 53 and 54 Switches

To run STO, more wiring for the frequency converter is required. Refer to *VLT® Frequency Converters Safe Torque Off Operating Guide* for further information.

4.8.5 RS485 Serial Communication

Connect RS485 serial communication wiring to terminals (+)68 and (-)69.

- Use shielded serial communication cable (recommended).
- See *chapter 4.3 Grounding* for proper grounding.

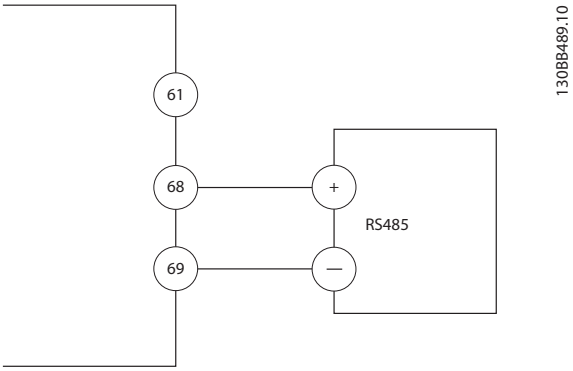

Illustration 4.12 Serial Communication Wiring Diagram

For basic serial communication set-up, select the following:

1. Protocol type in *parameter 8-30 Protocol*.
2. Frequency converter address in *parameter 8-31 Address*.
3. Baud rate in *parameter 8-32 Baud Rate*.

- 2 communication protocols are internal to the frequency converter:
  - Danfoss FC.
  - Modbus RTU.
- Functions can be programmed remotely using the protocol software and RS485 connection or in *parameter group 8-** Communications and Options*.
- Selecting a specific communication protocol changes various default parameter settings to match that protocol's specifications and makes more protocol-specific parameters available.
- Option cards for the frequency converter are available to provide extra communication protocols. See the option card documentation for installation and operation instructions.

Danfoss A/S © 10/2016 All rights reserved.

4.9 Installation Check List

Before completing installation of the unit, inspect the entire installation as detailed in *Table 4.3*. Check and mark the items when completed.

Inspect for	Description	☑
Auxiliary equipment	• Look for auxiliary equipment, switches, disconnects, or input fuses/circuit breakers, residing on the input power side of the frequency converter, or output side to the motor. Ensure that they are ready for full-speed operation. • Check the function and installation of any sensors used for feedback to the frequency converter. • Remove any power factor correction caps on the motor. • Adjust any power factor correction caps on the mains side and ensure that they are dampened.	
Cable routing	• Ensure that the motor wiring and control wiring are separated, shielded, or in 3 separate metallic conduits for high frequency interference isolation.	
Control wiring	• Check for broken or damaged wires and loose connections. • Check that the control wiring is isolated from power and motor wiring for noise immunity. • Check the voltage source of the signals, if necessary. The use of shielded cable or twisted pair is recommended. Ensure that the shield is terminated correctly.	
Cooling clearance	• Ensure that the top and bottom clearance is adequate to ensure proper airflow for cooling, see *chapter 3.3 Mounting*.	
Ambient conditions	• Check that requirements for ambient conditions are met.	
Fusing and circuit breakers	• Check for proper fusing or circuit breakers. • Check that all fuses are inserted firmly and are in operational condition, and that all circuit breakers are in the open position.	
Grounding	• Check for sufficient ground connections and ensure that those connections are tight and free of oxidation. • Grounding to conduit, or mounting the back panel to a metal surface, is not a suitable grounding.	
Input and output power wiring	• Check for loose connections. • Check that the motor and mains cables are in separate conduit or separated shielded cables.	
Panel interior	• Inspect that the unit interior is free of dirt, metal chips, moisture, and corrosion. • Check that the unit is mounted on an unpainted metal surface.	
Switches	• Ensure that all switch and disconnect settings are in the proper positions.	
Vibration	• Check that the unit is mounted solidly, or that shock mounts are used, as necessary. • Check for an unusual amount of vibration.	

Table 4.3 Installation Check List

⚠CAUTION

POTENTIAL HAZARD IN THE EVENT OF INTERNAL FAILURE

Risk of personal injury if the frequency converter is not properly closed.

- **Before applying power, ensure that all safety covers are in place and securely fastened.**

Danfoss A/S © 10/2016 All rights reserved.

5 Commissioning

5.1 Safety Instructions

See *chapter 2 Safety* for general safety instructions.

⚠WARNING

HIGH VOLTAGE

Frequency converters contain high voltage when connected to AC mains input power. Failure to perform installation, start-up, and maintenance by qualified personnel could result in death or serious injury.

- **Installation, start-up, and maintenance must be performed by qualified personnel only.**

Before applying power:

1. Close the cover properly.
2. Check that all cable glands are firmly tightened.
3. Ensure that input power to the unit is off and locked out. Do not rely on the frequency converter disconnect switches for input power isolation.
4. Verify that there is no voltage on input terminals L1 (91), L2 (92), and L3 (93), phase-to-phase, and phase-to-ground.
5. Verify that there is no voltage on output terminals 96 (U), 97 (V), and 98 (W), phase-to-phase, and phase-to-ground.
6. Confirm continuity of the motor by measuring Ω values on U–V (96–97), V–W (97–98), and W–U (98–96).
7. Check for proper grounding of the frequency converter and the motor.
8. Inspect the frequency converter for loose connections on the terminals.
9. Confirm that the supply voltage matches the voltage of the frequency converter and the motor.

5.2 Applying Power

Apply power to the frequency converter using the following steps:

1. Confirm that the input voltage is balanced within 3%. If not, correct the input voltage imbalance before proceeding. Repeat this procedure after the voltage correction.
2. Ensure that any optional equipment wiring matches the installation application.
3. Ensure that all operator devices are in the OFF position. Panel doors must be closed and covers securely fastened.
4. Apply power to the unit. Do not start the frequency converter now. For units with a disconnect switch, turn it to the ON position to apply power to the frequency converter.

5.3 Local Control Panel Operation

The local control panel (LCP) is the combined display and keypad on the front of the unit.

The LCP has several user functions:

- Start, stop, and control speed when in local control.
- Show operational data, status, warnings, and cautions.
- Program frequency converter functions.
- Manually reset the frequency converter after a fault when auto reset is inactive.

An optional numeric LCP (NLCP) is also available. The NLCP operates in a manner similar to the LCP. See the product relevant *programming guide* for details on use of the NLCP.

NOTICE

For commissioning via PC, install the MCT 10 Set-up Software. The software is available for download (basic version) or for ordering (advanced version, code number 130B1000). For more information and downloads, see *www.danfoss.com/BusinessAreas/DrivesSolutions/Software+MCT10/MCT10+Downloads.htm*.

5.3.1 Graphic Local Control Panel Layout

The graphic local control panel (GLCP) is divided into 4 functional groups (see *Illustration 5.1*).

A. Display area.

B. Display menu keys.

C. Navigation keys and indicator lights.

D. Operation keys and reset.

Danfoss A/S © 10/2016 All rights reserved.

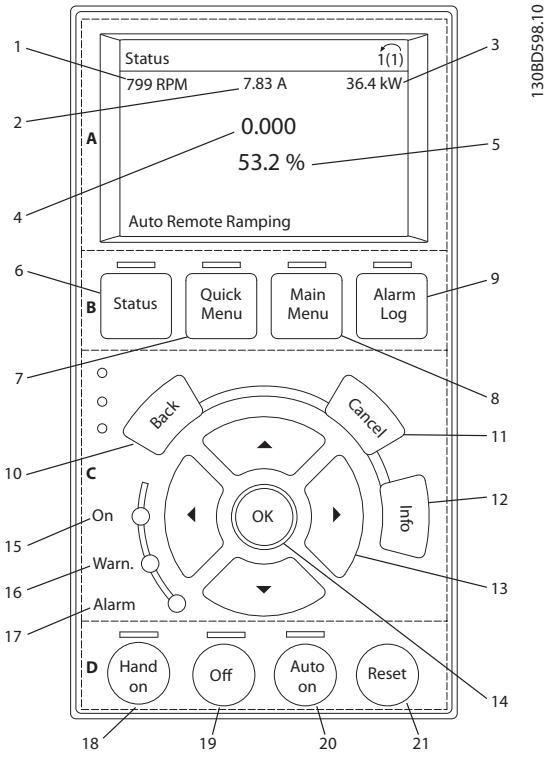

Illustration 5.1 GLCP

A. Display area

The display area is activated when the frequency converter receives power from the mains voltage, a DC bus terminal, or a 24 V DC external supply.

The information shown on the LCP can be customized for user applications. Select options in the *Quick Menu Q3-13 Display Settings*.

Display	Parameter	Default setting
1	*Parameter 0-20 Display Line 1.1 Small*	*[1617] Speed [RPM]*
2	*Parameter 0-21 Display Line 1.2 Small*	*[1614] Motor Current*
3	*Parameter 0-22 Display Line 1.3 Small*	*[1610] Power [kW]*
4	*Parameter 0-23 Display Line 2 Large*	*[1613] Frequency*
5	*Parameter 0-24 Display Line 3 Large*	*[1602] Reference %*

Table 5.1 Legend to *Illustration 5.1*, Display Area

B. Display menu keys

Menu keys are used for menu access for parameter set-up, toggling through status display modes during normal operation, and viewing fault log data.

	Key	Function
6	Status	Shows operational information.
7	Quick Menu	Allows access to programming parameters for initial set-up instructions and many detailed application instructions.
8	Main Menu	Allows access to all programming parameters.
9	Alarm Log	Shows a list of current warnings, the last 10 alarms, and the maintenance log.

Table 5.2 Legend to *Illustration 5.1*, Display Menu Keys

C. Navigation keys and indicator lights (LEDs)

Navigation keys are used for programming functions and moving the display cursor. The navigation keys also provide speed control in local operation. There are also 3 frequency converter status indicator lights in this area.

	Key	Function
10	Back	Reverts to the previous step or list in the menu structure.
11	Cancel	Cancels the last change or command as long as the display mode is not changed.
12	Info	Press for a definition of the function being showed.
13	Navigation Keys	Press the navigation keys to move between items in the menu.
14	OK	Press to access parameter groups or to enable a selection.

Table 5.3 Legend to *Illustration 5.1*, Navigation Keys

	Indicator	Color	Function
15	On	Green	The ON indicator light activates when the frequency converter receives power from the mains voltage, a DC bus terminal, or a 24 V external supply.
16	Warn	Yellow	When warning conditions are met, the yellow WARN indicator light comes on and text appears in the display area identifying the problem.
17	Alarm	Red	A fault condition causes the red alarm LED to flash and an alarm text is shown.

Table 5.4 Legend to *Illustration 5.1*, Indicator Lights (LEDs)

5

Danfoss A/S © 10/2016 All rights reserved.

D. Operation keys and reset
Operation keys are at the bottom of the LCP.

	Key	Function
18	[Hand On]	Starts the frequency converter in local control. • An external stop signal by control input or serial communication overrides the local hand on.
19	Off	Stops the motor but does not remove power to the frequency converter.
20	[Auto On]	Puts the system in remote operational mode. • Responds to an external start command by control terminals or serial communication.
21	Reset	Resets the frequency converter manually after a fault has been cleared.

Table 5.5 Legend to *Illustration 5.1*, Operation Keys and Reset

NOTICE

The display contrast can be adjusted by pressing [Status] and the [▲]/[▼] keys.

5.3.2 Parameter Settings

Establishing the correct programming for applications often requires setting functions in several related parameters. Details for parameters are provided in *chapter 9.2 Parameter Menu Structure*.

Programming data is stored internally in the frequency converter.

- For back-up, upload data into the LCP memory.
- To download data to another frequency converter, connect the LCP to that unit and download the stored settings.
- Restoring factory default settings does not change data stored in the LCP memory.

5.3.3 Uploading/Downloading Data to/from the LCP

1. Press [Off] to stop the motor before uploading or downloading data.
2. Press [Main Menu], select *parameter 0-50 LCP Copy* and press [OK].
3. Select *[1] All to LCP* to upload data to the LCP or select *[2] All from LCP* to download data from the LCP.
4. Press [OK]. A progress bar shows the uploading or downloading progress.
5. Press [Hand On] or [Auto On] to return to normal operation.

5.3.4 Changing Parameter Settings

Access and change parameter settings from the *Quick Menu* or from the *Main Menu*. The *Quick Menu* only gives access to a limited number of parameters.

1. Press [Quick Menu] or [Main Menu] on the LCP.
2. Press [▲] [▼] to browse through the parameter groups, press [OK] to select a parameter group.
3. Press [▲] [▼] to browse through the parameters, press [OK] to select a parameter.
4. Press [▲] [▼] to change the value of a parameter setting.
5. Press [◄] [►] to shift digit when a decimal parameter is in the editing state.
6. Press [OK] to accept the change.
7. Press either [Back] twice to enter *Status*, or press [Main Menu] once to enter the *Main Menu*.

View changes
Quick Menu Q5 - Changes Made lists all parameters changed from default settings.

- The list only shows parameters, which are changed in the current edit set-up.
- Parameters, which were reset to default values, are not listed.
- The message *Empty* indicates that no parameters are changed.

5.3.5 Restoring Default Settings

NOTICE

Risk of losing programming, motor data, localization, and monitoring records by restoration of default settings. To provide a back-up, upload data to the LCP before initialization.

Restoring the default parameter settings is done by initialization of the frequency converter. Initialization is carried out through *parameter 14-22 Operation Mode* (recommended) or manually.

- Initialization using *parameter 14-22 Operation Mode* does not reset frequency converter settings such as hours run, serial communication selections, personal menu settings, fault log, alarm log, and other monitoring functions.
- Manual initialization erases all motor, programming, localization, and monitoring data and restores factory default settings.

Danfoss A/S © 10/2016 All rights reserved.

Recommended initialization procedure via *parameter 14-22 Operation Mode*

1. Press [Main Menu] twice to access parameters.
2. Scroll to *parameter 14-22 Operation Mode* and press [OK].
3. Scroll to *[2] initialization* and press [OK].
4. Remove power to the unit and wait for the display to turn off.
5. Apply power to the unit.

Default parameter settings are restored during start-up. The start-up may take slightly longer than normal.

6. *Alarm 80, Drive initialized to default value* is shown.
7. Press [Reset] to return to operating mode.

Manual initialization procedure

1. Remove power to the unit and wait for the display to turn off.
2. Press and hold [Status], [Main Menu], and [OK] at the same time while applying power to the unit (approximately 5 s or until audible click and fan starts).

Factory default parameter settings are restored during start-up. The start-up may take slightly longer than usual.

Manual initialization does not reset the following frequency converter information:

- *Parameter 15-00 Operating hours*.
- *Parameter 15-03 Power Up's*.
- *Parameter 15-04 Over Temp's*.
- *Parameter 15-05 Over Volt's*.

5.4 Basic Programming

5.4.1 Commissioning with SmartStart

The SmartStart wizard enables fast configuration of basic motor and application parameters.

- SmartStart starts automatically at first power-up or after initialization of the frequency converter.
- Follow the on-screen instructions to complete the commissioning of the frequency converter. Always reactivate SmartStart by selecting *Quick Menu Q4 - SmartStart*.
- For commissioning without use of the SmartStart wizard, refer to *chapter 5.4.2 Commissioning via [Main Menu]* or the programming guide.

NOTICE

Motor data is required for the SmartStart set-up. The required data is normally available on the motor nameplate.

The SmartStart configures the frequency converter in 3 phases, each consisting of several steps, see *Table 5.6*.

Phase		Action
1	Basic Programming	Perform the programming
2	Application Section	Select and program appropriate application: • Single pump/motor. • Motor alternation. • Basic cascade control. • Master/slave.
3	Water and Pump Features	Go to water and pump dedicated parameters.

Table 5.6 SmartStart, Setup in 3 Phases

5.4.2 Commissioning via [Main Menu]

Recommended parameter settings are intended for start-up and check-out purposes. Application settings may vary.

Enter data with power ON, but before operating the frequency converter.

1. Press [Main Menu] on the LCP.
2. Press the navigation keys to scroll to *parameter group 0-** Operation/Display* and press [OK].

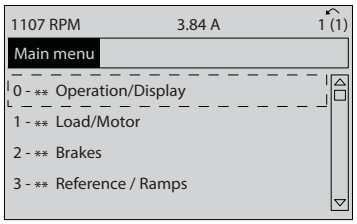

Illustration 5.2 Main Menu

3. Press the navigation keys to scroll to *parameter group 0-0* Basic Settings* and press [OK].

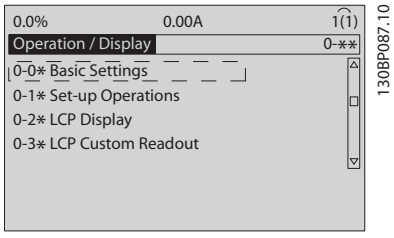

Illustration 5.3 Operation/Display

5

Danfoss A/S © 10/2016 All rights reserved.

4. Press the navigation keys to scroll to *parameter 0-03 Regional Settings* and press [OK].

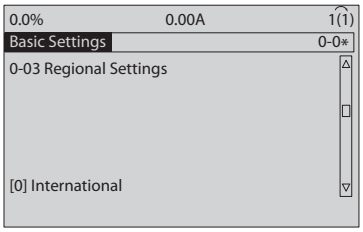

Illustration 5.4 Basic Settings

5. Press the navigation keys to select *[0] International* or *[1] North America* as appropriate and press [OK]. (This changes the default settings for several basic parameters).
6. Press [Main Menu] on the LCP.
7. Press the navigation keys to scroll to *parameter 0-01 Language*.
8. Select the language and press [OK].
9. If a jumper wire is in place between control terminals 12 and 27, leave *parameter 5-12 Terminal 27 Digital Input* at factory default. Otherwise, select *[0] No operation* in *parameter 5-12 Terminal 27 Digital Input*.
10. Make the application-specific settings in the following parameters:
    - 10a *Parameter 3-02 Minimum Reference*.
    - 10b *Parameter 3-03 Maximum Reference*.
    - 10c *Parameter 3-41 Ramp 1 Ramp Up Time*.
    - 10d *Parameter 3-42 Ramp 1 Ramp Down Time*.
    - 10e *Parameter 3-13 Reference Site*. Linked to Hand/Auto Local Remote.

5.4.3 Asynchronous Motor Set-up

Enter the following motor data. Find the information on the motor nameplate.

1. *Parameter 1-20 Motor Power [kW]* or *parameter 1-21 Motor Power [HP]*.
2. *Parameter 1-22 Motor Voltage*.
3. *Parameter 1-23 Motor Frequency*.
4. *Parameter 1-24 Motor Current*.
5. *Parameter 1-25 Motor Nominal Speed*.

For optimum performance in VVC+ mode, extra motor data is required to set up the following parameters. Find the data in the motor datasheet (this data is typically not available on the motor nameplate). Run a complete automatic motor adaptation (AMA) using *parameter 1-29 Automatic Motor Adaptation (AMA) [1] Enable Complete AMA* or enter the parameters manually. *Parameter 1-36 Iron Loss Resistance (Rfe)* is always entered manually.

6. *Parameter 1-30 Stator Resistance (Rs)*.
7. *Parameter 1-31 Rotor Resistance (Rr)*.
8. *Parameter 1-33 Stator Leakage Reactance (X1)*.
9. *Parameter 1-34 Rotor Leakage Reactance (X2)*.
10. *Parameter 1-35 Main Reactance (Xh)*.
11. *Parameter 1-36 Iron Loss Resistance (Rfe)*.

Application-specific adjustment when running VVC+
VVC+ is the most robust control mode. In most situations, it provides optimum performance without further adjustments. Run a complete AMA for best performance.

5.4.4 PM Motor Setup in VVC+

NOTICE

Only use permanent magnet (PM) motor with fans and pumps.

Initial programming steps

1. Activate PM motor operation
   Parameter 1-10 Motor Construction, select *[1] PM, non salient SPM.*
2. Set *parameter 0-02 Motor Speed Unit* to *[0] RPM*.

Programming motor data
After selecting PM motor in *parameter 1-10 Motor Construction*, the PM motor-related parameters in parameter groups *1-2* Motor Data*, *1-3* Adv. Motor Data* and *1-4** are active.
The necessary data can be found on the motor nameplate and in the motor datasheet.

Program the following parameters in the listed order:

1. *Parameter 1-24 Motor Current*.
2. *Parameter 1-26 Motor Cont. Rated Torque*.
3. *Parameter 1-25 Motor Nominal Speed*.
4. *Parameter 1-39 Motor Poles*.
5. *Parameter 1-30 Stator Resistance (Rs)*.
   Enter line to common stator winding resistance (Rs). If only line-line data is available, divide the line-line value with 2 to achieve the line to common (startpoint) value.
6. *Parameter 1-37 d-axis Inductance (Ld)*.
   Enter line to common direct axis inductance of the PM motor.

Danfoss A/S © 10/2016 All rights reserved.

If only line-line data is available, divide the line-line value by 2 to achieve the line-common (startpoint) value.

7. *Parameter 1-40 Back EMF at 1000 RPM*.
   Enter line-to-line back EMF of the PM motor at 1000 RPM mechanical speed (RMS value). Back EMF is the voltage generated by a PM motor when no frequency converter is connected and the shaft is turned externally. Back EMF is normally specified for nominal motor speed or for 1000 RPM measured between 2 lines. If the value is not available for a motor speed of 1000 RPM, calculate the correct value as follows: If back EMF is for example 320 V at 1800 RPM, it can be calculated at 1000 RPM as follows: Back EMF = (Voltage / RPM)*1000 = (320/1800)*1000 = 178. This is the value that must be programmed for *parameter 1-40 Back EMF at 1000 RPM*.

Test motor operation

1. Start the motor at low speed (100–200 RPM). If the motor does not turn, check installation, general programming, and motor data.
2. Check if the start function in *parameter 1-70 PM Start Mode* fits the application requirements.

Rotor detection
This function is the recommended choice for applications where the motor starts from standstill, for example pumps or conveyors. On some motors, a sound is heard when the impulse is sent out. This does not harm the motor.

Parking
This function is the recommended choice for applications where the motor is rotating at slow speed, for example windmilling in fan applications. *Parameter 2-06 Parking Current* and *parameter 2-07 Parking Time* can be adjusted. Increase the factory setting of these parameters for applications with high inertia.

Start the motor at nominal speed. If the application does not run well, check the VVC+ PM settings. Recommended settings in different applications can be found in *Table 5.7*.

Application	Settings
Low inertia applications I_{Load}/I_{Motor} <5	*Parameter 1-17 Voltage filter time const.* to be increased by factor 5–10. *Parameter 1-14 Damping Gain* should be reduced. *Parameter 1-66 Min. Current at Low Speed* should be reduced (<100%).
Low inertia applications 50>I_{Load}/I_{Motor} >5	Keep calculated values.
High inertia applications I_{Load}/I_{Motor} > 50	*Parameter 1-14 Damping Gain*, *parameter 1-15 Low Speed Filter Time Const.*, and *parameter 1-16 High Speed Filter Time Const.* should be increased.
High load at low speed <30% (rated speed)	*Parameter 1-17 Voltage filter time const.* should be increased. *Parameter 1-66 Min. Current at Low Speed* should be increased (>100% for a prolonged time can overheat the motor).

Table 5.7 Recommended Settings in Different Applications

If the motor starts oscillating at a certain speed, increase *parameter 1-14 Damping Gain*. Increase the value in small steps. Depending on the motor, a good value for this parameter can be 10% or 100% higher than the default value.

The starting torque can be adjusted in *parameter 1-66 Min. Current at Low Speed*. 100% provides nominal torque as starting torque.

5.4.5 SynRM Motor Set-up with VVC+

This section describes how to set up a SynRM motor with VVC+.

NOTICE

The SmartStart wizard covers the basic configuration of SynRM motors.

Initial programming steps
To activate SynRM motor operation, select *[5] Sync. Reluctance* in *parameter 1-10 Motor Construction*.

Programming motor data
After performing the initial programming steps, the SynRM motor-related parameters in *parameter groups 1-2* Motor Data*, *1-3* Adv. Motor Data*, and *1-4* Adv. Motor Data II* are active.

Use the motor nameplate data and the motor datasheet to program the following parameters in the order listed:

Danfoss A/S © 10/2016 All rights reserved.

1. *Parameter 1-23 Motor Frequency*.
2. *Parameter 1-24 Motor Current*.
3. *Parameter 1-25 Motor Nominal Speed*.
4. *Parameter 1-26 Motor Cont. Rated Torque*.

Run a complete AMA using *parameter 1-29 Automatic Motor Adaptation (AMA) [1] Enable Complete AMA* or enter the following parameters manually:

1. *Parameter 1-30 Stator Resistance (Rs)*.
2. *Parameter 1-37 d-axis Inductance (Ld)*.
3. *Parameter 1-44 d-axis Inductance Sat. (LdSat)*.
4. *Parameter 1-45 q-axis Inductance Sat. (LqSat)*.
5. *Parameter 1-48 Inductance Sat. Point*.

Application-specific adjustments

Start the motor at nominal speed. If the application does not run well, check the VVC+ SynRM settings. *Table 5.8* provides application-specific recommendations:

Application	Settings
Low-inertia applications I_{Load}/I_{Motor}<5	Increase *parameter 1-17 Voltage filter time const.* by factor 5–10. Reduce *parameter 1-14 Damping Gain*. Reduce *parameter 1-66 Min. Current at Low Speed* (<100%).
Low-inertia applications 50>I_{Load}/I_{Motor}>5	Keep the default values.
High-inertia applications I_{Load}/I_{Motor}>50	Increase *parameter 1-14 Damping Gain*, *parameter 1-15 Low Speed Filter Time Const.*, and *parameter 1-16 High Speed Filter Time Const.*
High-load at low speed <30% (rated speed)	Increase *parameter 1-17 Voltage filter time const.* Increase *parameter 1-66 Min. Current at Low Speed* to adjust the starting torque. 100% current provides nominal torque as starting torque. Working at a current level higher than 100% for a prolonged time can cause the motor to overheat.
Dynamic applications	Increase *parameter 14-41 AEO Minimum Magnetisation* for highly dynamic applications. Adjusting *parameter 14-41 AEO Minimum Magnetisation* ensures a good balance between energy efficiency and dynamics. Adjust *parameter 14-42 Minimum AEO Frequency* to specify the minimum frequency at which the frequency converter should use minimum magnetization.
Motor sizes less than 18 kW (24 hp)	Avoid short ramp-down times.

Table 5.8 Recommendations for Various Applications

If the motor starts oscillating at a certain speed, increase *parameter 1-14 Damping Gain*. Increase the damping gain value in small steps. Depending on the motor, this parameter can be set to 10–100% higher than the default value.

5.4.6 Automatic Energy Optimization (AEO)

NOTICE

AEO is not relevant for permanent magnet motors.

AEO is a procedure which minimizes voltage to the motor, as a result of that reducing energy consumption, heat, and noise.

To activate AEO, set *parameter 1-03 Torque Characteristics* to *[2] Auto Energy Optim. CT* or *[3] Auto Energy Optim. VT*.

5.4.7 Automatic Motor Adaptation (AMA)

AMA is a procedure which optimizes compatibility between the frequency converter and the motor.

- The frequency converter builds a mathematical model of the motor for regulating output motor current. The procedure also tests the input phase balance of electrical power. It compares the motor characteristics with the entered nameplate data.
- The motor shaft does not turn and no harm is done to the motor while running the AMA.
- Some motors may be unable to run the complete version of the test. In that case, select *[2] Enable reduced AMA*.
- If an output filter is connected to the motor, select *[2] Enable reduced AMA*.

Danfoss A/S © 10/2016 All rights reserved.

- If warnings or alarms occur, see *chapter 7.4 List of Warnings and Alarms*.
- Run this procedure on a cold motor for best results.

To run AMA

1. Press [Main Menu] to access parameters.
2. Scroll to *parameter group 1-** Load and Motor* and press [OK].
3. Scroll to *parameter group 1-2* Motor Data* and press [OK].
4. Scroll to *parameter 1-29 Automatic Motor Adaptation (AMA)* and press [OK].
5. Select *[1] Enable complete AMA* and press [OK].
6. Follow the on-screen instructions.
7. The test runs automatically and indicates when it is complete.
8. The advanced motor data is entered in *parameter group 1-3* Adv. Motor Data*.

5.5 Checking Motor Rotation

NOTICE

Risk of damage to pumps/compressors caused by motor running in wrong direction. Before running the frequency converter, check the motor rotation.

The motor runs briefly at 5 Hz or the minimum frequency set in *parameter 4-12 Motor Speed Low Limit [Hz]*.

1. Press [Main Menu].
2. Scroll to *parameter 1-28 Motor Rotation Check* and press [OK].
3. Scroll to *[1] Enable*.

The following text appears: *Note! Motor may run in wrong direction*.

4. Press [OK].
5. Follow the on-screen instructions.

NOTICE

To change the direction of rotation, remove power to the frequency converter and wait for power to discharge. Reverse the connection of any 2 of the 3 motor wires on the motor or frequency converter side of the connection.

5.6 Local-control Test

1. Press [Hand On] to provide a local start command to the frequency converter.
2. Accelerate the frequency converter by pressing [▲] to full speed. Moving the cursor left of the decimal point provides quicker input changes.
3. Note any acceleration problems.
4. Press [Off]. Note any deceleration problems.

If acceleration or deceleration problems occur, see *chapter 7.5 Troubleshooting*. See *chapter 7.4 List of Warnings and Alarms* for resetting the frequency converter after a trip.

5.7 System Start-up

The procedure in this section requires wiring and application programming to be completed. The following procedure is recommended after application set-up is completed.

1. Press [Auto On].
2. Apply an external run command.
3. Adjust the speed reference throughout the speed range.
4. Remove the external run command.
5. Check the sound and vibration levels of the motor to ensure that the system is working as intended.

If warnings or alarms occur, see *chapter 7.3 Warning and Alarm Types* or *chapter 7.4 List of Warnings and Alarms*.

Danfoss A/S © 10/2016 All rights reserved.

6 Application Set-up Examples

The examples in this section are intended as a quick reference for common applications.

- Parameter settings are the regional default values unless otherwise indicated (selected in *parameter 0-03 Regional Settings*).
- Parameters associated with the terminals and their settings are shown next to the drawings.
- Required switch settings for analog terminals A53 or A54 are also shown.

NOTICE

When using the optional STO feature, a jumper wire may be required between terminal 12 (or 13) and terminal 37 for the frequency converter to operate with factory default programming values.

6

6.1 Application Examples

6.1.1 Feedback

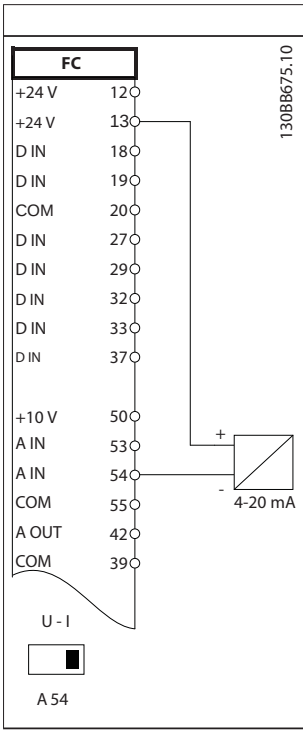

	Parameters	
	Function	**Setting**
	Parameter 6-22 Terminal 54 Low Current	4 mA*
	Parameter 6-23 Terminal 54 High Current	20 mA*
	Parameter 6-24 Terminal 54 Low Ref./Feedb. Value	0*
	Parameter 6-25 Terminal 54 High Ref./Feedb. Value	50*
* = Default value		
Notes/comments: D IN 37 is an option.		

Table 6.1 Analog Current Feedback Transducer

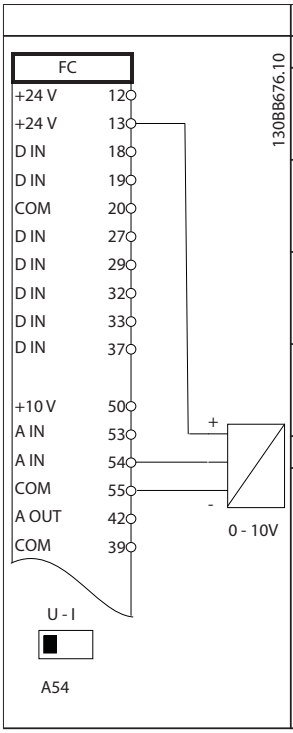

	Parameters	
	Function	**Setting**
	Parameter 6-20 Terminal 54 Low Voltage	0.07 V*
	Parameter 6-21 Terminal 54 High Voltage	10 V*
	Parameter 6-24 Terminal 54 Low Ref./Feedb. Value	0*
	Parameter 6-25 Terminal 54 High Ref./Feedb. Value	50*
* = Default value		
Notes/comments: D IN 37 is an option.		

Table 6.2 Analog Voltage Feedback Transducer (3-wire)

Danfoss A/S © 10/2016 All rights reserved.

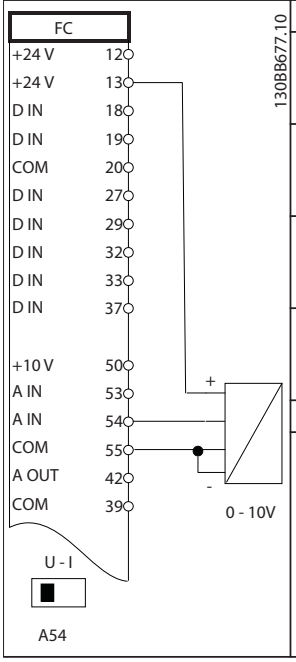

Parameters	
Function	**Setting**
Parameter 6-20 Terminal 54 Low Voltage	0.07 V*
Parameter 6-21 Terminal 54 High Voltage	10 V*
Parameter 6-24 Terminal 54 Low Ref./Feedb. Value	0*
Parameter 6-25 Terminal 54 High Ref./Feedb. Value	50*
* = Default value	
Notes/comments: D IN 37 is an option.	

Table 6.3 Analog Voltage Feedback Transducer (4-wire)

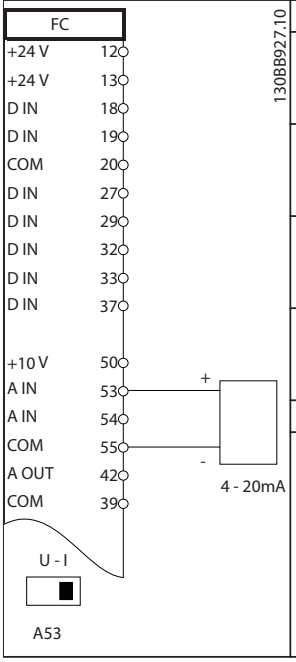

Parameters	
Function	**Setting**
Parameter 6-12 Terminal 53 Low Current	4 mA*
Parameter 6-13 Terminal 53 High Current	20 mA*
Parameter 6-14 Terminal 53 Low Ref./Feedb. Value	0 Hz
Parameter 6-15 Terminal 53 High Ref./Feedb. Value	50 Hz
* = Default value	
Notes/comments: D IN 37 is an option.	

Table 6.5 Analog Speed Reference (Current)

6.1.2 Speed

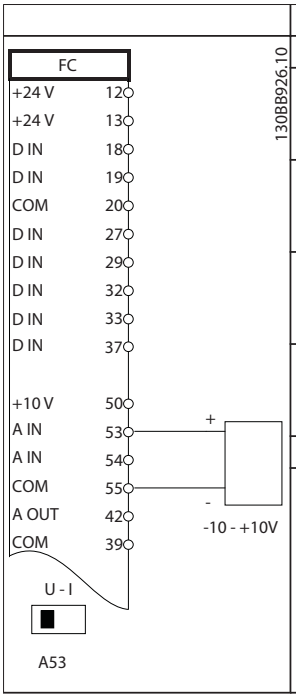

Parameters	
Function	**Setting**
Parameter 6-10 Terminal 53 Low Voltage	0.07 V*
Parameter 6-11 Terminal 53 High Voltage	10 V*
Parameter 6-14 Terminal 53 Low Ref./Feedb. Value	0 Hz
Parameter 6-15 Terminal 53 High Ref./Feedb. Value	50 Hz
* = Default value	
Notes/comments: D IN 37 is an option.	

Table 6.4 Analog Speed Reference (Voltage)

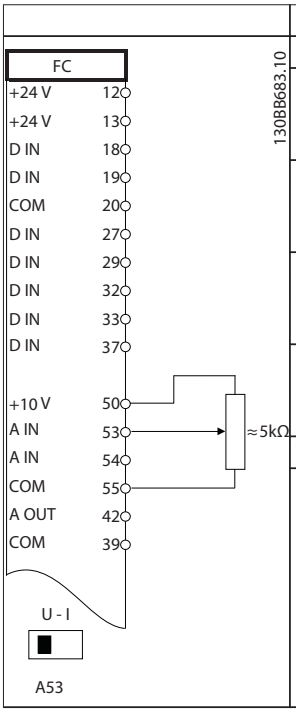

Parameters	
Function	**Setting**
Parameter 6-10 Terminal 53 Low Voltage	0.07 V*
Parameter 6-11 Terminal 53 High Voltage	10 V*
Parameter 6-14 Terminal 53 Low Ref./Feedb. Value	0 Hz
Parameter 6-15 Terminal 53 High Ref./Feedb. Value	50 Hz
* = Default value	
Notes/comments: D IN 37 is an option.	

Table 6.6 Speed Reference (Using a Manual Potentiometer)

6

Danfoss A/S © 10/2016 All rights reserved.

6.1.3 Run/Stop

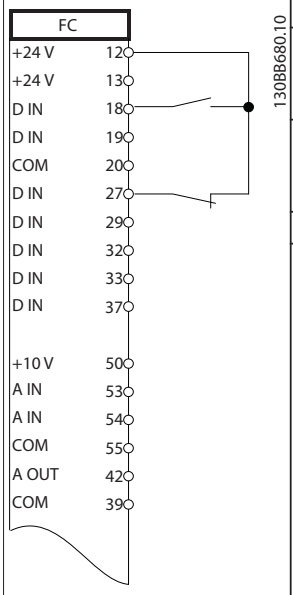

Parameters	
Function	**Setting**
Parameter 5-10 Terminal 18 Digital Input	*[8] Start**
Parameter 5-12 Terminal 27 Digital Input	*[7] External interlock*
* = Default value	
Notes/comments: D IN 37 is an option.	

Table 6.7 Run/Stop Command with External Interlock

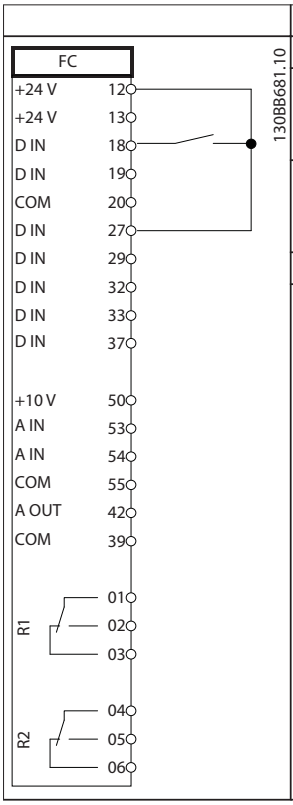

Parameters	
Function	**Setting**
Parameter 5-10 Terminal 18 Digital Input	*[8] Start**
Parameter 5-12 Terminal 27 Digital Input	*[7] External interlock*
* = Default value	
Notes/comments: If *parameter 5-12 Terminal 27 Digital Input* is set to *[0] No operation*, a jumper wire to terminal 27 is not needed. D IN 37 is an option.	

Table 6.8 Run/Stop Command without External Interlock

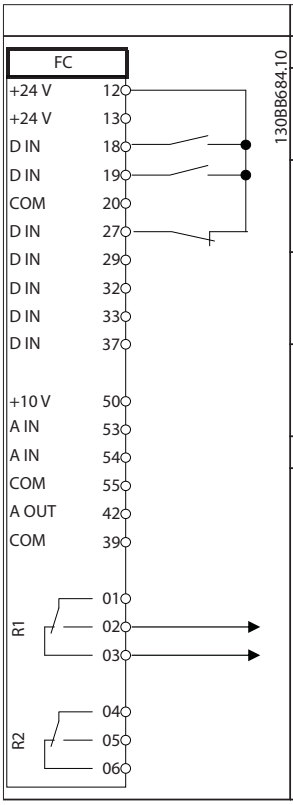

Parameters	
Function	**Setting**
Parameter 5-10 Terminal 18 Digital Input	*[8] Start**
Parameter 5-11 Terminal 19 Digital Input	*[52] Run Permissive*
Parameter 5-12 Terminal 27 Digital Input	*[7] External interlock*
Parameter 5-40 Function Relay	*[167] Start command act.*
* = Default value	
Notes/comments: D IN 37 is an option.	

Table 6.9 Run Permissive

6.1.4 External Alarm Reset

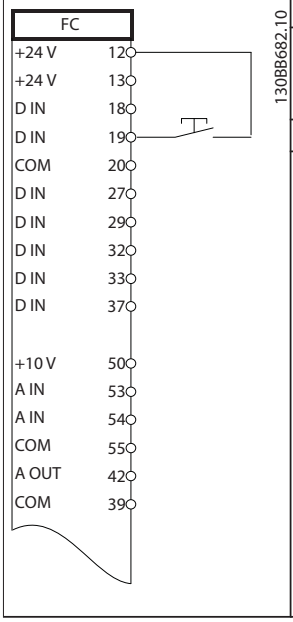

Parameters	
Function	**Setting**
Parameter 5-11 Terminal 19 Digital Input	*[1] Reset*
* = Default value	
Notes/comments: D IN 37 is an option.	

Table 6.10 External Alarm Reset

Danfoss A/S © 10/2016 All rights reserved.

6.1.5 RS485

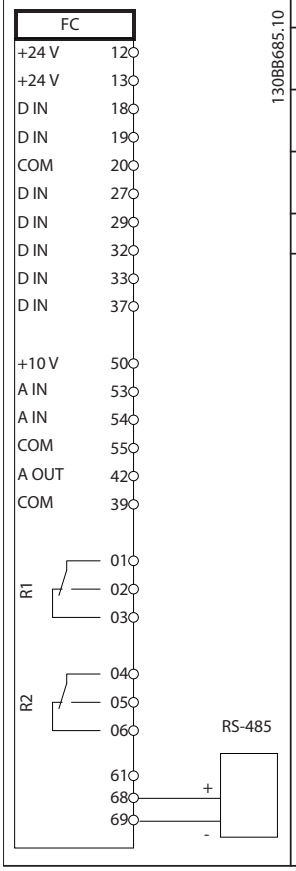

Parameters	
Function	**Setting**
Parameter 8-30 Protocol	FC*
Parameter 8-31 Address	1*
Parameter 8-32 Baud Rate	9600*
* = Default value	
Notes/comments: Select protocol, address, and baud rate in the above-mentioned parameters. D IN 37 is an option.	

Table 6.11 RS485 Network Connection

6.1.6 Motor Thermistor

⚠CAUTION

THERMISTOR INSULATION

Risk of personal injury or equipment damage.

- **Use only thermistors with reinforced or double insulation to meet PELV insulation requirements.**

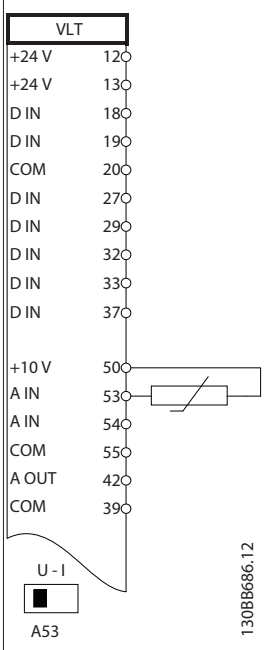

Parameters	
Function	**Setting**
Parameter 1-90 Motor Thermal Protection	*[2] Thermistor trip*
Parameter 1-93 Thermistor Source	*[1] Analog input 53*
* = Default value	
Notes/comments: If only a warning is required, set *parameter 1-90 Motor Thermal Protection* to *[1] Thermistor warning*. D IN 37 is an option.	

Table 6.12 Motor Thermistor

6

Danfoss A/S © 10/2016 All rights reserved.

7 Maintenance, Diagnostics, and Troubleshooting

This chapter includes:

- Maintenance and service guidelines.
- Status messages.
- Warnings and alarms.
- Basic troubleshooting.

7.1 Maintenance and Service

Under normal operating conditions and load profiles, the frequency converter is maintenance-free throughout its designed lifetime. To prevent breakdown, danger, and damage, examine the frequency converter at regular intervals depending on the operating conditions. Replace worn or damaged parts with original spare parts or standard parts. For service and support, contact the local Danfoss supplier.

7

⚠WARNING

UNINTENDED START

When the frequency converter is connected to AC mains, DC supply, or load sharing, the motor may start at any time. Unintended start during programming, service, or repair work can result in death, serious injury, or property damage. The motor can start via an external switch, a fieldbus command, an input reference signal from the LCP or LOP, via remote operation using MCT 10 Set-up Software, or after a cleared fault condition.

7.2 Status Messages

When the frequency converter is in *Status* mode, status messages are generated automatically and appear in the bottom line of the display (see *Illustration 7.1*).

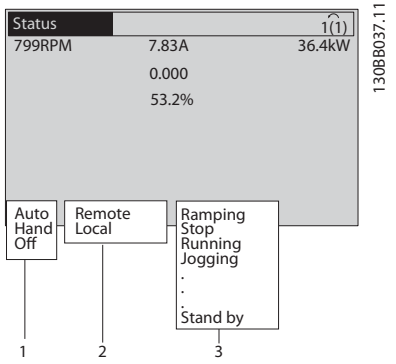

1	Operating mode (see *Table 7.1*)
2	Reference site (see *Table 7.2*)
3	Operation status (see *Table 7.3*)

Illustration 7.1 Status Display

Table 7.1 to *Table 7.3* describe the status messages shown.

Off	The frequency converter does not react to any control signal until [Auto On] or [Hand On] is pressed.
Auto On	The frequency converter is controlled from the control terminals and/or the serial communication.
Hand On	Control the frequency converter via the navigation keys on the LCP. Stop commands, reset, reversing, DC brake, and other signals applied to the control terminals override local control.

Table 7.1 Operating Mode

Remote	The speed reference is given from external signals, serial communication, or internal preset references.
Local	The frequency converter uses [Hand On] control or reference values from the LCP.

Table 7.2 Reference Site

AC Brake	*[2] AC brake* is selected in *parameter 2-10 Brake Function*. The AC brake overmagnetizes the motor to achieve a controlled slow down.
AMA finish OK	AMA was carried out successfully.
AMA ready	AMA is ready to start. Press [Hand On] to start.
AMA running	AMA process is in progress.
Braking	The brake chopper is in operation. Generative energy is absorbed by the brake resistor.

Danfoss A/S © 10/2016 All rights reserved.

Braking max.	The brake chopper is in operation. The power limit for the brake resistor defined in *parameter 2-12 Brake Power Limit (kW)* has been reached.
Coast	• *[2] Coast inverse* was selected as a function for a digital input (*parameter group 5-1* Digital Inputs*). The corresponding terminal is not connected. • Coast activated by serial communication.
Ctrl. ramp-down	*[1] Control Ramp-down* was selected in *parameter 14-10 Mains Failure*. • The mains voltage is below the value set in *parameter 14-11 Mains Voltage at Mains Fault* at mains fault. • The frequency converter ramps down the motor using a controlled ramp down.
Current High	The frequency converter output current is above the limit set in *parameter 4-51 Warning Current High*.
Current Low	The frequency converter output current is below the limit set in *parameter 4-52 Warning Speed Low*.
DC Hold	*[1] DC hold* is selected in *parameter 1-80 Function at Stop* and a stop command is active. The motor is held by a DC current set in *parameter 2-00 DC Hold/Preheat Current*.
DC Stop	The motor is held with a DC current (*parameter 2-01 DC Brake Current*) for a specified time (*parameter 2-02 DC Braking Time*). • The DC brake cut-in speed is reached in *parameter 2-03 DC Brake Cut In Speed [RPM]* and a stop command is active. • *[5] DC-brake inverse* is selected as a function for a digital input (*parameter group 5-1* Digital Inputs*). The corresponding terminal is not active. • The DC brake is activated via serial communication.
Feedback high	The sum of all active feedbacks is above the feedback limit set in *parameter 4-57 Warning Feedback High*.
Feedback low	The sum of all active feedbacks is below the feedback limit set in *parameter 4-56 Warning Feedback Low*.
Freeze output	The remote reference is active, which holds the present speed. • *[20] Freeze output* is selected as a function for a digital input (*parameter group 5-1* Digital Inputs*). The corresponding terminal is active. Speed control is only possible via the terminal options *[21] Speed up* and *[22] Speed down*. • Hold ramp is activated via serial communication.
Freeze output request	A freeze output command was given, but the motor remains stopped until a run permissive signal is received.
Freeze ref.	*[19] Freeze reference* is selected as a function for a digital input (*parameter group 5-1* Digital Inputs*). The corresponding terminal is active. The frequency converter saves the actual reference. Changing the reference is now only possible via terminal options *[21] Speed up* and *[22] Speed down*.
Jog request	A jog command was given, but the motor remains stopped until a run permissive signal is received via a digital input.
Jogging	The motor is running as programmed in *parameter 3-19 Jog Speed [RPM]*. • *[14] Jog* was selected as a function for a digital input (*parameter group 5-1* Digital Inputs*). The corresponding terminal (for example, terminal 29) is active. • The jog function is activated via the serial communication. • The jog function is selected as a reaction for a monitoring function (for example, for the no signal function). The monitoring function is active.
Motor check	In *parameter 1-80 Function at Stop*, *[2] Motor Check* is selected. A stop command is active. To ensure that a motor is connected to the frequency converter, a permanent test current is applied to the motor.
OVC control	Overvoltage control is activated via *parameter 2-17 Over-voltage Control*, *[2] Enabled*. The connected motor supplies the frequency converter with generative energy. The overvoltage control adjusts the V/Hz ratio to run the motor in controlled mode and to prevent the frequency converter from tripping.
PowerUnit Off	(Only frequency converters with a 24 V external supply installed). Mains supply to the frequency converter was removed, and the control card is supplied by the external 24 V.

7

Danfoss A/S © 10/2016 All rights reserved.

Protection md	Protection mode is active. The unit detected a critical status (overcurrent or overvoltage). • To avoid tripping, switching frequency is reduced to 4 kHz. • If possible, protection mode ends after approximately 10 s. • Protection mode can be restricted in *parameter 14-26 Trip Delay at Inverter Fault*.
Qstop	The motor is decelerating using *parameter 3-81 Quick Stop Ramp Time*. • *[4] Quick stop inverse* is selected as a function for a digital input (*parameter group 5-1* Digital Inputs*). The corresponding terminal is not active. • The quick stop function is activated via serial communication.
Ramping	The motor is accelerating/decelerating using the active ramp up/down. The reference, a limit value, or a standstill is not yet reached.
Ref. high	The sum of all active references is above the reference limit set in *parameter 4-55 Warning Reference High*.
Ref. low	The sum of all active references is below the reference limit set in *parameter 4-54 Warning Reference Low*.
Run on ref.	The frequency converter is running in the reference range. The feedback value matches the setpoint value.
Run request	A start command was given, but the motor remains stopped until a run permissive signal is received via digital input.
Running	The frequency converter drives the motor.
Sleep Mode	The energy-saving function is enabled. The motor has stopped, but restarts automatically when required.
Speed high	Motor speed is above the value set in *parameter 4-53 Warning Speed High*.
Speed low	Motor speed is below the value set in *parameter 4-52 Warning Speed Low*.
Standby	In auto-on mode, the frequency converter starts the motor with a start signal from a digital input or serial communication.
Start delay	In *parameter 1-71 Start Delay*, a delay starting time was set. A start command is activated, and the motor starts after the start delay time expires.
Start fwd/rev	*[12] Enable start forward* and *[13] Enable start reverse* are selected as options for 2 different digital inputs (*parameter group 5-1* Digital Inputs*). The motor starts in forward or reverse direction depending on which terminal is activated.
Stop	The frequency converter received a stop command from the LCP, digital input, or serial communication.
Trip	An alarm occurred and the motor is stopped. Once the cause of the alarm is cleared, the frequency converter can be reset manually by pressing [Reset] or remotely by control terminals or serial communication.
Trip lock	An alarm occurred, and the motor is stopped. When the cause of the alarm is cleared, cycle power to the frequency converter. The frequency converter can then be reset manually by pressing [Reset], or remotely by control terminals or serial communication.

Table 7.3 Operation Status

7

NOTICE

In auto/remote mode, the frequency converter requires external commands to execute functions.

7.3 Warning and Alarm Types

Warnings
A warning is issued when an alarm condition is impending, or when an abnormal operating condition is present and may result in the frequency converter issuing an alarm. A warning clears by itself when the abnormal condition ceases.

Alarms
An alarm indicates a fault that requires immediate attention. The fault always triggers a trip or a trip lock. Reset the system after an alarm.

Trip
An alarm is issued when the frequency converter is tripped, meaning that the frequency converter suspends operation to prevent frequency converter or system damage. The motor coasts to a stop. The frequency converter logic continues to operate and monitor the frequency converter status. After the fault condition is remedied, the frequency converter can be reset. It is then ready to start operation again.

Resetting the frequency converter after trip/trip lock
A trip can be reset in any of 4 ways:

- Press [Reset] on the LCP.
- Digital reset input command.
- Serial communication reset input command.
- Auto reset.

Trip lock
Input power is cycled. The motor coasts to a stop. The frequency converter continues to monitor the frequency converter status. Remove input power to the frequency converter, correct the cause of the fault, and reset the frequency converter.

Danfoss A/S © 10/2016 All rights reserved.

Warning and alarm displays

- A warning is shown in the LCP along with the warning number.
- An alarm flashes along with the alarm number.

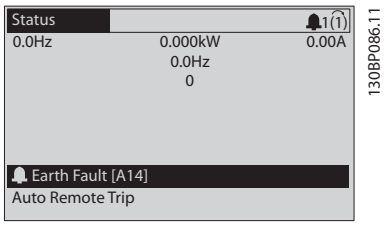

Illustration 7.2 Alarm Example

In addition to the text and alarm code in the LCP, there are 3 status indicator lights.

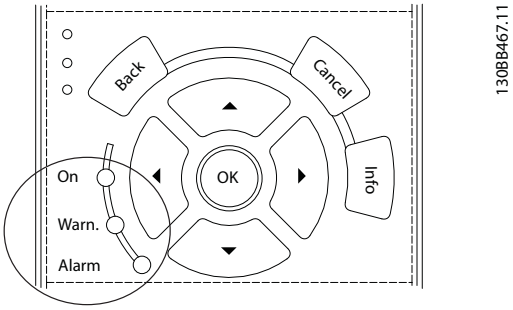

	Warning indicator light	Alarm indicator light
Warning	On	Off
Alarm	Off	On (flashing)
Trip lock	On	On (flashing)

Illustration 7.3 Status Indicator Lights

7.4 List of Warnings and Alarms

The warning/alarm information in this chapter defines each warning/alarm condition, provides the probable cause for the condition, and details a remedy or troubleshooting procedure.

WARNING 1, 10 Volts low
The control card voltage from terminal 50 is <10 V. Remove some of the load from terminal 50, as the 10 V supply is overloaded. Maximum 15 mA or minimum 590 Ω.

A short circuit in a connected potentiometer or improper wiring of the potentiometer can cause this condition.

Troubleshooting

- Remove the wiring from terminal 50.
- If the warning clears, the problem is with the customer wiring.
- If the warning does not clear, replace the control card.

WARNING/ALARM 2, Live zero error
This warning or alarm only appears if programmed in *parameter 6-01 Live Zero Timeout Function*. The signal on 1 of the analog inputs is less than 50% of the minimum value programmed for that input. Broken wiring or signals from a faulty device cause this condition.

Troubleshooting

- Check connections on all the analog input terminals. Control card terminals 53 and 54 for signals, terminal 55 common. VLT® General Purpose I/O MCB 101 terminals 11 and 12 for signals, terminal 10 common. VLT® Analog I/O Option MCB 109 terminals 1, 3, 5 for signals, terminals 2, 4, 6 common).
- Check that the frequency converter programming and switch settings match the analog signal type.
- Perform an input terminal signal test.

WARNING/ALARM 3, No motor
No motor has been connected to the output of the frequency converter.

WARNING/ALARM 4, Mains phase loss
A phase is missing on the supply side, or the mains voltage imbalance is too high. This message also appears in case of a fault in the input rectifier on the frequency converter. Options are programmed in *parameter 14-12 Function at Mains Imbalance*.

Troubleshooting

- Check the supply voltage and supply currents to the frequency converter.

WARNING 5, DC link voltage high
The DC-link voltage is higher than the high-voltage warning limit. The limit depends on the frequency converter voltage rating. The unit is still active.

WARNING 6, DC link voltage low
The DC-link voltage is lower than the low-voltage warning limit. The limit depends on the frequency converter voltage rating. The unit is still active.

WARNING/ALARM 7, DC overvoltage
If the DC-link voltage exceeds the limit, the frequency converter trips after some time.

Troubleshooting

- Connect a brake resistor.
- Extend the ramp time.
- Change the ramp type.
- Activate the functions in *parameter 2-10 Brake Function*.
- Increase *parameter 14-26 Trip Delay at Inverter Fault*.

WARNING/ALARM 8, DC under voltage
If the DC-link voltage drops below the undervoltage limit, the frequency converter checks if a 24 V DC back-up supply is connected. If no 24 V DC back-up supply is

 Danfoss A/S © 10/2016 All rights reserved.

connected, the frequency converter trips after a fixed time delay. The time delay varies with unit size.

Troubleshooting

- Check that the supply voltage matches the frequency converter voltage.
- Perform an input voltage test.
- Perform a soft charge circuit test.

WARNING/ALARM 9, Inverter overload

The frequency converter is about to cut out because of an overload (too high current for too long). The counter for electronic thermal inverter protection issues a warning at 98% and trips at 100%, while issuing an alarm. The frequency converter *cannot* be reset until the counter is below 90%.

Troubleshooting

- Compare the output current shown on the LCP with the frequency converter rated current.
- Compare the output current shown on the LCP with measured motor current.
- Show the thermal load on the LCP and monitor the value. When running above the frequency converter continuous current rating, the counter should increase. When running below the frequency converter continuous current rating, the counter should decrease.

WARNING/ALARM 10, Motor overload temperature

According to the electronic thermal protection (ETR), the motor is too hot. Select whether the frequency converter issues a warning or an alarm when the counter reaches 100% in *parameter 1-90 Motor Thermal Protection*. The fault occurs when the motor overload exceeds 100% for too long.

Troubleshooting

- Check for motor overheating.
- Check if the motor is mechanically overloaded.
- Check that the motor current set in *parameter 1-24 Motor Current* is correct.
- Ensure the motor data in parameters *1-20* through *1-25* is set correctly.
- If an external fan is used, check that it is selected in *parameter 1-91 Motor External Fan*.
- Running AMA in *parameter 1-29 Automatic Motor Adaptation (AMA)* tunes the frequency converter to the motor more accurately and reduces thermal loading.

WARNING/ALARM 11, Motor thermistor overtemp

The thermistor may be disconnected. Select whether the frequency converter issues a warning or an alarm in *parameter 1-90 Motor Thermal Protection*.

Troubleshooting

- Check for motor overheating.
- Check if the motor is mechanically overloaded.
- Check that the thermistor is connected correctly between either terminal 53 or 54 (analog voltage input) and terminal 50 (+10 V supply) and that the terminal switch for 53 or 54 is set for voltage. Check *parameter 1-93 Thermistor Source* selects terminal 53 or 54.
- When using digital inputs 18 or 19, check that the thermistor is connected correctly between either terminal 18 or 19 (digital input PNP only) and terminal 50.
- If a KTY sensor is used, check for correct connection between terminals 54 and 55.
- If using a thermal switch or thermistor, check that the programming if *parameter 1-93 Thermistor Source* matches sensor wiring.

WARNING/ALARM 12, Torque limit

The torque has exceeded the value in *parameter 4-16 Torque Limit Motor Mode* or the value in *parameter 4-17 Torque Limit Generator Mode*. *Parameter 14-25 Trip Delay at Torque Limit* can change this from a warning-only condition to a warning followed by an alarm.

Troubleshooting

- If the motor torque limit is exceeded during ramp-up, extend the ramp-up time.
- If the generator torque limit is exceeded during ramp down, extend the ramp-down time.
- If torque limit occurs while running, possibly increase the torque limit. Be sure that the system can operate safely at a higher torque.
- Check the application for excessive current draw on the motor.

WARNING/ALARM 13, Over current

The inverter peak current limit (approximately 200% of the rated current) is exceeded. The warning lasts about 1.5 s, then the frequency converter trips and issues an alarm. Shock loading or fast acceleration with high-inertia loads can cause this fault. If extended mechanical brake control is selected, the trip can be reset externally.

Troubleshooting

- Remove power and check if the motor shaft can be turned.
- Check that the motor size matches the frequency converter.
- Check *parameters 1-20* to *1-25* for correct motor data.

 Danfoss A/S © 10/2016 All rights reserved.

ALARM 14, Earth (ground) fault
There is current from the output phases to ground, either in the cable between the frequency converter and the motor, or in the motor itself.

Troubleshooting

- Remove power from the frequency converter and repair the ground fault.
- Check for ground faults in the motor by measuring the resistance to ground of the motor cables and the motor with a megohmmeter.
- Perform current sensor test.

ALARM 15, Hardware mismatch
A fitted option is not operational with the present control board hardware or software.

Record the value of the following parameters and contact the local Danfoss supplier:

- *Parameter 15-40 FC Type*.
- *Parameter 15-41 Power Section*.
- *Parameter 15-42 Voltage*.
- *Parameter 15-43 Software Version*.
- *Parameter 15-45 Actual Typecode String*.
- *Parameter 15-49 SW ID Control Card*.
- *Parameter 15-50 SW ID Power Card*.
- *Parameter 15-60 Option Mounted*.
- *Parameter 15-61 Option SW Version* (for each option slot).

ALARM 16, Short circuit
There is short-circuiting in the motor or motor wiring.

Troubleshooting

- Remove power from the frequency converter and repair the short circuit.

WARNING/ALARM 17, Control word timeout
There is no communication to the frequency converter. The warning is only active when *parameter 8-04 Control Timeout Function* is NOT set to *[0] Off*.
If *parameter 8-04 Control Timeout Function* is set to *[5] Stop and trip*, a warning appears and the frequency converter ramps down until it trips, then it shows an alarm.

Troubleshooting

- Check the connections on the serial communication cable.
- Increase *parameter 8-03 Control Timeout Time*.
- Check the operation of the communication equipment.
- Verify a proper installation based on EMC requirements.

WARNING/ALARM 22, Hoist mechanical brake
When this warning is active, the LCP shows the type of issue.
0 = The torque ref. was not reached before timeout.
1 = There was no brake feedback before timeout.

WARNING 23, Internal fan fault
The fan warning function is an extra protective function that checks if the fan is running/mounted. The fan warning can be disabled in *parameter 14-53 Fan Monitor* (*[0] Disabled*).

Troubleshooting

- Check the fan resistance.
- Check the soft charge fuses.

WARNING 24, External fan fault
The fan warning function is an extra protective function that checks if the fan is running/mounted. The fan warning can be disabled in *parameter 14-53 Fan Monitor* (*[0] Disabled*).

Troubleshooting

- Check the fan resistance.
- Check the soft charge fuses.

WARNING 25, Brake resistor short circuit
The brake resistor is monitored during operation. If a short circuit occurs, the brake function is disabled and the warning appears. The frequency converter is still operational but without the brake function. Remove power from the frequency converter and replace the brake resistor (see *parameter 2-15 Brake Check*).

WARNING/ALARM 26, Brake resistor power limit
The power transmitted to the brake resistor is calculated as a mean value over the last 120 s of run time. The calculation is based on the DC-link voltage and the brake resistance value set in *parameter 2-16 AC brake Max. Current*. The warning is active when the dissipated braking is higher than 90% of the brake resistance power. If *[2] Trip* is selected in *parameter 2-13 Brake Power Monitoring*, the frequency converter trips when the dissipated braking power reaches 100%.

WARNING/ALARM 27, Brake chopper fault
The brake transistor is monitored during operation. If a short circuit occurs, the brake function is disabled and a warning is issued. The frequency converter is still operational, but since the brake transistor has short-circuited, substantial power is transmitted to the brake resistor, even if it is inactive.
Remove power from the frequency converter and remove the brake resistor.

This alarm/warning could also occur if the brake resistor overheats. Terminals 104 and 106 are available as brake resistor Klixon inputs, see *Brake Resistor Temperature Switch* in the *design guide*.

WARNING/ALARM 28, Brake check failed
The brake resistor is not connected or not working. Check *parameter 2-15 Brake Check*.

Danfoss A/S © 10/2016 All rights reserved.

ALARM 29, Heat Sink temp
The maximum temperature of the heat sink has been exceeded. The temperature fault does not reset until the temperature drops below a defined heatsink temperature. The trip and reset points vary based on the frequency converter power size.

Troubleshooting
Check for the following conditions:

- Ambient temperature too high.
- Motor cable too long.
- Incorrect airflow clearance above and below the frequency converter.
- Blocked airflow around the frequency converter.
- Damaged heat sink fan.
- Dirty heat sink.

This alarm is based on the temperature measured by the heat sink sensor mounted inside the IGBT modules.

Troubleshooting

- Check the fan resistance.
- Check the soft charge fuses.
- Check the IGBT thermal sensor.

ALARM 30, Motor phase U missing
Motor phase U between the frequency converter and the motor is missing.

Troubleshooting

- Remove power from the frequency converter and check motor phase U.

ALARM 31, Motor phase V missing
Motor phase V between the frequency converter and the motor is missing.

Troubleshooting

- Remove power from the frequency converter and check motor phase V.

ALARM 32, Motor phase W missing
Motor phase W between the frequency converter and the motor is missing.

Troubleshooting

- Remove power from the frequency converter and check motor phase W.

ALARM 33, Inrush fault
Too many power-ups have occurred within a short time period. Let the unit cool to operating temperature.

WARNING/ALARM 34, Fieldbus communication fault
The fieldbus on the communication option card is not working.

WARNING/ALARM 36, Mains failure
This warning/alarm is only active if the supply voltage to the frequency converter is lost and *parameter 14-10 Mains Failure* is NOT set to *[0] No Function*.

Troubleshooting

- Check the fuses to the frequency converter and mains power supply to the unit.

ALARM 38, Internal fault
When an internal fault occurs, a code number defined in *Table 7.4* is shown.

Troubleshooting

- Cycle power.
- Check that the option is properly installed.
- Check for loose or missing wiring.

Contact the Danfoss supplier or Danfoss service if necessary. Note the code number for further trouble-shooting directions.

Number	Text
0	The serial port cannot be initialized. Contact the Danfoss supplier or Danfoss Service.
256–258	Power EEPROM data is defective or too old.
512	The control board EEPROM data is defective or too old.
513	Communication timeout reading EEPROM data.
514	Communication timeout reading EEPROM data.
515	Application-oriented control cannot recognize the EEPROM data.
516	Cannot write to the EEPROM because a write command is in progress.
517	Write command is under timeout.
518	Failure in the EEPROM.
519	Missing or invalid barcode data in EEPROM.
783	Parameter value outside of minimum/maximum limits.
1024–1279	Sending a CAN telegram failed.
1281	Digital signal processor flash timeout.
1282	Power micro software version mismatch.
1283	Power EEPROM data version mismatch.
1284	Cannot read digital signal processor software version.
1299	The option SW in slot A is too old.
1300	The option SW in slot B is too old.
1301	The option SW in slot C0 is too old.
1302	The option SW in slot C1 is too old.
1315	The option SW in slot A is not supported (not allowed).
1316	The option SW in slot B is not supported (not allowed).
1317	The option SW in slot C0 is not supported (not allowed).
1318	The option SW in slot C1 is not supported (not allowed).
1379	The option A did not respond when calculating the platform version.
1380	The option B did not respond when calculating the platform version.

Danfoss A/S © 10/2016 All rights reserved.

Number	Text
1381	The option C0 did not respond when calculating the platform version.
1382	The option C1 did not respond when calculating the platform version.
1536	An exception in the application-oriented control is registered. Debug information written in LCP.
1792	The DSP watchdog is active. Debugging of power part data, motor-oriented control data not transferred correctly.
2049	Power data restarted.
2064–2072	H081x: Option in slot x restarted.
2080–2088	H082x: Option in slot x issued a power-up wait.
2096–2104	H983x: Option in slot x issued a legal power-up wait.
2304	Could not read any data from power EEPROM.
2305	Missing SW version from power unit.
2314	Missing power unit data from power unit.
2315	Missing SW version from power unit.
2316	Missing lo_statepage from power unit.
2324	The power card configuration is determined to be incorrect at power-up.
2325	A power card has stopped communicating while main power is applied.
2326	The power card configuration is determined to be incorrect after the delay for power cards to register.
2327	Too many power card locations are registered as present.
2330	Power size information between the power cards does not match.
2561	No communication from DSP to ATACD.
2562	No communication from ATACD to DSP (state running).
2816	Stack overflow control board module.
2817	Scheduler slow tasks.
2818	Fast tasks.
2819	Parameter thread.
2820	LCP stack overflow.
2821	Serial port overflow.
2822	USB port overflow.
2836	cfListMempool too small.
3072–5122	Parameter value is outside its limits.
5123	Option in slot A: Hardware incompatible with control board hardware.
5124	Option in slot B: Hardware incompatible with control board hardware.
5125	Option in slot C0: Hardware incompatible with control board hardware.
5126	Option in slot C1: Hardware incompatible with control board hardware.
5376–6231	Out of memory.

Table 7.4 Code Numbers for Internal Faults

ALARM 39, Heat sink sensor
No feedback from the heat sink temperature sensor.

The signal from the IGBT thermal sensor is not available on the power card. The problem could be in the power card, in the gatedrive card, or the ribbon cable between the power card and the gatedrive card.

WARNING 40, Overload of digital output terminal 27
Check the load connected to terminal 27 or remove the short circuit connection. Check *parameter 5-00 Digital I/O Mode* and *parameter 5-01 Terminal 27 Mode*.

WARNING 41, Overload of digital output terminal 29
Check the load connected to terminal 29 or remove the short circuit connection. Check *parameter 5-00 Digital I/O Mode* and *parameter 5-02 Terminal 29 Mode*.

WARNING 42, Overload of digital output on X30/6 or overload of digital output on X30/7
For X30/6, check the load connected to X30/6 or remove the short circuit connection. Check *parameter 5-32 Term X30/6 Digi Out (MCB 101)*.

For X30/7, check the load connected to X30/7 or remove the short circuit connection. Check *parameter 5-33 Term X30/7 Digi Out (MCB 101)*.

ALARM 46, Power card supply
The supply on the power card is out of range.

There are 3 supplies powered by the switch mode power supply (SMPS) on the power card: 24 V, 5 V, ±18 V. When powered with 24 V DC with the VLT® 24V DC Supply MCB 107 option, only the 24 V and 5 V supplies are monitored. When powered with 3-phase mains voltage, all 3 supplies are monitored.

WARNING 47, 24 V supply low
The 24 V DC supply is measured on the control card. The external 24 V DC back-up supply may be overloaded, otherwise contact the Danfoss supplier.

WARNING 48, 1.8 V supply low
The 1.8 V DC supply used on the control card is outside of the allowable limits. The supply is measured on the control card. Check for a defective control card. If an option card is present, check for an overvoltage condition.

WARNING 49, Speed limit
When the speed is not within the specified range in *parameter 4-11 Motor Speed Low Limit [RPM]* and *parameter 4-13 Motor Speed High Limit [RPM]*, the frequency converter shows a warning. When the speed is below the specified limit in *parameter 1-86 Trip Speed Low [RPM]* (except when starting or stopping) the frequency converter trips.

ALARM 50, AMA calibration failed
Contact the Danfoss supplier or Danfoss Service.

ALARM 51, AMA check U_{nom} and I_{nom}
The settings for motor voltage, motor current, and motor power are wrong. Check the settings in *parameters 1-20* to *1-25*.

Danfoss A/S © 10/2016 All rights reserved.

ALARM 52, AMA low I_{nom}
The motor current is too low. Check the settings.

ALARM 53, AMA motor too big
The motor is too big for the AMA to operate.

ALARM 54, AMA motor too small
The motor is too small for the AMA to operate.

ALARM 55, AMA parameter out of range
The parameter values of the motor are outside of the acceptable range. AMA does not run.

ALARM 56, AMA interrupted by user
The user has interrupted the AMA.

ALARM 57, AMA internal fault
Try to restart AMA several times, until the AMA is carried out. Repeated runs may heat the motor to a level where the resistance R_s and R_r are increased. Usually this is not critical.

7

ALARM 58, AMA Internal fault
Contact the Danfoss supplier.

WARNING 59, Current limit
The current is higher than the value in *parameter 4-18 Current Limit*. Ensure that motor data in parameters *1-20* to *1-25* are set correctly. Possibly increase the current limit. Be sure that the system can operate safely at a higher limit.

WARNING 60, External interlock
External interlock has been activated. To resume normal operation:

1. Apply 24 V DC to the terminal programmed for external interlock.
2. Reset the frequency converter via
   - 2a Serial communication.
   - 2b Digital I/O.
   - 2c The [Reset] key.

WARNING 62, Output frequency at maximum limit
The output frequency is higher than the value set in *parameter 4-19 Max Output Frequency*.

WARNING 64, Voltage Limit
The load and speed combination demands a motor voltage higher than the actual DC-link voltage.

WARNING/ALARM 65, Control card over temperature
The control card has reached its trip temperature of 75 °C (167 °F).

WARNING 66, Heat sink temperature low
The frequency converter is too cold to operate. This warning is based on the temperature sensor in the IGBT module. Also, a trickle amount of current can be supplied to the frequency converter whenever the motor is stopped by setting *parameter 2-00 DC Hold/Preheat Current* at 5% and *parameter 1-80 Function at Stop*.

Troubleshooting
- Check the temperature sensor.
- Check the sensor wire between the IGBT and the gatedrive card.

ALARM 67, Option module configuration has changed
One or more options have either been added or removed since the last power-down. Check that the configuration change is intentional and reset the unit.

ALARM 68, Safe Stop activated
STO is activated.

Troubleshooting
- To resume normal operation, apply 24 V DC to terminal 37, then send a reset signal (via bus, digital I/O, or by pressing [Reset]).

ALARM 69, Power card temperature
The temperature sensor on the power card is either too hot or too cold.

Troubleshooting
- Check the operation of the door fans.
- Check that the filters for the door fans are not blocked.
- Check that the gland plate is properly installed on IP21/IP54 (NEMA 1/12) frequency converters.

ALARM 70, Illegal FC configuration
The control card and power card are incompatible.

Troubleshooting
- Contact the supplier with the type code of the unit from the nameplate and the part numbers of the cards to check compatibility.

ALARM 71, PTC 1 safe stop
Safe Torque Off is activated from the VLT® PTC Thermistor Card MCB 112 (motor too warm). Normal operation can be resumed when the MCB 112 applies 24 V DC to T37 again (when the motor temperature reaches an acceptable level) and when the digital input from the MCB 112 is deactivated. When that happens, a reset signal must be is be sent (via bus, digital I/O, or by pressing [Reset]).

NOTICE

If automatic restart is enabled, the motor may start when the fault is cleared.

ALARM 72, Dangerous failure
Safe Torque Off (STO) with trip lock. Unexpected signal levels on Safe Torque Off (STO) and digital input from the VLT® PTC Thermistor Card MCB 112.

WARNING 73, Safe Stop auto restart
Safe Torque Off (STO). With automatic restart enabled, the motor can start when the fault is cleared.

Danfoss A/S © 10/2016 All rights reserved.

WARNING 76, Power unit setup
The required number of power units does not match the detected number of active power units. When replacing an enclosure size F module, this warning occurs if the power-specific data in the module power card does not match the rest of the frequency converter. If the power card connection is lost, the unit also triggers this warning.

Troubleshooting
- Confirm that the spare part and its power card are the correct part number.
- Ensure that the 44-pin cables between the MDCIC and power cards are mounted properly.

WARNING 77, Reduced power mode
This warning indicates that the frequency converter is operating in reduced power mode (that is, less than the allowed number of inverter sections). This warning is generated on power cycle when the frequency converter is set to run with fewer inverters and remains on.

ALARM 79, Illegal power section configuration
The scaling card is the incorrect part number or not installed. Also, the MK102 connector on the power card could not be installed.

ALARM 80, Drive initialised to default value
Parameter settings are initialized to default settings after a manual reset.

Troubleshooting
- Reset the unit to clear the alarm.

ALARM 81, CSIV corrupt
CSIV (Customer-specific initialization values) file has syntax errors.

ALARM 82, CSIV parameter error
CSIV (Customer-specific initialization values) failed to initialize a parameter.

ALARM 85, Dang fail PB
PROFIBUS/PROFIsafe error.

ALARM 92, No flow
A no-flow condition is detected in the system. *Parameter 22-23 No-Flow Function* is set for alarm.

Troubleshooting
- Troubleshoot the system and reset the frequency converter after clearing the fault.

ALARM 93, Dry pump
A no-flow condition in the system with the frequency converter operating at high speed can indicate a dry pump. *Parameter 22-26 Dry Pump Function* is set for alarm.

Troubleshooting
- Troubleshoot the system and reset the frequency converter after clearing the fault.

ALARM 94, End of curve
The feedback is lower than the setpoint. This condition can indicate leakage in the system. *Parameter 22-50 End of Curve Function* is set for alarm.

Troubleshooting
- Troubleshoot the system and reset the frequency converter after clearing the fault.

ALARM 95, Broken belt
Torque is below the torque level set for no load, indicating a broken belt. *Parameter 22-60 Broken Belt Function* is set for alarm.

Troubleshooting
- Troubleshoot the system and reset the frequency converter after clearing the fault.

ALARM 100, Derag limit fault
The *Deragging* feature failed during execution. Check the pump impeller for blockage.

WARNING/ALARM 104, Mixing fan fault
The fan monitor checks that the fan is spinning at frequency converter power-up or whenever the mixing fan is turned on. If the fan is not operating, the fault is issued. The mixing-fan fault can be configured as a warning or an alarm trip by *parameter 14-53 Fan Monitor*.

Troubleshooting
- Cycle power to the frequency converter to determine if the warning/alarm returns.

WARNING 250, New spare part
A component in the frequency converter has been replaced. To resume normal operation, reset the frequency converter.

WARNING 251, New typecode
The power card or other components have been replaced and the type code changed.

Troubleshooting
- Reset to remove the warning and resume normal operation.

Danfoss A/S © 10/2016 All rights reserved.

7.5 Troubleshooting

Symptom	Possible cause	Test	Solution
Display dark/No function	Missing input power.	See *Table 4.3*.	Check the input power source.
	Missing or open fuses, or circuit breaker tripped.	See *Open fuses and tripped circuit breaker* in this table for possible causes.	Follow the recommendations provided.
	No power to the LCP.	Check the LCP cable for proper connection or damage.	Replace the faulty LCP or connection cable.
	Shortcut on control voltage (terminal 12 or 50) or at control terminals.	Check the 24 V control voltage supply for terminals 12/13 to 20-39 or 10 V supply for terminals 50–55.	Wire the terminals properly.
	Incompatible LCP (LCP from VLT® 2800 or 5000/6000/8000/ FCD or FCM).	–	Use only LCP 101 (P/N 130B1124) or LCP 102 (P/N 130B1107).
	Wrong contrast setting.	–	Press [Status] + [▲]/[▼] to adjust the contrast.
	Display (LCP) is defective.	Test using a different LCP.	Replace the faulty LCP or connection cable.
	Internal voltage supply fault or SMPS is defective.	–	Contact supplier.
Intermittent display	Overloaded supply (SMPS) due to improper control wiring or a fault within the frequency converter.	To rule out a problem in the control wiring, disconnect all control wiring by removing the terminal blocks.	If the display stays lit, the problem is in the control wiring. Check the wiring for short circuits or incorrect connections. If the display continues to cut out, follow the procedure for display dark.
Motor not running	Service switch is open or missing motor connection.	Check if the motor is connected and the connection is not interrupted (by a service switch or other device).	Connect the motor and check the service switch.
	No mains power with 24 V DC option card.	If the display is functioning but no output, check that mains power is applied to the frequency converter.	Apply mains power to run the unit.
	LCP stop.	Check if [Off] has been pressed.	Press [Auto On] or [Hand On] (depending on operating mode) to run the motor.
	Missing start signal (Standby).	Check *parameter 5-10 Terminal 18 Digital Input* for correct setting for terminal 18 (use default setting).	Apply a valid start signal to start the motor.
	Motor coast signal active (Coasting).	Check *parameter 5-12 Terminal 27 Digital Input* for correct setting for terminal 27 (use default setting).	Apply 24 V on terminal 27 or program this terminal to *No operation*.
	Wrong reference signal source.	Check the following: • Reference signal: Local, remote, or bus reference. • Preset reference. • Terminal connection. • Scaling of terminals. • Reference signal availability.	Program the correct settings. Check *parameter 3-13 Reference Site*. Set preset reference active in *parameter group 3-1* References*.
Motor running in wrong direction	Motor rotation limit.	Check that *parameter 4-10 Motor Speed Direction* is programmed correctly.	Program the correct settings.
	Active reversing signal.	Check if a reversing command is programmed for the terminal in *parameter group 5-1* Digital inputs*.	Deactivate reversing signal.
	Wrong motor phase connection.	–	See *chapter 5.5 Checking Motor Rotation*.

Danfoss A/S © 10/2016 All rights reserved.

Symptom	Possible cause	Test	Solution
Motor is not reaching maximum speed	Frequency limits are set incorrectly.	Check the output limits in *parameter 4-13 Motor Speed High Limit [RPM]*, *parameter 4-14 Motor Speed High Limit [Hz]* and *parameter 4-19 Max Output Frequency*.	Program the correct limits.
	Reference input signal is not scaled correctly.	Check the reference input signal scaling in *parameter group 6-0* Analog I/O Mode* and *parameter group 3-1* References*. Check the reference limits in *parameter group 3-0* Reference Limit*.	Program the correct settings.
Motor speed unstable	Possible incorrect parameter settings.	Check the settings of all motor parameters, including all motor compensation settings. For closed-loop operation, check the PID settings.	Check the settings in *parameter group 1-6* Load Depen. Setting*. For closed-loop operation, check the settings in *parameter group 20-0* Feedback*.
Motor runs rough	Possible overmagnetization.	Check for incorrect motor settings in all motor parameters.	Check the motor settings in *parameter groups 1-2* Motor Data, 1-3* Adv Motor Data*, and *1-5* Load Indep. Setting*.
Motor does not brake	Possible incorrect settings in the brake parameters. Possible too short ramp-down times.	Check the brake parameters. Check the ramp time settings.	Check *parameter groups 2-0* DC Brake* and *3-0* Reference Limits*.
Open power fuses or circuit breaker trip	Phase-to-phase short circuit.	The motor or panel has a short phase-to-phase. Check the motor and panel phase for short circuits.	Eliminate any short circuits detected.
	Motor overload.	Motor is overloaded for the application.	Perform a start-up test and verify that the motor current is within the specifications. If the motor current exceeds the nameplate full load current, the motor may run only with reduced load. Review the specifications for the application.
	Loose connections.	Perform a pre-startup check for loose connections.	Tighten any loose connections.
Mains current imbalance >3%	Problem with the mains power (See *alarm 4, Mains phase loss* description).	Rotate input power leads into the frequency converter 1 position: A to B, B to C, C to A.	If imbalanced leg follows the wire, it is a power problem. Check the mains supply.
	Problem with the frequency converter.	Rotate input power leads into the frequency converter 1 position: A to B, B to C, C to A.	If imbalance leg stays on the same input terminal, it is a problem with the unit. Contact the supplier.
Motor current imbalance >3%	Problem with the motor or motor wiring.	Rotate output motor cables 1 position: U to V, V to W, W to U.	If imbalanced leg follows the wire, the problem is in the motor or motor wiring. Check the motor and motor wiring.
	Problem with the frequency converter.	Rotate output motor cables 1 position: U to V, V to W, W to U.	If imbalance leg stays on same output terminal, it is a problem with the frequency converter. Contact the Danfoss supplier.
Frequency converter acceleration problems	Motor data was entered incorrectly.	If warnings or alarms occur, see *chapter 7.4 List of Warnings and Alarms*. Check that motor data is entered correctly.	Increase the ramp-up time in *parameter 3-41 Ramp 1 Ramp Up Time*. Increase the current limit in *parameter 4-18 Current Limit*. Increase the torque limit in *parameter 4-16 Torque Limit Motor Mode*.
Frequency converter deceleration problems	Motor data was entered incorrectly.	If warnings or alarms occur, see *chapter 7.4 List of Warnings and Alarms*. Check that motor data is entered correctly.	Increase the ramp-down time in *parameter 3-42 Ramp 1 Ramp Down Time*. Enable overvoltage control in *parameter 2-17 Over-voltage Control*.

Danfoss A/S © 10/2016 All rights reserved.

Symptom	Possible cause	Test	Solution
Acoustic noise or vibration	Resonances.	Bypass critical frequencies by using parameters in *parameter group 4-6* Speed Bypass*.	Check if noise and/or vibration have been reduced to an acceptable limit.
		Turn off overmodulation in *parameter 14-03 Overmodulation*.	
		Change the switching pattern and frequency in *parameter group 14-0* Inverter Switching*.	
		Increase resonance dampening in *parameter 1-64 Resonance Damping*.	

Table 7.5 Troubleshooting

7

Danfoss A/S © 10/2016 All rights reserved.

8 Specifications

8.1 Electrical Data

8.1.1 Mains Supply 1x200–240 V AC

Type designation	P1K1	P1K5	P2K2	P3K0	P3K7	P5K5	P7K5	P15K	P22K
Typical shaft output [kW]	1.1	1.5	2.2	3.0	3.7	5.5	7.5	15	22
Typical shaft output at 240 V [hp]	1.5	2.0	2.9	4.0	4.9	7.5	10	20	30
Protection rating IP20/Chassis	A3	–	–	–	–	–	–	–	–
Protection rating IP21/Type 1	–	B1	B1	B1	B1	B1	B2	C1	C2
Protection rating IP55/Type 12	A5	B1	B1	B1	B1	B1	B2	C1	C2
Protection rating IP66/NEMA 4X	A5	B1	B1	B1	B1	B1	B2	C1	C2
Output current									
Continuous (3x200–240 V) [A]	6.6	7.5	10.6	12.5	16.7	24.2	30.8	59.4	88
Intermittent (3x200–240 V) [A]	7.3	8.3	11.7	13.8	18.4	26.6	33.4	65.3	96.8
Continuous kVA at 208 V [kVA]	2.4	2.7	3.8	4.5	6.0	8.7	11.1	21.4	31.7
Maximum input current									
Continuous (1x200–240 V) [A]	12.5	15	20.5	24	32	46	59	111	172
Intermittent (1x200–240 V) [A]	13.8	16.5	22.6	26.4	35.2	50.6	64.9	122.1	189.2
Maximum pre-fuses [A]	20	30	40	40	60	80	100	150	200
Additional specifications									
Maximum cable cross-section (mains, motor, brake) [mm^2 (AWG)]	0.2–4 (4–10)					10 (7)	35 (2)	50 (1/0)	95 (4/0)
Maximum cable cross-section for mains with disconnect switch [mm2 (AWG)]	5.26 (10)	16 (6)	16 (6)	16 (6)	16 (6)	16 (6)	25 (3)	50 (1/0)	2 x 50 (2 x 1/0)[9) 10)]
Maximum cable cross-section for mains without disconnect switch [mm2 (AWG)]	5.26 (10)	16 (6)	16 (6)	16 (6)	16 (6)	16 (6)	25 (3)	50 (1/0)	95 (4/0)
Cable insulation temperature rating [°C (°F)]	75 (167)	75 (167)	75 (167)	75 (167)	75 (167)	75 (167)	75 (167)	75 (167)	75 (167)
Estimated power loss[3)] at rated maximum load [W][4)]	44	30	44	60	74	110	150	300	440
Efficiency[5)]	0.98	0.98	0.98	0.98	0.98	0.98	0.98	0.98	0.98

Table 8.1 Mains Supply 1x200–240 V AC, Normal Overload 110% for 1 Minute, P1K1–P22K

8

Danfoss A/S © 10/2016 All rights reserved.

8.1.2 Mains Supply 3x200–240 V AC

Type designation	PK25		PK37		PK55		PK75	
High/normal overload[1]	HO	NO	HO	NO	HO	NO	HO	NO
Typical shaft output [kW]	0.25		0.37		0.55		0.75	
Typical shaft output at 208 V [hp]	0.34		0.5		0.75		1	
Protection rating IP20/Chassis[6] Protection rating IP21/Type 1	A2		A2		A2		A2	
Protection rating IP55/Type 12 Protection rating IP66/NEMA 4X	A4/A5		A4/A5		A4/A5		A4/A5	
Output current								
Continuous (3x200–240 V) [A]	1.8		2.4		3.5		4.6	
Intermittent (3x200–240 V) [A]	2.7	2.0	3.6	2.6	5.3	3.9	6.9	5.1
Continuous kVA at 208 V [kVA]	0.65		0.86		1.26		1.66	
Maximum input current								
Continuous (3x200–240 V) [A]	1.6		2.2		3.2		4.1	
Intermittent (3x200–240 V) [A]	2.4	1.8	3.3	2.4	4.8	3.5	6.2	4.5
Maximum pre-fuses [A]	10		10		10		10	
Additional specifications								
Maximum cable cross-section[2] for mains, motor, brake, and load sharing [mm² (AWG)]	4, 4, 4 (12, 12, 12) (minimum 0.2 (24))							
Maximum cable cross-section[2] for mains disconnect [mm² (AWG)]	6, 4, 4 (10, 12, 12)							
Estimated power loss[3] at rated maximum load [W (hp)][4]	21 (0.03)		29 (0.04)		42 (0.06)		54 (0.07)	
Efficiency[5]	0.94		0.94		0.95		0.95	

Table 8.2 Mains Supply 3x200–240 V AC, PK25–PK75

Type designation	P1K1		P1K5		P2K2		P3K0		P3K7	
High/normal overload[1]	HO	NO	HO	NO	HO	NO	HO	NO	HO	NO
Typical shaft output [kW]	1.1		1.5		2.2		3.0		3.7	
Typical shaft output at 208 V [hp]	1.5		2		3		4		5	
Protection rating IP20/Chassis[6] Protection rating IP21/Type 1	A2		A2		A2		A3		A3	
Protection rating IP55/Type 12 Protection rating IP66/NEMA 4X	A4/A5		A4/A5		A4/A5		A5		A5	
Output current										
Continuous (3x200–240 V) [A]	6.6		7.5		10.6		12.5		16.7	
Intermittent (3x200–240 V) [A]	9.9	7.3	11.3	8.3	15.9	11.7	18.8	13.8	25	18.4
Continuous kVA at 208 V [kVA]	2.38		2.70		3.82		4.50		6.00	
Maximum input current										
Continuous (3x200–240 V) [A]	5.9		6.8		9.5		11.3		15.0	
Intermittent (3x200–240 V) [A]	8.9	6.5	10.2	7.5	14.3	10.5	17.0	12.4	22.5	16.5
Maximum pre-fuses [A]	20		20		20		32		32	
Additional specifications										
Maximum cable cross-section[2] for mains, motor, brake, and load sharing [mm² (AWG)]	4, 4, 4 (12, 12, 12) (minimum 0.2 (24))									
Maximum cable cross-section[2] for mains disconnect [mm²] [(AWG)]	6, 4, 4 (10, 12, 12)									
Estimated power loss[3] at rated maximum load [W (hp)][4]	63 (0.09)		82 (0.11)		116 (0.16)		155 (0.21)		185 (0.25)	
Efficiency[5]	0.96		0.96		0.96		0.96		0.96	

Table 8.3 Mains Supply 3x200–240 V AC, P1K1–P3K7

Danfoss A/S © 10/2016 All rights reserved.

Type designation	P5K5		P7K5		P11K		P15K	
High/normal overload[1]	HO	NO	HO	NO	HO	NO	HO	NO
Typical shaft output [kW]	3.7	5.5	5.5	7.5	7.5	11	11	15
Typical shaft output at 208 V [hp]	5.0	7.5	7.5	10	10	15	15	20
IP20/Chassis[7]	B3		B3		B3		B4	
Protection rating IP21/Type 1 Protection rating IP55/Type 12 Protection rating IP66/NEMA 4X	B1		B1		B1		B2	
Output current								
Continuous (3x200–240 V) [A]	16.7	24.2	24.2	30.8	30.8	46.2	46.2	59.4
Intermittent (3x200–240 V) [A]	26.7	26.6	38.7	33.9	49.3	50.8	73.9	65.3
Continuous kVA at 208 V [kVA]	6.0	8.7	8.7	11.1	11.1	16.6	16.6	21.4
Maximum input current								
Continuous (3x200–240 V) [A]	15.0	22.0	22.0	28.0	28.0	42.0	42.0	54.0
Intermittent (3x200–240 V) [A]	24.0	24.2	35.2	30.8	44.8	46.2	67.2	59.4
Maximum pre-fuses [A]	63		63		63		80	
Additional specifications								
IP20 maximum cable cross-section[2] for mains, brake, motor, and load sharing [mm² (AWG)]	10, 10, – (8, 8, –)		10, 10, – (8, 8, –)		10, 10, – (8, 8, –)		35, –, – (2, –, –)	
Protection rating IP21 maximum cable cross-section[2] for mains, brake, and load sharing [mm² (AWG)]	16, 10, 16 (6, 8, 6)		16, 10, 16 (6, 8, 6)		16, 10, 16 (6, 8, 6)		35, –, – (2, –, –)	
Protection rating IP21 maximum cable cross-section[2] for motor [mm² (AWG)]	10, 10, – (8, 8, –)		10, 10, – (8, 8, –)		10, 10, – (8, 8, –)		35, 25, 25 (2, 4, 4)	
Maximum cable cross-section[2] for mains disconnect [mm² (AWG)]	16, 10, 10 (6, 8, 8)						35 (2)	
Estimated power loss[3] at rated maximum load [W (hp)][4]	239 (0.33)	310 (0.42)	239 (0.33)	310 (0.42)	371 (0.51)	514 (0.7)	463 (0.63)	602 (0.82)
Efficiency[5]	0.96		0.96		0.96		0.96	

Table 8.4 Mains Supply 3x200–240 V AC, P5K5–P15K

8

Danfoss A/S © 10/2016 All rights reserved.

Type designation	P18K		P22K		P30K		P37K		P45K	
High/normal overload[1]	HO	NO	HO	NO	HO	NO	HO	NO	HO	NO
Typical shaft output [kW]	15	18.5	18.5	22	22	30	30	37	37	45
Typical shaft output at 208 V [hp]	20	25	25	30	30	40	40	50	50	60
Protection rating IP20/Chassis[7]	B4		C3		C3		C4		C4	
Protection rating IP21/Type 1 Protection rating IP55/Type 12 Protection rating IP66/NEMA 4X	C1		C1		C1		C2		C2	
Output current										
Continuous (3x200–240 V) [A]	59.4	74.8	74.8	88.0	88.0	115	115	143	143	170
Intermittent (3x200–240 V) [A]	89.1	82.3	112	96.8	132	127	173	157	215	187
Continuous kVA at 208 V [kVA]	21.4	26.9	26.9	31.7	31.7	41.4	41.4	51.5	51.5	61.2
Maximum input current										
Continuous (3x200–240 V) [A]	54.0	68.0	68.0	80.0	80.0	104	104	130	130	154.0
Intermittent (3x200–240 V) [A]	81.0	74.8	102	88.0	120	114	156	143	195	169.0
Maximum pre-fuses [A]	125		125		160		200		250	
Additional specifications										
Protection rating IP20 maximum cable cross-section for mains, brake, motor, and load sharing [mm² (AWG)]	35 (2)		50 (1)		50 (1)		150 (300 MCM)		150 (300 MCM)	
Protection ratings IP21, IP55, IP66 maximum cable cross-section for mains and motor [mm² (AWG)]	50 (1)		50 (1)		50 (1)		150 (300 MCM)		150 (300 MCM)	
Protection ratings IP21, IP55, IP66 maximum cable cross-section for brake, and load sharing [mm² (AWG)]	50 (1)		50 (1)		50 (1)		95 (3/0)		95 (3/0)	
Maximum cable cross-section[2] for disconnect [mm² (AWG)]	50, 35, 35 (1, 2, 2)						95, 70, 70 (3/0, 2/0, 2/0)		185, 150, 120 (350 MCM, 300 MCM, 4/0)	
Estimated power loss[3] at rated maximum load [W (hp)][4]	624 (0.85)	737 (1)	740 (1)	845 (1.2)	874 (1.2)	1140 (1.6)	1143 (1.6)	1353 (1.8)	1400 (1.9)	1636 (2.2)
Efficiency[5]	0.96		0.97		0.97		0.97		0.97	

Table 8.5 Mains Supply 3x200–240 V AC, P18K–P45K

8.1.3 Mains Supply 1x380–480 V AC

Type designation	P7K5	P11K	P18K	P37K
Typical shaft output [kW]	7.5	11	18.5	37
Typical shaft output at 240 V [hp]	10	15	25	50
Protection rating IP21/Type 1	B1	B2	C1	C2
Protection rating IP55/Type 12	B1	B2	C1	C2
Protection rating IP66/NEMA 4X	B1	B2	C1	C2
Output current				
Continuous (3x380–440 V) [A]	16	24	37.5	73
Intermittent (3x380–440 V) [A]	17.6	26.4	41.2	80.3
Continuous (3x441–480 V) [A]	14.5	21	34	65
Intermittent (3x441–480 V) [A]	15.4	23.1	37.4	71.5
Continuous kVA at 400 V [kVA]	11.0	16.6	26	50.6
Continuous kVA at 460 V [kVA]	11.6	16.7	27.1	51.8
Maximum input current				
Continuous (1x380–440 V) [A]	33	48	78	151
Intermittent (1x380–440 V) [A]	36	53	85.5	166

Danfoss A/S © 10/2016 All rights reserved.

Type designation	P7K5	P11K	P18K	P37K
Continuous (1x441–480 V) [A]	30	41	72	135
Intermittent (1x441–480 V) [A]	33	46	79.2	148
Maximum pre-fuses [A]	63	80	160	250
Additional specifications				
Maximum cable cross-section for mains, motor, and brake [mm^2] (AWG)]	10 (7)	35 (2)	50 (1/0)	120 (4/0)
Estimated power loss[3] at rated maximum load [W (hp)][4]	300 (0.41)	440 (0.6)	740 (1)	1480 (2)
Efficiency[5]	0.96	0.96	0.96	0.96

Table 8.6 Mains Supply 1x380–480 V AC, Normal Overload 110% for 1 Minute, P7K5–P37K

8.1.4 Mains Supply 3x380–480 V AC

Type designation	PK37		PK55		PK75		P1K1		P1K5	
High/normal overload[1]	HO	NO	HO	NO	HO	NO	HO	NO	HO	NO
Typical shaft output [kW]	0.37		0.55		0.75		1.1		1.5	
Typical shaft output at 460 V [hp]	0.5		0.75		1.0		1.5		2.0	
Protection rating IP20/Chassis[6]	A2		A2		A2		A2		A2	
Protection rating IP55/Type 12 Protection rating IP66/NEMA 4X	A4/A5		A4/A5		A4/A5		A4/A5		A4/A5	
Output current										
Continuous (3x380–440 V) [A]	1.3		1.8		2.4		3.0		4.1	
Intermittent (3x380–440 V) [A]	2.0	1.4	2.7	2.0	3.6	2.6	4.5	3.3	6.2	4.5
Continuous (3x441–480 V) [A]	1.2		1.6		2.1		2.7		3.4	
Intermittent (3x441–480 V) [A]	1.8	1.3	2.4	1.8	3.2	2.3	4.1	3.0	5.1	3.7
Continuous kVA at 400 V [kVA]	0.9		1.3		1.7		2.1		2.8	
Continuous kVA at 460 V [kVA]	0.9		1.3		1.7		2.4		2.7	
Maximum input current										
Continuous (3x380–440 V) [A]	1.2		1.6		2.2		2.7		3.7	
Intermittent (3x380–440 V) [A]	1.8	1.3	2.4	1.8	3.3	2.4	4.1	3.0	5.6	4.1
Continuous (3x441–480 V) [A]	1.0		1.4		1.9		2.7		3.1	
Intermittent (3x441–480 V) [A]	1.5	1.1	2.1	1.5	2.9	2.1	4.1	3.0	4.7	3.4
Maximum pre-fuses [A]	10		10		10		10		10	
Additional specifications										
Protection ratings IP20, IP21 maximum cable cross-section[2] for mains, motor, brake, and load sharing [mm^2 (AWG)]	4, 4, 4 (12, 12, 12) (minimum 0.2 (24))									
Protection ratings IP55, IP66 maximum cable cross-section[2] for mains, motor, brake, and load sharing [mm^2 (AWG)]	4, 4, 4 (12, 12, 12)									
Maximum cable cross-section[2] for disconnect [mm^2 (AWG)]	6, 4, 4 (10, 12, 12)									
Estimated power loss[3] at rated maximum load [W (hp)][4]	35 (0.05)		42 (0.06)		46 (0.06)		58 (0.08)		62 (0.08)	
Efficiency[5]	0.93		0.95		0.96		0.96		0.97	

Table 8.7 Mains Supply 3x380–480 V AC, PK37–P1K5

8

Danfoss A/S © 10/2016 All rights reserved.

Type designation	P2K2		P3K0		P4K0		P5K5		P7K5	
High/normal overload[1)]	HO	NO	HO	NO	HO	NO	HO	NO	HO	NO
Typical shaft output [kW]	2.2		3.0		4.0		5.5		7.5	
Typical shaft output at 460 V [hp]	2.9		4.0		5.3		7.5		10	
Protection rating IP20/Chassis[6)]	A2		A2		A2		A3		A3	
Protection rating IP55/Type 12 Protection rating IP66/NEMA 4X	A4/A5		A4/A5		A4/A5		A5		A5	
Output current										
Continuous (3x380–440 V) [A]	5.6		7.2		10		13		16	
Intermittent (3x380–440 V) [A]	8.4	6.2	10.8	7.9	15.0	11.0	19.5	14.3	24.0	17.6
Continuous (3x441–480 V) [A]	4.8		6.3		8.2		11		14.5	
Intermittent (3x441–480 V) [A]	7.2	5.3	9.5	6.9	12.3	9.0	16.5	12.1	21.8	16.0
Continuous kVA at 400 V [kVA]	3.9		5.0		6.9		9.0		11.0	
Continuous kVA at 460 V [kVA]	3.8		5.0		6.5		8.8		11.6	
Maximum input current										
Continuous (3x380–440 V) [A]	5.0		6.5		9.0		11.7		14.4	
Intermittent (3x380–440 V) [A]	7.5	5.5	9.8	7.2	13.5	9.9	17.6	12.9	21.6	15.8
Continuous(3x441–480 V) [A]	4.3		5.7		7.4		9.9		13.0	
Intermittent (3x441–480 V) [A]	6.5	4.7	8.6	6.3	11.1	8.1	14.9	10.9	19.5	14.3
Maximum pre-fuses [A]	20		20		20		30		30	
Additional specifications										
Protection ratings IP20, IP21 maximum cable cross-section[2)] for mains, motor, brake, and load sharing [mm^2 (AWG)]	4, 4, 4 (12, 12, 12) (minimum 0.2 (24))									
Protection ratings IP55, IP66 maximum cable cross-section[2)] for mains, motor, brake, and load sharing [mm^2 (AWG)]	4, 4, 4 (12, 12, 12)									
Maximum cable cross-section[2)] for disconnect [mm^2 (AWG)]	6, 4, 4 (10, 12, 12)									
Estimated power loss[3)] at rated maximum load [W (hp)][4)]	88 (0.12)		116 (0.16)		124 (0.17)		187 (0.25)		225 (0.31)	
Efficiency[5)]	0.97		0.97		0.97		0.97		0.97	

Table 8.8 Mains Supply 3x380–480 V AC, P2K2–P7K5

8

Danfoss A/S © 10/2016 All rights reserved.

Type designation	P11K		P15K		P18K		P22K		P30K	
High/normal overload[1]	HO	NO	HO	NO	HO	NO	HO	NO	HO	NO
Typical shaft output [kW]	7.5	11	11	15	15	18.5	22.0	22.0	22.0	30
Typical shaft output at 460 V [hp]	10	15	15	20	20	25	30	30	30	40
Protection rating IP20/Chassis[7]	B3		B3		B3		B4			B4
Protection rating IP21/Type 1	B1		B1		B1		B2		B2	
Protection rating IP55/Type 12 Protection rating IP66/NEMA 4X	B1		B1		B1		B2		B2	
Output current										
Continuous (3x380–440 V) [A]	–	24	24	32	32	37.5	37.5	44	44	61
Intermittent (60 s overload) (3x380–440 V) [A]	–	26.4	38.4	35.2	51.2	41.3	60	48.4	70.4	67.1
Continuous (3x441–480 V) [A]	–	21	21	27	27	34	34	40	40	52
Intermittent (60 s overload) (3x441–480 V) [A]	–	23.1	33.6	29.7	43.2	37.4	54.4	44	64	61.6
Continuous kVA at 400 V [kVA]	–	16.6	16.6	22.2	22.2	26	26	30.5	30.5	42.3
Continuous kVA at 460 V [kVA]	–	16.7	16.7	21.5	21.5	27.1	27.1	31.9	31.9	41.4
Maximum input current										
Continuous (3x380–440 V) [A]	–	22	22	29	29	34	34	40	40	55
Intermittent (60 s overload) (3x380–440 V) [A]	–	24.2	35.2	31.9	46.4	37.4	54.4	44	64	60.5
Continuous (3x441–480 V) [A]	–	19	19	25	25	31	31	36	36	47
Intermittent (60 s overload) (3x441–480 V) [A]	–	20.9	30.4	27.5	40	34.1	49.6	39.6	57.6	51.7
Maximum pre-fuses [A]	–	63		63		63		63		80
Additional specifications										
Protection ratings IP21, IP55, IP66 maximum cable cross-section[2] for mains, brake, and load sharing [mm^2 (AWG)]	16, 10, 16 (6, 8, 6)						35, –, – (2, –, –)			
Protection ratings IP21, IP55, IP66 maximum cable cross-section[2] for motor [mm^2 (AWG)]	10, 10,– (8, 8,–)						35, 25, 25 (2, 4, 4)			
Protection rating IP20 maximum cable cross-section[2] for mains, brake, motor, and load sharing [mm^2 (AWG)]	10, 10,– (8, 8,–)						35, –, – (2, –, –)			
Maximum cable cross-section[2] for disconnect [mm^2 (AWG)]	16, 10, 10 (6, 8, 8)									
Estimated power loss[3] at rated maximum load [W (hp)][4]	291 (0.4)	392 (0.53)	291 (0.4)	392 (0.53)	379 (0.52)	465 (0.63)	444 (0.61)	525 (0.72)	547 (0.75)	739 (1)
Efficiency[5]	0.98		0.98		0.98		0.98		0.98	

Table 8.9 Mains Supply 3x380–480 V AC, P11K–P30K

Danfoss A/S © 10/2016 All rights reserved.

Type designation	P37K		P45K		P55K		P75K		P90K	
High/normal overload[1]	HO	NO	HO	NO	HO	NO	HO	NO	HO	NO
Typical shaft output [kW]	30	37	37	45	45	55	55	75	75	90
Typical shaft output at 460 V [hp]	40	50	50	60	60	75	75	100	100	125
Protection rating IP20/Chassis[6]	B4		C3		C3		C4		C4	
Protection rating IP21/Type 1	C1		C1		C1		C2		C2	
Protection rating IP55/Type 12 Protection rating IP66/NEMA 4X	C1		C1		C1		C2		C2	
Output current										
Continuous (3x380–440 V) [A]	61	73	73	90	90	106	106	147	147	177
Intermittent (60 s overload) (3x380–440 V) [A]	91.5	80.3	110	99	135	117	159	162	221	195
Continuous (3x441–480 V) [A]	52	65	65	80	80	105	105	130	130	160
Intermittent (60 s overload) (3x441–480 V) [A]	78	71.5	97.5	88	120	116	158	143	195	176
Continuous kVA at 400 V [kVA]	42.3	50.6	50.6	62.4	62.4	73.4	73.4	102	102	123
Continuous kVA at 460 V [kVA]	41.4	51.8	51.8	63.7	63.7	83.7	83.7	104	103.6	128
Maximum input current										
Continuous (3x380–440 V) [A]	55	66	66	82	82	96	96	133	133	161
Intermittent (60 s overload) (3x380–440 V) [A]	82.5	72.6	99	90.2	123	106	144	146	200	177
Continuous (3x441–480 V) [A]	47	59	59	73	73	95	95	118	118	145
Intermittent (60 s overload) (3x441–480 V) [A]	70.5	64.9	88.5	80.3	110	105	143	130	177	160
Maximum pre-fuses [A]	100		125		160		250		250	
Additional specifications										
Protection rating IP20 maximum cable cross-section for mains and motor [mm² (AWG)]	35 (2)		50 (1)		50 (1)		150 (300 MCM)		150 (300 MCM)	
Protection rating IP20 maximum cable cross-section for brake and load sharing [mm² (AWG)]	35 (2)		50 (1)		50 (1)		95 (4/0)		95 (4/0)	
Protection ratings IP21, IP55, IP66 maximum cable cross-section for mains and motor [mm² (AWG)]	50 (1)		50 (1)		50 (1)		150 (300 MCM)		150 (300 MCM)	
Protection ratings IP21, IP55, IP66 maximum cable cross-section for brake and load sharing [mm² (AWG)]	50 (1)		50 (1)		50 (1)		95 (3/0)		95 (3/0)	
Maximum cable cross-section[2] for mains disconnect [mm² (AWG)]	50, 35, 35 (1, 2, 2)						95, 70, 70 (3/0, 2/0, 2/0)		185, 150, 120 (350 MCM, 300 MCM, 4/0)	
Estimated power loss[3] at rated maximum load [W (hp)][4]	570 (0.78)	698 (0.95)	697 (0.95)	843 (1.1)	891 (1.2)	1083 (1.5)	1022 (1.4)	1384 (1.9)	1232 (1.7)	1474 (2)
Efficiency[5]	0.98		0.98		0.98		0.98		0.99	

Table 8.10 Mains Supply 3x380–480 V AC, P37K–P90K

Danfoss A/S © 10/2016 All rights reserved.

8.1.5 Mains Supply 3x525–600 V AC

Type designation	PK75		P1K1		P1K5		P2K2	
High/normal overload[1)]	HO	NO	HO	NO	HO	NO	HO	NO
Typical shaft output [kW]	0.75		1.1		1.5		2.2	
Typical shaft output [hp]	1		1.5		2		3	
Protection rating IP20/Chassis Protection rating IP21/Type 1	A3		A3		A3		A3	
Protection rating IP55/Type 12	A5		A5		A5		A5	
Output current								
Continuous (3x525–550 V) [A]	1.8		2.6		2.9		4.1	
Intermittent (3x525–550 V) [A]	2.7	2.0	3.9	2.9	4.4	3.2	6.2	4.5
Continuous (3x551–600 V) [A]	1.7		2.4		2.7		3.9	
Intermittent (3x551–600 V) [A]	2.6	1.9	3.6	2.6	4.1	3.0	5.9	4.3
Continuous kVA at 550 V [kVA]	1.7		2.5		2.8		3.9	
Continuous kVA at 550 V [kVA]	1.7		2.4		2.7		3.9	
Maximum input current								
Continuous (3x525–600 V) [A]	1.7		2.4		2.7		4.1	
Intermittent (3x525–600 V) [A]	2.6	1.9	3.6	2.6	4.1	3.0	6.2	4.5
Maximum pre-fuses [A]	10		10		10		20	
Additional specifications								
Maximum cable cross-section[2)] for mains, motor, brake, and load sharing [mm^2 (AWG)]	4,4,4 (12,12,12) (minimum 0.2 (24))							
Maximum cable cross-section[2)] for mains disconnect [mm^2 (AWG)]	6,4,4 (10,12,12)							
Estimated power loss[3)] at rated maximum load [W (hp)][4)]	35 (0.05)		50 (0.07)		65 (0.09)		92 (0.13)	
Efficiency[5)]	0.97		0.97		0.97		0.97	

Table 8.11 Mains Supply 3x525–600 V AC, PK75–P2K2

8

Danfoss A/S © 10/2016 All rights reserved.

Type designation	P3K0		P4K0		P5K5		P7K5	
High/normal overload[1)]	HO	NO	HO	NO	HO	NO	HO	NO
Typical shaft output [kW]	3.0		4.0		5.5		7.5	
Typical shaft output [hp]	4		5		7.5		10	
Protection rating IP20/Chassis Protection rating IP21/Type 1	A2		A2		A3		A3	
IP55/Type 12	A5		A5		A5		A5	
Output current								
Continuous (3x525–550 V) [A]	5.2		6.4		9.5		11.5	
Intermittent (3x525–550 V) [A]	7.8	5.7	9.6	7.0	14.3	10.5	17.3	12.7
Continuous (3x551–600 V) [A]	4.9		6.1		9.0		11.0	
Intermittent (3x551–600 V) [A]	7.4	5.4	9.2	6.7	13.5	9.9	16.5	12.1
Continuous kVA at 550 V [kVA]	5.0		6.1		9.0		11.0	
Continuous kVA at 550 V [kVA]	4.9		6.1		9.0		11.0	
Maximum input current								
Continuous (3x525–600 V) [A]	5.2		5.8		8.6		10.4	
Intermittent (3x525–600 V) [A]	7.8	5.7	8.7	6.4	12.9	9.5	15.6	11.4
Maximum pre-fuses [A]	20		20		32		32	
Additional specifications								
Maximum cable cross-section[2)] for mains, motor, brake, and load sharing [mm^2 (AWG)]	4,4,4 (12,12,12) (minimum 0.2 (24))							
Maximum cable cross-section[2)] for mains disconnect [mm^2 (AWG)]	6,4,4 (10,12,12)							
Estimated power loss[3)] at rated maximum load [W (hp)][4)]	122 (0.17)		145 (0.2)		195 (0.27)		261 (0.36)	
Efficiency[5)]	0.97		0.97		0.97		0.97	

Table 8.12 Mains Supply 3x525–600 V AC, P3K0–P7K5

Danfoss A/S © 10/2016 All rights reserved.

Type designation	P11K		P15K		P18K		P22K		P30K		P37K	
High/normal overload[1]	HO	NO	HO	NO	HO	NO	HO	NO	HO	NO	HO	NO
Typical shaft output [kW]	7.5	11	11	15	15	18.5	18.5	22	22	30	30	37
Typical shaft output [hp]	10	15	15	20	20	25	25	30	30	40	40	50
Protection rating IP20/ Chassis	B3		B3		B3		B4		B4		B4	
Protection rating IP21/ Type 1 Protection rating IP55/ Type 12 Protection rating IP66/ NEMA 4X	B1		B1		B1		B2		B2		C1	
Output current												
Continuous (3x525–550 V) [A]	11.5	19	19	23	23	28	28	36	36	43	43	54
Intermittent (3x525–550 V) [A]	18.4	21	30	25	37	31	45	40	58	47	65	59
Continuous (3x551–600 V) [A]	11	18	18	22	22	27	27	34	34	41	41	52
Intermittent (3x551–600 V) [A]	17.6	20	29	24	35	30	43	37	54	45	62	57
Continuous kVA at 550 V [kVA]	11	18.1	18.1	21.9	21.9	26.7	26.7	34.3	34.3	41.0	41.0	51.4
Continuous kVA at 575 V [kVA]	11	17.9	17.9	21.9	21.9	26.9	26.9	33.9	33.9	40.8	40.8	51.8
Maximum input current												
Continuous at 550 V [A]	10.4	17.2	17.2	20.9	20.9	25.4	25.4	32.7	32.7	39	39	49
Intermittent at 550 V [A]	16.6	19	28	23	33	28	41	36	52	43	59	54
Continuous at 575 V [A]	9.8	16	16	20	20	24	24	31	31	37	37	47
Intermittent at 575 V [A]	15.5	17.6	26	22	32	27	39	34	50	41	56	52
Maximum pre-fuses [A]	40		40		50		60		80		100	
Additional specifications												
Protection rating IP20, maximum cable cross-section[2] for mains, brake, motor, and load sharing [mm² (AWG)]	10, 10,– (8, 8,–)						35,–,– (2,–,–)					
Protection ratings IP21, IP55, IP66 maximum cable cross-section[2] for mains, brake, and load sharing [mm² (AWG)]	16, 10, 10 (6, 8, 8)						35,–,– (2,–,–)					
Protection ratings IP21, IP55, IP66 maximum cable cross-section[2] for motor [mm² (AWG)]	10, 10,– (8, 8,–)						35, 25, 25 (2, 4, 4)					
Maximum cable cross-section[2] for mains disconnect [mm² (AWG)]	16, 10, 10 (6, 8, 8)										50, 35, 35 (1, 2, 2)	
Estimated power loss[3] at rated maximum load [W (hp)][4]	220 (0.3)	300 (0.41)	220 (0.3)	300 (0.41)	300 (0.41)	370 (0.5)	370 (0.5)	440 (0.6)	440 (0.6)	600 (0.82)	600 (0.82)	740 (1)
Efficiency[5]	0.98		0.98		0.98		0.98		0.98		0.98	

Table 8.13 Mains supply 3x525–600 V AC, P11K–P37K

Danfoss A/S © 10/2016 All rights reserved.

Type designation	P45K		P55K		P75K		P90K	
High/normal overload[1]	HO	NO	HO	NO	HO	NO	HO	NO
Typical shaft output [kW]	37	45	45	55	55	75	75	90
Typical shaft output [hp]	50	60	60	75	75	100	100	125
Protection rating IP20/Chassis	C3		C3		C4		C4	
Protection rating IP21/Type 1 Protection rating IP55/Type 12 Protection rating IP66/NEMA 4X	C1		C1		C2		C2	
Output current								
Continuous (3x525–550 V) [A]	54	65	65	87	87	105	105	137
Intermittent (3x525–550 V) [A]	81	72	98	96	131	116	158	151
Continuous (3x525–600 V) [A]	52	62	62	83	83	100	100	131
Intermittent (3x525–600 V) [A]	78	68	93	91	125	110	150	144
Continuous kVA at 525 V [kVA]	51.4	61.9	61.9	82.9	82.9	100	100.0	130.5
Continuous kVA at 575 V [kVA]	51.8	61.7	61.7	82.7	82.7	99.6	99.6	130.5
Maximum input current								
Continuous at 550 V [A]	49	59	59	78.9	78.9	95.3	95.3	124.3
Intermittent at 550 V [A]	74	65	89	87	118	105	143	137
Continuous at 575 V [A]	47	56	56	75	75	91	91	119
Intermittent at 575 V [A]	70	62	85	83	113	100	137	131
Maximum pre-fuses [A]	150		160		225		250	
Additional specifications								
Protection rating IP20 maximum cable cross-section for mains and motor [mm² (AWG)]	50 (1)				150 (300 MCM)			
Protection rating IP20 maximum cable cross-section for brake and load sharing [mm² (AWG)]	50 (1)				95 (4/0)			
Protection ratings IP21, IP55, IP66 maximum cable cross-section for mains and motor [mm² (AWG)]	50 (1)				150 (300 MCM)			
Protection ratings IP21, IP55, IP66 maximum cable cross-section for brake and load sharing [mm² (AWG)]	50 (1)				95 (4/0)			
Maximum cable cross-section[2] for mains disconnect [mm² (AWG)]	50, 35, 35 (1, 2, 2)				95, 70, 70 (3/0, 2/0, 2/0)		185, 150, 120 (350 MCM, 300 MCM, 4/0)	
Estimated power loss[3] at rated maximum load [W (hp)][4]	740 (1)	900 (1.2)	900 (1.2)	1100 (1.5)	1100 (1.5)	1500 (2)	1500 (2)	1800 (2.5)
Efficiency[5]	0.98		0.98		0.98		0.98	

Table 8.14 Mains supply 3x525–600 V AC, P45K–P90K

Danfoss A/S © 10/2016 All rights reserved.

8.1.6 Mains Supply 3x525–690 V AC

Type designation	P1K1		P1K5		P2K2		P3K0		P4K0		P5K5		P7K5	
High/normal overload[1]	HO	NO	HO	NO	HO	NO	HO	NO	HO	NO	HO	NO	HO	NO
Typical shaft output [kW]	1.1		1.5		2.2		3.0		4.0		5.5		7.5	
Typical shaft output [hp]	1.5		2		3		4		5		7.5		10	
IP20/Chassis	A3		A3		A3		A3		A3		A3		A3	
Output current														
Continuous (3x525–550 V) [A]	2.1		2.7		3.9		4.9		6.1		9.0		11.0	
Intermittent (3x525–550 V) [A]	3.2	2.3	4.1	3.0	5.9	4.3	7.4	5.4	9.2	6.7	13.5	9.9	16.5	12.1
Continuous (3x551–690 V) [A]	1.6		2.2		3.2		4.5		5.5		7.5		10.0	
Intermittent (3x551–690 V) [A]	2.4	1.8	3.3	2.4	4.8	3.5	6.8	5.0	8.3	6.1	11.3	8.3	15.0	11.0
Continuous kVA at 525 V [kVA]	1.9		2.5		3.5		4.5		5.5		8.2		10.0	
Continuous kVA at 690 V [kVA]	1.9		2.6		3.8		5.4		6.6		9.0		12.0	
Maximum input current														
Continuous (3x525–550 V) [A]	1.9		2.4		3.5		4.4		5.5		8.1		9.9	
Intermittent (3x525–550 V) [A]	2.9	2.1	3.6	2.6	5.3	3.9	6.6	4.8	8.3	6.1	12.2	8.9	14.9	10.9
Continuous (3x551–690 V) [A]	1.4		2.0		2.9		4.0		4.9		6.7		9.0	
Intermittent (3x551–690 V) [A]	2.1	1.5	3.0	2.2	4.4	3.2	6.0	4.4	7.4	5.4	10.1	7.4	13.5	9.9
Additional specifications														
Maximum cable cross–section[2] for mains, motor, brake, and load sharing [mm^2 (AWG)]	4, 4, 4 (12, 12, 12) (minimum (24)													
Maximum cable cross–section[2] for mains disconnect [mm^2 (AWG)]	6, 4, 4 (10, 12, 12)													
Estimated power loss[3] at rated maximum load [W (hp)][4]	44 (0.06)		60 (0.08)		88 (0.12)		120 (0.16)		160 (0.22)		220 (0.3)		300 (0.41)	
Efficiency[5]	0.96		0.96		0.96		0.96		0.96		0.96		0.96	

Table 8.15 A3 Enclosure, Mains Supply 3x525–690 V AC IP20/Protected Chassis, P1K1–P7K5

8

Danfoss A/S © 10/2016 All rights reserved.

Type designation	P11K		P15K		P18K		P22K		P30K	
High/normal overload[1]	HO	NO	HO	NO	HO	NO	HO	NO	HO	NO
Typical shaft output at 550 V [kW]	5.9	7.5	7.5	11	11	15	15	18.5	18.5	22
Typical shaft output at 550 V [hp]	7.5	10	10	15	15	20	20	25	25	30
Typical shaft output at 690 V [kW]	7.5	11	11	15	15	18.5	18.5	22	22	30
Typical shaft output at 690 V [hp]	10	15	15	20	20	25	25	30	30	40
IP20/Chassis	B4		B4		B4		B4		B4	
IP21/Type 1 IP55/Type 12	B2		B2		B2		B2		B2	
Output current										
Continuous (3x525–550 V) [A]	11	14	14.0	19.0	19.0	23.0	23.0	28.0	28.0	36.0
Intermittent (60 s overload) (3x525–550 V) [A]	17.6	15.4	22.4	20.9	30.4	25.3	36.8	30.8	44.8	39.6
Continuous (3x551–690 V) [A]	10	13	13.0	18.0	18.0	22.0	22.0	27.0	27.0	34.0
Intermittent (60 s overload) (3x551–690 V) [A]	16	14.3	20.8	19.8	28.8	24.2	35.2	29.7	43.2	37.4
Continuous kVA at 550 V [kVA]	10	13.3	13.3	18.1	18.1	21.9	21.9	26.7	26.7	34.3
Continuous kVA at 690 V kVA]	12	15.5	15.5	21.5	21.5	26.3	26.3	32.3	32.3	40.6
Maximum input current										
Continuous at 550 V [A]	9.9	15	15.0	19.5	19.5	24.0	24.0	29.0	29.0	36.0
Intermittent (60 s overload) at 550 V [A]	15.8	16.5	23.2	21.5	31.2	26.4	38.4	31.9	46.4	39.6
Continuous (at 690 V) [A]	9	14.5	14.5	19.5	19.5	24.0	24.0	29.0	29.0	36.0
Intermittent (60 s overload) at 690 V [A]	14.4	16	23.2	21.5	31.2	26.4	38.4	31.9	46.4	39.6
Additional specifications										
Maximum cable cross–section[2] for mains, motor, brake, and load sharing [mm² (AWG)]	35, 25, 25 (2, 4, 4)									
Maximum cable cross–section[2)] for mains disconnect [mm² (AWG)]	16,10,10 (6, 8, 8)									
Estimated power loss[3)] at rated maximum load [W (hp)][4)]	150 (0.2)	220 (0.3)	150 (0.2)	220 (0.3)	220 (0.3)	300 (0.41)	300 (0.41)	370 (0.5)	370 (0.5)	440 (0.6)
Efficiency[5)]	0.98		0.98		0.98		0.98		0.98	

Table 8.16 B2/B4 Enclosure, Mains Supply 3x525–690 V AC IP20/IP21/IP55 – Chassis/NEMA 1/NEMA 12, P11K–P22K

Danfoss A/S © 10/2016 All rights reserved.

Type designation	P37K		P45K		P55K		P75K/N75K[8]		P90K/N90K[8]	
High/normal overload[1]	HO	NO	HO	NO	HO	NO	HO	NO	HO	NO
Typical shaft output at 550 V [kW]	22	30	30	37	37	45	45	55	55	75
Typical shaft output at 550 V [hp]	30	40	40	50	50	60	60	75	75	100
Typical shaft output at 690 V [kW]	30	37	37	45	45	55	55	75	75	90
Typical shaft output at 690 V [hp]	40	50	50	60	60	75	75	100	199	125
IP20/Chassis	B4		C3		C3		D3h		D3h	
IP21/Type 1 IP55/Type 12	C2		C2		C2		C2		C2	
Output current										
Continuous (3x525–550 V) [A]	36.0	43.0	43.0	54.0	54.0	65.0	65.0	87.0	87.0	105
Intermittent (60 s overload) (3x525–550 V) [A]	54.0	47.3	64.5	59.4	81.0	71.5	97.5	95.7	130.5	115.5
Continuous (3x551–690 V) [A]	34.0	41.0	41.0	52.0	52.0	62.0	62.0	83.0	83.0	100
Intermittent (60 s overload) (3x551–690 V) [A]	51.0	45.1	61.5	57.2	78.0	68.2	93.0	91.3	124.5	110
Continuous kVA at 550 V [kVA]	34.3	41.0	41.0	51.4	51.4	61.9	61.9	82.9	82.9	100
Continuous kVA at 690 V [kVA]	40.6	49.0	49.0	62.1	62.1	74.1	74.1	99.2	99.2	119.5
Maximum input current										
Continuous at 550 V [A]	36.0	49.0	49.0	59.0	59.0	71.0	71.0	87.0	87.0	99.0
Intermittent (60 s overload) at 550 V [A]	54.0	53.9	72.0	64.9	87.0	78.1	105.0	95.7	129	108.9
Continuous at 690 V [A]	36.0	48.0	48.0	58.0	58.0	70.0	70.0	86.0	–	–
Intermittent (60 s overload) at 690 V [A]	54.0	52.8	72.0	63.8	87.0	77.0	105	94.6	–	–
Additional specifications										
Maximum cable cross-section for mains and motor [mm² (AWG)]	150 (300 MCM)									
Maximum cable cross-section for brake and load sharing [mm² (AWG)]	95 (3/0)									
Maximum cable cross-section[2] for mains disconnect [mm² (AWG)]	95 (3/0)						185, 150, 120 (350 MCM, 300 MCM, 4/0)		–	
Estimated power loss[3] at rated maximum load [W (hp)][4]	600 (0.82)	740 (1)	740 (1)	900 (1.2)	900 (1.2)	1100 (1.5)	1100 (1.5)	1500 (2)	1500 (2)	1800 (2.5)
Efficiency[5]	0.98		0.98		0.98		0.98		0.98	

Table 8.17 B4, C2, C3 Enclosure, Mains Supply 3x525–690 V AC IP20/IP21/IP55 – Chassis/NEMA1/NEMA 12, P30K–P75K

For fuse ratings see chapter 8.8 Fuses and Circuit Breakers.

1) High overload=150% or 160% torque for a duration of 60 s. Normal overload=110% torque for a duration of 60 s.

2) The 3 values for the maximum cable cross-section are for single core, flexible wire, and flexible wire with sleeve, respectively.

3) Applies for dimensioning of frequency converter cooling. If the switching frequency is higher than the default setting, the power losses may increase. LCP and typical control card power consumptions are included. For power loss data according to EN 50598–2, refer to www.danfoss.com/vltenergyefficiency.

4) Efficiency measured at nominal current. For energy efficiency class see chapter 8.4.1 Ambient Conditions. For part load losses see www.danfoss.com/vltenergyefficiency.

5) Measured using 5 m (16 ft) shielded motor cables at rated load and rated frequency.

6) Enclosure sizes A2+A3 can be converted to IP21 using a conversion kit. See also chapters Mechanical mounting and IP21/Type 1 Enclosure kit in the design guide.

7) Enclosure sizes B3+B4 and C3+C4 can be converted to IP21 using a conversion kit. See also chapters Mechanical mounting and IP21/Type 1 Enclosure kit in the design guide.

8) Enclosure sizes for N75K, N90K are D3h for IP20/Chassis, and D5h for IP54/Type 12.

9) Two wires are required.

10) Variant not available in IP21.

Danfoss A/S © 10/2016 All rights reserved.

8.2 Mains Supply

Mains supply (L1, L2, L3)	
Supply voltage	200–240 V ±10%
Supply voltage	380–480 V ±10%
Supply voltage	525–600 V ±10%
Supply voltage	525–690 V ±10%

Mains voltage low/mains drop-out:
During low mains voltage or a mains drop-out, the frequency converter continues until the DC-link voltage drops below the minimum stop level. Typically, this corresponds to 15% below the lowest rated supply voltage of the frequency converter. Power-up and full torque cannot be expected at mains voltage <10% below the lowest rated supply voltage of the frequency converter.

Supply frequency	50/60 Hz +4/-6%

The frequency converter power supply is tested in accordance with IEC61000-4-28, 50 Hz +4/-6%.

Maximum imbalance temporary between mains phases	3.0% of rated supply voltage
True power factor (λ)	≥0.9 nominal at rated load
Displacement power factor (cosφ) near unity	(>0.98)
Switching on input supply L1, L2, L3 (power-ups) ≤7.5 kW (10 hp)	Maximum 2 times/minute
Switching on input supply L1, L2, L3 (power-ups) 11–90 kW (15–125 hp)	Maximum 1 time/minute
Environment according to EN 60664-1	Overvoltage category III/pollution degree 2

The unit is suitable for use on a circuit capable of delivering not more than 100000 RMS symmetrical Amperes, 240/480/600/690 V maximum.

8

8.3 Motor Output and Motor Data

Motor output (U, V, W)	
Output voltage	0–100% of supply voltage
Output frequency	0–590 Hz[1)]
Switching on output	Unlimited
Ramp times	1–3600 s

1) Dependent on power size.

Torque characteristics, normal overload	
Starting torque (constant torque)	Maximum 110% for 1 minute, once in 10 minutes[2)]
Overload torque (constant torque)	Maximum 110% for 1 minute, once in 10 minutes[2)]

Torque characteristics, high overload	
Starting torque (constant torque)	Maximum 150/160% for 1 minute, once in 10 minutes[2)]
Overload torque (constant torque)	Maximum 150/160% for 1 minute, once in 10 minutes[2)]

2) Percentage relates to the nominal torque of the frequency converter, dependent on power size.

Danfoss A/S © 10/2016 All rights reserved.

8.4 Ambient Conditions

Environment	
Enclosure size A	IP20/Chassis, IP21/Type 1, IP55/Type 12, IP66/Type 4X
Enclosure size B1/B2	IP21/Type 1, IP55/Type 12, IP66/Type 4X
Enclosure size B3/B4	IP20/Chassis
Enclosure size C1/C2	IP21/Type 1, IP55/Type 12, IP66/Type 4X
Enclosure size C3/C4	IP20/Chassis
Enclosure kit available ≤ enclosure size A	IP21/TYPE 1/IP4X top
Vibration test enclosure A/B/C	1.0 g
Maximum relative humidity	5–95% (IEC 721-3-3; Class 3K3 (non-condensing) during operation
Aggressive environment (IEC 721-3-3), uncoated	Class 3C2
Aggressive environment (IEC 721-3-3), coated	Class 3C3
Test method according to IEC 60068-2-43 H2S (10 days)	
Ambient temperature	Maximum 50 °C (122 °F)

Derating for high ambient temperature, see chapter Special Conditions in the design guide.

Minimum ambient temperature during full-scale operation	0 °C (32 °F)
Minimum ambient temperature at reduced performance	-10 °C (14 °F)
Temperature during storage/transport	-25 to +65/70 °C (-13 to 149/158 °F)
Maximum altitude above sea level without derating	1000 m (3281 ft)
Maximum altitude above sea level with derating	3000 m (9843 ft)

Derating for high altitude, see chapter Special Conditions in the design guide.

EMC standards, Emission	EN 61800-3
EMC standards, Immunity	EN 61800-3
Energy efficiency class[1)]	IE2

1) Determined according to EN50598-2 at:

- *Rated load.*
- *90% rated frequency.*
- *Switching frequency factory setting.*
- *Switching pattern factory setting.*

8.5 Cable Specifications

Maximum motor cable length, shielded/armored	150 m (492 ft)
Maximum motor cable length, unshielded/unarmored	300 m (984 ft)
Maximum cross-section to motor, mains, load sharing, and brake[1)]	
Maximum cross-section to control terminals, rigid wire	1.5 mm^2 or 2 x 0.75 mm^2 (16 AWG)
Maximum cross-section to control terminals, flexible cable	1 mm^2 (18 AWG)
Maximum cross-section to control terminals, cable with enclosed core	0.5 mm^2 (20 AWG)
Minimum cross-section to control terminals	0.25 mm^2 (24 AWG)

1) See electrical data tables in chapter 8.1 Electrical Data for more information.

It is mandatory to ground the mains connection properly using T95 (PE) of the frequency converter. The ground connection cable cross-section must be at least 10 mm^2 (8 AWG) or 2 rated mains wires terminated separately according to EN 50178. See also*chapter 4.3.1 Grounding* . Use unshielded cable.

8.6 Control Input/Output and Control Data

Control card, RS485 serial communication	
Terminal number	68 (P,TX+, RX+), 69 (N,TX-, RX-)
Terminal number 61	Common for terminals 68 and 69

The RS485 serial communication circuit is functionally separated from other central circuits and galvanically isolated from the supply voltage (PELV).

Danfoss A/S © 10/2016 All rights reserved.

Analog inputs	
Number of analog inputs	2
Terminal number	53, 54
Modes	Voltage or current
Mode select	Switches S201 and S202
Voltage mode	Switch S201/S202 = OFF (U)
Voltage level	0–10 V (scaleable)
Input resistance, R_i	Approximately 10 kΩ
Maximum voltage	±20 V
Current mode	Switch S201/S202=On (I)
Current level	0/4-20 mA (scaleable)
Input resistance, R_i	Approximately 200 Ω
Maximum current	30 mA
Resolution for analog inputs	10 bit (+ sign)
Accuracy of analog inputs	Maximum error 0.5% of full scale
Bandwidth	200 Hz

The analog inputs are galvanically isolated from the supply voltage (PELV) and other high-voltage terminals.

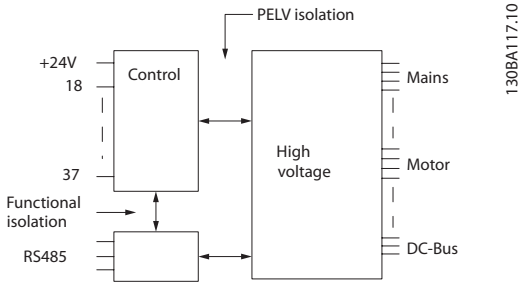

Illustration 8.1 PELV Isolation of Analog Inputs

Analog output	
Number of programmable analog outputs	1
Terminal number	42
Current range at analog output	0/4–20 mA
Maximum resistor load to common at analog output	500 Ω
Accuracy on analog output	Maximum error 0.8% of full scale
Resolution on analog output	8 bit

The analog output is galvanically isolated from the supply voltage (PELV) and other high-voltage terminals.

Digital inputs	
Programmable digital inputs	4 (6)
Terminal number	18, 19, 27[1)], 29[1)], 32, 33,
Logic	PNP or NPN
Voltage level	0–24 V DC
Voltage level, logic 0 PNP	<5 V DC
Voltage level, logic 1 PNP	>10 V DC
Voltage level, logic 0 NPN	>19 V DC
Voltage level, logic 1 NPN	<14 V DC
Maximum voltage on input	28 V DC
Input resistance, R_i	Approximately 4 kΩ

All digital inputs are galvanically isolated from the supply voltage (PELV) and other high-voltage terminals.

1) Terminals 27 and 29 can also be programmed as output.

Danfoss A/S © 10/2016 All rights reserved.

Digital output	
Programmable digital/pulse outputs	2
Terminal number	27, 29[1)]
Voltage level at digital/frequency output	0–24 V
Maximum output current (sink or source)	40 mA
Maximum load at frequency output	1 kΩ
Maximum capacitive load at frequency output	10 nF
Minimum output frequency at frequency output	0 Hz
Maximum output frequency at frequency output	32 kHz
Accuracy of frequency output	Maximum error 0.1% of full scale
Resolution of frequency outputs	12 bit

1) Terminal 27 and 29 can also be programmed as input.

The digital output is galvanically isolated from the supply voltage (PELV) and other high-voltage terminals.

Pulse inputs	
Programmable pulse inputs	2
Terminal number pulse	29, 33
Maximum frequency at terminal 29, 33	110 kHz (push-pull driven)
Maximum frequency at terminal 29, 33	5 kHz (open collector)
Minimum frequency at terminal 29, 33	4 Hz
Voltage level	See *Digital inputs*
Maximum voltage on input	28 V DC
Input resistance, R_i	Approximately 4 kΩ
Pulse input accuracy (0.1–1 kHz)	Maximum error 0.1% of full scale

Control card, 24 V DC output	
Terminal number	12, 13
Maximum load	200 mA

The 24 V DC supply is galvanically isolated from the supply voltage (PELV), but has the same potential as the analog and digital inputs and outputs.

Relay outputs	
Programmable relay outputs	2
Relay 01 terminal number	1-3 (break), 1-2 (make)
Maximum terminal load (AC-1)[1)] on 1-3 (NC), 1-2 (NO) (resistive load)	240 V AC, 2 A
Maximum terminal load (AC-15)[1)] (inductive load @ cosφ 0.4)	240 V AC, 0.2 A
Maximum terminal load (DC-1)[1)] on 1-2 (NO), 1-3 (NC) (resistive load)	60 V DC, 1 A
Maximum terminal load (DC-13)[1)] (inductive load)	24 V DC, 0.1 A
Relay 02 terminal number	4-6 (break), 4-5 (make)
Maximum terminal load (AC-1)[1)] on 4-5 (NO) (resistive load)[2) 3)]	400 V AC, 2 A
Maximum terminal load (AC-15)[1)] on 4-5 (NO) (inductive load @ cosφ 0.4)	240 V AC, 0.2 A
Maximum terminal load (DC-1)[1)] on 4-5 (NO) (resistive load)	80 V DC, 2 A
Maximum terminal load (DC-13)[1)] on 4-5 (NO) (inductive load)	24 V DC, 0.1 A
Maximum terminal load (AC-1)[1)] on 4-6 (NC) (resistive load)	240 V AC, 2 A
Maximum terminal load (AC-15)[1)] on 4-6 (NC) (inductive load @ cosφ 0.4)	240 V AC, 0.2 A
Maximum terminal load (DC-1)[1)] on 4-6 (NC) (resistive load)	50 V DC, 2 A
Maximum terminal load (DC-13)[1)] on 4-6 (NC) (inductive load)	24 V DC, 0.1 A
Minimum terminal load on 1-3 (NC), 1-2 (NO), 4-6 (NC), 4-5 (NO)	24 V DC, 10 mA, 24 V AC, 20 mA
Environment according to EN 60664-1	Overvoltage category III/pollution degree 2

1) IEC 60947 parts 4 and 5.

The relay contacts are galvanically isolated from the rest of the circuit by reinforced isolation (PELV).

2) Overvoltage category II.

3) UL applications 300 V AC 2 A.

 Danfoss A/S © 10/2016 All rights reserved.

Control card, 10 V DC output	
Terminal number	50
Output voltage	10.5 V ±0.5 V
Maximum load	25 mA

The 10 V DC supply is galvanically isolated from the supply voltage (PELV) and other high-voltage terminals.

Control characteristics	
Resolution of output frequency at 0–590 Hz	±0.003 Hz
System response time (terminals 18, 19, 27, 29, 32, 33)	≤2 ms
Speed control range (open loop)	1:100 of synchronous speed
Speed accuracy (open loop)	30–4000 RPM: Maximum error of ±8 RPM

All control characteristics are based on a 4-pole asynchronous motor.

Control card performance	
Scan interval	5 ms

Control card, USB serial communication	
USB standard	1.1 (full speed)
USB plug	USB type B "device" plug

8

NOTICE

Connection to a PC is carried out via a standard host/device USB cable.
The USB connection is galvanically isolated from the supply voltage (PELV) and other high-voltage terminals.
The USB connection is not galvanically isolated from protective earth. Use only an isolated laptop/PC as a connection to the USB connector on the frequency converter, or an isolated USB cable/converter.

8.7 Connection Tightening Torques

	Torque [N•m (in-lb)]					
Enclosure	**Mains**	**Motor**	**DC connection**	**Brake**	**Ground**	**Ground**
A2	1.8 (16)	1.8 (16)	1.8 (16)	1.8 (16)	3 (27)	0.6 (5)
A3	1.8 (16)	1.8 (16)	1.8 (16)	1.8 (16)	3 (27)	0.6 (5)
A4	1.8 (16)	1.8 (16)	1.8 (16)	1.8 (16)	3 (27)	0.6 (5)
A5	1.8 (16)	1.8 (16)	1.8 (16)	1.8 (16)	3 (27)	0.6 (5)
B1	1.8 (16)	1.8 (16)	1.5 (13)	1.5 (13.3)	3 (27)	0.6 (5)
B2	4.5 (40)	4.5 (40)	3.7 (33)	3.7 (33)	3 (27)	0.6 (5)
B3	1.8 (16)	1.8 (16)	1.8 (16)	1.8 (16)	3 (27)	0.6 (5)
B4	4.5 (40)	4.5 (40)	4.5 (40)	4.5 (40)	3 (27)	0.6 (5)
C1	10 (89)	10 (89)	10 (89)	10 (89)	3 (27)	0.6 (5)
C2	14/24 (124/221)[1)]	14/24 (124/221)[1)]	14 (124)	14 (124)	3 (27)	0.6 (5)
C3	10 (89)	10 (89)	10 (89)	10 (89)	3 (27)	0.6 (5)
C4	14/24 (124/221)[1)]	14/24 (124/221)[1)]	14 (124)	14 (124)	3 (27)	0.6 (5)

Table 8.18 Terminal Tightening Torques

1) For different cable dimensions x/y, where x≤95 mm^2 (3 AWG) and y≥95 mm^2 (3 AWG).

Danfoss A/S © 10/2016 All rights reserved.

8.8 Fuses and Circuit Breakers

Use recommended fuses and/or circuit breakers on the supply side as protection if there is component break-down inside the frequency converter (first fault).

NOTICE

Use of fuses on the supply side is mandatory for IEC 60364 (CE) and NEC 2009 (UL) compliant installations.

Recommendations

- gG type fuses.
- Moeller type circuit breakers. For other circuit breaker types, ensure that the energy into the frequency converter is equal to or lower than the energy provided by Moeller types.

Use of recommended fuses and circuit breakers ensures that possible damage to the frequency converter is limited to damage inside the unit. For further information, see *Application Note Fuses and Circuit Breakers*.

The fuses in *chapter 8.8.1 CE Compliance* to *chapter 8.8.2 UL Compliance* are suitable for use on a circuit capable of delivering 100000 A_{rms} (symmetrical), depending on the frequency converter voltage rating. With the proper fusing, the frequency converter short circuit current rating (SCCR) is 100000 A_{rms}.

8

8.8.1 CE Compliance

Enclosure	Power [kW (hp)]	Recommended fuse size	Recommended maximum fuse	Recommended circuit breaker Moeller	Maximum trip level [A]
A2	0.25–2.2 (0.34–3)	gG-10 (0.25–1.5) gG-16 (2.2)	gG-25	PKZM0-25	25
A3	3.0–3.7 (4–5)	gG-16 (3) gG-20 (3.7)	gG-32	PKZM0-25	25
A4	0.25–2.2 (0.34–3)	gG-10 (0.25–1.5) gG-16 (2.2)	gG-32	PKZM0-25	25
A5	0.25–3.7 (0.34–5)	gG-10 (0.25–1.5) gG-16 (2.2–3) gG-20 (3.7)	gG-32	PKZM0-25	25
B1	5.5–11 (7.5–15)	gG-25 (5.5) gG-32 (7.5)	gG-80	PKZM4-63	63
B2	15 (20)	gG-50	gG-100	NZMB1-A100	100
B3	5.5–11 (7.5–15)	gG-25	gG-63	PKZM4-50	50
B4	15–18 (20–24)	gG-32 (7.5) gG-50 (11) gG-63 (15)	gG-125	NZMB1-A100	100
C1	18.5–30 (25–40)	gG-63 (15) gG-80 (18.5) gG-100 (22)	gG-160 (15–18.5) aR-160 (22)	NZMB2-A200	160
C2	37–45 (50–60)	aR-160 (30) aR-200 (37)	aR-200 (30) aR-250 (37)	NZMB2-A250	250
C3	22–30 (30–40)	gG-80 (18.5) aR-125 (22)	gG-150 (18.5) aR-160 (22)	NZMB2-A200	150
C4	37–45 (50–60)	aR-160 (30) aR-200 (37)	aR-200 (30) aR-250 (37)	NZMB2-A250	250

Table 8.19 200–240 V, Enclosure Sizes A, B, and C

Danfoss A/S © 10/2016 All rights reserved.

Enclosure	Power [kW (hp)]	Recommended fuse size	Recommended maximum fuse	Recommended circuit breaker Moeller	Maximum trip level [A]
A2	1.1–4.0 (1.5–5)	gG-10 (0.37-3) gG-16 (4)	gG-25	PKZM0-25	25
A3	5.5–7.5 (7.5–10)	gG-16	gG-32	PKZM0-25	25
A4	1.1–4.0 (1.5–5)	gG-10 (0.37-3) gG-16 (4)	gG-32	PKZM0-25	25
A5	1.1–7.5 (1.5–10)	gG-10 (0.37-3) gG-16 (4-7.5)	gG-32	PKZM0-25	25
B1	11–18.5 (15–25)	gG-40	gG-80	PKZM4-63	63
B2	22–30 (30–40)	gG-50 (18.5) gG-63 (22)	gG-100	NZMB1-A100	100
B3	11–18 (15–24)	gG-40	gG-63	PKZM4-50	50
B4	22–37 (30–50)	gG-50 (18.5) gG-63 (22) gG-80 (30)	gG-125	NZMB1-A100	100
C1	37–55 (50–75)	gG-80 (30) gG-100 (37) gG-160 (45)	gG-160	NZMB2-A200	160
C2	75–90 (100–125)	aR-200 (55) aR-250 (75)	aR-250	NZMB2-A250	250
C3	45–55 (60–75)	gG-100 (37) gG-160 (45)	gG-150 (37) gG-160 (45)	NZMB2-A200	150
C4	75–90 (100–125)	aR-200 (55) aR-250 (75)	aR-250	NZMB2-A250	250

Table 8.20 380–480 V, Enclosure Sizes A, B, and C

8

Danfoss A/S © 10/2016 All rights reserved.

Enclosure	Power [kW (hp)]	Recommended fuse size	Recommended maximum fuse	Recommended circuit breaker Moeller	Maximum trip level [A]
A2	1.1–4.0 (1.5–5)	gG-10	gG-25	PKZM0-25	25
A3	5.5–7.5 (7.5–10)	gG-10 (5.5) gG-16 (7.5)	gG-32	PKZM0-25	25
A5	1.1–7.5 (1.5–10)	gG-10 (0.75-5.5) gG-16 (7.5)	gG-32	PKZM0-25	25
B1	11–18 (15–24)	gG-25 (11) gG-32 (15) gG-40 (18.5)	gG-80	PKZM4-63	63
B2	22–30 (30–40)	gG-50 (22) gG-63 (30)	gG-100	NZMB1-A100	100
B3	11–18.5 (15–25)	gG-25 (11) gG-32 (15)	gG-63	PKZM4-50	50
B4	22–37 (30–50)	gG-40 (18.5) gG-50 (22) gG-63 (30)	gG-125	NZMB1-A100	100
C1	37–55 (50–75)	gG-63 (37) gG-100 (45) aR-160 (55)	gG-160 (37-45) aR-250 (55)	NZMB2-A200	160
C2	75–90 (100–125)	aR-200 (75)	aR-250	NZMB2-A250	250
C3	45–55 (60–75)	gG-63 (37) gG-100 (45)	gG-150	NZMB2-A200	150
C4	75–90 (100–125)	aR-160 (55) aR-200 (75)	aR-250	NZMB2-A250	250

Table 8.21 525–600 V, Enclosure Sizes A, B, and C

Enclosure	Power [kW (hp)]	Recommended fuse size	Recommended maximum fuse	Recommended circuit breaker Danfoss	Maximum trip level [A]
A3	1.1 (1.5)	gG-6	gG-25	CTI25M 10-16	16
	1.5 (2)	gG-6	gG-25	CTI25M 10-16	16
	2.2 (3)	gG-6	gG-25	CTI25M 10-16	16
	3 (4)	gG-10	gG-25	CTI25M 10-16	16
	4 (5)	gG-10	gG-25	CTI25M 10-16	16
	5.5 (7.5)	gG-16	gG-25	CTI25M 10-16	16
	7.5 (10)	gG-16	gG-25	CTI25M 10-16	16
B2	11 (15)	gG-25	gG-63	–	–
	15 (20)	gG-25	gG-63	–	–
	18 (24)	gG-32	–	–	–
	22 (30)	gG-32	–	–	–
C2	30 (40)	gG-40	–	–	–
	37 (50)	gG-63	gG-80	–	–
	45 (60)	gG-63	gG-100	–	–
	55 (75)	gG-80	gG-125	–	–
	75 (100)	gG-100	gG-160	–	–
C3	37 (50)	gG-100	gG-125	–	–
	45 (60)	gG-125	gG-160	–	–

Table 8.22 525–690 V, Enclosure Sizes A, B, and C

Danfoss A/S © 10/2016 All rights reserved.

8.8.2 UL Compliance

Recommended maximum fuse													
Power [kW (hp)]	Maximum prefuse size [A]	Bussmann JFHR2	Bussmann RK1	Bussmann J	Bussmann T	Bussmann CC	Bussmann CC	Bussmann CC	SIBA RK1	Littelfuse RK1	Ferraz-Shawmut CC	Ferraz-Shawmut RK1	Ferraz-Shawmut J
1.1 (1.5)	15	FWX-15	KTN-R15	JKS-15	JJN-15	FNQ-R-15	KTK-R-15	LP-CC-15	5017906-016	KLN-R15	ATM-R15	A2K-15R	HSJ15
1.5 (2)	20	FWX-20	KTN-R20	JKS-20	JJN-20	FNQ-R-20	KTK-R-20	LP-CC-20	5017906-020	KLN-R20	ATM-R20	A2K-20R	HSJ20
2.2 (3)	30[1)]	FWX-30	KTN-R30	JKS-30	JJN-30	FNQ-R-30	KTK-R-30	LP-CC-30	5012406-032	KLN-R30	ATM-R30	A2K-30R	HSJ30
3.0 (4)	35	FWX-35	KTN-R35	JKS-35	JJN-35	–	–	–	–	KLN-R35	–	A2K-35R	HSJ35
3.7 (5)	50	FWX-50	KTN-R50	JKS-50	JJN-50	–	–	–	5014006-050	KLN-R50	–	A2K-50R	HSJ50
5.5 (7.5)	60[2)]	FWX-60	KTN-R60	JKS-60	JJN-60	–	–	–	5014006-063	KLN-R60	–	A2K-60R	HSJ60
7.5 (10)	80	FWX-80	KTN-R80	JKS-80	JJN-80	–	–	–	5014006-080	KLN-R80	–	A2K-80R	HSJ80
15 (20)	150	FWX-150	KTN-R150	JKS-150	JJN-150	–	–	–	2028220-150	KLN-R150	–	A2K-150R	HSJ150
22 (30)	200	FWX-200	KTN-R200	JKS-200	JJN-200	–	–	–	2028220-200	KLN-R200	–	A2K-200R	HSJ200

Table 8.23 1x200–240 V, Enclosure Sizes A, B, and C

1) Siba allowed up to 32 A.

2) Siba allowed up to 63 A.

Recommended maximum fuse													
Power [kW (hp)]	Maximum prefuse size [A]	Bussmann JFHR2	Bussmann RK1	Bussmann J	Bussmann T	Bussmann CC	Bussmann CC	Bussmann CC	SIBA RK1	Littelfuse RK1	Ferraz-Shawmut CC	Ferraz-Shawmut RK1	Ferraz-Shawmut J
7.5 (10)	60	FWH-60	KTS-R60	JKS-60	JJS-60	–	–	–	5014006-063	KLS-R60	–	A6K-60R	HSJ60
11 (15)	80	FWH-80	KTS-R80	JKS-80	JJS-80	–	–	–	2028220-100	KLS-R80	–	A6K-80R	HSJ80
22 (30)	150	FWH-150	KTS-R150	JKS-150	JJS-150	–	–	–	2028220-160	KLS-R150	–	A6K-150R	HSJ150
37 (50)	200	FWH-200	KTS-R200	JKS-200	JJS-200	–	–	–	2028220-200	KLS-200	–	A6K-200R	HSJ200

Table 8.24 1x380–500 V, Enclosure Sizes B and C

- *KTS-fuses from Bussmann may substitute KTN for 240 V frequency converters.*
- *FWH-fuses from Bussmann may substitute FWX for 240 V frequency converters.*
- *JJS-fuses from Bussmann may substitute JJN for 240 V frequency converters.*
- *KLSR fuses from Littelfuse may substitute KLNR fuses for 240 V frequency converters.*
- *A6KR fuses from Ferraz-Shawmut may substitute A2KR for 240 V frequency converters.*

Danfoss A/S © 10/2016 All rights reserved.

	Recommended maximum fuse					
Power [kW (hp)]	Bussmann Type RK1 [1]	Bussmann Type J	Bussmann Type T	Bussmann Type CC	Bussmann	Bussmann Type CC
0.25–0.37 (0.34–0.5)	KTN-R-05	JKS-05	JJN-05	FNQ-R-5	KTK-R-5	LP-CC-5
0.55–1.1 (0.75–1.5)	KTN-R-10	JKS-10	JJN-10	FNQ-R-10	KTK-R-10	LP-CC-10
1.5 (2)	KTN-R-15	JKS-15	JJN-15	FNQ-R-15	KTK-R-15	LP-CC-15
2.2 (3)	KTN-R-20	JKS-20	JJN-20	FNQ-R-20	KTK-R-20	LP-CC-20
3.0 (4)	KTN-R-25	JKS-25	JJN-25	FNQ-R-25	KTK-R-25	LP-CC-25
3.7 (5)	KTN-R-30	JKS-30	JJN-30	FNQ-R-30	KTK-R-30	LP-CC-30
5.5–7.5 (7.5–10)	KTN-R-50	JKS-50	JJN-50	–	–	–
11 (15)	KTN-R-60	JKS-60	JJN-60	–	–	–
15 (20)	KTN-R-80	JKS-80	JJN-80	–	–	–
18.5–22 (25–30)	KTN-R-125	JKS-125	JJN-125	–	–	–
30 (40)	KTN-R-150	JKS-150	JJN-150	–	–	–
37 (50)	KTN-R-200	JKS-200	JJN-200	–	–	–
45 (60)	KTN-R-250	JKS-250	JJN-250	–	–	–

Table 8.25 3x200–240 V, Enclosure Sizes A, B, and C

	Recommended maximum fuse							
Power [kW (hp)]	SIBA Type RK1	Littelfuse Type RK1	Ferraz-Shawmut Type CC	Ferraz-Shawmut Type RK1[2]	Bussmann Type JFHR2[3]	Littelfuse JFHR2	Ferraz-Shawmut JFHR2[4]	Ferraz-Shawmut J
0.25–0.37 (0.34–0.5)	5017906-005	KLN-R-05	ATM-R-05	A2K-05-R	FWX-5	–	–	HSJ-6
0.55–1.1 (0.75–1.5)	5017906-010	KLN-R-10	ATM-R-10	A2K-10-R	FWX-10	–	–	HSJ-10
1.5 (2)	5017906-016	KLN-R-15	ATM-R-15	A2K-15-R	FWX-15	–	–	HSJ-15
2.2 (3)	5017906-020	KLN-R-20	ATM-R-20	A2K-20-R	FWX-20	–	–	HSJ-20
3.0 (4)	5017906-025	KLN-R-25	ATM-R-25	A2K-25-R	FWX-25	–	–	HSJ-25
3.7 (5)	5012406-032	KLN-R-30	ATM-R-30	A2K-30-R	FWX-30	–	–	HSJ-30
5.5–7.5 (7.5–10)	5014006-050	KLN-R-50	–	A2K-50-R	FWX-50	–	–	HSJ-50
11 (15)	5014006-063	KLN-R-60	–	A2K-60-R	FWX-60	–	–	HSJ-60
15 (20)	5014006-080	KLN-R-80	–	A2K-80-R	FWX-80	–	–	HSJ-80
18.5–22 (25–30)	2028220-125	KLN-R-125	–	A2K-125-R	FWX-125	–	–	HSJ-125
30 (40)	2028220-150	KLN-R-150	–	A2K-150-R	FWX-150	L25S-150	A25X-150	HSJ-150
37 (50)	2028220-200	KLN-R-200	–	A2K-200-R	FWX-200	L25S-200	A25X-200	HSJ-200
45 (60)	2028220-250	KLN-R-250	–	A2K-250-R	FWX-250	L25S-250	A25X-250	HSJ-250

Table 8.26 3x200–240 V, Enclosure Sizes A, B, and C

1) KTS-fuses from Bussmann may substitute KTN for 240 V frequency converters.

2) A6KR fuses from Ferraz-Shawmut may substitute A2KR for 240 V frequency converters.

3) FWH-fuses from Bussmann may substitute FWX for 240 V frequency converters.

4) A50X fuses from Ferraz-Shawmut may substitute A25X for 240 V frequency converters.

Danfoss A/S © 10/2016 All rights reserved.

	Recommended maximum fuse					
Power [kW (hp)]	Bussmann Type RK1	Bussmann Type J	Bussmann Type T	Bussmann Type CC	Bussmann Type CC	Bussmann Type CC
–	KTS-R-6	JKS-6	JJS-6	FNQ-R-6	KTK-R-6	LP-CC-6
1.1–2.2 (1.5–3)	KTS-R-10	JKS-10	JJS-10	FNQ-R-10	KTK-R-10	LP-CC-10
3 (4)	KTS-R-15	JKS-15	JJS-15	FNQ-R-15	KTK-R-15	LP-CC-15
4 (5)	KTS-R-20	JKS-20	JJS-20	FNQ-R-20	KTK-R-20	LP-CC-20
5.5 (7.5)	KTS-R-25	JKS-25	JJS-25	FNQ-R-25	KTK-R-25	LP-CC-25
7.5 (10)	KTS-R-30	JKS-30	JJS-30	FNQ-R-30	KTK-R-30	LP-CC-30
11 (15)	KTS-R-40	JKS-40	JJS-40	–	–	–
15 (20)	KTS-R-50	JKS-50	JJS-50	–	–	–
22 (30)	KTS-R-60	JKS-60	JJS-60	–	–	–
30 (40)	KTS-R-80	JKS-80	JJS-80	–	–	–
37 (50)	KTS-R-100	JKS-100	JJS-100	–	–	–
45 (60)	KTS-R-125	JKS-125	JJS-125	–	–	–
55 (75)	KTS-R-150	JKS-150	JJS-150	–	–	–
75 (100)	KTS-R-200	JKS-200	JJS-200	–	–	–
90 (125)	KTS-R-250	JKS-250	JJS-250	–	–	–

Table 8.27 3x380–480 V, Enclosure Sizes A, B, and C

	Recommended maximum fuse							
Power [kW (hp)]	SIBA Type RK1	Littelfuse Type RK1	Ferraz-Shawmut Type CC	Ferraz-Shawmut Type RK1	Bussmann JFHR2	Ferraz-Shawmut J	Ferraz-Shawmut JFHR2[1)]	Littelfuse JFHR2
–	5017906-006	KLS-R-6	ATM-R-6	A6K-6-R	FWH-6	HSJ-6	–	–
1.1–2.2 (1.5–3)	5017906-010	KLS-R-10	ATM-R-10	A6K-10-R	FWH-10	HSJ-10	–	–
3 (4)	5017906-016	KLS-R-15	ATM-R-15	A6K-15-R	FWH-15	HSJ-15	–	–
4 (5)	5017906-020	KLS-R-20	ATM-R-20	A6K-20-R	FWH-20	HSJ-20	–	–
5.5 (7.5)	5017906-025	KLS-R-25	ATM-R-25	A6K-25-R	FWH-25	HSJ-25	–	–
7.5 (10)	5012406-032	KLS-R-30	ATM-R-30	A6K-30-R	FWH-30	HSJ-30	–	–
11 (15)	5014006-040	KLS-R-40	–	A6K-40-R	FWH-40	HSJ-40	–	–
15 (20)	5014006-050	KLS-R-50	–	A6K-50-R	FWH-50	HSJ-50	–	–
22 (30)	5014006-063	KLS-R-60	–	A6K-60-R	FWH-60	HSJ-60	–	–
30 (40)	2028220-100	KLS-R-80	–	A6K-80-R	FWH-80	HSJ-80	–	–
37 (50)	2028220-125	KLS-R-100	–	A6K-100-R	FWH-100	HSJ-100	–	–
45 (60)	2028220-125	KLS-R-125	–	A6K-125-R	FWH-125	HSJ-125	–	–
55 (75)	2028220-160	KLS-R-150	–	A6K-150-R	FWH-150	HSJ-150	–	–
75 (100)	2028220-200	KLS-R-200	–	A6K-200-R	FWH-200	HSJ-200	A50-P-225	L50-S-225
90 (125)	2028220-250	KLS-R-250	–	A6K-250-R	FWH-250	HSJ-250	A50-P-250	L50-S-250

Table 8.28 3x380–480 V, Enclosure Sizes A, B, and C

1) Ferraz-Shawmut A50QS fuses may substitute A50P fuses.

Danfoss A/S © 10/2016 All rights reserved.

	Recommended maximum fuse									
Power [kW (hp)]	Bussmann Type RK1	Bussmann Type J	Bussmann Type T	Bussmann Type CC	Bussmann Type CC	Bussmann Type CC	SIBA Type RK1	Littelfuse Type RK1	Ferraz-Shawmut Type RK1	Ferraz-Shawmut J
0.75–1.1 (1–1.5)	KTS-R-5	JKS-5	JJS-6	FNQ-R-5	KTK-R-5	LP-CC-5	5017906-005	KLS-R-005	A6K-5-R	HSJ-6
1.5–2.2 (2–3)	KTS-R-10	JKS-10	JJS-10	FNQ-R-10	KTK-R-10	LP-CC-10	5017906-010	KLS-R-010	A6K-10-R	HSJ-10
3 (4)	KTS-R15	JKS-15	JJS-15	FNQ-R-15	KTK-R-15	LP-CC-15	5017906-016	KLS-R-015	A6K-15-R	HSJ-15
4 (5)	KTS-R20	JKS-20	JJS-20	FNQ-R-20	KTK-R-20	LP-CC-20	5017906-020	KLS-R-020	A6K-20-R	HSJ-20
5.5 (7.5)	KTS-R-25	JKS-25	JJS-25	FNQ-R-25	KTK-R-25	LP-CC-25	5017906-025	KLS-R-025	A6K-25-R	HSJ-25
7.5 (10)	KTS-R-30	JKS-30	JJS-30	FNQ-R-30	KTK-R-30	LP-CC-30	5017906-030	KLS-R-030	A6K-30-R	HSJ-30
11–15 (15–20)	KTS-R-35	JKS-35	JJS-35	–	–	–	5014006-040	KLS-R-035	A6K-35-R	HSJ-35
18 (24)	KTS-R-45	JKS-45	JJS-45	–	–	–	5014006-050	KLS-R-045	A6K-45-R	HSJ-45
22 (30)	KTS-R-50	JKS-50	JJS-50	–	–	–	5014006-050	KLS-R-050	A6K-50-R	HSJ-50
30 (40)	KTS-R-60	JKS-60	JJS-60	–	–	–	5014006-063	KLS-R-060	A6K-60-R	HSJ-60
37 (50)	KTS-R-80	JKS-80	JJS-80	–	–	–	5014006-080	KLS-R-075	A6K-80-R	HSJ-80
45 (60)	KTS-R-100	JKS-100	JJS-100	–	–	–	5014006-100	KLS-R-100	A6K-100-R	HSJ-100
55 (75)	KTS-R-125	JKS-125	JJS-125	–	–	–	2028220-125	KLS-R-125	A6K-125-R	HSJ-125
75 (100)	KTS-R-150	JKS-150	JJS-150	–	–	–	2028220-150	KLS-R-150	A6K-150-R	HSJ-150
90 (125)	KTS-R-175	JKS-175	JJS-175	–	–	–	2028220-200	KLS-R-175	A6K-175-R	HSJ-175

Table 8.29 3x525–600 V, Enclosure Sizes A, B, and C

	Recommended maximum fuse							
Power [kW (hp)]	Maximum pre-fuse [A]	Bussmann E52273 RK1/JDDZ	Bussmann E4273 J/JDDZ	Bussmann E4273 T/JDDZ	SIBA E180276 RK1/JDDZ	Littelfuse E81895 RK1/JDDZ	Ferraz-Shawmut E163267/E2137 RK1/JDDZ	Ferraz-Shawmut E2137 J/HSJ
11–15 (15–20)	30	KTS-R-30	JKS-30	JJS-30	5017906-030	KLS-R-030	A6K-30-R	HST-30
22 (30)	45	KTS-R-45	JKS-45	JJS-45	5014006-050	KLS-R-045	A6K-45-R	HST-45
30 (40)	60	KTS-R-60	JKS-60	JJS-60	5014006-063	KLS-R-060	A6K-60-R	HST-60
37 (50)	80	KTS-R-80	JKS-80	JJS-80	5014006-080	KLS-R-075	A6K-80-R	HST-80
45 (60)	90	KTS-R-90	JKS-90	JJS-90	5014006-100	KLS-R-090	A6K-90-R	HST-90
55 (75)	100	KTS-R-100	JKS-100	JJS-100	5014006-100	KLS-R-100	A6K-100-R	HST-100
75 (100)	125	KTS-R-125	JKS-125	JJS-125	2028220-125	KLS-150	A6K-125-R	HST-125
90 (125)	150	KTS-R-150	JKS-150	JJS-150	2028220-150	KLS-175	A6K-150-R	HST-150

Table 8.30 3x525–690 V, Enclosure Sizes B and C

Danfoss A/S © 10/2016 All rights reserved.

8.9 Power Ratings, Weight, and Dimensions

Enclosure size [kW (hp)]		A2		A3		A4	A5
3x525–690 V	T7	–		–		–	–
3x525–600 V	T6	–		0.75–7.5 (1–10)		–	0.75–7.5 (1–10)
3x380–480 V	T4	0.37–4.0 (0.5–5)		5.5–7.5 (7.5–10)		0.37–4.0 (0.5–5)	0.37–7.5 (0.5–10)
1x380–480 V	S4	–		–		1.1–4.0 (1.5–5)	–
3x200–240 V	T2	0.25–3.0 (0.34–4)		3.7 (0.5)		0.25–2.2 (0.34–3)	0.25–3.7 (0.34–5)
1x200–240 V	S2	–		1.1 (1.5)		1.1–2.2 (1.5–3)	1.1 (1.5)
IP NEMA		20 Chassis	21 Type 1	20 Chassis	21 Type 1	55/66 Type 12/4X	55/66 Type 12/4X
Height [mm (in)]							
Height of backplate	A[1)]	268 (10.6)	375 (14.8)	268 (10.6)	375 (14.8)	390 (15.4)	420 (16.5)
Height with de-coupling plate for fieldbus cables	A	374 (14.7)	–	374 (14.7)	–	–	–
Distance between mounting holes	a	257 (10.1)	350 (13.8)	257 (10.1)	350 (13.8)	401 (15.8)	402 (15.8)
Width [mm (in)]							
Width of backplate	B	90 (3.5)	90 (3.5)	130 (5.1)	130 (5.1)	200 (7.9)	242 (9.5)
Width of backplate with 1 C option	B	130 (5.1)	130 (5.1)	170 (6.7)	170 (6.7)	–	242 (9.5)
Width of backplate with 2 C options	B	90 (3.5)	90 (3.5)	130 (5.1)	130 (5.1)	–	242 (9.5)
Distance between mounting holes	b	70 (2.8)	70 (2.8)	110 (4.3)	110 (4.3)	171 (6.7)	215 (8.5)
Depth[2)] [mm (in)]							
Without option A/B	C	205 (8.1)	205 (8.1)	205 (8.1)	205 (8.1)	175 (6.9)	200 (7.9)
With option A/B	C	220 (8.7)	220 (8.7)	220 (8.7)	220 (8.7)	175 (6.9)	200 (7.9)
Screw holes [mm (in)]							
	c	8.0 (0.31)	8.0 (0.31)	8.0 (0.31)	8.0 (0.31)	8.25 (0.32)	8.2 (0.32)
	d	ø11 (0.43)	ø11 (0.43)	ø11 (0.43)	ø11 (0.43)	ø12 (0.47)	ø12 (0.47)
	e	ø5.5 (0.22)	ø5.5 (0.22)	ø5.5 (0.22)	ø5.5 (0.22)	ø6.5 (0.26)	ø6.5 (0.26)
	f	9 (0.35)	9 (0.35)	9 (0.35)	9 (0.35)	6 (0.24)	9 (0.35)
Maximum weight [kg (lb)]		4.9 (10.8)	5.3 (11.7)	6.6 (14.6)	7 (15.4)	9.7 (21.4)	14 (31)

1) See *Illustration 3.4* and *Illustration 3.5* for top and bottom mounting holes.
2) Depth of enclosure varies with different options installed.

Table 8.31 Power Ratings, Weight, and Dimensions, Enclosure Sizes A2-A5

8

Danfoss A/S © 10/2016 All rights reserved.

Enclosure size [kW (hp)]		B1	B2	B3	B4	C1	C2	C3	C4
3x525–690 V	T7	–	11–30 (15–40)	–	–	–	37–90 (50–125)	–	–
3x525–600 V	T6	11–18.5 (15–25)	22–30 (30–40)	11–18.5 (15–25)	22–37 (30–50)	37–55 (50–75)	75–90 (100–125)	45–55 (60–75)	75–90 (100–125)
3x380–480 V	T4	11–18.5 (15–25)	22–30 (30–40)	11–18.5 (15–25)	22–37 (30–50)	37–55 (50–75)	75–90 (100–125)	45–55 (60–75)	75–90 (100–125)
1x380–480 V	S4	7.5 (10)	11 (15)	–	–	18 (24)	37 (50)	–	–
3x200–240 V	T2	5.5–11 (7.5–15)	15 (20)	5.5–11 (7.5–15)	15–18.5 (20–25)	18.5–30 (25–40)	37–45 (50–60)	22–30 (30–40)	37–45 (50–60)
1x200–240 V	S2	1.5–3.7 (2–5)	7.5 (10)	–	–	15 (20)	22 (30)	–	–
IP NEMA		21/55/66 Type 1/12/4X	21/55/66 Type 1/12/4X	20 Chassis	20 Chassis	21/55/66 Type 1/12/4X	21/55/66 Type 1/12/4X	20 Chassis	20 Chassis
Height [mm (in)]									
Height of backplate	A[1)]	480 (18.9)	650 (25.6)	399 (15.7)	520 (20.5)	680 (26.8)	770 (30.3)	550 (21.7)	660 (26)
Height with de-coupling plate for fieldbus cables	A	–	–	419 (16.5)	595 (23.4)	–	–	630 (24.8)	800 (31.5)
Distance between mounting holes	a	454 (17.9)	624 (24.6)	380 (15)	495 (19.5)	648 (25.5)	739 (29.1)	521 (20.5)	631 (24.8)
Width [mm (in)]									
Width of backplate	B	242 (9.5)	242 (9.5)	165 (6.5)	231 (9.1)	308 (12.1)	370 (14.6)	308 (12.1)	370 (14.6)
Width of backplate with 1 C option	B	242 (9.5)	242 (9.5)	205 (8.1)	231 (9.1)	308 (12.1)	370 (14.6)	308 (12.1)	370 (14.6)
Width of backplate with 2 C options	B	242 (9.5)	242 (9.5)	165 (6.5)	231 (9.1)	308 (12.1)	370 (14.6)	308 (12.1)	370 (14.6)
Distance between mounting holes	b	210 (8.3)	210 (8.3)	140 (5.5)	200 (7.9)	272 (10.7)	334 (13.1)	270 (10.6)	330 (13)
Depth[2)][mm (in)]									
Without option A/B	C	260 (10.2)	260 (10.2)	248 (9.8)	242 (9.5)	310 (12.2)	335 (13.2)	333 (13.1)	333 (13.1)
With option A/B	C	260 (10.2)	260 (10.2)	262 (10.3)	242 (9.5)	310 (12.2)	335 (13.2)	333 (13.1)	333 (13.1)
Screw holes [mm (in)]									
	c	12 (0.47)	12 (0.47)	8 (0.32)	–	12 (0.47)	12 (0.47)	–	–
	d	ø19 (0.75)	ø19 (0.75)	12 (0.47)	–	ø19 (0.75)	ø19 (0.75)	–	–
	e	ø9 (0.35)	ø9 (0.35)	6.8 (0.27)	8.5 (0.33)	ø9 (0.35)	ø9 (0.35)	8.5 (0.33)	8.5 (0.33)
	f	9 (0.35)	9 (0.35)	7.9 (0.31)	15 (0.59)	9.8 (0.39)	9.8 (0.39)	17 (0.67)	17 (0.67)
Maximum weight [kg (lb)]		23 (51)	27 (60)	12 (26.5)	23.5 (52)	45 (99)	65 (143)	35 (77)	50 (110)

1) See *Illustration 3.4* and *Illustration 3.5* for top and bottom mounting holes.
2) Depth of enclosure varies with different options installed.

Table 8.32 Power Ratings, Weight, and Dimensions, Enclosure Sizes B1–B4, C1–C4

8

Danfoss A/S © 10/2016 All rights reserved.

9 Appendix

9.1 Symbols, Abbreviations, and Conventions

°C	Degrees Celsius
°F	Degrees Fahrenheit
AC	Alternating current
AEO	Automatic energy optimization
AWG	American wire gauge
AMA	Automatic motor adaptation
DC	Direct current
EMC	Electro-magnetic compatibility
ETR	Electronic thermal relay
$f_{M,N}$	Nominal motor frequency
FC	Frequency converter
I_{INV}	Rated inverter output current
I_{LIM}	Current limit
$I_{M,N}$	Nominal motor current
$I_{VLT,MAX}$	Maximum output current
$I_{VLT,N}$	Rated output current supplied by the frequency converter
IP	Ingress protection
LCP	Local control panel
MCT	Motion control tool
n_s	Synchronous motor speed
$P_{M,N}$	Nominal motor power
PELV	Protective extra low voltage
PCB	Printed circuit board
PM Motor	Permanent magnet motor
PWM	Pulse width modulation
RPM	Revolutions per minute
Regen	Regenerative terminals
T_{LIM}	Torque limit
$U_{M,N}$	Nominal motor voltage

Table 9.1 Symbols and Abbreviations

Conventions

Numbered lists indicate procedures. Bullet lists indicate other information.

Italicized text indicates:

- Cross-reference.
- Link.
- Parameter name.
- Parameter group name.
- Parameter option.
- Footnote.

All dimensions in drawings are in [mm] (in).

9.2 Parameter Menu Structure

NOTICE

The availability of some parameters depends on the hardware configuration (installed options and power rating).

Danfoss A/S © 10/2016 All rights reserved.

0-	**Operation / Display**
0-0*	**Basic Settings**
0-01	Language
0-02	Motor Speed Unit
0-03	Regional Settings
0-04	Operating State at Power-up
0-05	Local Mode Unit
0-1*	**Set-up Operations**
0-10	Active Set-up
0-11	Programming Set-up
0-12	This Set-up Linked to
0-13	Readout: Linked Set-ups
0-14	Readout: Prog. Set-ups / Channel
0-2*	**LCP Display**
0-20	Display Line 1.1 Small
0-21	Display Line 1.2 Small
0-22	Display Line 1.3 Small
0-23	Display Line 2 Large
0-24	Display Line 3 Large
0-25	My Personal Menu
0-3*	**LCP Custom Readout**
0-30	Custom Readout Unit
0-31	Custom Readout Min Value
0-32	Custom Readout Max Value
0-37	Display Text 1
0-38	Display Text 2
0-39	Display Text 3
0-4*	**LCP Keypad**
0-40	[Hand on] Key on LCP
0-41	[Off] Key on LCP
0-42	[Auto on] Key on LCP
0-43	[Reset] Key on LCP
0-44	[Off/Reset] Key on LCP
0-45	[Drive Bypass] Key on LCP
0-5*	**Copy/Save**
0-50	LCP Copy
0-51	Set-up Copy
0-6*	**Password**
0-60	Main Menu Password
0-61	Access to Main Menu w/o Password
0-65	Personal Menu Password
0-66	Access to Personal Menu w/o Password
0-67	Bus Password Access
0-7*	**Clock Settings**
0-70	Date and Time
0-71	Date Format
0-72	Time Format
0-74	DST/Summertime
0-76	DST/Summertime Start
0-77	DST/Summertime End
0-79	Clock Fault
0-81	Working Days
0-82	Additional Working Days
0-83	Additional Non-Working Days
0-89	Date and Time Readout
1-	**Load and Motor**
1-0*	**General Settings**
1-00	Configuration Mode
1-01	Motor Control Principle
1-03	Torque Characteristics
1-04	Overload Mode
1-06	Clockwise Direction
1-1*	**Motor Selection**
1-10	Motor Construction
1-1*	**VVC+ PM/SYN RM**
1-14	Damping Gain
1-15	Low Speed Filter Time Const.
1-16	High Speed Filter Time Const.
1-17	Voltage filter time const.
1-2*	**Motor Data**
1-20	Motor Power [kW]
1-21	Motor Power [HP]
1-22	Motor Voltage
1-23	Motor Frequency
1-24	Motor Current
1-25	Motor Nominal Speed
1-26	Motor Cont. Rated Torque
1-28	Motor Rotation Check
1-29	Automatic Motor Adaptation (AMA)
1-3*	**Adv. Motor Data**
1-30	Stator Resistance (Rs)
1-31	Rotor Resistance (Rr)
1-33	Stator Leakage Reactance (X1)
1-34	Rotor Leakage Reactance (X2)
1-35	Main Reactance (Xh)
1-36	Iron Loss Resistance (Rfe)
1-37	d-axis Inductance (Ld)
1-38	q-axis Inductance (Lq)
1-39	Motor Poles
1-40	Back EMF at 1000 RPM
1-44	d-axis Inductance Sat. (LdSat)
1-45	q-axis Inductance Sat. (LqSat)
1-46	Position Detection Gain
1-47	Torque Calibration
1-48	Inductance Sat. Point
1-5*	**Load Indep. Setting**
1-50	Motor Magnetisation at Zero Speed
1-51	Min Speed Normal Magnetising [RPM]
1-52	Min Speed Normal Magnetising [Hz]
1-55	V/f Characteristic - V
1-56	V/f Characteristic - f
1-58	Flying Start Test Pulses Current
1-59	Flying Start Test Pulses Frequency
1-6*	**Load Depen. Setting**
1-60	Low Speed Load Compensation
1-61	High Speed Load Compensation
1-62	Slip Compensation
1-63	Slip Compensation Time Constant
1-64	Resonance Damping
1-65	Resonance Damping Time Constant
1-66	Min. Current at Low Speed
1-7*	**Start Adjustments**
1-70	PM Start Mode
1-71	Start Delay
1-72	Start Function
1-73	Flying Start
1-77	Compressor Start Max Speed [RPM]
1-78	Compressor Start Max Speed [Hz]
1-79	Pump Start Max Time to Trip
1-8*	**Stop Adjustments**
1-80	Function at Stop
1-81	Min Speed for Function at Stop [RPM]
1-82	Min Speed for Function at Stop [Hz]
1-86	Trip Speed Low [RPM]
1-87	Trip Speed Low [Hz]
1-9*	**Motor Temperature**
1-90	Motor Thermal Protection
1-91	Motor External Fan
1-93	Thermistor Source
1-94	ATEX ETR cur.lim. speed reduction
1-98	ATEX ETR interpol. points freq.
1-99	ATEX ETR interpol points current
2-	**Brakes**
2-0*	**DC-Brake**
2-00	DC Hold/Preheat Current
2-01	DC Brake Current
2-02	DC Braking Time
2-03	DC Brake Cut In Speed [RPM]
2-04	DC Brake Cut In Speed [Hz]
2-06	Parking Current
2-07	Parking Time
2-1*	**Brake Energy Funct.**
2-10	Brake Function
2-11	Brake Resistor (ohm)
2-12	Brake Power Limit (kW)
2-13	Brake Power Monitoring
2-15	Brake Check
2-16	AC brake Max. Current
2-17	Over-voltage Control
3-	**Reference / Ramps**
3-0*	**Reference Limits**
3-02	Minimum Reference
3-03	Maximum Reference
3-04	Reference Function
3-1*	**References**
3-10	Preset Reference
3-11	Jog Speed [Hz]
3-13	Reference Site
3-14	Preset Relative Reference
3-15	Reference 1 Source
3-16	Reference 2 Source
3-17	Reference 3 Source
3-19	Jog Speed [RPM]
3-4*	**Ramp 1**
3-41	Ramp 1 Ramp Up Time
3-42	Ramp 1 Ramp Down Time
3-5*	**Ramp 2**
3-51	Ramp 2 Ramp Up Time
3-52	Ramp 2 Ramp Down Time
3-8*	**Other Ramps**
3-80	Jog Ramp Time
3-81	Quick Stop Ramp Time
3-84	Initial Ramp Time
3-85	Check Valve Ramp Time
3-86	Check Valve Ramp End Speed [RPM]
3-87	Check Valve Ramp End Speed [HZ]
3-88	Final Ramp Time
3-9*	**Digital Pot.Meter**
3-90	Step Size
3-91	Ramp Time
3-92	Power Restore
3-93	Maximum Limit
3-94	Minimum Limit
3-95	Ramp Delay
4-	**Limits / Warnings**
4-1*	**Motor Limits**
4-10	Motor Speed Direction
4-11	Motor Speed Low Limit [RPM]
4-12	Motor Speed Low Limit [Hz]
4-13	Motor Speed High Limit [RPM]
4-14	Motor Speed High Limit [Hz]
4-16	Torque Limit Motor Mode
4-17	Torque Limit Generator Mode
4-18	Current Limit
4-19	Max Output Frequency
4-5*	**Adj. Warnings**
4-50	Warning Current Low
4-51	Warning Current High
4-52	Warning Speed Low
4-53	Warning Speed High
4-54	Warning Reference Low
4-55	Warning Reference High
4-56	Warning Feedback Low
4-57	Warning Feedback High
4-58	Missing Motor Phase Function
4-6*	**Speed Bypass**
4-60	Bypass Speed From [RPM]
4-61	Bypass Speed From [Hz]
4-62	Bypass Speed To [RPM]
4-63	Bypass Speed To [Hz]
4-64	Semi-Auto Bypass Set-up
5-	**Digital In/Out**
5-0*	**Digital I/O mode**
5-00	Digital I/O Mode
5-01	Terminal 27 Mode
5-02	Terminal 29 Mode
5-1*	**Digital Inputs**
5-10	Terminal 18 Digital Input
5-11	Terminal 19 Digital Input
5-12	Terminal 27 Digital Input
5-13	Terminal 29 Digital Input
5-14	Terminal 32 Digital Input
5-15	Terminal 33 Digital Input
5-16	Terminal X30/2 Digital Input
5-17	Terminal X30/3 Digital Input
5-18	Terminal X30/4 Digital Input
5-19	Terminal 37 Digital Input
5-20	Terminal X46/1 Digital Input
5-21	Terminal X46/3 Digital Input
5-22	Terminal X46/5 Digital Input
5-23	Terminal X46/7 Digital Input
5-24	Terminal X46/9 Digital Input
5-25	Terminal X46/11 Digital Input
5-26	Terminal X46/13 Digital Input
5-3*	**Digital Outputs**
5-30	Terminal 27 Digital Output
5-31	Terminal 29 Digital Output
5-32	Term X30/6 Digi Out (MCB 101)
5-33	Term X30/7 Digi Out (MCB 101)
5-4*	**Relays**
5-40	Function Relay
5-41	On Delay, Relay
5-42	Off Delay, Relay
5-5*	**Pulse Input**
5-50	Term. 29 Low Frequency
5-51	Term. 29 High Frequency
5-52	Term. 29 Low Ref./Feedb. Value
5-53	Term. 29 High Ref./Feedb. Value
5-54	Pulse Filter Time Constant #29
5-55	Term. 33 Low Frequency
5-56	Term. 33 High Frequency
5-57	Term. 33 Low Ref./Feedb. Value
5-58	Term. 33 High Ref./Feedb. Value
5-59	Pulse Filter Time Constant #33
5-6*	**Pulse Output**
5-60	Terminal 27 Pulse Output Variable
5-62	Pulse Output Max Freq #27
5-63	Terminal 29 Pulse Output Variable
5-65	Pulse Output Max Freq #29
5-66	Terminal X30/6 Pulse Output Variable
5-68	Pulse Output Max Freq #X30/6
5-8*	**I/O Options**
5-80	AHF Cap Reconnect Delay
5-9*	**Bus Controlled**
5-90	Digital & Relay Bus Control
5-93	Pulse Out #27 Bus Control
5-94	Pulse Out #27 Timeout Preset
5-95	Pulse Out #29 Bus Control
5-96	Pulse Out #29 Timeout Preset
5-97	Pulse Out #X30/6 Bus Control
5-98	Pulse Out #X30/6 Timeout Preset
6-	**Analog In/Out**
6-0*	**Analog I/O Mode**
6-00	Live Zero Timeout Time
6-01	Live Zero Timeout Function
6-1*	**Analog Input 53**
6-10	Terminal 53 Low Voltage
6-11	Terminal 53 High Voltage
6-12	Terminal 53 Low Current
6-13	Terminal 53 High Current
6-14	Terminal 53 Low Ref./Feedb. Value
6-15	Terminal 53 High Ref./Feedb. Value
6-16	Terminal 53 Filter Time Constant
6-17	Terminal 53 Live Zero
6-2*	**Analog Input 54**
6-20	Terminal 54 Low Voltage
6-21	Terminal 54 High Voltage
6-22	Terminal 54 Low Current
6-23	Terminal 54 High Current
6-24	Terminal 54 Low Ref./Feedb. Value
6-25	Terminal 54 High Ref./Feedb. Value
6-26	Terminal 54 Filter Time Constant
6-27	Terminal 54 Live Zero
6-3*	**Analog Input X30/11**
6-30	Terminal X30/11 Low Voltage

6-31 Terminal X30/11 High Voltage
6-34 Term. X30/11 Low Ref./Feedb. Value
6-35 Term. X30/11 High Ref./Feedb. Value
6-36 Term. X30/11 Filter Time Constant
6-37 Term. X30/11 Live Zero
6-4* Analog Input X30/12
6-40 Terminal X30/12 Low Voltage
6-41 Terminal X30/12 High Voltage
6-44 Term. X30/12 Low Ref./Feedb. Value
6-45 Term. X30/12 High Ref./Feedb. Value
6-46 Term. X30/12 Filter Time Constant
6-47 Term. X30/12 Live Zero
6-5* Analog Output 42
6-50 Terminal 42 Output
6-51 Terminal 42 Output Min Scale
6-52 Terminal 42 Output Max Scale
6-53 Terminal 42 Output Bus Control
6-54 Terminal 42 Output Timeout Preset
6-55 Terminal 42 Output Filter
6-6* Analog Output X30/8
6-60 Terminal X30/8 Output
6-61 Terminal X30/8 Min. Scale
6-62 Terminal X30/8 Max. Scale
6-63 Terminal X30/8 Output Bus Control
6-64 Terminal X30/8 Output Timeout Preset
6-7* Analog Output X45/1
6-70 Terminal X45/1 Output
6-71 Terminal X45/1 Min. Scale
6-72 Terminal X45/1 Max. Scale
6-73 Terminal X45/1 Bus Control
6-74 Terminal X45/1 Output Timeout Preset
6-8* Analog Output X45/3
6-80 Terminal X45/3 Output
6-81 Terminal X45/3 Min. Scale
6-82 Terminal X45/3 Max. Scale
6-83 Terminal X45/3 Bus Control
6-84 Terminal X45/3 Output Timeout Preset
8- Comm. and Options**
8-0* General Settings
8-01 Control Site
8-02 Control Source
8-03 Control Timeout Time
8-04 Control Timeout Function
8-05 End-of-Timeout Function
8-06 Reset Control Timeout
8-07 Diagnosis Trigger
8-08 Readout Filtering
8-1* Control Settings
8-10 Control Profile
8-13 Configurable Status Word STW
8-14 Configurable Control Word CTW
8-17 Configurable Alarm and Warningword
8-3* FC Port Settings
8-30 Protocol
8-31 Address
8-32 Baud Rate
8-33 Parity / Stop Bits
8-35 Minimum Response Delay
8-36 Max Response Delay
8-37 Maximum Inter-Char Delay
8-4* FC MC protocol set
8-40 Telegram Selection
8-42 PCD Write Configuration
8-43 PCD Read Configuration
8-5* Digital/Bus
8-50 Coasting Select
8-51 Quick Stop Select
8-52 DC Brake Select
8-53 Start Select
8-54 Reversing Select
8-55 Set-up Select
8-56 Preset Reference Select
8-8* FC Port Diagnostics
8-80 Bus Message Count
8-81 Bus Error Count
8-82 Slave Message Rcvd
8-83 Slave Error Count
8-9* Bus Jog / Feedback
8-94 Bus Feedback 1
8-95 Bus Feedback 2
8-96 Bus Feedback 3
9- PROFIdrive**
9-00 Setpoint
9-07 Actual Value
9-15 PCD Write Configuration
9-16 PCD Read Configuration
9-18 Node Address
9-22 Telegram Selection
9-23 Parameters for Signals
9-27 Parameter Edit
9-28 Process Control
9-31 Safe Address
9-44 Fault Message Counter
9-45 Fault Code
9-47 Fault Number
9-52 Fault Situation Counter
9-53 Profibus Warning Word
9-63 Actual Baud Rate
9-64 Device Identification
9-65 Profile Number
9-67 Control Word 1
9-68 Status Word 1
9-70 Programming Set-up
9-71 Profibus Save Data Values
9-72 ProfibusDriveReset
9-75 DO Identification
9-80 Defined Parameters (1)
9-81 Defined Parameters (2)
9-82 Defined Parameters (3)
9-83 Defined Parameters (4)
9-84 Defined Parameters (5)
9-85 Defined Parameters (6)
9-90 Changed Parameters (1)
9-91 Changed Parameters (2)
9-92 Changed Parameters (3)
9-93 Changed Parameters (4)
9-94 Changed Parameters (5)
9-99 Profibus Revision Counter
10- CAN Fieldbus**
10-0* Common Settings
10-00 CAN Protocol
10-01 Baud Rate Select
10-02 MAC ID
10-05 Readout Transmit Error Counter
10-06 Readout Receive Error Counter
10-07 Readout Bus Off Counter
10-1* DeviceNet
10-10 Process Data Type Selection
10-11 Process Data Config Write
10-12 Process Data Config Read
10-13 Warning Parameter
10-14 Net Reference
10-15 Net Control
10-2* COS Filters
10-20 COS Filter 1
10-21 COS Filter 2
10-22 COS Filter 3
10-23 COS Filter 4
10-3* Parameter Access
10-30 Array Index
10-31 Store Data Values
10-32 Devicenet Revision
10-33 Store Always
10-34 DeviceNet Product Code
10-39 Devicenet F Parameters
12- Ethernet**
12-0* IP Settings
12-00 IP Address Assignment
12-01 IP Address
12-02 Subnet Mask
12-03 Default Gateway
12-04 DHCP Server
12-05 Lease Expires
12-06 Name Servers
12-07 Domain Name
12-08 Host Name
12-09 Physical Address
12-1* Ethernet Link Parameters
12-10 Link Status
12-11 Link Duration
12-12 Auto Negotiation
12-13 Link Speed
12-14 Link Duplex
12-18 Supervisor MAC
12-19 Supervisor IP Addr.
12-2* Process Data
12-20 Control Instance
12-21 Process Data Config Write
12-22 Process Data Config Read
12-27 Primary Master
12-28 Store Data Values
12-29 Store Always
12-3* EtherNet/IP
12-30 Warning Parameter
12-31 Net Reference
12-32 Net Control
12-33 CIP Revision
12-34 CIP Product Code
12-35 EDS Parameter
12-37 COS Inhibit Timer
12-38 COS Filter
12-4* Modbus TCP
12-40 Status Parameter
12-41 Slave Message Count
12-42 Slave Exception Message Count
12-8* Other Ethernet Services
12-80 FTP Server
12-81 HTTP Server
12-82 SMTP Service
12-83 SNMP Agent
12-84 Address Conflict Detection
12-85 ACD Last Conflict
12-89 Transparent Socket Channel Port
12-9* Advanced Ethernet Services
12-90 Cable Diagnostic
12-91 MDI-X
12-92 IGMP Snooping
12-93 Cable Error Length
12-94 Broadcast Storm Protection
12-95 Inactivity timeout
12-96 Port Config
12-97 QoS Priority
12-98 Interface Counters
12-99 Media Counters
13- Smart Logic**
13-0* SLC Settings
13-00 SL Controller Mode
13-01 Start Event
13-02 Stop Event
13-03 Reset SLC
13-1* Comparators
13-10 Comparator Operand
13-11 Comparator Operator
13-12 Comparator Value
13-1* RS Flip Flops
13-15 RS-FF Operand S
13-16 RS-FF Operand R
13-2* Timers
13-20 SL Controller Timer
13-4* Logic Rules
13-40 Logic Rule Boolean 1
13-41 Logic Rule Operator 1
13-42 Logic Rule Boolean 2
13-43 Logic Rule Operator 2
13-44 Logic Rule Boolean 3
13-5* States
13-51 SL Controller Event
13-52 SL Controller Action
13-9* User Defined Alerts
13-90 Alert Trigger
13-91 Alert Action
13-92 Alert Text
13-9* User Defined Readouts
13-97 Alert Alarm Word
13-98 Alert Warning Word
13-99 Alert Status Word
14- Special Functions**
14-0* Inverter Switching
14-00 Switching Pattern
14-01 Switching Frequency
14-03 Overmodulation
14-04 PWM Random
14-1* Mains On/Off
14-10 Mains Failure
14-11 Mains Voltage at Mains Fault
14-12 Function at Mains Imbalance
14-16 Kin. Backup Gain
14-2* Reset Functions
14-20 Reset Mode
14-21 Automatic Restart Time
14-22 Operation Mode
14-25 Trip Delay at Torque Limit
14-26 Trip Delay at Inverter Fault
14-28 Production Settings
14-29 Service Code
14-3* Current Limit Ctrl.
14-30 Current Lim Ctrl, Proportional Gain
14-31 Current Lim Ctrl, Integration Time
14-32 Current Lim Ctrl, Filter Time
14-4* Energy Optimising
14-40 VT Level
14-41 AEO Minimum Magnetisation
14-42 Minimum AEO Frequency
14-43 Motor Cosphi
14-5* Environment
14-50 RFI Filter
14-51 DC Link Compensation
14-52 Fan Control
14-53 Fan Monitor
14-55 Output Filter
14-56 Capacitance Output Filter
14-57 Inductance Output Filter
14-58 Voltage Gain Filter
14-59 Actual Number of Inverter Units
14-6* Auto Derate
14-60 Function at Over Temperature
14-61 Function at Inverter Overload
14-62 Inv. Overload Derate Current
14-8* Options
14-80 Option Supplied by External 24VDC
14-9* Fault Settings
14-90 Fault Level
15- Drive Information**
15-0* Operating Data
15-00 Operating hours
15-01 Running Hours
15-02 kWh Counter
15-03 Power Up's
15-04 Over Temp's
15-05 Over Volt's
15-06 Reset kWh Counter
15-07 Reset Running Hours Counter
15-08 Number of Starts
15-1* Data Log Settings
15-10 Logging Source

Danfoss A/S © 10/2016 All rights reserved.

15-11 Logging Interval
15-12 Trigger Event
15-13 Logging Mode
15-14 Samples Before Trigger
15-2* Historic Log
15-20 Historic Log: Event
15-21 Historic Log: Value
15-22 Historic Log: Time
15-23 Historic log: Date and Time
15-3* Alarm Log
15-30 Alarm Log: Error Code
15-31 Alarm Log: Value
15-32 Alarm Log: Time
15-33 Alarm Log: Date and Time
15-34 Alarm Log: Setpoint
15-35 Alarm Log: Feedback
15-36 Alarm Log: Current Demand
15-37 Alarm Log: Process Ctrl Unit
15-4* Drive Identification
15-40 FC Type
15-41 Power Section
15-42 Voltage
15-43 Software Version
15-44 Ordered Typecode String
15-45 Actual Typecode String
15-46 Frequency Converter Ordering No
15-47 Power Card Ordering No
15-48 LCP Id No
15-49 SW ID Control Card
15-50 SW ID Power Card
15-51 Frequency Converter Serial Number
15-53 Power Card Serial Number
15-54 Config File Name
15-58 SmartStart Filename
15-59 Filename
15-6* Option Ident
15-60 Option Mounted
15-61 Option SW Version
15-62 Option Ordering No
15-63 Option Serial No
15-70 Option in Slot A
15-71 Slot A Option SW Version
15-72 Option in Slot B
15-73 Slot B Option SW Version
15-74 Option in Slot C0/E0
15-75 Slot C0/E0 Option SW Version
15-76 Option in Slot C1/E1
15-77 Slot C1/E1 Option SW Version
15-8* Operating Data II
15-80 Fan Running Hours
15-81 Preset Fan Running Hours
15-9* Parameter Info
15-92 Defined Parameters
15-93 Modified Parameters
15-98 Drive Identification
15-99 Parameter Metadata
16- Data Readouts**
16-0* General Status
16-00 Control Word
16-01 Reference [Unit]
16-02 Reference [%]
16-03 Status Word
16-05 Main Actual Value [%]
16-09 Custom Readout
16-1* Motor Status
16-10 Power [kW]
16-11 Power [hp]
16-12 Motor Voltage
16-13 Frequency
16-14 Motor current
16-15 Frequency [%]
16-16 Torque [Nm]
16-17 Speed [RPM]
16-18 Motor Thermal
16-20 Motor Angle
16-22 Torque [%]
16-23 Motor Shaft Power [kW]
16-24 Calibrated Stator Resistance
16-26 Power Filtered [kW]
16-27 Power Filtered [hp]
16-3* Drive Status
16-30 DC Link Voltage
16-31 System Temp.
16-32 Brake Energy /s
16-33 Brake Energy Average
16-34 Heatsink Temp.
16-35 Inverter Thermal
16-36 Inv. Nom. Current
16-37 Inv. Max. Current
16-38 SL Controller State
16-39 Control Card Temp.
16-40 Logging Buffer Full
16-49 Current Fault Source
16-5* Ref. & Feedb.
16-50 External Reference
16-52 Feedback[Unit]
16-53 Digi Pot Reference
16-54 Feedback 1 [Unit]
16-55 Feedback 2 [Unit]
16-56 Feedback 3 [Unit]
16-58 PID Output [%]
16-59 Adjusted Setpoint
16-6* Inputs & Outputs
16-60 Digital Input
16-61 Terminal 53 Switch Setting
16-62 Analog Input 53
16-63 Terminal 54 Switch Setting
16-64 Analog Input 54
16-65 Analog Output 42 [mA]
16-66 Digital Output [bin]
16-67 Pulse Input #29 [Hz]
16-68 Pulse Input #33 [Hz]
16-69 Pulse Output #27 [Hz]
16-70 Pulse Output #29 [Hz]
16-71 Relay Output [bin]
16-72 Counter A
16-73 Counter B
16-75 Analog In X30/11
16-76 Analog In X30/12
16-77 Analog Out X30/8 [mA]
16-78 Analog Out X45/1 [mA]
16-79 Analog Out X45/3 [mA]
16-8* Fieldbus & FC Port
16-80 Fieldbus CTW 1
16-82 Fieldbus REF 1
16-84 Comm. Option STW
16-85 FC Port CTW 1
16-86 FC Port REF 1
16-89 Configurable Alarm/Warning Word
16-9* Diagnosis Readouts
16-90 Alarm Word
16-91 Alarm Word 2
16-92 Warning Word
16-93 Warning Word 2
16-94 Ext. Status Word
16-95 Ext. Status Word 2
16-96 Maintenance Word
18- Info & Readouts**
18-0* Maintenance Log
18-00 Maintenance Log: Item
18-01 Maintenance Log: Action
18-02 Maintenance Log: Time
18-03 Maintenance Log: Date and Time
18-3* Analog Readouts
18-30 Analog Input X42/1
18-31 Analog Input X42/3
18-32 Analog Input X42/5
18-33 Analog Out X42/7 [V]
18-34 Analog Out X42/9 [V]
18-35 Analog Out X42/11 [V]
18-36 Analog Input X48/2 [mA]
18-37 Temp. Input X48/4
18-38 Temp. Input X48/7
18-39 Temp. Input X48/10
18-5* Ref. & Feedb.
18-50 Sensorless Readout [unit]
18-6* Inputs & Outputs 2
18-60 Digital Input 2
18-7* Rectifier Status
18-70 Mains Voltage
18-71 Mains Frequency
18-72 Mains Imbalance
18-75 Rectifier DC Volt.
20- Drive Closed Loop**
20-0* Feedback
20-00 Feedback 1 Source
20-01 Feedback 1 Conversion
20-02 Feedback 1 Source Unit
20-03 Feedback 2 Source
20-04 Feedback 2 Conversion
20-05 Feedback 2 Source Unit
20-06 Feedback 3 Source
20-07 Feedback 3 Conversion
20-08 Feedback 3 Source Unit
20-12 Reference/Feedback Unit
20-2* Feedback/Setpoint
20-20 Feedback Function
20-21 Setpoint 1
20-22 Setpoint 2
20-23 Setpoint 3
20-6* Sensorless
20-60 Sensorless Unit
20-69 Sensorless Information
20-7* PID Autotuning
20-70 Closed Loop Type
20-71 PID Performance
20-72 PID Output Change
20-73 Minimum Feedback Level
20-74 Maximum Feedback Level
20-79 PID Autotuning
20-8* PID Basic Settings
20-81 PID Normal/ Inverse Control
20-82 PID Start Speed [RPM]
20-83 PID Start Speed [Hz]
20-84 On Reference Bandwidth
20-9* PID Controller
20-91 PID Anti Windup
20-93 PID Proportional Gain
20-94 PID Integral Time
20-95 PID Differentiation Time
20-96 PID Diff. Gain Limit
21- Ext. Closed Loop**
21-0* Ext. CL Autotuning
21-00 Closed Loop Type
21-01 PID Performance
21-02 PID Output Change
21-03 Minimum Feedback Level
21-04 Maximum Feedback Level
21-09 PID Auto Tuning
21-1* Ext. CL 1 Ref./Fb.
21-10 Ext. 1 Ref./Feedback Unit
21-11 Ext. 1 Minimum Reference
21-12 Ext. 1 Maximum Reference
21-13 Ext. 1 Reference Source
21-14 Ext. 1 Feedback Source
21-15 Ext. 1 Setpoint
21-17 Ext. 1 Reference [Unit]
21-18 Ext. 1 Feedback [Unit]
21-19 Ext. 1 Output [%]
21-2* Ext. CL 1 PID
21-20 Ext. 1 Normal/Inverse Control
21-21 Ext. 1 Proportional Gain
21-22 Ext. 1 Integral Time
21-23 Ext. 1 Differentation Time
21-24 Ext. 1 Dif. Gain Limit
21-3* Ext. CL 2 Ref./Fb.
21-30 Ext. 2 Ref./Feedback Unit
21-31 Ext. 2 Minimum Reference
21-32 Ext. 2 Maximum Reference
21-33 Ext. 2 Reference Source
21-34 Ext. 2 Feedback Source
21-35 Ext. 2 Setpoint
21-37 Ext. 2 Reference [Unit]
21-38 Ext. 2 Feedback [Unit]
21-39 Ext. 2 Output [%]
21-4* Ext. CL 2 PID
21-40 Ext. 2 Normal/Inverse Control
21-41 Ext. 2 Proportional Gain
21-42 Ext. 2 Integral Time
21-43 Ext. 2 Differentation Time
21-44 Ext. 2 Dif. Gain Limit
21-5* Ext. CL 3 Ref./Fb.
21-50 Ext. 3 Ref./Feedback Unit
21-51 Ext. 3 Minimum Reference
21-52 Ext. 3 Maximum Reference
21-53 Ext. 3 Reference Source
21-54 Ext. 3 Feedback Source
21-55 Ext. 3 Setpoint
21-57 Ext. 3 Reference [Unit]
21-58 Ext. 3 Feedback [Unit]
21-59 Ext. 3 Output [%]
21-6* Ext. CL 3 PID
21-60 Ext. 3 Normal/Inverse Control
21-61 Ext. 3 Proportional Gain
21-62 Ext. 3 Integral Time
21-63 Ext. 3 Differentation Time
21-64 Ext. 3 Dif. Gain Limit
22- Appl. Functions**
22-0* Miscellaneous
22-00 External Interlock Delay
22-01 Power Filter Time
22-2* No-Flow Detection
22-20 Low Power Auto Set-up
22-21 Low Power Detection
22-22 Low Speed Detection
22-23 No-Flow Function
22-24 No-Flow Delay
22-26 Dry Pump Function
22-27 Dry Pump Delay
22-28 No-Flow Low Speed [RPM]
22-29 No-Flow Low Speed [Hz]
22-3* No-Flow Power Tuning
22-30 No-Flow Power
22-31 Power Correction Factor
22-32 Low Speed [RPM]
22-33 Low Speed [Hz]
22-34 Low Speed Power [kW]
22-35 Low Speed Power [HP]
22-36 High Speed [RPM]
22-37 High Speed [Hz]
22-38 High Speed Power [kW]
22-39 High Speed Power [HP]
22-4* Sleep Mode
22-40 Minimum Run Time
22-41 Minimum Sleep Time
22-42 Wake-up Speed [RPM]
22-43 Wake-up Speed [Hz]
22-44 Wake-up Ref./FB Difference
22-45 Setpoint Boost
22-46 Maximum Boost Time
22-5* End of Curve
22-50 End of Curve Function
22-51 End of Curve Delay
22-6* Broken Belt Detection
22-60 Broken Belt Function

22-61 Broken Belt Torque
22-62 Broken Belt Delay
22-7* Short Cycle Protection
22-75 Short Cycle Protection
22-76 Interval between Starts
22-77 Minimum Run Time
22-78 Minimum Run Time Override
22-79 Minimum Run Time Override Value
22-8* Flow Compensation
22-80 Flow Compensation
22-81 Square-linear Curve Approximation
22-82 Work Point Calculation
22-83 Speed at No-Flow [RPM]
22-84 Speed at No-Flow [Hz]
22-85 Speed at Design Point [RPM]
22-86 Speed at Design Point [Hz]
22-87 Pressure at No-Flow Speed
22-88 Pressure at Rated Speed
22-89 Flow at Design Point
22-90 Flow at Rated Speed
23- Time-based Functions**
23-0* Timed Actions
23-00 ON Time
23-01 ON Action
23-02 OFF Time
23-03 OFF Action
23-04 Occurrence
23-1* Maintenance
23-10 Maintenance Item
23-11 Maintenance Action
23-12 Maintenance Time Base
23-13 Maintenance Time Interval
23-14 Maintenance Date and Time
23-1* Maintenance Reset
23-15 Reset Maintenance Word
23-16 Maintenance Text
23-5* Energy Log
23-50 Energy Log Resolution
23-51 Period Start
23-53 Energy Log
23-54 Reset Energy Log
23-6* Trending
23-60 Trend Variable
23-61 Continuous Bin Data
23-62 Timed Bin Data
23-63 Timed Period Start
23-64 Timed Period Stop
23-65 Minimum Bin Value
23-66 Reset Continuous Bin Data
23-67 Reset Timed Bin Data
23-8* Payback Counter
23-80 Power Reference Factor
23-81 Energy Cost
23-82 Investment
23-83 Energy Savings
23-84 Cost Savings
24- Appl. Functions 2**
24-1* Drive Bypass
24-10 Drive Bypass Function
24-11 Drive Bypass Delay Time
25- Cascade Controller**
25-0* System Settings
25-00 Cascade Controller
25-02 Motor Start
25-04 Pump Cycling
25-05 Fixed Lead Pump
25-06 Number of Pumps
25-2* Bandwidth Settings
25-20 Staging Bandwidth
25-21 Override Bandwidth
25-22 Fixed Speed Bandwidth
25-23 SBW Staging Delay
25-24 SBW Destaging Delay
25-25 OBW Time
25-26 Destage At No-Flow
25-27 Stage Function
25-28 Stage Function Time
25-29 Destage Function
25-30 Destage Function Time
25-4* Staging Settings
25-40 Ramp Down Delay
25-41 Ramp Up Delay
25-42 Staging Threshold
25-43 Destaging Threshold
25-44 Staging Speed [RPM]
25-45 Staging Speed [Hz]
25-46 Destaging Speed [RPM]
25-47 Destaging Speed [Hz]
25-49 Staging Principle
25-5* Alternation Settings
25-50 Lead Pump Alternation
25-51 Alternation Event
25-52 Alternation Time Interval
25-53 Alternation Timer Value
25-54 Alternation Predefined Time
25-55 Alternate if Load < 50%
25-56 Staging Mode at Alternation
25-58 Run Next Pump Delay
25-59 Run on Mains Delay
25-8* Status
25-80 Cascade Status
25-81 Pump Status
25-82 Lead Pump
25-83 Relay Status
25-84 Pump ON Time
25-85 Relay ON Time
25-86 Reset Relay Counters
25-9* Service
25-90 Pump Interlock
25-91 Manual Alternation
26- Analog I/O Option**
26-0* Analog I/O Mode
26-00 Terminal X42/1 Mode
26-01 Terminal X42/3 Mode
26-02 Terminal X42/5 Mode
26-1* Analog Input X42/1
26-10 Terminal X42/1 Low Voltage
26-11 Terminal X42/1 High Voltage
26-14 Term. X42/1 Low Ref./Feedb. Value
26-15 Term. X42/1 High Ref./Feedb. Value
26-16 Term. X42/1 Filter Time Constant
26-17 Term. X42/1 Live Zero
26-2* Analog Input X42/3
26-20 Terminal X42/3 Low Voltage
26-21 Terminal X42/3 High Voltage
26-24 Term. X42/3 Low Ref./Feedb. Value
26-25 Term. X42/3 High Ref./Feedb. Value
26-26 Term. X42/3 Filter Time Constant
26-27 Term. X42/3 Live Zero
26-3* Analog Input X42/5
26-30 Terminal X42/5 Low Voltage
26-31 Terminal X42/5 High Voltage
26-34 Term. X42/5 Low Ref./Feedb. Value
26-35 Term. X42/5 High Ref./Feedb. Value
26-36 Term. X42/5 Filter Time Constant
26-37 Term. X42/5 Live Zero
26-4* Analog Out X42/7
26-40 Terminal X42/7 Output
26-41 Terminal X42/7 Min. Scale
26-42 Terminal X42/7 Max. Scale
26-43 Terminal X42/7 Bus Control
26-44 Terminal X42/7 Timeout Preset
26-5* Analog Out X42/9
26-50 Terminal X42/9 Output
26-51 Terminal X42/9 Min. Scale
26-52 Terminal X42/9 Max. Scale
26-53 Terminal X42/9 Bus Control
26-54 Terminal X42/9 Timeout Preset
26-6* Analog Out X42/11
26-60 Terminal X42/11 Output
26-61 Terminal X42/11 Min. Scale
26-62 Terminal X42/11 Max. Scale
26-63 Terminal X42/11 Bus Control
26-64 Terminal X42/11 Timeout Preset
27- Cascade CTL Option**
27-0* Control & Status
27-01 Pump Status
27-02 Manual Pump Control
27-03 Current Runtime Hours
27-04 Pump Total Lifetime Hours
27-1* Configuration
27-10 Cascade Controller
27-11 Number Of Drives
27-12 Number Of Pumps
27-14 Pump Capacity
27-16 Runtime Balancing
27-17 Motor Starters
27-18 Spin Time for Unused Pumps
27-19 Reset Current Runtime Hours
27-2* Bandwidth Settings
27-20 Normal Operating Range
27-21 Override Limit
27-22 Fixed Speed Only Operating Range
27-23 Staging Delay
27-24 Destaging Delay
27-25 Override Hold Time
27-27 Min Speed Destage Delay
27-3* Staging Speed
27-30 Auto Tune Staging Speeds
27-31 Stage On Speed [RPM]
27-32 Stage On Speed [Hz]
27-33 Stage Off Speed [RPM]
27-34 Stage Off Speed [Hz]
27-4* Staging Settings
27-40 Auto Tune Staging Settings
27-41 Ramp Down Delay
27-42 Ramp Up Delay
27-43 Staging Threshold
27-44 Destaging Threshold
27-45 Staging Speed [RPM]
27-46 Staging Speed [Hz]
27-47 Destaging Speed [RPM]
27-48 Destaging Speed [Hz]
27-49 Staging Principle
27-5* Alternate Settings
27-50 Automatic Alternation
27-51 Alternation Event
27-52 Alternation Time Interval
27-53 Alternation Timer Value
27-54 Alternation At Time of Day
27-55 Alternation Predefined Time
27-56 Alternate Capacity is <
27-58 Run Next Pump Delay
27-6* Digital Inputs
27-60 Terminal X66/1 Digital Input
27-61 Terminal X66/3 Digital Input
27-62 Terminal X66/5 Digital Input
27-63 Terminal X66/7 Digital Input
27-64 Terminal X66/9 Digital Input
27-65 Terminal X66/11 Digital Input
27-66 Terminal X66/13 Digital Input
27-7* Connections
27-70 Relay
27-9* Readouts
27-91 Cascade Reference
27-92 % Of Total Capacity
27-93 Cascade Option Status
27-94 Cascade System Status
27-95 Advanced Cascade Relay Output [bin]
27-96 Extended Cascade Relay Output [bin]
29- Water Application Functions**
29-0* Pipe Fill
29-00 Pipe Fill Enable
29-01 Pipe Fill Speed [RPM]
29-02 Pipe Fill Speed [Hz]
29-03 Pipe Fill Time
29-04 Pipe Fill Rate
29-05 Filled Setpoint
29-06 No-Flow Disable Timer
29-07 Filled setpoint delay
29-1* Deragging Function
29-10 Derag Cycles
29-11 Derag at Start/Stop
29-12 Deragging Run Time
29-13 Derag Speed [RPM]
29-14 Derag Speed [Hz]
29-15 Derag Off Delay
29-2* Derag Power Tuning
29-20 Derag Power[kW]
29-21 Derag Power[HP]
29-22 Derag Power Factor
29-23 Derag Power Delay
29-24 Low Speed [RPM]
29-25 Low Speed [Hz]
29-26 Low Speed Power [kW]
29-27 Low Speed Power [HP]
29-28 High Speed [RPM]
29-29 High Speed [Hz]
29-30 High Speed Power [kW]
29-31 High Speed Power [HP]
29-32 Derag On Ref Bandwidth
29-33 Power Derag Limit
29-34 Consecutive Derag Interval
29-35 Derag at Locked Rotor
29-4* Pre/Post Lube
29-40 Pre/Post Lube Function
29-41 Pre Lube Time
29-42 Post Lube Time
29-5* Flow Confirmation
29-50 Validation Time
29-51 Verification Time
29-52 Signal Lost Verification Time
29-53 Flow Confirmation Mode
29-6* Flow Meter
29-60 Flow Meter Monitor
29-61 Flow Meter Source
29-62 Flow Meter Unit
29-63 Totalized Volume Unit
29-64 Actual Volume Unit
29-65 Totalized Volume
29-66 Actual Volume
29-67 Reset Totalized Volume
29-68 Reset Actual Volume
29-69 Flow
30- Special Features**
30-2* Adv. Start Adjust
30-22 Locked Rotor Detection
30-23 Locked Rotor Detection Time [s]
30-5* Unit Configuration
30-50 Heat Sink Fan Mode
30-8* Compatibility (I)
30-81 Brake Resistor (ohm)
31- Bypass Option**
31-00 Bypass Mode
31-01 Bypass Start Time Delay
31-02 Bypass Trip Time Delay
31-03 Test Mode Activation
31-10 Bypass Status Word
31-11 Bypass Running Hours
31-19 Remote Bypass Activation
35- Sensor Input Option**
35-0* Temp. Input Mode
35-00 Term. X48/4 Temperature Unit
35-01 Term. X48/4 Input Type
35-02 Term. X48/7 Temperature Unit

Danfoss A/S © 10/2016 All rights reserved.

35-03 Term. X48/7 Input Type
35-04 Term. X48/10 Temperature Unit
35-05 Term. X48/10 Input Type
35-06 Temperature Sensor Alarm Function
35-1* Temp. Input X48/4
35-14 Term. X48/4 Filter Time Constant
35-15 Term. X48/4 Temp. Monitor
35-16 Term. X48/4 Low Temp. Limit
35-17 Term. X48/4 High Temp. Limit
35-2* Temp. Input X48/7
35-24 Term. X48/7 Filter Time Constant
35-25 Term. X48/7 Temp. Monitor
35-26 Term. X48/7 Low Temp. Limit
35-27 Term. X48/7 High Temp. Limit
35-3* Temp. Input X48/10
35-34 Term. X48/10 Filter Time Constant
35-35 Term. X48/10 Temp. Monitor
35-36 Term. X48/10 Low Temp. Limit
35-37 Term. X48/10 High Temp. Limit
35-4* Analog Input X48/2
35-42 Term. X48/2 Low Current
35-43 Term. X48/2 High Current
35-44 Term. X48/2 Low Ref./Feedb. Value
35-45 Term. X48/2 High Ref./Feedb. Value
35-46 Term. X48/2 Filter Time Constant
35-47 Term. X48/2 Live Zero
43- Unit Readouts**
43-0* Component Status
43-00 Component Temp.
43-01 Auxiliary Temp.
43-1* Power Card Status
43-10 HS Temp. ph.U
43-11 HS Temp. ph.V
43-12 HS Temp. ph.W
43-13 PC Fan A Speed
43-14 PC Fan B Speed
43-15 PC Fan C Speed
43-2* Fan Pow.Card Status
43-20 FPC Fan A Speed
43-21 FPC Fan B Speed
43-22 FPC Fan C Speed
43-23 FPC Fan D Speed
43-24 FPC Fan E Speed
43-25 FPC Fan F Speed

Danfoss A/S © 10/2016 All rights reserved.

Index

A

Abbreviation ... 78

AC
- input ... 8, 19
- mains ... 8, 19
- waveform ... 8

Additional resources ... 4

Alarm log ... 25

Alarms ... 38

AMA
- AMA ... 36, 40, 43
- Automatic motor adaptation ... 30

Ambient conditions ... 65

Analog output ... 20, 66

Analog signal ... 39

Analog speed reference ... 33

Approval ... 8

ASM ... 28

Auto on ... 26, 31, 36, 38

Automatic energy optimization ... 30

Auto-reset ... 24

Auxiliary equipment ... 23

B

Backplate ... 12

Braking ... 36, 41

Burst transient ... 15

C

Cable
- routing ... 23
- Motor cable ... 14, 18, 63
- Motor cable length ... 65
- Specifications ... 65

Certification ... 8

Circuit breaker ... 23, 69, 70, 71

Clearance requirements ... 12

Closed loop ... 22

Communication option ... 42

Conduct ... 23

Control
- characteristic ... 68
- signal ... 36
- terminal ... 26, 28, 36, 38
- wiring ... 17, 21, 23
- Local control ... 24, 26, 36
- Wiring ... 14

Control card
- Control card ... 39
- Control card performance ... 68
- Control card, 10 V DC output ... 68
- Control card, 24 V DC output ... 67
- Control card, RS485 serial communication ... 65
- USB serial communication ... 68

Convention ... 78

Cooling ... 12, 63

Cooling clearance ... 23

Cos φ ... 64, 67

Current
- level ... 66
- limit ... 47
- mode ... 66
- range ... 66
- rating ... 40
- DC current ... 8, 14, 37
- Input current ... 19
- Output current ... 37

D

Danfoss FC ... 22

DC link ... 39

Default settings ... 26

Derating ... 65

Digital output ... 67

Dimensions ... 76, 77

Discharge time ... 9

Disconnect switch ... 24

Displacement power factor ... 64

E

Efficiency ... 63, 65

EMC interference ... 17

EMC-compliant installation ... 14

Environment ... 65

Exploded view ... 6, 7

External alarm reset ... 34

External command ... 8, 38

External controllers ... 4

External interlock ... 34

F

Fault log ... 25

Feedback ... 22, 23, 32, 37, 43, 45

Floating delta ... 19

Fue ... 69

Fuse ... 14, 23, 42, 46, 69, 70, 71, 72, 73, 74, 75

Danfoss A/S © 10/2016 All rights reserved.

G

Ground connection ... 23
Ground wire ... 14
Grounded delta ... 19
Grounding ... 18, 19, 23, 24

H

Hand on ... 26, 36
Harmonics
  Harmonics ... 8
High altitude ... 65
High voltage ... 9, 24
Humidity ... 65

I

IEC 61800-3 ... 19
Initialization ... 27
Input
  Analog input ... 20, 39, 66
  Digital input ... 20, 21, 38, 40, 66
  disconnect ... 19
  power ... 8, 14, 17, 19, 23, 38
  power wiring ... 23
  signal ... 22
  terminal ... 19, 22, 24, 39
  voltage ... 24
  Pulse input ... 67
Installation
  Check list ... 23
  Installation ... 21, 22
  environment ... 11
Intended use ... 4
Interference isolation ... 23
Interlock ... 34
Items supplied ... 11

J

Jumper ... 21

L

LCP ... 24
Leakage current ... 10, 14
Lifting ... 12
Load sharing ... 9, 50, 51, 52, 53, 54, 55, 56, 57, 58, 59, 60, 61, 62, 63
Local control panel ... 24

M

Main menu ... 25
Mains
  voltage ... 25, 37
  Transient ... 8
Maintenance ... 36
Manual initialization ... 27
MCT 10 ... 20, 24
Menu key ... 24, 25
Menu structure ... 25
Modbus RTU ... 22
Motor
  cable ... 14, 18
  current ... 8, 25, 30, 43
  data ... 28, 31, 40, 44, 47
  output ... 64
  power ... 14, 25, 43
  rotation ... 31
  speed ... 27
  status ... 4
  thermal protection ... 35
  thermistor ... 35
  wiring ... 17, 23
  Output current ... 40
  Output performance (U, V, W) ... 64
  Thermistor ... 35
  Unintended motor rotation ... 10
Mounting ... 12, 23

N

Nameplate ... 11
Navigation key ... 24, 25, 27, 36

O

Open loop ... 22
Operation key ... 24
Optional equipment ... 19, 21, 24
Output power wiring ... 23
Overcurrent protection ... 14
Overload
  High overload ... 63, 64
  Normal overload ... 49, 53, 64
  torque ... 64
Overvoltage ... 37, 47, 64, 67

P

Parameter menu structure ... 79
PELV ... 35, 65, 66, 67, 68
Phase loss ... 39
PM Motor ... 28
Potential equalization ... 15
Potentiometer ... 33

Danfoss A/S © 10/2016 All rights reserved.

Power
Input power ... 24, 46
connection ... 14
factor ... 8, 23
Power factor ... 64
Programming ... 21, 24, 25, 26, 39

Q

Qualified personnel ... 9
Quick menu ... 25

R

Ramp-down time ... 47
Ramp-up time ... 47
Reference
Reference ... 25, 32, 36, 37, 38
Remote reference ... 37
Speed reference ... 22, 31, 33, 36
Relay
Relay ... 21
1 ... 67
2 ... 67
output ... 67
Remote commands ... 4
Reset ... 24, 26, 27, 38, 40, 45
RFI filter ... 19
RMS current ... 8
RS485 ... 35
Run command ... 31
Run permissive ... 34, 37
Run/stop command ... 34

S

Safe Torque Off ... 22
Safety ... 10
Serial communication
RS485 ... 22
Serial communication ... 20, 22, 26, 36, 37, 38
Service ... 36
Setpoint ... 38
Set-up ... 31
Shielded cable ... 17, 23
Shock ... 11
Short circuit ... 41
Sleep mode ... 38
SmartStart ... 27
Specifications ... 22
Start-up ... 27
Status display ... 36
Status mode ... 36
STO ... 22
see also *Safe Torque Off*
Storage ... 11, 65
Supply voltage ... 19, 20, 24, 42
Switch ... 22
Switching frequency ... 38
Symbol ... 78
SynRM ... 29
System feedback ... 4

T

Terminal
Output terminal ... 24
53 ... 22
54 ... 22
tightening torques ... 68
Thermal protection ... 8
Thermistor ... 19, 40
Torque
Starting torque ... 64
characteristic ... 64
limit ... 47
Transient protection ... 8
Trip
Trip ... 35, 38
level ... 69, 70, 71
lock ... 38
Troubleshooting ... 48
True power factor ... 64

U

UL compliance ... 72
Unintended start ... 9, 36

V

Vibration ... 11
Voltage imbalance ... 39
Voltage level ... 66
VVC+ ... 28

W

Warnings ... 38
Weight ... 76, 77
Windmilling ... 10
Wire size ... 14, 18
Wiring
Control wiring ... 21
Thermistor control wiring ... 19
schematic ... 16

 Danfoss A/S © 10/2016 All rights reserved.

Danfoss A/S © 10/2016 All rights reserved.

Danfoss can accept no responsibility for possible errors in catalogues, brochures and other printed material. Danfoss reserves the right to alter its products without notice. This also applies to products already on order provided that such alterations can be made without subsequential changes being necessary in specifications already agreed. All trademarks in this material are property of the respective companies. Danfoss and the Danfoss logotype are trademarks of Danfoss A/S. All rights reserved.

Danfoss A/S
Ulsnaes 1
DK-6300 Graasten
vlt-drives.danfoss.com

130R0336 MG20MD02 10/2016

B-501/2 - Filter, Silencer, Solberg, FS-230P-300

SMALL COMPACT FILTER SILENCERS WITH STANDARD FILTER DESIGN
"FS" Series 1/2" - 3" MPT

APPLICATIONS

- Blowers-PD Type
- Blowers-Side Channel
- Compressor-Piston
- Compressor-Screw
- Construction\Contractor Industry
- Dental
- Engines
- Hydraulic Breathers - fine filtration
- Industrial & Severe Duty
- Medical
- Pneumatic Conveying Systems
- Sparging
- Waste Water Aeration
- Workshop

FEATURES & SPECIFICATIONS

- ;99%+ removal efficiency std: Paper=2 micron, Polyester=5 micron
- Durable carbon steel construction with powder coated finish or galvanized steel
- Filter change out differential: 10"-15" in. H_2O above initial delta P
- Fully drawn weatherhood - no welds to rust or vibrate apart
- Interchangeable elements: Polyester, Paper, HEPA
- Low pressure drop center bracket and outlet pipe design
- Pressure drop graphs available upon request
- Temp (continuous): min -15° F (-26° C) max 220° F (104° C)
- Tubular silencing design - tube is positioned to maximize attenuation and air flow while minimizing pressure drop
- Typical noise attenuation up to 15 dB's (due to the wide range of applications and machines these units are used on, a single graph is insufficient. Please inquire for your specific requirement)

OPTIONS

- 1/8" tap holes for differential pressure gauges
- Available in *Stainless Steel*
- Epoxy coated housings
- Hot dipped galvanized housings
- Special connections, BSPT/Metric
- Various elements available

Line Drawing



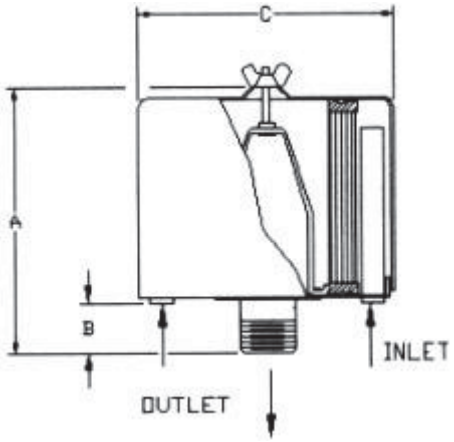

***All measurements are shown in standards.**

Typical Lead Times:
- Normally in stock
- 1 - 2 weeks
- 5 - 7 weeks
- 3 - 4 weeks
- 8 + weeks

Add To Order	Model Number	Element Type	Outlet in. NPT or FLG	Connection Style	Dim A in.	Dim B in.	Dim C in.	Rated Flow Piston SCFM	Rated Flow Screw Blower Fan SCFM	Element Parent Flow SCFM	Tube Count	Approx. Weight lbs.	CAD
■	FS-15-050	Polyester	0.5	MPT	4	1.5	6	10	10	35	1	1.8	CAD
■	FS-15-075	Polyester	0.75	MPT	4	1.5	6	20	25	35	2	2	CAD
■	FS-15-100	Polyester	1	MPT	4	1.5	6	25	35	35	3	2.1	CAD
■	FS-19P-100	Polyester	1	MPT	6.63	1.5	6	35	55	100	3	3	CAD
■	FS-19P-125	Polyester	1.25	MPT	6.63	1.63	6.1	55	70	100	5	3.3	CAD
■	FS-19P-150	Polyester	1.5	MPT	6.63	1.5	6	70	85	100	5	3.5	CAD

	FS-231P-200	Polyester	2	MPT	12.25	2.25	10	135	135	300	5	14	CAD
	FS-31P-200	Polyester	2	MPT	7.25	2.25	10	85	135	195	5	7.8	CAD
	FS-231P-250	Polyester	2.5	MPT	12.5	2.5	10	195	195	300	9	14.5	CAD
	FS-31P-250	Polyester	2.5	MPT	7.5	2.5	10	100	195	195	5	8.2	CAD
	FS-231P-300	Polyester	3	MPT	13	3	10	200	300	300	9	15	CAD
	FS-14-050	Paper	0.5	MPT	4	1.5	6	10	10	35	1	1.8	CAD
	FS-14-075	Paper	0.75	MPT	4	1.5	6	20	25	35	2	2	CAD
	FS-14-100	Paper	1	MPT	4	1.5	6	25	35	35	3	2.1	CAD
	FS-18P-100	Paper	1	MPT	6.63	1.5	6	35	55	100	3	3	CAD
	FS-18P-125	Paper	1.25	MPT	6.63	1.63	6.1	55	70	100	5	3.3	CAD
	FS-18P-150	Paper	1.5	MPT	6.63	1.5	6	70	85	100	5	3.5	CAD
	FS-230P-200	Paper	2	MPT	12.25	2.25	10	135	135	300	5	14	CAD
	FS-30P-200	Paper	2	MPT	7.25	2.25	10	85	135	195	5	8.2	CAD
	FS-230P-250	Paper	2.5	MPT	12.5	2.5	10	195	195	300	9	14.5	CAD
	FS-30P-250	Paper	2.5	MPT	7.5	2.5	10	100	195	195	5	8.2	CAD
	FS-230P-300	Paper	3	MPT	13	3	10	200	300	300	9	15	CAD

Solberg Mfg.
1151 W. Ardmore Ave.·Itasca, IL 60143·(630)773-1363· Fax: (630)773-0727

SFS_2-2

Edition: 09.2011 · 610.44434.40.000

Original operating instructions · English

B601/2 - Blower, Elmo G200 2BH-1510-7HH56-Z

Operating instructions G-BH1, G-BH9

Elmo Rietschle
A Gardner Denver Product

CE

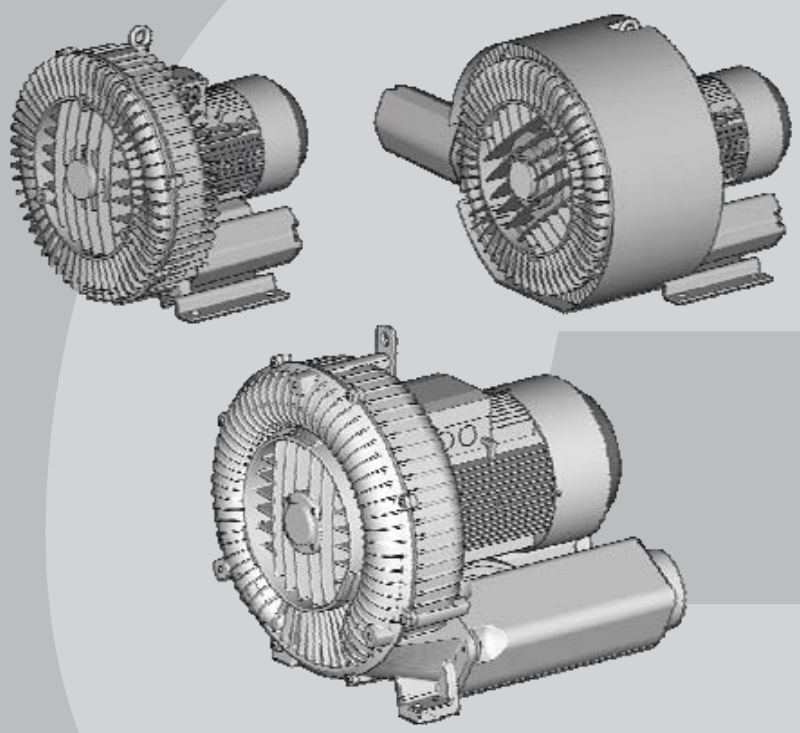

2BH1 1
2BH1 2
2BH1 3
2BH1 4
2BH1 5
2BH1 6
2BH1 8
2BH1 9
2BH9 23

G-Serie
G-Series
Seitenkanal
Side Channel

E-251

Contents

1 Safety 3
1.1 Definitions 3
1.1.1 Safety alert symbol 3
1.1.2 Signal words 3
1.2 General safety precautions 3
1.3 Residual risks 5
2 Intended Use 6
3 Technical Data 7
3.1 Mechanical data 7
3.2 Electrical data 11
3.3 Operating conditions 11
4 Transport and Handling 12
5 Installation 13
5.1 Installation 14
5.2 Electrical connection (motor) 15
5.3 Connecting pipes/hoses (vacuum pump/compressor) 18
5.3.1 Inlet connection 19
5.3.2 Discharge connection 19
5.3.3 Procedure when connecting pipes/hoses 20
6 Commissioning 21
6.1 Preparation 21
6.2 Start-up and shut-down 22
7 Operation 23
8 Shut-Down and Longer Standstills 24
8.1 Preparing for shut-down or longer standstill 24
8.2 Storage conditions 24
9 Servicing 25
9.1 Emptying/Rinsing/Cleaning 25
9.2 Repairs/troubleshooting 25
9.3 Service/After-sales service 27
10 Disposal 27
11 Explosion-Protected Design 27
EU declaration of conformity 28
Statement on health safety and on the protection of the environment 29

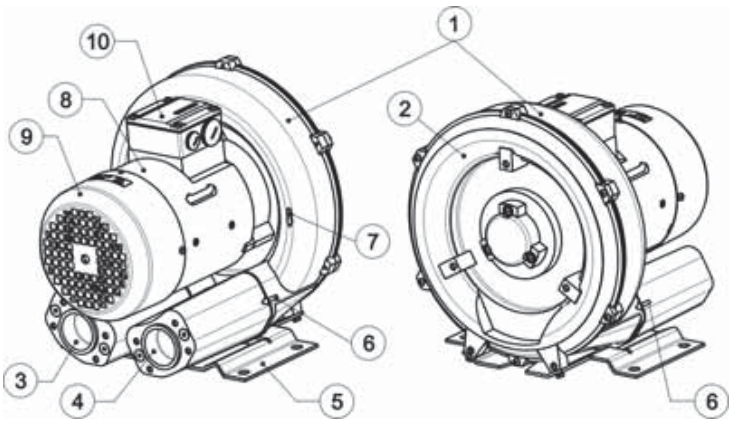

Fig. 1: Design of gas-ring vacuum pump/compressor

1 Vacuum pump/compressor housing
2 Vacuum pump/compressor cover
3 Inlet connection with muffler
4 Discharge connection with muffler
5 Base
6 Arrow indicating delivery direction
7 Arrow indicating direction of rotation
8 Drive motor
9 Fan guard (over external fan)
10 Terminal box

© 2011 Gardner Denver Deutschland GmbH · Industriestraße 26 · 97616 Bad Neustadt · Germany

Replication, distribution and / or editing of this document and the use and distribution of its content is prohibited unless explicitly permitted. Violation obligates compensation for damages.
All rights reserved in case of the issue of a patent, utility patent or design patent.

1 Safety

1.1 Definitions

To point out dangers and important information, the following signal words and symbols are used in these operating instructions:

1.1.1 Safety alert symbol

The **safety alert symbol** ⚠ is located in the safety precautions in the highlighted heading field on the left next to the signal word (DANGER, WARNING, CAUTION).

Safety precautions **with** a safety alert symbol indicate a danger of **injuries**.

Be sure to follow these safety precautions to protect against **injuries or death**!

Safety precautions **without** a safety alert symbol indicate a danger of **damage**.

1.1.2 Signal words

DANGER **WARNING** **CAUTION** **NOTICE** **NOTE**	The **signal words** are located in the safety precautions in the highlighted heading field. They follow a certain hierarchy and indicate (in conjunction with the safety alert symbol, see Chapter 1.1.1) the **seriousness of the danger** and the **type of warning.** See the following explanations:

⚠ DANGER

Danger of injuries.
Indicates an imminently hazardous situation, that **will** result in **death or serious injury** if the corresponding measures are not taken.

⚠ WARNING

Danger of injuries.
Indicates a potentially hazardous situation, that **could** result in **death or serious injury** if the corresponding measures are not taken.

⚠ CAUTION

Danger of injuries.
Indicates a potentially hazardous situation, that may result in **minor or moderate injury** if the corresponding measures are not taken.

CAUTION

Danger of damage.
Indicates a potentially hazardous situation that may result in **property damage** if the corresponding measures are not taken.

NOTICE

Indicates a possible **disadvantage**, i.e. undesirable conditions or consequences can occur if the corresponding measures are not taken.

NOTE

Indicates a possible **advantage** if the corresponding measures are taken; tip.

1.2 General safety precautions

⚠ WARNING

Improper use of the unit can result in serious or even fatal injuries!
These operating instructions

- must have been read completely and understood before beginning any work with or at the pump-motor unit,
- must be strictly observed,
- must be available at the operating location of the pump-motor unit.

⚠ WARNING

Improper use of the unit can result in serious or even fatal injuries!
Only operate the pump-motor unit

- for the purposes indicated under "Intended Use"!
- with the fluids indicated under 'Intended Use'!
- with the values indicated under 'Technical Data'!

⚠ WARNING

Improper use of the unit can result in serious or even fatal injuries!
All work on and with the pump-motor unit (transport, installation, operation, shut-down, maintenance, disposal) may only be carried out by **trained, reliable expert personnel**!

⚠ WARNING

When working on the unit, there is a danger of injury, e.g. in the form of cuts/cutting off, crushing and burns!
During all work on and with the pump-motor unit (transport, installation, operation, shut-down, maintenance, disposal) wear **personal safety equipment (safety helmet, protective gloves, safety shoes)**!

⚠ WARNING

Hair and clothing can be pulled into the unit or caught and wound up moving parts!
Do not wear long, loose hair or wide, loose clothes! Use a hair net!

⚠ DANGER

Electrical danger!
Work on electrical installations may be carried out by trained and authorized electricians only!

⚠ DANGER

Electrical danger!
Before beginning work on the unit or system, the following measures must be carried out:

- Deenergize.
- Secure against being switched on again.
- Determine whether deenergized.
- Ground and short-circuit.
- Cover or block off adjacent energized parts.

⚠ DANGER

Electrical danger!
Do not open the motor terminal box until absence of electricity has been ensured!

⚠ WARNING

Danger due to vacuum and gauge pressure: sudden escape of fluids (skin and eye injuries),
sudden drawing in of hair and clothing!

Danger due to escaping fluid: Burns!
Use mounting elements, connections, lines, fittings and containers with sufficient freedom from leaks and strength for the pressures which occur.

Check the mounting elements, connections, lines, fittings and containers for strength, leaks and firm seating at regular intervals!

⚠ WARNING

Danger from rotating parts (external fan, impeller, shaft):
Cutting/cutting off of extremities, Grasping/winding up of hair and clothing!

Danger due to vacuum and gauge pressure: sudden escape of fluids (skin and eye injuries), sudden drawing in of hair and clothing!

Danger due to escaping fluid: Burns!
Start-up and operation only under the following conditions:

- The pump-motor unit must be completely assembled. When doing so, pay particular attention to the following components:
  - the vacuum pump/compressor cover,
  - the muffler on inlet and discharge connections,
  - the fan guard.
- The pipes/hoses must be connected to inlet and discharge connections.
- Inlet and discharge connections and the connected pipes/hoses may not be closed, clogged or soiled.
- Check the mounting elements, connections of the pipe/hose connections, lines, fittings and containers for strength, leaks and firm seating at regular intervals.

⚠ WARNING

Danger from rotating parts (external fan, impeller, shaft):
Cutting/cutting off of extremities, Grasping/winding up of hair and clothing!

Danger due to vacuum and gauge pressure: sudden escape of fluids (skin and eye injuries), sudden drawing in of hair and clothing!

Danger due to escaping fluid: Burns!
Before beginning work on the pump-motor unit, take the following measures:

- Shut down pump-motor unit and secure against being switched on again.
- Attach a sign on the system controller and on the control elements for the pump-motor unit: "DANGER! Maintenance work on vacuum pump/compressor! Do not switch on!"
- Wait for pump-motor unit to come to a complete stop. Observe run-on time!
- Allow pump-motor unit to cool!
- Shut-off lines. Release pressure.
- Make sure that no vacuum or gauge pressure is present in the lines/tanks to be opened.
- Make sure that no fluids can escape.

© Gardner Denver Deutschland GmbH

⚠ WARNING

Danger from rotating impeller:
Cutting/cutting of off extremities!
The rotating impeller is accessible with the inlet and discharge connections open!

Do not reach into the unit through open connections!

Do not insert objects into the unit through the openings!

⚠ WARNING

Danger from rotating impeller:
Cutting/cutting of off extremities!
The rotating impeller is accessible with the inlet and discharge connections open!

With free entry and exit of gases, i.e. with direct intake out of or direct feeding into the atmosphere without piping, the following therefore applies:

Provide the inlet and discharge connections of the pump-motor unit either with additional mufflers or with additional piping of a sufficient length to prevent access to the impeller!

⚠ WARNING

Danger of burns from hot surfaces of the pump-motor unit and from hot fluids!
High temperatures of up to approx. 160°C [320°F] can occur on the surface of the pump-motor unit.

Cover the pump-motor unit with a suitable touch protection (e.g. perforated plate cover or wire cover). Do not touch during operation!
Allow to cool after shut-down!

1.3 Residual risks

⚠ WARNING

Danger zone:
Hot surface up to approx. 160°C [320°F].

Hazard:
Possible burns.

Protective measures:
Cover the pump-motor unit with a suitable touch protection (e.g. perforated plate cover or wire cover).

⚠ WARNING

Danger zone:
Fan guard

Hazard:
Long, loose hair can be drawn into external fan through fan guard grate, even with fan guard mounted!

Protective measures:
Wear hair net!

⚠ WARNING

Danger zone:
Missing or defective muffler inlet or discharge connection.

Hazard:
Possible serious hearing damage due to emitted noise.

Protective measures:
Have missing or defective mufflers replaced. Conduct a noise measurement in the system after installing the pump-motor unit. The following measures can be taken from 85 dB(A) and must be taken from 90 dB(A):

- Mark noise area with a warning sign.
- Wear hearing protection.

⚠ WARNING

Danger zone:
Environment of pump-motor unit.

Hazard:
Possible serious hearing damage due to emitted noise.

Protective measures:
Conduct a noise measurement in the system during operation after installing the pump-motor unit.

The following measures can be taken from 85 dB(A) and must be taken from 90 dB(A):

- Mark noise area with a warning sign.
- Wear hearing protection.
- With free entry and exit of gases, i.e. with direct intake out of or direct feeding into the atmosphere without piping, attach an additional muffler.

2 Intended Use

This operating manual

- is intended for side channel compressors of the
  G-BH1 and G-BH9 series, types 2BH1 1 2BH1 2 2BH1 3 2BH1 4 2BH1 5 2BH1 6 2BH1 8 2BH1 9 2BH9 23,
- contains instructions bearing on transport and handling, installation, commissioning, operation, shut-down, storage, servicing and disposal of the G-BH1,G-BH9,
- must be completely read and understood by all operating and servicing personnel before beginning to work with or on the G-BH1, G-BH9,
- must be strictly observed,
- must be available at the site of operation of the G-BH1, G-BH9.

About the operating and servicing personnel of the G-BH1, G-BH9

- These persons must be trained and authorized for the work to be carried out.
- Work on electrical installations may be carried out by trained and authorized electricians only.

The G-BH1,G-BH9

- are pump-motor units for generating vacuum or gauge pressure;
- are used to **extract**, **pump** and **compress the following gases**:
  - Air,
  - Non-flammable, non-aggressive, non-toxic and non-explosive gases or gas-air mixtures.
  - With differing gases/gas-air mixtures, inquire with the Service Department.
- are equipped with one of the following kind of drive motors:
  - 3-phase AC drive motor with a standard or explosion-protected design
  - Single-phase AC drive motor

  These operating instructions apply **only to** pump-motor units with a **standard design**. For an explosion-protected design (EEx e II), see the separate operating instructions.
- are intended for industrial applications,
- are designed for continuous operation. With increased switch-on frequency (6x per hour with equal pauses and operating times) or with increased gas inflow and ambient temperature, the excess temperature limit of the coil and the bearing can be exceeded. Consult the manufacturer when using under such conditions.

When operating the G-BH1, G-BH9 the limits listed in Chapter 3, "Technical Data", Pg. 7 ff. must always be complied with.

Foreseeable Misuse

It is prohibited

- to use the G-BH1, G-BH9 in applications other than industrial applications unless the necessary protection is provided on the system, e.g. guards suitable for children's fingers;
- to use the device in rooms in which explosive gases can occur if the G-BH1, G-BH9 is not expressly intended for this purpose;
- to extract, to deliver and to compress explosive, flammable, corrosive or toxic fluids, unless the G-BH1, G-BH9 is specifically designed for this purpose;
- to operate the G-BH1 with values other than those specified in Chapter 3, "Technical Data", Pg. 7 ff.

Any unauthorized modifications of the G-BH1, G-BH9 are prohibited for safety reasons.

The operator is only permitted to perform the maintenance and service work described in these operating instructions.

Maintenance and servicing work which goes beyond this may only be carried out by companies which have been authorised by the manufacturer (ask the service department for details).

© Gardner Denver Deutschland GmbH

3 Technical Data

3.1 Mechanical data

Weight

Single-impeller design		
	Weight	
Type	[kg] approx.	[lbs] approx.
2BH1100-7..0.	9	20
2BH1200-7..0.	9	20
2BH1300-7..0.	9	20
2BH1300-7..1.	10	22
2BH1300-7..2.	11	24
2BH1330-7..0.	10	22
2BH1330-7..1.	11	24
2BH1330-7..2.	12	26
2BH1400-7..0.	13	29
2BH1400-7..1.	16	35
2BH1400-7..2.	17	37
2BH1430-7..0.	14	31
2BH1430-7..1.	17	37
2BH1430-7..2.	18	40
2BH1500-7..0.	20	44
2BH1500-7..1.	22	49
2BH1500-7..2.	23	51
2BH1500-7..3.	25	55
2BH1530-7..0.	21	46
2BH1530-7..1.	23	51
2BH1530-7..2.	24	53
2BH1530-7..3.	26	57
2BH1600-7..0.	27	60
2BH1600-7..1.	30	66
2BH1600-7..2.	36	79
2BH1600-7..3.	40	88
2BH1600-7..6.	32	71
2BH1600-7..7.	39	86
2BH1630-7..0.	29	64
2BH1630-7..1.	32	71
2BH1630-7..2.	37	82
2BH1630-7..3.	43	95
2BH1630-7..6.	34	75
2BH1630-7..7.	40	88

Single-impeller design		
	Weight	
Type	[kg] approx.	[lbs] approx.
2BH180.-7..0.	117	258
2BH180.-7..1.	126	278
2BH180.-7..2.	132	291
2BH183.-7..0.	120	265
2BH183.-7..1.	129	284
2BH183.-7..2.	135	298
2BH190.-7..0.	179	395
2BH190.-7..1.	198	437
2BH190.-7..3.	210	463
2BH193.-7..0.	179	395
2BH193.-7..1.	198	437
2BH193.-7..3.	209	463
2BH923..-…P	167	368
2BH923..-…Q	145	320
2BH923..-…H	151	333

Two-impeller design		
	Weight	
Type	[kg] approx.	[lbs] approx.
2BH1310-7..2.	15	33
2BH1410-7..3.	25	55
2BH1410-7..4.	27	60
2BH1510-7..4.	40	88
2BH1510-7..5.	44	97
2BH1610-7..1.	43	95
2BH1610-7..2.	48	106
2BH1610-7..3.	54	119
2BH1610-7..4.	66	146
2BH1610-7..5.	73	161
2BH1610-7..7.	50	110
2BH1610-7..8.	62	137
2BH1640-7..3.	54	119
2BH1640-7..4.	69	152
2BH1640-7..5.	75	165
2BH1640-7..8.	62	137
2BH181.-7..1.	171	377
2BH181.-7..2.	177	390

Two-impeller design		
Type	Weight [kg] approx.	Weight [lbs] approx.
2BH181.-7..3.	203	448
2BH181.-7..4.	215	474
2BH184.-7..2.	177	390
2BH184.-7..3.	203	448
2BH191.-7..1.	274	604
2BH191.-7..2.	288	635
2BH191.-7..3.	299	659
2BH191.-7..4.	309	681
2BH1940-7B.2.	275	606
2BH1940-7B.3.	314	692
2BH1940-7B.4.	324	714
2BH1943-7..2.	330	728
2BH1943-7..3.	339	747
2BH1943-7..4.	349	769

Minimum distances

Minimum distance to fan guard (for sucking in cooling air):

Type	[mm]	[inches]
2BH1 1.. - 2BH1 4	34	1.34
2BH1 5.. - 2BH1 9	53	2.09
2BH923…	52	2.05

Minimum distance to face of vacuum pump/compressor cover:

Type	[mm]	[inches]
2BH1 1.. - 2BH1 5	20	0.79
2BH1 6..	30	1.18
2BH1 8.. - 2BH1 9	40	1.57
2BH923..	52	2.05

Noise level

Measuring-surface sound-pressure level as per EN ISO 3744, measured at a distance of 1 m [3.28 ft] at an operating point of approximately 2/3 of the permissible total pressure difference with the lines connected without a vacuum or pressure relief valve, tolerance ±3 dB (A).

Single-impeller design		
Type	1-m measuring-surface sound pressure level L [dB (A)]	
	50 Hz approx.	60 Hz approx.
2BH1100-7..0.	52	55
2BH1200-7..0.	57	61
2BH1300-7..0.	53	56
2BH1300-7..1.	53	56
2BH1300-7..2.	53	56
2BH1330-7..0.	53	56
2BH1330-7..1.	53	56
2BH1330-7..2.	53	56
2BH1400-7..0.	63	64
2BH1400-7..1.	63	64
2BH1400-7..2.	63	64
2BH1430-7..0.	63	64
2BH1430-7..1.	63	64
2BH1430-7..2.	63	64
2BH1500-7..0.	64	70
2BH1500-7..1.	64	70
2BH1500-7..2.	64	70
2BH1500-7..3.	64	70
2BH1530-7..0.	64	70
2BH1530-7..1.	64	70
2BH1530-7..2.	64	70
2BH1530-7..3.	64	70
2BH1600-7..0.	69	72
2BH1600-7..1.	69	72
2BH1600-7..2.	69	72
2BH1600-7..3.	69	72
2BH1600-7..6.	69	72
2BH1600-7..7.	69	72
2BH1630-7..0.	69	72

© Gardner Denver Deutschland GmbH

Single-impeller design		
Type	**1-m measuring-surface sound pressure level L [dB (A)]**	
	50 Hz approx.	**60 Hz approx.**
2BH1630-7..1.	69	72
2BH1630-7..2.	69	72
2BH1630-7..3.	69	72
2BH1630-7..6.	69	72
2BH1630-7..7.	69	72
2BH180.-7..0.	70	74
2BH180.-7..1.	70	74
2BH180.-7..2.	70	74
2BH183.-7..0.	70	74
2BH183.-7..1.	70	74
2BH183.-7..2.	70	74
2BH190.-7..0.	74	79
2BH190.-7..1.	74	79
2BH190.-7..3.	74	79
2BH193.-7..0.	75	80
2BH193.-7..1.	75	80
2BH193.-7..3.	75	80
2BH923..	79	81

Two-impeller design		
Type	**1-m measuring-surface sound pressure level L [dB (A)]**	
	50 Hz approx.	**60 Hz approx.**
2BH1310-7..2.	55	61
2BH1410-7..3.	66	69
2BH1410-7..4.	66	69
2BH1510-7..4.	72	74
2BH1510-7..5.	72	74
2BH1610-7..1.	73	76
2BH1610-7..2.	73	76
2BH1610-7..3.	73	76
2BH1610-7..4.	73	76
2BH1610-7..5.	73	76
2BH1610-7..7.	73	76
2BH1610-7..8.	73	76
2BH1640-7..3.	74	78
2BH1640-7..4.	74	78
2BH1640-7..5.	74	78
2BH1640-7..8.	74	---
2BH181.-7..1.	74	---
2BH181.-7..2.	74	78
2BH181.-7..3.	74	78
2BH181.-7..4.	74	78
2BH184.-7..2.	74	78
2BH184.-7..3.	74	78
2BH191.-7..1.	74	84
2BH191.-7..2.	74	84
2BH191.-7..3.	74	84
2BH1940-7B.2.	75	84
2BH1940-7B.3.	75	84
2BH1940-7B.4.	75	84
2BH1943-7..2.	75	84
2BH1943-7..3.	75	84
2BH1943-7..4.	75	84

Sound power level

Sound power level L_W as per EN ISO 3744, tolerance ±3 dB (A).

Two-impeller design		
	Sound power level L_W [dB (A)]	
Type	50 Hz	60 Hz
2BH191.	-	98
2BH1940	-	98
2BH1943	-	99
2BH923..	-	93

Tightening torques for screw connections

The following values apply if no other information is available.

With non-electrical connections, property classes of 8.8 and 8 or higher as per ISO 898-1 are assumed.

	Tightening torques for non-electrical connections	
Thread	[Nm]	[ft lbs]
M4	2.7 - 3.3	1.99 - 4.44
M5	3.6 - 4.4	2.65 - 3.25
M6	7.2 - 8.8	5.31 - 6.5
M8	21.6 - 26.4	15.9 - 19.5
M10	37.8 - 46.2	27.9 - 34.1
M12	63.0 - 77.0	46.5 - 56.8

The following information for electrical connection applies to all terminal board connections with the exception of terminal strips.

	Tightening torques for electrical connections	
Thread	[Nm]	[ft lbs]
M4	0.8 - 1.2	0.59 - 0.89
M5	1.8 - 2.5	1.33 - 1.84

Especially for metal and plastic threaded cable glands and pipe unions, the following values apply:

	Tightening torques for metal threaded glands/unions	
Thread	[Nm]	[ft lbs]
M12x1,5	4 - 6	2.95 - 4.43
M16x1,5	5 - 7.5	3.69 - 5.53
M25x1,5	6 - 9	4.43 - 6.64
M32x1,5	8 - 12	5.9 - 8.85
M40x1,5		

	Tightening torques for plastic threaded glands/unions	
Thread	[Nm]	[ft lbs]
M12x1,5	2 - 3.5	1.48 - 2.58
M16x1,5	3 - 4	2.21 - 2.95
M25x1,5	4 - 5	2.95 - 3.69
M32x1,5	5 - 7	3.69 - 5.16
M40x1,5		

© Gardner Denver Deutschland GmbH

3.2 Electrical data

See rating plate.

3.3 Operating conditions

Temperatures

Temperature of pumped gases:	max. permissible temperature: +40°C [+104°F] Nominal value: +15°C [+59°F] Pump-motor units for higher fluid temperatures on request.
Ambient temperature:	max. permissible temperature: +40°C [+104°F] min. permissible temperature: -15°C [+5°F] Nominal value: +25°C [+77°F] Ambient temperatures between 25°C [+77°F] and 40°C [+104°F] affect the permissible total pressure difference. At higher temperatures the winding may be damaged and the grease change interval may be shortened.

Pressures

Min. suction pressure:	See rating plate
Max. discharge pressure in compressor mode:	See rating plate

* The total pressure difference, shown on the rating plate, applies only for the following conditions:

- Ambient temperature: 25°C
- Pressure for vacuum operation: 1013 mbar at pressure connection;
- Pressure for compressor operation: 1013 mbar at suction connection;
- Intake temperature (temperature of conveyed gases at suction connection): 15°C
  For ambient temperatures between 25°C and 40°C, the total pressure difference specified on the rating plate must be reduced (at 40°C by 10%).

Consultation with the manufacturer is essential for such operational conditions.

Installation altitude

Max. of 1,000 m [3,280 ft] above sea level.

When installing the pump-motor unit at an altitude of more than 1,000 m [3,280 ft] above sea level, first inquire with the Service department.

4 Transport and Handling

⚠ WARNING

Tipping or falling can lead to crushing, broken bones etc.! Sharp edges can cause cuts!
Wear personal safety equipment (gloves, safety shoes and protective helmet) during transport!

⚠ WARNING

Danger from tipping or falling loads!
Prior to transport and handling make sure that all components are securely assembled and secure or remove all components the fasteners of which have been loosened!

Manual handling:

⚠ WARNING

Danger from lifting heavy loads!
Manual handling of the unit is only permitted within the following limits:

- max. 30 kg [max. 66 lbs] for men
- max. 10 kg [max. 22 lbs] for women
- max. 5 kg [max. 11 lbs] for pregnant women

For the weight of the pump-motor unit, see Chapter 3.1, "Mechanical data", Section "Weight", Pg. 7. For weights above the given values use suitable lifting appliances and handling equipment!

Handling by means of lifting equipment:

⚠ WARNING

Danger from tipping or falling loads!
When transporting with lifting equipment, observe the following basic rules:

- Before each transport, check the tight fit of the eye bolt/lifting attachment, see "Tightening torques for screw connections", p. 10.
- The lifting capacity of lifting equipment and lifting gear must be at least equal to the unit's weight. For the weight of the pump-motor unit, see Chapter 3.1, "Mechanical data", Section "Weight", Pg. 7.
- The pump-motor unit must be secured so that it cannot tip or fall.
- Do not stand or walk under suspended loads!

The transport must be carried out in different ways depending on the type:

- 2BH11., 2BH12., 2BH13., 2BH14., 2BH15. (single-impeller): Manual handling
- 2BH15. (two-impeller), 2BH16., 2BH18., 2BH19., 2BH923…
  Transport with crane, hooked onto eye bolt/lifting attachment (1 attachment point)
- 2BH1943:
  Transport with crane, hooked with lifting belts onto eye bolt and onto the holes in the two feet of the vacuum pump/compressor housing (3 attachment points).

For **transport with a crane**, the pump-motor unit can be hooked into the crane hook as follows:

- directly on the eye bolt/lifting attachment (With 2BH194 the eye bolt and the two foot holes should be used)

or possibly

- with lifting belts.

Eye bolt/lifting attachment:

Types with a weight of up to 30 kg [66 lbs] are **not** equipped with an eye bolt/lifting attachment (2BH11., 2BH12., 2BH13., 2BH14., 2BH15 [single-impeller]).

Types with a weight of more than 30 kg [66 lbs] are equipped with an eye bolt/lifting attachment as **standard** (2BH15. [two-impeller], 2BH16., 2BH18., 2BH19., 2BH9…).

The eye bolt/lifting attachment is mounted on the vacuum pump/compressor housing.

In case of possible removal and remounting of the eye bolt, it must be ensured that the eye level is positioned exactly in the axis direction of the pump-motor unit. Lay shims under the eye bolt if necessary.

The eye bolt/lifting attachment must be firmly tightened.

Loads laterally to the ring level are not permissible. Heavy impact loads during transport must be avoided.

© Gardner Denver Deutschland GmbH

5 Installation

⚠ WARNING

Improper use of the unit can result in serious or even fatal injuries!
Have you read the safety precautions in Chapter 1, "Safety", Pg. 3 f.?

Otherwise you many not carry out any work with or on the pump-motor unit!

⚠ DANGER

Danger from missing view into area of pump-motor unit!
When operating the control elements without a view into the area of the pump-motor unit, there is a danger that the pump-motor unit will be switched on while other persons are still performing work on it. Extreme injuries are possible!

Provide control elements at a location with a view of the pump-motor unit.

⚠ DANGER

Electrical danger!
The pump-motor unit must be installed so that the electrical device cannot be damaged by external influences!

In particular, the feed pipes must be securely routed, e.g. in cable ducts, in the floor etc.

⚠ WARNING

Danger from balance damage caused by vibration!
Vibrating environments can cause balance damage!

Install the pump-motor unit on a solid foundation or on a solid mounting surface.

Check screw glands/unions for mounting the pump-motor unit on the mounting surface regularly for strength and firm seating.

⚠ WARNING

Danger from crushing due to pump-motor unit tipping over!
Wear personal safety equipment (protective gloves and safety shoes). Handle the unit with the appropriate care. Install the pump-motor unit on a solid foundation or on a solid mounting surface! Check screw glands/unions for mounting the pump-motor unit on the mounting surface regularly for strength.

⚠ WARNING

Danger of fire from flammable substances!
The pump-motor unit must never come into contact with flammable substances.

⚠ WARNING

Danger of burns from hot surfaces of the pump-motor unit and from hot fluids!
High temperatures of up to approx. 160°C [320°F] can occur on the surface of the pump-motor unit.

The pump-motor unit must be installed so that accidental touch of its surface is not possible. Cover the pump-motor unit with a suitable touch protection (e.g. perforated plate cover or wire cover).

⚠ WARNING

Danger of injuries from flying parts!
Select installation so that parts that are thrown out through the grate if the external fan breaks cannot hit persons!

⚠ CAUTION

Danger of tripping and falling!
Make sure the unit does not present a danger of tripping. Lay cables and pipes so that they cannot be reached during operation(recessed in floor, in ducts on the wall etc.).

CAUTION

Danger of overheating due to hot surface of pump-motor unit!
High temperatures can occur on the surface of the pump-motor unit.

Temperature sensitive parts, such as lines or electronic components, may not come into contact with the surface of the pump-motor unit.

The pump-motor unit is ready to connect on delivery. However, if the time from delivery to commissioning of the pump-motor unit exceeds a certain period, the lubrication of the rolling bearings must be renewed.
See Chapter 8.2, "Storage conditions", Section "Lubrication of rolling bearings after longer storage", Pg. 24 for information on this topic.

Carry out the following work to install the pump-motor unit:

- Installation and securing,
- Attachment of the included loose muffler if necessary,
- Attachment of threaded flange or hose flange (available as accessories)
  for the connection of inlet or discharge pipe to the muffler,
- Electrical connection,
- Connection of inlet and discharge connection to the system.

5.1 Installation

⚠ WARNING

For an installation that differs from the following specifications, it is necessary to inquire with the Service Department!

Ambient conditions:

The pump-motor unit is suitable for installation in the following environments:

- In a dusty or damp environment,
- in buildings,
- in the open.
  When properly installed in the open, the pump-motor unit must be protected from exposure to intensive sunlight, e.g. by attaching a protective roof. Otherwise, no special protective devices against the effects of weathering are required.

The drive motors of the pump-motor units have the following design:

- with degree of protection IP55 (see rating plate),
- with tropicalized insulation.

Installation conditions:

The pump-motor unit must be installed as follows:

- on level surfaces,
- at a maximum height of 1000 m [3280 ft] above sea level.
  When installing at an altitude of more than 1,000 m [3,280 ft] above sea level, first inquire with the Service Department.

Minimum distances:

To ensure sufficient cooling of the pump-motor unit, it is absolutely necessary that the required minimum distances to the **fan guard** and to the **face of the vacuum pump/compressor cover** be maintained. see Chapter 3.1, "Mechanical data", Section "Minimum distances", Pg. 8.

The minimum distances to the face of the vacuum pump/compressor cover are especially important when installing on the vacuum pump/compressor cover or near a wall.

CAUTION

To ensure sufficient cooling of the pump-motor unit, also observe the following:

- Ventilation screens and openings must remain clear.
- Discharge air of other units may not be directly sucked in again!

Noise radiation:

To reduce the noise radiation, the following must be observed:

- Do not mount pump-motor unit on noise-conducting or noise-radiating parts (e.g. thin walls or sheet-metal plates).
- Provide pump-motor unit with sound-insulating intermediate layers (e.g. rubber buffers under the base of the pump-motor unit) if necessary.
- Install the pump-motor unit on a stable foundation or on a rigid mounting surface. This provides for smooth, low-vibration running of the pump-motor unit.

Components for reducing noise on the pump-motor unit:

- **Mufflers** (included as standard equipment):
  On delivery the pump-motor units are equipped with attached mufflers as standard. The noise radiation is considerably reduced by the mufflers. See Fig. 2 to Fig. 9, Pg. 18 ff.
- **Additional silencer** (available as an accessory for the 2BH1):
  The additional mufflers enable a further noise reduction. They may only be used with free entry and exit of gases, i.e. with direct intake out of or direct feeding into the atmosphere **without piping**.

 © Gardner Denver Deutschland GmbH

- **Sound protection hood** (available as an accessory for the 2BH1):
  Noise protection hoods are suitable for installation in rooms and in the open. They reduce both the total sound pressure level and tonal components that are perceived as particularly annoying.

Installation variants/axis position:

Basically, when installing the pump-motor unit, the following variants are possible with a different axis position (horizontal or vertical):

- Horizontal installation
- Vertical installation on the vacuum pump/compressor cover ("cover installation")
- Vertical mounting on the wall

Basically, all variants are possible with all type.

Exceptions

- For the 2BH1943, vertical axis mounting on the compressor cover ("cover position") is necessary.
- For the 2BH923, only horizontal axis mounting and vertical axis mounting on the compressor cover are possible.
- For units with condensate water opening, horizontal axis mounting with a foot below is necessary.

Horizontal axis mounting

The foot of the unit has fastening holes.

- Screw the foot of the unit to the base using suitable screws.
  All fastening holes must have screws!

Vertical axis mounting on the compressor cover ("cover position")

For vertical axis mounting on the compressor cover, use spring elements.

Spring elements are available as accessories and come in a set of 3. The upper part has a threaded stud and the lower part a threaded hole.

- fFastening spring elements to the unit:
  Screw threaded studs of the spring elements into the holes on the front side of the compressor cover and tighten.
- Fastening the unit with spring elements to the foundation:
  Select suitable fastening elements for the threaded hole.
  Screw spring elements over the threaded hole into the base or foundation.

Vertical axis mounting on the wall with the compressor cover pointing downward

For vertical axis mounting of the unit on the wall, the unit is fastened using the holes in the foot. The foot of the unit has fastening holes.

- Place the unit with the foot to the wall on a base plate with sufficient load-bearing capability in the mounting position.
- Screw the foot of the unit to the wall using suitable screws.
  All fastening holes must have screws!
- Remove the base plate.

Eye bolt/lifting attachment:

After set-up, the eye bolt/lifting attachment can be removed.

5.2 Electrical connection (motor)

⚠ DANGER

Electrical danger!
Malpractice can result in severe injuries and material damage!

⚠ DANGER

Electrical danger!
The electrical connection may be carried out by trained and authorized electricians only!

⚠ DANGER

Electrical danger!
Before beginning work on the unit or system, the following measures must be carried out:

- Deenergize.
- Secure against being switched on again.
- Determine whether deenergized.
- Ground and short-circuit.
- Cover or block off adjacent energized parts.

CAUTION

Incorrect connection of the motor can lead to serious damage to the unit!

Regulations:

The electrical connection must be carried out as follows:

- according to the applicable national and local laws and regulations,
- according to the applicable system-dependent prescriptions and requirements,
- according to the applicable regulations of the utility company.

Electrical power supply:

Observe the **rating plate**.
It is imperative that the operating conditions correspond to the data given on the rating plate!

Deviations permissible without reduction in performance:

- ±5 % voltage deviation
- ±2 % frequency deviation

Connection to drive-motor terminal box:

Open the required cable entry openings on the terminal box. Here the following two cases are differentiated:

- The cable entry opening is prefabricated and provided with a sealing plug.
- Screw out sealing plug.

OR

- The cable entry opening is closed off with a casting skin (only on pump-motor units with drive-motor axis heights of 100 to 160 in standard design).
- Break out casting skin using a suitable tool. For example, use a metal pin with a corresponding diameter or a chisel and hammer.

CAUTION

When pounding out the casting skin on the cable entry openings in the terminal box, the terminal box or its parts can be damaged (e.g. terminal board, cable connections).

Proceed with suitable caution and precision when doing so! Prevent flash formation!

Mount cable glands on the terminal box. Proceed as follows:

- Select one cable gland in each case which is suitable for the cable diameter.
- Insert this cable gland in the opening of the terminal box.
  Use a reducer if necessary.
- Screw on the cable gland so that no moisture, dirt etc. can penetrate into the terminal box.

Carry out the connection and the arrangement of the jumpers in accordance with the **circuit diagram in the terminal box**.

Connect the protective conductor to the terminal with the following symbol:
 .

The electrical connection must be carried out as follows:

- The electrical connection must be permanently safe.
- There may be no protruding wire ends.
- Clearance between bare live parts and between bare live parts and ground: ≥ 5.5 mm [0.217"] (at a nominal voltage of $U_N \leq 690V$).
- For the tightening torques for terminal board connections (except terminal strips), see Chapter 3.1, "Mechanical data", Section "Tightening torques for screw connections", Pg. 10.
- For terminals with clamping straps (e.g. as per DIN 46282), the conductors must be inserted so that approximately the same clamping height results on both sides of the bar. Individual conductors must therefore be bent into a U-shape or connected with a cable lug (DIN 46234).

This also applies to:

- the protective conductor,
- the outer ground conductor.

Both conductors can be recognized from their color (green/yellow).

⚠ DANGER

Electrical danger!
The terminal box must be free from

- foreign bodies,
- dirt,
- humidity.

Terminal box cover and cable entries must be tightly closed so as to make them dustproof and waterproof. Check for tightness at regular intervals.

⚠ DANGER

Electrical danger!
Clearance between bare live parts and between bare live parts and ground:

at least **5.5 mm [0.217"]** (at a nominal voltage of $U_N \leq 690V$).

There may be no protruding wire ends!

© Gardner Denver Deutschland GmbH

For **motor overload protection**:

- Use motor circuit breakers.
- This must be adjusted to the specified nominal current (see rating plate).

⚠ DANGER

Electrical danger!
There is danger of an electrical shock when a defective pump-motor unit is touched!

Mount motor circuit breaker.
Have electrical equipment checked regularly by an electrician.

Interference immunity of drive motor:

For drive motors with integrated sensors, the operator must provide for a sufficient interference immunity itself. Select a suitable sensor signal cable (e.g. with screening, connection as for a motor power-supply cable) and analyzing unit.

Operation with frequency converter:

⚠ WARNING

Pump-motor units with a UL approbation may not be operated on frequency converters in the US without testing by a suitable test agency!

With a power supply by a frequency converter, the following must be observed:

- High-frequency current and voltage harmonics in the motor supply cables can lead to emitted electromagnetic interference. This is dependent on the converter design (type, manufacturer, interference suppression measures).
- Be sure to observe the EMC notes of the converter manufacturer!
- Use screened power supply cables if necessary. For optimal screening, the screen must be conductively connected over a large area to the metal terminal box of the drive motor with a screwed metal gland.
- In the case of drive motors with integrated sensors (e.g. PTC thermistors) interference voltage can occur on the sensor cable depending on the converter type.
- Limit speed:
  see specifications on the rating plate.

5.3 Connecting pipes/hoses (vacuum pump/compressor)

Mufflers:

The pump-motor units are delivered with mufflers (indicated with arrows in the following illustrations) for the inlet and discharge connections as standard equipment.

On delivery the mufflers are already mounted on the following pump-motor units.

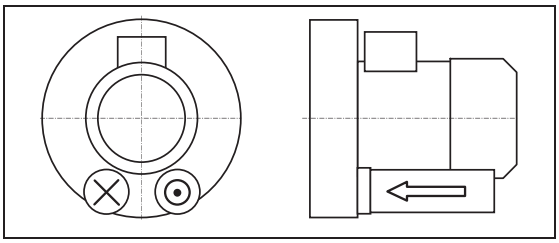

Fig. 2: 2BH1… (single-impeller pump-motor units), 2BH9 23

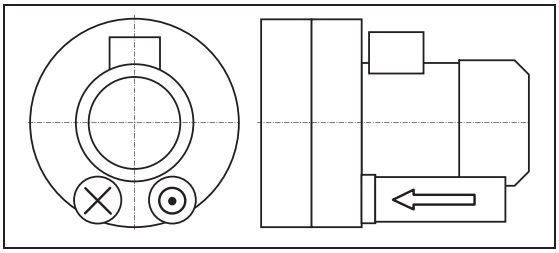

Fig. 3: 2BH1640 (two-impeller pump-motor unit with double-flow design)

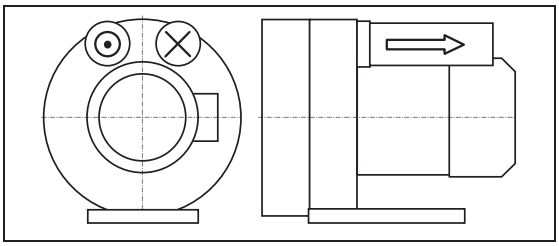

Fig. 4: 2BH1840-7G... (two-impeller pump-motor unit with double-flow design)

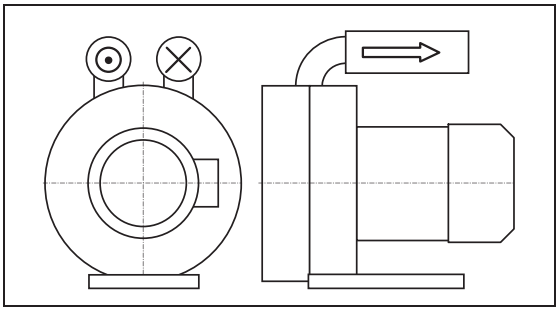

Fig. 5: 2BH1840-7J... (two-impeller pump-motor unit with double-flow design)

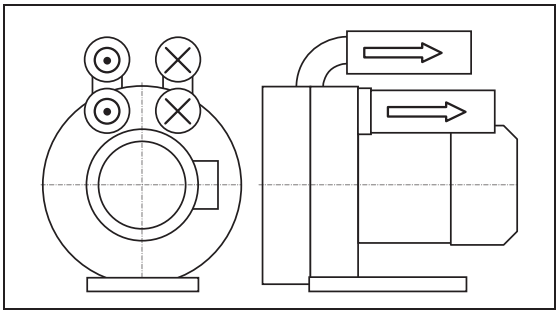

Fig. 6: 2BH1840-7L... (two-impeller pump-motor unit with double-flow design)

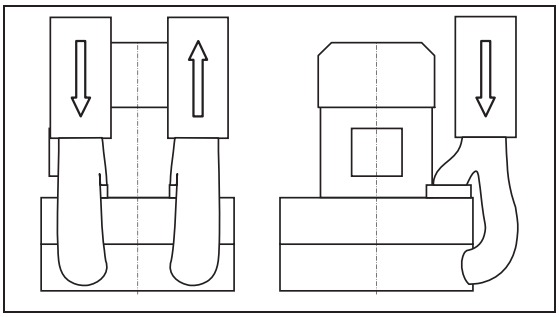

Fig. 7: 2BH1943 (two-impeller pump-motor unit with double-flow design)

On **two-impeller pump-motor units with a two-stage design of the types 2BH1310 to 2BH1910** the discharge-side muffler is included loose for packing-related reasons and must be mounted by the customer.

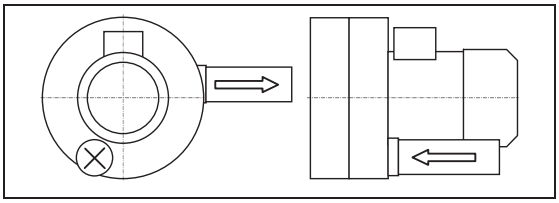

Fig. 8: 2BH1310 ... 2BH1610, 2BH1910 (two-impeller pump-motor units with a two-stage design)

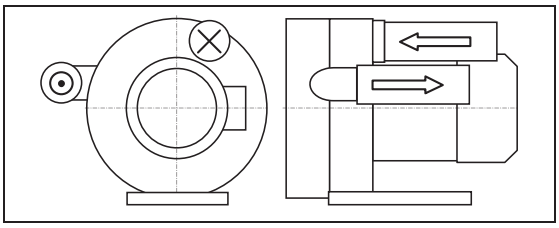

Fig. 9: 2BH1810 (two-impeller pump-motor unit with a two-stage design)

 © Gardner Denver Deutschland GmbH

⚠ WARNING

Danger from rotating impeller:
Cutting/cutting of off extremities!

The rotating impeller is accessible with the inlet and discharge connections open!

With free entry and exit of gases, i.e. with direct intake out of or direct feeding into the atmosphere without piping, the following therefore applies:

Provide the inlet and discharge connections of the pump-motor unit either with additional mufflers or with additional piping of a sufficient length to prevent access to the impeller!

Connections:

To prevent foreign bodies from entering the unit, all connections are sealed off when delivered. Do not remove the sealing plugs until immediately before connecting the pipes/hoses.

The following applies for the arrangement of the pipe/hose connections:

The **pumped gases** are sucked in via the inlet connection (see Chapter 5.3.1, Pg. 19) and discharged via the discharge connection (see Chapter 5.3.2, Pg. 19).

The **shaft rotating direction** is marked with an arrow on the back of the vacuum pump/compressor housing (Fig. 1, Pg. 2, Item 7).

The **delivery direction of the gases** is marked with arrows on both connections (Fig. 1, Pg. 2, Item 6).

⚠ WARNING

Danger from interchanging inlet and pressure line!

Interchanged inlet and pressure lines can lead to damage to the pump-motor unit and the system, and as a result of this to serious injuries!

Make sure that the inlet and pressure line cannot be confused when connecting.

Look for the clear marking with the arrow indicating the delivery direction on the inlet and discharge connections.

⚠ WARNING

Danger due to vacuum and gauge pressure!

Danger due to escaping fluid!

During operation, connected pipes and vessels are vacuumized or pressurized!

Use only mounting elements, connections, lines, fittings and containers with sufficient freedom from leaks and strength for the pressures which occur.

Make sure that the mounting elements and connections are mounted sufficiently firmly and leak-free!

CAUTION

If the pumped gases are passed on on the discharge side in a closed pipe system, then it must be ensured that the pipe system is adapted to the maximum discharge pressure. See Chapter 3.3: "Operating conditions", Section "Pressures", Pg. 11. Connect a pressure relief valve upstream if necessary.

NOTICE

Attach pipes/hoses free of mechanical tensions. Support the weight of the pipes/hoses.

5.3.1 Inlet connection

The inlet connection with the related muffler (Fig. 1, Pg. 2, Item 3) is marked with an arrow pointing into the vacuum pump/compressor. Connect the inlet pipe here. The pumped gases are sucked in via this.
Procedure: see Chapter 5.3.3.

⚠ WARNING

Danger from solid bodies and impurities in the pump-motor unit!

If solid bodies penetrate into the pump-motor unit, blades of the impellers can break and broken pieces can be thrown out.

Install a filter in the inlet pipe.
Replace filter regularly!

5.3.2 Discharge connection

The discharge connection with the related muffler (Fig. 1, Pg. 2, Item 4) is marked with an arrow pointing out of the vacuum pump/compressor. Connect the discharge pipe here. The pumped gases are discharged via this. Procedure: see Chapter 5.3.3.

5.3.3 Procedure when connecting pipes/hoses

Attach the pipes/hoses to the unit as described in the following. The pipes/hoses are connected differently to inlet and discharge connections depending on the muffler design and the type of line (pipe or hose):

- Muffler with inside threads:
  The pipe is screwed directly into the muffler.
- Muffler without inside thread:
  - Screw threaded flange (available as an accessory) onto the muffler.
  - Screw the pipe into the threaded flange.
- Hose connection:
  - for 2BH1 Screw the hose flange (available as an accessory) onto the silencer.
  - Push the hose onto the hose flange and secure it with a hose clamp. See Chapter 3.1, "Mechanical data", Section "Tightening torques for screw connections", Pg. 10 for information on this topic.

© Gardner Denver Deutschland GmbH

6 Commissioning

⚠ WARNING

Improper use of the unit can result in serious or even fatal injuries!

Have you read the safety precautions in Chapter 1, "Safety", Pg. 3 f.? Otherwise you many not carry out any work with or on the pump-motor unit!

⚠ WARNING

Danger from rotating parts (external fan, impeller, shaft): Cutting/cutting off of extremities, Grasping/winding up of hair and clothing!

Danger due to vacuum and gauge pressure: sudden escape of fluids (skin and eye injuries), sudden drawing in of hair and clothing!

Danger due to escaping fluid: Burns!

Start-up and operation only under the following conditions:

- The pump-motor unit must be completely assembled. When doing so, pay particular attention to the following components:
  - the vacuum pump/compressor cover,
  - the muffler on inlet and discharge connections,
  - the fan guard.
- The pipes/hoses must be connected to inlet and discharge connections.
- Inlet and discharge connections and the connected pipes/hoses may not be closed, clogged or soiled.
- Check the mounting elements, connections of the pipe/hose connections, lines, fittings and containers for strength, leaks and firm seating at regular intervals.

6.1 Preparation

⚠ WARNING

Danger from closed connections!

With closed/soiled intake or discharge connections vacuum or gauge pressure results in the pump-motor unit.

This can overheat and damage the drive motor winding.

Before start-up, make sure that the inlet and discharge connections are not closed, clogged or soiled!

CAUTION

Before starting up again after a longer standstill: Measure the insulation resistance of the motor. With values ≤ 1 kΩ per volt of nominal voltage, the winding is too dry.

Measures before start-up:

- If a shut-off device is installed in the discharge pipe:
  Make sure that the unit is NOT operated with the shut-off device closed.
- Before starting up the pump-motor unit, observe the values specified on the rating plate. Specifications on the drive-motor nominal current apply at a gas entry and ambient temperature of +40° C [104°F].
- Adjust the motor circuit breaker to the drive-motor nominal current.

Check direction of rotation:

- The intended rotating direction of the shaft is marked with arrows on the vacuum pump/compressor housing (Fig. 1, Pg. 2, Item. 7).
- The gas delivery direction is marked with arrows on the inlet and discharge connections (Fig. 1, Pg. 2, Item 6).
- Make sure the pipes/hoses on the inlet and discharge connections are properly connected.
- Switch the pump-motor unit on briefly and then off again.
- Compare the actual rotating direction of the external fan with the intended shaft rotating direction indicated with the arrows shortly before the pump-motor unit comes to a standstill.
- If necessary, reverse the direction of rotation of the motor.

⚠ WARNING

Danger due to rotating parts! Danger due to vacuum and gauge pressure! Danger due to escaping fluid!
Test runs may also only be conducted with the pump-motor unit completely mounted.

⚠ DANGER

Electrical danger!
The electrical connection may be carried out by trained and authorized electricians only!

⚠ DANGER

Electrical danger!
Before beginning work on the unit or system, the following measures must be carried out:

- Deenergize.
- Secure against being switched on again.
- Determine whether deenergized.
- Ground and short-circuit.
- Cover or block off adjacent energized parts.

Check operating speeds:

Observe the operating speed specified on the rating plate. This may not be exceeded, as otherwise the noise radiation, vibration behavior, grease consumption duration and bearing change interval worsen. To prevent damage as a result of higher speeds, it may be necessary to inquire with the Service Department as to the maximum speed.

⚠ WARNING

Danger of hearing damage due to noise radiation!
For the noise emission of the pump-motor unit measured by the manufacturer, see Chapter 3.1, "Mechanical data", Section "Noise level", Pg. 8. However, the actual noise emission during operation is highly dependent on the installation and system conditions. Conduct a noise measurement in the system during operation after installing the pump-motor unit. The following measures can be taken from 85 dB(A) and must be taken from 90 dB(A):

- Mark noise area with a warning sign.
- Wear hearing protection.
- With free entry and exit of gases, i.e. with direct intake out of or direct feeding into the atmosphere without piping, attach an additional muffler.

6.2 Start-up and shut-down

Start-up

- Open shut-off device in intake/discharge pipe.
- Switch on power supply for drive motor.

Shut-down:

- Switch off power supply for drive motor.
- Close shut-off device in intake/discharge pipe.

© Gardner Denver Deutschland GmbH

7 Operation

⚠ WARNING

Improper use of the unit can result in serious or even fatal injuries!
Have you read the safety precautions in Chapter 1, "Safety", Pg. 3 f.?
Otherwise you many not carry out any work with or on the pump-motor unit!

Also **be sure** to read the safety precautions in Chapter 6, "Commissioning", Pg. 21!

Starting up and shutting down

See Chapter 6, "Commissioning", Sub-Chapter 6.2, "Start-up and shut-down", Pg. 22.

Also be sure to observe the following important notes especially for operation:

⚠ WARNING

Danger of burns from hot surfaces of the pump-motor unit and from hot fluids!
High temperatures of up to approx. 160°C [320°F] can occur on the surface of the pump-motor unit.

Do not touch during operation!
Allow to cool after shut-down!

CAUTION

Danger of overheating due to hot surface of pump-motor unit!
High temperatures of up to approx. 160°C [320°F] can occur on the surface of the pump-motor unit.

Temperature sensitive parts, such as lines or electronic components, may not come into contact with the surface of the pump-motor unit.

CAUTION

Danger of overheating!
During operation the standstill heating may, if installed, **not** be switched on!

CAUTION

Danger of rusting due to collection of condensed water in drive motor area!
On drive motors with closed condensed water openings:
Remove closures occasionally to allow any water which has collected to drain off.

CAUTION

Danger of bearing damage!
Heavy mechanical impacts must be avoided during operating and while at a standstill.

8 Shut-Down and Longer Standstills

8.1 Preparing for shut-down or longer standstill

⚠ WARNING

Improper use of the unit can result in serious or even fatal injuries!
Have you read the safety precautions in Chapter 1, "Safety", Pg. 3 f.?
Otherwise you many not carry out any work with or on the pump-motor unit!

CAUTION

Danger of rusting due to collection of condensed water in drive motor area!
On drive motors with closed condensed water openings:
Remove closures occasionally to allow any water which has collected to drain off.

CAUTION

Danger of bearing damage!
Avoid mechanical shocks during operation and shut-down.

Prior to shut-down or longer standstill, proceed as follows:

- Switch off the pump-motor unit.
- Close shut-off device in inlet and pressure line if installed.
- Disconnect pump-motor unit from power supply.
- Release pressure.
  When doing so, open pipes/hoses slowly and carefully so that the vacuum or gauge pressure in the pump-motor unit can be released.
- Remove pipes/hoses.
- Provide mufflers on inlet and discharge side with sealing plugs.

8.2 Storage conditions

To prevent standstill damage during storage, the environment must provide the following conditions:

- dry,
- dust-free,
- low-vibration (V_{eff} ≤ 2.8 mm/s [0.11"/sec]).
- Ambient temperature:
  min. -30°C [-22°F]
  max. 40°C [+104°F].

CAUTION

Danger of overheating due to high temperature!
When storing in an environment with a temperature of over 40°C [104°F], the winding may be damaged and the grease change interval may be shortened.

Lubrication of rolling bearings after longer storage:

The new pump-motor unit may at first be stored following delivery. If the time from deliver to commissioning exceeds the following periods, the lubrication of the rolling bearings must be renewed:

- Under advantageous storage conditions (as specified above): 4 years.
- Under disadvantageous storage conditions (e.g. high humidity, salty air, sandy or dusty air): 2 years.

In these cases open rolling bearings must be relubricated and closed rolling bearings must be completely replaced. In this case be sure to inquire with the Service Department. In particular, exact information with regard to the procedure and grease type are required.

⚠ WARNING

Improper use of the unit can result in serious or even fatal injuries!
All maintenance work on the pump-motor unit must always be performed by the Service Department!

Maintenance work on the pump-motor unit may only be conducted by the operator itself when the related **maintenance manual** on hand!

Inquire with the Service Department!

Commissioning after longer standstill:

Before recommissioning after a longer standstill, measure the insulation resistance of the drive motor. With values ≤ 1 kΩ per volt of nominal voltage, the winding is too dry.

© Gardner Denver Deutschland GmbH

9 Servicing

⚠ WARNING

Improper use of the unit can result in serious or even fatal injuries!
Have you read the safety precautions in Chapter 1, "Safety", Pg. 3 f.?

Otherwise you many not carry out any work with or on the pump-motor unit!

⚠ WARNING

Improper use of the unit can result in serious or even fatal injuries!
All maintenance work on the pump-motor unit must always be performed by the Service Department!

Maintenance work on the pump-motor unit may only be conducted by the operator itself when the related **maintenance manual** on hand!

Inquire with the Service Department!

9.1 Emptying/Rinsing/Cleaning

Before any maintenance/servicing work, empty, rinse and clean the outside of the unit.

- Empty unit with air and rinse until all residues have been removed.
- Clean the outside of the unit with compressed air.
  - Wear gloves and protective safety glasses.
  - Secure the surrounding area.
  - Clean the entire surface of the unit and exterior fan with compressed air.

9.2 Repairs/troubleshooting

Fault	Cause	Remedy	Carried out by
Motor does not start; no motor noise.	At least two power supply leads interrupted.	Eliminate interruption by fuses, terminals or power supply cables.	Electrician
Motor does not start; humming noise..	One power supply lead interrupted.	Eliminate interruption by fuses, terminals or power supply cables.	Electrician
	Impeller is jammed.	Open vacuum pump/compressor cover, remove foreign body, clean.	Service*)
		Check or correct impeller gap setting if necessary.	Service
	Impeller defective.	Replace impeller.	Service*)
	Rolling bearing on drive motor side or vacuum pump/compressor side defective.	Replace motor bearing or vacuum pump/compressor bearing.	Service*)
Protective motor switch trips when motor is switched on. Power consumption too high.	Winding short-circuit.	Have winding checked.	Electrician
	Motor overloaded. Throttling does not match specification on rating plate.	Reduce throttling.	Service*)
		Clean filters, mufflers and connection pipes if necessary.	Service*)
	Compressor is jammed.	See fault: "Motor does not start; humming noise." with cause: "Impeller is jammed.".	Service*)

Fault	Cause	Remedy	Carried out by
Pump-motor unit does not generate any or generates insufficient pressure difference.	Leak in system.	Seal leak in the system.	Operator
	Wrong direction of rotation.	Reverse direction of rotation by interchanging two connecting leads.	Electrician
	Incorrect frequency (on pump-motor units with frequency converter).	Correct frequency.	Electrician
	Shaft seal defective.	Replace shaft seal.	Service*)
	Different density of pumped gas.	Take conversion of pressure values into account. Inquire with Service Department.	Service
	Change in blade profile due to soiling.	Clean impeller, check for wear and replace if necessary.	Service*)
Abnormal flow noises.	Flow speed too high.	Clean pipes. Use pipe with larger cross-section if necessary.	Operator
	Muffler soiled.	Clean muffler inserts, check condition and replace if necessary.	Service*)
Abnormal running noise.	Ball bearing lacking grease or defective.	Regrease or replace ball bearing.	Service*)
Compressor leaky.	Seals on muffler defective.	Check muffler seals and replace if necessary.	Service*)
	Seals in motor area defective.	Check motor seals and replace if necessary.	Service

*) Only when the maintenance manual is at hand: rectification by the operator.

© Gardner Denver Deutschland GmbH

9.3 Service/After-sales service

Our Service is available for work (in particular the installation of spare parts, as well as maintenance and repair work), not described in these operating instruction.

A list of spare parts with an exploded drawing is available on the Internet at www.gd-elmorietschle.com.

Observe the following when **returning** pump-motor unit:

- The pump-motor unit must be delivered complete, i.e. not dismantled.
- The pump-motor unit may not present a danger to the workshop personnel.
  Each pump motor unit on delivery to the workshop must be accompanied with a fully completed "Statement on health safety and on the protection of the environment", Pg. 29.
- The original rating plate of the pump-motor unit must be properly mounted, intact and legible.
  All warranty claims are voided for pump-motor units delivered for a damage expertise without the original rating plate or with a destroyed original rating plate.
- In case of warranty claims, the manufacturer must be informed of the operating conditions, operating duration etc. and additional detailed information provided on request if necessary.

10 Disposal

Have the entire pump-motor unit scrapped by a suitable disposal company. No special measures are required when doing so.
For additional information on disposing of the unit, ask the Service Department.

11 Explosion-Protected Design

An additional set of operating instructions with supplementary or specific information is provided with these pump-motor units.

EU declaration of conformity

Manufacturer:	Gardner Denver Deutschland GmbH Industriestraße 26 97616 Bad Neustadt Germany
Responsible for documentation:	Holger Krause Industriestraße 26 97616 Bad Neustadt Germany
Designation:	G series Side channel blower G-BH1, G-BH9 Types 2BH1 1 2BH1 2 2BH1 3 2BH1 4 2BH1 5 2BH1 6 2BH1 8 2BH1 9 2BH9 23

The side channel blower described above meets the following applicable Community harmonisation legislation:

2004/108/EC[*)]	Directive 2004/108/EC of the European Parliament and of the Council of 15 December 2004 on the approximation of the laws of the Member States relating to electromagnetic compatibility and repealing Directive 89/336/EEC
2006/42/EC	Directive 2006/42/EC of the European Parliament and of the Council of 17 May 2006 on machinery, and amending Directive 95/16/EC The protection targets of the directive 2006/95/EC have been met

Harmonised standards applied:

EN 1012-1:2010	Compressors and vacuum pumps - Safety requirements - Part 1: Air compressors
EN 1012-2:1996 +A1:2009	Compressors and vacuum pumps - Safety requirements - Part 2: Vacuum pumps
EN ISO 12100:2010	Safety of machinery - General principles for design - Risk assessment and risk reduction
EN 60204-1:2006	Safety of machinery - Electrical equipment of machines Part 1: General requirements

Bad Neustadt, 26.09.2011
(Place and date of issue)
Thomas Kurth, Managing Director
(Name and function)



(Signature)

[*)] Only applicable for version with frequency converter 2FC

664.44434.40.000

© Gardner Denver Deutschland GmbH

Gardner Denver

Statement on health safety and on the protection of the environment

- For the safety of our employees and to comply with statutory requirements on handling substances harmful to the health and the environment, this statement must be enclosed, fully completed, with **each** unit/system sent.
- **Without the fully completed statement, repair/disposal is not possible and delays are unavoidable!**
- The statement is to be completed and signed by suitably qualified, authorised personnel at the operating organisation.
- In the case of shipment to Germany, the statement is to be completed in German or English.
- The statement is to be attached to the outside of the packing on shipment.
- If necessary, the carrier is to be informed.

1. **Product designation (type):** .....
2. **Serial number (no. BN):** .....
3. **Reason for sending:** .....
4. **The unit/system**
   - ☐ has **not** come into contact with hazardous substances. There will be **no** hazards for personnel or the environment during repair/disposal. Continue with "6. Legally binding statement“
   - ☐ has come into contact with hazardous substances. Continue with "5. Information on the contamination“
5. **Information on the contamination** (if necessary provide more information on an additional sheet)
   The unit/system was used in the following application:

   .....

   and has come into contact with the following classifiable substances or substances presenting a hazard to health/environment:

Trade name:	Chemical designation:	Hazardous substance class:	Properties (e.g. toxic, inflammable, caustic, radioactive):

   - ☐ The unit/system has been emptied in accordance with the operating instructions, flushed and cleaned externally.
   - ☐ Safety data sheets in accordance with the applicable regulations are enclosed (..... sheet).
   - ☐ The following safety precautions are necessary for handling (e.g. personal protective equipment):

     .....

     .....
6. **Legally binding statement**
   I herewith guarantee that the details specified are true and complete and that I, as signatory, am in a position to judge that this is so.
   We are aware that we are liable to the contractor for any damages arising from incomplete or incorrect specifications. We are obliged to indemnify the contractor against claims for damages by third parties arising from incomplete or incorrect specifications. We are aware that, irrespective of this statement, we are directly liable to third parties - in particular including the contractor's employees tasked with repair/disposal.

Company/institute:	.....		
Name, position:	.....	Phone:	.....
Street:	.....	Fax:	.....
Post code, city:	.....		
Country:	.....	Stamp:	
Date, signature:	.....		

© Gardner Denver Deutschland GmbH
P.O. box 1510
97605 Bad Neustadt
Phone: +49 7622 392 0
Fax: +49 7622 392 300
E-mail: er.de@gardnerdenver.com
Internet: www.gd-elmorietschle.com
610.00250.40.905
10.2009
English

© Gardner Denver Deutschland GmbH

Elmo Rietschle
A Gardner Denver Product

www.gd-elmorietschle.de
er.de@gardnerdenver.com

Gardner Denver
Schopfheim GmbH
Roggenbachstraße 58
79650 Schopfheim · Deutschland
Tel. +49 7622 392-0
Fax +49 7622 392-300

Gardner Denver
Deutschland GmbH
Industriestraße 26
97616 Bad Neustadt · Deutschland
Tel. +49 9771 6888-0
Fax +49 9771 6888-4000

Gardner Denver

Elmo Rietschle is a brand of Gardner Denver's Industrial Products Group and part of Blower Operations.

B-7911 - Blower, Cincinnati LM-4, 4.3" X 2.9" Width Alum wheel
B7914 - Blower, Cincinnati, LM-6, Direct drive

cincinnati fan

Form: OMM-01-0509
Effective: 5/4/09
Supersedes OMM-01-0207
Part No.: 01218

Installation, Safety, Operation & Maintenance Instructions And Parts List

For Models PB, PBS, SPB, LM and LMF.

Arrangement 4 Blowers

NOTE

READ ENTIRE MANUAL, INCLUDING "SECTION IV. INITIAL UNIT STARTUP" BEFORE ATTEMPTING TO INSTALL AND OPERATE THIS EQUIPMENT.

BLOWER SPECIFICATIONS

BLOWER SERIAL NUMBER: _____ **MFG. DATE:** _____

NOTE: The serial number above is a required reference for any assistance. It is stamped on the blower nameplate.

BLOWER SPECIFICATIONS:

Model: _____ **Arrangement:** _____ **Rotation:** _____ **Discharge:** _____

Nominal Inlet Size: _____ (in Inches) **Wheel Size and Type:** _____

BLOWER PERFORMANCE DATA: (If entered on order)

CFM: _____ **SP:** _____ (Inches of Water Gauge) **Motor BHP:** _____

Density: _____ **Altitude:** _____ (Ft. above S.L.) **Airstream Temperature:** _____**°F.**

Fan RPM: _____ **Maximum Safe Fan RPM:** _____ **DO NOT EXCEED THIS RPM**

MOTOR DATA: (This section is completed only if the motor was supplied by Cincinnati Fan)

HP: _____ **RPM:** _____ **Voltage:** _____ **Phase:**_____

Hz: _____ **Frame Size:** _____ **Enclosure:** _____ **Efficiency:** _____

IF Motor is EXP, Class(es) & Group(s) are:_____

Manufacturers Model Number: _____ **CFV Part Number:** _____

ATTENTION: RECEIVING DEPARTMENT

All Cincinnati Fan products are packaged to minimize any damage during shipment. The freight carrier is responsible for delivering all items in their original condition as received from Cincinnati Fan. The individual receiving this equipment is responsible for inspecting this unit for any obvious or concealed damage. If any damage is found, it should be noted on the bill of lading before the freight is accepted and the receiver must file a claim with the freight carrier.

LONG TERM STORAGE NOTICE

If this blower will NOT be installed and put into operation within 30 days, refer to the "Long Term Storage Instructions" on pages 12 and 13. Failure to follow all applicable long term storage instructions, will void your warranty. This blower should be stored indoors in a clean, dry location.

⚠ DANGER				
				
Hazardous voltage can cause electrical shock and death.	High speed rotating equipment can cause severe personal injury.	Lock out/Tag out to prevent personal injury BEFORE starting ANY service or inspection.	Avoid injury. NEVER operate without ALL required safety guards in place.	Avoid injury. You MUST read and understand all instructions in this manual BEFORE installing.

TABLE OF CONTENTS

I. GENERAL
- A. Unpacking and Handling 2
- B. Safety Accessories & Instructions.....2-3

II. INSTALLATION
- A. Vibration.....3
- B. Mounting Methods.....3-4
- C. Duct Work Connections.....4
- D. Safety Guards.....4
- E. Dampers and Valves.....4
- F. Set Screw & Taper-lock Bushing Torque Values 5

III. ELECTRICAL
- A. Disconnect Switches 5
- B. Motors.....5-6
- C. Maximum Blower Speed.....6

IV. INITIAL UNIT STARTUP
- A. Pre-Startup & Post-Startup Checks.....7
- B. Vibration.....8-9

V. ROUTINE INSPECTION & MAINTENANCE.....9
- A. Hardware 10
- B. Motor Bearing Lubrication 10
- C. Wheel Balance 10
- D. Vibration.....10
- E. Dampers and Valves.....10
- F. Safety Equipment or Accessories 10-11

VI. ORDERING PARTS.....11

VII. TROUBLESHOOTING.....11-12

VIII. LONG TERM STORAGE.....12-13

IX. WARRANTY, LIABILITY & RETURNS.....14

X. PARTS DRAWING.....15

I. GENERAL

A. Unpacking:

Be careful not to damage or deform any parts of the blower when removing it from the packaging container. **All the packaging material should be kept in the event the blower needs to be returned.**

Handling:

Handling of the blower should be performed by trained personnel and be consistent with all safe handling practices. Verify that all lifting equipment is in good operating condition and has the proper lifting capacity. The blower should be lifted using well-padded chains, cables or lifting straps with spreader bars. Some blower models have lifting eye locations provided in the blower base. **NEVER lift the blower by an inlet or discharge flange, motor shaft, motor eye bolt, or any other part of the blower assembly that could cause distortion of the blower assembly.**

B. Safety Instructions & Accessories:

1. **Safety Instructions:**
   All installers, operators and maintenance personnel should read AMCA Publication 410-96, **"Recommended Safety Practices for Users and Installers of Industrial and Commercial Fans".** This manual is included with the blower. Additional copies can be requested by writing us at Cincinnati Fan, 7697 Snider Rd., Mason, OH 45040-9135
2. **Sound:**
   Some blowers can generate sound that could be hazardous to personnel. It is the responsibility of the user to measure the sound levels of the blower and/or system, determine the degree of personnel exposure, and comply with all applicable safety laws and requirements to protect personnel from excessive noise.

3. Air Pressure and Suction:

In addition to the normal dangers of rotating machinery, the blower can present additional hazards from the suction or pressure created at the blower inlet or discharge. Suction at the blower inlet can draw materials into the blower where they become high velocity projectiles at the discharge and cause severe personal injury or death. It can also be extremely dangerous to persons in close proximity to the inlet or discharge as the forces involved can overcome the strength of most individuals.

⚠ WARNING

NEVER OPERATE A BLOWER WITH A NON-DUCTED INLET AND/OR DISCHARGE. IF THE BLOWER INLET AND/OR DISCHARGE IS NON-DUCTED, IT IS THE USERS RESPONSIBILITY TO INSTALL AN INLET AND/OR DISCHARGE GUARD.

4. Temperature:

Many blowers, blower components and all motors operate at temperatures that could burn someone if they come in contact with them. If this potential hazard could exist in your installation, steps must be taken by the user to protect anyone from coming in contact with this equipment.

5. Spark Resistance; (Per AMCA Standard 99-0401-86 and ISO 13499)

⚠ DANGER

NO GUARANTEE OF ANY LEVEL OF SPARK RESISTANCE IS IMPLIED BY SPARK RESISTANT CONSTRUCTION. IT HAS BEEN DEMONSTRATED THAT ALUMINUM IMPELLERS RUBBING ON RUSTY STEEL CAN CAUSE HIGH INTENSITY SPARKS. AIR STREAM MATERIAL AND DEBRIS OR OTHER SYSTEM FACTORS CAN ALSO CAUSE SPARKS.

6. Safety Accessories;

Guards:

All moving parts must be guarded to protect personnel. Safety requirements can vary, so the number and types of guards required to meet company, local, state and OSHA regulations must be determined and specified by the actual user or operator of the equipment.

NEVER start any blower without having all required safety guards properly installed. All blowers should be checked on a regular schedule, for missing or damaged guards. If any required guards are found to be missing or defective, the power to the blower should be immediately turned off and locked out in accordance with OSHA regulations. Power to the blower should NOT be tuned back on until the required guards have been repaired or replaced.

This blower can become dangerous due to a potential “windmill” effect, even though all electrical power has been turned off or disconnected. The blower wheel should be **carefully** secured to prevent any rotational turning ***BEFORE*** working on any parts of the blower/motor assembly that could move.

7. Access or Inspection Doors:

⚠ DANGER

NEVER OPEN ANY ACCESS OR INSPECTION DOORS WHILE THE BLOWER IS OPERATING. SERIOUS INJURY OR DEATH COULD RESULT FROM THE AFFECTS OF AIR PRESSURE, AIR SUCTION OR MATERIAL THAT IS BEING CONVEYED. DISCONNECT OR LOCK OUT POWER TO THE BLOWER AND LET THE BLOWER WHEEL COME TO A COMPLETE STOP *BEFORE* OPENING ANY TYPE OF ACCESS OR INSPECTION DOOR.

II. INSTALLATION

A. Vibration:

Before any mounting method is selected, the user should be aware of the effects vibration will have on the blower, motor and other parts. Improper blower installation can cause excessive vibration causing premature wheel and/or motor bearing failure, that is not covered under warranty. Vibration eliminator pads, springs or bases should be properly installed to prevent any blower vibration from transmitting to the foundation, support structure or ducting.

⚠ WARNING

SHUT THE BLOWER DOWN IMMEDIATELY IF THERE IS ANY SUDDEN INCREASE IN VIBRATION.

B. Mounting Methods:

1. Floor Mounted Units;

Centrifugal blowers should be mounted on a flat, level, concrete foundation weighing 2-3 times the weight of the complete blower/motor assembly. It is recommended that the foundation be at least 6 inches larger than the base of the blower. The foundation should include anchor bolts such as shown in **Fig. 1** on page 4. Place the blower over the anchor bolts and shim under each bolt until the blower is level. After shimming, flat washers, lock washers and lock nuts should be tightened at each anchor bolt. Any gaps between the blower base and the foundation should be grouted. If the blower will be sitting on some type of vibration pads or mounts, follow the recommended mounting procedures supplied with the vibration elimination equipment.

Fig. 1

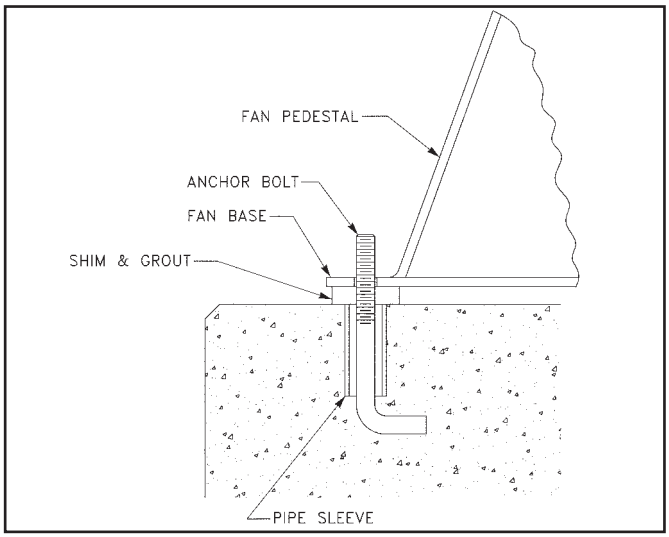

2. Elevated Units;

Improper mounting of elevated blowers can cause vibration problems. The structure that the blower/motor assembly will be mounted on must be strong enough to support at least 3 times the weight of the entire blower/motor assembly. **An insufficient support will cause excessive vibration and lead to premature wheel and/or motor bearing failure**. Bracing of the support structure must be sufficient enough to prevent any side sway. The entire structure should be welded at all connection joints to maintain constant alignment of the platform.

⚠ DANGER

THE IMPROPER DESIGN OF AN ELEVATED PLATFORM STRUCTURE COULD RESULT IN A RESONANT CONDITION, AND CONSEQUENTLY, CAUSE A LIFE THREATENING, CATASTROPHIC, STRUCTURAL FAILURE.

C. Duct Work Connections:

All duct connections to the blower should include flexible connectors between the ducting and the blower inlet and/or discharge. This will eliminate distortion, noise and vibration from transmitting to the duct and building. The connectors should be selected to handle the operating conditions for air volume and pressure that the blower will produce. **All ducting or accessories, added by the user, should be independently supported. DO NOT use the blower/motor assembly to support any additional weight.** Inlet and/or discharge duct elbows should be located a minimum of 2 blower wheel diameters from the blower. Any duct elbows located closer than 2 wheel diameters to the blower inlet or discharge **WILL** reduce the air performance and blower efficiency. Any duct elbows near the blower discharge should be in the **same rotational direction** as the **blower rotation**.

Non-Ducted Blower Inlet:

Any blower with no ducting on the inlet **must** have an inlet guard. The blower should be located so the blower inlet is, at least, 1 wheel diameter away from any wall or bulkhead to eliminate a reduction in air flow.

Non-Ducted Blower Discharge:

Any blower with no ducting on the discharge **must** have a discharge guard.

D. Safety Guards:

Cincinnati Fan offers guards, as optional, to keep your blower in compliance with OSHA safety regulations. These include inlet or discharge guards. Any blowers built with high temperature construction, a “heat slinger guard” is standard. It is the responsibility of the user to make sure this blower meets all local, state and OSHA safety regulations. If you have a specific guard requirement not covered by OSHA, please contact the local Cincinnati Fan sales office for assistance.

E. Dampers and Valves: (Airflow control devices)

If the blower is supplied with any type of air flow control device, it should be closed before initial start-up of the blower to minimize overloading of the motor. Any airflow control device, with bearings, should be maintained in accordance with the manufacturers instructions. Any air flow control device, with an automatic control mechanism, should be adjusted per the manufacturers recommendations.

F. Set Screw and Taper-lock Bushing Torque Values:

All blower wheel set screws are tightened to the proper torque prior to shipment. Some wheels may have taper-lock hubs and split, taper-lock bushings to secure the wheel to the motor shaft.

NOTE: Check all set screw or taper-lock bushing torques. Forces encountered during shipment, handling, rigging and temperature can affect factory settings. For correct torque values, see **Tables 1** and **2** below.

Table 1

SET SCREW TORQUE VALUES		
Diameter & Number of Treads/Inch	**Hex Wrence Size (Across Flats)**	**Required Torque (Inch Pounds)**
1/4-20	1/8"	65
5/16-18	5/32"	165
3/8-16	3/16"	228
7/16-14	7/32"	348
1/2-13	1/4"	504
5/8-11	5/16"	1104

Table 2

TORQUE VALUES FOR TAPER-LOCK BUSHINGS	
Taper-lock Bushing Size	**Required Torque (Inch Pounds)**
H	95
B	192
P	192
Q	350
R	350

⚠ CAUTION

Set screws should NEVER be used more than once. If the set screws are loosened, they MUST be replaced. Use only knurled, cup-point, set screws with a nylon locking patch.

III. ELECTRICAL

A. Disconnect Switches:

All blower motors should have an independent disconnect switch located in close visual proximity to turn off the electrical service to the blower motor. **Disconnects must be locked out in accordance with OSHA "lock out-tag out" procedures any time inspection or maintenance is being performed on the blower and/or motor assembly. The "lock out-tag out" procedure should be performed by a licensed electrician or authorized personnel.** All disconnects should be sized in accordance with the latest NEC codes (National Electric Codes) and any local codes and should be installed only by a licensed electrician. "Slow blow" or "time delay" fuses or breakers should be used since the initial start-up time for the blower motor, although rare, can be up to 10 seconds.

B. Motors:

⚠ DANGER

ALL WIRING CONNECTIONS, INSPECTION AND MAINTENANCE OF ANY MOTOR MUST BE PERFORMED BY A LICENSED ELECTRICIAN IN ACCORDANCE WITH THE MOTOR MANUFACTURERS RECOMMENDATIONS, ALL ELECTRICAL CODES AND OSHA REGULATIONS. FAILURE TO PROPERLY INSTALL, MAKE WIRING CONNECTIONS, INSPECT OR PERFORM ANY MAINTENANCE TO A MOTOR CAN RESULT IN MOTOR FAILURE, PROPERTY DAMAGE, EXPLOSION, ELECTRICAL SHOCK AND DEATH.

1. **DO NOT connect or operate a motor without reading the motor manufacturers instructions supplied with the blower.** The basic principle of motor maintenance is: **KEEP THE MOTOR CLEAN AND DRY.** This requires periodic inspections of the motor. The frequency of the inspections depends on the type of motor, the service and environment it will be subjected to and the motor manufacturers instructions.
2. **Cleaning:** Cleaning should be limited to exterior surfaces only. **Follow motor manufacturers cleaning instructions.**
3. **Lubrication:** Most small motors have sealed bearings that are permanently lubricated for the life of the motor. Some larger motors have grease plugs that should be replaced with grease fittings to perform re-lubrication. These motors, or any motor with grease fittings, should be lubricated in accordance with the motor manufacturers recommendations. Lubrication frequency depends on the motor horsepower, speed and service. **BE SURE** you use compatible grease and **DO NOT** over grease.
4. **Location:** If the motor will be outside and subjected to the weather, it is recommended that a weather cover be installed to keep rain and snow off of the motor. No motors are guaranteed to be "watertight". Be careful to allow enough openings between the motor and the motor cover to let the motor "breath". If the back end of the motor is covered, the cover should be no closer than 3" to the back of the motor for proper ventilation.

5. **Wiring Connections:** All wiring connections should be made for the proper voltage and phase as shown on the motor nameplate. Connections should follow the motor manufacturers recommendations as shown on the wiring schematic. This wiring diagram will be located on the outside of the motor, inside of the motor conduit box or on the motor nameplate. **Reversing some wires might be necessary to get the correct blower rotation.**
6. **Motors with Thermal Overload Protection:** If a motor is equipped with thermal overloads, the thermal overload must be wired per the wiring schematic to be operable. ***There are 3 types of thermal overloads:***
   a. **Automatic:** These will automatically shut the motor down if the internal temperature exceeds the design limits.

⚠ DANGER

MAKE SURE YOU LOCK OUT THE POWER TO THE MOTOR BEFORE INSPECTING ANY MOTOR WITH AUTOMATIC THERMALS. WHEN THE THERMALS COOL DOWN, THEY WILL ALLOW THE MOTOR TO AUTOMATICALLY START UP AGAIN, UNLESS YOU HAVE LOCKED OUT THE POWER TO THE MOTOR.

   b. **Manual:** These motors will have a button on them. If the motor overheats, it will shut down. After you have inspected the motor and eliminated the over heating problem, you will need to "reset" it by pushing the button. **You should still lock out the power BEFORE inspecting the motor.**
   c. **Thermostats:** This type of thermal is a temperature sensing device **ONLY**. If the motor overheats, the thermostats will open or close (depending on the type) and send a **"signal"** to the electrical box. ***THEY WILL NOT TURN THE MOTOR OFF.*** **These are pilot circuit devices that must be connected to the magnetic starter circuit.**

7. **EXPLOSION PROOF Motors:** No motor is explosion proof. Explosion proof (EXP) motors are designed so if there is an explosion **WITHIN** the motor, the explosion will be **CONTAINED INSIDE** the motor and not allowed to get out to the atmosphere. All explosion proof motors must be selected based on the atmosphere and/or the environment the motor will be operating in. Explosion proof motors are designed, rated, and labeled for their operating conditions based on Classes, Groups and "T" Codes. **The Class, Group and "T" Code of an EXP motor MUST be selected based on the atmosphere and/or environmental conditions the motor will be operating in. Consult the NEC (National Electric Code) and the NFPA (National Fire Protection Association) for the proper EXP motor Class, Group and "T" Code required for your specific application and location.**

⚠ DANGER

IF AN EXPLOSION PROOF MOTOR IS USED IN AN AREA CONTAINING VOLITILE LIQUIDS, GASES, FUMES OR DUST FOR WHICH THE MOTOR WAS NOT DESIGNED TO OPERATE IN, AN EXPLOSION AND/OR FIRE CAN OCCUR.

NOTICE:

   a. **All EXP motors have some type of thermal overload as required by UL (Underwriters Laboratories). Refer to all of Section 6 above.**
   b. **All EXP motors are required to have the UL (Underwriters Laboratories) and CSA (Canadian Standards Association) listing numbers on the motor name plate or on a separate plate attached to the motor. The Class, Group and "T" Code the motor is designed for must also be listed.**

8. **Normal Motor Operating Temperatures:**
   Using your hand to test the normal running temperature of a motor can be a very painful experience;
   The normal operating temperature of a fully loaded, open type, electric motor operating in a 70°F. (21° C.) ambient temperature is 174°F. (79° C.)

C. Maximum Blower Speed and Motor Speed Controllers:

If you will be using any type of motor speed controller with this blower, **DO NOT** exceed the **maximum safe blower speed**. Installing and using a speed control device requires special training and certification as required by the speed control manufacturer. See the manufacturers instructions for proper use, installation and wiring connections for the maximum speed settings. It may also be necessary to "block out" some speeds to eliminate a resonant vibration problem. The maximum safe blower speed is shown on the data sheet shipped with the blower. If you have lost the data sheet, contact Cincinnati Fan or our sales office for your area. You must have the serial number from the **blower** name plate for us to determine the maximum safe blower speed. Cincinnati Fan will only extend the motor manufacturers warranty, when used with a speed controlling device, if the motor has the words **"Inverter Duty"** marked on the motor name plate. If the motor does not have **"Inverter Duty"** marked on the motor name plate, and you have a motor failure, you will be required to contact the motor manufacturer for any service or warranty claims.

IV. INITIAL UNIT STARTUP

NOTICE: Failure to complete and document all the following pre-startup and both post-startup checks, listed in sections A (below) and B on page 8, could void all warranties.

A. Pre-Startup & Post-Startup Checks: (Check blocks as each step is completed. Retain this for your records.)

A1. Pre-Startup Checks Completed By: _____ DATE: _____

A2. 8 Hour, Post-Startup Checks Completed By: _____ DATE: _____

A3. 3 Day, Post-Startup Checks Completed By: _____ DATE: _____

MAKE SURE POWER TO THE MOTOR IS LOCKED OUT BEFORE STARTING PRE-STARTUP OR POST-STARTUP CHECKS.

1. ☐☐☐ If possible, *CAREFULLY* spin the blower wheel by hand to ensure it rotates freely and no rubbing or clicking noise is heard.
2. ☐☐☐ Check all blower, foundation and duct work hardware to make sure it is tight.
3. ☐☐☐ Check all blower wheel set screws to make sure they are tight per **Table 1** on page 5.
4. ☐☐☐ If the wheel has a taper-lock bushing, make sure the bolts are tightened per **Table 2** on page 5.
5. ☐☐☐ Make certain there is no foreign material in the blower or duct work that can become a projectile.
6. ☐☐☐ Make sure any inspection doors in the duct work are securely bolted or locked.
7. ☐☐☐ Ensure all electrical power components are properly sized and matched for your electrical system.
8. ☐☐☐ Check that all required guards are properly secured.
9. ☐☐☐ Any dampers should be fully opened and closed to make sure there is no binding or interference.
10. ☐☐☐ If your blower is mounted on an elevated support structure, make sure the structure is welded at all the joint connections and the structure is properly braced to prevent “side sway”.
11. ☐☐☐ Close any dampers to minimize load on motor. Especially on blowers with high temperature construction. **Never** subject a “cold” blower to a “hot” gas stream. If the blower will be handling “hot gases” greater than 150°F (65°C) it is imperative that the blower be subjected to a gradual rate of temperature increase, not to exceed 15°F/minute (8°C/minute). The same temperature limits are also important when the blower is experiencing a drop in temperature until the temperature drops down to 150°F (65°C). Only, when the entire blower has reached an equilibrium temperature of 150°F (65°C), or less, should the power be turned off.
12. ☐☐☐ Make sure the power source connections to the blower motor are per the motor manufacturers instructions.
13. ☐☐☐ Make sure the blower wheel is stationary prior to startup. **Starting a blower with a wheel that is rotating backwards can cause wheel damage.**
14. ☐☐☐ Apply power to the blower motor momentarily (i.e. “bump start”) to check for proper blower wheel rotation. If the blower is rotating in the wrong direction, reconnect the motor leads per the motor manufacturers wiring schematic. **Blower rotation is determined by viewing the blower from the motor side of the blower, NOT from the inlet side**. After reconnecting the leads, repeat this step. **See Fig. 2 below.**

Fig. 2

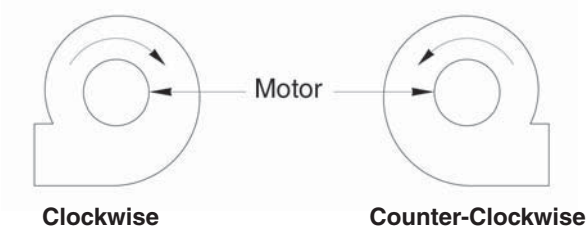

Clockwise (CW) Rotation **Counter-Clockwise (CCW) Rotation**

15. ☐☐☐ Apply power to the blower motor and let it come up to full speed. **Turn off the power.** Look and listen for any unusual noise or mechanical abnormality while the blower wheel is still spinning. If any are noticed, lock out the power, wait for the blower wheel to come to a complete stop, locate the cause and correct it.
16. ☐☐☐ Unlock power and start the blower.
17. ☐☐☐ Measure, record and keep the following motor data for future reference and comparison:
(Single phase motors will only have L1 and L2 leads)

Amperage draw on each motor lead: L1 _____ L2 _____ L3 _____
(Running amps **SHOULD NOT** exceed the motor nameplate amps for the voltage being operated on)

Voltage coming to motor leads: L1_____ L2_____ L3_____
(Should be about the same input voltage on all leads)

B. Vibration:

The blower was balanced at the factory to comply with ANSI/AMCA Standard 204-05, Category BV-2. However, rough handling in shipment and/or erection, weak and/or non-rigid foundations, and misalignment may cause a vibration problem after installation. After installation, the vibration levels should be checked by personnel experienced with vibration analysis and vibration analysis equipment.

NOTE:

The blower SHOULD NOT be operated if the vibration velocity of the fan exceeds 0.50 inches per second, filter out, if the blower is rigidly mounted. If the blower is mounted on isolators or on an isolator base, it SHOULD NOT be operated if the vibration velocity of the blower exceeds 0.75 inches per second, filter out.

Vibration readings for direct driven blowers should be taken on the motor at the top, sides and end as per **Fig. 3** below. After you have taken your vibration readings, write them down in the spaces below and keep for future comparison.

⚠ DANGER

If the blower is going to be conveying material, it is the users responsibility to periodically turn the blower off and lock out the power. The blower wheel should then be checked for material build-up and/or erosion. If material has built up on any parts of the wheel, it MUST be removed and cleaned before it is put back into service. If any parts of the wheel have been eroded, the wheel MUST be replaced. Failure to perform this inspection can cause excessive vibration that will damage the blower and/or motor bearings. When vibration becomes excessive, it will lead to complete blower failure that could cause property damage, severe personal injury and death. The user must determine the frequency of this inspection based on the actual circumstances of their operation, BUT checking the vibration readings should NEVER exceed a 12 month period. For the AMCA/ANSI standard for vibration limits, see Fig. 4 on page 9.

Fig. 3

VIBRATION METER PROBE POSITIONS

For Arrangement 4 Blowers

	1	2	3	4	5
A					
B					
C					

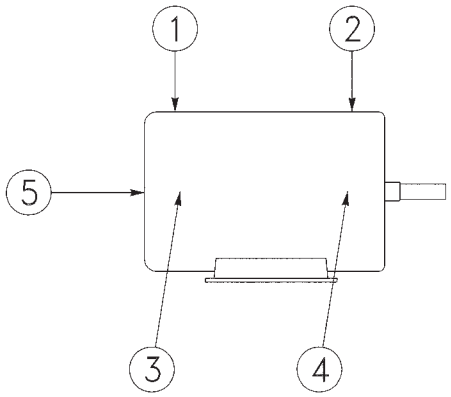

A Pre-Startup ..... Readings taken by: _____ **Date:** _____

B 8 Hour Post-Startup ..... Readings taken by: _____ **Date:** _____

C 3 Day Post-Startup ..... Readings taken by: _____ **Date:** _____

Fig. 4 Vibration Severity Chart

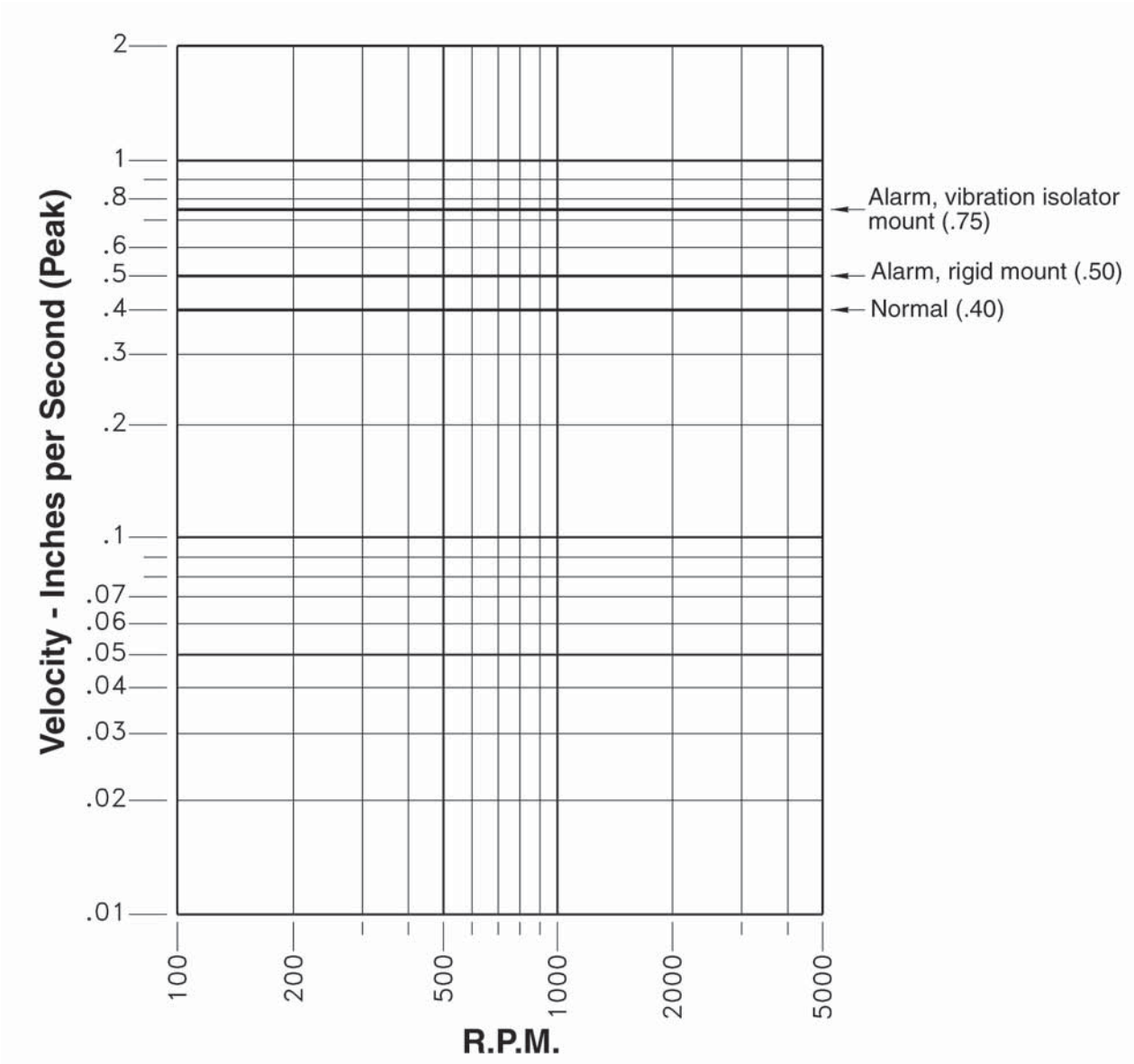

V. ROUTINE INSPECTION & MAINTENANCE

Periodic inspection of all the blower parts is the key to good maintenance and trouble-free operation. The frequency of inspections must be determined by the user and is dependent upon the severity of the application. **BUT,** it should **NEVER** exceed a 12 month period. The user should prepare an inspection and maintenance schedule and make sure it is adhered to.

⚠ WARNING

BEFORE STARTING ANY INSPECTION OR MAINTENANCE, BE SURE BLOWER IS TURNED OFF, POWER IS LOCKED OUT AND THE BLOWER WHEEL HAS BEEN CAREFULLY SECURED TO PREVENT WIND MILLING. IF THE OPERATING CONDITIONS OF THE BLOWER ARE TO BE CHANGED (SPEED, PRESSURE, TEMPERATURE, ETC.) CONSULT CINCINNATI FAN, OR OUR SALES OFFICE FOR YOUR TERRITORY, TO DETERMINE IF THE UNIT WILL OPERATE SAFELY AT THE NEW CONDITIONS.

A. Hardware:

All blower and foundation hardware should be checked to make sure it is tight. Wheel set screws or taper-lock bushings should be tightened to the torque values shown in **Tables 1 and 2** on page 5.

NOTE: If any set screws have come loose, they must be thrown away and replaced. **NEVER** use set screws more than once. **Replace with knurled, cup-point set screws with a nylon locking patch.**

B. Motor Bearing Lubrication:

1. Motor Bearings:

Most smaller motors have sealed bearings that never require re-lubrication for the life of the motor. For any motors with grease fittings, consult the motor manufacturers recommendations with reference to the lubrication frequency and the type of grease that should be used.

DO NOT over grease the motor bearings. Generally, 1-2 shots should be enough. Use a hand operated grease gun at no more than 40 PSI. ***IF POSSIBLE, CAREFULLY*** **lubricate the motor bearings while the motor is running.**

C. Wheel Balance:

All blower wheels are balanced at the factory. It is not uncommon that additional "trim balancing" is required after the blower is assembled. Trim balancing of the blower assembly, in the field, is typically always necessary for all replacement wheels. **After any wheel is installed, the final balance of the entire blower assembly should be checked.** Refer to Section B on page 8 and Fig. 4 on page 9. Air stream material or chemicals can cause abrasion or corrosion of the blower parts. This wear is generally uneven and, over time, will lead to the wheel becoming unbalanced, causing excessive vibration. When that happens, the wheel must be rebalanced or replaced. The other air stream components should also be inspected for wear or structural damage and cleaned or replaced if necessary. **After cleaning any blower wheel, it should be balanced and then "trim balanced" on the motor shaft.**

There are three ways to balance a blower wheel:

1. **Add balancing weights for fabricated aluminum, steel or stainless steel wheels:**
   Balance weights should be rigidly attached to the wheel at a location that will not interfere with the blower housing nor disrupt air flow. They should (if at all possible) be welded to the wheel. When trim balancing the wheel, **on the blower,** be sure to ground the welder **directly** to the blower wheel. Otherwise, the welding current will likely pass through the motor and damage the motor bearings.
2. **Grinding off material for cast aluminum wheels:**
   If you are grinding on the wheel to remove material, be very careful not to grind too much in one area. That could affect the structural integrity of the wheel.
3. **Forward curved wheels, Model LM only (also known as squirrel cage or multivane wheels).**
   These wheels have balancing clips attached to individual blades around the wheel. That is the only proper way to balance this type of wheel.
   NOTE:
   Removing any forward curve wheel from the blower to clean it, requires special attention when reinstalling the wheel back into the blower housing. Make sure you reinstall the wheel so the proper wheel-to-inlet clearance is maintained. Failure to do this will affect the blowers airflow (CFM), static pressure (SP) capabilities and efficiency. Consult Cincinnati Fan or our local sales office for your area for assistance if necessary.

D. Vibration:

As mentioned previously in this manual, excessive vibration can cause premature motor bearing failure that could lead to catastrophic failure of the blower. After performing any routine maintenance, the vibration readings should be taken again. New readings should be taken (maximum every 12 months) and compared to the readings you recorded in **Figure 3**, on page 8, during the initial startup. **If any major differences are present, the cause should be determined and corrected before the blower is put back into operation.**

The most common causes of vibration problems are:

1. Wheel unbalance.
2. Mechanical looseness.
3. Poor blower inlet and/or discharge conditions.
4. Foundation stiffness.

E. Dampers and Valves: (Airflow control devices)

Turn off and lock out power to the blower motor. Any dampers or valves should be periodically inspected to make sure all parts are still operable within their full range and there is no interference with any other damper or blower components. Any bearings or seals should be checked for their proper function. The manufacturers maintenance instructions should be followed.

F. Safety Equipment & Accessories:

It is the users responsibility to make sure that all safety guards required by the company, local, state and OSHA regulations are properly attached and fully functional at all times. If any guards become defective or non-functional at any time, **the power to the blower MUST be turned off and locked out** until complete repairs and/or replacements have been made, installed and inspected by authorized personnel.

Any accessories used in conjunction with the blower should also be inspected to make sure they are functioning within their intended limits and design specifications. The manufacturers maintenance manuals should be referred to for correct maintenance procedures. These accessories include, but are not limited to, the following:

Shaft seals, inspection doors, vibration isolators or vibration bases, air flow or pressure measuring equipment, hoods, controls, special coatings, silencers, expansion joints, valves, flexible connectors and filters.

VI. ORDERING REPLACEMENT PARTS:

Under normal conditions, you should not need any spare or replacement parts for at least 24 months after shipment from Cincinnati Fan. That does not include any wear due to abrasion, corrosion, excessive temperatures, abuse, misuse, accident or any severe conditions the fan was not designed for.

NOTICE:

1. **If this blower is vital to any process that could cost you lost revenue, we strongly recommend that you keep a replacement blower wheel and motor at your location.**

2. **If this blower is vital for the safety of any people and/or animals, we strongly recommend that you keep a complete blower/motor assembly, as originally ordered, at your location.**

To order any parts or complete units, contact us for the name of our sales office for your area. Or you can find them on our website at: **www.cincinnatifan.com**

WE MUST HAVE THE BLOWER SERIAL NUMBER FROM THE BLOWER NAME PLATE TO IDENTIFY PARTS CORRECTLY.

VII. TROUBLESHOOTING

⚠ DANGER

Troubleshooting should only be performed by trained personnel. Any potential electrical problems should only be checked by a licensed electrician. All safety rules, regulations and procedures MUST be followed. Failure to follow proper procedures can cause property damage, severe bodily injury and death.

Potential problems and causes listed below are in no order of importance or priority. The causes are only a list of the most common items to check to correct a problem. If you find the cause of a problem, **DO NOT** assume it is the **ONLY** cause of that problem. Different problems can have the same causes.

PROBLEM	CAUSE
Excessive Vibration	1. Loose mounting bolts, wheel set screws, taper-lock hubs. 2. Worn or corroded blower wheel. 3. Accumulation of foreign material on blower wheel. 4. Bent motor shaft. 5. Worn motor bearings. 6. Motor out of balance. 7. Inadequate structural support. 8. Support structure not sufficiently cross braced. 9. Weak or resonant foundation. 10. Foundation not flat and level.
Airflow (CFM) Too Low	1. Blower wheel turning in wrong direction (**rotation**). 2. Actual system static pressure (**SP**) is higher than expected. 3. Motor speed (**RPM**) too low. 4. Dampers or valves not adjusted properly. 5. Leaks or obstructions in duct work. 6. Filters dirty. 7. Inlet and/or discharge guards are clogged. 8. Duct elbow too close to blower inlet and/or discharge. 9. Improperly designed duct work 10. Blower wheel not properly located relative to the inlet bell (**LM** Model only).
Airflow (CFM) Too High	1. Actual system static pressure (**SP**) is lower than expected. 2. Motor speed (**RPM**) too high. 3. Filter not in place. 4. Dampers or valves not adjusted properly.

PROBLEM	CAUSE
Motor Overheating	**NOTE: A normal motor will operate at 174°F. See B-8 on page 6.** 1. Actual system static pressure **(SP)** is lower than expected. 2. Voltage supplied to motor is too high or too low. 3. Motor speed (**RPM**) too high or defective motor. 4. Air density higher than expected. 5. Motor wired incorrectly or loose wiring connections. 6. Cooling fan cover on back of motor is clogged. (Fan cooled motors only.)
Excessive Noise	1. Wheel rubbing inside of housing. 2. Worn or corroded blower wheel. 3. Accumulation of foreign material on blower wheel. 4. Loose mounting bolts, wheel set screws, or taper-lock hubs. 5. Bent motor shaft. 6. Worn motor bearings. 7. Motor out of balance. 8. Motor bearings need lubrication. 9. Vibration originating elsewhere in system. 10. System resonance or pulsation. 11. Inadequate or faulty design of blower support structure. 12. Blower operating near "stall" condition due to incorrect system design or installation.
Fan Doesn't Operate	1. Motor wired incorrectly. 2. Incorrect voltage supply. 3. Defective fuses or circuit breakers. 4. Power turned off elsewhere. 5. Motor wired incorrectly or loose wiring connections. 6. Defective motor.

VIII. LONG TERM STORAGE INSTRUCTIONS: (Storage exceeding 30 days after receipt of equipment)

NOTE: Failure to adhere to these instructions voids all warranties in their entirety.

1. Storage site selection:
   a. Level, well-drained, firm surface, in clean, dry and warm location. Minimum temperature of 50°F (10°C).
   b. Isolated from possibility of physical damage from construction vehicles, erection equipment, etc.
   c. Accessible for periodical inspection and maintenance.
2. The blower should be supported under each corner of its base to allow it to "breath". Supports (2 x 4's, timbers, or railroad ties) should be placed diagonally under each corner.
3. If the equipment is to be stored for more than three (3) months, the entire blower assembly must be loosely covered with plastic, **but not tightly wrapped**.
4. Storage Maintenance:

   A periodic inspection and maintenance log, by date and action taken, must be developed and maintained for each blower. See example below. Each item must be checked monthly.

EXAMPLE:

Storage / Maintenance Schedule Log

ITEM	ACTION	DATES CHECKED
1	Re-inspect units to insure any protective devices used are functioning properly. Check for scratches in the finish which will allow corrosion or rust to form.	
2	Rotate wheel a minimum of 10 full revolutions to keep the motor bearing grease from separating and drying out. ***This is a critical step.***	

Long Term Storage instructions continued on page 13.

5. General Motor Procedure:

   If the motor is not put into service immediately, the motor must be stored in a clean, dry, warm location. Minimum temperature of 50°F. (10°C,). Several precautionary steps must be performed to avoid motor damage during storage.

   a. Use a “Megger” each month to ensure that integrity of the winding insulation has been maintained. Record the Megger readings. Immediately investigate any significant drop in insulation resistance.
   b. **DO NOT** lubricate the motor bearings during storage. Motor bearings are packed with grease at the factory.
   c. If the storage location is damp or humid, the motor windings **must** be protected from moisture. This can be done by applying power to the motor’s space heaters, (IF AVAILABLE) while the motor is in storage. If the motor does not have space heaters, storing it in a damp or humid location will, very quickly, cause internal corrosion and motor failure which is not warranted.

   ***NOTE*:**
   For specific storage instructions, for the <u>actual</u> motor and any accessory parts that were supplied, refer to the manufacturer’s instructions.

IX. LIMITED WARRANTY:

Cincinnati Fan & Ventilator Company (Seller) warrants products of its own manufacture, against defects of material and workmanship under normal use and service for a period of eighteen (18) months from date of shipment or twelve (12) months from date of installation, whichever occurs first. This warranty does not apply to any of Seller's products or any part thereof which has been subject to extraordinary wear and tear, improper installation, accident, abuse, misuse, overloading, negligence or alteration. This warranty does not cover systems or materials not of Seller's manufacture. On products furnished by Seller, but manufactured by others, such as motors, Seller extends the same warranty as Seller received from the manufacturer thereof. Expenses incurred by Purchaser's in repairing or replacing any defective product will not be allowed except where authorized in writing and signed by an officer of the Seller.

The obligation of the Seller under this warranty shall be limited to repairing or replacing F.O.B. the Seller's plant, or allowing credit at Seller's option. **THIS WARRANTY IS EXPRESSLY IN LIEU OF ALL OTHER WARRANTIES EITHER EXPRESSED OR IMPLIED INCLUDING THE WARRANTIES OF MERCHANTABILITY AND FITNESS FOR A PARTICULAR PURPOSE AND OF ALL OTHER OBLIGATIONS AND LIABILITIES OF THE SELLER. THE PURCHASER ACKNOWLEDGES THAT NO OTHER REPRESENTATIONS WERE MADE TO PURCHASER OR RELIED UPON BY PURCHASER WITH RESPECT TO THE QUALITY OR FUNCTION OF THE PRODUCTS HEREIN SOLD.**

Removal of the Sellers nameplate or any generic fan nameplate containing the fan serial number voids all warranties, either written or implied. Failure to complete and document all the pre-startup and post startup checks and perform the suggested routine maintenance checks voids all warranties, either written or implied.

LIMITATION OF LIABILITY:

Notice of any claim, including a claim for defect in material or workmanship, must be given to Seller in writing within 30 days after receipt of the equipment or other products. Seller reserves the right to inspect any alleged defect at Purchaser's facility before any claim can be allowed and before adjustment, credit, allowance replacement or return will be authorized. See **RETURNS** below. Seller's liability with respect to such defects will be limited to the replacement, free of charge, of parts returned at Purchaser's expense F.O.B. Seller's plant and found to be defective by the Seller.

IN NO EVENT WILL SELLER BE LIABLE FOR SPECIAL, INDIRECT, INCIDENTAL OR CONSEQUENTIAL DAMAGES, WHETHER IN CONTACT, TORT, NEGLIGENCE, STRICT LIABILITY OR OTHERWISE, INCLUDING WITHOUT LIMITATION DAMAGES FOR INJURY TO PERSONS OR PROPERTY, LOST PROFITS OR REVENUE, LOST SALES OR LOSS OF USE OF ANY PRODUCT SOLD HEREUNDER. PURCHASER'S SOLE AND EXCLUSIVE REMEDY AGAINST SELLER WILL BE THE REPLACEMENT OF DEFECTIVE PARTS AS PROVIDED HEREIN OR REFUND OF THE PURCHASE PRICE FOR DEFECTIVE PRODUCTS, AT SELLER'S SOLE OPTION. SELLER'S LIABILITY ON ANY CLAIM, WHETHER IN CONTRACT, TORT, NEGLIGENCE, STRICT LIABILITY OR OTHERWISE, FOR ANY LOSS OR DAMAGE ARISING OUT OF OR IN CONNECTION WITH PURCHASER'S ORDER OR THE PRODUCTS OR EQUIPMENT PURCHASED HEREUNDER, SHALL IN NO CASE EXCEED THE PURCHASE PRICE OF THE EQUIPMENT GIVING RISE TO THE CLAIM.

RESPONSIBILITY:

It is the understanding of the Seller that Purchaser and/or User will use this equipment in conjunction with additional equipment or accessories to comply with all Federal, State and local regulations. The Seller assumes no responsibility for the Purchaser's or Users compliance with any Federal, State and local regulations.

RETURNS:

Cincinnati Fan & Ventilator Company assumes no responsibility for any material returned to our plant without our permission. An **RMA** (Return Material Authorization) number must be obtained and clearly shown on the outside of the carton or crate and on a packing slip. Any items returned must be shipped freight prepaid. Failure to comply will result in refusal of the shipment at our receiving department.

DISCLAIMER

This manual, and all its content herein, is based on all applicable known material at the time this manual was created. **Any parts of this manual are subject to change at any time and without notice.**

If any statements, diagrams and/or instructions contained herein, **for components not manufactured by the Seller,** conflict with instructions in the manufacturer's manual (i.e.: motors, dampers, etc.), the instructions in the manufacturer's manual, for that component take precedent.

Should you want the latest version of this manual, please contact us or our sales office for your area. Or, you can print a current version by going to our website at: **www.cincinnatifan.com**

cincinnati fan

7697 Snider Road, Mason, OH 45040-9135
Phone: (513) 573-0600 Fax: (513) 573-0640
E-Mail: sales@cincinnatifan.com

X. PARTS DRAWING:

PLEASE NOTE

Cincinnati Fan manufactures many models and arrangements with special variations. For that reason, the maintenance manuals contained on our website do not include a parts drawing nor the completed blower or fan specifications on page 1. For the parts drawing of all the standard components and specifications for the specific blower or fan that you have, please contact our local Cincinnati Fan sales office for your area.

You will need to give them the serial number shown on the blower or fan nameplate so they can supply you the correct information.

Click on ***"Contact a Sales Rep"*** on our website for the name and contact information for our local sales office for your area. **www.cincinnatifan.com**

Innovations in Water Monitoring

Operator's Manual

RDO® PRO-X Process Optical Dissolved Oxygen Probe

DO-501 - Transmitter, Dissolved Oxygen, OpticalRDO Pro-x (10m cable)



Information subject to change without notice. In-Situ, In-Situ logo, Baro Merge, BaroTROLL, HERMIT, HydroVu™, iSitu, Pocket-Situ, RDO, RuggedCable, RuggedReader, SmarTROLL™, TROLL, and Win-Situ are trademarks or registered trademarks of In-Situ Inc.© 2015. All rights reserved.

0088692 Rev 04 | 07/2015

Copyright © 2008-2015 by In-Situ All rights reserved.

This document contains proprietary information which is protected by copyright. No part of this document may be photocopied, reproduced, or translated to another language without the prior written consent of In-Situ

In-Situ makes no warranty of any kind with regard to this material, including, but not limited to, its fitness for a particular application. In-Situ will not be liable for errors contained herein or for incidental or consequential damages in connection with the furnishing, performance, or use of this material.

In no event shall In-Situ Inc. be liable for any claim for direct, incidental, or consequential damages arising out of, or in connection with, the sale, manufacture, delivery, or use of any product.

In-Situ and the In-Situ logo, Win-Situ, TROLL, Baro Merge, BaroTROLL, HERMIT, iSitu, Pocket-Situ, RDO, RuggedCable, RuggedReader, TROLL, and Win-Situ are trademarks or registered trademarks of In-Situ Inc. Microsoft and Windows are registered trademarks of Microsoft Corporation. Pentium is a registered trademark of Intel. Tefzel and Delrin are registered trademarks of E. I. DuPont de Nemours and Company. Viton is a registered trademark of DuPont Dow Elastomers. Kellems is a registered trademark of Hubbell Inc. Alconox is a registered trademark of Alconox Company. Lime-A-Way is a registered trademark of Reckitt Benckiser. iPod and iPhone are trademarks of of Apple Inc., registered in the U.S. and other countries. The Bluetooth word mark and logos are registered trademarks owned by the Bluetooth SIG, Inc. and any use of such marks by In-Situ Inc. is under license. NIST is a registered trademark of the National Institute of Standards and Technology, U.S.A. Other brand names and trademarks are property of their respective owners.





The presence of the Waste Electrical and Electronic Equipment (WEEE) marking on the product indicates that the device is not to be disposed via the municipal waste collection system of any member state of the European Union.

For products under the requirement of WEEE directive, please contact your distributor for the proper decontamination information and take back program, which will facilitate the proper collection, treatment, recovery, recycling, and safe disposal of the device.

Table of Contents

1 Optical RDO PRO-X Dissolved Oxygen Probe Specifications 5
2 Introduction 6
System Description 6
Serial Numbers 7
Unpack the Probe 7
3 Calibrate the RDO PRO-X Probe 9
1-Point Calibration 9
Water-Saturated Air 9
2-Point Calibration 10
100% and 0% Saturation 10
4 Probe Deployment 11
5 Care and Maintenance 12
Clean the RDO-X Sensor Cap 12
Clean the Optical Window 12
Clean the Probe 12
RDO-X Sensor Cap Storage 12
Replace the RDO-X Sensor Cap 12
Maintain Desiccant 13
6 Controller Requirements and Connections 14
Wiring Overview 14
Analog (4-20 mA) 3-wire 15
SDI-12 (3-wire) 16
Modbus Master with Built-in RS485 17
Modbus Master with Built-in RS232 (Converter Required) 18
Converter 19
Power Connections 19
Communications 19
7 Modbus Registers 20
Common Registers 20
Sensor Status Registers 20
Device Specific Register 0042 Data Quality ID 20
Device Specific Registers 21
8 Dissolved Oxygen Equations 22
Dissolved Oxygen Concentration 22
Dissolved Oxygen, % Saturation 23
9 Calibration Registers 24

Live Salinity Value 24
Default Salinity Value 24
Live Barometric Pressure 24
Default Barometric Pressure 24
100% Saturation Calibration Values 24
0% Saturation Calibration Values 25
Calibration Slope and Offset 25
Entering Calibration Registers 25
Calibration Calculations 26
10 Service 27
Sensor Health Table 27
11 Appendix A - Communication Device 29
Install and Open the Software 29
Connect the Probe to the Communication Device 29
12 Declaration of Similarity 30

Optical RDO PRO-X Dissolved Oxygen Probe Specifications

Optical RDO PRO-X Dissolved Oxygen Probe	
Sensor Type	Optical (luminescent) dissolved oxygen sensor
RDO PRO-X Probe	Range: 0 to 50 mg/L concentration
	Accuracy: ±0.1 mg/L, 0 to 8 mg/L ±0.2 mg/L, 8 to 20 mg/L ±10% of reading, 20 to 50 mg/L
	Resolution: 0.01 mg/L
	Response time: T90 < 45 sec; T95 < 60 sec @ 25°C
	Storage conditions: -5° to 60° C (23° to 140° F)
RDO-X Sensor Cap	Usage life: 2 years typical
	Storage conditions: 1° to 60° C (33° to 140° F), in factory container
Temperature sensor	Range: 0° to 50° C (32° to 122° F)
	Accuracy: ±0.1° C typical
	Resolution: 0.01° C
Transmitter/local display	Optional, or use with Con TROLL PRO System
Communications options	Modbus/RS485, 4-20 mA, SDI-12
Max. power consumption	50 mA at 12 VDC
Measure current	6 mA typical at 24 VDC
Idle current (no measurement or communication)	160 µA typical at 24 VDC
Maximum cable length	Up to 1,219 m (4,000 ft) (for Modbus and 4-20 mA) or up to 60.96 (200 ft) for SDI-12
Cable options	10 m fixed stripped-and-tinned; Twist-lock connector with user-selectable cable length
Internal mounting thread	1¼ - 11 ½ NPT
IP rating	IP-67 with cap off, IP-68 with cap installed
Compliance	Heavy industrial, IEC 61000-6-2:2005
Salinity compensation	Fixed or real-time capable (using controller)
Barometric pressure	Fixed or real-time capable (using controller)
Maximum pressure	150 psi from 0 to 50° C; 300 psi @ 25° C
Warranty	Probe: 3 years from date of shipment RDO-X Sensor Cap: 2 years in typical applications
Methods	Standard Methods 4500-O; In-Situ Methods 1002-8-2009,1003-8-2009, 1004-8-2009 (EPA approved)

Introduction

The RDO PRO-X Probe is a rugged, reliable instrument designed to deliver accurate dissolved oxygen (DO) data across a wide measurement range and to reduce maintenance costs. The probe features the latest optical technology for DO measurement.

System Description

The RDO PRO-X system consists of the following items.

- Black probe body with removable nose cone
- Optical RDO-X Sensor Cap
- Titanium thermistor

RuggedCable System

- 10-m standard length with stripped-and-tinned ends
- Customized lengths with titanium twist-lock connectors



1	Cable end, stripped-and-tinned
2	Nose cone
3	RDO-X Sensor Cap
4	Thermistor



1	Probe
2	Cable end, twist-lock connector and RuggedCable System

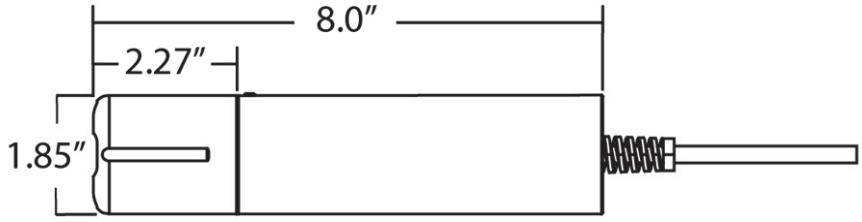

Serial Numbers

The probe serial number is engraved on the side of the unit. The cap serial number is programmed on the memory chip inside the cap.

Unpack the Probe

1. Remove the probe from the box and other packaging materials.
2. Unscrew the nose cone from the probe and remove the red protective dust cap from the sensor. Save the dust cap for later use.



1	Dust cap
2	Nose cone

3. Remove the RDO cap from the storage sleeve.



4. Align the arrow on the cap with the index mark on the probe and firmly press the cap onto the probe, without twisting, until it seals over the probe body.



1	Alignment arrow on cap
2	Cap installed over lens
3	Nose cone

✔ Do not allow moisture or atmospheric humidity inside the cap. Keep the cap in its sealed package until you are ready to install it. Install promptly. Ensure that O-ring grooves are dry and that the O-ring is not rolled or pinched inside the cap.
The typical cap lifetime is two years after the first reading has been taken.

5. Reattach the nose cone.

Calibrate the RDO PRO-X Probe

Calibrate the sensor with the Comm Kit Software and the RDO PRO Communication Device, or calibrate the sensor directly with your controller.

1-Point Calibration

The optical Rugged Dissolved Oxygen sensor is very stable. The factory calibration should produce readings within 3% accuracy. If you require readings with greater accuracy we recommend that you perform a 1-point, 100% water-saturated air calibration as described below.

Water-Saturated Air

1. Remove the storage cap from the top of the calibration chamber and replace it with the vented calibration cap.



1	Storage cap
2	Vented calibration cap

Figure 6.1 Storage cap and vented calibration cap shown together

2. Place the sponge wafer in the bottom of the calibration chamber and saturate with approximately 10 mL water.
3. Gently dry the instrument and sensing material with a paper towel, making sure there is no water or debris on the instrument or on the sensing surface.
4. Place the instrument into the calibration chamber about 2.5 cm (1 in.) above the water-saturated sponge.



Figure 6.2 Calibration chamber with water-saturated sponge

5. Allow 5 to 10 minutes for temperature stabilization prior to starting the calibration procedure. Do not leave the instrument in the calibration chamber for more than 30

minutes. This can allow condensation to form on the sensing material, which will produce false low readings after calibration. If condensation does occur, remove the instrument, dry the sensing material, place the instrument in the chamber, and calibrate.

2-Point Calibration

100% and 0% Saturation

We recommend that you perform the 0 % oxygen calibration only if you intend to measure dissolved oxygen at a concentration of less than 4 mg/L.

1. Set up the calibration procedure as previously described, and perform a water-saturated air calibration.
2. Remove the water-saturated sponge from the calibration chamber and fill the chamber to the fill line with approximately 60 mL of fresh sodium sulfite solution.



1	Fill line
2	Temperature sensor

2. Place the instrument into the solution. Leave at least 13 mm (0.5 in.) between the surface of the sensing material and the bottom of the chamber.
3. Ensure that the temperature sensor is completely submerged in the solution.
4. Allow at least 5 minutes for the temperature to stabilize prior to performing the calibration procedure.
5. Once calibration is complete, remove the sensor, and thoroughly rinse to remove all of the sodium sulfite.

Probe Deployment

The cable end of the RDO PRO-X Probe is internally threaded (1¼ - 11½ NPT) and can be attached to a male threaded pipe. When deployed, make sure that the nose cone and thermistor are completely submerged.

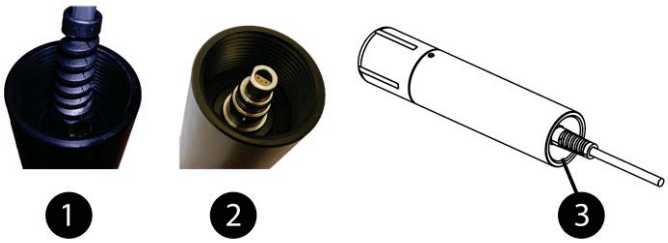

1	10 m cable attached
2	Twist-lock connector
3	1 1/4 NPT threading

Care and Maintenance

Clean the RDO-X Sensor Cap

1. The cap and nose cone must remain on the probe.
2. Rinse the sensor with clean water from a squirt bottle or spray bottle.
3. Gently wipe with a soft-bristled brush or soft cloth if biofouling is present. Use Alconox to remove grease.
4. If extensive fouling or mineral build-up is present, soak the cap end in vinegar for 15 minutes, then soak in deionized (DI) water for 15 minutes.

> ⚠ Do not use organic solvents—they will damage the sensing element. Do not remove the cap from the sensor prior to cleaning.

5. After cleaning, perform a 1- or 2-point user calibration or calibration check.

Clean the Optical Window

1. Clean the optical window only when you change the cap. See full instructions in the sensor cap replacement kit.
2. Remove the cap and gently wipe the lens with the supplied lens cloth.

> ⚠ Do not wet the lens area with water or any solution. Use only the supplied lens cloth for cleaning. Do not use any other cloth or material.

Clean the Probe

With the RDO cap installed on probe, gently scrub the probe with a soft-bristled brush or nylon dish scrubber. Use Alconox to remove grease or other matter. Soak in vinegar and DI water to remove mineral deposits or extensive fouling.

RDO-X Sensor Cap Storage

Prior to installation–Store in factory supplied container.

Installed–Store in the calibration chamber with the storage cap attached and a few drops of clean water.

Replace the RDO-X Sensor Cap

The RDO cap has a 2-year typical life after the sensor takes its first reading. Replacement caps are available from In-Situ Inc. or your authorized In-Situ distributor.

1. Remove the probe nose cone.
2. Use a lint-free cloth to remove any moisture from the probe.

3. Pull the used RDO cap off of the sensor, without twisting.
4. Remove the existing O-rings from the sensor.

> ⚠ Ensure that there is no moisture in the O-ring grooves. Do not touch or clean the lens with anything other than the supplied lens wipe.

5. Use your finger to apply a very light layer of silicone-based lubricant around the O-ring grooves.
6. Place the O-rings on the sensor. Apply another thin layer of lubricant to the O-rings and grooves.

> ✔ Note: Do not transfer grease to the lens or sensor pins.

7. Clean the sensor lens with the wipe provided in the kit and allow it to thoroughly dry. Inspect for scratches or dirt.
8. Remove the new cap from its sealed packaging and attach it to the sensor, being careful to press firmly, without twisting, until it seals over the lens. Make sure that the O-rings are not pinched or rolled between the cap and sensor.
9. Replace the nose cone.
10. Perform a 1- or 2-point calibration.

Maintain Desiccant

Desiccant installed in a controller or transceiver protects probe electronics from condensation. A desiccant pack changes color from blue to pink as it becomes saturated with moisture.

> ⚠ It is extremely important to use the proper size desiccant for your deployment and to change desiccant often. Desiccant should be changed before the entire pack has turned pink, and you should use enough to effectively keep cables and probes dry until your next scheduled maintenance. Desiccant lifespan is dependent on site conditions.

Controller Requirements and Connections

The RDO PRO-X Probe may be connected to a controller or logger for communication via the following options.

- Analog (4-20 mA) provides a configurable 4-20 mA current loop output
- SDI-12
- RS485 Modbus
- RS232 to Modbus

Wiring Overview

Refer to diagrams on the following pages. Trim and insulate unused wires. The shielded wire should be connected to a chassis ground or earth ground.

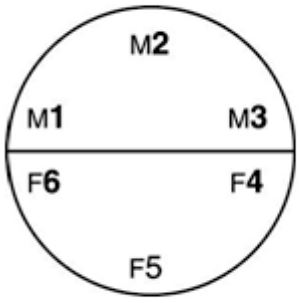

Signal	Color
Ground/Return	Black
External Power	Red
4-20 mA	Brown
RS485 (-)	Green
RS485 (+)	Blue
SDI-12	White

⚠ The inside of the controller must be kept free of moisture and humidity. Condensed moisture can migrate through the wiring and cause the probe to fail. Therefore, desiccant should be installed in the controller and be replaced on a regular basis.

Analog (4-20 mA) 3-wire

Signal	Color
Ground/Return	Black
External Power (12-36 VDC)	Red
4-20 mA	Brown

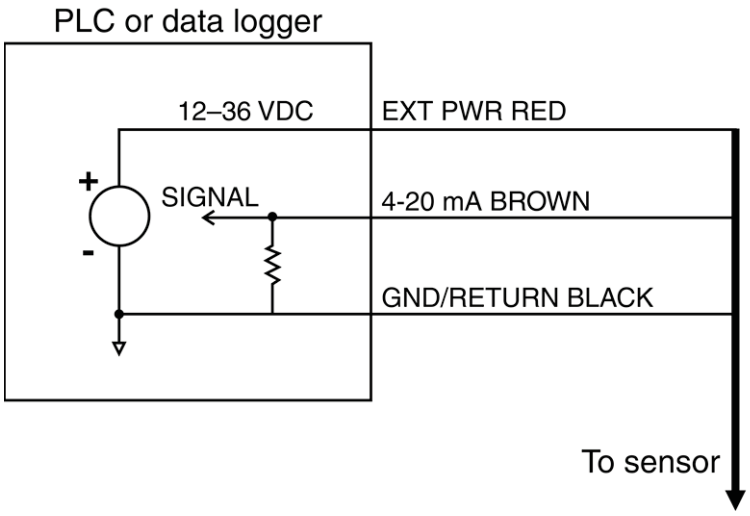

✔ Cable length must not exceed 1219 m (4000 ft.)
Analog signal must be enabled in Win-Situ 5 Software or the Comm Kit Software prior to use.

SDI-12 (3-wire)

Signal	Color
Ground/Return	Black
External Power (9.6-16 VDC)	Red
RS485 (-)	Green
RS485 (+)	Blue
SDI-12	White

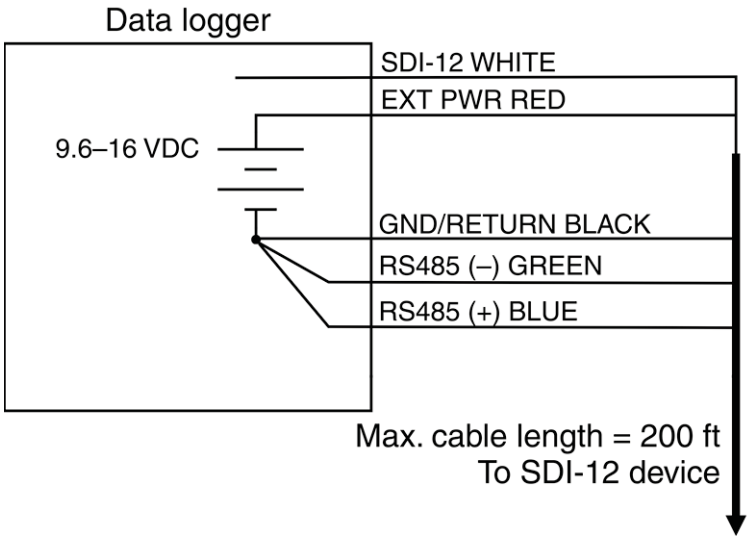

✔ Cable length must not exceed 60.96 m (200 ft.)

Modbus Master with Built-in RS485

Signal	Color
Ground/Return	Black
External Power (12-36 VDC)	Red
RS485 (-)	Green
RS485 (+)	Blue

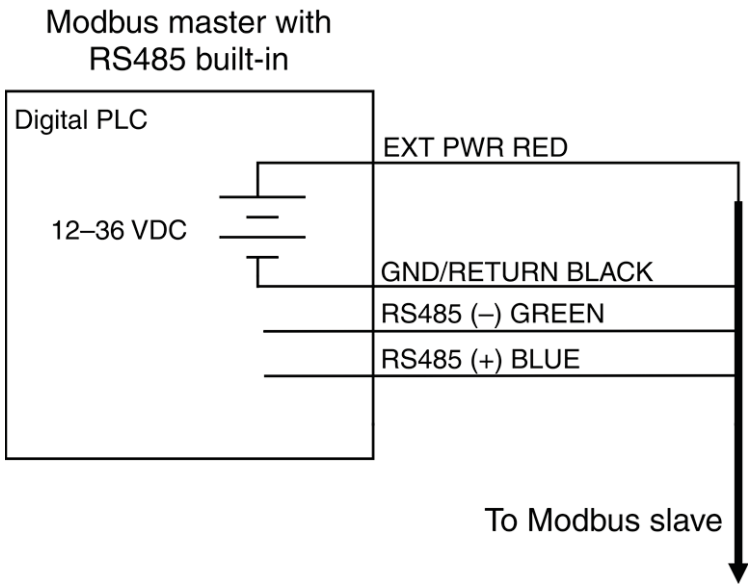

✔ Cable length must not exceed 1219 m (4000 ft.)

Modbus Master with Built-in RS232 (Converter Required)

Signal	Color
Ground/Return	Black
External Power (12 VDC, voltage limited by converter)	Red
RS485 (-)	Green
RS485 (+)	Blue

Modbus master with
RS232 built-in
(converter required)

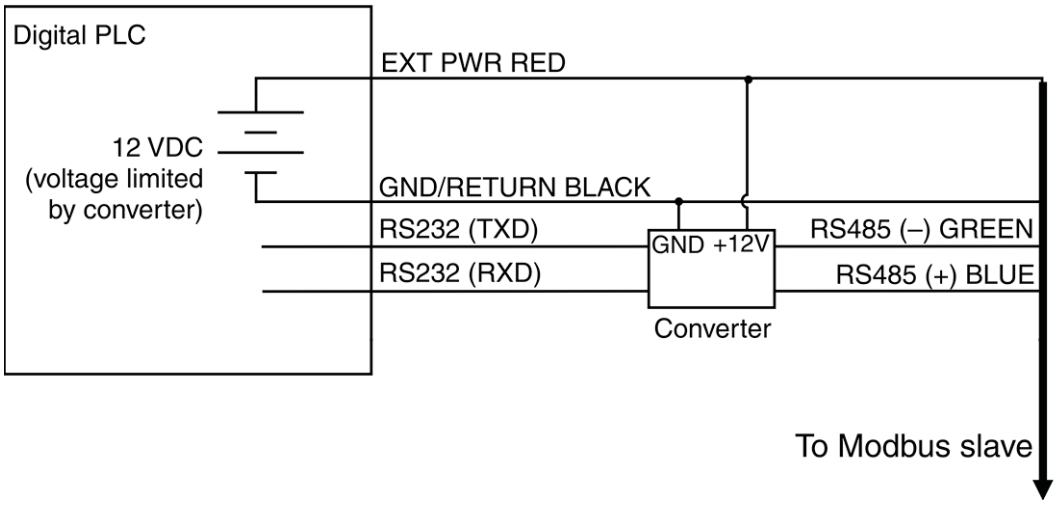

✔ Cable between converter and master must not exceed 60.96 m (20 ft.)
Cable between master and slave must not exceed 1219 m (4000 ft.)

Converter

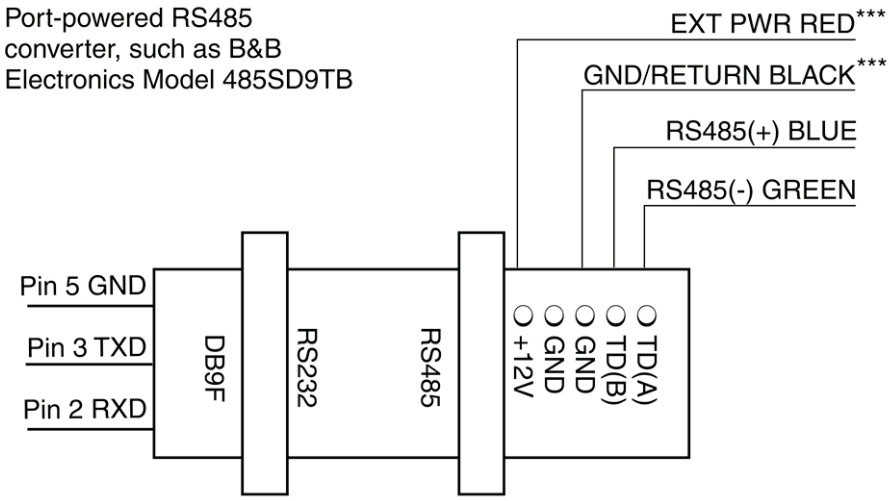

*** Required if port power is not available

Power Connections

The red wire provides power for all system modes. Analog output is disabled by default. However, the 4-20 mA current loop output can be continuous in Modbus or SDI-12 mode as long as Modbus device register 9507 is set to 1.

Communications

The device automatically switches between Modbus and SDI-12 modes depending on which of the two interfaces has activity. Modbus and SDI-12 cannot be used at the same time–whichever one is currently in use will block communication on the other.

Modbus Registers

Common Registers

Register	Size	Mode & Access Level (R/W)	Data Type	Description
9001	1	R/W	ushort	Device ID = 31 for RDO PRO-X
9002	2	R/W	ulong	Device serial number
9004	3	R/W	time	Manufacture date

Sensor Status Registers

Register	Size	Mode & Access Level (R/W)	Data Type	Description
0005	3	R1	time	Cap start date/time 0 = no cap
0008	3	R1	time	Cap end of usable life date/time 0 = no cap

Device Specific Register 0042 Data Quality ID

Register 0042 is responsible for returning the various data quality IDs for the RDO sensor. For a list of the Data Quality IDs and definitions, see the Sensor Health Table in the Service and Troubleshooting section of this manual.

Device Specific Registers

Register	Size	Mode & Access Level (R/W)	Data Type	Description
Dissolved Oxygen Concentration				
0038	2	R1	float	Measured value, C_o
0040	1	R1	ushort	Parameter ID = 20
0041	1	R1/W2	ushort	Units ID 117 = mg/L (default) 118 = ug/L
0042	1	R1	ushort	Data quality ID (See the Sensor Health Table)
0043	2	R1/W3	float	Offline sentinel value (default = 0.0)
0045	1	R1	16 bits	Available units = 0x0030 (48)
Temperature				
0046	2	R1	float	Measured value
0048	1	R1	ushort	Parameter ID = 1
0049	1	R1/W2	ushort	Units ID 1= °C (default) 2= °F
0050	1	R1	ushort	Data quality ID
0051	2	R1/W3	float	Offline sentinel value (default = 0.0)
0053	1	R1	16 bits	Available units = 0x00030 (3)
Dissolved Oxygen % Saturation				
0054	2	R1	float	Measured value
0056	1	R1/W2	ushort	Parameter ID = 21
0057	1	R1/W2	ushort	Units ID 177 = percent saturation (default)
0058	1	R1	ushort	Data quality ID
0059	2	R1/W3	float	Offline sentinel value (default = 0.0)
0061	1	R1	16 bits	Available units = 0x0001 (1)
Oxygen Partial Pressure				
0062	2	R1	float	Measured value
0064	1	R1	ushort	Parameter ID = 2 (pressure)
0065	1	R1/W2	ushort	Units ID 26 = torr (default)
0066	1	R1	ushort	Data quality ID
0067	2	R1/W3	float	Offline sentinel value (default = 0.0)
0069	1	R1	16 bits	Available Units = 0x0200 (512)

Dissolved Oxygen Equations

Dissolved Oxygen Concentration

DO concentration is internally calculated in mg/L. Conversion to other units is as follows:

$\mu g/L = 1000 * mg/L$

Oxygen concentration C_o (mg/L) is calculated as:

$$C_o = 31.9988 \times 1E6 \times (\rho P_o / k_o M)\,(1 - \Theta_o) \times S_c$$

Where:

P_o is the partial pressure of O_2 in atmospheres.

$$P_{torr} = 759.999876 \times P_{atm}$$

S_c is the salinity correction:

$$\ln S_c = S(B_0 + B_1 T_s + B_2 T_s^2 + B_3 T_s^3) + C_0 S^2$$

$B_0 = -6.246090 \times 10^{-3}$

$B_1 = -7.423444 \times 10^{-3}$

$B_2 = -1.048635 \times 10^{-2}$

$B_3 = -7.987907 \times 10^{-3}$

$C_0 = -4.679983 \times 10^{-7}$

T_s is the scaled temperature:

$$T_s = \ln[(298.15 - t) / (273.15 + t)]$$

t is temperature in degrees C.

S is the salinity in PSU.

k_o is Henry's constant:

$$\ln k_o = 3.71814 + (5596.17/T) - (1{,}049{,}668/T^2)$$

T is temperature in Kelvin.

Θ_o is the negative of the second pressure coefficient:

$$\Theta_o = 0.000975 - (1.426 \times 10^{-5} t) + (6.436 \times 10^{-8} t^2)$$

t is temperature in degrees C.

ρ is the density of water in g/cm^3:

$$\ln \rho = -0.589581 + (326.785/T) - (45{,}284.1/T^2)$$

T is the temperature in Kelvin.

Molar mass of water: M = 18.0152 g/mole

References:

Benson and Krause. Jr.. 1980. The concentration and isotopic fractionation of gases dissolved in freshwater in equilibrium with the atmosphere. *Limnol, Oceanogr*, 25(4), 662-671.

Gordon and Garcia. 1992. Oxygen Solubility in Seawater: Better Fitting Equations. *Limnol, Oceaongr*, 37(6), 1307-1312.

Dissolved Oxygen, % Saturation

$O_2\%Sat = O_2Reading / O_2100\%Sat$

Where:

O_2 reading is the mg/L reading from the RDO Sensor.

O_2 100% Sat is the theoretical saturation value in mg/L and is derived as:

$$O_2100\%Sat = 31.9988 \times 10^6 \times \frac{\rho\,[0.20946 \times (P - P_{wv})] \times (1 - \Theta_o P) \times S_c}{k_o M}$$

Where:

ρ is the density of water in g/cm^3:

$$\ln \rho = -0.589581 + (326.785/T) - (45{,}284.1/T^2)$$

T is the temperature in Kelvin.

P is the atmospheric pressure in atm.

P_{wv} is the partial pressure of water vapor at saturation in atm:

$$\ln P_{wv} = 11.8571 - (3{,}840.70/T) - (216{,}961/T^2)$$

k_o is Henry's constant:

$$\ln k_o = 3.71814 + (5596.17/T) - (1{,}049{,}668/T^2)$$

T is the temperature in Kelvin.

Molar mass of water: M = 18.0152 g/mole

Θ_o is the negative of the second pressure coefficient:

$$\Theta_o = 0.000975 - (1.426 \times 10^{-5} t) + (6.436 \times 10^{-8} t^2)$$

t is temperature in degrees C.

S_c is the salinity correction:

$$\ln S_c = S(B_0 + B_1 T_s + B_2 T_s^2 + B_3 T_s^3) + C_0 S^2$$

$$B_0 = -6.246090 \times 10^{-3}$$

$$B_1 = -7.423444 \times 10^{-3}$$

$$B_2 = -1.048635 \times 10^{-2}$$

$$B_3 = -7.987907 \times 10^{-3}$$

$$C_0 = -4.679983 \times 10^{-7}$$

T_s is the scaled temperature:

$$T_s = \ln [(298.15 - t) / (273.15 + t)]$$

Where t is temperature in °C

S is the salinity in PSU

References:

Benson and Krause. Jr.. 1980. The concentration and isotopic fractionation of gases dissolved in freshwater in equilibrium with the atmosphere. *Limnol, Oceanogr*, 25(4), 662-671.

Calibration Registers

Register	Size	Mode & Access Level (R/W)	Data Type	Description
0118	2	R1/W3	float	Live salinity value (PSU)
0120	2	R1/W3	float	Default salinity value (PSU, default = 0.0)
0122	2	R1/W3	float	Live barometric pressure (mbar)
0124	2	R1/W3	float	Default barometric pressure (mbar, default = 1013.25)
0126	2	R1/W3	float	100% saturation calibration reading (mg/L)
0128	2	R1/W3	float	100% saturation temperature reading (°C)
0130	2	R1/W3	float	100% saturation salinity value (PSU)
0132	2	R1/W3	float	100% saturation barometric pressure (mbar)
0134	2	R1/W3	float	0% saturation calibration reading (mg/L)
0136	2	R1/W3	float	0% saturation temperature reading (°C)
0138	2	R1/W3	float	Calibration slope (default = 1.0)
0140	2	R1/W3	float	Calibration offset (default = 0.0)

Live Salinity Value

The live salinity value is used to correct the oxygen concentration value for salinity. Values must be written in Practical Salinity Units (PSU) in the range 0 to 42 PSU. This is not a measured parameter.

Default Salinity Value

The default salinity value is loaded into the live salinity value register when power is first applied to the probe. The default salinity value is used in calculations until a live salinity value is written. This is not a measured parameter.

Live Barometric Pressure

The live barometric pressure is used in the calculation of percent saturation and to determine the theoretical saturation point during calibration. Values must be written in millibars in the range 506.625 to 1114.675 mbar. This is not a measured parameter.

Default Barometric Pressure

The default barometric pressure is loaded into the live barometric pressure register when power is applied to the probe. The default barometric pressure is used in calculations until a live barometric pressure is written. This is not a measured parameter.

100% Saturation Calibration Values

These values represent the sensor conditions while the probe is in a 100% saturation calibration environment. These are not measured values, they are written by the controller during the calibration process.

Writes to these registers are only accepted if the probe is in the calibration mode. The probe will return exception 0x85 (invalid device command sequence) if an attempt is made to write these registers when the calibration mode is off.

0% Saturation Calibration Values

These values represent the sensor conditions while the probe is in a 0% saturation calibration environment. These are not measured values, they are written by the controller during the calibration process.

Writes to these registers are only accepted if the probe is in the calibration mode. The probe will return exception 0x85 (invalid device command sequence) if an attempt is made to write these registers when the calibration mode is off.

Calibration Slope and Offset

These values represent the slope and offset that will be applied to the raw concentration reading from the sensor to generate the final values reported by the sensor parameters. These registers may be written independently of the normal internal calibration procedure.

Entering Calibration Registers

The sensor is calibrated using the following procedure.

1. Optional: Read the Sensor Data Cache Timeout register 9463 and store the value.
2. Write the Sensor Data Cache Timeout register 9463 to a value less than your intended sample rate and greater than 1000 milliseconds. This will ensure that you get new sensor readings during the stabilization process.
3. Optional: Read the temperature units register 0049 and saturation units register 0041 and store their values.
4. Write the temperature units register 0049 to its default value (1) and write the saturation units register 0041 to its default value (117).
5. Write the Calibration Mode On command (0xE000) to the sensor command register 9305.
6. Update the live salinity and barometric pressure registers if necessary.
7. Prompt the user to place the probe in a 100% saturation environment.
8. Read the oxygen concentration and temperature parameters. When these values have reached equilibrium, record them in their respective 100% saturation calibration registers. Write the current live salinity and barometric pressure readings to their respective calibration registers.
9. Place the sensor in a 0% saturation environment. When these registers have reached equilibrium, record them in their respective 0% saturation calibration registers. If a zero calibration is not to be performed, these registers can be set to zero or left at their previous values.

10. Write the Calibration Update command (0xE001) to the sensor command register. The sensor will calculate a new slope and offset, write the current time to the last user calibration time register, and set the next user calibration time register to zero (disabled). If the concentrations at 100% and 0% saturation are equal, the probe will return an exception response with code 0x97 (invalid calibration) and not attempt to compute a new slope and offset due to possible division by zero. If the slope does not calculate between 0.85 and 1.20 inclusive, or if the offset does not calculate between -0.2 and +0.2 inclusive, then the probe will return an exception response with code 0x97 (invalid calibration).The slope and offset will be available for read but will not be committed to flash.
11. Optional: Read the last user calibration time register, add the next calibration interval, and write the result to the next user calibration time register.
12. Write the Calibration Mode Off command (0xE002) to the sensor command register to place the sensor in normal operation. If the calibration mode is turned off without a calibration update command, or the calibration command returned an exception, the previous calibration shall be restored.
13. Optional: If you saved the temperature and saturation parameter units at the start of the process, write the original values back.
14. Optional: If you saved the Sensor Data Cache Timeout register 9463 at the start of the process, write the original value back.

Calibration Calculations

Calibrated oxygen reading:

$$O_{2RC} = c_o + c_1 \times O_{2RU}$$

Where:

$$c1 = (O_2100\%Sat)/(O_{2RUS} - O_{2RUZ})$$

$$c_o = -c_1 \times O_{2RUZ}$$

Where:

$O_2100\%Sat$ is the theoretical 100% saturation point

O_{2RUS} is the un-calibrated reading at 100% saturation

O_{2RUZ} is the un-calibrated reading at 0% saturation

References:

Standard Methods for the Examination of Water and Wastewater. 20th Ed. 2008. 4500-0 C. Azide Modification. American Public Health Association, USA.

Service

The RDO PRO-X Probe contains no user-serviceable parts. Do not attempt to open the probe case or service the unit yourself.

RDO-X Software Troubleshooting

✔ Sensor health diagnostics indicate when the RDO sensor has been damaged in the field. If the sensor has sustained moderate damage, the probe provides a DO value that includes a (DIS or Data Quality ID 5) warning. The same warning is included with readings taken after the sensor has reached its 24-month recommended lifespan.

However, if the sensor has been severely damaged, an error message is shown (ERR or Data Quality ID 3), a DO value is not provided and the sentinel value is shown. This prevents you from receiving an erroneous reading.

Sensor Health Table

The following error messages appear in the software and the data file when a sensor issue has been detected.

Abbreviation	Data Quality ID	Text	Description
None	0	None	Normal Data Quality
UC	1	User Cal Expired	Parameter measured without errors using an expired user calibration.
FC	2	Factory Cal Expired	Parameter measured without errors using an expired factory calibration.
ERR	3	Unknown Error	Parameter measured with error, sentinel value supplied.
WU	4	Sensor Warm-up	Sensor is warming up, sentinel value supplied.
DIS	5	Sensor Warning	Parameter measured but does not meet normal quality criteria. The sensor has sustained moderate damage, or the recommended lifespan has been reached.

Abbreviation	Data Quality ID	Text	Description
CAL	6	Sensor Calibrating	Sensor is calibrating, calibration value supplied.
OL	7	Sensor Missing	Sensor communication failed, sentinel value supplied. Make sure the sensor cap is installed and properly seated.

Appendix A - Communication Device

The Communication Device is an accessory product that can be used to calibrate and set up RDO probes.

Install and Open the Software

The Comm Kit Software must be installed on a computer before you connect to the probe.

Connect the Probe to the Communication Device

The Communication Device connects a stripped-and-tinned probe to a computer via USB connection.

1. Disconnect the instrument from the PLC.
2. The communication device includes an electrical connection diagram label. To attach the instrument to the communication device, depress a lever and insert the appropriate wire in the location specified by the diagram.
3. Attach the USB connector to a USB port on the computer. Follow the directions provided in the Communication Device Kit to set up the probe.

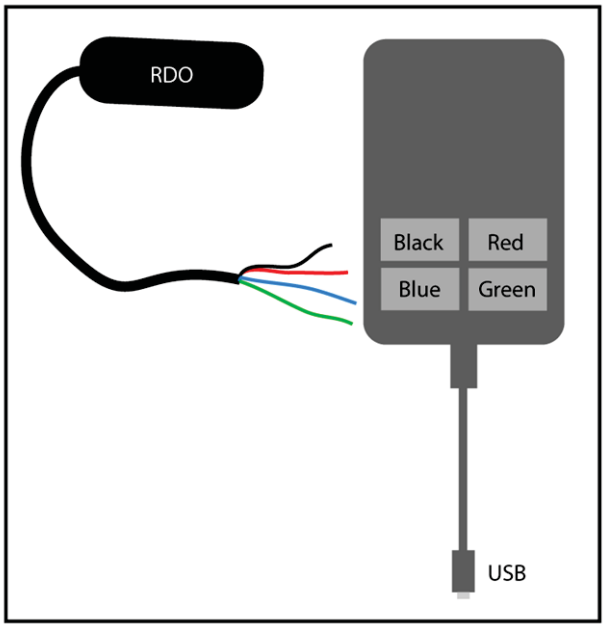

Declaration of Similarity

Equipment

Type of equipment: Measurement instrumentation
Product name: RDO PRO-X Optical Dissolved Oxygen Probe
Model: RDO PRO-X Dissolved Oxygen Probe

Manufacturer: In-Situ, Inc.
221 East Lincoln Avenue
Fort Collins, CO 80524
USA

Category Standards

- **Immunity**
  EN 61000-6-2, Electromagnetic Compatibility (EMC) – part 6-2: Generic standards – Immunity for industrial environments
- **Emissions**
  Class A requirements of CISPR 11: 2004, Specification for limits and methods of measurement of radio disturbance characteristics of industrial, scientific and medical (ISM) radio-frequency equipment

Supplementary Information:
The device complies with the requirements of the EU Directive 73/23/EEC, and the CE mark is affixed accordingly.

Summary

We confirm that the equipment referenced above, without reasonable doubt, will fulfill the requirements concerning electromagnetic compatibility according to the above mentioned standards harmonized with the 2004/108/EC for Electromagnetic Compatibility (EMC) Directive—part 6-2. The RDO PRO Optical Dissolved Oxygen Sensor was tested and found to be in compliance in the month of October 2008.

Date of Issue: October 7, 2013

Signature: 

Name: Ben Kimbell
Title: Vice President of Research and Development

Test Report reference: 3161946DEN-003

F-7961 - Fan, Building, 12", 1/4hp, 1750rpm, 120V, 1ph, TEAOCSA Approved, S12-E1

CANARM®

Standard Exhaust Fans

Instruction Manual

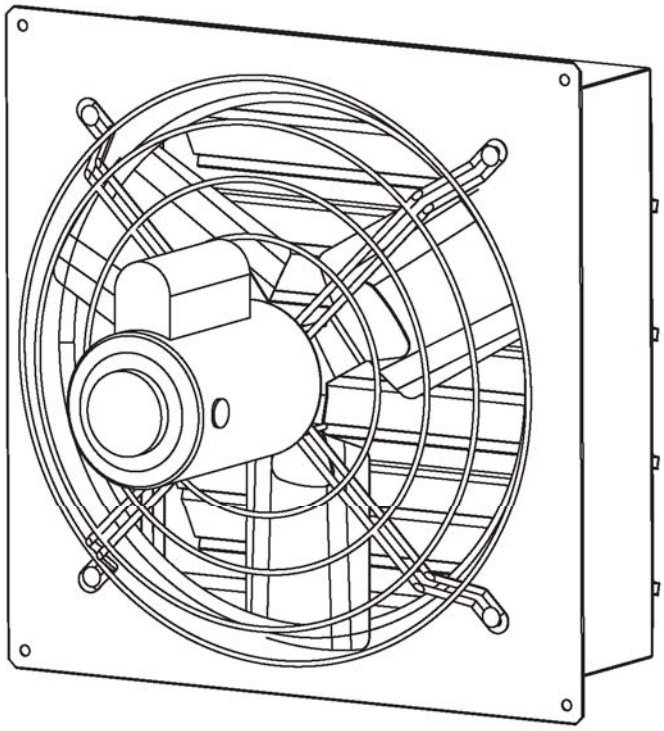

WARRANTY

CANARM Ltd. warrants every new fan to be free of defects in material and workmanship, to the extent that, within a period of one year from the date of purchase CANARM Ltd. shall either repair or replace at CANARM's option, any unit or part thereof, returned freight prepaid, and found to be defective.
This warranty does not include any labour or transportation costs incidental to the removal and reinstallation of the unit at the user's premises.
Components repaired or replaced are warranted through the remainder of the original warranty period only.
This warranty applies to the original purchaser-user only; it is null and void in case of alteration, accident, abuse, neglect, and operation not in accordance with instructions.

NOTICE: No warranty claims will be honored by CANARM Ltd. unless prior authorization is obtained.

Installation or Product problems? Do not return to store of purchase.
Contact Canarm Service at 1-800-265-1833 (CANADA) 1-800-267-4427 (U.S.A.)
1-800-567-2513 (EN FRANCAIS) Monday to Friday 8:00 - 5:00pm e.s.t.

CANARM®

Instruction Manual for Standard Exhaust Fans

Read Instructions Completely Before Installation & Save For Reference

Congratulations on the purchase of your quality built direct drive, wall exhaust ventilation fan. All of these models use totally enclosed ball bearing motors with thermal over load protection. Variable speed motors are high efficiency motors which save on electrical costs and can be run as a single speed motor. The motors are mounted on heavy gauge welded steel rod motor mounts that have a powder coated finish. Fans come fully assembled and 100% of fans are tested for proper operation before shipping.

Standard Fans:

These models have a rugged, welded steel box housing with a powder coated finish and aluminum or plastic exhaust louvers that are supported by long life nylon bushings. The louvers open automatically when the fan starts up and close when the fan stops.

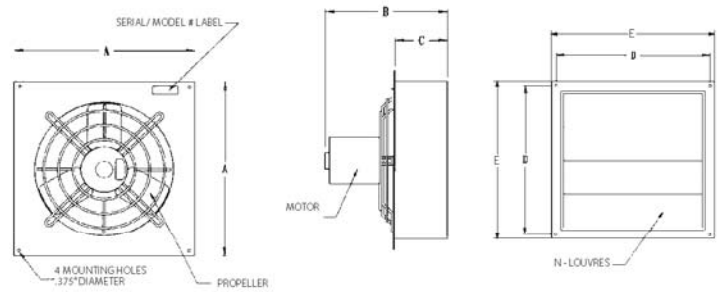

Fan Dimensions							
Fan Size	A	B	C	D	E	N	Framing
8"	13-1/4"	10"	4"	12"	10-3/4"	2	11x11
10"	15-1/4"	10"	4"	14"	12-3/4"	2	13x13
12"	17-1/4"	14"	6"	16"	14-3/4"	3	15x15
14"	19-1/4"	14"	6"	18"	16-3/4"	3	17x17
16"	21-1/4"	14"	6"	20"	18-3/4"	4	19x19
18"	23-1/4"	15"	6"	22"	20-3/4"	4	21x21
20"	25-1/4"	16"	6"	24"	22-3/4"	5	23x23
24"	29-1/4"	16"	6"	28"	26-3/4"	5	27x27
30"	35-1/4"	19"	6"	34"	32-3/4"	8	33x33
36"	41-1/4"	16"	6"	40"	38-3/4"	10	39x39

Explosion Proof Fans:

Explosion proof fans are equipped with explosion proof motors and aluminum blades so sparks cannot occur if a metal object obstructs the blade path. Explosion proof fans have the same quality welded steel box housing and heavy gauge welded guard as the standard fans. These fans should be used to ventilate hazardous areas. Locations are considered hazardous if the atmosphere contains or may contain gas, vapor, or dust in explosive quantities.

The motor ambient temperature is not to exceed +40ºC or -25ºC unless the motor nameplate specifically permits another value. Canarm explosion proof fans are approved for the hazardous classifications below only.

Class 1, Division 1 (Gases, Vapors)

~~Group A~~	Acetylene
~~Group B~~	Butadiene, ethylene oxide, hydrogen, Propylene oxide
Group C	Acetaldehyde, cyclopropane, diethlether, Ethylene, isoprene
Group D	Acetone, acrylonitrile, ammonia, benzene, Butane, ethylene dichloride, gasoline, hexane, methane, methanol, naphtha, propane, propylene styrene, toluene, vinyl, acetate, vinyl chloride, xylene

Class 2, Division 1 (Combustible Dusts)

~~Group E~~	Aluminum, magnesium and other metal dusts with similar characteristics
Group F	Carbon black, coke or coal dust
Group G	Flour, starch or graindust

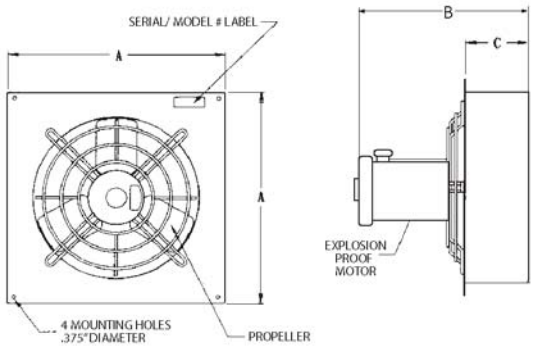

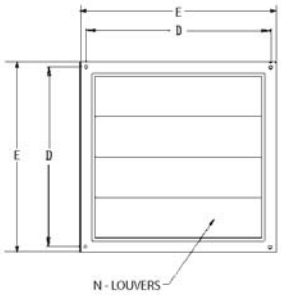

Fan Dimensions							
Fan Size	A	B	C	D	E	N	Framing
12"	17-1/4"	20-1/2"	6"	16"	14-3/4"	3	15x15
18"	23-1/4"	20-1/2"	6"	22"	20-3/4"	4	21x21
24"	29-1/4"	20-1/2"	6"	28"	26-3/4"	5	27x27

INSTALLATION

Installation is fast and simple. A sturdy framed wall opening should be prepared in advance to the size indicated for your fan in the charts above. With lag bolts for wooden frames or nut, bolt and lock washers for steel frames, secure the fan using the four mounting holes provided, one in each corner of the fan.

ELECTRICAL CONNECTIONS



WARNING: BE SURE POWER IS OFF AT THE ELECTRICAL PANEL BEFORE WIRING.

WARNING: ALL ELECTRICAL WORK SHOULD BE PERFORMED BY A QUALIFIED ELECTRICIAN.

These fans are supplied with single, two or variable speed motors. Single and two speed motors are 120V only. Variable speed motors are dual voltage. All dual voltage motors are pre-wired at 240V in our factory. Rewire motor as per motor nameplate if running fan at 120V. Please see the motor nameplate for wiring diagram. Make electrical connections in motor connection box as per the motor nameplate. Follow ***Chart #1*** for wire sizes. Two speed fans require a two speed control or 3 position toggle switch to change from high/ low/off. See wiring diagram with control for 2 speed wiring instructions.

CHART# 1

Table A Minimum Wire Sizes for Three-Phase Motors

Motor	25 to 50 Feet			100 Feet			150 to 200 Feet		
HP	200V	230V	460V	200V	230V	460V	200V	230V	460V
1/8	14(18)*	14(18)*	14(18)*	14(18)*	14(18)*	14(18)*	14(16)*	14(16)*	14(18)*
1/6	14(18)*	14(18)*	14(18)*	14(18)*	14(18)*	14(18)*	14	14(16)*	14(18)*
1/4	14(18)*	14(18)*	14(18)*	14(16)*	14(18)*	14(18)*	14	14	14(18)*
1/3	14(18)*	14(18)*	14(18)*	14(16)*	14(16)*	14(18)*	12	14	14(18)*
1/2	14(16)*	14(18)*	14(18)*	12	14(16)*	14(18)*	10	12	14(18)*
3/4	14(16)*	14(16)*	14(18)*	12	14	14(18)*	10	10	14(16)*
1	14	14(16)*	14(18)*	12	12	14(18)*	8	10	14(16)*
1-1/2	12	14	14(18)*	10	10	14(16)*	6	8	14
2	12	12	14(18)*	8	10	14(16)*	6	6	12
3	10	12	14(18)*	6	8	14	4	6	12

Table B Minimum Wire Sizes for Single-Phase Motors

Motor	25 Feet			100 Feet			150 to 200 Feet		
HP	200V	230V	460V	200V	230V	460V	200V	230V	460V
1/8	14(18)*	14(18)*	14	14(18)*	12	14(18)*	10	8	14
1/6	14(16)*	14(18)*	12	14(18)*	10	14(16)*	6	6	12
1/4	14	14(18)*	10	14(16)*	8	14	6	4	10
1/3	14	14(18)*	10	14(16)*	8	14	6	4	10
1/2	12	14(18)*	8	14	6	12	4	3	8
3/4	10	14(16)*	6	12	4	10	2	1	6
1	10	14(16)*	6	12	4	10	2	1	6
1-1/2	8	14	6	12	3	8	1	1/0	6
2	8	14	4	10	2	8	1/0	2/0	4
3	6	12	3	8	1/0	6	2/0	4/0	3

NOTE:
- NEC Article 310-5 - * Minimum conductor size for general wiring at 115-440VAC is number 14AWG.
- Above wire sizes based on approximate 5% voltage drop during starting; copper conductors; and 75ºC type THHW, THW, THWN, RH, RHW insulation etc. For aluminum wire, increase two wire size steps minimum. See NEC Article 310 for ampacities af aluminum conductors.
- Type S, SO, SJ, SJO, etc flexible cable wire sizes. See NEC Article 400 for ampacity.

OPERATION

WARNING: VARIABLE SPEED FANS SHOULD HAVE THE MINIMUM SPEED SET TO OPEN LOUVERS AT LEAST ONE INCH FOR PROPER MOTOR COOLING AND TO PREVENT MOTOR FAILURE.
All fans are direct drive. Fans with variable speed motors can be operated as an energy efficient single speed fan or in variable operation with the proper controller. As mentioned above two speed fans require a two speed control or 3 position toggle switch to change from high speed to low and off.



WARNING: GUARDING SHOULD BE USED IF FANS ARE MOUNTED LOWER THAN SEVEN FEET (2 METRES) OFF FLOOR OR GROUND LEVEL.

ACCESSORIES
Canarm provides a complete line of manual and thermostatic controls. Canarm also offers wall mount exhaust shutter kits, replacement shutter sets, and weather protection hoods.

MAINTENANCE
Motors are equipped with automatic overload protection and may restart without warning. Always disconnect from power before attempting service. Motor, blade and louvers should be kept clean of any buildup to prevent premature motor failure and to achieve proper performance. Automatic louvers should be kept operating freely. As with all mechanical equipment scheduled inspections should include checking that all hardware is secure and blade set screws are tight.

WARRANTY

CANARM Ltd. warrants every new fan to be free of defects in material and workmanship, to the extent that, within a period of one year from the date of purchase CANARM Ltd. shall either repair or replace at CANARM's option, any unit or part thereof, returned freight prepaid, and found to be defective.
This warranty does not include any labour or transportation costs incidental to the removal and reinstallation of the unit at the user's premises.
Components repaired or replaced are warranted through the remainder of the original warranty period only.
This warranty applies to the original purchaser-user only; it is null and void in case of alteration, accident, abuse, neglect, and operation not in accordance with instructions.

NOTICE: No warranty claims will be honored by CANARM Ltd. unless prior authorization is obtained.

CANARM®

CANARM LTD.
2157 PARKEDALE AVENUE
BROCKVILLE, ONTARIO K6V 5V6
TELEPHONE: (613) 342-5424
FAX: 1-800-263-4598
E-MAIL: agsales@canarm.ca

CANARM LTEE.
8500 RUE GRENACHE
ANJOU, QUEBEC H1J 2B1
TELEPHONE: (514) 353-2255
FAX: (514) 353-2522
E-MAIL: agsales@canarm.ca

CANARM®

Ventilateurs d'évacuation Standard

Manuel de l'usager

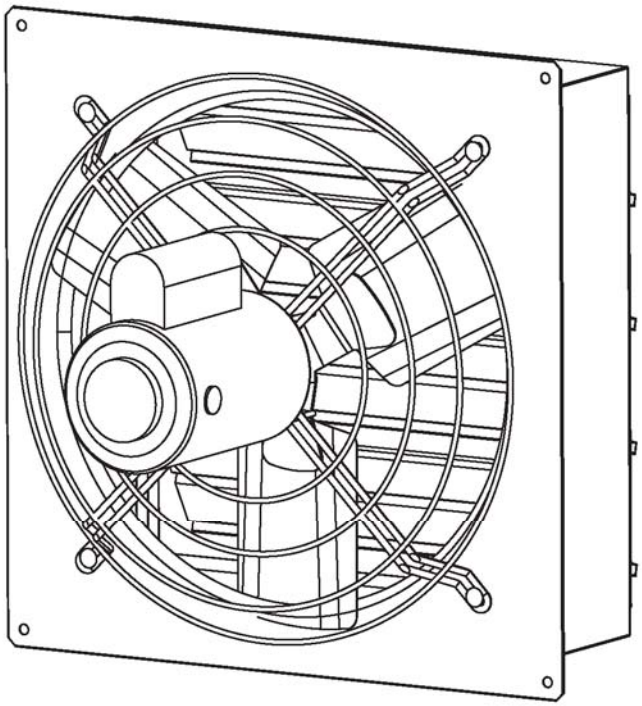

GARANTIE

Canarm Ltée. garantie que chaque nouveau ventilateur ne comporte aucune défectuosité dans le matèriel et la main-d'oeuvre, et de ce fait, Canarm Ltée. remplacera ou réparera à son choix, tout unité ou partie de cette unité qui comporte une defectuosité, pour une période de un an suivant la date d'achat. L'unité doit être retournée frais de port payé et une défectuosité doit être décelée. Cette garantie ne couvre pas les frais de démontage et de réinstallation de l'unité sur les lieux de l'usager.
Les éléments réparés ou remplacés sont garanties pour la durée de la garantie originale seulement. Cette garantie s'applique à l'acheteur-usage initial seulement, elle est nulle dans le cas d'altérations, d'accident, d'abus, de négligence ou si l'opération n'est pas conforme aux instructions.

N.B.: Aucune réclamation ne sera honorée par Canarm Ltée. à moins d'autorisation obtenue au préalable.

Problèmes d'installation ou d'utilisation? Ne retournez pas au magasin. Communiquez avec le service à la clientèle chez Canarm au 1-800-265-1833 (Canada) 1-800-267-4427 (USA) 1-800-567-2513 (en français) du lundi au vendredi entre 8:00h et 17:00h HNE

Mode d'emploi du Ventilateur d'évacuation Standard

Veuillez lire les instructions suivantes avant de procéder à l'installation et gardez ce manuel comme référence

Félicitations sur l'achat de votre ventilateur d'évacuation mural à entraînement direct de qualité. Tous ces modéles comportent un moteur fermé à roulements sur bille avec une protection thermique contre la surcharge. Les moteurs à vitesse variable sont hautement efficaces et consomment peu d'énergie et de plus, ils peuvent être opérés comme un moteur à vitesse simple.
Les moteurs sont soutenus par une monture de moteur trés robuste en tiges d'acier soudées de haut calibreet sont revĺtues d'un fini poudré. Les ventilateurs vous sont livrés tout assemblé et 100% de nos ventilateurs sont testés avant la livraison.

VENTILATEUR STANDARD:

Ces modéles portent un boîtier robuste en acier soudé avec un fini poudré ainsi que des volets en aluminium ou en plastique qui sont retenus par des douilles en nylon de longue durée. Les volets s'ouvrent automatiquement lorsque le ventilateur démarre et se ferment lorsqu'il s'arrête.

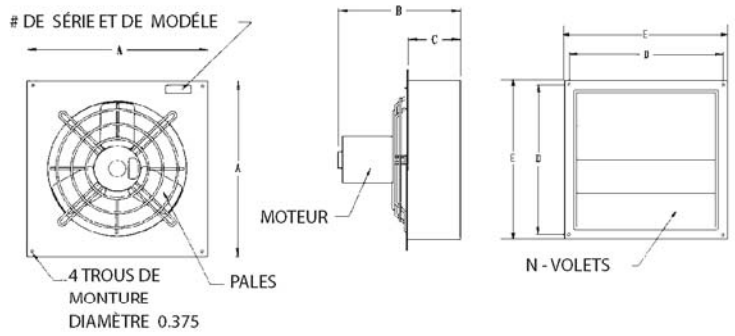

Dimensions du Ventilateur							
Ventilateur	A	B	C	D	E	N	Encadrement
8"	13-1/4"	10"	4"	12"	10-3/4"	2	11x11
10"	15-1/4"	10"	4"	14"	12-3/4"	2	13x13
12"	17-1/4"	14"	6"	16"	14-3/4"	3	15x15
14"	19-1/4"	14"	6"	18"	16-3/4"	3	17x17
16"	21-1/4"	14"	6"	20"	18-3/4"	4	19x19
18"	23-1/4"	15"	6"	22"	20-3/4"	4	21x21
20"	25-1/4"	16"	6"	24"	22-3/4"	5	23x23
24"	29-1/4"	16"	6"	28"	26-3/4"	5	27x27
30"	35-1/4"	19"	6"	34"	32-3/4"	8	33x33
36"	41-1/4"	16"	6"	40"	38-3/4"	10	39x39

VENTILATEUR ANTI-EXPLOSIF:

Les ventilateurs anti-explosifs sont munis de moteurs et de pales qui sont contre les explosions afin qu'une étincelle ne puisse pas se produire si un objet en métal obstruerait le mouvement de la pale. Les ventilateurs anti-explosifs sont fabriqués du même boîtier en acier robuste et de qualité et du même grillage à haut calibre que les ventilateurs Standard. Ces ventilateurs devront être utilisés pour ventilé les endroits hasardeux. L'endroit est considéré hasardeux si l'atmosphére contient ou peut contenir un gaz, une vapeur, ou de la poussiére en quantité explosive.

La température ambiante du moteur ne devrait pas excéder +40ºC ou -25ºC à moins que la plaque sur le moteur indique spécifiquement une autre valeur. Les ventilateurs anti-explosifs Canarm sont approuvés pour les classes hasardeuse ci-dessou seulement.

Classe 1, Division 1 (Gas et vapeurs)

~~Groupe~~ A	Aceetylène
~~Groupe~~ B	Butadiène, oxyde d'éthylène, hydrogène, oxyde de propylène
Groupe C	Acétaldéhyde, cyclopropane, diéthléther, éthylène, isoprène
Groupe D	Acétone, acrylonitrile, ammoniac, benzène, butane, éthylène dichloride, gazoline, hexane, méthane, méthanol, naphtha,propane, propylène styrène, toluène, vinyle, acétate, vinyle chloride, xylène

Classe 2, Division 1 (Poussières Combustibles)

~~Groupe~~ E	Aluminium, magnésium, et autres poussières de métal avec des caracteristiques similaires.
Groupe F	Carbon noir, coke ou poussière de charbon
Groupe G	Farine, amidon ou poussière de grain

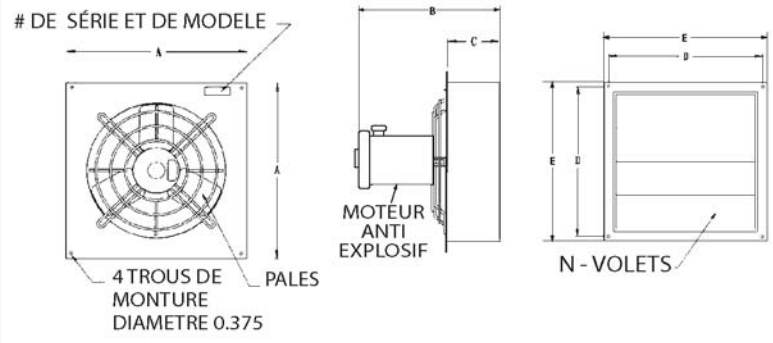

Dimensions du Ventilateur							
Ventilateur	A	B	C	D	E	N	Encadrement
12"	17-1/4"	20-1/2"	6"	16"	14-3/4"	3	15x15
18"	23-1/4"	20-1/2"	6"	22"	20-3/4"	4	21x21
24"	29-1/4"	20-1/2"	6"	28"	26-3/4"	5	27x27

INSTALLATION

L'installation est simple et rapide. Un encadrement robuste dans l'ouverture du mur devrait être préparé à l'avance aux grandeurs mentionnes pour votre ventilateur dans le tableau ci-dessus. A l'aide de boulons pour cadrage de bois ou d'écrous, boulons et rondelles de blocage pour cadrage de métal, posez le ventilateur à l'aide des quatres trous de montage fournies, un dans chacun des coins.

CONNEXIONS ÉLECTRIQUES



MISE EN GARDE: FERMEZ LE COURANT AU DISJONCTEUR AVANT PROCÉDER AUX RACCORDEMENTS.

MISE EN GARDE: TOUS LES TRAVAUX ÉLECTRIQUES DEVRONT ÊTRE EXÉCUTÉS PAR UN ÉLECTRICIEN QUALIFIÉ.
Ces ventilateurs portent un moteur à une, deux ou vitesse variable. Les moteurs à une ou deux vitesses peuvent recevoir du 120V seulement. Les moteurs à vitesse variable sont à voltage double. Tous les moteurs à voltage double sont préparés en usine pour recevoir du 240V. Suivez les indications sur la plaque du moteur pour rebrancher le moteur sur le 120V. Faîtes les connexions dans la boîte de connexion du moteur selon les indications sur la plaque du moteur. Consultez le ***Tableau #1*** pour la grandeur de fil à être utilisé. Les ventilateurs à deux vitesses demandent un contrôle à 2 vitesses ou un interrupteur à levier 3 postions pour changer la vitesse de grande/petite/fermé. Consultez le diagramme fournie avec le contrôle pour l'installation à 2 vitesses.

TABLEAU #1

Tableau A Grosseur minium de fil pour moteur à trois phases

Moteur	25 à 50 Pieds			100 Pieds			150 à 200 Pieds		
HP	200V	230V	460V	200V	230V	460V	200V	230V	460V
1/8	14(18)*	14(18)*	14(18)*	14(18)*	14(18)*	14(18)*	14(16)*	14(16)*	14(18)*
1/6	14(18)*	14(18)*	14(18)*	14(18)*	14(18)*	14(18)*	14	14(16)*	14(18)*
1/4	14(18)*	14(18)*	14(18)*	14(16)*	14(18)*	14(18)*	14	14	14(18)*
1/3	14(18)*	14(18)*	14(18)*	14(16)*	14(16)*	14(18)*	12	14	14(18)*
1/2	14(16)*	14(18)*	14(18)*	12	14(16)*	14(18)*	10	12	14(18)*
3/4	14(16)*	14(16)*	14(18)*	12	14	14(18)*	10	10	14(16)*
1	14	14(16)*	14(18)*	12	12	14(18)*	8	10	14(16)*
1-1/2	12	14	14(18)*	10	10	14(16)*	6	8	14
2	12	12	14(18)*	8	10	14(16)*	6	6	12
3	10	12	14(18)*	6	8	14	4	6	12

Tableau B Grosseur minium de fil pour moteur à phase simple

Moteur	25 à 50 Pieds			100 Pieds			150 à 200 Pieds		
HP	200V	230V	460V	200V	230V	460V	200V	230V	460V
1/8	14(18)*	14(18)*	14	14(18)*	12	14(18)*	10	8	14
1/6	14(16)*	14(18)*	12	14(18)*	10	14(16)*	6	6	12
1/4	14	14(18)*	10	14(16)*	8	14	6	4	10
1/3	14	14(18)*	10	14(16)*	8	14	6	4	10
1/2	12	14(18)*	8	14	6	12	4	3	8
3/4	10	14(16)*	6	12	4	10	2	1	6
1	10	14(16)*	6	12	4	10	2	1	6
1-1/2	8	14	6	12	3	8	1	1/0	6
2	8	14	4	10	2	8	1/0	2/0	4
3	6	12	3	8	1/0	6	2/0	4/0	3

N.B.:
- Article 310-5 NEC grosseur minium de conducteur pour filage général à 115- 440VAC est le numéro 14AWG
- Les grandeurs de fils ci-dessus sont basés sur une baisse approximative de 5% lors du départ; conducteurs en cuivre; et isolation type 75C THHW, THW, RH, RHW etc. Pour un fil en aluminium, augmentez le fil d'un minimum de deux grandeurs. Voir Article 310 NEC pour ampacités des conducteurs en aluminium.
- Type S, SO, SJ, SJO, ETC.. grandeur de fil de cable flexible. Voir article 400 NEC pour ampérage relatif.

OPÉRATION:

MISE EN GARDE: LES VENTILATEURS À VITESSE VARIABLE DEVRAIENT ÊTRE AJUSTÉS AFIN QUE LA VITESSE MINIUM OUVRE LES VOLETS D'AU MOINS 1" AFIN DE PERMETTRE UN AÉRATION ADÉQUATE DU MOTEUR. Tous les ventilateurs sont à entraînement direct. Les ventilateurs avec moteur à vitesse variable peuvent étre opérés comme moteur à une vitesse économe d'énergie ou comme moteur variable avec un contrôle adéquat. Tel que mentionné, les ventilateurs à 2 vitesses requiËrent un contrôle à 2 vitesses ou un interrupteur à levier à 3 positions pour pouvoir changer la vitesse du moteur de grande à petite.



MISE EN GARDE: UNE GRILLE INTÉRIEUR DEVRAIT ÊTRE UTILSÉ SI LE VENTILATEUR EST INSTALLÉ À MOINS DE 7 PEIDS (2 METRE) DU SOL.

ACCESSOIRES:

Canarm vous offre une gamme complète de contrôle manuel et thermostatique. Canarm vous offre également des ensembles de volets muraux d'évacuation, les volets de remplacement ainsi que des capots de protection contre les intempéries.

ENTRETIEN:

Les moteurs comportent une protection automatique contre la surcharge et pourraient démarrer sans avertissement. Débrancher toujours l'unité avant de procéder à l'entretien. Le moteur, les pales et les volets devraient être nettoyés régulièrement pour éviter une accumulation de saleté qui pourrait endommager le moteur et nuire au bon fonctionnement de votre ventilateur. Les volets automatiques devraient pouvoir opérer librement. Comme pour tout les appareils mécaniques, des inspections régulières devront être entreprises afin de s'assurer que toute la quincaillerie et les vis à pales soient bien serrées.

GARANTIE

Canarm Ltée. garantie que chaque nouveau ventilateur ne comporte aucune défectuosité dans le matériel et la main-d'oeuvre, et de ce fait, Canarm Ltée. remplacera ou réparera à son choix, tout unité ou partie de cette unité qui comporte une defectuosité, pour une période d'un an suivant la date d'achat. L'unité doit être retournée frais de port payé et une défectuosité doit être décelée. Cette garantie ne couvre pas les frais de démontage et de réinstallation de l'unité sur les lieux de l'usager. Les éléments réparés ou remplacés sont garanties pour la durée de la garantie originale seulement. Cette garantie s'applique à l'acheteur-usager initial seulement; elle est nulle dans le cas d'altérations, d'accident, d'abus, de négligence ou si l'opération n'est pas conforme aux instructions.

N.B.: Aucune réclamation ne sera honorée par Canarm Ltée. à moins d'autorisation obtenue au préalable.

CANARM®

CANARM LTD.
2157 PARKEDALE AVENUE
BROCKVILLE, ONTARIO K6V 5V6
TELEPHONE: (613) 342-5424
FAX: 1-800-263-4598
E-MAIL: agsales@canarm.ca

CANARM LTEE.
8500 RUE GRENACHE
ANJOU, QUEBEC H1J 2B1
TELEPHONE: (514) 353-2255
FAX: (514) 353-2522
E-MAIL: agsales@canarm.ca

FM 701/702 - Flow meter, IFM efector, SM9000, Magnetic flow meter

ifm electronic

CE

Operating instructions
Magnetic-inductive flow meter

UK

efector300®

SM9000
SM9100
SM2000
SM2100

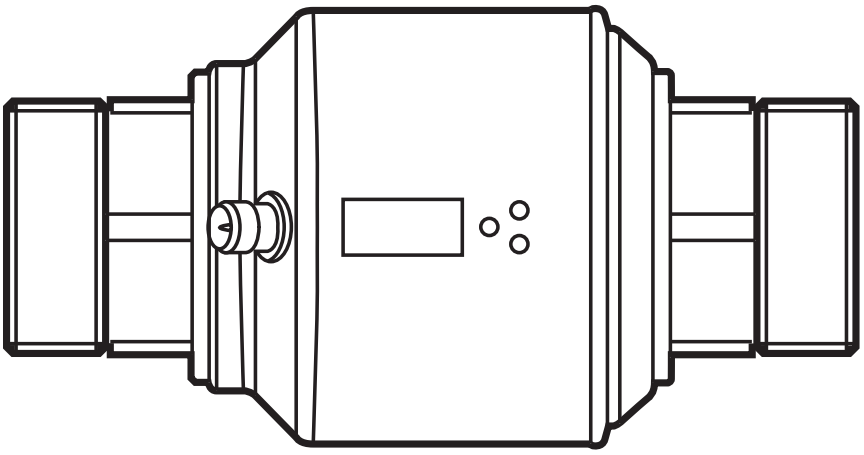

706222B2 / 00 05 / 2014

Contents

1 Preliminary note 4
1.1 Symbols used 4
1.2 Warning signs used 5

2 Safety instructions 5

3 Functions and features 6

4 Function 6
4.1 Measuring principle for volumetric flow monitoring 6
4.2 Processing of the measured signals 7
4.3 Volumetric flow monitoring 8
4.3.1 Volumetric flow quantity 8
4.3.2 Direction of flow 8
4.4 Consumed quantity monitoring (totaliser function) 8
4.4.1 Consumed quantity monitoring with pulse output 9
4.4.2 Consumed quantity monitoring with preset counter 9
4.5 Temperature monitoring 10
4.6 Empty pipe detection 10
4.7 Volumetric flow or temperature monitoring / switching function 11
4.7.1 Hysteresis function 11
4.7.2 Window function 11
4.8 Volumetric flow or temperature monitoring / analogue function 12
4.8.1 Current output 12
4.8.2 Voltage output 13
4.9 Volumetric flow monitoring / frequency output 14
4.10 Start-up delay 14
4.11 Low flow cut-off (LFC) 16
4.12 Simulation 16

5 Installation 17
5.1 Recommended installation position 17
5.2 Not recommended installation position 19
5.3 Grounding 20
5.4 Installation in pipes 20

6 Electrical connection 21

7 Operating and display elements 22

8 Menu 23
8.1 Process value display 23
8.2 Main menu 24
8.2.1 Explanation main menu 25
8.3 Extended functions – Basic settings 26
8.3.1 Explanation extended functions (EF) 27
8.3.2 Submenu basic settings (CFG) 27
8.4 Extended functions – Min/max memory – Emtpy pipe – Simulation 28
8.4.1 Explanation extended functions (EF) 29
8.4.2 Submenu min/max memory (MEM) 29
8.4.3 Submenu empty pipe (EPD) 29
8.4.4 Submenu simulation (SIM) 29

9 Set-up 30

10 Parameter setting 30
10.1 IO-Link 31
10.1.1 General information 31
10.1.2 Device-specific information 31
10.1.3 Parameter setting tools 31
10.2 Parameter setting in general 32
10.2.1 Switching between the menu levels 33
10.2.2 Locking / unlocking 33
10.2.3 Timeout 33
10.3 Settings for consumed quantity monitoring 33
10.3.1 Settings for limit value monitoring with OUT1 33
10.3.2 Settings for limit value monitoring with OUT2 34
10.3.3 Setting the analogue value for volumetric flow 34
10.3.4 Setting the frequency value for volumetric flow 34
10.4 Settings for consumed quantity monitoring 34
10.4.1 Settings for quantity monitoring via pulse output 34
10.4.2 Settings for quantity monitoring via the preset counter 35
10.4.3 Setting the pulse value 35
10.4.4 Manual counter reset 35
10.4.5 Time-controlled counter-reset 36
10.4.6 Deactivation of the counter reset 36
10.4.7 Configure counter reset using an external signal 36
10.5 Settings for temperature monitoring 36

10.5.1 Settings for limit value monitoring with OUT2 36
10.5.2 Setting the analogue value for temperature 36
10.6 User settings (optional) 37
10.6.1 Setting of the standard unit of measurement for volumetric flow 37
10.6.2 Configuration of the standard display 37
10.6.3 Changing the direction of the flow rate measurement 37
10.6.4 Setting the output logic 37
10.6.5 Setting the start-up delay 37
10.6.6 Setting the measured value damping 37
10.6.7 Setting the error behaviour of the outputs 38
10.6.8 Configuring the empty pipe detection as diagnostic output 38
10.6.9 Activating / deactivating empty pipe detection 38
10.6.10 Time-delay empty pipe detection 38
10.6.11 Setting of the empty pipe detection 39
10.6.12 Setting the counting method of the totaliser 39
10.6.13 Setting the low flow cut-off 39
10.7 Service functions 39
10.7.1 Reading the min/max values for the volumetric flow 39
10.7.2 Reading the min/max values for the temperature 39
10.7.3 Simulation menu 40
10.7.4 Resetting all parameters to factory setting 40

11 Operation 41
11.1 Reading the process value 41
11.2 Reading the parameter value 42
11.3 Error indications 43

12 Technical data 43

13 Factory setting 44

1 Preliminary note

1.1 Symbols used

▶ Instructions

> Reaction, result

[…] Designation of pushbuttons, buttons or indications

→ Cross-reference

Important note
Non-compliance can result in malfunction or interference.

Information
Supplementary note.

1.2 Warning signs used

⚠ CAUTION

Warning of personal injury.
Slight reversible injuries may result.

2 Safety instructions

- Please read this document prior to set-up of the unit. Ensure that the product is suitable for your application without any restrictions.
- If the operating instructions or the technical data are not adhered to, personal injury and/or damage to property can occur.
- Improper or non-intended use may lead to malfunctions of the unit or to unwanted effects in your application. That is why installation, electrical connection, set-up, operation and maintenance of the unit must only be carried out by qualified personnel authorised by the machine operator.
- In order to guarantee the correct condition of the device for the operating time it is necessary to use the device only for media to which the wetted materials are sufficiently resistant (→ Technical data).
- The responsibility whether the measurement devices are suitable for the respective application lies with the operator. The manufacturer assumes no liability for consequences of misuse by the operator. Improper installation and use of the devices result in a loss of the warranty claims.
- For medium temperatures above 50 °C some parts of the housing can heat up to over 65 °C. Moreover, during installation or in case of a fault (e.g. housing damage) media under high pressure or hot media can leak from the system. To avoid personal injury, take the following measures:
  ▶ Install the unit according to the applicable rules and regulations.
  ▶ Ensure that the system is free of pressure during installation.

- ▶ Protect the housing against contact with flammable substances and unintentional contact. To do so, equip the unit with suitable protection (e.g. protective cover).
- ▶ Do not press the pushbuttons manually; instead use another object (e.g. ballpoint pen).

3 Functions and features

Pressure Equipment Directive (PED): The units comply with section 3, article 3 of the Directive 97/23/EC and must be designed and manufactured for non-super-heated liquids of group 2 fluids in accordance with the sound engineering practice.

The unit monitors liquid media.

The unit detects the 3 process categories volumetric flow quantity, consumed quantity and medium temperature.

Application area

Conductive liquids with the following properties:

- Conductivity: ≥ 20 µS/cm
- Viscosity: < 70 mm^2/s at 40 °C

4 Function

4.1 Measuring principle for volumetric flow monitoring

The magnetic-inductive measuring principle means that a magnetic field is generated in the measuring pipe via current-carrying coils. When a conductive medium flows through the measuring pipe, the ions therein are diverted perpendicularly to the magnetic field. Positive and negative charge carriers flow in opposite directions. The voltage induced is measured by two electrodes that are in contact with the medium. This signal voltage is directly proportional to the average flow velocity. The volumetric flow quantity is derived from the inside pipe diameter.

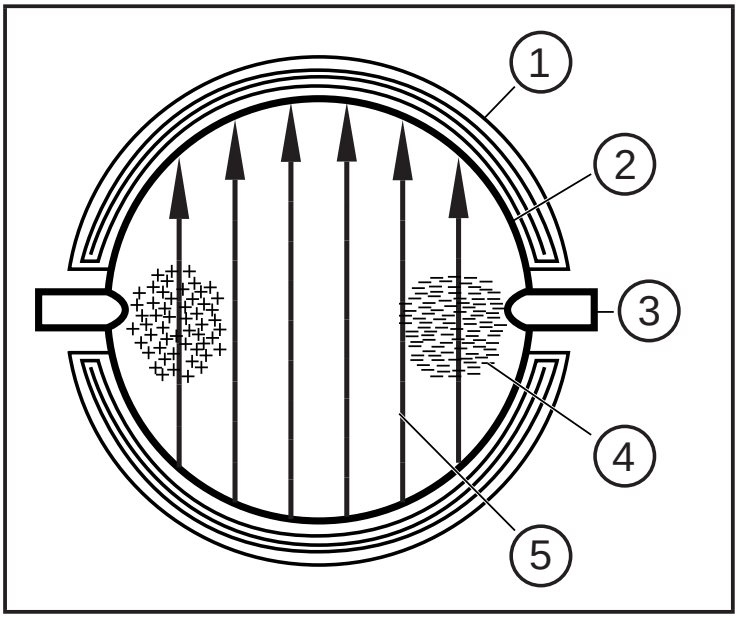

1: Field coil
2: Measuring pipe
3: Electrode
4: Charge carrier in the medium
5: Magnetic field

UK

Both electrodes must be wetted by the medium. Otherwise the signal [SEnS] for empty pipe is provided, if empty pipe detection is enabled.

4.2 Processing of the measured signals

The unit displays the current process values.

It generates 2 output signals according to the parameter setting.

OUT1/IO-Link: 5 selection options	Parameter setting
- Switching signal for volumetric flow limit values	(→ 10.3.1)
- or frequency signal for volumetric flow quantity	(→ 10.3.4)
- or pulse signal for quantity meter	(→ 10.4.1)
- or switching signal for preset counter	(→ 10.4.2)
- or switching signal for empty pipe detection	(→ 10.6.9)

OUT2: 6 selection options	Parameter setting
- Switching signal for volumetric flow limit values	(→ 10.3.2)
- or switching signal for temperature limit value	(→ 10.5.1)
- or analogue signal for volumetric flow quantity	(→ 10.3.3)
- or analogue signal for temperature	(→ 10.5.2)
- or input for external reset signal (InD)	(→ 10.4.7)
- or switching signal for empty pipe detection	(→ 10.6.9)

4.3 Volumetric flow monitoring

4.3.1 Volumetric flow quantity

The signals for measuring the volumetric flow quantity can be provided as follows:

1. Two switching signals for volumetric flow quantity limit values on output 1 and output 2. On the switching functions → 4.7.
2. A frequency signal (10 Hz...10 kHz) on output 1.
   On the frequency functions → 4.9.
3. An analogue signal proportional to the volumetric flow (4...20 mA or 0...10 V) on output 2. On the analogue functions → 4.8.

4.3.2 Direction of flow

In addition to the flow velocity, the unit also detects the flow direction. An arrow on the unit indicates the positive flow direction.

The flow direction can be inversed (→ 10.6.3).

▶ Use the supplied label to mark the changed flow direction.

Direction of flow in accordance with "flow direction" > process value and display positive. Direction of flow against the "flow direction" > process value and display negative.

Only positive process values are processed for the signal output (limit values and analogue values for volumetric flow).

4.4 Consumed quantity monitoring (totaliser function)

The unit has an internal mass flow meter which continuously totals the volumetric flow. The sum corresponds to the current consumed quantity since the last reset.

- The quantity meter takes account of the flow direction for totalisation.
  - Flow according to the marked flow direction (arrow "flow direction"): meter adds.
  - Flow against the marked flow direction: meter subtracts (→ 10.6.12).
  - Meter pulses are only provided as the sum increases. After subtraction (consumed quantity decreases), the pulses are only provided again when the consumed quantity has exceeded the previous maximum value.

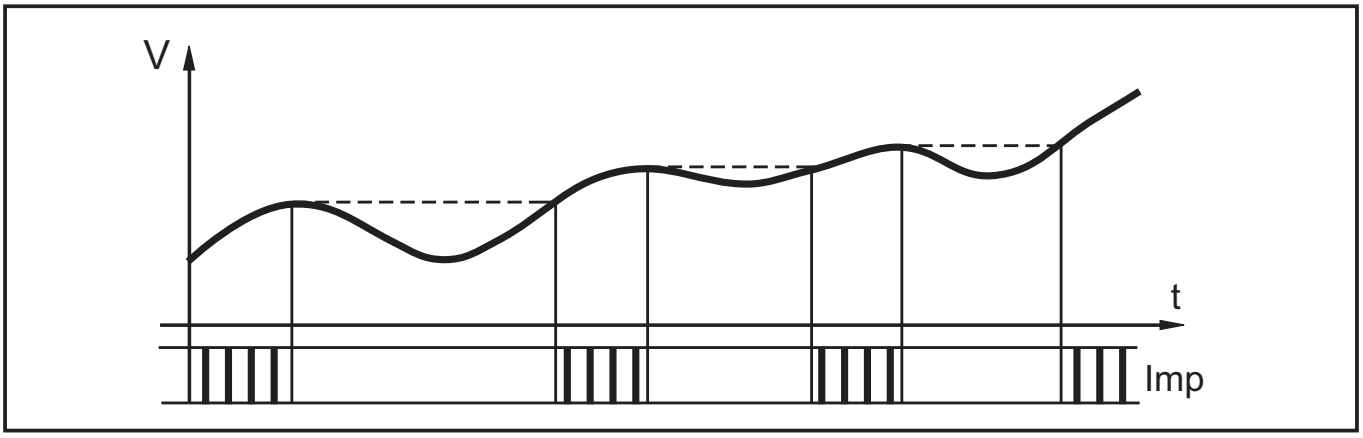

V = volumetric flow quantity, Imp = output pulses

- The current meter reading can be displayed (→ 11.1 Reading the process value).
- In addition the value before the last reset is stored. This value can also be displayed (→ 11.1 Reading the process value).

The meter saves the totalled consumed quantity every 10 minutes. In the event of a power failure this value is retained as the current meter reading. If a time-controlled reset is set, the elapsed time of the set reset interval is also stored. So the possible data loss can be maximum 10 minutes.

There are different ways to reset the meter

→ 10.4.4 Manual counter reset
→ 10.4.5 Time-controlled counter-reset
→ 10.4.7 Configure counter reset using an external signal

4.4.1 Consumed quantity monitoring with pulse output

Output 1 indicates a counting pulse when the set volumetric flow quantity has been reached (→ 10.4.1).

4.4.2 Consumed quantity monitoring with preset counter

Output 1 switches when the set volumetric flow quantity has been reached (→ 10.4.2).
2 types of monitoring are possible:

1. Time-dependent quantity monitoring (→ 10.4.5 Time-controlled counter-reset).
   - If the quantity x is reached during t, output 1 switches and remains switched until the meter is reset.

- If the quantity x is not reached during the time t, the meter is automatically reset and counting starts again; output 1 does not switch.

2. Quantity monitoring not time-dependent (→ 10.4.6 Deactivation of the counter reset).
   - If the quantity x is reached, output 1 switches and remains switched until the meter is reset.

4.5 Temperature monitoring

The following signals are provided for temperature monitoring:

- A switching signal for temperature limit values on output 2. On the switching functions → 4.7.
- An analogue signal proportional to the temperature (4...20 mA or 0...10 V) on output 2. On the analogue functions → 4.8.

4.6 Empty pipe detection

The unit detects when the two electrodes are not wetted by the medium (→ 4.1 Measuring principle for volumetric flow monitoring). The empty pipe detection can be activated or deactivated (→ 10.6.9). If it is active and the pipe is empty, the unit reacts as follows:

> [SEnS] is indicated in the display.

> The flow is set to zero.

The empty pipe detection can be set as time-depending or not time depending (→ 10.6.10).

4.7 Volumetric flow or temperature monitoring / switching function

OUTx changes its switching state if it is above or below the set switching limits (SPx, rPx). The following switching functions can be selected:

4.7.1 Hysteresis function

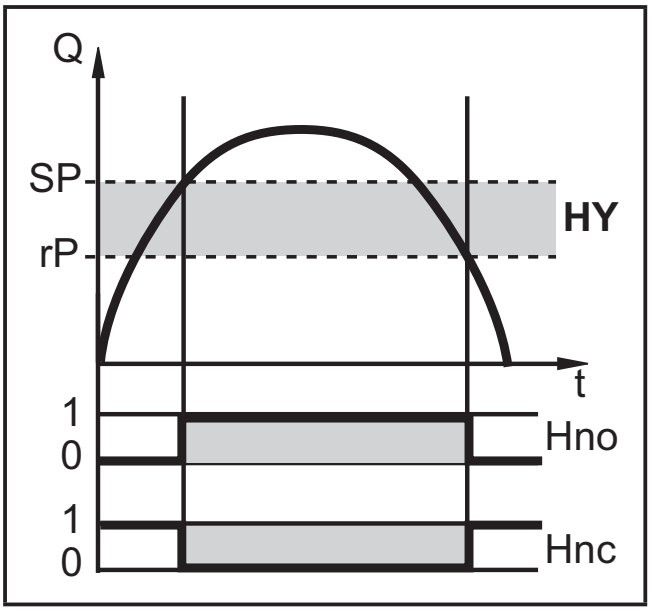

Example of volumetric flow monitoring
HY = hysteresis

Normally open: [OUx] = [Hno]

Normally closed: [OUx] = [Hnc]

First the set point (SPx) is set, then the reset point (rPx) with the requested difference.

When SPx is adjusted rPx is changed automatically; the difference remains constant.

UK

4.7.2 Window function

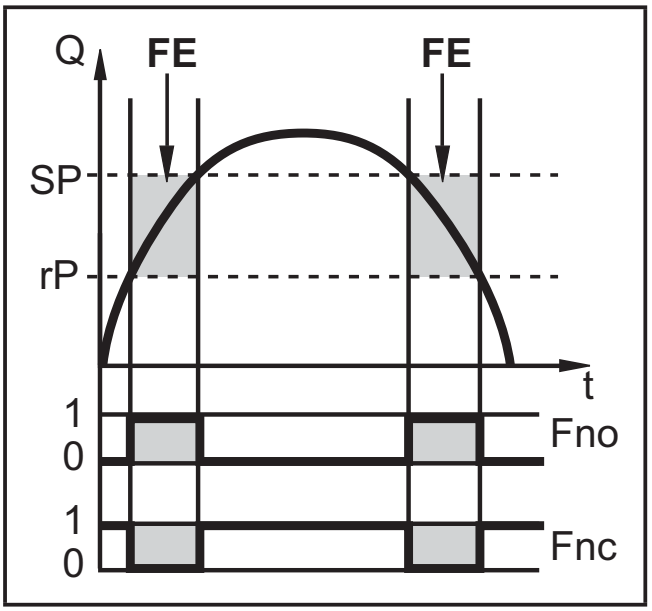

Example of volumetric flow monitoring
FE = window

Normally open: [OUx] = [Fno]

Normally closed: [OUx] = [Fnc]

The width of the window can be set by means of the difference between SPx and rPx.
SPx = upper value
rPx = lower value.

When set to the window function the set and reset points have a fixed hysteresis of 0.25 % of the final value of the measuring range. This keeps the switching state of the output stable if the volumetric flow varies slightly.

4.8 Volumetric flow or temperature monitoring / analogue function

4.8.1 Current output

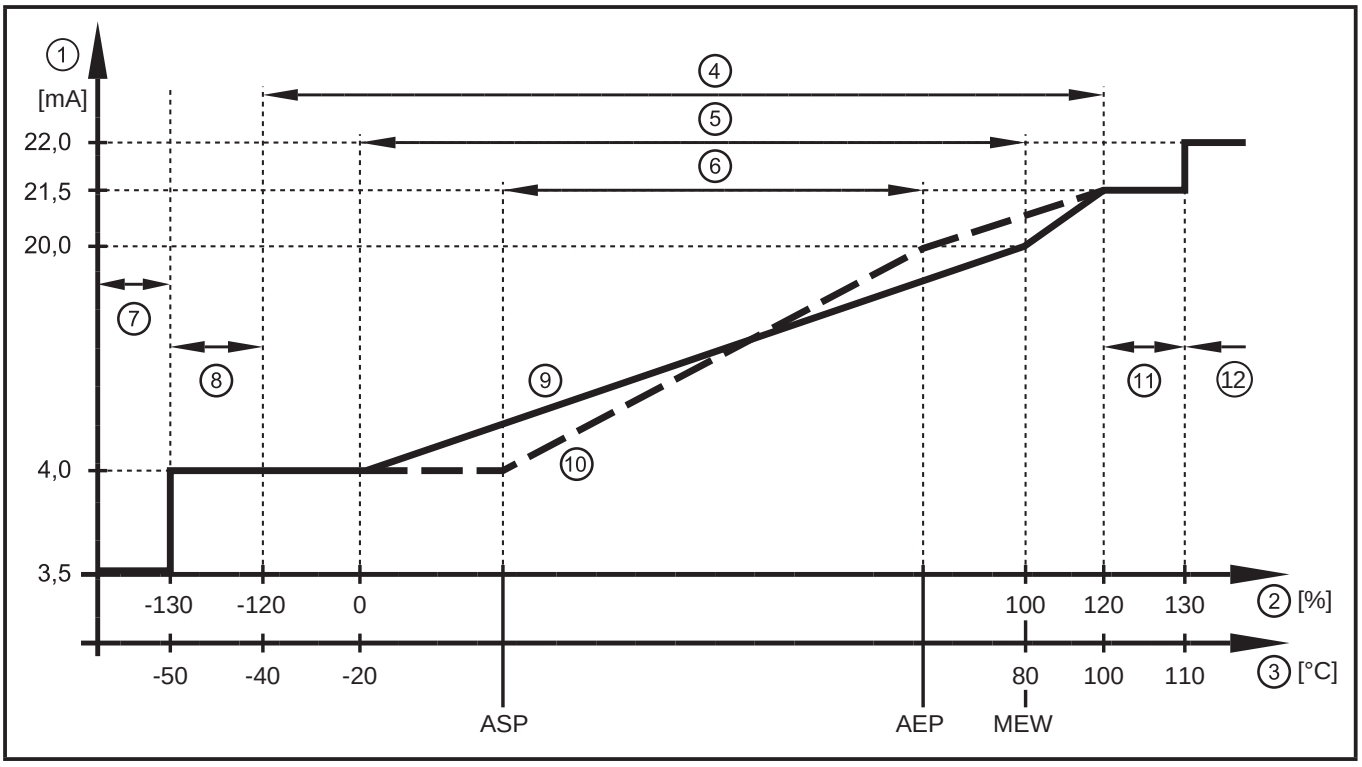

Characteristics of the analogue output according to the standard IEC 60947-5-7

1: Output current
2: Volumetric flow quantity
3: Temperature
4: Display range
5: Measuring range
6: Range between analogue start point and analogue end point
7: The unit is in the error state (FOU = OFF).
8: The process value transmitted in an analogue way is therefore below the display range.
9: Curve of the analogue signal at factory setting
10: Curve of the analogue signal with shifted ASP and AEP
11: The process value transmitted in an analogue way is therefore above the display range.
12: The unit is in the error state (FOU = ON).

ASP = analogue start point: determines at which measured value the output signal is 4 mA
AEP = analogue end point: determines at which measured value the output signal is 20 mA
VMR = final value of the measuring range = 100 %

Minimum distance between ASP and AEP = 20 % of the measuring range

In the set scaling range the output signal is between 4 and 20 mA.

4.8.2 Voltage output

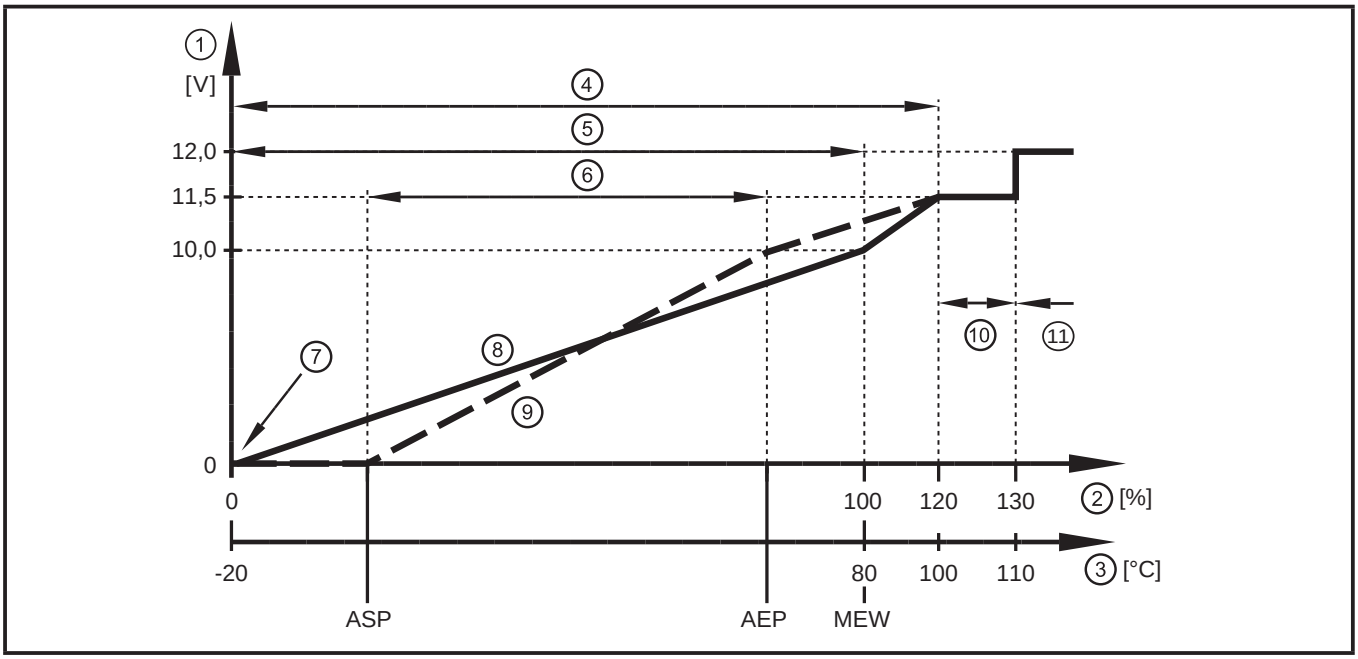

Characteristics of the analogue output according to the standard IEC 60947-5-7

1: Output voltage
2: Volumetric flow quantity
3: Temperature
4: Display range
5: Measuring range
6: Range between analogue start point and analogue end point
7: The unit is in the error state (FOU = OFF) or the process value transmitted in an analogue way is below the display range.
8: Curve of the analogue signal at factory setting
9: Curve of the analogue signal with shifted ASP and AEP
10: The process value transmitted in an analogue way is therefore above the display range.
11: The unit is in the error state (FOU = ON).

ASP = analogue start point: determines at which measured value the output signal is 0 V
AEP = analogue end point: determines at which measured value the output signal is 10 V
VMR = final value of the measuring range = 100 %

Minimum distance between ASP and AEP = 20 % of the measuring range

In the set scaling range the output signal is between 0 and 10 V.

UK

4.9 Volumetric flow monitoring / frequency output

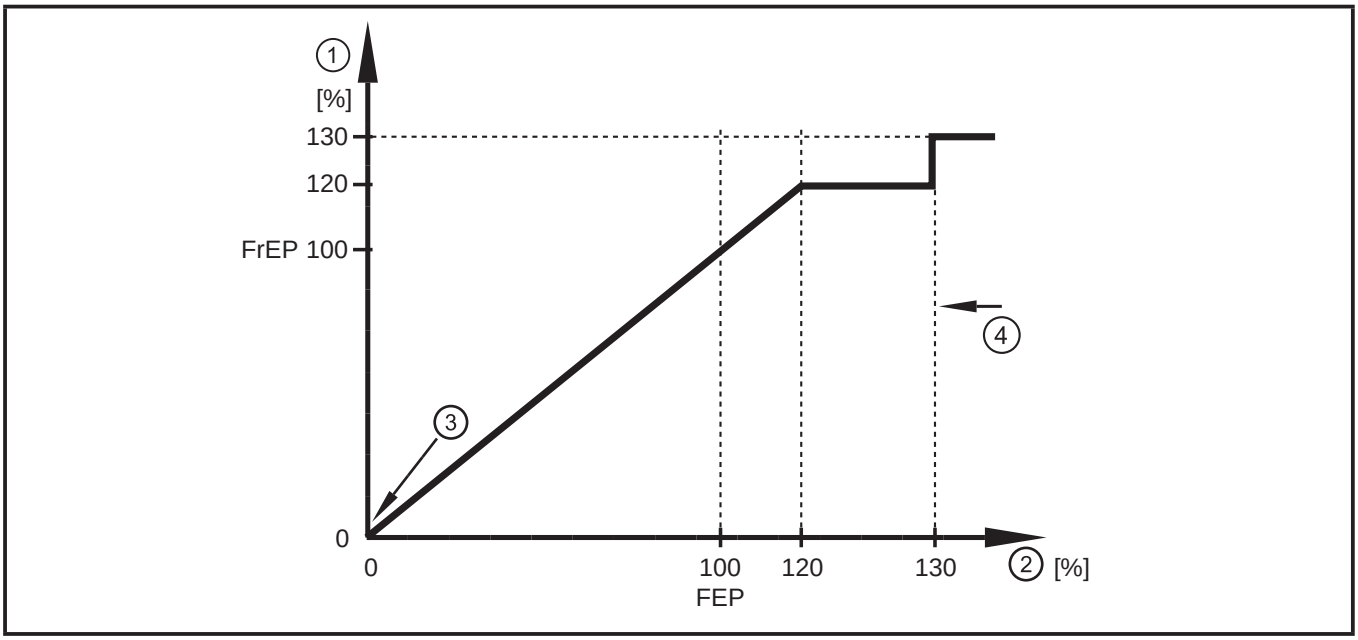

Output curve frequency output
1: Frequency output
2: Volumetric flow quantity Q
3: The unit is in the error state (FOU = OFF) or the process value transmitted in an analogue way is below the display range.
4: The unit is in the error state (FOU = ON).

FrEP = configured frequency at FEP (→ 10.3.4 Setting the frequency value for volumetric flow)

4.10 Start-up delay

The start-up delay dST influences the switching outputs of the volumetric flow monitoring.

If the start-up delay is active (dST > 0), note: As soon as the volumetric flow quantity exceeds the LFC (LFC = low flow cut-off → 4.11), the following processes are carried out:

> The start-up delay is activated.

> The outputs switch as programmed:
ON for NO function, OFF for NC function.

After the start of the start-up delay there are 3 options:

1. The volumetric flow quantity increases quickly and reaches the set point / good range within dST.
> Outputs remain active.

2. The volumetric flow increases slowly and does not reach the set point /good range within dST.
   > Outputs are reset.
3. Volumetric flow quantity falls below LFC within dST.
   > Outputs are reset at once; dST is stopped.

Example: dST for hysteresis function

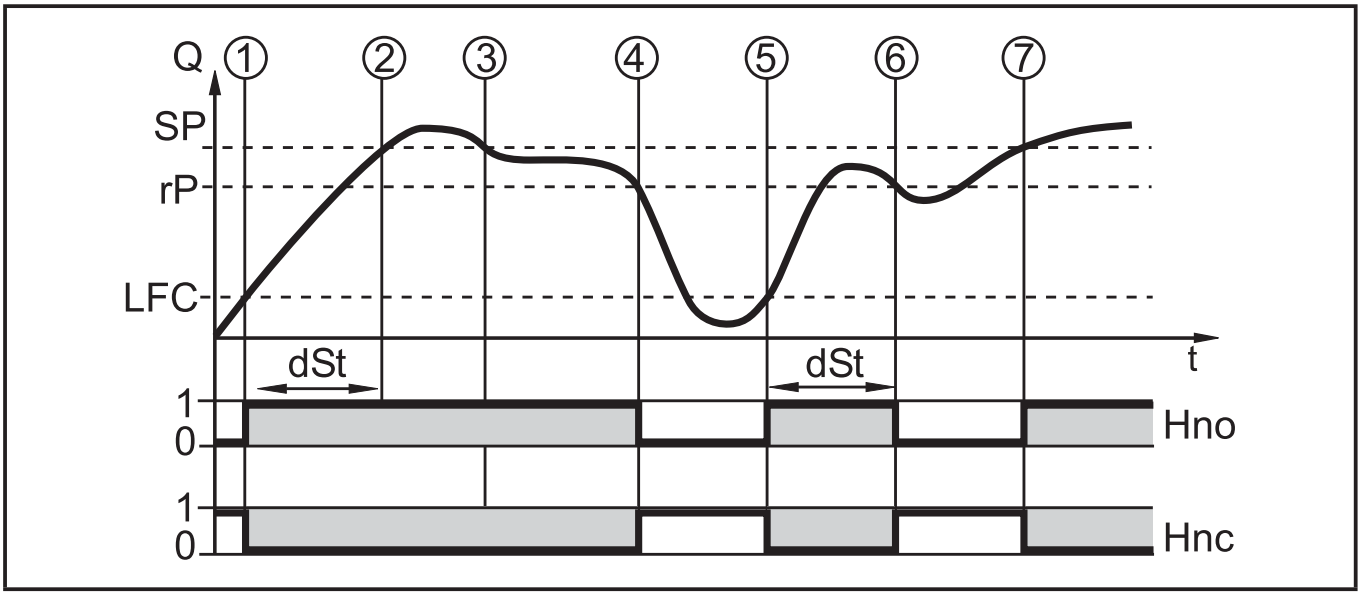

	Condition	Reaction
1	Volumetric flow quantity Q reaches LFC	dST starts, output becomes active
2	dST elapsed, Q reached SP	output remains active
3	Q below SP but above rP	output remains active
4	Q below rP	output is reset
5	Q reaches again LFC	dST starts, output becomes active
6	dST elapsed, Q has not reached SP	output is reset
7	Q reaches SP	output becomes active

Example: dST for window function

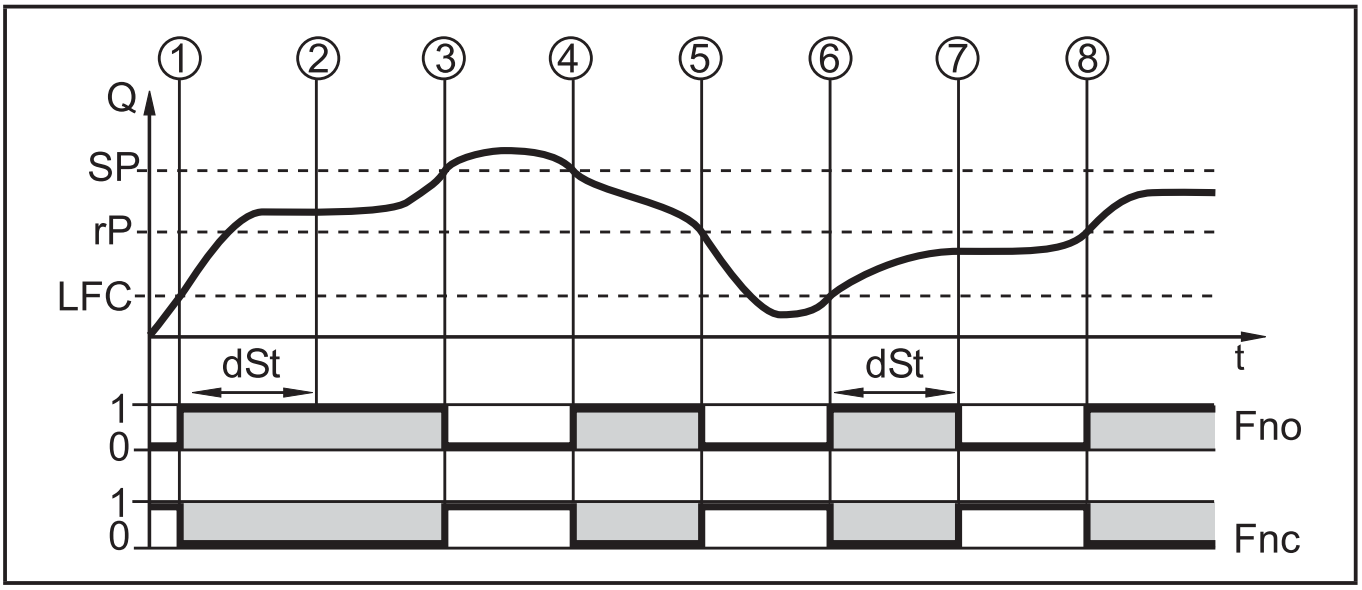

	Condition	Reaction
1	Volumetric flow quantity Q reaches LFC	dST starts, output becomes active.
2	dST elapsed, Q reached good range	output remains active
3	Q above SP (leaves good range)	output is reset
4	Q again below SP	output becomes active again
5	Q below rP (leaves good range)	output is reset again
6	Q reaches again LFC	dST starts, output becomes active
7	dST elapsed, Q has not reached good range	output is reset
8	Q reaches good range	output becomes active

4.11 Low flow cut-off (LFC)

With this function small volumetric flow quantities can be ignored (→ 10.6.13). Flows below the LFC value are evaluated by the sensor as standstill (Q = 0).

4.12 Simulation

With this function small volumetric flow quantities can be suppressed (→ 10.7.3). The simulation does not have any effect on the totaliser or the current flow. The outputs operate as previously set.
When the simulation starts, the value of the totaliser is saved and then the simulated totaliser is set to 0. The simulated flow value then has an effect on the simulated totaliser. When the simulation is finished, the original totaliser value is restored.

During the simulation the original totaliser value remains saved without any changes even if there is a real flow.

5 Installation

▶ Avoid deposits, accumulated gas and air in the pipe system.

5.1 Recommended installation position

Example of an optimised installation:

UK

1

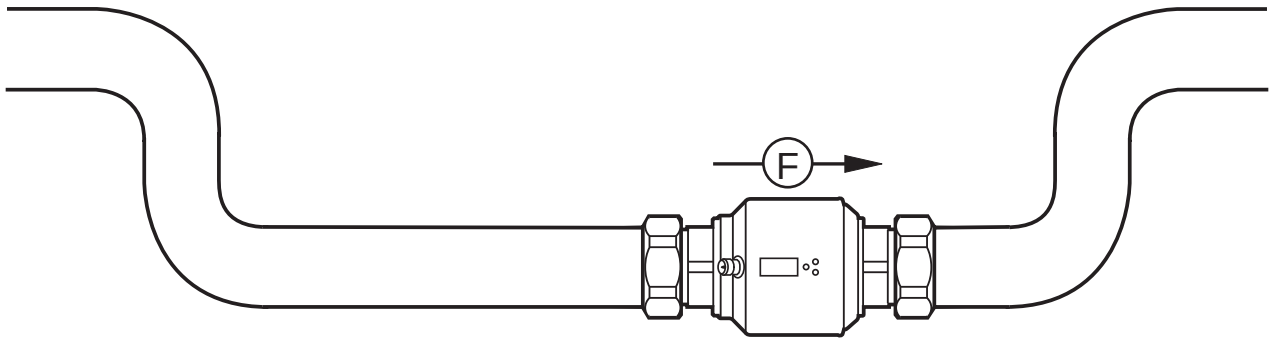

▶ Install the unit so that the measuring pipe is completely filled.

▶ Arrange for inlet and outlet pipe lengths. Disturbances caused by bends, valves, reductions, etc. are compensated for. It applies in particular: No shut-off and control devices are allowed directly in front of the unit.

2

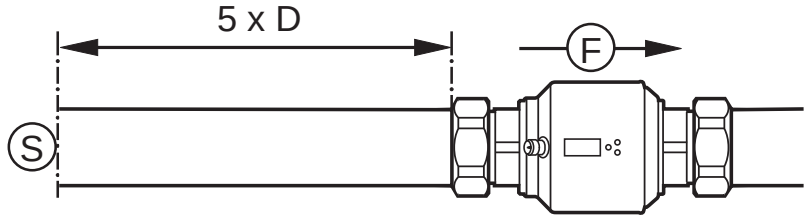

3

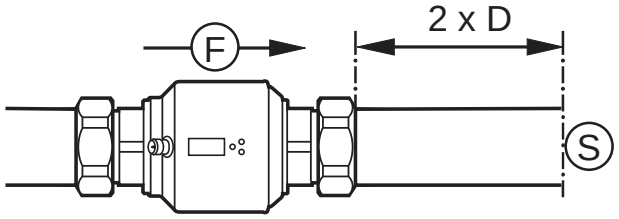

S = disturbance; D = pipe diameter; F = flow direction

▶ Install in front of or in a rising pipe:

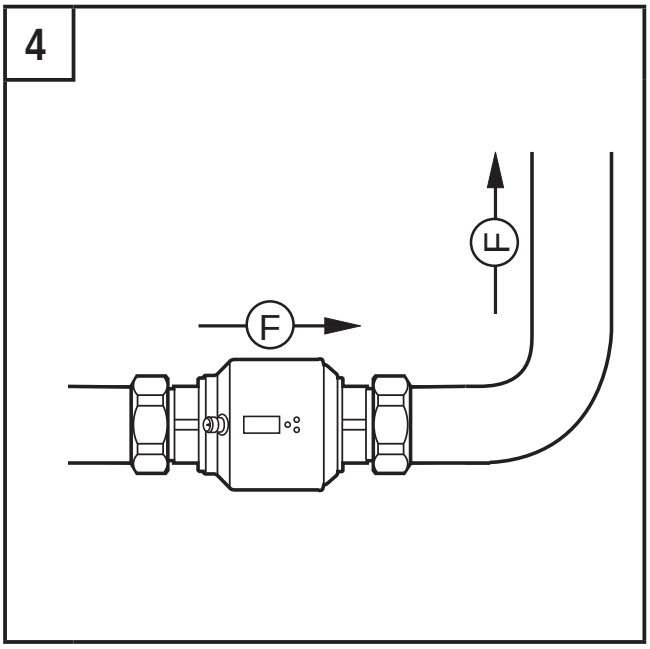

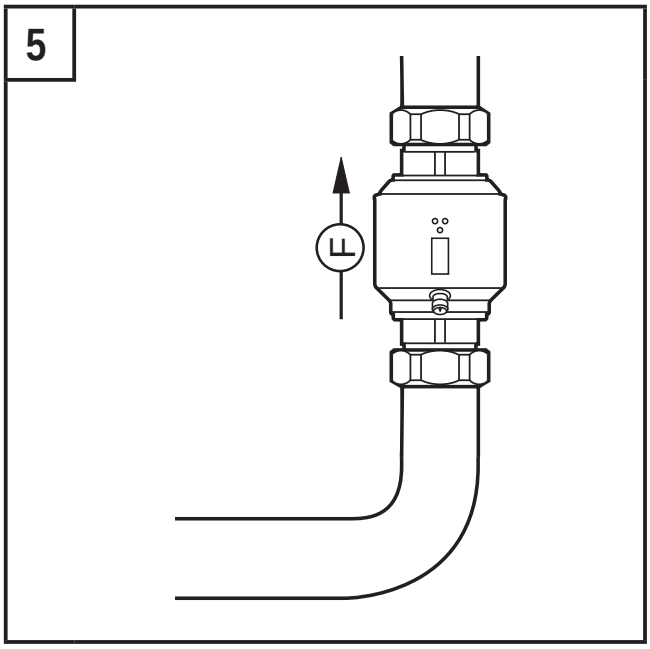

F = flow direction

With empty pipe detection:
▶ Install the unit according to figure 1, 4 or 5.

5.2 Not recommended installation position

▶ Avoid the following installation positions:

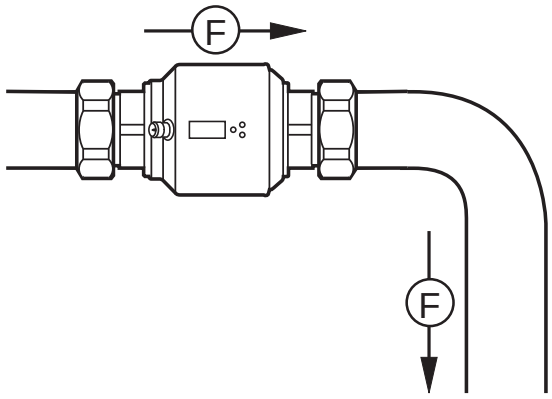

Directly in front of a falling pipe.

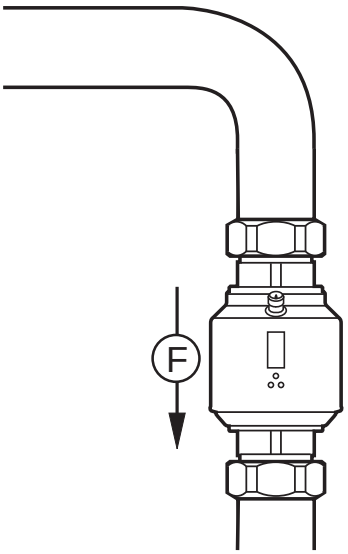

In a falling pipe.

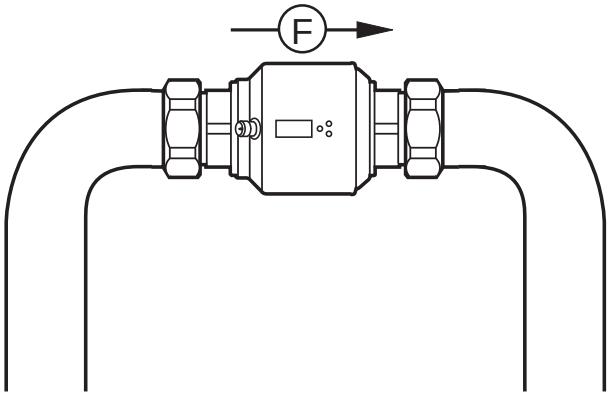

At the highest point of the pipe system.

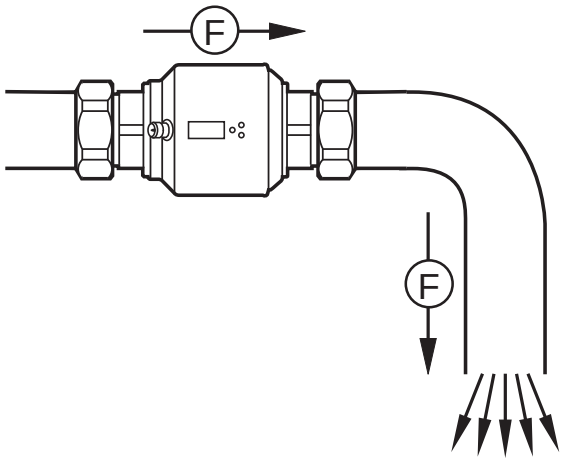

Directly in front of the spout of the pipe.

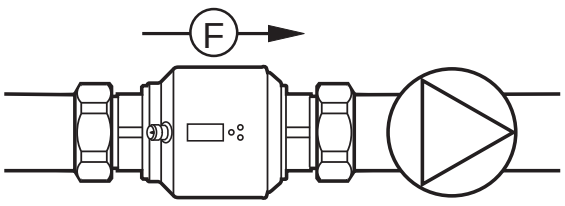

On the suction side of a pump.

F = flow direction

The unit can be installed independently of the orientation if the following is ensured:

- No air bubbles can form in the pipe system.
- The pipes are always completely filled.

5.3 Grounding

If installed in an ungrounded pipe system (e.g. plastic pipes), the unit must be grounded (functional earth).

Ground brackets for the M12 connector are available as accessories (→ www.ifm.com).

5.4 Installation in pipes

The unit can be installed in pipes using adapters. The adapters have to be ordered separately as accessories (→ www.ifm.com).

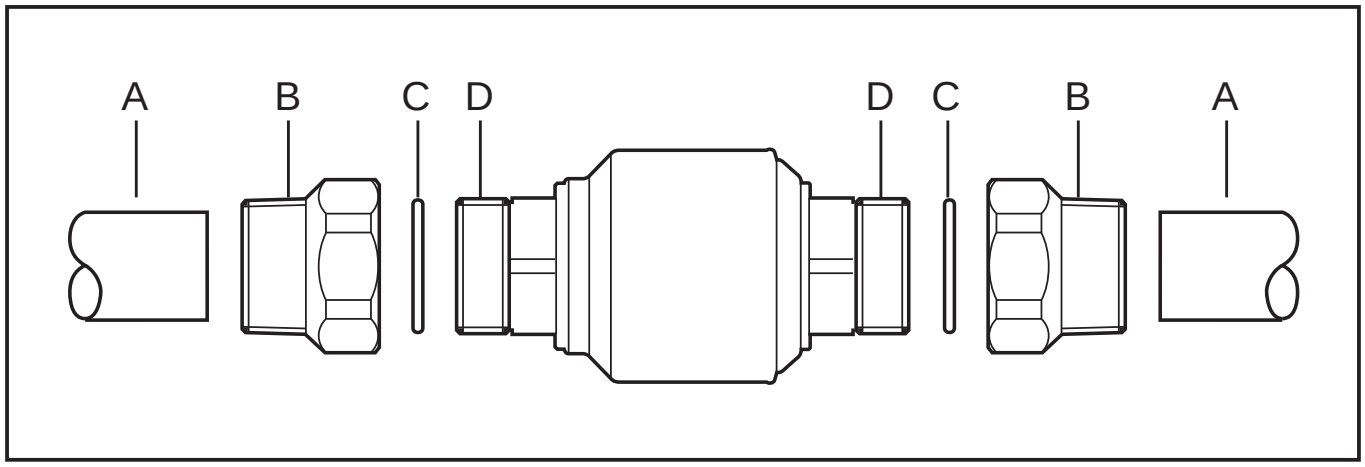

1. Screw the adapter (B) into the pipe (A).
2. Place the seals (C) and install the unit according to the marked flow direction.

   ▶ To mount the adapters on the process connection of the sensor use suitable lubricants.
3. Screw the adapter (B) with the threads (D) until it is hand-tight.
4. Tighten the two adapters in opposite direction (tightening torque: 30 Nm).

After installation air bubbles in the system can affect the measurement.
Corrective measures:

▶ Rinse the system after installation for ventilation (rinsing quantity > 15 l/min.).

In case of horizontal installation: As a result of design requirements a small quantity of the medium always remains in the measuring channel after switching off the pump.

6 Electrical connection

The unit must be connected by a qualified electrician.
The national and international regulations for the installation of electrical equipment must be adhered to.
Voltage supply according to EN 50178, SELV, PELV.

▶ Disconnect power.

▶ Connect the unit as follows:

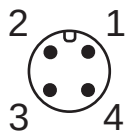

BK: black
BN: brown
BU: blue
WH: white

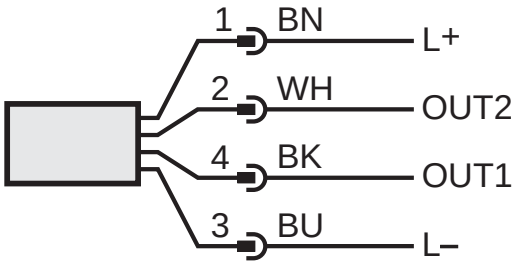

Colours to DIN EN 60947-5-6

Sample circuits:

2 x positive switching

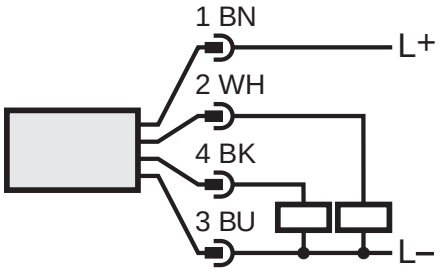

2 x negative switching

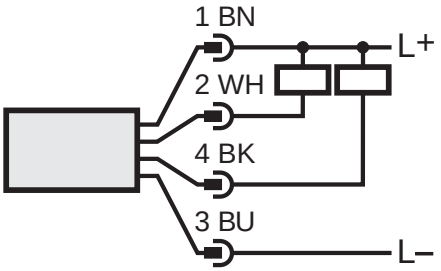

1 x positive switching / 1 x analogue

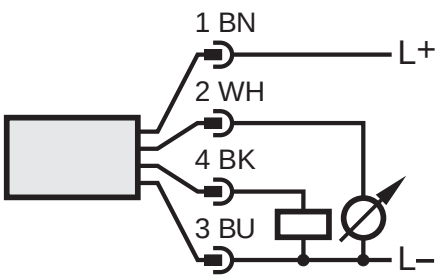

1 x negative switching / 1 x analogue

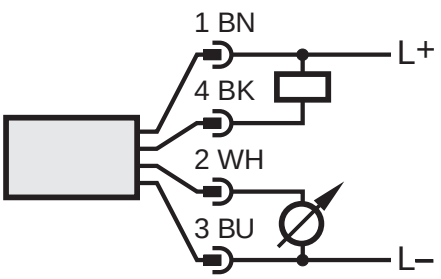

E-356

Pin 1	L+
Pin 3	L-
Pin 4 (OUT1)	• Switching signal: limit values for volumetric flow • Pulse signal: 1 pulse every time the defined volumetric flow quantity is reached. • Switching signal: quantity meter reached preset value • Frequency signal for volumetric flow quantity • Switching signal: empty pipe detection • IO-Link
Pin 2 (OUT2/ InD)	• Switching signal: limit values for volumetric flow • Switching signal: limit values for temperature • Analogue signal for volumetric flow quantity • Analogue signal for temperature • Switching signal: empty pipe detection • Input for external reset signal (InD)

7 Operating and display elements

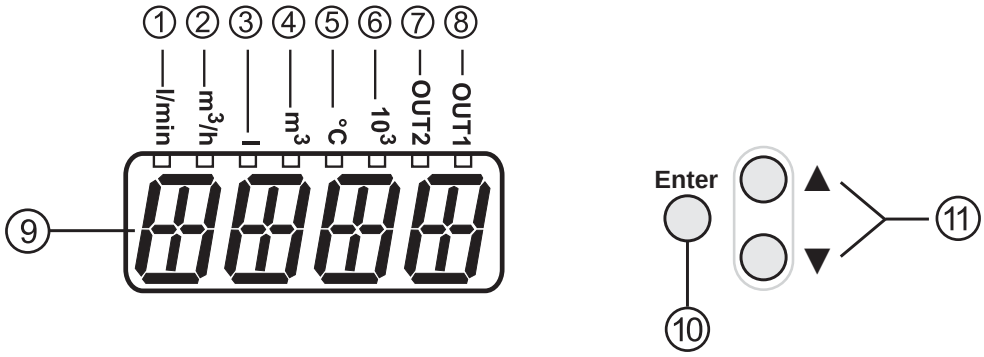

1 to 8: Indicator LEDs
• LEDs 1-6 = Unit of the currently represented numerical value → 11.1 Reading the process value • LED 7 = switching state of output OUT2 / of input InD • LED 8 = switching status of output OUT1
9: Alphanumeric display, 4 digits
• Current volumetric flow quantity (with setting [SELd] = [FLOW]) • Meter reading of the totaliser (with setting [SELd] = [TOTL]) • Current medium temperature (with setting [SELd] = [TEMP]) • Parameters and parameter values

10: [Enter] button
• Selecting the parameters • Reading the set values • Confirming the parameter values Representation in → 8 Menu: ○
11: Buttons up [▲] and down [▼]
• Selection of the parameters • Activation of the setting functions • Changing the parameter values • Change of the display unit in the normal operating mode (Run mode) • Locking / unlocking Representation in → 8 Menu: ▲ and ▼

8 Menu

8.1 Process value display

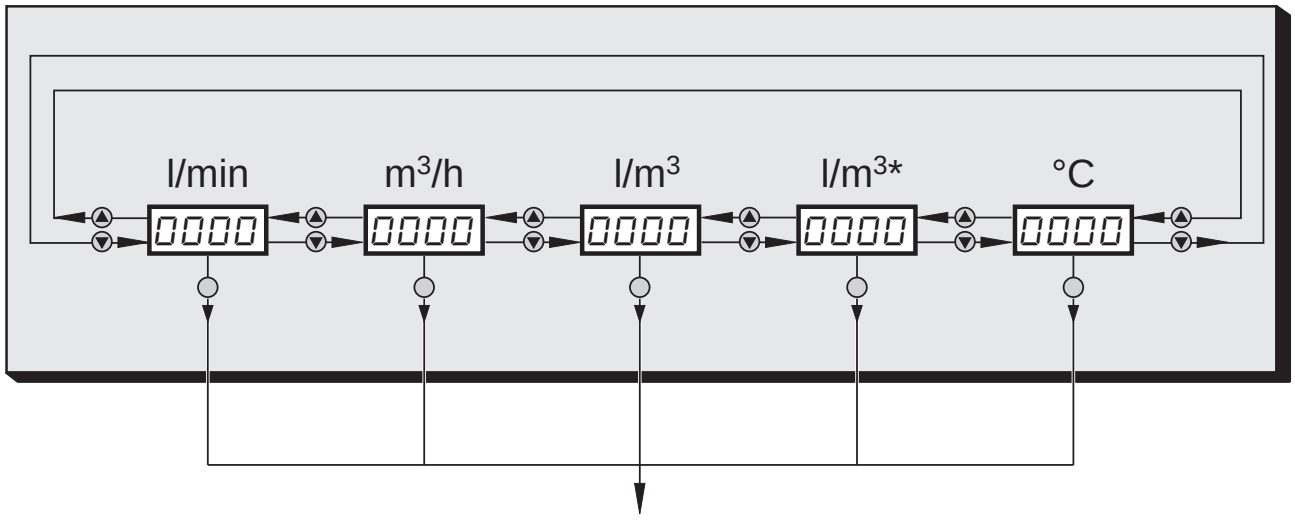

* Stored totaliser value

↓ Main menu

8.2 Main menu

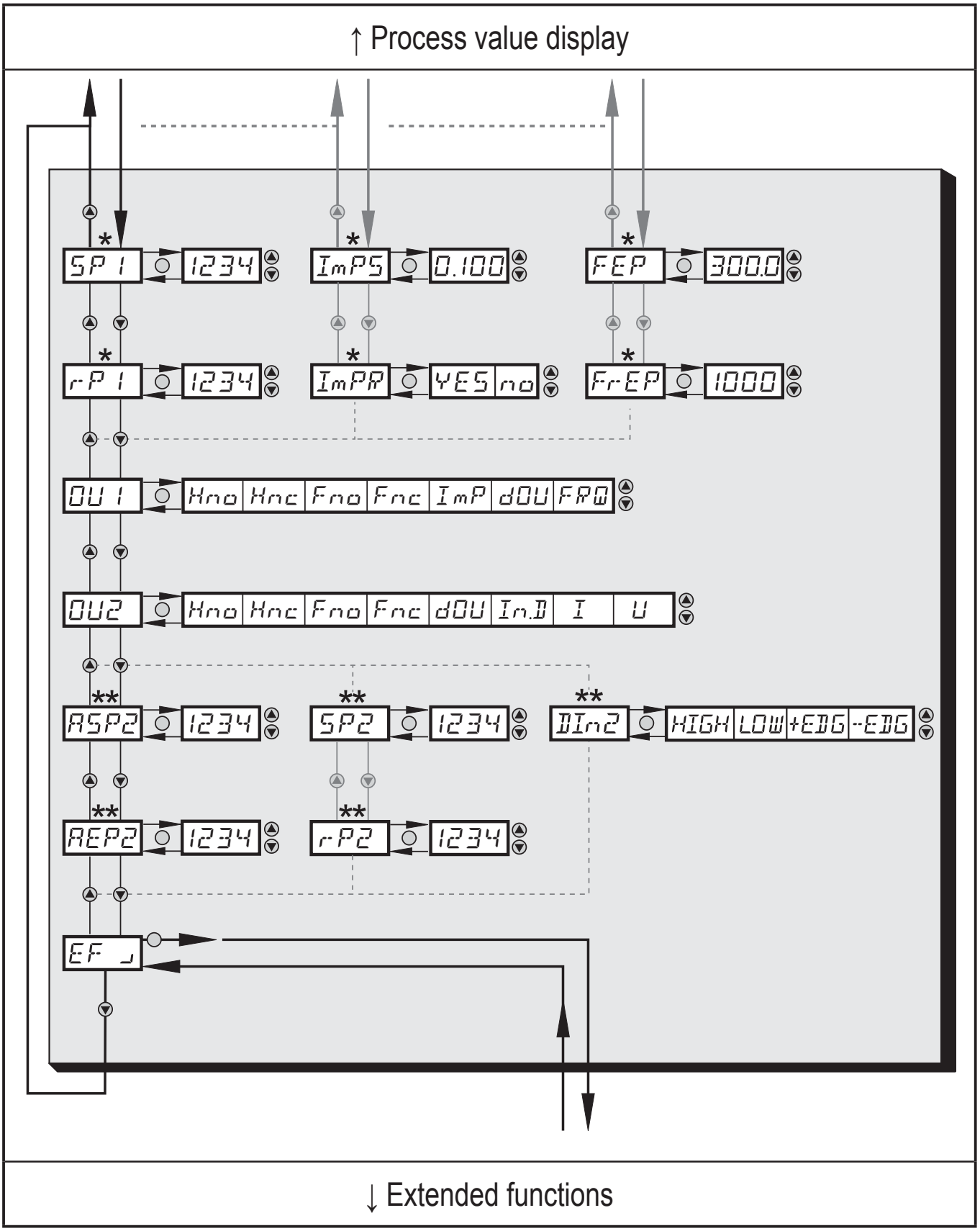

* The parameters are only displayed when selected at OU1.
** The parameters are only displayed when selected at OU2.

8.2.1 Explanation main menu

SP1	Maximum limit value for the set process value
rP1	Minimum limit value for the set process value
ImPS	Pulse value
ImPR	Pulse reset
FEP	Frequency output of the end point of the flow value
FrEP	Frequency output of the end point of the frequency
OU1	Output function for OUT1 (volumetric flow or consumed quantity)
OU2	Output function for OUT2 (volumetric flow or temperature)
	As an alternative: configure OUT2 (Pin2) as input for external reset signal: Setting: [OU2] = [In.D]
Hno	Hysteresis normally open
Hnc	Hysteresis normally closed
Fno	Window normally open
Fnc	Window normally closed
ImP	Pulse output
FRQ	Frequency output
dOU	Diagnostic output
I	Current output
U	Voltage output
In.D	External input
ASP2	Analogue start value for the set process value
AEP2	Analogue end value for the set process value
SP2	Maximum limit value for the set process value
rP2	Minimum limit value for the set process value
DIn2	Configuration of the input (Pin2) for counter reset
EF	Extended functions / opening of menu level 2

8.3 Extended functions – Basic settings

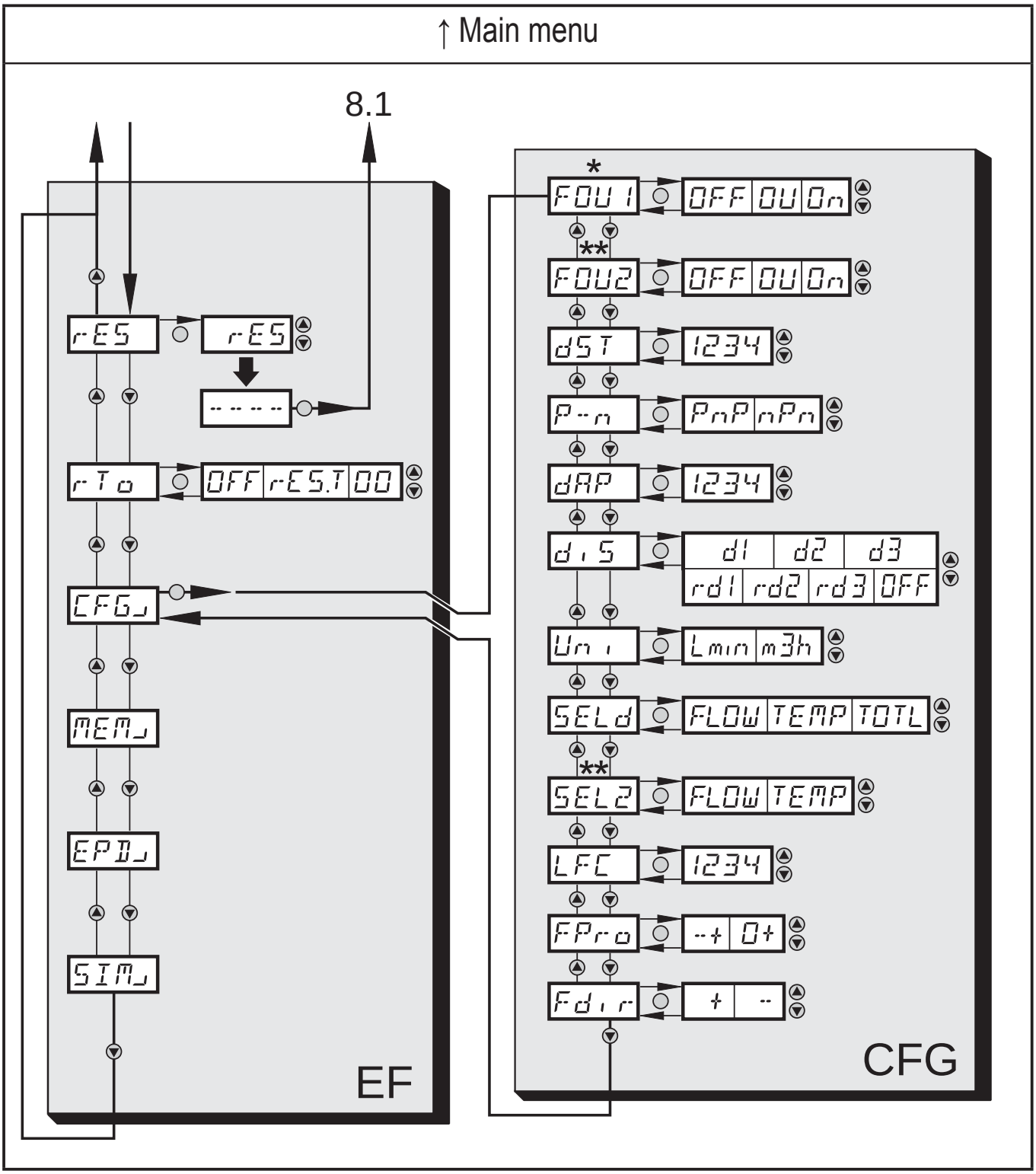

* The parameters are only displayed when selected at OU1.
** The parameters are only displayed when selected at OU2.

8.3.1 Explanation extended functions (EF)

rES	Restore the factory setting
rTo	Counter reset: manual reset / time-controlled reset
CFG	Submenu basic settings
MEM	Submenu min/max memory
EPD	Submenu empty pipe
SIM	Submenu simulation

8.3.2 Submenu basic settings (CFG)

FOU1	Behaviour of output 1 in case of an error
FOU2	Behaviour of output 2 in case of an error
dST	Start-up delay of volumetric flow monitoring
P-n	Output logic: pnp / npn
dAP	Measured value damping / damping constant in seconds
diS	Update rate and orientation of the display
Uni	Standard unit of measurement for volumetric flow: litres/minute or cubic metres/hour
SELd	Standard measuring unit of the display: volumetric flow value / medium temperature / meter reading
SEL2	Standard unit of measurement for evaluation via OUT2
LFC	Low flow cut-off
FPro	Totaliser: behaviour with negative flow
Fdir	Direction of flow

8.4 Extended functions – Min/max memory – Emtpy pipe – Simulation

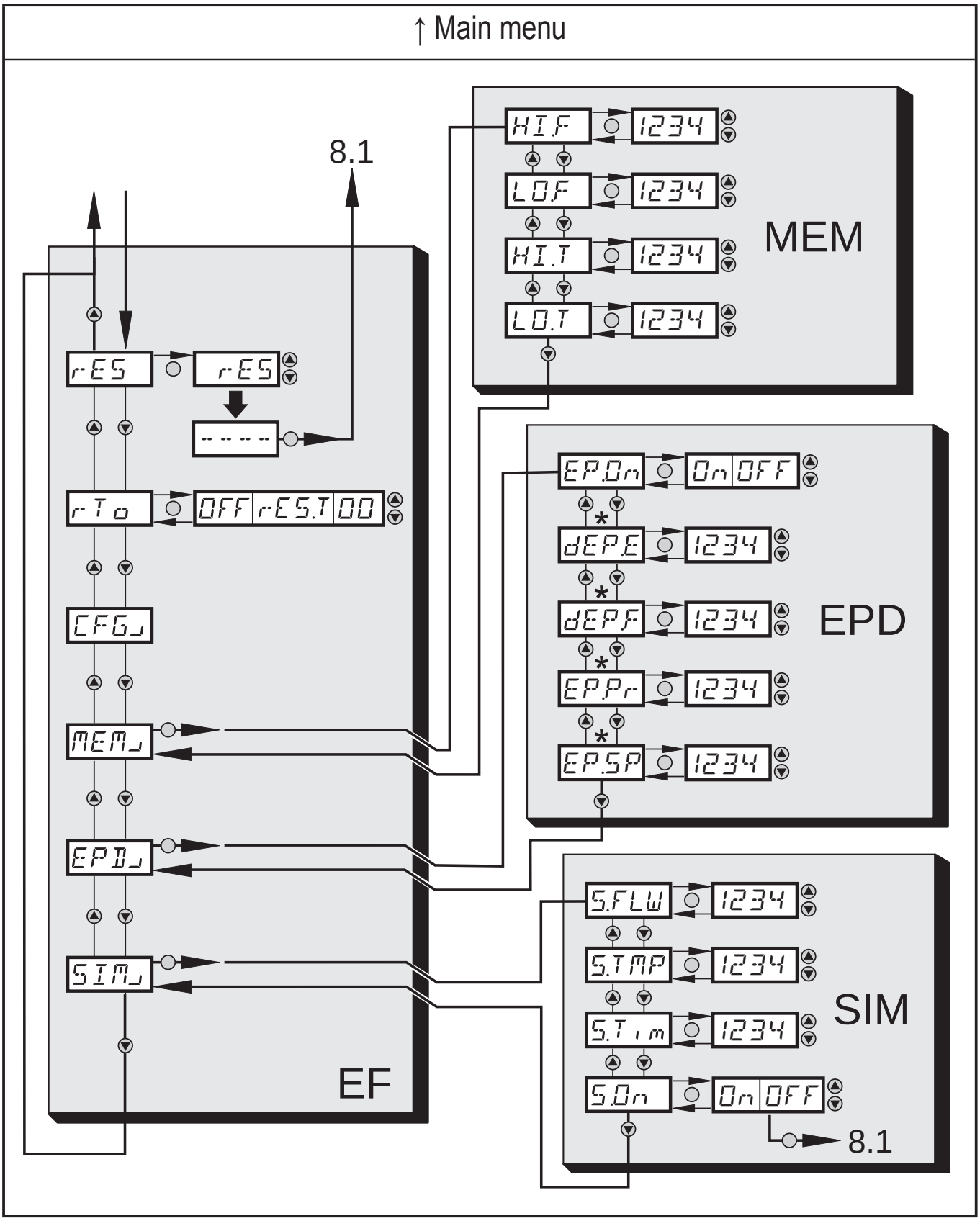

* Parameters are only displayed for the selection EP.On = On.

8.4.1 Explanation extended functions (EF)

rES	Restore the factory setting
rTo	Counter reset: manual reset / time-controlled reset
CFG	Submenu basic settings
MEM	Submenu min/max memory
EPD	Submenu empty pipe
SIM	Submenu simulation

8.4.2 Submenu min/max memory (MEM)

HI.F	Max. value flow
LO.F	Min. value flow
HI.T	Max. value temperature
LO.T	Min. value temperature

8.4.3 Submenu empty pipe (EPD)

EP.On	Empty pipe detection on / off
dEP.E.	Delay time empty signal
dEP.F	Delay time full signal
EP.Pr	Current measured value of empty pipe detection
EP.SP	Switch point of empty pipe detection

8.4.4 Submenu simulation (SIM)

S.FLW	Simulation flow value
S.TMP	Simulation temperature value
S.TIM	Simulation time
S.ON	Simulation start

9 Set-up

After power on and expiry of the power-on delay time (approx. 5 seconds) the unit is in the normal operating mode. It carries out its measurement and evaluation functions and generates output signals according to the set parameters.

- During the power-on delay time the outputs are switched as programmed:
  - ON with normally open function (Hno / Fno)
  - OFF with normally closed function (Hnc / Fnc).
- If output 2 is configured as analogue output, the output signal is at 20 mA (current output) or 10 V (voltage output).

10 Parameter setting

Parameters can be set before installation and set-up of the unit or during operation.

If you change parameters during operation, this will influence the function.

▶ Ensure that there will be no malfunctions in your plant.

During parameter setting the unit remains in the operating mode. It continues to monitor with the existing parameter until the parameter setting has been completed.

⚠ CAUTION

For medium temperatures above 50 °C some parts of the housing can heat up to over 65 °C.

▶ Do not press the pushbuttons manually; instead use another object (e.g. ballpoint pen).

10.1 IO-Link

10.1.1 General information

This unit has an IO-Link communication interface which requires an IO-Link-capable module (IO-Link master) for operation.

The IO-Link interface enables direct access to the process and diagnostic data and provides the possibility to set the parameters of the unit during operation.

In addition communication is possible via a point-to-point connection with a USB adapter cable.

You will find more detailed information about IO-Link at www.ifm.com/gb/io-link.

10.1.2 Device-specific information

You will find the IODDs necessary for the configuration of the IO-Link unit and detailed information about process data structure, diagnostic information and parameter addresses at www.ifm.com/gb/io-link.

10.1.3 Parameter setting tools

You will find all necessary information about the required IO-Link hardware and software at www.ifm.com/gb/io-link.

10.2 Parameter setting in general

Select the parameter

1. Press [Enter] briefly.
2. Press [▲] or [▼] until the requested parameter is displayed**.**

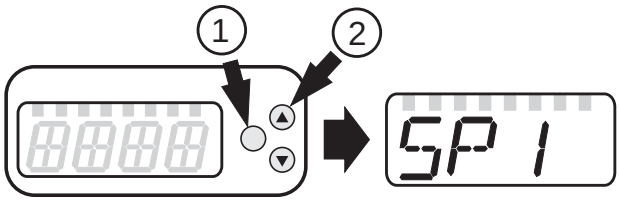

Changing the parameter value

3. Press [Enter] briefly.
   > The currently set value is displayed.
4. Keep [▲] or [▼] pressed for 1 s
   > Display flashes first, then permanent.
5. Change value by pressing [▲] or [▼].

[▲] or [▼] pressed.
> Faster cycle of the numerical values.

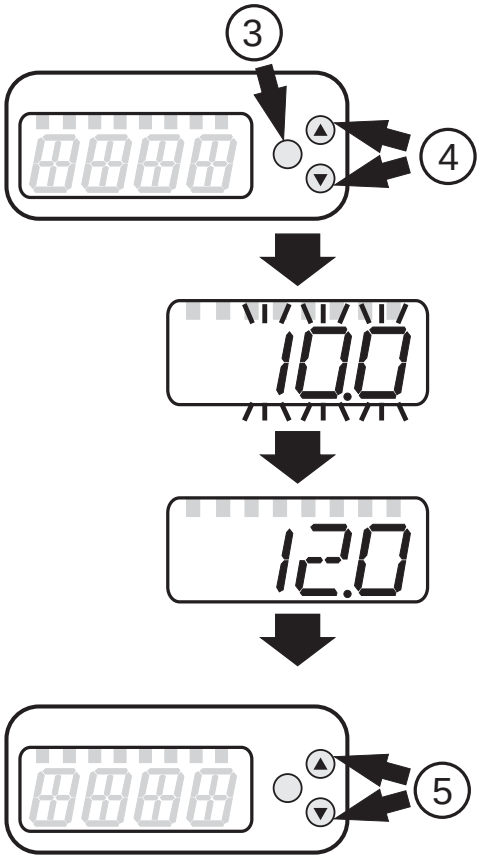

Confirm the parameter value

6. Press [Enter] briefly.

> The parameter is displayed again. The new setting value is saved.

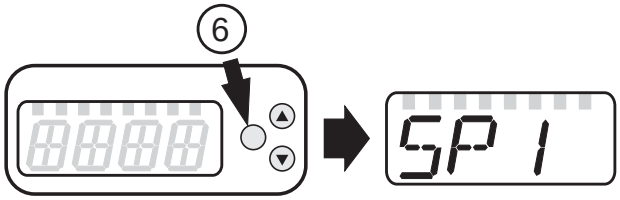

Finish parameter setting and change to the process value display:

▶ Wait for 30 seconds

or

▶ Change from the submenu to the main menu, from the main menu to the process value display with [▲] or [▼].

If [C.Loc] is displayed when an attempt is made to modify a parameter value, an IO-Link communication is active (temporary locking). If [S.Loc] is displayed, the sensor is permanently locked via software. This locking can only be removed using a parameter setting software.

10.2.1 Switching between the menu levels

Change to the submenu	Switching to the next submenu via the parameters [EF], [CFG], [MEM], [EPD] or [SIM]. ▶ Select a submenu with [▲] or [▼] and switch to the submenu by pressing [Enter].
Back to the process value display	▶ Wait for 30 seconds or ▶ Change from the submenu to the main menu, from the main menu to the process value display with [▲] or [▼].

10.2.2 Locking / unlocking

The unit can be locked electronically to prevent unintentional settings. Setting at the factory: not locked.

Locking is also possible via an IO-Link capable parameter setting tool.

Locking	▶ Make sure that the unit is in the normal operating mode. ▶ Press [▲] and [▼] simultaneously for 10 s. > [Loc] is displayed. During operation: [LOC] is briefly displayed if you try to change parameter values.
Unlocking	▶ Press [▲] and [▼] simultaneously for 10 s. > [uLoc] is displayed.

10.2.3 Timeout

If no button is pressed for 30 s during parameter setting, the unit returns to the operating mode with unchanged parameter.

10.3 Settings for consumed quantity monitoring

10.3.1 Settings for limit value monitoring with OUT1

▶ Select [OU1] and set the switching function:
- [Hno] = hysteresis function/NO,
- [Hnc] = hysteresis function/NC,
- [Fno] = window function/NO,
- [Fnc] = window function/NC.

▶ Select [SP1] and set the value at which the output switches.
▶ Select [rP1] and set the value at which the output switches off.

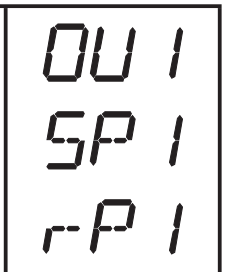

10.3.2 Settings for limit value monitoring with OUT2

- ▶ Select [SEL2] and set [FLOW].
- ▶ Select [OU2] and set the switching function.
  - [Hno] = hysteresis function/NO,
  - [Hnc] = hysteresis function/NC,
  - [Fno] = window function/NO,
  - [Fnc] = window function/NC.
- ▶ Select [SP2] and set the value at which the output switches.
- ▶ Select [rP2] and set the value at which the output switches off.

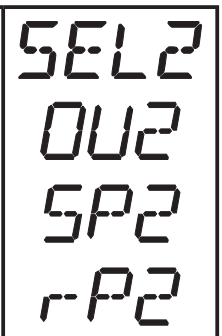

10.3.3 Setting the analogue value for volumetric flow

- ▶ Select [SEL2] and set [FLOW].
- ▶ Select [OU2] and set the function:
  - [I] = current signal proportional to volumetric flow (4…20 mA);
  - [U] = voltage signal proportional to volumetric flow (0…10 V).
- ▶ Select [ASP2] and set the value at which the minimum value is provided.
- ▶ Select [AEP2] and set the value at which the maximum value is provided.

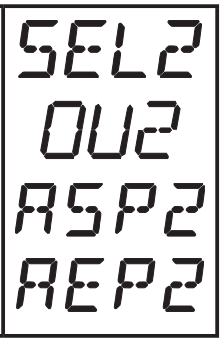

10.3.4 Setting the frequency value for volumetric flow

- ▶ Select [OU1] and set [FRQ].
- ▶ Select [FEP] and set the flow value at which the frequency set in FrEP is provided.
- ▶ Select [FrEP] and set the frequency.

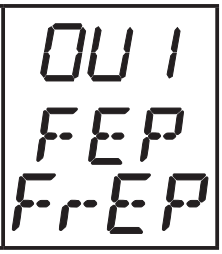

10.4 Settings for consumed quantity monitoring

10.4.1 Settings for quantity monitoring via pulse output

- ▶ Select [OU1] and set [ImP].
- ▶ Select [ImPS] and set the volumetric flow quantity at which 1 pulse is provided (→ 10.4.3).
- ▶ Select [ImPR] and set [YES].
- > Pulse repetition is active. Output 1 provides a counting pulse each time the value set in [ImPS] is reached.

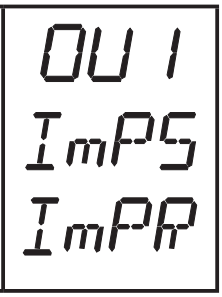

10.4.2 Settings for quantity monitoring via the preset counter

- ▶ Select [OU1] and set [ImP].
- ▶ Select [ImPS] and set the volumetric flow quantity at which output 1 switches (→ 10.4.3).
- ▶ Select [ImPR] and set [no].
- > Pulse repetition is not active. The output switches ON if the value set in [ImPS] is reached. It remains set until the counter is reset.



10.4.3 Setting the pulse value



UK

- ▶ Select [ImPS].
- ▶ Press [Enter] briefly.
- > The currently set value is displayed.
- ▶ Keep [▲] or [▼] pressed until "cccc" is displayed.
- ▶ Press [▲] or [▼] to select the setting range.
- > With each press of the pushbutton the display changes to the next setting range (decimal point shifts and / or LED changes).
- ▶ Press [Enter] to confirm the setting range.
- ▶ Press [▲] or [▼] until the requested numerical value is displayed.
- ▶ Press [Enter] briefly.

Setting ranges:

LED*	Unit	Display	Value	Step increment
3	l	000.1...999.9	0.1...999.9 l	0.1 l
4	m³	0.001...9.999	0.001...9.999 m³	0.001 m³
4	m³	00.01...99.99	0.01...99.99 m³	0.01 990 m³
4	m³	000.1...999.9	0,1...999,9 990 m³	0.1 990 m³
4 + 6	m³ x 10³	0.001...9.999	1...9999 m³	1 m³
4 + 6	m³ x 10³	00.01...99.99	10...99 990 m³	10 m³
4 + 6	m³ x 10³	000.1...999.9	100...999 900 m³	100 m³

* indicator LED → 7 Operating and display elements

10.4.4 Manual counter reset

- ▶ Select [rTo] and set [rES.T].
- > The counter is reset to zero.



10.4.5 Time-controlled counter-reset

▶ Select [rTo] and set the requested value (intervals of hours, days or weeks). > The counter is reset automatically with the value now set.	

10.4.6 Deactivation of the counter reset

▶ Select [rTo] and set [OFF]. > The meter is only reset after overflow (= factory setting).	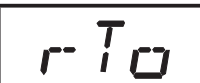

10.4.7 Configure counter reset using an external signal

▶ Select [OU2] and set [InD]. ▶ Select [DIn2] and set the reset signal: - [HIGH] = reset for high signal, - [LOW] = reset for low signal, - [+EDG] = reset for rising edge, - [-EDG] = reset for falling edge.	

10.5 Settings for temperature monitoring

10.5.1 Settings for limit value monitoring with OUT2

▶ Select [SEL2] and set [TEMP]. ▶ Select [OU2] and set the switching function. - [Hno] = hysteresis function/NO, - [Hnc] = hysteresis function/NC, - [Fno] = window function/NO, - [Fnc] = window function/NC. ▶ Select [SP2] and set the value at which the output switches. ▶ Select [rP2] and set the value at which the output switches off.	

10.5.2 Setting the analogue value for temperature

▶ Select [SEL2] and set [TEMP]. ▶ Select [OU2] and set the function: - [I] = temperature-proportional current signal (4…20 mA); - [U] = temperature-proportional voltage signal (0…10 V). ▶ Select [ASP2] and set the value at which the minimum value is provided. ▶ Select [AEP2] and set the value at which the maximum value is provided.	

10.6 User settings (optional)

10.6.1 Setting of the standard unit of measurement for volumetric flow

▶ Select [Uni] and set the unit of measurement: [Lmin] or [m3h]. The setting only has an effect on the volumetric flow value. The counter values (consumed quantity) are automatically displayed in the unit of measurement providing the highest accuracy.	

10.6.2 Configuration of the standard display

▶ Select [SELd] and determine the standard measuring unit: - [FLOW] = the current volumetric flow value in the standard unit of measurement is displayed. - [TOTL] = display indicates the current meter count in l, m^3 or 1000 m^3. - [TEMP] = the current medium temperature in °C is displayed. ▶ Select [diS] and set the update rate and orientation of the display: - [d1] = update of the measured values every 50 ms. - [d2] = update of the measured values every 200 ms. - [d3] = update of the measured values every 600 ms. - [rd1], [rd2], [rd3] = display as for d1, d2, d3; rotated by 180°. - [OFF] = the display is switched off in the operating mode.	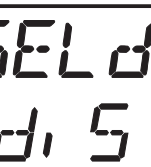

10.6.3 Changing the direction of the flow rate measurement

▶ Select [Fdir] and set the direction of flow: [+] = flow in the direction of the flow arrow (= factory setting) [-] = flow against the flow arrow ▶ label over the arrow	

10.6.4 Setting the output logic

▶ Select [P-n] and set [PnP] or [nPn].	

10.6.5 Setting the start-up delay

▶ Select [dST] and set the numerical value in seconds.	

10.6.6 Setting the measured value damping

▶ Select [dAP] and set the damping constant in seconds (τ value 63 %).	

10.6.7 Setting the error behaviour of the outputs

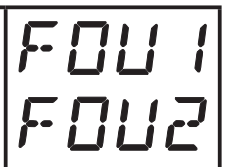

▶ Select [FOU1] and set the value:

1. Switching output:
   - [On] = output 1 switches ON in case of an error.
   - [OFF] = output 1 switches OFF in case of an error.
   - [OU1] = output 1 switches irrespective of the error as defined with the parameters.
2. Frequency output:
   - [On] = 130% of FrEP
   - [OFF] = 0 Hz
   - [OU1] = continues running

▶ Select [FOU2] and set the value:
- [On] = output 2 switches ON in case of an error, the analogue signal goes to the upper error value.
- [OFF] = output 2 switches OFF in case of an error, the analogue signal goes to the lower error value.
- [OU2] = output 2 switches irrespective of the error as defined with the parameters. The analogue signal corresponds to the measured value.

10.6.8 Configuring the empty pipe detection as diagnostic output

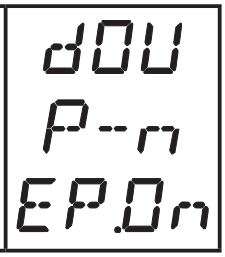

▶ Select [OU1] or [OU2] and set [dOU].
▶ Select [P-n] and set [PnP] or [nPn].

The empty pipe detection is only effective if it is activated at [EP. On] → 10.6.9. When the empty pipe state is detected, the diagnostic output is inactive.

10.6.9 Activating / deactivating empty pipe detection



▶ Select [EP.On] and set the function:
- [OFF] = empty pipe detection deactivated.
- [On] = empty pipe detection activated.

10.6.10 Time-delay empty pipe detection



▶ Select [dEP.E] and set the delay time from 0…30 s, at which the signal should be provided when the pipe is empty.
▶ Select [dEP.F] and set the delay time from 0…30 s, at which the signal should be provided when the pipe is full.

10.6.11 Setting of the empty pipe detection

▶ Select [EP.Pr] to display the current value of the empty pipe detection in percent. ▶ Select [EP.SP] and set the switch point of empty pipe detection.	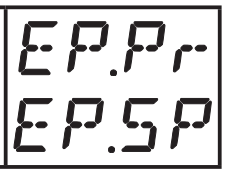

10.6.12 Setting the counting method of the totaliser

▶ Select [FPro] and set the value: [-+] = totalling the volumetric flow values with the correct sign. [0+] = totalling only positive volumetric flow values.	

10.6.13 Setting the low flow cut-off

▶ Select [LFC] and set the limit value.	

10.7 Service functions

10.7.1 Reading the min/max values for the volumetric flow

▶ Select [HI.F] or [LO.F] [HI.F] = max. value, [LO.F] = min. value. Delete memory: ▶ Select [HI.F] or [LO.F]. ▶ Press [Enter] briefly. ▶ Keep [▲] or [▼] pressed. > [----] is displayed. ▶ Press [Enter] briefly. It makes sense to delete the memories as soon as the unit operates under normal operating conditions for the first time.	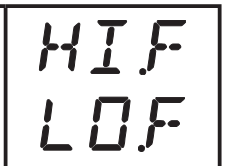

10.7.2 Reading the min/max values for the temperature

▶ Select [HI.T] or [LO.T] [HI.T] = max. value, [LO.T] = min. value. Delete memory: ▶ Select [HI.T] or [LO.T]. ▶ Press [Enter] briefly. ▶ Keep [▲] or [▼] pressed. > [----] is displayed. ▶ Press [Enter] briefly. It makes sense to delete the memories as soon as the unit operates under normal operating conditions for the first time.	

10.7.3 Simulation menu

▶ Select [S.FLW] and set the flow value to be simulated. ▶ Select [S.TMP] and set the temperature value to be simulated. ▶ Select [S.Tim] and set the time of the simulation in minutes. ▶ Select [S.On] and set the function: - [On]: The simulation starts. The values are simulated for the time set at [S.Tim]. [SIM] is displayed simultaneously with the process values. Cancel with [Enter]. - [OFF]: The simulation is not active.	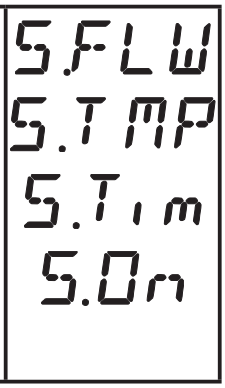

10.7.4 Resetting all parameters to factory setting

▶ Select [rES]. ▶ Press [Enter] briefly. ▶ Keep [▲] or [▼] pressed. > [----] is displayed. ▶ Press [Enter] briefly. For the factory settings please refer to the end of these instructions → 13. We recommend taking down your own settings in that table before carrying out a reset.	

11 Operation

11.1 Reading the process value

The LEDs 1-6 signal which process value is currently displayed.The process value to be displayed as standard (temperature, flow velocity or meter reading of the totaliser) can be preset → 10.6.2 Configuration of the standard display. A standard unit of measurement can be defined for the flow velocity (l/min or m^3/h → 10.6.1).

Further process values can be read in addition to the preset standard display:

▶ Press the buttons [▲] or [▼].

> The LED of the selected process value display is lit and the current process value is displayed.

> After 30 seconds the display changes to the standard display.

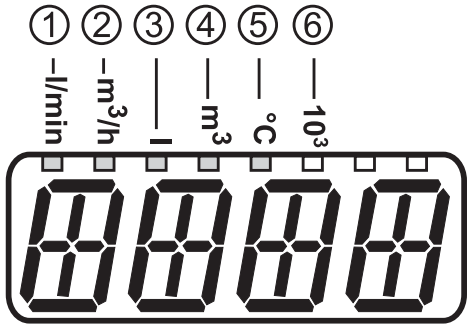

LED			Process value display	Unit
1	□		Current flow volume per minute	l/min
2	□		Current flow volume per hour	m^3 / h
3	□	Totaliser *	Current consumed quantity since the last reset	l
3	⌸		Consumed quantity before the last reset	L
4	□		Current consumed quantity since the last reset	m^3
4	⌸		Consumed quantity before the last reset	m^3
4 + 6	□		Current consumed quantity since the last reset	m^3 x 10^3
4 + 6	⌸		Consumed quantity before the last reset	m^3 x 10^3
5	□		Current medium temperature	°C

□ LED is lit; ⌸ LED flashes

* The consumed quantity is automatically displayed in the unit of measurement providing the highest accuracy.

11.2 Reading the parameter value

To display the currently set parameter value, take the following steps:

Select the parameter

1. Press [Enter] briefly.
2. Press [▲] or [▼] until the requested parameter is displayed**.**

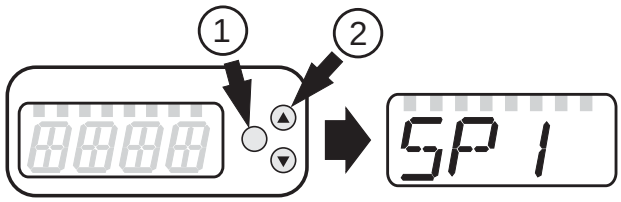

Display the parameter value

3. Press [Enter] briefly.

> The currently set value is displayed for 30 s.

By pressing [Enter] briefly several times, the display switches between parameter and parameter value.

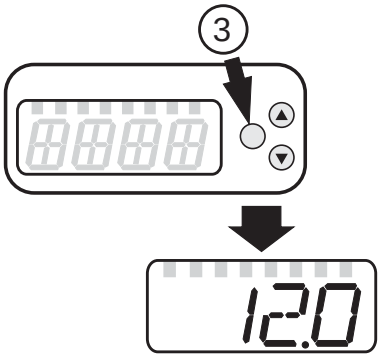

Switching to the process value display

▶ Wait for 30 seconds

or

▶ Change from the submenu to the main menu, from the main menu to the process value display with [▲] or [▼].

11.3 Error indications

	Warning message
[SC1]	Short circuit in OUT1. LED8 for OUT1 flashes (→ 7 Operating and display elements).
[SC2]	Short circuit in OUT2. LED7 for OUT2 flashes (→ 7 Operating and display elements).
[SC]	Short circuit in both outputs. LED7 and LED8 flash (→ 7 Operating and display elements).
[OL]	Detection zone of volumetric flow or temperature exceeded. Measured value between 120 % and 130 % of the final value of the measuring range.
[UL]	Below the detection zone of volumetric flow or temperature. Measured value between -120 % and -130 % of the final value of the measuring range.
[Err]	• Unit faulty / malfunction. • Measured value greater than 130 % of the final value of the measuring range. • Measured value lower than -130 % of the final value of the measuring range.
[C.Loc]	Setting pushbuttons locked, parameter change rejected. Active IO-Link communication.
[S.Loc]	Setting pushbuttons locked, parameter change rejected. Unlock using parameter setting software.
[SEnS]	• Sensor signal invalid. • Measuring pipe not sufficiently filled. • Medium with too low a conductivity.
[IOE.n]	Malfunctioning. The unit is faulty and must be replaced.

12 Technical data

Technical data and scale drawing at www.ifm.com.

13 Factory setting

	Factory setting	User setting
SP1	20 % *	
rP1	19.5 % *	
ImPS	0.1	
ImPR	YES	
OU1	Hno	
OU2	I	
SP2 (FLOW)	40 % *	
rP2 (FLOW)	39.5 % *	
SP2 (TEMP)	20 °C	
rP2 (TEMP)	-19.6 °C	
ASP2 (FLOW)	0 % *	
AEP2 (FLOW)	100 % *	
ASP2 (TEMP)	-20 °C	
AEP2 (TEMP)	80 °C	
FEP	100 % *	
FrEP	1 kHz	
FDir	+	
FPro	- +	
LFC	5 l/min	
DIn2	+EDG	
FOU1	OFF	
FOU2	OFF	
dST	0	
P-n	PnP	
dAP	0.6 s	
rTo	OFF	
diS	d2	

Uni	**Lmin**	
SELd	**FLOW**	
SEL2	**FLOW**	
EP.On	**OFF**	
dEP.E	**0 s**	
dEP.F	**2 s**	
EP.SP	**75 %**	
S.FLW	**20 %**	
S.TMP	**20 °C**	
S.Tim	**3 min**	

* of the final value of the measuring range

BA00082D/06/EN/16.15
71280120

Valid as of software version
V 1.04.00 (device software)

FT-102/2 - Flow meter, Endress, Promag 10D50 2"10D50-4LGA1RA0B4AAM1 Compact head

Operating Instructions
Proline Promag 10
HART

Electromagnetic flowmeter

HART®
FIELD COMMUNICATION PROTOCOL

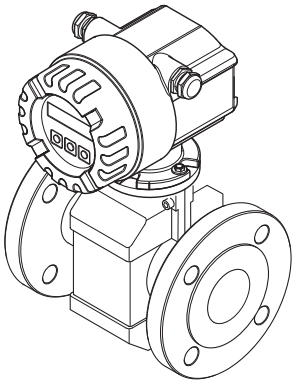
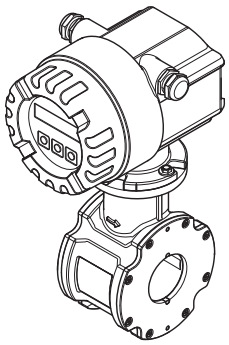
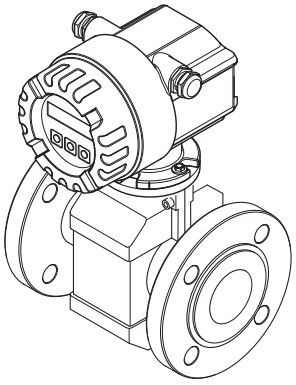
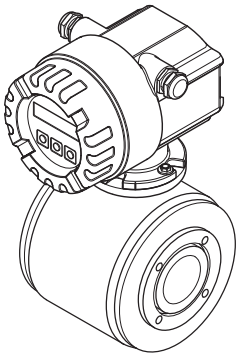

Endress+Hauser
People for Process Automation

E-381

Table of contents

1 Safety instructions 4

1.1 Designated use 4
1.2 Installation, commissioning and operation 4
1.3 Operational safety 4
1.4 Return 5
1.5 Notes on safety conventions and icons 5

2 Identification 6

2.1 Device designation 6
2.2 Certificates and approvals 8
2.3 Registered trademarks 8

3 Installation 9

3.1 Incoming acceptance, transport and storage 9
3.2 Installation conditions 11
3.3 Installation instructions 19
3.4 Post-installation check 41

4 Wiring 42

4.1 Connecting the remote version 42
4.2 Connecting the measuring unit 48
4.3 Potential equalization 50
4.4 Degree of protection 53
4.5 Post-connection check 54

5 Operation 55

5.1 Display and operating elements 55
5.2 Brief operating instructions on the function matrix 56
5.3 Displaying error messages 58
5.4 Communication 59

6 Commissioning 66

6.1 Function check 66
6.2 Switching on the measuring device 66
6.3 Brief commissioning guide 66
6.4 Commissioning after installing a new electronics board 67
6.5 Empty-pipe/full-pipe adjustment 68

7 Maintenance 69

7.1 Exterior cleaning 69
7.2 Seals 69

8 Accessories 70

8.1 Device-specific accessories 70
8.2 Measuring principle-specific accessories 70
8.3 Communication-specific accessories 71
8.4 Service-specific accessories 72

9 Troubleshooting 73

9.1 Troubleshooting instructions 73
9.2 System error messages 74
9.3 Process error messages 76
9.4 Process errors without messages 76
9.5 Response of outputs to errors 77
9.6 Spare parts 78
9.7 Return 82
9.8 Disposal 82
9.9 Software history 82

10 Technical data 83

10.1 Technical data at a glance 83

11 Appendix 108

11.1 Illustration of the function matrix 108
11.2 Group SYSTEM UNITS 109
11.3 Group OPERATION 111
11.4 USER INTERFACE 112
11.5 Group TOTALIZER 113
11.6 Group CURRENT OUTPUT 114
11.7 Group PULSE/STATUS OUTPUT 116
11.8 Group COMMUNICATION 121
11.9 Group PROCESS PARAMETER 122
11.10 Group SYSTEM PARAMETER 124
11.11 Group SENSOR DATA 127
11.12 Group SUPERVISION 129
11.13 Group SIMULATION SYSTEM 131
11.14 Group SENSOR VERSION 131
11.15 Group AMPLIFIER VERSION 131
11.16 Factory settings 132

Index 135

1 Safety instructions

1.1 Designated use

The measuring device described in this Operating Manual is to be used only for measuring the flow rate of conductive fluids in closed pipes.

Most liquids can be measured as of a minimum conductivity of 50 µS/cm.

Examples:
- Acids, alkalis
- Drinking water, wastewater, sewage sludge
- Milk, beer, wine, mineral water, etc.

Resulting from incorrect use or from use other than that designated the operational safety of the measuring devices can be suspended. The manufacturer accepts no liability for damages being produced from this.

1.2 Installation, commissioning and operation

Please note the following:
- Installation, connection to the electricity supply, commissioning and maintenance of the device must be carried out by trained, qualified specialists authorized to perform such work by the facility's owner-operator. The specialist must have read and understood this Operating Manual and must follow the instructions it contains.
- The device must be operated by persons authorized and trained by the facility's owner-operator. Strict compliance with the instructions in the Operating Manual is mandatory.
- With regard to special fluids, including fluids used for cleaning, Endress+Hauser will be happy to assist in clarifying the corrosion-resistant properties of wetted materials. However, minor changes in temperature, concentration or in the degree of contamination in the process may result in variations in corrosion resistance. For this reason, Endress+Hauser does not accept any responsibility with regard to the corrosion resistance of wetted materials in a specific application.
  The user is responsible for the choice of suitable wetted materials in the process.
- If welding work is performed on the piping system, do not ground the welding appliance through the Promag flowmeter.
- The installer must ensure that the measuring system is correctly wired in accordance with the wiring diagrams. The transmitter must be grounded apart from when special protective measures are taken (e.g. galvanically isolated SELV or PELV power supply)
- Invariably, local regulations governing the opening and repair of electrical devices apply.

1.3 Operational safety

Please note the following:
- Measuring systems for use in hazardous environments are accompanied by separate Ex documentation, which is an integral part of this Operating Manual. Strict compliance with the installation instructions and ratings as stated in this supplementary documentation is mandatory. The symbol on the front of this Ex documentation indicates the approval and the certification body (e.g. Ex Europe, FM USA, CSA Canada).
- The measuring device complies with the general safety requirements in accordance with EN 61010-1, the EMC requirements of IEC/EN 61326 and NAMUR Recommendations NE 21 and NE 43.
- Depending on the application, the seals of the process connections of the Promag H sensor require periodic replacement.
- When hot fluid passes through the measuring tube, the surface temperature of the housing increases. In the case of the sensor, in particular, users should expect temperatures that can be close to the fluid temperature. If the temperature of the fluid is high, implement sufficient measures to prevent burning or scalding.

- The manufacturer reserves the right to modify technical data without prior notice. Your Endress+Hauser distributor will supply you with current information and updates to these Operating Instructions.

1.4 Return

The measuring device must be returned if repairs or a factory calibration are required, or if the wrong measuring device has been ordered or delivered. According to legal regulations, Endress+Hauser, as an ISO-certified company, is required to follow certain procedures when handling returned products that are in contact with medium.

To ensure swift, safe and professional device returns, please read the return procedures and conditions on the Endress+Hauser website at www.services.endress.com/return-material

1.5 Notes on safety conventions and icons

The devices are designed to meet state-of-the-art safety requirements, have been tested, and left the factory in a condition in which they are safe to operate. The devices comply with the applicable standards and regulations in accordance with EN 61010-1 "Safety requirements for electrical equipment for measurement, control and laboratory use".
The devices can, however, be a source of danger if used incorrectly or for anything other than the designated use. Consequently, always pay particular attention to the safety instructions indicated in this Operating Manual by the following icons:



Warning!
"Warning" indicates an action or procedure which, if not performed correctly, can result in injury or a safety hazard. Comply strictly with the instructions and proceed with care.



Caution!
"Caution" indicates an action or procedure which, if not performed correctly, can result in incorrect operation or destruction of the device. Comply strictly with the instructions.



Note!
"Note" indicates an action or procedure which, if not performed correctly, can have an indirect effect on operation or trigger an unexpected response on the part of the device.

2 Identification

2.1 Device designation

The flow measuring system consists of the following components:

- Promag 10 transmitter
- Promag D/E/H/L/P/W sensor

In the *compact version*, the transmitter and sensor form a single mechanical unit; in the *remote version* they are installed separately.

2.1.1 Nameplate of the transmitter

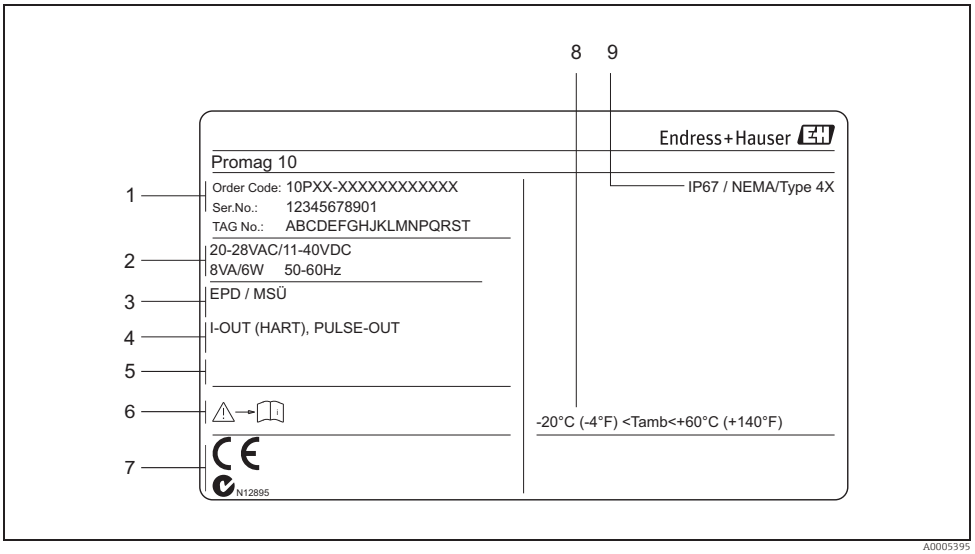

Fig. 1: Nameplate specifications for the "Promag 10" transmitter (example)

1 Ordering code/serial number: See the specifications on the order confirmation for the meanings of the individual letters and digits.
2 Power supply, frequency, power consumption
3 Additional information:
EPD/MSÜ: with Empty Pipe Detection
4 Outputs available:
I-OUT (HART): with current output (HART)
PULSE-OUT: with pulse/status output
5 Reserved for information on special products
6 Observe device documentation
7 Reserved for additional information on device version (approvals, certificates)
8 Permitted ambient temperature range
9 Degree of protection

2.1.2 Nameplate of the sensor

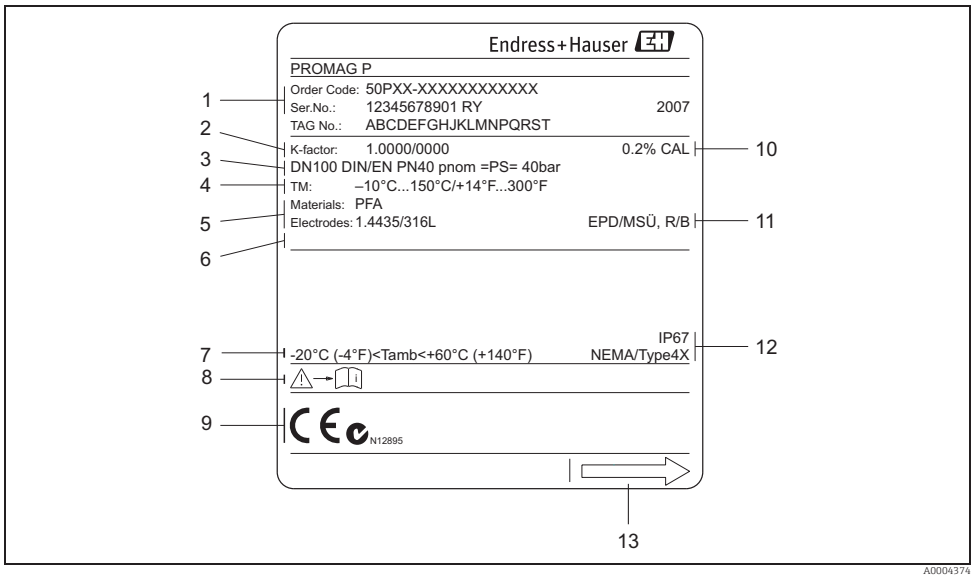

Fig. 2: Nameplate specifications for the "Promag" sensor (example)

1 *Ordering code/serial number: See the specifications on the order confirmation for the meanings of the individual letters and digits.*
2 *Calibration factor with zero point*
3 *Nominal diameter/Pressure rating*
4 *Fluid temperature range*
5 *Materials: lining/measuring electrodes*
6 *Reserved for information on special products*
7 *Permitted ambient temperature range*
8 *Observe device documentation*
9 *Reserved for additional information on device version (approvals, certificates)*
10 *Calibration tolerance*
11 *Additional information (examples):*
- *EPD/MSÜ: with Empty Pipe Detection electrode*
- *R/B: with reference electrode*

12 *Degree of protection*
13 *Flow direction*

2.1.3 Nameplate, connections

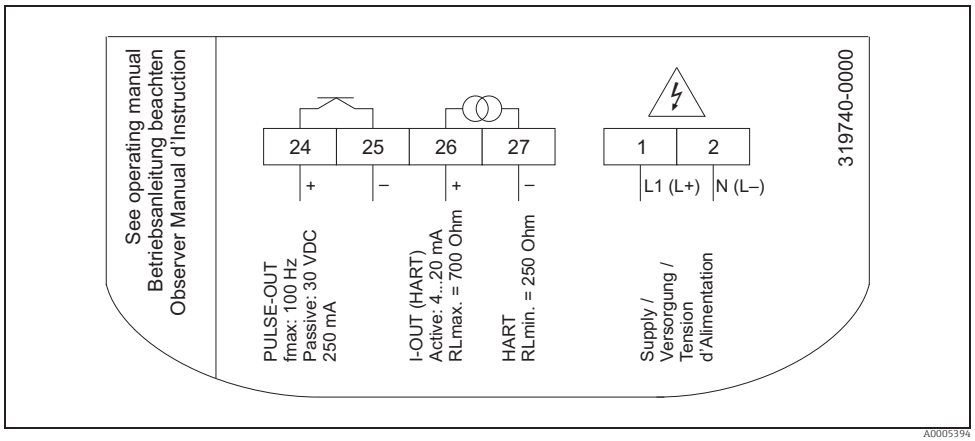

Fig. 3: Nameplate specifications for transmitter (example)

2.2 Certificates and approvals

The devices are designed to meet state-of-the-art safety requirements in accordance with sound engineering practice. They have been tested and left the factory in a condition in which they are safe to operate.

The devices comply with the applicable standards and regulations in accordance with EN 61010-1 "Safety requirements for electrical equipment for measurement, control and laboratory use" and with the EMC requirements of IEC/EN 61326.

The measuring system described in this Operating Manual is therefore in conformity with the statutory requirements of the EC Directives. Endress+Hauser confirms successful testing of the device by affixing to it the CE mark.

The measuring system meets the EMC requirements of the "Australian Communications and Media Authority (ACMA)".

2.3 Registered trademarks

KALREZ® and VITON®
Registered trademarks of E.I. Du Pont de Nemours & Co., Wilmington, USA

TRI-CLAMP®
Registered trademark of Ladish & Co., Inc., Kenosha, USA

HART®
Registered trademark of the HART Communication Foundation, Austin, USA

FieldCare®, Fieldcheck®, Applicator®
Registered or registration-pending trademarks of Endress+Hauser Flowtec AG, Reinach, CH

3 Installation

3.1 Incoming acceptance, transport and storage

3.1.1 Incoming acceptance

On receipt of the goods, check the following:
- Check the packaging and the contents for damage.
- Check the shipment, make sure nothing is missing and that the scope of supply matches your order.

3.1.2 Transport

The following instructions apply to unpacking and to transporting the device to its final location:
- Transport the devices in the containers in which they are delivered.
- Do not remove the protective plates or caps on the process connections until you are ready to install the device. This is particularly important in the case of sensors with PTFE linings.

Special notes on flanged devices

Caution!
- The wooden covers mounted on the flanges from the factory protect the linings on the flanges during storage and transportation. In case of Promag L they are additionally used to hold the lap joint flanges in place. Do not remove these covers until immediately before the device in the pipe.
- Do not lift flanged devices by the transmitter housing, or the connection housing in the case of the remote version.

Transporting flanged devices DN ≤ 300 (12")

Use webbing slings slung round the two process connections.
Do not use chains, as they could damage the housing.

Warning!
Risk of injury if the measuring device slips. The center of gravity of the assembled measuring device might be higher than the points around which the slings are slung.
At all times, therefore, make sure that the device does not unexpectedly turn around its axis or slip.

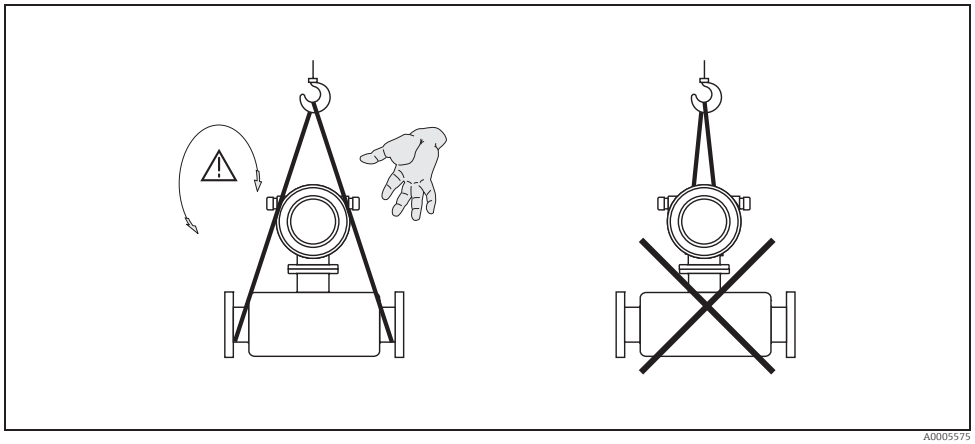

Fig. 4: Transporting sensors with DN ≤ 300 (12")

Transporting flanged devices DN ≥ 350 (14")

Use only the metal eyes on the flanges for transporting the device, lifting it and positioning the sensor in the piping.

Caution!
Do not attempt to lift the sensor with the tines of a fork-lift truck beneath the metal casing. This would buckle the casing and damage the internal magnetic coils.

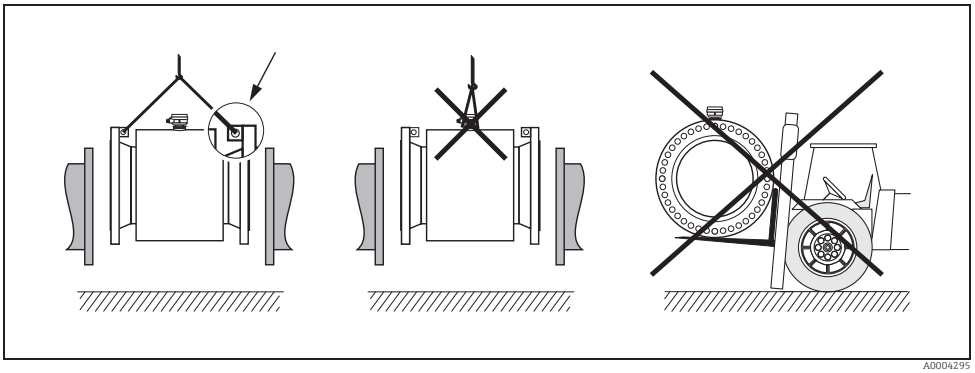

Fig. 5: Transporting sensors with DN ≥ 350 (14")

3.1.3 Storage

Please note the following:
- Pack the measuring device in such a way as to protect it reliably against impact for storage (and transportation). The original packaging provides optimum protection.
- The storage temperature corresponds to the operating temperature range of the measuring transmitter and the appropriate measuring sensors → 86.
- Do not remove the protective plates or caps on the process connections until you are ready to install the device. This is particularly important in the case of sensors with PTFE linings.
- The measuring device must be protected against direct sunlight during storage in order to avoid unacceptably high surface temperatures.
- Choose a storage location where moisture does not collect in the measuring device. This will help prevent fungus and bacteria infestation which can damage the liner.

3.2 Installation conditions

3.2.1 Dimensions

The dimensions and installation lengths of the sensor and transmitter can be found in the "Technical Information" for the device in question. This document can be downloaded as a PDF file from www.endress.com. A list of the "Technical Information" documents available is provided in the "Documentation" section on → 🖹 107.

3.2.2 Mounting location

Entrained air or gas bubble formation in the measuring tube can result in an increase in measuring errors.
Avoid the following locations:
- Highest point of a pipeline. Risk of air accumulating!
- Directly upstream from a free pipe outlet in a vertical pipeline.

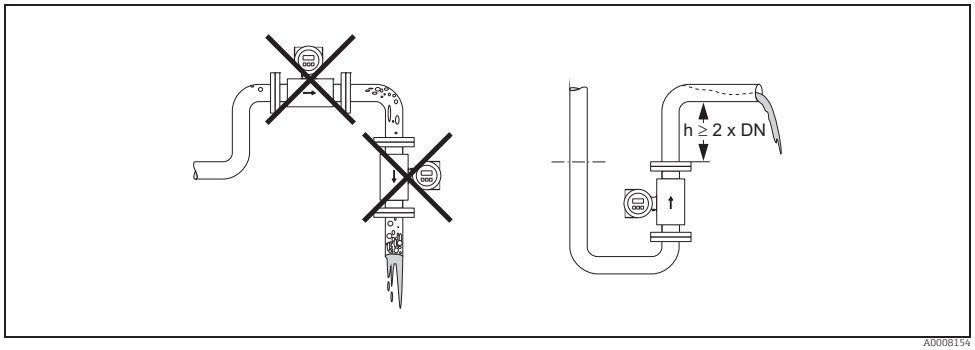

Fig. 6: Mounting location

Installation of pumps

Do not install the sensor on the intake side of a pump. This precaution is to avoid low pressure and the consequent risk of damage to the lining of the measuring tube. Information on the lining's resistance to partial vacuum can be found on → 🖹 90.

It might be necessary to install pulse dampers in systems incorporating reciprocating, diaphragm or peristaltic pumps. Information on the measuring system's resistance to vibration and shock can be found on → 🖹 87.

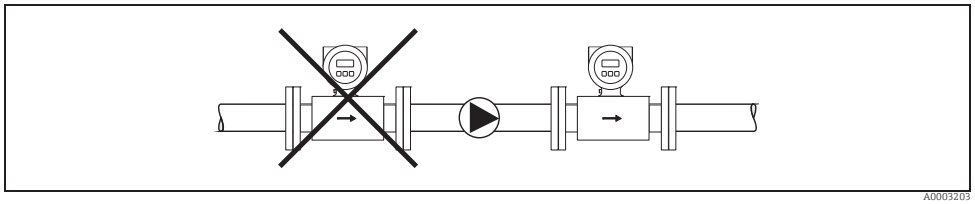

Fig. 7: Installation of pumps

Partially filled pipes

Partially filled pipes with gradients necessitate a drain-type configuration.
The Empty Pipe Detection function (EPD → 68) offers additional protection by detecting empty or partially filled pipes.

Caution!
Risk of solids accumulating. Do not install the sensor at the lowest point in the drain. It is advisable to install a cleaning valve.

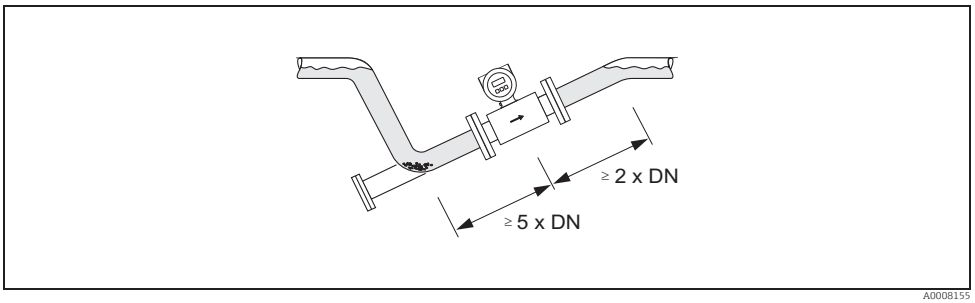

Fig. 8: Installation in a partially filled pipe

Down pipes

Install a siphon or a vent valve downstream of the sensor in down pipes whose length h ≥ 5 m (16.4 ft). This precaution is to avoid low pressure and the consequent risk of damage to the lining of the measuring tube.
This measure also prevents the system losing prime, which could cause air pockets.
Information on the lining's resistance to partial vacuum can be found on → 90.

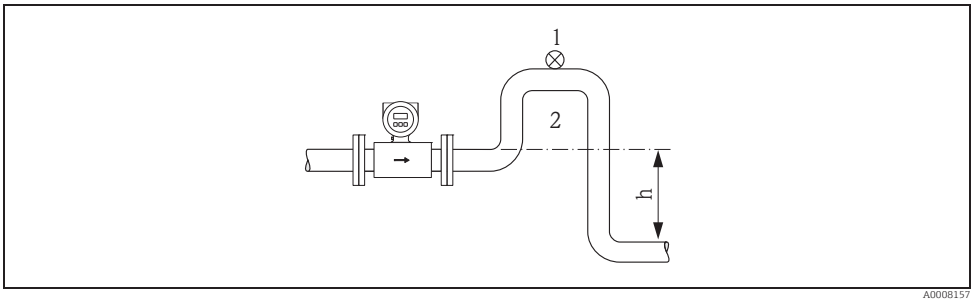

Fig. 9: Measures for installation in a down pipe

1 Vent valve
2 Pipe siphon
h Length of down pipe

3.2.3 Orientation

An optimum orientation position helps avoid gas and air accumulations and deposits in the measuring tube. However, Promag offers the additional Empty Pipe Detection (EPD) function to ensure the detection of partially filled measuring tubes, e.g. in the case of degassing fluids or varying process pressure.

Vertical orientation

This is the ideal orientation for self-emptying piping systems and for use in conjunction with Empty Pipe Detection.

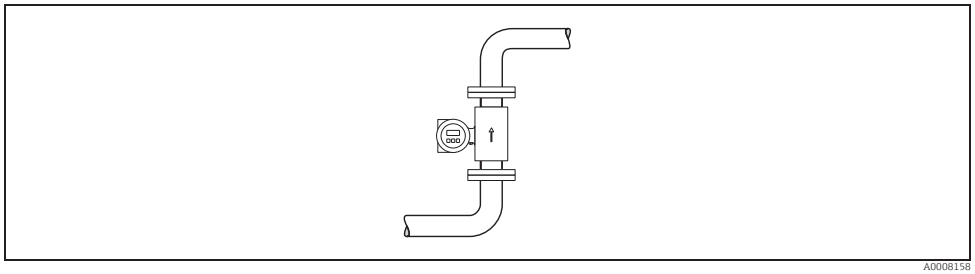

Fig. 10: Vertical orientation

Horizontal orientation

The measuring electrode plane should be horizontal. This prevents brief insulation of the two measuring electrodes by entrained air bubbles.

Caution!
Empty Pipe Detection functions correctly only when the measuring device is installed horizontally and the transmitter housing is facing upward (→ 10). Otherwise there is no guarantee that Empty Pipe Detection will respond if the measuring tube is only partially filled or empty.

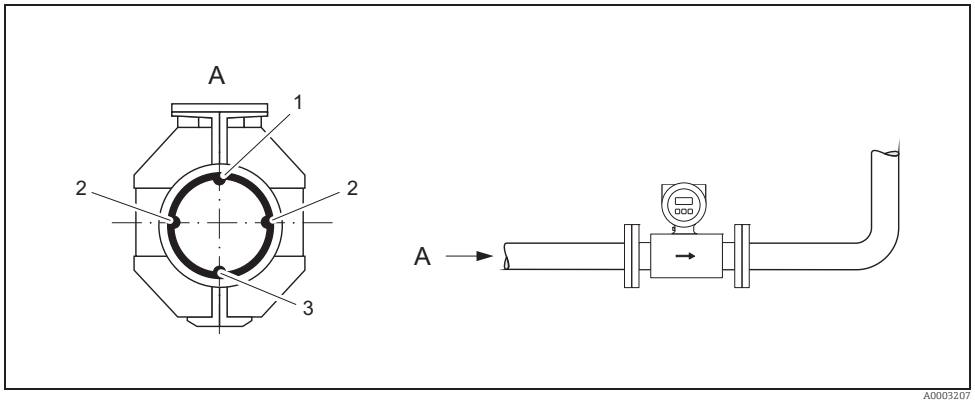

Fig. 11: Horizontal orientation

1 EPD electrode for the detection of empty pipes (not with Promag D and Promag H (DN 2 to 15 / 1/12 to ½"))
2 Measuring electrodes for signal detection
3 Reference electrode for the potential equalization (not with Promag D and H)

Inlet and outlet run

If possible, install the sensor upstream from fittings such as valves, T-pieces, elbows, etc.

The following inlet and outlet runs must be observed in order to meet accuracy specifications:
- Inlet run: ≥ 5 × DN
- Outlet run: ≥ 2 × DN

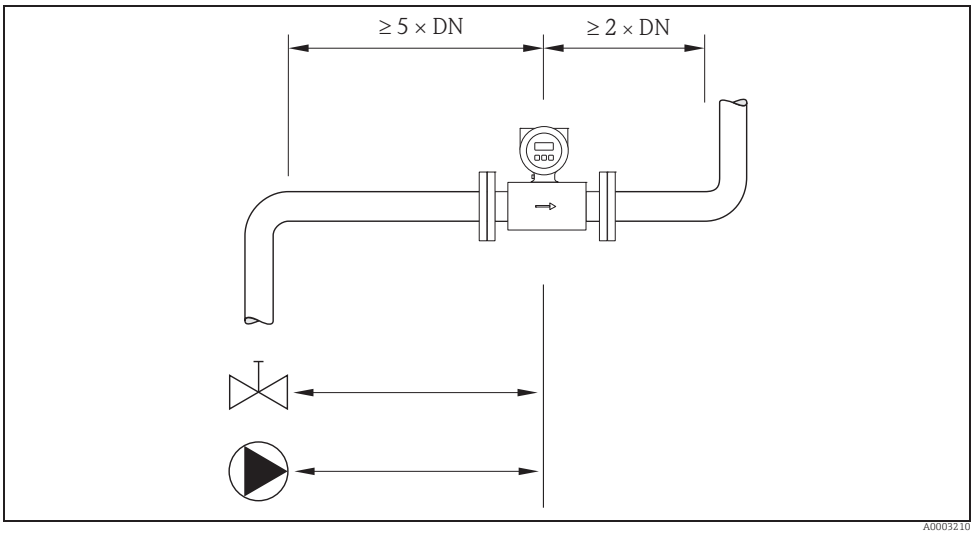

Fig. 12: Inlet and outlet runs

3.2.4 Vibrations

Secure the piping and the sensor if vibration is severe.

Caution!
If vibrations are too severe, we recommend the sensor and transmitter be mounted separately. Information on resistance to vibration and shock can be found on → 87.

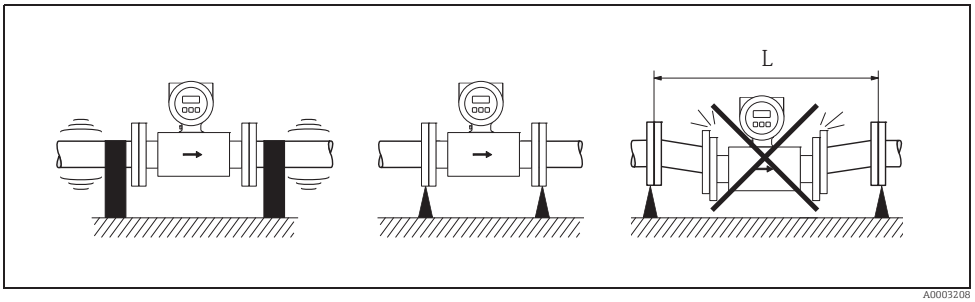

Fig. 13: Measures to prevent vibration of the device (L > 10 m (32.8 ft))

3.2.5 Foundations, supports

If the nominal diameter is DN ≥ 350 (14"), mount the sensor on a foundation of adequate load-bearing strength.

Caution!
Risk of damage.
Do not support the weight of the sensor on the metal casing: the casing would buckle and damage the internal magnetic coils.

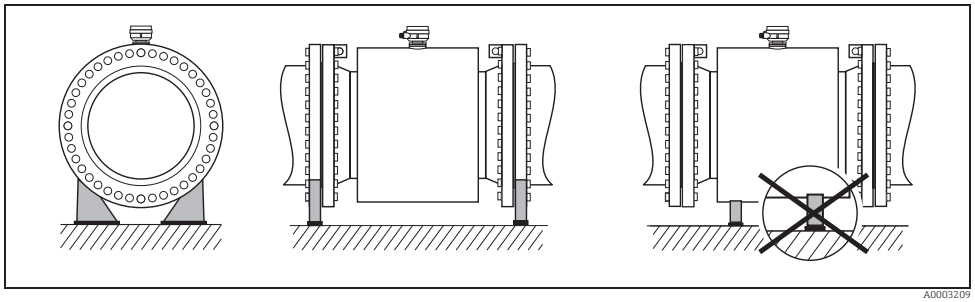

Fig. 14: Correct support for large nominal diameters (DN ≥ 350 / 14")

3.2.6 Adapters

Suitable adapters to DIN EN 545 (double-flange reducers) can be used to install the sensor in larger-diameter pipes.
The resultant increase in the rate of flow improves measuring accuracy with very slow-moving fluids. The nomogram shown here can be used to calculate the pressure loss caused by reducers and expanders.

Note!
The nomogram only applies to liquids of viscosity similar to water.

1. Calculate the ratio of the diameters d/D.
2. From the nomogram read off the pressure loss as a function of flow velocity (*downstream* from the reduction) and the d/D ratio.

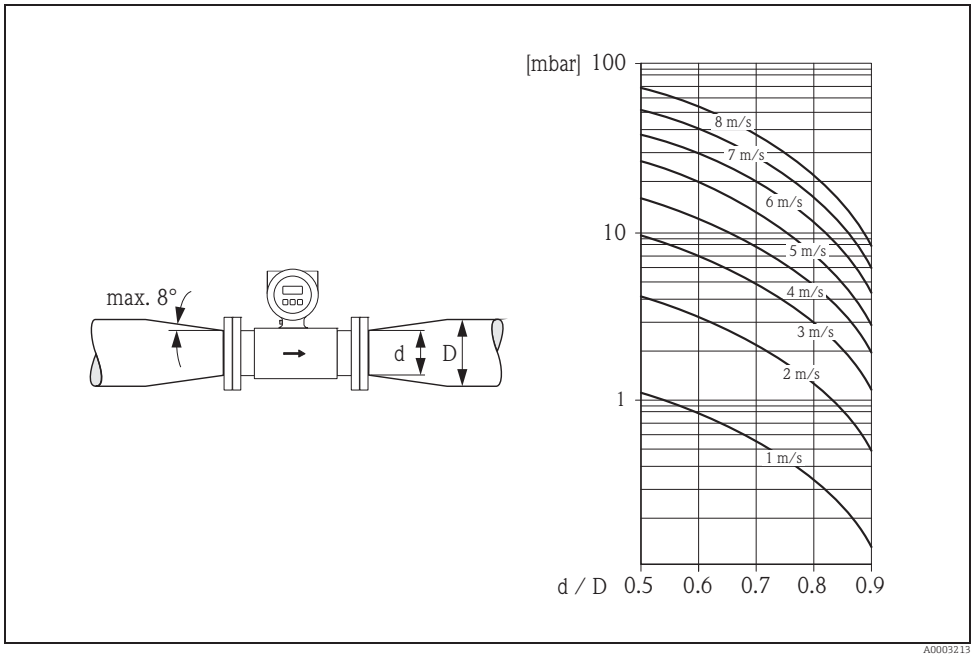

Fig. 15: Pressure loss due to adapters

3.2.7 Nominal diameter and flow rate

The diameter of the pipe and the flow rate determine the nominal diameter of the sensor. The optimum velocity of flow is between 2 and 3 m/s (6.5 to 9.8 ft/s)

The velocity of flow (v), moreover, has to be matched to the physical properties of the fluid:
- v < 2 m/s (6.5 ft/s): for abrasive fluids
- v > 2 m/s (6.5 ft/s): for fluids producing buildup



Note!
Flow velocity can be increased, if necessary, by reducing the nominal diameter of the sensor (→ 15).

Recommended flow (SI units)

Nominal diameter	Promag D	Promag E/P	Promag H	Promag L	Promag W
[mm]	Min./max. full scale value (v ≈ 0.3 or 10 m/s) in [dm³/min]				
2	–	–	0.06 to 1.8	–	–
4	–	–	0.25 to 7	–	–
8	–	–	1 to 30	–	–
15	–	4 to 100	4 to 100	–	–
25	9 to 300	9 to 300	9 to 300	9 to 300	9 to 300
32	–	15 to 500	–	15 to 500	15 to 500
40	25 to 700	25 to 700	25 to 700	25 to 700	25 to 700
50	35 to 1100	35 to 1100	35 to 1100	35 to 1100	35 to 1100
65	60 to 2000	60 to 2000	60 to 2000	60 to 2000	60 to 2000
80	90 to 3000	90 to 3000	90 to 3000	90 to 3000	90 to 3000
100	145 to 4700	145 to 4700	145 to 4700	145 to 4700	145 to 4700
125	–	220 to 7500	–	220 to 7500	220 to 7500
[mm]	Min./max. full scale value (v ≈ 0.3 or 10 m/s) in [m³/h]				
150	–	20 to 600	–	20 to 600	20 to 600
200	–	35 to 1100	–	35 to 1100	35 to 1100
250	–	55 to 1700	–	55 to 1700	55 to 1700
300	–	80 to 2400	–	80 to 2400	80 to 2400
350	–	110 to 3300	–	110 to 3300	110 to 3300
375	–	–	–	140 to 4200	140 to 4200
400	–	140 to 4200	–	140 to 4200	140 to 4200
450	–	180 to 5400	–	180 to 5400	180 to 5400
500	–	220 to 6600	–	220 to 6600	220 to 6600
600	–	310 to 9600	–	310 to 9600	310 to 9600
700	–	–	–	420 to 13500	420 to 13500
750	–	–	–	480 to 15200	480 to 15200
800	–	–	–	550 to 18000	550 to 18000
900	–	–	–	690 to 22500	690 to 22500
1000	–	–	–	850 to 28000	850 to 28000
1050	–	–	–	950 to 40000	950 to 40000
1200	–	–	–	1250 to 40000	1250 to 40000
1400	–	–	–	–	1700 to 55000
1600	–	–	–	–	2200 to 70000
1800	–	–	–	–	2800 to 90000
2000	–	–	–	–	3400 to 110000

Recommended flow (US units)

Nominal diameter	Promag D	Promag E/P	Promag H	Promag L	Promag W
[inch]	Min./max. full scale value (v ≈ 0.3 or 10 m/s) in [gal/min]				
1/12"	–	–	0.015 to 0.5	–	–
1/8"	–	–	0.07 to 2	–	–
8"	–	–	0.25 to 8	–	–
½"	–	1.0 to 27	1.0 to 27	–	–
1"	2.5 to 80	2.5 to 80	2.5 to 80	2.5 to 80	2.5 to 80
1 ¼"	–	4 to 130	–	–	4 to 130
1 ½"	7 to 190	7 to 190	7 to 190	7 to 190	7 to 190
2"	10 to 300	10 to 300	10 to 300	10 to 300	10 to 300
2 ½"	16 to 500	16 to 500	16 to 500	16 to 500	16 to 500
3"	24 to 800	24 to 800	24 to 800	24 to 800	24 to 800
4"	40 to 1250	40 to 1250	40 to 1250	40 to 1250	40 to 1250
5"	–	60 to 1950	–	60 to 1950	60 to 1950
6"	–	90 to 2650	–	90 to 2650	90 to 2650
8"	–	155 to 4850	–	155 to 4850	155 to 4850
10"	–	250 to 7500	–	250 to 7500	250 to 7500
12"	–	350 to 10600	–	350 to 10600	350 to 10600
14"	–	500 to 15000	–	500 to 15000	500 to 15000
15"	–	–	–	600 to 19000	600 to 19000
16"	–	600 to 19000	–	600 to 19000	600 to 19000
18"	–	800 to 24000	–	800 to 24000	800 to 24000
20"	–	1000 to 30000	–	1000 to 30000	1000 to 30000
24"	–	1400 to 44000	–	1400 to 44000	1400 to 44000
28"	–	–	–	1900 to 60000	1900 to 60000
30"	–	–	–	2150 to 67000	2150 to 67000
32"	–	–	–	2450 to 80000	2450 to 80000
36"	–	–	–	3100 to 100000	3100 to 100000
40"	–	–	–	3800 to 125000	3800 to 125000
42"	–	–	–	4200 to 135000	4200 to 135000
48"	–	–	–	5500 to 175000	5500 to 175000
[inch]	Min./max. full scale value (v ≈ 0.3 or 10 m/s) in [Mgal/d]				
54"	–	–	–	–	9 to 300
60"	–	–	–	–	12 to 380
66"	–	–	–	–	14 to 500
72"	–	–	–	–	16 to 570
78"	–	–	–	–	18 to 650

3.2.8 Length of connecting cable

In order to ensure measuring accuracy, comply with the following instructions when installing the remote version:

- Fix cable run or lay in armored conduit. Cable movements can falsify the measuring signal especially in the case of low fluid conductivities.
- Route the cable well clear of electrical machines and switching elements.
- Ensure potential equalization between sensor and transmitter, if necessary.
- The permitted connecting cable length L_{max} is determined by the fluid conductivity (→ 16). A minimum conductivity of 50 µS/cm is needed for all fluids.
- The maximum connecting cable length is 10 m (33 ft) when empty pipe detection (EPD → 68) is switched on.

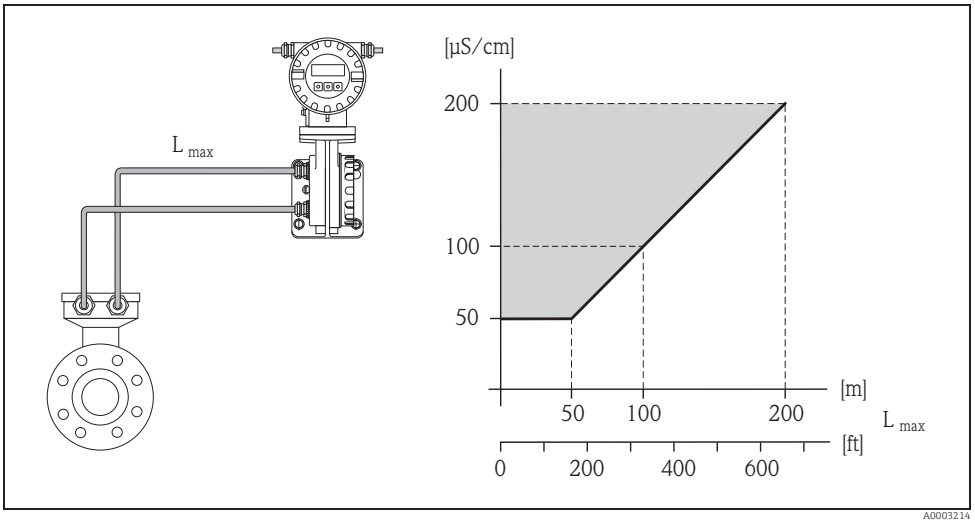

Fig. 16: Permissible cable length for the remote version

Area shaded gray = permitted range
Lmax = connecting cable length in [m]
Fluid conductivity in [µS/cm]

3.3 Installation instructions

3.3.1 Installing the Promag D sensor

The sensor is installed between the pipe flanges with a mounting kit. The device is centered using recesses on the sensor (→ 20).

Note!
A mounting kit consisting of mounting bolts, seals, nuts and washers can be ordered separately (→ 70). Centering sleeves are provided with the device if they are required for the installation.

Caution!
When installing the transmitter in the pipe, observe the necessary torques (→ 21).

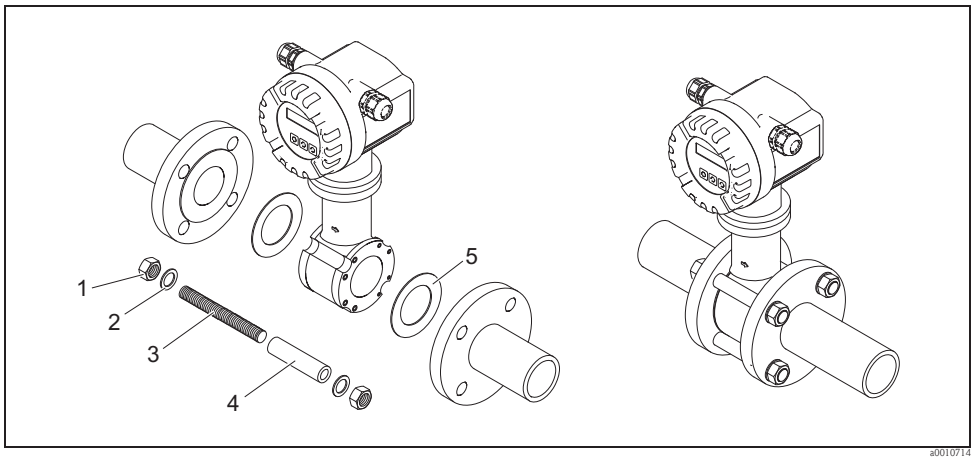

Fig. 17: Mounting the sensor

1 Nut
2 Washer
3 Mounting bolt
4 Centering sleeve
5 Seal

Seals

When installing the sensor, make sure that the seals used do not project into the pipe cross-section.

Caution!
Risk of short circuit! Do not use electrically conductive sealing compounds such as graphite! An electrically conductive layer could form on the inside of the measuring tube and short-circuit the measuring signal.

Note!
Use seals with a hardness rating of 70° Shore A.

Arrangement of the mounting bolts and centering sleeves

The device is centered using recesses on the sensor. The arrangement of the mounting bolts and the use of the centering sleeves supplied depend on the nominal diameter, the flange standard und the pitch circle diameter.

	Process connection		
	EN (DIN)	ASME	JIS
DN 25 to 40 (1 to 1 ½")	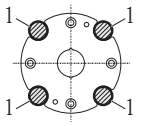 A0010896	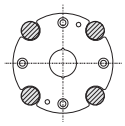 A0010824	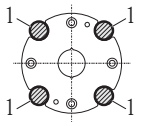 A0010896
DN 50 (2")	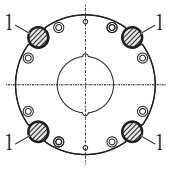 A0010897	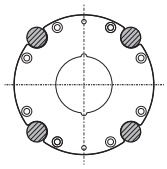 A0010825	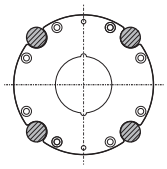 A0010825
DN 65 (–)	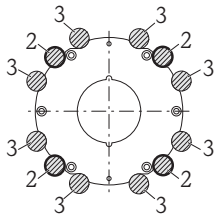 A0012170	–	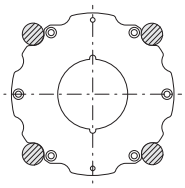 A0012171
DN 80 (3")	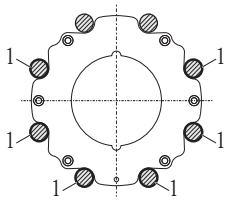 A0010898	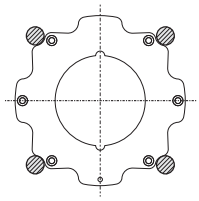 A0010827	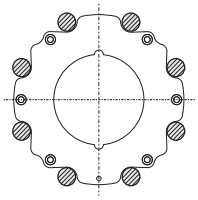 A0010826
DN 100 (4")	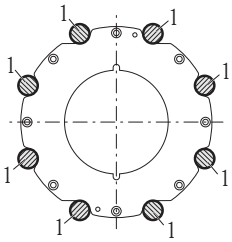 A0012168	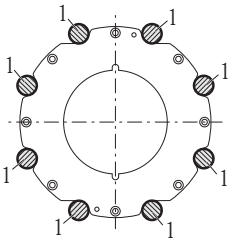 A0012168	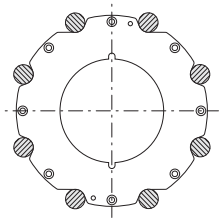 A0012169

1 = Mounting bolts with centering sleeves
2 = EN (DIN) flanges: 4-hole → with centering sleeves
3 = EN (DIN) flanges: 8-hole → without centering sleeves

Screw tightening torques (Promag D)

Please note the following:
- The tightening torques listed below are for lubricated threads only.
- Always tighten the screws uniformly and in diagonally opposite sequence.
- Overtightening the screws will deform the sealing faces or damage the seals.
- The tightening torques listed below apply only to pipes not subjected to tensile stress.

The tightening torques apply to situations where an EPDM soft material flat seal (e.g. 70° Shore A) is used.

Tightening torques, mounting bolts and centering sleeves for EN (DIN) PN 16

Nominal diameter [mm]	Mounting bolts [mm]	Centering sleeve length [mm]	Tightening torque [Nm] with a process flange with a	
			smooth seal face	raised face
25	4 × M12 × 145	54	19	19
40	4 × M16 × 170	68	33	33
50	4 × M16 × 185	82	41	41
65[1)]	4 × M16 × 200	92	44	44
65[2)]	8 × M16 × 200	– [3)]	29	29
80	8 × M16 × 225	116	36	36
100	8 × M16 × 260	147	40	40

[1)] EN (DIN) flanges: 4-hole → with centering sleeves
[2)] EN (DIN) flanges: 8-hole → without centering sleeves
[3)] A centering sleeve is not required. The device is centered directly via the sensor housing.

Tightening torques, mounting bolts and centering sleeves for JIS 10 K

Nominal diameter [mm]	Mounting bolts [mm]	Centering sleeve length [mm]	Tightening torque [Nm] with a process flange with a	
			smooth seal face	raised face
25	4 × M16 × 170	54	24	24
40	4 × M16 × 170	68	32	25
50	4 × M16 × 185	– *	38	30
65	4 × M16 × 200	– *	42	42
80	8 × M16 × 225	– *	36	28
100	8 × M16 × 260	– *	39	37

* A centering sleeve is not required. The device is centered directly via the sensor housing.

Tightening torques, mounting bolts and centering sleeves for ASME Class 150

Nominal diameter [inch]	Mounting bolts [inch]	Centering sleeve length [inch]	Tightening torque [lbf · ft] with a process flange with a	
			smooth seal face	raised face
1"	4 × UNC 1/2" × 5.70"	– *	14	7
1 ½"	4 × UNC 1/2" × 6.50"	– *	21	14
2"	4 × UNC 5/8" × 7.50"	– *	30	27
3"	4 × UNC 5/8" × 9.25"	– *	31	31
4"	8 × UNC 5/8" × 10.4"	5.79	28	28

* A centering sleeve is not required. The device is centered directly via the sensor housing.

3.3.2 Installing the Promag E sensor

Caution!
- The protective covers mounted on the two sensor flanges guard the PTFE, which is turned over the flanges. Consequently, do not remove these covers until immediately before the sensor is installed in the pipe.
- The covers must remain in place while the device is in storage.
- Make sure that the lining is not damaged or removed from the flanges.

Note!
Bolts, nuts, seals, etc. are not included in the scope of supply and must be supplied by the customer.

The sensor is designed for installation between the two piping flanges.
- Observe in any case the necessary screw tightening torques on → 📄 23
- If grounding disks are used, follow the mounting instructions which will be enclosed with the shipment

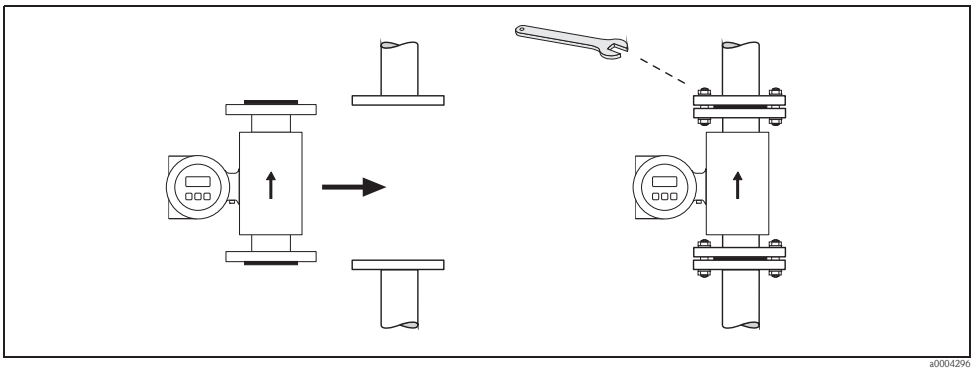

Fig. 18: Installing the Promag E sensor

Seals

Comply with the following instructions when installing seals:
- PTFE lining → No seals are required!
- For DIN flanges, use only seals according to EN 1514-1.
- Make sure that the seals do not protrude into the piping cross-section.

Caution!
Risk of short circuit! Do not use electrically conductive sealing compounds such as graphite! An electrically conductive layer could form on the inside of the measuring tube and short-circuit the measuring signal.

Ground cable

- If necessary, special ground cables for potential equalization can be ordered as an accessory (→ 📄 70).
- Information on potential equalization and detailed mounting instructions for the use of ground cables can be found on → 📄 50

Tightening torques for threaded fasteners (Promag E)

Please note the following:
- The tightening torques listed below are for lubricated threads only.
- Always tighten the screws uniformly and in diagonally opposite sequence.
- Overtightening the screws will deform the sealing faces or damage the seals.
- The tightening torques listed below apply only to pipes not subjected to tensile stress.

Tightening torques for:
- EN (DIN) → 🖹 23
- ASME → 🖹 24
- JIS → 🖹 24

Promag E tightening torques for EN (DIN)

Nominal diameter [mm]	EN (DIN) Pressure rating [bar]	Threaded fasteners	Max. tightening torque [Nm]
15	PN 40	4 × M 12	11
25	PN 40	4 × M 12	26
32	PN 40	4 × M 16	41
40	PN 40	4 × M 16	52
50	PN 40	4 × M 16	65
65 *	PN 16	8 × M 16	43
80	PN 16	8 × M 16	53
100	PN 16	8 × M 16	57
125	PN 16	8 × M 16	75
150	PN 16	8 × M 20	99
200	PN 10	8 × M 20	141
200	PN 16	12 × M 20	94
250	PN 10	12 × M 20	110
250	PN 16	12 × M 24	131
300	PN 10	12 × M 20	125
300	PN 16	12 × M 24	179
350	PN 6	12 × M 20	200
350	PN 10	16 × M 20	188
350	PN 16	16 × M 24	254
400	PN 6	16 × M 20	166
400	PN 10	16 × M 24	260
400	PN 16	16 × M 27	330
450	PN 6	16 × M 20	202
450	PN 10	20 × M 24	235
450	PN 16	20 × M 27	300
500	PN 6	20 × M 20	176
500	PN 10	20 × M 24	265
500	PN 16	20 × M 30	448
600	PN 6	20 × M 24	242
600	PN 10	20 × M 27	345
600 *	PN 16	20 × M 33	658
* Designed acc. to EN 1092-1 (not to DIN 2501)			

Promag E tightening torques for ASME

Nominal diameter		ASME		Max. tightening torque PTFE	
[mm]	[inch]	Pressure rating [lbs]	Threaded fasteners	[Nm]	[lbf · ft]
15	½"	Class 150	4 × ½"	6	4
25	1"	Class 150	4 × ½"	11	8
40	1 ½"	Class 150	4 × ½"	24	18
50	2"	Class 150	4 × 5/8"	47	35
80	3"	Class 150	4 × 5/8"	79	58
100	4"	Class 150	8 × 5/8"	56	41
150	6"	Class 150	8 × ¾"	106	78
200	8"	Class 150	8 × ¾"	143	105
250	10"	Class 150	12 × 7/8"	135	100
300	12"	Class 150	12 × 7/8"	178	131
350	14"	Class 150	12 × 1"	260	192
400	16"	Class 150	16 × 1"	246	181
450	18"	Class 150	16 × 1 1/8"	371	274
500	20"	Class 150	20 × 1 1/8"	341	252
600	24"	Class 150	20 × 1 ¼"	477	352

Promag E tightening torques for JIS

Nominal diameter [mm]	JIS Pressure rating	Threaded fasteners	Max. tightening torque [Nm] PTFE
15	20K	4 × M 12	16
25	20K	4 × M 16	32
32	20K	4 × M 16	38
40	20K	4 × M 16	41
50	10K	4 × M 16	54
65	10K	4 × M 16	74
80	10K	8 × M 16	38
100	10K	8 × M 16	47
125	10K	8 × M 20	80
150	10K	8 × M 20	99
200	10K	12 × M 20	82
250	10K	12 × M 22	133
300	10K	16 × M 22	99

3.3.3 Installing the Promag H sensor

The sensor is supplied to order, with or without pre-installed process connections. Pre-installed process connections are secured to the sensor with 4 or 6 hex-head threaded fasteners.

Caution!
The sensor might require support or additional attachments, depending on the application and the length of the piping run. When plastic process connections are used, the sensor must be additionally supported mechanically. A wall-mounting kit can be ordered separately from Endress+Hauser as an accessory (→ 📄 70).

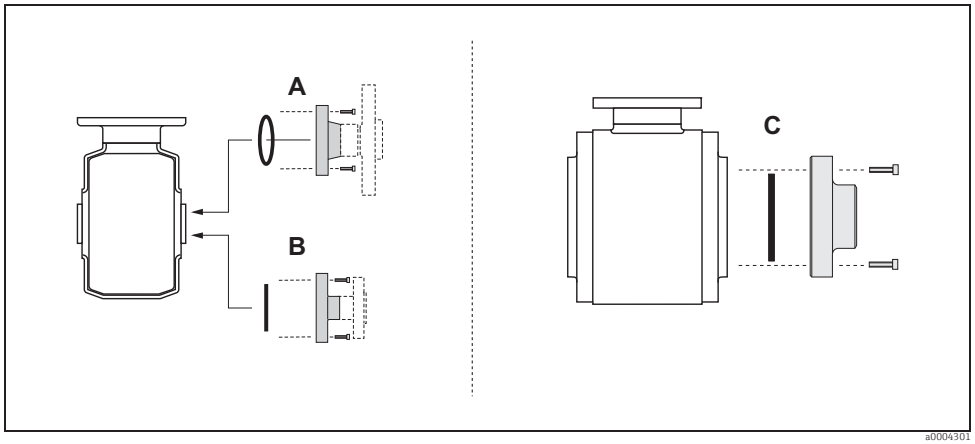

Fig. 19: Promag H process connections (DN 2 to 25 / 1/12 to 1", DN 40 to 100 / 1½ to 4")

A = DN 2 to 25 / process connections with O-ring
– Flanges (EN (DIN), ASME, JIS),
– External thread

B = DN 2 to 25 / process connections with aseptic gasket seal
– Weld nipples (DIN 11850, ODT/SMS)
– Tri-Clamp L14AM7
– Coupling (DIN 11851, DIN 11864-1, SMS 1145 (only DN 25)
– Flange DIN 11864-2

C = DN 40 to 100 / process connections with aseptic gasket seal
– Weld nipples (DIN 11850, ODT/SMS)
– Tri-Clamp L14AM7
– Coupling (DIN 11851, DIN 11864-1, SMS 1145)
– Flange DIN 11864-2

Seals

When installing the process connections, make sure that the seals are clean and correctly centered.

Caution!
- With metal process connections, you must fully tighten the screws. The process connection forms a metallic connection with the sensor, which ensures a defined compression of the seal.
- With plastic process connections, note the max. torques for lubricated threads (7 Nm / 5.2 lbf ft). With plastic flanges, always use seals between connection and counter flange.
- The seals must be replaced periodically, depending on the application, particularly in the case of gasket seals (aseptic version)!
  The period between changes depends on the frequency of cleaning cycles, the cleaning temperature and the fluid temperature. Replacement seals can be ordered as accessories → 📄 70.

Welding the transmitter into the piping (weld nipples)



Caution!
Risk of destroying the measuring electronics. Make sure that the welding machine is *not* grounded via the sensor or the transmitter.

1. Tack-weld the sensor into the pipe. A suitable welding jig can be ordered separately as an accessory (→ 🖹 70).
2. Loosen the screws on the process connection flange and remove the sensor, complete with the seal, from the pipe.
3. Weld the process connection to the pipe.
4. Reinstall the sensor in the pipe. Make sure that everything is clean and that the seal is correctly seated.



Note!
- If thin-walled foodstuffs pipes are not welded correctly, the heat could damage the installed seal. It is therefore advisable to remove the sensor and the seal prior to welding.
- The pipe has to be spread approximately 8 mm to permit disassembly.

Cleaning with pigs

If pigs are used for cleaning, it is essential to take the inside diameters of the measuring tube and process connection into account. All the dimensions and lengths of the sensor and transmitter are provided in the separate documentation "Technical Documentation".

3.3.4 Installing the Promag L sensor

Caution!
- The protective covers mounted on the two sensor flanges (DN 25 to 300 / 1 to 12") are used to hold the lap joint flanges in place and to protect the PTFE liner during transportation. Consequently, do not remove these covers until immediately before the sensor is installed in the pipe.
- The covers must remain in place while the device is in storage.
- Make sure that the lining is not damaged or removed from the flanges.

Note!
Bolts, nuts, seals, etc. are not included in the scope of supply and must be supplied by the customer.

The sensor is designed for installation between the two piping flanges.
- Observe in any case the necessary screw tightening torques on → 28
- If grounding disks are used, follow the mounting instructions which will be enclosed with the shipment
- To comply with the device specification, a concentrical installation in the measuring section is required

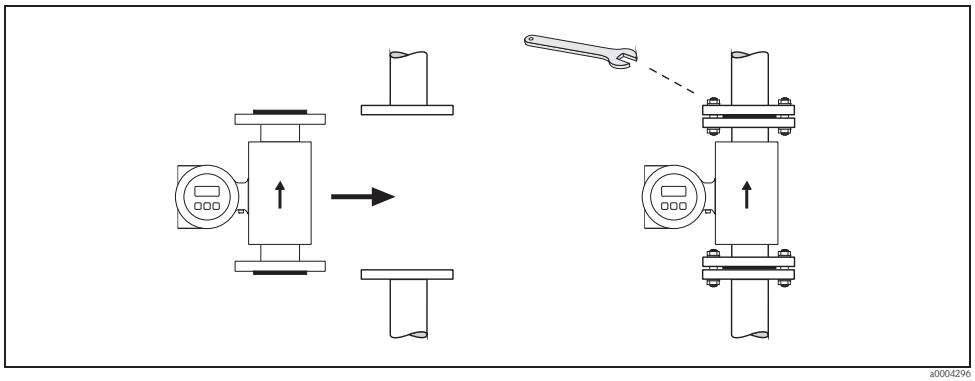

Fig. 20: Installing the Promag L sensor

Seals

Comply with the following instructions when installing seals:
- Hard rubber lining → additional seals are always necessary.
- Polyurethane lining → no seals are required.
- PTFE lining → no seals are required.
- For DIN flanges, use only seals according to EN 1514-1.
- Make sure that the seals do not protrude into the piping cross-section.

Caution!
Risk of short circuit!
Do not use electrically conductive sealing compounds such as graphite! An electrically conductive layer could form on the inside of the measuring tube and short-circuit the measuring signal.

Ground cable

- If necessary, special ground cables for potential equalization can be ordered as an accessory (→ 70).
- Information on potential equalization and detailed mounting instructions for the use of ground cables can be found on → 50.

Screw tightening torques (Promag L)

Please note the following:
- The tightening torques listed below are for lubricated threads only.
- Always tighten the screws uniformly and in diagonally opposite sequence.
- Overtightening the screws will deform the sealing faces or damage the seals.
- The tightening torques listed below apply only to pipes not subjected to tensile stress.

Promag L tightening torques for EN (DIN)

Nominal diameter [mm]	EN (DIN) Pressure rating [bar]	Threaded fasteners	Max. tightening torque Hard rubber [Nm]	Polyurethane [Nm]	PTFE [Nm]
25	PN 10/16	4 × M 12	-	6	11
32	PN 10/16	4 × M 16	-	16	27
40	PN 10/16	4 × M 16	-	16	29
50	PN 10/16	4 × M 16	-	15	40
65*	PN 10/16	8 × M 16	-	10	22
80	PN 10/16	8 × M 16	-	15	30
100	PN 10/16	8 × M 16	-	20	42
125	PN 10/16	8 × M 16	-	30	55
150	PN 10/16	8 × M 20	-	50	90
200	PN 16	12 × M 20	-	65	87
250	PN 16	12 × M 24	-	126	151
300	PN 16	12 × M 24	-	139	177
350	PN 6	12 × M 20	111	120	-
350	PN 10	16 × M 20	112	118	-
400	PN 6	16 × M 20	90	98	-
400	PN 10	16 × M 24	151	167	-
450	PN 6	16 × M 20	112	126	-
450	PN 10	20 × M 24	153	133	-
500	PN 6	20 × M 20	119	123	-
500	PN 10	20 × M 24	155	171	-
600	PN 6	20 × M 24	139	147	-
600	PN 10	20 × M 27	206	219	-
700	PN 6	24 × M 24	148	139	-
700	PN 10	24 × M 27	246	246	-
800	PN 6	24 × M 27	206	182	-
800	PN 10	24 × M 30	331	316	-
900	PN 6	24 × M 27	230	637	-
900	PN 10	28 × M 30	316	307	-
1000	PN 6	28 × M 27	218	208	-
1000	PN 10	28 × M 33	402	405	-
1200	PN 6	32 × M 30	319	299	-
1200	PN 10	32 × M 36	564	568	-

* Designed acc. to EN 1092-1 (not to DIN 2501)

Promag L tightening torques for ASME

Nominal diameter		ASME	Threaded fasteners	Max. tightening torque					
		Pressure rating		Hard rubber		Polyurethane		PTFE	
[mm]	[inch]	[lbs]		[Nm]	[lbf · ft]	[Nm]	[lbf · ft]	[Nm]	[lbf · ft]
25	1"	Class 150	4 × 5/8"	-	-	5	4	14	13
40	1 ½"	Class 150	8 × 5/8"	-	-	10	17	21	15
50	2"	Class 150	4 × 5/8"	-	-	15	11	40	29
80	3"	Class 150	4 × 5/8"	-	-	25	18	65	48
100	4"	Class 150	8 × 5/8"	-	-	20	15	44	32
150	6"	Class 150	8 × ¾"	-	-	45	33	90	66
200	8"	Class 150	8 × ¾"	-	-	65	48	87	64
250	10"	Class 150	12 × 7/8"	-	-	126	93	151	112
300	12"	Class 150	12 × 7/8"	-	-	146	108	177	131
350	14"	Class 150	12 × 1"	135	100	158	117	-	-
400	16"	Class 150	16 × 1"	128	94	150	111	-	-
450	18"	Class 150	16 × 1 1/8"	204	150	234	173	-	-
500	20"	Class 150	20 × 1 1/8"	183	135	217	160	-	-
600	24"	Class 150	20 × 1 ¼"	268	198	307	226	-	-

Promag L tightening torques for AWWA

Nominal diameter		AWWA	Threaded fasteners	Max. tightening torque					
		Pressure rating		Hartgummi		Polyurethane		PTFE	
[mm]	[inch]			[Nm]	[lbf · ft]	[Nm]	[lbf · ft]	[Nm]	[lbf · ft]
700	28"	Class D	28 × 1 ¼"	247	182	292	215	-	-
750	30"	Class D	28 × 1 ¼"	287	212	302	223	-	-
800	32"	Class D	28 × 1 ½"	394	291	422	311	-	-
900	36"	Class D	32 × 1 ½"	419	309	430	317	-	-
1000	40"	Class D	36 × 1 ½"	420	310	477	352	-	-
1050	42"	Class D	36 × 1 ½"	528	389	518	382	-	-
1200	48"	Class D	44 × 1 ½"	552	407	531	392	-	-

Promag L tightening torques for AS 2129

Nominal diameter	AS 2129	Threaded fasteners	Max. tightening torque		
	Pressure rating		Hard rubber	Polyurethane	PTFE
[mm]			[Nm]	[Nm]	[Nm]
350	Table E	12 × M 24	203	-	-
400	Table E	12 × M 24	226	-	-
450	Table E	16 × M 24	226	-	-
500	Table E	16 × M 24	271	-	-
600	Table E	16 × M 30	439	-	-
700	Table E	20 × M 30	355	-	-
750	Table E	20 × M 30	559	-	-
800	Table E	20 × M 30	631	-	-
900	Table E	24 × M 30	627	-	-
1000	Table E	24 × M 30	634	-	-
1200	Table E	32 × M 30	727	-	-

Promag L tightening torques for AS 4087

Nominal diameter [mm]	AS 4087 Pressure rating	Threaded fasteners	Max. tightening torque		
			Hard rubber [Nm]	Polyurethane [Nm]	PTFE [Nm]
350	PN 16	12 × M 24	203	-	-
375	PN 16	12 × M 24	137	-	-
400	PN 16	12 × M 24	226	-	-
450	PN 16	12 × M 24	301	-	-
500	PN 16	16 × M 24	271	-	-
600	PN 16	16 × M 27	393	-	-
700	PN 16	20 × M 27	330	-	-
750	PN 16	20 × M 30	529	-	-
800	PN 16	20 × M 33	631	-	-
900	PN 16	24 × M 33	627	-	-
1000	PN 16	24 × M 33	595	-	-
1200	PN 16	32 × M 33	703	-	-

3.3.5 Installing the Promag P sensor

Caution!
- The protective covers mounted on the two sensor flanges guard the PTFE, which is turned over the flanges. Consequently, do not remove these covers until immediately before the sensor is installed in the pipe.
- The covers must remain in place while the device is in storage.
- Make sure that the lining is not damaged or removed from the flanges.

Note!
Bolts, nuts, seals, etc. are not included in the scope of supply and must be supplied by the customer.

The sensor is designed for installation between the two piping flanges.
- Observe in any case the necessary screw tightening torques on → 31
- If grounding disks are used, follow the mounting instructions which will be enclosed with the shipment

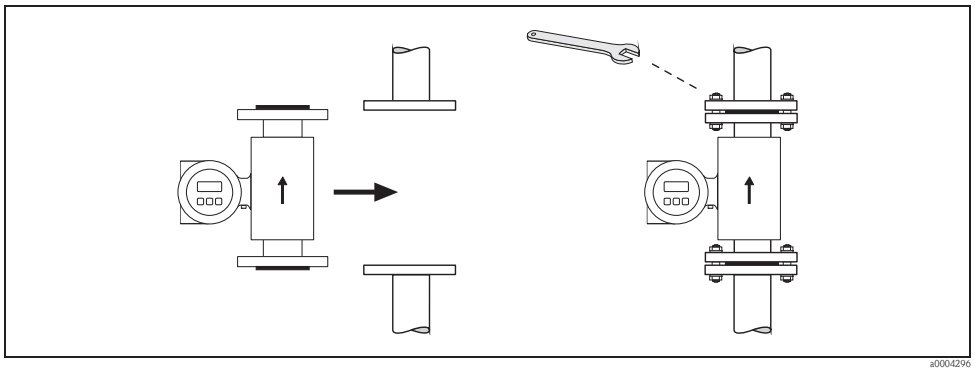

Fig. 21: Installing the Promag P sensor

Seals

Comply with the following instructions when installing seals:
- PTFE lining → No seals are required!
- For DIN flanges, use only seals according to EN 1514-1.
- Make sure that the seals do not protrude into the piping cross-section.

Caution!
Risk of short circuit! Do not use electrically conductive sealing compounds such as graphite! An electrically conductive layer could form on the inside of the measuring tube and short-circuit the measuring signal.

Ground cable

- If necessary, special ground cables for potential equalization can be ordered as an accessory (→ 70).
- Information on potential equalization and detailed mounting instructions for the use of ground cables can be found on → 50

Tightening torques for threaded fasteners (Promag P)

Please note the following:
- The tightening torques listed below are for lubricated threads only.
- Always tighten the screws uniformly and in diagonally opposite sequence.
- Overtightening the screws will deform the sealing faces or damage the seals.
- The tightening torques listed below apply only to pipes not subjected to tensile stress.

Tightening torques for:
- EN (DIN) → 32
- ASME → 32
- JIS → 33
- AS 2129 → 33
- AS 4087 → 33

Promag P tightening torques for EN (DIN)

Nominal diameter [mm]	EN (DIN) Pressure rating [bar]	Threaded fasteners	Max. tightening torque [Nm]
25	PN 40	4 × M 12	26
32	PN 40	4 × M 16	41
40	PN 40	4 × M 16	52
50	PN 40	4 × M 16	65
65 *	PN 16	8 × M 16	43
65	PN 40	8 × M 16	43
80	PN 16	8 × M 16	53
80	PN 40	8 × M 16	53
100	PN 16	8 × M 16	57
100	PN 40	8 × M 20	78
125	PN 16	8 × M 16	75
125	PN 40	8 × M 24	111
150	PN 16	8 × M 20	99
150	PN 40	8 × M 24	136
200	PN 10	8 × M 20	141
200	PN 16	12 × M 20	94
200	PN 25	12 × M 24	138
250	PN 10	12 × M 20	110
250	PN 16	12 × M 24	131
250	PN 25	12 × M 27	200
300	PN 10	12 × M 20	125
300	PN 16	12 × M 24	179
300	PN 25	16 × M 27	204
350	PN 10	16 × M 20	188
350	PN 16	16 × M 24	254
350	PN 25	16 × M 30	380
400	PN 10	16 × M 24	260
400	PN 16	16 × M 27	330
400	PN 25	16 × M 33	488
450	PN 10	20 × M 24	235
450	PN 16	20 × M 27	300
450	PN 25	20 × M 33	385
500	PN 10	20 × M 24	265
500	PN 16	20 × M 30	448
500	PN 25	20 × M 33	533
600	PN 10	20 × M 27	345
600 *	PN 16	20 × M 33	658
600	PN 25	20 × M 36	731
* Designed acc. to EN 1092-1 (not to DIN 2501)			

Promag P tightening torques for ASME

Nominal diameter		ASME Pressure rating		Max. tightening torque PTFE	
[mm]	[inch]	[lbs]	Threaded fasteners	[Nm]	[lbf · ft]
25	1"	Class 150	4 × ½"	11	8
25	1"	Class 300	4 × 5/8"	14	10
40	1 ½"	Class 150	4 × ½"	24	18
40	1 ½"	Class 300	4 × ¾"	34	25
50	2"	Class 150	4 × 5/8"	47	35

Nominal diameter		ASME Pressure rating		Max. tightening torque PTFE	
[mm]	[inch]	[lbs]	Threaded fasteners	[Nm]	[lbf · ft]
50	2"	Class 300	8 × 5/8"	23	17
80	3"	Class 150	4 × 5/8"	79	58
80	3"	Class 300	8 × ¾"	47	35
100	4"	Class 150	8 × 5/8"	56	41
100	4"	Class 300	8 × ¾"	67	49
150	6"	Class 150	8 × ¾"	106	78
150	6"	Class 300	12 × ¾"	73	54
200	8"	Class 150	8 × ¾"	143	105
250	10"	Class 150	12 × 7/8"	135	100
300	12"	Class 150	12 × 7/8"	178	131
350	14"	Class 150	12 × 1"	260	192
400	16"	Class 150	16 × 1"	246	181
450	18"	Class 150	16 × 1 1/8"	371	274
500	20"	Class 150	20 × 1 1/8"	341	252
600	24"	Class 150	20 × 1 ¼"	477	352

Promag P tightening torques for JIS

Nominal diameter [mm]	JIS Pressure rating	Threaded fasteners	Max. tightening torque [Nm] PTFE
25	10K	4 × M 16	32
25	20K	4 × M 16	32
32	10K	4 × M 16	38
32	20K	4 × M 16	38
40	10K	4 × M 16	41
40	20K	4 × M 16	41
50	10K	4 × M 16	54
50	20K	8 × M 16	27
65	10K	4 × M 16	74
65	20K	8 × M 16	37
80	10K	8 × M 16	38
80	20K	8 × M 20	57
100	10K	8 × M 16	47
100	20K	8 × M 20	75
125	10K	8 × M 20	80
125	20K	8 × M 22	121
150	10K	8 × M 20	99
150	20K	12 × M 22	108
200	10K	12 × M 20	82
200	20K	12 × M 22	121
250	10K	12 × M 22	133
250	20K	12 × M 24	212
300	10K	16 × M 22	99
300	20K	16 × M 24	183

Promag P tightening torques for AS 2129

Nominal diameter [mm]	AS 2129 Pressure rating	Threaded fasteners	Max. tightening torque [Nm] PTFE
25	Table E	4 × M 12	21
50	Table E	4 × M 16	42

Promag P tightening torques for AS 4087

Nominal diameter [mm]	AS 4087 Pressure rating	Threaded fasteners	Max. tightening torque [Nm] PTFE
50	PN 16	4 × M 16	42

3.3.6 Installing the Promag W sensor

Note!
Bolts, nuts, seals, etc. are not included in the scope of supply and must be supplied by the customer.

The sensor is designed for installation between the two piping flanges.
- Observe in any case the necessary screw tightening torques on → 📄 34
- If grounding disks are used, follow the mounting instructions which will be enclosed with the shipment

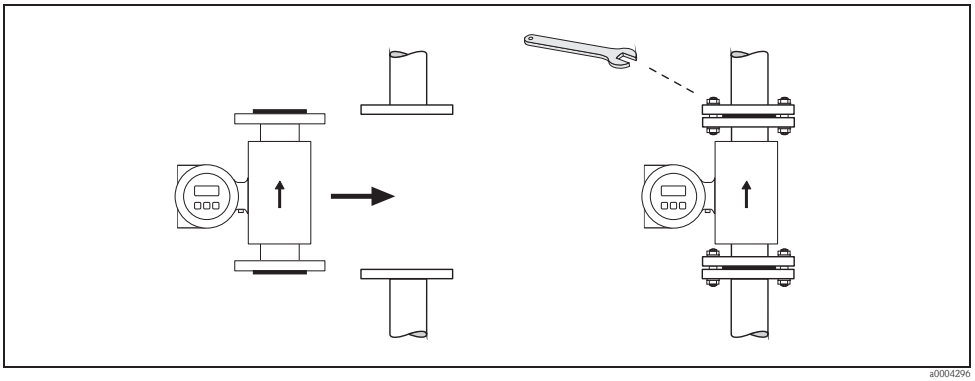

Fig. 22: Installing the Promag W sensor

Seals

Comply with the following instructions when installing seals:
- Hard rubber lining → additional seals are always necessary.
- Polyurethane lining → no seals are required.
- For DIN flanges, use only seals according to EN 1514-1.
- Make sure that the seals do not protrude into the piping cross-section.

Caution!
Risk of short circuit!
Do not use electrically conductive sealing compounds such as graphite! An electrically conductive layer could form on the inside of the measuring tube and short-circuit the measuring signal.

Ground cable

- If necessary, special ground cables for potential equalization can be ordered as an accessory (→ 📄 70).
- Information on potential equalization and detailed mounting instructions for the use of ground cables can be found on → 📄 50

Screw tightening torques (Promag W)

Please note the following:
- The tightening torques listed below are for lubricated threads only.
- Always tighten the screws uniformly and in diagonally opposite sequence.
- Overtightening the screws will deform the sealing faces or damage the seals.
- The tightening torques listed below apply only to pipes not subjected to tensile stress.

Tightening torques for:
- EN (DIN)→ 🖹 35
- JIS→ 🖹 37
- ASME→ 🖹 36
- AWWA → 🖹 37
- AS 2129 → 🖹 38
- AS 4087 → 🖹 38

Promag W tightening torques for EN (DIN)

Nominal diameter [mm]	EN (DIN) Pressure rating [bar]	Threaded fasteners	Max. tightening torque [Nm] Hard rubber	Polyurethane
25	PN 40	4 × M 12	-	15
32	PN 40	4 × M 16	-	24
40	PN 40	4 × M 16	-	31
50	PN 40	4 × M 16	48	40
65*	PN 16	8 × M 16	32	27
65	PN 40	8 × M 16	32	27
80	PN 16	8 × M 16	40	34
80	PN 40	8 × M 16	40	34
100	PN 16	8 × M 16	43	36
100	PN 40	8 × M 20	59	50
125	PN 16	8 × M 16	56	48
125	PN 40	8 × M 24	83	71
150	PN 16	8 × M 20	74	63
150	PN 40	8 × M 24	104	88
200	PN 10	8 × M 20	106	91
200	PN 16	12 × M 20	70	61
200	PN 25	12 × M 24	104	92
250	PN 10	12 × M 20	82	71
250	PN 16	12 × M 24	98	85
250	PN 25	12 × M 27	150	134
300	PN 10	12 × M 20	94	81
300	PN 16	12 × M 24	134	118
300	PN 25	16 × M 27	153	138
350	PN 6	12 × M 20	111	120
350	PN 10	16 × M 20	112	118
350	PN 16	16 × M 24	152	165
350	PN 25	16 × M 30	227	252
400	PN 6	16 × M 20	90	98
400	PN 10	16 × M 24	151	167
400	PN 16	16 × M 27	193	215
400	PN 25	16 × M 33	289	326
450	PN 6	16 × M 20	112	126
450	PN 10	20 × M 24	153	133
450	PN 16	20 × M 27	198	196
450	PN 25	20 × M 33	256	253
500	PN 6	20 × M 20	119	123
500	PN 10	20 × M 24	155	171
500	PN 16	20 × M 30	275	300
500	PN 25	20 × M 33	317	360
600	PN 6	20 × M 24	139	147
600	PN 10	20 × M 27	206	219
600 *	PN 16	20 × M 33	415	443
600	PN 25	20 × M 36	431	516
700	PN 6	24 × M 24	148	139
700	PN 10	24 × M 27	246	246
700	PN 16	24 × M 33	278	318

Nominal diameter [mm]	EN (DIN) Pressure rating [bar]	Threaded fasteners	Max. tightening torque [Nm] Hard rubber	Polyurethane
700	PN 25	24 × M 39	449	507
800	PN 6	24 × M 27	206	182
800	PN 10	24 × M 30	331	316
800	PN 16	24 × M 36	369	385
800	PN 25	24 × M 45	664	721
900	PN 6	24 × M 27	230	637
900	PN 10	28 × M 30	316	307
900	PN 16	28 × M 36	353	398
900	PN 25	28 × M 45	690	716
1000	PN 6	28 × M 27	218	208
1000	PN 10	28 × M 33	402	405
1000	PN 16	28 × M 39	502	518
1000	PN 25	28 × M 52	970	971
1200	PN 6	32 × M 30	319	299
1200	PN 10	32 × M 36	564	568
1200	PN 16	32 × M 45	701	753
1400	PN 6	36 × M 33	430	398
1400	PN 10	36 × M 39	654	618
1400	PN 16	36 × M 45	729	762
1600	PN 6	40 × M 33	440	417
1600	PN 10	40 × M 45	946	893
1600	PN 16	40 × M 52	1007	1100
1800	PN 6	44 × M 36	547	521
1800	PN 10	44 × M 45	961	895
1800	PN 16	44 × M 52	1108	1003
2000	PN 6	48 × M 39	629	605
2000	PN 10	48 × M 45	1047	1092
2000	PN 16	48 × M 56	1324	1261
* Designed acc. to EN 1092-1 (not to DIN 2501)				

Promag W tightening torques for ASME

Nominal diameter [mm]	[inch]	ASME Pressure rating [lbs]	Threaded fasteners	Max. tightening torque Hard rubber [Nm]	[lbf · ft]	Polyurethane [Nm]	[lbf · ft]
25	1"	Class 150	4 × ½"	-	-	7	5
25	1"	Class 300	4 × 5/8"	-	-	8	6
40	1 ½"	Class 150	4 × ½"	-	-	10	7
40	1 ½"	Class 300	4 × ¾"	-	-	15	11
50	2"	Class 150	4 × 5/8"	35	26	22	16
50	2"	Class 300	8 × 5/8"	18	13	11	8
80	3"	Class 150	4 × 5/8"	60	44	43	32
80	3"	Class 300	8 × ¾"	38	28	26	19
100	4"	Class 150	8 × 5/8"	42	31	31	23
100	4"	Class 300	8 × ¾"	58	43	40	30
150	6"	Class 150	8 × ¾"	79	58	59	44
150	6"	Class 300	12 × ¾"	70	52	51	38
200	8"	Class 150	8 × ¾"	107	79	80	59
250	10"	Class 150	12 × 7/8"	101	74	75	55
300	12"	Class 150	12 × 7/8"	133	98	103	76
350	14"	Class 150	12 × 1"	135	100	158	117
400	16"	Class 150	16 × 1"	128	94	150	111
450	18"	Class 150	16 × 1 1/8"	204	150	234	173
500	20"	Class 150	20 × 1 1/8"	183	135	217	160
600	24"	Class 150	20 × 1 ¼"	268	198	307	226

Promag W tightening torques for JIS

Nominal diameter [mm]	JIS Pressure rating	Threaded fasteners	Max. tightening torque [Nm]	
			Hard rubber	Polyurethane
25	10K	4 × M 16	-	19
25	20K	4 × M 16	-	19
32	10K	4 × M 16	-	22
32	20K	4 × M 16	-	22
40	10K	4 × M 16	-	24
40	20K	4 × M 16	-	24
50	10K	4 × M 16	40	33
50	20K	8 × M 16	20	17
65	10K	4 × M 16	55	45
65	20K	8 × M 16	28	23
80	10K	8 × M 16	29	23
80	20K	8 × M 20	42	35
100	10K	8 × M 16	35	29
100	20K	8 × M 20	56	48
125	10K	8 × M 20	60	51
125	20K	8 × M 22	91	79
150	10K	8 × M 20	75	63
150	20K	12 × M 22	81	72
200	10K	12 × M 20	61	52
200	20K	12 × M 22	91	80
250	10K	12 × M 22	100	87
250	20K	12 × M 24	159	144
300	10K	16 × M 22	74	63
300	20K	16 × M 24	138	124

Promag W tightening torques for AWWA

Nominal diameter		AWWA Pressure rating	Threaded fasteners	Max. tightening torque			
				Hard rubber		Polyurethane	
[mm]	[inch]			[Nm]	[lbf · ft]	[Nm]	[lbf · ft]
700	28"	Class D	28 × 1 ¼"	247	182	292	215
750	30"	Class D	28 × 1 ¼"	287	212	302	223
800	32"	Class D	28 × 1 ½"	394	291	422	311
900	36"	Class D	32 × 1 ½"	419	309	430	317
1000	40"	Class D	36 × 1 ½"	420	310	477	352
1050	42"	Class D	36 × 1 ½"	528	389	518	382
1200	48"	Class D	44 × 1 ½"	552	407	531	392
1350	54"	Class D	44 × 1 ¾"	730	538	633	467
1500	60"	Class D	52 × 1 ¾"	758	559	832	614
1650	66"	Class D	52 × 1 ¾"	946	698	955	704
1800	72"	Class D	60 × 1 ¾"	975	719	1087	802
2000	78"	Class D	64 × 2"	853	629	786	580

Promag W tightening torques for AS 2129

Nominal diameter [mm]	AS 2129 Pressure rating	Threaded fasteners	Max. tightening torque [Nm] Hard rubber
50	Table E	4 × M 16	32
80	Table E	4 × M 16	49
100	Table E	8 × M 16	38
150	Table E	8 × M 20	64
200	Table E	8 × M 20	96
250	Table E	12 × M 20	98
300	Table E	12 × M 24	123
350	Table E	12 × M 24	203
400	Table E	12 × M 24	226
450	Table E	16 × M 24	226
500	Table E	16 × M 24	271
600	Table E	16 × M 30	439
700	Table E	20 × M 30	355
750	Table E	20 × M 30	559
800	Table E	20 × M 30	631
900	Table E	24 × M 30	627
1000	Table E	24 × M 30	634
1200	Table E	32 × M 30	727

Promag W tightening torques for AS 4087

Nominal diameter [mm]	AS 4087 Pressure rating	Threaded fasteners	Max. tightening torque [Nm] Hard rubber
50	Table E	4 × M 16	32
80	PN 16	4 × M 16	49
100	PN 16	4 × M 16	76
150	PN 16	8 × M 20	52
200	PN 16	8 × M 20	77
250	PN 16	8 × M 20	147
300	PN 16	12 × M 24	103
350	PN 16	12 × M 24	203
375	PN 16	12 × M 24	137
400	PN 16	12 × M 24	226
450	PN 16	12 × M 24	301
500	PN 16	16 × M 24	271
600	PN 16	16 × M 27	393
700	PN 16	20 × M 27	330
750	PN 16	20 × M 30	529
800	PN 16	20 × M 33	631
900	PN 16	24 × M 33	627
1000	PN 16	24 × M 33	595
1200	PN 16	32 × M 33	703

3.3.7 Turning the transmitter housing

1. Loosen the two securing screws.
2. Turn the bayonet lock as far as it will go.
3. Carefully lift the transmitter housing:
   – Promag D: approx. 10 mm (0.39 in) above the securing screws
   – Promag E/H/L/P/W: to the stop
4. Turn the transmitter housing to the desired position:
   – Promag D: max. 180° clockwise or max. 180° counterclockwise
   – Promag E/H/L/P/W: max. 280° clockwise or max. 20° counterclockwise
5. Lower the housing into position and re-engage the bayonet catch.
6. Retighten the two securing screws.

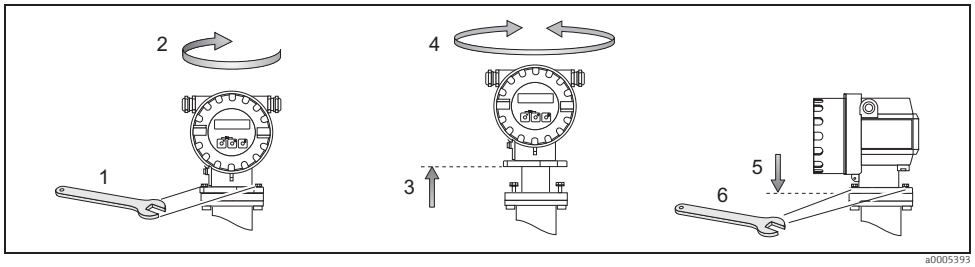

Fig. 23: Turning the transmitter housing

3.3.8 Turning the onsite display

1. Unscrew cover of the electronics compartment from the transmitter housing.
2. Remove the display module from the transmitter retaining rails.
3. Turn the display to the desired position (max. 4 × 45° in each direction).
4. Fit the display back onto the retaining rails.
5. Screw the cover of the electronics compartment firmly back onto the transmitter housing.

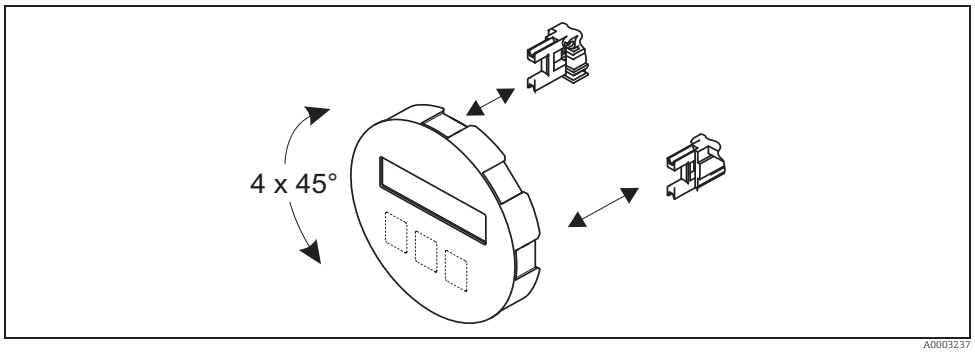

Fig. 24: Turning the local display

3.3.9 Mounting the transmitter (remote version)

The transmitter can be mounted in the following ways:
- Wall mounting
- Pipe mounting (with separate mounting kit, accessories → 📄 70)

The transmitter and the sensor must be mounted separate in the following circumstances:
- Poor accessibility
- Lack of space
- Extreme fluid/ambient temperatures (temperature ranges → 📄 86)
- Severe vibration (> 2 g/2 h per day; 10 to 100 Hz)

Caution!
- The ambient temperature range -20 to +60 °C (–4 to +140 °F) may not be exceeded at the mounting location. Avoid direct sunlight.
- If the device is mounted to a warm pipe, make sure that the housing temperature does not exceed +60 °C (+140 °F), which is the maximum permissible temperature.

Mount the transmitter as illustrated in → 🖼 25.

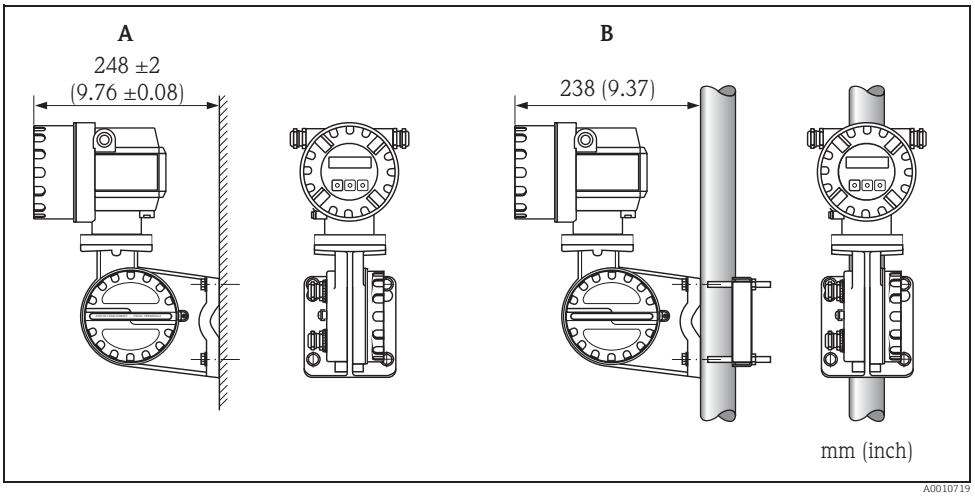

Fig. 25: Mounting the transmitter (remote version)

A Direct wall mounting
B Pipe mounting

3.4 Post-installation check

Perform the following checks after installing the measuring device in the pipe:

Device condition and specifications	Notes
Is the device damaged (visual inspection)?	–
Does the device correspond to specifications at the measuring point, including process temperature and pressure, ambient temperature, minimum fluid conductivity, measuring range, etc.?	→ 🖹 87
Installation	**Notes**
Does the arrow on the sensor nameplate match the actual direction of flow through the pipe?	–
Is the position of the measuring electrode plane correct?	→ 🖹 13
Is the position of the empty pipe detection electrode correct?	→ 🖹 13
Were all screws tightened to the specified torques when the sensor was installed?	Promag D → 🖹 21 Promag E → 🖹 23 Promag L → 🖹 28 Promag P → 🖹 31 Promag W → 🖹 34
Were the correct seals used (type, material, installation)?	Promag D → 🖹 19 Promag E → 🖹 22 Promag H → 🖹 25 Promag L→ 🖹 27 Promag P → 🖹 31 Promag W → 🖹 34
Are the measuring point number and labeling correct (visual inspection)?	–
Process environment / process conditions	**Notes**
Were the inlet and outlet runs respected?	Inlet run ≥ 5 × DN Outlet run ≥ 2 × DN
Is the measuring device protected against moisture and direct sunlight?	–
Is the sensor adequately protected against vibration (attachment, support)?	Acceleration up to 2 g by analogy with IEC 600 68-2-8

4 Wiring

Warning!
When using remote versions, only sensors and transmitters with the same serial number can be connected up. Measuring errors can occur if the devices are not connected in this way.

Note!
The device does not have an internal circuit breaker. For this reason, assign the device a switch or power-breaker switch capable of disconnecting the power supply line from the mains.

4.1 Connecting the remote version

4.1.1 Connecting Promag D/E/H/L/P/W

Warning!
- Risk of electric shock! Switch off the power supply before opening the device. Do not install or wire the device while it is connected to the power supply. Failure to comply with this precaution can result in irreparable damage to the electronics.
- Risk of electric shock! Connect the protective conductor to the ground terminal on the housing before the power supply is applied.

Caution!
- Only sensors and transmitters with the same serial number can be connected to one another. Communication problems can occur if the devices are not connected in this way.
- Risk of damaging the coil driver. Always switch off the power supply before connecting or disconnecting the coil cable.

Procedure

1. Transmitter: Loosen the securing clamp and remove the cover from the connection compartment (a).
2. Sensor: Remove the cover from the connection housing (b).
3. Feed the signal cable (c) and the coil cable (d) through the appropriate cable entries.

   Caution!
   Route the connecting cables securely (see "Length of connecting cable" → 18).
4. Terminate the signal and coil current cable as indicated in the table:
   Promag D/E/L/P/W → Refer to the table → 45
   Promag H → Refer to the "Cable termination" table → 46
5. Establish the wiring between the sensor and the transmitter.
   The electrical wiring diagram that applies to your device can be found:
   - In the corresponding graphic:
     → 26 (Promag D); → 27 (Promag E/L/P/W); → 28 (Promag H)
   - In the cover of the sensor and transmitter

   Note!
   The cable shields of the Promag H sensor are grounded by means of the strain relief terminals (see also the "Cable termination" table → 46)

   Caution!
   Insulate the shields of cables that are not connected to eliminate the risk of short-circuits with neighboring cable shields inside the connection housing.
6. Transmitter: Secure the cover to the connection compartment (a) and tighten the socket head cap screw of the securing clamp.
7. Sensor: Secure the cover on the connection housing (b).

Promag D

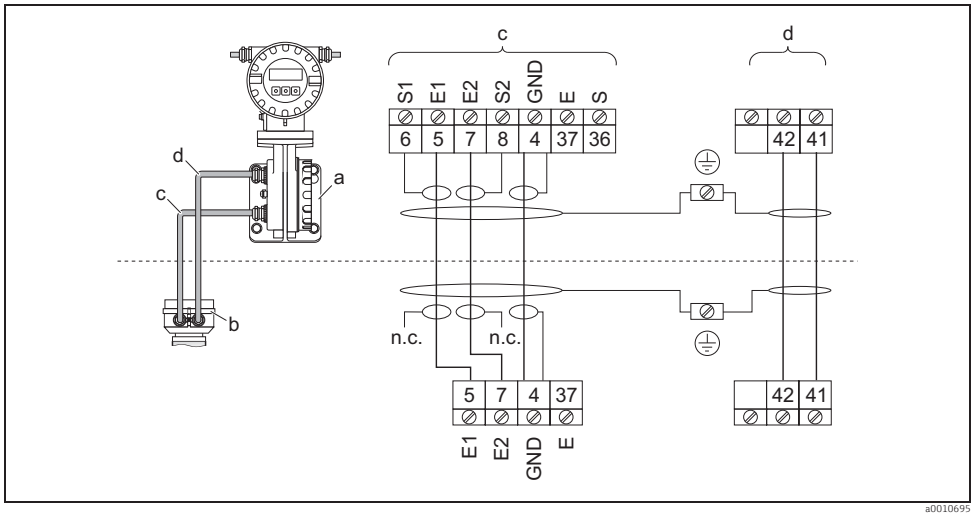

Fig. 26: Connecting the remote version of Promag D

a Wall-mount housing connection compartment
b Cover of the sensor connection housing
c Signal cable
d Coil current cable
n.c. Not connected, insulated cable shields

Wire colors/Terminal No.:
5/6 = braun, 7/8 = white, 4 = green, 37/36 = yellow

Promag E/L/P/W

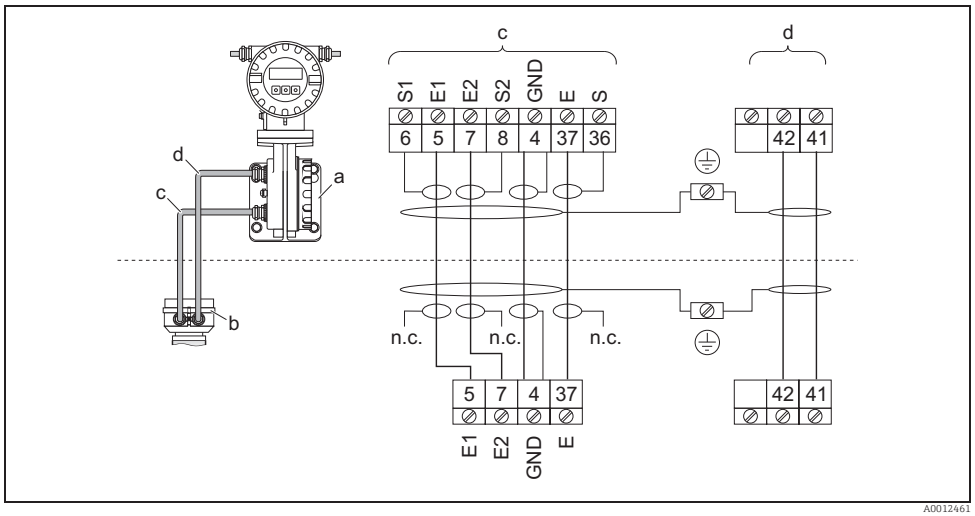

Fig. 27: Connecting the remote version of Promag E/L/P/W

a Wall-mount housing connection compartment
b Cover of the sensor connection housing
c Signal cable
d Coil current cable
n.c. Not connected, insulated cable shields

Wire colors/Terminal No.:
5/6 = braun, 7/8 = white, 4 = green, 37/36 = yellow

Promag H

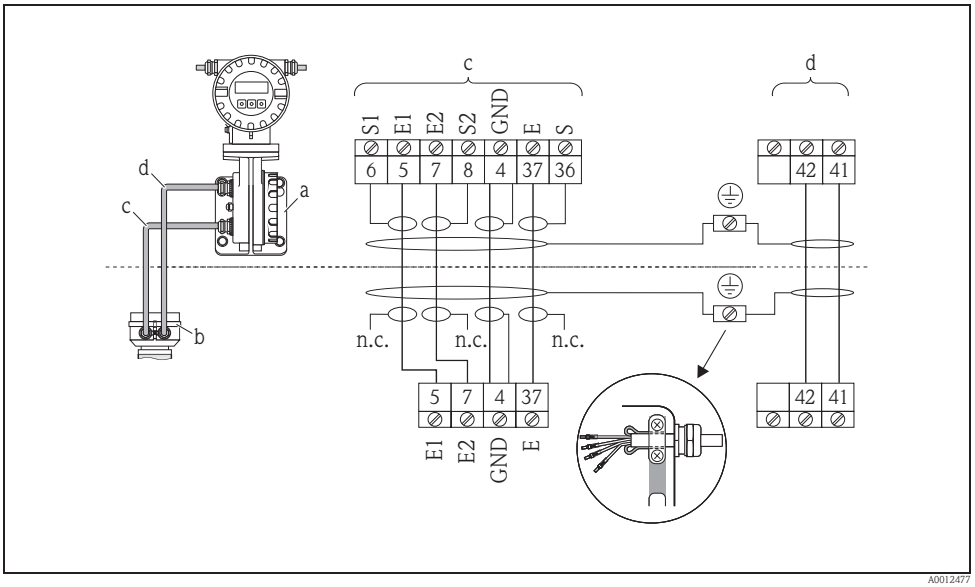

Fig. 28: Connecting the remote version of Promag H

a Wall-mount housing connection compartment
b Cover of the sensor connection housing
c Signal cable
d Coil current cable
n.c. Not connected, insulated cable shields

Wire colors/Terminal No.:
5/6 = braun, 7/8 = white, 4 = green, 37/36 = yellow

Cable termination for the remote version
Promag D/E/L/P/W

Terminate the signal and coil current cables as shown in the figure below (Detail A).
Ferrules must be provided on the fine-wire cores (Detail B: ① = red ferrules, ∅ 1.0 mm; ② = white ferrules, ∅ 0.5 mm).

Caution!
When fitting the connectors, pay attention to the following points:
- *Signal cable* → Make sure that the ferrules do not touch the wire shield on the sensor side. Minimum distance = 1 mm (exception "GND" = green cable)
- *Coil current cable* → Insulate one core of the three-core wire at the level of the core reinforcement; you only require two cores for the connection.

TRANSMITTER

Signal cable

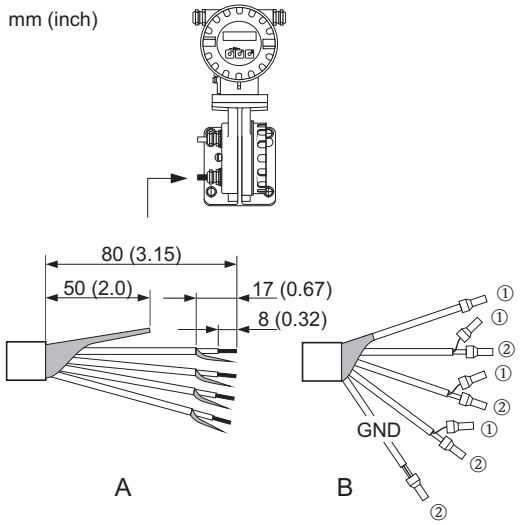

Coil current cable

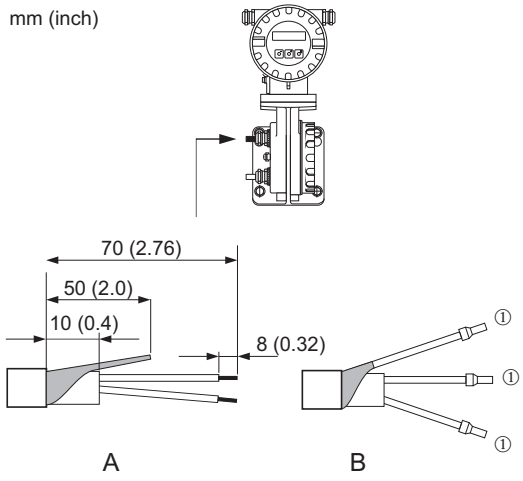

SENSOR

Signal cable

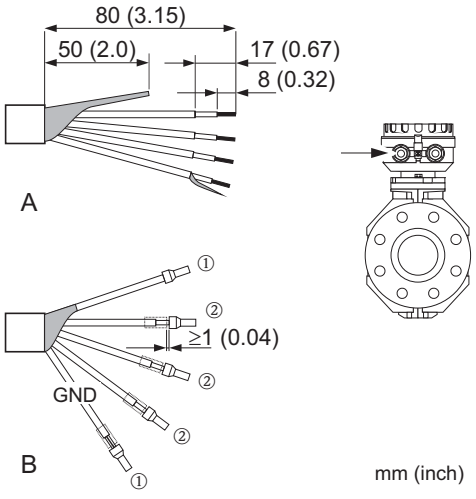

Coil current cable

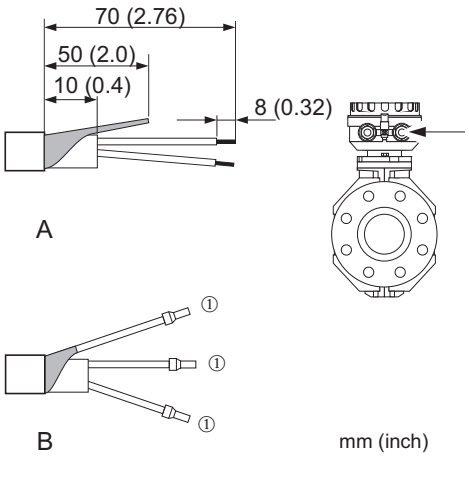

Cable termination for the remote version
Promag H

Terminate the signal and coil current cables as shown in the figure below (Detail A).
Ferrules must be provided on the fine-wire cores (Detail B: ① = red ferrules, ∅ 1.0 mm; ② = white ferrules, ∅ 0.5 mm).

Caution!
When fitting the connectors, pay attention to the following points:
- *Signal cable* → Make sure that the ferrules do not touch the wire shield on the sensor side. Minimum distance = 1 mm (exception "GND" = green cable).
- *Coil current cable* → Insulate one core of the three-core wire at the level of the core reinforcement; you only require two cores for the connection.
- On the sensor side, reverse both cable shields approx. 15 mm over the outer jacket. The strain relief ensures an electrical connection with the connection housing.

TRANSMITTER

Signal cable

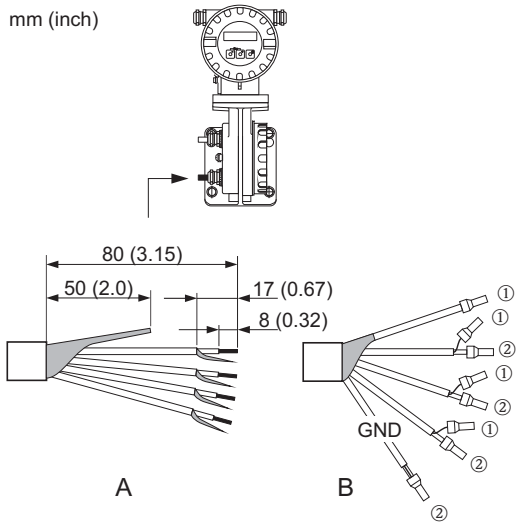

Coil current cable

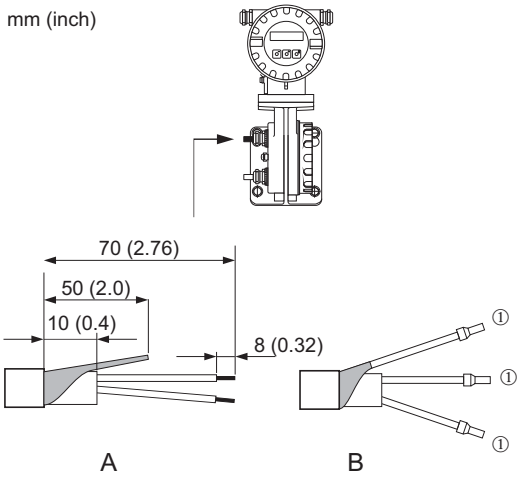

SENSOR

Signal cable

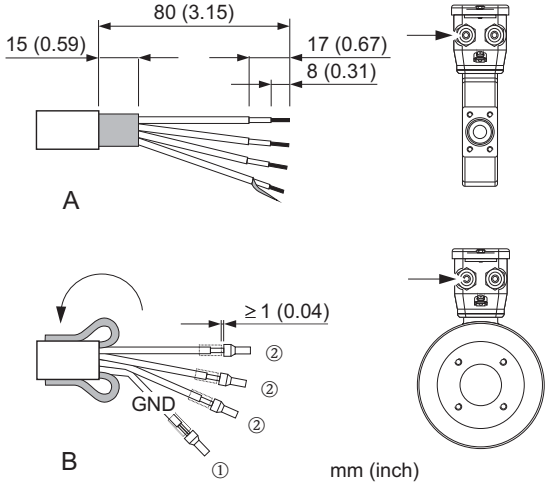

Coil current cable

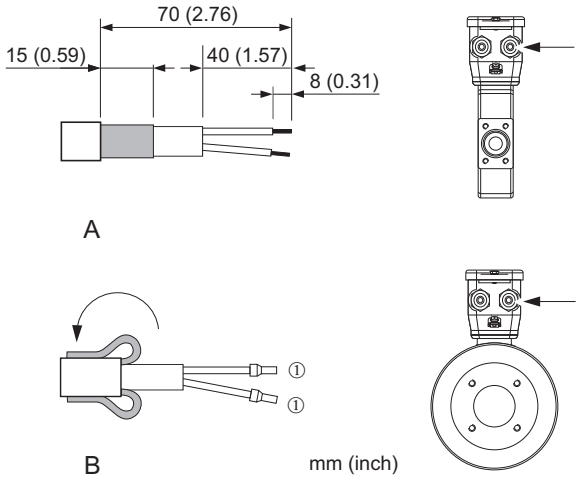

4.1.2 Cable specifications

Signal cable

- 3 × 0.38 mm² PVC cable with common, braided copper shield (∅ ~7 mm) and individually shielded cores
- With Empty Pipe Detection (EPD): 4 × 0.38 mm² PVC cable with common, braided copper shield (∅ ~ 7 mm) and individually shielded cores
- Conductor resistance: ≤ 50 Ω/km
- Capacitance: core/shield: ≤ 420 pF/m
- Permanent operating temperature: –20 to +80 °C
- Cable cross-section: max. 2.5 mm²

Coil cable

- 2 × 0.75 mm² PVC cable with common, braided copper shield (∅ ~ 7 mm)
- Conductor resistance: ≤ 37 Ω/km
- Capacitance: core/core, shield grounded: ≤ 120 pF/m
- Operating temperature: –20 to +80 °C
- Cable cross-section: max. 2.5 mm²
- Test voltage for cable insulation: ≥ 1433 V AC r.m.s. 50/60 Hz or ≥ 2026 V DC

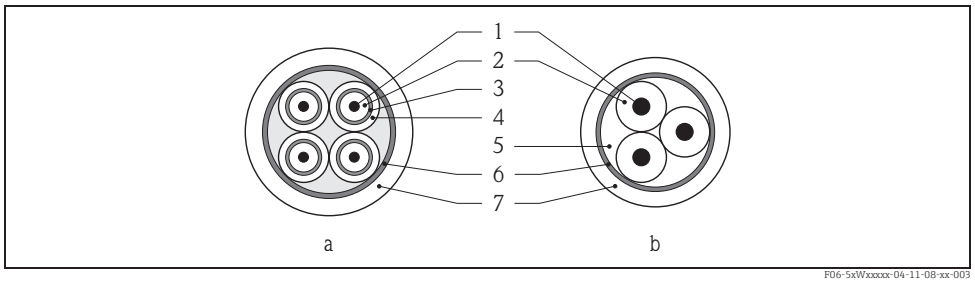

Fig. 29: Cable cross-section

a Signal cable
b Coil current cable

1 Core
2 Core insulation
3 Core shield
4 Core jacket
5 Core reinforcement
6 Cable shield
7 Outer jacket

Operation in zones of severe electrical interference:

The measuring device complies with the general safety requirements in accordance with EN 61010 and the EMC requirements of IEC/EN 61326.

Caution!
Grounding is by means of the ground terminals provided for the purpose inside the connection housing. Ensure that the stripped and twisted lengths of cable shield to the ground terminal are as short as possible.

4.2 Connecting the measuring unit

4.2.1 Transmitter

Warning!
- Risk of electric shock!
  Switch off the power supply before opening the device. Do not install or wire the device while it is connected to the power supply. Failure to comply with this precaution can result in irreparable damage to the electronics.
- Risk of electric shock!
  Connect the protective conductor to the ground terminal on the housing before the power supply is applied.
- Compare the specifications on the nameplate with the local supply voltage and frequency. The national regulations governing the installation of electrical equipment also apply.
- The transmitter must be included in the building fuse system.

1. Unscrew cover of the electronics compartment from the transmitter housing.
2. Press the side latches and flip down the cover of the connection compartment.
3. Feed the cable for the power supply and the signal cable through the appropriate cable entries.
4. Remove the terminal connectors from the transmitter housing and connect the cable for the power supply and the signal cable:
   – Wiring diagram → 30
   – Terminal assignment → 49
5. Plug the terminal connectors back into the transmitter housing.

   Note!
   The connectors are coded so you cannot mix them up.
6. Secure the ground cable to the ground terminal.
7. Flip up the cover of the connection compartment.
8. Screw the cover of the electronics compartment firmly onto the transmitter housing.

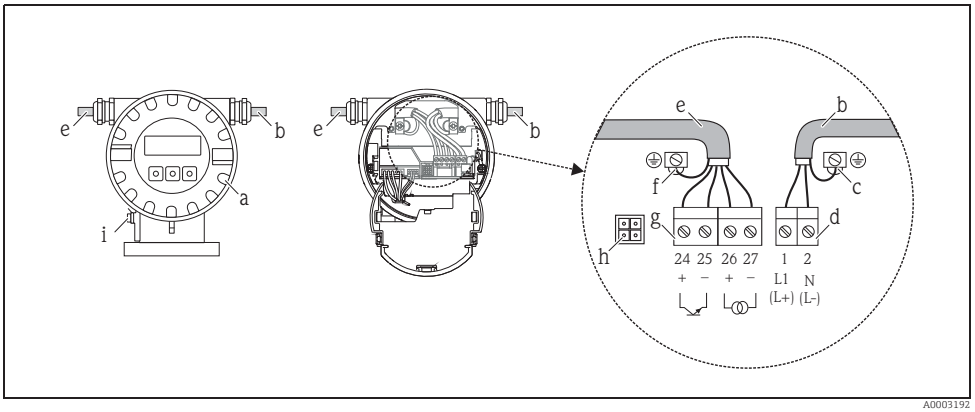

Fig. 30: Connecting the transmitter (aluminum field housing). Cable cross-section: max. 2.5 mm²

a Electronics compartment cover
b Cable for power supply: 85 to 250 V AC, 11 to 40 V DC, 20 to 28 V AC
c Ground terminal for power supply cable
*d Terminal connector for power supply: No. 1–2 → **49** (terminal assignment)*
e Signal cable
f Ground terminal for signal cable
*g Terminal connector for signal cable: No. 24–27 → **49** (terminal assignment)*
h Service connector
i Ground terminal for potential equalization

4.2.2 Terminal assignment

Order version	Terminal No. (outputs/power supply)		
	24 (+) / 25 (–)	26 (+) / 27 (–)	1 (L1/L+) / 2 (N/L–)
10***-**********A	Pulse output	Current output HART	Power supply

Note!
Functional values of the outputs and power supply → 83

4.2.3 HART connection

Users have the following connection options at their disposal:
- Direct connection to transmitter by means of terminals 26(+) and 27 (–)
- Connection by means of the 4 to 20 mA circuit.
- The measuring loop's minimum load must be at least 250 Ω.
- After commissioning, make the following settings:
  – CURRENT SPAN function → "4–20 mA HART"
  – Switch HART write protection on or off → 60

Connection of the HART handheld communicator

See also the documentation issued by the HART Communication Foundation, and in particular HCF LIT 20: "HART, a technical summary".

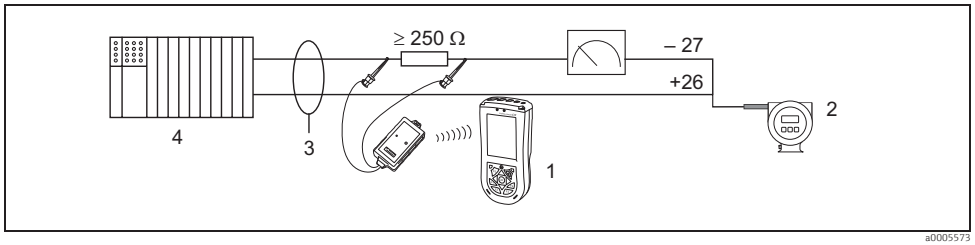

Fig. 31: Electrical connection of HART handheld Field Xpert SFX100

1 HART handheld Field Xpert SFX100
2 Auxiliary energy
3 Shielding
4 Other devices or PLC with passive input

Connection of a PC with an operating software

In order to connect a PC with an operating software (e.g. "FieldCare), a HART modem (e.g. Commubox FXA 195) is needed.

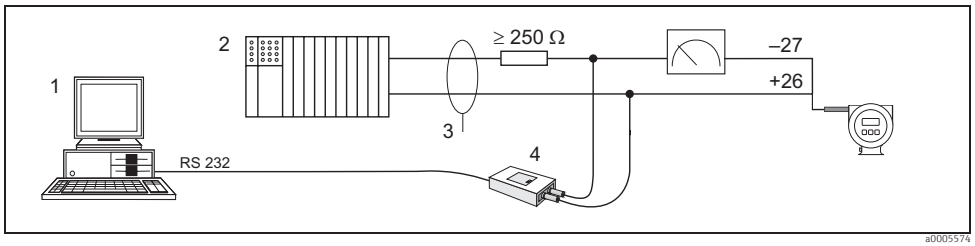

Fig. 32: Electrical connection of a PC with an operating software

1 PC with an operating software
2 Other evaluation devices or PLC with passive input
3 Shield
4 HART modem, e.g. Commubox FXA 195

4.3 Potential equalization

Warning!
The measuring system must be included in the potential equalization.

Perfect measurement is only ensured when the fluid and the sensor have the same electrical potential. This is ensured by the reference electrode integrated in the sensor as standard.

The following should also be taken into consideration for potential equalization:
- Internal grounding concepts in the company
- Operating conditions, such as the material/grounding of the pipes (see Table)

4.3.1 Potential equalization for Promag D

- No reference electrode is integrated!
  For the two ground disks of the sensor an electrical connection to the fluid is always ensured.
- Exampels for connections → 50

4.3.2 Potential equalization for Promag E/L/P/W

- Reference electrode integrated in the sensor as standard
- Exampels for connections → 51

4.3.3 Potential equalization for Promag H

No reference electrode is integrated!
For the metal process connections of the sensor an electrical connection to the fluid is always ensured.

Caution!
If using process connections made of a synthetic material, ground rings have to be used to ensure that potential is equalized (→ 25). The necessary ground rings can be ordered separately from Endress+Hauser as accessories (→ 70).

4.3.4 Exampels for potential equalization connections for Promag D

Standard case

Operating conditions	Potential equalization
When using the measuring device in a: ▪ Metal, grounded pipe ▪ Plastic pipe ▪ Pipe with insulating lining Potential equalization takes place via the ground terminal of the transmitter (standard situation). Note! When installing in metal pipes, we recommend you connect the ground terminal of the transmitter housing with the piping.	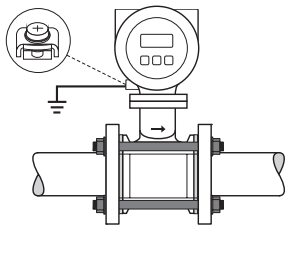 a0010702 *Fig. 33: Via the ground terminal of the transmitter*

Special cases

Operating conditions	Potential equalization
When using the measuring device in a: ▪ Metal pipe that is not grounded This connection method also applies in situations where: ▪ Customary potential equalization cannot be ensured ▪ Excessively high equalizing currents can be expected Potential equalization takes place via the ground terminal of the transmitter and the two pipe flanges. Here, the ground cable (copper wire, 6 mm² / 0.0093 in²) is mounted directly on the conductive flange coating with flange screws.	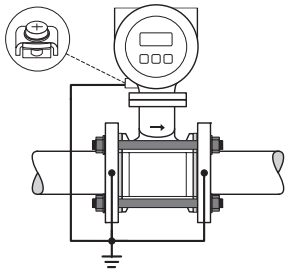 a0010703 *Fig. 34: Via the ground terminal of the transmitter and the flanges of the pipe*
When using the measuring device in a: ▪ Pipe with a cathodic protection unit The device is installed potential-free in the pipe. Only the two flanges of the pipe are connected with a ground cable (copper wire, 6 mm² / 0.0093 in²). Here, the ground cable is mounted directly on the conductive flange coating with flange screws. Note the following when installing: ▪ The applicable regulations regarding potential-free installation must be observed. ▪ There should be no electrically conductive connection between the pipe and the device. ▪ The mounting material must withstand the applicable torques.	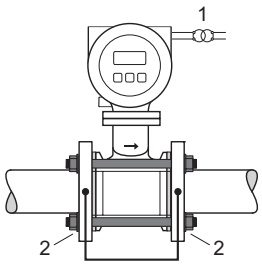 a0010704 *Fig. 35: Potential equalization and cathodic protection* *1 Power supply isolation transformer* *2 Electrically isolated*

4.3.5 Exampels for potential equalization connections for Promag E/L/P/W

Standard case

Operating conditions	Potential equalization
When using the measuring device in a: ▪ Metal, grounded pipe Potential equalization takes place via the ground terminal of the transmitter (standard situation). Note! When installing in metal pipes, we recommend you connect the ground terminal of the transmitter housing with the piping.	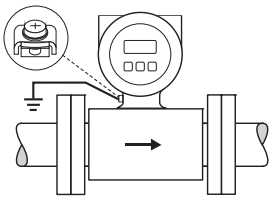 a0010702 *Fig. 36: Via the ground terminal of the transmitter*

Special cases

Operating conditions	Potential equalization
When using the measuring device in a: ■ Metal pipe that is not grounded This connection method also applies in situations where: ■ Customary potential equalization cannot be ensured ■ Excessively high equalizing currents can be expected Both sensor flanges are connected to the pipe flange by means of a ground cable (copper wire, 6 mm² / 0.0093 in²) and grounded. Connect the transmitter or sensor connection housing, as applicable, to ground potential by means of the ground terminal provided for the purpose. Ground cable installation depends on the nominal diameter: ■ DN ≤ 300: The ground cable is mounted directly on the conductive flange coating with the flange screws. ■ DN ≥ 350: The ground cable is mounted directly on the metal transport bracket. Note! The ground cable for flange-to-flange connections can be ordered separately as an accessory from Endress+Hauser.	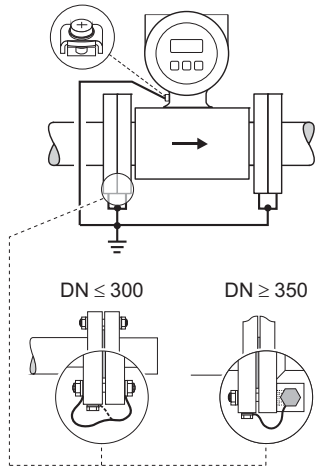 a0010703 *Fig. 37: Via the ground terminal of the transmitter and the flanges of the pipe*
When using the measuring device in a: ■ Plastic pipe ■ Pipe with insulating lining This connection method also applies in situations where: ■ Customary potential equalization cannot be ensured ■ Excessively high equalizing currents can be expected Potential equalization takes place using additional ground disks, which are connected to the ground terminal via a ground cable (copper wire, min. 6 mm² / 0.0093 in²). When installing the ground disks, please comply with the enclosed Installation Instructions.	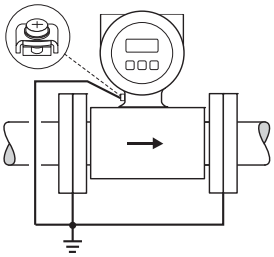 a0010702 *Fig. 38: Via the ground terminal of the transmitter*
When using the measuring device in a: ■ Pipe with a cathodic protection unit The device is installed potential-free in the pipe. Only the two flanges of the pipe are connected with a ground cable (copper wire, 6 mm² / 0.0093 in²). Here, the ground cable is mounted directly on the conductive flange coating with flange screws. Note the following when installing: ■ The applicable regulations regarding potential-free installation must be observed. ■ There should be no electrically conductive connection between the pipe and the device. ■ The mounting material must withstand the applicable torques.	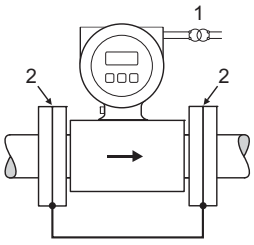 a0010704 *Fig. 39: Potential equalization and cathodic protection* *1 Power supply isolation transformer* *2 Electrically isolated*

4.4 Degree of protection

The devices meet all the requirements of IP 67 degree of protection.

Compliance with the following points is mandatory following installation in the field or servicing in order to ensure that IP 67 protection is maintained:
- The housing seals must be clean and undamaged when inserted into their grooves. The seals must be dried, cleaned or replaced if necessary.
- All threaded fasteners and screw covers must be firmly tightened.
- The cables used for connection must be of the specified outside diameter → 47.
- Firmly tighten the cable entries.
- The cables must loop down before they enter the cable entries ("water trap"). This arrangement prevents moisture penetrating the entry. Always install the measuring device in such a way that the cable entries do not point up.
- Remove all unused cable entries and insert plugs instead.
- Do not remove the grommet from the cable entry.

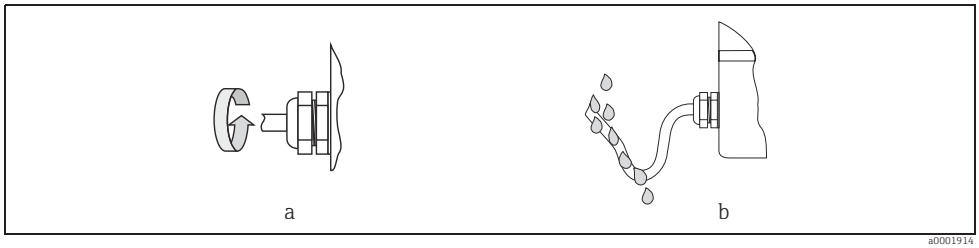

Fig. 40: Installation instructions, cable entries

Caution!
Do not loosen the threaded fasteners of the sensor housing, as otherwise the degree of protection guaranteed by Endress+Hauser no longer applies.

Note!
The Promag E/L/P/W sensors can be supplied with IP 68 rating (permanent immersion in water to a depth of 3 meters (10 ft)). In this case the transmitter must be installed remote from the sensor.
The Promag L sensors with IP 68 rating are only available with stainless steel flanges.

4.5 Post-connection check

Perform the following checks after completing electrical installation of the measuring device:

Device condition and specifications	Notes
Are cables or the device damaged (visual inspection)?	–
Electrical connection	**Notes**
Does the supply voltage match the specifications on the nameplate?	▪ 85 to 250 V AC (50 to 60 Hz) ▪ 20 to 28 V AC (50 to 60 Hz), 11 to 40 V DC
Do the cables used comply with the necessary specifications?	→ 🖹 47
Do the cables have adequate strain relief?	–
Is the cable type route completely isolated? Without loops and crossovers?	–
Are the power-supply and signal cables correctly connected?	See the wiring diagram inside the cover of the terminal compartment
Only remote version: Is the flow sensor connected to the matching transmitter electronics?	Check serial number on nameplates of sensor and connected transmitter.
Only remote version: Is the connecting cable between sensor and transmitter connected correctly?	→ 🖹 42
Are all screw terminals firmly tightened?	–
Have the measures for grounding/potential equalization been correctly implemented?	→ 🖹 50
Are all cable entries installed, firmly tightened and correctly sealed? Cables looped as "water traps"?	→ 🖹 53
Are all housing covers installed and firmly tightened?	–

5 Operation

5.1 Display and operating elements

The local display enables you to read all important parameters directly at the measuring point and configure the device.
The display area consists of two lines; this is where measured values are displayed, and/or status variables (partially filled pipe, etc.). The assignment of the display lines in operating mode is specified. The top line displays the volume flow and the bottom line displays the totalizer status.

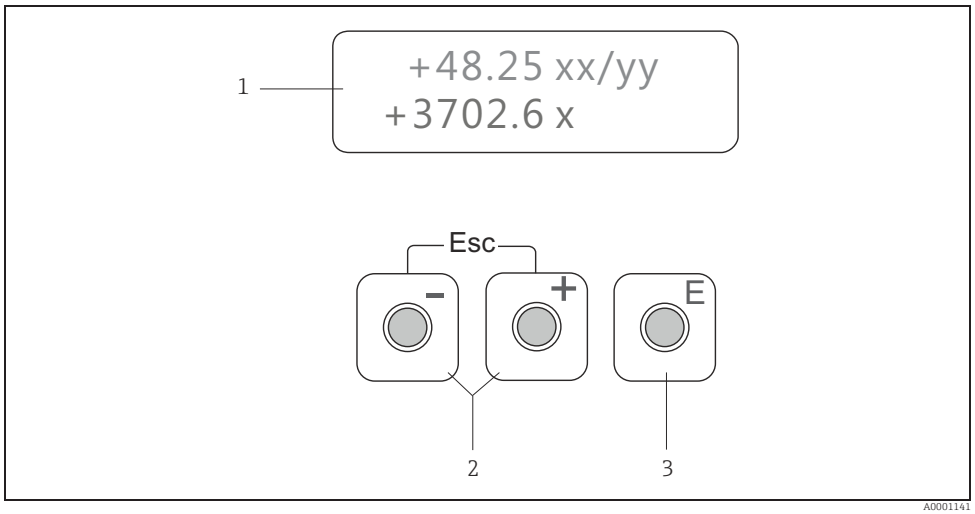

Fig. 41: Display and operating elements

1 Liquid crystal display
The two-line liquid-crystal display shows measured values, dialog texts, error messages and information messages. The display as it appears when normal measuring is in progress is known as the HOME position (operating mode).
- *Upper display line: Shows primary measured values, e.g. volume flow [e.g. in ml/min]*
- *Lower display line: Shows the totalizer status, [e.g. in m^3]*

2 Plus/minus keys
- *Enter numerical values, select parameters*
- *Select different function groups within the function matrix*

Press the +/- keys simultaneously to trigger the following functions:
- *Exit the function matrix step by step → HOME position*
- *Press and hold down +/- keys for longer than 3 seconds → Return directly to HOME position*
- *Cancel data entry*

3 Enter key
- *HOME position → Entry into the function matrix*
- *Save the numerical values you input or settings you change*

5.2 Brief operating instructions on the function matrix

Note!
- See the general notes on → 57.
- Function matrix overview → 108
- Detailed description of all functions → 109 ff.

The function matrix comprises two levels, namely the function groups and the functions of the function groups.
The groups are the highest-level grouping of the control options for the device. A number of functions is assigned to each group. You select a group in order to access the individual functions for operating and configuring the device.

1. HOME position → E → Enter the function matrix
2. Select a function group (e.g. OPERATION)
3. Select a function (e.g. LANGUAGE)
   Change parameter/enter numerical values:
   ± → select or enter enable code, parameters, numerical values
   E → save your entries
4. Exit the function matrix:
   – Press and hold down Esc key (Esc) for longer than 3 seconds → HOME position
   – Repeatedly press Esc key (Esc) → return step by step to HOME position

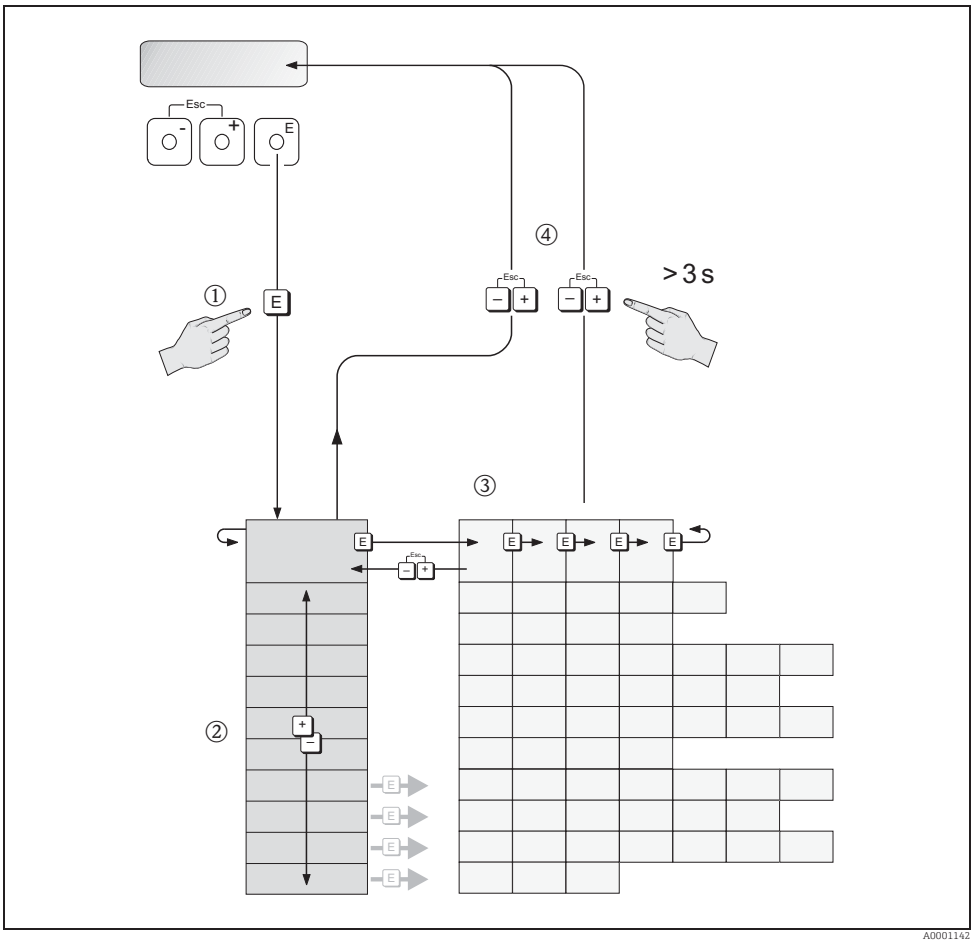

Fig. 42: Selecting functions and configuring parameters (function matrix)

5.2.1 General notes

The brief commissioning guide (→ 66) is adequate for commissioning in most instances. Complex measuring operations on the other hand necessitate additional functions that you can configure as necessary and customize to suit your process parameters. The function matrix, therefore, comprises a multiplicity of additional functions which, for the sake of clarity, are arranged in a number of function groups.

Comply with the following instructions when configuring functions:
- You select functions as described on → 56.
- You can switch off certain functions (OFF). If you do so, related functions in other function groups will no longer be displayed.
- Certain functions prompt you to confirm your data entries.
  Press ± to select "SURE [YES]" and press E again to confirm. This saves your setting or starts a function, as applicable.
- Return to the HOME position is automatic if no key is pressed for 5 minutes.

Note!
- The transmitter continues to measure while data entry is in progress, i.e. the current measured values are output via the signal outputs in the normal way.
- If the power supply fails, all preset and configured values remain safely stored in the EEPROM.

5.2.2 Enabling the programming mode

The function matrix can be disabled. Disabling the function matrix rules out the possibility of inadvertent changes to device functions, numerical values or factory settings. A numerical code (factory setting = 10) has to be entered before settings can be changed.
If you use a code of your choice, you exclude the possibility of unauthorized persons accessing data, see ACCESS CODE function → 111.

Comply with the following instructions when entering codes:
- If programming is disabled and the ± operating elements are pressed in any function, a prompt for the code automatically appears on the display.
- If "0" is specified as the customer's code, programming is always enabled.
- The Endress+Hauser service organization can be of assistance if you mislay your personal code.

Caution!
Changing certain parameters such as all sensor characteristics, for example, influences numerous functions of the entire measuring system, particularly measuring accuracy. Normally, such parameters may not be changed! Please contact Endress+Hauser if you have any questions.

5.2.3 Disabling the programming mode

Programming is disabled if you do not press the operating elements within 60 seconds following automatic return to the HOME position.
You can also disable programming in the "ACCESS CODE" function by entering any number (other than the customer's code).

5.3 Displaying error messages

5.3.1 Type of error

Errors which occur during commissioning or measuring operation are displayed immediately. If two or more system or process errors occur, the error with the highest priority is the one shown on the display.

The measuring system distinguishes between two types of error:
- *System errors* → 📄 *74:*
  This group comprises all device errors, e.g. communication errors, hardware faults, etc.
- *Process errors* → 📄 76:
  This group comprises all application errors, e.g. empty pipe, etc.

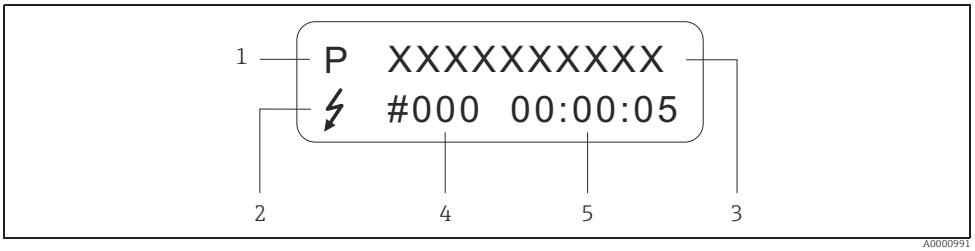

Fig. 43: Error messages on the display (example)

1 Error type:
– P = process error
– S = system error
2 Error message type:
– ϟ = fault message
– ! = notice message
3 Error designation: e.g. EMPTY PIPE = measuring tube is only partly filled or completely empty
4 Error number: e.g. #401
5 Duration of most recent error occurrence (in hours, minutes and seconds)

5.3.2 Error message types

Notice message (!)

- Displayed as → Exclamation mark (!), error type (S: system error, P: process error)
- The error in question has no effect on the outputs of the measuring device.

Fault message (ϟ)

- Displayed as → Lightning flash (ϟ), error type (S: system error, P: process error).
- The error in question has a direct effect on the outputs.
  The response of the individual outputs (failsafe mode) can be defined in the function matrix using the "FAILSAFE MODE" function → 📄 129.

Note!
For security reasons, error messages should be output via the status output.

5.4 Communication

In addition to local operation, the measuring device can be configured and measured values can be obtained by means of the HART protocol. Digital communication takes place using the 4–20 mA current output HART → 🖹 49.

The HART protocol allows the transfer of measuring and device data between the HART master and the field devices for configuration and diagnostics purposes.
The HART master, e.g. a handheld terminal or PC-based operating programs (such as FieldCare), require device description (DD) files which are used to access all the information in a HART device. Information is exclusively transferred using so-called "commands". There are three different command classes:

- *Universal commands:*
  All HART device support and use universal commands.
  The following functionalities are linked to them:
  – Identify HART devices
  – Reading digital measured values (volume flow, totalizer, etc.)
- *Common practice commands:*
  Common practice commands offer functions which are supported and can be executed by most but not all field devices.
- *Device-specific commands:*
  These commands allow access to device-specific functions which are not HART standard. Such commands access individual field device information, amongst other things, such as empty/full pipe calibration values, low flow cutoff settings, etc.



Note!
The device has access to all three command classes. A list of all the "Universal commands" and "Common practice commands" is provided on → 🖹 61.

5.4.1 Operating options

For the complete operation of the measuring device, including device-specific commands, there are DD files available to the user to provide the following operating aids and programs:

Field Xpert HART Communicator

Selecting device functions with a HART Communicator is a process involving a number of menu levels and a special HART function matrix.
The HART manual in the carrying case of the HART Communicator contains more detailed information on the device.

Operating program "FieldCare"

FieldCare is Endress+Hauser's FDT-based plant Asset Management Tool and allows the configuration and diagnosis of intelligent field devices. By using status information, you also have a simple but effective tool for monitoring devices. The Proline flow measuring devices are accessed via a service interface or via the service interface FXA193.

Operating program "SIMATIC PDM" (Siemens)

SIMATIC PDM is a standardized, manufacturer-independent tool for the operation, configuration, maintenance and diagnosis of intelligent field devices.

Operating program "AMS" (Emerson Process Management)

AMS (Asset Management Solutions): program for operating and configuring devices.

5.4.2 Current device description files

The following table illustrates the suitable device description file for the operating tool in question and then indicates where these can be obtained.

HART protocol:

Valid for device software:	1.04.XX	→ Function DEVICE SOFTWARE
Device data HART Manufacturer ID: Device ID:	 11_{hex} (ENDRESS+HAUSER) 56_{hex}	 → Function MANUFACTURER ID → Function DEVICE ID
HART version data:	Device Revision 5/ DD Revision 1	
Software release:	01.2012	

Operating program:	Sources for obtaining device descriptions:
Handheld Field Xpert SFX100	Use update function of handheld terminal
FieldCare / DTM	▪ www.endress.com → Download ▪ CD-ROM (Endress+Hauser order number 56004088) ▪ DVD (Endress+Hauser order number 70100690)
AMS	www.endress.com → Download
SIMATIC PDM	www.endress.com → Download

Tester/simulator:	Sources for obtaining device descriptions:
Fieldcheck	Update by means of FieldCare with the flow device FXA193/291 DTM in the Fieldflash module

Note!
The "Fieldcheck" tester/simulator is used for testing flowmeters in the field. When used in conjunction with the "FieldCare" software package, test results can be imported into a database, printed out and used for official certification. Contact your Endress+Hauser representative for more information.

5.4.3 Device variables

The following device variables are available using the HART protocol:

Code (decimal)	Device variable
0	OFF (not assigned)
1	Volume flow
250	Totalizer

At the factory, the process variables are assigned to the following device variables:
- Primary process variable (PV) → Volume flow
- Second process variable (SV) → Totalizer
- Third process variable (TV) → not assigned
- Fourth process variable (FV) → not assigned

5.4.4 Switching HART write protection on/off

The HART write protection can be switched on and off using the HART WRITE PROTECT device function → 🖹 121.

5.4.5 Universal and common practice HART commands

The following table contains all the universal commands supported by the device.

Command No. HART command / Access type		Command data (numeric data in decimal form)	Response data (numeric data in decimal form)
Universal commands			
0	Read unique device identifier Access type = read	none	Device identification delivers information on the device and the manufacturer. It cannot be changed. The response consists of a 12 byte device ID: – Byte 0: fixed value 254 – Byte 1: Manufacturer ID, 17 = E+H – Byte 2: Device type ID, 69 = Promag 10 – Byte 3: Number of preambles – Byte 4: Universal commands rev. no. – Byte 5: Device-specific commands rev. no. – Byte 6: Software revision – Byte 7: Hardware revision – Byte 8: Additional device information – Bytes 9-11: Device identification
1	Read primary process variable Access type = read	none	– Byte 0: HART unit code of the primary process variable – Bytes 1-4: Primary process variable Factory setting: Primary process variable = Volume flow ✎ Note! Manufacturer-specific units are represented using the HART unit code "240".
2	Read the primary process variable as current in mA and percentage of the set measuring range Access type = read	none	– Bytes 0-3: actual current of the primary process variable in mA – Bytes 4-7: % value of the set measuring range Factory setting: Primary process variable = Volume flow
3	Read the primary process variable as current in mA and four dynamic process variables Access type = read	none	24 bytes are sent as a response: – Bytes 0-3: primary process variable current in mA – Byte 4: HART unit code of the primary process variable – Bytes 5-8: Primary process variable – Byte 9: HART unit code of the second process variable – Bytes 10-13: Second process variable – Byte 14: HART unit code of the third process variable – Bytes 15-18: Third process variable – Byte 19: HART unit code of the fourth process variable – Bytes 20-23: Fourth process variable *Factory setting:* ▪ Primary process variable = Volume flow ▪ Second process variable = Totalizer ▪ Third process variable = OFF (not assigned) ▪ Fourth process variable = OFF (not assigned) The assignment of the process variables is fixed and cannot be changed. ✎ Note! Manufacturer-specific units are represented using the HART unit code "240".
6	Set HART shortform address Access type = write	Byte 0: desired address (0 to 15) Factory setting: 0 ✎ Note! With an address >0 (multidrop mode), the current output of the primary process variable is set to 4 mA.	Byte 0: active address

Command No. HART command / Access type		Command data (numeric data in decimal form)	Response data (numeric data in decimal form)
11	Read unique device identification using the TAG (measuring point designation) Access type = read	Bytes 0-5: TAG	Device identification delivers information on the device and the manufacturer. It cannot be changed. The response consists of a 12 byte device ID if the given TAG agrees with the one saved in the device: – Byte 0: fixed value 254 – Byte 1: Manufacturer ID, 17 = E+H – Byte 2: Device type ID, 69 = Promag 10 – Byte 3: Number of preambles – Byte 4: Universal commands rev. no. – Byte 5: Device-specific commands rev. no. – Byte 6: Software revision – Byte 7: Hardware revision – Byte 8: Additional device information – Bytes 9-11: Device identification
12	Read user message Access type = read	none	Bytes 0-24: User message ✎ Note! You can write the user message using Command 17.
13	Read TAG, descriptor and date Access type = read	none	– Bytes 0-5: TAG – Bytes 6-17: descriptor – Bytes 18-20: Date ✎ Note! You can write the TAG, descriptor and date using Command 18.
14	Read sensor information on primary process variable	none	– Bytes 0-2: Sensor serial number – Byte 3: HART unit code of sensor limits and measuring range of the primary process variable – Bytes 4-7: Upper sensor limit – Bytes 8-11: Lower sensor limit – Bytes 12-15: Minimum span ✎ Note! ▪ The data relate to the primary process variable (= volume flow). ▪ Manufacturer-specific units are represented using the HART unit code "240".
15	Read output information of primary process variable Access type = read	none	– Byte 0: Alarm selection ID – Byte 1: Transfer function ID – Byte 2: HART unit code for the set measuring range of the primary process variable – Bytes 3-6: upper range, value for 20 mA – Bytes 7-10: lower range, value for 4 mA – Bytes 11-14: Damping constant in [s] – Byte 15: Write protection ID – Byte 16: OEM dealer ID, 17 = E+H Factory setting: Primary process variable = Volume flow ✎ Note! Manufacturer-specific units are represented using the HART unit code "240".
16	Read the device production number Access type = read	none	Bytes 0-2: Production number
17	Write user message Access = write	Save any 32-character text in the device. Bytes 0-23: Desired user message	Displays the current user message in the device: Bytes 0-23: Current user message in the device
18	Write TAG, descriptor and date Access = write	With this parameter, you can store an 8 character TAG, a 16 character descriptor and a date: – Bytes 0-5: TAG – Bytes 6-17: descriptor – Bytes 18-20: Date	Displays the current information in the device: – Bytes 0-5: TAG – Bytes 6-17: descriptor – Bytes 18-20: Date
19	Write the device production number Access = write	Bytes 0-2: Production number	Bytes 0-2: Production number

The following table contains all the common practice commands supported by the device:

Command No. HART command / Access type		Command data (numeric data in decimal form)	Response data (numeric data in decimal form)
Common practice commands			
34	Write damping value for primary process variable Access = write	Bytes 0-3: Damping value of the primary process variable "volume flow" in seconds *Factory setting:* Primary process variable = Current output damping	Displays the current damping value in the device: Bytes 0-3: Damping value in seconds
35	Write measuring range of primary process variable Access = write	Write the desired measuring range: – Byte 0: HART unit code of the primary process variable – Bytes 1-4: upper range, value for 20 mA – Bytes 5-8: lower range, value for 4 mA *Factory setting:* Primary process variable = Volume flow Note! ▪ The start of the measuring range (4 mA) must correspond to the zero flow. ▪ If the HART unit code is not the correct one for the process variable, the device will continue with the last valid unit.	The currently set measuring range is displayed as a response: – Byte 0: HART unit code for the set measuring range of the primary process variable – Bytes 1-4: upper range, value for 20 mA – Bytes 5-8: lower range, value for 4 mA Note! Manufacturer-specific units are represented using the HART unit code "240".
38	Device status reset (configuration changed) Access = write	none Note! It is also possible to execute this HART command when write protection is activated (= ON)!	none
40	Simulate input current of primary process variable Access = write	Simulation of the desired output current of the primary process variable. An entry value of 0 exits the simulation mode: Bytes 0-3: Output current in mA *Factory setting:* Primary process variable = Volume flow Note! You can set the assignment of device variables to process variables using Command 51.	The momentary output current of the primary process variable is displayed as a response: Bytes 0-3: Output current in mA
42	Perform master reset Access = write	none	none
44	Write unit of primary process variable Access = write	Set unit of primary process variable. Only units which are suitable for the process variable are transferred to the device: Byte 0: HART unit code *Factory setting:* Primary process variable = Volume flow Note! ▪ If the written HART unit code is not the correct one for the process variable, the device will continue with the last valid unit. ▪ If you change the unit of the primary process variable, this has a direct impact on the system units.	The current unit code of the primary process variable is displayed as a response: Byte 0: HART unit code Note! Manufacturer-specific units are represented using the HART unit code "240".
48	Read additional device status Access = read	none	The device status is displayed in extended form as the response: Coding: see table → 65.

Command No. HART command / Access type		Command data (numeric data in decimal form)	Response data (numeric data in decimal form)
50	Read assignment of the device variables to the four process variables Access = read	none	Display of the current variable assignment of the process variables: – Byte 0: Device variable code to the primary process variable – Byte 1: Device variable code to the second process variable – Byte 2: Device variable code to the third process variable – Byte 3: Device variable code to the fourth process variable *Factory setting:* ▪ Primary process variable: Code 1 for volume flow ▪ Second process variable: Code 250 for totalizer ▪ Third process variable: Code 0 for OFF (not assigned) ▪ Fourth process variable: Code 0 for OFF (not assigned)
53	Write device variable unit Access = write	This command sets the unit of the given device variables. Only those units which suit the device variable are transferred: – Byte 0: Device variable code – Byte 1: HART unit code *Code of the supported device variables:* See information → 🖹 60 ✎ Note! ▪ If the written unit is not the correct one for the device variable, the device will continue with the last valid unit. ▪ If you change the unit of the device variable, this has a direct impact on the system units.	The current unit of the device variables is displayed in the device as a response: – Byte 0: Device variable code – Byte 1: HART unit code ✎ Note! Manufacturer-specific units are represented using the HART unit code "240".
59	Write number of preambles in response message Access = write	This parameter sets the number of preambles which are inserted in the response messages: Byte 0: Number of preambles (4 to 20)	As a response, the current number of the preambles is displayed in the response message: Byte 0: Number of preambles

5.4.6 Device status and error messages

You can read the extended device status, in this case, current error messages, via Command "48". The command delivers information which is partly coded in bits (see table below).

Note!
- You can find a detailed explanation of the device status and error messages and their elimination on → 📄 65
- Bits and bytes not listed are not assigned.

Byte	Bit	Error No.	Short error description
0	0	001	Serious device error
	1	011	Measuring amplifier has faulty EEPROM
	2	012	Error when accessing data of the measuring amplifier EEPROM
3	3	111	Totalizer checksum error
5	0	321	Coil current of the sensor is outside the tolerance.
7	3	351	Current output: Flow is out of range
8	3	359	Pulse output: The pulse output frequency is out of range
10	7	401	Measuring tube partially filled or empty
11	2	461	EPD calibration not possible because the fluid's conductivity is either too low or too high
	4	463	The EPD calibration values for empty pipe and full pipe are identical, and therefore incorrect.
12	7	501	Amplifier software version is loaded. Currently no other commands are possible.
14	3	601	Positive zero return active
18	3	691	Simulation of response to error (outputs) active
	4	692	Simulation of volume flow active

6 Commissioning

6.1 Function check

Make sure that all final checks have been completed before you start up your measuring point:
- Checklist for "Post-installation check" → 41
- Checklist for "Post-connection check" → 54

6.2 Switching on the measuring device

Once the connection checks have been successfully completed, it is time to switch on the power supply. The device is now operational. The measuring device performs a number of post switch-on self-tests. As this procedure progresses the following sequence of messages appears on the local display:

PROMAG 10 V 1.XX.XX	Start-up message

Normal measuring mode commences as soon as start-up completes.
Various measured-value and/or status variables (HOME position) appear on the display.

Note!
If start-up fails, an error message indicating the cause is displayed.

6.3 Brief commissioning guide

HOME position → E → +

Configure display	
UI language	→ 111
Display contrast	→ 112
Number of decimal places	→ 112

Select engineering units	
Volume flow	→ 109
Totalizer	→ 113

Configure outputs			
Current output		*Pulse/status output*	
Current range	→ 114	Operating mode	→ 116
Full scale value	→ 115	Pulse value	→ 116
		Pulse width	→ 116
		or	
		Assign status output	→ 117
		Switch-on point	→ 117

Complex applications The quickest way to find information on configuring additional functions is via the following pages:	
Operating matrix	→ 108
Index	→ 135

For optimum measurement results	
Low flow cut off	→ 122
Empty pipe detection	→ 122

6.4 Commissioning after installing a new electronics board

After startup, the device checks whether a serial number is available. If this is not the case, the following setup is started. Installing a new electronics board → 79.

6.4.1 "Commissioning" setup

Note!
- The setup can no longer be called up once a serial number has been entered and stored. If a parameter is entered incorrectly during the setup, this must be corrected in the relevant function via the function matrix.
- The appropriate information is documented on the nameplate of the sensor and on the inside of the housing cover, → 2 → 7.

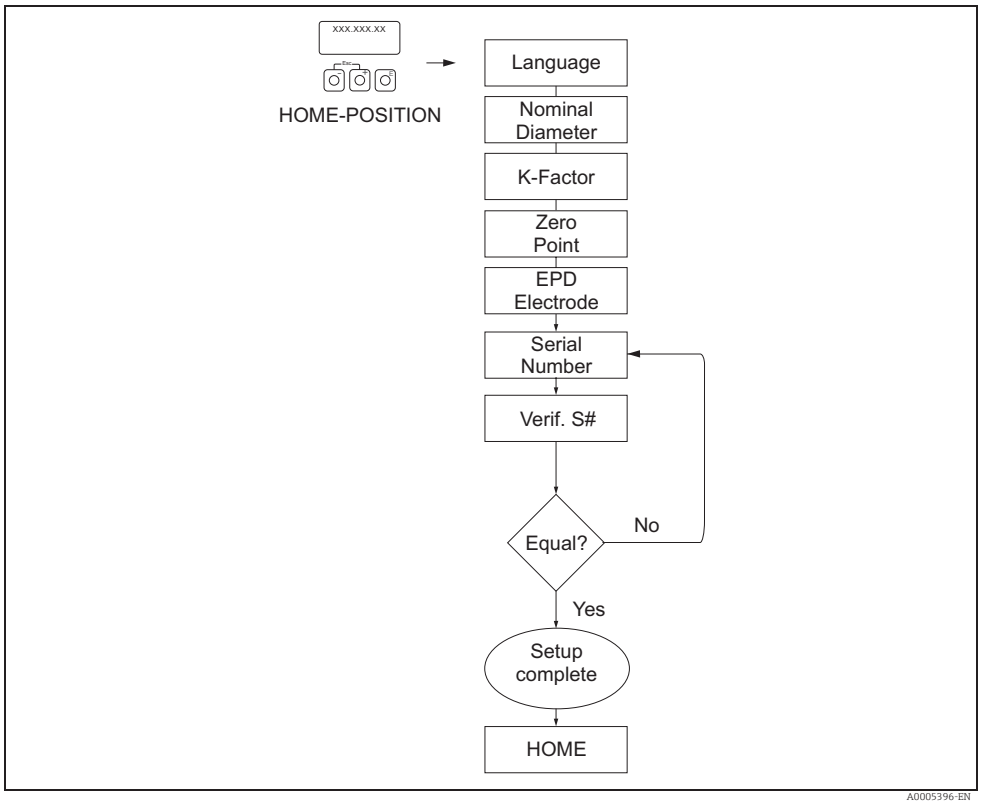

Fig. 44: The "Commissioning" setup starts after installation of a new electronics board if no serial number is present.

6.5 Empty-pipe/full-pipe adjustment

Flow cannot be measured correctly unless the measuring tube is completely full.
This status can be permanently monitored using the Empty Pipe Detection:
EPD = Empty Pipe Detection (with the help of an EPD electrode)

Caution!
More detailed information on empty-pipe and full-pipe adjustment can be found in the description of the functions:
- EPD ADJUSTMENT (carrying out the adjustment) → 123.
- EPD (switching empty pipe detection on and off) → 122

Note!
- The EPD function is not available unless the sensor is fitted with an EPD electrode.
- The devices are already calibrated at the factory with water (approx. 500 µS/cm). If the fluid conductivity differs from this reference, empty-pipe/full-pipe adjustment has to be performed again on site.
- The default setting for EPD when the devices are delivered is OFF; the function has to be activated if required.
- The EPD process error can be output by means of the configurable status output.

6.5.1 Performing empty-pipe and full-pipe adjustment (EPD)

1. Select the appropriate function in the function matrix:
   HOME → E → + → PROCESS PARAMETER → E → + → EPD ADJUSTMENT
2. Empty the piping. The wall of the measuring tube should still be wet with fluid during EPD empty pipe adjustment
3. Start empty-pipe adjustment: Select "EMPTY PIPE ADJUST" and press E to confirm.
4. After empty-pipe adjustment, fill the piping with fluid.
5. Start full-pipe adjustment: Select "FULL PIPE ADJUST" and press E to confirm.
6. Having completed the adjustment, select the setting "OFF" and exit the function by pressing E.
7. Now switch on empty pipe detection in the EPD function by selecting the option "ON".

   Caution!
   The adjustment coefficients must be valid before you can activate the EPD function. If adjustment is incorrect the following messages might appear on the display:
   – FULL = EMPTY
     The adjustment values for empty pipe and full pipe are identical. In cases of this nature you must repeat empty-pipe or full-pipe adjustment!
   – ADJUSTMENT NOT OK
     Adjustment is not possible because the fluid's conductivity is out of range.

7 Maintenance

No special maintenance work is required.

7.1 Exterior cleaning

When cleaning the exterior of measuring devices, always use cleaning agents that do not attack the surface of the housing and the seals.

7.2 Seals

The seals of the Promag H sensor must be replaced periodically, particularly in the case of gasket seals (aseptic version).
The period between changes depends on the frequency of cleaning cycles, the cleaning temperature and the fluid temperature.

Replacement seals (accessories) → 70.

8 Accessories

Various accessories, which can be ordered separately from Endress+Hauser, are available for the transmitter and the sensor. Your Endress+Hauser service organization can provide detailed information on the specific order codes on request.

8.1 Device-specific accessories

Accessory	Description	Order code
Proline Promag 10 transmitter	Transmitter for replacement or storage. Use the order code to define the following specifications: ▪ Approvals ▪ Degree of protection/version ▪ Cable for remote version ▪ Cable entry ▪ Display/power supply/operation ▪ Software ▪ Outputs/inputs	10XXX – XXXXX******

8.2 Measuring principle-specific accessories

Accessory	Description	Order code
Mounting set for Promag 10 transmitter	Mounting set for aluminum field housing (remote version). Suitable for Pipe mounting	DK5WM – B
Wall-mounting kit for Promag H	Wall-mounting kit for the Promag H sensor.	DK5HM – **
Cable for remote version	Coil and signal cables, various lengths.	DK5CA – **
Mounting kit for Promag D, wafer version	▪ Mounting bolts ▪ Nuts incl. washers ▪ Flange seals ▪ Centering sleeves (if required for the flange)	DKD** – **
Set of seals for Promag D	Set of seals consisting of two flange seals.	DK5DD – ***
Mounting kit for Promag H	▪ 2 process connections ▪ Threaded fasteners ▪ Seals	DKH** – ****
Set of seals for Promag H	For regular replacement of the seals of the Promag H sensor.	DK5HS – ***
Welding jig for Promag H	Weld nipple as process connection: welding jig for installation in pipe.	DK5HW – ***
Adapter connection for Promag A, H	Adapter connections for installing a Promag H instead of a Promag 30/33 A or Promag 30/33 H DN 25.	DK5HA – *****
Ground cable for Promag E/L/P/W	Ground cable for potential equalization.	DK5GC – ***
Ground disk for Promag E/L/P/W	Ground disk for potential equalization.	DK5GD – * * ***
Process display RIA45	Multifunctional 1-channel display unit: ▪ Universal input ▪ Transmitter power supply ▪ Limit relay ▪ Analog output	RIA45 – ******
Process display RIA251	Digital display device for looping into the 4 to 20 mA current loop.	RIA251 – **

Accessory	Description	Order code
Field display unit RIA16	Digital field display device for looping into the 4 to 20 mA current loop.	RIA16 – ***
Application Manager RMM621	Electronic recording, display, balancing, control, saving and event and alarm monitoring of analog and digital input signals. Values and conditions determined are output by means of analog and digital output signals. Remote transmission of alarms, input values and calculated values using a PSTN or GSM modem.	RMM621 – **********

8.3 Communication-specific accessories

Accessory	Description	Order code
HART Communicator Field Xpert SFX 100	Handheld terminal for remote configuration and for obtaining measured values via the HART current output (4 to 20 mA). Contact your Endress+Hauser representative for more information.	SFX100 – *******
Fieldgate FXA320	Gateway for remote interrogation of HART sensors and actuators via Web browser: ▪ 2-channel analog input (4 to 20 mA) ▪ 4 binary inputs with event counter function and frequency measurement ▪ Communication via modem, Ethernet or GSM ▪ Visualization via Internet/Intranet in Web browser and/or WAP cellular phone ▪ Limit value monitoring with alarm by e-mail or SMS ▪ Synchronized time stamping of all measured values.	FXA320 – *****
Fieldgate FXA520	Gateway for remote interrogation of HART sensors and actuators via Web browser: ▪ Web server for remote monitoring of up to 30 measuring points ▪ Intrinsically safe version [EEx ia]IIC for applications in hazardous areas ▪ Communication via modem, Ethernet or GSM ▪ Visualization via Internet/Intranet in Web browser and/or WAP cellular phone ▪ Limit value monitoring with alarm by e-mail or SMS ▪ Synchronized time stamping of all measured values ▪ Remote diagnosis and remote configuration of connected HART devices	FXA520 – ****
FXA195	The Commubox FXA195 connects intrinsically safe Smart transmitters with HART protocol to the USB port of a personal computer. This makes the remote operation of the transmitters possible with the aid of configuration programs (e.g. FieldCare). Power is supplied to the Commubox by means of the USB port	FXA195 – *

8.4 Service-specific accessories

Accessory	Description	Order code
Applicator	Software for selecting and planning flowmeters. The Applicator software can be downloaded from the Internet or ordered on CD-ROM for installation on a local PC. Contact your Endress+Hauser representative for more information.	DXA80 – *
Fieldcheck	Tester/simulator for testing flowmeters in the field. When used in conjunction with the "FieldCare" software package, test results can be imported into a database, printed out and used for official certification. Contact your Endress+Hauser representative for more information.	50098801
FieldCare	FieldCare is Endress+Hauser's FDT-based asset management tool. It can configure all intelligent field units in your system and helps you manage them. By using status information, it is also a simple but effective way of checking their status and condition.	See the product page on the Endress+Hauser Web site: www.endress.com
Memograph M graphic display recorder	The Memograph M graphic display recorder provides information on all the relevant process variables. Measured values are recorded correctly, limit values are monitored and measuring points analyzed. The data are stored in the 256 MB internal memory and also on a DSD card or USB stick. Memograph M boasts a modular design, intuitive operation and a comprehensive security concept. The ReadWin® 2000 PC software is part of the standard package and is used for configuring, visualizing and archiving the data captured. The mathematics channels which are optionally available enable continuous monitoring of specific power consumption, boiler efficiency and other parameters which are important for efficient energy management.	RSG40 – **********
FXA193	Service interface from the device to the PC for operation via FieldCare.	FXA193 – *

9 Troubleshooting

9.1 Troubleshooting instructions

Always start troubleshooting with the checklist below if faults occur after start-up or during operation. The routine takes you directly to the cause of the problem and the appropriate remedial measures.

Check the display	
No display visible and no output signals present.	1. Check the supply voltage → terminals 1, 2 2. Check the power line fuse → 🖹 81 85 to 250 V AC: TR5 1 A slow-blow / 250 V 11 to 40 V DC / 20 to 28 V AC: TR5 1.6A slow-blow / 250 V 3. Measuring electronics defective → order spare parts → 🖹 78
No display visible, but output signals are present.	1. Check whether the ribbon-cable connector of the display module is correctly plugged into the amplifier board → 🖹 79 2. Display module defective → order spare parts → 🖹 78 3. Measuring electronics defective → order spare parts → 🖹 78
Display texts are in a foreign language.	Switch off power supply. Press and hold down both the ± buttons and switch on the measuring device. The display text will appear in English (default) and is displayed at maximum contrast.
Measured value indicated, but no signal at the current or pulse output.	Electronics board defective → order spare parts → 🖹 78
↓	
Error messages on display	
Errors which occur during commissioning or measuring operation are displayed immediately. Error messages consist of a variety of icons: the meanings of these icons are as follows (example): – Error type: S = system error, P = process error – Error message type: ϟ = fault message, ! = notice message – EMPTY PIPE = Type of error, e.g. measuring tube is only partly filled or completely empty – 03:00:05 = duration of error occurrence (in hours, minutes and seconds) – #401 = error number ☝ Caution! ▪ See the information on → 🖹 58! ▪ The measuring system interprets simulations and positive zero return as system errors, but displays them as notice message only.	
Error number: No. 001 – 399 No. 501 – 699	System error (device error) has occurred → 🖹 74
Error number: No. 401 - 499	Process error (application error) has occurred → 🖹 76
↓	
Other error (without error message)	
Some other error has occurred.	Diagnosis and rectification → 🖹 76

9.2 System error messages

Serious system errors are always recognized by the device as "Fault message", and are shown as a lightning flash (ϟ) on the display. Fault messages immediately affect the outputs. Simulations and positive zero return, on the other hand, are only classed and displayed as notice messages.

Caution!
In the event of a serious fault, a flowmeter might have to be returned to the manufacturer for repair. Necessary procedures must be carried out before you return the measuring device to Endress+Hauser → 🖹 5.
Always enclose a duly completed "Declaration of Contamination" form. You will find a master copy of this form at the back of this manual.

Note!
- The error types listed in the following correspond to the factory settings.
- Also observe the information on → 🖹 58

Type	Error message / No.	Cause	Remedy (Replace electronics board → 🖹 79)
S = System error ϟ = Fault message (with an effect on the outputs) ! = Notice message (without an effect on the outputs)			
No. # 0xx→ Hardware error			
S ϟ	CRITICAL FAIL. # 001	Serious device error	Replace electronics board.
S ϟ	AMP HW EEPROM # 011	Electronics board: Defective EEPROM	Replace electronics board.
S ϟ	AMP SW EEPROM # 012	Amplifier: Error accessing EEPROM data.	The EEPROM data blocks in which an error has occurred are displayed in the TROUBLESHOOTING function. Press Enter to acknowledge the errors in question; default values are automatically inserted instead of the errored parameter values. Note! The measuring device has to be restarted if an error has occurred in a totalizer block (see error No. 111 / CHECKSUM TOTAL).
No. # 1xx→ Software error			
S ϟ	GAIN ERROR AMP # 101	Impermissible gain deviation compared to reference.	Replace electronics board.
S ϟ	CHECKSUM TOTAL. # 111	Totalizer checksum error	1. Restart the measuring device 2. Replace electronics board if necessary.
No. # 3xx→ System limits exceeded			
S ϟ	TOL. COIL CURR. # 321	Sensor: Coil current is out of tolerance.	Warning! Switch off power supply before manipulating the coil current cable, coil current cable connector or measuring electronics boards! Remote version: 1. Check wiring of terminals 41/42 → 🖹 42 2. Check coil current cable connector. Compact and remote version: Replace measuring electronics boards if necessary
S !	CURRENT RANGE # 351	Current output: flow is out of range.	– Change the upper or lower limit setting, as applicable. – Increase or reduce flow, as applicable.

Type	Error message / No.	Cause	Remedy (Replace electronics board → 79)
S !	RANGE PULSE # 359	Pulse output: the pulse output frequency is out of range.	1. Increase the setting for pulse weighting 2. When selecting the pulse width, choose a value that can still be processed by a connected counter (e.g. mechanical counter, PLC etc.). *Determine the pulse width:* – Variant 1: Enter the minimum duration that a pulse must be present at the connected counter to ensure its registration. – Variant 2: Enter the maximum (pulse) frequency as the half "reciprocal value" that a pulse must be present at the connected counter to ensure its registration. Example: The maximum input frequency of the connected counter is 10 Hz. The pulse width to be entered is: 1 / (2 · 10 Hz) = 50 ms 3. Reduce flow.
No. # 5xx→ Application error			
S !	SW.-UPDATE ACT. # 501	Electronics board: New software version being loaded, no other commands are possible at present.	Wait until process is completed and restart device.
S !	UP-/DOWNL. ACT. # 502	Data are being uploaded or downloaded via FieldCare. ✎ Note! Measuring device configuration is locked during the upload/download.	Wait until uploading/downloading process is finished.
No. # 6xx→ Simulation mode active			
S !	POS. ZERO-RET. # 601	Positive zero return active	Switch off positive zero return.
S ϟ	SIM. FAILSAFE # 691	Simulation of response to error (outputs) active.	Switch off simulation.
S !	SIM. VOL. FLOW # 692	Simulation of volume flow active.	Switch off simulation.

9.3 Process error messages

Process errors are permanently defined as fault messages or notice messages.

Type	Error message / No.	Cause	Remedy / spare part
P = Process error ϟ = Fault message (with an effect on the outputs) ! = Notice message (without an effect on the outputs)			
P !	EMPTY PIPE # 401	Measuring tube partially filled or empty	1. Check the process conditions of the plant 2. Fill the measuring tube
P !	ADJ. NOT OK # 461	EPD calibration not possible because the fluid's conductivity is either too low or too high.	The EPD function cannot be used with fluids of this nature.
P ϟ	FULL = EMPTY # 463	The EPD calibration values for empty pipe and full pipe are identical, therefore incorrect.	Repeat calibration, making sure procedure is correct → 🖹 68.

9.4 Process errors without messages

Symptoms	Rectification
Remark: You may have to change or correct certain settings in functions in the function matrix in order to rectify the fault.	
Flow values are negative, even though the fluid is flowing forwards through the pipe.	1. Remote version: – Switch off the power supply and check the wiring → 🖹 42 – If necessary, reverse the connections at terminals 41 and 42 2. Change the setting in the "INSTALLATION DIRECTION SENSOR" function accordingly
Measured-value reading fluctuates even though flow is steady.	1. Check grounding and potential equalization → 🖹 50 2. Check the fluid for presence of gas bubbles. 3. In the "SYSTEM DAMPING" function → increase the value
Measured-value reading shown on display, even though the fluid is at a standstill and the measuring tube is full.	1. Check grounding and potential equalization → 🖹 50 2. Check the fluid for presence of gas bubbles. 3. Activate the "LOW FLOW CUTOFF" function, i.e. enter or increase the value for the switching point.
Measured-value reading on display, even though measuring tube is empty.	1. Perform empty-pipe/full-pipe adjustment and then switch on Empty Pipe detection → 🖹 68 2. Remote version: Check the terminals of the EPD cable → 🖹 42 3. Fill the measuring tube.
The current output signal is always 4 mA, irrespective of the flow signal at any given time.	1. Select the "BUS ADDRESS" function and change the setting to "0". 2. Value for creepage too high. Reduce the value in the "LOW FLOW CUTOFF" function.
The fault cannot be rectified or some other fault not described above has arisen. In these instances, please contact your Endress+Hauser service organization.	The following options are available for tackling problems of this nature: Request the services of an Endress+Hauser service technician If you contact our service organization to have a service technician sent out, please be ready to quote the following information: – Brief description of the fault – Nameplate specifications (→ 🖹 6): order code, serial number Returning devices to Endress+Hauser The necessary procedures on → 🖹 5 must be carried out before you return a flowmeter requiring repair or calibration to Endress+Hauser. Always enclose a duly completed "Declaration of Conformity" form with the flowmeter. You will find a master copy of this form at the back of this manual. Replace transmitter electronics Components in the measuring electronics defective → order spare parts → 🖹 78

9.5 Response of outputs to errors

Note!
The response of the totalizer, current output, pulse output and status output is defined in the FAILSAFE MODE function (→ 129).

You can use positive zero return to set the signals of the current, pulse and status outputs to their fallback value, for example when measuring has to be interrupted while a pipe is being cleaned. This function takes priority over all other device functions: simulations, for example, are suppressed.

Failsafe mode of outputs and totalizers		
	Process/system error is current	**Positive zero return is activated**
Caution! System or process errors defined as "Notice messages" have no effect whatsoever on the inputs and outputs. See the information on → 58		
Current output	MINIMUM VALUE 4–20 mA (25 mA) → 2 mA 4–20 mA NAMUR →3.5 mA 4–20 mA US → 3.75 mA 4–20 mA (25 mA) HART → 2 mA 4–20 mA HART NAMUR →3.5 mA 4–20 mA HART US → 3.75 mA MAXIMUM VALUE 4–20 mA (25 mA) → 25 mA 4–20 mA NAMUR → 22.6 mA 4–20 mA US → 22.6 mA 4–20 mA (25 mA) HART → 25 mA 4–20 mA HART NAMUR → 22.6 mA 4–20 mA HART US → 22.6 mA HOLD VALUE Last valid value (preceding occurrence of the fault) is output. ACTUAL VALUE Measured value display on the basis of the current flow measurement. The fault is ignored.	Output signal corresponds to "zero flow"
Pulse output	MIN/MAX VALUE → FALLBACK VALUE Signal output → no pulses HOLD VALUE Last valid value (preceding occurrence of the fault) is output. ACTUAL VALUE Fault is ignored, i.e. normal measured-value output on the basis of ongoing flow measurement.	Output signal corresponds to "zero flow"
Totalizer	*MINIMUM/MAXIMUM VALUE → STOP* The totalizers are paused until the error is rectified. *ACTUAL VALUE* The fault is ignored. The totalizer continues to count in accordance with the current flow value.	Totalizer stops
Status output	In the event of a fault or power supply failure: Status output → non-conductive	No effect on status output

9.6 Spare parts

Detailed troubleshooting instructions are provided in the previous sections → 🖹 73
The measuring device, moreover, provides additional support in the form of continuous self-diagnosis and error messages.

Fault rectification can entail replacing defective components with tested spare parts. The illustration below shows the available scope of spare parts.

Note!
You can order spare parts directly from your Endress+Hauser service organization by providing the serial number printed on the transmitter's nameplate → 🖹 6.

Spare parts are shipped as sets comprising the following parts:
- Spare part
- Additional parts, small items (threaded fasteners, etc.)
- Mounting instructions
- Packaging

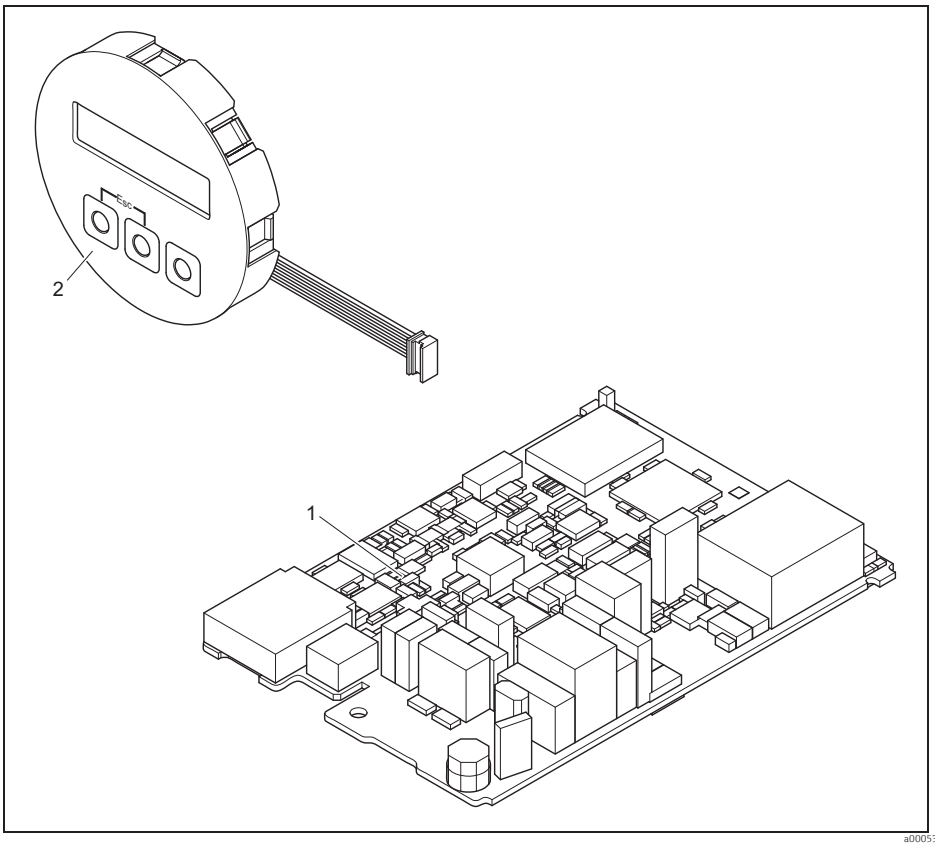

Fig. 45: Spare parts for Promag 10 transmitter

1 Electronics board
2 Display module

9.6.1 Removing and installing printed circuit boards

Field housing: removing and installing electronics boards → 46

Warning!
- Risk of electric shock!
  Exposed components carry dangerous voltages. Make sure that the power supply is switched off before you remove the cover of the electronics compartment.
- Risk of damaging electronic components (ESD protection). Static electricity can damage electronic components or impair their operability. Use a workplace with a grounded working surface purpose-built for electrostatically sensitive devices!
- If you cannot guarantee that the dielectric strength of the device is maintained in the following steps, then an appropriate inspection must be carried out in accordance with the manufacturer's specifications.

Caution!
Use only original Endress+Hauser parts.

Note!
Commissioning a new electronics board: → 67

1. Switch off power supply.
2. Unscrew cover of the electronics compartment from the transmitter housing.
3. Remove the local display (a) from the connection compartment cover.
4. Press the side latches (b) and flip down the cover of the connection compartment.
5. Disconnect the connector of the electrode signal cable (c) and the coil current cable (d).
6. Disconnect the connector for the power supply (e) and the outputs (f).
7. Disconnect the connector of the local display (g).
8. Remove the cover from the connection compartment (h) by loosening the screws.
9. Plug out the ground cable (i) of the electronics board.
10. Pull entire module (plastic retainer and electronics board) out of the housing.
11. Press the side latches (j) slightly outwards and partly push out the electronics board towards the rear from the front.
12. Remove the electronics board from the plastic retainer from the rear.
13. Installation is the reverse of the removal procedure.

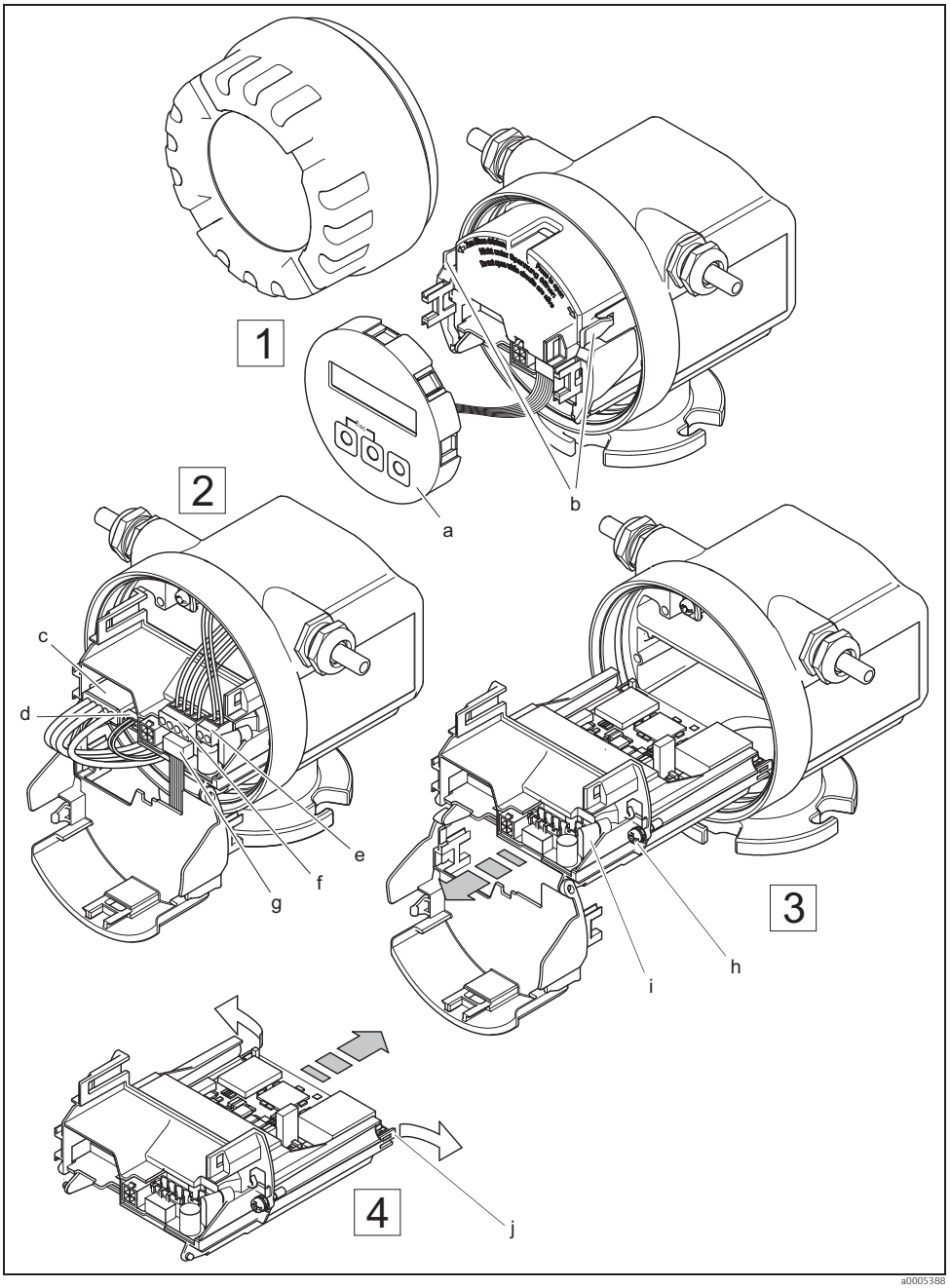

Fig. 46: Field housing: removing and installing printed circuit boards

a Local display
b Latches
c Connector of the electrode signal cable
d Connector of the coil current cable
e Connector for the power supply
f Connector for current output and pulse/status output
g Connector of local display
h Screws of electronics compartment cover
i Connector of the ground cable
j Latches for the electronics board

9.6.2 Replacing the device fuse

Warning!
Risk of electric shock!
Exposed components carry dangerous voltages. Make sure that the power supply is switched off before you remove the cover of the electronics compartment.

The main fuse is located on the electronics board (→ 47).
The procedure for replacing the fuse is as follows:

1. Switch off power supply.
2. Unscrew cover of the electronics compartment from the transmitter housing.
3. Press the side latches and flip down the cover of the connection compartment.
4. Remove the connector for the power supply (a).
5. Replace device fuse (b). Only use the following fuse type.
   Use only fuses of the following type:
   – Power supply 11 to 40 V DC / 20 to 28 V AC → 1.6 A slow-blow / 250 V TR5
   – Power supply 85 to 250 V DC → 1 A slow-blow / 250 V TR5
6. Installation is the reverse of the removal procedure.

Caution!
Use only original Endress+Hauser parts.

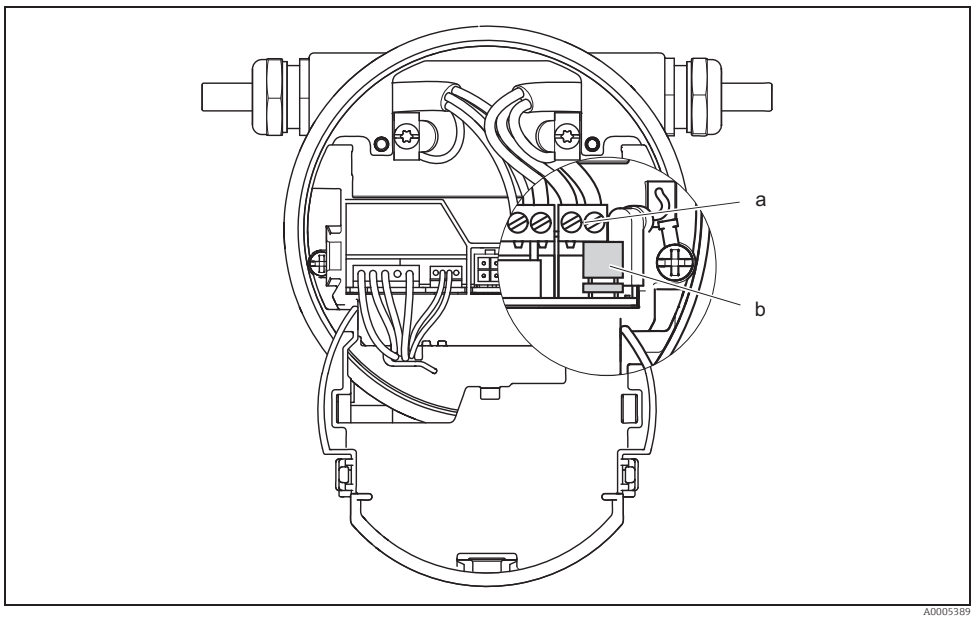

Fig. 47: Replacing the device fuse on the electronics board

a Connector for power supply
b Device fuse

9.7 Return

Caution!
Do not return a measuring device if you are not absolutely certain that all traces of hazardous substances have been removed, e.g. substances which have penetrated crevices or diffused through plastic.
Costs incurred for waste disposal and injury (burns, etc.) due to inadequate cleaning will be charged to the owner-operator.

The following steps must be taken before returning a flow measuring device to Endress+Hauser, e.g. for repair or calibration:
- Always enclose a duly completed "Declaration of contamination" form. Only then can Endress+Hauser transport, examine and repair a returned device.
- Enclose special handling instructions if necessary, for example a safety data sheet as per EC REACH Regulation No. 1907/2006.
- Remove all residues. Pay special attention to the grooves for seals and crevices which could contain residues. This is particularly important if the substance is hazardous to health, e.g. flammable, toxic, caustic, carcinogenic, etc.

Note!
You will find a preprinted "Declaration of contamination" form at the back of these Operating Instructions.

9.8 Disposal

Observe the regulations applicable in your country!

9.9 Software history

Date	Software version	Changes to software	Operating Instructions
01.2012	V 1.04.00	Introduction of new nominal diameters; faster coil current control; calf-values to 2.5	71249469/15.14
11.2009	V 1.03.00	Introduction of Calf history	71106179/12.09 71105338/11.09
06.2009	V 1.02.00	Introduction of Promag L	71095705/06.09
03.2009	V 1.02.00	Introduction of Promag D; introduction of new nominal diameter.	71088674/03.09
10.2004	V 1.02.00	Software modification/extension Function: SELF CHECKING	50104787/05.05
09.2004	V 1.01.01	Software modification; extension of nominal diameter range	50104787/04.03
06.2004	V 1.01.00	Software extension; preparation for uploading/ downloading via ToF Tool - Fieldtool Package	50104787/04.03
08.2003	V 1.00.02	Production-related software modification	50104787/04.03
01.2003	V 1.00.00	Original software. Compatible with: ToF Tool - Fieldtool Package, HART Communicator DXR 275 (from OS 4.6) with Rev. 1, DD 1.	50104787/04.03

Note!
Uploads or downloads between the individual software versions are only possible with a special service software.

10 Technical data

10.1 Technical data at a glance

10.1.1 Application

→ 🖹 4

10.1.2 Function and system design

Measuring principle

Electromagnetic flow measurement on the basis of Faraday's Law.

Measuring system

→ 🖹 6

10.1.3 Input

Measured variable

Flow velocity (proportional to induced voltage)

Measuring range

Typically v = 0.01 to 10 m/s (0.033 to 33 ft/s) with the specified accuracy

Operable flow range

Over 1000 : 1

10.1.4 Output

Output signal

Current output

- Galvanically isolated
- Active: 4 to 20 mA, R_L <700 Ω (for HART: RL ≥250 Ω)
- Full scale value adjustable
- Temperature coefficient: typ. 2 µA/°C, resolution: 1.5 µA

Pulse/status output:

- Galvanically isolated
- Passive: 30 V DC / 250 mA
- Open collector
- Can be configured as:
  - Pulse output
    Pulse value and pulse polarity can be selected, max. pulse width adjustable (5 to 2000 ms), pulse frequency max. 100 Hz
  - Status output
    For example, can be configured for error messages, empty pipe detection, flow recognition, limit value

Signal on alarm

Current output

Failsafe mode can be selected (e.g. in accordance with NAMUR Recommendation NE 43) → 🖹 129

Pulse output

Failsafe mode can be selected → 🖹 129

Status output

"Not conductive" in the event of fault or power supply failure

Load

See "Output signal"

Low flow cut off

Low flow cut off, switch-on point can be selected as required

Galvanic isolation

All circuits for inputs, outputs, and power supply are galvanically isolated from each other.

10.1.5 Power supply

Electrical connections

→ 🖹 42

Supply voltage (power supply)

- 20 to 28 V AC, 45 to 65 Hz
- 85 to 250 V AC, 45 to 65 Hz
- 11 to 40 V DC

Cable entry

Power supply and signal cables (inputs/outputs):

- Cable entry M20 × 1.5 (8 to 12 mm/0.31 to 0.47 inch)
- Threads for cable entries ½" NPT, G ½"

Connecting cable for remote version:

- Cable entry M20 × 1.5 (8 to 12 mm/0.31 to 0.47 inch)
- Threads for cable entries ½" NPT, G ½"

Cable specifications

→ 🖹 47

Power consumption

Power consumption

- 20 to 28 V AC: <8 VA (incl. sensor)
- 85 to 250 V AC: <12 VA (incl. sensor)
- 11 to 40 V DC: <6 W (incl. sensor)

Switch-on current:

- Max. 3.3 A (<5 ms) for 24 V DC
- Max. 5.5 A (<5 ms) for 28 V DC
- Max. 16 A (<5 ms) for 250 V DC

Power supply failure

Lasting min. ½ cycle frequency: EEPROM saves measuring system data

Potential equalization

→ 🖹 50

10.1.6 Performance characteristics

Reference operating conditions

To DIN EN 29104 and VDI/VDE 2641:

- Fluid temperature: +28 ± 2 °C (+82 ± 4 °F)
- Ambient temperature: +22 ± 2 °C (+72 ± 4 °F)
- Warm-up period: 30 minutes

Installation:

- Inlet run >10 × DN
- Outlet run > 5 × DN
- Sensor and transmitter grounded.
- The sensor is centered in the pipe.

Maximum measured error

- Current output: plus typically ± 5 µA
- Pulse output: ± 0.5% o.r. ± 2 mm/s (o.r. = of reading)

Fluctuations in the supply voltage do not have any effect within the specified range.

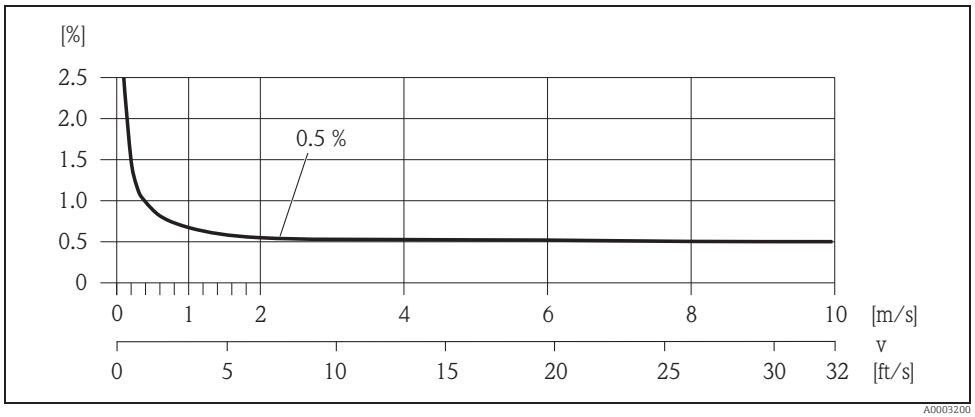

Fig. 48: Max. measured error in % of reading

Repeatability

Max. ± 0.2% o.r. ± 2 mm/s (o.r. = of reading)

10.1.7 Installation

Installation instructions

Any orientation (vertical, horizontal), restrictions and additional installation instructions → 11

Inlet and outlet runs

If possible, install the sensor upstream from fittings such as valves, T-pieces, elbows, etc. The following inlet and outlet runs must be observed in order to meet accuracy specifications (→ 14, → 12):
- Inlet run: ≥ 5 × DN
- Outlet run: ≥ 2 × DN

Adapters

→ 15

Length of connecting cable

- The permitted length of connecting cable L_{max} is determined by the fluid conductivity (→ 18, → 16). A minimum conductivity of 50 µS/cm is needed for all fluids.
- The maximum connecting cable length is 10 m (32.81 ft) when empty pipe detection (EPD → 68) is switched on.

10.1.8 Environment

Ambient temperature range

- Transmitter: −20 to +60 °C (−4 to +140 °F)

  Note!
  At ambient temperatures below −20 (−4 °F) the readability of the display may be impaired.
- Sensor (flange material carbon steel): −10 to +60 °C (+14 to +140 °F)

Caution!
- The permitted temperature range of the measuring tube lining may not be undershot or overshot (→ "Operating conditions: Process" → "Medium temperature range").
- Install the device in a shady location. Avoid direct sunlight, particularly in warm climatic regions.
- The transmitter must be mounted separate from the sensor if both the ambient and fluid temperatures are high.

Storage temperature

The storage temperature corresponds to the operating temperature range of the measuring transmitter and the appropriate measuring sensors.

Caution!
- The measuring device must be protected against direct sunlight during storage in order to avoid unacceptably high surface temperatures.
- A storage location must be selected where moisture does not collect in the measuring device. This will help prevent fungus and bacteria infestation which can damage the liner.

Degree of protection

Standard: IP 67 (NEMA 4X) for transmitter and sensor

Shock and vibration resistance

Acceleration up to 2 g following IEC 600 68-2-6

CIP cleaning

Caution!
The maximum fluid temperature permitted for the device may not be exceeded.

CIP cleaning is possible:
Promag E (100 °C / 212 °F), Promag H/P

CIP cleaning is not possible:
Promag D/L/W

SIP cleaning

Caution!
The maximum fluid temperature permitted for the device may not be exceeded.

SIP cleaning is possible:
Promag H

SIP cleaning is not possible:
Promag D/E/L/P/W

Electromagnetic compatibility (EMC)

- As per IEC/EN 61326 and NAMUR Recommendation NE 21
- Emission: to limit value for industry EN 55011

10.1.9 Process

Medium temperature range

The permissible temperature depends on the lining of the measuring tube

Promag D

0 to +60 °C (+32 to +140 °F) for polyamide

Promag E

−10 to +110 °C (+14 to +230 °F) for PTFE,
Restrictions → see the following diagram

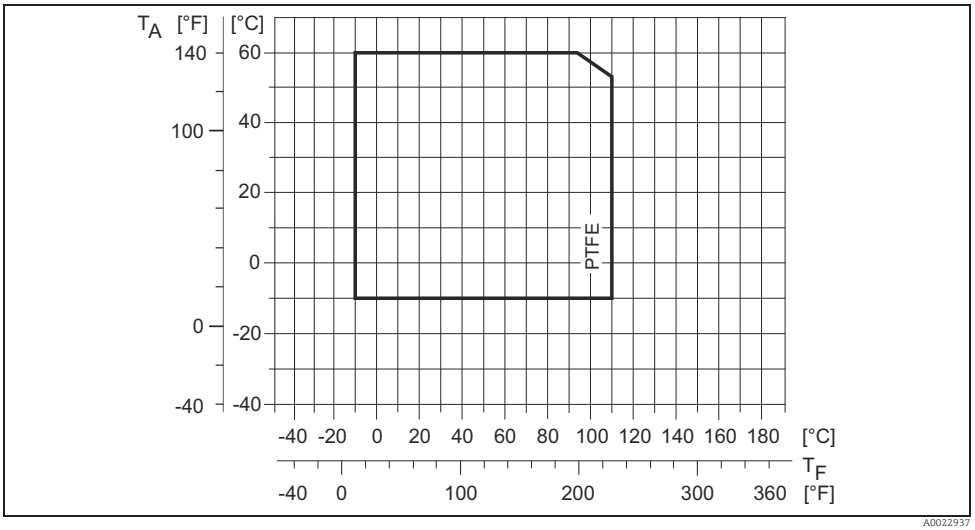

Fig. 49: Compact and remote version Promag E (TA = ambient temperature; TF = fluid temperature)

Promag H

Sensor:
- DN 2 to 25 (1/12 to 1"): −20 to +150 °C (−4 to +302 °F)
- DN 40 to 100 (1 ½ to 4"): −20 to +150 °C (−4 to +302 °F)

Seals:
- EPDM/Viton (FKM)/Kalrez: −20 to +150 °C (−4 to +302 °F)

Promag L

- 0 to +80 °C (+32 to +176 °F) for hard rubber (DN 350 to 2400 / 14 to 90")
- −20 to +50 °C (−4 to +122 °F) for polyurethane (DN 25 to 1200 / 1 to 48")
- −20 to +90 °C (−4 to +194 °F) for PTFE (DN 25 to 300 / 1 to 12")

Promag P

−40 to +130 °C (−40 to +266 °F) for PTFE (DN 25 to 600 / 1 to 24"),
Restrictions → see the following diagram

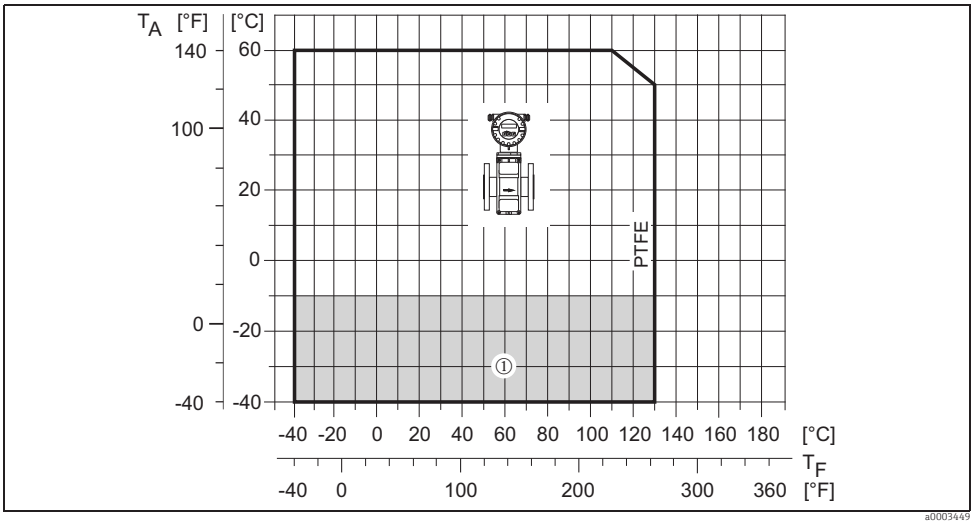

Fig. 50: Compact version Promag P with PTFE-lining

TA = ambient temperature; TF = fluid temperature
① = light gray area → temperature range from −10…−40 °C (−14…−40 °F) valid for stainless steel version only

Promag W

- 0 to +80 °C (+32 to +176 °F) for hard rubber (DN 65 to 2000 / 2 ½ to 78")
- −20 to +50 °C (−4 to +122 °F) for polyurethane (DN 25 to 1000 / 1 to 48")

Conductivity

The minimum conductivity is ≥ 50 µS/cm

Note!
Note that in the case of the remote version, the requisite minimum conductivity is also influenced by the length of the connecting cable → 18

Medium pressure range (nominal pressure)

Promag D

- EN 1092-1 (DIN 2501)
  - PN 16
- ASME B 16.5
  - Class 150
- JIS B2220
  - 10 K

Promag E

- EN 1092-1 (DIN 2501)
  - PN 10 (DN 200 to 600 / 8 to 24")
  - PN 16 (DN 65 to 600 / 3 to 24")
  - PN 40 (DN 15 to 150 / ½ to 2")
- ASME B 16.5
  - Class 150 (½ to 24")
- JIS B2220
  - 10 K (DN 50 to 300 / 2 to 12")
  - 20 K (DN 15 to 40 / ½ to 1½")

Promag H

The permissible nominal pressure depends on the process connection and the seal:
- PN 40, Class 150, 20 K → Couplings, flanges (with O-ring seal)
- PN 16 → Welding nipple, couplings, clamp, flange (with aseptic gasket seal)

Promag L

- EN 1092-1 (DIN 2501)
  - PN 6 (DN 350 to 2400 / 14 to 90")
  - PN 10 (DN 200 to 2400 / 8 to 90")
  - PN 16 (DN 25 to 300 / 1 to 12")
- EN 1092-1, lap joint flange, stampel plate
  - PN 10 (DN 25 to 300 / 1 to 12")
- ASME B16.5
  - Class 150 (1 to 24")
- AWWA
  - Class D (28 to 90")
- AS2129
  - Table E (350 to 1200 / 14 to 48")
- AS4087
  - PN 16 (350 to 1200 / 14 to 48")

Promag P

- EN 1092-1 (DIN 2501)
  - PN 10 (DN 200 to 600 / 8 to 24")
  - PN 16 (DN 65 to 600 / 3 to 24")
  - PN 25 (DN 200 to 600 / 8 to 24")
  - PN 40 (DN 25 to 150 / 1 to 6")
- ASME B 16.5
  - Class 150 (1 to 24")
  - Class 300 (1 to 6")
- JIS B2220
  - 10 K (DN 50 to 300 / 2 to 12")
  - 20 K (DN 25 to 300 / 1 to 12")
- AS 2129
  - Table E (DN 25 / 1"), 50 / 2")
- AS 4087
  - PN 16 (DN 50 / 2")

Promag W

- EN 1092-1 (DIN 2501)
  - PN 6 (DN 350 to 2000 / 14 to 84")
  - PN 10 (DN 200 to 2000 / 8 to 84")
  - PN 16 (DN 65 to 2000 / 3 to 84")
  - PN 25 (DN 200 to 1000 / 8 to 40")
  - PN 40 (DN 25 to 150 / 1 to 6")
- ASME B 16.5
  - Class 150 (1 to 24")
  - Class 300 (1 to 6")
- AWWA
  - Class D (28 to 78")
- JIS B2220
  - 10 K (DN 50 to 300 / 2 to 12")
  - 20 K (DN 25 to 300 / 1 to 12")
- AS 2129
  - Table E (DN 80 / 3", 100 / 4", 150 to 1200 / 6 to 48")
- AS 4087
  - PN 16 (DN 80 / 3", 100 / 4", 150 to 1200 / 6 to 48")

Pressure tightness

Promag D

Measuring tube: 0 mbar abs (0 psi abs) with a fluid temperature of ≤ 60 °C (140 °F)

Promag E (Measuring tube lining: PTFE)

Nominal diameter		Resistance of measuring tube lining to partial vacuum Limit values for abs. pressure [mbar] ([psi]) at various fluid temperatures							
		25 °C		80 °C		100 °C		110 °C	
		77 °F		176 °F		212 °F		230 °F	
[mm]	[inch]	[mbar]	[psi]			[mbar]	[psi]	[mbar]	[psi]
15	½"	0	0	0	0	0	0	100	1.45
25	1"	0	0	0	0	0	0	100	1.45
32	–	0	0	0	0	0	0	100	1.45
40	1 ½"	0	0	0	0	0	0	100	1.45
50	2"	0	0	0	0	0	0	100	1.45
65	–	0	0	*	*	40	0.58	130	1.89

Nominal diameter		Resistance of measuring tube lining to partial vacuum Limit values for abs. pressure [mbar] ([psi]) at various fluid temperatures							
		25 °C		80 °C		100 °C		110 °C	
		77 °F		176 °F		212 °F		230 °F	
[mm]	[inch]	[mbar]	[psi]			[mbar]	[psi]	[mbar]	[psi]
80	3"	0	0	*	*	40	0.58	130	1.89
100	4"	0	0	*	*	135	1.96	170	2.47
125	–	135	1.96	*	*	240	3.48	385	5.58
150	6"	135	1.96	*	*	240	3.48	385	5.58
200	8"	200	2.90	*	*	290	4.21	410	5.95
250	10"	330	4.79	*	*	400	5.80	530	7.69
300	12"	400	5.80	*	*	500	7.25	630	9.14
350	14"	470	6.82	*	*	600	8.70	730	10.59
400	16"	540	7.83	*	*	670	9.72	800	11.60
450	18"	Partial vacuum is impermissible!							
500	20"								
600	24"								
* No value can be quoted.									

Promag H (Measuring tube lining: PFA)

Nominal diameter		Resistance of measuring tube lining to partial vacuum Limit values for abs. pressure [mbar] ([psi]) at various fluid temperatures					
		25 °C	80 °C	100 °C	130 °C	150 °C	180 °C
[mm]	[inch]	77 °F	176 °F	212 °F	266 °F	302 °F	356 °F
2 to 100	1/12 to 4"	0	0	0	0	0	0

Promag L (Measuring tube lining: Polyurethane, Hard rubber)

Nominal diameter		Measuring tube lining	Resistance of measuring tube lining to partial vacuum Limit values for abs. pressure [mbar] ([psi]) at various fluid temperatures		
			25 °C	50 °C	80 °C
[mm]	[inch]		77 °F	122 °F	176 °F
25 to 1200	1 to 48"	25 to 1200	1 to 48"	0	–
350 to 2400	14 to 90"	Hard rubber	0	0	0

Promag L (Measuring tube lining: PTFE)

Nominal diameter		Resistance of measuring tube lining to partial vacuum Limit values for abs. pressure [mbar] ([psi]) at various fluid temperatures			
		25 °C		90 °C	
		77 °F		194 °F	
[mm]	[inch]	[mbar]	[psi]	[mbar]	[psi]
25	1"	0	0	0	0
32	–	0	0	0	0
40	1 ½"	0	0	0	0
50	2"	0	0	0	0
65	–	0	0	40	0.58
80	3"	0	0	40	0.58
100	4"	0	0	135	1.96
125	–	135	1.96	240	3.48
150	6"	135	1.96	240	3.48

Nominal diameter		Resistance of measuring tube lining to partial vacuum Limit values for abs. pressure [mbar] ([psi]) at various fluid temperatures			
		25 °C		90 °C	
		77 °F		194 °F	
[mm]	[inch]	[mbar]	[psi]	[mbar]	[psi]
200	8"	200	2.90	290	4.21
250	10"	330	4.79	400	5.80
300	12"	400	5.80	500	7.25

Promag P (Measuring tube lining: PTFE)

Nominal diameter		Resistance of measuring tube lining to partial vacuum Limit values for abs. pressure [mbar] ([psi]) at various fluid temperatures									
		25 °C		80 °C		100 °C		130 °C		150 °C	180 °C
		77 °F		176 °F		212 °F		266 °F		302 °F	356 °F
[mm]	[inch]	[mbar]	[psi]			[mbar]	[psi]	[mbar]	[psi]		
25	1"	0	0	0	0	0	0	100	1.45	–	–
32	–	0	0	0	0	0	0	100	1.45	–	–
40	1 ½"	0	0	0	0	0	0	100	1.45	–	–
50	2"	0	0	0	0	0	0	100	1.45	–	–
65	–	0	0	*	*	40	0.58	130	1.89	–	–
80	3"	0	0	*	*	40	0.58	130	1.89	–	–
100	4"	0	0	*	*	135	1.96	170	2.47	–	–
125	–	135	1.96	*	*	240	3.48	385	5.58	–	–
150	6"	135	1.96	*	*	240	3.48	385	5.58	–	–
200	8"	200	2.90	*	*	290	4.21	410	5.95	–	–
250	10"	330	4.79	*	*	400	5.80	530	7.69	–	–
300	12"	400	5.80	*	*	500	7.25	630	9.14	–	–
350	14"	470	6.82	*	*	600	8.70	730	10.59	–	–
400	16"	540	7.83	*	*	670	9.72	800	11.60	–	–
450	18"	Partial vacuum is impermissible!									
500	20"										
600	24"										
* No value can be quoted.											

Promag W

Nominal diameter		Measuring tube lining	Resistance of measuring tube lining to partial vacuum Limit values for abs. pressure [mbar] ([psi]) at various fluid temperatures						
			25 °C	50 °C	80 °C	100 °C	130 °C	150 °C	180 °C
[mm]	[inch]		77 °F	122 °F	176 °F	212 °F	266 °F	302 °F	356 °F
25 to 1200	1 to 40"	Polyurethane	0	0	–	–	–	–	–
50 to 2000	2 to 78"	Hard rubber	0	0	0	–	–	–	–

Limiting flow

→ 🖹 16

Pressure loss

- No pressure loss if the sensor is installed in a pipe with the same nominal diameter.
- Pressure losses for configurations incorporating adapters according to DIN EN 545 (see "Adapters" → 🖹 15)

10.1.10 Mechanical construction

Design, dimensions

The dimensions and installation lengths of the sensor and transmitter can be found in the "Technical Information" for the device in question. This document can be downloaded as a PDF file from www.endress.com. A list of the "Technical Information" documents available is provided in the "Documentation" section on → 🖹 107.

Weight (SI units)

Promag D

Weight data in kg				
Nominal diameter		Compact version	Remote version (without cable)	
[mm]	[inch]		Sensor	Transmitter
25	1"	2.9	2.5	3.1
40	1 ½"	3.5	3.1	3.1
50	2"	4.3	3.9	3.1
65	2 ½"	5.1	4.7	3.1
80	3"	6.1	5.7	3.1
100	4"	8.8	8.4	3.1
Transmitter Promag (compact version): 1.8 kg (Weight data valid without packaging material)				

Promag E

Weight data in kg							
Nominal diameter		Compact version					
		EN (DIN)				ASME	JIS
[mm]	[inch]	PN 6	PN 10	PN 16	PN 40	Class 150	10K
15	½"	–	–	–	6.5	6.5	6.5
25	1"	–	–	–	7.3	7.3	7.3
32	–	–	–	–	8.0	–	7.3
40	1½"	–	–	–	9.4	9.4	8.3
50	2"	–	–	–	10.6	10.6	9.3
65	–	–	–	12.0	–	–	11.1
80	3"	–	–	14.0	–	14.0	12.5
100	4"	–	–	16.0	–	16.0	14.7
125	–	–	–	21.5	–	–	21.0
150	6"	–	–	25.5	–	25.5	24.5
200	8"	–	45.0	46.0	–	45.0	41.9
250	10"	–	65.0	70.0	–	75.0	69.4
300	12"	–	70.0	81.0	–	110.0	72.3
350	14"	77.4	88.4	99.4	–	137.4	–
400	16"	89.4	104.4	120.4	–	168.4	–
450	18"	99.4	112.4	133.4	–	191.4	–
500	20"	114.4	132.4	182.4	–	228.4	–
600	24"	155.4	162.4	260.4	–	302.4	–

- Transmitter (compact version): 1.8 kg
- Weight data without packaging material

Weight data in kg								
Nominal diameter		Remote version (without cable)						
		Sensor						Transmitter
		EN (DIN)				ASME	JIS	
[mm]	[inch]	PN 6	PN 10	PN 16	PN 40	Class 150	10K	Wall-mount housing
15	½"	–	–	–	4.5	4.5	4.5	6.0
25	1"	–	–	–	5.3	5.3	5.3	
32	–	–	–	–	6.0	–	5.3	
40	1½"	–	–	–	7.4	7.4	6.3	
50	2"	–	–	–	8.6	8.6	7.3	
65	–	–	–	10.0	–	–	9.1	
80	3"	–	–	12.0	–	12.0	10.5	
100	4"	–	–	14.0	–	14.0	12.7	
125	–	–	–	19.5	–	–	19.0	
150	6"	–	–	23.5	–	23.5	22.5	
200	8"	–	43.0	44.0	–	43.0	39.9	
250	10"	–	63.0	68.0	–	73.0	67.4	
300	12"	–	68.0	79.0	–	108.0	70.3	
350	14"	73.1	84.1	95.1	–	133.1		
400	16"	85.1	100.1	116.1	–	164.1		
450	18"	95.1	108.1	129.1	–	187.1		
500	20"	110.1	128.1	178.1	–	224.1		
600	24"	158.1	158.1	256.1	–	298.1		

- Transmitter (remote version): 3.1 kg
- Weight data without packaging material

Promag H

Weight data in kg				
Nominal diameter		Compact version	Remote version (without cable)	
[mm]	[inch]	DIN	Sensor	Transmitter
2	1/12"	3.6	2	3.1
4	1/8"	3.6	2	3.1
8	3/8"	3.6	2	3.1
15	½"	3.7	1.9	3.1
25	1"	3.9	2.8	3.1
40	1 ½"	4.9	4.5	3.1
50	2"	7.4	7.0	3.1
65	2 ½"	7.9	7.5	3.1
80	3"	17.4	17.0	3.1
100	4"	16.9	16.5	3.1
Transmitter Promag (compact version): 1.8 (Weight data valid for standard pressure ratings and without packaging material)				

Promag L

Weight data in kg												
Nominal diameter		Compact version (including transmitter)[1]										
[mm]	[inch]	EN (DIN)						ASME/ AWWA		AS		
25	1"	PN 6	–	PN 10	–	PN 16	7.3	ASME / Class 150	7.9	PN 16	–	Tabelle E	–
32	1 ¼"		–		–		8.0		–		–		–
40	1 ½"		–		–		9.0		7.5		–		–
50	2"		–		–		9.4		7.6		–		–
65	2 ½"		–		–		10.4		–		–		–
80	3"		–		–		12.4		12.8		–		–
100	4"		–		–		14.4		16.1		–		–
125	5"		–		–		15.9		–		–		–
150	6"		–		–		23.9		24.4		–		–
200	8"		–		43.4		44.9		49.6		–		–
250	10"		–		63.4		70.7		75.1		–		–
300	12"		–		68.4		85.8		100		–		–
350	14"		77.4		88.4		103		137		99.4		99.4
375	15"		–		–		–		–		105		–
400	16"		89.4		104		124		168		120		120
450	18"		99.4		112		139		191		133		143
500	20"		114		132		174		228		182		182
600	24"		155		162		303		302		260		260
700	28"		190		240		288	AWWA / Class D	266		367		346
750	30"		–		–		–		318		445		433
800	32"		240		315		364		383		503		493
900	36"		308		393		456		470		702		690
1000	40"		359		468		579		587		759		761
1050	42"		–		–		–		670		–		–
1200	48"		529		717		866		901		–		1237
–	54"		–		–		–		1273		–		–
1400	–		784		1114		1274		–		–		–
–	60"		–		–		–		1594		–		–
1600	–		1058		1624		1872		–		–		–
1650	66"		–		–		–		2131		–		–
1800	72"		1418		2107		2409		2568		–		–
2000	78"		1877		2630		2997		3113		–		–
–	84"		–		–		–		3755		–		–
2200	–		2512		3422		–		–		–		–
–	90"		–		–		–		4797		–		–
2400	–		2996		4094		–		–		–		–
Transmitter Promag (compact version): 3.1 kg (Weight data valid without packaging material)													

1) Lap joint flanges / welded flanges DN > 300 (12")

Weight data in kg

Nominal diameter		Remote version (sensor plus sensor housing without cable)[1]											
[mm]	[inch]	EN (DIN)						ASME/ AWWA		AS			
25	1"	PN 6	–	PN 10	–	PN 16	5.3	ASME / Class 150	5.9	PN 16	–	Tabelle E	–
32	1 ¼"		–		–		6.0		–		–		–
40	1 ½"		–		–		7.0		5.5		–		–
50	2"		–		–		7.4		5.6		–		–
65	2 ½"		–		–		8.4		–		–		–
80	3"		–		–		10.4		10.8		–		–
100	4"		–		–		12.4		14.1		–		–
125	5"		–		–		13.9		–		–		–
150	6"		–		–		21.9		22.4		–		–
200	8"		–		41.4		42.9		47.6		–		–
250	10"		–		61.4		68.7		73.1		–		–
300	12"		–		66.4		83.8		98		–		–
350	14"		75.4		86.4		103		135		97.4		97.4
375	15"		–		102		–		–		103		–
400	16"		87.4		102		124		166		118		118
450	18"		97.4		110		139		189		131		141
500	20"		112		130		174		226		180		180
600	24"		153		160		303		300		258		258
700	28"		188		238		288	AWWA / Class D	264		365		344
750	30"		–		–		–		316		443		431
800	32"		238		313		364		381		501		491
900	36"		306		391		456		468		700		688
1000	40"		357		466		579		585		757		759
1050	42"		–		–		–		668		–		–
1200	48"		527		715		866		899				1235
–	54"		–		–		–		1271		–		–
1400	–		782		1112		1274		–		–		–
–	60"		–		–		–		1592		–		–
1600	–		1056		1622		1872		–		–		–
1650	66"		–		–		–		2129		–		–
1800	72"		1416		2105		2409		2566		–		–
2000	78"		1875		2628		2997		3111		–		–
–	84"		–		–		–		3753		–		–
2200	–		2510		3420		–		–		–		–
–	90"		–		–		–		4795		–		–
2400	–		2994		4092		–		–		–		–

Transmitter Promag (remote version): 3.4 kg
(Weight data valid without packaging material)

1) Lap joint flanges / welded flanges DN > 300 (12")

Weight data in kg						
Nominal diameter		Compact version[1]		Remote version (without cable)[1]		
[mm]	[inch]	EN (DIN)		Sensor EN (DIN)		Transmitter
25	1"	PN 10	5.8	PN 10	3.8	4.2
32	1 ¼"		5.4		3.4	4.2
40	1 ½"		6.3		4.7	4.2
50	2"		5.4		3.4	4.2
65	2 ½"		6.2		4.2	4.2
80	3"		7.2		5.2	4.2
100	4"		9.7		7.7	4.2
125	5"		13.2		11.2	4.2
150	6"		17.2		15.2	4.2
200	8"		35.7		33.7	4.2
250	10"		54.2		52.2	4.2
300	12"		55.2		53.2	4.2
Transmitter Promag (compact version): 1.8 kg (Weight data valid for standard pressure ratings and without packaging material)						

1) Lap joint flanges, stamped plate

Promag P

Weight data in kg														
Nominal diameter		Compact version						Remote version (without cable)						
								Sensor						Trans-mitter
[mm]	[inch]	EN (DIN) / AS*		JIS		ASME/ AWWA		EN (DIN) / AS*		JIS		ASME/ AWWA		
25	1"	PN 40	5.7	10K	5.7	Class 150	5.7	PN 40	5.3	10K	5.3	Class 150	5.3	3.1
32	1 ¼"		6.4		5.7		–		6.0		5.3		–	3.1
40	1 ½"		7.8		6.7		7.8		7.4		6.3		7.4	3.1
50	2"		9.0		7.7		9.0		8.6		7.3		8.6	3.1
65	2 ½"	PN 16	10.4		9.5		–	PN 16	10.0		9.1		–	3.1
80	3"		12.4		10.9		12.4		12.0		10.5		12.0	3.1
100	4"		14.4		13.1		14.4		14.0		12.7		14.0	3.1
125	5"		19.9		19.4		–		19.5		19.0		–	3.1
150	6"		23.9		22.9		23.9		23.5		22.5		23.5	3.1
200	8"	PN 10	43.4		40.3		43.4	PN 10	43		39.9		43	3.1
250	10"		63.4		67.8		73.4		63		67.4		73	3.1
300	12"		68.4		70.7		108.4		68		70.3		108	3.1
350	14"		113.4				172.4		113				173	3.1
400	16"		133.4				203.4		133				203	3.1
450	18"		173.4				253.4		173				253	3.1
500	20"		173.4				283.4		173				283	3.1
600	24"		233.4				403.4		233				403	3.1
Transmitter Promag (compact version): 1.8 kg (Weight data valid for standard pressure ratings and without packaging material) * Flanges according to AS are only available for DN 25 and 50.														

Promag W

Weight data in kg

Nominal diameter		Compact version						Remote version (without cable)						Transmitter
								Sensor						
[mm]	[inch]	EN (DIN) / AS*		JIS		ASME/ AWWA		EN (DIN) / AS*		JIS		ASME/ AWWA		
25	1"	PN 40	5.7	10K	5.7	Class 150	5.7	PN 40	5.3	10K	5.3	Class 150	5.3	3.1
32	1 ¼"		6.4		5.7		–		6.0		5.3		–	3.1
40	1 ½"		7.8		6.7		7.8		7.4		6.3		7.4	3.1
50	2"		9.0		7.7		9.0		8.6		7.3		8.6	3.1
65	2 ½"	PN 16	10.4		9.5		–	PN 16	10.0		9.1		–	3.1
80	3"		12.4		10.9		12.4		12.0		10.5		12.0	3.1
100	4"		14.4		13.1		14.4		14.0		12.7		14.0	3.1
125	5"		19.9		19.4		–		19.5		19.0		–	3.1
150	6"		23.9		22.9		23.9		23.5		22.5		23.5	3.1
200	8"	PN 10	43.4		40.3		43.4	PN 10	43		39.9		43	3.1
250	10"		63.4		67.8		73.4		63		67.4		73	3.1
300	12"		68.4		70.7		108.4		68		70.3		108	3.1
350	14"		113.4				172.4		113				173	3.1
400	16"		133.4				203.4		133				203	3.1
450	18"		173.4				253.4		173				253	3.1
500	20"		173.4				283.4		173				283	3.1
600	24"		233.4				403.4		233				403	3.1
700	28"		353.4			Class D	398.4		353			Class D	398	3.1
–	30"		–				458.4		–				458	3.1
800	32"		433.4				548.4		433				548	3.1
900	36"		573.4				798.4		573				798	3.1
1000	40"		698.4				898.4		698				898	3.1
–	42"	PN 6	–				1098.4	PN 6	–				1098	3.1
1200	48"		848.4				1398.4		848				1398	3.1
–	54"		–				2198.4		–				2198	3.1
1400	–		1298.4				–		1298				–	3.1
–	60"		–				2698.4		–				2698	3.1
1600	–		1698.4				–		1698				–	3.1
–	66"		–				3698.4		–				3698	3.1
1800	72"		2198.4				4098.4		2198				4098	3.1
–	78"		–				4598.4		–				4598	3.1
2000	–		2798.4				–		2798				–	3.1

Transmitter Promag (compact version): 1.8 kg
(Weight data valid for standard pressure ratings and without packaging material)
*Flanges according to AS are only available for DN 80, 100, 150 to 400, 500 and 600

Weight (US units)

Promag D

Weight data in lbs				
Nominal diameter		Compact version	Remote version (without cable)	
[mm]	[inch]		Sensor	Transformer
25	1"	6	6	7
40	1 ½"	8	7	7
50	2"	9	9	7
80	3"	13	13	7
100	4"	19	19	7
Transmitter Promag (compact version): 3.9 lbs (Weight data valid without packaging material)				

Promag E

Weight data in lbs				
Nominal diameter		Compact version	Remote version (without cable)	
			Sensor	Transmitter
		ASME	ASME	
[mm]	[inch]	Class 150	Class 150	Wall-mount housing
15	½"	14.3	9.92	13.2
25	1"	16.1	11.7	
40	1½"	20.7	16.3	
50	2"	23.4	19.0	
80	3"	30.9	26.5	
100	4"	35.3	30.9	
150	6"	56.2	51.8	
200	8"	99.2	94.8	
250	10"	165.4	161.0	
300	12"	242.6	238.1	
350	14"	303.0	293.5	
400	16"	371.3	361.8	
450	18"	422.0	412.6	
500	20"	503.6	494.1	
600	24"	666.8	657.3	

- Transmitter: 4.0 lbs (compact version); 6.8 lbs (remote version)
- Weight data without packaging material

Promag H

Weight data in lbs				
Nominal diameter		Compact version	Remote version (without cable)	
[mm]	[inch]		Sensor	Transformer
2	1/12"	8	4	7
4	1/8"	8	4	7
8	3/8"	8	4	7
15	½"	8	4	7
25	1"	9	6	7
40	1 ½"	11	10	7
50	2"	16	15	7
65	2 ½"	17	17	7
80	3"	38	37	7
100	4"	37	36	7
Transmitter Promag (compact version): 3.9 lbs (Weight data valid for standard pressure ratings and without packaging material)				

Promag L (ASME/AWWA)

Weight data in lbs					
Nominal diameter		Compact version[1]		Remote version1)	
[mm]	[inch]	ASME/AWWA		ASME/AWWA	
25	1"	ASME / Class 150	17.4	ASME / Class 150	13
32	1 ¼"		–		–
40	1 ½"		16.5		12.1
50	2"		16.8		12.3
65	2 ½"		–		–
80	3"		28.2		23.8
100	4"		35.5		31.1
125	5"		–		–
150	6"		53.8		49.4
200	8"		109		105
250	10"		166		161
300	12"		221		216
350	14"		302		298
375	15"		–		–
400	16"		370		366
450	18"		421		417
500	20"		503		498
600	24"		666		662
700	28"	AWWA / Class D	587	AWWA / Class D	582
750	30"		701		697
800	32"		845		840
900	36"		1036		1032
1000	40"		1294		1290
1050	42"		1477		1473
1200	48"		1987		1982
–	54"		2807		2803
1400	–		–		–
–	60"		3515		3510
1600	–		–		–
1650	66"		4699		4694
1800	72"		5662		5658
2000	78"		6864		6860
–	84"		8280		8275
2200	–		–		–
–	90"		10577		10573
2400	–		–		–
Transmitter Promag (compact version): 4.0 lbs Transmitter Promag (remote version): 6.8 lbs (Weight data valid without packaging material)					

1) Lap joint flanges / welded flanges DN > 300 (12")

Promag P (ASME/AWWA)

Weight data in lbs						
Nominal diameter		Compact version		Remote version (without cable)		
[mm]	[inch]				Sensor	Transformer
25	1"	Class 150	13	Class 150	12	7
40	1 ½"		17		16	7
50	2"		20		19	7
80	3"		27		26	7
100	4"		32		31	7
150	6"		53		52	7
200	8"		96		95	7
250	10"		162		161	7
300	12"		239		238	7
350	14"		380		381	7
400	16"		448		448	7
450	18"		559		558	7
500	20"		625		624	7
600	24"		889		889	7
Transmitter Promag (compact version): 3.9 lbs (Weight data valid for standard pressure ratings and without packaging material)						

Promag W (ASME/AWWA)

Weight data in lbs						
Nominal diameter		Compact version		Remote version (without cable)		
[mm]	[inch]				Sensor	Transformer
25	1"	Class 150	13	Class 150	12	7
40	1 ½"		17		16	7
50	2"		20		19	7
80	3"		27		26	7
100	4"		32		31	7
150	6"		53		52	7
200	8"		96		95	7
250	10"		162		161	7
300	12"		239		238	7
350	14"		380		381	7
400	16"		448		448	7
450	18"		559		558	7
500	20"		625		624	7
600	24"		889		889	7
700	28"	Class D	878	Class D	878	7
–	30"		1011		1010	7
800	32"		1209		1208	7
900	36"		1760		1760	7
1000	40"		1981		1980	7
–	42"		2422		2421	7
1200	48"		3083		3083	7
–	54"		4847		4847	7
–	60"		5950		5949	7
–	66"		8155		8154	7
1800	72"		9037		9036	7
–	78"		10139		10139	7
Transmitter Promag (compact version): 3.9 lbs (Weight data valid for standard pressure ratings and without packaging material)						

Material

Promag D

- Transmitter housing: powder-coated die-cast aluminum
- Sensor housing: powder-coated die-cast aluminum
- Measuring tube: polyamide, O-rings EPDM
  (Drinking water approvals: WRAS BS 6920, ACS, NSF 61, KTW/W270)
- Electrodes: 1.4435 (316, 316L)
- Ground disks: 1.4301 (304)

Promag E

- Transmitter housing: powder-coated die-cast aluminum
- Sensor housing
  – DN 15 to 300 (½ to 12"): powder-coated die-cast aluminum
  – DN 350 to 600 (14 to 24"): with protective lacquering
- Measuring tube
  – DN ≤ 300 (12"): stainless steel 1.4301 (304) or 1.4306 (304L) (with Al/Zn protective coating)
  – DN ≥ 350 (14"): stainless steel 1.4301 (304) or 1.4306 (304L) (with protective lacquering)
- Electrodes: 1.4435 (316, 316L), Alloy C22
- Flanges (with protective lacquering)
  – EN 1092-1 (DIN2501): RSt37-2 (S235JRG2); Alloy C22; Fe 410W B
  – ASME: A105
  – JIS: RSt37-2 (S235JRG2); HII
- Seals: to DIN EN 1514-1
- Ground disks: 1.4435 (316, 316L) or Alloy C22

Promag H

- Transmitter housing: powder-coated die-cast aluminum
- Window material: glass or polycarbonate
- Sensor housing: stainless steel 1.4301 (304)
- Wall mounting kit: stainless steel 1.4301 (304)
- Measuring tube: stainless steel 1.4301 (304)
- Liner: PFA (USP class VI; FDA 21 CFR 177.1550: 3A)
- Electrodes: 11.4435 (316, 316L) (optional: Alloy C22, tantalum, platinum)
- Flanges: connections generally made of 1.4404 (316L)
- Seals
  – DN 2 to 25: O-ring (EPDM, Viton, Kalrez), gasket seal (EPDM*, Viton, Silicone*)
  – DN 40 to 100: gasket seal (EPDM*, Silicone*)

  * = USP class VI; FDA 21 CFR 177.2600: 3A
- Ground rings: 1.4435 (316, 316L) (optional: Alloy C22)

Promag L

- Transmitter housing:
  – Compact housing: powder-coated die-cast aluminum
  – Wall-mounted housing: powder-coated die-cast aluminum

- Sensor housing
  - DN 25 to 300 (1 to 12"): powder-coated die-cast aluminum
  - DN 350 to 1200 (14 to 48"): with protective lacquering
- Measuring tube:
  - DN ≤ 300 (12"); stainless steel 1.4301 (304) or 1.4306 (304L)
  - DN ≥ 350 (14"); stainless steel 202 or 304
- Electrodes: 1.4435 (316, 316L), Alloy C22
- Flange
  - EN 1092-1 (DIN 2501): DN ≤ 300: 1.4306; 1.4307; 1.4301 (304); 1.0038 (S235JRG2)
  - EN 1092-1 (DIN 2501): DN ≥ 350: A105; 1.0038 (S235JRG2)
  - AWWA: A181/A105; 1.0425 (316L) (P265GH); 1.0044 (S275JR)
  - AS 2129: A105; 1.0345 (P235GH); 1.0425 (316L) (P265GH); 1.0038 (S235JRG2); FE 410 WB
  - AS 4087: A105; 1.0425 (316L) (P265GH); 1.0044 (S275JR)
- Seals: to DIN EN 1514-1
- Ground disks: 11.4435 (316, 316L) or Alloy C22

Promag P/W

- Transmitter housing: powder-coated die-cast aluminum
- Sensor housing
  - DN 25 to 300: powder-coated die-cast aluminum
  - DN 350 to 2000: with protective lacquering
- Measuring tube
  - DN ≤ 300: stainless steel 1.4301 (304) or 1.4306 (304L)
    (Flange material: carbon steel with Al/Zn protective coating)
  - DN ≥ 350: stainless steel 1.4301 (304) or 1.4306 (304)
    (Flange material: carbon steel with protective lacquering)
- Electrodes: 1.4435 (316, 316L), Alloy C22
- Flange
  - EN 1092-1 (DIN2501): RSt37-2 (S235JRG2); Alloy C22; FE 410 WB
    (DN ≤ 300: with Al/Zn protective coating; DN ≥ 350 with protective lacquering)
  - ASME: A105
    (DN ≤ 300 with Al/Zn protective coating; DN ≥ 350 with protective lacquering)
  - AWWA (only Promag W): 1.0425 (with protective lacquering)
  - JIS: RSt37-2 (S235JRG2); HII; 1.0425
    (DN ≤ 300 with Al/Zn protective coating; DN ≥ 350 with protective lacquering)
  - AS 2129
    - (DN 25, 80, 100, 150 to 1200) A105 or RSt37-2 (S235JRG2)
    - (DN 50, 80, 350, 400, 500) A105 or St44-2 (S275JR)
      (DN ≤ 300 with Al/Zn protective coating; DN ≥ 350 with protective lacquering)
  - AS 4087: A105 or St44-2 (S275JR)
    (DN ≤ 300 with Al/Zn protective coating; DN ≥ 350 with protective lacquering)
- Seals: to DIN EN 1514-1
- Ground disks: 1.4435 (316, 316L) or Alloy C22

Material load diagram

The material load diagrams (pressure-temperature graphs) for the process connections are to be found in the "Technical Information" documents of the device in question:
List of supplementary documentation → 🖹 107.

Fitted electrodes

Promag D

- 2 measuring electrodes for signal detection

Promag E/L/P/W

- 2 measuring electrodes for signal detection
- 1 EPD electrode for empty pipe detection
- 1 reference electrode for potential equalization

Promag H

- 2 measuring electrodes for signal detection
- 1 EPD electrode for empty pipe detection (apart from DN 2 to 15)

Process connections

Promag D

Wafer version → without process connections

Promag E

Flange connection:
- EN 1092-1 (DIN 2501), DN ≤ 300 (12") form A, DN ≥ 350 (14") form B (Dimensions to DIN 2501, DN 65 PN 16 and DN 600 (24") PN 16 exclusively to EN 1092-1)
- ASME B16.5
- JIS B2220

Promag H

With O-ring:
- Flange EN (DIN), ASME, JIS
- External thread

With gasket seal:
- Weld nipple DIN 11850, ODT/SMS
- TriClamp L14 AM7
- Threaded joint DIN 11851, DIN 11864-1, SMS 1145
- Flange DIN 11864-2

Promag L

Flange connection:
- EN 1092-1 (DIN 2501)
  - DN ≤ 300 (12") = form A
  - DN ≥ 350 (14") = form B
- ASME B16.5
- AWWA C207
- AS

Promag P/W

Flange connections:
- EN 1092-1 (DIN 2501)
  - DN ≤ 300 = form A
  - DN ≥ 350 = flat face
  - DN 65 PN 16 and DN 600 PN 16 only as per EN 1092-1

- ASME
- AWWA (only Promag W)
- JIS
- AS

Surface roughness

All data relate to parts in contact with fluid.

- Liner → PFA: ≤ 0.4 µm (15 µin)
- Electrodes → 1.4435 (316, 316L), Alloy C22: 0.3 to 0.5 µm (12 to 20 µin)
- Process connection made of stainless-steel (Promag H):
  - with O-ring seal: ≤ 1.6 µm (63 µin)
  - with aseptic gasket seal: ≤ 0.8 µm (31.5 µin)
  - optional: ≤ 0.38 µm (15 µin)

10.1.11 Human interface

Display elements

- Liquid crystal display: unilluminated, two-line, 16 characters per line
- Display (operating mode) preconfigured: volume flow and totalizer status
- 1 totalizer

Note!
At ambient temperatures below −20 (−4 °F) the readability of the display may be impaired.

Operating elements

Local operation with three keys (⊟ ⊞ Ⓔ)

Remote operation

Operation via HART protocol and FieldCare

10.1.12 Certificates and approvals

CE mark

The measuring system is in conformity with the statutory requirements of the EC Directives. Endress+Hauser confirms successful testing of the device by affixing to it the CE mark.

C-tick mark

The measuring system meets the EMC requirements of the Australian Communications and Media Authority (ACMA)

Ex approval

Information about currently available Ex versions (ATEX, FM, CSA, IECEx, NEPSI etc.) can be supplied by your Endress+Hauser Sales Center on request. All explosion protection data are given in a separate documentation which is available upon request.

Sanitary compatibility

Promag D/E/L/P/W

No applicable approvals or certification

Promag H

- 3A authorization and EHEDG-certified
- Seals: in conformity with FDA (except Kalrez seals)

Drinking water approval

Promag D/L/W

- WRAS BS 6920
- ACS
- NSF 61
- KTW/W270

Promag E/H/P

No drinking water approval

Pressure Equipment Directive

Promag D/L

No pressure measuring device approval

Promag E/H/P/W

The devices can be ordered with or without a PED approval. If a device with a PED approval is required, this must be explicitly stated in the order. For devices with nominal diameters less than or equal to DN 25 (1"), this is neither possible nor necessary.

- With the PED/G1/x (x = category) marking on the sensor nameplate, Endress+Hauser confirms compliance with the "Essential Safety Requirements" specified in Annex I of the Pressure Equipment Directive 97/23/EC.
- Devices bearing this marking (PED) are suitable for the following types of medium: Media in Group 1 and 2 with a vapor pressure greater than, or smaller and equal to 0.5 bar (7.3 psi)
- Devices not bearing this marking (PED) are designed and manufactured according to good engineering practice. They meet the requirements of Art.3 Section 3 of the Pressure Equipment Directive 97/23/EC. The range of application is indicated in tables 6 to 9 in Annex II of the Pressure Equipment Directive.

Other standards and guidelines

- EN 60529:
  Degrees of protection by housing (IP code).
- EN 61010-1
  Safety requirements for electrical equipment for measurement, control and laboratory use
- IEC/EN 61326
  Electromagnetic compatibility (EMC requirements)
- ASME/ISA-S82.01
  Safety Standard for Electrical and Electronic Test, Measuring, Controlling and related Equipment - General Requirements. Pollution degree 2, Installation Category II.
- CAN/CSA-C22.2 (No. 1010.1-92)
  Safety requirements for Electrical Equipment for Measurement and Control and Laboratory Use. Pollution degree 2, Installation Category I.

10.1.13 Ordering information

Detailed ordering information is available from the following sources:
- In the Product Configurator on the Endress+Hauser website: www.endress.com → Select country → Instruments → Select device → Product page function: Configure this product
- From your Endress+Hauser Sales Center: www.endress.com/worldwide



Note!
Product Configurator - the tool for individual product configuration
- Up-to-the-minute configuration data
- Depending on the device: Direct input of measuring point-specific information such as measuring range or operating language
- Automatic verification of exclusion criteria
- Automatic creation of the order code and its breakdown in PDF or Excel output format
- Ability to order directly in the Endress+Hauser Online Shop

10.1.14 Accessories

Various accessories, which can be ordered separately from Endress+Hauser, are available for the transmitter and the sensor.→ 70
Your Endress+Hauser service organization can provide detailed information on the specific order codes on request.

10.1.15 Documentation

- Flow measuring technology (FA00005D/06)
- Technical Information Promag 10D (TI00081D/06)
- Technical Information Promag 10E (TI01160D/06)
- Technical Information Promag 10H (TI00095D/06)
- Technical Information Promag 10L(TI00100D/06)
- Technical Information Promag 10P (TI00094D/06)
- Technical Information Promag 10W (TI00093D/06)

11 Appendix

11.1 Illustration of the function matrix

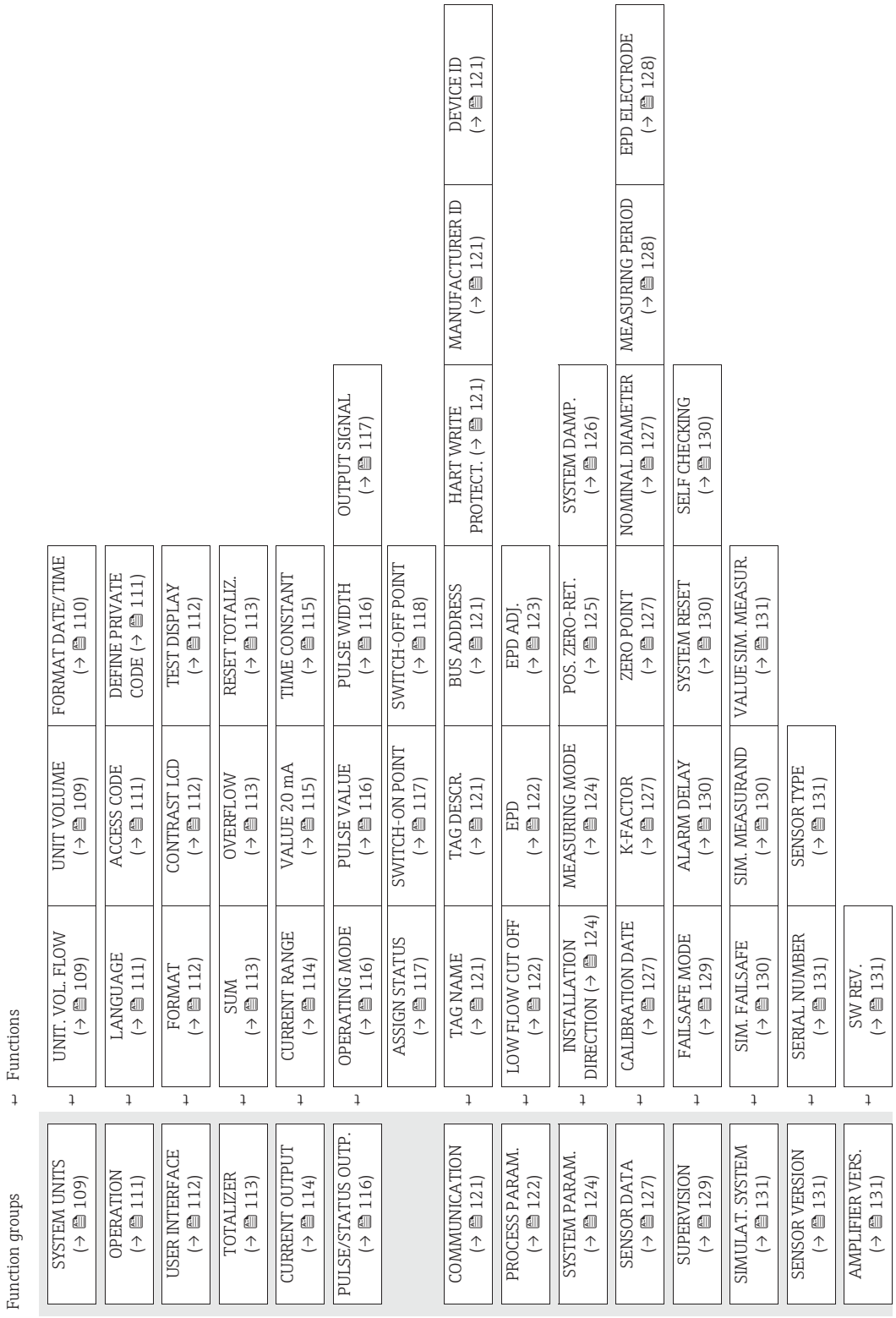

11.2 Group SYSTEM UNITS

Functional description SYSTEM UNITS	
Use this function group to select the unit required and displayed for the measured variable.	
UNIT VOLUME FLOW	Use this function to select the unit required and displayed for the volume flow. The unit you select here is also valid for: ▪ Volume flow display ▪ Current output ▪ Switch points (limit value for volume flow, flow direction) ▪ Low flow cut off Options: *Metric:* Cubic centimeter → cm^3/s; cm^3/min; cm^3/h; cm^3/day Cubic decimeter → dm^3/s; dm^3/min; dm^3/h; dm^3/day Cubic meter → m^3/s; m^3/min; m^3/h; m^3/day Milliliter → ml/s; ml/min; ml/h; ml/day Liter → l/s; l/min; l/h; l/day Hectoliter → hl/s; hl/min; hl/h; hl/day Megalith → Ml/s; Ml/min; Ml/h; Ml/day *US*: Cubic centimeter → cc/s; cc/min; cc/h; cc/day Acre foot → af/s; af/min; af/h; af/day Cubic foot → ft3/s; ft3/min; ft3/h; ft3/day Fluid ounce → oz f/s; oz f/min; oz f/h; oz f/day Gallon → gal/s; gal/min; gal/h; gal/day Kilo gallons → kgal/s; kgal/min; kgal/h; kgal/day Million gallons → Mgal/s; Mgal/min; Mgal/h; Mgal/day Barrel (normal fluids: 31.5 gal/bbl) → bbl/s; bbl/min; bbl/h; bbl/day Barrel (beer: 31.0 gal/bbl) → bbl/s; bbl/min; bbl/h; bbl/day Barrel (petrochemicals: 42.0 gal/bbl) → bbl/s; bbl/min; bbl/h; bbl/day Barrel (filling tanks: 55.0 gal/bbl) → bbl/s; bbl/min; bbl/h; bbl/day *Imperial*: Gallon → gal/s; gal/min; gal/h; gal/day Mega gallon → Mgal/s; Mgal/min; Mgal/h; Mgal/day Barrel (beer: 36.0 gal/bbl) → bbl/s; bbl/min; bbl/h; bbl/day Barrel (petrochemicals: 34.97 gal/bbl) → bbl/s; bbl/min; bbl/h; bbl/day Factory setting: Depends on nominal diameter and country (dm^3/min to m^3/h or US-gal/min), corresponding to the full scale value unit factory setting → 🖹 132
UNIT VOLUME	Use this function to select the unit required and displayed for the volume. The unit you select here is also valid for: ▪ Totalizer status display ▪ Totalizer unit ▪ Pulse value (e.g. m^3/p) Options: *Metric* → cm^3; dm^3; m^3; ml; l; hl; Ml *US* → cc; af; ft3; oz f; gal; Mgal; bbl (normal fluids); bbl (beer); bbl (petrochemicals); bbl (filling tanks) *Imperial* → gal; Mgal; bbl (beer); bbl (petrochemicals) Factory setting: Depends on nominal diameter and country (dm^3 to m^3 or US-gal corresponding to the totalizer unit factory setting. → 🖹 132

Functional description SYSTEM UNITS	
FORMAT DATE/TIME	Use this function to select the format for the date and the time. The unit you select here is also valid for displaying the current calibration date (function CALIBRATION DATE on → 127 Options: DD.MM.YY 24H MM/DD/YY 12H A/P DD.MM.YY 12H A/P MM/DD/YY 24H Factory setting: DD.MM.YY 24H (SI units) MM/DD/YY 12H A/P (US units)

11.3 Group OPERATION

Functional description OPERATION	
LANGUAGE	Use this function to select the language for all texts, parameters and messages shown on the local display. Options: ENGLISH DEUTSCH FRANCAIS ESPANOL ITALIANO Factory setting: Depends on country, see factory setting → 🖹 132 ✎ Note! If you press the ⊕⊖keys simultaneously at startup, the language defaults to "ENGLISH".
ACCESS CODE	All data of the measuring system are protected against inadvertent change. Programming is disabled and the settings cannot be changed until a code is entered in this function. If you press the ℗ keys in any function, the measuring system automatically goes to this function and the prompt to enter the code appears on the display (when programming is disabled). You can activate programming by entering your private code (factory setting = 10, see also the subsequent DEFINE PRIVATE CODE function) User input: Max. 4-digit number: 0 to 9999 ✎ Note! ▪ The programming levels are disabled if you do not press the operating elements within 60 seconds following automatic return to the HOME position. ▪ You can also disable programming in this function by entering any number (other than the defined private code). ▪ The Endress+Hauser service organization can be of assistance if you mislay your personal code.
DEFINE PRIVATE CODE	Use this function to enter a personal code to enable programming. User input: 0 to 9999 (max. 4-digit number) Factory setting: 10 ✎ Note! ▪ This function only appears if the private code was entered in the ACCESS CODE function. ▪ Programming is always enabled with the code "0". ▪ Programming has to be enabled before this code can be changed. When programming is disabled this function is not available, thus preventing others from accessing your personal code.

11.4 USER INTERFACE

Functional description USER INTERFACE	
FORMAT	Use this function to define the maximum number of places after the decimal point displayed for the reading in the main line. Options: XXXXX. XXXX.X XXX.XX XX.XXX X.XXXX Factory setting: X.XXXX ✎ Note! ▪ Note that this setting only affects the reading as it appears on the display, it has no influence on the accuracy of the system's calculations. ▪ The places after the decimal point as computed by the measuring device cannot always be displayed, depending on this setting and the engineering unit. In such instances an arrow appears on the display between the measuring value and the engineering unit (e.g. 1.2 → l/h), indicating that the measuring system is computing with more decimal places than can be shown on the display.
CONTRAST LCD	Use this function to optimize display contrast to suit local operating conditions. User input: 10 to 100% Factory setting: 50%
TEST DISPLAY	Use this function to test the operability of the local display and its pixels. Options: OFF ON Factory setting: OFF Test sequence: 1. Start the test by selecting ON. 2. All pixels of the main line and additional line are darkened for minimum 0.75 seconds. 3. The main line and additional line show an "8" in each field for minimum 0.75 seconds. 4. The main line and additional line show a "0" in each field for minimum 0.75 seconds. 5. The main line and additional line show nothing (blank display) for minimum 0.75 seconds. When the test completes the local display returns to its initial state and the setting changes to "OFF".

11.5 Group TOTALIZER

Functional description TOTALIZER	
SUM	The total for the totalizer's measured variable aggregated since measuring commenced appears on the display. This value can be positive or negative, depending on: ▪ Flow direction and/or ▪ Setting in the MEASURING MODE function → 🖹 124 Display: Max. 6-digit floating-point number, incl. sign and unit (e.g. 15467.4 m^3) ✎ Note! ▪ The totalizer's response to faults is defined in the central "FAILSAFE MODE" function → 🖹 129. ▪ The unit of the totalizer is defined in the UNIT VOLUME function → 🖹 109.
OVERFLOW	The total for the totalizer's overflow aggregated since measuring commenced appears on the display. Total flow quantity is represented by a floating-point number consisting of max. 7 digits. You can use this function to view higher numerical values (>9,999,999) as overflows. The effective quantity is thus the total of the OVERFLOW function plus the value displayed in the SUM function. Example: Reading for 2 overflows: 2 E7 dm^3 (= 20,000,000 dm^3) The value displayed in the function "SUM" = 196,845 dm^3 Effective total quantity = 20,196,845 dm^3 Display: Integer with exponent, including sign and unit, e.g. 2 E7 dm^3
RESET TOTALIZER	Use this function to reset the sum and the overflow of the totalizer to "zero" (= RESET). Options: NO YES Factory setting: NO

11.6 Group CURRENT OUTPUT

Functional description CURRENT OUTPUT	
Note! **The functions of the CURRENT OUTPUT group are only available if the "0" value was entered in the BUS ADDRESS function → 121.**	
CURRENT RANGE	Use this function to specify the current range. You can configure the current output either in accordance with the NAMUR recommendation (max. 20.5 mA) or for a maximum drive of 25 mA. Options: OFF 4-20 mA (25 mA) 4-20 mA (25 mA) HART 4-20 mA NAMUR 4-20 mA HART NAMUR 4-20 mA US 4-20 mA HART US Factory setting: 4-20 mA HART NAMUR Current range, work range and signal on alarm level 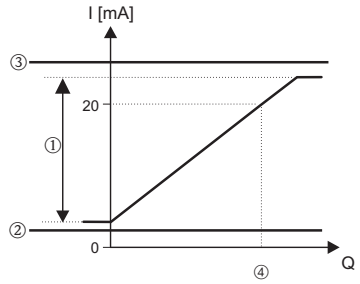 **A** | ① | ② | ③ OFF | 4 mA | - | - 4-20 mA (25 mA) | 4 - 24 mA | 2 | 25 4-20 mA (25 mA) HART | 4 - 24 mA | 2 | 25 4-20 mA NAMUR | 3,8 - 20,5 mA | 3,5 | 22,6 4-20 mA HART NAMUR | 3,8 - 20,5 mA | 3,5 | 22,6 4-20 mA US | 3,9 - 20,8 mA | 3,75 | 22,6 4-20 mA HART US | 3,9 - 20,8 mA | 3,75 | 22,6 A0005392 *A = Work range* *① = Work range* *② = Lower signal on alarm level* *③ = Upper signal on alarm level* *④ = Scaled full scale value* *Q = Flow* Note! ▪ If the measured value is outside the measuring range (defined in the VALUE 20 mA function → 115), a notice message is generated. ▪ The current output's response to faults is defined in the central FAILSAFE MODE function → 129.

Functional description CURRENT OUTPUT	
VALUE 20 mA	Use this function to assign the 20 mA current a full scale value. Positive and negative values are permitted. The required measuring range is defined by defining the VALUE 20 mA . In the SYMMETRY measuring mode → 🖹 124, the value assigned applies to both flow directions; in the STANDARD measuring mode it applies only to the flow direction selected. User input: 5-digit floating-point number, with sign Factory setting: Depends on nominal diameter and country, [value] / [dm^3...m^3 or US-gal...US-Mgal] Corresponds to the factory setting for the full scale value → 🖹 132 ✎ Note! ▪ The appropriate unit is taken from the SYSTEM UNITS group → 🖹 109. ▪ The value for 4 mA always corresponds to the zero flow (0 [unit]). This value is fixed and cannot be edited.
TIME CONSTANT	Use this function to enter a time constant defining how the current output signal reacts to severely fluctuating measured variables, either very quickly (enter a low time constant) or with damping (enter a high time constant). User input: Fixed-point number 0.01 to 100.00 s Factory setting: 1.00 s

11.7 Group PULSE/STATUS OUTPUT

Functional description PULSE/STATUS OUTPUT	
OPERATING MODE	Configuration of the output as a pulse or status output. The functions available in this function group vary, depending on which option you select here. Options: OFF PULSE STATUS Factory setting: PULSE
PULSE VALUE	✎ Note! This function is not available unless the PULSE setting was selected in the OPERATING MODE function. Use this function to define the flow at which a pulse is triggered. These pulses can be totaled by an external totalizer, and the total flow quantity since measuring started can be registered in this way. In the SYMMETRY measuring mode → 🖹 124, the value assigned applies to both flow directions; in the STANDARD measuring mode it applies only to the positive flow direction. User input: 5-digit floating-point number, [unit] Factory setting: Depends on nominal diameter and country, [value] [dm^3...m^3 or US-gal] / pulse; Corresponds to the factory setting for the pulse value → 🖹 132 ✎ Note! The appropriate unit is taken from the SYSTEM UNITS group.
PULSE WIDTH	✎ Note! This function is not available unless the PULSE setting was selected in the OPERATING MODE function. Use this function to enter the maximum pulse width of the output pulses. User input: 5 to 2000 ms Factory setting: 100 ms Pulse output is always with the pulse width (B) entered in this function. The pauses (P) between the individual pulses are automatically configured. However, they must at least correspond to the pulse width (B = P). 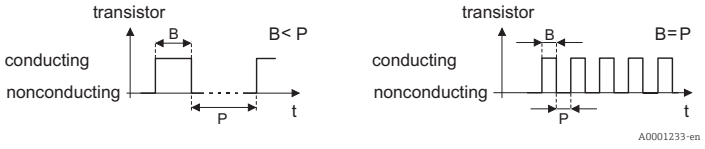 *P = Intervals between the individual pulses* *B = Pulse width entered (the illustration applies to positive pulses)* ☝ Caution! Buffering (pulse memory) takes place if the number of pulses is too large to output the pulses with the selected pulse width (see PULSE VALUE function on → 🖹 116). The system error message RANGE PULSE is displayed if more pulses are in the pulse memory than can be output in 4 seconds. ✎ Note! ▪ When selecting the pulse width, choose a value that can still be processed by a connected counter (e.g. mechanical counter, PLC etc.). ▪ The pulse output's response to faults is defined in the central FAILSAFE MODE function → 🖹 129.

Functional description PULSE/STATUS OUTPUT	
OUTPUT SIGNAL	Note! This function is not available unless the PULSE setting was selected in the OPERATING MODE function. Use this function to configure the output in such a way that it matches an external counter, for example. Depending on the application, you can select the direction of the pulses here. Options: PASSIVE - POSITIVE PASSIVE - NEGATIVE Factory setting: PASSIVE - NEGATIVE
ASSIGN STATUS OUTPUT	Note! This function is not available unless the STATUS setting was selected in the OPERATING MODE function. Configuration of the status output. Options: ON (operation) FAULT MESSAGE NOTICE MESSAGE FAULT MESSAGE or NOTICE MESSAGE EPD (empty pipe detection, only if active) FLOW DIRECTION VOLUME FLOW LIMIT VALUE Factory setting: FAULT MESSAGE Note! ▪ The behavior of the status output is a normally closed behavior, in other words the output is closed (trASMEstor conductive) when normal, error-free measuring is in progress. ▪ It is very important to read and comply with the information on the switching characteristics of the status output → 120.
SWITCH-ON POINT	Note! This function is not available unless LIMIT VALUE or FLOW DIRECTION was selected in the ASSIGN STATUS OUTPUT function. Use this function to assign a value to the switch-on point (status output pulls up). The value can be equal to, greater than or less than the switch-off point. Positive and negative values are permitted. User input: 5-digit floating-point number, [unit] Factory setting: 0 [unit] Note! ▪ The appropriate unit is taken from the SYSTEM UNITS group. ▪ Only the switch-on point is available for flow direction output (no switch-off point). If you enter a value not equal to the zero flow (e.g. 5), the difference between the zero flow and the value entered corresponds to half the switchover hysteresis.

Functional description PULSE/STATUS OUTPUT	
SWITCH-OFF POINT	✎ Note! This function is not available unless LIMIT VALUE was selected in the ASSIGN STATUS OUTPUT function. Use this function to assign a value to the switch-off point (status output drops off). The value can be equal to, greater than or less than the switch-on point. Positive and negative values are permitted. User input: 5-digit floating-point number, [unit] Factory setting: 0 [unit] ✎ Note! ▪ The appropriate unit is taken from the SYSTEM UNITS group. ▪ If SYMMETRY is selected in the MEASURING MODE function and values with different signs are entered for the switch-on and switch-off points, the notice message "INPUT RANGE EXCEEDED" appears.

11.7.1 Information on the response of the status output

General

If you have configured the status output for "LIMIT VALUE" or "FLOW DIRECTION", you can configure the requisite switch points in the SWITCH-ON POINT and SWITCH-OFF POINT functions. When the measured variable in question reaches these predefined values, the status output switches as shown in the illustrations below.

Status output configured for flow direction

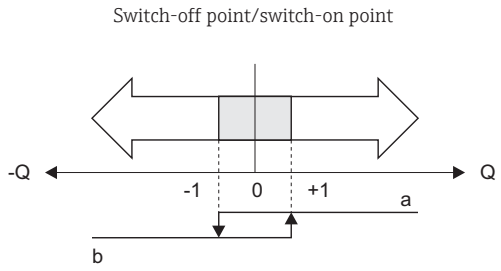

a = Status output conductive
b = Status output not conductive

The value you entered in the function SWITCH-ON POINT defines the switch point for the positive and negative directions of flow. If, for example, the switch point entered is = 1 m^3/h, the status output switches off at −1 m^3/h (not conductive) and switches on again at +1 m^3/h (conductive). Set the switch point to 0 if your process calls for direct switchover (no switching hysteresis). If low flow cut off is used, it is advisable to set hysteresis to a value greater than or equal to the low flow cut off rate.

Status output configured for limit value

The status output switches as soon as the measured variable undershoots or overshoots a defined switch point.

Application: monitoring flow or process-related boundary conditions.

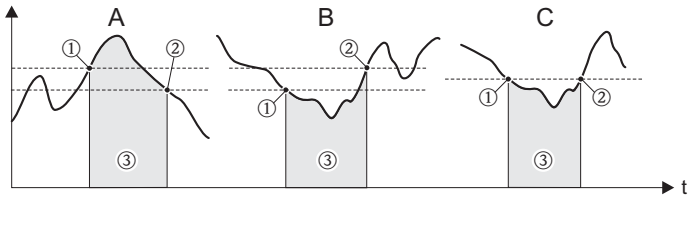

- A = Maximum safety:
  ① SWITCH-OFF POINT > ② SWITCH-ON POINT
- B = Minimum safety:
  ① SWITCH-OFF POINT < ② SWITCH-ON POINT
- C = Minimum safety:
  ① SWITCH-OFF POINT = ② SWITCH-ON POINT (this configuration should be avoided)
- ③ = Relay de-energized

11.7.2 Switching behavior of the status output

Function	State	Open collector behavior (TrASMEstor)
ON (operation)	System in measuring mode 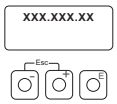	conductive  A0001237
	System not in measuring mode (power supply failed) 	not conductive  A0001239
Fault message	System OK 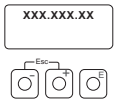	conductive  A0001237
	(System error or process error) fault → Response to error, outputs/inputs and totalizers 	not conductive  A0001239
Notice message	System OK 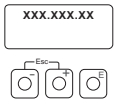	conductive  A0001237
	(System error or process error) Notice → Continuation of measuring 	not conductive  A0001239
Fault message or notice message	System OK 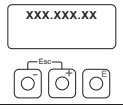	conductive  A0001237
	(System error or process error) Fault → Response to error or Notice → Continuation of measuring 	not conductive  A0001239
Empty pipe detection (EPD)	Measuring tube full 	conductive  A0001237
	Measuring tube partially filled / empty measuring tube 	not conductive  A0001239
Flow direction	Forwards  A0001241	conductive  A0001237
	Backwards  A0001242	not conductive  A0001239
Volume flow limit value	Limit value not overshot or undershot 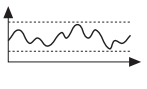 A0001243	conductive  A0001237
	Limit value overshot or undershot 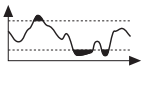 A0001244	not conductive  A0001239

11.8 Group COMMUNICATION

Functional description COMMUNICATION	
✎ **Note!** **The communication group is only visible if the HART option was selected in the CURRENT RANGE function.**	
TAG NAME	Use this function to enter a tag name for the measuring device. You can edit and read this tag name at the local display or via the HART protocol. User input: Max. 8-character text, permitted characters are: A-Z, 0-9, +,-, underscore, space, period Factory setting: "_ _ _ _ _ _ _ _" (no text)
TAG DESCRIPTION	Use this function to enter a tag description for the measuring device. You can edit and read this tag description at the local display or via the HART protocol. User input: Max. 16-character text, permitted characters are: A-Z, 0-9, +,-, underscore, space, period Factory setting: "_ _ _ _ _ _ _ _ _ _ _ _ _ _ _ _" (no text)
BUS ADDRESS	Use this function to define the address for the exchange of data with the HART protocol. User input: 0 to 15 Factory setting: 0 ✎ Note! Addresses 1 to 15: a constant 4 mA current is applied.
HART WRITE PROTECTION	Use this function to activate HART write protection. Options: OFF = function can be edited/read via the HART protocol ON = HART protocol write-protected (only readable) Factory setting: OFF
MANUFACTURER ID	Use this function to view the manufacturer ID in decimal numerical format. Display: – Endress+Hauser – 17 (≙ 11 hex) for Endress+Hauser
DEVICE ID	Use this function to view the device ID in hexadecimal numerical format. Display: 45 hex (≙ 69 dec) for Promag 10

11.9 Group PROCESS PARAMETER

Functional description PROCESS PARAMETER	
SWITCH-ON POINT LOW FLOW CUT OFF	Use this function to enter the switch-on point for low flow cut off. Low flow cut off is active if the value entered is not equal to 0. The sign of the flow value is highlighted on the display to indicate that low flow cut off is active. User input: 5-digit floating-point number, [unit] Factory setting: Depends on nominal diameter and country, [value] / [dm^3...m^3 or US-gal] Corresponds to the factory setting for the low flow cut off → 🖹 132 ✎ Note! The appropriate unit is taken from the SYSTEM UNITS group. The switch-off point is specified as a positive hysteresis from the switch-on point with 50%. 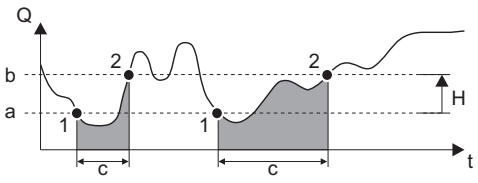 A0001245 *Q* *Flow [volume/time]* *t* *Time* *H* *Hysteresis* *a* *SWITCH-ON POINT LOW FLOW CUT OFF = 200 dm^3/h* *b* *Low flow cut off switch-off point = 50%* *c* *Low flow cut off active* *1* *Low flow cut off is switched on at 200 dm^3/h* *2* *Low flow cut off is switched off at 300 dm^3/h*
EPD	Activating empty pipe detection (EPD). Options: OFF ON (empty pipe detection) Factory setting: OFF ✎ Note! ▪ The ON option is not available unless the sensor is fitted with an EPD electrode. ▪ The default setting for the EPD function when the device is delivered is OFF. The function must be activated as required. ▪ When delivered, the measuring device is calibrated with water (500 µS/cm). If the fluid differs from this conductivity, empty-pipe and full-pipe adjustment has to be performed on site. ▪ To activate the function (ON option), valid adjustment coefficients have to be available. ▪ The following error messages are displayed if the empty-pipe and full-pipe adjustment is incorrect: ▪ ADJUSTMENT FULL = EMPTY: the adjustment values for empty pipe and full pipe are identical. ▪ ADJUSTMENT NOT OK: adjustment is not possible as the fluid conductivity values are outside the permitted range. ▪ In cases of this nature you must repeat empty-pipe or full-pipe adjustment.

Functional description PROCESS PARAMETER	
EPD-MODE (continued)	Notes on empty pipe detection (EPD) ▪ Flow cannot be measured correctly unless the measuring tube is completely full. This status can be monitored at all times by means of the EPD. ▪ An empty or partially filled pipe is a process error. A default factory setting defines that a notice message is issued and that this process error does not have any effect on the outputs. ▪ The EPD process error can be output via the configurable status output. Response to partially filled pipe If the EPD is switched on and responds to a partially filled or empty pipe, the notice message "EMPTY PIPE" appears on the display and zero flow is indicated. If the pipe is partially empty and the EPD is not switched on, the response can vary in identically configured systems: ▪ Flow reading fluctuates ▪ Zero flow ▪ Excessively high flow values
EPD ADJUSTMENT	Use this function to activate adjustment for an empty or full measuring tube. Options: OFF EPD EMPTY PIPE ADJ. EPD FULL PIPE ADJUST Factory setting: OFF ✎ Note! An exact description of the procedure for an EPD empty-pipe/full-pipe adjustment is provided on → 🖹 68.

11.10 Group SYSTEM PARAMETER

Functional description SYSTEM PARAMETER	
INSTALLATION DIRECTION SENSOR	Use this function to reverse the sign of the flow quantity, if necessary. Options: FORWARDS (flow as indicated by the arrow) BACKWARDS (flow opposite to direction indicated by the arrow) Factory setting: FORWARDS ✎ Note! Ascertain the actual direction of fluid flow with reference to the direction indicated by the arrow on the sensor (nameplate).
MEASURING MODE	Use this function to select the measuring mode for all outputs and for the internal totalizer. Options: STANDARD SYMMETRY Factory setting: STANDARD The responses of the individual outputs and the internal totalizer in each of the measuring modes are described in detail on the following pages: Current output STANDARD Only the flow components for the selected flow direction are output, (positive or negative full scale value ② = flow direction). Flow components in the opposite direction are not taken into account (suppression). Example for current output: 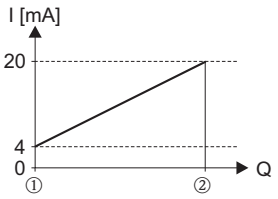 A0001248 SYMMETRY The output signals of the current output are independent of the direction of flow (absolute amount of the measured variable). The "VALUE20mA" ③ (e.g. backflow) corresponds to the mirrored VALUE20mA ② (e.g. flow). Positive and negative flow components are taken into account. Example for current output: 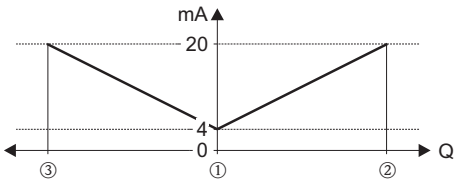 A0001249 ✎ Note! The direction of flow can be output via the configurable status output.

Functional description SYSTEM PARAMETER	
MEASURING MODE (Contd)	Pulse output STANDARD Only flow components of the positive flow direction are output. Components in the opposite direction are not taken into account. SYMMETRY The absolute value of the positive and negative flow components is taken into account. Status output ✎ Note! The information is only applicable if LIMIT VALUE was selected in the function ASSIGN STATUS OUTPUT. STANDARD The status output signal switches at the defined switch points. SYMMETRY The status output signal switches at the defined switch points, irrespective of the sign. In other words, if you define a switch point with a positive sign, the status output signal switches as soon as the value is reached in the negative direction (negative sign), (see illustration). Example for the SYMMETRY measuring mode: Switch-on point: Q = 4 Switch-off point: Q = 10 ① = Status output switched on (conductive) ② = Status output switched off (nonconductive) 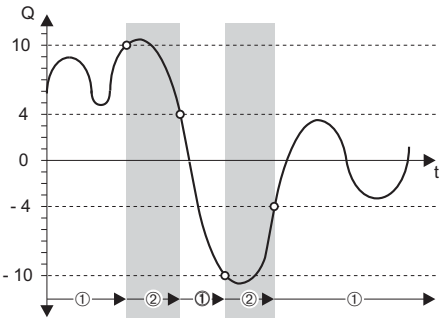 A0001247 Totalizer STANDARD Only positive flow components are output. Negative components are not taken into account. SYMMETRY The positive and negative flow components are balanced. In other words, net flow in the flow direction is registered.
POSITIVE ZERO RETURN	Use this function to interrupt evaluation of measured variables. This is necessary when a piping system is being cleaned, for example. This setting acts on all function and outputs of the measuring device. Options: OFF ON → Signal output is set to the "ZERO FLOW" value. Factory setting: OFF

Functional description SYSTEM PARAMETER	
SYSTEM DAMPING	Use this function to set the filter depth of the digital filter. This reduces the sensitivity of the measuring signal to interference peaks (e.g. high solids content, gas bubbles in the fluid, etc.). The system reaction time increases with the filter setting. User input: 0 to 4 Factory setting: 3 ✎ Note! ▪ The system damping acts on all functions and outputs of the measuring device. ▪ The higher the value set, the stronger the damping (higher response time).

11.11 Group SENSOR DATA

All sensor data (calibration factors, zero point and nominal diameter etc.) are set at the factory.

Caution!
Under normal circumstances you should not change the following parameter settings, because changes affect numerous functions of the entire measuring facility in general and the accuracy of the measuring system in particular. Therefore, the functions described below are provided with an additional prompt (with the code 10) once you enter your private code.

Functional description SENSOR DATA	
CALIBRATION DATE	Use this function to view the current calibration date and time for the sensor. User input: Calibration date and time. Factory setting: Calibration date and time of the current calibration. Note! The calibration date and time format is defined in the FORMAT DATE/TIME function, → 110 Selectable formats: DD.MM.YY 24H MM/DD/YY 12H A/P DD.MM.YY 12H A/P MM/DD/YY 24H
K-FACTOR	Use this function to display the current calibration factor (positive and negative flow direction) for the sensor. The calibration factor is determined and set at the factory. User input: 5-digit fixed-point number: 0.5000 to 2.0000 Factory setting: Depends on nominal diameter and calibration Note! This value is also provided on the sensor nameplate.
ZERO POINT	This function shows the current zero-point correction value for the sensor. Zero-point correction is determined and set at the factory. User input: Max. 4-digit number: -1000 to +1000 Factory setting: Depends on nominal diameter and calibration Note! This value is also provided on the sensor nameplate.
NOMINAL DIAMETER	This function shows the nominal diameter for the sensor. The nominal diameter depends on the size of the sensor and is set at the factory. Options: 2 to 2000 mm 1/12 to 78" Factory setting: Depends on the size of the sensor Note! This value is also provided on the sensor nameplate.

Functional description SENSOR DATA	
MEASURING PERIOD	Use this function to set the time for a full measuring period. The duration of the measuring period is calculated from the rise time of the magnetic field, the brief recovery time, the (automatically tracked) integration time and the empty pipe detection time. User input: 10 to 1000 ms Factory setting: Depends on nominal diameter
EPD ELECTRODE	Indicates whether the sensor is equipped with an EPD electrode. Display: YES NO Factory setting: YES → Electrode fitted as standard

11.12 Group SUPERVISION

Functional description SUPERVISION	
FAILSAFE MODE	The dictates of safety render it advisable to ensure that the device signal processing assumes a predefined state in the event of a fault. The setting you select here is valid for: ▪ Current output ▪ Pulse output ▪ Totalizer ✎ Note! This has no effect on the display. Options: MINIMUM VALUE MAXIMUM VALUE ACTUAL VALUE Factory setting: MINIMUM VALUE The response of the individual outputs and the totalizer is listed below. Current output: MINIMUM VALUE The current output adopts the value of the lower signal on alarm level (as defined in the CURRENT RANGE function → 🖹 114). MAXIMUM VALUE The current output is set to the upper value of the signal on alarm level. (The values in question can be found in the CURRENT RANGE function on → 🖹 114). ACTUAL VALUE Measured value output is based on the current flow measurement. The fault is ignored. Pulse output: MINIMUM or MAXIMUM VALUE Output is zero pulse ACTUAL VALUE Measured value output is based on the current flow measurement (fault is ignored). Totalizer: MINIMUM or MAXIMUM VALUE The totalizer is paused until the fault is rectified. ACTUAL VALUE The totalizer continues to count on the basis of the current flow value. The fault is ignored.

Functional description SUPERVISION	
ALARM DELAY	Use this function to define a time span in which the criteria for an error have to be satisfied without interruption before an error or notice message is generated. Depending on the setting and the type of error, this suppression acts on: ▪ Display ▪ Current output ▪ Pulse/status output User input: 0 to 100 s (in increments of one second) Factory setting: 0 s ☝ Caution! If this function is activated error and notice messages are delayed by the time corresponding to the setting before being forwarded to the higher-order controller (process controller, etc.). It is therefore imperative to check in advance in order to make sure whether a delay of this nature could affect the safety requirements of the process. If error and notice messages cannot be suppressed, a value of 0 seconds must be entered here.
SYSTEM RESET	Use this function to perform a reset of the measuring system. Options: NO RESTART SYSTEM (Restart without disconnecting main power) RESET DELIVERY (Restart without disconnecting main power, the saved settings of the delivery status (factory settings) are applied). Factory setting: NO
SELF CHECKING	Use this function to switch on and off the self-checking function of the electrode amplifier. When the function is switched on, the electrode signal circuit is checked against a reference voltage at 60-second intervals. If there is an impermissible deviation from the value, system error message #101 is output and displayed on the local display. Options: ON OFF Factory setting: OFF

11.13 Group SIMULATION SYSTEM

Functional description SIMULATION SYSTEM	
SIMULATION FAILSAFE MODE	Use this function to set all outputs and the totalizer to their defined failsafe modes, in order to check whether they respond correctly. During this time, the words "SIMULATION FAILSAFE MODE" appear on the display. Options: ON OFF Factory setting: OFF
SIMULATION MEASURAND	Use this function to set all outputs and the totalizer to their defined flow-response modes, in order to check whether they respond correctly. During this time, the words "SIMULATION MEASURAND" appear on the display. Options: OFF VOLUME FLOW Factory setting: OFF Note! ▪ The measuring device cannot be used for measuring while this simulation is in progress. ▪ The setting is not saved if the power supply fails.
VALUE SIMULATION MEASURAND	Note! This function is not available unless the SIMULATION MEASURAND function is active (= VOLUME FLOW). In this function, a freely selectable value (e.g. 12 m^3/s) is specified. This value is used to test downstream devices and the flowmeter itself. User input: 5-digit floating-point number [unit], with sign Factory setting: 0 [unit] Caution! The setting is not saved if the power supply fails. Note! The appropriate unit is taken from the SYSTEM UNITS group.

11.14 Group SENSOR VERSION

Functional description SENSOR VERSION	
SERIAL NUMBER	Use this function to view the serial number of the sensor.
SENSOR TYPE	Use this function to view the sensor type.

11.15 Group AMPLIFIER VERSION

Functional description AMPLIFIER VERSION	
SOFTWARE REVISION NUMBER	Use this function to view the software revision number of the electronics board.

11.16 Factory settings

11.16.1 SI units (not for USA and Canada)

Low flow cut off, full scale value, pulse value, totalizer

Nominal diameter		Low flow cut off		Full scale value current output		Pulse value		Totalizer
[mm]	[inch]	(approx. v = 0.04 m/s)		(approx. v = 2.5 m/s)		(approx. 2 pulses/s at v = 2.5 m/s)		
2	1/12"	0.01	dm³/min	0.5	dm³/min	0.005	dm³	dm³
4	1/8"	0.05	dm³/min	2	dm³/min	0.025	dm³	dm³
8	3/8"	0.1	dm³/min	8	dm³/min	0.10	dm³	dm³
15	½"	0.5	dm³/min	25	dm³/min	0.20	dm³	dm³
25	1"	1	dm³/min	75	dm³/min	0.50	dm³	dm³
32	1 ¼"	2	dm³/min	125	dm³/min	1.00	dm³	dm³
40	1 ½"	3	dm³/min	200	dm³/min	1.50	dm³	dm³
50	2"	5	dm³/min	300	dm³/min	2.50	dm³	dm³
65	2 ½"	8	dm³/min	500	dm³/min	5.00	dm³	dm³
80	3"	12	dm³/min	750	dm³/min	5.00	dm³	dm³
100	4"	20	dm³/min	1200	dm³/min	10.00	dm³	dm³
125	5"	30	dm³/min	1850	dm³/min	15.00	dm³	dm³
150	6"	2.5	m³/h	150	m³/h	0.025	m³	m³
200	8"	5.0	m³/h	300	m³/h	0.05	m³	m³
250	10"	7.5	m³/h	500	m³/h	0.05	m³	m³
300	12"	10	m³/h	750	m³/h	0.10	m³	m³
350	14"	15	m³/h	1000	m³/h	0.10	m³	m³
375	15"	20	m3/h	1200	m3/h	0.15	m3	m3
400	16"	20	m³/h	1200	m³/h	0.15	m³	m³
450	18"	25	m³/h	1500	m³/h	0.25	m³	m³
500	20"	30	m³/h	2000	m³/h	0.25	m³	m³
600	24"	40	m³/h	2500	m³/h	0.30	m³	m³
700	28"	50	m³/h	3500	m³/h	0.50	m³	m³
–	30"	60	m³/h	4000	m³/h	0.50	m³	m³
800	32"	75	m³/h	4500	m³/h	0.75	m³	m³
900	36"	100	m³/h	6000	m³/h	0.75	m³	m³
1000	40"	125	m³/h	7000	m³/h	1.00	m³	m³
–	42"	125	m³/h	8000	m³/h	1.00	m³	m³
1200	48"	150	m³/h	10000	m³/h	1.50	m³	m³
–	54"	200	m³/h	13000	m³/h	1.50	m³	m³
1400	–	225	m³/h	14000	m³/h	2.00	m³	m³
–	60"	250	m³/h	16000	m³/h	2.00	m³	m³
1600	–	300	m³/h	18000	m³/h	2.50	m³	m³
–	66"	325	m³/h	20500	m³/h	2.50	m³	m³
1800	72"	350	m³/h	23000	m³/h	3.00	m³	m³
–	78"	450	m³/h	28500	m³/h	3.50	m³	m³
2000	–	450	m³/h	28500	m³/h	3.50	m³	m³

Language

Country	Language
Austria	Deutsch
Belgium	English
Denmark	English
England	English
Finland	English
France	Francais
Germany	Deutsch
Holland	English
Hong Kong	English
International Instruments	English
Italy	Italiano
Japan	English
Malaysia	English
Norway	English
Singapore	English
South Africa	English
Spain	Espanol
Sweden	English
Switzerland	Deutsch
Thailand	English

11.16.2 US units (only for USA and Canada)

Low flow cut off, full scale value, pulse value, totalizer

Nominal diameter		Low flow cut off		Full scale value current output		Pulse value		Totalizer
[inch]	[mm]	(approx. v = 0.04 m/s)		(approx. v = 2.5 m/s)		(approx. 2 pulses/s at v = 2.5 m/s)		
1/12"	2	0.002	gal/min	0.1	gal/min	0.001	gal	gal
1/8"	4	0.008	gal/min	0.5	gal/min	0.005	gal	gal
3/8"	8	0.025	gal/min	2	gal/min	0.02	gal	gal
½"	15	0.10	gal/min	6	gal/min	0.05	gal	gal
1"	25	0.25	gal/min	18	gal/min	0.20	gal	gal
1 ¼"	32	0.50	gal/min	30	gal/min	0.20	gal	gal
1 ½"	40	0.75	gal/min	50	gal/min	0.50	gal	gal
2"	50	1.25	gal/min	75	gal/min	0.50	gal	gal
2 ½"	65	2.0	gal/min	130	gal/min	1	gal	gal
3"	80	2.5	gal/min	200	gal/min	2	gal	gal
4"	100	4.0	gal/min	300	gal/min	2	gal	gal
5"	125	7.0	gal/min	450	gal/min	5	gal	gal
6"	150	12	gal/min	600	gal/min	5	gal	gal
8"	200	15	gal/min	1200	gal/min	10	gal	gal
10"	250	30	gal/min	1500	gal/min	15	gal	gal
12"	300	45	gal/min	2400	gal/min	25	gal	gal
14"	350	60	gal/min	3600	gal/min	30	gal	gal
15"	375	60	gal/min	4800	gal/min	50	gal	gal
16"	400	60	gal/min	4800	gal/min	50	gal	gal
18"	450	90	gal/min	6000	gal/min	50	gal	gal
20"	500	120	gal/min	7500	gal/min	75	gal	gal
24"	600	180	gal/min	10500	gal/min	100	gal	gal
28"	700	210	gal/min	13500	gal/min	125	gal	gal
30"	–	270	gal/min	16500	gal/min	150	gal	gal
32"	800	300	gal/min	19500	gal/min	200	gal	gal
36"	900	360	gal/min	24000	gal/min	225	gal	gal
40"	1000	480	gal/min	30000	gal/min	250	gal	gal
42"	–	600	gal/min	33000	gal/min	250	gal	gal
48"	1200	600	gal/min	42000	gal/min	400	gal	gal
54"	–	1.3	Mgal/d	75	Mgal/d	0.0005	Mgal	Mgal
–	1400	1.3	Mgal/d	85	Mgal/d	0.0005	Mgal	Mgal
60"	–	1.3	Mgal/d	95	Mgal/d	0.0005	Mgal	Mgal
–	1600	1.7	Mgal/d	110	Mgal/d	0.0008	Mgal	Mgal
66"	–	2.2	Mgal/d	120	Mgal/d	0.0008	Mgal	Mgal
72"	1800	2.6	Mgal/d	140	Mgal/d	0.0008	Mgal	Mgal
78"	–	3.0	Mgal/d	175	Mgal/d	0.001	Mgal	Mgal
–	2000	3.0	Mgal/d	175	Mgal/d	0.001	Mgal	Mgal

Language

Country	Language
USA	English
Canada	English

Index

A

ACCESS CODE 111
Accessories 70
Adapters 15
ALARM DELAY 130
Ambient temperature range 86
Applicator (selection and configuration software) 72
Approvals 8, 105
ASSIGN STATUS OUTPUT 117

B

Brief commissioning guide 66
BUS ADDRESS 121

C

Cable entry 84
Cable specifications 47
CALIBRATION DATE 127
Calibration factor 7
CE mark 105
CE mark (Declaration of Conformity) 8
Centering sleeve
  Promag D 20
Certificates 8, 105
CIP cleaning 87
Cleaning (exterior cleaning) 69
Code entry (function matrix) 57
Commissioning
  Brief operating instructions 66
  General 66
  Setup 67
  With a new electronics board 67
Commissioning setup 67
Communication 59
Conductivity of fluid 89
Connecting cable 18
Connection
  HART 49
  Remote version 42
  Terminal assignment 49
  Transmitter 48
CONTRAST LCD 112
C-tick mark 105
CURRENT RANGE 114

D

Declaration of Conformity (CE mark) 8
DEFINE PRIVATE CODE 111
Degree of protection 53, 86
Design 93
Device description files 60
DEVICE ID 121
Device variable via HART protocol 60
Display
  Elements 55, 105
  Turning 39
Documentation 107
Drinking water approval 106

E

Electrical connections 84
Electrodes
  EPD electrode 13
EMC (electromagnetic compatibility) 47, 87
Empty-pipe/full-pipe adjustment 68
Environment 86
EPD 122
EPD ADJUSTMENT 123
EPD ELECTRODE 128
Error message types 58
Ex approval 105
Exterior cleaning 69

F

Factory setting
  SI units 132
  US units 134
FAILSAFE MODE 129
Field Xpert SFX100 49
FieldCare 59, 72
Fieldcheck (tester and simulator) 72
Fitted electrodes 104
Flow rate/limits 16
FORMAT 112
FORMAT DATE/TIME 110
Function matrix
  Brief operating instructions 56
  Illustration 108
FXA 193 service interface 72
FXA193 72

G

Galvanic isolation 84
Ground cable
  Promag E 22
  Promag L 27
  Promag P 31
  Promag W 34
Group
  AMPLIFIER VERSION 131
  COMMUNICATION 121
  CURRENT OUTPUT 114
  DISPLAY 112
  OPERATION 111
  PROCESS PARAMETER 122
  PULSE/STATUS OUTPUT 116
  SENSOR DATA 127
  SENSOR VERSION 131
  SIMULATION SYSTEM 131
  SUPERVISION 129
  SYSTEM PARAMETER 124
  SYSTEM UNITS 109
  TOTALIZER 113

H

HART
- Command classes . . . 59
- Commands . . . 61
- Communicator DXR 375 . . . 59
- Device description files . . . 60
- Device status / Error messages . . . 65
- Write protection . . . 60

HART WRITE PROTECTION . . . 121
Hazardous substances . . . 82
HOME position (operating mode) . . . 55

I

Incoming acceptance . . . 9
Inlet/outlet run . . . 14
Installation
- Promag D . . . 19
- Promag E . . . 22
- Promag H . . . 25
- Promag L . . . 27
- Promag P . . . 31
- Promag W . . . 34
- Remote version . . . 40
- See Installation instructions

Installation conditions
- Adapters . . . 15
- Dimensions . . . 11
- Down pipe . . . 12
- EPD electrode . . . 13
- Foundations, supports . . . 15
- Inlet/outlet run . . . 14
- Installation of pumps . . . 11
- Mounting location . . . 11
- Orientation . . . 13
- Partially filled pipes . . . 12
- Vibrations . . . 14

INSTALLATION DIRECTION SENSOR . . . 124

K

K-FACTOR . . . 127

L

LANGUAGE . . . 111
Load . . . 84
Local display
- See Display

Low flow cut off . . . 84

M

Maintenance . . . 69
MANUFACTURER ID . . . 121
Material . . . 102
Material load diagram . . . 103
Maximum measured error . . . 85
Measured variable . . . 83
MEASURING MODE . . . 124–125
MEASURING PERIOD . . . 128
Measuring principle . . . 83
Measuring range . . . 83
Measuring system . . . 83
Mechanical construction . . . 93
Medium pressure range . . . 89
Medium temperature range . . . 87
Mounting bolts
- Promag D . . . 20

N

Nameplate specifications
- Connections . . . 7
- Sensor . . . 7
- Transmitter . . . 6

NOMINAL DIAMETER . . . 127
Nominal diameter and flow rate
- Promag W . . . 16

O

Operable flow range . . . 83
Operating conditions
- Process . . . 87

Operating elements . . . 55, 105
OPERATING MODE . . . 116
Operation . . . 55
- Device description files . . . 60
- FieldCare . . . 59
- Operating programs . . . 59

Operational safety . . . 4
Order code
- Accessories . . . 70
- Sensor . . . 7
- Transmitter . . . 6

Output . . . 83
OUTPUT SIGNAL . . . 117
Output signal . . . 83
OVERFLOW . . . 113

P

Performance characteristics . . . 85
Pig (cleaning) . . . 26
POSITIVE ZERO RETURN . . . 125
Post-connection
- Check . . . 54

Post-installation
- Check . . . 41

Potential equalization . . . 50
Power consumption . . . 85
Power supply . . . 84
Power supply failure . . . 85
Pressure Equipment Directive . . . 106
Pressure loss
- Adapters (reducers, expanders) . . . 15

Pressure tightness . . . 90
Process connections . . . 104
Process error messages . . . 76
Process errors (definition) . . . 58
Programming mode
- Disable . . . 57
- Enable . . . 57

Promag D
- Centering sleeve . . . 20
- Installation . . . 19

Mounting bolts 20
Seals 19
Tightening torques 21
Promag D mounting kit 19
Promag E
Ground cable 22
Installation 22
Seals 22
Tightening torques 23
Promag H
Cleaning with pigs 26
Installation 25
Seals 25
Weld nipple 26
Promag H cleaning with pigs 26
Promag H with weld nipples 26
Promag L
Ground cable 27
Installation 27
Seals 27
Tightening torques 28
Promag P
Ground cable 31
Installation 31
Seals 31
Tightening torques 31
Promag W
Ground cable 34
Installation 34
Seals 34
Tightening torques 34
PULSE VALUE 116
PULSE WIDTH 116

R
Reference operating conditions 85
Registered trademarks 8
Remote operation 105
Remote version
Connection 42
Installation 40
Repair 82
Repeatability 86
RESET TOTALIZER 113
Response of the status output 119
Response to errors 77
Returning devices 82

S
Safety icons 5
Safety instructions 4
Sanitary compatibility 105
Seals 69
Promag D 19
Promag E 22
Promag H 25
Promag L 27
Promag P 31
Promag W 34
SELF CHECKING 130
SENSOR TYPE 131
SERIAL NUMBER 131
Serial number
Sensor 7
Transmitter 6
Shock resistance 87
Signal on alarm 84
SIMULATION FAILSAFE MODE 131
SIMULATION MEASURAND 131
SIP cleaning 87
Spare parts 78
Standards, guidelines 106
Storage temperature 86
SUM 113
Supply voltage 84
Surface roughness 105
SW REV. NUMBER 131
Switching behavior of the status output 120
Switching on (measuring device) 66
SWITCH-OFF POINT 118
SWITCH-ON POINT 117
SWITCH-ON POINT LOW FLOW CUT OFF 122
SYSTEM DAMPING 126
System error messages 74
System errors (definition) 58
SYSTEM RESET 130

T
TAG DESCRIPTION 121
TAG NAME 121
Technical data 83
Temperature
Ambient 86
Medium 87
Storage 86
TEST DISPLAY 112
Tightening torques
Promag D 21
Promag E 23
Promag L 28
Promag P 31
Promag W 34
TIME CONSTANT 115
Troubleshooting 73
Types of error (system and process errors) 58

U
UNIT VOLUME 109
UNIT VOLUME FLOW 109

V
VALUE 20 mA 115
VALUE SIMULATION MEASURAND 131
Vibration resistance 87
Vibrations 14

W
Weight 93, 99
Wiring 42

Z

ZERO POINT 127

www.addresses.endress.com

Endress+Hauser

People for Process Automation

Heater, Forced Air, Ouellet, 4.8kW, OAC04804BL

180, 3rd Avenue, L'Islet, Quebec, G0R 2C0, CANADA
Tel.: (418) 247-3947, 1-800-463-7043 Fax: (418) 247-7801
www.ouellet.com

INSTRUCTIONS "OAC" Series

WARNING

When using electrical appliances, basic precautions should always be taken to reduce the risk of fire, electrical shock and injury, including the following.

Read carefully these instructions before installation, operation of the heater. Failure to adhere to the instructions could result in fire, electric shock, serious personal injury, and death or property damage. Review frequently for continuing safe operation and instruction of future users, if necessary.

IMPORTANT INSTRUCTIONS

1- Read all instructions before installing or using this heater.
2- This heater is hot when in use. To avoid burns, do not let bare skin touch hot surfaces. Keep combustible materials, like furniture, pillows, bedding, papers, clothes, and curtains at least 36 in. (915 mm) from the front of the heater.
3- Extreme caution is necessary when any heater is used by or near children or invalids and whenever the heater is left operating and unattended.
4- Do not operate any heater after it malfunctions. Disconnect power at service panel and have heater inspected by a reputable electrician before reusing.
5- Do not use outdoors.
6- Do not insert or allow foreign objects to enter any ventilation or exhaust opening as this may cause an electric shock or fire, or damage the heater.
7- Do not block air intakes or exhaust in any way whatsoever.
8- This heater has hot and arcing or sparking parts inside. Do not use it in areas where gasoline, paint, or flammable liquids are used or stored.
9- Use this heater only as described in this manual. Any other use not recommended by the manufacturer may cause fire, electric shock, or injury.
10- **AMERICAN VERSION ONLY:** Some models (up to 6000W maximum and 240V maximum) include a visual alarm to warn that parts of the heater are getting excessively hot. If the light turns on, immediately turn the heater off and inspect for any objects on or adjacent to the heater that may have blocked the airflow or otherwise caused high temperatures to have occured. If no obstruction is visible, the heater must be checked by a qualified person. **DO NOT OPERATE THE HEATER WHEN THE ALARM LIGHT IS ON.**
11- The thermostat should not be considered an infallible device in cases where maintaining a temperature is considered critical. Examples: Hazardous material storage, computer server room, etc. In these particular cases, it is imperative to add a monitoring system to avoid the consequences of a thermostat failure.

OPERATING INSTRUCTIONS

1- The heater must be properly installed before it is used.
2- Turn the power on at the circuit breaker panel.
3- Electronic thermostat: be sure to set it on the fan mode.
4- Built-in thermostat: to set thermostat at the desired temperature, follow these steps:
   - Set thermostat at maximum temperature (turn clockwise).
   - When the desired temperature is reached, turn the thermostat counter-clockwise slowly until you hear a click.
   - The thermostat will keep this room temperature.
5- Built-in thermostat with control knob, the setting can be adjusted with the knob supplied, located on the front cover.
6- Built-in tamperproof thermostat: the setting can be adjusted through the hole in the front cover with a small slotted screwdriver.
7- **AMERICAN VERSION ONLY**:
   Some models (up to 6000W maximum and 240V maximum) include a visual alarm to warn that parts of the heater are getting excessively hot. If the light turns on, immediately turn the heater off and inspect for any objects on or adjacent to the heater that may have blocked the airflow or otherwise caused high temperatures to have occured.
   DO NOT OPERATE THE HEATER WHEN THE ALARM LIGHT IS ON.

OPTIONS:

Fan switch:
This option allows the use of the fan in continuous or automatic mode.
The switch can be switched through the upper grille with a screwdriver.
Position ON: The fan runs continuously, with or without heating demand.
Position AUTO: The fan operates in automatic mode, only during a heating demand.

Heating switch:
This option allows the standby of the heating function of the heater.
The switch can be switched through the upper grille with a screwdriver.
Position ON: The heater is operating normally, depending of the heating demand from the thermostat.
Position STBY: The heater does not allow to heat the room, even with a heating demand from the thermostat.
However, the fan can be used for air circulation with the fan switch option, if applicable.

MAINTENANCE INSTRUCTIONS

1- Once a year, remove the front panel and use a vacuum cleaner to remove the dust accumulation inside the heater and through openings of the front panel.
2- Cleaning should be done while the heater is disconnected from the main service panel. Wait until the housing and heating element cool before performing maintenance.
3- Replace the front panel before energizing.
4- Any other servicing should be performed by a qualified technician.

WARRANTY

Please refer to the product sheet at www.ouellet.com.

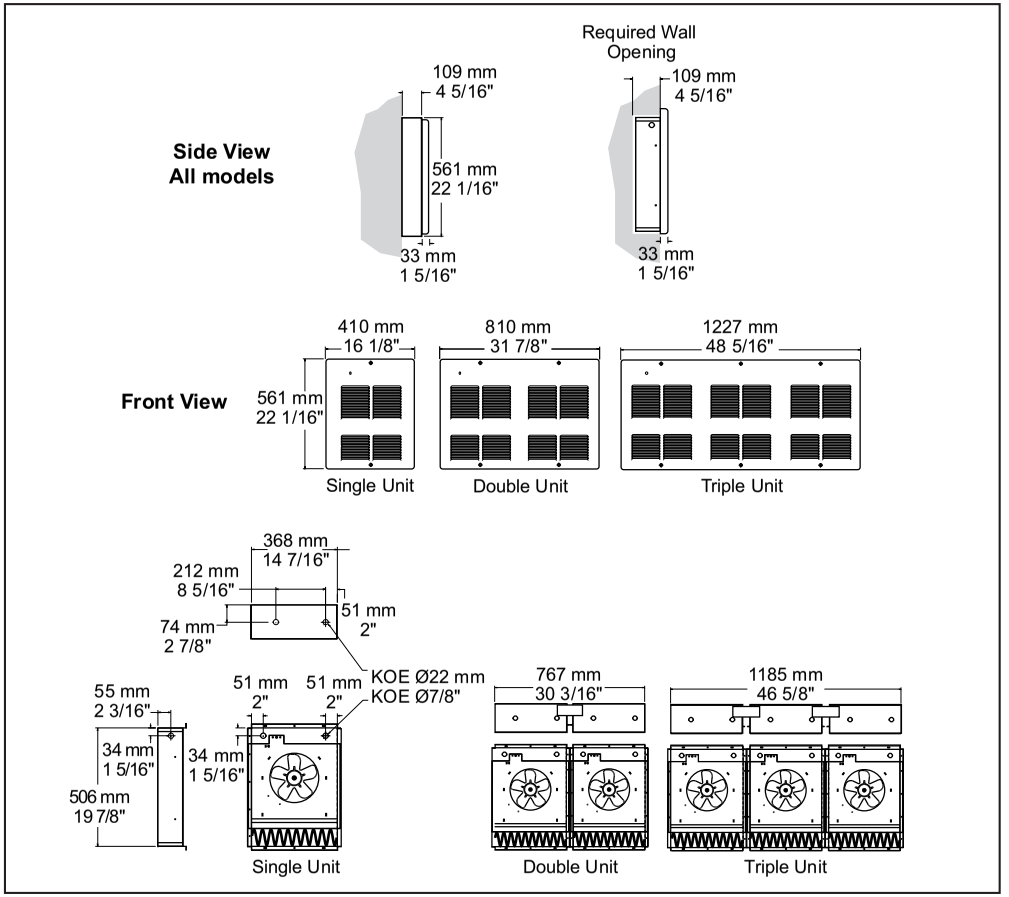

SAVE THESE INSTRUCTIONS

INSTALLATION INSTRUCTIONS

RECESS MOUNTING:

1- Heater must be used with recess box.
2- Never install warm air outlet of heater less than 10 in. (250 mm) from floor or adjacent wall.
3- Provide a wall opening as:
   Depth : 4 5/16 in. (109 mm)
   Height : 19 7/8 in. (506 mm)
   Length : - Single unit : 14 7/16 in. (368 mm)
   - Double unit : 30 3/16 in. (767 mm)
   - Triple unit : 46 5/8 in. (1185 mm)
4- Remove the appropriate knock-out from the recess box for the electrical supply.
5- Attach firmly the recess box using provided screws. Make sure that the edge on each side of the recess box lean on the gypsum panel and not on the structural parts of the wall. See marking on the sides of the recess box.
6- Install the heater to the recess box and be sure that the heater is attach firmly with four (4) provided screws.
7- Connect the heater leads to the supply leads according to national and local codes. See wiring diagram in the front cover of the heater.
8- Make sure the fan rotates freely and that there is no foreign object in the heater.
9- Install the front cover using the provided screws. IMPORTANT: To insure that the front cover is not upside down, check if the logo is in the correct orientation.
10- To test the heater temporarily, set thermostat at maximum temperature.

SURFACE MOUNTING:

Model 4 in. (102 mm)

1- The surface box must be used with recess box.
2- Never install warm air outlet of heater less than 10 in. (250 mm) from floor or adjacent wall.
3- Locate the power supply leads behind the planned location of the heater (surface box).
4- Mount the surface box securely to the wall with provided screws. IMPORTANT: For a single surface box, there are two bracktets fixed at the top and bottom. Unfold the metal hooks to remove the brackets. Insert brackets in the surface box before continuing the installation. See illustration to install properly.
5- Follow instructions 4 to 10 as above for recess mounting.

SEMI-RECESSED MOUNTING:

Model 1 in. (25 mm) and Model 2 in. (51 mm)

1- The surface box must be used with recess box.
2- Never install warm air outlet of heater less than 10 in. (250 mm) from floor or adjacent wall.
3- Provide a wall opening as:
   Depth for 1 in. model : 3 5/16 in. (84 mm)
   Depth for 2 in. model : 2 5/16 in. (59 mm)
   Height : 19 7/8 in. (506 mm)
   Length : - Single unit : 14 7/16 in. (368 mm)
   - Double unit : 30 3/16 in. (767 mm)
   - Triple unit : 46 5/8 in. (1185 mm)
4- Locate the power supply leads behind the planned location of the heater (surface box).
5- Mount the surface box securely to the wall with provided screws. IMPORTANT: For a single surface box, model 2 in. (51 mm) there are two bracktets fixed at the top and bottom. Unfold the metal hooks to remove the brackets. Insert brackets in the surface box before continuing the installation. See illustration to install properly.
6- Follow instructions 4 to 10 as above for recess mounting.

CAUTION:

High temperature, risk of fire, keep electrical cords, drapery, furnishings, and other combustibles at least 36 in. (915 mm) from the front of the heater. To reduce the risk of fire, do not store or use gasoline or other flammable vapors and liquids in the vicinity of the heater.

IMPORTANT

1- Do not obstruct front of heater for at least 48 in. (1220 mm).
2- Any remote thermostat or relay must be connected to the heater control terminal block.
3- Do not interrupt power supply to control this heater.

Surface mounting and Semi-recessed mounting
Single unit
Model 4 in. (102 mm)
Model 2 in. (51 mm)

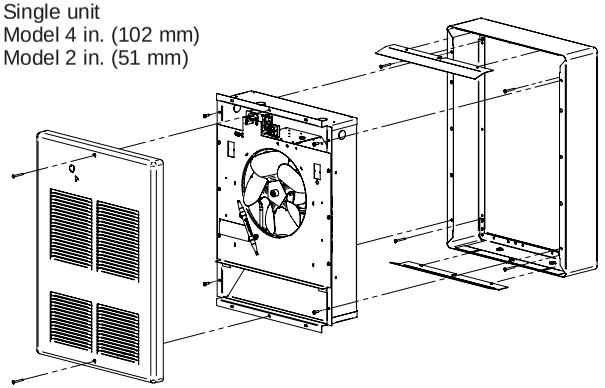

Semi-recessed mounting
Single unit
Model 1 in. (25 mm)

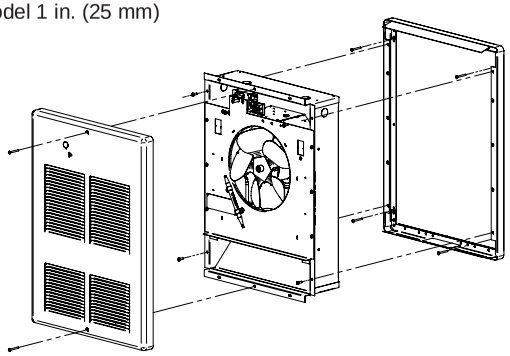

Surface mounting and Semi-recessed mounting
Double unit
All models

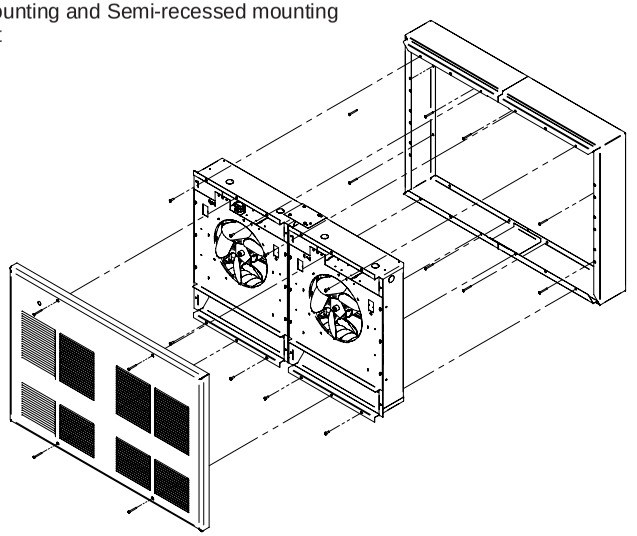

Surface mounting and Semi-recessed mounting
Triple unit
All models

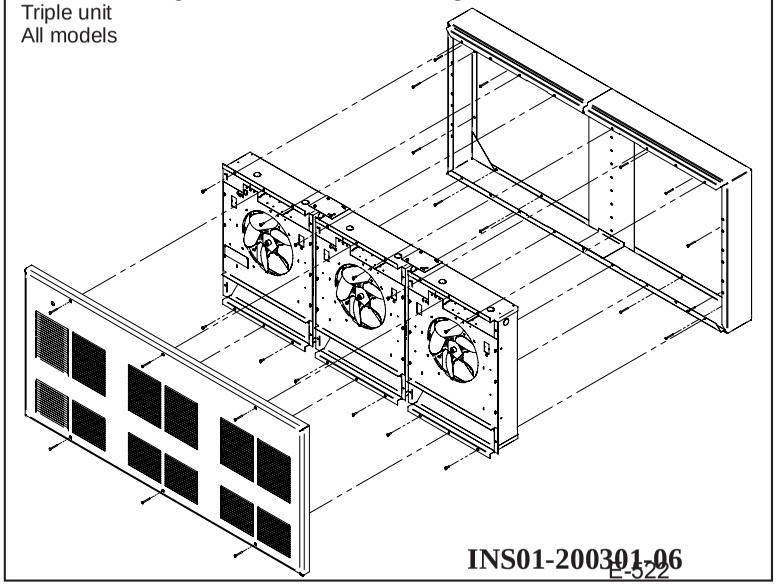

OAC *series*

Commercial Wall Heater

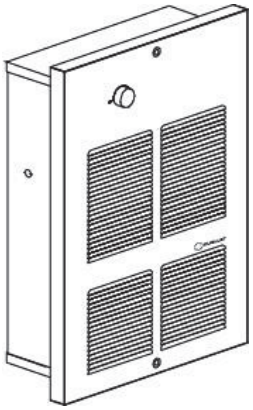

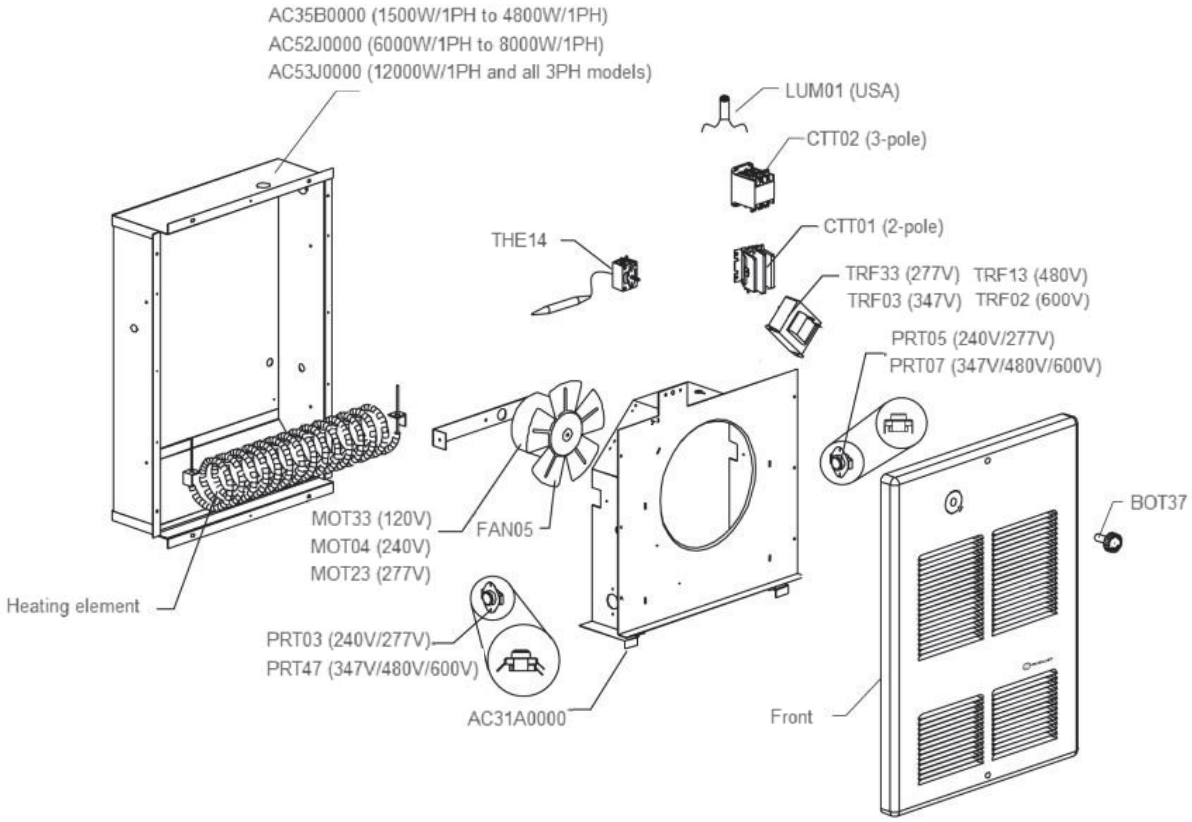

Amp	Fusible *Fuse*	Porte fusible *Fuse holder*	
		Avant le 14 août 2013 *Before August 14, 2013*	After le 14 août 2013 *After August 14, 2013*
15	FUS02	FUS03	FUS07
30	FUS09	FUS07	FUS07

Watts (PH)	Devant *Front*
1500 (1) - 4000 (1)	AC07A000*
4800 (1)	AC29A000*
6000 (1) - 8000 (1)	AC11A000*
12000 (1) **	AC14A000*

* Couleurs sur mesure disponible sur demande. / Custom colors available upon request.
** 12000W/1PH et tous les modèles 3PH. / 12000W/1PH and all 3PH models.

Watts (PH)	Élément chauffant *Heating element*						
	120V	208V	240V	277V	347V	480V	600V
1500 (1)	ELO114	-	ELO71	ELU32	ELO66	ELU71	ELO67
2000 (1)	-	ELO72	ELO47	ELU20	ELO50	ELU24	ELO53
3000 (1)	-	-	ELO48	ELU21	ELO51	ELU25	ELO54
4000 (1)	-	ELO46	ELO49	ELU22	ELO52	ELU26	ELO55
4800 (1)	-	ELU30	ELU31	ELU33	ELO107	ELU58	ELO106
6000 (1)	-	-	ELO48	ELU21	ELO51	ELU25	ELO54
6000 (3)	-	ELO72	-	-	-	-	ELO53
8000 (1)	-	ELO46	ELO49	ELU22	ELO52	ELU26	ELO55
9000 (3)	-	ELO49	-	-	-	-	ELO54
12000 (1)	-	ELO46	ELO49	ELU22	ELO52	ELU26	ELO55
12000 (3)	-	ELO46	-	-	-	ELU26	ELO55

test

watts	volts	
	ELU26	

H-301/302H-401/402 H-501/502 H-503/504 - Heater, Immersion, Caloritech 6KW 460V 3ph

INC.
Tel.: (905) 829-4422
Fax: (905) 829-4430
Tel.: (705) 325-3473
Fax: (705) 325-2106
Tel.: (514) 334-3720
Fax: (514) 334-6491
Tel.: (716) 564-0010
Fax: (716) 564-0044

INSTALLATION AND MAINTENANCE INSTRUCTIONS IMMERSION HEATERS - TYPES CX & DX

1.0 INSTALLATION

1.1 Immersion heaters are designed for operation only while completely immersed in liquids. Never allow the heating elements to be exposed while energized or failure will result.

1.2 CAUTION: Use the heater only in liquids and at pressures for which it was designed. Normally copper sheath is recommended in water, steel or alloy sheath in oil, and the appropriate alloy sheath for heating chemical solutions. Check factory for recommendations.

1.3 In the case of flanged (and some screwplug type) heaters where a gasket seal is required, the gasket surface should be clean and dry before the heater is seated.

1.4 The terminals must be protected at all times from moisture or vapour. In hazardous locations, explosion resistant terminal housings must be used. In outdoor locations, moisture resistant housings are required.

1.5 Protect terminals of heating elements from drippings, condensation, fumes, spray or any other substance which could result in element contamination.

1.6 When melting solids by direct immersion, a surface vent should be provided to allow gases to escape. Operate the heater on $^1/_2$ voltage until melted material completely covers the heating elements. Heaters used for this purpose may require special design features. Check factory for recommendations.

2.0 WIRING AND CONTROL

2.1 Heaters must be wired by qualified personnel to electrical code requirements.

2.2 Check supply voltage for compliance with heater nameplate voltage.

2.3 A line voltage or pilot duty thermostat should be used to control the heater. The pilot duty thermostat must be used with a contactor and (if required) a transformer. Generally, heaters supplied with built-in thermostats will be factory prewired if suitable for line voltage operation. Integral thermostats not factory prewired are usually intended for pilot duty.

2.4 It is recommended that the control circuits be supplied from the isolated secondary windings of transformers obviating the need for two supply circuits, or as an alternative, that mechanical or electrical interlocking be provided so that both supplies must be disconnected before live parts can be made accessible.

2.5 If there is even the slightest possibility that the liquid level may fall below the elements, a level control switch or over-temperature sensing device affixed to the uppermost heating element is required. Check factory for recommendations.

2.6 Heaters with explosion resistant terminal housings must only be used in locations for which the heaters are certified.

a) Check heater nameplate information for approval code.

b) Never energize an explosion resistant heater unless the terminal housing cover is properly tightened.

c) An immersion heater for hazardous locations is approved for use only if an approved liquid level control is used to de-energize the heater under low liquid conditions.

3.0 START-UP INSPECTION

3.1 Check that all terminal connections are tight.

3.2 Heaters stored for prolonged periods may absorb moisture. Using a megger (insulation resistance tester) check the value of the insulation resistance to ground for each circuit. Initial readings of over 500,000 ohms to ground are normally acceptable. Should lower readings be observed, check factory for instructions.

4.0 MAINTENANCE

4.1 DISCONNECT POWER BEFORE SERVICING.

4.2 Remove the immersion heater periodically to inspect for corrosion, sludge built-up and for scale removal.

4.3 Periodically check electrical connections for tightness.

INDEECO

Owner's Manual

ULTRA-SAFE EXP Series

Electric Forced Air Heater for Hazardous Locations

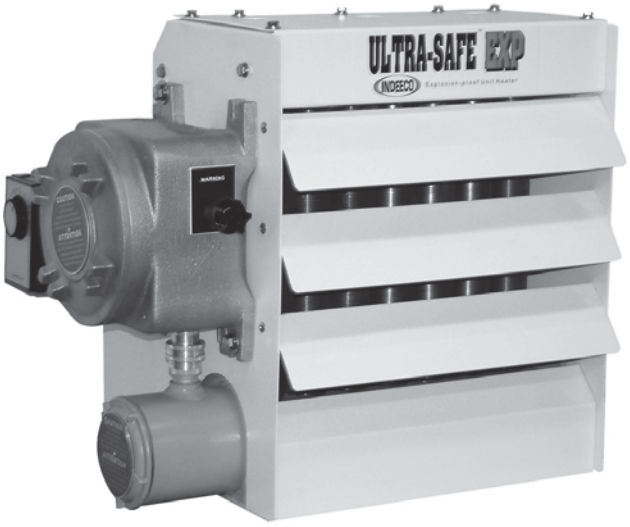

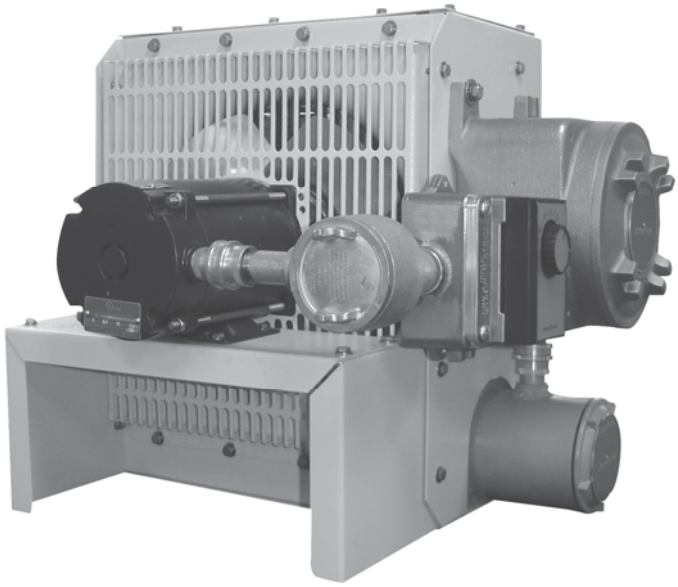

This manual covers installation, maintenance and repair parts.

FM and CSA Approved for the following classified areas:
Class I, Divisions 1 & 2, Groups C & D
Class II, Divisions 1 & 2, Groups F & G
Operating Temperature Code T3C - 320°F (160°C)
Class I, Zones 1 & 2, Group IIB, T3 (FMUS & CSAUS only)
or
Class I, Divisions 1 & 2, Groups C & D
Class II, Divisions 1 & 2, Groups E, F & G
Operating Temperature Code T3C - 320ºF (160ºC)
Class I, Zones 1 & 2, Group IIB T3 (FMUS & CSAUS only)
See Data Plate for Specific Area Classification

For details on the particular hazardous environments having the potential for explosion, refer to Articles 500 through 516 of the National Electric Code, and/or Section 18 of the Canadian Electric Code, Part I.

C SA ® US

C FM US APPROVED

23-2199-83-1
E-526

WARNINGS

Installation and maintenance personnel should familiarize themselves with this manual and all the **WARNINGS** before installing or working on this heater to avoid potential hazardous conditions, severe property damage, personal injury or death.

1. To reduce the risk of ignition of hazardous atmospheres: Do not install where the operating temperature code limit exceeds the ignition temperature of the hazardous atmosphere.
2. Potentially lethal voltages are present. Be sure to lock the branch circuit disconnect switch in the OFF position and tag the circuit "Out for Maintenance" before working on this equipment.
3. Keep electrical enclosure covers tightly closed while in operation.
4. Hazard of Electric Shock. Heater must be grounded in accordance with the N.E.C. and/or C.E.C.
5. This heater should be installed by qualified personnel familiar with the National Electric Code and/or the Canadian Electrical Code requirements for hazardous locations. It is the responsibility of the installer to verify the safety and suitability of the installation.
6. Disassembly of the unit, for installation, is not required or authorized.
7. When connecting the room thermostat, be sure that the thermal cutouts remain connected in series with the controlling contactor. The unit must not operate without the thermal cutouts properly connected in the circuit.
8. Do not attempt to install a "Fan Only" switch on a standard unit heater and do not try to field modify a standard unit heater for this option. The heater must have been ordered for this option to have the necessary internal controls.
9. Replacement of electrical components should only be done by qualified personnel familiar with the requirements of maintaining electrical equipment in hazardous locations.
10. Replacement electrical components must be obtained from the factory in order to maintain the hazardous location rating.
11. The heat exchanger is a factory vacuum-sealed unit. Do not attempt to loosen or tighten any of the fill or drain plugs or attempt to operate the pressure relief valve. A loss of vacuum could cause nuisance tripping of the cutouts or high pressures which will cause the relief valve to actuate with an accompanying loss of liquid. Should leakage occur, remove unit from service and investigate cause.
12. The heat exchanger is filled with a mixture of water and inhibited propylene glycol. Contact with the fluid at operating temperatures may produce a burn hazard. The Material Safety Data sheets indicate that there is not a health hazard from coming in contact with the inhibited propylene glycol. Suggested first aid consists of flushing eyes with plenty of water and to wash off skin in flowing water or a shower.
13. Install and operate in an upright position only. Failure to comply will cause the overtemperature thermal cutouts to trip.
14. Installation minimum mounting clearances on nameplate must be maintained.
15. Use copper wire for supply connections according to size and rating on nameplate.
16. Do not attempt to override louver stops or operate unit with louvers fully closed.
17. "Warning Light", if supplied, will turn on if the high temperature thermal cutout opens. This could result if the heat exchanger is dirty, inlet air is obstructed, vacuum loss in heat exchanger, fan not turning or incorrect supply voltage. Disconnect power to unit before servicing.
18. Crackling noises within the heat exchanger at startup are normal.

WARRANTY WILL BE VOID IF INSTRUCTIONS ARE NOT FOLLOWED.

GENERAL

The air heaters are designed for comfort heating and should not be used in ambient temperatures exceeding 104ºF (40ºC). The units may be wall, pole or ceiling mounted. They utilize a hermetically sealed, liquid-to-air heat exchanger containing immersion type electric heating elements. A mixture of nontoxic propylene glycol and water is place in the heater core to act as a heat transfer fluid. The propylene glycol provides freeze damage protection to -49ºF (-45ºC). The unit is designed to give years of safe, trouble-free operation when properly installed and maintained.

INSTALLATION

A. Site Selection:

The Heaters should not be mounted close to drapery or similar materials which could lay on the cabinet, or block the inlet or outlet of the heater. The heaters are intended for elevated mounting locations so that they blow warm air down to the floor area. A mounting height should be selected so that the heater is out of the way of possible moving equipment or personnel, yet low enough to deliver warm air to the selected area. See mechanical installation instructions for recommended installation heights.

B. Mechanical Installation:

Once an acceptable location has been determined, follow these instructions to complete the mechanical installation.

1. The Heaters are designed for use only while permanently mounted in an upright, level position. See figure below maximum tilt angles:

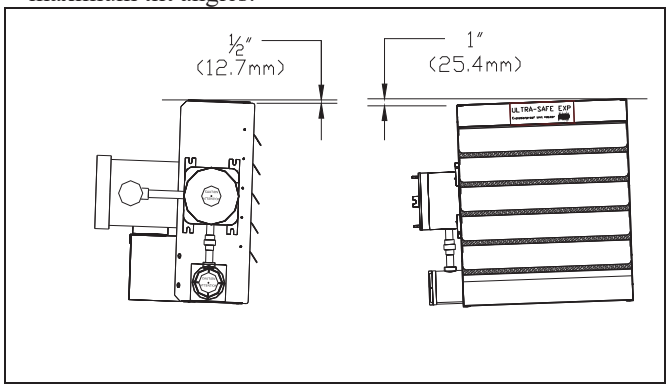

2. To ensure proper heating of floor surfaces, observe the following recommended maximum mounting heights (to bottom of heater):

Maximum Mounting Height from Floor:		
233-FA	233-FB	233-FC
9 ft.	10 ft.	13 ft.
(2.7m)	(3.0m)	(4.0m)

3. The supporting structure that the heater is attached to must have adequate strength to safely support the heater and be sufficient to keep the heater in its proper upright operating position. The maximum unit weights are:

MODEL	lbs	(kgs)
233-FA	150	68
233-FB	200	91
233-FC	250	114

4. See figure below for minimum installation clearances:

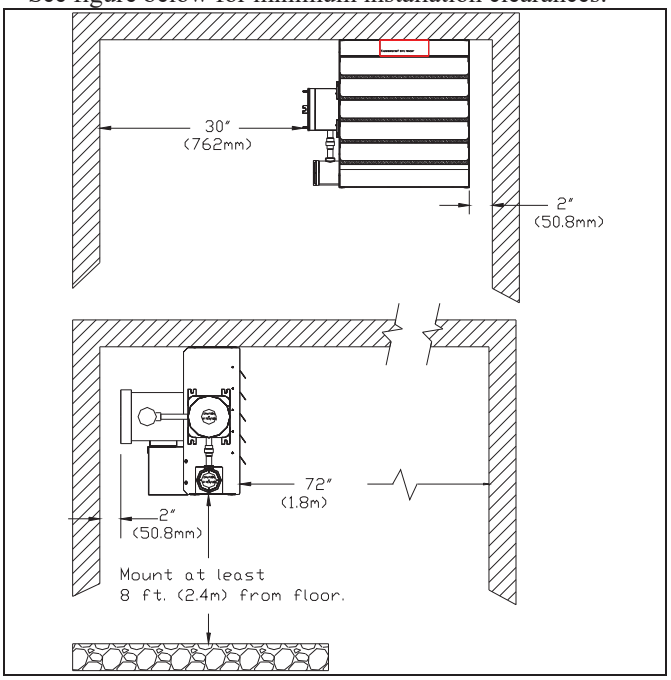

5. The heater may be suspended from overhead beams or mounted to a side wall or a 4" pipe using one of the approved mounting kits. Use of non-approved mounting kits voids all warranties, expressed or implied.
6. Wall mounting should be to structural steel. If the wall construction is plasterboard with wooden 2 X 4 framing or similar, it must be reinforced with angle iron or wooden cross braces.
7. Lock washers should be used on all mounting nuts and bolts to ensure they don't vibrate or work loose due to fan vibration or other vibration transmitted to the heater.

C. Electrical Installation:

Follow these instructions to complete the electrical installation:

1. External branch circuit protection is required. See nameplate ratings and follow Code recommendations.
2. Use only an approved explosion-proof means of wiring, such as mineral insulated cable or copper conductors in rigid conduit with conduit seals as required to make connection to the heater.
3. Follow the NEC and/or CEC and any local electrical and building codes related to the installation and intended use of the heater in an explosion-hazard area.
4. When doing any work on a heater, including the initial electrical connection, disconnect the electrical current at the main branch circuit switch, and lock the switch in the off (open) position and tag the circuit "Out for Maintenance" to prevent potential lethal shock hazards.
5. Confirm that the electrical power supply matches the nameplate voltage, phase, amperage and frequency rating of the heater to be connected.
6. Ensure conductors are of appropriate gauge size. The minimum gauge is stamped on the nameplate. Size all input conductors according to accepted standards consistent with the temperature rating of the wire being used. Use minimum 75°C rated wire.

7. Proper installation of the heater requires that an adequate grounding conductor be connected to the ground terminal. This terminal is painted green or marked with the letter "G" and is located on the inside of the control enclosure next to the power input opening.
8. Check and confirm all connections are securely fastened.
9. Before application of electrical power, check all connections to ensure compliance with the wiring diagram and any code requirements. Remove any foreign objects from the control boxes. Reinstall covers tightly.
10. On all 3-phase heaters, it is necessary to verify that the fan is rotating in the proper direction. If air delivery is not from the front of the heater, exchange any 2 input wires at the main contactor terminal located in the control enclosure.
11. The explosion-proof control box is designed with threaded joints and metal-to-metal contact at the lid or cover joint to prevent an explosion. Do not attempt to install gasket material of any type at these joints. A light coating of anti-seize compound is applied to the threads to prevent seizing.
12. See section titled "operation" before energizing the heater.

D. Field Installed Controls:

1. Power Disconnect Switch:
The NEC requires that a power disconnect switch be mounted within sight of the heater. The CEC or local codes may require a disconnect switch within sight of the heater. Refer to the electrical diagram and follow these steps:
   a.) The remote power disconnect switch must be an explosion-proof disconnect switch rated for the area classification.
   b.) The switch must be indicating and have a locked off position.
   c.) The switch must be rated for the nameplate voltage and current per the NEC, CEC and any local codes.
   d.) Follow steps 6 through 12 of the electrical installation instructions to complete the installation.

2. Room Thermostat:
Refer to the electrical wiring diagram and follow these steps:
   a.) Connect the remote thermostat across the leads marked "C" and "C1". The external thermostat will then be in series with the heater thermal high-limit switches and correct operation of the heater will result.
   b.) The wiring to the remote thermostat must be copper wire, 16 gauge minimum (for Class II) or 14 gauge minimum (Class I) and run in explosion-proof conduit with appropriate conduit seals installed per the NEC, CEC and any local codes.
   c.) Any room thermostat used with this heater must be of an explosion-proof type rated for the area classification, open on temperature rise, rated 250VAC, 75VA inductive capacity.
3. 'Fan Only' Switch:
Refer to the electrical wiring diagram and follow these steps:
   a.) Do not attempt to install a "Fan Only" switch on a standard unit heater and do not try to field modify a standard unit heater for this option. The heater must have been ordered for this option to have the necessary internal controls.
   b.) Connect the remote 'fan only' selector switch across the leads marked "C" and "F".
   c.) The wiring to the fan selector switch must be copper wire, 16 gauge minimum (for Class II) or 14 gauge minimum (for Class I) and run in explosion-proof conduit with appropriate conduit seals installed per the NEC, CEC and any local codes.
   d.) Any selector switch used with this heater must be an explosion-proof switch rated for the area classification, maintained 2 position selector switch rated for 250 VAC, 75 VA inductive.

OPERATION

The unit heater may be operated normally at ambient temperatures of 104°F (40°C) or less and at altitudes of 3,300 feet (1000m) or less in atmospheres containing less than 21% oxygen by volume, and as classified on the nameplate. All of these conditions must be met before attempting to operate the heater. The heater should never be operated in an oxygen-enriched atmosphere or at ambient temperatures above 104°F, (40°C). The heater may be operated at higher altitudes if the ambient temperatures are below 104°F, (40°C).

A. Initial Operation:

Check to make sure the mechanical and electrical installation is complete and that it is safe to operate the heater.

1.) Heater without built on or remotely mounted fan switch:
   a.) Set the temperature control thermostat to a setting above the current room temperature.
   b.) Energize the heater electrical supply circuit.
   c.) The heater and fan should come on and in 5 to 15 minutes reach a stable operating temperature. If the room temperature is high and the installation is above 3,300 feet, the unit heater may cycle on the thermal high limits of the motor or the heater.
   d.) Check out and report any unusual or questionable operating characteristics, such as noise, vibration, loss of fluid, etc. Note that crackling noises coming from the heat exchanger during warm up are normal.
   e.) Set the temperature control thermostat to the desired room temperature setting.
   f.) De-energize the heater electrical supply circuit until heater operation is required.
2.) Heater with fan switch:
   a.) Place the fan switch in the fan position.
   b.) Set the temperature control thermostat to a setting below the current room temperature.
   c.) Energize the heater electrical supply circuit.
   d.) The heater fan should come on but the heater should remain off.
   e.) Place the fan switch in the auto position.
   f.) The fan should go off.
   g.) Set the temperature control thermostat to a setting above the current room temperature.

h.) The fan and heater should operate. If the room temperature is high and the installation is above 3,300 feet (1000m), the unit heater may cycle on the thermal high limit cutouts of the motor or the heater.

i.) Check out and report any unusual or questionable operating characteristics, such as noise, vibration, loss of fluid, etc.
Note that crackling noises coming from the heat exchanger during warm up are normal.

j.) Set the fan switch and temperature control thermostat to the desired operating positions.

B. Normal Operation:

Prior to the start of the heating season, perform the electrical and mechanical steps outlined in the section titled "maintenance".

a.) Perform the Operation steps for the applicable temperature control option.

b.) Place all switches in their normal operating position and place the unit heater in service.

MAINTENANCE

Maintenance and repair must be performed by qualified personnel only.

A. Electrical:

1. Inspect all terminal connections, contactor and conductor insulation for damage, looseness, fraying, etc., as applicable. Tighten any loose terminals and replace or repair wire with damaged or deteriorated insulation. If contactor contacts are badly pitted, welded together, or burned, replace the contactor. Check all explosion-proof conduit for visible damage and tightness.
2. If reduced heat output is suspected, perform the mechanical checks. If low heat output is still suspected after completing the mechanical checks, verify the condition of the heating elements by using an amperage meter to check the current draw of each input line. All input lines should draw approximately equal current which should agree with nameplate rating. If they do not, one or more of the heating elements could be burned out and the heater/core assembly should be replaced.
3. The electric motor is permanently lubricated and thermally protected. Check for smooth and quiet running at all inspections. Replace motor if excessive bearing play is detected. Contact the factory for instructions.

B. Mechanical:

1. Never attempt to fill, drain or check the liquid level of the heat exchanger or check the action of the pressure relief valve. Contact the factory for instructions.
2. The explosion-proof control box is designed with threaded joints and metal-to-metal contact at the lid or cover joints to prevent an explosion. Do not attempt to install gasket material of any type at these joints. A light coating of anti-seize compound is applied to the threads to prevent seizing.
3. Annually check the tightness of all visible bolts and nuts, in particular the support structure bolts and nuts. Similarly check the motor mounting bolts and nuts.
4. Periodically, check the motor, fan and heater core fins for cleanliness. A dirty heat exchanger can cause the unit to over heat and cycle on the thermal cutouts. If the dirt is loose dust, clean with a vacuum or by air jet. If the dirt can't be vacuumed or blown off, use a warm water spray directed to the inlet side of the heat exchanger then to the outlet side. A soft bristled brush may be required to loosen stubborn deposits. Be careful not to bend the aluminum fins on the heat exchanger or the fan blade propeller. Allow unit to dry before re-energizing.
5. Check louvers for position tightness and equal angle settings. Check motor and fan for smooth running operation. Any unusual noise or vibration must be investigated and rectified.
6. Should there be any evidence of fluid leakage from the heater core, the heater should be repaired immediately. The heater will not operate properly with a low fluid level. Contact the factory for replacement core.

REPAIR AND REPLACEMENT

Maintenance and repair must be performed by qualified personnel only.

A. Replacing the Heat Exchanger Core:

The heat exchanger core is not field repairable. Contact factory for replacement.

1. Disconnect the heater electrical power supply, unwire and lower the heater from it's mounting location. Set heater face down on a table or on the floor.
2. Remove the cabinet bottom, cabinet top, wiring and heater enclosure covers.
3. Disconnect all heater wires from the contactor in the wiring enclosure. Disconnect the control wiring from thermal cutout.
4. Thread conduit into wiring enclosure to disconnect the heater terminal box.
5. With an assistant supporting the weight of the heat exchanger, remove the 3 heat exchanger mounting bolts. Carefully remove the heat exchanger out of the bottom of the cabinet.
6. Locate rating tag on the heat exchanger and verify that electrical ratings of the core to be installed match the electrical ratings on the heater nameplate.
7. To reinstall, slide the core through the bottom of the cabinet while an assistant lines up and installs the 3 heat exchanger mounting bolts.
8. Guide the heater lead wires back into the wiring enclosure.
9. Reconnect the heater lead wires to the contactor and the conduit.
10. Reattach the cabinet bottom and enclosure covers before mounting heater and energizing.

B. Replacing the Temperature High-Limit Cutouts:

1. Disconnect the heater electrical power supply and remove the heater enclosure cover.

2. Remove the wire barrier to expose the high limit cutout.
3. Disconnect the wires from the high limit cutout and mark their location.
4. Remove the two nuts used to attach the temperature high limit cutout.
5. Lift and remove the sheetmetal mounting plate.
6. Carefully lift and remove the temperature high limit cutout.
7. Use only factory supply parts for safe operation.
8. Lightly coat the new manual and automatic cutout bulbs with the supplied thermal transfer compound. This is critical for proper cutout operation.
9. Carefully slide the automatic cutout bulb into the **left** thermowell and the manual cutout bulb into the **right** thermowell.
10. Reinstall the sheetmetal plate. Note that the sheetmetal plate also acts as a stop to keep the cutout bulbs from backing out of the wells.
11. Carefully install the temperature high limit control to avoid putting kinks into the capillary.
12. Reattach the wires to the cutout and reinstall the wire barrier.
13. Ensure heater enclosure cover is in place before energizing heater.

C. Resetting the Manual Cutout:

All unit heaters contain a built-in manual reset thermal cutout with or without backup contactor.

1. Disconnect the heater electrical power supply and remove the heater enclosure cover.
2. Determine the reason for the manual reset thermal cutout actuating and rectify the situation. See section titled “maintenance”.
3. Reset the manual reset thermal cutout by pressing on the red stem in the center of the control.
4. Replace the heater enclosure cover securely.
5. Energize the heater electrical supply circuit.
6. The heater and fan should come on and in 5 to 15 minutes reach a stable operating temperature.
7. Check out and report any unusual or questionable operating characteristics, such as noise, vibration, loss of fluid, etc.
8. If heater operation appears normal, place the unit into normal operation.

D. Replacing the Fan Motor and Blade:

The fan motor is permanently lubricated and does not require any maintenance. If the fan motor is defective, a replacement must be obtained from the factory.

1. To replace the fan motor:
   a. Disconnect the heater electrical power supply.
   b. Disconnect the motor supply wires from the contactor in the wiring enclosure.
   c. Disassemble the conduit union located at the motor wiring hub.
   d. Remove top fan guard and motor mounting bolts.
   e. Lift motor out of heater assembly.
   f. Remove fan blade and conduit union from defective motor and install on new motor.
   g. Install new motor to heater using existing motor mounting hardware.
   h. Reinstall top fan guard and ensure that the fan blade rotates freely.
   i. Feed motor wires through conduit and into wiring enclosure.
   j. Reattach conduit union. Reconnect motor wires to contactor.
   k. Check fan rotation by momentarily energizing heater. Airflow should exit from front of heater cabinet. If rotation is incorrect, disconnect electrical power supply and reverse two of the motor lead wires at the contactor.
   l. Reattach wiring enclosure cover before placing heater back in service.

2. To replace the motor fan blade:
   a. Remove the top fan guard.
   b. Remove the four motor mounting bolts and disconnect the conduit union at the motor.
   c. Loosen the bolt that connects the fan blade to the motor shaft.
   d. Slide the motor back and tilt in order to remove the old blade & install a new one.
   e. Tighten the fan blade attachment bolt to the motor shaft.
   f. Reattach the motor conduit union and the four motor mounting bolts.
   g. Reinstall the top fan guard and ensure that the fan blade rotates freely.

REPLACEMENT PARTS

1. All replacements must be factory supplied to ensure safe heater operation.
2. Mark wires and refer to wiring diagram to ensure proper electrical connections.

Reference heater catalog number and item number in figures below when contacting factory for replacement parts. Contact factory for items not shown.

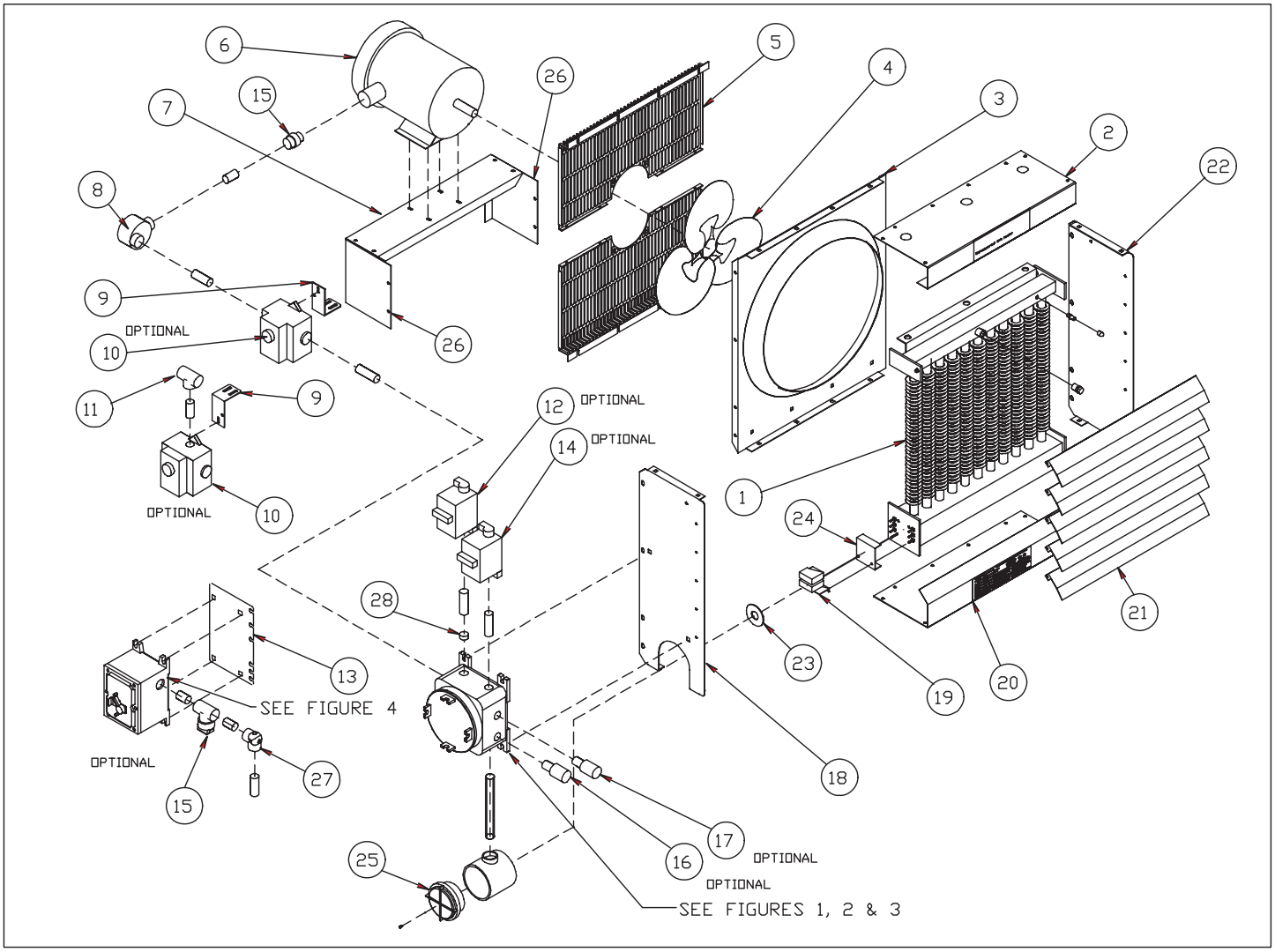

ITEM	DESCRIPTION
1	Heat Exchanger Core Assy.
2	Cabinet – Top
3	Fan Venturi
4	Fan Blade
5	Fan Guard
6	Fan Motor
7	Motor Support – Top
8	Motor Junction Box
9	Thermostat Support Bracket
10	Thermostat
11	Conduit Tee
12	Disconnect Switch – Small
13	Large Disconnect Support Bkt.
14	Fan Switch

ITEM	DESCRIPTION
15	Conduit Seal
16	Pilot Light – Bottom
17	Pilot Light – Top
18	Cabinet – Left Side
19	High Limit Cutout
20	Cabinet – Bottom
21	Cabinet - Louver
22	Cabinet – Right Side
23	High Limit Barrier
24	High Limit Mounting Bridge
25	Heater Enclosure Cover
26	Motor Support – Side
27	¾” Conduit Pull Elbow
28	Reducer Bushing

Select the Figure that corresponds to your heater.

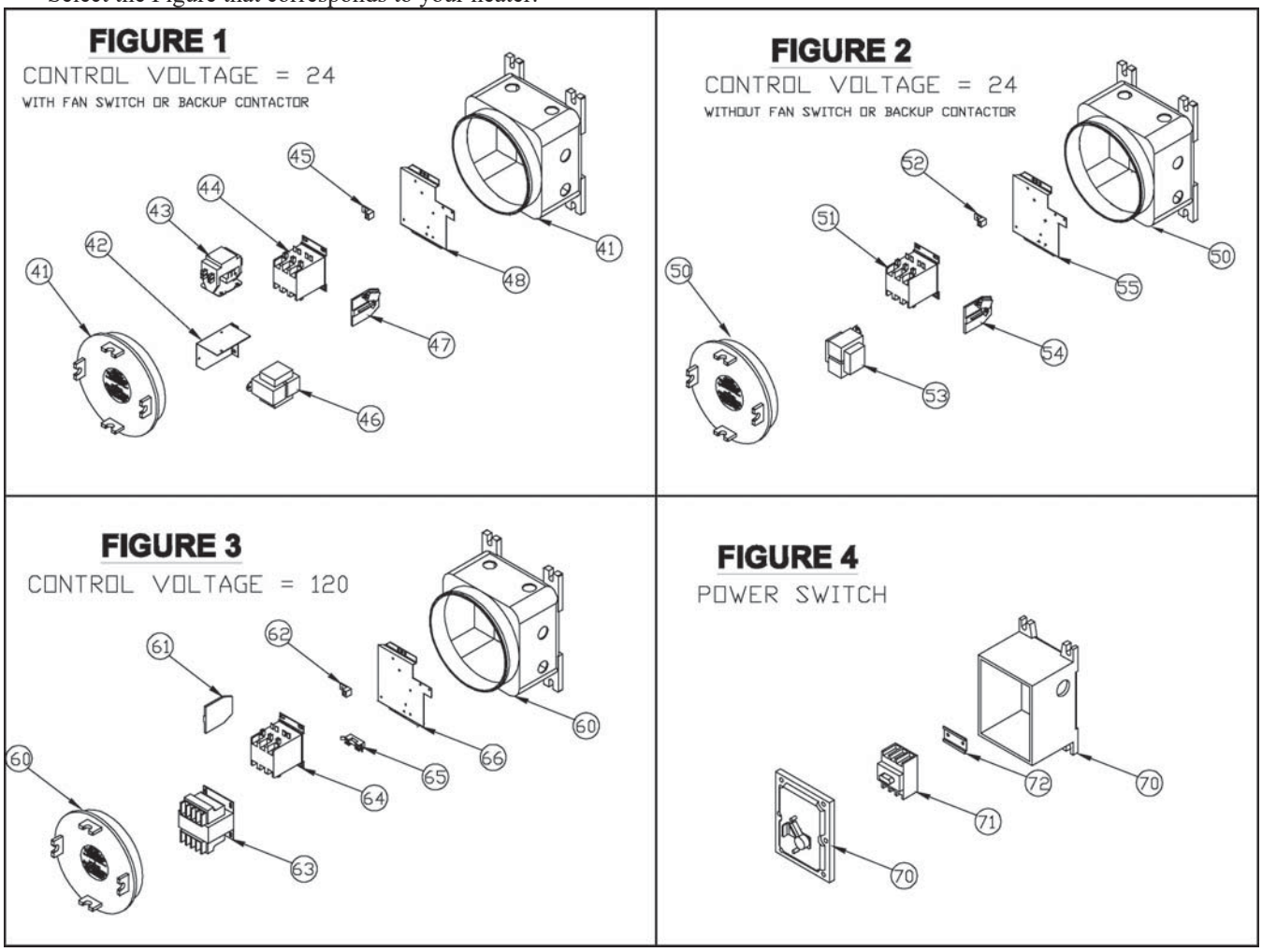

FIGURE 1:

ITEM	DESCRIPTION
41	Wiring Enclosure and Cover
42	Option Mounting Bridge
43	Option Contactor
44	Main Contactor
45	Ground Lug
46	Transformer
47	Auxiliary Contact
48	Main Mounting Bridge

FIGURE 2:

ITEM	DESCRIPTION
50	Wiring Enclosure and Cover
51	Main Contactor
52	Ground Lug
53	Transformer
54	Auxiliary Contact
55	Main Mounting Bridge

FIGURE 3:

ITEM	DESCRIPTION
60	Wiring Enclosure and Cover
61	Auxiliary Contact
62	Ground Lug
63	Transformer
64	Main Contactor
65	Transformer Fuse & Fuse Block
66	Main Mounting Bridge

FIGURE 4:

ITEM	DESCRIPTION
70	Switch Enclosure and Cover
71	Disconnect Switch
72	Disconnect Switch Track

Magelis
GTO HMI
User Manual

10/2014

EIO0000001133.03

www.schneider-electric.com

Schneider Electric

The information provided in this documentation contains general descriptions and/or technical characteristics of the performance of the products contained herein. This documentation is not intended as a substitute for and is not to be used for determining suitability or reliability of these products for specific user applications. It is the duty of any such user or integrator to perform the appropriate and complete risk analysis, evaluation and testing of the products with respect to the relevant specific application or use thereof. Neither Schneider Electric nor any of its affiliates or subsidiaries shall be responsible or liable for misuse of the information contained herein. If you have any suggestions for improvements or amendments or have found errors in this publication, please notify us.

No part of this document may be reproduced in any form or by any means, electronic or mechanical, including photocopying, without express written permission of Schneider Electric.

All pertinent state, regional, and local safety regulations must be observed when installing and using this product. For reasons of safety and to help ensure compliance with documented system data, only the manufacturer should perform repairs to components.

When devices are used for applications with technical safety requirements, the relevant instructions must be followed.

Failure to use Schneider Electric software or approved software with our hardware products may result in injury, harm, or improper operating results.

Failure to observe this information can result in injury or equipment damage.

© 2014 Schneider Electric. All rights reserved.

Table of Contents

Safety Information 5
About the Book 7
Chapter 1 Overview 9
HMIGTO Package Contents 10
Certifications and Standards 11
GTO Series of Panels 13
Chapter 2 Device Connectivity 15
System Design 16
Accessories 21
Chapter 3 Parts Identification and Functions 25
Parts Identification and Functions 25
Chapter 4 Specifications 35
4.1 HMIGTO1300/1310 36
Electrical Specifications 37
Environmental Specifications 38
Structural Specifications 39
Display Specifications 40
Memory, Clock, Touch Panel and Function Switches 41
Interface Specifications 42
Specifications of Serial Interface COM1 43
Specifications of Serial Interface COM2 45
Dimensions 46
4.2 HMIGTO2300/2310/2315 50
Electrical Specifications 51
Environmental Specifications 52
Structural Specifications 53
Display Specifications 55
Memory, Clock, and Touch Panel 56
Interface Specifications 57
Specifications of Serial Interface COM1 58
Specifications of Serial Interface COM2 60
Dimensions 61
4.3 HMIGTO3510/4310 68
Electrical Specifications 69
Environmental Specifications 70
Structural Specifications 71
Display Specifications 72
Memory, Clock, Touch Panel, and Function Switches 73
Interface Specifications 74
Specifications of Serial Interface COM1 75
Specifications of Serial Interface COM2 77
Dimensions 78
4.4 HMIGTO5310/5315 84
Electrical Specifications 85
Environmental Specifications 86
Structural Specifications 87
Display Specifications 89
Memory, Clock, and Touch Panel 90

Interface Specifications 91
Specifications of Serial Interface COM1 92
Specifications of Serial Interface COM2 94
Dimensions 95
4.5 HMIGTO6310/6315 101
Electrical Specifications 102
Environmental Specifications 103
Structural Specifications 104
Display Specifications 106
Memory, Clock, and Touch Panel 107
Interface Specifications 108
Specifications of Serial Interface COM1 109
Specifications of Serial Interface COM2 111
Dimensions 112
Chapter 5 Installation and Wiring 119
5.1 Installation 120
Installation Procedures 120
5.2 Wiring Principles 125
Connecting the Power Cord 126
Connecting the Power Supply 128
Grounding 130
5.3 SD Card Insertion/Removal 131
Introduction 132
Inserting the SD Card 133
Removing the SD Card 134
SD Card Data Backup 135
5.4 USB Cable Clamp 136
USB Cable Clamp for USB (Type A) 137
USB Holder for USB (mini-B) 139
Chapter 6 Maintenance 141
Regular Cleaning 142
Replacing the Installation Gasket 143
Periodic Check Points 145
Replacing the Primary Battery 146
Index 149

Safety Information

Important Information

NOTICE

Read these instructions carefully, and look at the equipment to become familiar with the device before trying to install, operate, or maintain it. The following special messages may appear throughout this documentation or on the equipment to warn of potential hazards or to call attention to information that clarifies or simplifies a procedure.



The addition of this symbol to a “Danger” or “Warning” safety label indicates that an electrical hazard exists which will result in personal injury if the instructions are not followed.



This is the safety alert symbol. It is used to alert you to potential personal injury hazards. Obey all safety messages that follow this symbol to avoid possible injury or death.

⚠ DANGER

DANGER indicates a hazardous situation which, if not avoided, **will result in** death or serious injury.

⚠ WARNING

WARNING indicates a hazardous situation which, if not avoided, **could result in** death or serious injury.

⚠ CAUTION

CAUTION indicates a hazardous situation which, if not avoided, **could result** in minor or moderate injury.

NOTICE

NOTICE is used to address practices not related to physical injury.

PLEASE NOTE

Electrical equipment should be installed, operated, serviced, and maintained only by qualified personnel. No responsibility is assumed by Schneider Electric for any consequences arising out of the use of this material.

A qualified person is one who has skills and knowledge related to the construction and operation of electrical equipment and its installation, and has received safety training to recognize and avoid the hazards involved.

About the Book

At a Glance

Document Scope

This manual describes how to use the HMIGTO panels.

Validity Note

This documentation is valid for Vijeo Designer 6.2 or higher.

The technical characteristics of the devices described in this document also appear online. To access this information online:

Step	Action
1	Go to the Schneider Electric home page *www.schneider-electric.com*.
2	In the **Search** box type the reference of a product or the name of a product range. ● Do not include blank spaces in the model number/product range. ● To get information on grouping similar modules, use asterisks (*).
3	If you entered a reference, go to the **Product Datasheets** search results and click on the reference that interests you. If you entered the name of a product range, go to the **Product Ranges** search results and click on the product range that interests you.
4	If more than one reference appears in the **Products** search results, click on the reference that interests you.
5	Depending on the size of your screen, you may need to scroll down to see the data sheet.
6	To save or print a data sheet as a .pdf file, click **Download XXX product datasheet**.

The characteristics that are presented in this manual should be the same as those characteristics that appear online. In line with our policy of constant improvement, we may revise content over time to improve clarity and accuracy. If you see a difference between the manual and online information, use the online information as your reference.

Product Related Information

⚠ WARNING

UNINTENDED EQUIPMENT OPERATION

The application of this product requires expertise in the design and programming of control systems. Only persons with such expertise should be allowed to program, install, alter, and apply this product.

Follow all local and national safety standards.

Failure to follow these instructions can result in death, serious injury, or equipment damage.

Chapter 1
Overview

Overview

This chapter describes the panels and general topics such as package contents and standards.

What Is in This Chapter?

This chapter contains the following topics:

Topic	Page
HMIGTO Package Contents	10
Certifications and Standards	11
GTO Series of Panels	13

HMIGTO Package Contents

Overview

Verify all items listed here are present in your package:

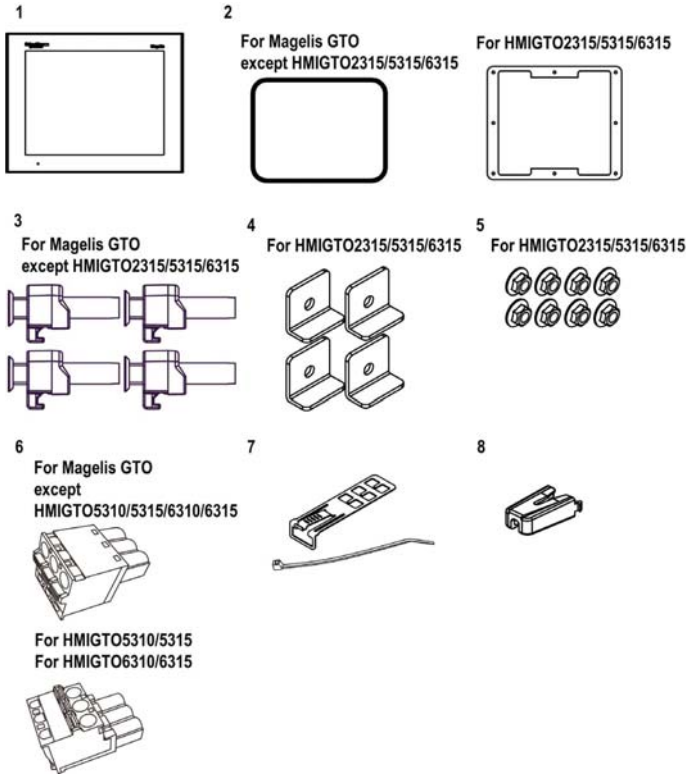

1 HMIGTO: 1
2 Installation gasket: 1 (attached to the panel)
3 Installation fasteners: 4 per set
4 Brackets: 4
5 M4 Hex Nuts: 8
6 DC power connector: 1[*1]
7 USB cable clamp Type A: 1 set (1 clip and 1 tie)
8 USB cable clamp mini-B: 1 (1 USB holder)
9 HMIGTO Quick Reference Guide: 1

This product has been carefully packed with special attention to quality. However, should you find anything damaged or missing, please contact your local distributor.

[*1] You can use the DC power connector for HMIGTO1300/1310/2300/2310/2315/3510/4310 to supply power to HMIGTO5310/5315/6310/6315. However the reverse is not possible. You cannot use the power connector for HMIGTO5310/5315/6310/6315 on HMIGTO1300/1310/2300/2310/2315/3510/4310.

Revision

You can identify the product version (PV), revision level (RL) and the software version (SV) from the unit product label.

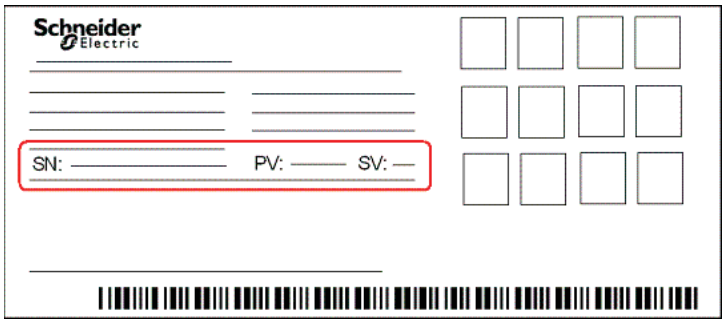

Certifications and Standards

Introduction

Schneider Electric submitted this product for independent testing and qualification by third-party listing agencies. These agencies have certified this product as meeting the following standards.

Agency Certifications

The HMIGTO is manufactured in accordance with:

- Standard UL 508 and CSA C22.2 n°142 for Industrial Control Equipment
- Standard ANSI/ISA - 12.12.01 and CSA C22.2 n°213 for Electrical Equipment for Use in Class I, Division 2 Hazardous Locations
  NOTE:
- For use in Pollution Degree 2 environments.
- For use on a flat surface of a Type 1, Type 4X (Indoor Use Only) or Type 13 Enclosure.
- 24 Vdc input panel must be used with a Class 2 power supply.
- Suitable for use in Class I, Division 2 Groups A, B, C, and D Hazardous Locations.

- GOST certification.
  Please refer to product markings.
- ATEX certification by Technical Inspection Association.
  Please refer to product label.
- Merchant Navy rules. (Except Magelis GTOxxx5.)
  Products are designed to comply with Merchant Navy rules.
  Please refer to the Schneider Electric Web site for Merchant Navy rules installation guidelines.
- Standard EN1672-2 (Magelis GTOxxx5).
- FDA regulation 21 CFR 177 (Magelis GTOxxx5).

Refer to the Schneider Electric web site for installation guidelines.

For detailed information, contact your local distributor or see the catalog & marking on the product.

Hazardous Substances

The HMIGTO is a device for use in factory systems. When using the HMIGTO in a system, the system should comply with the following standards in regards to the installation environment and handling:

- WEEE, Directive 2002/96/EC
- RoHS, Directive 2011/65/EU
- RoHS China, Standard SJ/T 11363-2006

CE Markings

This product conforms to the necessary requirements of the following Directives for applying the CE label:

- 2006/95/EC Low Voltage Directive
- 2004/108/EC EMC Directive

This conformity is based on compliance with EN61000-6-4, EN61000-6-2

⚠ DANGER

POTENTIAL FOR EXPLOSION

- Verify that the power, input and output (I/O) wiring are in accordance with Class I, Division 2 wiring methods.
- Substitution of any component may impair suitability for Class I, Division 2.
- Do not connect or disconnect equipment unless power has been switched off or the area is known to be non-hazardous.
- Securely lock externally connected units and each interface before turning on the power supply.
- Do not use, connect, or disconnect USB cable unless area is known to be non-hazardous.
- Do not disconnect while circuit is live or unless the area is known to be free of ignitable concentrations.
- Potential electrostatic charging hazard. Wipe the front panel of the terminal with a damp cloth before turning ON.

Failure to follow these instructions will result in death or serious injury.

KC Markings

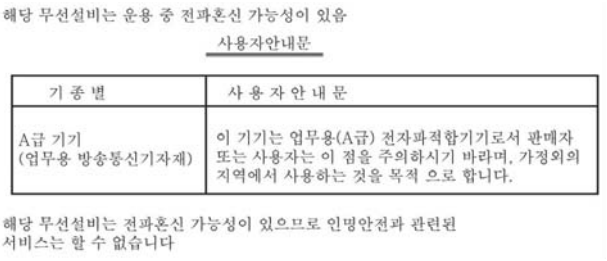

해당 무선설비는 운용 중 전파혼신 가능성이 있음

사용자안내문

기 종 별	사 용 자 안 내 문
A급 기기 (업무용 방송통신기자재)	이 기기는 업무용(A급) 전자파적합기기로서 판매자 또는 사용자는 이 점을 주의하시기 바라며, 가정외의 지역에서 사용하는 것을 목적 으로 합니다.

해당 무선설비는 전파혼신 가능성이 있으므로 인명안전과 관련된 서비스는 할 수 없습니다

GTO Series of Panels

Critical systems, alarms and handling Requirements

Critical alarm indicators and system functions require independent and redundant protection hardware and/or mechanical interlocks.

When you cycle power, wait at least 10 seconds before restoring the power to the panel after it has been turned off. Switching the power OFF and ON quickly can damage the panel.

In the event the screen cannot be properly read, for example, if the backlight is not functioning, it may be difficult or impossible to identify a function. Functions that may present a hazard if not immediately executed, such as a fuel shut-off, must be provided independently of the panel. The machine's control system design must take into account the possibility of the backlight no longer functioning and the operator being unable to control the machine or making mistakes in the control of the machine.

⚠ WARNING

LOSS OF CONTROL

- The designer of any control scheme must consider the potential failure modes of control paths and, for certain critical control functions, provide a means to achieve a safe state during and after a path failure. Examples of critical control functions are emergency stop and overtravel stop, power outage and restart.
- Separate or redundant control paths must be provided for critical control functions.
- System control paths may include communication links. Consideration must be given to the implications of unanticipated transmission delays or failures of the link.
- Observe all accident prevention regulations and local safety guidelines.
- Each implementation of this equipment must be individually and thoroughly tested for proper operation before being placed into service.
- The machine control system design must take into account the possibility of the backlight no longer functioning and the operator being unable to control the machine, or making errors in the control of the machine.

Failure to follow these instructions can result in death, serious injury, or equipment damage.

For additional information, refer to NEMA ICS 1.1 (latest edition), "Safety Guidelines for the Application, Installation, and Maintenance of Solid State Control" and to NEMA ICS 7.1 (latest edition), "Safety Standards for Construction and Guide for Selection, Installation and Operation of Adjustable-Speed Drive Systems" or their equivalent governing your particular location.

⚠ WARNING

UNINTENDED EQUIPMENT OPERATION

- Do not use this equipment as the only means of control for critical system functions such as motor start/stop or power control.
- Do not use this equipment as the only notification device for critical alarms, such as device overheating or overcurrent.

Failure to follow these instructions can result in death, serious injury, or equipment damage.

Handling the LCD panel

The following characteristics are specific to the LCD panel and are considered normal behavior:

- LCD screen may show unevenness in the brightness of certain images or may appear different when seen from outside the specified viewing angle. Extended shadows, or crosstalk may also appear on the sides of screen images.
- LCD screen pixels may contain black and white colored spots and color display may seem to have changed.
- When the same image is displayed on the screen for a long period, an afterimage may appear when the image is changed.

NOTE: Change the screen image periodically and try not to display the same image for a long period of time.

⚠ CAUTION

SERIOUS EYE AND SKIN INJURY

The liquid in the LCD panel contains an irritant:
- Avoid direct skin contact with the liquid.
- Wear gloves when you handle a broken or leaking unit.
- Do not use sharp objects or tools in the vicinity of the LCD touch panel.
- Handle the LCD panel carefully to prevent puncture, bursting, or cracking of the panel material.

Failure to follow these instructions can result in injury or equipment damage.

If the panel is damaged and any liquid comes in contact with your skin, immediately rinse the area with running water for at least 15 minutes. If the liquid gets in your eyes, immediately rinse your eyes with running water for at least 15 minutes and consult a doctor.

Chapter 2
Device Connectivity

Introduction

This chapter presents the equipment you can connect to the panel.

What Is in This Chapter?

This chapter contains the following topics:

Topic	Page
System Design	16
Accessories	21

System Design

Introduction

The following diagrams represent equipment you can connect to the panel.

	COM1	COM2
HMIGTO1300	RS-232C *(see page 16)*	RS-485 *(see page 19)*
HMIGTO1310	RS-232C / RS-485 *(see page 18)*	–
HMIGTO2300	RS-232C *(see page 16)*	RS-485 *(see page 19)*
HMIGTO2310	RS-232C *(see page 16)*	RS-485 *(see page 19)*
HMIGTO2315	RS-232C *(see page 16)*	RS-485 *(see page 19)*
HMIGTO3510	RS-232C *(see page 16)*	RS-485 *(see page 19)*
HMIGTO4310	RS-232C *(see page 16)*	RS-485 *(see page 19)*
HMIGTO5310	RS-232C *(see page 16)*	RS-485 *(see page 19)*
HMIGTO5315	RS-232C *(see page 16)*	RS-485 *(see page 19)*
HMIGTO6310	RS-232C *(see page 16)*	RS-485 *(see page 19)*
HMIGTO6315	RS-232C *(see page 16)*	RS-485 *(see page 19)*

RUN Mode Peripherals - RS-232C

⚠ CAUTION

LOSS OF POWER

- Make sure all connections to the communication ports on the bottom and sides of the panel do not put excessive stress on the ports.
- Securely attach communication cables to the panel or cabinet.
- Use only D-Sub 9 pin cables with a locking system in good condition.

Failure to follow these instructions can result in injury or equipment damage.

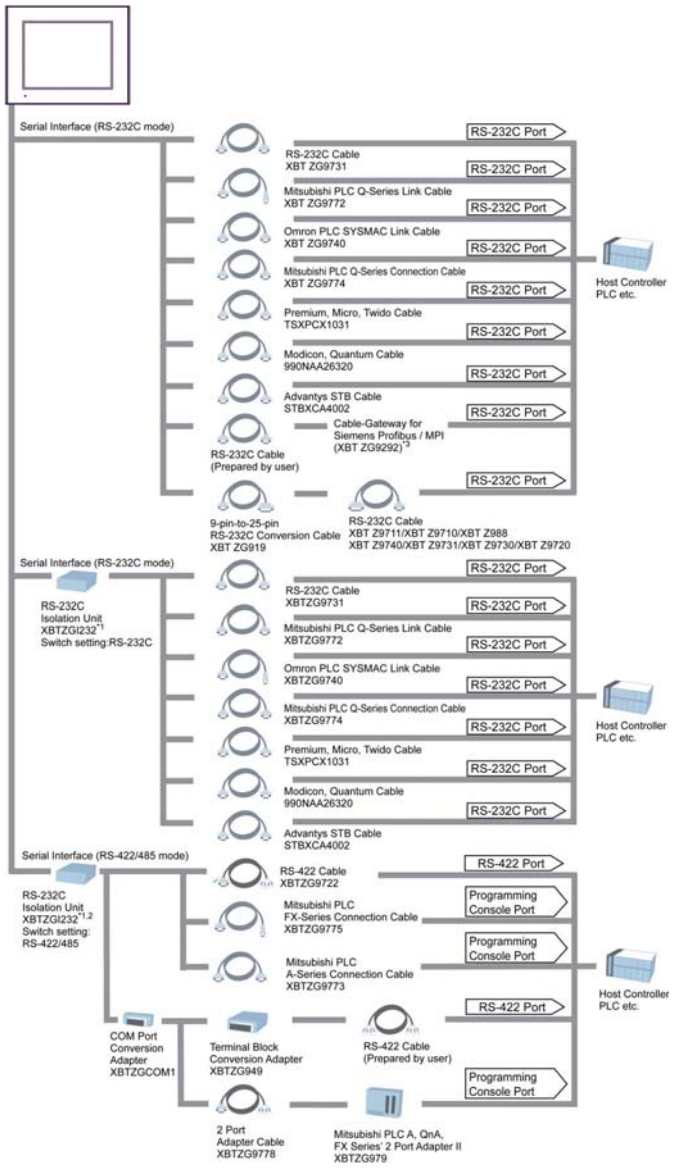

*1 When connecting the XBTZGI232, the COM port's pin 9 setting should be VCC. You can define COM port settings in Vijeo Designer or in the HMIGTO's offline menu.

*2 The RS-232C Isolation Unit works with only RS-422/485 (4 wire) communication.

*3 Cable-Gateway for Siemens Profibus / MPI (XBT ZG9292) is not supported by HMIGTO1310.

RUN Mode Peripherals - RS-232C / RS-485

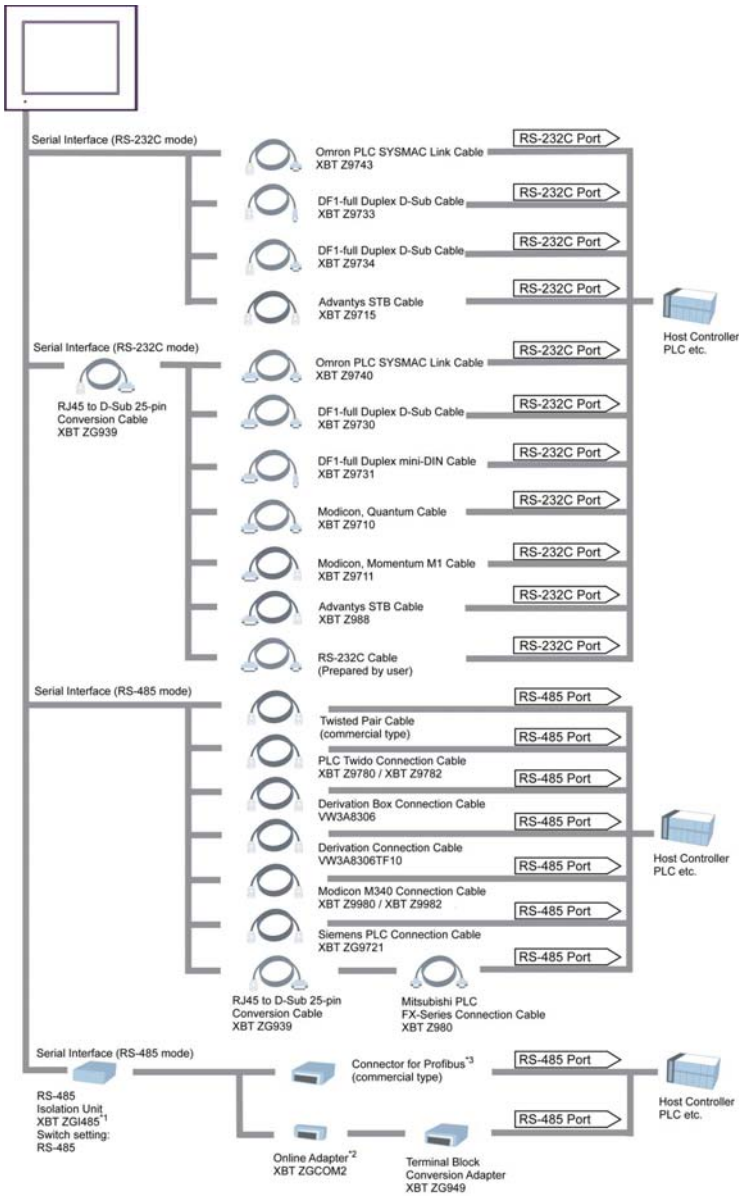

*1 Use the RS-485 Isolation Unit's USB port to supply power to itself. There is no need to set up a separate power supply.

*2 In 1:n, n:1, or n:m communication, you can use the online adapter as a terminal. (Use 1 unit in either communication setup.)

*3 The connector has a switch to control the terminal. Turn on the switch to enable communication.

RUN Mode Peripherals - RS-485

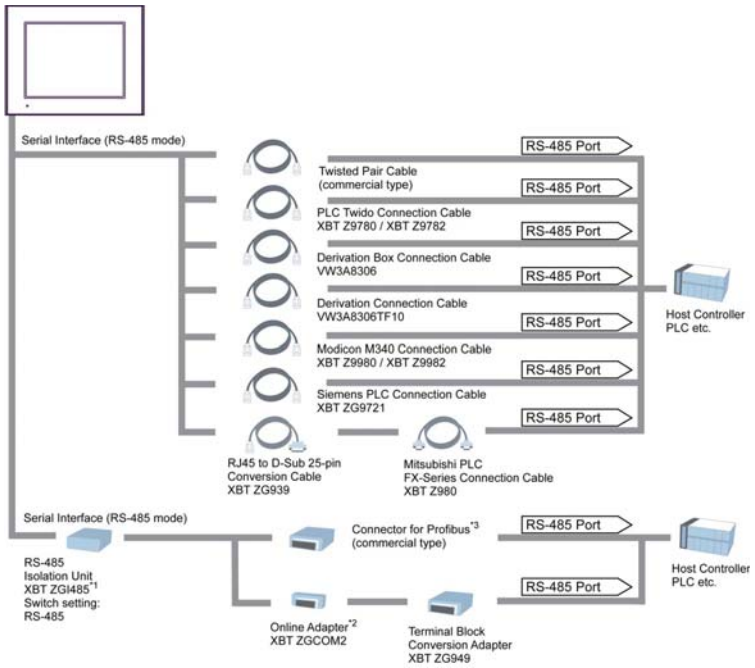

*1 Use the RS-485 Isolation Unit's USB port to supply power to itself. There is no need to set up a separate power supply.

*2 In 1:n, n:1, or n:m communication, you can use the online adapter as a terminal. (Use 1 unit in either communication setup.)

*3 The connector has a switch to control the terminal. Turn on the switch to enable communication.

RUN Mode Peripherals - Ethernet Communication

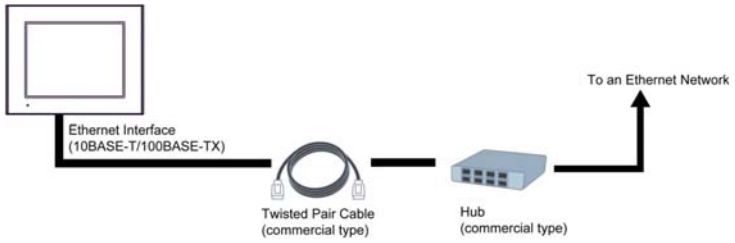

RUN Mode Peripherals - USB Type A / mini-B Interface

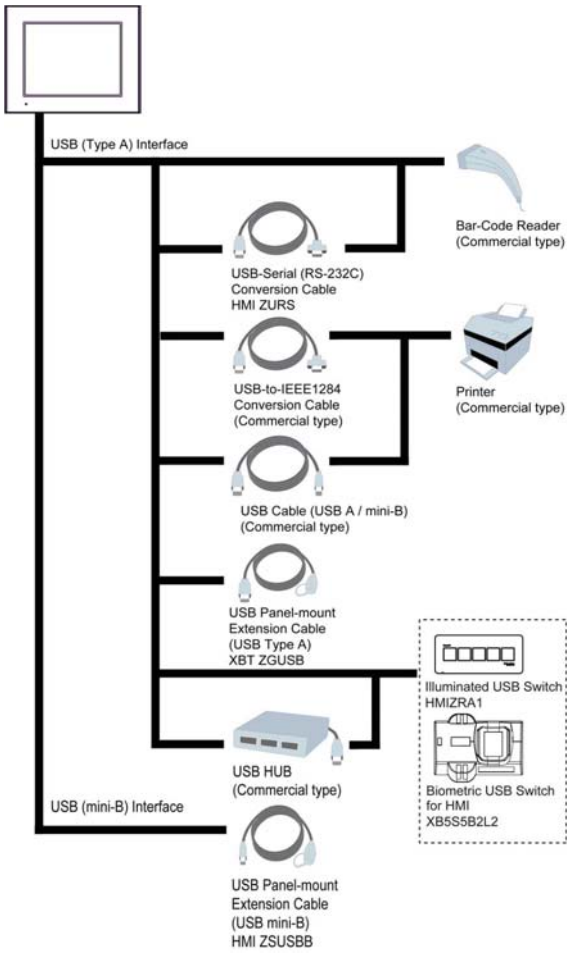

Edit Mode Peripherals

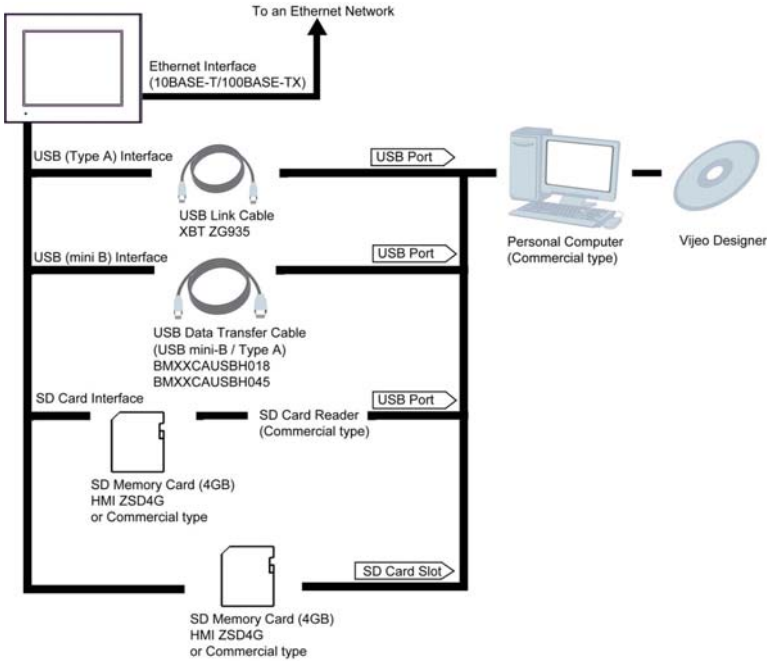

Accessories

Serial Interface Items

Product Name	Product Number	Description
RS-232C Cable	XBT ZG9731	Connects a host controller to the panel. (RS-232C)
RS-422 Cable	XBT ZG9722	Connects a host controller to the panel. (RS-422)
Mitsubishi PLC Q-Series Link Cable	XBT ZG9772	Connects Mitsubishi PLC Q-Series (or other host controller) to the panel. (RS-232C)
Omron PLC SYSMAC Link Cable	XBT ZG9740 XBT Z9743 XBT Z9740	Connects Omron PLC SYSMAC Series unit (or other host controller) to the panel. (RS-232C)
Mitsubishi PLC A-Series Connection Cable	XBT ZG9773	Connects Mitsubishi PLC A or QnA Series programming console I/F to panel. (Simultaneous use of programming consoles is not possible.)
Mitsubishi PLC Q-Series Connection Cable	XBT ZG9774	Connects Mitsubishi PLC Q-Series programming console I/F to panel. (Simultaneous use of programming consoles is not possible.)
Mitsubishi PLC FX-Series Connection Cable	XBT ZG9775 XBT Z980	Connects Mitsubishi PLC FX-Series programming console I/F and panel. (Simultaneous use of programming consoles is not possible.)
Premium, Micro, Twido Cable	TSXPCX1031	Connects Premium, Micro, or Twido to the panel.
Modicon, Quantum Cable	990NAA26320 XBT Z9710	Connects Modicon or Quantum to the panel.
2 Port Adapter Cable	XBT ZG9778	Connects Mitsubishi PLC directly to the panel (D-sub 9 pin plug) using 2 port adapter II (RS-422).
Mitsubishi PLC A, QnA, FX Series 2 Port Adapter II	XBT ZG979	Enables simultaneous use of a panel and a Mitsubishi PLC A, QnA, or FX Series peripheral device.
Advantys STB Cable	STBXCA4002 XBT Z9715 XBT Z988	Connects Advantys STB to panel.
Terminal Block Conversion Adapter	XBT ZG949	Connects output from a panel's Serial Interface (D-sub 9 pin plug) directly with an RS-422 terminal block.
COM Port Conversion Adapter	XBT ZGCOM1	Connects optional RS-422 communication items to panel's COM1 port.
DF1-full Duplex D-Sub Cable	XBT Z9730 XBT Z9733 XBT Z9734	Connects DF1-full Duplex to HMIGTO.
DF1-full Duplex mini-DIN Cable	XBT Z9731 XBT Z9720	Connects DF1-full Duplex to HMIGTO.
Modicon, Momentum M1 Cable	XBT Z9711	Connects Modicon, Momentum M1 to HMIGTO.
PLC Twido Connection Cable	XBT Z9780 / XBT Z9782	Connects PLC Twido to HMIGTO.
Derivation Box Connection Cable	VW3A8306	Connects Derivation Box to HMIGTO.
Derivation Connection Cable	VW3A8306TF10	Connects Derivation to HMIGTO.
Modicon M340 Connection Cable	XBT Z9980 / XBT Z9982	Connects Modicon M340 to HMIGTO.
Siemens PLC Connection Cable	XBT ZG9721	Connects Siemens PLC to HMIGTO.
RS-232C Isolation Unit	XBT ZGI232	Connects a host controller to HMIGTO with isolation. (RS-232C and RS-422 are switchable.)
RS-485 Isolation Unit	XBT ZGI485	Connects a host controller to HMIGTO with isolation.
Cable-gateway for Siemens Profibus / MPI	XBT ZG9292	Connects Siemens Profibus / MPI units to HMIGTO.
RJ45 to D-Sub 25 pin Conversion Cable	XBT ZG939	Connects a RJ45 cable to HMIGTO (D-sub 9 pin plug).
9-pin to 25-pin RS-232C Conversion Cable	XBT ZG919	Connects a standard RS-232C cable (D-Sub 25-pin socket) to HMIGTO (D-sub 9 pin plug).
Online Adapter	XBT ZGCOM2	Terminal adapter for RS-485 communication.

USB Interface Items

Product Name	Product Number	Description
USB Transfer Cable	XBT ZG935	Downloads project data created with the software via the panel's USB I/F.
USB Front Cable	XBT ZGUSB	Extension cable attaching USB interface to front panel.
USB-Serial (RS-232C) Conversion Cable	HMIZURS	Cable for converting a panel's USB interface into a serial interface (RS-232C). Allows connection to modems*1 or bar code readers*1 that support RS-232C.
USB Transfer Cable (USB Type A/mini-B)	BMXXCAUSBH018 BMXXCAUSBH045	Cable for transferring screen data from a PC (USB Type A) to the panel (USB mini-B).
Remote USB port location for mini-USB	HMIZSUSBB XBT ZGUSBB	Extension cable that attaches to the USB (mini-B) interface on the front side of the operation panel.
Illuminated USB Switch	HMIZRA1	A unit of 5 illuminated switches with multiple color LED easily connected with HMIGTO via USB.
Biometric USB Switch for HMI	XB5S5B2L2	Fingerprint recognition unit easily connected with HMIGTO via USB.

Software

Product name	Description
Vijeo Designer (Version 6.1 or later)	Software you install on your computer to create project data for your HMIGTO.

SD Card Items

Product Name	Product Number	Description
SD Memory Card (4 GB)	HMIZSD4G	SD Memory Card (4 GB, CLASS4)

Option Items

Product Name	Product Number	Corresponding panel	Description
12.1-inch Screen Protection Sheet	XBT ZG66	HMIGTO6310/6315	Disposable, dirt-resistant sheet for the HMIGTO screen (5 sheets/set)
10.4-inch Screen Protection Sheet	XBT ZG65	HMIGTO5310/5315	
7.5-inch Screen Protection Sheet	XBT ZG64	HMIGTO4310	
7.0-inch Wide Screen Protection Sheet	XBT ZG63	HMIGTO3510	
5.7-inch Screen Protection Sheet	XBT ZG62	HMIGTO2300/2310/2315	
3.5-inch Screen Protection Sheet	XBT ZG60	HMIGTO1300/1310	
12.1-inch Environment Cover	XBT ZECOV6	HMIGTO6310	Disposable, environment cover for the HMIGTO screen (1 sheet/set)
10.4-inch Environment Cover	XBT ZECOV5	HMIGTO5310	
7.0/7.5-inch Environment Cover	XBT ZECOV4	HMIGTO3510/4310	
5.7-inch Environment Cover	XBT ZECOV2	HMIGTO2300/2310	
3.5-inch Environment Cover	XBT ZECOV1	HMIGTO1300/1310	

Maintenance Options

Product Name	Product Number	Corresponding panel	Description
Installation Fastener	HMI ZGFIX	HMIGTO except HMIGTO2315/5315/6315	Used to install the HMIGTO into a solid panel (4 pieces/set)
Installation System	HMI ZGFIX2	HMIGTO2315/5315/6315	Used to install the HMIGTO into a solid panel. Brackets (4 pieces/set) M4 Hex nuts (8 pieces/set)
12.1-inch Installation Gasket	HMI ZG56	HMIGTO6310	Provides dust and moisture resistance when HMIGTO is installed into a solid panel (1 piece)
	HMI ZG562	HMIGTO6315	
10.4-inch Installation Gasket	HMI ZG55	HMIGTO5310	
	HMI ZG552	HMIGTO5315	
7.0-inch Wide & 7.5-inch Installation Gasket	HMI ZG54	HMIGTO3510/4310	
5.7-inch Installation Gasket	HMI ZG52	HMIGTO2300/2310	
	HMI ZG522	HMIGTO2315	
3.5-inch Installation Gasket	HMI ZG51	HMIGTO1300/1310	
USB Clamp TypeA (1 port)	HMI ZGCLP1	Magelis GTO	Clamp to prevent disconnection of USB cable (USB/A, 1 port, 5 clamps/set)
USB Clamp mini-B (1 port)	HMI ZGCLP3	Magelis GTO	Clamp to prevent disconnection of USB cable (USB/mini-B, 1 port, 5 clamps/set)
DC Power Supply Connector	HMI ZGPWS	HMIGTO3510/4310 HMIGTO2300/2310/2315 HMIGTO1300/1310	Connector to connect DC power supply cables (5 pcs/set)
DC Power Supply Connector (Right-angle)	HMI ZGPWS2	HMIGTO6310/6315 HMIGTO5310/5315	Right-angle connector to connect DC power supply cables (5 pcs/set)
Battery for Memory Backup	HMI ZGBAT	HMIGTO (except HMIGTO1300/1310/2300)	Primary battery for memory and time data backup
Panel Cutout Adapter	XBT ZGGCO4	HMIGTO5310	Panel cutout adapter for mounting HMIGTO5310 in cutout for XBT GT5230.
Insert Label	HMI ZLYGO3	HMIGTO3510	Label insert for HMIGTO 7-inch Wide models.
	HMI ZLYGO1	HMIGTO1300/1310	Label insert for HMIGTO 3.5-inch models

Chapter 3
Parts Identification and Functions

Parts Identification and Functions

HMIGTO1300/1310 Parts Identification

Side	HMIGTO1300/1310
Front	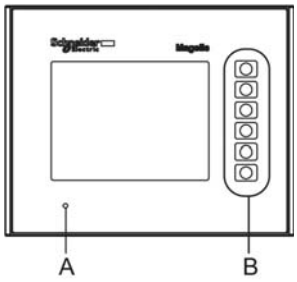
Rear	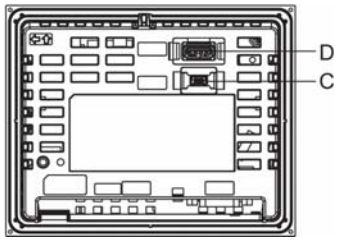
Bottom	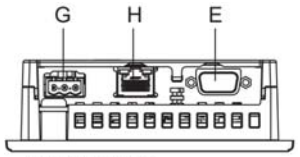 HMIGTO1300 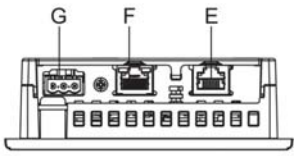 HMIGTO1310

Part	Name	Description
A	Status LED	*1
B	Function Switches	Six switches (F1 to F6). You can define operations for these switches using Vijeo Designer.
C	USB (mini-B) Interface	Conforms to USB2.0 (mini-B) x 1. Communication Distance: 5 m (16.4 ft) or less.
D	USB (Type A) Interface	Conforms to USB2.0 (Type A) x 1. Power supply voltage: 5Vdc+/-5%. Output Current: 500 mA or less. Maximum communication distance: 5 m (16.4 ft).
E	Serial Interface (COM1)	HMIGTO1300: RS-232C Serial Interface. Connector: D-Sub 9 pin (plug) x 1. HMIGTO1310: RS-232C/485 Serial Interface. (You can switch the communication method via software.) Connector: Modular jack (RJ-45).

Part	Name	Description
F	Ethernet Interface*2	Ethernet transmission interface (10BASE-T/100BASE-TX) Connector: Modular jack (RJ-45) x 1. Ethernet Interface is not attached to HMIGTO1300.
G	Power Plug Connector	-
H	Serial Interface (COM2)	HMIGTO1300: RS-485 Serial Interface. Connector: Modular jack (RJ-45) x 1.

*1 Status LED operations are as shown below:

Color	Indicator	Description
Green	ON	Offline
		In operation
Orange	Flashing	Software starting up.
Red	ON	Power is turned ON.
-	OFF	Power is turned OFF.

*2 Ethernet LED operations are as shown below.

	Color	Indicator	Description
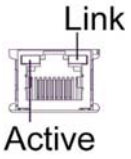	Green (Active)	Flashing	Data transmission is occurring.
		OFF	No data transmission.
	Green (Link)	ON	Data transmission is available in 10BASE-T/100BASE-TX.
		OFF	No connection or subsequent transmission failure.

HMIGTO2300/2310/2315 Parts Identification

Side	HMIGTO2300/HMIGTO2310	HMIGTO2315
Front	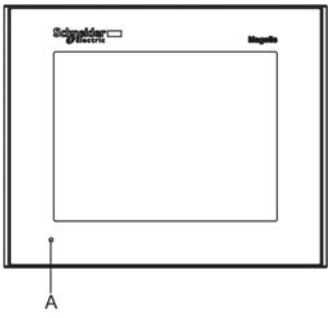	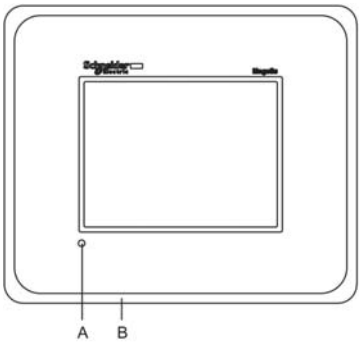
Right	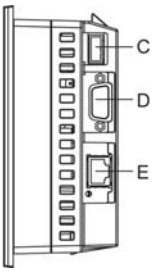	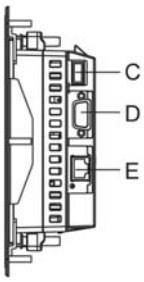

Side	HMIGTO2300/HMIGTO2310	HMIGTO2315
Rear	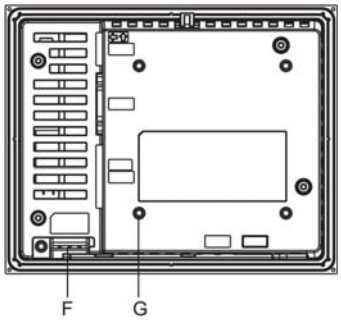	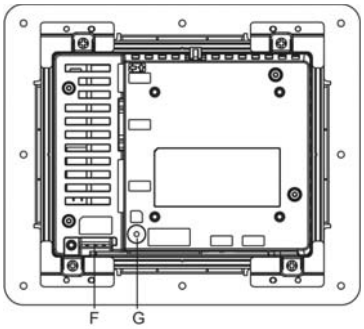
Bottom	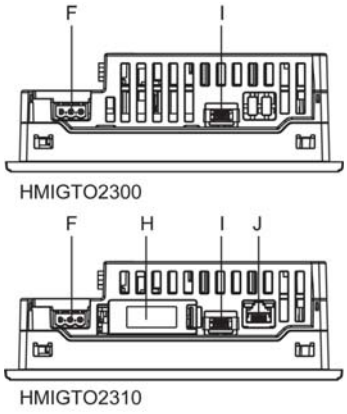	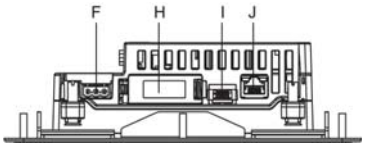

Part	Name	Description
A	Status LED	*1
B	Stainless Steel Bezel	HMIGTO2315 only.
C	USB (Type A) Interface	Conforms to USB2.0 (Type A) x 1. Power supply voltage: 5Vdc+/-5%. Output Current: 500 mA or less. Maximum communication distance: 5 m (16.4 ft).
D	Serial Interface (COM1)	RS-232C Serial Interface. Connector: D-Sub 9 pin (plug) x 1.
E	Serial Interface (COM2)*2	RS-485 Serial Interface. Connector: Modular jack (RJ-45).
F	Power Plug Connector	-
G	SD Card Access LED *3	This lamp lights up when SD Card is inserted. For more information, refer to SD Card Insertion/Removal *(see page 131)*. **NOTE:** SD Card Access LED is not available on HMIGTO2300.
H	SD Card Interface Cover/Replacement Battery Insertion Cover	For information on how to open the cover, and insert or remove the SD Card, refer to SD Card Insertion / Removal *(see page 131)*. For information on how to open the cover and replace the battery, refer to Replacing the Primary Battery *(see page 146)*. **NOTE:** This cover is not on HMIGTO2300.
I	USB (mini-B) Interface	Conforms to USB2.0 (mini-B) x 1. Communication Distance: 5 m (16.4 ft) or less.
J	Ethernet Interface *4	Ethernet transmission interface (10BASE-T/100BASE-TX) Connector: Modular jack (RJ-45) x 1. **NOTE:** Ethernet Interface is not available on HMIGTO2300.

*1 Status LED operations are as shown below:

Color	Indicator	Description
Green	ON	Offline
		In operation
Orange	Flashing	Software starting up.
Red	ON	Power is turned ON.
-	OFF	Power is turned OFF.

*2 COM2 LED operations are as shown below.

Color	Indicator	Description
Yellow	ON	Communication (sending or receiving data) is occurring.
	OFF	No communication.

*3 SD Card Access LED operations are as shown below.

Color	Indicator	Description
Green (Active)	ON	The SD Card is inserted.
	OFF	The SD Card is not inserted or is not being accessed.

*4 Ethernet LED operations are as shown below.

	Color	Indicator	Description
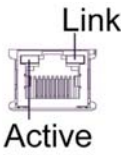	Green (Active)	Flashing	Data transmission is occurring.
		OFF	No data transmission.
	Green (Link)	ON	Data transmission is available in 10BASE-T/100BASE-TX.
		OFF	No connection or subsequent transmission failure.

HMIGTO3510/4310 Parts Identification

Side	HMIGTO3510/4310
Front	HMIGTO3510 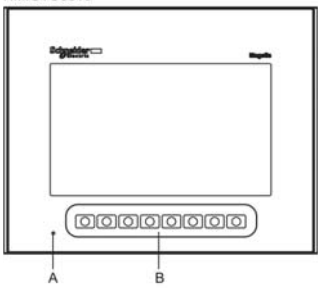 HMIGTO4310 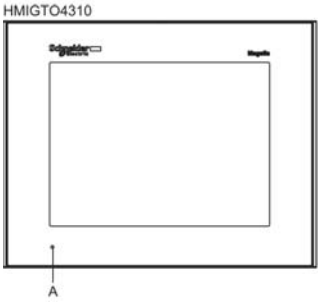
Right	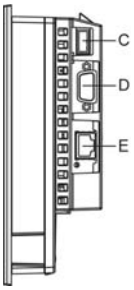
Rear	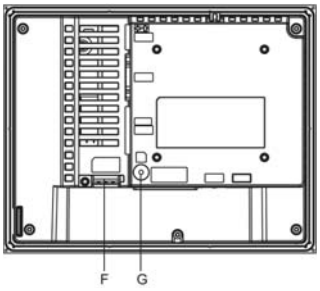
Bottom	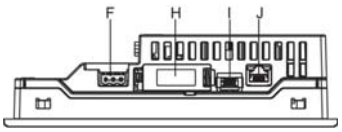

Part	Name	Description
A	Status LED	*1
B	Function Switches	HMIGTO3510 only. Eight switches (F1 to F8). You can define operations for these switches using Vijeo Designer.
C	USB (Type A) Interface	Conforms to USB2.0 (Type A) x 1. Power supply voltage: 5 Vdc+/-5%. Output Current: 500 mA or less. Maximum communication distance: 5 m (16.4 ft).
D	Serial Interface (COM1)	RS-232C Serial Interface. Connector: D-Sub 9 pin (plug) x 1.
E	Serial Interface (COM2)*2	RS-485 Serial Interface. Connector: Modular jack (RJ-45) x 1.
F	Power Plug Connector	-
G	SD Card Access LED *3	This lamp lights up when SD Card is inserted. For more information, refer to SD Card Insertion / Removal *(see page 131)*.
H	SD Card Interface Cover/Replacement Battery Insertion Cover	For information on how to open the cover, and insert or remove the SD Card, refer to SD Card Insertion / Removal *(see page 131)*. For information on how to open the cover and replace the battery, refer to Replacing the Primary Battery *(see page 146)*.
I	USB (mini-B) Interface	Conforms to USB2.0 (mini-B) x 1. Communication Distance: 5 m (16.4 ft) or less.
J	Ethernet Interface *4	Ethernet transmission interface (10BASE-T/100BASE-TX) Connector: Modular jack (RJ-45) x 1.

*1 Status LED operations are as shown below:

Color	Indicator	Description
Green	ON	Offline
		In operation
Orange	Flashing	Software starting up.
Red	ON	Power is turned ON.
-	OFF	Power is turned OFF.

*2 COM2 LED operations are as shown below.

Color	Indicator	Description
Yellow	ON	Communication (sending or receiving data) is occurring.
	OFF	No communication.

*3 SD Card Access LED operations are as shown below.

Color	Indicator	Description
Green (Active)	ON	The SD Card is inserted.
	OFF	The SD Card is not inserted or is not being accessed.

*4 Ethernet LED operations are as shown below.

	Color	Indicator	Description
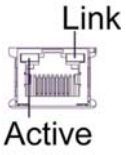	Green (Active)	Flashing	Data transmission is occurring.
		OFF	No data transmission.
	Green (Link)	ON	Data transmission is available in 10BASE-T/100BASE-TX.
		OFF	No connection or subsequent transmission failure.

HMIGTO5310/5315 Parts Identification

Side	HMIGTO5310	HMIGTO5315
Front	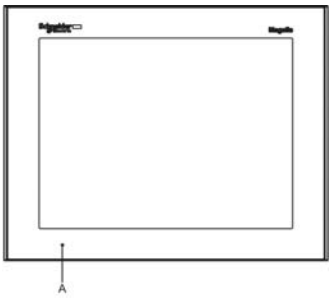	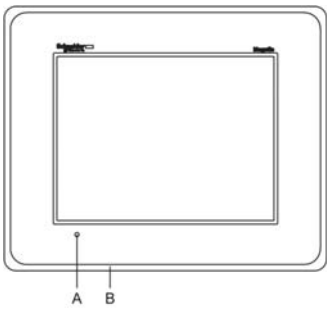
Rear	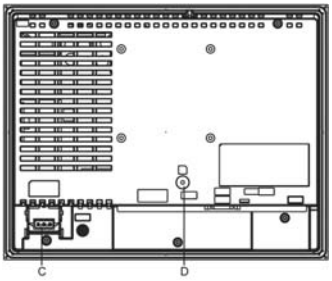	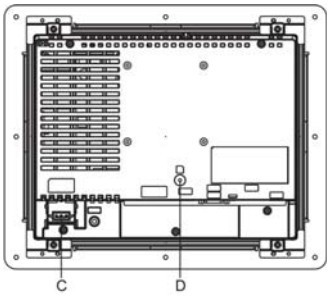
Bottom	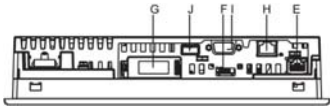	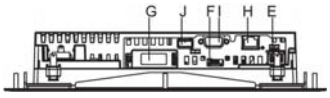

Part	Name	Description
A	Status LED	*1
B	Stainless Steel Bezel	HMIGTO5315 only.
C	Power Plug Connector	-
D	SD Card Access LED *2	This lamp lights up when SD Card is inserted. **NOTE:** Do not remove or insert the SD Card when the LED lamp is on. Doing so may damage data on the SD Card.
E	Ethernet Interface *3	Ethernet transmission interface (10BASE-T/100BASE-TX) Connector: Modular jack (RJ-45) x 1.
F	USB (mini-B) Interface	Conforms to USB2.0 (mini-B) x 1. Communication Distance: 5 m (16.4 ft) or less.
G	SD Card Interface Cover/Replacement Battery Insertion Cover	For information on how to open the cover, and insert or remove the SD Card, refer to SD Card Insertion/Removal *(see page 131)*. For information on how to open the cover and replace the battery, refer to Replacing the Primary Battery *(see page 146)*.
H	Serial Interface (COM2)*4	RS-485 Serial Interface. Connector: Modular jack (RJ-45).
I	Serial Interface (COM1)	RS-232C Serial Interface. Connector: D-Sub 9 pin (plug) x 1.
J	USB (Type A) Interface	Conforms to USB2.0 (Type A) x 1. Power supply voltage: 5Vdc+/-5%. Output Current: 500 mA or less. Maximum communication distance: 5 m (16.4 ft).

*1 Status LED operations are as shown below:

Color	Indicator	Description
Green	ON	Offline
		In operation
Orange	Flashing	Software starting up.
Red	ON	Power is turned ON.
-	OFF	Power is turned OFF.

*2 SD Card Access LED operations are as shown below.

Color	Indicator	Description
Green (Active)	ON	The SD Card is inserted.
	OFF	The SD Card is not inserted or is not being accessed.

*3 Ethernet LED operations are as shown below.

	Color	Indicator	Description
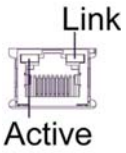	Green (Active)	Flashing	Data transmission is occurring.
		OFF	No data transmission.
	Green (Link)	ON	Data transmission is available in 10BASE-T/100BASE-TX.
		OFF	No connection or subsequent transmission failure.

*4 COM2 LED operations are as shown below.

Color	Indicator	Description
Yellow	ON	Communication (sending or receiving data) is occurring.
	OFF	No communication.

HMIGTO6310/6315 Parts Identification

Side	HMIGTO6310	HMIGTO6315
Front	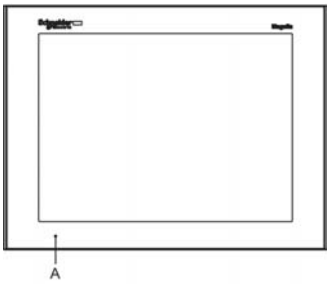	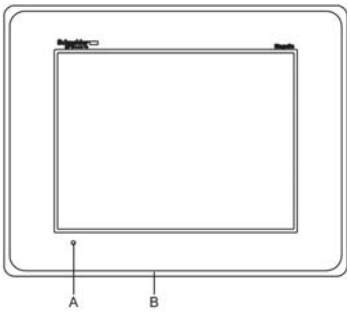
Rear	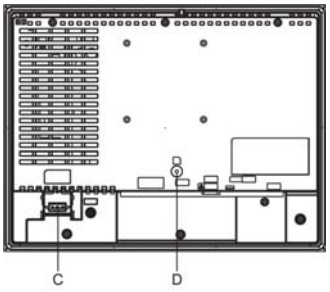	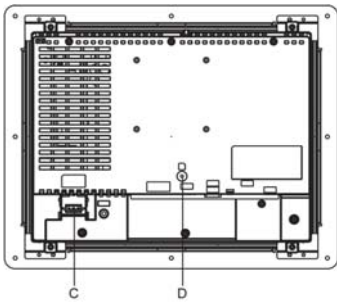
Bottom	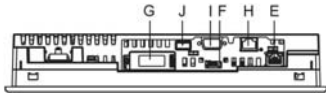	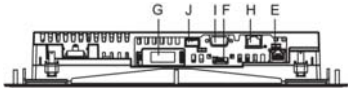

Part	Name	Description
A	Status LED	*1
B	Stainless Steel Bezel	HMIGTO6315 only.
C	Power Plug Connector	-
D	SD Card Access LED *2	This lamp lights up when SD Card is inserted. **NOTE:** Do not remove or insert the SD Card when the LED lamp is on. Doing so may damage data on the SD Card.
E	Ethernet Interface *3	Ethernet transmission interface (10BASE-T/100BASE-TX) Connector: Modular jack (RJ-45) x 1.
F	USB (mini-B) Interface	Conforms to USB2.0 (mini-B) x 1. Communication Distance: 5 m (16.4 ft) or less.
G	SD Card Interface Cover/Replacement Battery Insertion Cover	For information on how to open the cover, and insert or remove the SD Card, refer to SD Card Insertion/Removal *(see page 131)*. For information on how to open the cover and replace the battery, refer to Replacing the Primary Battery *(see page 146)*.
H	Serial Interface (COM2)	RS-485 Serial Interface. Connector: Modular jack (RJ-45)
I	Serial Interface (COM1)	RS-232C Serial Interface. Connector: D-Sub 9 pin (plug) x 1.
J	USB (Type A) Interface	Conforms to USB2.0 (Type A) x 1. Power supply voltage: 5Vdc+/-5%. Output Current: 500 mA or less. Maximum communication distance: 5 m (16.4 ft).

*1 Status LED operations are as shown below:

Color	Indicator	Description
Green	ON	Offline
		In operation
Orange	Flashing	Software starting up.
Red	ON	Power is turned ON.
-	OFF	Power is turned OFF.

*2 SD Card Access LED operations are as shown below.

Color	Indicator	Description
Green (Active)	ON	The SD Card is inserted.
	OFF	The SD Card is not inserted or is not being accessed.

*3 Ethernet LED operations are as shown below.

	Color	Indicator	Description
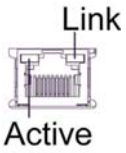	Green (Active)	Flashing	Data transmission is occurring.
		OFF	No data transmission.
	Green (Link)	ON	Data transmission is available in 10BASE-T/100BASE-TX.
		OFF	No connection or subsequent transmission failure.

*4 COM2 LED operations are as shown below.

Color	Indicator	Description
Yellow	ON	Communication (sending or receiving data) is occurring.
	OFF	No communication.

Chapter 4
Specifications

Overview

This chapter presents the HMIGTO specifications.

What Is in This Chapter?

This chapter contains the following sections:

Section	Topic	Page
4.1	HMIGTO1300/1310	36
4.2	HMIGTO2300/2310/2315	50
4.3	HMIGTO3510/4310	68
4.4	HMIGTO5310/5315	84
4.5	HMIGTO6310/6315	101

Section 4.1
HMIGTO1300/1310

What Is in This Section?

This section contains the following topics:

Topic	Page
Electrical Specifications	37
Environmental Specifications	38
Structural Specifications	39
Display Specifications	40
Memory, Clock, Touch Panel and Function Switches	41
Interface Specifications	42
Specifications of Serial Interface COM1	43
Specifications of Serial Interface COM2	45
Dimensions	46

Electrical Specifications

Power Supply	Rated Input Voltage		24 Vdc
	Input Voltage Limits		19.2...28.8 Vdc
	Voltage Drop		2 ms or less
	Power Consumption		9.6 W or less
		When power is not supplied to external devices	5.2 W or less
		Backlight OFF (Standby Mode)	4.2 W or less
		Backlight Dimmed (Brightness: 20%)	4.3 W or less
	In-Rush Current		30 A or less
Voltage Endurance			1,000 Vac 20 mA for 1 minute (between charging and FG terminals)
Insulation Resistance			500 Vdc, 10 MΩ or more (between charging and FG terminals)

Environmental Specifications

Physical Environment	Surrounding Air Temperature	0...50 °C (32...122 °F)
	Storage Temperature	-20...60 °C (-4...140 °F)
	Surrounding Air and Storage Humidity	10%...90% RH (Non condensing, wet bulb temperature 39 °C [102.2 °F] or less)
	Dust	0.1 mg/m^3 (10^{-7} oz/ft^3) or less (non-conductive levels)
	Pollution Degree	For use in Pollution Degree 2 environment
	Corrosive Gases	Free of corrosive gases
	Atmospheric Pressure (Operating Altitude)	800...1,114 hPa (2,000 m [6,561 ft] or lower)
Mechanical Environment	Vibration Resistance	IEC/EN 61131-2 compliant 5...9 Hz Single amplitude 3.5 mm (0.14 in.) 9...150 Hz Fixed acceleration: 9.8 m/s^2 X, Y, Z directions for 10 cycles (approx. 100 min.)
	Concussion Resistance	IEC/EN 61131-2 compliant 147 m/s^2, X, Y, Z directions for 3 times
Electrical Environment	Noise immunity	Noise Voltage: 1,000 Vp-p Pulse Width: 1 µs Rise Time: 1 ns (via noise simulator)
	Electrostatic Discharge Immunity	Contact Discharge Method: 6 kV (IEC/EN 61000-4-2 Level 3)

Air quality requirements

Do not operate or store the panel where chemicals evaporate, or where chemicals are present in the air:

- Corrosive chemicals: Acids, alkalines, liquids containing salt.
- Flammable chemicals: Organic solvents.

⚠ CAUTION

INOPERATIVE EQUIPMENT

Do not allow water, liquids, metal, and wiring fragments to enter the panel case.

Failure to follow these instructions can result in injury or equipment damage.

Structural Specifications

Grounding	Functional grounding: Grounding resistance of 100Ω, 2mm^2 (AWG 14) or thicker wire, or your country's applicable standard. (Same for FG and SG terminals)
Cooling Method	Natural air circulation
Structure *1	IP65f NEMA #250 TYPE 4X/13 (on the front panel when properly installed in an enclosure)
External Dimensions	W132 x H106 x D42 mm (W5.2 x H4.17 x D1.65 in.)
Panel Cut Dimensions	W118.5 x H92.5 mm (W4.67 x H3.64 in.)*2 Panel thickness area: 1.6...5 mm (0.06...0.2 in)*3
Weight	0.4 kg (0.9 lb) or less (main unit only)

*1 The front face of the HMIGTO, installed in a solid panel, has been tested using conditions equivalent to the standards shown in the specification. Even though the HMIGTO's level of resistance is equivalent to these standards, oils that should have no effect on the HMIGTO can possibly harm the panel. This can occur in areas where either vaporized oils are present, or where low viscosity cutting oils are allowed to adhere to the panel for long periods of time. If the panel's front face protection sheet peels off, these conditions can lead to the ingress of oil into the panel and separate protection measures are suggested.

Also, if non-approved oils are present, they may cause deformation or corrosion of the front panel's plastic cover. Therefore, prior to installing the panel, be sure to confirm the type of conditions that will be present in the panel's operating environment. If the installation gasket is used for a long period of time, or if the panel and its gasket are removed from the panel, the original level of protection cannot be kept. To maintain the original protection level, be sure to replace the installation gasket regularly.

*2 For dimensional tolerance, everything +1/-0 mm (+0.04/-0 in.) and R in angle are below R3 (R0.12 in.)

*3 Even if the installation wall thickness is within the recommended range for the "Panel Cut Dimensions", depending on wall's material, size, and installation location of the panel and other devices, the installation wall could warp. To prevent warping, the installation surface may need to be strengthened.

The front face of the panel, installed in a solid panel, has been tested using conditions equivalent to the standards shown in the specification.

⚠ CAUTION

EQUIPMENT DAMAGE

Ensure that the panel is not in permanent and direct contact with oils.

Failure to follow these instructions can result in injury or equipment damage.

NOTICE

STORAGE AND OPERATION OUTSIDE OF SPECIFICATIONS

- Store the panel in areas where temperatures are within the panel's specifications.
- Do not restrict or block the panel's rear-face ventilation slots.

Failure to follow these instructions can result in equipment damage.

NOTICE

GASKET AGING

- Inspect the gasket periodically as required by your operating environment to keep the initial IP level.
- Change the gasket at least once a year, or as soon as scratches or dirt become visible.

Failure to follow these instructions can result in equipment damage.

Display Specifications

		HMIGTO1310	HMIGTO1300
Display Type		TFT Color LCD	
Display Size		3.5”	
Resolution		320 x 240 pixels (QVGA)	
Effective Display Area		W70.56 x H52.92 mm (W2.78 x H2.08 in.)	
Display Colors		65,536 colors (No blink) / 16,384 colors (Blink)	
Backlight		White LED (Not user replaceable. When replacement is required, contact your local distributor.)	
Backlight Service Life		50,000 hours or more (continuous operation at 25 °C [77 °F] before backlight brightness decreased to 50%)	
Brightness Control		16 levels (Adjusted with touch panel or software	
Language Fonts		ASCII: (Code page 850) Alphanumeric (including European characters) Chinese: (GB2312-80 codes) Simplified Chinese fonts Japanese (except for XBT GT1000 series): ANK 158, Kanji: 6,962 (JIS Standards 1 & 2) (including 607 non-kanji characters) Korean: (KSC5601 - 1992 codes) Hangul fonts Taiwanese: (Big 5 codes) Traditional Chinese fonts	
Character sizes		8 x 8, 8 x 16, 16 x 16 and 32 x 32 pixel fonts	
Font sizes		You can expand width up to 8 times, and expand height up to 8 times.*1	
Text	8 x 8 pixels	40 characters per row x 30 rows	
	8 x 16 pixels	40 characters per row x 15 rows	
	16 x 16 pixels	20 characters per row x 15 rows	
	32 x 32 pixels	10 characters per row x 7 rows	

*1 You can set up other font sizes using the software.

Memory, Clock, Touch Panel and Function Switches

Memory

	HMIGTO1310	HMIGTO1300
Application Memory *1	FLASH EPROM 96 MB	FLASH EPROM 64 MB
Application run DRAM	128 MB	128 MB
Data Backup	SRAM 512 KB (Rechargeable lithium battery for data backup)	SRAM 128 KB (Rechargeable lithium battery for data backup)

*1 Capacity available for user application.

NOTE:

- When the message "Battery level is low" is displayed, supply power to the panel and fully charge the battery. In 24 hours the battery charges to a level that allows backup operation. Completing a full charge requires about 120 hours (5 days).
- The lifetime of the rechargeable lithium battery is 10 years when the battery's ambient temperature is 40 °C (104 °F) or less, 4.1 years when the battery's ambient temperature is 50 °C (122 °F) or less, and 1.5 years when the battery's ambient temperature is 60 °C (140 °F) or less.
  When used for backup:
  Approximately 100 days with a fully charged battery.
  Approximately 6 days with a half-charged battery.

Clock

Clock Accuracy*1	±65 seconds/month (deviation at room temperature and power is OFF).

*1 Depending on the operating temperature and age of panel, the clock can deviate from -380 to +90 sec/month. For systems where this level of precision is insufficient, the user should monitor and make adjustments when required.

NOTE:

- When the message "Battery level is low" is displayed, supply power to the panel and fully charge the battery. In 24 hours the battery charges to a level that allows backup operation. Completing a full charge requires about 120 hours (5 days).
- The lifetime of the rechargeable lithium battery is 10 years when the battery's ambient temperature is 40 °C (104 °F) or less, 4.1 years when the battery's ambient temperature is 50 °C (122 °F) or less, and 1.5 years when the battery's ambient temperature is 60 °C (140 °F) or less.
  When used for backup:
  Approximately 100 days with a fully charged battery.
  Approximately 6 days with a half-charged battery.

Touch Panel

Touch Panel Type	Resistive Film (analog)
Touch Panel Resolution	1,024 x 1,024
Touch Panel Service Life	1 million times or more

Function Switches

Six switches (F1 to F6).

Interface Specifications

Serial Interface COM1

	HMIGTO1310	HMIGTO1300
Asynchronous Transmission	RS-232C / RS-485	RS-232C
Data Length	7 or 8 bits	
Stop Bit	1 or 2 bits	
Parity	None, odd or even	
Data Transmission Speed	2,400...115,200 bps, 187,500 bps (MPI)	2,400...115,200 bps
Connector	Modular jack (RJ-45)	D-Sub 9 pin (plug)

Serial Interface COM2

	HMIGTO1300
Asynchronous Transmission	RS-485
Data Length	7 or 8 bits
Stop Bit	1 or 2 bits
Parity	None, odd or even
Data Transmission Speed	2,400...115,200 bps, 187,500 bps (MPI)
Connector	Modular jack (RJ-45)

USB Interface

	USB (Type A) Interface	USB (mini-B) Interface
Connector	USB 2.0 (Type A) x 1	USB 2.0 (mini-B) x 1
Power Supply Voltage	5 Vdc ±5%	-
Maximum Current Supplied	500 mA	-
Maximum Transmission Distance	5 m (16.4 ft)	

Ethernet Interface

	HMIGTO1310
Ethernet (LAN)	IEEE802.3i / IEEE802.3u, 10BASE-T/100BASE-TX
Connector	Modular jack (RJ45) x 1

NOTE: HMIGTO1300 does not have an Ethernet interface.

Specifications of Serial Interface COM1

Introduction

⚠ CAUTION

LOSS OF POWER

- Make sure all connections to the communication ports on the bottom and sides of the panel do not put excessive stress on the ports.
- Securely attach communication cables to the panel or cabinet.
- Use only D-Sub 9 pin cables with a locking system in good condition.

Failure to follow these instructions can result in injury or equipment damage.

The serial port is not isolated. The SG (signal ground) and FG (frame ground) terminals are connected inside the panel.

⚠⚠ DANGER

ELECTRIC SHOCK

When using the SG terminal to connect an external device to the panel:

- Verify that a short-circuit loop is not created when you set up the system.
- For HMIGTO1300, connect the #5 SG terminal to remote equipment when the host (PLC) unit is not isolated. Connect the #5 SG terminal to a known reliable ground connection to reduce the risk of damaging the circuit.
- For HMIGTO1310, connect the #8 SG terminal to remote equipment when the host (PLC) unit is not isolated. Connect the #8 SG terminal to a known reliable ground connection to reduce the risk of damaging the circuit.

Failure to follow these instructions will result in death or serious injury.

Serial Interface COM1

HMIGTO1300: D-Sub 9 pin plug connector via an RS-232C cable.

Pin Connection	Pin No.	RS-232C		
		Signal Name	Direction	Meaning
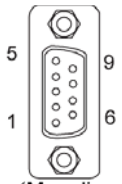 (Magelis GTO side)	1	CD	Input	Carrier Detect
	2	RD(RXD)	Input	Receive Data
	3	SD(TXD)	Output	Send Data
	4	ER(DTR)	Output	Data Terminal Ready
	5	SG	-	Signal Ground
	6	DR(DSR)	Input	Data Set Ready
	7	RS(RTS)	Output	Request to Send
	8	CS(CTS)	Input	Send possible
	9	CI(RI)/VCC	Input/–	Called Status Display +5V±5% Output 0.25A
	Shell	FG	–	Frame Ground (Common with SG)

You can switch pin #9 between RI and VCC via software.

NOTICE

EQUIPMENT DAMAGE

Use only the rated current.

Failure to follow these instructions can result in equipment damage.

Interfit bracket is #4-40 (UNC).

⚠ CAUTION

LOSS OF COMMUNICATION

- All connections to the communication ports must not put excessive stress on the ports.
- Securely attach communication cables to the panel wall or cabinet.
- Use only D-Sub 9 pin cables with a locking tab in good condition.

Failure to follow these instructions can result in injury or equipment damage.

HMIGTO1310: RJ-45 connector via an RS-232C or RS-485 cable.

Pin Connection	Pin No.	RS-232C/RS-485		
		Signal Name	Direction	Meaning
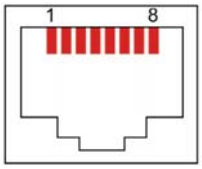	1	RD(RXD)	Input	Receive Data (RS-232C)
	2	SD(TXD)	Output	Send Data (RS-232C)
	3	NC	–	–
	4	D1	Input/Output	Transfer Data (RS-485)
	5	D0	Input/Output	Transfer Data (RS-485)
	6	RS(RTS)	Output	Request to Send
	7	NC	–	–
	8	SG	–	Signal Ground
	Shell	FG	–	Frame Ground (Common with SG)

⚠ CAUTION

LOSS OF COMMUNICATION

- All connections to the communication ports must not put excessive stress on the ports.
- Securely attach communication cables to the panel wall or cabinet.
- Use only RJ45 with a locking tab in good condition.

Failure to follow these instructions can result in injury or equipment damage.

Specifications of Serial Interface COM2

Introduction

The serial port is not isolated. The SG (signal ground) and FG (frame ground) terminals are connected inside the panel.

⚠⚠ DANGER

ELECTRIC SHOCK

When using the SG terminal to connect an external device to the panel:
- Verify that a short-circuit loop is not created when you set up the system.
- Connect the #8 SG terminal to remote equipment when the host (PLC) unit is not isolated. Connect the #8 SG terminal to a known reliable ground connection to reduce the risk of damaging the circuit.

Failure to follow these instructions will result in death or serious injury.

Serial Interface COM2

HMIGTO1300: RJ-45 connector via an RS-485 cable

NOTE: When setting up RS-485 communication, the cable diagram for some equipment may require polarization on the terminal side. This terminal does not require any special setting as it handles polarization automatically.

Pin Connection	Pin No.	RS-485		
		Signal Name	Direction	Meaning
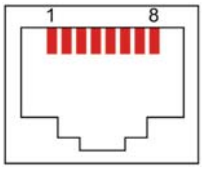	1	NC	–	–
	2	NC	–	–
	3	NC	–	–
	4	Line A	Input/Output	Transfer Data (RS-485)
	5	Line B	Input/Output	Transfer Data (RS-485)
	6	RS(RTS)	Output	Request to Send
	7	NC	–	–
	8	SG	–	Signal Ground

⚠ CAUTION

LOSS OF COMMUNICATION

- All connections to the communication ports must not put excessive stress on the ports.
- Securely attach communication cables to the panel wall or cabinet.
- Use only RJ45 with a locking tab in good condition.

Failure to follow these instructions can result in injury or equipment damage.

Dimensions

External Dimensions

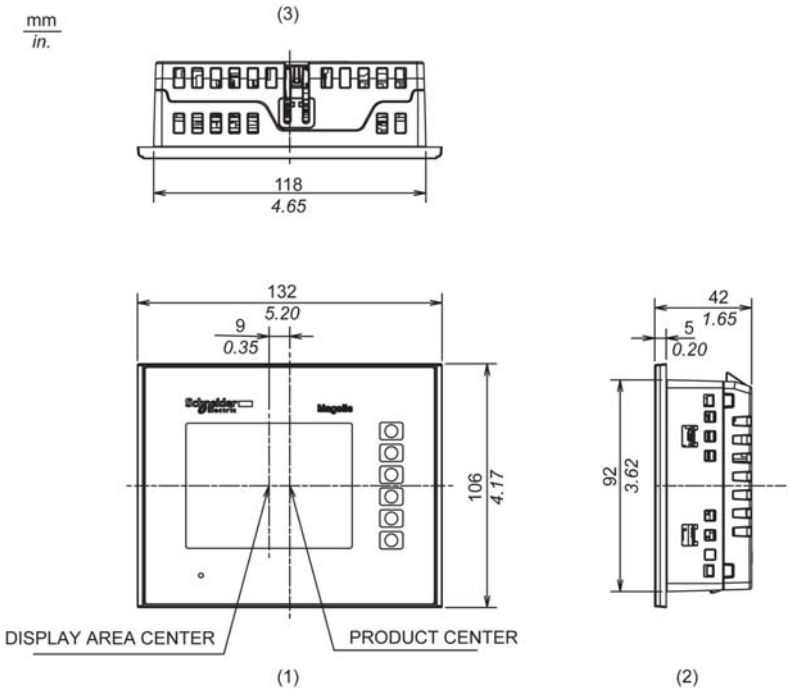

1 Front
2 Right Side
3 Top

Installation with Installation Fasteners

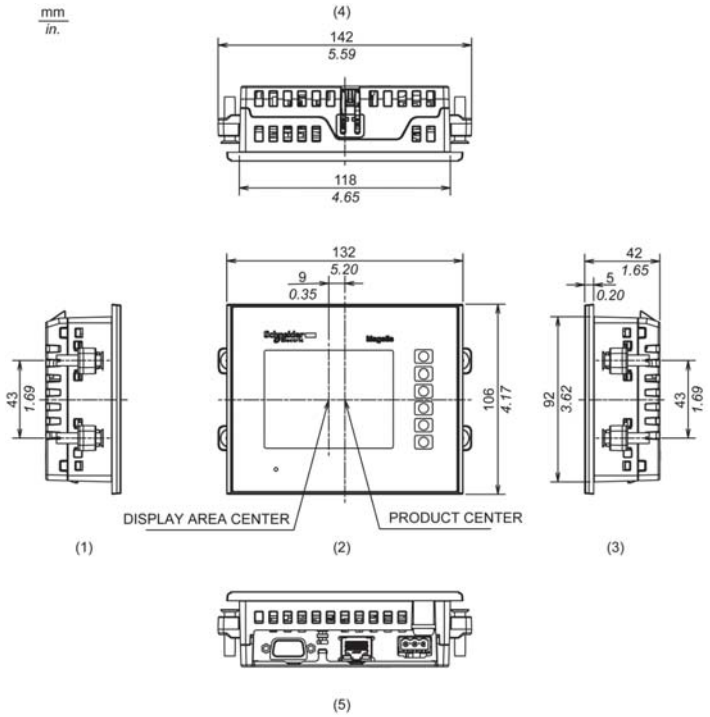

1 Left Side
2 Front
3 Right Side
4 Top
5 Bottom

Dimensions with Cables: HMIGTO1300

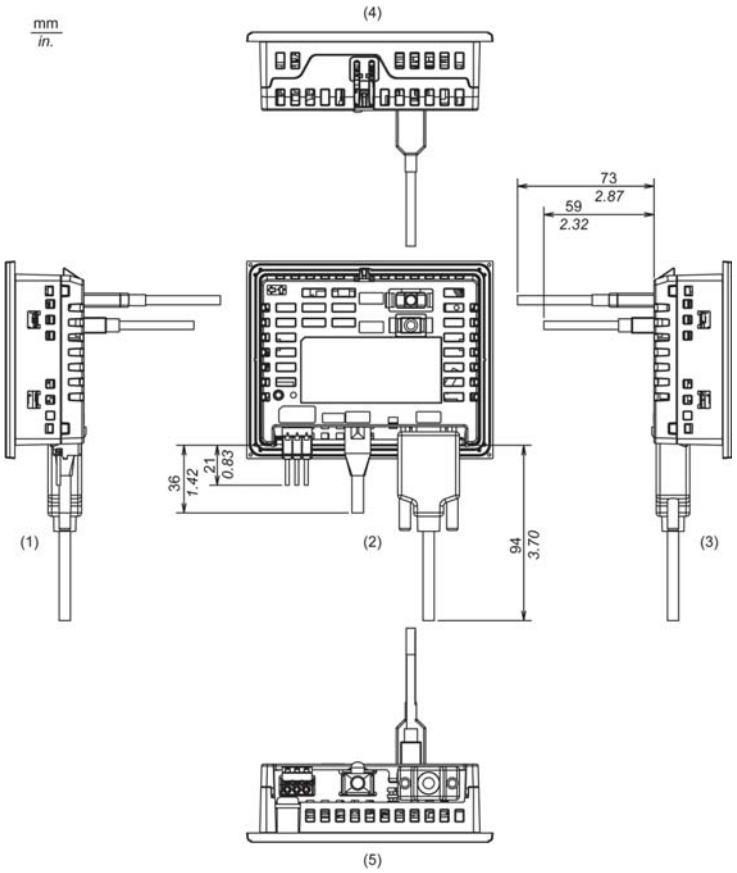

1 Left Side
2 Rear
3 Right Side
4 Top
5 Bottom

NOTE: All the above values are designed with cable bending in mind. The dimensions given here are representative values depending on the type of connection cable in use. Therefore, these values are intended for reference only.

Dimensions with Cables: HMIGTO1310

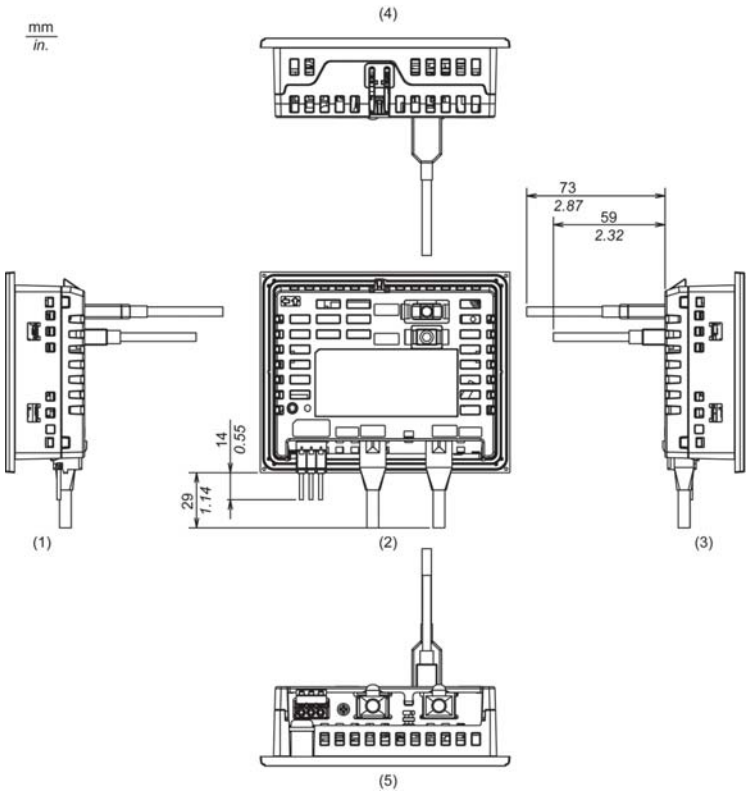

1 Left Side
2 Rear
3 Right Side
4 Top
5 Bottom

NOTE: All the above values are designed with cable bending in mind. The dimensions given here are representative values depending on the type of connection cable in use. Therefore, these values are intended for reference only.

Panel Cut Dimensions

Create a panel cut and insert the panel into the opening from the front.

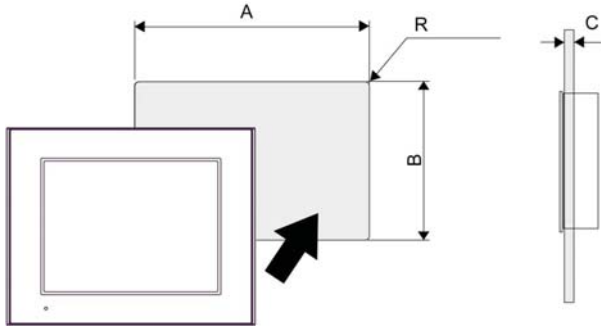

A	B	C	R
118.5 mm (+1, -0 mm) (4.67 in [+0.04, -0 in.])	92.5 mm (+1, -0 mm) (3.64 in. [+0.04, -0 in.])	1.6...5 mm (0.06...0.2 in)	3 mm (0.12 in.) maximum

NOTE: Before designing the panel cut, refer to Installation *(see page 120)*.

Installation Fastener Dimensions

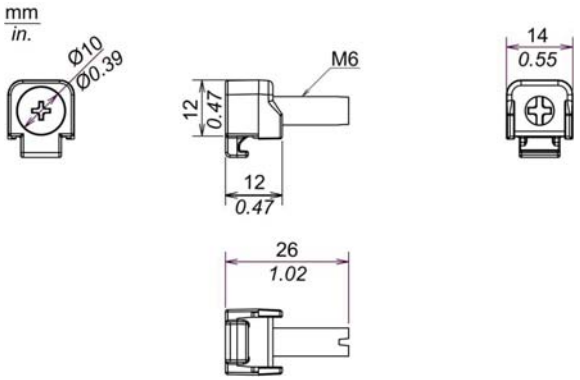

Section 4.2
HMIGTO2300/2310/2315

What Is in This Section?

This section contains the following topics:

Topic	Page
Electrical Specifications	51
Environmental Specifications	52
Structural Specifications	53
Display Specifications	55
Memory, Clock, and Touch Panel	56
Interface Specifications	57
Specifications of Serial Interface COM1	58
Specifications of Serial Interface COM2	60
Dimensions	61

Electrical Specifications

Power Supply	Rated Input Voltage		24 Vdc
	Input Voltage Limits		19.2...28.8 Vdc
	Voltage Drop		5 ms or less
	Power Consumption		10.5 W or less
		When power is not supplied to external devices	6.5 W or less
		Backlight OFF (Standby Mode)	4.5 W or less
		Backlight Dimmed (Brightness: 20%)	5 W or less
	In-Rush Current		30 A or less
Voltage Endurance			1,000 Vac, 20 mA for 1 minute (between charging and FG terminals)
Insulation Resistance			500 Vdc, 10 MΩ or more (between charging and FG terminals)

Environmental Specifications

		HMIGTO2310 / HMIGTO2315	HMIGTO2300
Physical Environment	Surrounding Air Temperature	0...55 °C (32 °F...131 °F)	0...50 °C (32...122 °F)
	Storage Temperature	-20...60 °C (-4...140 °F)	
	Surrounding Air and Storage Humidity	10...90% RH (Non condensing, wet bulb temperature 39 °C [102.2 °F] or less)	
	Dust	0.1 mg/m^3 (10^{-7} oz/ft^3) or less (non-conductive levels)	
	Pollution Degree	For use in Pollution Degree 2 environment	
	Corrosive Gases	Free of corrosive gases	
	Atmospheric Pressure (Operating Altitude)	800...1,114 hPa (2,000 m [6,561 ft] or lower)	
Mechanical Environment	Vibration Resistance	IEC/EN 61131-2 compliant 5...9 Hz Single amplitude 3.5 mm (0.14 in.) 9...150 Hz Fixed acceleration: 9.8 m/s^2 X, Y, Z directions for 10 cycles (approx. 100 min)	
	Concussion Resistance	IEC/EN 61131-2 compliant 147 m/s^2, X, Y, Z directions for 3 times	
Electrical Environment	Noise Immunity	Noise Voltage: 1,000 Vp-p Pulse Width: 1 µs Rise Time: 1 ns	
	Electrostatic Discharge Immunity	Contact Discharge Method: 6 kV (IEC/EN 61000-4-2 Level 3)	

Air quality requirements

Do not operate or store the panel where chemicals evaporate, or where chemicals are present in the air:

- Corrosive chemicals: Acids, alkalines, liquids containing salt.
- Flammable chemicals: Organic solvents.

⚠ CAUTION

INOPERATIVE EQUIPMENT

Do not allow water, liquids, metal, and wiring fragments to enter the panel case.

Failure to follow these instructions can result in injury or equipment damage.

Structural Specifications

	HMIGTO2300/HMIGTO2310	HMIGTO2315
Grounding	Functional grounding: Grounding resistance of 100Ω, 2mm^2 (AWG 14) or thicker wire, or your country's applicable standard. (Same for FG and SG terminals)	
Cooling Method	Natural air circulation	
Structure[*1]	IP65f NEMA #250 TYPE 4X/13 (on the front panel when properly installed in an enclosure)	IP66k NEMA #250 TYPE 4X/13 (on the front panel when properly installed in an enclosure)[*2]
External Dimensions	W169.5 x H137 x D59.5 mm (W6.67 x H5.39 x D2.34 in.)	W213.5 x H181 x D59.5 mm (W8.41 x H7.13 x D2.34 in.)
Panel Cut Dimensions	W156 x H123.5 mm (W6.14 x H4.86 in.) [*3] Panel thickness area: 1.6...5 mm (0.06...0.2 in.) [*4]	W195 x H162.5 mm (W7.68 x H6.40 in.) [*3] Panel thickness area: 1.6...5 mm (0.06...0.2 in.) [*4]
Weight	0.8 kg (1.8 lbs) or less (main unit only)	1.2 kg (2.6 lbs) or less (main unit only)

NOTE: [*1] The front face of the HMIGTO, installed in a solid panel, has been tested using conditions equivalent to the standards shown in the specification. Even though the HMIGTO's level of resistance is equivalent to these standards, oils that should have no effect on the HMIGTO can possibly harm the panel. This can occur in areas where either vaporized oils are present, or where low viscosity cutting oils are allowed to adhere to the panel for long periods of time. If the panel's front face protection sheet peels off, these conditions can lead to the ingress of oil into the panel and separate protection measures are suggested.
Also, if non-approved oils are present, they may cause deformation or corrosion of the front panel's plastic cover. Therefore, prior to installing the panel, be sure to confirm the type of conditions that will be present in the panel's operating environment. If the installation gasket is used for a long period of time, or if the panel and its gasket are removed from the panel, the original level of protection cannot be kept. To maintain the original protection level, be sure to replace the installation gasket regularly.

[*2] When installing the HMIGTO in a panel, you may not be able to mount the HMIGTO flush with the panel. This occurs due to the thickness of the gasket. The difference in level between the HMIGTO and panel depends on how much the gasket is compressed.

NOTICE

EQUIPMENT DAMAGE

For food and beverage and pharmaceutical industries, when the HMIGTO is not flush with panel, use silicon to form a seal to prevent water, chemicals, or food from lodging into place. Otherwise, the panel face could leak.

Failure to follow these instructions can result in equipment damage.

[*3] For dimensional tolerance, everything +1/-0 mm (+0.04/-0 in.) and R in angle are below R3 (R0.12 in.)

[*4] Even if the installation wall thickness is within the recommended range for the "Panel Cut Dimensions", depending on wall's material, size, and installation location of the panel and other devices, the installation wall could warp. To prevent warping, the installation surface may need to be strengthened.

⚠ CAUTION

EQUIPMENT DAMAGE

Ensure that the panel is not in permanent and direct contact with oils.

Failure to follow these instructions can result in injury or equipment damage.

NOTICE

STORAGE AND OPERATION OUTSIDE OF SPECIFICATIONS

- Store the panel in areas where temperatures are within the panel's specifications.
- Do not restrict or block the panel's rear-face ventilation slots.

Failure to follow these instructions can result in equipment damage.

NOTICE

GASKET AGING

- Inspect the gasket periodically as required by your operating environment to keep the initial IP level.
- Change the gasket at least once a year, or as soon as scratches or dirt become visible.

Failure to follow these instructions can result in equipment damage.

Display Specifications

Display Type		TFT Color LCD
Display Size		5.7”
Resolution (pixels)		320 x 240 pixels (QVGA)
Effective Display Area		W115.2 x H86.4 mm (W4.54 x H3.40 in.)
Display Colors		65,536 colors (No blink) / 16,384 colors (Blink)
Backlight		White LED (Not user replaceable. When replacement is required, contact your local distributor.)
Backlight Service Life		50,000 hours or more (continuous operation at 25 °C [77 °F] before backlight decreases to 50%.)
Brightness Control		16 levels (Adjusted with touch panel or software)
Language Fonts		ASCII: (Code page 850) Alphanumeric (including European characters) Chinese: (GB2312-80 codes) Simplified Chinese fonts Japanese (except for XBT GT1000 series): ANK 158, Kanji: 6,962 (JIS Standards 1 & 2) (including 607 non-kanji characters) Korean: (KSC5601 - 1992 codes) Hangul fonts Taiwanese: (Big 5 codes) Traditional Chinese fonts
Character Sizes		8 x 8, 8 x 16, 16 x 16 and 32 x 32 pixel fonts
Font Sizes		You can expand the width up to 8 times, and expand the height up to 8 times.*1
Text	8 x 8 pixels	40 characters per row x 30 rows
	8 x 16 pixels	40 characters per row x 15 rows
	16 x 16 pixels	20 characters per row x 15 rows
	32 x 32 pixels	10 characters per row x 7 rows

*1 You can set up other font sizes using the software.

Memory, Clock, and Touch Panel

Memory

	HMIGTO2310 / HMIGTO2315	HMIGTO2300
Application Memory *1	FLASH EPROM 96 MB	FLASH EPROM 64 MB
Application run DRAM	128 MB	128 MB
Data Backup	SRAM 512 KB (Replaceable lithium battery for data backup)	SRAM 128 KB (Rechargeable lithium battery for data backup)

*1 Capacity available for user application.

NOTE:

- When the message "Battery level is low" is displayed on the HMIGTO2300, supply power to the panel and fully charge the battery. In 24 hours the battery charges to a level that allows backup operation. Completing a full charge requires about 120 hours (5 days).
- The lithium battery's lifetime is: 10 years when the battery's ambient temperature is 40 °C (104 °F) or less, 4.1 years when the battery's ambient temperature is 50 °C (122 °F) or less, and 1.5 years when the battery's ambient temperature is 60 °C (140 °F) or less.
  When used for backup:
  Approximately 100 days, with a fully charged battery.
  Approximately 6 days, with a half-charged battery.

Clock

Clock Accuracy*1	±65 seconds/month (deviation at room temperature and power is OFF).

*1 Depending on the operating temperature and age of panel, the clock can deviate from -380 to +90 sec/month. For systems where this level of precision is insufficient, the user should monitor and make adjustments when required.

NOTE:

- When the message "Battery level is low" is displayed on the HMIGTO2300, supply power to the panel and fully charge the battery. In 24 hours the battery charges to a level that allows backup operation. Completing a full charge requires about 120 hours (5 days).
- The lithium battery's lifetime is: 10 years when the battery's ambient temperature is 40 °C (104 °F) or less, 4.1 years when the battery's ambient temperature is 50 °C (122 °F) or less, and 1.5 years when the battery's ambient temperature is 60 °C (140 °F) or less.
  When used for backup:
  Approximately 100 days, with a fully charged battery.
  Approximately 6 days, with a half-charged battery.

Touch Panel

Touch Panel Type	Resistive Film (analog)
Touch Panel Resolution	1,024 x 1,024
Touch Panel Service Life	1 million times or more

Interface Specifications

Serial Interface COM1

Asynchronous Transmission	RS-232C
Data Length	7 or 8 bits
Stop Bit	1 or 2 bits
Parity	None, odd or even
Data Transmission Speed	2,400...115,200 bps
Connector	D-Sub 9 pin (plug)

Serial Interface COM2

Asynchronous Transmission	RS-485
Data Length	7 or 8 bits
Stop Bit	1 or 2 bits
Parity	None, odd or even
Data Transmission Speed	2,400...115,200 bps, 187,500 bps (MPI)
Connector	Modular jack (RJ-45)

USB Interface

	USB (Type A) Interface	**USB (mini-B) Interface**
Connector	USB 2.0 (Type A) x 1	USB 2.0 (mini-B) x 1
Power Supply Voltage	5 Vdc ±5%	-
Maximum Current Supplied	500 mA	-
Maximum Transmission Distance	5 m (16.4 ft)	

Ethernet Interface

	HMIGTO2310 / HMIGTO2315
Ethernet (LAN)	IEEE802.3i / IEEE802.3u, 10BASE-T/100BASE-TX
Connector	Modular jack (RJ45) x 1

SD Card Interface

HMIGTO2310/HMIGTO2315: SD Card slot x 1 (maximum 32 GB SD/SDHC Card)

NOTE: HMIGTO2300 does not have an SD Card interface.

Specifications of Serial Interface COM1

Introduction

⚠ CAUTION

LOSS OF POWER

- Make sure all connections to the communication ports on the bottom and sides of the panel do not put excessive stress on the ports.
- Securely attach communication cables to the panel or cabinet.
- Use only D-Sub 9 pin cables with a locking system in good condition.

Failure to follow these instructions can result in injury or equipment damage.

The serial port is not isolated. The SG (signal ground) and FG (frame ground) terminals are connected inside the panel.

⚠⚠ DANGER

ELECTRIC SHOCK

When using the SG terminal to connect an external device to the panel:

- Verify that a short-circuit loop is not created when you set up the system.
- Connect the #5 SG terminal to remote equipment when the host (PLC) unit is not isolated. Connect the #5 SG terminal to a known reliable ground connection to reduce the risk of damaging the circuit.

Failure to follow these instructions will result in death or serious injury.

Serial Interface COM1

HMIGTO2300 / HMIGTO2310/ HMIGTO2315: D-Sub 9 pin plug connector via an RS-232C cable.

Pin Connection	Pin No.	RS-232C		
		Signal Name	Direction	Meaning
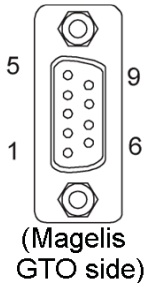 (Magelis GTO side)	1	CD	Input	Carrier Detect
	2	RD(RXD)	Input	Receive Data
	3	SD(TXD)	Output	Send Data
	4	ER(DTR)	Output	Data Terminal Ready
	5	SG	-	Signal Ground
	6	DR(DSR)	Input	Data Set Ready
	7	RS(RTS)	Output	Request to Send
	8	CS(CTS)	Input	Send possible
	9	CI(RI)/VCC	Input/–	Called Status Display +5V±5% Output 0.25A[*1]
	Shell	FG	–	Frame Ground (Common with SG)

NOTE: [*1] You can switch pin #9 between RI and VCC via software.

NOTICE

EQUIPMENT DAMAGE

Use only the rated current.

Failure to follow these instructions can result in equipment damage.

Interfit bracket is #4-40 (UNC).

⚠ CAUTION

LOSS OF COMMUNICATION

- All connections to the communication ports must not put excessive stress on the ports.
- Securely attach communication cables to the panel wall or cabinet.
- Use only D-Sub 9 pin cables with a locking tab in good condition.

Failure to follow these instructions can result in injury or equipment damage.

Specifications of Serial Interface COM2

Introduction

The serial port is not isolated. The SG (signal ground) and FG (frame ground) terminals are connected inside the panel.

⚠⚠ DANGER

ELECTRIC SHOCK

When using the SG terminal to connect an external device to the panel:
- Verify that a short-circuit loop is not created when you set up the system.
- Connect the #8 SG terminal to remote equipment when the host (PLC) unit is not isolated. Connect the #8 SG terminal to a known reliable ground connection to reduce the risk of damaging the circuit.

Failure to follow these instructions will result in death or serious injury.

Serial Interface COM2

HMIGTO2300 / HMIGTO2310/ HMIGTO2315: RJ45 connector via an RS-485 cable.

NOTE: When setting up RS-485 communication, the cable diagram for some equipment may require polarization on the terminal side. This terminal does not require any special setting as it handles polarization automatically.

Pin Connection	Pin No.	RS-422/RS-485		
		Signal Name	Direction	Meaning
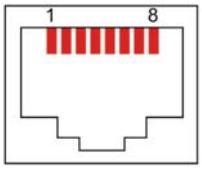	1	NC	-	-
	2	NC	-	-
	3	NC	-	-
	4	Line A	Input/Output	Transfer Data (RS-485)
	5	Line B	Input/Output	Transfer Data (RS-485)
	6	RS(RTS)	Output	Request To Send
	7	NC	-	-
	8	SG	-	Signal Ground

⚠ CAUTION

LOSS OF COMMUNICATION

- All connections to the communication ports must not put excessive stress on the ports.
- Securely attach communication cables to the panel wall or cabinet.
- Use only RJ45 with a locking tab in good condition.

Failure to follow these instructions can result in injury or equipment damage.

Dimensions

External Dimensions: HMIGTO2300/HMIGTO2310

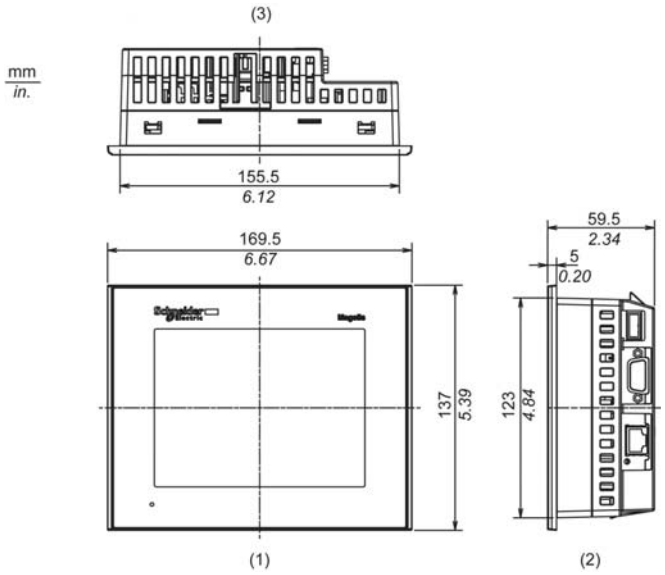

1 Front
2 Right Side
3 Top

External Dimensions: HMIGTO2315

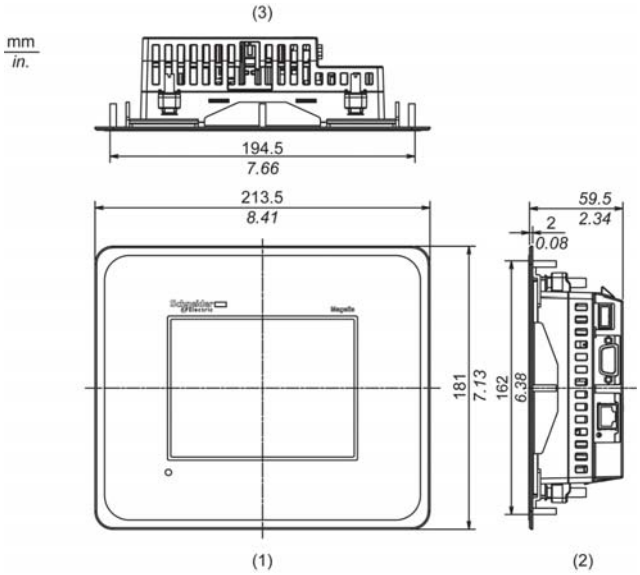

1 Front
2 Right Side
3 Top

Installation with Installation Fasteners: HMIGTO2300/HMIGTO2310

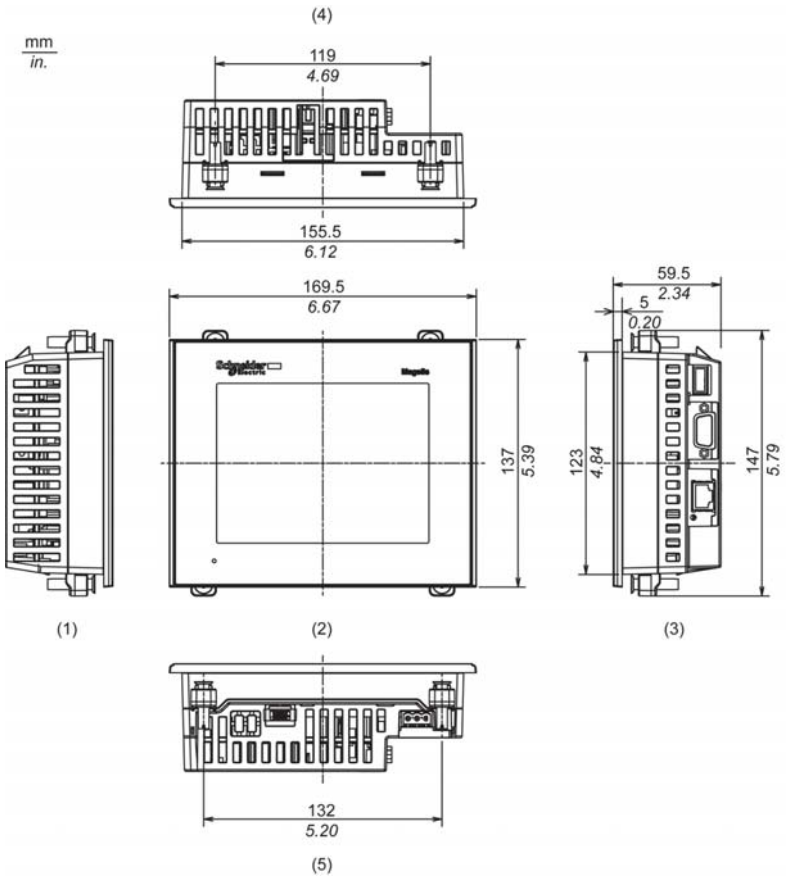

1 Left Side
2 Front
3 Right Side
4 Top
5 Bottom

Installation with Installation Fasteners: HMIGTO2315

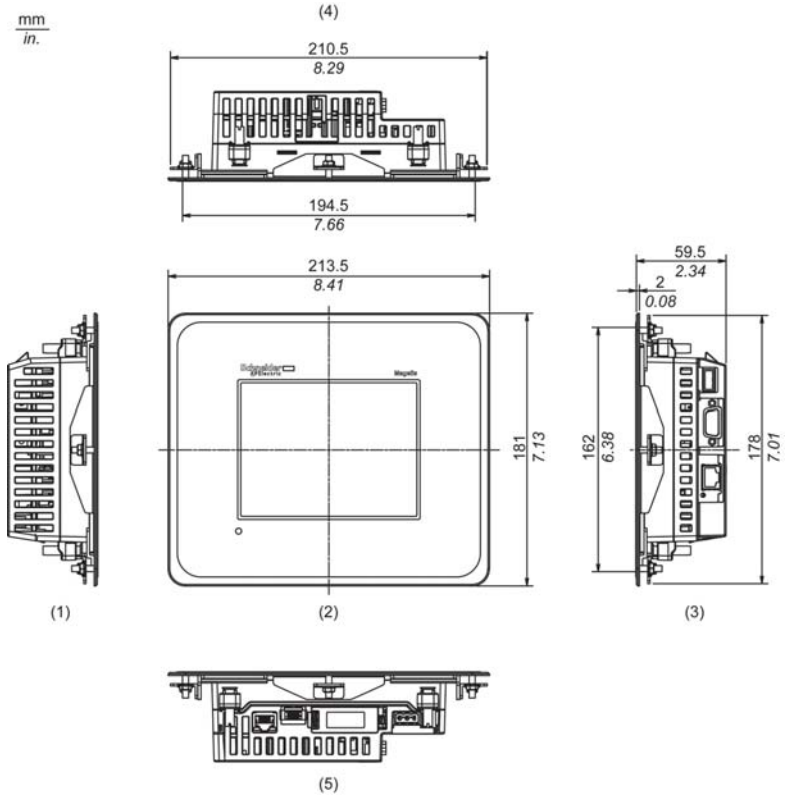

1 Left Side
2 Front
3 Right Side
4 Top
5 Bottom

Dimensions with Cables: HMIGTO2300

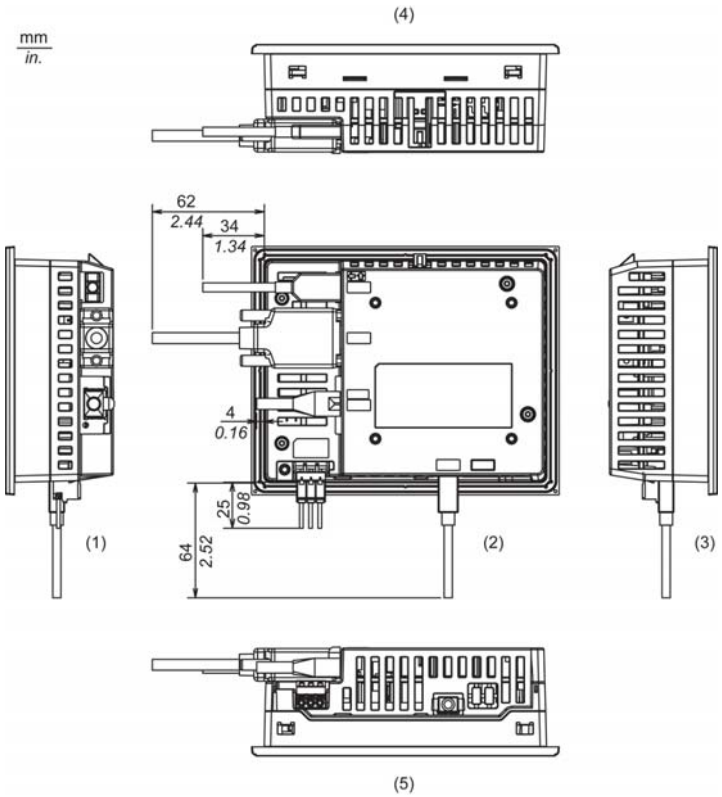

1 Left Side
2 Rear
3 Right Side
4 Top
5 Bottom

NOTE: All the above values are designed with cable bending in mind. The dimensions given here are representative values depending on the type of connection cable in use. Therefore, these values are intended for reference only.

Dimensions with Cables: HMIGTO2310

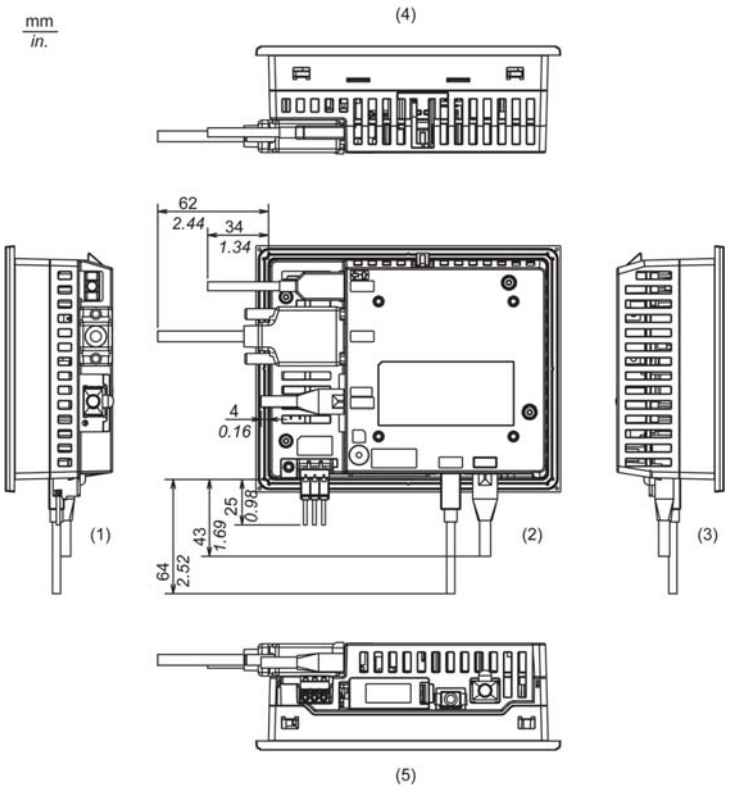

1 Left Side
2 Rear
3 Right Side
4 Top
5 Bottom

NOTE: All the above values are designed with cable bending in mind. The dimensions given here are representative values depending on the type of connection cable in use. Therefore, these values are intended for reference only.

Dimensions with Cables: HMIGTO2315

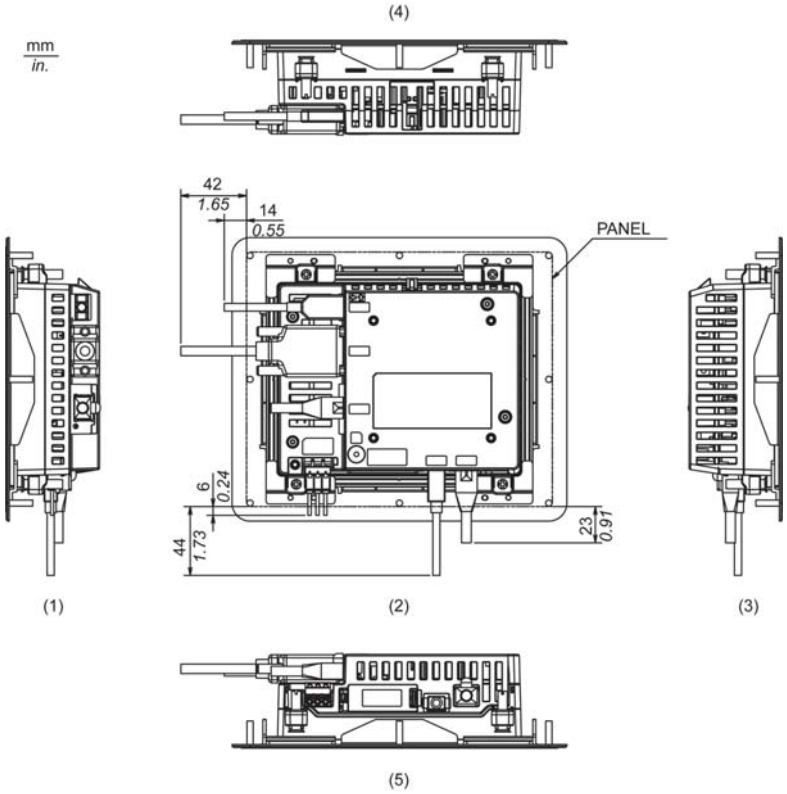

1 Left Side
2 Rear
3 Right Side
4 Top
5 Bottom

NOTE: All the above values are designed with cable bending in mind. The dimensions given here are representative values depending on the type of connection cable in use. Therefore, these values are intended for reference only.

Panel Cut Dimensions

Create a panel cut and insert the panel into the opening from the front.

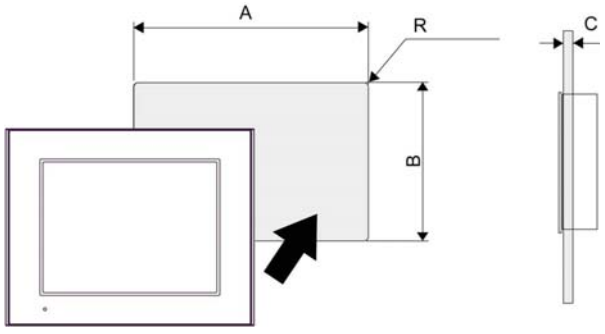

	A	B	C	R
HMIGTO2310 HMIGTO2300	156 mm (+1/-0) mm (6.14 in [+0.04, -0 in.])	123.5 mm (+1, -0 mm) (4.86 in [+0.04, -0 in.])	1.6...5 mm (0.06...0.2 in.)	3 mm (0.12 in.) maximum
HMIGTO2315	195 mm (+1/-0) mm (7.68 in [+0.04, -0in.])	162.5 mm (+1/-0) mm (6.40 in [+0.04, -0in.])		

NOTE: Before designing the panel cut, refer to Installation *(see page 120)*.

Installation Fastener Dimensions

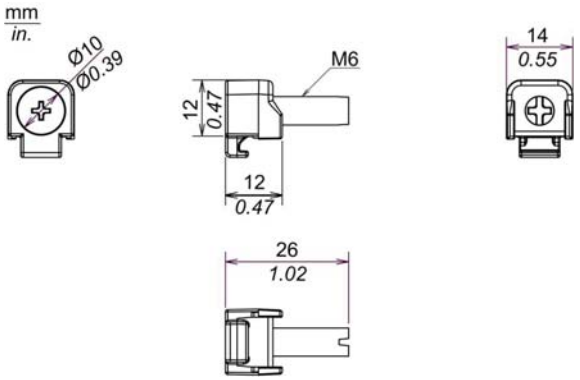

Section 4.3
HMIGTO3510/4310

What Is in This Section?

This section contains the following topics:

Topic	Page
Electrical Specifications	69
Environmental Specifications	70
Structural Specifications	71
Display Specifications	72
Memory, Clock, Touch Panel, and Function Switches	73
Interface Specifications	74
Specifications of Serial Interface COM1	75
Specifications of Serial Interface COM2	77
Dimensions	78

Electrical Specifications

Power Supply	Rated Input Voltage		24 Vdc
	Input Voltage Limits		19.2...28.8 Vdc
	Voltage Drop		5 ms or less
	Power Consumption		12 W or less
		When power is not supplied to external devices	8 W or less
		Backlight OFF (Standby Mode)	5 W or less
		Backlight Dimmed (Brightness: 20%)	5.5 W or less
	In-Rush Current		30 A or less
Voltage Endurance			1,000 Vac, 20 mA for 1 minute (between charging and FG terminals)
Insulation Resistance			500 Vdc, 10 MΩ or more (between charging and FG terminals)

Environmental Specifications

		HMIGTO4310	HMIGTO3510
Physical Environment	Surrounding Air Temperature	0...55 °C (32...131 °F)	0...50 °C (32...122 °F)
	Storage Temperature	-20...60 °C (-4...140 °F)	
	Surrounding Air and Storage Humidity	10...90% RH (Non condensing, wet bulb temperature 39 °C [102.2 °F] or less)	
	Dust	0.1 mg/m^3 (10^{-7} oz/ft^3) or less (non-conductive levels)	
	Pollution Degree	For use in Pollution Degree 2 environment	
	Corrosive Gases	Free of corrosive gases	
	Atmospheric pressure (Operating Altitude)	800...1,114 hPa (2,000 m [6,561 ft] or lower)	
Mechanical Environment	Vibration Resistance	IEC/EN 61131-2 5...9 Hz Single amplitude 3.5 mm (0.14 in.) 9...150 Hz Fixed acceleration: 9.8 m/s^2 X, Y, Z directions for 10 cycles (approx. 100 min)	
	Concussion Resistance	IEC/EN 61131-2 compliant 147 m/s^2, X, Y, Z directions for 3 times	
Electrical Environment	Noise Immunity	Noise Voltage: 1,000 Vp-p Pulse Width: 1 µs Rise Time: 1 ns	
	Electrostatic Discharge Immunity	Contact Discharge Method: 6 kV (IEC/EN 61000-4-2 Level 3)	

Air quality requirements

Do not operate or store the panel where chemicals evaporate, or where chemicals are present in the air:

- Corrosive chemicals: Acids, alkalines, liquids containing salt.
- Flammable chemicals: Organic solvents.

⚠ CAUTION

INOPERATIVE EQUIPMENT

Do not allow water, liquids, metal, and wiring fragments to enter the panel case.

Failure to follow these instructions can result in injury or equipment damage.

Structural Specifications

Grounding	Functional grounding: Grounding resistance of 100 Ω, 2 mm^2 (AWG 14) or thicker wire, or your country's applicable standard. (Same for FG and SG terminals)
Cooling Method	Natural air circulation
Structure*1	IP65f NEMA #250 TYPE 4X/13 (on the front panel when properly installed in an enclosure)
External Dimensions	W218 x H173 x D60 mm (W8.58 x H6.81 x D2.36 in.)
Panel Cut Dimensions	W204.5 x H159.5 mm (W8.05 x H6.28 in.)*2 Panel thickness area: 1.6...5 mm (0.06...0.2 in.)*3
Weight	1.2 kg (2.6 lb) or less (main unit only)

NOTE: *1 The front face of the HMIGTO, installed in a solid panel, has been tested using conditions equivalent to the standards shown in the specification. Even though the HMIGTO's level of resistance is equivalent to these standards, oils that should have no effect on the HMIGTO can possibly harm the panel. This can occur in areas where either vaporized oils are present, or where low viscosity cutting oils are allowed to adhere to the panel for long periods of time. If the panel's front face protection sheet peels off, these conditions can lead to the ingress of oil into the panel and separate protection measures are suggested.
Also, if non-approved oils are present, they may cause deformation or corrosion of the front panel's plastic cover. Therefore, prior to installing the HMIGTO, be sure to confirm the type of conditions that will be present in the panel's operating environment. If the installation gasket is used for a long period of time, or if the HMIGTO and its gasket are removed from the panel, the original level of protection cannot be kept. To maintain the original protection level, be sure to replace the installation gasket regularly.

*2 For dimensional tolerance, everything +1/-0 mm (+0.04/-0 in.) and R in angle are below R3 (R0.12 in.)

*3 Even if the installation wall thickness is within the recommended range for the "Panel Cut Dimensions", depending on wall's material, size, and installation location of the panel and other devices, the installation wall could warp. To prevent warping, the installation surface may need to be strengthened.

⚠ CAUTION

EQUIPMENT DAMAGE

Ensure that the panel is not in permanent and direct contact with oils.

Failure to follow these instructions can result in injury or equipment damage.

NOTICE

STORAGE AND OPERATION OUTSIDE OF SPECIFICATIONS

- Store the panel in areas where temperatures are within the panel's specifications.
- Do not restrict or block the panel's rear-face ventilation slots.

Failure to follow these instructions can result in equipment damage.

NOTICE

GASKET AGING

- Inspect the gasket periodically as required by your operating environment to keep the initial IP level.
- Change the gasket at least once a year, or as soon as scratches or dirt become visible.

Failure to follow these instructions can result in equipment damage.

Display Specifications

		HMIGTO4310	HMIGTO3510
Display Type		TFT Color LCD	
Display Size		7.5”	7.0”
Resolution		640 x 480 pixels (VGA)	800 x 480 pixels (WVGA)
Effective Display Area		W153.7 x H115.8 mm (W6.05 x H4.56 in.)	W152.4 x H91.44 mm (W6.0 x H3.6 in.)
Display Colors		65,536 colors (No blink) / 16,384 colors Blink)	
Backlight		White LED (Not user replaceable. When replacement is required, contact your local distributor.)	
Backlight Service Life		50,000 hours or more (continuous operation at 25 °C [77 °F] before backlight brightness decreases to 50%)	
Brightness Control		16 levels (Adjusted with touch panel or software)	
Language Fonts		ASCII: (Code page 850) Alphanumeric (including European characters) Chinese: (GB2312-80 codes) Simplified Chinese fonts Japanese (except for XBT GT1000 series): ANK 158, Kanji: 6,962 (JIS Standards 1 & 2) (including 607 non-kanji characters) Korean: (KSC5601 - 1992 codes) Hangul fonts Taiwanese: (Big 5 codes) Traditional Chinese fonts	
Character sizes		8 x 8, 8 x 16, 16 x 16 and 32 x 32 pixel fonts	
Font sizes		You can expand the width up to 8 times, and expand the height up to 8 times.*1	
Text	8 x 8 pixels	80 characters per row x 60 rows	100 characters per row x 60 rows
	8 x 16 pixels	80 characters per row x 30 rows	100 characters per row x 30 rows
	16 x 16 pixels	40 characters per row x 30 rows	50 characters per row x 30 rows
	32 x 32 pixels	20 characters per row x 15 rows	25 characters per row x 15 rows

*1 You can set up other font sizes using the software.

Memory, Clock, Touch Panel, and Function Switches

Memory

	HMIGTO4310	HMIGTO3510
Application Memory *1	FLASH EPROM 96 MB	FLASH EPROM 96 MB
Application run DRAM	128 MB	128 MB
Data Backup	SRAM 512 KB (Replaceable lithium battery for data backup)	SRAM 128 KB (Replaceable lithium battery for data backup)

*1 Capacity available for user application.

NOTE:

- When the message "Battery level is low" is displayed, supply power to the panel and fully charge the battery.

Clock

Clock Accuracy*1	±65 seconds/month (deviation at room temperature and power is OFF).

*1 Depending on the operating temperature and age of panel, the clock can deviate from -380 to +90 sec/month. For systems where this level of precision is insufficient, the user should monitor and make adjustments when required.

Touch Panel

Touch Panel Type	Resistive Film (analog)
Touch Panel Resolution	1,024 x 1,024
Touch Panel Service Life	1 million times or more

Function Switches

HMIGTO3510: Eight switches (F1 to F8).

Interface Specifications

Serial Interface COM1

Asynchronous Transmission	RS-232C
Data Length	7 or 8 bits
Stop Bit	1 or 2 bits
Parity	None, odd or even
Data Transmission Speed	2,400...115,200 bps
Connector	D-Sub 9 pin (plug)

Serial Interface COM2

Asynchronous Transmission	RS-485
Data Length	7 or 8 bits
Stop Bit	1 or 2 bits
Parity	None, odd or even
Data Transmission Speed	2,400...115,200 bps, 187,500 bps (MPI)
Connector	Modular jack (RJ-45)

USB Interface

	USB (Type A) Interface	**USB (mini-B) Interface**
Connector	USB 2.0 (Type A) x 1	USB 2.0 (mini-B) x 1
Power Supply Voltage	5 Vdc ±5%	-
Maximum Current Supplied	500 mA	-
Maximum Transmission Distance	5 m (16.4 ft)	

Ethernet Interface

Ethernet (LAN)	IEEE802.3i / IEEE802.3u, 10BASE-T/100BASE-TX
Connector	Modular jack (RJ45) x 1

SD Card Interface

SD Card slot x 1 (maximum 32 GB SD/SDHC Card)

Specifications of Serial Interface COM1

Introduction

⚠ CAUTION

LOSS OF POWER

- Make sure all connections to the communication ports on the bottom and sides of the panel do not put excessive stress on the ports.
- Securely attach communication cables to the panel or cabinet.
- Use only D-Sub 9 pin cables with a locking system in good condition.

Failure to follow these instructions can result in injury or equipment damage.

The serial port is not isolated. The SG (signal ground) and FG (frame ground) terminals are connected inside the panel.

⚠⚠ DANGER

ELECTRIC SHOCK

When using the SG terminal to connect an external device to the panel:

- Verify that a short-circuit loop is not created when you set up the system.
- Connect the #5 SG terminal to remote equipment when the host (PLC) unit is not isolated. Connect the #5 SG terminal to a known reliable ground connection to reduce the risk of damaging the circuit.

Failure to follow these instructions will result in death or serious injury.

Serial Interface COM1

HMIGTO3510 / HMIGTO4310: D-Sub 9 pin plug connector via an RS-232C cable.

Pin Connection	Pin No.	RS-232C		
		Signal Name	Direction	Meaning
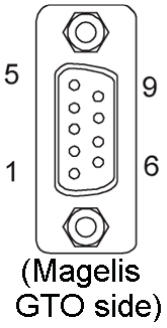 (Magelis GTO side)	1	CD	Input	Carrier Detect
	2	RD(RXD)	Input	Receive Data
	3	SD(TXD)	Output	Send Data
	4	ER(DTR)	Output	Data Terminal Ready
	5	SG	-	Signal Ground
	6	DR(DSR)	Input	Data Set Ready
	7	RS(RTS)	Output	Request to Send
	8	CS(CTS)	Input	Send possible
	9	CI(RI)/VCC	Input/–	Called Status Display +5V±5% Output 0.25A[*1]
	Shell	FG	–	Frame Ground (Common with SG)

NOTE: [*1] You can switch pin #9 between RI and VCC via software.

NOTICE

EQUIPMENT DAMAGE

Use only the rated current.

Failure to follow these instructions can result in equipment damage.

Interfit bracket is #4-40 (UNC).

⚠ CAUTION

LOSS OF COMMUNICATION

- All connections to the communication ports must not put excessive stress on the ports.
- Securely attach communication cables to the panel wall or cabinet.
- Use only D-Sub 9 pin cables with a locking tab in good condition.

Failure to follow these instructions can result in injury or equipment damage.

Specifications of Serial Interface COM2

Introduction

The serial port is not isolated. The SG (signal ground) and FG (frame ground) terminals are connected inside the panel.

⚠⚠ DANGER

ELECTRIC SHOCK

When using the SG terminal to connect an external device to the panel:
- Verify that a short-circuit loop is not created when you set up the system.
- Connect the #8 SG terminal to remote equipment when the host (PLC) unit is not isolated. Connect the #8 SG terminal to a known reliable ground connection to reduce the risk of damaging the circuit.

Failure to follow these instructions will result in death or serious injury.

Serial Interface COM2

HMIGTO3510 / HMIGTO4310: RJ45 connector via a RS-485 cable.

NOTE: When setting up RS-485 communication, the cable diagram for some equipment may require polarization on the terminal side. This terminal does not require any special setting as it handles polarization automatically.

Pin Connection	Pin No.	RS-485		
		Signal Name	Direction	Meaning
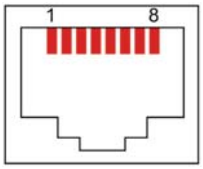	1	NC	-	-
	2	NC	-	-
	3	NC	-	-
	4	Line A	Input/Output	Transfer Data (RS-485)
	5	Line B	Input/Output	Transfer Data (RS-485)
	6	RS(RTS)	Output	Request To Send
	7	NC	-	-
	8	SG	-	Signal Ground

⚠ CAUTION

LOSS OF COMMUNICATION

- All connections to the communication ports must not put excessive stress on the ports.
- Securely attach communication cables to the panel wall or cabinet.
- Use only RJ45 with a locking tab in good condition.

Failure to follow these instructions can result in injury or equipment damage.

Dimensions

External Dimensions: HMIGTO3510

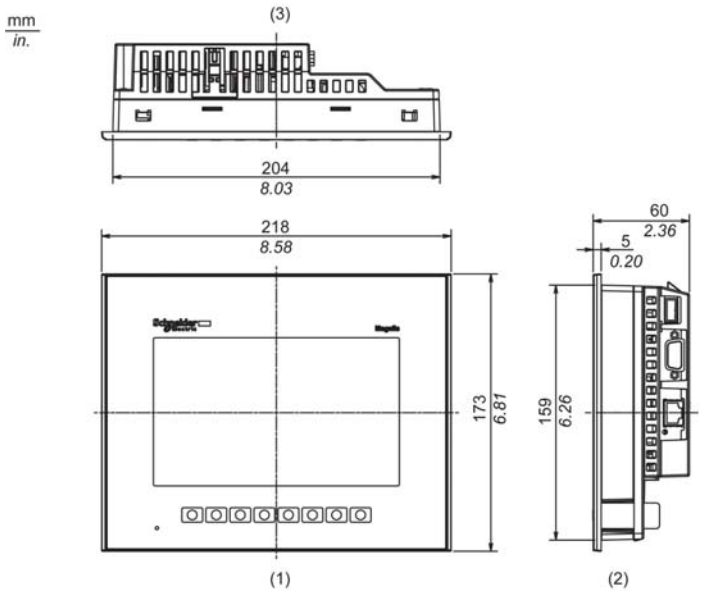

1 Front
2 Right Side
3 Top

External Dimensions: HMIGTO4310

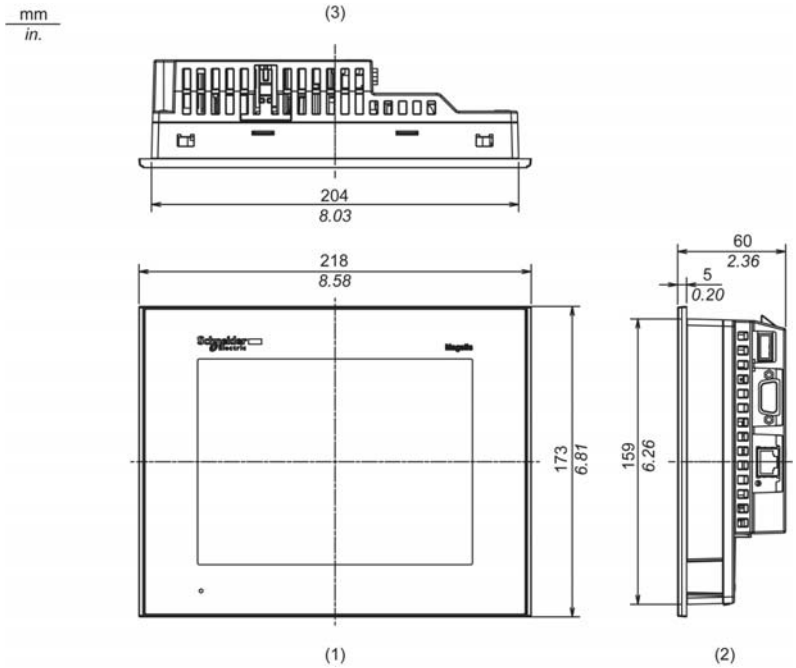

1 Front
2 Right Side
3 Top

Installation with Installation Fasteners: HMIGTO3510

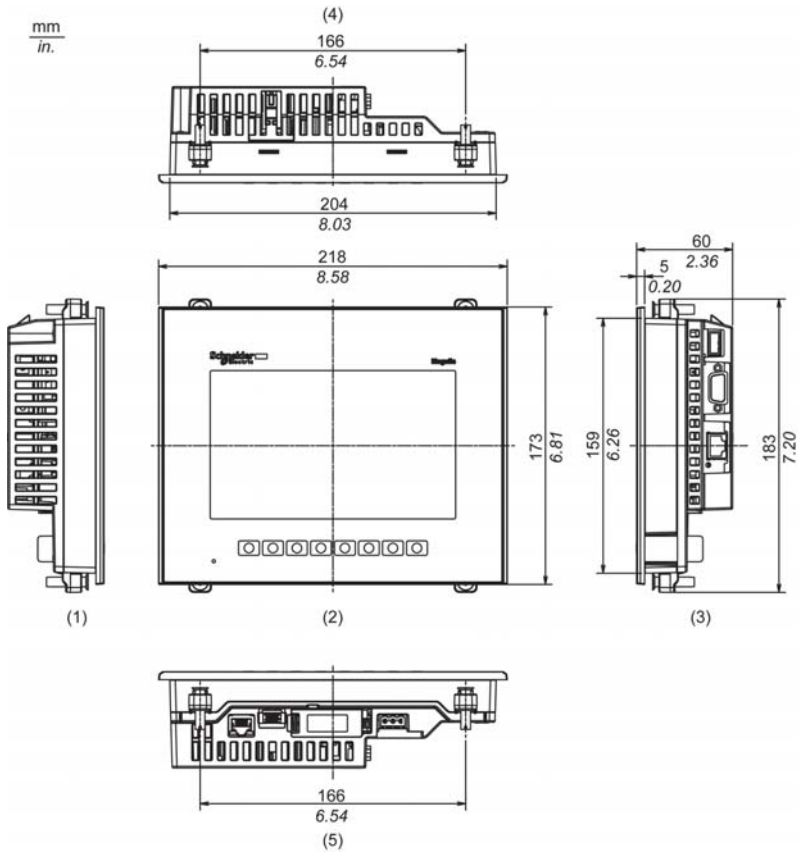

1 Left Side
2 Front
3 Right Side
4 Top
5 Bottom

Installation with Installation Fasteners: HMIGTO4310

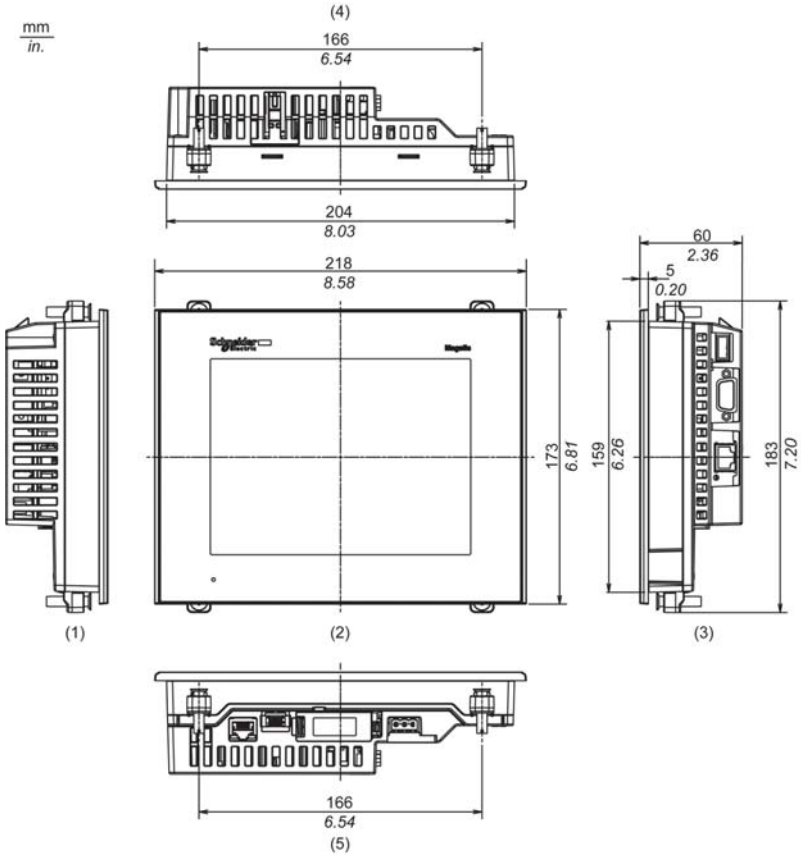

1 Left Side
2 Front
3 Right Side
4 Top
5 Bottom

Dimensions with Cables: HMIGTO3510

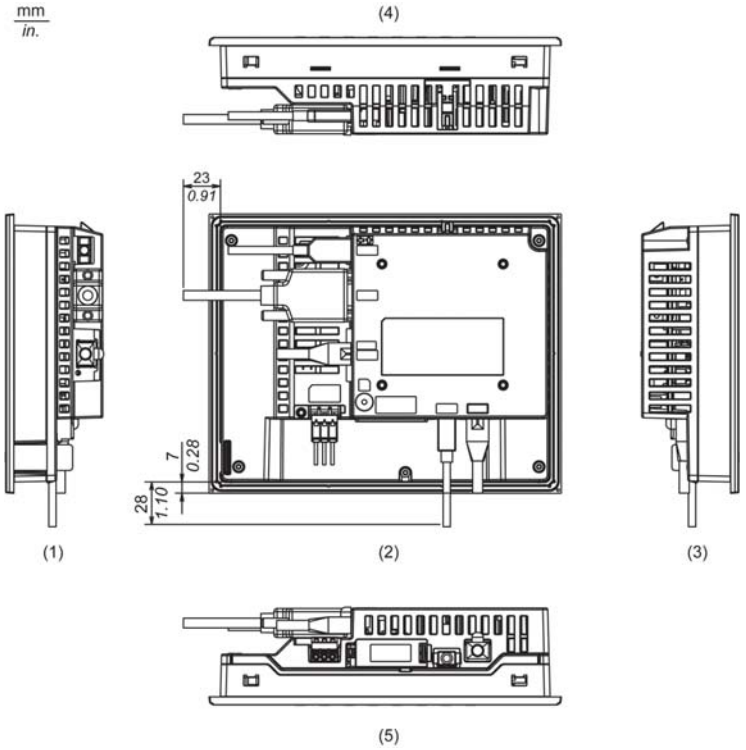

1 Left Side
2 Rear
3 Right Side
4 Top
5 Bottom

NOTE: All the above values are designed with cable bending in mind. The dimensions given here are representative values depending on the type of connection cable in use. Therefore, these values are intended for reference only.

Dimensions with Cables: HMIGTO4310

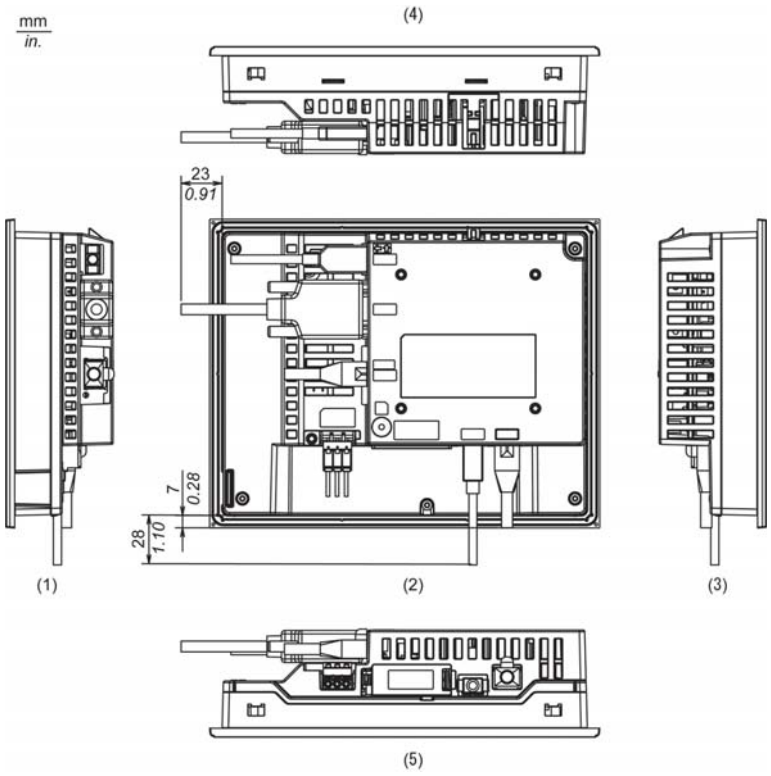

1 Left Side
2 Rear
3 Right Side
4 Top
5 Bottom

NOTE: All the above values are designed with cable bending in mind. The dimensions given here are representative values depending on the type of connection cable in use. Therefore, these values are intended for reference only.

Panel Cut Dimensions

Create a panel cut and insert the panel into the opening from the front.

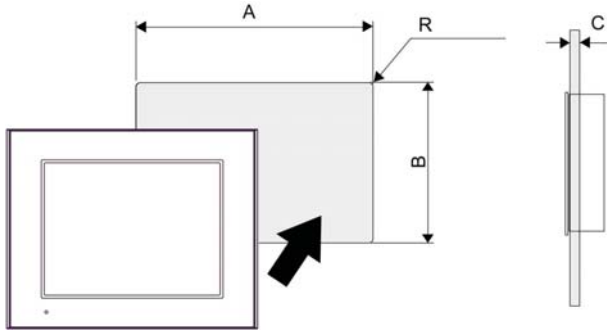

A	B	C	R
204.5 mm (+1, -0 mm) (8.05 in. [+0.04, -0 in.])	159.5 mm (+1, -0 mm) (6.28 in. [+0.04, -0 in.])	1.6...5 mm (0.06...0.2 in.)	3 mm (0.12 in.) maximum

NOTE: Before designing the panel cut, refer to Installation *(see page 120)*.

Installation Fastener Dimensions

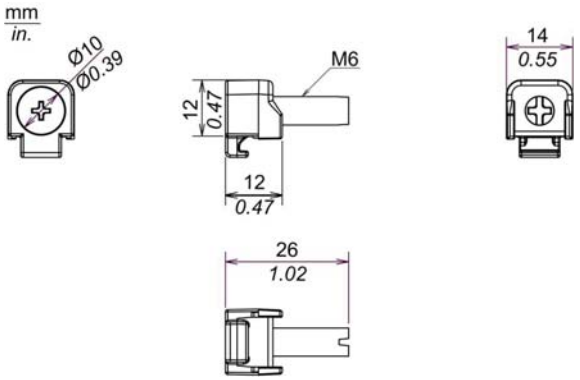

Section 4.4
HMIGTO5310/5315

What Is in This Section?

This section contains the following topics:

Topic	Page
Electrical Specifications	85
Environmental Specifications	86
Structural Specifications	87
Display Specifications	89
Memory, Clock, and Touch Panel	90
Interface Specifications	91
Specifications of Serial Interface COM1	92
Specifications of Serial Interface COM2	94
Dimensions	95

Electrical Specifications

Power Supply	Rated Input Voltage		24 Vdc
	Input Voltage Limits		19.2...28.8 Vdc
	Voltage Drop		10 ms or less
	Power Consumption		17 W or less
		When power is not supplied to external devices	12 W or less
		Backlight OFF (Standby Mode)	7 W or less
		Backlight Dimmed (Brightness: 20%)	8 W or less
	In-Rush Current		30 A or less
Voltage Endurance			1500 Vac, 20 mA for 1 min. (between charging and FG terminals)
Insulation Resistance			500 Vdc, 10 MΩ or more (between charging and FG terminals)

Environmental Specifications

Physical Environment	Surrounding Air Temperature	0...55 °C (32...131 °F)
	Storage Temperature	-20...60 °C (-4...140 °F)
	Surrounding Air and Storage Humidity	10...90% RH (Non condensing, wet bulb temperature 39 °C [102.2 °F] or less)
	Dust	0.1 mg/m^3 (10^{-7} oz/ft^3) or less (non-conductive levels)
	Pollution Degree	For use in Pollution Degree 2 environment
	Corrosive Gases	Free of corrosive gases
	Atmospheric Pressure (Operating Altitude)	800...1,114 hPa (2,000 m [6,561 ft] or lower)
Mechanical Environment	Vibration Resistance	IEC/EN 61131-2 compliant 5...9 Hz Single amplitude 3.5 mm (0.14 in.) 9...150 Hz Fixed acceleration: 9.8 m/s^2 X, Y, Z directions for 10 cycles (approx. 100 min.)
	Concussion Resistance	IEC/EN 61131-2 compliant 147 m/s^2, X, Y, Z directions for 3 times
Electrical Environment	Noise Immunity	Noise Voltage: 1,000 Vp-p Pulse Width: 1 µs Rise Time: 1 ns
	Electrostatic Discharge Immunity	Contact Discharge Method: 6 kV (IEC/EN 61000-4-2 Level 3)

Air quality requirements

Do not operate or store the panel where chemicals evaporate, or where chemicals are present in the air:

- Corrosive chemicals: Acids, alkalines, liquids containing salt.
- Flammable chemicals: Organic solvents.

⚠ CAUTION

INOPERATIVE EQUIPMENT

Do not allow water, liquids, metal, and wiring fragments to enter the panel case.

Failure to follow these instructions can result in injury or equipment damage.

Structural Specifications

	HMIGTO5310	HMIGTO5315
Grounding	Functional grounding: Grounding resistance of 100Ω, 2mm^2 (AWG 14) or thicker wire, or your country's applicable standard. (Same for FG and SG terminals)	
Cooling Method	Natural air circulation	
Structure[*1]	IP65f NEMA #250 TYPE 4X/13 (on the front panel when properly installed in an enclosure)	IP66k NEMA #250 TYPE 4X/13 (on the front panel when properly installed in an enclosure)[*2]
External Dimensions	W272.5 x H214.5 x D57 mm (W10.73 x H8.44 x D2.24 in.)	W316.5 x H258.5 x D57 mm (W12.44 x H10.18 x D2.24 in.)
Panel Cut Dimensions	W259 x H201 mm (W10.2 x H7.91 in.)[*3] Panel thickness area: 1.6...5 mm (0.06...0.2 in.)[*4]	W298 x H240 mm (W11.73 x H9.45 in.)[*3] Panel thickness area: 1.6...5 mm (0.06...0.2 in.)[*4]
Weight	2.0 kg (4.4 lb) or less (main unit only)	2.5 kg (5.5 lb) or less (main unit only)

NOTE: [*1] The front face of the HMIGTO, installed in a solid panel, has been tested using conditions equivalent to the standards shown in the specification. Even though the HMIGTO's level of resistance is equivalent to these standards, oils that should have no effect on the HMIGTO can possibly harm the panel. This can occur in areas where either vaporized oils are present, or where low viscosity cutting oils are allowed to adhere to the panel for long periods of time. If the panel's front face protection sheet peels off, these conditions can lead to the ingress of oil into the panel and separate protection measures are suggested.
Also, if non-approved oils are present, they may cause deformation or corrosion of the front panel's plastic cover. Therefore, prior to installing the HMIGTO, be sure to confirm the type of conditions that will be present in the panel' operating environment. If the installation gasket is used for a long period of time, or if the HMIGTO and its gasket are removed from the panel, the original level of protection cannot be kept. To maintain the original protection level, be sure to replace the installation gasket regularly.
[*2] When installing the HMIGTO in a panel, you may not be able to mount the HMIGTO flush with the panel. This occurs due to the thickness of the gasket. The difference in level between the HMIGTO and panel depends on how much the gasket is compressed.

NOTICE

EQUIPMENT DAMAGE

For food and beverage and pharmaceutical industries, when the HMIGTO is not flush with panel, use silicon to form a seal to prevent water, chemicals, or food from lodging into place. Otherwise, the panel face could leak.

Failure to follow these instructions can result in equipment damage.

[*3] For dimensional tolerance, everything +1/-0 mm (+0.04/-0 in.) and R in angle are below R3 (R0.12 in.)

[*4] Even if the installation wall thickness is within the recommended range for the "Panel Cut Dimensions", depending on wall's material, size, and installation location of the panel and other devices, the installation wall could warp. To prevent warping, the installation surface may need to be strengthened.

⚠ CAUTION

EQUIPMENT DAMAGE

Ensure that the panel is not in permanent and direct contact with oils.

Failure to follow these instructions can result in injury or equipment damage.

NOTICE

STORAGE AND OPERATION OUTSIDE OF SPECIFICATIONS

- Store the panel in areas where temperatures are within the panel's specifications.
- Do not restrict or block the panel's rear-face ventilation slots.

Failure to follow these instructions can result in equipment damage.

NOTICE

GASKET AGING

- Inspect the gasket periodically as required by your operating environment to keep the initial IP level.
- Change the gasket at least once a year, or as soon as scratches or dirt become visible.

Failure to follow these instructions can result in equipment damage.

Display Specifications

Display Type		TFT Color LCD
Display Size		10.4”
Resolution		640 x 480 pixels (VGA)
Effective Display Area		W211.2 x H158.4 mm (8.31 x 6.24 in.)
Display Colors		65,536 colors (No blink) / 16,384 colors (Blink)
Backlight		White LED (Not user replaceable. When replacement is required, contract your local distributor.)
Backlight Service Life		50,000 hours or more (continuous operation at 25 °C [77 °F] before backlight brightness dimmed to 50%
Brightness Control		16 levels (Adjusted with the touch panel or software)
Language Fonts		ASCII: (Code page 850) Alphanumeric (including European characters) Chinese: (GB2312-80 codes) Simplified Chinese fonts Japanese: ANK 158, Kanji: 6,962 (JIS Standards 1 & 2) (including 607 non-kanji characters) Korean: (KSC5601 - 1992 codes) Hangul fonts Taiwanese: (Big 5 codes) Traditional Chinese fonts
Character Sizes		8 x 8, 8 x 16, 16 x 16 and 32 x 32 pixel fonts
Font Sizes		You can expand the width up to 8 times, and expand the height up to 8 times.*1
Text	8 x 8 pixels	80 characters per row x 60 rows
	8 x 16 pixels	80 characters per row x 30 rows
	16 x 16 pixels	40 characters per row x 30 rows
	32 x 32 pixels	20 characters per row x 15 rows

*1 You can set up other font sizes using the software.

Memory, Clock, and Touch Panel

Memory

Application Memory *1	FLASH EPROM 96 MB
Application run DRAM	128 MB
Data Backup	SRAM 512 KB (Replaceable lithium battery for data backup)

*1 Capacity available for user application.

NOTE:

- When the message "Battery level is low" is displayed, supply power to the panel and fully charge the battery.

Clock

Clock Accuracy*1	±65 seconds/month (deviation at room temperature and power is OFF).

*1 Depending on the operating temperature and age of panel, the clock can deviate from -380 to +90 sec/month. For systems where this level of precision is insufficient, the user should monitor and make adjustments when required.

Touch Panel

Touch Panel Type	Resistive Film (analog)
Touch Panel Resolution	1,024 x 1,024
Service Life	1 million times or more

Interface Specifications

Serial Interface COM1

Asynchronous Transmission	RS-232C
Data Length	7 or 8 bits
Stop Bit	1 or 2 bits
Parity	None, odd or even
Data Transmission Speed	2,400...115,200 bps
Connector	D-Sub 9 pin (plug)

Serial Interface COM2

Asynchronous Transmission	RS-485
Data Length	7 or 8 bits
Stop Bit	1 or 2 bits
Parity	None, odd or even
Data Transmission Speed	2,400...115,200 bps, 187,500 bps (MPI)
Connector	Modular jack (RJ-45)

USB Interface

	USB (Type A) Interface	**USB (mini-B) Interface**
Connector	USB 2.0 (Type A) x 1	USB 2.0 (mini-B) x 1
Power Supply Voltage	5 Vdc ±5%	-
Maximum Current Supplied	500 mA	-
Maximum Transmission Distance	5 m (16.4 ft)	

Ethernet Interface

Ethernet (LAN)	IEEE802.3i / IEEE802.3u, 10BASE-T/100BASE-TX
Connector	Modular jack (RJ45) x 1

SD Card Interface

SD Card slot x 1 (maximum 32 GB SD/SDHC Card)

Specifications of Serial Interface COM1

Introduction

⚠ CAUTION

LOSS OF POWER

- Make sure all connections to the communication ports on the bottom and sides of the panel do not put excessive stress on the ports.
- Securely attach communication cables to the panel or cabinet.
- Use only D-Sub 9 pin cables with a locking system in good condition.

Failure to follow these instructions can result in injury or equipment damage.

The serial port is not isolated. The SG (signal ground) and FG (frame ground) terminals are connected inside the panel.

⚠⚠ DANGER

ELECTRIC SHOCK

When using the SG terminal to connect an external device to the panel:

- Verify that a short-circuit loop is not created when you set up the system.
- Connect the #5 SG terminal to remote equipment when the host (PLC) unit is not isolated. Connect the #5 SG terminal to a known reliable ground connection to reduce the risk of damaging the circuit.

Failure to follow these instructions will result in death or serious injury.

Serial Interface COM1

HMIGTO5310 / HMIGTO5315: D-Sub 9 pin plug connector via an RS-232C cable.

Pin Connection	Pin No.	RS-232C		
		Signal Name	Direction	Meaning
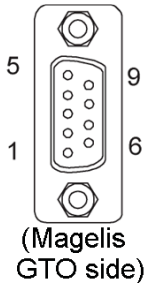 (Magelis GTO side)	1	CD	Input	Carrier Detect
	2	RD(RXD)	Input	Receive Data
	3	SD(TXD)	Output	Send Data
	4	ER(DTR)	Output	Data Terminal Ready
	5	SG	-	Signal Ground
	6	DR(DSR)	Input	Data Set Ready
	7	RS(RTS)	Output	Request to Send
	8	CS(CTS)	Input	Send possible
	9	CI(RI)/VCC	Input/–	Called Status Display +5V±5% Output 0.25A[*1]
	Shell	FG	–	Frame Ground (Common with SG)

NOTE: [*1] You can switch pin #9 between RI and VCC via software.

NOTICE

EQUIPMENT DAMAGE

Use only the rated current.

Failure to follow these instructions can result in equipment damage.

Interfit bracket is #4-40 (UNC).

⚠ CAUTION

LOSS OF COMMUNICATION

- All connections to the communication ports must not put excessive stress on the ports.
- Securely attach communication cables to the panel wall or cabinet.
- Use only D-Sub 9 pin cables with a locking tab in good condition.

Failure to follow these instructions can result in injury or equipment damage.

Specifications of Serial Interface COM2

Introduction

The serial port is not isolated. The SG (signal ground) and FG (frame ground) terminals are connected inside the panel.

⚠⚠ DANGER

ELECTRIC SHOCK

When using the SG terminal to connect an external device to the panel:
- Verify that a short-circuit loop is not created when you set up the system.
- Connect the #8 SG terminal to remote equipment when the host (PLC) unit is not isolated. Connect the #8 SG terminal to a known reliable ground connection to reduce the risk of damaging the circuit.

Failure to follow these instructions will result in death or serious injury.

Serial Interface COM2

HMIGTO5310 / HMIGTO5315: RJ45 connector via a RS-485 cable.

NOTE: When setting up RS-485 communication, the cable diagram for some equipment may require polarization on the terminal side. This terminal does not require any special setting as it handles polarization automatically.

Pin Connection	Pin No.	RS-485		
		Signal Name	Direction	Meaning
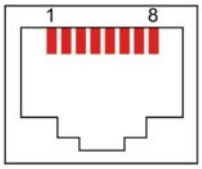	1	NC	-	-
	2	NC	-	-
	3	NC	-	-
	4	Line A	Input/Output	Transfer Data (RS-485)
	5	Line B	Input/Output	Transfer Data (RS-485)
	6	RS(RTS)	Output	Request To Send
	7	NC	-	-
	8	SG	-	Signal Ground

⚠ CAUTION

LOSS OF COMMUNICATION

- All connections to the communication ports must not put excessive stress on the ports.
- Securely attach communication cables to the panel wall or cabinet.
- Use only RJ45 with a locking tab in good condition.

Failure to follow these instructions can result in injury or equipment damage.

Dimensions

External Dimensions: HMIGTO5310

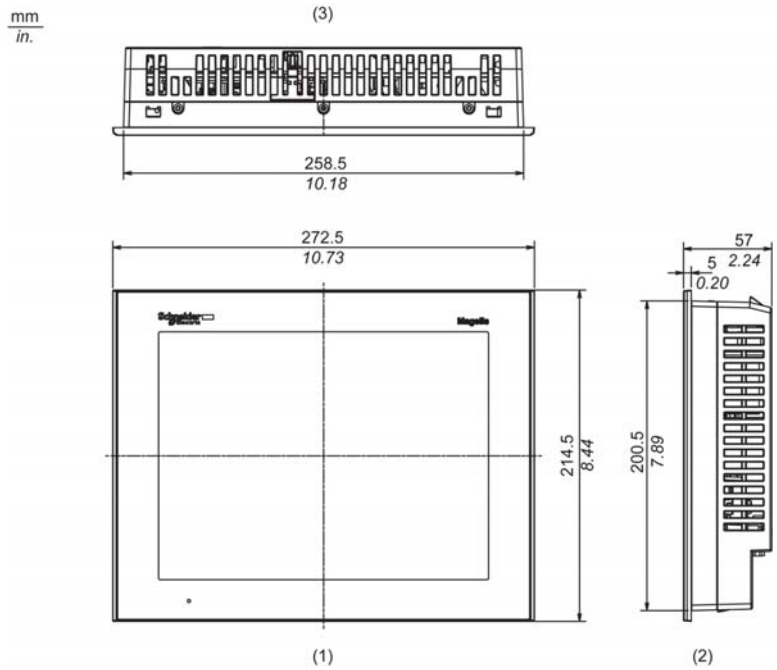

1 Front
2 Right Side
3 Top

External Dimensions: HMIGTO5315

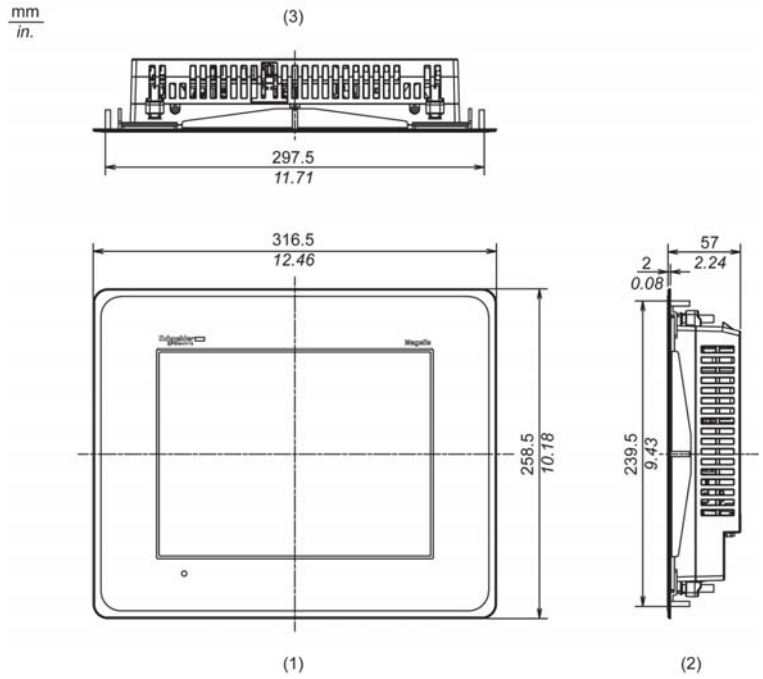

1 Front
2 Right Side
3 Top

Installation with Installation Fasteners: HMIGTO5310

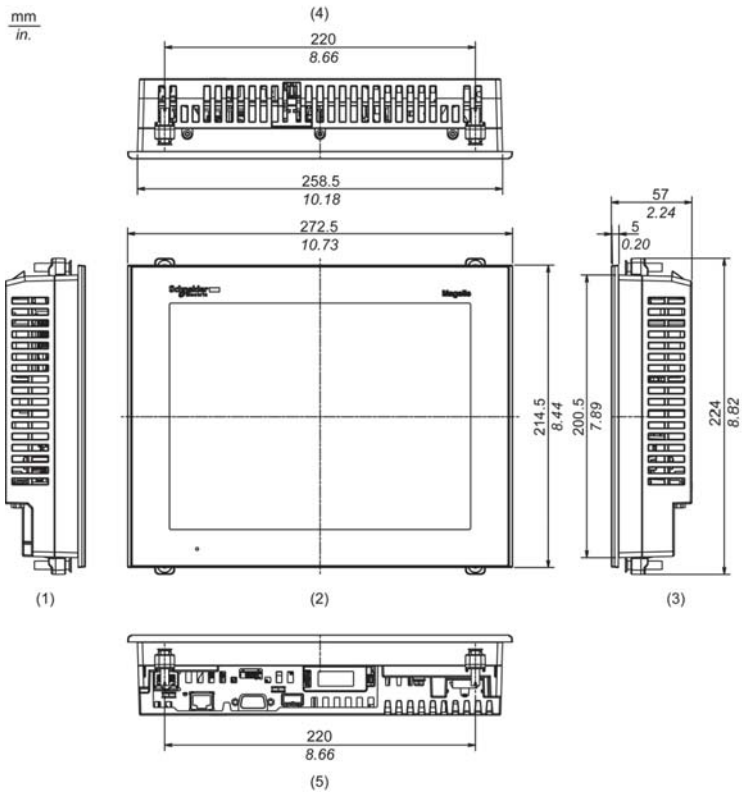

1 Left Side
2 Front
3 Right Side
4 Top
5 Bottom

Installation with Installation Fasteners: HMIGTO5315

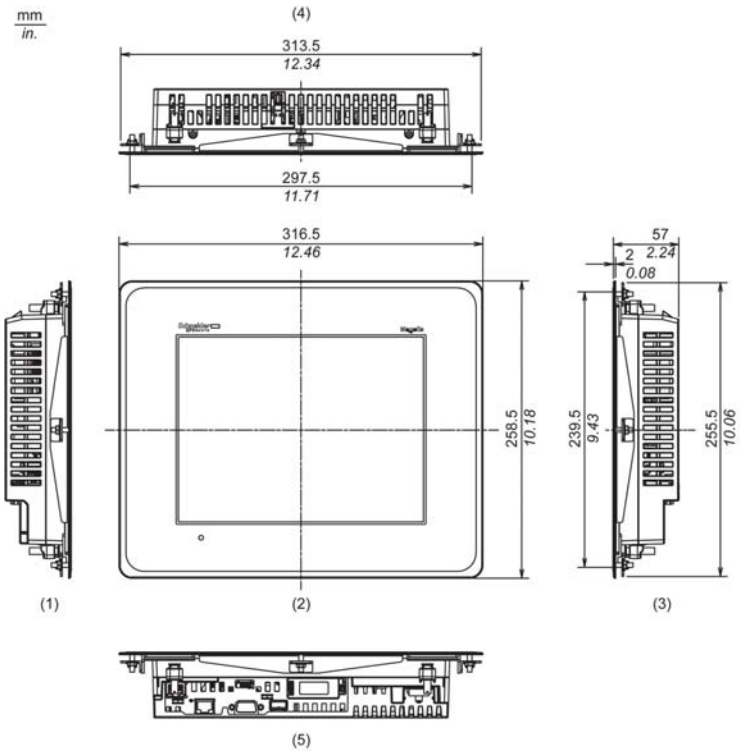

1 Left Side
2 Front
3 Right Side
4 Top
5 Bottom

Dimensions with Cables: HMIGTO5310

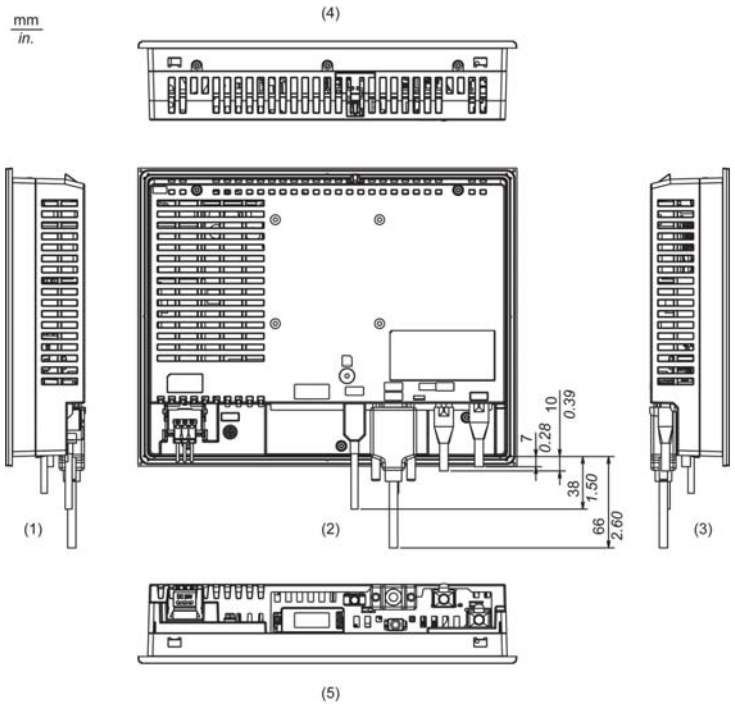

1 Left Side
2 Rear
3 Right Side
4 Top
5 Bottom

NOTE: All the above values are designed with cable bending in mind. The dimensions given here are representative values depending on the type of connection cable in use. Therefore, these values are intended for reference only.

Dimensions with Cables: HMIGTO5315

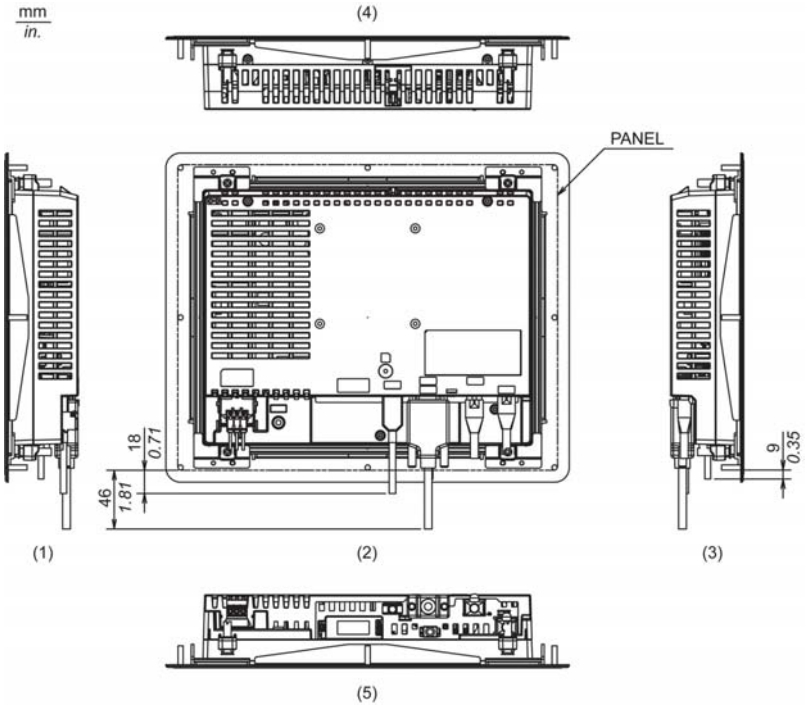

1 Left Side
2 Rear
3 Right Side
4 Top
5 Bottom

NOTE: All the above values are designed with cable bending in mind. The dimensions given here are representative values depending on the type of connection cable in use. Therefore, these values are intended for reference only.

Panel Cut Dimensions

Create a panel cut and insert the panel into the opening from the front.

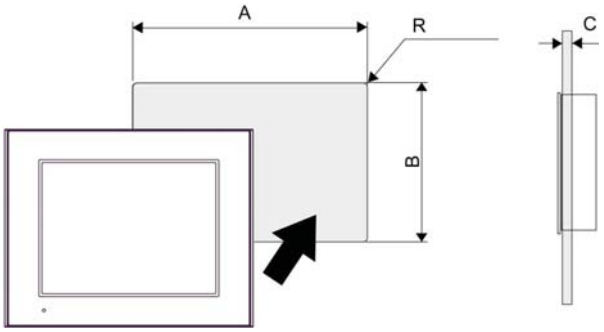

	A	B	C	R
HMIGTO5310	259 mm (+1, -0 mm) (10.2 in. [+0.04, -0 in.])	201 mm (+1, -0 mm) (7.91 in. [+0.04, -0 in.])	1.6...5 mm (0.06...0.2 in.)	3 mm (0.12 in.) maximum
HMIGTO5315	298 mm (+1, -0 mm) (11.73 in. [+0.04, -0 in.])	240 mm (+1, -0 mm) (9.45 in. [+0.04, -0 in.])		

NOTE: Before designing the panel cut, refer to Installation *(see page 120)*.

Installation Fastener Dimensions

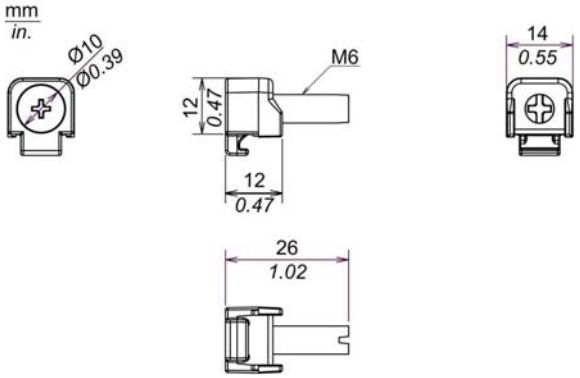

Section 4.5
HMIGTO6310/6315

What Is in This Section?

This section contains the following topics:

Topic	Page
Electrical Specifications	102
Environmental Specifications	103
Structural Specifications	104
Display Specifications	106
Memory, Clock, and Touch Panel	107
Interface Specifications	108
Specifications of Serial Interface COM1	109
Specifications of Serial Interface COM2	111
Dimensions	112

Electrical Specifications

Power Supply	Rated Input Voltage		24 Vdc
	Input Voltage Limits		19.2...28.8 Vdc
	Voltage Drop		10 ms or less
	Power Consumption		17 W or less
		When power is not supplied to external devices	12 W or less
		Backlight OFF (Standby Mode)	7 W or less
		Backlight Dimmed (Brightness: 20%)	8 W or less
	In-Rush Current		30 A or less
Voltage Endurance			1,500 Vac, 20 mA for 1 minute (between charging and FG terminals)
Insulation Resistance			500 Vdc, 10 MΩ or more (between charging and FG terminals)

Environmental Specifications

Physical Environment	Surrounding Air Temperature	0...55 °C (32...131 °F)
	Storage Temperature	-20...60 °C (-4...140 °F)
	Surrounding Air and Storage Humidity	10...90% RH (Non condensing, wet bulb temperature 39 °C [102.2 °F] or less)
	Dust	0.1 mg/m^3 (10^{-7} oz/ft^3) or less (non-conductive levels)
	Pollution Degree	For use in Pollution Degree 2 environment
	Corrosive gases	Free of corrosive gases
	Atmospheric Pressure (Operating Altitude)	800...1,114 hPa (2,000 m [6,561 ft] or lower)
Mechanical Environment	Vibration Resistance	IEC/EN 61131-2 compliant 5...9 Hz Single amplitude 3.5 mm (0.14 in.) 9...150 Hz Fixed acceleration: 9.8 m/s^2 X, Y, Z directions for 10 cycles (approx.100 minute)
	Concussion Resistance	IEC/EN 61131-2 compliant 147 m/s^2, X, Y, Z directions for 3 times
Electrical Environment	Noise immunity	Noise Voltage: 1,000 Vp-p Pulse Width: 1 µs Rise Time: 1 ns
	Electrostatic Discharge Immunity	Contact Discharge Method: 6 kV (IEC/EN 61000-4-2 Level 3)

Air quality requirements

Do not operate or store the panel where chemicals evaporate, or where chemicals are present in the air:

- Corrosive chemicals: Acids, alkalines, liquids containing salt.
- Flammable chemicals: Organic solvents.

⚠ CAUTION

INOPERATIVE EQUIPMENT

Do not allow water, liquids, metal, and wiring fragments to enter the panel case.

Failure to follow these instructions can result in injury or equipment damage.

Structural Specifications

	HMIGTO6310	HMIGTO6315
Grounding	Functional grounding: Grounding resistance of 100 Ω, 2 mm^2 (AWG 14) or thicker wire, or your country's applicable standard. (Same for FG and SG terminals)	
Cooling Method	Natural air circulation	
Structure[*1]	IP65f NEMA #250 TYPE 4X/13 (on the front panel when properly installed in an enclosure)	IP66k NEMA #250 TYPE 4X/13 (on the front panel when properly installed in an enclosure)[*2]
External Dimensions	W315 x H241 x D56 mm (W12.4 x H9.49 x D2.2 in.)	W359 x H285 x D56 mm (W14.13 x H11.22 x D2.2 in.)
Panel Cut Dimensions	W301.5 x H227.5 mm (W11.87 x H8.96 in.)[*3] Panel thickness area: 1.6...5 mm (0.06...0.2 in.)[*4]	W340.5 x H266.5 mm (W13.41 x H10.49 in.)[*3] Panel thickness area: 1.6...5 mm (0.06...0.2 in.)[*4]
Weight	2.5 kg (5.5 lb) or less (main unit only)	3 kg (6.6 lb) or less (main unit only)

NOTE: [*1] The front face of the HMIGTO, installed in a solid panel, has been tested using conditions equivalent to the standards shown in the specification. Even though the HMIGTO's level of resistance is equivalent to these standards, oils that should have no effect on the HMIGTO can possibly harm the panel. This can occur in areas where either vaporized oils are present, or where low viscosity cutting oils are allowed to adhere to the panel for long periods of time. If the panel's front face protection sheet peels off, these conditions can lead to the ingress of oil into the panel and separate protection measures are suggested.

Also, if non-approved oils are present, they may cause deformation or corrosion of the front panel's plastic cover. Therefore, prior to installing the HMIGTO, be sure to confirm the type of conditions that will be present in the panel's operating environment. If the installation gasket is used for a long period of time, or if the HMIGTO and its gasket are removed from the panel, the original level of protection cannot be kept. To maintain the original protection level, be sure to replace the installation gasket regularly.

[*2] When installing the HMIGTO in a panel, you may not be able to mount the HMIGTO flush with the panel. This occurs due to the thickness of the gasket. The difference in level between the HMIGTO and panel depends on how much the gasket is compressed.

NOTICE

EQUIPMENT DAMAGE

For food and beverage and pharmaceutical industries, when the HMIGTO is not flush with panel, use silicon to form a seal to prevent water, chemicals, or food from lodging into place. Otherwise, the panel face could leak.

Failure to follow these instructions can result in equipment damage.

[*3] For dimensional tolerance, everything +1/-0 mm (+0.04/-0 in.) and R in angle are below R3 (R0.12in.)

[*4] Even if the installation wall thickness is within the recommended range for the "Panel Cut Dimensions", depending on wall's material, size, and installation location of the panel and other devices, the installation wall could warp. To prevent warping, the installation surface may need to be strengthened.

⚠ CAUTION

EQUIPMENT DAMAGE

Ensure that the panel is not in permanent and direct contact with oils.

Failure to follow these instructions can result in injury or equipment damage.

NOTICE

STORAGE AND OPERATION OUTSIDE OF SPECIFICATIONS

- Store the panel in areas where temperatures are within the panel's specifications.
- Do not restrict or block the panel's rear-face ventilation slots.

Failure to follow these instructions can result in equipment damage.

NOTICE

GASKET AGING

- Inspect the gasket periodically as required by your operating environment to keep the initial IP level.
- Change the gasket at least once a year, or as soon as scratches or dirt become visible.

Failure to follow these instructions can result in equipment damage.

Display Specifications

Display Type		TFT Color LCD
Display Size		12.1”
Resolution		800 x 600 pixels (SVGA)
Effective Display Area		W246.0 x H184.5 mm (W9.69 x H7.26 in.)
Display Colors		65,536 colors (No blink) / 16,384 colors (Blink)
Backlight		White LED (Not user replaceable. When replacement is required, contact your local distributor.)
Backlight Service Life		50,000 hours (continuous operation at at 25 °C [77 °F] before backlight brightness decreases to 50%)
Brightness Control		16 levels (Adjusted with touch panel or software)
Language Fonts		ASCII: (Code page 850) Alphanumeric (including European characters) Chinese: (GB2312-80 codes) Simplified Chinese fonts Japanese: ANK 158, Kanji: 6,962 (JIS Standards 1 & 2) (including 607 non-kanji characters) Korean: (KSC5601 - 1992 codes) Hangul fonts Taiwanese: (Big 5 codes) Traditional Chinese fonts
Character Sizes		8 x 8, 8 x 16, 16 x 16 and 32 x 32 pixel fonts
Text	8 x 8 pixels	100 characters per row x 75 rows
	8 x 16 pixels	100 characters per row x 37 rows
	16 x 16 pixels	50 characters per row x 37 rows
	32 x 32 pixels	25 characters per row x 18 rows

*1 You can set up other font sizes using the software.

Memory, Clock, and Touch Panel

Memory

Application Memory*1	FLASH EPROM96 MB
Application run DRAM	128 MB
Data Backup	SRAM 512 KB (Replaceable lithium battery for backup memory)

*1 Capacity available for user application.

NOTE:

- When the message "Battery level is low" is displayed, supply power to the panel and fully charge the battery.

Clock

Clock Accuracy*1	±65 seconds/month (deviation at room temperature and power is OFF).

*1 Depending on the operating temperature and age of the panel, the clock can deviate from -380 to +90 sec/month. For systems where this level of precision is insufficient, the user should monitor and make adjustments when required.

Touch Panel

Touch Panel Type	Resistive Film (analog)
Touch Panel Resolution	1,024 x 1,024
Touch Panel Service Life	1 million times or more

Interface Specifications

Serial Interface COM1

Asynchronous Transmission	RS-232C
Data Length	7 or 8 bits
Stop Bit	1 or 2 bits
Parity	None, odd or even
Data Transmission Speed	2,400...115,200 bps
Connector	D-Sub 9 pin (plug)

Serial Interface COM2

Asynchronous Transmission	RS-485
Data Length	7 or 8 bits
Stop Bit	1 or 2 bits
Parity	None, odd or even
Data Transmission Speed	2,400...115,200 bps, 187,500 bps (MPI)
Connector	Modular jack (RJ-45)

USB Interface

	USB (Type A) Interface	**USB (mini-B) Interface**
Connector	USB 2.0 (Type A) x 1	USB 2.0 (mini-B) x 1
Power Supply Voltage	5 Vdc ±5%	-
Maximum Current Supplied	500 mA	-
Maximum Transmission Distance	5 m (16.4 ft)	

Ethernet Interface

Ethernet (LAN)	IEEE802.3i / IEEE802.3u, 10BASE-T/100BASE-TX
Connector	Modular jack (RJ45) x 1

SD Card Interface

SD Card slot x 1 (maximum 32 GB SD/SDHC Card)

Specifications of Serial Interface COM1

Introduction

⚠ CAUTION

LOSS OF POWER

- Make sure all connections to the communication ports on the bottom and sides of the panel do not put excessive stress on the ports.
- Securely attach communication cables to the panel or cabinet.
- Use only D-Sub 9 pin cables with a locking system in good condition.

Failure to follow these instructions can result in injury or equipment damage.

The serial port is not isolated. The SG (signal ground) and FG (frame ground) terminals are connected inside the panel.

⚠⚠ DANGER

ELECTRIC SHOCK

When using the SG terminal to connect an external device to the panel:

- Verify that a short-circuit loop is not created when you set up the system.
- Connect the #5 SG terminal to remote equipment when the host (PLC) unit is not isolated. Connect the #5 SG terminal to a known reliable ground connection to reduce the risk of damaging the circuit.

Failure to follow these instructions will result in death or serious injury.

Serial Interface COM1

HMIGTO6310 / HMIGTO6315: D-Sub 9 pin plug connector via an RS-232C cable.

Pin Connection	Pin No.	RS-232C		
		Signal Name	Direction	Meaning
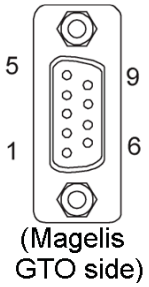 (Magelis GTO side)	1	CD	Input	Carrier Detect
	2	RD(RXD)	Input	Receive Data
	3	SD(TXD)	Output	Send Data
	4	ER(DTR)	Output	Data Terminal Ready
	5	SG	-	Signal Ground
	6	DR(DSR)	Input	Data Set Ready
	7	RS(RTS)	Output	Request to Send
	8	CS(CTS)	Input	Send possible
	9	CI(RI)/VCC	Input/–	Called Status Display +5V±5% Output 0.25A[*1]
	Shell	FG	–	Frame Ground (Common with SG)

NOTE: [*1] You can switch pin #9 between RI and VCC via software.

NOTICE

EQUIPMENT DAMAGE

Use only the rated current.

Failure to follow these instructions can result in equipment damage.

Interfit bracket is #4-40 (UNC).

⚠ CAUTION

LOSS OF COMMUNICATION

- All connections to the communication ports must not put excessive stress on the ports.
- Securely attach communication cables to the panel wall or cabinet.
- Use only D-Sub 9 pin cables with a locking tab in good condition.

Failure to follow these instructions can result in injury or equipment damage.

Specifications of Serial Interface COM2

Introduction

The serial port is not isolated. The SG (signal ground) and FG (frame ground) terminals are connected inside the panel.

⚠⚠ DANGER

ELECTRIC SHOCK

When using the SG terminal to connect an external device to the panel:
- Verify that a short-circuit loop is not created when you set up the system.
- Connect the #8 SG terminal to remote equipment when the host (PLC) unit is not isolated. Connect the #8 SG terminal to a known reliable ground connection to reduce the risk of damaging the circuit.

Failure to follow these instructions will result in death or serious injury.

Serial Interface COM2

HMIGTO6310 / HMIGTO6315: RJ45 connector via a RS-485 cable.

NOTE: When setting up RS-485 communication, the cable diagram for some equipment may require polarization on the terminal side. This terminal does not require any special setting as it handles polarization automatically.

Pin Connection	Pin No.	RS-485		
		Signal Name	Direction	Meaning
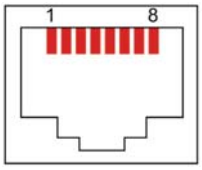	1	NC	-	-
	2	NC	-	-
	3	NC	-	-
	4	Line A	Input/Output	Transfer Data (RS-485)
	5	Line B	Input/Output	Transfer Data (RS-485)
	6	RS(RTS)	Output	Request To Send
	7	NC	-	-
	8	SG	-	Signal Ground

⚠ CAUTION

LOSS OF COMMUNICATION

- All connections to the communication ports must not put excessive stress on the ports.
- Securely attach communication cables to the panel wall or cabinet.
- Use only RJ45 with a locking tab in good condition.

Failure to follow these instructions can result in injury or equipment damage.

Dimensions

External Dimensions: HMIGTO6310

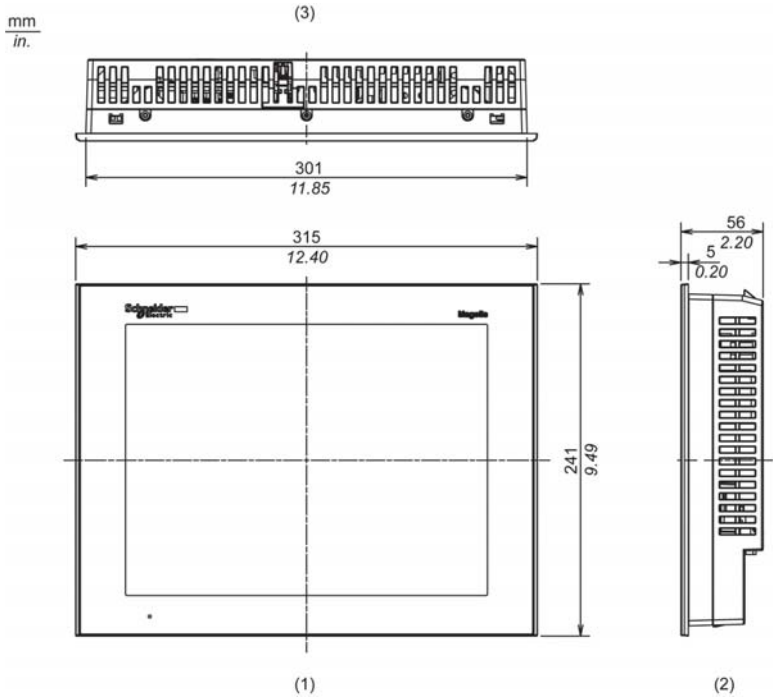

1 Front
2 Right Side
3 Top

External Dimensions: HMIGTO6315

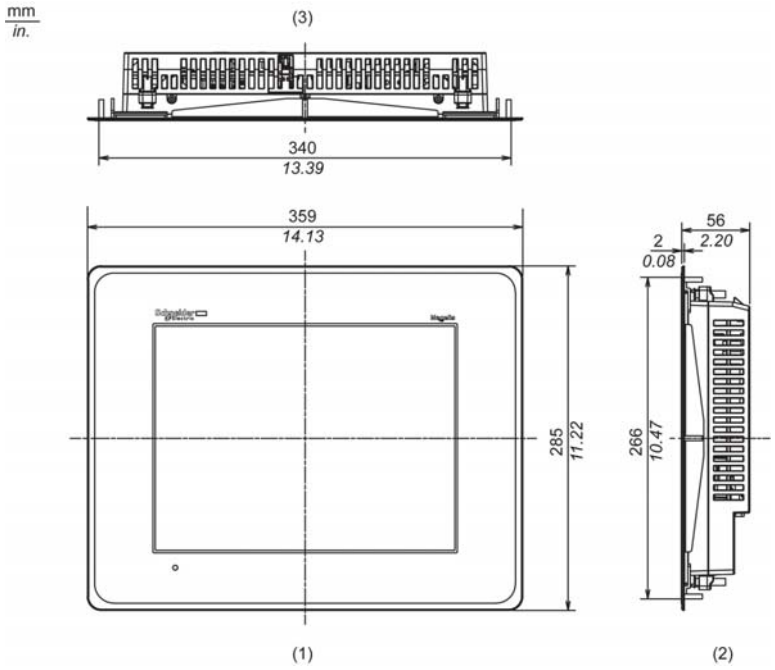

1 Front
2 Right Side
3 Top

Installation with Installation Fasteners: HMIGTO6310

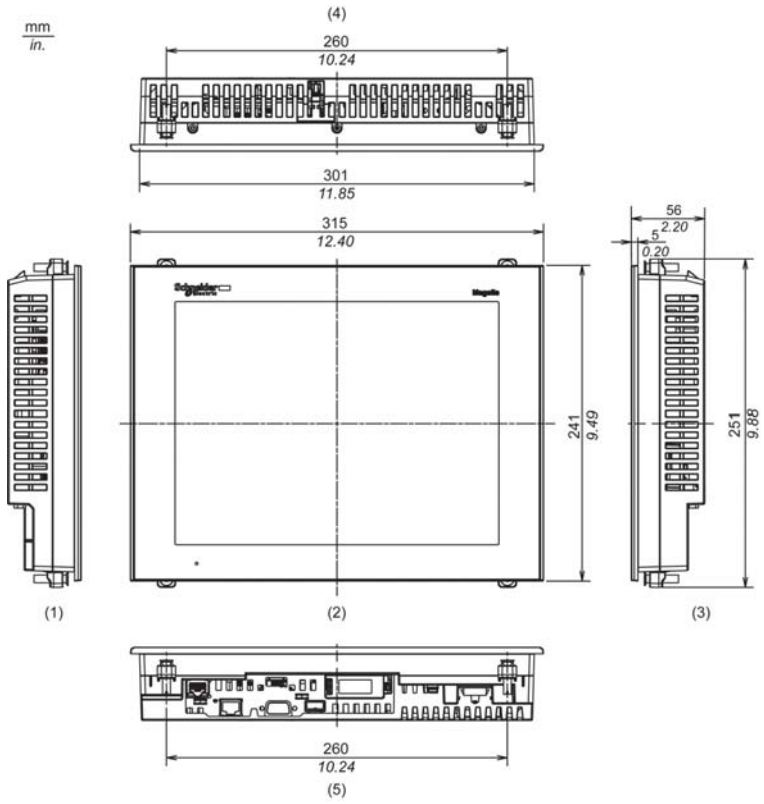

1 Left Side
2 Front
3 Right Side
4 Top
5 Bottom

Installation with Installation Fasteners: HMIGTO6315

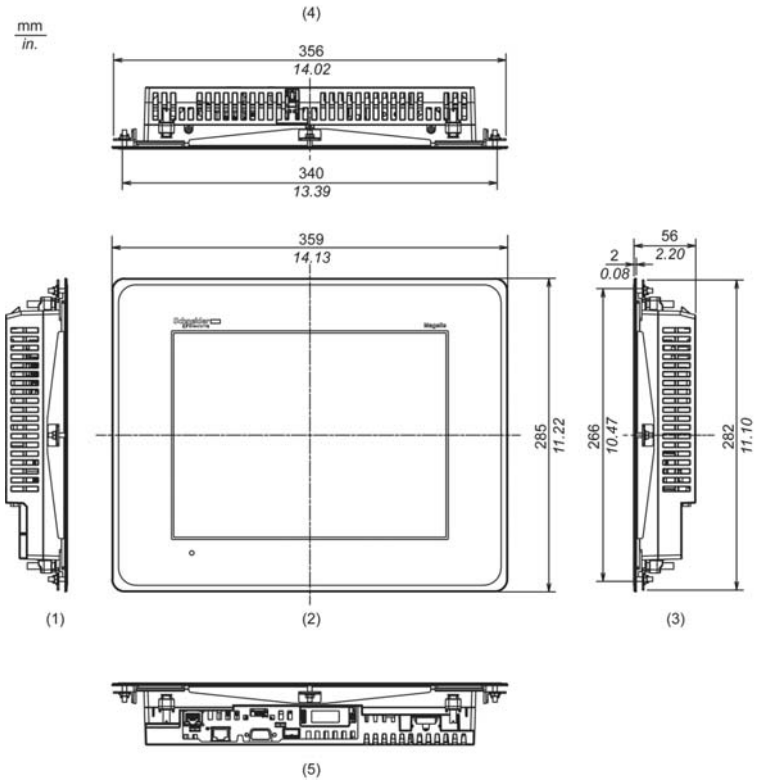

1 Left Side
2 Front
3 Right Side
4 Top
5 Bottom

Dimensions with Cables: HMIGTO6310

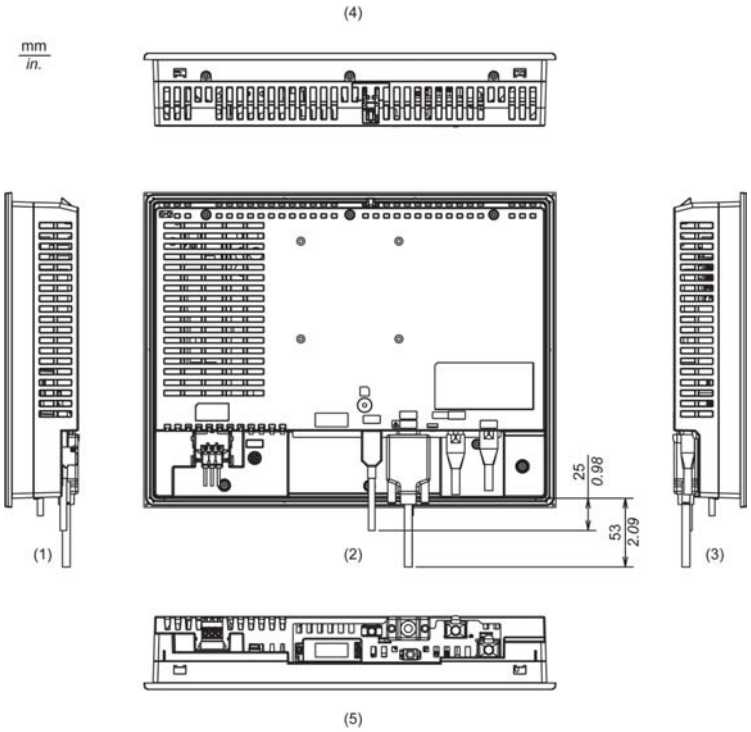

1 Left Side
2 Rear
3 Right Side
4 Top
5 Bottom

NOTE: All the above values are designed with cable bending in mind. The dimensions given here are representative values depending on the type of connection cable in use. Therefore, these values are intended for reference only.

Dimensions with Cables: HMIGTO6315

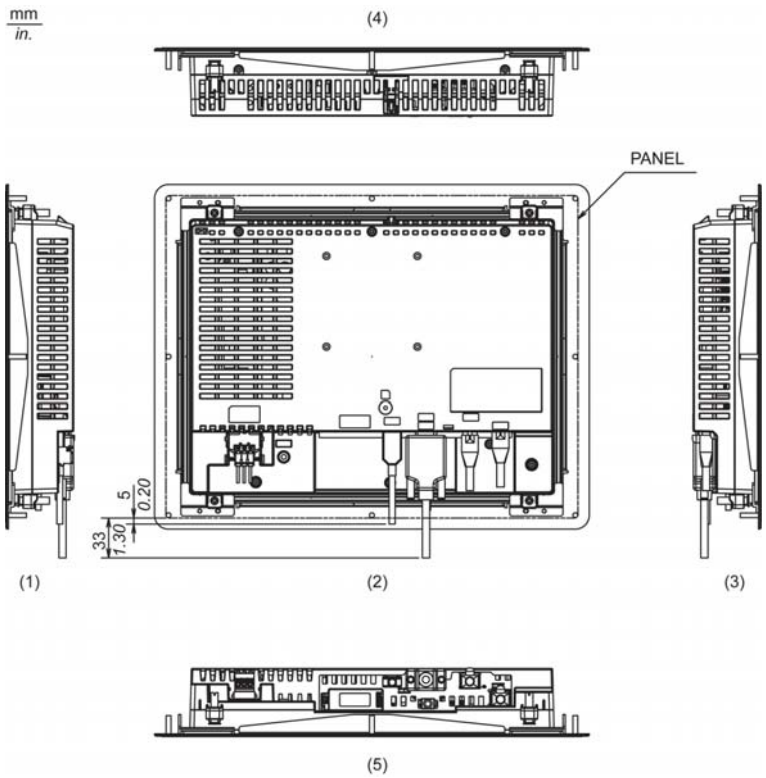

1 Left Side
2 Rear
3 Right Side
4 Top
5 Bottom

NOTE: All the above values are designed with cable bending in mind. The dimensions given here are representative values depending on the type of connection cable in use. Therefore, these values are intended for reference only.

Panel Cut Dimensions

Create a panel cut and insert the panel into the opening from the front.

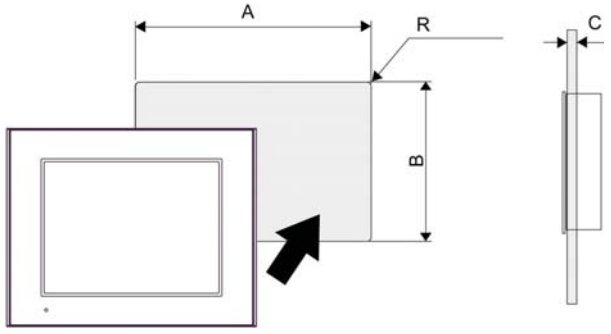

	A	B	C	R
HMIGTO6310	301.5 mm (+1, -0 mm) (11.87 [+0.04, -0 in.])	227.5 mm (+1, -0 mm) (8.96 in. [+0.04, -0 in.])	1.6...5 mm (0.06...0.2 in.)	3 mm (0.12 in.) maximum
HMIGTO6315	340.5 mm (+1, -0 mm) (13.41 [+0.04, -0 in.])	266.5 mm (+1, -0 mm) (10.49 in. [+0.04, -0 in.])		

NOTE: Before designing the panel cut, refer to Installation *(see page 120)*.

Installation Fastener Dimensions

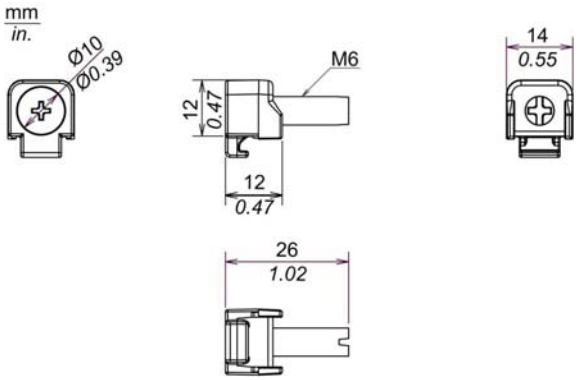

Chapter 5
Installation and Wiring

What Is in This Chapter?

This chapter contains the following sections:

Section	Topic	Page
5.1	Installation	120
5.2	Wiring Principles	125
5.3	SD Card Insertion/Removal	131
5.4	USB Cable Clamp	136

Section 5.1
Installation

Installation Procedures

Introduction

The installation fasteners are required when installing the panel.

Mount the panel in an enclosure that provides a clean, dry, robust and controlled environment. (HMIGTO except HMIGTO2315/HMIGTO5315/HMIGTO6315: IP65, Type 1, Type 4X [Indoor Use Only] or Type 13 Enclosure. HMIGTO2315/HMIGTO5315/HMIGTO6315: IP66k, Type 1, Type 4X [Indoor Use Only] or Type 13 Enclosure.)

Installation Requirements

Check that the installation wall or cabinet's surface is flat, in good condition and has no jagged edges. Metal reinforcing strips may be attached to the inside of the wall, near the panel-cut, to increase its rigidity.
Decide on the thickness of the enclosure wall, based on the level of strength required: 1.6...5 mm (0.06...0.2 in.).
Be sure that the surrounding air temperature and the ambient humidity are within their designated ranges. Surrounding air temperature: 0 to 50 °C (32 to 122 °F) or 0 to 55 °C (32 to 131 °F) (please see the Environment Specifications for your HMIGTO); ambient humidity: 10 to 90%RH; wet bulb temperature: maximum 39 °C [102 °F]. When installing the panel in a cabinet or enclosure, the surrounding air temperature is the cabinet's or enclosure's internal temperature. 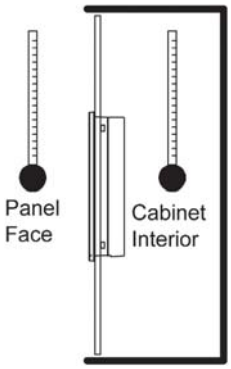
Be sure that heat from surrounding equipment does not cause the panel to exceed its standard operating temperature.
When mounting the panel vertically, ensure that the right side of the unit faces up. In other words, the power connector should be at the top. 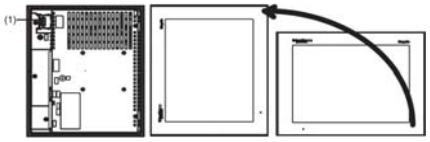 **1** Power connector
When installing the panel in a slanted position, the panel face should not incline more than 30° . 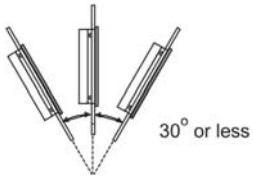
When installing the panel in a slanted position with an incline more than 30° , the ambient temperature must not exceed 40 °C (104 °F). You may need to use forced air cooling (fan, A/C) to ensure the ambient operating temperature is 40° C or less (104 °F or less).

For easier maintenance, operation and improved ventilation, install the panel at least 100 mm (3.94 in.) away from adjacent structures and other equipment as shown in the following illustration:

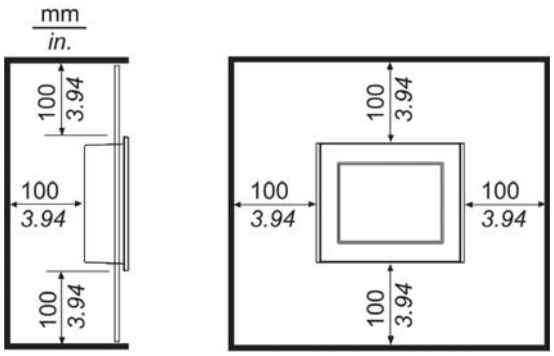

The holes on the rear of the panel (except HMIGTO1300/1310) do not correspond to VESA 75 mm standards. Do not attach the panel to a commercial-type VESA arm.

Panel Mounting Procedure: (except HMIGTO2315/HMIGTO5315/HMIGTO6315)

NOTICE

PANEL UNSTEADY WHEN UNSECURED

Keep HMIGTO stabilized in the panel-cut while you are installing or removing the screw fasteners.

Failure to follow these instructions can result in equipment damage.

Step	Action
1	Place the panel on a clean and level surface with the display facing downward.
2	Check that the panel's gasket is seated securely into the gasket's groove, which runs around the perimeter of the panel frame.
3	Cut a hole in the installation panel as defined by the HMIGTO's panel cutout dimensions. HMIGTO1300/HMIGTO1310 *(see page 48)* HMIGTO2300/HMIGTO2310 *(see page 66)* HMIGTO3510/HMIGTO4310 *(see page 82)* HMIGTO5310 *(see page 99)* HMIGTO6310 *(see page 116)*
4	Insert the HMIGTO into the panel-cut.

Step	Action
5	Insert the installation fasteners into the HMIGTO's insertion slots on the top and bottom sides (left and right sides for the HMIGTO1300/1310). Slide the fasteners to the back. If the fasteners are not correctly attached, the HMIGTO may shift or fall out. 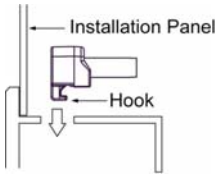 HMIGTO2310 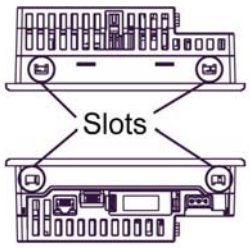 HMIGTO1310 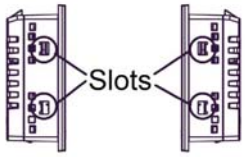
6	Insert each of the fasteners shown below. Make sure you pull the fastener back until it is flush with the rear of the attachment hole insert. 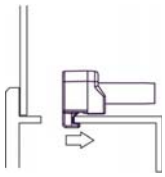
7	Use a Phillips screwdriver to tighten each fastener screw and secure the panel in place. The necessary torque is 0.5 Nm (4.4 lb•in). 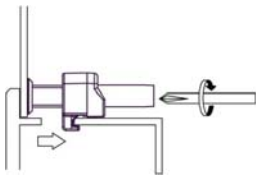

NOTICE

BROKEN ENCLOSURE

- Do not exert more than 0.5 Nm (4.4 lb•in) of torque when tightening the fastener's screws.
- Use on flat surface of a Type 1, Type 4X (Indoor Use Only) or Type 13 Enclosure.

Failure to follow these instructions can result in equipment damage.

Removal Procedure: (except HMIGTO2315/HMIGTO5315/HMIGTO6315)

Step	Action
1	Loosen the installation fasteners (4) from the HMIGTO.
2	Remove the HMIGTO slowly from the panel while pressing the projections on the top of the HMIGTO. 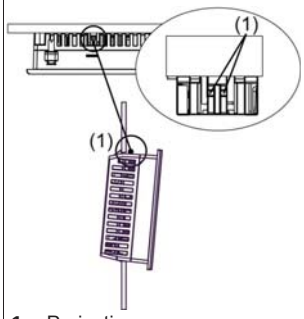 **1** Projections **NOTE:** ● You could damage the HMIGTO if you try and remove it without holding down the projections. ● Watch your fingers so they do not get caught when holding down the projections.

⚠ CAUTION

RISK OF INJURY

Do not drop the HMIGTO when you remove it from the panel.

- Hold the HMIGTO in place after removing the fasteners.
- Use both hands.

Failure to follow these instructions can result in injury or equipment damage.

HMIGTO2315/HMIGTO5315/HMIGTO6315 Panel Mounting Procedure

⚠ CAUTION

RISK OF INJURY

Do not drop the HMIGTO when you install or remove it from the panel.

- Hold the HMIGTO in place after removing the M4 Hex nuts and brackets.
- Use both hands.

Failure to follow these instructions can result in injury or equipment damage.

NOTICE

PANEL UNSTEADY WHEN UNSECURED

Keep panel stabilized in the panel-cut while you are installing or removing the M4 Hex nuts and brackets.

Failure to follow these instructions can result in equipment damage.

Step	Action
1	Place the panel on a clean and level surface with the display facing downward.
2	Confirm that the panel's gasket is seated properly on the rear of the panel.
3	Cut a hole in the panel as defined by the HMIGTO panel cutout dimensions. HMIGTO2315 *(see page 66)* HMIGTO5315 *(see page 99)* HMIGTO6315 *(see page 116)*

Step	Action
4	Insert the HMIGTO into the panel-cut. 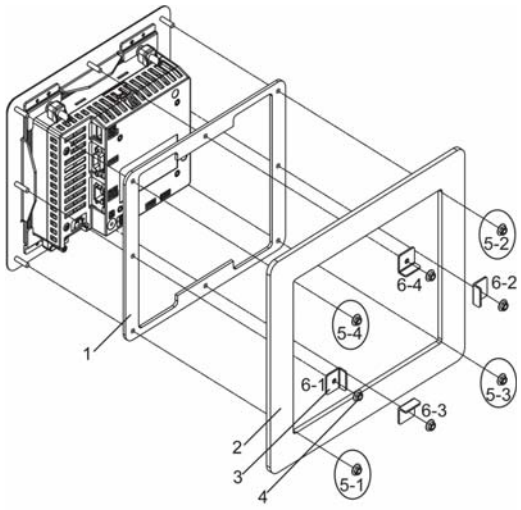 **1** Gasket **2** Panel **3** Brackets **4** M4 Hex Nut **5** Please read Step 5. **6** Please read Step 6.
5	Tighten the four corners of the rear of the panel with the M4 Hex nuts, in the order shown in the example in Step 4. Use an M4 box-type screwdriver to tighten each M4 Hex nut and secure the panel in place. The necessary torque is 0.5 Nm (4.4 lb•in). If the M4 Hex nuts are not correctly attached, the panel may shift or fall out.
6	Attach the bracket onto the screws in the middle between the M4 Hex nuts in the order shown in the example in Step 4. Use an M4 box-type screwdriver to tighten each M4 Hex nut and secure the panel in place. The necessary torque is 0.5 Nm (4.4 lb•in). If the M4 Hex nuts are not correctly attached, the panel may shift or fall out.
7	Tighten all the M4 Hex nuts again. The necessary torque is 0.5 Nm (4.4 lb•in). **NOTE:** Do not loosen the installation fasteners, marked with red squares below. 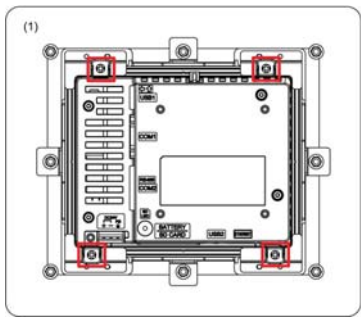 **1** Panel

NOTICE

BROKEN ENCLOSURE

- Do not exert more than 0.5 Nm (4.4 lb•in) of torque when tightening the M4 Hex nuts.
- Use on flat surface of a Type 1, Type 4X (Indoor Use Only) or Type 13 Enclosure.

Failure to follow these instructions can result in equipment damage.

Section 5.2
Wiring Principles

Overview

This section presents the HMIGTO wiring principles.

What Is in This Section?

This section contains the following topics:

Topic	Page
Connecting the Power Cord	126
Connecting the Power Supply	128
Grounding	130

Connecting the Power Cord

⚠ WARNING

EXCESSIVE ELECTROMAGNETIC INTERFERENCE

- When the functional ground (FG) terminal is connected, be sure the wire is grounded. Not grounding the HMIGTO can result in excessive Electromagnetic Interference (EMI). Grounding is required to meet EMC level immunity.
- Remove power before wiring the HMIGTO's power terminals.
- The DC model uses only 24 Vdc power. Using any other level of power can damage both the power supply and the HMIGTO.
- Since the HMIGTO is not equipped with a power switch, be sure to connect a power switch to the power supply.
- Be sure to ground the HMIGTO's FG terminal.
- Replace and secure all elements of the system before applying power to the HMIGTO.

Failure to follow these instructions can result in death, serious injury, or equipment damage.

NOTE: The shield ground (SG) and FG terminals are connected internally in the panel.

DC Power Cord Preparation

- Make sure the ground wire is either the same or heavier gauge than the power wires.
- Do not use aluminum wires in the power supply's power cord.
- If the ends of the individual wires are not twisted correctly, the wires may create a short circuit.
- Wherever possible, use wires that are 0.75 to 2.5 mm^2 (AWG 18 - 13) for the power cord, and twist the wire ends before attaching the terminals.
- The conductor type is solid or stranded wire.
- Field wiring terminal marking for wire type (75 °C [167 °F] copper conductors only).

DC Power Supply Connector (Plug) Specifications: Spring Clamp Terminal Blocks

HMIGTO1300/1310 / HMIGTO2300/2310/2315 / HMIGTO3510/4310

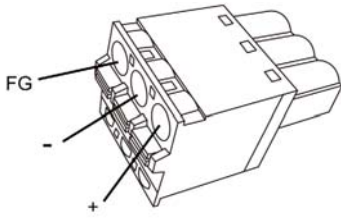

HMIGTO5310/5315 / HMIGTO6310/6315

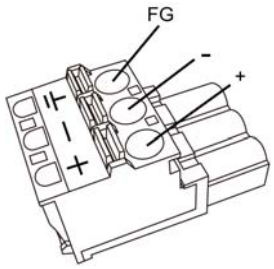

Connection	Wire
+	24 Vdc
-	0 Vdc
FG	Grounded terminal connected to the panel chassis.

How to connect the DC Power Cord

Step	Action
1	Confirm the power cord is not connected to the power supply.
2	Check the rated voltage and remove the “DC24V” sticker on the DC power supply connector.
3	Remove 10 mm (0.39 in.) of the vinyl membrane off the ends of the power cord wires.
4	If using stranded wire, twist the ends. Tinning the ends with solder reduces risk of fraying and ensures good electrical transfer.
5	Push the Opening button with a small and flat screwdriver to open the desired pin hole.
6	Insert each pin terminal into its corresponding hole. Release the Opening button to clamp the pin in place. HMIGTO1300/1310 / HMIGTO2300/2310/2315 / HMIGTO3510/4310 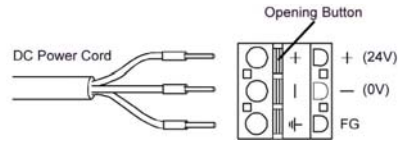 HMIGTO5310/5315 / HMIGTO6310/6315 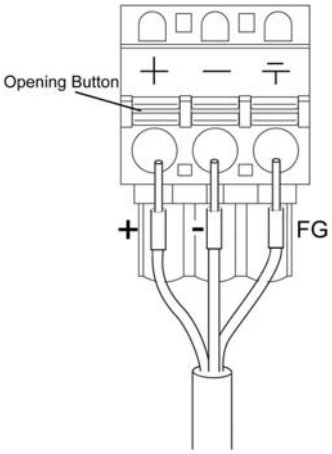
7	After inserting all three pins, insert the power plug into the power connector on the panel.

NOTE:

- Do not solder the wire directly to the power receptacle pin.
- To prevent the possibility of a terminal short, use a pin terminal that has an insulating sleeve.
- You can connect the DC power supply connector for HMIGTO1300/1310, HMIGTO2300/2310/2315, or HMIGTO3510/4310 to HMIGTO5310/5315 or HMIGTO6310/6315 units. However, the reverse is not possible. You cannot connect the DC power supply connector for HMIGTO5310/5315 or HMIGTO6310/6315 to HMIGTO1300/1310, HMIGTO2300/2310/2315, or HMIGTO3510/4310 units.

Connecting the Power Supply

Precautions

- You must use a 24 Vdc input unit with a Class 2 power supply.
- To increase the electromagnetic noise resistance, make sure you twist the ends of the power cord wires before connecting them to the power plug.
- The panel's power supply cord should not be bundled with or kept close to main circuit lines (high voltage, high current), or input/output signal lines.
- Connect a lightning surge absorber to handle power surges.
- To reduce electromagnetic noise, make the power cord as short as possible.

⚠ WARNING

SHORT CIRCUIT, FIRE, OR UNINTENDED EQUIPMENT OPERATION

Avoid excessive force on the power cable to prevent accidental disconnection

- Securely attach power cables to the HMIGTO or cabinet.
- Use the designated torque to tighten the unit terminal block screws.
- Install and fasten the HMIGTO on installation panel or cabinet prior to connecting power supply and communication lines.

Failure to follow these instructions can result in death, serious injury, or equipment damage.

Power Supply Connections

When supplying power to the panel, separate the input/output and power lines, as shown.

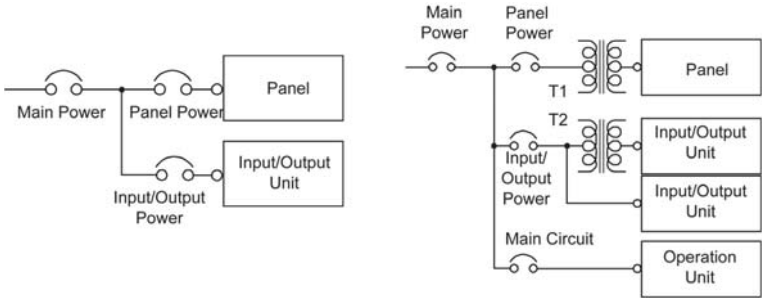

NOTE:
The following shows a lightning surge absorber connection:

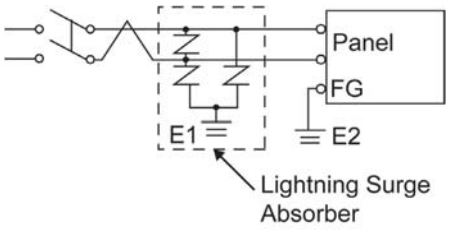

- Ground the surge absorber (E1) separately from the panel (E2).
- Select a surge absorber that has a maximum circuit voltage greater than that of the peak voltage of the power supply.

If the supplied voltage exceeds the panel range, connect a constant voltage transformer.

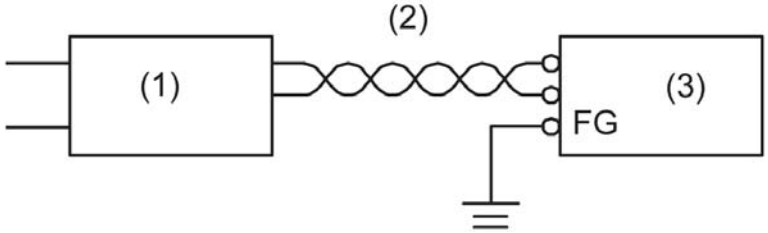

1 Constant voltage transformer
2 Twisted-pair cord
3 panel

Select a power supply low in noise for between the line and ground. If there is an excess amount of noise, connect an insulating transformer.

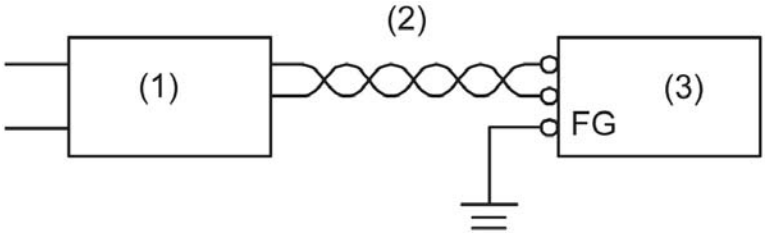

1 Insulating transformer
2 Twisted-pair cord
3 panel

NOTE: Use constant voltage and insulating transformers with capacities exceeding the Power Consumption value.

Grounding

Exclusive Grounding

When supplying power to the panel, separate the input/output and power lines as shown below.

Connect the frame ground (FG) terminal on the power plug to an exclusive ground.

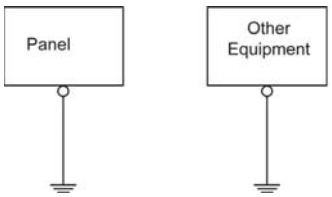

Precautions

Electromagnetic Interference (EMI) can be created if the devices are improperly grounded. EMI can cause loss of communication. Do not use common grounding, except for the authorized configuration described below. If exclusive grounding is not possible, use a common grounding point.

Correct grounding

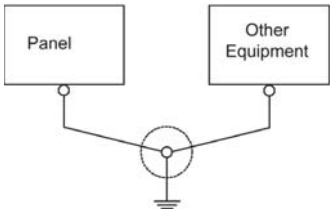

Incorrect grounding

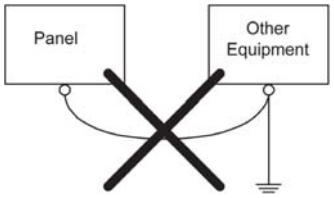

- Check that the grounding resistance is 100 Ω or less.[*1]
- The FG wire should have a cross sectional area greater than 2 mm^2 (AWG 14) [(1)]. Create the connection point as close to the panel as possible, and make the wire as short as possible. When using a long grounding wire, replace the thin wire with a thicker wire, and place it in a duct.
- FG and SG terminals are internally connected in the panel. When connecting an external device to the panel using the SG terminal, check that you do not create a short-circuit loop when you set up the system.

[*1] Observe local codes and standards. Ensure the ground connection has a resistance of 100 Ω and that the ground wire has a cross-section of at least 2 mm^2 or AWG 14.

Section 5.3
SD Card Insertion/Removal

What Is in This Section?

This section contains the following topics:

Topic	Page
Introduction	132
Inserting the SD Card	133
Removing the SD Card	134
SD Card Data Backup	135

Introduction

NOTICE

LOSS OF DATA

When using the HMIGTO and a SD Card, observe the following to avoid losing valuable data:

- Since accidental data loss can occur at any time, back up HMIGTO screen and SD Card data regularly. Once HMIGTO data is lost, it cannot be recovered.
- While a SD Card is accessed, do not turn OFF or reset the HMIGTO, and do not insert or remove the SD Card. Doing so could damage the SD Card, or corrupt its data.
- Before using the SD Card, familiarize yourself with the SD Card's front and rear face orientation, as well as the position of the SD Card connectors. If the SD Card is not positioned correctly when inserted into the HMIGTO, the card's internal data and HMIGTO could become damaged.

Failure to follow these instructions can result in equipment damage.

NOTICE

LOSS OF DATA

When handling the SD Card, follow the instructions below to prevent internal data on the SD Card from being destroyed or a SD Card malfunction from occurring:

- Avoid storing the SD Card where there is static electricity or electromagnetic waves.
- Avoid storing the SD Card in direct sunlight, near a heater, or other locations where high temperatures can occur.
- Do not bend the SD Card.
- Do not drop or strike the SD Card against another object.
- Keep the SD Card dry.
- Do not touch the SD Card connectors.
- Do not disassemble or modify the SD Card.
- Use only SD Cards formatted using FAT or FAT32. The HMIGTO does not recognize NTFS formatted SD Cards. Format the SD Card on your computer using FAT or FAT32.

Failure to follow these instructions can result in equipment damage.

Inserting the SD Card

NOTE: As shown in the image below (example on the left-hand side), you can set the Write-Control Tab to prevent write operations to the SD Card. Push the tab up, as shown in the example on the right-hand side, to release the lock and enable writing to the SD Card. Before using a commercial-type SD Card, read the manufacturer's instructions.

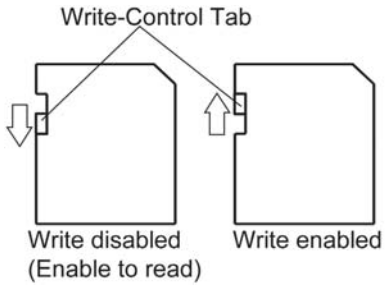

Step	Action
1	Pull on the tab and open the SD Card cover. 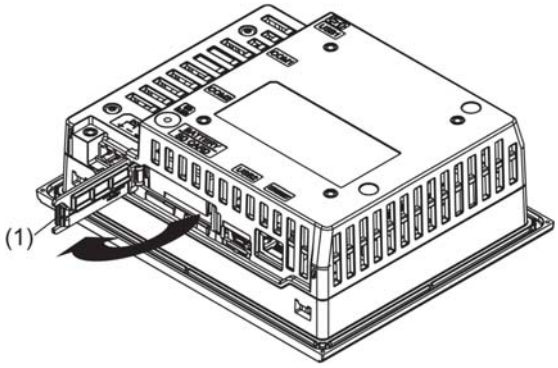 **1** Tab
2	Insert the SD Card into the SD Card interface, and push until you hear it "click". 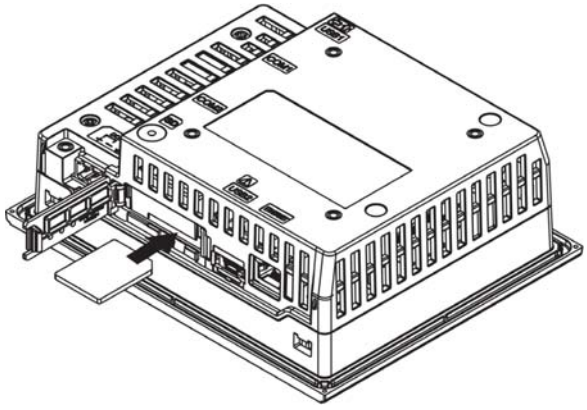
3	Close the SD Card cover.

Removing the SD Card

Step	Action
1	Make sure the SD Card Access LED is off. 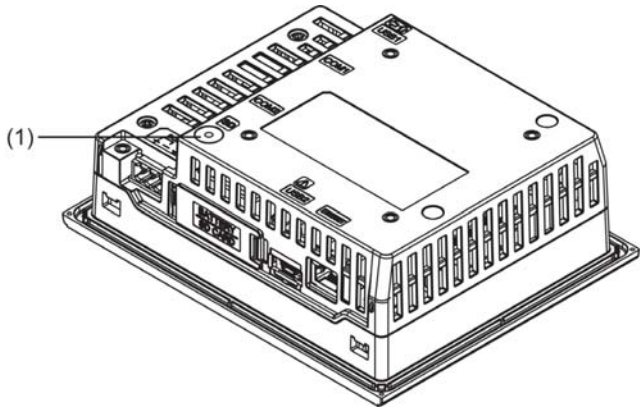 **1** SD Card Access LED
2	Push down the tab on the SD Card cover, then pull open the cover. 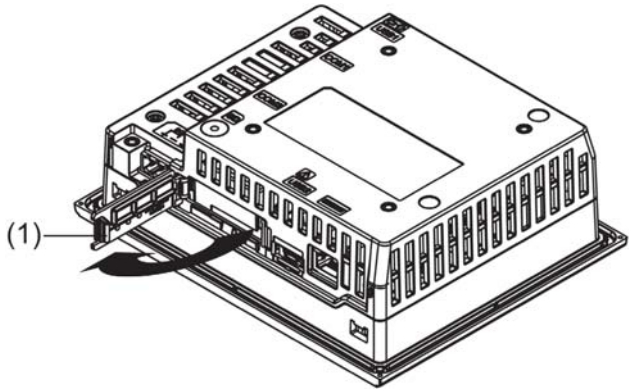 **1** Tab
3	Push the SD Card once to release, and pull out the card. After removing the card, close the cover. **NOTE:** After using the SD Card, store the SD Card in its case or other safe location.

SD Card Data Backup

To make your backups, you can either insert the SD Card directly into the SD Card interface on your computer, or use a commercially available SD Card reader.

Section 5.4
USB Cable Clamp

Overview

This section presents the USB cable clamp.

What Is in This Section?

This section contains the following topics:

Topic	Page
USB Cable Clamp for USB (Type A)	137
USB Holder for USB (mini-B)	139

USB Cable Clamp for USB (Type A)

Introduction

When using a USB device, attaching a USB cable clamp to the USB interface to prevent the USB cable from being disconnected.

⚠ DANGER

POTENTIAL FOR EXPLOSION

- Verify the power, input, and output (I/O) wiring are in accordance with Class I, Division 2 wiring methods.
- Substitution of any components may impair suitability for Class I, Division 2.
- Confirm that the USB cable has been fixed with the USB cable clamp before using the USB interface.
- Remove power before attaching or detaching any connectors to or from the unit.

Failure to follow these instructions will result in death or serious injury.

Attaching the USB Cable Clamp

NOTE: Watch your fingers. The edge of the clip is sharp.

Step	Action
1	Mount the clip to the USB mark connector shell so that it overlaps. The clip matches the 27 to 43.5 mm [1.06 to 1.71 in.] length of the USB connector. 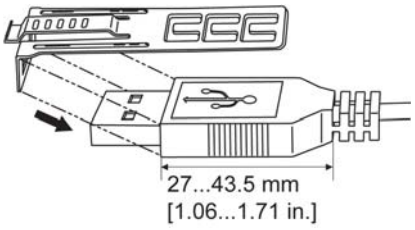
2	Align the clip and the USB cable connector shell. Adjust the position of the holes where the clip is attached. To ensure stability, select the clip-hole position that is closest to the base of the connector shell. 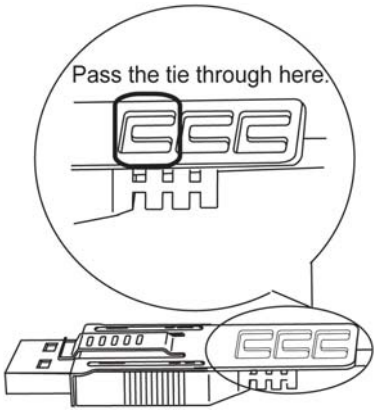

Step	Action
3	As shown, pass the tie through the clip hole. Next, turn the tie and pass it through the head so that the USB cable can pass through the center of the tie loop. The clip is now attached to the USB cable. 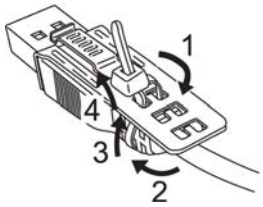 **NOTE:** ● Check the direction of the head beforehand. Make sure the USB cable is through the center of the tie loop and that the tie can pass through the head. ● You can substitute the tie provided with commercially available ties with a width of 4.8 mm [0.19 in.] and thickness of 1.3 mm [0.05 in.].
4	While pressing the grip on the clip, insert the cable from step 3 all the way into the USB host interface. Make sure that the clip tab is secured to the USB cable attached to the HMIGTO. 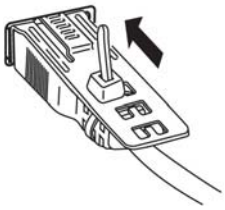

Removing the USB Cable

Remove the USB cable while pushing the grip section of the clip.

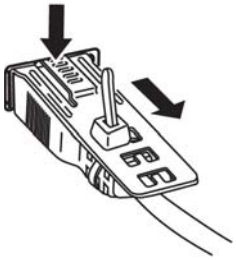

USB Holder for USB (mini-B)

Introduction

When using a USB device, you can attach a USB holder to the USB (mini-B) interface to prevent the USB cable from being disconnected.

⚠ DANGER

POTENTIAL FOR EXPLOSION

- Verify the power, input, and output (I/O) wiring are in accordance with Class I, Division 2 wiring methods.
- Substitution of any components may impair suitability for Class I, Division 2.
- Confirm that the USB cable has been fixed with the USB cable clamp before using the USB interface.
- Remove power before attaching or detaching any connectors to or from the unit.

Failure to follow these instructions will result in death or serious injury.

Attaching the USB Holder

Step	Action
1	Insert the USB cable into the USB (mini-B) interface. 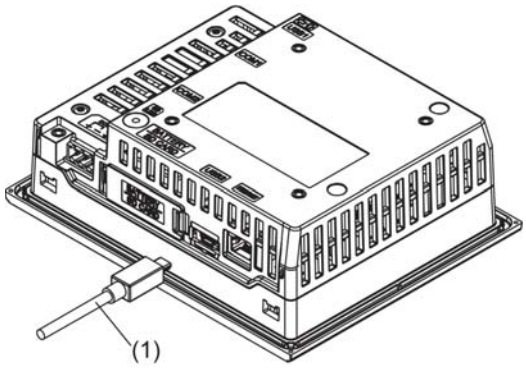 **1** USB cable
2	Attach the USB holder to fix the USB cable in place. Insert the USB holder into the USB (mini-B) interface. 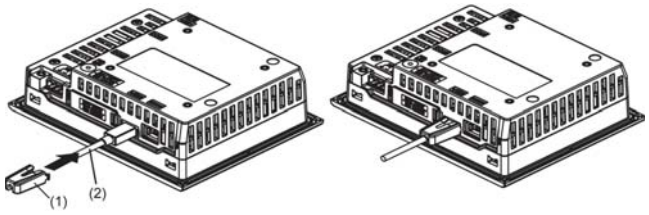 **1** USB holder **2** USB cable

Removing the USB Holder

Remove the USB holder by pressing the tabs from the sides.

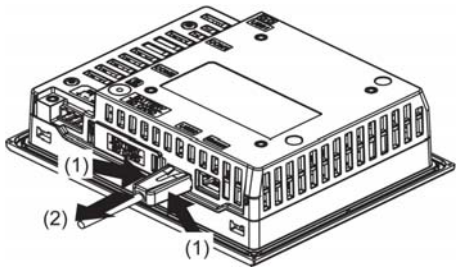

1 USB holder
2 USB cable

Chapter 6
Maintenance

Overview

This chapter explains how to maintain your panel.

What Is in This Chapter?

This chapter contains the following topics:

Topic	Page
Regular Cleaning	142
Replacing the Installation Gasket	143
Periodic Check Points	145
Replacing the Primary Battery	146

Regular Cleaning

Cleaning the display

NOTICE
EQUIPMENT DAMAGE ● Power off the panel before cleaning it. ● Do not use hard or pointed objects to operate the touch panel as you may damage the panel surface. ● Do not use paint thinner, organic solvents, or a strong acid compound to clean the unit. **Failure to follow these instructions can result in equipment damage.**

When the surface or the frame of the display gets dirty, soak a soft cloth in water with a neutral detergent, wring the cloth tightly and wipe the display.

Replacing the Installation Gasket

Overview

The installation gasket provides protection against dust and moisture.

NOTICE
GASKET AGING ● Inspect the gasket periodically as required by your operating environment to keep the initial IP level. ● Change the gasket at least once a year, or as soon as scratches or dirt become visible. **Failure to follow these instructions can result in equipment damage.**

Installing the Installation Gasket

NOTE: For instructions on how to install the installation gasket when using HMIGTO2315/HMIGTO5315/HMIGTO6315, see HMIGTO2315/HMIGTO5315/HMIGTO6315 Panel Mounting Procedure *(see page 123)*.

Stage	Description
1	Place the panel on a flat, level surface, with the display face pointing down.
2	Remove the gasket from the panel.
3	Attach the new gasket to the panel. Position the gasket in the installation groove so that the gasket seam is at the bottom of the panel. First, insert the gasket into the 4 corners, in the order shown in the image below. Then, insert the rest of the gasket into the installation groove. **NOTE:** ● The center of the panel bezel's installation groove is ribbed. Make sure you insert the gasket all the way in without catching the ribbed sections. ● When using a tool to insert the gasket, make sure the tool does not catch the rubber gasket and cause a tear. 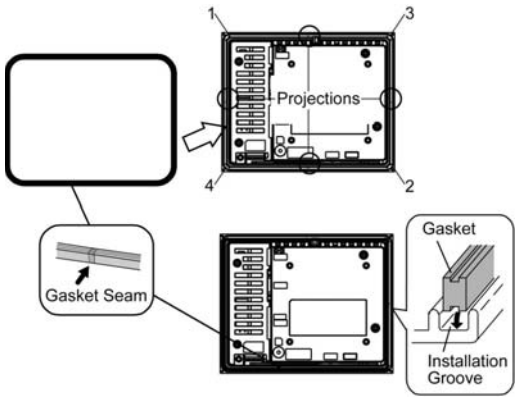
4	The upper surface of the gasket should protrude approximately 2.0 mm (0.06 in.) from the groove. Check the gasket is inserted correctly before installing the HMIGTO into a panel. 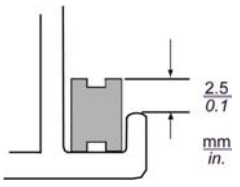

The gasket must be inserted correctly into the groove for IP65f moisture resistance for the panel. (IP66k moisture resistance for HMIGTO2315/HMIGTO5315/HMIGTO6315.)

⚠ CAUTION

EQUIPMENT DAMAGE

- Since the gasket is flexible but not elastic, be careful not to stretch it unnecessarily.
- Make sure the gasket seam is not inserted into any of the panel corners.
- Insert the gasket in the installation groove

Failure to follow these instructions can result in injury or equipment damage.

Periodic Check Points

Operation Environment

- Is the operating temperature within the allowable range? Refer to Environmental Specifications *(see page 38)*, *(see page 52)*, *(see page 70)*, *(see page 86)*, *(see page 103)*.
- Is the operating humidity within the specified range? (10%RH to 90%RH, dry bulb temperature of 39 °C [102.2 °F] or less)
- Is the operating atmosphere free of corrosive gasses?

When the HMIGTO is inside a panel, the ambient environment refers to the interior of the panel.

Electrical Specifications

Is the input voltage appropriate?

- 100 Vac to 240 Vac 50/60 Hz
- 19.2 Vdc to 28.8 Vdc

Related Items

- Are all power cords and cables connected properly? Are there any loose cables?
- Are all mounting brackets holding the unit securely?
- Are there scratches or traces of dirt on the installation gasket?

Replacing the Primary Battery

Introduction

The replacement battery HMI ZGBAT (sold separately) for the primary battery in the HMIGTO is available from Schneider Electric.

NOTE: The HMIGTO1300/1310 and HMIGTO2300 are not equipped with a primary battery.

⚠⚠ DANGER

HAZARD OF ELECTRIC SHOCK, EXPLOSION, OR ARC FLASH

- Follow the procedures step by step to replace the battery correctly and safely.
- Before replacing the battery, turn OFF the HMIGTO's power.

Failure to follow these instructions will result in death or serious injury.

⚠ DANGER

EXPLOSION, FIRE, OR CHEMICAL HAZARD

- Use only the replacement battery HMI ZGBAT manufactured by Schneider Electric.
- Do not cause a short circuit.
- Recycle or properly dispose of used batteries.

Failure to follow these instructions will result in death or serious injury.

NOTICE

LOSS OF DATA

The primary battery is non-rechargeable, and is used for data backup of memory and the internal clock. If the primary battery is depleted, the backup data is lost. One month before the primary battery is completely depleted, a message will appear to indicate it is time to replace the primary battery.

- Replace the battery within one month after the message appears. Otherwise, backup data may be lost.
- Complete replacing the battery within ten minutes of shutting down the HMIGTO.
- The primary battery replacement time (within a month after the message appears) is only a guideline. When backup SRAM data and clock data is lost after the message appears, Schneider Electric does not perform data recovery/retrieval. Schneider Electric does not accept any responsibility for the loss of data.
- Replace the primary battery regularly every five years after you purchase the HMIGTO.

Failure to follow these instructions can result in equipment damage.

Step	Action
1	Disconnect the power supply from the HMIGTO.
2	Touch the housing or ground connection (not the power supply) to discharge any electrostatic charge from your body.
3	Open the SD Card Interface Cover by pressing its tab. Next, open the Replacement Battery Insertion Cover by pressing its tab. 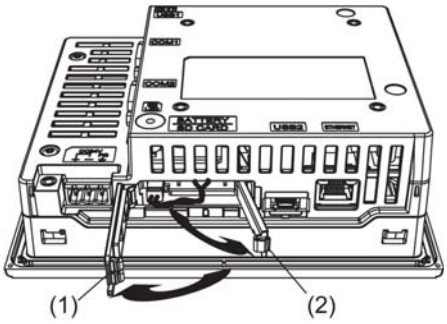 **1** SD Card Interface Cover / Tab **2** Replacement Battery Insertion Cover / Tab

Step	Action
4	Remove the primary battery and connector. 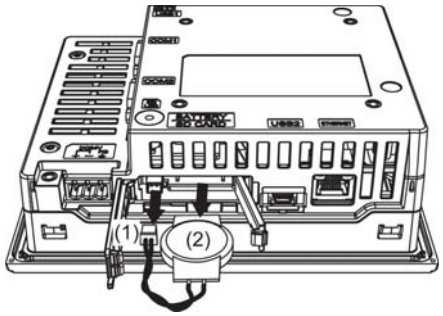 **1** Connector **2** Primary battery
5	Attach the new primary battery and connector. 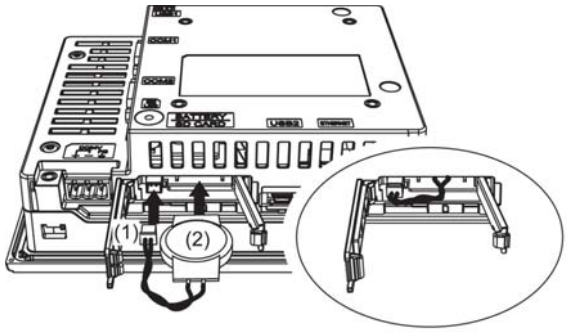
6	First close the replacement battery cover, then close the SD Card Interface Cover. **NOTE:** Make sure the cables are inserted completely inside the enclosure. Otherwise, you can damage the cables when you close the cover.
7	Reconnect the power supply to the HMIGTO.

Index

A
Accessories, *21*

B
battery, *146*

C
caution
  loss of data, *132*
  equipment damage, *144*
  injury, *123*, *123*
  loss of communication, *44*, *44*, *45*, *59*, *60*, *76*, *77*, *93*, *94*, *110*, *111*
CE marking, *11*
Certifications and Standards, *11*
cleaning, *142*
clock, *41*, *56*, *73*, *90*, *107*
COM1, *16*, *18*, *19*
connecting the power cord, *126*
connecting the power supply, *128*

D
danger
  arc flash, *146*
  chemical hazard, *146*
  electric shock, *43*, *45*, *58*, *60*, *75*, *77*, *92*, *94*, *109*, *111*, *146*
  explosion, *137*, *139*, *146*, *146*
  fire, *146*
dimensions, *46*, *61*, *78*, *95*, *112*

E
Ethernet, *19*

F
function keys, *41*

G
gasket, *144*
grounding, *130*

I
installation
  procedures, *120*
installation gasket, *143*

K
KC marking, *12*

M
maintenance, *141*
  check points, *145*
Maintenance
  Cleaning, *142*
maintenance accessories, *23*
memory, *41*, *56*, *73*, *90*, *107*

N
notice
  loss of data, *132*
  panel unsteady when unsecured, *121*
  loss of data, *146*
  overtorque, *122*, *124*
  panel unsteady when unsecured, *123*

O
optional accessories, *22*

P
parts identification and functions, *25*
power plug, *126*

R
replacing the battery, *146*
RS-232C, *16*, *18*
RS-422/RS-485, *18*
RS-485, *19*

S
SD Card, *131*
  backup, *135*
  insertion, *133*
SD Card accessories, *22*
serial interface accessories, *21*
specifications
  COM, *43*, *58*, *60*, *77*, *92*, *94*, *109*, *111*
  COM1, *42*, *57*, *58*, *74*, *75*, *91*, *92*, *108*, *109*
  COM2, *42*, *45*, *57*, *60*, *74*, *77*, *91*, *94*, *108*, *111*
  display, *40*, *55*, *72*, *89*, *106*
  electrical, *37*, *51*, *69*, *85*, *102*
  environmental, *38*, *52*, *70*, *86*, *103*
  Ethernet, *108*
  interfaces, *42*, *57*, *74*, *91*, *108*
  SD Card, *57*, *74*, *108*
  structural, *39*, *53*, *71*, *87*, *104*
  USB, *42*, *42*, *57*, *57*, *74*, *74*, *91*, *91*, *91*, *108*

T
touch panel, *41*, *56*, *73*, *90*, *107*

U

USB
cable clamp for USB Type A, *137*
holder mini-B, *139*
USB interface accessories, *22*
USB mini-B, *20*
USB Type A, *20*

W

warning
electromagnetic interference, *126*
fire, *128*
short circuit, *128*
unintended equipment operation, *7*, *128*

LS	19279	Switch, Level, Mech Float, Narrow Angle, N.C., YEL	N/C, Yellow float
LS	M1343	Switch, Level, Mech Float, Narrow Angle, N.O., Blue	Tilt Float Level Switch w 40' cable
LS-101/2/3	19279	Switch, Level, Mech Float, Narrow Angle, N.C., YEL	N/C, Yellow float
LSHH-101.102/103 LSHH-301 LSHH-401 LSHH-501 LSHH-502 LSHH-601/602	19279	Switch, Level, Mech Float, Narrow Angle, N.C., YEL	N/C, Yellow float
LSLL-301/401/501/502	M1108	Switch, Level, Mech Float, Wide Angle, N.O., Red	13A, SPST, N/O, Red

Form 237
Sheet P/N 7801165
Rev. D

Warrick®
Series M Mechanical Tilt Float Switch
Installation and Operation Bulletin

Specifications

Cord	16 gauge, 2 or 3 conductor SJOW, Oil Resistant CPE
Contact Rating	13 amp @ 120/240 VAC, 1/2hp
Contact Design	SPST, Normally Open or Normally Closed, Common with N.O. & N.C. (Form C)
Temperature Rating	32°F (0°C) to 194°F (90°C) Dry and 140°F (60°C) Water Resistant
Overall Weight	1.0 lbs. (not including weight)
Tether Method	Tie-wrap nylon, weight: 2.5 lbs.
Approvals	U.L. Recognized, CSA Certified

Installation

Tether Tie-Wrap (Fig 1)
Attach cord, using a tie-wrap, to a stationary structure. This is known as the tether point, it will determine the pumping range. The farther the float is placed from the tether point, the greater the pumping range. The minimum distance that the float should be placed from the tether point is 3 inches.

Tether-Weight (Fig 2)
Place tension-brand over the cord before installation. Place the weight at the desired position and secure with the tension-band. This position will determine the pumping range. The farther the float is placed from the tether point, the greater the pumping range. The minimum distance that the float should be placed from the tether point is 3 inches.

Determine tether point using charts below as a reference

Notes:
1. To Prevent Motor Burnout - In a pumpdown application make sure the turn-off level is at least 2 inches above the intake of the submersible pump.

2. Securing Tether Points - Make sure levels are correct and that floats are free from any obstructions before securing tether points.

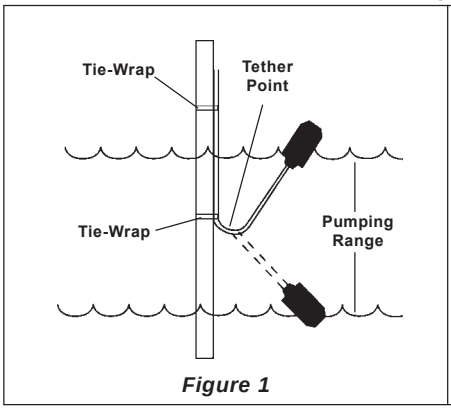

Figure 1

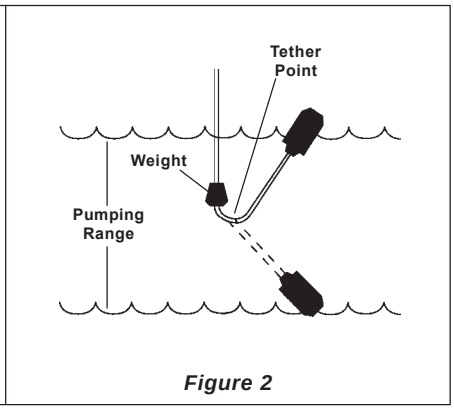

Figure 2

Tether Data For Wide Angle Float

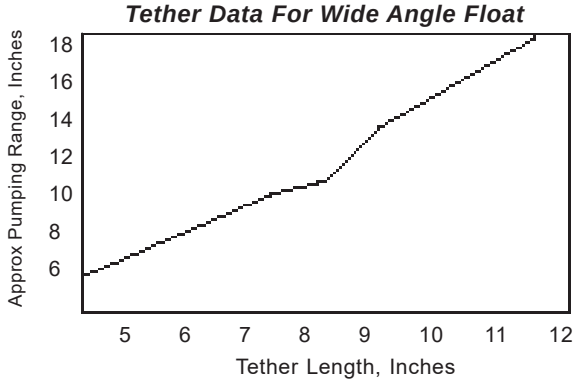

Tether Data For Narrow Angle Float

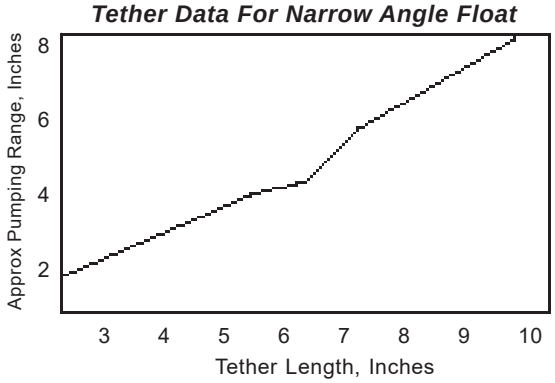

Notes:
1. Narrow angle pumping range is approximately 2 In. to 8 In.
2. Wide angle pumping range is approximately 5 In. to 18 In.

Dimensions

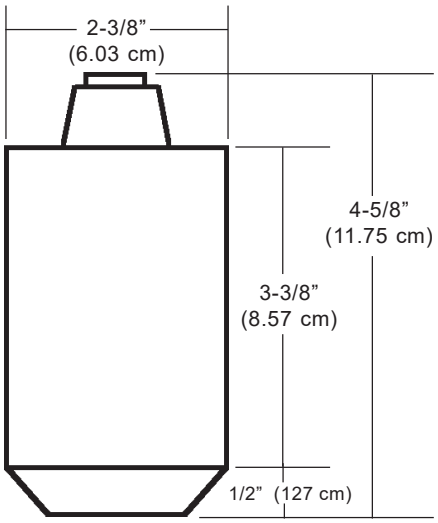

Contact Configurations

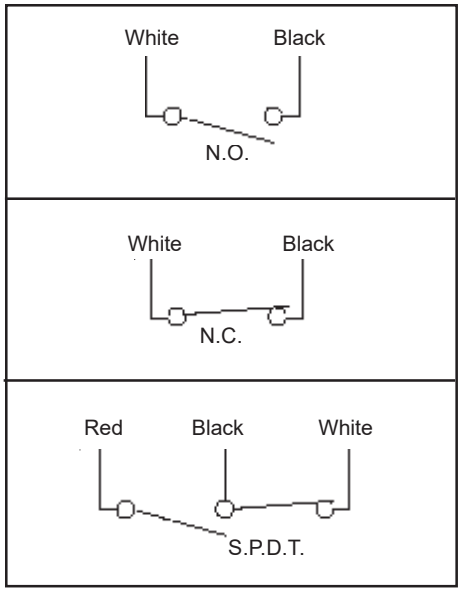

Important Points:

- Gems products must be maintained and installed in strict accordance with the National Electrical Code and the applicable Gems Product Instruction Bulletin that covers installation, operation and proper maintenance. Failure to observe this information may result in serious injury or damages.
- For hazardous area applications involving such things as, but not limited to, ignitable mixtures, combustible dust and flammable materials, use an appropriate explosionproof enclosure or intrinsically safe interface device.
- Please adhere to the pressure and temperature limitations shown throughout this catalog for our level and flow sensors. These limitations must not be exceeded. These pressures and temperatures take into consideration possible system surge pressures/temperatures and their frequencies.
- Selection of materials for compatibility with the media is critical to the life and operation of Gems products. Take care in the proper selection of materials of construction, testing is required.
- NSF-approved sensors are made of materials approved for potable water applica tions according to Standard 61.
- Stainless steel is generally regarded as safe by NSF and FDA.
- Life expectancy of switch contacts varies with application. Contact Gems if life cycle testing is required.
- Ambient temperature changes do affect switch set points, since the gravity of a liquid can vary with temperature.
- Our sensors have been designed to resist shock and vibration. However, shock and vibration should be minimized.
- Filter liquid media containing particulate and/or debris to ensure the proper operation of our products.
- Electrical entries and mounting points in an enclosed tank may require liquid/vapor sealing.
- Our sensors must not be field-repaired.
- Physical damage sustained by product may render it unserviceable.

Return Policy

Returns are accepted on stock items up to 30 days from date of order. You must contact our Returns Department for a Return Authorization (RA) number. Return the goods - freight prepaid - in the original container and include original packing slip. C. O. D. returns are not accepted. Gems reserves the right to apply restocking charges.

Tel: 860-793-4357
Fax: 860-793-4563

Gems Sensors Inc.
One Cowles Road
Plainville, CT 06062-1198
Tel: 860-793-4579
Fax: 860-793-4580

LSHH - Switch, Level, Almeg, Vertical, ATB3-48B
LSHH-7901 - "LSLL-301/401/ 501/502"M1108Switch, Level, Mech Float, Wide Angle, N.O., Red13A, SPST, N/O, Red
Switch, Level, Almeg, Vertical, ATB3-48B

ATB 3 and ATS3 Series Spec Sheet
Level Switch - Small Size - Heavy Duty



The ATB3 is designed for high or low level alarm or switch point applications in rugged situations similar to oil tank reservoirs or industry vessels that require a more robust level switch. Notice the larger brass one piece machined hex to get a wrench on - this model also has an optional brass set screw locking collar in place of the clip.

Internal reed switch selection is the same Almeg quality standard but we've beefed up the external part as well as fully encapsulated the reed switch to maintain a complete moisture free environment. The leads are wire wrapped (not clipped) soldered and heat shrink sealed to the reed switch before encapsulating.

The TRUE closed cell Buna float will not swell or take on moisture - even if cut or drilled. It is designed like a tight bee hive or honey comb construction.

100% of our controls are tested before shipping.

The ATB3 is available in a single order or OEM applications.

LT-301/501 - Transmitter, Pressure, KPSI 750 series 0-10ft H20Part Number 750S14D4A004.334000.000B10015B

KPSI®

Level Transducers



KPSI® User's Manual

18th Edition

February 2010

E-688

©This User's Manual is a copyright product of Pressure Systems, Inc., 2009.

Permission is hereby granted to make copies and distribute verbatim copies of this manual, provided the copyright notice and this permission notice are preserved on all copies.

Our Company

Pressure Systems is an ISO9001:2000 certified U.S. manufacturer of submersible and non-submersible (above ground) pressure transducers for environmental, industrial and municipal applications. Our KPSI™ Level and Pressure Transducers have been specified in thousands of projects throughout the United States, Canada and Europe by geologists, system integrators, national engineering firms and a variety of government agencies. Typical applications include, but are not limited to, pump control, tank level monitoring, sewage lift station operation, reservoirs, weirs, flumes, site remediation, watershed management, storm water/well monitoring, pump/pipeline pressures and compressor pressures.

Website and E-Mail

You may visit our website at www.PressureSystems.com to look at our latest new product releases, application notes, product certifications and specifications, as well as Intrinsic Safety control installation drawings. E-mail your questions and comments to us: sales@PressureSystems.com.

E-commerce

Orders may be placed on-line by visiting our e-commerce site *(www.LEVELandPRESSURE.com)* or by contacting the factory or local representative.

Applicable Products

This manual provides information applicable to the use of the following KPSI Level and Pressure Transducers:

Please note: Series 500 and Series 550 (waterMONITOR) have separate manuals.

Level Transducers (Submersible)
Series 700/710/720/730/735
Series 320/330/335/340
Series 300DS
Series 705
Series 750

Pressure Transducers (Non-submersible)
Series 27/28/30

Table of Contents

1.0 Product Description 1
General Characteristics 1
Care and Handling 1
Calibration 1
Approvals 1

2.0 Product Accessories and Options 2
Nose Caps 2
810 SuperDry™ Vent Filter or 815 Aneroid Bellows 2
Sacrificial Anode 2
Absolute/Sealed Gage Transducer 3
Polyurethane & ETFE Jacketed Cable 3
Lightning Protection 4
½" Male NPT Conduit Fitting 4
Electrical Outputs 4
Reverse Signal Output 5
Temperature Output 5
Cable Hanger 5
Submersible Cable Splicing Kit 5

3.0 Installation & Maintenance Tips 6
General Installation Procedures 6
Transducer Anchors 6
Transducer Submersion 6
SuperDry™ Vent Filter (Desiccant) or 815 Aneroid Bellows Installation 6
Cable Protection 6
Bending of Cable 7
Cable Compression 7
4-20 mA Output Wiring 7
VDC Output Wiring 7
Model 750 7
Sealed-Gage Transducer Configured for Altitude Above Sea Level 7
Transducer Position Sensitivity 7
General Maintenance Tips 8
Desiccant Maintenance 8
Clogged Nose Piece or Dirty Diaphragm 8
Cleaning Your Transducer 9
Cleaning the Lightning Protection Data Line Protector 9

4.0 Warranty and Product Return Procedures 10
Restocking Policy 11

Appendix A - Drawings and Diagrams 13
Appendix B - Frequently Asked Questions 17
Appendix C - Field Checkout and Troubleshooting Techniques 20
Appendix D - Calibration Calculations 28

1.0 Product Description

General Characteristics

KPSI™ Level and Pressure Transducers use isolated-diaphragm sensors that are specifically designed for use with hostile fluids and gases. These sensors utilize a silicon pressure cell that has been fitted into a stainless steel or titanium package with an integral, compliant stainless steel or titanium barrier diaphragm. This sensor assembly is housed in a rugged 316 stainless steel or titanium case which provides for a variety of level ranges from 2.3 ft (0.75 m) H_2O through 4614 ft (1408 m) H_2O and pressure inputs from 0-1 (7 kPa) through 0-15000 psi (103 mPa). Our devices feature internal signal conditioning. Standard outputs are 4-20 mA and VDC.

All units containing active electronic components have surge and reverse polarity protection. For ease of use in the field, our transducers are permanently laser engraved with our logo and name, wiring information, part number (P/N), serial number (S/N), date of manufacture (DOM), range, excitation and output. Transducers are offered in diameters of 1.0 (25 mm) and 0.75 inches (19 mm).

Care and Handling

Our transducers are designed for rugged use. However, they need protection from over pressure and sharp impact. When lowering them into a liquid, penetrate the surface slowly and only to the depth necessary. Avoid dropping the unit from above the surface. Clean all transducers by rinsing them in a mild detergent. Direct probing of the diaphragm or attempts to remove protective screens will damage the sensor, voiding the warranty.

Calibration

All transducers are shipped with calibration information unique to each transducer. Make sure you keep each calibration report. However, should you misplace your calibration sheet, you can contact the factory and request a duplicate. All KPSI™ Transducer calibrations are traceable to the National Institute of Standards and Technology (NIST).

Approvals

Most of our products have UL and FM certification for intrinsic safety. Their respective installation control drawings can be downloaded from our website. Several of our product lines also carry ABS approval. Most products are CE compliant to EN 61326-1:2006 and EN 61326-2-3:2006. CE compliant units are labeled accordingly.

2.0 Product Accessories and Options



Nose Caps

There are several different user-installable nose caps for the 700, 710, 720, 730, 735 submersible level transducers. The ported nose cap (Delrin) with #8-32UNC-2B threaded hole is best used where weights are required and for those installations where users may encounter sharp, protruding objects. The open-face nose cap which allows maximum contact with the liquid media is ideal for wastewater and "greasy" applications where clogging of the sensor is a concern. The piezometer nose cap allows the unit to be buried in saturated soil without damage to the sensor diaphragm. The 1/4" male NPT pressure nose cap is not only useful for calibration purposes but also allows the device to be used as a submersible or above ground pressure transducer.



810 SuperDry™ Vent Filter or 815 Aneroid Bellows

All submersible transducers with vented gauge format are supplied with a protective barrier that guards against moisture buildup in the cable vent tube. The 810 SuperDry™ vent filter is installed free of charge and is guaranteed to operate maintenance free for one year. We also offer the 815 Aneroid Bellows as a maintenance free option that can be used on submersibles with accuracies of: ±1%, ±0.5%, or ±0.25% FSO. These barriers ensure reliable operation and long life as they protect sensitive electronic components from mildew and prevent the formation of a liquid column in the vent tube. Any such liquid column directly affects calibration of the transducer.

Sacrificial Anodes

Our sacrificial anodes are made from a special zinc alloy formulated to guarantee continued effectiveness over long periods. Because the anodes are 95% galvanic, they will not corrode unless there is an electrolytic demand. The anode maintains a high driving potential throughout its 12 month life, is self-sluffing and always exposes new zinc for the best possible protection. For those applications where cable buoyancy is a problem, the sacrificial anode can be substituted for hanging weights.

Sacrificial Anodes provide cathodic protection against galvanic corrosion for our submersible pressure transducers. Galvanic corrosion occurs when dissimilar metals are placed in contact with an electrolyte. This condition causes a potential difference to exist between the two metals, causing electron flow between them. Corrosion of the less corrosion-resistant metal is increased and attack of the more resistant metal is decreased. The 820 Sacrificial Anode is clamped to the exterior of a one-inch bore submersible transducer. We also offer a 1" diameter pencil anode, the 825, that attaches to the nose cap of either a 3/4" or 1" bore submersible transducer.

Absolute/Sealed Gage Transducer

The sealed gage option for submersible transducers eliminates the need for a vent filter. The standard output of a sealed gauge transducer is 4 mA at 14.70 psia. Before ordering a sealed gauge transducer, the customer should determine the altitude (above sea level) of the installation and inform PSI's Customer Service of this value before order entry. During manufacture, the output of the transducer will be adjusted to compensate for the altitude difference, if applicable.

Polyurethane & ETFE Jacketed Cable

Most installations of our submersible level transducers connect our polyurethane or ETFE cable to a junction box. From this junction box (P/N 840), users typically run their own cable to the required instrumentation. Polyurethane-jacketed cable is used for most applications while ETFE material is recommended for more aggressive environments.

Specifications for our standard polyurethane and ETFE jacketed cable are as follows:

Specifications	Standard Submersible Cable	Standard Non-Submersible Cable
Weight	0.05 lbs/ft (0.07 kg/m)	0.025 lbs/ft (0.035 kg/m)
Min. OD	0.28" (7.10 mm)	0.189" (4.8 mm)
Max OD	0.31" (7.87 mm)	0.19" (4.9 mm)
Conductors	4 - 22 AWG	22 AWG
Insulation Conductors Outer jacket	PVC Polyurethane or ETFE	Color coded PVC
Shield	36 gauge spiral tinned copper wire foil shield with drain wire	Aluminum/polyester foil facing outward
Vent Tube	Polyethylene, .060" ID (1.52 mm)	Drain wire 7/32 tinned copper

- **Chemical resistance of polyurethane:** Potable Water, Wastewater, Borax, Butane, Animal Fat, Carbonic Acid, Citric Acid, Cod Liver Oil, Corn Oil, Glycerin, Glycol, Mineral Oils, Potassium Nitrate, Potassium Sulfate, Silicone Oils, Stoddard Solvent, Tannic Acid (10), Tartaric Acid, Turbine Oil.

- **Chemical resistance of ETFE:** Acetic Acid (Glacial), Acetic Anhydride, Acetone, Aluminum Chloride, Anti-Freeze, Bromine, Calcium Chloride, Calcium Hydroxide, Chlorine, Copper Chloride, Ferrous Chloride, Hydrochloric Acid, Ketones, Lacquer Thinners, Sulfuric Acid.

The vented cable termination end is specially prepared at the factory to eliminate the potential for moisture migration. Where the lead wires emerge from under the jacket, there's potting material and a shrink tube "boot", every effort should be made to leave this feature intact. Should the cable be longer than needed for the installation, it is recommended that the excess length be accommodated in a service loop and that the potted end of the cable **NOT** be shortened.

The cable attached to this instrument is specifically engineered for submersible applications. The polyurethane outer jacket provides long term reliability under most conditions. The cable should be handled carefully, however, as the jacket may be subject to cutting should it be "raked" over extremely sharp edges. To guard against water incursion should an inadvertent minor cut occur, we have incorporated an exclusive "water block" feature immediately beneath the jacket. The cable is fully shielded, with the shield connected to the metal housing at the transducer end and terminated in a drain wire at the termination or user end. The shield should always be terminated to a good earth ground, unless the transducer is installed in an area where galvanic corrosion is known to be a serious problem.

Lightning Protection

Lightning and surge protection for VDC, SDI-12 and 4-20 mA output are available. This is achieved through the use of 2 protectors, one is integral to the transducer housing and one is provided for the outside line located at the surface and grounded to a DIN-Rail. Please remember this option must be factory installed at the time of order entry or as a factory upgrade. **This option cannot be installed in the field.** Lightning protection is also available for unit only. Contact customer service for details.

Featuring quick response and low clamping voltages, these devices protect against fast rising voltage transients as well as severe current surges associated with lightning discharges up to 20,000 amperes. Following a surge, the protector automatically restores the line to normal operation and awaits the next surge without having to reset a breaker or replace a fuse. The power supply needs to be limited to 150 mA to avoid lock up of the gas tube after a suppression event. **Transducers installed with this option have a lifetime warranty *against damage due to voltage surge***.

Please note: When using the lightning protection option on 4-20 mA products, users should take into account the additional series resistance of this option when selecting the loop power supply. This option will increase total loop resistance by 88 Ohms.

½" Male NPT Conduit Fitting

Submersible level transducers can be attached to a rigid conduit and the cable run through the conduit. To achieve this, all of our submersible transducers can be fitted with an optional ½" NPT male conduit fitting (specify "Electrical Connection Option 4" when ordering) where the cable exits the transducer. This fitting can be mated to a standard rigid conduit.

Electrical Outputs

We offer the industry standard 0-5 VDC and 4-20 mA outputs. In addition we also offer a variety of voltage output ranges.

Reverse Signal Output

For some applications, it is important to know how far the water is from the top of the tank or the surface of the ground. If specified by the customer, our factory can set the transducer so that zero pressure reads full scale electrical output and maximum pressure reads zero electrical output.

Temperature Output

A temperature output option is available for most transducers having 4-20 mA pressure output. The temperature sensor requires an excitation of 9-28 VDC and is calibrated for a temperature range of -20 to 60ºC with an accuracy of ±4ºC.

Output Option 6 (4-20mA output for -20 to 60ºC) (mA Reading x 5) - 40 = Temperature ºC

Example:	Reading is 20mA	(20 x 5) - 40 = 60ºC
	Reading is 12mA	(12 x 5) - 40 = 20ºC
	Reading is 4mA	(4 x 5) - 40 = -20ºC

Cable Hanger

We can supply an optional cable hanger (P/N 12-90-0931) to help end users secure the cable. The cable hanger can be positioned anywhere on the cable by pushing the ends together. Once positioned, the cable hanger expands and provides a snug grip on the cable.

When mounting the transducer in a well casing, the cable hanger can be secured to a hook on the well plate or an eye bolt may be attached to the side of the well casing. The cable hanger loop is then secured to the eye bolt by using any number of types of fasteners. A similar technique can be used when working in stilling wells for surface water level measurement. In this case, the loop-end of the cable hanger can be attached directly to a screw or bolt bored into the still well shelf.

Submersible Cable Splicing Kit

Our field-installable cable splice kit (P/N 830) allows you to splice polyurethane and ETFE submersible cable. It is most commonly used for well applications where the more expensive ETFE cable is required for suspension in corrosive media where the liquid level is fairly shallow, but the well is hundreds of feet in depth. It is also used in emergency situations where cable must be spliced together to get an application up and running.

3.0 Installation & Maintenance Tips



General Installation Procedures

The following is important installation and preventive maintenance information. Our Customer Service or Applications Engineering Support staff can provide additional instruction.

1. **Transducer Anchors:** Most users either suspend our submersible transducers in stilling wells or attach them to rigid conduit. This is done to prevent damage to the transducer from shock caused by water turbulence. It is not advisable to tie your transducer to a pump or to piping, as any problem with the transducer could require that the pump be pulled from the installation. This could prove to be *very expensive*. (Please refer to the Cable Anchoring Schemes drawing in **Appendix A**.)

   Some applications use our optional bracket (P/N 49-06-00PC) to clamp the transducer to a fixed object (i.e., wall, ladder, step) or require the unit to be suspended without any protective still well or attachment device. In all installations, care should be taken to ensure no damage occurs to the cable.

2. **Transducer Submersion:** Damage to submersible cable is one of the most frequent causes of transducer failure. Lower your transducer into the liquid slowly, making sure the cable does not drag over sharp edges and only to the depth necessary. Avoid dropping the unit from the surface. This does not apply to Series 27, 28, and 30 transducers.

3. **SuperDry™ Vent Filter (Desiccant) or Aneroid Bellows Installation** (For submersible transducers vented gage pressure format only) ***Always*** install a desiccant vent filter or aneroid bellows immediately after transducer installation**.** Failure to use one or the other could result in premature failure of the transducer; which would not be covered by warranty. If you use a desiccant filter, you should establish a regular maintenance schedule. You should change your vent filter when it is 75% spent (pink color). Replacement filters are available at a nominal cost from the factory. Do not remove the old vent filter until a new one is available. The most common failure mode of our transducers is moisture and corrosion damage due to lack of use or maintenance of the vent filter. This will allow air into the desiccant filter and allows the transducer to properly vent with changes in barometric pressure.

   To install/replace either the aneroid bellows or the vent filter, simply unplug the old unit from the vent tube and plug the 0.062" x 1" stainless steel connector tube (supplied with each filter or bellows) into the vent tube. (Installation and mounting instructions are supplied with each aneroid bellows and vent filter.) The diagram on page 16 shows typical vent filter and aneroid bellows hookups.

4. **Cable Protection** An inexpensive way to protect the cable from damage is to order the submersible pressure transducer with a ½" conduit attachment. Connect an inexpensive flexible 5/8" garden hose to the ½" conduit fitting with an equally inexpensive female PVC ½" NPT x 3/4" NHT swivel fitting, available at your local hardware store

5. **Bending of Cable** Our polyurethane and ETFE jacketed cables are quite flexible. Care needs to be taken to ensure that when bending the cable to suit your installation you do not crimp the vent tube inside the cable. Consequently, do not bend the cable more than a radius of 1 inch.

6. **Cable Compression** Many users require a compression fitting to secure our ETFE and polyurethane jacketed cable as it enters a junction box. Care needs to be taken that you do not over-tighten the fitting so as to damage the cable.

7. **4-20 mA Wiring** When connecting a 2-wire 4-20 mA transducer to a typical power supply and mA meter, verify that the meter has an input impedance of at least 10 Ohms. If you are unsure of the input impedance, then a 10 Ohm resistor may be placed in series with the meter and transducer. Connect the + (red) lead of the transducer to the + terminal of the power supply. If the 10 Ohm resistor is required, connect it to the - (black) lead of the transducer. Use a short length of 22 AWG or heavier wire to connect the + terminal of the meter to the resistor (if it is required) or the - (black) wire of the transducer. Connect the - terminal of the meter to the - terminal of the power supply with a length of 22 AWG or heavier wire. Connect the drain wire from the transducer to a good earth ground. (See **Appendix**, page **14** for wiring diagram.) Please refer to "**Maximum Cable Lengths and Minimum Supply Voltage**" in **Appendix C**, page **22** to verify minimum loop supply voltage requirements.

8. **VDC Wiring** To connect a 3 wire VDC output transducer to a typical power supply and the voltmeter, connect the - terminal of the power supply to the - input terminal of the meter with a length of 22 AWG or heavier wire. Connect the - excitation (black) lead of the transducer to the - input terminal of the meter. Connect the + input terminal of the meter to the signal lead (white) of the transducer. Connect the + terminal of the power supply to the + lead (red) of the transducer. Connect the drain wire to a good earth ground. (See **Appendix A**, **page 14**.)

9. **The Model 750** comes standard with a field removable diaphragm protector (one-inch or 25 mm standoff). The diaphragm protector can easily be taken off by removing six (6) fasteners located on the bottom of the unit.

10. **Sealed-Gage Transducer Configured For Altitude Above Sea Level** Since sealed-gauge transducers are normally calibrated at sea level, there may be considerable error induced when used at a higher elevation. If the transducer was calibrated without taking into consideration the difference in atmospheric pressure at sea level and the higher elevation, an offset error will occur. In order to eliminate error due to this difference, the customer must identify the elevation where the transducer will be installed. The nominal atmospheric pressure at the location is calculated and the transducer will be ranged accordingly. Not all KPSI Transducers are available in a sealed pressure format. Please refer to the appropriate datasheet for availability.

11. **Position Sensitivity** The transducer should be installed so that the diaphragm located behind the nose cap is oriented in a vertical position, otherwise the unit could exhibit an offset.

General Maintenance Tips for Submersible Transducers

1. **Desiccant Maintenance**



If you use a desiccant vent filter, you should establish a regular maintenance schedule. You should change your vent filter when it is 75% spent (pink color). Replacement filters are available at a nominal cost from the factory. Do not remove the old vent filter until a new one is available. Remember that Pressure Systems' improved 810 SuperDry™ Vent Filter are designed to be effective for at least one year before requiring replacement.

2. **Clogged Nose Piece or Dirty Diaphragm**

Either of these conditions could result in erroneous readings from your transducer.



Your transducer may be cleaned in accordance with the procedures listed in step 4, below.

3. **Cleaning your transducer**

Materials required:

- Plastic bowls 8-12 inches (200-300 mm) in diameter and 4-6 inches (100 - 150 mm) deep
- Supply of clean, lint-free cleaning rags
- 32 ounce bottle of "The Works-Tub and Shower Cleaner" (a mild detergent) manufactured by Lime-O-Sol Company in Ashley, IN 46705 and available locally through Wal-Mart, K-Mart, Target, and Ace Hardware stores at $2 to $4 per bottle

Preparation: Prior to cleaning your pressure transducer, ensure that all procedures have been followed in the proper cleaning of the cable and transducer to remove any hazardous materials. The vent filter (or bellows) must be properly attached. The cable should be coiled to ensure ease of handling and it must be protected against the possibility of accidental abrasion and/or penetration of the cable jacket by sharp objects. A lead length of 1 to 1 ½ feet (0.3 - 0.45 m) of cable from the transducer should be allowed to facilitate handling during cleaning. The protective covering (or similar protective device) that is shipped with each transducer should be attached to the transducer at all times. It should only be removed prior to installation or cleaning.

Your work surface needs to be clean and free of clutter and large enough to accommodate all materials required in addition to the transducer and cable. Fill one of the bowls with fresh water, one with a mild detergent mixed with water and the last with 16 ounces (0.45 kg) of "The Works".

Cleaning:

Step 1: Holding the cable 6 inches (150 mm) from the transducer, immerse the unit in the bowl containing the mild detergent and stir for 20-30 seconds. Remove and rinse in the bowl containing the fresh water, using the same stirring motion used in the mild detergent. Rinse and wipe dry.

Step 2: Holding the body of the transducer with one hand so that you are looking at the retaining screen protecting the sensor, carefully remove the sensor nose piece by simply unscrewing it from the transducer body. *Do not touch the sensor diaphragm with your finger or any other object. Also, do not try to dry the inside portion of the transducer, as you risk damaging the pressure sensor*.

Step 3: Place the transducer in a vertical position with the sensing end facing downward in the bowl containing "The Works" solution for approximately 15-20 seconds. Rinse in the bowl containing clean water and wipe dry the external casing only. Place the protective screen in the same solution for 15-20 seconds, rinse and wipe dry.

Step 4: Holding the transducer in a vertical position so that you can see the face of the sensor, screw the protective nose piece back into place.

4. Cleaning the Lightning Protection Data Line Protector



4.0 Warranty and Product Return Procedure

Any transducer/transmitter that is less than 2 years old (see DOM) which does not meet the product's specifications and exhibits **no obvious physical damage to the housing, sensor, or cable (cuts),** will be replaced under warranty.

Units 2-3 years old: Units that fall within this age group and exhibit no obvious physical damage to the housing, sensor, or cable (cuts), may be replaced at a discounted list price.

Units greater than 3 years old: Units that fall within this age group are not replaced under warranty.

Merchandise Return Procedures

Contact the **Applications Support Group** or the **Customer Service Department** at Pressure Systems if your transducer is not operating properly. Our staff is available for troubleshooting at **(757) 865-1243** or toll free at **1-800-328-3665** during normal working hours, Eastern time. If your transducer or accessory needs to be returned to Pressure Systems, obtain a *Returned Merchandise Authorization* (RMA) from the Customer Service Department prior to shipment. Be prepared to supply the following information when requesting the RMA:

- Part number
- Serial number
- Complete description of problems/symptoms
- **Bill To** and **Ship To** address
- Purchase order number (not required for warranty repairs)
- Customer contact and telephone number

The above information, including the RMA number, must be on the customer's shipping documents that accompany the equipment to be repaired. Pressure Systems also requests that the outside of the shipping container be labeled with the RMA number to assist in tracking the repairs. All equipment should be sent to the following address:

ATTN: KPSI TRANSDUCER REPAIR DEPARTMENT (7-digit RMA number)
Pressure Systems, Inc.
34 Research Drive
Hampton, Virginia 23666

Prior to returning to Pressure Systems, the transducer and cable must be cleaned per instructions provided on the cleaning certificate supplied when the transducer was delivered. The certificate can also be found on Pressure Systems website:

www.PressureSystems.com/cleaning.html

The completed certificate must accompany the transducer when shipped to Pressure Systems. If the transducer has been used in media other than potable water, PSI customer service must be notified at the same time an RMA number is requested. PSI reserves the right to reject any shipment deemed to be unsanitary or environmentally unsafe to handle. If these guidelines are not met, the package will be sent back unopened and at the customer's expense. ***Please***

include the attached vent filter or aneroid bellow with each returned vented gage submersible transducer.

Pressure Systems will return warranty items prepaid via UPS GROUND. If the customer desires another method of return shipment, Pressure Systems will prepay and add the shipping charges to the repair bill.

Incoming freight charges are the customer's responsibility. The customer is also responsible for shipping charges to and from Pressure Systems for all equipment not under warranty.

Once the return is received, it typically takes 5-10 working days for the technician to make a fault determination.

A cable reconnect fee will be charged when the customer requests a different length of cable.

Restocking Policy

Pressure Systems does allow standard products to be returned for credit in the event it is no longer required, providing the products are in new and unused condition. A restocking fee will be assessed depending on the model type and variety.

A **25% restocking fee** applies to the following models, providing they are vented-gage reference format and [pressure ranges above 3 psig (20 kPa) and below 100 psig (690 kPa)].

27	320	700	710
28	342	705	720
Display Meters - all models			750

A **50% restocking fee** applies to the following models. This also applies to all other models with sealed-gage and absolute pressure formats as well as vented-gage reference formats with [pressure ranges below 3 psig (20 kPa) and above 100 psig (690 kPa)].

30	335
300DS	730
330	735

NOTE: Expedite premiums and shipping charges are non-refundable.

Please consult the individual manuals for the Series 500 and Series 550 (waterMONITOR) for the restocking policy.

This page intentionally left blank.

Appendix A

Drawings and Diagrams

Wiring Diagram VDC, mA, and Temp Output 14
Cable Anchoring Schemes 15
Reference Connection Schemes 16
Submersible Cable Termination 17

Wiring Diagram VDC, mA, and Temp Output

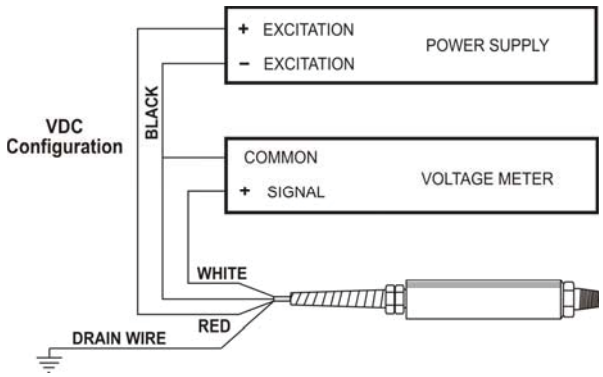

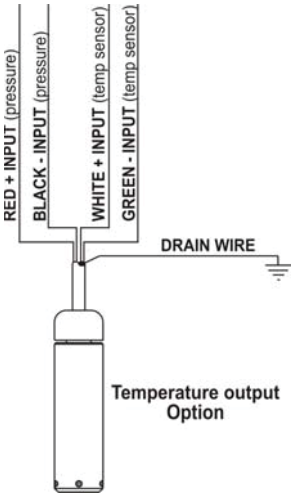

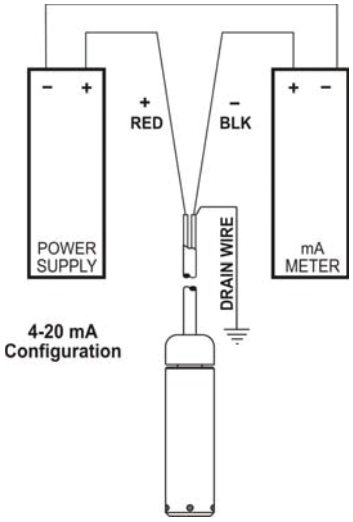

Notes:

1. These diagrams depict typical installations. Refer to your power supply and instrumentation Manufacturer for the specifics of your application.

Cable Anchoring Schemes

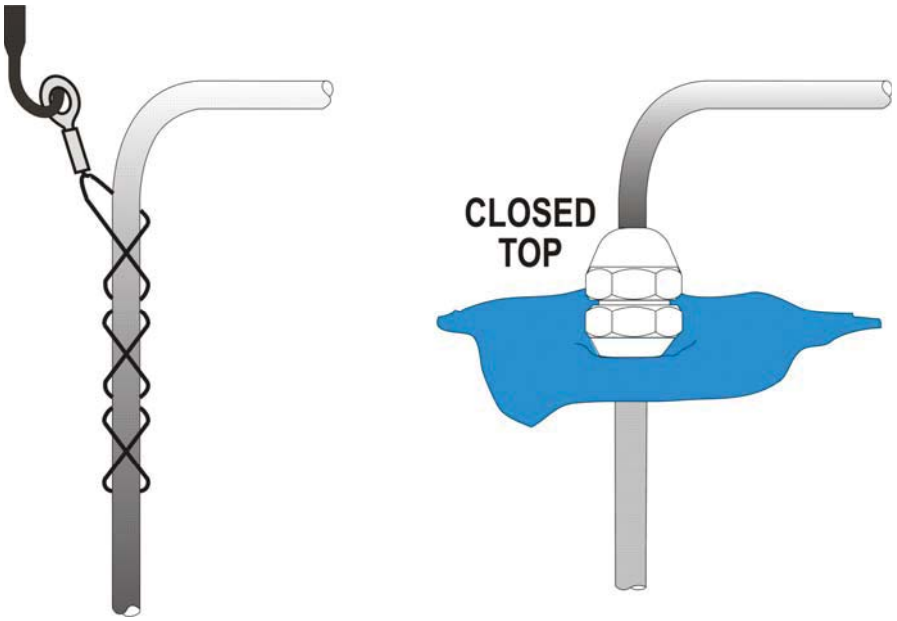

Reference Connection Schemes

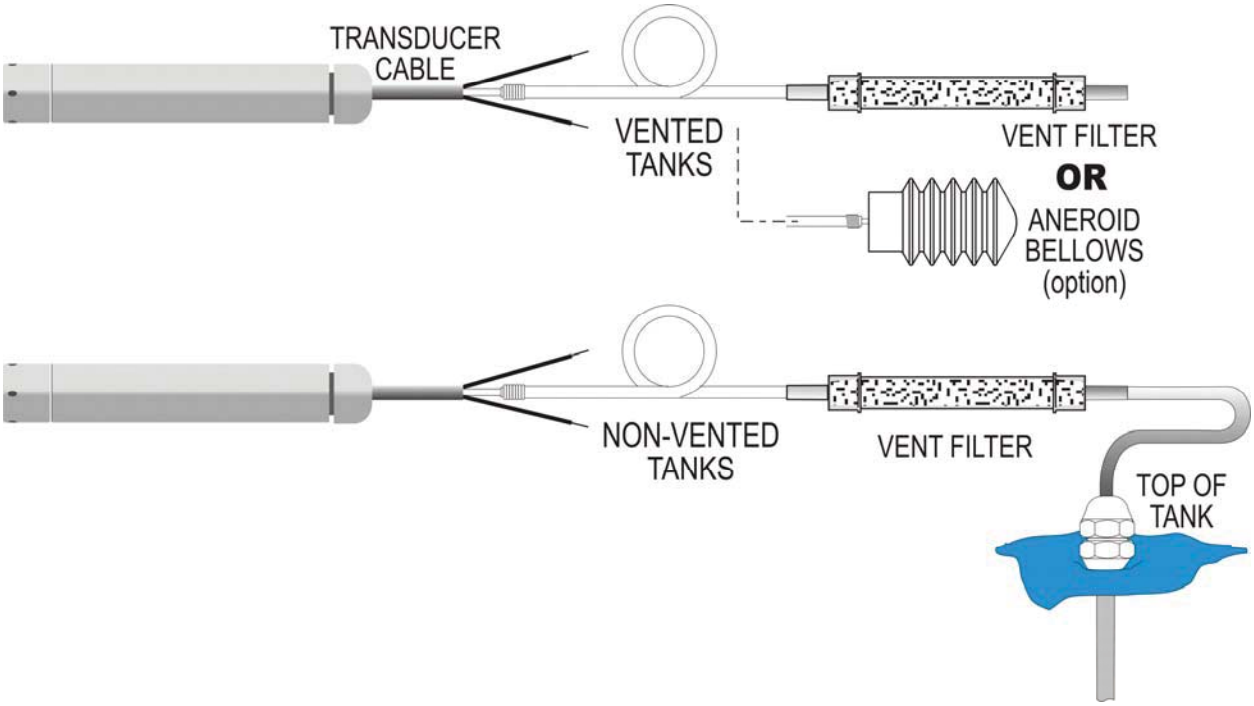

Submersible Cable Termination

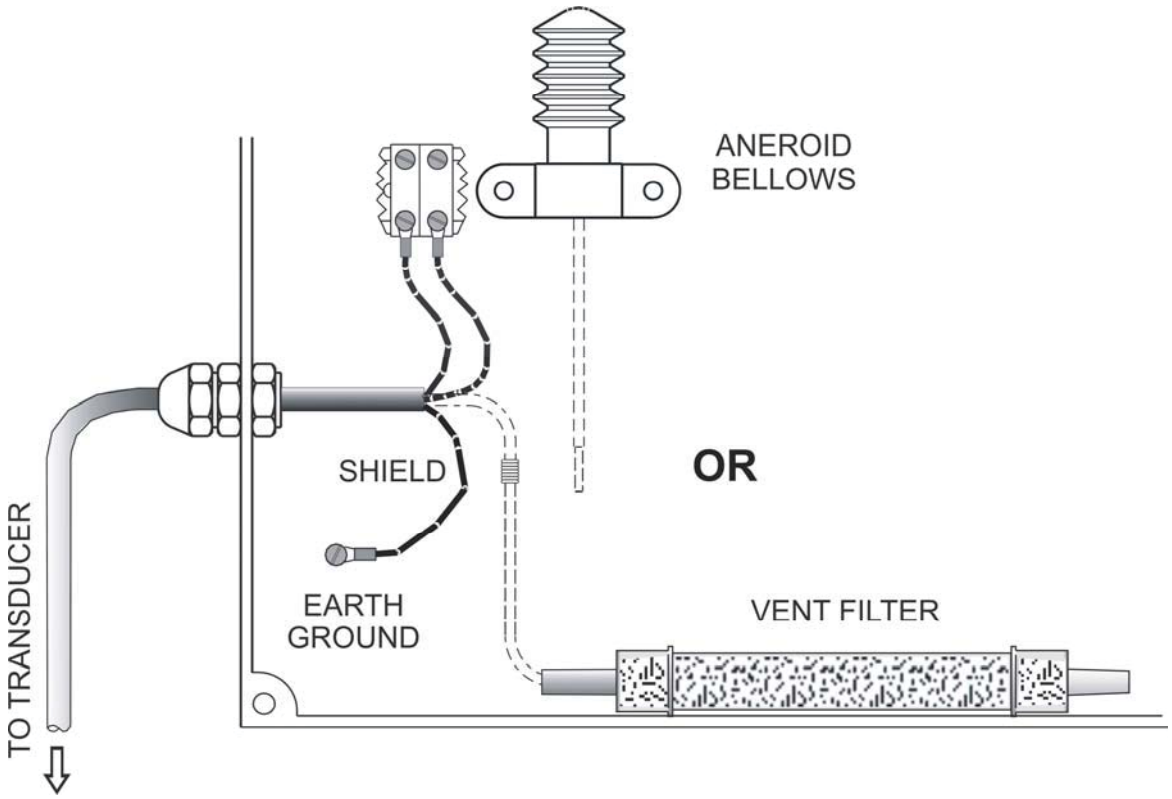

Appendix B

1. Question: What installation ideas do you have to help me get rid of electrical noise interfering with the signal?

Answer: An ounce of prevention goes a long way. Either try to eliminate the source of noise or move the transducer as far away from it as possible. We strongly encourage you to secure our cable shield to a good earth ground and that you use a 4-20 mA signal output. Armed with these precautions and the fact that many of our transducers are CE approved for electromagnetic interference, you should have few problems.

2. Question: The cable on the submersible transducer always seems to get cut and damaged. What am I doing wrong?

Answer: This is the most common problem that our users encounter. Make sure that all of your colleagues and staff understand the importance of handling the cable with care. The cable should not be bent around rough or sharp edges. Always use a cable reel during transport. Where possible, suspend the unit in a perforated 2" (50 mm) PVC pipe and thread the cable through protective conduit to the nearest junction box.

3. Question: I have an application where the transducer is frequently damaged by voltage spikes. What can be done to prevent this?

Answer: At a minimum, make sure the cable shield is connected to an earth ground as near as possible to the transducer. We can provide a surge protection kit for both our submersible and non-submersible transducers. See page 4. These kits will handle typical spikes that might come in through the power lines as well as surges that travel through the ground due to nearby lightning strikes

4. Question: How much impact shock can your submersible transducers withstand?

Answer: Our transducers are not shock tested and the lower pressure ranges can be damaged if dropped from several feet onto an unforgiving surface like concrete. We recommend that the protective shipping foam remain in place until the unit is installed.

5. Question: What is the response time of your transducer?

Answer: From initial power up, the transducer output will stabilize within a fraction of a second. The frequency response is rather low, probably less than 1 kHz, but it depends on the application, the media, plumbing, etc. Call our factory for application assistance if frequency response is critical in your application.

6. Question: How do I attach your vent filter or aneroid bellows to my cable vent tube?

Answer: The vent filter can be mounted anywhere convenient, preferably out of the weather. It can be mounted in any position and connects to the cable vent tube via the extension tube with metal connector tube provided. The aneroid bellows must be mounted in a way that its movement is not encumbered. It is provided with a mounting base.

7. Question: What is the best way to mark my cable?

Answer: Use white vinyl marking tape available from your local hardware or electronic stores. These same stores may also sell cable marking kits.

8. Question: Any ideas for preventing marine growth on your submersible transducers?

Answer: You might want to try waterproof grease. Remove the threaded nose cap to facilitate applying the grease**. Take care not to damage the diaphragm when applying the grease and not to trap air bubbles against the sensing diaphragm.**

9. Question: How many measurements can you make before the diaphragm on the sensor fails?

Answer: In normal operation - millions of cycles. We find that sensor failure is rarely due to diaphragm fatigue.

10. Question: What is the turnaround time on repairs?

Answer: Once we receive a unit into our facility it takes less than 10 working days to complete an evaluation.

11. Question: What is the longest length of cable you have attached to a submersible transducer?

Answer: Two thousand feet (610 meters).

12. Question: Why do you use 316 SS housings and sensors for your standard transducers?

Answer: It offers a good combination of corrosion resistance and reasonable cost. As an option, we do offer titanium for more aggressive environments.

13. Question: What wire gauge should I limit myself to when connecting to your 22 AWG wire?

Answer: Use 22 AWG or heavier.

14. Question: Does it make any difference if I mount the transducer in a vertical or horizontal position?

Answer: Yes. Our units will experience a certain amount of position sensitivity. You should mount it in a vertical position throughout the measurement cycle. If you lay the transducer down, the user must realize than an offset will occur.

15. Question: What happens when you freeze your transducer in a column of water?

Answer: We have frozen our transducers in a container of water in a home freezer, with no resulting damage. However, depending on the level range of the unit, over pressure of the unit is possible. In harsh environments where debris is common and ice shifts, you might expect damage to both the transducer and cable.

16. Question: Why would I choose a KPSI Transducer versus a competitor?

Answer: Reliable, long lasting products
Rapid delivery
Lightning protection lifetime warranty
Excellent pre & post sales/application support
No hassle service

Appendix C

Troubleshooting Techniques

Quick Check Procedure

The following is a quick field checkout procedure for KPSI Level and Pressure Transducers. It will be referred to throughout the troubleshooting section.

Should a problem be encountered with a transducer or transmitter, it is sometimes helpful to test the transducer independently from the rest of the system, thereby establishing where to concentrate the troubleshooting effort.

On the next page is a simple hookup diagram for the most common types of electrical output, a 0-5 VDC transducer and a 4-20 mA transmitter. In either case, the "power supply" can be a common 12 volt lantern battery, or even a 9 volt transistor radio battery, although the lifetime of a 9 volt battery will be limited. The meter should be a digital type capable of reading at least 2 digits to the right of the decimal point. Use 22 gage or heavier hookup wire or clip leads for jumpers. If your unit has other than a 0-5 VDC or 4-20 mA output, please call Applications Support at **(800) 328-3665** for assistance.

Once your transducer is correctly configured per one of the diagrams below, orient the transducer in a vertical position with the pressure port down and then read the zero output on your meter. For a 0-5 VDC output, the zero should be between 0 and 0.10 volts, and for a 4-20 mA output, between 3.80 and 4.20 mA. For Series 300, the values do not change for VDC output but the values for mA are between 3.80 and 4.20 mA. If the output is outside of these limits, you may, at your option, choose to troubleshoot the transducer per the suggested measurements shown below. Otherwise, contact our Customer Service Department at **(800) 328-3665** for a Return Material Authorization number (RMA).

If the zero output is within these limits, the problem will more than likely be found elsewhere in your system.

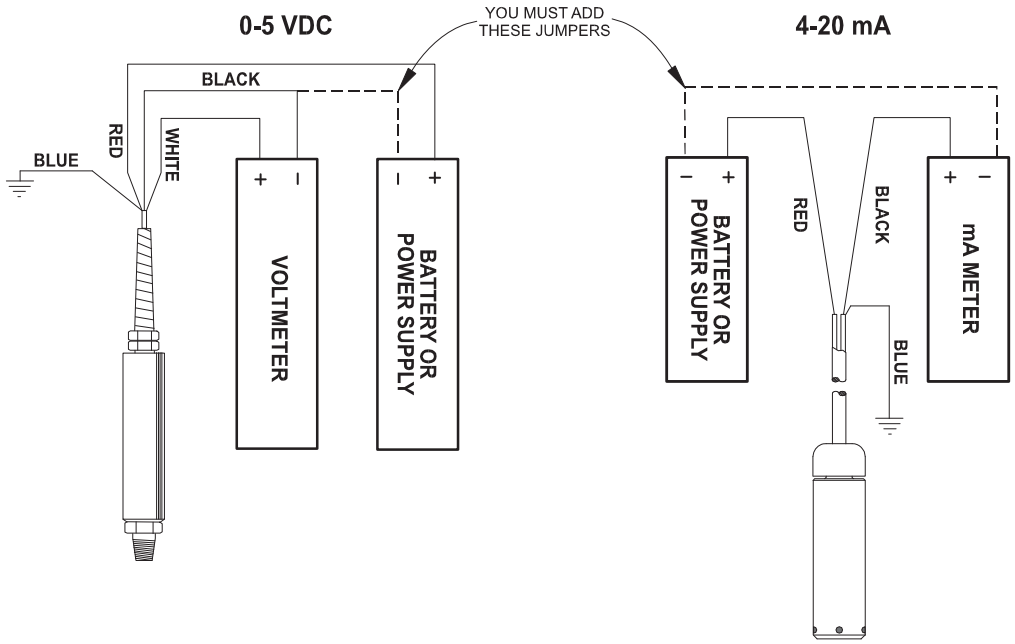

When an error is observed at a customer's installation, it is important to determine if the fault lies in the transducer or the instrument reading the transducer signal, ie. digital panel meter, programmable logic controller, etc. . To do this, a second instrument should be used to confirm the observations. The second instrument may be a handheld DMM (Digital Multi-Meter) or a dedicated milliammeter capable of reading 4-20 mA of current to a resolution of at least 0.1 mA. The diagram above illustrates the attachment of the meter in series with the black (negative signal) wire of the transducer using a 9-28 VDC power supply for transducer excitation. Some suggested power supplies are:

- 1 - 12 VDC automotive battery.
- 2 - 6 VDC lantern batteries connected in series (for a total of 12 VDC).
- 2 - 9 VDC transistor batteries connected in series (for a total of 18 VDC).

Batteries are suggested to power the transducer during testing to eliminate the possibility that line noise is passing through an improperly filtered, grounded, or damaged power supply. All measurements should be recorded and sent to Pressure Systems along with the transducer to assist in the evaluation process.

Further Measurements:

0-5 VDC	Should read:	4-20 mA	Should read:
+Excitation (white) to Shield (drain)	> 2.5 Mohms	+Excitation (red) to Shield (drain)	> 2.5 Mohms
-Excitation (black) to Shield (drain)	> 2.5 Mohms	-Excitation (black) to Shield (drain)	> 2.5 Mohms
+Output (red) to Shield (drain)	> 2.5 Mohms	Shield (drain) to Housing	< 2 ohms
Shield (blue) to Housing	< 2 ohms		

Maximum Cable Lengths and Minimum Supply Voltage

The maximum length of cable to be used with our submersible transducers is largely dependent upon the type of electrical output of the transducer. For a 0-5 VDC output, a maximum cable length of 100 feet (30 m) is recommended. A voltage output is more susceptible to electrical interference than a 4-20 mA signal. A 4-20 mA signal can be transmitted much longer distances, depending upon such factors as temperature, wire size, length of the wire, power supply, and voltage requirements of any devices to be powered. At 25ºC the 22 AWG conducting copper wire used in our polyurethane jacketed cable has a resistance of 16.45 ohms per 1000 feet (304 m).

Using Ohms Law (E=IR) where E=voltage, I=current and R =resistance, one finds that a 20 mA signal requires .329 volts to drive it along 1000 feet (304 m) of 22 AWG copper wire (E=16.45 x .020). This drop is seen on both the supply and return wire for a total loop voltage drop of 0.658 volts

To find out how much voltage is required to drive our Series 700 submersible level transducer's 4-20 mA signal 10,000 feet, just add the minimum power requirement of the 700 (9 VDC) to the resistance offered by 10,000 feet (3048 m) of our polyurethane jacketed cable (10,000÷1000 x .658=6.58). The resulting power requirement is 15.58 VDC (9 + 6.58).

Connect the cable shield (drain wire) to a good earth ground. This will protect the transducer from relatively minor transient voltages. The only exception to this rule is if high rates of electrolytic corrosion have been previously experienced with grounded submersible devices. In this case it may be better to leave the shield disconnected.

Please note: When using products with the lightning protection option on 4-20 mA products, users should take into account the additional series resistance of this option when selecting the loop power supply. This option will increase total loop resistance by 88 Ohms.

Troubleshooting Techniques

1. Symptom: ***Transducer fails to give output of any kind.***

Procedure: Isolate the problem to either the transducer or the power supply/readout. See the Quick Check Procedures (above) for this check. If it can be determined that the transducer is no longer operable, remove it from service for further analysis. If the transducer output falls within the limits described above, the fault lies somewhere else in your system.

2. Symptom: ***Transducer has failed and has been removed for analysis.***

Procedure: Inspect the cable for physical damage. Cuts in the cable jacket can result in liquid incursion into the transducer housing, which can cause permanent damage. If operational, the cable can be repaired by using a splice kit (P/N 830) supplied by Pressure Systems.

Inspect the transducer housing. It should be intact and free of corrosion. If the outer surface of the transducer is pitted, this could be an indication of galvanic corrosion caused by stray ground currents. If this is the case, the transducer will probably require replacement. If the external case exhibits none of these characteristics, carefully unscrew the nosepiece and look into the pressure sensing end of the transducer. The concentric rings of the sensing diaphragm should be visible. If they are not, it could be that residue has accumulated on the diaphragm, preventing it from responding properly to pressure changes. The transducer can be cleaned by gently swishing the transducer back and forth in a bucket of warm, soapy water until the residue softens and washes off. (See **Cleaning Your Transducer**, page 8.) ***Under no circumstances should any object or tool be used to remove residue from the sensing diaphragm or else permanent damage will be done.*** If cleaning the diaphragm does not solve the problem, the transducer should be returned to the factory for repair or replacement.

3. Symptom: ***Transducer develops a negative offset and gets worse over time (actual level exceeds specified level).***

Procedure: This may be a sign that moisture has entered the reference (vent) tube in the cable and is inside the transducer housing. This is usually the result of not maintaining the desiccant vent filter or of operating the transducer without a desiccant filter or aneroid bellows. If caught early enough, the transducer can be saved by coiling the cable and transducer in a pan and baking it in an oven at 50°C (122°F) for a minimum of 2 hours. *Be careful that the oven temperature does not exceed 50ºC (122°F)* or both the transducer and the cable can be damaged. **Alternatively**, suspend both the cable and transducer in a vertical position (with vent tube down), overnight to allow water to drain from the transducer and vent tube.

4. Symptom: ***Transducer suddenly fails during or just after a nearby lightning event.***

Procedure: This failure is usually caused by overvoltage due to ground transients resulting from a direct or indirect lightning event. These transients can travel

distances of a mile or more. The transducer may be returned to the factory for repair and optional retrofit of our ***lightning protection system.*** This system carries a lifetime warranty against transducer damage due to lightning.

5. Symptom: ***Transducer response to pressure/level input changes becomes sluggish.***

Procedure: This is usually a sign that the sensing end of the transducer has become fouled with residue. The transducer must be removed from service and the sensing diaphragm cleaned as described in Item 2, (warm, soapy water). If fouling persists, the transducer may be replaced with a Series 705 or Series 750 (non-fouling) transducer, which is specifically designed for trouble-free operation in a high residue environment.

6. Symptom: ***Output reading is within limits but "freezes" at one point.***

Procedure: In certain environments "crust" may form over the sensing diaphragm, preventing the sensor from identifying change in level. Removing the transducer from service and cleaning it (as described in Item 2) will generally solve the problem. To combat marine growth, you might try wrapping the transducer with copper wire similar to that found in wire scouring pads for cleaning dishes. Marine growth occurs on the copper and eventually erodes the copper and drops off or the copper is manually removed during routine maintenance. Alternatively, there are various companies that will impregnate/coat the 316 stainless steel with anti-fouling chemicals of coatings. Level transducers temporarily removed from the well or sump should not be stored dry, but should be stored in a bucket of fresh water in order to prevent "crust" formation.

7. Symptom: ***Readings increase very slowly over time***.

Procedure: Our cable is shipped coiled and consequently takes time to straighten when installed. Attaching a weight to the transducer (e.g., one of our sacrificial anodes) will help. To prevent cable stretch with lengths greater than 200 feet (60 m), secure the Kevlar fibers (just under the cable jacket) to your junction box or other secure object.

8. Symptom: ***No electrical output from your transducer.***

Procedure: Check all electrical connections to ensure they are correct and secure. Double check your power supply or use a battery (as described previously) to ensure the transducer is getting power. If all checks OK, the problem could be a circuit board or the sensor in your transducer. The unit must be returned to the factory for evaluation. The most probable cause of this type of failure is damage to the submersible cable jacket allowing water to leak down the cable and into the transducer housing or lightning damage.

9. Symptom: ***Formation of marine growth on a submersible transducer.***

Procedure: Certain transducer construction materials, for example, 316 stainless steel, attract marine life (snails) and algae. Clean the transducer diaphragm by

soaking it in a bucket of warm water with a non-aggressive cleaning solution. You can also coat the transducer with marine grease. This may be the most effective and inexpensive way to protect your transducer.

10. Symptom: ***Submersible transducer exhibits corrosion or pitting on body or diaphragm***

Procedure: Dissimilar metals (for example, your transducer housing and your pump housing) in an electrolytic environment (fluid in your well) can lead to *galvanic corrosion* of the metal that is nearer the anodic end of the galvanic series. Likewise, a voltage potential between the ground wire of the transducer and the ground of other equipment in the well can lead to *galvanic corrosion*. Installation of a P/N 820 or 825 sacrificial anode will help protect your transducer from *galvanic corrosion*. Our sacrificial anodes are made of a zinc alloy that, being nearer the anodic end of the galvanic series than the 316 stainless steel or titanium housing of the transducer, will corrode before the transducer.

11. Symptom: ***The transducer is buried in dirt or silt and the readings seem to be erroneous.***

Procedure: Use of a piezometer nosepiece in this application would help. This nosepiece can be easily installed in the field and features a very fine screen to keep dirt from fouling the diaphragm, but allows the diaphragm to sense moisture levels.

12. Symptom: ***Transducer has an offset error.***

Procedure: Our submersible transducers perform best when the sensing end is pointing in a downward manner. Keep in mind that you can experience offset error due to the position sensitivity or orientation change of the sensor. Offset errors are more prominent in low pressure applications with the sensing end of the transducer lying flat or pointing upward.

13. Symptom: ***I am testing a Series 700 4-20mA sensor for use with our data logger. On page A-2 of the KPSI Level and Pressure Transducers User's Manual, I see the standard 4-20mA configuration. Does the recording channel of my data logger become the mA meter?***

Procedure: Most data loggers cannot measure current (mA) directly. When this is the case a load resistor must be used to convert the current (mA) output into an appropriate voltage. If the User's Manual for your particular instrument does not illustrate a preferred method for recording current (mA) data then you should attach your transducer signal wires to your data logger in the following manner.

Transducer red wire - Data Logger Excitation Terminal
(The minimum excitation for a Series 700 Transducer is 9VDC)
Transducer black wire – Data Logger signal input (+) terminal

Attach a Load resistor between the Data Logger signal input (+) terminal and the Data Logger signal input (-) terminal.

Attach a separate piece of wire between the Data Logger signal input (-) and analog ground.

In this configuration you will turn your data logger into a milliammeter. The size of your load resistor can be calculated in the following manner.

D/0.02=R

Where:

Data logger input range = D
Full scale output of transducer = 0.02 A (20 mA)
Load Resistor Value = R

Pick an appropriate standard value

250 Ohms results in 1 to 5 VDC at 4 and 20 mADC
125 Ohms results in 0.5 to 2.5 VDC (500 to 2500 mVDC) at 4 and 20 mADC

At this point the discussion needs to address IR loss (voltage drop) in series circuits. Note that Series 700 transducers need a minimum of 9 VDC to operate correctly. When the transducer is operating correctly it will output a current which, when driven through a resistor, will generate some amount of voltage drop. If the resistor value is 250 Ohms then the voltage measured across that resistor will be 0.004 A * 250 Ohms = 1.000 VDC and 0.020 A * 250 Ohms = 5 VDC. Notice that, if the available voltage from the data logger is12 VDC then 12 VDC - 5 VDC = 7 VDC which is less than the voltage required by the transducer to operate. If this scenario were to occur the transducer would actually stop functioning correctly when its output reached 12 mADC (50% of transducer full scale range). In this case the appropriate choice for a load resistor value is 125 Ohms.

14. Symptom: ***I have a Series 700 4-20mA transducer rated for 7.5 PSIG attached to a pressure source that is outputting 7.5 PSIG. With 20VDC being supplied I am getting 19.94 mA. I can't find the upper range allowance for the sensor, but this seems low to me. Does this mA reading fall into the acceptable range for the transducer with the settings I've specified?***

Procedure: When evaluating a transducer it is sometimes convenient to make some broad generalizations in order to rapidly determine the condition of the unit. In general, transducers that output a 4-20 mADC signal have a 16 mADC span (4 - 20 = 16). If the transducers accuracy is reported as being some percentage of its full-scale range then the following table could be used in conjunction with the instructional notations to determine whether a more detailed analysis of data quality is required.

Model	Accuracy	Accuracy in mADC
700	1.00%FS	±0.16 ma
710	0.50%FS	±0.08 ma
720	0.25%FS	±0.05 ma
730	0.10%FS	±0.016 ma
735	0.05%FS	±0.008 ma

In order to approximately determine how many milliamps a transducer should output at a given depth.

1. Determine the depth (in feet) at which the transducer is sited.
2. Divide the depth value (from step 1) by the transducer full-scale range (in feet). - Record the value.
3. Multiply the value calculated in step 2 by 16 (the transducer span in milliamps).
4. Add 4 to the product of step 3. This is the approximate value in milliamps that should be output by the transducer at its current depth.

In order to approximately determine the depth of a transducer (in feet) using a given value of milliamps.

1. Divide the full-scale range of the transducer (in feet) by 16. Record this value.
2. Subtract 4 from the milliamp output of the transducer. Record this value
3. Multiply the result of step one by the result of step 2. This is the approximate depth at which the transducer is sited.

If the resulting numbers are reasonably close to some verified value for current water depth, then the unit is functioning. In order to determine the quality of measurement, additional steps need to be performed.

Appendix D

Calibration Calculations

Pressure Systems ships a calibration sheet with every KPSI™ Transducer. This sheet lists the actual values that were output by the transducer, when it was being manufactured, at several different pressures. In addition, two coefficients are provided that can be used to calculate the actual depth from any given mA output value. These coefficients are derived from a Least Squares Best Fit Straight Line (BFSL) calibration using the data listed on the datasheet. Our accuracy specification is referenced to the line described by the BFSL coefficients and so the transducer may not output exactly 4 mADC at zero pressure and 20 mADC at full-scale. As an example here is an example of data for a typical transducer.

Calibration Report

Test Date: 02/28/08
Test Time: 13:02:57
Model No: 320T14B0A008.670000.000B10030B
Serial No: 0802048
Pressure Range: 0.00 to 8.67 PSIG
Excitation: 9-28 VDC
Output: 4-20 mA

Test Temps: ROOM = 25.3 DegC

PCU Serial No: TRF048

Target Test Pressure	BFSL Rm Temp Outputs	Run #1 Rm Temp Outputs	Run #1 Error %FSO	Run #2 Rm Temp Outputs	Run #2 Error %FSO
0.00	4.0017	3.9995	-0.0134	3.9981	-0.0222
1.73	7.2050	7.2003	-0.0295	7.2066	0.0098
3.47	10.4096	10.4111	0.0091	10.4144	0.0297
5.20	13.6133	13.6182	0.0305	13.6207	0.0461
6.94	16.8176	16.8158	-0.0114	16.8174	-0.0014
8.67	20.0219	20.0173	-0.0290	20.0190	-0.0184
6.94	16.8171	16.8162	-0.0057	16.8172	0.0006
5.20	13.6127	13.6176	0.0305	13.6175	0.0299
3.47	10.4083	10.4131	0.0298	10.4110	0.0167
1.73	7.2049	7.2067	0.0115	7.2059	0.0065
0.00	4.0020	4.0001	-0.0118	4.0000	-0.0124

Maximum Static Error: 0.0523 %FSO
Maximum Non-repeatability: -0.0393 %FSO

Electrical termination: RED: +SUPPLY
BLACK: -SUPPLY
BLUE: SHIELD

Slope1:	0.5411	PSIG/mA
Zero Offset1:	0.0000	PSIG
Slope2:	1.8479	mA/PSIG
Zero Offset2:	4.0017	mA
Conversion Factor:	1.0000	

Notes:

Calculations:

Method 1: Calculate pressure in desired units, using sensor's output as independent variable.
PSIG = 0.5411(mA - 4.0017) + 0.0000

Method 2: Calculate predicted sensor output in desired units using pressure as the independent variable.
mA = 1.8479(PSIG - 0.0000) + 4.0017

In this case, even though the offset or 0 PSIG output was 4.0017 mADC and the full-scale point was 20.0219 mADC the unit actually performed better than its specified accuracy of ±0.25% of full-scale range as indicated in the Error % FS column.

The calculation for pressure is illustrated below:

PSIG = (Span*Output (in mA)) + Offset

And, to convert to feet of water

Feet H_2O = PSIG * 2.3073

measurement
SPECIALTIES
34 Research Drive, Hampton, VA 23666 USA
757-865-1243, Toll Free 800-328-3665
Fax 757-865-8744
E-mail sales@PressureSystems.com
www.PressureSystems.com
online orders www.LevelandPressure.com



SERIES 250N - 253N
DIRECT MOUNT 2 WAY BALL VALVE

Brass ball valve, female/female, with ISO 5211 pad for actuator.
- Full port from 1/4" to 4".
- Pressure rating 600 WOG - 150 WSP.
- Temperature to 366°F.
- Blow out proof stem, chrome plated brass ball.
- P.T.F.E. seats with O-RING backing for low operating torque.
- P.T.F.E. seats and double O-RING stem packing.
- 100% electronically tested in the open and closed position at 80 psi.

250N: WITH BRASS BALL AND STEM - size up to 4".
253N: WITH STAINLESS STEEL BALL AND STEM - size up to 2".

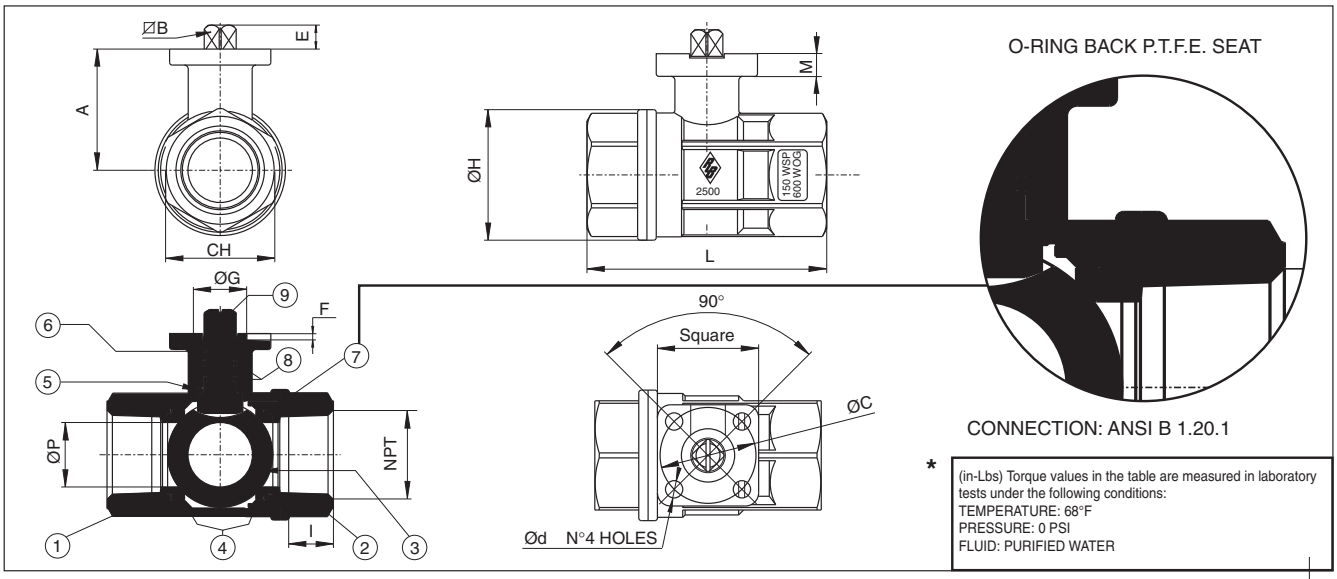

* (in-Lbs) Torque values in the table are measured in laboratory tests under the following conditions:
TEMPERATURE: 68°F
PRESSURE: 0 PSI
FLUID: PURIFIED WATER

1	BODY	BRASS CW 617N UNI EN 12165	1
2	END CONNECTION	BRASS CW 617N UNI EN 12165	1
3	BALL	BRASS CW 617N UNI EN 12165	1
4	BALL SEAT	P.T.F.E	2
5	THRUST WASHER	P.T.F.E	1
6	STEM SEAL	P.T.F.E	1
7	O-RING	FKM (Viton®)	2
8	O-RING	FKM (Viton®)	2
9	STEM	BRASS CW 614 NUNI EN 12164	1

1/4"	1.49	1.28	0.35	1.42 (ISO F03)	0.24	0.35	0.08	0.98	1.32	0.39	2.64	1.06	0.22	0.39	5.4	600	0.82	53.10
3/8"	1.49	1.28	0.35	1.42 (ISO F03)	0.24	0.35	0.08	0.98	1.32	0.40	2.64	1.06	0.22	0.39	6	600	0.79	53.10
1/2"	1.49	1.28	0.35	1.42 (ISO F03)	0.24	0.35	0.08	0.98	1.32	0.53	2.64	1.06	0.22	0.56	16.3	600	0.66	53.10
3/4"	1.49	1.36	0.35	1.42 (ISO F03)	0.24	0.35	0.08	0.98	1.57	0.55	3.00	1.26	0.22	0.75	29.5	600	0.91	53.10
1"	1.49	1.79	0.35	1.42 (ISO F03)	0.24	0.35	0.12	0.98	1.93	0.66	3.35	1.61	0.24	0.95	43	600	1.55	53.10
1"1/4	1.49	1.93	0.35	1.42 (ISO F03)	0.24	0.35	0.12	0.98	2.30	0.68	3.66	1.97	0.24	1.18	89	600	2.14	53.10
1"1/2	1.96	2.52	0.43	1.97 (ISO F05)	0.27	0.43	0.12	1.38	2.87	0.68	4.13	2.16	0.39	1.49	230	600	3.71	150.46
2"	1.96	2.88	0.43	1.97 (ISO F05)	0.27	0.43	0.12	1.38	3.60	0.70	4.80	2.75	0.31	1.97	265	600	5.52	150.46
2"1/2	2.75	3.48	0.55	2.76 (ISO F07)	0.35	0.59	0.12	2.16	4.51	0.93	6.10	3.54	0.35	2.52	540	600	8.83	274.37
3"	2.75	3.85	0.55	2.76 (ISO F07)	0.35	0.59	0.12	2.16	5.35	1.01	6.89	4.13	0.35	3.00	873	600	13.29	274.37
4"	2.75	4.59	0.67	2.76 (ISO F07)	0.35	0.69	0.12	2.16	6.53	1.09	8.03	5.12	0.33	3.74	1390	600	21.54	646.05

OM ELECTRIC ACTUATOR

OPERATION AND MAINTENANCE MANUAL

E-723

◆ PERFORMANCE

【12V / 24V】

Model No.	Torque (Nm)	Speed (90^0)	Motor Power	Motor Speed		12V DC/ AC			24V DC/ AC		
				12 V	24 V	Run	Start	Lock	Run	Start	Lock
OM-A	50	20 s	10 W	3600/min	3600/min	0.5A	3.0A	3.0A	0.7A	0.8A	1.4A
OM-1	35	15 s	10 W	3600/min	3600/min	0.5A	3.0A	3.0A	0.6A	0.8A	1.4A
OM-2	90	15 s	70 W	1800/min	1800/min	3.4A	5.0A	8.5A	3.0A	5.0A	13.0A
OM-3	150	22 s	70 W	1800/min	1800/min	3.4A	5.0A	8.5A	3.0A	5.0A	13.0A
OM-4	400	16 s	180W	1800/min	1800/min	12.0A	8.5A	30.0A	6.0A	8.0A	30.0A
OM-5	500	22 s	180W	1800/min	1800/min	13.0A	8.5A	30.0A	6.5A	8.0A	30.0A
OM-6	650	28 s	180W	1800/min	1800/min	14.0A	8.5A	30.0A	7.5A	8.0A	30.0A
OM-7									7.0A	8.0A	30.0A
OM-8									7.5A	8.0A	30.0A
OM-9									7.0A	8.0A	30.0A
OM-10									7.5A	8.0A	30.0A
OM-11									10.0A	10.0A	26.0A
OM-12									15.0A	15.0A	26.0A

【Single-Phase】

Model No.	Torque (Nm)	Speed (90^0)		Motor Power	Motor Speed		110V Current			220V-240V Current		
		60 Hz	50 Hz		60 Hz	50 Hz	Run	Start	Lock	Run	Start	Lock
BM-2	120	8 s	10 s	40W	1720/min	1450/min	1.3A	3.0A	1.8A	0.5A	1.5A	0.9A

M-A	50	20s	24s	10W	3600/min	3000/min	0.5A	1.5A	0.6A	0.3A	1.0A	0.5A
OM-1	35	12s	13s	10W	3600/min	3000/min	0.5A	1.5A	0.6A	0.3A	1.0A	0.5A
OM-2	90	15s	17s	40W	1720/min	1450/min	1.0A	3.0A	1.8A	0.5A	1.5A	0.9A
OM-3	150	22s	26s	40W	1720/min	1450/min	1.0A	3.0A	1.8A	0.5A	1.5A	0.9A
OM-4	400	16s	18s	120W	1720/min	1420/min	1.3A	3.1A	3.6A	0.6A	1.5A	1.8A
OM-5	500	22s	25s	120W	1720/min	1450/min	1.5A	3.0A	3.6A	0.7A	1.5A	1.8A
OM-6	650	28s	31s	120W	1720/min	1450/min	1.8A	3.0A	3.6A	0.8A	1.5A	1.8A
OM-7	1000	46s	55s	180W	1720/min	1450/min	3.2A	12.0A	10.0A	1.6A	4.0A	4.0A
OM-8	1500	46s	55s	220W	1720/min	1450/min	4.0A	14.0A	10.0A	2.0A	3.6A	5.0A
OM-9	2000	58s	70s	180W	1720/min	1450/min	3.2A	12.0A	6.0A	1.6A	5.0A	4.0A
OM-10	2500	58s	70s	220W	1720/min	1450/min	4.0A	12.0A	6.0A	2.0A	4.0A	3.0A
OM-11	3000	58s	70s	250W	1720/min	1450/min	3.0A	10.0A	5.0A	1.6A	4.0A	3.0A
OM-12	3500	58s	70s	300W	1720/min	1420/min	4.0A	14.0A	5.0A	2.0A	4.0A	3.0A

◆ PERFORMANCE

【Three-Phase】

Model No.	Torque (Nm)	Speed (90°)		Motor Power	Motor Speed		220V Current			380V Current			440V Current		
		60Hz	50Hz		60Hz	50Hz	Run	Start	Lock	Run	Start	Lock	Run	Start	Lock
BM-2	120	8 s	10 s	40W	1720/min	1450/min	06A	1.8A	1.1A	0.3A	1.0A	0.7A	0.4A	1.3A	0.7A
OM-2	90	15 s	17 s	40W	1720/min	1450/min	0.6A	1.8A	1.1A	0.3A	1.0A	0.7A	0.4A	1.3A	0.7A
OM-3	150	22 s	26 s	40W	1720/min	1450/min	0.6A	1.8A	1.1A	0.3A	1.0A	0.7A	0.4A	1.3A	0.7A
OM-4	400	16 s	18 s	120W	1720/min	1450/min	1.0A	3.0A	3.5A	0.7A	2.2A	2.0A	0.8A	2.5A	2.0A
OM-5	500	22 s	25 s	120W	1720/min	1450/min	1.0A	3.0A	3.5A	0.7A	2.2A	2.0A	0.8A	2.5A	2.0A
OM-6	650	28 s	31 s	120W	1720/min	1450/min	1.0A	3.0A	3.5A	0.7A	2.2A	2.0A	0.8A	2.5A	2.0A
OM-7	1000	46 s	55 s	180W	1720/min	1450/min	0.6A	0.8A	1.8A	0.4A	0.6A	1.0A	0.4A	0.6A	1.0A
OM-8	1500	46 s	55 s	220W	1720/min	1450/min	0.8A	1.0A	2.8A	0.6A	0.8A	1.6A	0.6A	0.8A	1.2A
OM-9	2000	58 s	70 s	180W	1720/min	1450/min	0.4A	0.6A	2.0A	0.4A	0.6A	1.0A	0.4A	0.6A	1.0A
OM-10	2500	58 s	70 s	220W	1720/min	1450/min	0.8A	1.0A	1.5A	0.4A	0.6A	1.0A	0.4A	0.6A	1.0A
OM-11	3000	58 s	70 s	250W	1720/min	1450/min	1.2A	1.2A	3.0A	0.6A	0.8A	1.5A	0.6A	0.8A	1.5A
OM-12	3500	58 s	70 s	300W	1720/min	1450/min	1.2A	1.4A	2.5A	0.6A	0.8A	1.5A	0.6A	0.8A	1.5A

◆ TRAVEL CAM & LIMIT SWITCHES ADJUSTMENT

The travel cams are set to control the open and closed position of the valve. The position is set to stop the travel of the actuator when the travel cams activate the limit switch.

Standard is two limit switches, one for open, one for closed. The bottom limit switch is normally the open position (full CCW); the top limit switch is normally the closed position (full CW). 2-Auxiliary switches are available and are set independent of the two primary control limit switches.

The travel cams can be adjusted by 2.5mm Hex. Spanner.

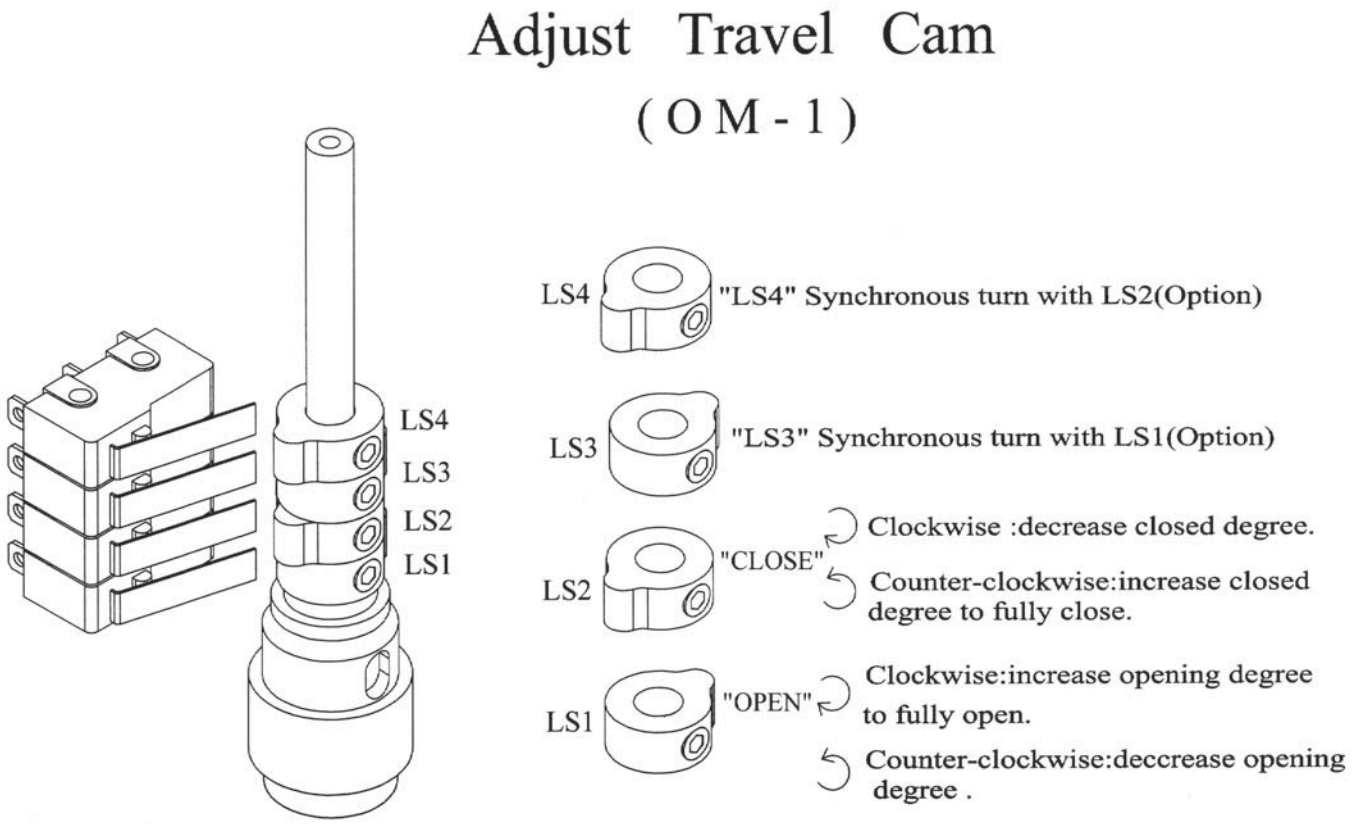

Clockwise = Closes
Counter Clockwise = Opens

TRAVEL CAM & LIMIT SWITCHES ADJUSTMENT

Adjust Travel Cam
(O M - A)

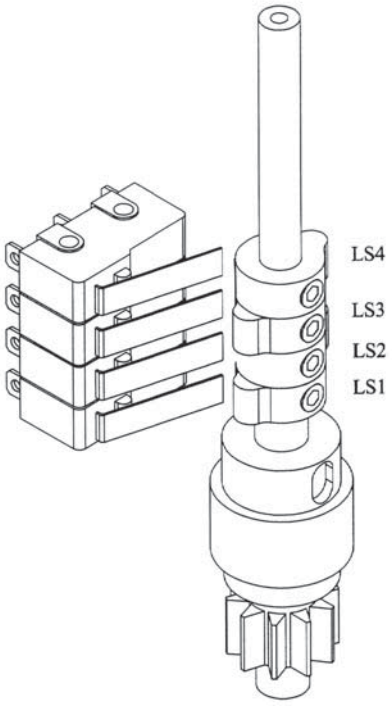

LS4 — "LS4" Synchronous turn with LS2(Option)

LS3 — "LS3" Synchronous turn with LS1(Option)

LS2 — "CLOSE"
- Clockwise :increase closed degree to fully close.
- Counter-clockwise:decrease closed degree.

LS1 — "OPEN"
- Clockwise:decrease opening degree.
- Counter-clockwise:increase opening degree to fully open.

Adjust Travel Cam
(BM-2) (OM-2~12)

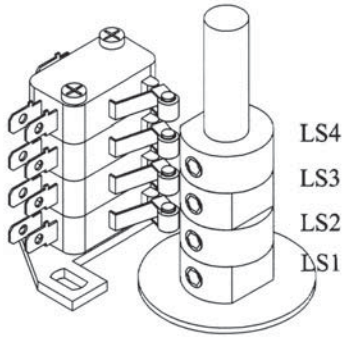

LS4 — "LS4" Synchronous turn with LS2(Option)

LS3 — "LS3" Synchronous turn with LS1(Option)

LS2 — "CLOSE"
- Clockwise:decrease closed degree.
- Counter-clockwise:increase closed degree to fully close.

LS1 — "OPEN"
- Clockwise:increase opening degree to fully open.
- Counter-clockwise:decrease opening degree.

◆ TRAVEL CAM & TORQUE SWITCHES ADJUSTMENT

Adjust Travel Cam
(OM-2~OM-8)

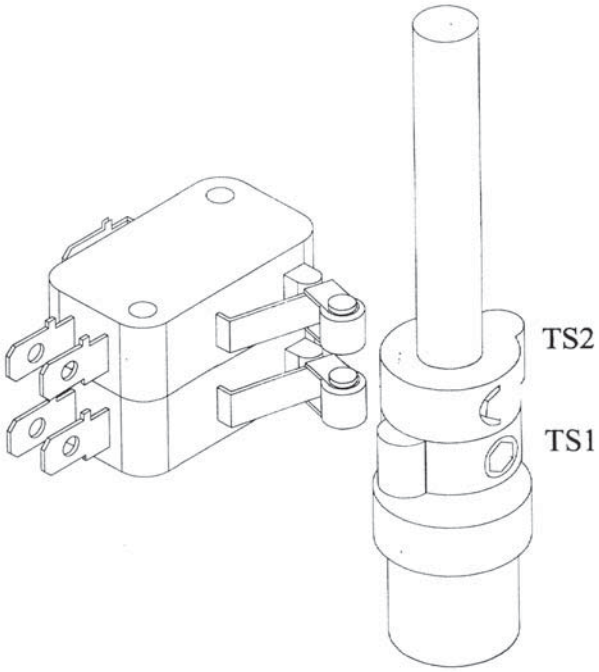

TS2 "CLOSE"

- Counter-clockwise:Decrease the degree of torque setting.
- Clockwise:Increase the degree of torque setting.

TS1 "OPEN"

- Counter-clockwise:Decrease the degree of torque setting.
- Clockwise:Increase the degree of torque setting.

Adjust Travel Cam
(OM-9~OM-12)

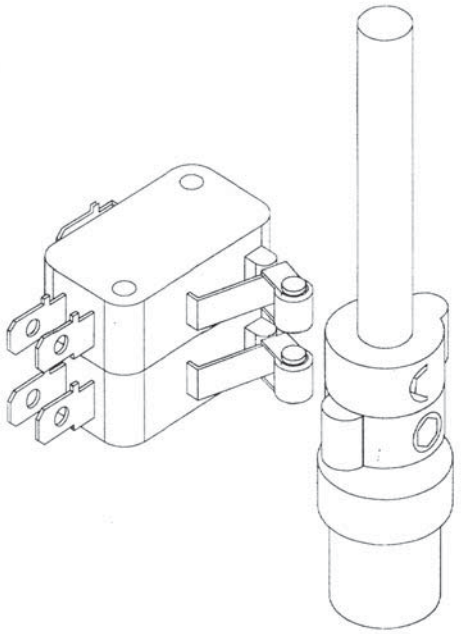

TS2 "CLOSE"

- Counter-clockwise:Increase the degree of torque setting.
- Clockwise:Decrease the degree of torque setting.

TS1 "OPEN"

- Clockwise:Increase the degree of torque setting.
- Counter-clockwise:Decrease the degree of torque setting.

◆ MECHANICAL STOPS

(1) For Electric Operation

Please refer to " Travel Cam & Limit Switches Adjustment ".

(2) For Manual Operation

1. To loosen the screws.
2. To adjust limit switches & travel cams.
3. To adjust the screws.
4. To reverse one cycle.

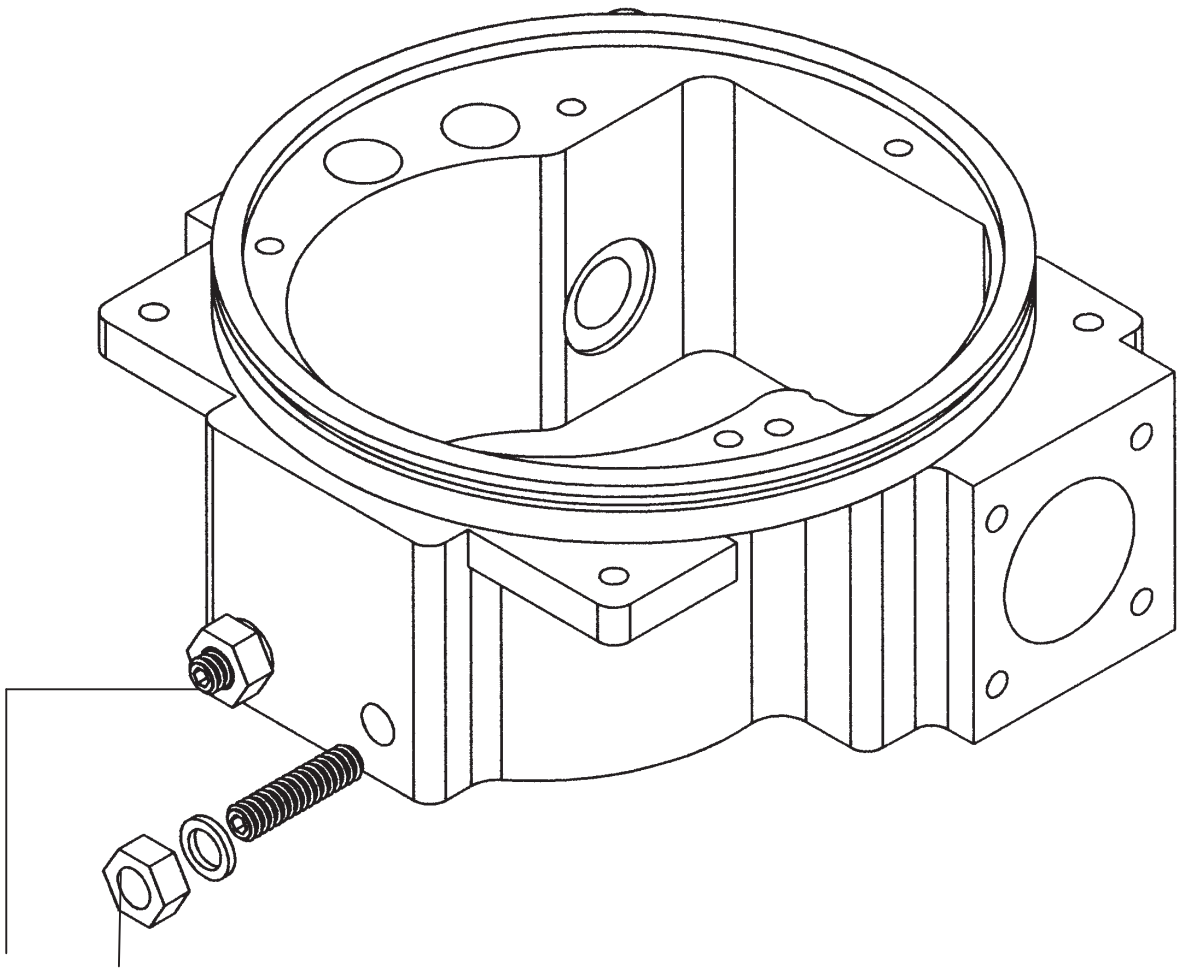

OPEN】 【CLOSE】

◆ POTENTIOMETER

Potentiometers turn with transmission shafts, and can provide a feedback signal for position indication.

Potentiometer points 1, 2, 3 are wired to terminal blocks 5, 6, 7.
When a valve is closed: 5, 6→ 1K Ohm.
6, 7 → 0K Ohm.
When a valve is opened: 5, 6 → 0K Ohm
6, 7 → 1K Ohm.

For modulating controllers, potentiometer points 1, 2, 3 are wired to terminal blocks 8, 9, 10.
When a valve is closed: 8, 9 → 5K Ohm.
9, 10 → 0K Ohm.
When a valve is opened: 8, 9 → 0K Ohm
9, 10 → 5K Ohm.

∗ Remark: OM-A is opposite. (i.e. 1,2,3 wired to 7,6,5; 1,2,3 wired to 10,9,8)

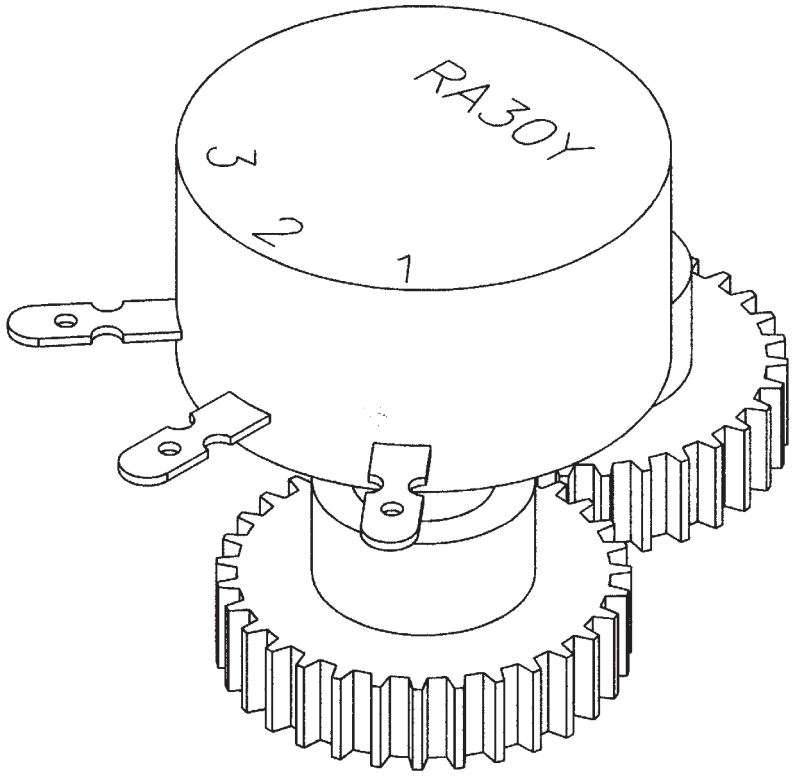

◆ MODULATING CONTROL BOARD：Interface

Modulating Control Board for OM2～12

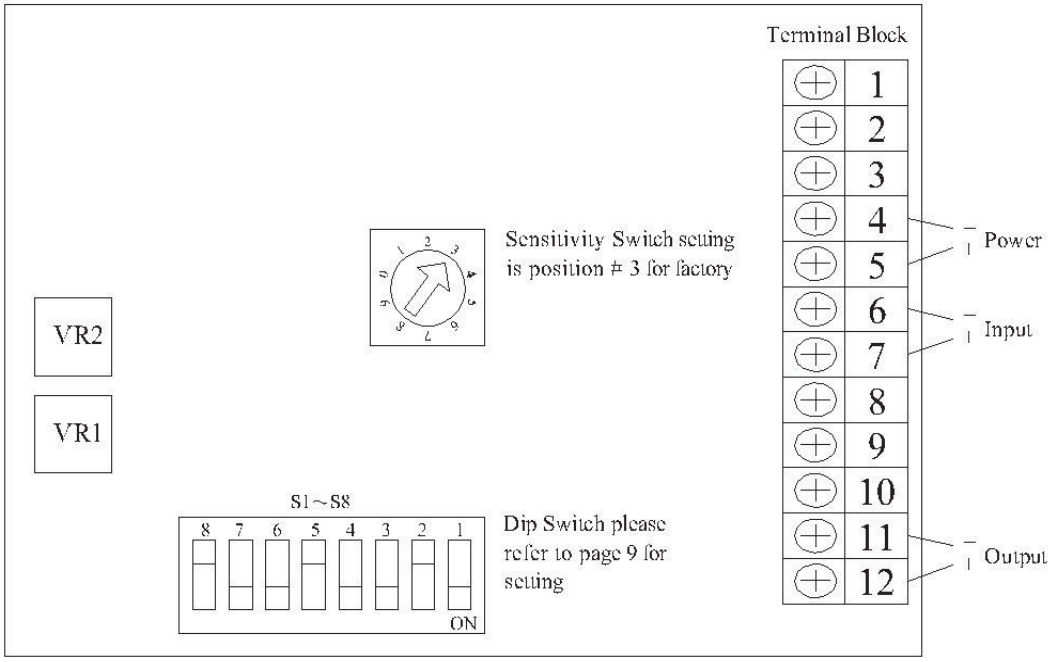

Modulating Control Board for OM1,OMA

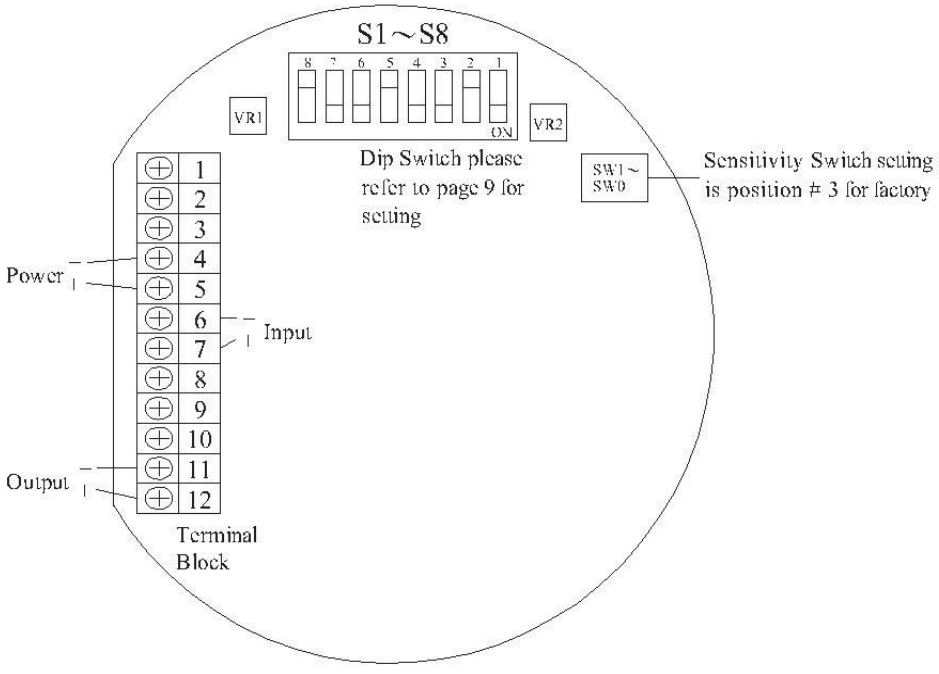

◆ MODULATING CONTROL BOARD

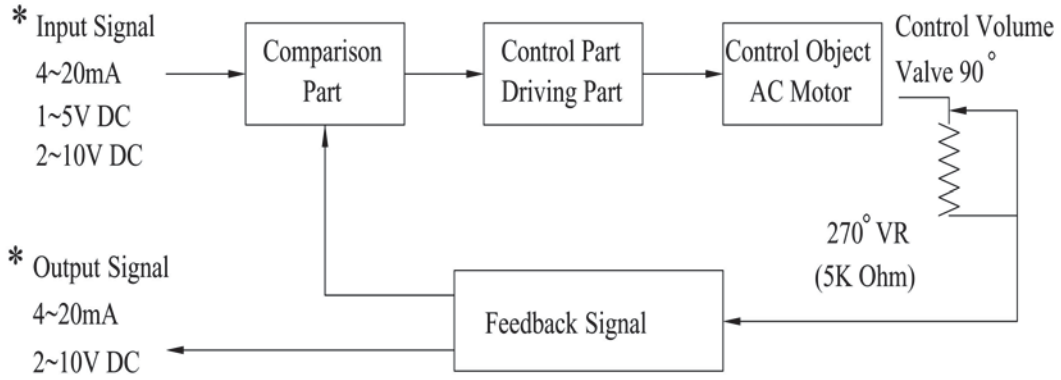

★Attention: TURN POWER OFF BEFORE CHANGING THE FOLLOWING SETTINGS:

S1,2: INPUT SIGNAL SELECT " 4~20mA " set 1-ON / 2-OFF.
" 1~5V " set 1-OFF / 2-OFF.
" 2~10V" set 1-OFF / 2-ON.

S3,4,5,: OUTPUT SIGNAL SELECT "2-10V" set 3-ON / 4-OFF / 5-ON.
"4-20mA" set 3-OFF / 4-ON / 5-OFF.

S6: Valve is fully-open when the input signal is 4mA, 2V or 1V and valve is fully-closed when the input signal is 20mA, 10V or 5V, set 6-ON.
S7,8: POSITION SELECT (When the feedback signal fails) "valve fully-closed" set 7-ON / 8-OFF；"valve fully-open" set 7-OFF / 8-ON；"valve stops" set 7-ON / 8-ON.

S6: Valve is fully-closed when the input signal is 4mA, 2V or 1V and valve is fully-open when the input signal is 20mA, 10V or 5V, set 6-OFF.
S7,8: POSITION SELECT (When the feedback signal fails) "valve fully-closed" set 7-OFF / 8-ON；"valve fully-open" set 7-ON / 8-OFF；"valve stops" set 7-ON / 8-ON.

SW1~0: Sensitivity switch:-
When switch to "1", the 0~90 degree can be divided up to around 80 times movement.
When switch to "0", the 0~90 degree can be divided up to around 17 times movement.
The sensitivity decreases 7 times movement by sectors from SW1 to SW2, SW2 to SW3, SW3 to SW4 and so on.

◆ LUBRICATION

The gearbox of the SUN YEH actuator is enclosed, and it has already been lubricated sufficiently with high temperature lubricant at the factory sufficient for use for up to two years.

◆ IMPORTANT NOTICES & MAINTENANCE

*** Notices**:

1. Make sure the voltage is correct before wiring.
2. Turn off before power for maintenance purposes.
3. Seal the casing and conduit entrance after wiring to prevent dusting or water contamination.
4. The angle of electric actuator installation must between 0~180 degree. Do not install upside down or below the horizontal.
5. Do not install when hazardous or explosive gases may be present.
6. The frequency of open and close is restricted to every 5 minutes. Avoid too high frequency.
7. When more than one electric actuator needs to operate simultaneously, please connect with the individual cables.
8. Please connect the ground wire to PE inside the electric actuator.
9. The warranty period of our product is for one year.

*** Storage**:

1. The actuator should be placed in a clean and dry place, and protected from the weather and extreme vibration.
2. If actuator needs be stored outside, it must be protected from excess moisture, dust, and weather.

◆ TROUBLE SHOOTING

Conditions	Possibilities	Solutions
Motor does not operate	1. Is the supplied power and voltage correct? 2. Any blisters on the capacitor? 3. Are the gear trains free?	1. Checking by meter. 2. If so replace. 3. Remove motor to check.
Motor stops running	1. Is power supply short circuited? 2. Any foreign objects in flow stream?	1. Check wiring. 2. Check for obstructions.
Unable to fully open/close	1. Loose/Misaligned cam? 2. Bent valve stem? 3. Mechanical stop adjustment incorrect?	1. Adjust/Tighten using spanner. 2. Replace valve stem. 3. Check position of stops.
Valve stops operating when motor is running.	1. Gear worn out? 2. Sleeve adapter worn out or broken? 3. Broken valve stem or actuator transmission shaft?	1. Replace gear. 2. Replace sleeve adapter. 3. Replace valve stem or actuator transmission shaft.
Abnormal control for operating two or more actuators simultaneously.	1. Controlling circuit connects in tandem or parallel?	1. Please refer to the wiring diagram.
Motor overheats.	1. Is the voltage correct? 2. Is valve too tight to operate? 3. High working frequency? 4. Is motor stem or bearing binding?	1. Checking by meter. 2. Replace valve. 3. Check duty cycle. 4. Replace the binding parts.
Abnormal on/off angle on 3-phase voltage.	1. Wrong phase wiring?	1. Change phase wiring.
Occasional on/off actuator failure.	1. Simultaneous input power on/off.	1. Check if the selection switch is normal.
Vibration when valve is closed.	1. Motor brake spring fatigued or Teflon worn?	1. Replace spring or Teflon.

OM-1 ~ OM-13, OM-A, OM-A-M, BM-2 110/220/24V Actuator (ON/OFF, 3 Point Control)

Wiring Diagram

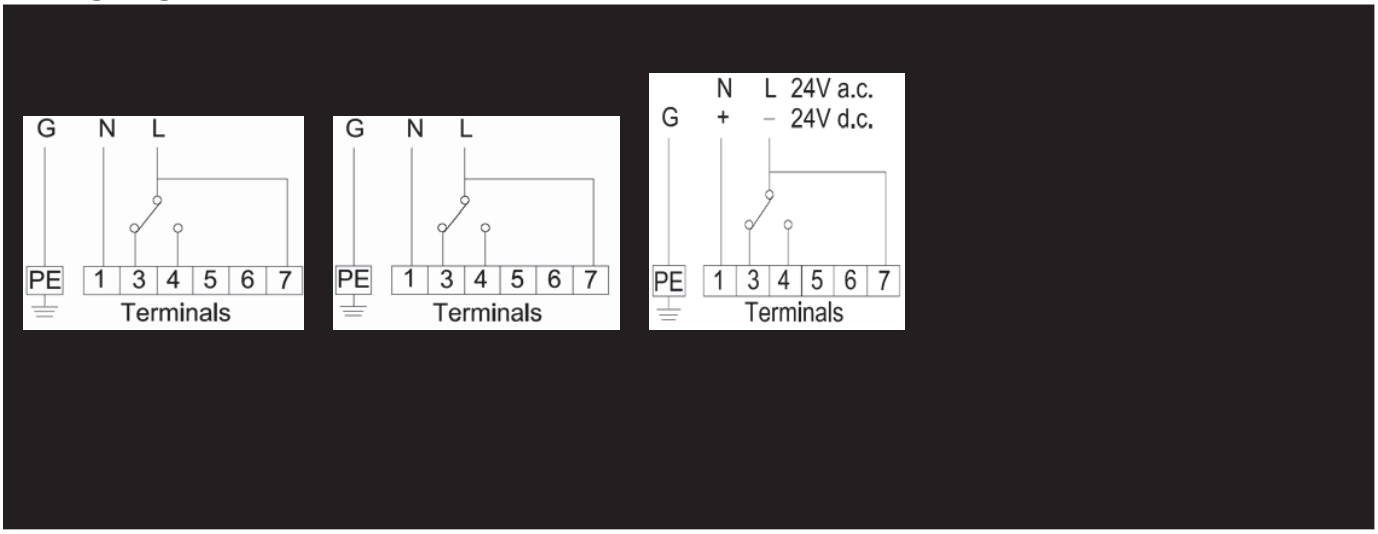

Travel switches adjustment for OM-2~OM-13

The quarter-turn actuator is provided with a limiting of manual rotation device to avoid over-travel with the hand-wheel. Before setting the limit switches, please adjust the mechanical stops.

Mechanical Stops adjustment



【OPEN】【CLOSE】

1. To loosen the screws
2. To adjust limit switches & travel cams.
3. To adjust the screws
4. To reverse one cycle

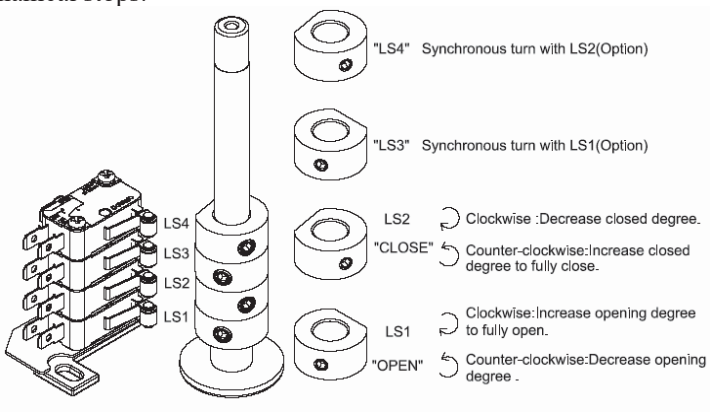

Travel switches adjustment for OM-1 & OM-A, OM-A-M

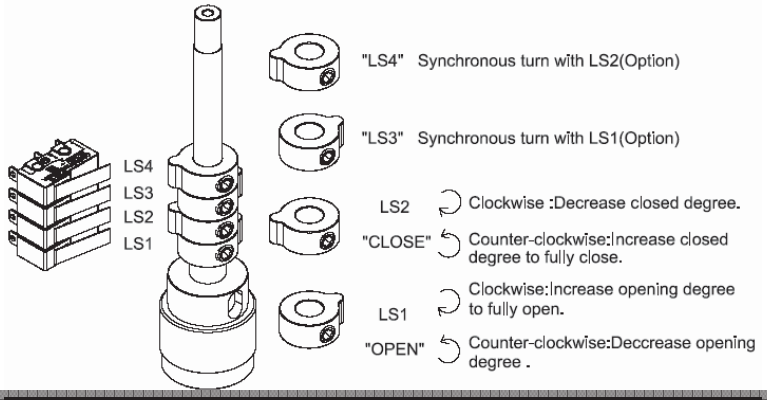

Important Notices & Maintenance

- Make sure if the voltage is correct before wiring.
- Power off before distribution or for maintenance purpose.
- Lock tight the casting and conduit entrance after power distribution to prevent from dusting or water spoiling.
- The angle of electric actuators must not be below the horizon or stands upside down.
- When electric actuators need two sets of unit for simultaneously, please connect with the individual cable.
- Don't install in complete vacuum space directly.
- Actuator should be placed at clean and dry place for storage, and protected with outer carton from being affected by great temperature difference or serious vibration.

OM-1~ OM-13, OM-A, OM-A-M 110/220/24V Actuator (Modulating , 30% & 75% duty cycle)

Wiring Diagram

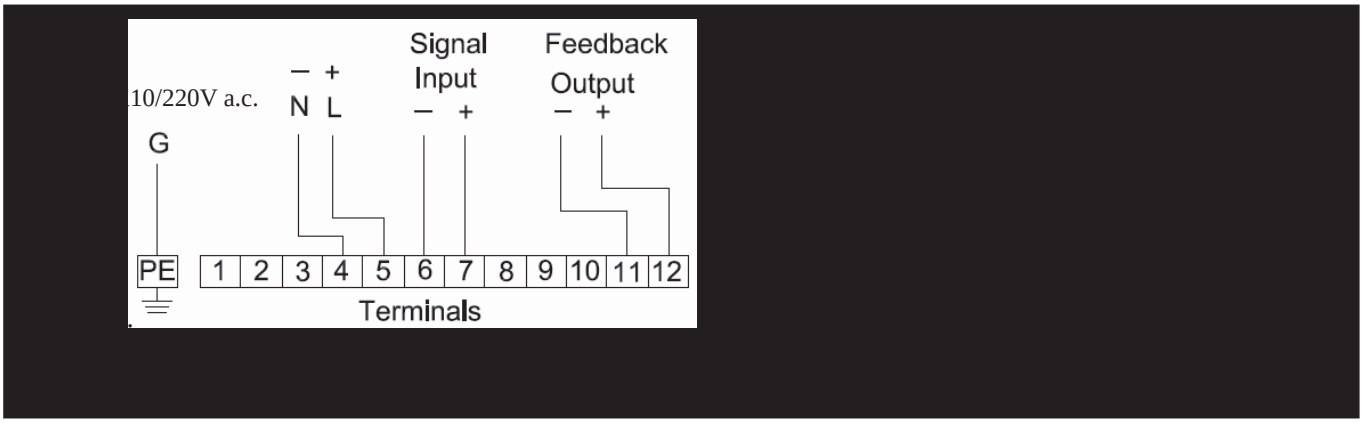

Modulating Board Set Up

OM-1 & OM-A ,OM-A-M **OM-2 ~ OM-13**

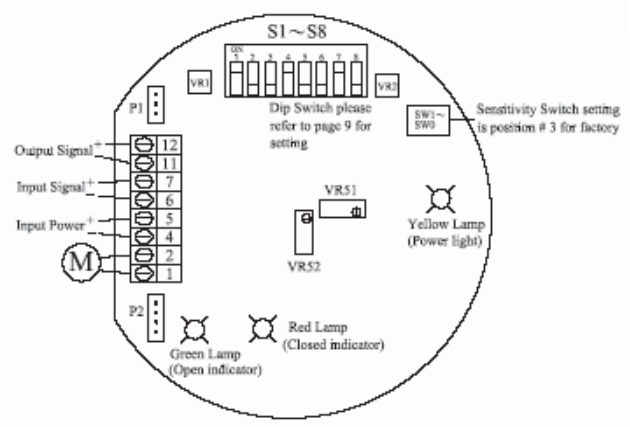

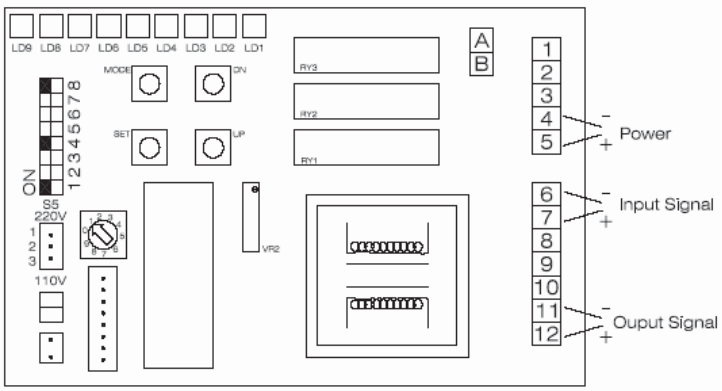

▲ Disconnect power supply before changing the following settings.

Dip Switch setting

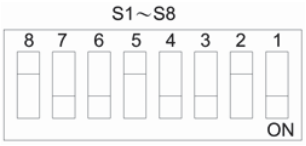

* S3, S4 &S5 for out put signal

Output Signal	S3	S4	S5
2-10V	ON	OFF	ON
4-20mA	OFF	ON	OFF

* S6 - Direction of travel in response to the control.

(Factory setting is OFF.)

S6	Symbol
OFF	90° Signal
ON	90° Signal

* S1, S2 for input signal

Input Signal	S1	S2
2-10V	OFF	ON
4-20mA	ON	OFF
1-5V	OFF	OFF

* S7 & S8-Actuator response to the loss of control signal.

When signal fails	S7	S8
Full closed	OFF	ON
Full open	ON	OFF
Stops	ON	ON

sensitive switch: (Factory setting is position “3”)

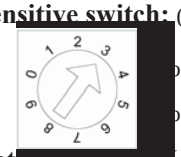

osition “0” : Lowest Sensitive, 0-90 divided into 17 steps.

osition “1” : Highest Sensitive, 0-90 divided into 70 steps.

Setting for OPEN and CLOSE

1. Keep pressing “SET” for 3 seconds, then LED9 comes on, it will enter the manual mode.
2. Keep pressing “UP” until LED2 comes on (fully-open), then supplies the input signal (5V or 10V or 20mA) and presses “MODE” once.
3. Keep pressing “Down” until LED1 comes on (fully-close), then supplies the input signal (1V or 2V or 4mA) and presses “MODE” once.
4. After finishing the above settings, press “SET” once.

To reset and return to the original status – Please power off and get troubleshooting, then power on.

⚠ **To avoid functional failure caused by statics, do not touch any components on the PCB with metal tools or bare hands.**

Modulating Board Set Up

OM-1 & OM-A ,OM-A-M

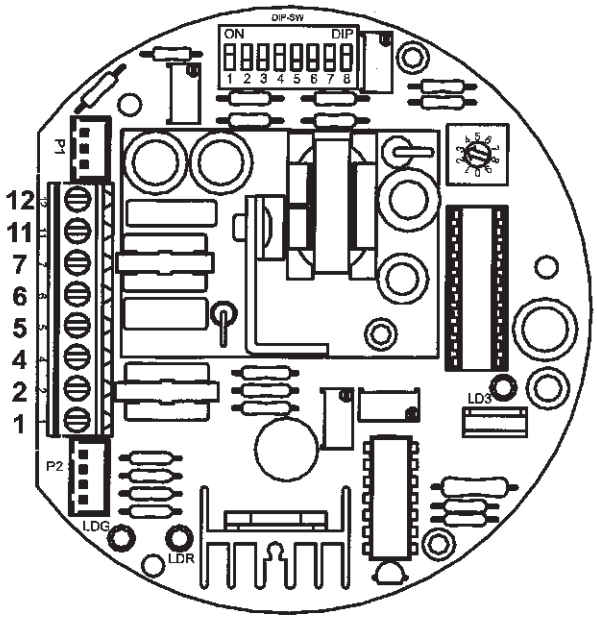

OM-2 ~ OM-13

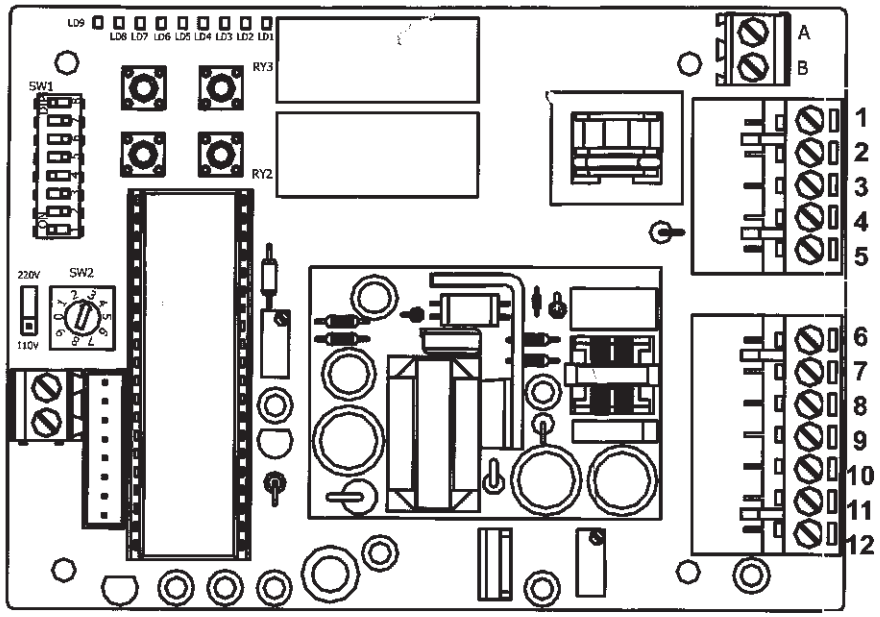

▲To adjust the following settings, turn power off FIRST.

Dip Switch setting

Factory setting: 1,4,8 ON

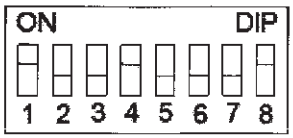

* S1, S2 for input signal

Input Signal	S1	S2
2-10V	OFF	ON
4-20mA	ON	OFF
1-5V	OFF	OFF

* S3, S4 &S5 for output signal

Output Signal	S3	S4	S5
2-10V	ON	OFF	ON
4-20mA	OFF	ON	OFF

* S7 & S8-Actuator response to the loss of control signal.

When signal fails	S7	S8
Fully closed	OFF	ON
Fully open	ON	OFF
Stops	ON	ON

* S6 - Direction of travel in response to the control.

S6	Symbol
OFF	90° Signal
ON	90° Signal

Sensitivity Switch Setting: (Factory setting is position "3")

SW2

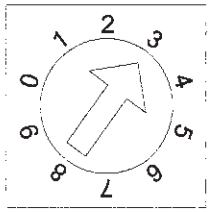

When switch to "1" : The Highest Sensitive and the 0-90 degree can be divided up to around 50 times movement.

When switch to "0" : The Lowest Sensitive and the 0-90 degree can be divided up to around 10 times movement.

The sensitivity decreases 7 times movement by sectors from SW1 to SW2, SW2 to SW3, SW3 to SW4 and so on.

Settings for OPEN and CLOSE

Keep pressing "**SET**" for 2 seconds, then LD9 comes on, it will enter the manual mode.

OPEN setting

1. Keep pressing "**UP**" until actuator runs to fully-open position, LD2 comes on, then supplies the input signal. (5V or 10V or 20mA).
2. Press "**MODE**" once. The OPEN setting is completed.

CLOSE setting

1. Keep pressing "**DOWN**" until actuator runs to fully-closed position, LD1 comes on, then supplies the input signal. (1V or 2V or 4mA).
2. Press "**MODE**" once. The CLOSE setting is completed.

Press "**SET**" once and back to electric mode.

LD1 : Fully - closed	LD6 : Motor thermostat turn off
LD2 : Fully – open	LD7 : Output signal short circuit
LD3 : Power	LD8 : Motor current is excessive
LD4 : Abnormal voltage	LD9 : Manual mode
LD5 : Wrong Input signal	

Operating Instruction

The quarter-turn actuator is provided with a limiting of manual rotation device to avoid over-travel with the hand-wheel. Please follow below adjusting procedures carefully to avoid the damage of the mechanical stops.

Mechanical Stops adjustment

1. Loosen mechanical stop screws.
2. For modulating type, loosen the set screw on the sector gear.
3. Follow below travel switches adjustment procedure for angle calibration.
4. For modulating type, rotate sector gear clockwise to the end. Then tighten the set screw.
5. Tighten the mechanical stop screw until it reaches the shaft, then reverse one cycle.

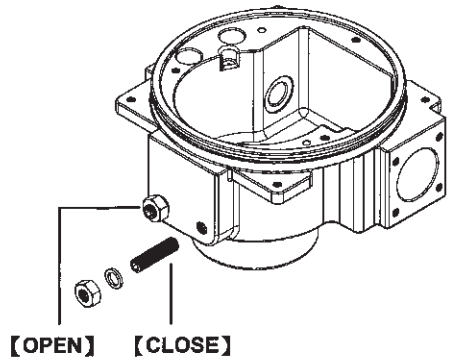

Travel switches adjustment

【OM-A & OM-A-M】

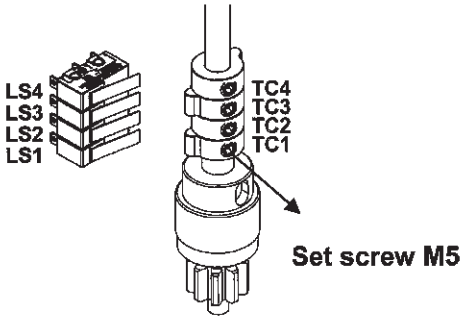

TC4 Synchronous turn with TC2 (optional)

TC3 Synchronous turn with TC1 (optional)

TC2 "CLOSE" ↻ Clockwise : increase closing degree to fully closed.

↺ Counter Clockwise : decrease closing degree.

TC1 "OPEN" ↻ Clockwise : decrease opening degree.

↺ Counter Clockwise : increase opening degree to fully open.

【OM-1】

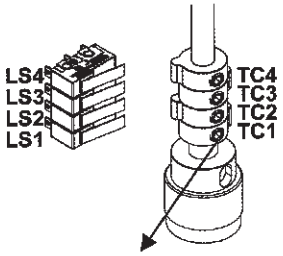

【BM-2, OM-2~13】

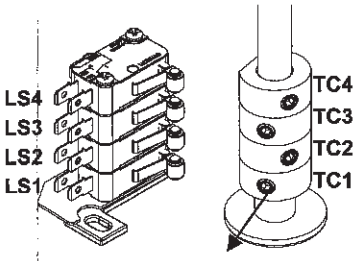

TC4 Synchronous turn with TC2 (optional)

TC3 Synchronous turn with TC1 (optional)

TC2 "CLOSE" ↻ Clockwise : decrease closing degree.

↺ Counter Clockwise : increase closing degree to fully closed.

TC1 "OPEN" ↻ Clockwise : increase opening degree to fully open.

↺ Counter Clockwise : decrease opening degree.

Important Notices & Maintenance

- Check for correct voltage prior to wiring.
- Turn power off before servicing or for maintenance purpose.
- Use sealant to seal conduit connections after wiring to prevent dusting or water contamination.
- The angle of electric actuator installation must be between 0~180 degree. Do not install upside down or below the horizontal.
- When more than one electric actuator needs to operate simultaneously, please connect with the individual cables.
- Please connect the ground wire to PE inside the electric actuator.
- Not intended for vacuum spaces and avoid installing near explosive atmospheres.
- The standard actuator is 30% duty cycle and optional for 75% duty cycle. Avoid too high frequency for the rated duty cycle.

PLC, TM251MESE

Modicon M251 Logic Controller

Hardware Guide

04/2014



EIO0000001486.00

www.schneider-electric.com

Schneider Electric

The information provided in this documentation contains general descriptions and/or technical characteristics of the performance of the products contained herein. This documentation is not intended as a substitute for and is not to be used for determining suitability or reliability of these products for specific user applications. It is the duty of any such user or integrator to perform the appropriate and complete risk analysis, evaluation and testing of the products with respect to the relevant specific application or use thereof. Neither Schneider Electric nor any of its affiliates or subsidiaries shall be responsible or liable for misuse of the information contained herein. If you have any suggestions for improvements or amendments or have found errors in this publication, please notify us.

No part of this document may be reproduced in any form or by any means, electronic or mechanical, including photocopying, without express written permission of Schneider Electric.

All pertinent state, regional, and local safety regulations must be observed when installing and using this product. For reasons of safety and to help ensure compliance with documented system data, only the manufacturer should perform repairs to components.

When devices are used for applications with technical safety requirements, the relevant instructions must be followed.

Failure to use Schneider Electric software or approved software with our hardware products may result in injury, harm, or improper operating results.

Failure to observe this information can result in injury or equipment damage.

© 2014 Schneider Electric. All rights reserved.

Table of Contents

	Safety Information	**5**
	About the Book	**7**
Part I	**Modicon M251 Logic Controller Introduction**	**11**
Chapter 1	**M251 General Overview**	**13**
	M251 Logic Controller Description	14
	Maximum Hardware Configuration	16
	TM4 Expansion Modules	19
	TM3 Expansion Modules	20
	TM2 Expansion Modules	28
	Accessories	32
Chapter 2	**M251 Features**	**35**
	Real Time Clock (RTC)	36
	Run/Stop	40
	SD Card	41
Chapter 3	**M251 Installation**	**45**
3.1	M251 Logic Controller General Rules for Implementing	46
	Environmental Characteristics	47
	Certifications and Standards	50
3.2	M251 Logic Controller Installation	51
	Installation and Maintenance Requirements	52
	M251 Logic Controller Mounting Positions and Clearances	55
	Top Hat Section Rail (DIN rail)	58
	Installing and Removing the Controller with Expansions	61
	Direct Mounting on a Panel Surface	63
3.3	M251 Electrical Requirements	64
	Wiring Best Practices	65
	DC Power Supply Characteristics and Wiring	68
	Grounding the M251 System	72
Part II	**Modicon M251 Logic Controller**	**75**
Chapter 4	**TM251MESC**	**77**
	TM251MESC Presentation	77
Chapter 5	**TM251MESE**	**81**
	TM251MESE Presentation	81

Part III Modicon M251 Logic Controller Communication 85
Chapter 6 Integrated Communication Ports 87
CANopen Port 88
Ethernet Port 90
TM251MESE Specific Considerations 93
USB Mini-B Programming Port 96
Serial Line 97
Chapter 7 Connecting the M251 Logic Controller to a PC 101
Connecting the Controller to a PC 101
Glossary 105
Index 111

Safety Information

Important Information

NOTICE

Read these instructions carefully, and look at the equipment to become familiar with the device before trying to install, operate, or maintain it. The following special messages may appear throughout this documentation or on the equipment to warn of potential hazards or to call attention to information that clarifies or simplifies a procedure.



The addition of this symbol to a Danger safety label indicates that an electrical hazard exists, which will result in personal injury if the instructions are not followed.



This is the safety alert symbol. It is used to alert you to potential personal injury hazards. Obey all safety messages that follow this symbol to avoid possible injury or death.

⚠ DANGER

DANGER indicates an imminently hazardous situation which, if not avoided, **will result in** death or serious injury.

⚠ WARNING

WARNING indicates a potentially hazardous situation which, if not avoided, **can result in** death or serious injury.

⚠ CAUTION

CAUTION indicates a potentially hazardous situation which, if not avoided, **can result in** minor or moderate injury.

NOTICE

NOTICE is used to address practices not related to physical injury.

PLEASE NOTE

Electrical equipment should be installed, operated, serviced, and maintained only by qualified personnel. No responsibility is assumed by Schneider Electric for any consequences arising out of the use of this material.

A qualified person is one who has skills and knowledge related to the construction and operation of electrical equipment and its installation, and has received safety training to recognize and avoid the hazards involved.

About the Book

At a Glance

Document Scope

Use this document to:

- Install and operate your M251 Logic Controller.
- Connect the M251 Logic Controller to a programming device equipped with SoMachine software.
- Interface the M251 Logic Controller with I/O expansion modules, HMI and other devices.
- Familiarize yourself with the M251 Logic Controller features.

NOTE: Read and understand this document and all related documents before installing, operating, or maintaining your controller.

Validity Note

This document has been updated with the release of SoMachine V4.1.

The technical characteristics of the devices described in this manual also appear online.

The characteristics that are presented in this manual should be the same as those characteristics that appear online. In line with our policy of constant improvement, we may revise content over time to improve clarity and accuracy. If you see a difference between the manual and online information, use the online information as your reference.

Related Documents

Title of Documentation	Reference Number
Modicon M251 Logic Controller - Programming Guide	EIO0000001462 (ENG), EIO0000001463 (FRE), EIO0000001464 (GER), EIO0000001465 (SPA), EIO0000001466 (ITA), EIO0000001467 (CHS)
Modicon TM3 Digital I/O Modules - Hardware Guide	EIO0000001408 (ENG), EIO0000001409 (FRE), EIO0000001410 (GER), EIO0000001411 (SPA), EIO0000001412 (ITA), EIO0000001413 (CHS), EIO0000001375 (TUR), EIO0000001374 (POR)

Title of Documentation	Reference Number
Modicon TM3 Expert I/O Modules - Hardware Guide	EIO0000001420 (ENG), EIO0000001421 (FRE), EIO0000001422 (GER), EIO0000001423 (SPA), EIO0000001424 (ITA), EIO0000001425 (CHS), EIO0000001381 (TUR), EIO0000001380 (POR)
Modicon TM3 Transmitter and Receiver Modules - Hardware Guide	EIO0000001426 (ENG), EIO0000001427 (FRE), EIO0000001428 (GER), EIO0000001429 (SPA), EIO0000001430 (ITA), EIO0000001431 (CHS), EIO0000001383 (TUR), EIO0000001382 (POR)
Modicon TM4 Expansion Modules - Hardware Guide	EIO0000001796 (ENG); EIO0000001797 (FRE); EIO0000001798 (GER); EIO0000001799 (SPA); EIO0000001800 (ITA); EIO0000001801 (CHS)
M251 Logic Controller - Instruction Sheet	HRB59604

You can download these technical publications and other technical information from our website at www.schneider-electric.com.

Product Related Information

⚠⚠ DANGER

HAZARD OF ELECTRIC SHOCK, EXPLOSION OR ARC FLASH

- Disconnect all power from all equipment including connected devices prior to removing any covers or doors, or installing or removing any accessories, hardware, cables, or wires except under the specific conditions specified in the appropriate hardware guide for this equipment.
- Always use a properly rated voltage sensing device to confirm the power is off where and when indicated.
- Replace and secure all covers, accessories, hardware, cables, and wires and confirm that a proper ground connection exists before applying power to the unit.
- Use only the specified voltage when operating this equipment and any associated products.

Failure to follow these instructions will result in death or serious injury.

This equipment has been designed to operate outside of any hazardous location. Only install this equipment in zones known to be free of a hazardous atmosphere.

⚠ DANGER

POTENTIAL FOR EXPLOSION

Install and use this equipment in non-hazardous locations only.

Failure to follow these instructions will result in death or serious injury.

⚠ WARNING

LOSS OF CONTROL

- The designer of any control scheme must consider the potential failure modes of control paths and, for certain critical control functions, provide a means to achieve a safe state during and after a path failure. Examples of critical control functions are emergency stop and overtravel stop, power outage and restart.
- Separate or redundant control paths must be provided for critical control functions.
- System control paths may include communication links. Consideration must be given to the implications of unanticipated transmission delays or failures of the link.
- Observe all accident prevention regulations and local safety guidelines.[1]
- Each implementation of this equipment must be individually and thoroughly tested for proper operation before being placed into service.

Failure to follow these instructions can result in death, serious injury, or equipment damage.

[1] For additional information, refer to NEMA ICS 1.1 (latest edition), "Safety Guidelines for the Application, Installation, and Maintenance of Solid State Control" and to NEMA ICS 7.1 (latest edition), "Safety Standards for Construction and Guide for Selection, Installation and Operation of Adjustable-Speed Drive Systems" or their equivalent governing your particular location.

⚠ WARNING

UNINTENDED EQUIPMENT OPERATION

- Only use software approved by Schneider Electric for use with this equipment.
- Update your application program every time you change the physical hardware configuration.

Failure to follow these instructions can result in death, serious injury, or equipment damage.

Part I
Modicon M251 Logic Controller Introduction

What Is in This Part?

This part contains the following chapters:

Chapter	Chapter Name	Page
1	M251 General Overview	13
2	M251 Features	35
3	M251 Installation	45

Chapter 1
M251 General Overview

Overview

This chapter provides general information about the M251 Logic Controller system architecture and its components.

What Is in This Chapter?

This chapter contains the following topics:

Topic	Page
M251 Logic Controller Description	14
Maximum Hardware Configuration	16
TM4 Expansion Modules	19
TM3 Expansion Modules	20
TM2 Expansion Modules	28
Accessories	32

M251 Logic Controller Description

Overview

The M251 Logic Controller has various powerful features and can service a wide range of applications.

Software configuration, programming, and commissioning are achieved with the SoMachine software described in the SoMachine Programming Guide and in the M251 Logic Controller Programming Guide.

Programming Languages

The M251 Logic Controller is configured and programmed with the SoMachine software, which supports the following IEC 61131-3 programming languages:

- IL: Instruction list
- ST: Structured text
- FBD: Function block diagram
- SFC: Sequential function chart
- LD: Ladder diagram

SoMachine software can also be used to program this controller using CFC (continuous function chart) language.

Power Supply

The power supply of the M251 Logic Controller is 24 Vdc *(see page 68)*.

Real Time Clock

The M251 Logic Controller includes a Real Time Clock (RTC) system *(see page 36)*.

Run/Stop

The M251 Logic Controller can be operated externally by the following:

- a hardware Run/Stop switch *(see page 40)*
- a SoMachine software command

Memory

This table describes the different types of memory:

Memory Type	Size	Used
RAM	64 Mbytes, of which 8 Mbytes available for the application	To execute the application.
Flash	128 Mbytes	To save the program and data in case of a power interruption.

Removable Storage

M251 Logic Controllers include an embedded SD card slot *(see page 41)*.

The main uses of the SD card are:
- Initializing the controller with a new application
- Updating the controller firmware
- Applying post configuration files to the controller
- Applying recipes
- Receiving data logging files

Embedded Communication Features

The M251 Logic Controller native communication ports include (depending on the controller reference):
- CANopen Master *(see page 88)*
- Ethernet *(see page 90)*
- USB Mini-B *(see page 96)*
- Serial Line *(see page 97)*

M251 Logic Controllers

Reference	Digital Inputs	Digital Outputs	Communication Ports
TM251MESC	0	0	1 serial line port 1 USB mini-B programming port 1 dual port Ethernet switch 1 CANopen port
TM251MESE	0	0	1 serial line port 1 USB mini-B programming port 1 dual port Ethernet switch 1 Ethernet port for fieldbus

Maximum Hardware Configuration

Introduction

The M251 Logic Controller is a control system that offers an scalable solution with optimized configurations and an expandable architecture.

Local and Remote Configuration Principle

The following figure defines the local and remote configurations:

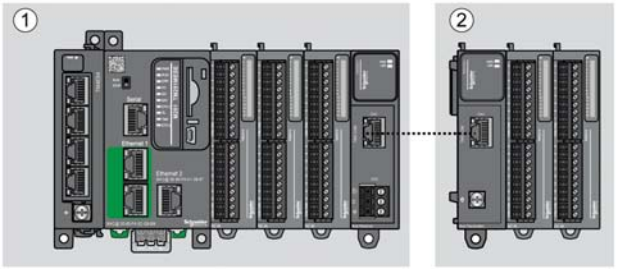

(1) Local configuration
(2) Remote configuration

M251 Logic Controller Local Configuration Architecture

Optimized local configuration and flexibility are provided by the association of:

- TM4 expansion modules
- M251 Logic Controller
- TM3 expansion modules
- TM2 expansion modules

Application requirements determine the architecture of your M251 Logic Controller configuration.

The following figure represents the components of a local configuration:

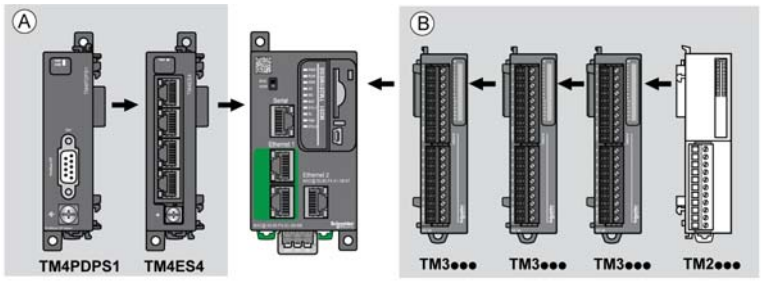

(A) Expansion modules (3 maximum)
(B) Expansion modules (7 maximum)

NOTE: It is prohibited to mount a TM2 module before any TM3 module as indicated in the following figure:

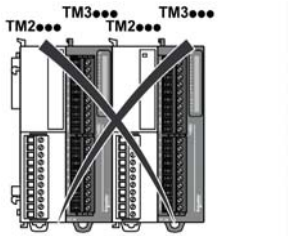

M251 Logic Controller Remote Configuration Architecture

Optimized remote configuration and flexibility are provided by the association of:

- TM4 expansion modules
- M251 Logic Controller
- TM3 expansion modules
- TM3 transmitter and receiver modules

Application requirements determine the architecture of your M251 Logic Controller configuration.

NOTE: You cannot use TM2 modules in configurations that include the TM3 transmitter and receiver modules.

The following figure represents the components of a remote configuration:

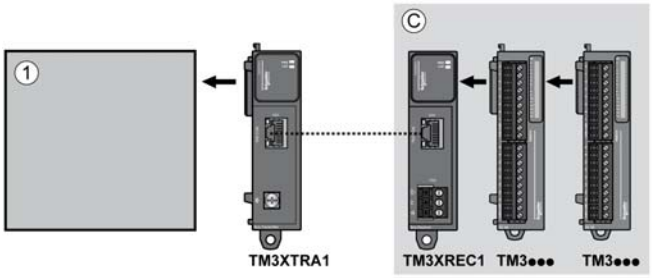

(1) Logic controller and modules
(C) Expansion modules (7 maximum)

Maximum Number of Modules

The following table shows the maximum configuration supported:

References	Maximum	Type of Configuration
TM251••••	7 TM3 / TM2 expansion modules	Local
TM251••••	3 TM4 expansion modules	Local
TM3XREC1	7 TM3 expansion modules	Remote
NOTE: TM3 transmitter and receiver modules are not included in a count of the maximum number of expansion modules.		

NOTE: The configuration with its TM4, TM3, and TM2 expansion modules is validated by SoMachine software in the **Configuration** window.

NOTE: In some environments, the maximum configuration populated by high consummation modules, coupled with the maximum distance allowable between the TM3 transmitter and receiver modules, may present bus communication issues although the SoMachine software allows for the configuration. In such a case you will need to analyze the consummation of the modules chosen for your configuration, as well as the minimum cable distance required by your application, and possibly seek to optimize your choices.

TM4 Expansion Modules

Introduction

The range of TM4 expansion modules includes communication modules.

For more information, refer to the TM4 Expansion Modules Hardware Guide.

TM4 Expansion Modules

The following table shows the TM4 expansion module features:

Module reference	Type	Terminal type
TM4ES4	Ethernet communication	4 RJ45 connectors 1 screw for functional ground connection
TM4PDPS1	PROFIBUS DP slave communication	1 SUB-D 9 pins female connector 1 screw for functional ground connection
NOTE: If the controller has more than one embedded Ethernet port, the module works as a standalone Ethernet switch.		

TM3 Expansion Modules

Introduction

The range of TM3 expansion modules includes:

- Digital modules, classified as follows:
  - Input modules *(see page 20)*
  - Output modules *(see page 21)*
  - Mixed input/output modules *(see page 23)*
- Analog modules, classified as follows:
  - Input modules *(see page 24)*
  - Output modules *(see page 25)*
  - Mixed input/output modules *(see page 26)*
- Expert modules *(see page 27)*
- Transmitter and Receiver modules *(see page 27)*

For more information, refer to the following documents:

- TM3 Digital I/O Modules Hardware Guide
- TM3 Analog I/O Modules Hardware Guide
- TM3 Expert I/O Modules Hardware Guide
- TM3 Transmitter and Receiver Modules Hardware Guide

TM3 Digital Input Modules

The following table shows the TM3 digital input expansion modules, with corresponding channel type, nominal voltage/current, and terminal type:

Reference	Channels	Channel Type	Voltage Current	Terminal Type / Pitch
TM3DI8A	8	Regular inputs	120 Vac 7.5 mA	Removable screw terminal block / 5.08 mm
TM3DI8	8	Regular inputs	24 Vdc 7 mA	Removable screw terminal block / 5.08 mm
TM3DI8G	8	Regular inputs	24 Vdc 7 mA	Removable spring terminal block / 5.08 mm
TM3DI16	16	Regular inputs	24 Vdc 7 mA	Removable screw terminal blocks / 3.81 mm
TM3DI16G	16	Regular inputs	24 Vdc 7 mA	Removable spring terminal blocks / 3.81 mm
TM3DI16K	16	Regular inputs	24 Vdc 5 mA	HE10 (MIL 20) connector
TM3DI32K	32	Regular inputs	24 Vdc 5 mA	HE10 (MIL 20) connector

TM3 Digital Output Modules

The following table shows the TM3 digital output expansion modules, with corresponding channel type, nominal voltage/current, and terminal type:

Reference	Channels	Channel Type	Voltage Current	Terminal Type / Pitch
TM3DQ8R	8	Relay outputs	24 Vdc / 240 Vac 7 A maximum per common line / 2 A maximum per output	Removable screw terminal block / 5.08 mm
TM3DQ8RG	8	Relay outputs	24 Vdc / 240 Vac 7 A maximum per common line / 2 A maximum per output	Removable spring terminal block / 5.08 mm
TM3DQ8T	8	Regular transistor outputs (source)	24 Vdc 4 A maximum per common line/0.5 A maximum per output	Removable screw terminal block / 5.08 mm
TM3DQ8TG	8	Regular transistor outputs (source)	24 Vdc 4 A maximum per common line/0.5 A maximum per output	Removable spring terminal block / 5.08 mm
TM3DQ8U	8	Regular transistor outputs (sink)	24 Vdc 4 A maximum per common line/0.5 A maximum per output	Removable screw terminal block / 5.08 mm
TM3DQ8UG	8	Regular transistor outputs (sink)	24 Vdc 4 A maximum per common line/0.5 A maximum per output	Removable spring terminal block / 5.08 mm
TM3DQ16R	16	Relay outputs	24 Vdc / 240 Vac 8 A maximum per common line / 2 A maximum per output	Removable screw terminal blocks / 3.81 mm
TM3DQ16RG	16	Relay outputs	24 Vdc / 240 Vac 8 A maximum per common line / 2 A maximum per output	Removable spring terminal blocks / 3.81 mm
TM3DQ16T	16	Regular transistor outputs (source)	24 Vdc 4 A maximum per common line / 0.5 A maximum per output	Removable screw terminal blocks / 3.81 mm

Reference	Channels	Channel Type	Voltage Current	Terminal Type / Pitch
TM3DQ16TG	16	Regular transistor outputs (source)	24 Vdc 4 A maximum per common line / 0.5 A maximum per output	Removable spring terminal blocks / 3.81 mm
TM3DQ16U	16	Regular transistor outputs (sink)	24 Vdc 2 A maximum per common line / 0.4 A maximum per output	Removable screw terminal blocks / 3.81 mm
TM3DQ16UG	16	Regular transistor outputs (sink)	24 Vdc 2 A maximum per common line / 0.4 A maximum per output	Removable spring terminal blocks / 3.81 mm
TM3DQ16TK	16	Regular transistor outputs (source)	24 Vdc 2 A maximum per common line / 0.1 A maximum per output	HE10 (MIL 20) connector
TM3DQ16UK	16	Regular transistor outputs (sink)	24 Vdc 2 A maximum per common line / 0.1 A maximum per output	HE10 (MIL 20) connector
TM3DQ32TK	32	Regular transistor outputs (source)	24 Vdc 2 A maximum per common line / 0.1 A maximum per output	HE10 (MIL 20) connectors
TM3DQ32UK	32	Regular transistor outputs (sink)	24 Vdc 2 A maximum per common line / 0.1 A maximum per output	HE10 (MIL 20) connectors

TM3 Digital Mixed Input/Output Modules

This following table shows the TM3 mixed I/O modules, with corresponding channel type, nominal voltage/current, and terminal type:

Reference	Channels	Channel Type	Voltage Current	Terminal Type / Pitch
TM3DM8R	4	Regular inputs	24 Vdc 7 mA	Removable screw terminal block / 5.08 mm
	4	Relay outputs	24 Vdc / 240 Vac 7 A maximum per common line / 2 A maximum per output	
TM3DM8RG	4	Regular inputs	24 Vdc 7 mA	Removable spring terminal block /5.08 mm
	4	Relay outputs	24 Vdc / 240 Vac 7 A maximum per common line / 2 A maximum per output	
TM3DM24R	16	Regular inputs	24 Vdc 7 mA	Removable screw terminal blocks / 3.81 mm
	8	Relay outputs	24 Vdc / 240 Vac 7 A maximum per common line / 2 A maximum per output	
TM3DM24RG	16	Regular inputs	24 Vdc 7 mA	Removable spring terminal blocks / 3.81 mm
	8	Relay outputs	24 Vdc / 240 Vac 7 A maximum per common line / 2 A maximum per output	

TM3 Analog Input Modules

The following table shows the TM3 analog input expansion modules, with corresponding resolution, channel type, nominal voltage/current, and terminal type:

Reference	Resolution	Channels	Channel Type	Mode	Terminal Type / Pitch
TM3AI2H	16 bit, or 15 bit + sign	2	inputs	0...10 Vdc -10…+10 Vdc 0...20 mA 4...20 mA	Removable screw terminal block / 5.08 mm
TM3AI2HG	16 bit, or 15 bit + sign	2	inputs	0...10 Vdc -10…+10 Vdc 0...20 mA 4...20 mA	Removable spring terminal block / 5.08 mm
TM3AI4	12 bit, or 11 bit + sign	4	inputs	0...10 Vdc -10…+10 Vdc 0...20 mA 4...20 mA	Removable screw terminal block / 3.81 mm
TM3AI4G	12 bit, or 11 bit + sign	4	inputs	0...10 Vdc -10…+10 Vdc 0...20 mA 4...20 mA	Removable spring terminal blocks / 3.81 mm
TM3AI8	12 bit, or 11 bit + sign	8	inputs	0...10 Vdc -10…+10 Vdc 0...20 mA 4...20 mA	Removable screw terminal block / 3.81 mm
TM3AI8G	12 bit, or 11 bit + sign	8	inputs	0...10 Vdc -10…+10 Vdc 0...20 mA 4...20 mA	Removable spring terminal blocks / 3.81 mm
TM3TI4	16 bit, or 15 bit + sign	4	inputs	0...10 Vdc -10…+10 Vdc 0...20 mA 4...20 mA Thermocouple PT100/1000 NI100/1000	Removable screw terminal block / 3.81 mm
TM3TI4G	16 bit, or 15 bit + sign	4	inputs	0...10 Vdc -10…+10 Vdc 0...20 mA 4...20 mA Thermocouple PT100/1000 NI100/1000	Removable spring terminal blocks / 3.81 mm

Reference	Resolution	Channels	Channel Type	Mode	Terminal Type / Pitch
TM3TI8T	16 bit, or 15 bit + sign	8	inputs	Thermocouple NTC/PTC	Removable screw terminal block / 3.81 mm
TM3TI8TG	16 bit, or 15 bit + sign	8	inputs	Thermocouple NTC/PTC	Removable spring terminal blocks / 3.81 mm

TM3 Analog Output Modules

The following table shows the TM3 analog output modules, with corresponding resolution, channel type, nominal voltage/current, and terminal type:

Reference	Resolution	Channels	Channel Type	Mode	Terminal Type / Pitch
TM3AQ2	12 bit, or 11 bit + sign	2	outputs	0...10 Vdc -10…+10 Vdc 0...20 mA 4...20 mA	Removable screw terminal block / 5.08 mm
TM3AQ2G	12 bit, or 11 bit + sign	2	outputs	0...10 Vdc -10…+10 Vdc 0...20 mA 4...20 mA	Removable spring terminal block / 5.08 mm
TM3AQ4	12 bit, or 11 bit + sign	4	outputs	0...10 Vdc -10…+10 Vdc 0...20 mA 4...20 mA	Removable screw terminal block / 5.08 mm
TM3AQ4G	12 bit, or 11 bit + sign	4	outputs	0...10 Vdc -10…+10 Vdc 0...20 mA 4...20 mA	Removable spring terminal block / 5.08 mm

TM3 Analog Mixed Input/Output Modules

This following table shows the TM3 analog mixed I/O modules, with corresponding resolution, channel type, nominal voltage/current, and terminal type:

Reference	Resolution	Channels	Channel Type	Mode	Terminal Type / Pitch
TM3AM6	12 bit, or 11 bit + sign	4	inputs	0...10 Vdc -10...+10 Vdc 0...20 mA 4...20 mA	Removable spring terminal block / 3.81 mm
		2	outputs		
TM3AM6G	12 bit, or 11 bit + sign	4	inputs	0...10 Vdc -10...+10 Vdc 0...20 mA 4...20 mA	Removable spring terminal block / 3.81 mm
		2	outputs		
TM3TM3	16 bit, or 15 bit + sign	2	inputs	0...10 Vdc -10...+10 Vdc 0...20 mA 4...20 mA Thermocouple PT100/1000 NI100/1000	Removable screw terminal block / 5.08 mm
	12 bit, or 11 bit + sign	1	output	0...10 Vdc -10...+10 Vdc 0...20 mA 4...20 mA	
TM3TM3G	16 bit, or 15 bit + sign	2	inputs	0...10 Vdc -10...+10 Vdc 0...20 mA 4...20 mA Thermocouple PT100/1000 NI100/1000	Removable spring terminal block / 5.08 mm
	12 bit, or 11 bit + sign	1	output	0...10 Vdc -10...+10 Vdc 0...20 mA 4...20 mA	

TM3 Expert Module

The following table shows the TM3 expert expansion module, with corresponding terminal type:

Reference	Description	Terminal Type / Pitch
TM3XTYS4	TeSys module	4 front connectors RJ-45 1 power supply connector / 5.08 mm

TM3 Transmitter and Receiver Modules

The following table shows the TM3 transmitter and receiver expansion modules:

Reference	Description	Terminal Type / Pitch
TM3XTRA1	Data transmitter module for remote I/O	1 front connector RJ-45 1 screw for functional ground connection
TM3XREC1	Data receiver module for remote I/O	1 front connector RJ-45 Power supply connector / 5.08 mm

TM2 Expansion Modules

Overview

You can expand the number of I/Os of your M251 Logic Controller by adding TM2 I/O expansion modules.

The following types of electronic modules are supported:
- TM2 digital I/O expansion modules
- TM2 analog I/O expansion modules

For more information, refer to the following documents:
- TM2 Digital I/O Expansion Modules Hardware Guide
- TM2 Analog I/O Expansion Modules Hardware Guide

NOTE: TM2 modules can only be used in the local configuration, and only if there is no TM3 transmitter and receiver modules present in the configuration.

NOTE: It is prohibited to mount a TM2 module before any TM3 module. The TM2 modules must be mounted and configured at the end of the local configuration.

TM2 Digital Input Expansion Modules

The following table shows the compatible TM2 digital input expansion modules with the corresponding channel type, nominal voltage/current, and terminal type:

Reference	Channels	Channel Type	Voltage Current	Terminal Type
TM2DAI8DT	8	Regular inputs	120 Vac 7.5 mA	Removable screw terminal block
TM2DDI8DT	8	Regular inputs	24 Vdc 7 mA	Removable screw terminal block
TM2DDI16DT	16	Regular inputs	24 Vdc 7 mA	Removable screw terminal block
TM2DDI16DK	16	Regular inputs	24 Vdc 5 mA	HE10 (MIL 20) connector
TM2DDI32DK	32	Regular inputs	24 Vdc 5 mA	HE10 (MIL 20) connector

TM2 Digital Output Expansion Modules

The following table shows the compatible TM2 digital output expansion modules with the corresponding channel type, nominal voltage/current, and terminal type:

Reference	Channels	Channel type	Voltage Current	Terminal type
TM2DRA8RT	8	Relay outputs	30 Vdc / 230 Vac 2 A max	Removable screw terminal block
TM2DRA16RT	16	Relay outputs	30 Vdc / 230 Vac 2 A max	Removable screw terminal block
TM2DDO8UT	8	Regular transistor outputs (sink)	24 Vdc 0.3 A max per output	Removable screw terminal block
TM2DDO8TT	8	Regular transistor outputs (source)	24 Vdc 0.5 A max per output	Removable screw terminal block
TM2DDO16UK	16	Regular transistor outputs (sink)	24 Vdc 0.1 A max per output	HE10 (MIL 20) connector
TM2DDO16TK	16	Regular transistor outputs (source)	24 Vdc 0.4 A max per output	HE10 (MIL 20) connector
TM2DDO32UK	32	Regular transistor outputs (sink)	24 Vdc 0.1 A max per output	HE10 (MIL 20) connector
TM2DDO32TK	32	Regular transistor outputs (source)	24 Vdc 0.4 A max per output	HE10 (MIL 20) connector

TM2 Digital Mixed Input/Output Expansion Modules

The following table shows the compatible TM2 digital mixed I/O expansion modules with the corresponding channel type, nominal voltage/current, and terminal type:

Reference	Channels	Channel type	Voltage Current	Terminal type
TM2DMM8DRT	4	Regular inputs	24 Vdc 7 mA	Removable screw terminal block
	4	Relay outputs	24 Vdc / 240 Vac 7 A maximum per common line / 2 A maximum per output	
TM2DMM24DRF	16	Regular inputs	24 Vdc 7 mA	Non-removable spring terminal block
	8	Relay outputs	24 Vdc / 240 Vac 7 A maximum per common line / 2 A maximum per output	

TM2 Analog Input Expansion Modules

The following table shows the compatible TM2 analog input expansion modules with the corresponding channel type, nominal voltage/current, and terminal type:

Reference	Channels	Channel type	Voltage Current	Terminal Type
TM2AMI2HT	2	High-level inputs	0...10 Vdc 4...20 mA	Removable screw terminal block
TM2AMI2LT	2	Low-level inputs	Thermocouple type J,K,T	Removable screw terminal block
TM2AMI4LT	4	Analog inputs	0...10 Vdc 0...20 mA PT100/1000 Ni100/1000	Removable screw terminal block
TM2AMI8HT	8	Analog inputs	0...20 mA 0...10 Vdc	Removable screw terminal block
TM2ARI8HT	8	Analog inputs	NTC / PTC	Removable screw terminal block
TM2ARI8LRJ	8	Analog inputs	PT100/1000	RJ11 connector
TM2ARI8LT	8	Analog inputs	PT100/1000	Removable screw terminal block

TM2 Analog Output Expansion Modules

The following table shows the compatible TM2 analog output expansion modules with the corresponding channel type, nominal voltage/current, and terminal type:

Reference	Channels	Channel type	Voltage Current	Terminal Type
TM2AMO1HT	1	Analog outputs	0...10 Vdc 4...20 mA	Removable screw terminal block
TM2AVO2HT	2	Analog outputs	+/- 10 Vdc	Removable screw terminal block

TM2 Analog Mixed Input/Output Expansion Modules

The following table shows the compatible TM2 analog mixed I/O expansion modules with the corresponding channel type, nominal voltage/current, and terminal type:

Reference	Channels	Channel type	Voltage Current	Terminal Type
TM2AMM3HT	2	Analog inputs	0...10 Vdc 4...20 mA	Removable screw terminal block
	1	Analog outputs	0...10 Vdc 4...20 mA	
TM2AMM6HT	4	Analog inputs	0...10 Vdc 4...20 mA	Removable screw terminal block
	2	Analog outputs	0...10 Vdc 4...20 mA	
TM2ALM3LT	2	Low-level inputs	Thermo J,K,T, PT100	Removable screw terminal block
	1	Analog outputs	0...10 Vdc 4...20 mA	

Accessories

Overview

This section describes the accessories and cables.

Accessories

Reference	Description	Use	Quantity
TMASD1	SD Card *(see page 41)*	Use to update the controller firmware, initialize a controller with a new application or clone a controller, manage user files.	1
TMAT2PSET	Set of 5 removable screw terminal block	Connects 24 Vdc power supply.	1
AB1AB8P35	End brackets	Help secure the logic controller or receiver module and their expansion modules on a top hat section rail (DIN rail).	1
TM2XMTGB	Grounding Bar	Connects the cable shield and the module to the functional ground.	1
TM200RSRCEMC	Shielding take-up clip	Mounts and connects the ground to the cable shielding.	25 pack

Cables

Reference	Description	Details	Length
TCSXCNAMUM3P	Terminal port/USB port cordset	From the USB mini-B port on the M251 Logic Controller to USB port on the PC terminal.	3 m (10 ft)
TCSMCN3M4F3C2	RS-232 serial link cordset 1 RJ45 connector and 1 SUB-D 9 connector	For DTE terminal (printer)	3 m (9.84 ft)
TCSMCN3M4M3S2	RS-232 serial link cordset 1 RJ45 connector and 1 SUB-D 9 connector	For DCE terminal (modem, converter)	3 m (9.84 ft)

Reference	Description	Details	Length
490NTW000••	Ethernet shielded cable for DTE connections	Standard cable, equipped with RJ45 connectors at each end for DTE. CE compliant	2,5,12,40, or 80 m (6.56,16.4, 39.37, 131.23, or 262.47 ft)
490NTW000••U		Standard cable, equipped with RJ45 connectors at each end for DTE. UL compliant	2,5,12,40, or 80 m (6.56,16.4, 39.37, 131.23, or 262.47 ft)
TCSECE3M3M••S4		Cable for harsh environment,, equipped with RJ45 connectors at each end. CE compliant	1, 2, 3, 5, or 10 m (3.28, 6.56, 9.84, 16.4, 32.81 ft)
TCSECU3M3M••S4		Cable for harsh environment, equipped with RJ45 connectors at each end. UL compliant	1, 2, 3, 5, or 10 m (3.28, 6.56, 9.84, 16.4, 32.81 ft)

Chapter 2
M251 Features

Overview

This chapter describes the Modicon M251 Logic Controller features.

What Is in This Chapter?

This chapter contains the following topics:

Topic	Page
Real Time Clock (RTC)	36
Run/Stop	40
SD Card	41

Real Time Clock (RTC)

Overview

The M251 Logic Controller includes an RTC to provide system date and time information, and to support related functions requiring a real-time clock. To continue keeping time when power is off, a non-rechargeable battery is required (see reference below). A battery LED on the front panel of the controller indicates if the battery is depleted or absent.

This table shows how RTC drift is managed:

RTC Characteristics	Description
RTC drift	Less than 60 seconds per month without any user calibration at 25 °C (77 °F)

Battery

The controller has one battery.

In the event of a power interruption, the backup battery maintains the RTC for the controller.

This table shows the characteristics of the battery:

Characteristics	Description
Use	In the event of a transient power outage, the battery powers the RTC and user data.
Backup life	At least 2 years at 25 °C max (77 °F). At higher temperatures, the time is reduced.
Battery monitoring	Yes
Replaceable	Yes
Controller battery type	Lithium carbon monofluoride, type Panasonic BR2032

Installing and Replacing the Battery

While lithium batteries are preferred due to their slow discharge and long life, they can present hazards to personnel, equipment and the environment and must be handled properly.

⚠ DANGER

EXPLOSION, FIRE, OR CHEMICAL BURNS

- Replace with identical battery type.
- Follow all battery manufacturer's instructions.
- Remove all replaceable batteries before discarding unit.
- Recycle or properly dispose of used batteries.
- Protect battery from any potential short-circuit.
- Do not recharge, disassemble, heat above 100 °C (212 °F), or incinerate.
- Use your hands or insulated tools to remove or replace the battery.
- Maintain proper polarity when inserting and connecting a new battery.

Failure to follow these instructions will result in death or serious injury.

To install or replace the battery, follow these steps:

Step	Action
1	Remove power from your controller.
2	Use an insulated screw-driver to pull out the battery holder. 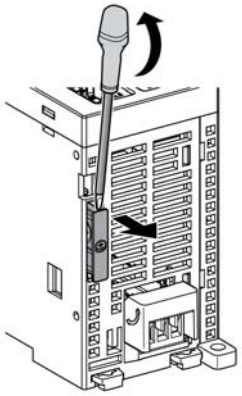
3	Side out the battery holder of the controller

Step	Action
4	Remove the battery from the battery holder. 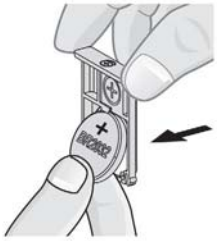
5	Insert the new battery into the battery holder in accordance with the polarity markings on the battery. 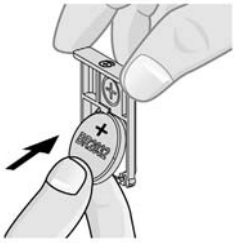
6	Replace the battery holder on the controller and verify that the latch clicks into place. 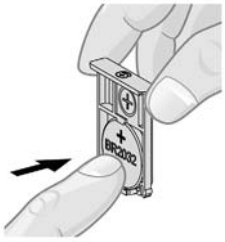

Step	Action
7	Slide in the battery holder of the controller. 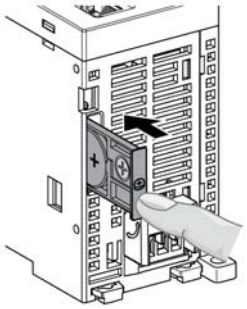
8	Power up your M251 Logic Controller.
9	Set the internal clock. For further details on the internal clock, refer to M251 Logic Controller Programming Guide *(see Modicon M251 Logic Controller, Programming Guide)*.

NOTE: Replacement of the battery in the controllers other than with the type specified in this documentation may present a risk of fire or explosion.

⚠ WARNING
IMPROPER BATTERY CAN PROVOKE FIRE OR EXPLOSION
Replace battery only with identical type: Panasonic Type BR2032.
Failure to follow these instructions can result in death, serious injury, or equipment damage.

Run/Stop

Run/Stop

The M251 Logic Controller can be operated externally by the following:

- a hardware Run/Stop switch
- a SoMachine software command.

The M251 Logic Controller has a Run/Stop hardware switch, which puts the controller in a RUN or STOP state.

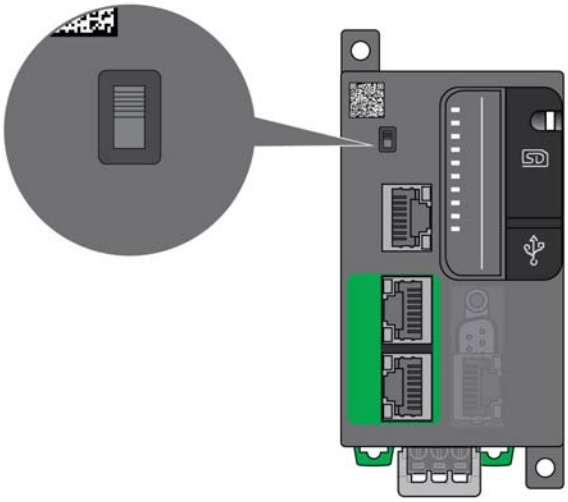

SD Card

Overview

When handling the SD card, follow the instructions below to help prevent internal data on the SD card from being corrupted or lost or a SD card malfunction from occurring:

NOTICE
LOSS OF APPLICATION DATA ● Do not store the SD card where there is static electricity or probable electromagnetic fields. ● Do not store the SD card in direct sunlight, near a heater, or other locations where high temperatures can occur. ● Do not bend the SD card. ● Do not drop or strike the SD card against another object. ● Keep the SD card dry. ● Do not touch the SD card connectors. ● Do not disassemble or modify the SD card. ● Use only SD cards formatted using FAT or FAT32. **Failure to follow these instructions can result in equipment damage.**

The M251 Logic Controller does not recognize NTFS formatted SD cards. Format the SD card on your computer using FAT or FAT32.

When using the M251 Logic Controller and a SD card, observe the following to avoid losing valuable data:

- Accidental data loss can occur at any time. Once data is lost it cannot be recovered.
- If you forcibly extract the SD card, data on the SD card may become corrupted.
- Removing an SD card that is being accessed could damage the SD card, or corrupt its data.
- If the SD card is not positioned correctly when inserted into the controller, the data on the card and the controller could become damaged.

NOTICE
LOSS OF APPLICATION DATA ● Backup SD card data regularly. ● Do not remove power or reset the controller, and do not insert or remove the SD card while it is being accessed. ● Become familiar with the proper orientation of the SD card when inserting it into the controller. **Failure to follow these instructions can result in equipment damage.**

This figure shows the SD card slot:

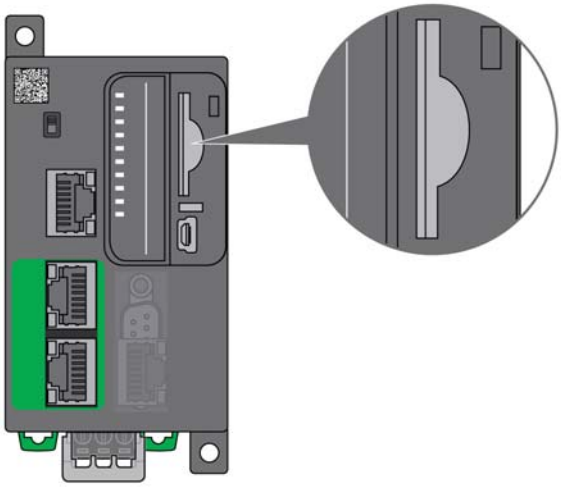

It is possible to set the Write-Control Tab to prevent write operations to the SD card. Push the tab up, as shown in the example on the right-hand side, to release the lock and enable writing to the SD card. Before using an SD card, read the manufacturer’s instructions.

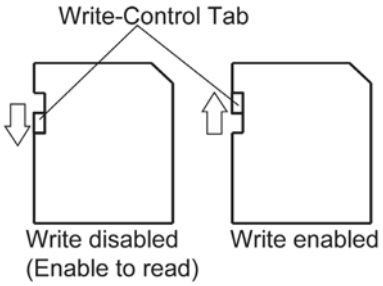

Step	Action
1	Insert the SD card into the SD card slot: 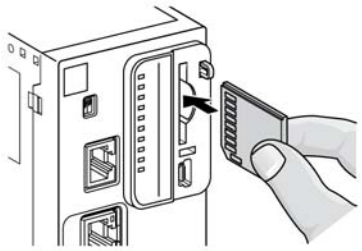
2	Push until you hear it “click”: 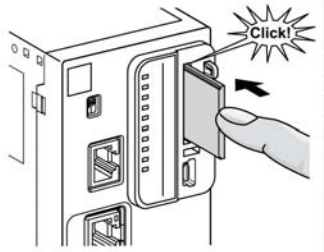

SD Card Slot Characteristics

Topic	Characteristics	Description
Supported type	Standard Capacity	SD (SDSC)
	High Capacity	SDHC
Global memory	Size	32 GB max.

TMASD1 Characteristics

Characteristics	Description
Card removal durability	Minimum 1000 times
File retention time	10 years @ 25 °C (77 °F)
Flash type	SLC NAND
Memory size	512 MB
Ambient operation temperature	–10 … +85° C (14...185 °F)
Storage temperature	–25 … +85° C (–13...185 °F)
Relative humidity	95% max. non-condensing
Write/Erase cycles	3,000,000 (approximately)

NOTE: The TMASD1 has been rigorously tested in association with the logic controller. For other commercially available cards, please consult your local sales representative.

NOTE: The SD card can be used directly on your PC.

Chapter 3
M251 Installation

Overview

This chapter provides installation safety guidelines, device dimensions, mounting instructions, and environmental specifications.

What Is in This Chapter?

This chapter contains the following sections:

Section	Topic	Page
3.1	M251 Logic Controller General Rules for Implementing	46
3.2	M251 Logic Controller Installation	51
3.3	M251 Electrical Requirements	64

Section 3.1
M251 Logic Controller General Rules for Implementing

What Is in This Section?

This section contains the following topics:

Topic	Page
Environmental Characteristics	47
Certifications and Standards	50

Environmental Characteristics

Enclosure Requirements

M251 Logic Controller system components are designed as Zone B, Class A industrial equipment according to IEC/CISPR Publication 11. If they are used in environments other than those described in the standard, or in environments that do not meet the specifications in this manual, the ability to meet electromagnetic compatibility requirements in the presence of conducted and/or radiated interference may be reduced.

All M251 Logic Controller system components meet European Community (CE) requirements for open equipment as defined by IEC/EN 61131-2. You must install them in an enclosure designed for the specific environmental conditions and to minimize the possibility of unintended contact with hazardous voltages. Use metal enclosures to improve the electromagnetic immunity of your M251 Logic Controller system. Use enclosures with a keyed locking mechanism to minimize unauthorized access.

Environmental Characteristics

All the M251 Logic Controller module components are electrically isolated between the internal electronic circuit and the input/output channels within the limits set forth and described by these environmental characteristics. For more information on electrical isolation, see the technical specifications of your particular controller found later in the current document. This equipment meets CE requirements as indicated in the table below. This equipment is intended for use in a Pollution Degree 2 industrial environment.

⚠ WARNING

UNINTENDED EQUIPMENT OPERATION

Do not exceed any of the rated values specified in the environmental and electrical characteristics tables.

Failure to follow these instructions can result in death, serious injury, or equipment damage.

The following table shows the general environmental characteristics:

Characteristic		Specification
Standard compliance	IEC/EN 61131-2 IEC/EN 61010-2-201	
Ambient operating temperature	Horizontal installation	–10...55 °C (14...131 °F)
	Vertical installation	–10...35 °C (14...95 °F)
Storage temperature		–25...70 °C (- 13...158 °F)

Characteristic		Specification
Relative humidity	Transport and storage	10...95 % (non-condensing)
	Operation	10...95 % (non-condensing)
Degree of pollution	IEC/EN 60664-1	2
Degree of protection	IEC/EN 61131-2	IP20 with protective covers in place
Machine Safety conformance	IEC/EN 61010-2-201	Yes
Corrosion immunity		Atmosphere free from corrosive gases
Operating altitude		0...2000 m (0...6560 ft)
Storage altitude		0...3000 m (0...9843 ft)
Vibration resistance	IEC/EN 61131-2 Panel mounting or mounted on a top hat section rail (DIN rail)	3.5 mm (0.13 in) fixed amplitude from 5...8.5 Hz 29.4 m/s^2 or 96.45 ft/s^2 (3 g_n) fixed acceleration from 8.7...150 Hz
Mechanical shock resistance		147 m/s^2 or 482.28 ft/s^2 (15 g_n) for a duration of 11 ms

Electromagnetic Susceptibility

The M251 Logic Controller system meets electromagnetic susceptibility specifications as indicated in the following table:

Characteristic	Designed to specification	Range	
Electrostatic discharge	IEC/EN 61000-4-2	8 kV (air discharge) 4 kV (contact discharge)	
Radiated electromagnetic field	IEC/EN 61000-4-3	10 V/m (80...1000 MHz) 3 V/m (1.4...2 GHz) 1 V/m (2...3 GHz)	
Magnetic field	IEC/EN 61000-4-8	30 A/m 50 Hz, 60 Hz	
Fast transients burst	IEC/EN 61000-4-4	–	CM[1] and DM[2]
		AC/DC Power lines	2 kV
		Relay Outputs	–
		24 Vdc I/Os	–
		Analog I/Os	–
		Communication line	1 kV

Characteristic	Designed to specification	Range		
Surge immunity	IEC/EN 61000-4-5 IEC/EN 61131-2	–	CM[1]	DM[2]
		DC Power lines	1 kV	0.5 kV
		AC Power lines	–	–
		Relay Outputs	–	–
		24 Vdc I/Os	–	–
		Shielded cable (between shield and ground)	1 kV	–
Induced electromagnetic field	IEC/EN 61000-4-6	10 Vrms (0.15...80 MHz)		
Conducted emission	IEC/EN 55011 (IEC/CISPR Publication 11)	AC power line: ● 0.15...0.5 MHz: 79 dBµV/m QP / 66 dBµV/m AV ● 0.5...300 MHz: 73 dBµV/m QP / 60 dBµV/m AV		
		AC/DC power line: ● 10...150 kHz: 120...69 dBµV/m QP ● 150...1500 kHz: 79...63 dBµV/m QP ● 1.5...30 MHz: 63 dBµV/m QP		
Radiated emission	IEC/EN 55011 (IEC/CISPR Publication 11)	Class A, 10 m distance: ● 30...230 MHz: 40 dBµV/m QP ● 230...1000 MHz: 47 dBµV/m QP		

1 Common Mode

2 Differential Mode

Certifications and Standards

Introduction

The M251 Logic Controllers are designed to conform to the main national and international standards concerning electronic industrial control devices:

- IEC/EN 61131-2
- UL 508
- CSA 22.2 n° 142
- CSA E61131-2

The M251 Logic Controllers have obtained, or in the process of obtaining, the following conformity marks:

- CE
- cULus pending
- CSA pending

The M251 Logic Controllers comply with the main national and international Directives and Regulations concerning electronic industrial control devices:

- Europe RoHS, exemption annex III 7(a)
- China RoHS regulations 
- REACh v9

Section 3.2
M251 Logic Controller Installation

What Is in This Section?

This section contains the following topics:

Topic	Page
Installation and Maintenance Requirements	52
M251 Logic Controller Mounting Positions and Clearances	55
Top Hat Section Rail (DIN rail)	58
Installing and Removing the Controller with Expansions	61
Direct Mounting on a Panel Surface	63

Installation and Maintenance Requirements

Before Starting

Read and understand this chapter before beginning the installation of your system.

The use and application of the information contained herein require expertise in the design and programming of automated control systems. Only you, the user, machine builder or integrator, can be aware of all the conditions and factors present during installation and setup, operation, and maintenance of the machine or process, and can therefore determine the automation and associated equipment and the related safeties and interlocks which can be effectively and properly used. When selecting automation and control equipment, and any other related equipment or software, for a particular application, you must also consider any applicable local, regional or national standards and/or regulations.

Pay particular attention in conforming to any safety information, different electrical requirements, and normative standards that would apply to your machine or process in the use of this equipment.

Disconnecting Power

All options and modules should be assembled and installed before installing the control system on a mounting rail, onto a mounting plate or in a panel. Remove the control system from its mounting rail, mounting plate or panel before disassembling the equipment.

⚠⚠ DANGER

HAZARD OF ELECTRIC SHOCK, EXPLOSION OR ARC FLASH

- Disconnect all power from all equipment including connected devices prior to removing any covers or doors, or installing or removing any accessories, hardware, cables, or wires except under the specific conditions specified in the appropriate hardware guide for this equipment.
- Always use a properly rated voltage sensing device to confirm the power is off where and when indicated.
- Replace and secure all covers, accessories, hardware, cables, and wires and confirm that a proper ground connection exists before applying power to the unit.
- Use only the specified voltage when operating this equipment and any associated products.

Failure to follow these instructions will result in death or serious injury.

Programming Considerations

⚠ WARNING

UNINTENDED EQUIPMENT OPERATION

- Only use software approved by Schneider Electric for use with this equipment.
- Update your application program every time you change the physical hardware configuration.

Failure to follow these instructions can result in death, serious injury, or equipment damage.

Operating Environment

This equipment has been designed to operate outside of any hazardous location. Only install this equipment in zones known to be free of a hazardous atmosphere.

⚠ DANGER

POTENTIAL FOR EXPLOSION

Install and use this equipment in non-hazardous locations only.

Failure to follow these instructions will result in death or serious injury.

⚠ WARNING

UNINTENDED EQUIPMENT OPERATION

Install and operate this equipment according to the conditions described in the Environmental Characteristics.

Failure to follow these instructions can result in death, serious injury, or equipment damage.

Installation Considerations

⚠ WARNING

UNINTENDED EQUIPMENT OPERATION

- Use appropriate safety interlocks where personnel and/or equipment hazards exist.
- Install and operate this equipment in an enclosure appropriately rated for its intended environment.
- Use the sensor and actuator power supplies only for supplying power to the sensors or actuators connected to the module.
- Power line and output circuits must be wired and fused in compliance with local and national regulatory requirements for the rated current and voltage of the particular equipment.
- Do not use this equipment in safety-critical machine functions.
- Do not disassemble, repair, or modify this equipment.
- Do not connect any wiring to reserved, unused connections, or to connections designated as No Connection (N.C.).

Failure to follow these instructions can result in death, serious injury, or equipment damage.

NOTE: JDYX2 or JDYX8 fuse types are UL-recognized and CSA approved.

M251 Logic Controller Mounting Positions and Clearances

Introduction

This section describes the correct mounting positions for the M251 Logic Controller.

NOTE: Keep adequate spacing for proper ventilation and to maintain the operating temperature specified in the Environmental Characteristics *(see page 47)*.

Correct Mounting Position

To obtain optimal operating characteristics, the M251 Logic Controller should be mounted horizontally on a vertical plane as shown in the figure below:

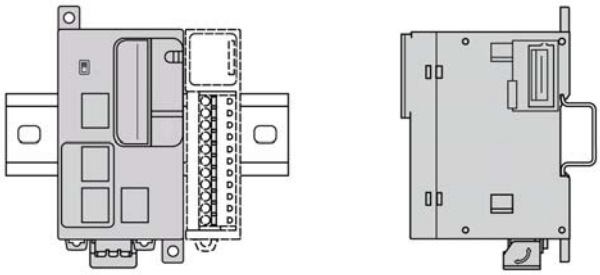

Acceptable Mounting Positions

The M251 Logic Controller can also be mounted vertically on a vertical plane as shown below.

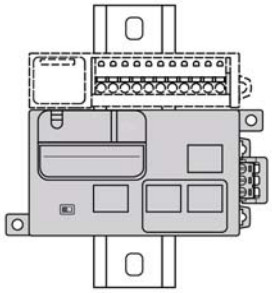

NOTE: Expansion modules must be mounted above the controller.

Incorrect Mounting Position

The M251 Logic Controller should only be positioned as shown in the Correct Mounting Position figure. The figures below show the incorrect mounting positions.

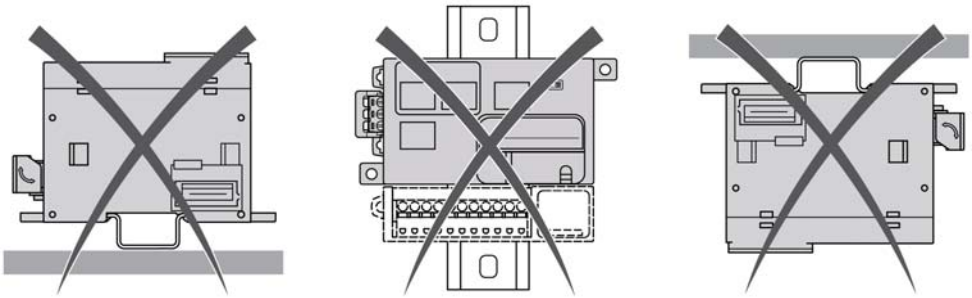

Minimum Clearances

⚠ WARNING

UNINTENDED EQUIPMENT OPERATION

- Place devices dissipating the most heat at the top of the cabinet and ensure adequate ventilation.
- Avoid placing this equipment next to or above devices that might cause overheating.
- Install the equipment in a location providing the minimum clearances from all adjacent structures and equipment as directed in this document.
- Install all equipment in accordance with the specifications in the related documentation.

Failure to follow these instructions can result in death, serious injury, or equipment damage.

The M251 Logic Controller has been designed as an IP20 product and must be installed in an enclosure. Clearances must be respected when installing the product.

There are 3 types of clearances to consider:

- The M251 Logic Controller and all sides of the cabinet (including the panel door).
- The M251 Logic Controller terminal blocks and the wiring ducts to help reduce potential electromagnetic interference between the controller and the duct wiring.
- The M251 Logic Controller and other heat generating devices installed in the same cabinet.

The following figure shows the minimum clearances that apply to all M251 Logic Controller references:

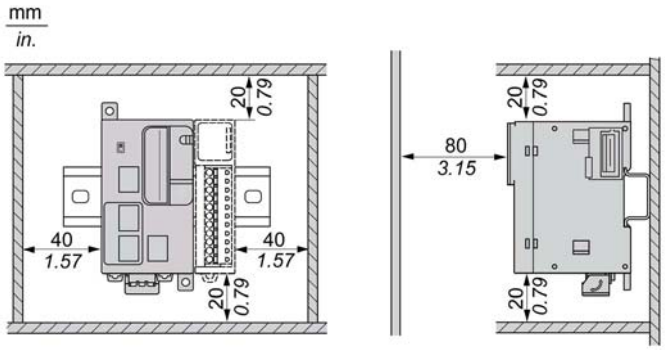

Top Hat Section Rail (DIN rail)

Dimensions of Top Hat Section Rail DIN Rail

You can mount the controller or receiver and its expansions on a 35 mm (1.38 in.) top hat section rail (DIN rail). It can be attached to a smooth mounting surface or suspended from a EIA rack or mounted in a NEMA cabinet.

Symmetric Top Hat Section Rails (DIN Rail)

The following illustration and table show the references of the top hat section rails (DIN rail) for the wall-mounting range:

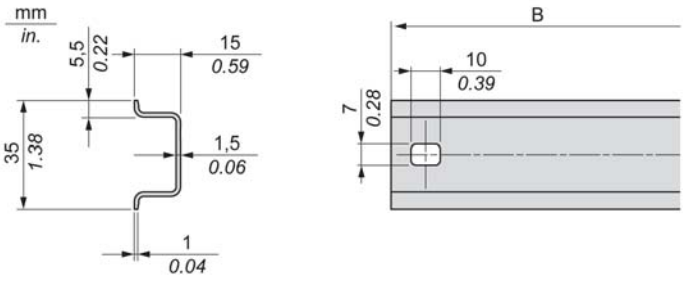

Reference	Type	Rail Length (B)
NSYSDR50A	A	450 mm (17.71 in.)
NSYSDR60A	A	550 mm (21.65 in.)
NSYSDR80A	A	750 mm (29.52 in.)
NSYSDR100A	A	950 mm (37.40 in.)

The following illustration and table show the references of the symmetric top hat section rails (DIN rail) for the metal enclosure range:

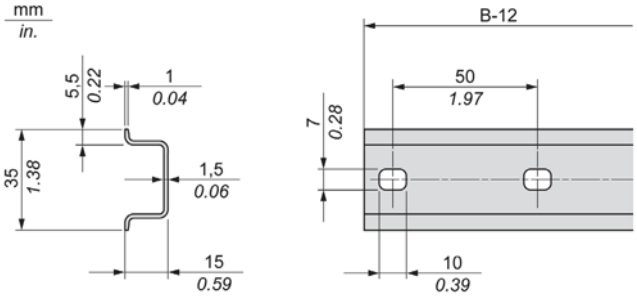

Reference	Type	Rail Length (B-12 mm)
NSYSDR60	A	588 mm (23.15 in.)
NSYSDR80	A	788 mm (31.02 in.)
NSYSDR100	A	988 mm (38.89 in.)
NSYSDR120	A	1188 mm (46.77 in.)

The following illustration and table shows the references of the symmetric top hat section rails (DIN rail) of 2000 mm (78.74 in.):

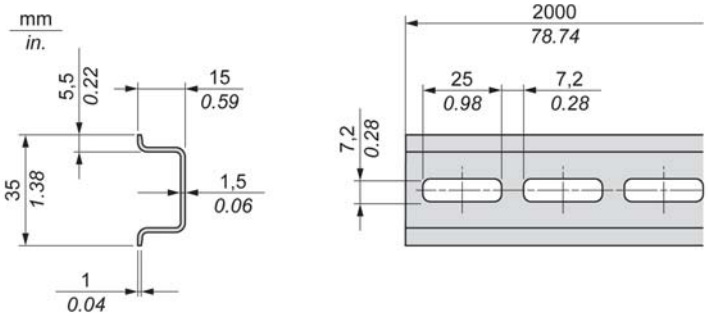

Reference	Type	Rail Length
NSYSDR200[1]	A	2000 mm (78.74 in.)
NSYSDR200D[2]	A	
1 Unperforated galvanized steel **2** Perforated galvanized steel		

Double-Profile Top Hat Section Rails (DIN rail)

The following illustration and table show the references of the double-profile top hat section rails (DIN rails) for the wall-mounting range:

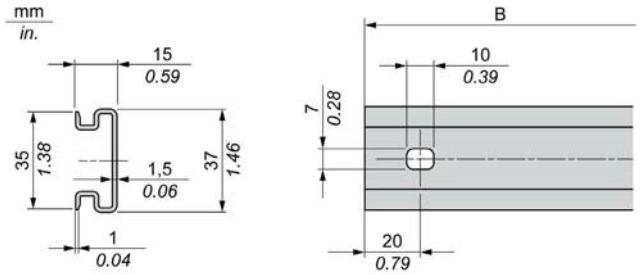

Reference	Type	Rail Length (B)
NSYDPR25	W	250 mm (9.84 in.)
NSYDPR35	W	350 mm (13.77 in.)
NSYDPR45	W	450 mm (17.71 in.)
NSYDPR55	W	550 mm (21.65 in.)
NSYDPR65	W	650 mm (25.60 in.)
NSYDPR75	W	750 mm (29.52 in.)

The following illustration and table show the references of the double-profile top hat section rails (DIN rail) for the floor-standing range:

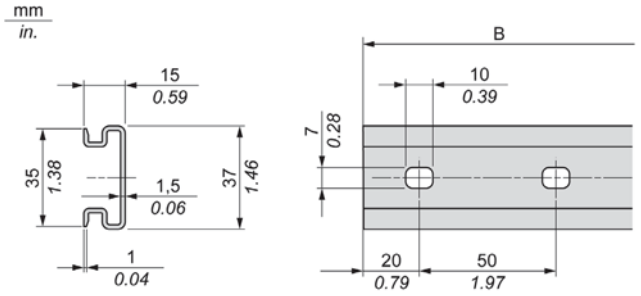

Reference	Type	Rail Length (B)
NSYDPR60	F	588 mm (23.15 in.)
NSYDPR80	F	788 mm (31.02 in.)
NSYDPR100	F	988 mm (38.89 in.)
NSYDPR120	F	1188 mm (46.77 in.)

Installing and Removing the Controller with Expansions

Overview

This section describes how to install and remove the controller with its expansion modules from a top hat section rail (DIN rail).

To assemble expansion modules to a controller or receiver module, or to other modules, refer to the respective expansion modules hardware guide(s).

Installing a Controller with its Expansions on a DIN Rail

The following procedure describes how to install a controller with its expansion modules on a top hat section rail (DIN rail):

Step	Action
1	Fasten the top hat section rail (DIN rail) to a panel surface using screws.
2	Position the top groove of the controller and its expansion modules on the top edge of the DIN rail and press the assembly against the top hat section rail (DIN rail) until you hear the top hat section rail (DIN rail) clip snap into place. 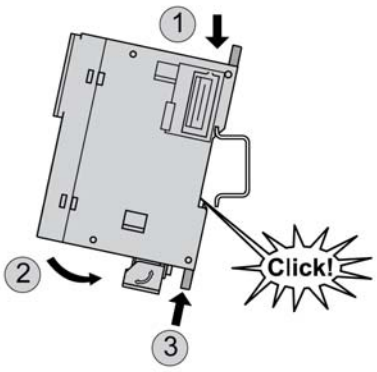

Step	Action
3	Place 2 terminal block end clamps on both sides of the controller and expansion module assembly. 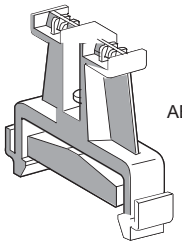 AB1AB8P35 **NOTE:** Type ABB8P35 or equivalent terminal block end clamps help minimize sideways movement and improve the shock and vibration characteristics of the controller and expansion module assembly.

Removing a Controller with its Expansions from a Top Hat Section Rail (DIN Rail)

The following procedure describes how to remove a controller with its expansion modules from a top hat section rail (DIN rail):

Step	Action
1	Remove all power from your controller and expansion modules.
2	Insert a flat screwdriver into the slot of the top hat section rail (DIN rail) clip. 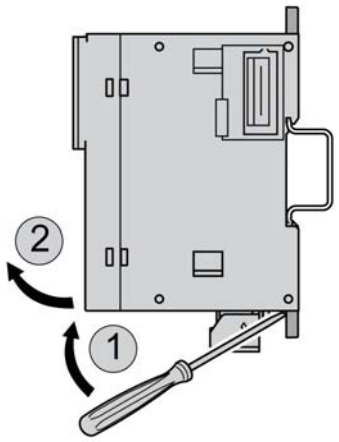
3	Pull down the DIN rail clip.
4	Pull the controller and its expansion modules from the top hat section rail (DIN rail) from the bottom.

Direct Mounting on a Panel Surface

Overview

This section shows how to install M251 Logic Controller on a panel surface using the mounting holes.

Mounting Hole Layout

This diagram shows the mounting hole layout for M251 Logic Controller:

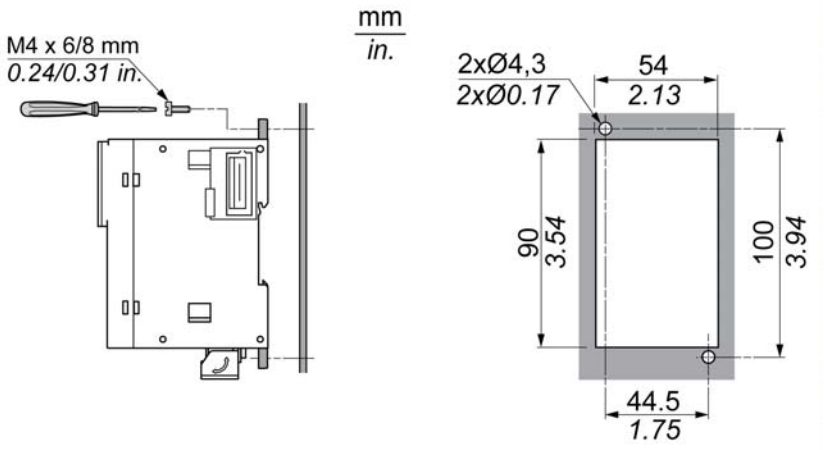

Section 3.3
M251 Electrical Requirements

What Is in This Section?

This section contains the following topics:

Topic	Page
Wiring Best Practices	65
DC Power Supply Characteristics and Wiring	68
Grounding the M251 System	72

Wiring Best Practices

Overview

This section describes the wiring guidelines and associated best practices to be respected when using the M251 Logic Controller system.

⚠⚠ DANGER

HAZARD OF ELECTRIC SHOCK, EXPLOSION OR ARC FLASH

- Disconnect all power from all equipment including connected devices prior to removing any covers or doors, or installing or removing any accessories, hardware, cables, or wires except under the specific conditions specified in the appropriate hardware guide for this equipment.
- Always use a properly rated voltage sensing device to confirm the power is off where and when indicated.
- Replace and secure all covers, accessories, hardware, cables, and wires and confirm that a proper ground connection exists before applying power to the unit.
- Use only the specified voltage when operating this equipment and any associated products.

Failure to follow these instructions will result in death or serious injury.

⚠ WARNING

LOSS OF CONTROL

- The designer of any control scheme must consider the potential failure modes of control paths and, for certain critical control functions, provide a means to achieve a safe state during and after a path failure. Examples of critical control functions are emergency stop and overtravel stop, power outage and restart.
- Separate or redundant control paths must be provided for critical control functions.
- System control paths may include communication links. Consideration must be given to the implications of unanticipated transmission delays or failures of the link.
- Observe all accident prevention regulations and local safety guidelines.[1]
- Each implementation of this equipment must be individually and thoroughly tested for proper operation before being placed into service.

Failure to follow these instructions can result in death, serious injury, or equipment damage.

[1] For additional information, refer to NEMA ICS 1.1 (latest edition), "Safety Guidelines for the Application, Installation, and Maintenance of Solid State Control" and to NEMA ICS 7.1 (latest edition), "Safety Standards for Construction and Guide for Selection, Installation and Operation of Adjustable-Speed Drive Systems" or their equivalent governing your particular location.

Wiring Guidelines

This rules must be applied when wiring a M251 Logic Controller system:

- Communication wiring must be kept separate from the power wiring. Route these 2 types of wiring in separate cable ducting.
- Verify that the operating conditions and environment are within the specification values.
- Use proper wire sizes to meet voltage and current requirements.
- Use copper conductors (required).
- Use twisted pair, shielded cables for networks, and fieldbus.

Use shielded, properly grounded cables for all communication connections. If you do not use shielded cable for these connections, electromagnetic interference can cause signal degradation. Degraded signals can cause the controller or attached modules and equipment to perform in an unintended manner.

⚠ WARNING

UNINTENDED EQUIPMENT OPERATION

- Use shielded cables for all communication signals.
- Ground cable shields for all communication signals at a single point[1].
- Route communication separately from power cables.

Failure to follow these instructions can result in death, serious injury, or equipment damage.

[1]Multipoint grounding is permissible if connections are made to an equipotential ground plane dimensioned to help avoid cable shield damage in the event of power system short-circuit currents.

For more details, refer to Grounding Shielded Cables *(see page 73)*.

NOTE: Surface temperatures may exceed 60° C. To conform to IEC 61010 standards, route primary wiring (wires connected to power mains) separately and apart from secondary wiring (extra low voltage wiring coming from intervening power sources). If that is not possible, double insulation is required such as conduit or cable gains.

Rules for Removable Screw Terminal Block

The following tables show the cable types and wire sizes for a **5.08 pitch** removable screw terminal block (power supply):

mm / in. 7 / 0.28								
mm^2	0.2…2.5	0.2…2.5	0.25…2.5	0.25…2.5	2 x 0.2…1	2 x 0.2…1.5	2 x 0.25…1	2 x 0.5…1.5
AWG	*24…14*	*24…14*	*23...14*	*23...14*	*2 x 24…17*	*2 x 24…16*	*2 x 23…17*	*2 x 20...16*

Ø 3,5 mm (*0.14 in.*)	C	N•m	0.5...0.6
		lb-in	*4.42...5.31*

The use of copper conductors is required.

⚠ DANGER

LOOSE WIRING CAUSES ELECTRIC SHOCK

- Tighten connections in conformance with the torque specifications.
- Do not insert more than one wire per connector of the terminal block without the cable ends specified above.

Failure to follow these instructions will result in death or serious injury.

⚠ DANGER

FIRE HAZARD

Use only the recommended wire sizes for the current capacity of the power supplies.

Failure to follow these instructions will result in death or serious injury.

DC Power Supply Characteristics and Wiring

Overview

This section provides the characteristics and the wiring diagrams of the DC power supply.

DC Power Supply Voltage Range

If the specified voltage range is not maintained, outputs may not switch as expected. Use appropriate safety interlocks and voltage monitoring circuits.

⚠ DANGER

FIRE HAZARD

- Use only the recommended wire sizes for the current capacity of the I/O channels and power supplies.
- For relay output (2 A) wiring, use conductors of at least 0.5 mm2 (AWG 20) with a temperature rating of at least 80 °C (176 °F).
- For common conductors of relay output wiring (7 A), or relay output wiring greater than 2 A, use conductors of at least 1.0 mm2 (AWG 16) with a temperature rating of at least 80 °C (176 °F).

Failure to follow these instructions will result in death or serious injury.

⚠ WARNING

UNINTENDED EQUIPMENT OPERATION

Do not exceed any of the rated values specified in the environmental and electrical characteristics tables.

Failure to follow these instructions can result in death, serious injury, or equipment damage.

DC Power Supply Requirements

The M251 Logic Controller and associated I/O (TM2,TM3) require power supplies with a nominal voltage of 24 Vdc. The 24 Vdc power supplies must be rated Safety Extra Low Voltage (SELV) or Protective Extra Low Voltage (PELV) according to IEC 61140. These power supplies are isolated between the electrical input and output circuits of the power supply.

⚠ WARNING

POTENTIAL OF OVERHEATING AND FIRE

- Do not connect the equipment directly to line voltage.
- Use only isolating PELV or SELV power supplies to supply power to the equipment[1].

Failure to follow these instructions can result in death, serious injury, or equipment damage.

[1]For compliance to UL (Underwriters Laboratories) requirements, the power supply must also be of a type Class II with a maximum power output availability of less than 100 VA (approximately 4 A at nominal voltage). A Class II circuit requires dry indoor use only in non-hazardous locations, and must be grounded. You must separate Class II circuits from other circuits. If a non-Class II power source is used, either power supply or transformer, you must impose a current limiting device such as a fuse or a circuit breaker with a maximum rating of 4 A, but never exceeding the limits indicated in the electric characteristics and wiring diagrams for this equipment. If the indicated rating of the electrical characteristics or wiring diagrams are greater than 4 A, multiple Class II power supplies may be used.

Controller DC Characteristics

This table shows the characteristics of the DC power supply required for the controller:

Characteristic		Value	
Rated voltage		24 Vdc	
Power supply voltage range		19.2...28.8 Vdc	
Power interruption time		10 ms at 24 Vdc	
Maximum inrush current		50 A	
Continuous output power		typical 32.6 W	max. 40.4 W
Isolation	between DC power supply and internal logic	Not isolated	
	between DC power supply and protective earth ground (PE)	500 Vac	

Power Interruption

The duration of power interruptions where the M251 Logic Controller is able to continue normal operation varies depending upon the load to the power supply of the controller, but a minimum of 10 ms is maintained as specified by IEC standards.

When planning the management of the power supplied to the controller, you must consider the power interruption duration due to the fast cycle time of the controller.

There could potentially be many scans of the logic and consequential updates to the I/O image table during the power interruption, while there is no external power supplied to the inputs, the outputs or both depending on the power system architecture and power interruption circumstances.

⚠ WARNING

UNINTENDED EQUIPMENT OPERATION

- Individually monitor each source of power used in the controller system including input power supplies, output power supplies and the power supply to the controller to allow appropriate system shutdown during power system interruptions.
- The inputs monitoring each of the power supply sources must be unfiltered inputs.

Failure to follow these instructions can result in death, serious injury, or equipment damage.

DC Power Supply Wiring Diagram

This figure shows the power supply terminal block removal procedure:

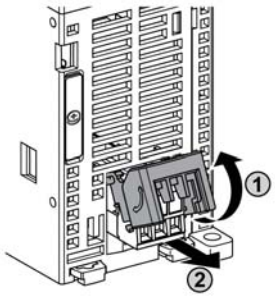

The following figure shows the wiring of the DC power supply:

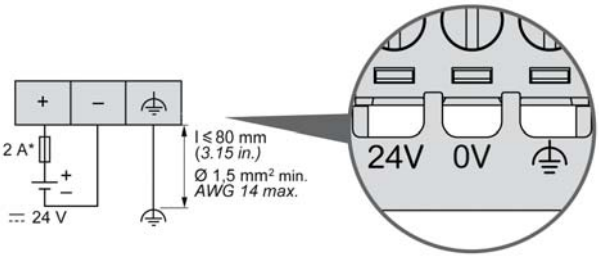

* Type T fuse

For more information, refer to the 5.08 pitch Rules for Removable Screw Terminal block (*see page 67*).

Grounding the M251 System

Overview

To help minimize the effects of electromagnetic interference, cables carrying fieldbus communication signals must be shielded.

⚠ WARNING

UNINTENDED EQUIPMENT OPERATION

- Use shielded cables for communication signals.
- Ground cable shields for communication signals at a single point [1].
- Always comply with local wiring requirements regarding grounding of cable shields.

Failure to follow these instructions can result in death, serious injury, or equipment damage.

[1]Multipoint grounding is permissible if connections are made to an equipotential ground plane dimensioned to help avoid cable shield damage in the event of power system short-circuit currents.

The use of shielded cables requires compliance with the following wiring rules:

- For protective ground connections (PE), metal conduit or ducting can be used for part of the shielding length, provided there is no break in the continuity of the ground connections. For functional ground (FE), the shielding is intended to attenuate electromagnetic interference and the shielding must be continuous for the length of the cable. If the purpose is both functional and protective, as is often the case for communication cables, the cable must have continuous shielding.
- Wherever possible, keep cables carrying one type of signal separate from the cables carrying other types of signals or power.

Protective Ground (PE) on the Backplane

The protective ground (PE) should be connected to the conductive backplane by a heavy-duty wire, usually a braided copper cable with the maximum allowable cable section.

Shielded Cables Connections

Cables carrying fieldbus communication signals must be shielded. The shielding must be securely connected to ground. The fieldbus communication cable shields must be connected to the protective ground (PE) with a connecting clamp secured to the conductive backplane of your installation.

⚠ WARNING

ACCIDENTAL DISCONNECTION FROM PROTECTIVE GROUND (PE)

- Do not use the TM2XMTGB Grounding Bar to provide a protective ground (PE).
- Use the TM2XMTGB Grounding Bar only to provide a functional ground (FE).

Failure to follow these instructions can result in death, serious injury, or equipment damage.

The shielding of the Modbus cable must be connected to the protective ground (PE).

⚠ DANGER

HAZARD OF ELECTRIC SHOCK

- The grounding terminal connection (PE) must be used to provide a protective ground at all times.
- Make sure that an appropriate, braided ground cable is attached to the PE/PG ground terminal before connecting or disconnecting the network cable to the equipment.

Failure to follow these instructions will result in death or serious injury.

Part II
Modicon M251 Logic Controller

What Is in This Part?

This part contains the following chapters:

Chapter	Chapter Name	Page
4	TM251MESC	77
5	TM251MESE	81

Chapter 4
TM251MESC

TM251MESC Presentation

Description

This figure shows the different components of the TM251MESC logic controller:

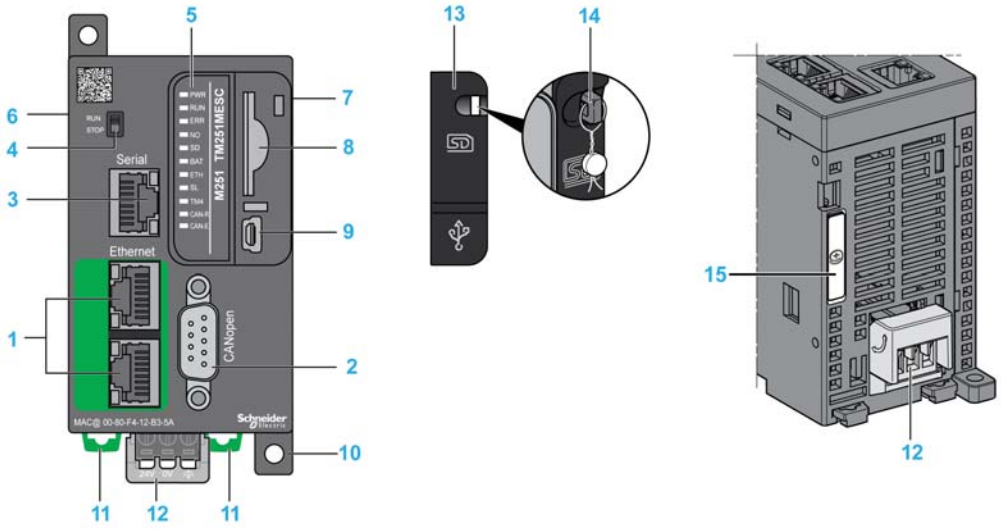

N°	Description	Refer to
1	Dual port Ethernet switch	Ethernet port *(see page 90)*
2	CANopen port	CANopen port *(see page 88)*
3	Serial line port / Type RJ45 (RS-232 or RS-485)	Serial Line *(see page 97)*
4	Run/Stop switch	Run/Stop *(see page 40)*
5	Status LEDs	–
6	TM4 bus connector	TM4 Expansion Modules *(see page 19)*
7	TM3/TM2 bus connector	TM3 Expansion Modules *(see page 20)*
8	SD card slot	SD Card *(see page 41)*
9	USB mini-B programming port / For terminal connection to a programming PC (SoMachine)	USB Mini-B Programming Port *(see page 96)*

N°	Description	Refer to
10	Surface mounting lugs	–
11	Clip-on lock for 35 mm (1.38 in.) top hat section rail (DIN-rail)	Top Hat Section Rail *(see page 58)*
12	24 Vdc power supply	DC Power supply Characteristics and Wiring *(see page 68)*
13	Protective cover (SD card slot and USB mini-B programming port)	–
14	Locking hook (Hook not included)	–
15	Battery holder	Real Time Clock (RTC) *(see page 36)*

Status LEDs

This figure shows the status LEDs:

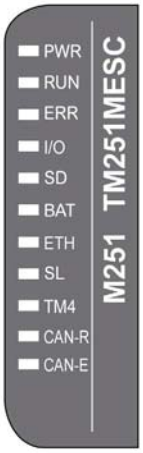

The following table describes the system status LEDs:

Label	Function Type	Color	Status	Description
PWR	Power	Green	On	Indicates that power is applied.
			Off	Indicates that power is removed.
RUN	Machine status	Green	On	Indicates that the controller is running a valid application.
			Flashing	Indicates that the controller has a valid application that is stopped.
			1 flash	Indicates that the controller has paused at BREAKPOINT.
			Off	Indicates that the controller is not programmed

Label	Function Type	Color	Status	Description
ERR	Internal Error	Red	On	Indicates that an operating system error has been detected
			Fast flashing	Indicates that the controller has detected an internal error
			Slow flashing	Indicates either that a minor error has been detected if **RUN** is ON or that no application has been detected
I/O	I/O error	Red	On	Indicates device errors on the serial line, SD card, TM4 bus, TM3 bus, Ethernet port(s) or CANopen port.
SD	SD card access	Green	On	Indicates that the SD card is being accessed
BAT	Battery	Red	On	Indicates that the battery needs to be replaced.
			Flashing	Indicates that the battery charge is low.
ETH	Ethernet port status	Green	On	Indicates that the ethernet port is connected and the IP address is defined.
			3 flashes	Indicates that the ethernet port is not connected.
			4 flashes	Indicates that the IP address is already in used.
			5 flashes	Indicates that the module is waiting for BOOTP or DHCP sequence.
			6 flashes	Indicates that the configured IP address is not valid.
SL	Serial line	Green	On	Indicates the status of serial line *(see page 99)*
			Off	Indicates no serial communication
TM4	Error on TM4 bus	Red	On	Indicates that an error has been detected on the TM4 bus
			Off	Indicates that no error has been detected on the TM4 bus
CAN-R	CANopen running status	Green	On	Indicates that the CANopen bus is operational.
			Off	Indicates that the CANopen master is configured.
			Flashing	Indicates that the CANopen bus is being initialized.
			1 flash per second	Indicates that the CANopen bus is stopped.
CAN-E	CANopen error	Red	On	Indicates that the CANopen bus is stopped (BUS OFF).
			Off	Indicates no CANopen detected error.
			Flashing	Indicates that the CANopen bus is not valid.
			1 flash per second	Indicates that the controller has detected that the maximum number of error frames has been reached or exceeded.
			2 flashes per second	Indicates that the controller has detected either a Node Guarding or a Heartbeat event.

NOTE: All the LEDs flash when the logic controller is being identified. For more details, refer to the SoMachine Programming Guide.

Dimensions

This figures shows the external dimensions of the logic controller:

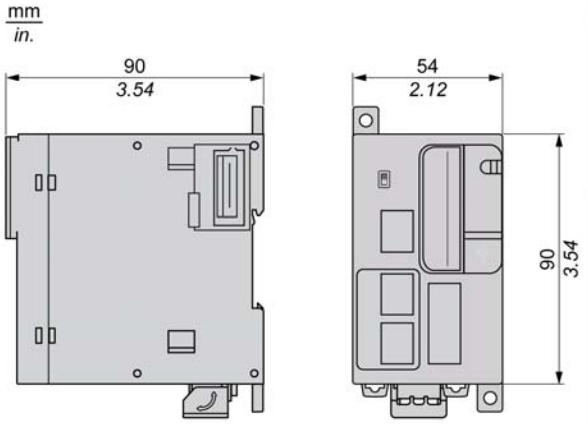

Chapter 5
TM251MESE

TM251MESE Presentation

Description

This figure shows the different components of the TM251MESE logic controller:

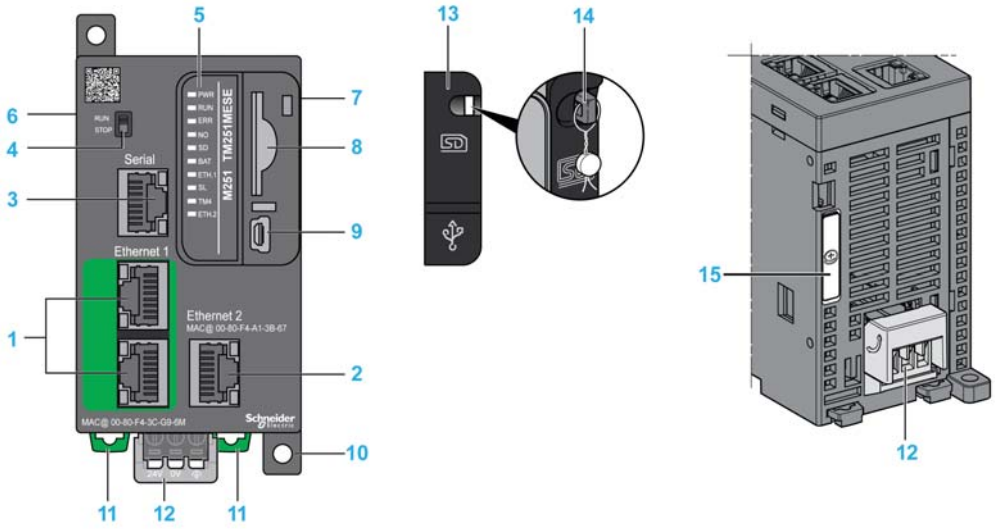

N°	Description	Refer to
1	Dual port Ethernet switch	Ethernet port *(see page 90)*
2	Ethernet port 2	Ethernet ports *(see page 93)*
3	Serial line port / Type RJ45 (RS-232 or RS-485)	Serial Line *(see page 97)*
4	Run/Stop switch	Run/Stop *(see page 40)*
5	Status LEDs	–
6	TM4 bus connector	TM4 Expansion Modules *(see page 19)*
7	TM3/TM2 bus connector	TM3 Expansion Modules *(see page 20)*
8	SD card slot	SD Card *(see page 41)*
9	USB mini-B programming port / For terminal connection to a programming PC (SoMachine)	USB Mini-B Programming Port *(see page 96)*

N°	Description	Refer to
10	Surface mounting lugs	–
11	Clip-on lock for 35 mm (1.38 in.) top hat section rail (DIN-rail)	Top Hat Section Rail *(see page 58)*
12	24 Vdc power supply	DC Power supply Characteristics and Wiring *(see page 68)*
13	Protective cover (SD card slot and USB mini-B programming port)	–
14	Locking hook (Hook not included)	–
15	Battery holder	Real Time Clock (RTC) *(see page 36)*

Status LEDs

This figure shows the status LEDs:

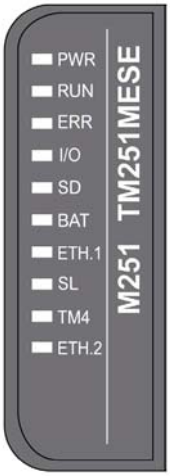

The following table describes the system status LEDs:

Label	Function Type	Color	Status	Description
PWR	Power	Green	On	Indicates that power is applied.
			Off	Indicates that power is removed.
RUN	Machine status	Green	On	Indicates that the controller is running a valid application.
			Flashing	Indicates that the controller has a valid application that is stopped.
			1 flash	Indicates that the controller has paused at BREAKPOINT.
			Off	Indicates that the controller is not programmed

Label	Function Type	Color	Status	Description
ERR	Internal Error	Red	On	Indicates that an operating system error has been detected
			Fast flashing	Indicates that the controller has detected an internal error
			Slow flashing	Indicates either that a minor error has been detected if **RUN** is ON or that no application has been detected
I/O	I/O error	Red	On	Indicates device errors on the serial line, SD card, TM4 bus, TM3 bus, Ethernet port(s) or CANopen port.
SD	SD card access	Green	On	Indicates that the SD card is being accessed
BAT	Battery	Red	On	Indicates that the battery needs to be replaced.
			Flashing	Indicates that the battery charge is low.
ETH.1 ETH.2	Ethernet port status	Green	On	Indicates that the ethernet port is connected and the IP address is defined.
			3 flashes	Indicates that the ethernet port is not connected.
			4 flashes	Indicates that the IP address is already in used.
			5 flashes	Indicates that the module is waiting for BOOTP or DHCP sequence.
			6 flashes	Indicates that the configured IP address is not valid.
SL	Serial line	Green	On	Indicates the status of serial line (*see page 99*)
			Off	Indicates no serial communication
TM4	Error on TM4 bus	Red	On	Indicates that an error has been detected on the TM4 bus
			Off	Indicates that no error has been detected on the TM4 bus

NOTE: All the LEDs flash when the logic controller is being identified. For more details, refer to the SoMachine Programming Guide.

Dimensions

This figure shows the external dimensions of the logic controller:

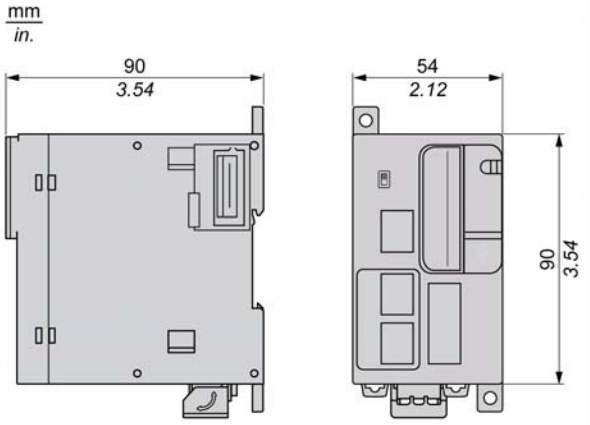

Part III
Modicon M251 Logic Controller Communication

What Is in This Part?

This part contains the following chapters:

Chapter	Chapter Name	Page
6	Integrated Communication Ports	87
7	Connecting the M251 Logic Controller to a PC	101

Chapter 6
Integrated Communication Ports

What Is in This Chapter?

This chapter contains the following topics:

Topic	Page
CANopen Port	88
Ethernet Port	90
TM251MESE Specific Considerations	93
USB Mini-B Programming Port	96
Serial Line	97

CANopen Port

CANopen Capabilities

The Modicon M251 Logic Controller CANopen master has the following features:

Maximum number of slaves on the bus	63 CANopen slave devices
Maximum length of CANopen fieldbus cables	According to the CAN specification (see cable length and transmission speed).
Maximum number of PDO managed by the master	252 TPDOs + 252 RPDOs

For each additional CANopen slave,

- the application size increases by an average of 10 Kbytes which conceivably could result in exceeding memory limits.
- the configuration initialization time at the startup increases which conceivably could result in a watchdog timeout.

Although SoMachine does not restrict you from doing so, we recommend that you not exceed more than 63 CANopen slave modules (and/or 252 TPDOs and 252 RPDOs) in order to have a sufficient performance tolerance and to avoid any performance degradation.

⚠ WARNING

UNINTENDED EQUIPMENT OPERATION

Do not connect more than 63 CANopen slave devices to the controller to avoid system overload watchdog condition.

Failure to follow these instructions can result in death, serious injury, or equipment damage.

NOTICE

DEGRADATION OF PERFORMANCE

Do not exceed more than 252 TPDOs and 252 RPDOs for the Modicon M251 Logic Controller.

Failure to follow these instructions can result in equipment damage.

CANopen Wiring Diagram

The CANopen plug is a male sub-D9 terminal block:

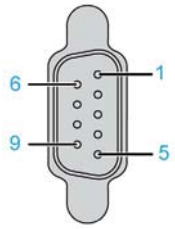

Pin	Signal	Description
1	–	Reserved
2	CAN_L	CAN_L bus line
3	CAN_GND	CAN ground
4	–	Reserved
5	(CAN_SHLD)	Optional CAN shield
6	GND	Ground
7	CAN_H	CAN_H bus line
8	–	Reserved
9	(CAN_V+)	Optional CAN external positive supply

Cable Length

Transmission speed is limited by the bus length and the type of cable used.

This table describes the relationship between the maximum transmission speed and the bus length (on a single CAN segment without a repeater).

Maximum Transmission baud Rate	Bus Length
1000 Kbps	20 m (65 ft)
800 Kbps	40 m (131 ft)
500 Kbps	100 m (328 ft)
250 Kbps	250 m (820 ft)
125 Kbps	500 m (1,640 ft)
50 Kbps	1000 m (3280 ft)
20 Kbps	2500 m (16,400 ft)

Ethernet Port

Overview

The M251 Logic Controller is equipped with Ethernet communications ports:

Reference	Number of Ports	Port Name
TM251MESC	2 (one dual Ethernet port switch)	Ethernet
TM251MESE	2 (one dual Ethernet port switch)	Ethernet 1
	1	Ethernet 2

Characteristics

This table describes the different Ethernet characteristics:

Characteristic	Description
Function	Modbus TCP/IP, SoMachine protocol, EtherNet I/P
Connector type	RJ45
Auto negotiation	from 10 M half duplex to 100 M full duplex
Cable type	Shielded
Automatic cross-over detection	Yes

Pin Assignment

This figure shows the RJ45 Ethernet connector pin assignment:

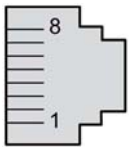

This table describes the RJ45 Ethernet connector pins:

Pin N°	Signal
1	TD+
2	TD-
3	RD+
4	-
5	-
6	RD-
7	-
8	-

NOTE: The controller supports the MDI/MDIX auto-crossover cable function. It is not necessary to use special Ethernet crossover cables to connect devices directly to this port (connections without an Ethernet hub or switch).

NOTE: Ethernet cable disconnection is detected every second. In case of disconnection of a short duration (< 1 second), the network status may not indicate the disconnection.

Status LED

This figure shows RJ45 connectors status LED:

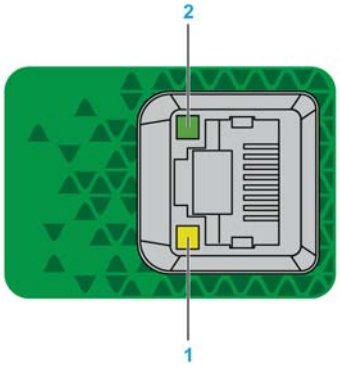

This table describes the Ethernet status LEDs:

Label	Description	LED		
		Color	Status	Description
1	Ethernet link	Green/Yellow	Off	No link
			Solid yellow	Link at 10 Mbit/s
			Solid green	Activity at 100 Mbit/s
2	Ethernet activity	Green	Off	No activity
			On	Transmitting or receiving data

TM251MESE Specific Considerations

Ethernet Ports

The TM251MESE has 2 different Ethernet networks. Each one get its own and unique IP and MAC address.

The 2 Ethernet networks are called Ethernet 1 and Ethernet 2:

- Ethernet 1 is made of 2 switched Ethernet ports dedicated to communication between machines or with the factory network.
- Ethernet 2 is made of 1 Ethernet port dedicated to fieldbus device connections.

For example, you can:

- Connect your PC to the Ethernet 1.
- Use a Modbus TCP I/O scanner with the Ethernet 2.

System Architecture

This figure is an example of an Ethernet architecture with 2 TM251MESE.

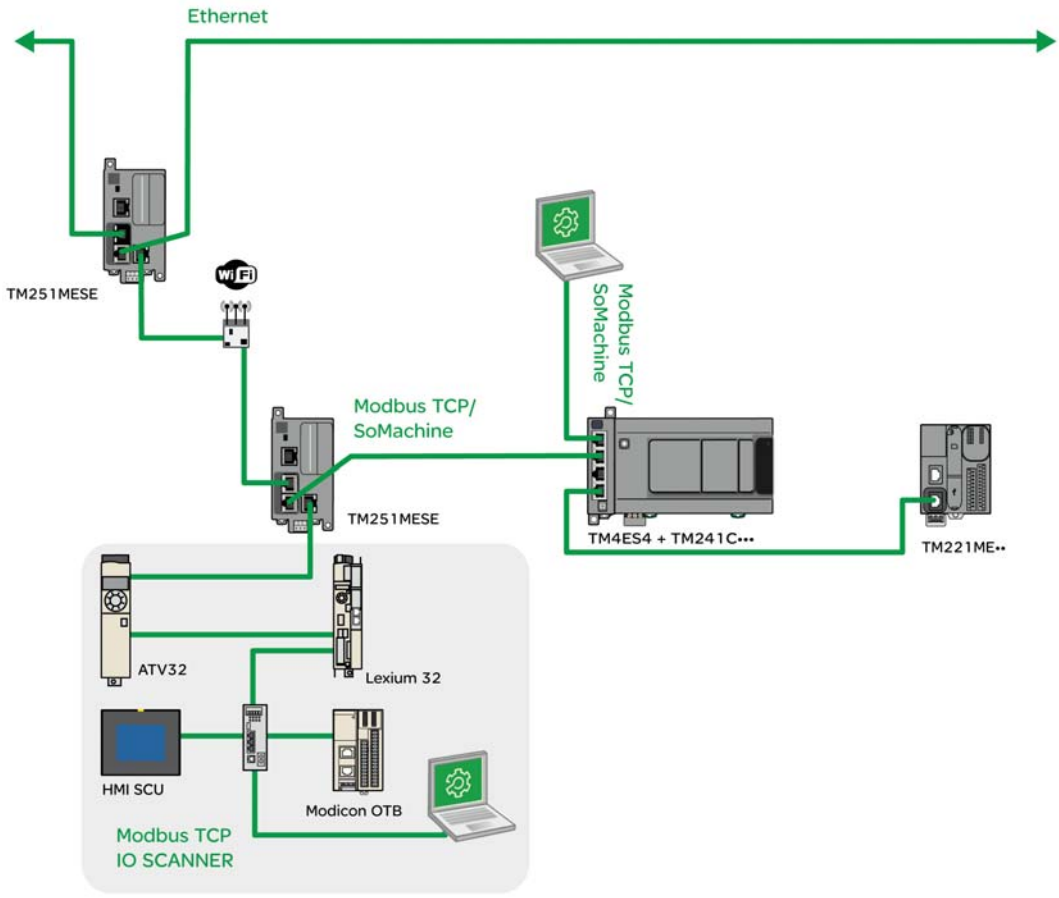

This figure is an example of an Ethernet architecture with TM251MESE and TM4ES4.

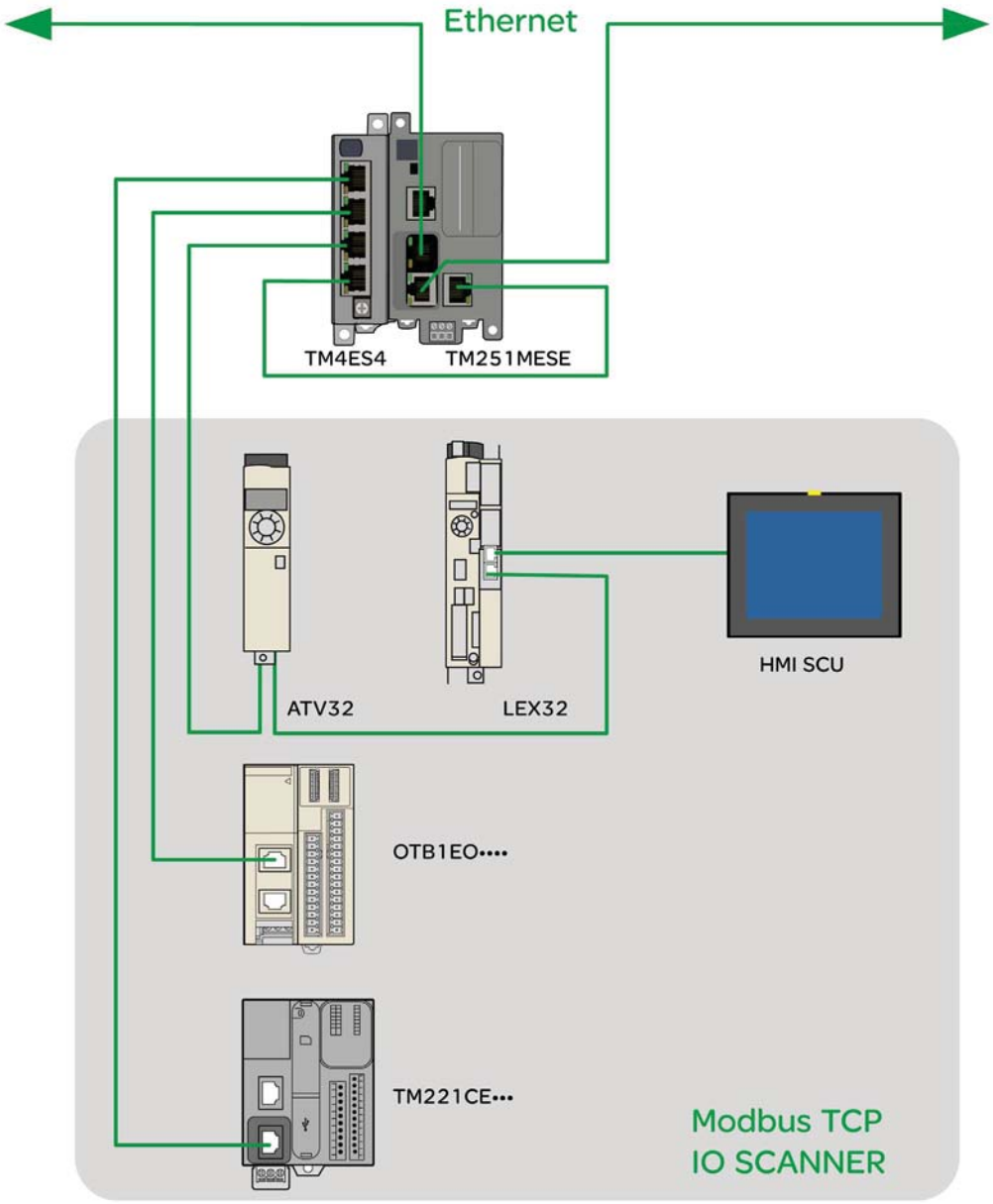

USB Mini-B Programming Port

Overview

The USB Mini-B Port is the programming port you can use to connect a PC with a USB host port using SoMachine software. Using a typical USB cable, this connection is suitable for quick updates of the program or short duration connections to perform maintenance and inspect data values. It is not suitable for long-term connections such as commissioning or monitoring without the use of specially adapted cables to help minimize electromagnetic interference.

⚠ WARNING

INOPERABLE EQUIPMENT OR UNINTENDED EQUIPMENT OPERATION

- You must use a shielded USB cable such as a BMX XCAUSBH0•• secured to the functional ground (FE) of the system for any long-term connection.
- Do not connect more than one controller at a time using USB connections.

Failure to follow these instructions can result in death, serious injury, or equipment damage.

Characteristics

This table describes the characteristics of the USB Mini-B programming port:

Parameter	USB Programming Port
Function	Compatible with USB 2.0
Connector type	Mini-B
Isolation	None
Cable type	Shielded

Serial Line

Overview

The serial line:

- Can be used to communicate with devices supporting the Modbus protocol as either master or slave, ASCII protocol (printer, modem...) and SoMachine Protocol (HMI,...).
- provides a 5 Vdc power distribution.

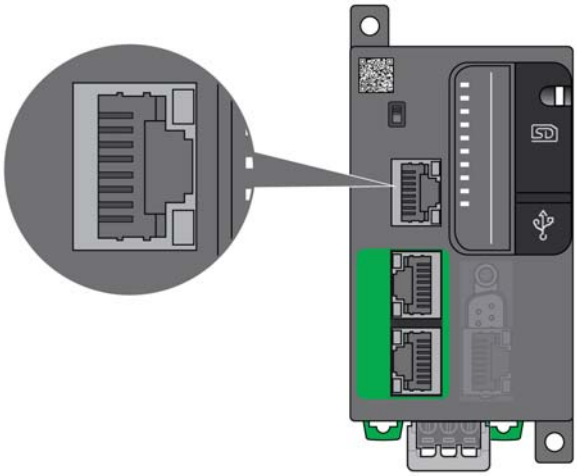

Characteristics

Characteristic		Description
Function		RS485 or RS232 software configured
Connector type		RJ45
Isolation		Non-isolated
Maximum baud rate		1200 up to 115 200 bps
Cable	Type	Shielded
	Maximum length	15 m (49 ft) for RS485 3 m (9.84 ft) for RS232
Polarization		Software configuration is used to connect when the node is configured as a master. 560 Ω resistors are optional.
5 Vdc power supply for RS485		Yes

NOTE: Some devices provide voltage on RS485 serial connections. It is necessary to avoid connection of these voltage lines to your controller as they may damage the controller serial port electronics and render the serial port inoperable.

NOTICE
INOPERABLE EQUIPMENT Use only the VW3A8306R•• serial cable to connect RS485 devices to your controller. **Failure to follow these instructions can result in equipment damage.**

Pin Assignment

The following figure shows the pins of the RJ45 connector:

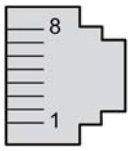

This table describes the pin assignment of the RJ45 connector:

Pin	RS232	RS485
1	RxD	N.C.
2	TxD	N.C.
3	N.C.	N.C.
4	N.C.	D1 (A +)
5	N.C.	D0 (B –)
6	N.C.	N.C.
7	N.C. *	5 Vdc
8	Common	Common

*: 5 Vdc delivered by the controller, do not connect.

N.C.: No connection

RxD: Received data

TxD: Transmitted data

⚠ WARNING

UNINTENDED EQUIPMENT OPERATION

Do not connect wires to unused terminals and/or terminals indicated as “No Connection (N.C.)”.

Failure to follow these instructions can result in death, serious injury, or equipment damage.

Status LED

This table describes the serial line status LED:

Label	Description	LED		
		Color	Status	Description
SL	Serial line	Green	On	Indicates the activity of the serial line.
			Off	Indicates no serial communication.

Chapter 7
Connecting the M251 Logic Controller to a PC

Connecting the Controller to a PC

Overview

To transfer, run, and monitor the applications, connect the controller to a computer, that has SoMachine installed, using either a USB cable or an Ethernet connection (for those references that support an Ethernet port).

NOTICE
INOPERABLE EQUIPMENT
Always connect the communication cable to the PC before connecting it to the controller.
Failure to follow these instructions can result in equipment damage.

USB Powered Download

In order to execute limited operations, the M251 Logic Controller has the capability to be powered through the USB Mini-B port. A diode mechanism avoids having the logic controller both powered by USB and by the normal power supply, or to supply voltage on the USB port.

When powered only by USB, the logic controller executes the firmware and the boot project (if any) and the I/O board is not powered during boot (same duration as a normal boot). USB powered download initializes the internal flash memory with some firmware or some application and parameters when the controller is powered by USB. The preferred tool to connect to the controller is the **Controller Assistant**.

The controller packaging allows easy access to USB Mini-B port with minimum opening of the packaging. You can connect the controller to the PC with a USB cable. Long cables are not suitable for the USB powered download.

⚠ WARNING

INSUFFICENT POWER FOR USB DOWNLOAD

Do not use a USB cable longer than 3m (9.8 ft) for USB powered download.

Failure to follow these instructions can result in death, serious injury, or equipment damage.

NOTE: It is not intended that you use the USB Powered Download on an installed controller. Depending on the number of I/O expansion modules in the physical configuration of the installed controller, there may be insufficient power from your PC USB port to accomplish the download.

USB Mini-B Port Connection

TCSXCNAMUM3P: This USB cable is suitable for short duration connections such as quick updates or retrieving data values.

BMXXCAUSBH018: Grounded and shielded, this USB cable is suitable for long duration connections.

NOTE: You can only connect 1 controller or any other device associated with SoMachine and its component to the PC at any one time.

The USB Mini-B Port is the programming port you can use to connect a PC with a USB host port using SoMachine software. Using a typical USB cable, this connection is suitable for quick updates of the program or short duration connections to perform maintenance and inspect data values. It is not suitable for long-term connections such as commissioning or monitoring without the use of specially adapted cables to help minimize electromagnetic interference.

⚠ WARNING

INOPERABLE EQUIPMENT OR UNINTENDED EQUIPMENT OPERATION

- You must use a shielded USB cable such as a BMX XCAUSBH0•• secured to the functional ground (FE) of the system for any long-term connection.
- Do not connect more than one controller at a time using USB connections.

Failure to follow these instructions can result in death, serious injury, or equipment damage.

The communication cable should be connected to the PC first to minimize the possibility of electrostatic discharge affecting the controller.

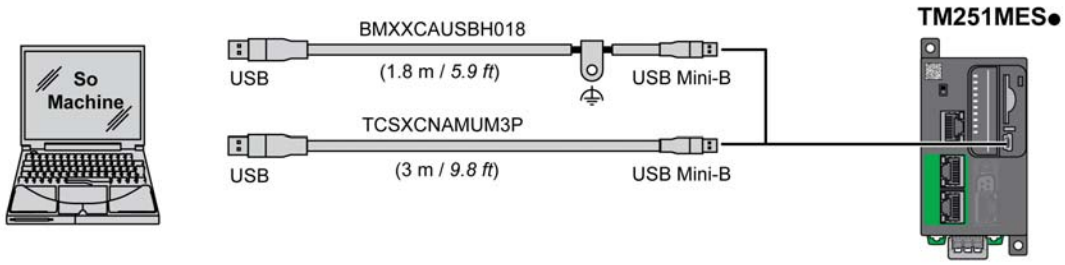

To connect the USB cable to your controller, follow the steps below:

Step	Action
1	**1a** If making a long-term connection using the cable BMXXCAUSBH018, or other cable with a ground shield connection, be sure to securely connect the shield connector to the functional ground (FE) or protective ground (PE) of your system before connecting the cable to your controller and your PC. **1b** If making a short-term connection using the cable TCSXCNAMUM3P or other non-grounded USB cable, proceed to step 2.
2	Connect your USB cable to the computer.
3	Open the hinged access cover.
4	Connect the Mini connector of your USB cable to the controller USB connector.

Ethernet Port Connection

You can also connect the controller to a PC using an Ethernet cable.

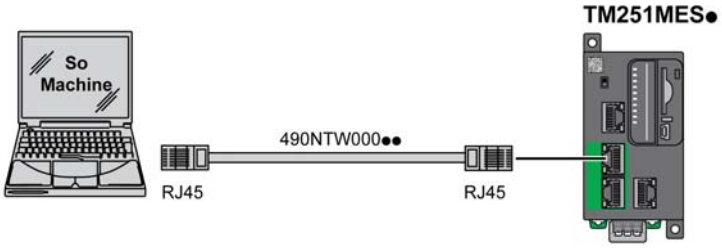

To connect the controller to the PC, do the following:

Step	Action
1	Connect your Ethernet cable to the PC.
2	Connect your Ethernet cable to the Ethernet port on the controller.

Glossary

A

ASCII

(*American standard code for Information Interchange*) A protocol for representing alphanumeric characters (letters, numbers, certain graphics, and control characters).

B

bps

(*bit per second*) A definition of transmission rate, also given in conjunction with multiplicator kilo (kbps) and mega (mbps).

C

CANopen

An open industry-standard communication protocol and device profile specification (EN 50325-4).

CFC

(*continuous function chart*) A graphical programming language (an extension of the IEC 61131-3 standard) based on the function block diagram language that works like a flowchart. However, no networks are used and free positioning of graphic elements is possible, which allows feedback loops. For each block, the inputs are on the left and the outputs on the right. You can link the block outputs to the inputs of other blocks to create complex expressions.

continuous function chart language

A graphical programming language (an extension of the IEC61131-3 standard) based on the function block diagram language that works like a flowchart. However, no networks are used and free positioning of graphic elements is possible, which allows feedback loops. For each block, the inputs are on the left and the outputs on the right. You can link the block outputs to inputs of other blocks to create complex expressions.

D

DIN

(*Deutsches Institut für Normung*) A German institution that sets engineering and dimensional standards.

E

EIA rack

(*electronic industries alliance rack*) A standardized (EIA 310-D, IEC 60297, and DIN 41494 SC48D) system for mounting various electronic modules in a stack or rack that is 19 inches (482.6 mm) wide.

EN

EN identifies 1 of many European standards maintained by CEN (*European Committee for Standardization*), CENELEC (*European Committee for Electrotechnical Standardization*), or ETSI (*European Telecommunications Standards Institute*).

F

FBD

(*function block diagram*) One of 5 languages for logic or control supported by the standard IEC 61131-3 for control systems. Function block diagram is a graphically oriented programming language. It works with a list of networks, where each network contains a graphical structure of boxes and connection lines, which represents either a logical or arithmetic expression, the call of a function block, a jump, or a return instruction.

FE

(functional Earth) A common grounding connection to enhance or otherwise allow normal operation of electrically sensitive equipment (also referred to as functional ground in North America).

In contrast to a protective Earth (protective ground), a functional earth connection serves a purpose other than shock protection, and may normally carry current. Examples of devices that use functional earth connections include surge suppressors and electromagnetic interference filters, certain antennas, and measurement instruments.

H

HE10

Rectangular connector for electrical signals with frequencies below 3 MHz, complying with IEC 60807-2.

I

IEC

(*international electrotechnical commission*) A non-profit and non-governmental international standards organization that prepares and publishes international standards for electrical, electronic, and related technologies.

IEC 61131-3

Part 3 of a 3-part IEC standard for industrial automation equipment. IEC 61131-3 is concerned with controller programming languages and defines 2 graphical and 2 textual programming language standards. The graphical programming languages are ladder diagram and function block diagram. The textual programming languages include structured text and instruction list.

IL

(*instruction list*) A program written in the language that is composed of a series of text-based instructions executed sequentially by the controller. Each instruction includes a line number, an instruction code, and an operand (refer to IEC 61131-3).

instruction list language

A program written in the instruction list language that is composed of a series of text-based instructions executed sequentially by the controller. Each instruction includes a line number, an instruction code, and an operand (see IEC 61131-3).

IP 20

(*ingress protection*) The protection classification according to IEC 60529 offered by an enclosure, shown by the letter IP and 2 digits. The first digit indicates 2 factors: helping protect persons and for equipment. The second digit indicates helping protect against water. IP 20 devices help protect against electric contact of objects larger than 12.5 mm, but not against water.

L

ladder diagram language

A graphical representation of the instructions of a controller program with symbols for contacts, coils, and blocks in a series of rungs executed sequentially by a controller (see IEC 61131-3).

LD

(*ladder diagram*) A graphical representation of the instructions of a controller program with symbols for contacts, coils, and blocks in a series of rungs executed sequentially by a controller (refer to IEC 61131-3).

M

master/slave

The single direction of control in a network that implements the master/slave mode.

Modbus

The protocol that allows communications between many devices connected to the same network.

N

NEMA

(*national electrical manufacturers association*) The standard for the performance of various classes of electrical enclosures. The NEMA standards cover corrosion resistance, ability to help protect from rain, submersion, and so on. For IEC member countries, the IEC 60529 standard classifies the ingress protection rating for enclosures.

P

PDO

(*process data object*) An unconfirmed broadcast message or sent from a producer device to a consumer device in a CAN-based network. The transmit PDO from the producer device has a specific identifier that corresponds to the receive PDO of the consumer devices.

PE

(*protective Earth*) A common grounding connection to help avoid the hazard of electric shock by keeping any exposed conductive surface of a device at earth potential. To avoid possible voltage drop, no current is allowed to flow in this conductor (also referred to as *protective ground* in North America or as an equipment grounding conductor in the US national electrical code).

R

RJ-45

A standard type of 8-pin connector for network cables defined for Ethernet.

RPDO

(*receive process data object* An unconfirmed broadcast message or sent from a producer device to a consumer device in a CAN-based network. The transmit PDO from the producer device has a specific identifier that corresponds to the receive PDO of the consumer devices.

RS-485

A standard type of serial communication bus, based on 2 wires (also known as EIA RS-485).

RxD

The line that receives data from one source to another.

S

SFC

(*sequential function chart*) A language that is composed of steps with associated actions, transitions with associated logic condition, and directed links between steps and transitions. (The SFC standard is defined in IEC 848. It is IEC 61131-3 compliant.)

ST

(*structured text*) A language that includes complex statements and nested instructions (such as iteration loops, conditional executions, or functions). ST is compliant with IEC 61131-3.

T

terminal block

(*terminal block*) The component that mounts in an electronic module and provides electrical connections between the controller and the field devices.

TPDO

(*transmit process data object*) An unconfirmed broadcast message or sent from a producer device to a consumer device in a CAN-based network. The transmit PDO from the producer device has a specific identifier that corresponds to the receive PDO of the consumer devices.

TxD

The line that sends data from one source to another.

Index

A

accessories, *32*
analog input modules
  specifications, *24*
analog mixed I/O modules
  specifications, *26*
analog output modules
  specifications, *25*

C

CANopen communication, *88*
caution
  loss of application data, *41*
certifications and standards, *50*
communication
  CANopen, *88*
Communication Ports, *87*
  Ethernet Port, *90*
  Serial Line 1, *97*
  USB Programming Port, *96*
connections
  to CANopen slaves, *88*

D

digital I/O modules
  specifications, *20*, *21*, *23*, *28*, *29*
Digital I/O modules
  Specifications, *29*

E

Electrical Requirements
  Installation, *64*
Electromagnetic Susceptibility, *48*

F

features
  key features, *14*

G

Grounding, *72*

I

Installation, *45*
  Electrical Requirements, *64*
  Logic Controller Installation, *51*

L

Logic Controller Installation
  Installation, *51*

M

M221 I/O
  Environmental Characteristics, *47*
M251
  TM251MESC, *77*
  TM251MESE, *81*
mounting positions, *55*

N

notice
  loss of application data, *41*

P

Power Supply, *68*
presentation
  TM251MESC, *77*
  TM251MESE, *81*

programming languages
IL, LD, grafcet, *14*

R

real time clock, *36*
regular inputs, *20*, *21*, *23*
regular transistor outputs, *20*, *21*, *23*
relay outputs, *20*, *21*, *23*
Run/Stop, *40*

S

SD Card, *41*
Serial Line 1
Communication Ports, *97*
specifications
analog input modules, *24*
analog mixed I/O modules, *26*
analog output modules, *25*
digital I/O modules, *20*, *21*, *23*, *28*
Specifications
Digital I/O modules, *29*, *29*
specifications
modules, *27*
transmitter and receiver modules, *27*

T

Tesys modules
specifications, *27*
transmitter and receiver modules
specifications, *27*

U

USB Programming Port
Communication Ports, *96*

W

wiring, *65*



Installation Guide

IG 022 / Rev. 1.5

eWON COSY 131

This installation guide describes the hardware of the eWON COSY 131 and explains how to get started with the embedded web site.



support.ewon.biz

Table of Contents

1. Product Summary 4
1.1. Introduction 4
1.2. Concept of the eWON COSY 131 Family 4
1.3. General specification of the hardware platform 4
1.4. Typical applications 4
1.5. Type and Part Numbers 5

2. Safety, Environmental & Regulatory Information 6
2.1. Scope 6
2.2. Power supply 6
2.3. Applicable Directives, Standards and Compliance 6
2.3.1. Applicable European Directives 6
2.3.2. Applicable Safety Standards 7
2.3.3. FCC Compliance 7
2.3.4. Certifications 7
2.4. Field implementation & environmental conditions 7
2.4.1. Ingress Protection 7
2.4.2. Mounting Recommendations 7
2.4.3. Cabling rules 10
2.4.4. Environmental conditions 10
2.4.5. Earthing 10
2.5. Battery 10

3. Hardware description 11
3.1. Label 11
3.2. Mechanical dimensions 13
3.3. Overal description 13
3.3.1. Front 13
3.3.2. Upper side 14
3.3.2. Status LED panel (COSY 131 – All version): 14
3.3.3.1. Status LED panel (COSY 131 - WiFi) 15
3.3.3.2. Status LED panel (COSY 131 - Cellular 3G+) 15
3.4. Radio communication models 16
3.4.1. COSY 131 with internal WiFi modem 16
3.4.2. COSY 131 with internal 3G+ Penta modem 17
3.5. LAN Switch Specifications 18
3.5.1. Boot process 18

4. COSY IP Address & Access to the Web Configuration 19
4.1. Factory Default IP settings 19
4.2. Powering ON 19
4.3. Setting the eWON COSY LAN IP Address 19
4.4. eWON COSY's Web Interface 21

5. Troubleshooting 24
5.1. Normal Boot Process 24
5.2. Resetting the eWON COSY 131 24
5.3. First Level Reset (user reset) 24

Table of Contents

5.4. Second Level Reset (factory reset) 24
5.5. Reset Impact Matrix 25

Appendix A - Connector Pinout & Related Specifications 26

A.1 - Main Connector 26
A.2 - Specification of the External Power Supply 27
A.3 - Digital Output & Digital Inputs 27
A.4 - Used Wireless Frequencies 29

Revision 30

Revision History 30

1. Product Summary

1.1. Introduction

The present Installation Guide describes the hardware of the ***eWON COSY 131*** family.

The eWON Cosy 131 family is a set of 3 industrial gateways/routers.

The eWON Cosy 131 is fully compatible with the Talk2M cloud connectivity services (www.talk2M.com).

1.2. Concept of the eWON COSY 131 Family

The Cosy 131 is available in 3 different versions depending on their communication interface:

- Ethernet Switch **Cosy 131 Ethernet**
- WiFi & Ethernet Switch **Cosy 131 WiFi**
- 3G+ & Ethernet Switch **Cosy 131 Cellular 3G+**

1.3. General specification of the hardware platform

Characteristic	Value
Design	Industrial design (24 VDC power supply, DIN Rail mounting, extended temperature)
Processor	ARM9
Clock	Backed up real time clock (RTC) Backup battery lifetime has 10 years expectancy
Ethernet Interface	LAN Ethernet port 10/100 Mbps
Digital Input	2
Digital Output	1
Mounting	Latch for DIN rail EN50022-compliant

1.4. Typical applications

- Remote Access of Ethernet devices using Talk2M connection
- Industrial VPN router

1.5. Type and Part Numbers

The available part numbers are:

Part Number	Type	Description
EC61330_00MA	COSY 131	LAN/WAN – Ethernet Only Switch 4-Ports
EC6133C_00MA	COSY 131	LAN/WAN, WIFI – Ethernet Switch + WiFi
EC6133D_00MA	COSY 131	LAN/WAN -3G+ Penta - Ethernet Switch + 3G+

Table: List of the available part numbers

- Note -

The MA suffix means Multiple languages A (ENG, FR, DE, SP)

The part number syntax is explained in *3.1. Label*

2. Safety, Environmental & Regulatory Information

2.1. Scope

The present heading addresses Safety, Environmental & Regulatory Information for the eWON Cosy 131 family.

2.2. Power supply

The external power supply is a third party device that is not part of this certification.

The device shall be supplied by a LPS power supply certified according to IEC/UL60950-1 or Class 2 per NEC (See annex A.2. Specification of the External Power Supply for detailed information).

2.3. Applicable Directives, Standards and Compliance

The product described in the present Installation Guide complies with the CE, R&TTE directives and the FCC regulations related to the wireless modems.

The product described in the present Installation Guide belongs to class A Information Technology Equipment (ITE). In a domestic environment this product may cause radio interference in which case the user may be required to take appropriate measures.

2.3.1. Applicable European Directives

The product described in the present Installation Guide is in conformity with the following EC directives:

- RoHS Directive 2011/65/EU
- EMC Directive 2004/108/EC
- R&TTE Directive 1999/5/EC (for versions includind RF modems)
  The product conforms to the corresponding R&TTE articles:
  RF spectrum efficiency (Art 3.2); EMC (Art. 3.1b); Safety (Art. 3.1a)
- REACH Directive 2006/121/EC
- For COSY 131, Cellular 3G+ only: to comply with R&TTE directive
  - Antenna must be mounted on a grounded plate
  - RFI suppressors must be mounted on the power supply cable in the following order, starting at 3cm of the connector and going to the power supply:
    - Wurth Elecktronik 742-717-33
    - Wurth Elecktronik 742-716-22
    - Wurth Elecktronik 742-711-11

2.3.2. Applicable Safety Standards

The product described in the present Installation Guide is in conformity with the following safety standards:

- IEC/EN 60950-1
- UL 60950-1
- CSA-C22.2 No 60950-1-07

2.3.3. FCC Compliance

The product described in the present Installation Guide complies with Part 15 of the FCC Rules. Operating is subject to the following two conditions:

- This device may not cause harmful interference, and
- This device must accept any interference received, including interference that may cause undesired operation.

2.3.4. Certifications

The product described in the present Installation Guide has been certified by authorized bodies:

- UL Certificate Of Compliance (CoC) for Ordinaty Locations # E350576 for a TMRA of 60°C
- CB certificate # DK-42240-UL

These certificates can be downloaded as PDF files on the eWON Support web site: http://support.ewon.biz/official-documents

2.4. Field implementation & environmental conditions

2.4.1. Ingress Protection

The eWON COSY 131 has an IP20 protection grade. Therefore, the eWON COSY is NOT suited for outdoor mounting. It has to be integrated in an electrical cabinet, protected from excessive heat, humidity and dust. Do not push any sharp object into the air vents or openings of the equipment.

2.4.2. Mounting Recommendations

The normal mounting position of the eWON COSY is wall mounted on a horizontal Omega type DIN-rail (EN 50022).

- **Mounting the unit on DIN-rail**
  Pull the slide lock (located at the bottom of the unit's back-side) downwards and present the unit in front of the DIN rail. Tilt the eWON upwards in order to hang it on the upper edge of the DIN rail by its hook. Gently tilt the unit downwards until it finds its original position. Pull the slide lock upwards to fix and lock the unit on the DIN rail.

- **Removing the unit from DIN-rail**
  Release the unit by pulling the slide lock downwards while gently tilting the unit upwards. Free the unit by unhooking it from the upper rail edge. See 2.4.2 Mounting instructions

The product is intended to be mounted vertically, label on the right side

Installation on DIN-rai

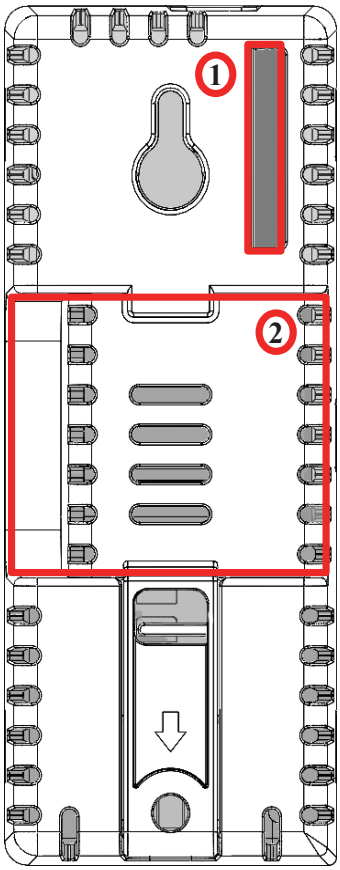

Wall mounting position

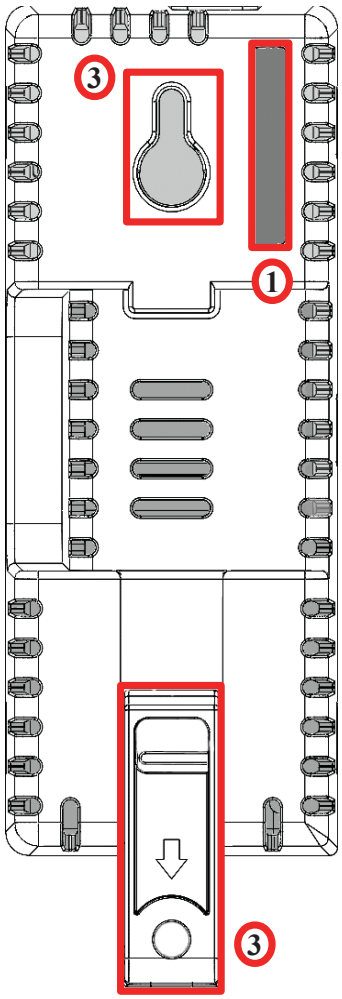

1	SIM card slot
2	DIN rail mounting braket
3	Screw holes intended to receive M4 screws with an 8mm diameter head

To ensure a proper ventilation of the equipment, a free gap of at least 2 cm must be respected in front of all upper & lower ventilation openings of the unit.

A free gap of at least 1 cm must be respected on each side of the unit.

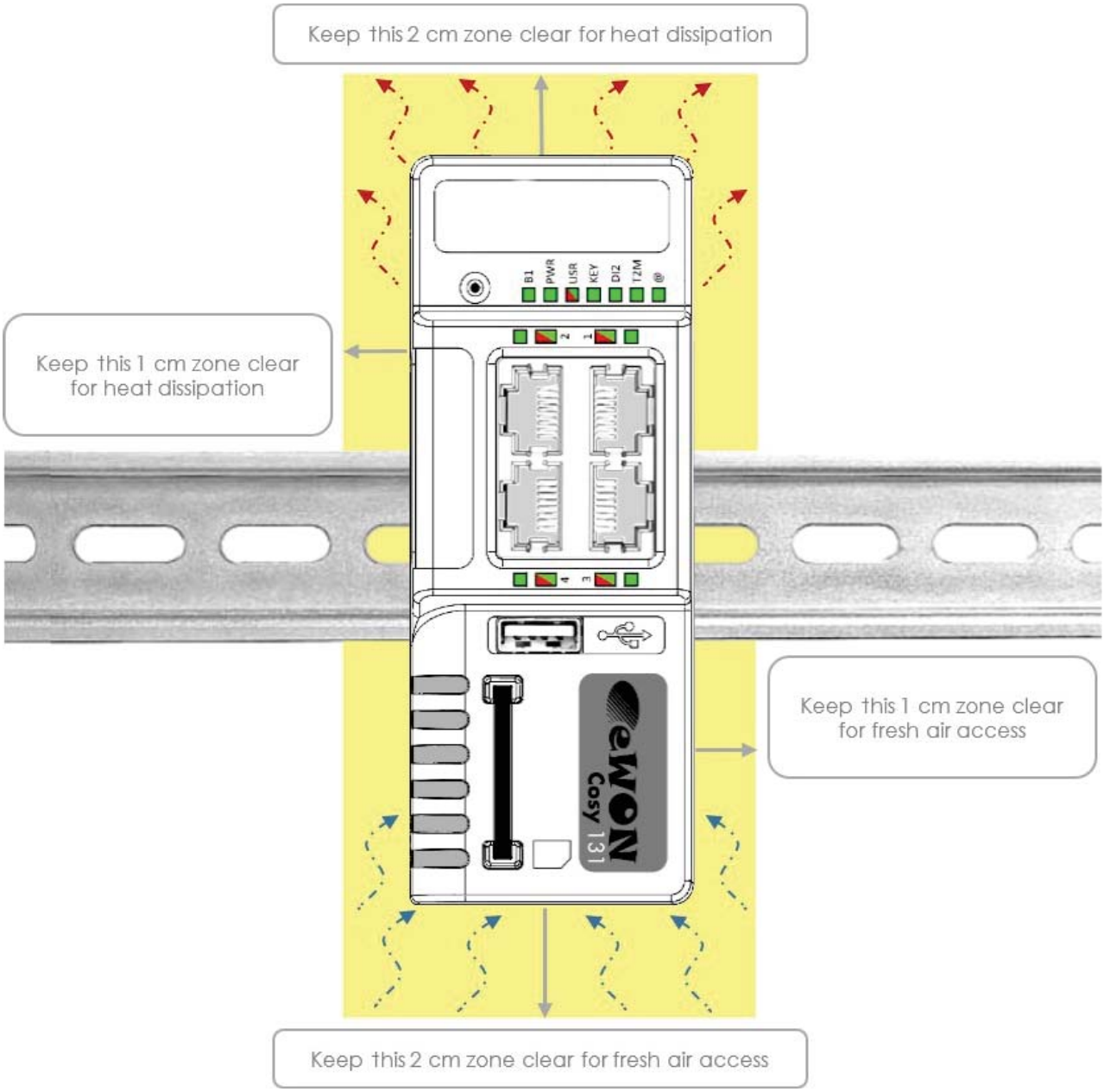

- Caution -

In any other mounting position than the one explained here above, the specified temperature has to be derated to -25°C to +40°C.

2.4.3. Cabling rules

Shielded cables must be used for Ethernet and USB connectivity to comply with the EMC requirements.

USB cable must be

- shorter than 3m;
- USB 2.0 type
- Maximum current per contact : 0.5A (or better)
- "A" plug connected to the eWON

2.4.4. Environmental conditions

The equipment will operate properly within the following environmental limits if it has been correctly mounted according to the above mentioned recommendations:

Operating T°	-25°C to +70°C
Relative Humidity	10 to 95% non-condensing
Operating altitude	Up to maximum 2000m
Storage temperature	-40 to +70 °C
Storage Humidity	10 to 95% non-condensing
Storage altitude	Up to maximum 3000m

2.4.5. Earthing

Earthing the eWON is necessary to eliminate unwanted transients (lightning protection) and to conform to the EMC requirements. Therefore, a functional earth (FE) terminal is available on the main connector as shown in A.2. Specification of the External Power Supply, Connect this terminal directly to allow impedance ground. Shielded cables have to be used for Ethernet and USB to comply with the EMC requirements.

2.5. Battery

The COSY contains a CR2032 battery. This battery is used to maintain the real time clock up-to-date even when the unit is not powered.

- Caution -

Risk of explosion if battery is replaced by an incorrect type.
The battery is not attended to be replaced on consumer's side. The product shall be returned to manufacture for replacement.

3. Hardware description

3.1. Label

The identification label of the eWON COSY 131 is placed on the right hand side of the housing. The different parts of the label are described below:

eWON COSY 131 Ethernet	Label	Description
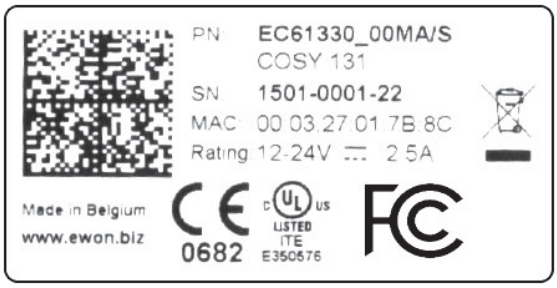	**PN**	Part Number (see syntax table below)
	SN	Serial number on the form **YYWW-SSSS-PP** **YY** = Year of production **WW** = Week of production **SSSS** = sequential mfg order **PP** = product type
	MAC	MAC address of the Ethernet adapter
	Rating	Power supply requirements
	Marks	CE, UL,... logos if applicable

Marks	Description
CE	Conformité Européenne or European Conformity (**EC**)
0682	Notified Body Number, warrantor of the CE Mark validation
c UL us LISTED	**UL Listed** (*Underwriters Laboratories*)
FC	**FCC** *Federal Communications Commission*

Label can have variant marks depending of models	
	
eWON COSY 131 WiFi	**eWON COSY 131 – 3G Penta**

EC6133m_ccLL[suffix]

Position(s)	Description	Acceptable values	
EC	name of the family	EC for eWON COSY	
6	number corresponding to the HW platform.	6	for "Cosy 131" platform
1	is communication options 1.	1	One Ethernet
3	Is communication options 2.	3	Three Ethernet
3	field communication option.	3	USB
m	modem communication option.	0	No modem
		C	WiFi
		D	HSUPA Modem
cc	is one or more digits or letters that correspond to software options	00 = no software option	
LL	Defines the firmware language	MA	UK + FR + DE + SP
[suffix]	can have an optional "/" character Defines the compliances of the unit	S	compliance with the UL/IEC/EN 60950 standard

3.2. Mechanical dimensions

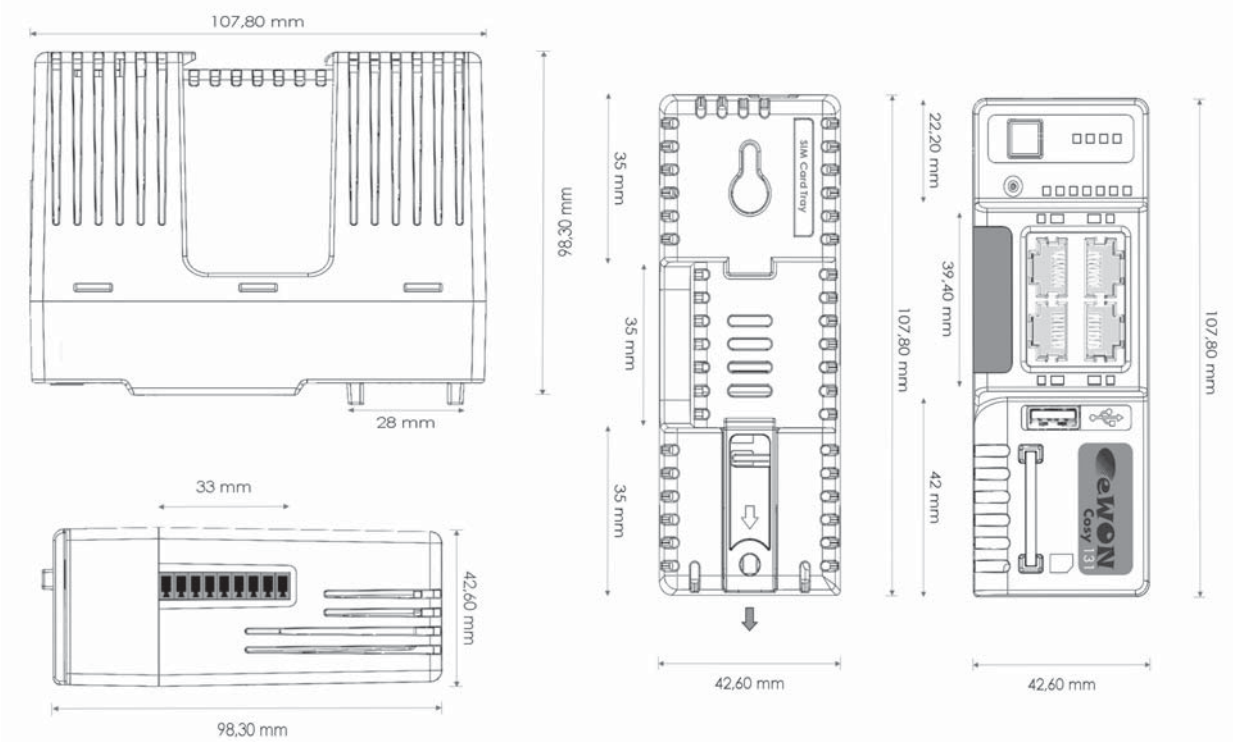

3.3. Overal description

3.3.1. Front

#	Description
1	Reset button
2	Status LEDs panel
3	LAN/WAN Ethernet ports and corresponding status LEDs (**Red**: WAN / **Green**: LAN)
4	USB slot
5	SD card slot *

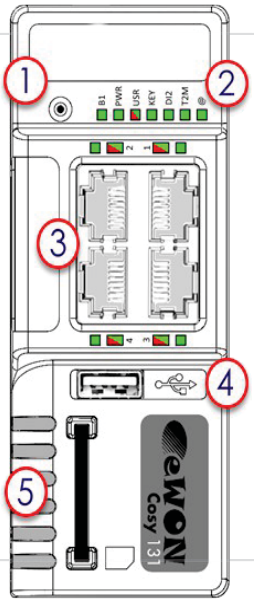

- SD Card is not supported for the moment

3.3.2. Upper side

Connector

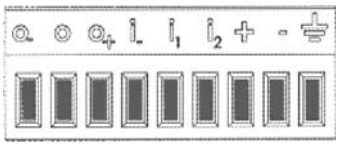

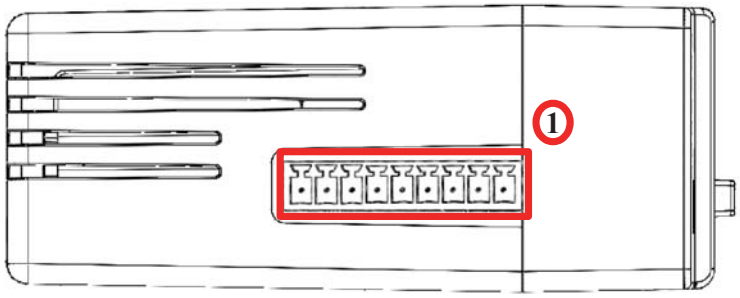

1	Main connector including power input terminal, 1DO and 2 DI

For more information about the connector see in A.1. Main Connector

3.3.2. Status LED panel (COSY 131 – All version):

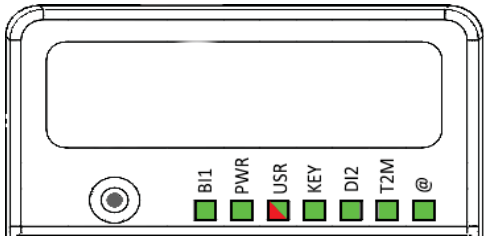

Label	Description
BI1	Button BI1 input Green ON = Reset being pressed
PWR	Power Green ON = Power is present
USR	User Green ON+OFF slowly = Unit is OK RED pattern = special attention required
KEY	Digital IN 1 – Green = ON: Signal on input 1 detected See. Digital Output & Digital Inputs
DI2	Digital IN 2 – Green = ON: Signal on input 2 detected See. Digital Output & Digital Inputs
T2M	Talk2M - Green ON = Talk2M VPN connection established See. Digital Output & Digital Inputs
@	Internet Green ON = Internet is configured on the eWON COSY

3.3.3.1. Status LED panel (COSY 131 - WiFi)

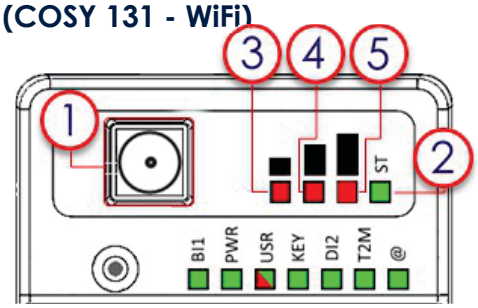

#	Mark	Description
1	/	SMA male connector for WIFI antenna
2	ST	Modem status Green ON = WiFi connected
3		Reception signal level Red ON = Poor signal
4		Reception signal level Red ON = Signal is OK
5		Reception signal level Red ON = Good signal

3.3.3.2. Status LED panel (COSY 131 - Cellular 3G+)

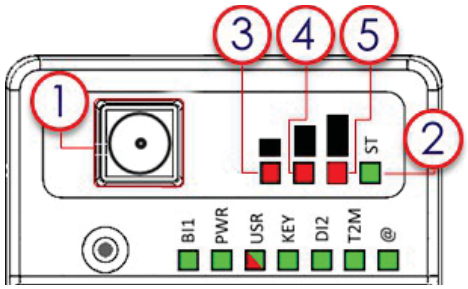

#	Mark	Description
1	/	SMA female connector for GSM antenna
2	ST	Modem status Green ON = Modem connected
3		Reception signal level Red ON = Poor signal
4		Reception signal level Red ON = Signal is OK
5		Reception signal level Red ON = Good signal

3.4. Radio communication models

- Warning -

This device is intended to be used in fixed or mobile applications only (not for portable applications). The antenna used for this transmitter has to be installed in a space providing a safe distance of at least 20 cm without encountering any person and must not be co-located or operating in conjunction with any other antenna or transmitter.

3.4.1. COSY 131 with internal WiFi modem

Cosy 131 – Wifi		
Item	**Value(s)**	
Protocols and Frequencies	IEEE802.11b/g/n, 2.4GHz - Channels: 1 to 11 (inclusive)	
Antenna Connector	Type RP-SMA	
Antenna (included in the delivery)	**Charact.**	**Value(s)**
	Impedance	50 Ohms
	Input Power	> 17 dBm, IEEE 802.11b > 15 dBm, IEEE 802.11g/n
	Tightening Torque	0.5 Nm. *In the absence of a torque wrench, a soft manual tightening is sufficient.*

Device conformity has been tested with the reference antenna: Pulse W1030.

- The product complies with the R&TTE directive, the FCC, the IC and Japan regulations related to the Wifi communications.
- Absolute maximum antenna gain as per FCC's rules and regulations, 47CFR:
  - Part 15C : 2.14dBi
- Modifications cannot be made by the user if it influences the normal behavior of the device.
- The user shall be informed about modem identification numbers according to their national authorities.
  This product contains part identified as follows by national authorities:
  – FCC ID: QOQWF111
  – IC ID: 5123A-BGTWF111
  – RRA ID: KCC-CRM-BGT-WF111
  – GITEKI (MIC) ID: 209-J00061

3.4.2. COSY 131 with internal 3G+ Penta modem

Cosy 131 – Cellular 3G+		
Item	**Value(s)**	
Protocols and Frequencies	GSM/GPRS/EDGE - 850, 900, 1800, 1900 MHz UMTS/HSUPA - 800/850, 900,AWS 1700,1900,2100 Mhz	
Class	5 bands GPRS/EDGE Class 33	
Antenna Connector	Type SMA	
Antenna (not included in the delivery*)	**Charact.**	**Value(s)**
	Impedance	50 Ohms
	VSWR	<= 5:1 Absolute max. to avoid permanent damage <= 2:1 Limit to fulfill all regulatory requirements
	Input Power	> 33 dBm (2W) peak power in GSM > 24 dBm average power in WCDMA
	Tightening Torque	0.5 Nm. *In the absence of a torque wrench, a soft manual tightening is sufficie*

Device conformity has been tested with the reference antenna: Taoglas TG.09.0113

As see in 2.4.1 Mounting instructions SIM Card Tray is at the rear of the COSY 131

(*) 3G antenna has to be purchased separately, 3G penta band antenna is available from eWON with FAC90501_0000 as reference

- The product complies with the R&TTE directive, the FCC, the IC and Japan regulations related to the GSM modems.
- Absolute maximum antenna gain as per FCC's rules and regulations, 47 CFR :
  - – Part 22H : 5.22dBi;
  - – Part 27 : 3.31dBi;
  - – Part 24E : 6.45dBi.
- Modifications cannot be made by the user if it influences the normal behavior of the device.
- The user shall be informed about modem identification numbers according to their national authorities:
  This product contains part identified as follows by national authorities:
  – FFC ID: RI7HE910
  – IC ID: 5131A-HE910
  – GITEKI (MIC) ID: 005-100269
  – JATE ID: AD12-0318001

3.5. LAN Switch Specifications

3.5.1. Boot process

During the (re)boot process, the eWON prevents the switch feature from working. This means that it might require little time starting from the power on (or the reboot request) to get the LAN switch to be fully operational.

When an eWON router is configured to operate a certain way, it is part of the strategy, if no other method worked, to reboot itself. This is the ultimate eWON strategy to try restoring the requested communication channels and be consistent with requested configuration.

4. COSY IP Address & Access to the Web Configuration

4.1. Factory Default IP settings

Characteristics	Value(s)
LAN IP Address	10.0.0.53
LAN Subnet Mask	255.255.255.0
Gateway	0.0.0.0

4.2. Powering ON

Power on the unit and wait approximately 25 sec. until the boot process is finished.

After a successful boot process the ***USR*** LED is flashing green ON & OFF slowly.

If the ***USR*** LED is flashing RED according to a given pattern, it indicates that the boot process was interrupted due to a problem. Most frequent problems include :

- a duplicate IP address was detected on the LAN Network
  USR LED flashing pattern is RED 1x short, 1x long

For the other LED patterns in case of error, please refer to the General Reference Guide RG-001.

4.3. Setting the eWON COSY LAN IP Address

You can easily establish your first communication with your eWON COSY by using our companion tool ***eBuddy*** which can be downloaded from http://support.ewon.biz/software

Connect one of the LAN-ports (by default, port No. 1 is always a LAN port) of your COSY with your PC point-to-point or through a network where there is no risk that the eWON's default IP-address (10.0.0.53) would conflict with another connected device.

Start the eBuddy application. This one scans the network through the Ethernet adapter and retrieves the connected eWON, including its IP address, Subnet Mask and serial number. The application also allows you to change the default IP address without being necessarily in the same network range.

Start the ***eBuddy*** utility on your PC

In the home page,
select ***Set IP Address***



Fill in the Serial Number of your COSY or click on ***Browse*** and select it.

The Serial Number of the COSY is on its label, see in 3.1.Label

Click ***Next***

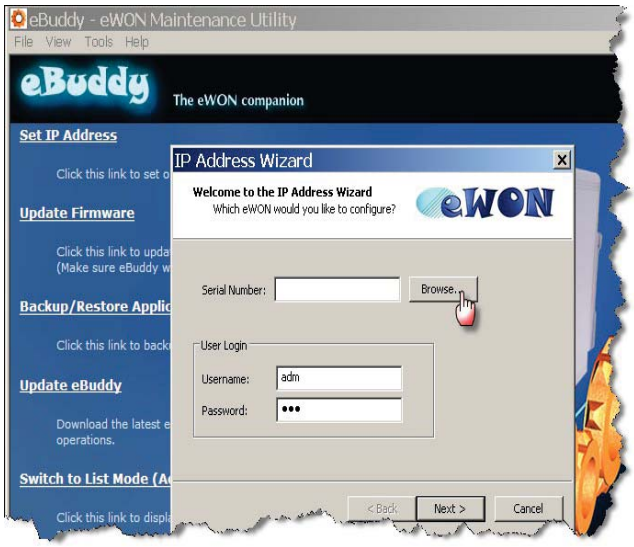

Enter a new LAN IP address and Subnet Mask.

Click ***Next***

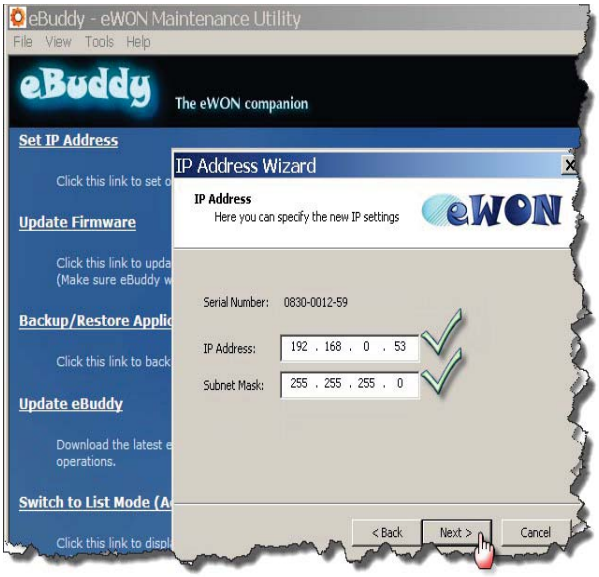

Wait until the address is updated and the device has rebooted.

Click ***Finish***.

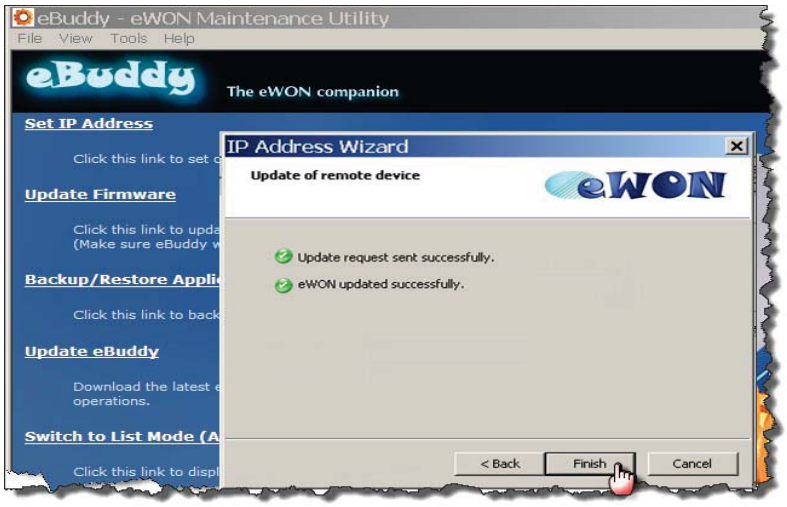

4.4. eWON COSY's Web Interface

To access the web pages of your eWON COSY proceed as follows:

Connect the PC to one of the LAN port of the eWON COSY.

Open your Internet browser and access the eWON COSY internal Web page by entering the LAN IP address in the URL field (the default address is http://10.0.0.53).

You arrive on a loading page

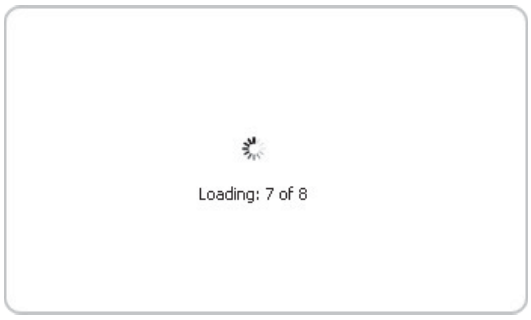

If this is the first boot of the eWON COSY (or after a level 2 reset), you will be asked for a default language.

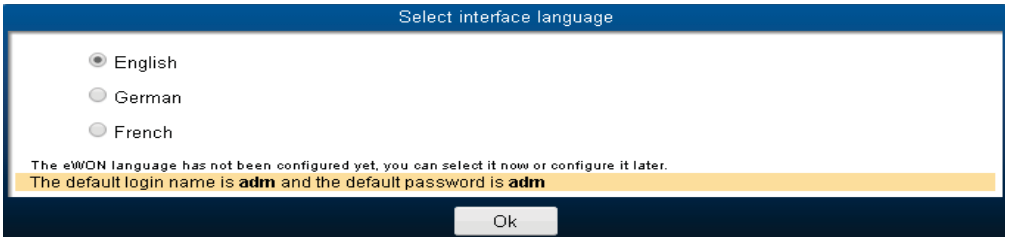

Before configuring your eWON COSY, an authentication is required.

For a first boot, the default login & password are both "adm".

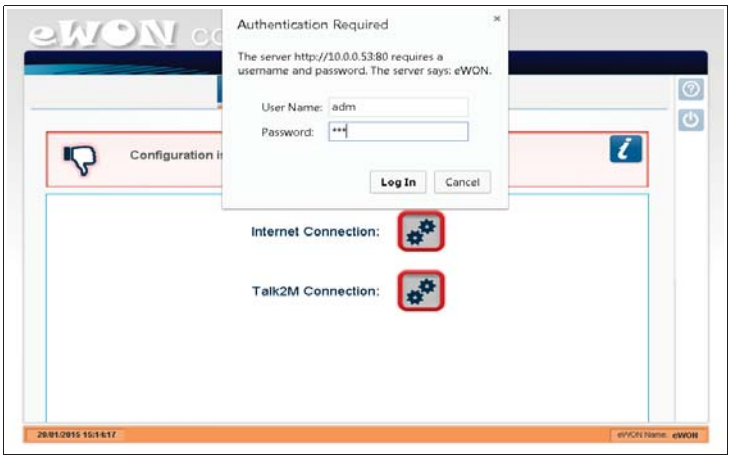

- Warning -

*For security reasons, changing the default password "**adm"** is absolutely required.*

You will be automatically redirected to the Quick Launch Wizard page:



You can follow the **Quick Start Guide** as an aid to configure your eWON COSY.

Can be downloaded on http://support.ewon.biz/cosy-131

To reconfigure your eWON COSY, you can easily rerun the wizard by clicking on the Settings button on top of the page.



5. Troubleshooting

5.1. Normal Boot Process

The normal boot process of the eWON COSY takes approximately 25 seconds to complete. During this process, all LEDs are shortly ON, except BI1 as long as the RESET button is not pressed. During this boot sequence, the ***USR*** LED is orange. As soon as the boot process is finished and the unit is ready to be used, the ***USR*** LED flashes GREEN slowly.

5.2. Resetting the eWON COSY 131

The reset button B1 is located on the front of the COSY unit (see in 3.3.1.Front). The reset function of this button is active only if pressed while powering on. The eWON COSY features two type of reset levels. A table follows with the impacted configuration zones per reset level.

5.3. First Level Reset (user reset)

The first level reset consists in formatting only the « ***user files*** » part of the non volatile memory. This type of reset does not modify the communication parameters of the eWON COSY.

How do I generate a first level reset?

- Power the unit OFF and ON again
- ***Immediately press and maintain*** the reset button. The LED labeled BI1 turns ON.
- Wait approximately 30 seconds until the ***USR*** LED flashes RED 1x per second.
- Immediately release the button (if you don't, you would reach the second level reset phase). The LED labeled BI1 turns OFF.
- Wait approximately 30 secs until the reset procedure is completed.
- The eWON restarts automatically and the unit is ready to be used, the ***USR*** LED flashes GREEN slowly.

5.4. Second Level Reset (factory reset)

This second level reset formats the entire non volatile memory and returns the eWON to its factory settings. This operation consists in 3 steps:

- Formats the entire non volatile memory, including all COM parameters and IP addresses
- Full hardware auto-test with result shown by the ***USR*** LED
- Return to ex-factory configuration (default config)

How do I generate a second level reset?

- Power the unit OFF and ON again
- ***Immediately press and maintain*** the reset button. The LED labeled BI1 turns ON.
- Wait approximately 35 seconds until the ***USR*** LED remains RED steady.
- When this state is reached, release the button. The LED labeled BI1 turns OFF.
- It takes no longer than 2 seconds to complete.
- Check if the auto test is successful, the ***USR*** LED flashes RED with a pattern of 200ms ON and 1,5 sec OFF[1]. The eWON COSY ***does NOT restart in normal mode*** by itself and remains running in this diagnostic mode.
- You have to power the eWON COSY OFF and ON again to reboot the unit in normal mode. As described before, the eWON returns to its default COM parameters and factory IP addresses (like LAN 10.0.0.53) after this level 2 reset is performed.

5.5. Reset Impact Matrix

	Erased or Reset	Preserved
Impact Reset Level 1 (user reset)		LAN IP address + mask
	adm password	Internet access
		Language settings
	eWON Identification	Modem/ Wifi settings
	User Web site	Talk2M config
		Proxy configuration

Impact Reset Level 2 (factory reset)	*adm* password	Nothing
	eWON Identification	
	User Web site	
	LAN IP address + mask	
	Internet access	
	Language settings	
	Modem/ Wifi settings	
	Talk2M config	
	Proxy configuration	

*1 Any other pattern reflects a problem. The pattern will start with 200ms ON (opening of the pattern) followed by OFF and a certain number of times of a 1 sec ON allowing to identify the nature of the detected problem. If you were to be confronted with an error pattern on the **USR** LED, please write down the pattern you observed and contact your distributor.*

Appendix A - Connector Pinout & Related Specifications

A.1 - Main Connector

As shown in the picture, the female mating connector is labeled with the appropriate symbols.

Characteristic	Value
Connector type	MINICONNEC MC model Type MC 1,5/9-ST-3,5 Pitch = 3.50 mm 9-pin female
Connector pinout	

PIN	ICON	ID	Description
1	O_-	DO_COM	Output signal (0V ground) connected to the emitter of the MOSFET transistor
2	O	DO	Output signal connected to the drain of the MOSFET transistor
3	O_+	DO_VDC	Common of the external predrive power supply (between +12 et +24 VDC)
4	i_-	DI_COM	Ground of the input (isolated)
5	i_1	DI1	Input signal 1
6	i_2	DI2	Input signal 2
7	+	Power in VDD +	between +12 et +24 VDC
8	-	Power in GND -	0V
9	⏚	Functional Earth	

A.2 - Specification of the External Power Supply

The eWON COSY must be powered by a safety Low Power Supply (LPS) in accordance with clause 2.5 of UL/IEC 60950-1 Ed2. Standard, 12-24Vdc, 30W min. Certified for 60°C and for altitudes up to 2000m. The safety LPS power supply is not part of the delivery.

Suggested power supply:

SIEMENS SITOP logo power 24V 2.5A 60W - Siemens order ref: 6EP1332-1SH43.

Equivalents are available on the market.

Power Supply	
Characteristic	**Value**
Power supply voltage	external 12-24 VDC +/- 19%
Max COSY input power	30W max.
Internal voltage protection	max 30V
Input protection	protected against polarity inversion

A.3 - Digital Output & Digital Inputs

Digital Inputs	
Characteristic	**Value**
Type of digital output[2]	Open drain MOSFET
Max. current (ext,source)	200 mA
Isolation (both DI & DO)	1,5 kV
DI voltage range	0 to 24 VDC
DI protection	33 VDC Max
DI OFF state input voltage range	0 to 5 VDC
DI ON state input voltage range	10 to 30 VDC
DI ON state current range	From 3,8 mA @ 12 VDC to 8,2 mA @ 24 VDC

2 *When the eWON COSY reboots, a short phase of ON state is part of the starting process.*

The digital output is activated by an open drain MOSFET transistor driven by an optocoupler. The maximum current flow inside this transistor has a value above the one specified in the eWON, in order to cope with the switching power losses.

The transistor used is in an open drain type with predrive. This means the relay power supply has to be supplied from an external source to the predrive electronics. The diagram below shows the external wiring needed for proper operation of the digital output. A relay has been chosen for this sample application but any load within the specifications can be used instead.

- Note -

This is a sink only output to ground (the transistor acts like a switch ground).

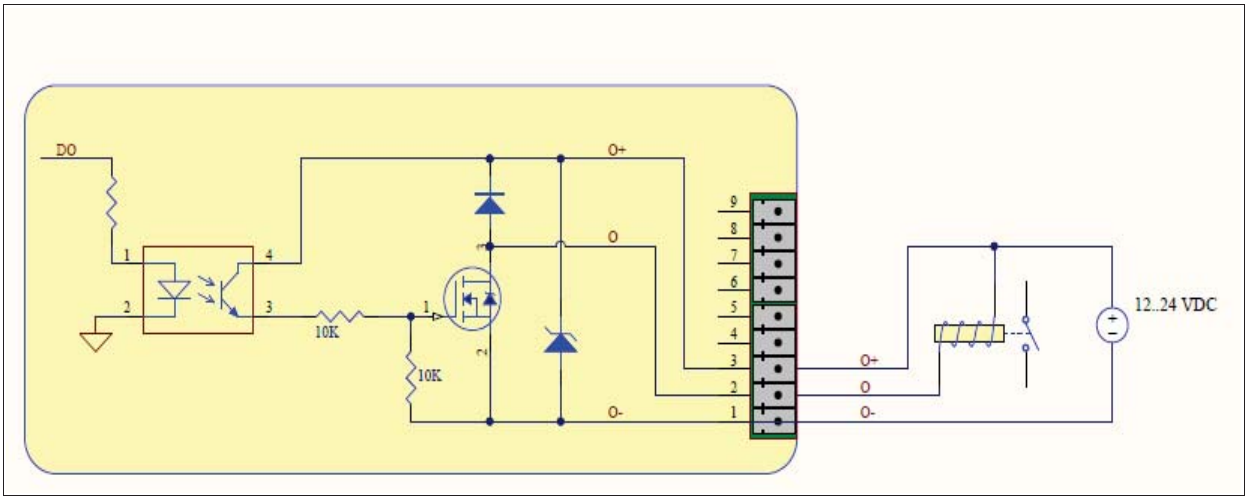

Possible features :

Digital Output & Inputs can be used on the COSY 131, some features can be externalized by wiring the main connector.

LED	Connector	Description
KEY	**DI1**	On a key switch to authorize or prevent the Internet connection.
		On a key switch to authorize or prevent the VPN connection.
DI2	**DI2**	Not supported.
T2M	**DO**	Can be wired to an external device to propagate the Talk2M status. If the VPN connection is active, the DO is set to 1.

Digital Input (DI1) can be used as a connectivity condition.

The configuration of this condition has to be done during the Internet Wizard where you define if the digital input is used or not and for which purpose.

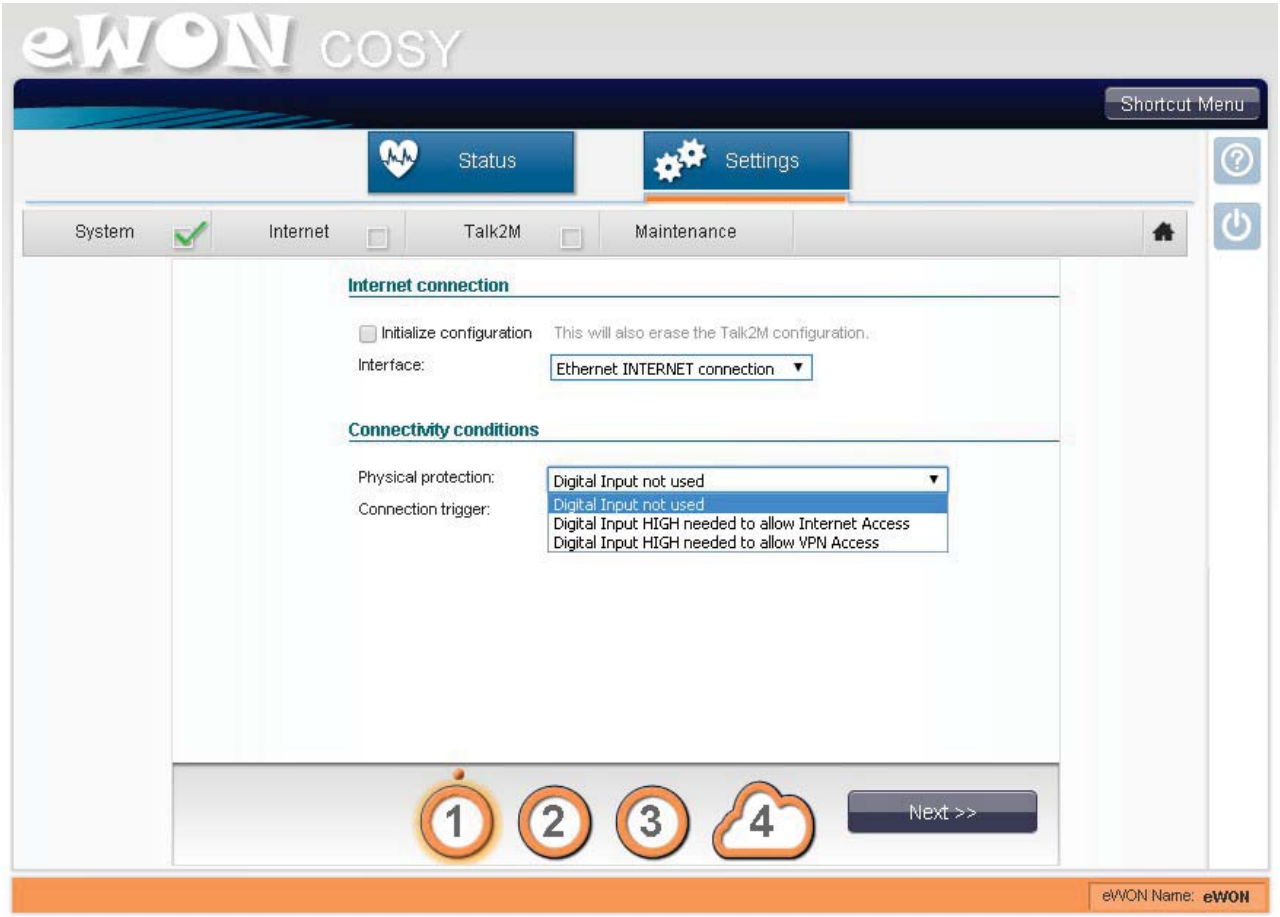

A.4 - Used Wireless Frequencies

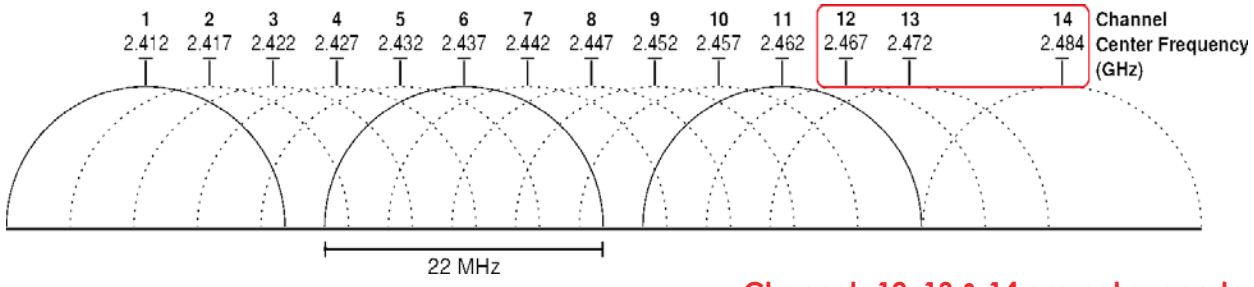

- **Channels 12, 13 & 14 are not supported**

Used channels and frequencies are between: Channel 1 - 2,412 Ghz and 11 - 2,462 Ghz

Revision

Revision History

Revision	Date	Description
1.0	22/01/2015	Original Document
1.1	04/02/2015	Pictures modifications
1.2	27/04/2015	WiFi & DI/DO Updates (3.4.1 A.3, A.4)
1.3	30/06/2015	Added Cabling rules (#2.4.3.Cabling rules)
1.4	17/11/2015	Added section 3.5: LAN Switch Specifications
1.5	11/01/2016	Modified DO Diagram

Document build number: 86

Note concerning the warranty and the rights of ownership:

The information contained in this document is subject to modification without notice. Check http://support.ewon.biz for the latest documents releases.

The vendor and the authors of this manual are not liable for the errors it may contain, nor for their eventual consequences.

No liability or warranty, explicit or implicit, is made concerning the quality, the accuracy and the correctness of the information contained in this document. In no case the manufacturer's responsibility could be called for direct, indirect, accidental or other damage occurring from any defect of the product of errors coming from this document.

The product names are mentioned in this manual for information purposes only. The trade marks and the product names or marks contained in this document are the property of their respective owners.

This document contains materials protected by the International Copyright Laws. All reproduction rights are reserved. No part of this handbook can be reproduced, transmitted or copied in any way without written consent from the manufacturer and/or the authors of this handbook.

eWON sa, Member of ACT'L Group

MicroClear®

MANUAL

FILTER MCXS2 and MCXL2
COMPACT FILTER HOUSING MA-/MB-SERIES

Directions for Installation, Operation and Maintenance



Copyright

Circulation, copying or use of this document, or disclosure of its contents, is prohibited unless otherwise expressly agreed with newterra GmbH. Copyright infringement will result in a liability to pay compensation for damages.

All rights reserved.

Revised: 12.10.2015

newterra gmbh
Steinbruchstrasse 8
35428 Langgoens
Germany

Tel +49 (0) 64 47 8 86 05 - 0
Fax +49 (0) 64 47 8 86 05 - 10
E-Mail info@microclear.de
Web www.microclear.de

MicroClear®

MANUAL

Table of contents

1. Product Specification 3
1.1. Designated application 3
1.2. General safety instructions 4
1.2.1. Definition of safety, warning and instruction signs 4
1.2.2. Obligation and duty for operational care 5
1.2.3. Qualification of operating and maintenance staff 5
1.3. Safety instructions for installation, inspection and maintenance 6

2. Installation 7
2.1. Preparation for the installation 7
2.1.1. Acceptable environmental conditions 7
2.1.2. Requirements on the minimum dimensions of the tank 7
2.2. General instructions 8
2.3. Assembly 8
2.3.1. Arrangement of the filters 9
2.3.2. Installation of a plug 10
2.3.3. Connection of two MicroClear® filter cassettes using a PVC fitting and O-rings 12

3. Starting up 13
3.1. Procedure of starting up 13
3.1.1. Checks prior to operation 13
3.1.2. Clear water test 13
3.1.3. Prerequisites for operation with sewage 13

4. Operation and control 14
4.1. Operating a new filter 14
4.2. Continuous operation 14
4.2.1. Filtration pressure 14
4.2.2. Temperature 14
4.2.3. Aeration 15

5. Maintenance 16
5.1. Cleaning of the MicroClear® filter 16
5.2. Spare parts 17
5.3. Persistence of the membrane 17

6. Additional information 19

newterra gmbh
Steinbruchstrasse 8
35428 Langgoens
Germany

Tel +49 (0) 64 47 8 86 05 - 0
Fax +49 (0) 64 47 8 86 05 - 10
E-Mail info@microclear.de
Web www.microclear.de

1. Product Specification

1.1. Designated application



The wastewater treatment plant must be operated with specified wastewater only.



For membrane bioreactor applications the feed water may not contain any materials harmful for, or even kill, the micro-organisms in the biological treatment stage. Do not feed the plant with disinfectants or similar substances.

Only specified wastewater with specified capacity is permitted to be fed into the plant. It is not permitted to feed the plant with excessive amounts of:

- surface water,
- cooling water, or
- rain water

as this will lead to plant overloading and malfunction.



The unit is intended exclusively for the above specified use. Any additional use or re-building of the equipment without prior written approval by the manufacturer does not comply with the intended use. The manufacturer will not assume liability for consequential damage to the plant or the environment. The operator alone will bear the risk.

Do not start up the plant before it has been ensured that all safety devices are completely mounted and operable, and that the plant complies with the rules.

newterra gmbh
Steinbruchstrasse 8
35428 Langgoens
Germany

Tel +49 (0) 64 47 8 86 05 - 0
Fax +49 (0) 64 47 8 86 05 - 10
E-Mail info@microclear.de
Web www.microclear.de

1.2. General safety instructions

This **Installation, Operating and Maintenance Manual** has to be kept available at all times. Any person who has to perform work on the wastewater treatment plant must have access to this manual.

In addition to this manual, common legal instructions in the sense of the labour protection law and ordinance regulating the use of tools have to be available.

As this manual contains fundamental instructions to be observed when installing, operating and servicing the filter housing, the responsible staff must read the instructions prior to machine installation and start-up. Not only the general safety instructions contained in this chapter have to be observed but also the special safety instructions added under the main items.

1.2.1. Definition of safety, warning and instruction signs



General warning sign

This symbol will accompany all important instructions or warnings associated with risks of life or limb as well as severe damage to equipment. Follow these instructions and proceed carefully! At the same time, follow all applicable laws, general safety and accident prevention regulations.



Attention symbol

Special attention is required to ensure compliance with instructions concerning correct operating sequences to prevent damage to the plant or its function.



Notice symbol

This symbol is found where an action or a procedure is recommended to ensure the correct handling of equipment or units.

newterra gmbh
Steinbruchstrasse 8
35428 Langgoens
Germany

Tel +49 (0) 64 47 8 86 05 - 0
Fax +49 (0) 64 47 8 86 05 - 10
E-Mail info@microclear.de
Web www.microclear.de

Safety and instruction signs must be strictly followed and should be directly attached to the plant.

These signs should be kept in absolutely readable condition. Signs or labels that have become unreadable must be replaced immediately.

1.2.2. Obligation and duty for operational care

To achieve operational safety, it is necessary to obey the following procedures. It is the operator's obligation to plan these procedures and control their implementation.

The operator must especially ensure that

- Equipment is employed according to its intended use (see chapter "Product Specification"). Any use not in compliance with the plant's specified intended use will invalidate the warranty.
- Regular maintenance and the checkups are carried out according to the chapter "Maintenance". The operator is responsible for the effluent quality.
- The filter housing should be operated only in a perfect ready-to-operate condition.
- This operation and maintenance manual is permanently available on site in complete and legible condition.
- Only sufficiently qualified and authorized personnel are in charge of unit operation, maintenance and repair.
- Any safety or warning symbols attached to the plant remain there in a legible condition.
- All relevant data is recorded at least once per day, especially filtration pressure and effluent output.

1.2.3. Qualification of operating and maintenance staff

Only well-trained and briefed persons who know this manual and act according to this manual are authorized to operate the unit. The individual areas of responsibility of operating staff must be defined clearly.

The training of personnel must be held in the beginning under the supervision of an experienced person. Successfully completed training and briefing must be confirmed in writing.



Non-observance of this instruction will invalidate any warranty.

newterra gmbh
Steinbruchstrasse 8
35428 Langgoens
Germany

Tel +49 (0) 64 47 8 86 05 - 0
Fax +49 (0) 64 47 8 86 05 - 10
E-Mail info@microclear.de
Web www.microclear.de

Any person performing work on the wastewater treatment plant must read this installation, operation and maintenance manual and confirm by signature that the manual has been completely understood.

Maintenance personnel must be trained specifically for plant maintenance works, beyond the standard of knowledge that the operating staff has already, preferably well trained and experienced staff.

1.3. Safety instructions for installation, inspection and maintenance

The following points should be recalled and ensured by the operator during the installation, inspection or maintenance works:

- Switch off all current-carrying equipment before starting work.
- Sealed or closed rooms of the wastewater treatment plant which need to be entered for service and maintenance have to be aerated in order to prevent a dangerous explosive atmosphere, lack of oxygen and presence of harmful concentrations of gas or vapour.
- Follow the instructions from the plant manufacturer for the exact work procedure.

It is in the operator's own interest to clean the plant prior to working on it, this helps to prevent the danger of infections.



When cleaning the plant, avoid direct contact with wastewater, organic material, etc. Always wear protective clothing, e.g. waterproof protective gear, boots, gloves, to keep these materials from your body. If possible, also wear face protection.

Do not use a high pressure cleaner but only a soft water jet.

Before starting the machine again, check the items mentioned in chapter "Starting up". Reattach all equipment or components completely to their original place and assure that they are properly and completely reattached.

newterra gmbh
Steinbruchstrasse 8
35428 Langgoens
Germany

Tel +49 (0) 64 47 8 86 05 - 0
Fax +49 (0) 64 47 8 86 05 - 10
E-Mail info@microclear.de
Web www.microclear.de

2. Installation

2.1. Preparation of the installation

Observe once more the following instructions when installing the equipment to avoid any damage to the equipment and other physical damage.

- Only qualified persons are permitted to perform installation work, observing the safety instructions.
- Check the unit for transport damage prior to starting any installation work.
- Make sure only authorized persons have access to the working area and that installation work does not endanger any other persons.
- Read also the chapter "General Safety Instructions".

2.1.1. Acceptable environmental conditions

MicroClear® filters must be protected against frost. In operation, the optimum working temperature is between 15 and 35 °C. The use of filters at lower temperatures is possible, but results in less flux (please contact us for an exact estimation).

2.1.2. Requirements on the minimum dimensions of the tank

Following dimension details of the tank should be used as a design guideline.

Filter housing	No. of filters	Filter-area [m²]	Typical max. flow* [m³/day]	Size of the filter housing [L x W x H in cm]	Min. size of the filtration tank [L x W x H in cm]	Min. water depth [cm]
MA03-S	1 MCXS2	3.5	2.0	28.3 x 32 x 68.4	50 x 50 x 150	120
MA03-M	2 MCXS2	7	4.0	28.3 x 32 x 117.4	50 x 50 x 200	170
MA03-XL	1 MCXL2	8	5.0	43 x 35 x 64.5	70 x 50 x 150	120
MA03-XL2	2 MCXL2	16	10.0	43 x 35 x 113	70 x 50 x 200	170
MB2-S	4 MCXL2	32	20.0	59.8 x 49.6 x 135.5	100 x 100 x 200	170
MB2-M	6 MCXL2	48	30.0	80.8 x 49.6 x 135.5	120 x 100 x 200	170

* Values depend on the wastewater characteristics and regular chem. cleaning

It is important to maintain a minimum distance between filter housings and the tank's side wall to ensure a low pressure loss for the runoff of water that rises inside the filter housing.

newterra gmbh
Steinbruchstrasse 8
35428 Langgoens
Germany

Tel +49 (0) 64 47 8 86 05 - 0
Fax +49 (0) 64 47 8 86 05 - 10
E-Mail info@microclear.de
Web www.microclear.de

2.2. General instructions

Installation must be carried out in accordance with these instructions if installation is not part of the supply contract with newterra GmbH, or an authorized trader or maintenance company. If the installation is not performed according to this installation, operation and maintenance manual, newterra GmbH cannot accept responsibility for incorrect offloading or installation.



Installation should be performed by qualified and experienced personnel.

The following actions should be carried out in order to maintain optimal operation of the MicroClear®- filter cassettes and compact MA/MB- series:

- Completely read this manual. It contains important information how to prevent damage caused by lack of knowledge.
- Make sure that the tank is leak-proof and has a correct dimension according to the guidelines of newterra GmbH.
- The tank must be emptied and cleaned before beginning the installation work inside the tank.

2.3. Assembly



Be careful not to mix up any lines as air in the permeate line would destroy the module.



In some cases the membrane surface can stick together on new filters. Don´t pull the plates apart, otherwise the active layer will be damaged.

Sticking membranes are no quality issue, the membrane will come apart as soon as the surface ist wet.

newterra gmbh
Steinbruchstrasse 8
35428 Langgoens
Germany

Tel +49 (0) 64 47 8 86 05 - 0
Fax +49 (0) 64 47 8 86 05 - 10
E-Mail info@microclear.de
Web www.microclear.de

2.3.1. Arrangement of the filters

Individual filter (one layer)

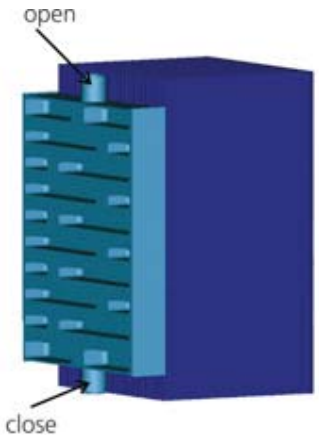

- Check the permeate nozzles of the filter. The open nozzle must be used at the top side of the filter.
- Plug the lower nozzle according to the instructions below.
- Attach and fix a hose with inner diameter 25 mm to the open nozzle.
- Connect the other end of the hose with the permeate extraction unit.
- If required, use reduction.
- Operate the MicroClear cassettes only in original MicroClear® filter housings.

Arrangement of filters in multiple layers

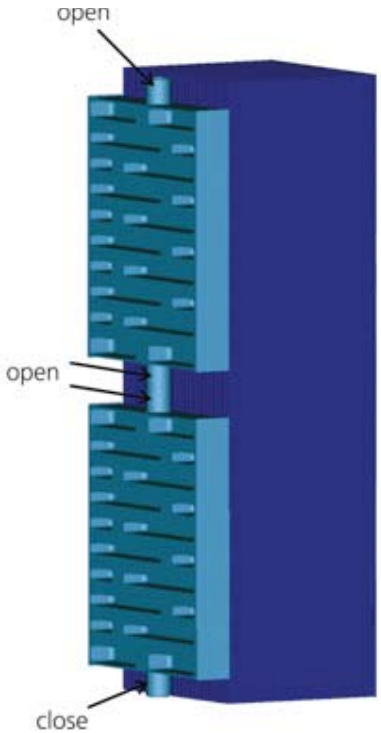

- Check the open permeate nozzles of the filters.
- The filter to be used at the bottom of the stack must have only one open nozzle. Plug the lower nozzle according to the instructions below.
- Make sure that the filter to be used at the top of the stack has open nozzles on both sides.
- Arrange the filters as shown in the illustration.
- Connect and fix the open nozzle of the bottom filter with the open nozzle of the top filter by using a hose with inner diameter 25 mm. Alternatively use a 25 mm PVC connector, see below.
- Attach and fix a hose with inner diameter 25 mm to the open nozzle of the top filter and connect with the permeate extraction unit.
- If required, use reduction.
  Operate the MicroClear cassettes only in original MicroClear® filter housings.

newterra gmbh
Steinbruchstrasse 8
35428 Langgoens
Germany

Tel +49 (0) 64 47 8 86 05 - 0
Fax +49 (0) 64 47 8 86 05 - 10
E-Mail info@microclear.de
Web www.microclear.de

2.3.2. Installation of a plug

Notice

From the factory, the MicroClear® filter bottom nozzle is open.
To close, follow the instructions given below!
Needed parts are given with each single filter.

a. Install 2 o-rings (15,6 x 1,78, EPDM) into the two grooves of the plug.



b. Add lubricant certified for connecting systems in drinking water to the plug and the o-rings.



newterra gmbh
Steinbruchstrasse 8
35428 Langgoens
Germany

Tel +49 (0) 64 47 8 86 05 - 0
Fax +49 (0) 64 47 8 86 05 - 10
E-Mail info@microclear.de
Web www.microclear.de

c. Insert the plug with the o-rings into the nozzle. Press gently and make sure, that the o-rings stay in the grooves and are not squeezed away.



d. Press the plug all the way into the nozzle until it cannot be moved any further. The friction holds the plug in place up to a tested back-flush pressure of 1,5 bar (max. allowable back-flush pressure is 0,1 bar). If necessary, the plug can be removed with pliers.

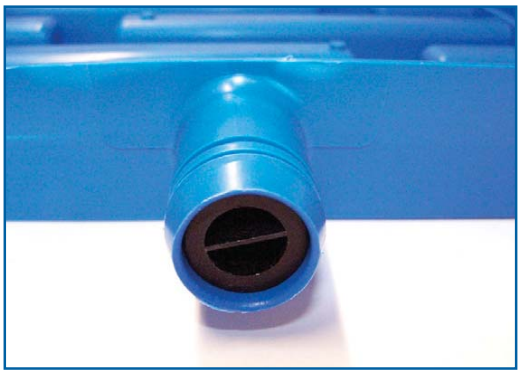

e. The MicroClear® MCXL is now ready for use.

newterra gmbh
Steinbruchstrasse 8
35428 Langgoens
Germany

Tel +49 (0) 64 47 8 86 05 - 0
Fax +49 (0) 64 47 8 86 05 - 10
E-Mail info@microclear.de
Web www.microclear.de

2.3.3. Connection of two MicroClear® using a PVC fitting and O-rings

MicroClear® filters can be connected with Standard PVC fittings nominal size 25 mm. The O-rings made of EPDM have a size of 21,95 x 1,78 mm and can be ordered with Art.-No. 30100360. It is mandatory to use a lubricant as shown above for the mounting of the O-ring and the fitting.





Permeate withdrawal is always from the top of the filter! Filters are mounted in upward direction into a closed frame. Aeration is from below.

newterra gmbh
Steinbruchstrasse 8
35428 Langgoens
Germany

Tel +49 (0) 64 47 8 86 05 - 0
Fax +49 (0) 64 47 8 86 05 - 10
E-Mail info@microclear.de
Web www.microclear.de

3. Starting Up

3.1. Procedure of starting up

3.1.1. Checks prior to operation

1. Check the horizontal alignment of filter housings.
2. Check that filter modules and filters are secured against buoyancy.

3.1.2. Clear water test

1. The filtration tank should be filled with clear water prior to starting the filtration unit.
2. Switch on the blower and check for an even distribution of air across the complete filter area.
3. Switch on permeate removal at a filtration pressure of 0.05 bar.

If all components function normally, empty the tank and fill with mixed liquor.

3.1.3. Prerequisites for operation with sewage

	Make sure that the biomass concentration of activated sludge is below 12 g/l at start-up.
	Screening the water with a 2 mm punchhole screen is essential to prevent the build-up of a blockage beneath the filters. This could result in an uneven distribution of air and damage filters. Industrial water and an unusual amount of fibres require special design for pre-treatment.
	No untreated wastewater should enter the membrane. Make sure water is completely biologically treated before it gets to the membrane.

newterra gmbh
Steinbruchstrasse 8
35428 Langgoens
Germany

Tel +49 (0) 64 47 8 86 05 - 0
Fax +49 (0) 64 47 8 86 05 - 10
E-Mail info@microclear.de
Web www.microclear.de

4. Operation and Control

4.1. Operating a new filter

When starting the system, the trans-membrane pressure (TMP) should be set to max 0.07 bar in order to prevent irreversible blockage of the membranes. After one to two days the suction pressure can be increased until the design output is reached. The run-in period, due to a so-called “dirt layer” that develops, is terminated when output of the unit will only decrease over a period of a couple of days.

4.2. Continuous operation

4.2.1. Filtration pressure

In continuous operation, filters are operated with a transmembrane pressure (TMP) of 0.1 to 0.15 bar. Exact regulation of suction pressure is essential for long-term operation. Fluctuating pressure should be avoided as it leads to an early blocking of membranes.



The filtration pressure, filtrate flow and air flow must be recorded daily and given to the manufacturer in the case of guarantee claims.

4.2.2. Temperature

The filter can be operated within a wide range of ambient temperature. However, the following maximum limit should be observed.

Maximum short term	50 °C
Maximum long term operation	40 °C
Standard operation	15 °C - 35 °C

Furthermore the filter may not be exposed to frost.

newterra gmbh
Steinbruchstrasse 8
35428 Langgoens
Germany

Tel +49 (0) 64 47 8 86 05 - 0
Fax +49 (0) 64 47 8 86 05 - 10
E-Mail info@microclear.de
Web www.microclear.de

4.2.3. Aeration



The air blower for scouring must always be in operation when the filtration process is running. A failure in blower operation will lead to severe blockage of the membranes.

The recommended value for the amount of air for scouring the membrane at operating pressure is given in the following table.

“At operating pressure” means, that the resistance of the water column (e.g. 2 m = 200 mbar) has to be added to the resistance of the diffuser (e.g. 80 mbar). For this example, the blower has to deliver the following amount of air at 280 mbar (see blower curve).

Filter module	Aeration rate (Nm³/h)		Flange connection [DN/NPS]
	Relax	Filtration	
MA03-S, MA03-M	6	3	19 / ¾”
MA03-XL, MA03-XL2	10	5	19 / ¾”
MB2-S	20	10	80 / 3”
MB2-M	30	15	80 / 3”



Exceeding these values will lead to abnormal wear or damage of the filters or of the diffusers.
The aeration must be switched off for 20 minutes per day to allow for a relaxation of the diffuser membrane.



The air blower for scouring must always be in operation when the filtration process is running. A failure in blower operation will lead to severe blockage of the membranes.



Exceeding these values can lead to abnormal wear of the filters or of the diffusers.

newterra gmbh
Steinbruchstrasse 8
35428 Langgoens
Germany

Tel +49 (0) 64 47 8 86 05 - 0
Fax +49 (0) 64 47 8 86 05 - 10
E-Mail info@microclear.de
Web www.microclear.de

5. Maintenance



Never expose the filter to frost, dust, rain or direct sunlight.

5.1. Cleaning of the MicroClear® Filter

If permeability has decreased below 50 l/m²hbar, a basic chemical cleaning of filters is necessary (depending on the application once or twice per year). The filter must be put into a cleaning tank, in which the cleaning chemicals are filled. In the case of an external filter setup, the filter tank must be emptied and filled with clear water.



Maintenance is only to be carried out by qualified and trained personnel! Chemicals can lead to serious injuries. Always wear protective glasses, clothing and, if possible, gloves. Obey the safety data sheet of the chemical manufacturer!

The following procedures are recommended for chemical cleaning of the ultrafiltration membrane. Keep the working temperature between 20 to 25 °C for all steps.

- Step 1: Immerse the filter inside a tank of NaOH solution, pH 11 for 3 hours.
- Step 2: Immerse the filter inside a tank of NaOCl 200 ppm (max. 500 ppm) (calculated as active chlorine) for 8 hours.
- Step 3: Rinse the filter with tap water.

newterra gmbh
Steinbruchstrasse 8
35428 Langgoens
Germany

Tel +49 (0) 64 47 8 86 05 - 0
Fax +49 (0) 64 47 8 86 05 - 10
E-Mail info@microclear.de
Web www.microclear.de



Rinse thoroughly with clear water to avoid the formation of chlorine gas!

- Step 4: Immerse the filter inside a tank of citric acid, pH 2 for 1 hour.
- Step 5: Finally, check permeability with tap water.

Normal permeability after cleaning: 150 to 300 l/m²hbar. If this value is not attained, repeat cleaning or use different detergents after contacting newterra GmbH.

5.2. Spare parts

Common spare parts such as permeate collector pipe, air diffuser, or filter module can be ordered directly from newterra GmbH or from a related partner of newterra GmbH.



Do not use any replacement parts other than those recommended by newterra GmbH. Use of third-party parts without informing or consulting with newterra GmbH will invalidate the warranty.

5.3. Persistence of the membrane

The raw water should comply with the attached compatibility chart. Furthermore, it must be:

Lipophilic substances average	< 25 mg/l
Lipophilic substances maximum	< 50 mg/l

Silicones and solvents must be avoided completely. Long molecules in general result in membrane blockage and should be avoided. This is especially true of flocculation aids based on polymers (polyelectrolyte) and antifoaming agents. Antifoaming agents based on silicone must be avoided completely as the can block membranes irreversibly.

newterra gmbh
Steinbruchstrasse 8
35428 Langgoens
Germany

Tel +49 (0) 64 47 8 86 05 - 0
Fax +49 (0) 64 47 8 86 05 - 10
E-Mail info@microclear.de
Web www.microclear.de

MicroClear® Compatibility chart

Group		SP-Type membrane
Chlorinated solvents	Methylene Chloride, Chloroform, Carbon Tetrachloride, Chlorobezene, Trichloroethane (< 1%)	--
Esters	Ethyl Acetate, Butyl Acetate, Butyl Acrylate (< 1%)	--
Ethers	Ethyl Ether, Polyethylene Oxide (< 1%)	--
H_2O_2	< 2000 ppm	++
Inorganic acids	HF, HCl, H_2SO_4	pH 0 - 14
Ketones	Acetone, Methyl Ethyl Ketone	--
NaOCl	< 500 ppm, 50.000 ppmxh	++
Organic acids	Sulfamic Acid, Formic Acid, Oleic Acid, Sulfonic Acid, Acetic Acid, Acrylic Acid, Lactic Acid	pH 0- 14
Phenols		--
Silicones		--
Alcohols	Ethanol, Butanol, Isopropranol (< 50%)	
Aldehydes	Formaldehyde (< 1%)	++
Alkali		pH 0- 14
	Dimethyl Formamide, Dimethyl, Acetamide, Dioxane, N-Methyl, Pyrrolidone, Tetramethyl Acetamide	--
Aprotic solvents	Benzene, Toluene, Xylene, Anthracene, Naphathalene, Gasoline	--
Aromatic hydrocarbon	Methoxyethanol, Ethoxyethanol, Buthoxyethanol	?

++ = very good
+ = good
- = fair
-- = not recommended

newterra gmbh
Steinbruchstrasse 8
35428 Langgoens
Germany

Tel +49 (0) 64 47 8 86 05 - 0
Fax +49 (0) 64 47 8 86 05 - 10
E-Mail info@microclear.de
Web www.microclear.de

6. Additional information

If any additional information is required, please contact newterra GmbH, contact see below.

newterra gmbh
Steinbruchstrasse 8
35428 Langgoens
Germany

Tel +49 (0) 64 47 8 86 05 - 0
Fax +49 (0) 64 47 8 86 05 - 10
E-Mail info@microclear.de
Web www.microclear.de

aeration parts for all brands

DIFFUSER EXPRESS

Diffuser Express Parts & Tools

Installation, Operation & Maintenance

MANUAL

For:

T-Type Disc Diffusers

Environmental Dynamics International
5601 Paris Road
Columbia MO 65202

P: +1-573-474-9456
www.EnvironmentalDynamics.com

M-CP005D-EN
Rev A

Table of Contents

Table of Contents

Notice **1**

Diffuser Spec Sheet **3**

Storage Instructions **5**

Receiving Inspection 5

Pre-Installation Storage Requirements 5

Post-Installation Storage Requirements for a Flexible Membrane System 5

Installation Instructions **6**

FlexAir T-Series Installation 6

Leveling of Diffusers *6*

Start-Up Instructions **7**

General Aeration/Mixing Systems Start-Up Instructions 7

General Air Piping Inspection *7*

Blower Components *7*

Initial System Start-Up *7*

Active Aeration Inspection *8*

Optional Water Flush and Air Purge Cleaning of Piping 9

Water Flush Cleaning *9*

Air Purge Cleaning *9*

Safety Considerations **10**

General Safety Considerations 10

Personal Protection Measures *10*

Personal Protective Equipment *10*

Confined Space Hazard *10*

Operation Instructions **11**

Description of the Aeration-Mixing System 11

Normal Operation of the Aeration System *11*

Normal Operation of the Blower System *11*

Shutdown Conditions *11*

Normal Operation of the Diffuser Unit *11*

Normal Operation of the Purge Assembly *11*

Preventive Maintenance **12**

Maintenance Schedule 12

In Situ Cleaning of Membrane *12*

In Situ Acid Cleaning *12*

Membrane Protection *12*

Corrective Maintenance **13**

Troubleshooting 13

Replacing Diffuser Assembly 13

EDI Services **14**

Aeration Works 14

Field Service 16

Diffuser Express 18

Notice

This document and all information contained within is the property of Environmental Dynamics International. This document is submitted under a confidential relationship specifically for the recipient's use on a designated project. Reproduction of this document or use of its contents in whole or in part without the written permission of EDI is prohibited.

Blank Page

aeration for life

PRODUCT SPECIFICATIONS

FlexAir™ T-Series Tube Diffuser

Fine Bubble Flexible Membrane

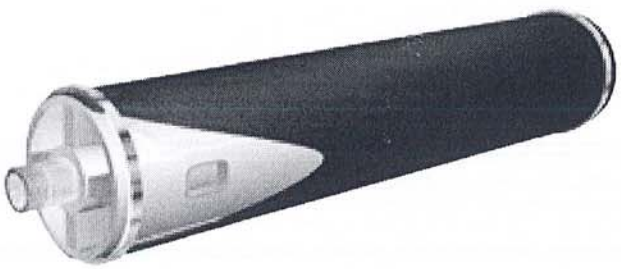

- 62 mm and 91 mm diameter tube diffusers with standard length options from 250 mm to 1000 mm
- Choice of PVC or CPVC material diffuser tubes available
- Stainless Steel ¾" male pipe thread or plastic ¾" female pipe thread connections available
- Premium quality membranes available in EPDM, PU, PTFE Matrix™ or PTFE-coated, silicone, or other materials
- Triple-check design minimizes entry of liquid/solids into air feed piping
- High-capacity membrane option available for maximum airflow and low operating pressure
- Non-buoyant flo-thru design for reduced uplift and stress on mounting connection

Model	Membrane Performance	Design Airflow (membrane)		Overall Length (membrane)		Active Surface Area (membrane)		Dry Weight (diffuser)		Net Operating Buoyancy (diffuser)	
		scfm	m^3_N/h	in	mm	ft^2	m^2	lb	kg	lb	kg
Magnum 91–1003	Micro	0–20	0–32	39.5	1003	2.64	0.245	5.4	2.4	1.7	0.76
	High-Cap	0–35	0–55	39.5	1003	2.64	0.245	5.4	2.4	1.7	0.76
Magnum 91–762	Micro	0–15	0–24	30.0	762	1.97	0.183	4.3	2.0	1.2	0.55
	High-Cap	0–26	0–41	30.0	762	1.97	0.183	4.3	2.0	1.2	0.55
Magnum 91–502	Micro	0–9	0–15	19.8	502	1.25	0.116	3.1	1.4	0.73	0.33
	High-Cap	0–17	0–26	19.8	502	1.25	0.116	3.1	1.4	0.73	0.33
Standard 62–1003	Micro	0–13	0–21	39.5	1003	1.71	0.159	3.9	1.8	1.9	0.85
	High-Cap	0–23	0–36	39.5	1003	1.71	0.159	3.9	1.8	1.9	0.85
Standard 62–762	Micro	0–10	0–15	30.0	762	1.27	0.118	3.4	1.5	1.1	0.50
	High-Cap	0–17	0–27	30.0	762	1.27	0.118	3.4	1.5	1.1	0.50
Standard 62–650	Micro	0–8.0	0–13	25.6	650	1.07	0.099	3.2	1.4	0.76	0.35
	High-Cap	0–14	0–22	25.6	650	1.07	0.099	3.2	1.4	0.76	0.35
Standard 62–610	Micro	0–7.6	0–12	24.0	610	1.00	0.092	3.1	1.4	0.63	0.29
	High-Cap	0–13	0–21	24.0	610	1.00	0.092	3.1	1.4	0.63	0.29

Environmental Dynamics International

FlexAir™ T-Series: Tube Membrane Diffuser



Processes:
Biological Aeration
Activated Sludge Processes
Oxidation Ditch
Sequence Batch Reactors (SBR)
Membrane Bio Reactors (MBR)
Moving Bed Bio Reactors (MBBR)
Sludge Stabilization/Digestion
Package Plants

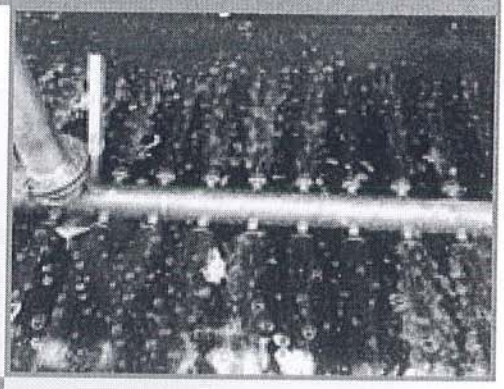

Applications:
Municipal Wastewater
Industrial Wastewater
Fixed Grid Systems
Lift-Out Systems
Floating Systems
Tank Mixing
High Oxygen Transfer
Low Head Loss



Industries:
Food and Drink
Dairy and Cheese
Pulp and Paper
Oil and Gas
Animal Processing
Leachate
Energy and Power
Pharmaceutical



EDI has demonstrated success in more than 7,000 installations in over 100 countries worldwide—serving over 400 million people.

Please contact your local office below for details of our proven products, systems, and processes.

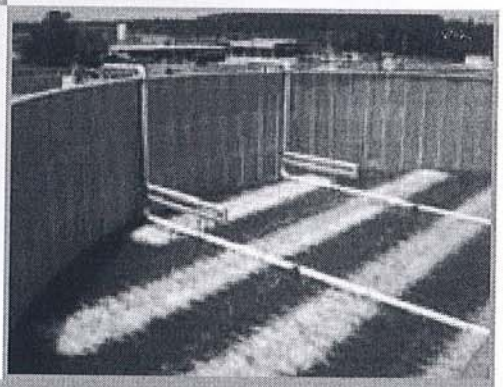

EDI Europe
Design, Manufacturing & Warehouse
Tel: +44-1295-810581
edi.Europe@EnvironmentalDynamics.com

Germany
Design Office
Tel: +49-(0)9073 921212
edi.Germany@EnvironmentalDynamics.com

France
Design Office
Tel: +33-(0)-781-548-529
edi.France@EnvironmentalDynamics.com

North America: Global Headquarters
Design, Manufacturing and Warehouse
Tel: +1-573-474-9456
edi.NorthAmerica@EnvironmentalDynamics.com

Mexico
Design Office
Tel: +1-877-334-2478
edi.Mexico@EnvironmentalDynamics.com

Singapore (SEA)
Design and Warehouse
Tel: +65-6521-4536
edi.Asia@EnvironmentalDynamics.com

China
Design Office
Tel: +86-10-5957-4336
edi.China@EnvironmentalDynamics.com

Japan
Design Office
Tel: +81-3-5789-9140
edi.Japan@EnvironmentalDynamics.com

India
Design and Manufacturing Office
Tel: +91-22-2422-4228
edi.India@EnvironmentalDynamics.com

Storage Instructions

Receiving Inspection

R.2015-06-17

(FOB EDI only)
Inspect shipments for damage upon receipt. The recipient/receiver is responsible for all damages. EDI offers to act on behalf of the recipient / receiver in filing a claim for damage incurred during shipment. To file a claim against the freight company, a damage report must be submitted to EDI within 24 hours of delivery.

(FOB Jobsite only)
Inspect shipments for damage upon receipt. Any damages observed upon receipt must be noted with the freight company at the time of delivery and reported to EDI within 24 hours of delivery. EDI will repair or replace damaged goods when notified within this notification period.

(Ex-Works only)
Inspect shipments for damage upon receipt. The recipient/receiver is responsible for all damages. To file a claim against the freight company, file a damage report directly with the shipping company.

Note
A full inventory of shipped components shall be completed within 14 days of the receipt of shipment. Any deficiencies in the shipment that are clearly deemed to be the result of EDI will be reconciled by EDI when notified within this time period.

Pre-Installation Storage Requirements

R.2015-06-17

Pipe sections are furnished with end caps to minimize the entry of foreign materials (dirt, debris, etc.) into the pipe. Any foreign materials that are allowed to contaminate the pipe will need to be removed from the system prior to installation and start-up.

Piping Storage Requirements:

- Store Piping on a flat surface.
- Accessories must be protected from excessive moisture and rain.
- Storage is acceptable provided the ambient air temperature is below 140°F (60°C).
- Avoid impact loads and moisture when storing below 32°F (0°C).

Note
Piping and components are to be shaded from sunlight if stored for longer than 6 months.

Diffuser Storage Requirements:

- Boxes must be protected from excessive moisture and rain.
- Storage is acceptable provided the ambient air temperature is below 100°F (40°C).
- Shade or move Components indoors if the Ambient air temperature exceeds 100°F (40°C).
- Indoor storage is acceptable if the ambient air temperature does not exceed 125°F (52°C).

Note
Storage of diffuser membrane components shall be limited to one year.

Post-Installation Storage Requirements for a Flexible Membrane System

R.2015-06-17

If the reactor is drained and the aeration system is exposed for a short period of time (less than 4 weeks), the system shall be protected from foreign objects including but not limited to paint or weld splatter, falling objects, etc.

A gray fabric tarp should be suspended above the aeration system approximately 6" (150 mm) if the ambient air temperature is above 100°F (40°C).

Warning ⚠
Do not use any form of plastic to cover the aeration components. Plastic can create a hotter environment and/or fuse to the surface of the equipment.

If the aeration system is idle for an extended period time (greater than 4 weeks), the system should be submerged in approximately 4 feet of clean water provided the ambient air temperature is greater than 32°F (0°C).
If the ambient air temperature is below 32°F (0°C), the water level may need to be increased so that the ice layer does not contact the aeration system.

When reactivating a system where ice exists, operate the system at a minimum airflow to avoid movement of ice and maintain this airflow condition until the ice is no longer present. The water level should never be lowered if ice is present. The weight of the ice may damage the system

Installation Instructions

FlexAir T-Series Installation

R.2015-12-07

Inventory all parts to ensure no shortages and familiarize yourself with the layout drawings and installation details.

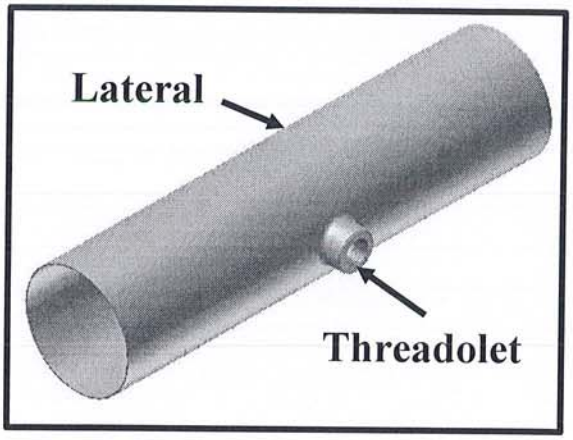

Note

PTFE thread sealant tape should be applied to all steel to steel threaded connections. EDI recommends Hercules Mega-Loc brand pipe dope on all plastic to plastic or plastic to steel threaded connections for lubricant and sealant (pipe dope containing PTFE is potentially damaging to plastic parts).

1) Apply thread sealant to the threads of the T-Series.
2) Insert the orifice plug into the T-series diffuser (if provided).

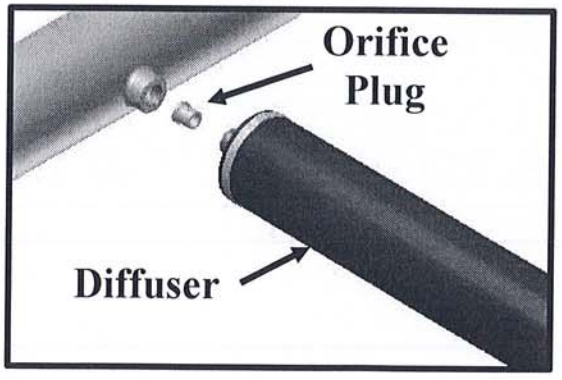

3) Thread diffuser into threadolet until hand-tight.



Note

The T-series diffuser should be oriented with the unperforated sections on top and bottom.

4) Repeat steps 1-3 for remaining diffusers.

Leveling of Diffusers

Air distribution through the aeration system is a function of the relative elevation of the individual aeration units and the leveling tolerance of the air supply piping. Excessive variation in pipe elevation (see Start-up Instructions) may result in poor air distribution during normal operation.

Start-Up Instructions

General Aeration/Mixing Systems Start-Up Instructions

R.2015-11-24

These instructions cover the general start-up requirements for the aeration system. Special start-up requirements outlined in the Engineer's specifications, contract documents, or instructions offered by EDI shall be supplementary to or take precedence over these general instructions.

General Air Piping Inspection

Contractor is to confirm the cleanliness of the air piping. If existing header piping is used, the air purge or water flush cleaning procedure is recommended prior to installation of diffuser units to remove any internal debris that may have accumulated in the header piping.

Inspect air piping and diffuser connections for loose fittings or damaged pipe. Damaged piping sections and connections should be repaired prior to commencing system operations.

Confirm that piping and diffusers are level by filling the basin with water until the diffusers are 1" to 2" under water. Diffuser elevation tolerance should be within the approved tolerance for the respective diffusers. Adjust supports as required to level the air supply piping (on which the diffusers are mounted) to within a tolerance of ±1/4".

Blower Components

See the blower installation and start-up instructions to assure all blower components are mounted properly and ready for operation. When EDI provides the blower assemblies, detailed installation and start-up instructions are provided in the blower submittal package.

Blower components should be fully installed and fully serviced prior to making final electrical connections and starting up the aeration system.

Precautions should be taken throughout system installation to minimize the discharge of airborne particles to the aeration system. As a minimum, an air inlet filter should be installed and operated during blower servicing procedures. EDI recommends a filter efficiency of 93% of 10-microns. Any solvents used to clean blower should be bypassed from the aeration piping. The discharge of airborne particulate matter or solvent into aeration piping may result in damage to diffuser membranes.

Upon completion of blower manufacturer's recommended service, the subsequent start-up procedures may be followed.

Initial System Start-Up

To start the system, completely open all valves in the air supply system, including blower shut-off valves, header valves and lateral isolation/throttling valves. This instruction assumes that uniform water level is present in all aerated basins served by a common blower. If varying water levels are present, basins with lower water levels will need to have the valve to that basin throttled back to avoid improper air distribution. Failure to completely open all valves may result in over-pressuring blower unit, release of pressure relief valve, motor overload, or poor air distribution in aeration system with the potential of exceeding airflow capacity to diffuser units and damaging the diffuser membranes.

Once valve positions have been confirmed, the blower unit may be started. EDI does not recommend starting multiple blower units at initial system start-up. Subsequent blowers should be brought on-line after the system has equalized and uniform diffuser activity is observed throughout the system.

Use the blower manufacturer's recommended start-up procedures. EDI recommends that initial pressure surge be reduced through PRV or blow-off valve.

Start-up procedures should follow the basic guidelines as listed below:

- When starting initial blower, the PRV or blow-off valve should be used to reduce the start-up pressure surge. This is accomplished by removing weights and the cap from the PRV or by opening the blow-off valve.
- When the basin has been filled, note the operating pressure at the blowers. The pressure relief valve should be adjusted to free-flow at approximately 1 psig above the normal operating pressure of the system.
- To confirm the PRV operates, partially close blower shut-off valve until PRV releases air. Reopen the shut-off valve to confirm that PRV will reseat. If required, readjust the PRV to the recommended setting per instructions in the Blower IOM manual.
- To properly assess the airflow distribution on the aeration system, the blower system must be operating at the design operating point. On dual blower systems, design airflow is typically achieved by operating one blower at 100%. On three-blower systems, design airflow is typically based on operating two blowers at 100%.
- Airflow distribution adjustment between aeration grids should not be conducted until the full operating depth is obtained and the blower system has been in operation for several days. Small adjustments may be made to the isolation/throttling valves on the laterals receiving the most air. System balancing should be completed on an incremental basis. Changes in airflow distribution may require 2-8 hours to fully

stabilize when fine-tuning a system. In addition, in situations where multiple basins are employed and varying water levels exist, adjustments of lateral valves will be required to maintain air distribution in the tanks.

EDI recommends that the system Operator contact EDI at 573-474-9456 prior to making any adjustments to the airflow distribution.

Active Aeration Inspection

With the blower system active, operate the aeration system at 50% design air capacity. At this setting, check piping and diffusers for obvious leaks, and repair as required. Open any manual purge valves to expel water that may be in the piping. Close the purge valves once all water has been expelled.

Check for minor leaks by completing the following steps:

- Turn the airflow down to very minimal release. If the system employs separate drop valves, each grid can be checked separately by throttling the valve one at a time. Again, take care not to exceed airflow capacities in neighboring aeration grids when reducing airflow by this method.
- The airflow will not be uniform at this low level. This is acceptable, as this test is only used to check for small leaks that are not visible with the design amount of airflow. Check for any observed leaks and repair as required.

Leaks commonly occur due to:

- Missing or misaligned O-ring
- Torn membranes
- Loose disc retainer ring

Optional Water Flush and Air Purge Cleaning of Piping

R.2015-06-17

These instructions cover the general procedure that may be used to clean the piping in a fine or medium bubble diffuser system prior to diffuser installation. Special pipe cleaning requirements outlined in the Engineer's specifications, contract documents, or instructions offered by EDI shall be supplementary to or take precedence over the general instructions outlined below.

If both water flush and air purge cleaning are used, the water flush procedure should be implemented first.

Water Flush Cleaning

To water-flush the system, connect a water supply to the air header or make individual connections to each lateral. If flush water is piped to the header, it is imperative that the header be valved or stubbed such that water does not flood the blowers.

Clean water must be used. It is not necessary to use potable water, but the flush water must be free of silt or debris.

Flush header assembly prior to water flushing the laterals. To flush the header, fill it with water and open the end lateral to create a flush velocity in the header of at least two feet per second.

The laterals are to be individually flushed at a recommended velocity of five to six feet per second. This is done by sequentially opening and closing the isolation valves on the individual laterals.

Opening one isolation valve will produce a significant flushing action in the lateral as water is pumped through the header. One or two drilled air outlet holes should be uncapped to allow water and debris to be flushed out of the piping.

As an alternative to using the main header/lateral flush procedure, the individual laterals may be cleaned independently of the main header. For this operation, the laterals are disconnected from the main header and cleaned individually.

Air Purge Cleaning

Remove weights and cap from the pressure relief valve during initial start-up of the system. This prevents potential damage to the blowers from blocked valves or obstructions in piping system. Cap and weights can be added back to the pressure relief valve as necessary to provide proper operating pressure capability.

Note

When a blow-off valve is provided for the blower system, it may be operated in lieu of using the pressure relief valve procedure listed above.

Open all lateral valves prior to start-up of the blowers. Provide an opening at the end of the air laterals to allow air and foreign materials to be discharged from the system. The opening may be made at the end of the air lateral by leaving the end cap off of the lateral or by removing two orifice/outlet plugs at the end of the lateral.

In order to increase the velocity of air through the header and air laterals, it may be desirable to operate at maximum blower capacity. In addition, it may be necessary to close some of the lateral throttling valves to achieve a high velocity through the balance of the laterals that are open to the atmosphere. A high velocity is required in order to blow out any accumulated foreign materials.

As laterals are consecutively cleaned, the isolation valves are operated in a manner that allows the remaining laterals to be cleaned by an air purge.

Upon completion of the air purge, the blowers are shut down and the laterals are capped. Diffuser units are installed on the laterals and all isolation valves are opened prior to filling the basin with water.

If only an air purge is used to clean the piping, the basins are now ready to be filled with water to check the operation of the diffuser units

Safety Considerations

General Safety Considerations

R.2015-06-17

The diffused aeration system supplied on this project has no moving parts and poses little to no risk of injury. However, routine maintenance may expose personnel to potential hazards. EDI has listed below potential hazards and recommended precautions when maintenance procedures are required for the aeration components.

Tank Hazards (at full liquid depth):

- *Turbulent liquid action.*

Precautions:

- *Provide access to emergency throw rope or life ring.*
- *Use buddy system and follow standard safety procedures.*

Tank Hazards (empty):

- *Falling into tank.*
- *Objects falling onto personnel in the tank.*
- *Slippery basin floor.*

Precautions:

- *Avoid access ways without railings.*
- *Provide emergency exit/access.*
- *Appropriate personal safety equipment*

Personal Protection Measures

Wastewater has a potential for health hazards because it may carry disease producing organisms and a variety of chemical wastes. It is important to employ good personal hygiene practices to prevent oral and skin contact with wastewater.

The following is a list of methods to prevent direct contact entry of pathogenic organisms:

- Wash hands frequently with soap and water after contacting wastewater, visiting restrooms, before eating, drinking, or smoking; and at the end of jobsite visit. When soap and water are not available use anti-bacterial hand wash specifically formulated for use when soap and water is not convenient.
- Promptly treat cuts and abrasions using appropriate first aid measures.
- Handle sharp items with extra care to prevent accidental injuries.
- Clean contaminated tools after use.
- Follow good common sense and exercise extra caution whenever there is contact with contaminated water or sludge.
- Never touch face, mouth, eyes, ears, or nose while working with wastewater or sludge.

Personal Protective Equipment

Wear heavy-duty gloves (or double gloving) and boots that are waterproof and puncture resistant. When practical, use thin disposable latex gloves for light work. Use reinforced rubber gloves for heavy activities.

Discard gloves that become torn and try not to submerge hand below top of glove during service activities. When it is not feasible to use gloves while installing or inspecting equipment, make sure to follow personal hygiene practice listed above.

Wear goggles in the presence of heavy aerosols, dust, or when splashing of wastewater might occur.

Wear protective clothing; if possible, shower and change clothes before leaving plant site. If work clothes are washed at home, separate from the family wash and use chlorine bleach.

Confined Space Hazard

Verify the designation of the tank before entering. Wastewater tanks or basins can be considered confined spaces and contain potential hazards. Flammable, explosive, toxic, or other hazardous substances or the absence of sufficient oxygen could cause injury, acute illness, disability, or death.

Particular care should be exercised to assure NO hydrogen sulfide, chlorine or other heavier than air gases have accumulated in the basins or tanks. DO NOT ENTER ANY CONFINED SPACE until your supervisor has verified that proper safety precautions have been met. Do not enter a confined space without someone else present on the outside and do not enter a confined space without proper rescue equipment outside the confined space. Every confined space entry has a unique set of hazards, but atmospheric monitoring and proper entrance procedures can minimize the hazards entry personnel typically encounter.

Operation Instructions

Description of the Aeration-Mixing System

R.2015-06-17

The aeration-mixing system employs a main air header and valved lateral piping system to distribute air throughout the basin. EDI normally designs the aeration system piping to provide uniform air distribution without adjustment to the isolation/throttling valves on the laterals. However, these valves are typically provided for direct control of airflow distribution on large aeration systems or for process control. If process demands dictate a revised airflow distribution pattern, contact EDI for guidance on modification to the system.

Normal Operation of the Aeration System

The following procedures should be followed on a regular basis to assure consistent and satisfactory performance of the aeration-mixing system.

The air rate to the system may be adjusted to maintain the desired dissolved oxygen levels in the basin. When adjusting the airflow rate, the diffusers should be operated within the normal operating range of the diffuser. Excessive airflow rates will result in high pressure drops across the diffuser and reduced oxygen transfer performance. Low airflow rates may result in incomplete utilization of the diffuser membrane and reduced air distribution.

The aeration-mixing system is designed to provide uniform aeration. Positive dissolved oxygen concentrations should be present throughout the entire system during normal operation.

A dissolved oxygen profile analysis may be used to confirm the performance of the aeration system. Typically, the dissolved oxygen levels are measured at the inlet, the outlet, and the midpoint locations of each basin to determine the aeration system performance. In regulating the system airflow to control dissolved oxygen levels, the diffuser units should be operated within their minimum and maximum airflow limits.

In applications where water level variations may exist between aeration basins supplied by a single blower, the isolation valves may need to be adjusted to maintain adequate airflow distribution. This normally requires valving back the air to the basin with the reduced water level.

Note

It is important to confirm the operating airflow range of the diffuser units before valving back any isolation valve. Damage could result to the aeration diffuser if airflow is above the recommendations noted in the Product Specification Sheet. Please consult EDI to confirm operating procedure before adjusting any aeration isolation/throttling valve.

Normal Operation of the Blower System

The Aeration-Mixing System normally utilizes a centrifugal or positive displacement (PD) blower system consisting of one or more blower units for normal operation plus one on-line spare unit. All blower units including the spare unit must be operated on a regular basis to maintain their proper working condition. EDI recommends that blower units be operated sequentially with idle blower units brought on-line weekly. EDI does not recommend the simultaneous operation of on-line and spare blowers for an extended period. This operating condition may deliver airflows exceeding the air capacity of the diffuser units.

All blower components should be serviced on a regular basis. For additional information concerning proper blower operation, service requirements or service intervals, reference the Blower Operation and Maintenance manual.

Shutdown Conditions

If air service is interrupted at any time, it should be restored as soon as possible. When restarting positive displacement blower units, the start-up pressure surge should be reduced by down-weighting the pressure relief valve (PRV) or operating the blow-off valve. Once the blower is operational, reset the PRV or slowly close the blow-off valve over a five- to ten-minute period. The PRV must be set properly to prevent overloading of the blower system. Operate manual water purge devices if provided. If the PRV releases air for an extended period of time, the relief setting should be checked.

Normal Operation of the Diffuser Unit

The diffuser unit has no moving parts and requires very little maintenance for long-term operation. EDI recommends that the air supply to the diffusers be maintained at all times for optimum performance. The airflow to the diffuser units must be kept within the ranges noted in the Product Specification Sheet to maintain the structural and operating characteristics of the diffuser membrane. Continuous application of high airflows, greater than denoted for normal operation, may result in physical damage to the diffuser membrane.

Note

Use caution when adjusting several lateral throttling valves in the same piping system. This procedure can result in elevated airflows in sections of the basin, exceeding the maximum allowable airflow to each diffuser unit.

Normal Operation of the Purge Assembly

Condensation will accumulate in the subheader and lateral piping due to the cooling of the air when it reaches the EDI aeration system. EDI has provided a purge assembly to remove this accumulation from the pipe while the system is in operation. If a manual purge assembly has been provided, open the ball valve at the top of the purge assembly on a monthly basis. Allow the water to exit through the valve until only air remains. Close the ball valve once the purging process has been completed.

Preventive Maintenance

Maintenance Schedule

R.2015-06-17

In order to be covered by the manufacturer's warranty the FlexAir aeration system must be maintained. EDI recommends to visually inspect the overall system and clean the membranes to remove any accumulated foulants on an annual basis. This activity is beneficial to the Owner, as a reduction in the uniformity of air release or an increase in backpressure will impact the power use. The FlexAir aeration system is designed to allow the system to be accessed by dropping the water level in the basin being serviced.

Note

To prevent solids from entering the system, it is important to keep the air flowing through the system until the water level has dropped below the lateral piping.

The air to the basin being serviced should be turned off after the water has dropped below the lateral piping and diffusers to prevent the possibility of excessive airflows to the units or damage to the blower unit.

The following items may be helpful in servicing the FlexAir aeration system during periodic inspections or maintenance procedures:

- Protective gloves and clothing
- Long-handled soft bristle brush for cleaning assembly for observation
- Spare FlexAir membranes

All system components should be inspected for general wear or damage. This includes but is not limited to:

- Pipe supports including anchor bolts, pipe straps and fasteners.
- Pipe connection including fasteners, shifts in alignment of pipes and joints.
- Diffuser assembly including position, membrane integrity, membrane clamps / retainer ring, etc.
- Purge assembly components including all connections, anchor points, and wear at any contact points.
- Any worn or damaged components need to be repaired or replaced. Please contact EDI for assistance in identifying a root cause and solution.

In Situ Cleaning of Membrane

Typically membrane diffuser units will require cleaning because of two common types of surface build-up; biological and inorganic scaling.

Biological build-up is a moss-like growth. The recommended cleaning procedure is to physically dislodge the growth either by gently brushing the substance off with a soft plastic bristle brush or by using low-pressure hosing. Care should be taken not to abrade the rubber membrane surface during the cleaning procedure.

In Situ Acid Cleaning

When standard cleaning methods do not produce desired results, inorganic scaling may be present and may require an alternate cleaning technique. Inorganic scaling is a granular mineral-like precipitate that can form on the membrane surface.

Warning ⚠

Read all applicable SDS (Safety Data Sheets) carefully and follow all instructions given therein. Always have new users familiarize themselves with the SDS before handling chemicals. Wear personal protective equipment (including, but not limited to, rubber gloves, safety goggles, and other protective clothing) as required.

The foulant adhered to a membrane can be tested with a solution of muriatic acid (20° Baume Hydrochloric Acid, 31.45% by weight HCl) for reactivity. This may indicate the nature of the foulant and its propensity for chemical cleaning. Ensure that the air supply has been turned off from the diffusers being serviced. Afterwards, place a small amount of acid on the surface of the membrane where fouling is most prevalent. If the foulant is reactive to acid, this is indicative of inorganic fouling, such as calcium deposits, and acid cleaning is recommended. Otherwise, the foulant is typically organic and acid cleaning may not prove effective.

If it is determined that the foulant does respond to acid, the membrane may be cleaned with acid in addition to manual cleaning. This technique involves applying Muriatic Acid directly to the membrane surface after the manual cleaning procedure followed by rinsing with a low-pressure hose. In the case of ceramic diffusers, the acid is typically applied both on the surface and pumped through the diffuser using air.

Note

EDI can provide an acid injection system, upon request, for cleaning aeration systems without process interruptions. Contact EDI for more information.

Membrane Protection

The diffuser membranes should be protected from chemicals that may be harmful to the material. If using a cleaning aid or other substance on or around the membranes, please contact EDI for chemical compatibility.

Corrective Maintenance

Troubleshooting

R.2015-06-17

The FlexAir aeration system requires very little maintenance for long-term operation. Periodic visual inspection of the system should allow the Operator to determine if the system is performing at optimum levels.

Operating airflows below the design condition will also reduce the uniformity of air distribution. If operating conditions warrant airflow rates below the design condition, contact EDI for additional operational guidelines.

Below are symptoms and procedures to follow if inspection of the aeration system reveals abnormal operating characteristics:

Large volume of air in localized area	
Possible Cause	**Procedure**
Air leak in aeration piping.	Access area in question. Inspect joints for evidence of breakage.
Diffuser membrane damaged or missing.	Inspect diffuser units for membrane damage. Repair as required.

Decreased diffuser activity and increased back pressure noted at blower	
Possible Cause	**Procedure**
Diffusers becoming fouled or deformed.	Access diffusers and inspect for external or internal fouling or deformation.
Reduced blower discharge air volume.	Confirm blower operating point and rpm reading.
Restriction in air header.	Confirm isolation valve position on header and drops.

Dissolved oxygen profile not satisfactory throughout basin	
Possible Cause	**Procedure**
Increased loading to system.	Confirm loading to system.
Reduced blower discharge air volume.	Confirm blower operations.
Improper distribution of air in system.	Inspect piping for leaks, both in-basin piping and out of basin piping leading from the blower system.
Air leak in system.	
Excessive foulant accumulated on diffuser.	Access diffusers and inspect for external fouling.

Replacing Diffuser Assembly

R.2015-12-15

If routine inspections reveal the need to replace a diffuser assembly, revert back to the installation instructions for the removal and reinstallation of components. Any parts damaged during removal should be replaced.

Questions regarding the aeration-mixing system operation, maintenance, etc. should be forwarded to Environmental Dynamics International, 5601 Paris Road, Columbia, Missouri 65202. +1(573)474-945

AerationWorks™

Global Maintenance & Installation Services



Customer Support Services

- **Install New Aeration Systems**
- **Maintain or Refurbish Existing Aeration Systems**
- **Develop and Implement Long-Term Maintenance Programs**
- **Service and Support for all Brands of Aeration Systems**

"The EDI Aeration Works division provides experts in the installation and maintenance of any aeration system, including supervision and/or the skilled labor pool to perform the actual service"

- Chuck Tharp, PE
Chairman • Environmental Dynamics Inc.

Aeration Works maintains special equipment, tools and skilled crews for installation and service on any aeration construction or maintenance project.

Contractors, owners and operating companies can better utilize their own personnel, equipment and resources by enlisting the support of the EDI Aeration Works Division.









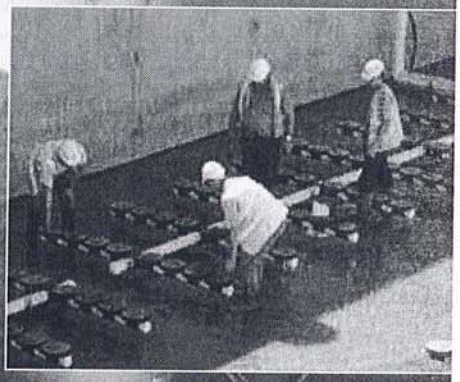



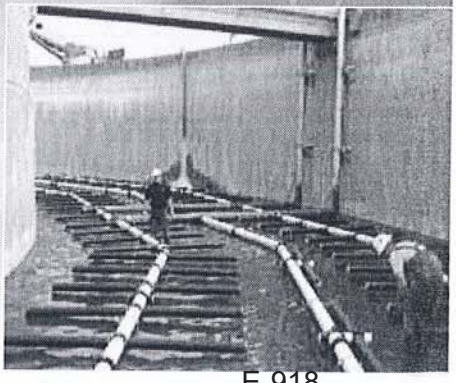

EDI Aeration Works personnel have the experience and knowledge to handle unique systems and offers a cost effective alternative for installation and maintenance of your aeration system.

AerationWorks™

Global Maintenance & Installation Services

5601 Paris Road • Columbia, MO 65202 • USA

+1 877.EDI.AIR8 (334-2478)

info@aerationworks.com

Environmental Dynamics International

Service Department

Quality In-House & On-Site Customer Service

EDI provides Field & Customer Service directly from its worldwide headquarters located in Columbia, Missouri, while maintaining Authorized Field Service offices around the globe.

Services may include visits made by an Authorized EDI Service Representative to a project site and may provide any or all of the following:



Train on-site personnel in the proper installation and assembly of all EDI equipment.

Inspect installation to provide verification of general conformance to EDI specifications and requirements.

Provide startup services to ensure that the equipment is operating satisfactorily after installation.



Train plant Owners/Operators in long term operation and maintenance procedures for the EDI equipment that has been installed.

Provide troubleshooting investigation or inspection when requested by the customer, with regards to EDI equipment installation

MotorSaver®
THREE-PHASE ELECTRIC MOTOR PROTECTOR

INSTALLATION INSTRUCTIONS FOR SYMCOM'S MOTORSAVER®
MODEL 460

DANGER!

HAZARDOUS VOLTAGES MAY BE PRESENT DURING INSTALLATION.
Electrical shock can cause death or serious injury.
Installation should be done by qualified personnel following all national, state and local electrical codes.

BE SURE POWER IS DISCONNECTED PRIOR TO INSALLATION!
FOLLOW NATIONAL, STATE, AND LOCAL CODES!
READ THESE INSTRUCTIONS ENTIRELY BEFORE INSTALLATION!

! WARNING !

UNEXPECTED OUTPUT ACTUATION CAN OCCUR.
Use hard-wired safety interlocks where personnel and/or equipment hazards exist.
Failure to follow this instruction can result in death, injury or equipment damage.

The Model 460 MotorSaver® is an auto ranging voltage monitor designed to protect three-phase motors regardless of size. The MotorSaver® is used on 190-480 VAC, 50 to 60 Hz motors to protect from damage caused by single phasing, low voltage, high voltage, phase reversal, and voltage unbalance.

CONNECTIONS

1. Mount the MotorSaver® in a convenient location in or near the motor control panel. If the location is wet or dusty, the MotorSaver® should be mounted in a NEMA 4 or 12 enclosure. The MotorSaver® can be mounted to a back panel using two #6 or #8 x 5/8 screws or can be snapped onto a DIN rail.
2. Connect L1, L2 and L3 on the MotorSaver's terminal strip to the LINE SIDE of the motor starter. (See Figure No. 1).
3. Connect the output relay to the circuitry to be controlled. For motor control, connect the normally open contact in series with the magnetic coil of the motor starter as shown in Figure No. 1. For alarm operation, connect the normally closed contact in series with the control circuit as shown in Figure No. 2.

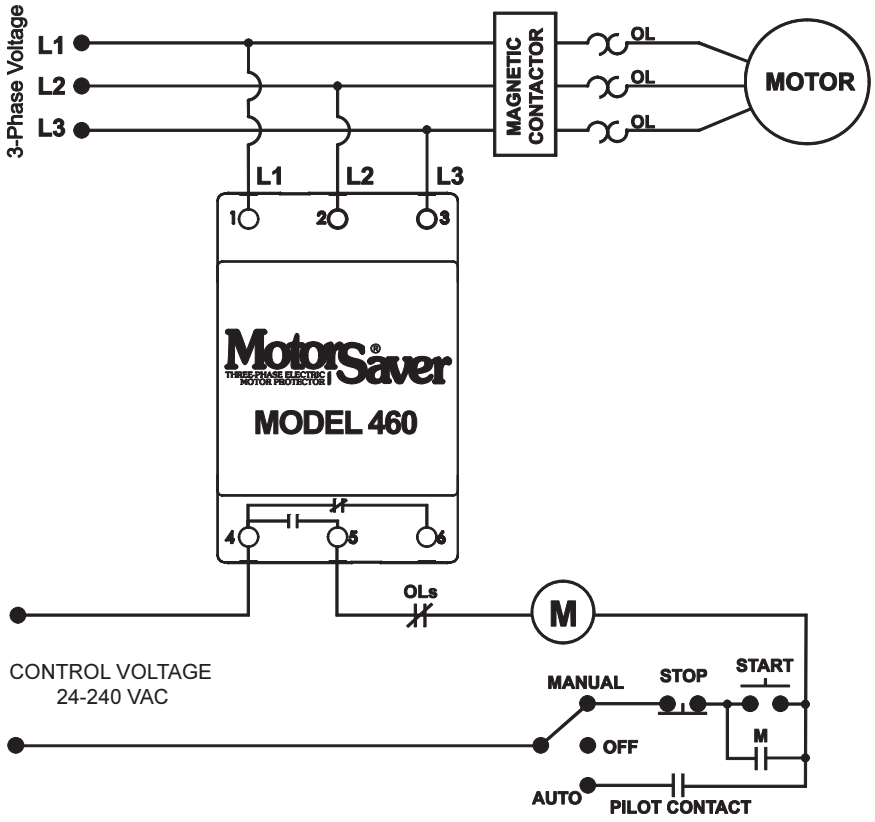

FIGURE NO. 1: CONTROL WIRING DIAGRAM

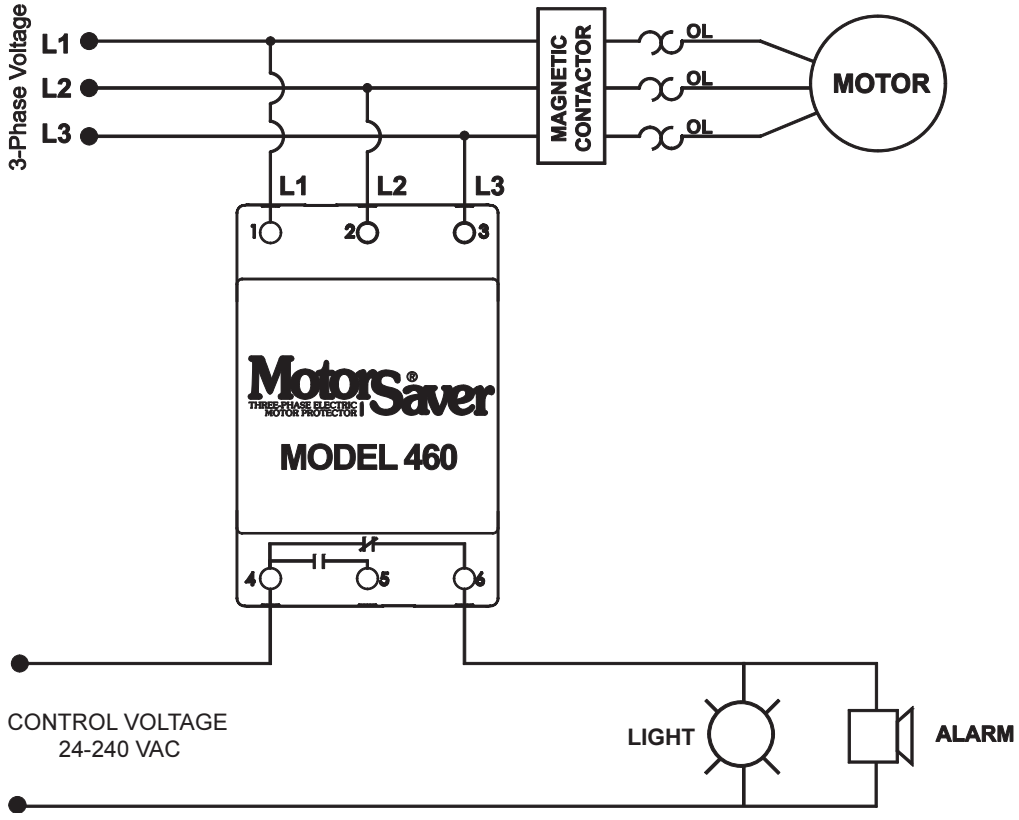

FIGURE NO. 2: ALARM WIRING DIAGRAM

SETTINGS

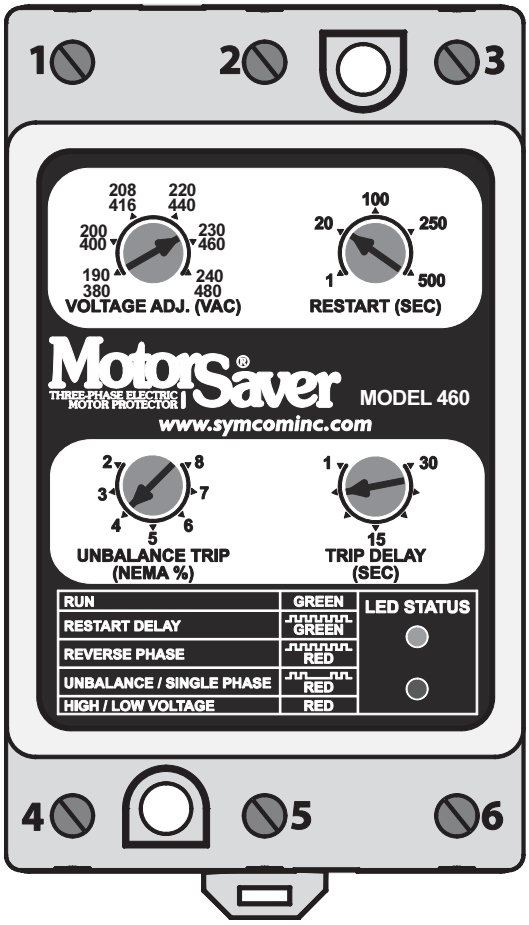

1. Line voltage adjustment: Rotate the **"VOLTAGE ADJ. (VAC)"** to the nominal three-phase line voltage feeding the motor to be protected.
2. Restart delay adjustment: Rotate the **"RESTART (SEC)"** adjustment to the desired position. The restart delay is the time between MotorSaver® seeing acceptable voltage and the MotorSaver® closing its output contacts. For compressor applications, the restart delay should be set for the approximate time it takes for the head pressure to bleed off of the compressor. For other applications, the restart delay is typically set between 2 and 10 seconds.
3. Trip delay adjustment: Rotate the **"TRIP DELAY (SEC)"** adjustment to the desired setting. This adjustment does not affect the trip delay on phasing faults. Typically, the trip delay adjustment is set between 1 and 5 seconds. In areas where voltage fluctuations are frequent, the trip delay adjustment may be set greater than 10 seconds.
4. Voltage unbalance adjustment: Rotate the **"UNBALANCE TRIP (NEMA%)"** adjustment to the desired unbalance trip level. The NEMA MG1 standard does not recommend operating a motor above 1% voltage unbalance without <u>derating</u> the motor. The NEMA MG1 standard also recommends against operating a motor above a 5% voltage unbalance under any circumstances. SymCom recommends consulting the motor manufacturer for specific tolerances.

$$\text{Percent Unbalance} = \frac{\text{Maximum Deviation from the Average}}{\text{Average}} \times 100$$

Example: The measured line-to-line voltages are 203, 210, and 212.

$$\text{Average} = \frac{203 + 210 + 212}{3} = 208.3$$

The maximum deviation from the average is the largest difference between the average voltage (208.3) and any one voltage reading.

208.3 - 203 = 5.3 210 - 208.3 = 1.7 212 - 208.3 = 3.7

The maximum deviation from the average is 5.3.

$$\frac{5.3}{208.3} \times 100 = 2.5\% \text{ Unbalance}$$

POWER-UP

Turn on the 3∅ power to the motor. The MotorSaver's green RUN light will blink during the RESTART delay. After the RESTART delay, the MotorSaver® will energize its output contacts and the green RUN light will illuminate. If the contacts do not energize and the RUN light does not illuminate, see the TROUBLESHOOTING section.

DIAGNOSTIC INDICATOR LIGHTS	
RUN	GREEN
RESTART DELAY	 GREEN
REVERSE PHASE	 RED
UNBALANCE / SINGLE PHASE	 RED
HIGH / LOW VOLTAGE	RED

CONGRATULATIONS!!
YOU HAVE JUST INSTALLED THE FINEST MOTOR PROTECTION AVAILABLE!!

TROUBLESHOOTING

SYMPTOM	LIGHT PATTERN	SOLUTION
No lights are on. The unit seems completely dead.	N / A	Measure the three line-to-line voltages. If any of the voltages are below 150 VAC, the MotorSaver® does not have enough power to operate its internal electronics. This may occur on a single-phased system. If the voltages are correct, call SymCom at 1-800-843-8848 or 1-605-348-5580.
Red light is blinking (on initial power up).	 RED	Turn off the three-phase power. Swap any two leads powering the MotorSaver® (L1, L2, or L3). There is a 50-50 chance of connecting L1, L2, and L3 correctly the first time. Re-apply the three-phase power.
Red light is blinking (after the motor has been previously running).	 RED	The incoming lines have been reverse phased. The MotorSaver® is preventing the motor from running backwards. Correct the phase sequence.
Red light is blinking in this pattern.	 RED	The voltage is unbalanced or single-phased. Measure the incoming line voltages and calculate the % unbalance. If the voltage unbalance does not exceed the % unbalance reset value, call SymCom at 1-800-843-8848 or 1-605-348-5580.
Red light is on steady.	RED	The voltage is out of tolerance. Measure the three line-to-line voltages. Calculate the average of the three voltages. If the average is 7% above or below the nominal voltage as selected by the LINE VOLTAGE ADJUST, the MotorSaver® is functioning properly. If the voltage is within ±7% of the selected line voltage, call SymCom at 1-800-843-8848 or 1-605-348-5580.
Green light blinks and motor is not running.	 GREEN	The MotorSaver® is in restart delay.
Green light is on steady, but motor does not start.	GREEN	The MotorSaver® is in run mode. Ensure other control devices are allowing the motor to start. Check control circuit for loose wires or malfunctioning switches.

Any questions or comments call SymCom at 1-800-843-8848 or 1-605-348-5580

SPECIFICATIONS

3 - Phase Line Voltage	190 - 480 VAC
Frequency	50* - 60 Hz
Low Voltage (% of setpoint)	
Trip	90% ± 1%
Reset	93% ± 1%
High Voltage (% of setpoint)	
Trip	110% ±1%
Reset	107% ±1%
Voltage Unbalance (NEMA)	
Trip	2 - 8% Adjustable
Reset	Trip Setting minus 1% (5 - 8%)
	Trip Setting minus 0.5% (2 - 4%)
Trip Delay Time	
Low, High, and Unbalanced Voltage	1 - 30 Seconds Adjustable
Single-phasing faults (>25% UB)	1 Second Fixed
Restart Delay Time	
After a fault or complete power loss	1 - 500 Seconds Adjustable
Output Contact Rating - SPDT	
Pilot Duty	480 VA @ 240 VAC
General Purpose	10 A @ 240 VAC
Power Consumption	6 Watts (maximum)
Weight	14 oz
Enclosure	Polycarbonate
Terminal	
Torque	6 Inch-Pounds Max.
Wire AWG	12 - 20 AWG
Safety Marks	
UL	UL508 (File # E68520)
CE	IEC 60947-6-2
Standards Passed	
Electrostatic Discharge (ESD)	IEC 1000-4-2, Level 3, 6 kv contact, 8 kv air
Radio Frequency Immunity, Radiated	159 MHz, 10 V/m
Fast Transient Burst	IEC 1000-4-4, Level 3, 3.5 kv input power and controls

*NOTE: 50 Hz will increase all delay timers by 20%

Surge	
IEC	IEC 1000-4-5, Level 3, 4kv line-to-line; Level 4, 4kv line-to-ground
ANSI / IEEE	C62.41 Surge and Ring Wave Compliance to a level of 6kv line-to-line
Hi-potential Test	Meets UL508 (2 x rated V +1000V for 1 minute)
Environmental	
Temperature Range	Ambient Operating: -20° - 70° C (-4° - 158°F) Ambient Storage: -40° - 80° C (-40° - 176°F)
Class of Protection	IP20, NEMA 1 (Finger Safe)
Relative Humidity	10-95%, non-condensing per IEC 68-2-3

DIMENSIONS

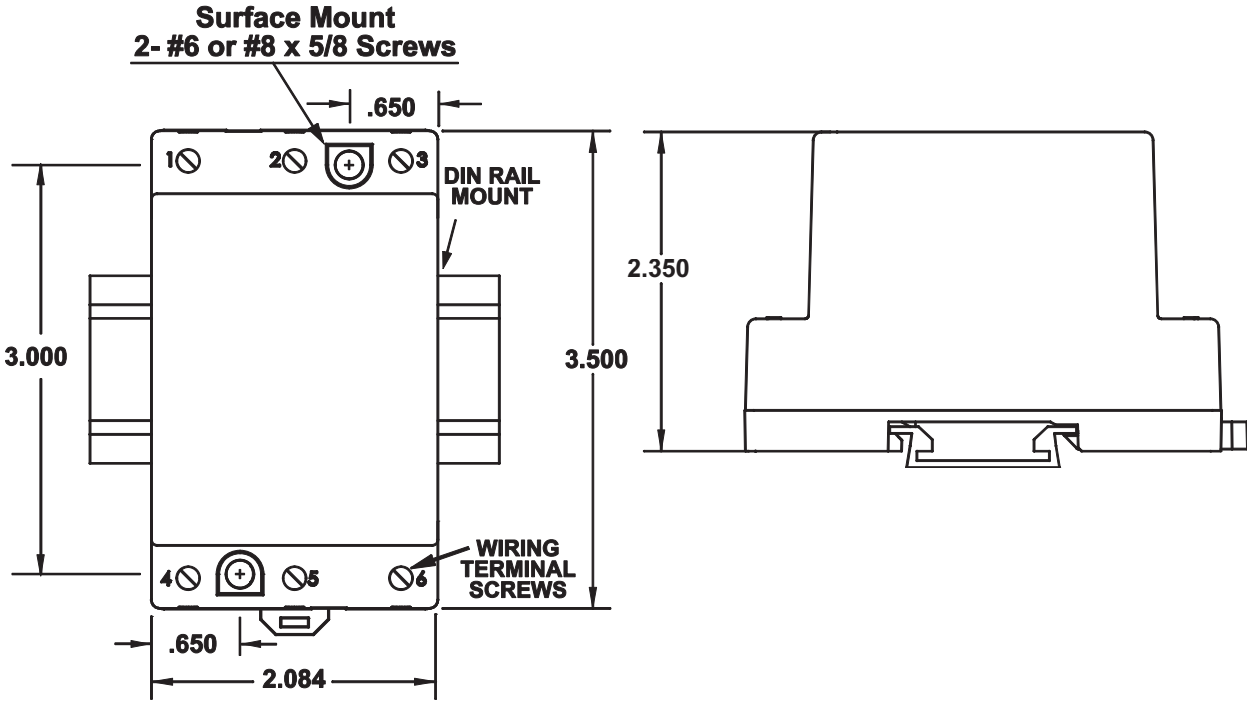

SymCom warrants its microcontroller based products against defects in material or workmanship for a period of five (5) years* from the date of manufacture. All other products manufactured by SymCom shall be warranted against defects in material and workmanship for a period of two (2) years from the date of manufacture. For complete information on warranty, liability, terms, and conditions, please refer to the SymCom Terms and Conditions of Sale document.

Visit our website at www.symcominc.com for our complete catalog and new product listings!

SymCom Inc
Motor Protection & Controls Since 1974

2880 North Plaza Drive, Rapid City, SD 57702
Phone: (800) 843-8848 or (605) 348-5580
FAX: (605) 348-5685

P-201/2 - Pump, Centrifugal, Price Pump 1hp 460V 3ph 3600RPMPN: RC200AI-300-26566-100-36-3X6

P-301/2 - Pump, Centrifugal, Price Pump 3/4hp 460V 3ph 3600RPMPN: RC200AI-250-26566-75-36-3T7

P-401/2 - Pump, Centrifugal, Price, Misc"RC300AI-4.33-26566-500-36-3T7200GPM @ 60 FEET PRESSURE3600RPM 5HP TEFC 460v3P"

P-501/2 - Pump, Centrifugal, Price Pump 2hp 460V 3ph 3600RPMPN: RC200AI-388-26566-200-36-3T6

P503 - Pump, Centrifugal, Price Pump 1/4hp 460V 3ph 1800RPMPN: RC200AI-388-26566-25-18-3T6

P-551/2 - Pump, Centrifugal, Price Pump 3/4hp 460V 3ph 3600RPMPN: RC200AI-250-26566-75-36-3T7

P-553/4 - Pump, Centrifugal, Price Pump 2hp 460V 3ph 3600RPMPN: RC200AI-388-26566-200-36-3T6

INSTALLATION, OPERATING AND MAINTENANCE MANUAL

TYPE RC CENTRIFUGAL PUMPS

MODELS: RC 200/300

PLEASE FILL IN FROM PUMP NAMEPLATE

Pump Model_____

BOM. No._____

Serial No._____

RETAIN MANUAL FOR REFERENCE

Price® Pump Company
21775 8th. Street East
Sonoma, CA 95476
Tel: 707-938-8441
Fax 707-938-0764
Email: sales@pricepump.com

Congratulations

You are now the owner of a Price® Pump Co. Centrifugal Pump. This pump was carefully inspected and subjected to final performance tests before being released for shipment. In order to achieve maximum performance and reliability, please follow the simple instructions in this manual.

RECOMMENDED PRECAUTIONS

1. For satisfactory operation and safety, maximum system pressure must not exceed 350 psi* (24.6kg/sq cm).

2. For satisfactory operation and safety, maximum fluid temperature must not exceed 300°F* (121°C).

3. No modifications, additions or deletions should be made to the pump without prior approval of the factory.

4. Drain pump completely and flush with water before servicing a pump handling volatile or harmful liquids.

READ CAREFULLY THE CAUTION BELOW

The performance of your Price® Pump Co. Centrifugal Pump is based on clean, room temperature, water with suction conditions as shown on the performance curves. If used to pump liquids other than water, pump performance may differ from rated performance based on the different specific gravity, temperature, viscosity, etc. of the liquid being pumped. A standard pump, however, may not be safe for pumping all types of liquids, such as toxic, volatile or chemical liquids, or liquids under extreme temperatures or pressures.

Please consult Price® Pump Co. technical specifications as well as local codes and general references to determine the appropriate pump for your particular application. Since it is impossible for us to anticipate every application of a Price® Centrifugal pump, if you plan to use the pump for a non-water application, contact Price® Pump Co. beforehand to determine whether such application may be appropriate and safe under the operating conditions. Failure to do so could result in property damage or personal harm.

* Depends on seal materials and seal type

Visit our website for product information and technical support

www.pricepump.com

INSTALLATION / OPERATING INSTRUCTIONS
CENTRIFUGAL PUMPS

Warning

Before installing, repairing or performing maintenance on this pump, read these instructions completely.

Disconnect power to pump before servicing to avoid dangerous or fatal electrical shock.

Match supply voltage and frequency to motor nameplate values. Incorrect voltage can cause fire or serious motor damage and void warranty.

Ground motor before connection to electrical power supply! Failure to ground motor can cause severe or fatal electrical shock!

Do not ground to gas supply line!

Before disassembling pump, be certain all liquid has been removed. If pump was used to pump hazardous or toxic fluid, it must be decontaminated prior to disassembly.

Close Coupled Motor Pumps

It is suggested that these pumps be firmly bolted to a level surface. Adequate air movement around motor will help prevent overheating.

Do not over tighten inlet and outlet piping or volute may be damaged.

Power Frame Mounted Pumps

Power Frame mounted pumps must be mounted on a rigid base that will not warp or flex. Each pump must be mounted such that the pump shaft centerline is in-line with the driver shaft centerline. Pads and/or shims will be required on the pump, the driver or both to insure proper alignment. The two shafts should not touch each other (end to end) and the distance between them depends on the coupling used to connect them.

Misalignment will cause vibration, bearing failure and void warranty. Pumps are rough aligned at the factory but must be realigned after shipment and installation.

Pulley driven pump must have pulleys inline and proper belt tightness practices followed.

Direction of Rotation

Note: Motor shaft rotation is viewed from the suction end of pump. A rotational arrow is shown on the front of the pump volute casing. Incorrect rotation can cause pump damage, failure or reduced performance, voiding warranty. It is best to check rotation by momentarily energizing or jogging the motor prior to filling pump with liquid.

Warning! Do not operate pump without liquid as damage may result to the pump internal wear surfaces.

Plumbing

All piping needs to be supported independently of the pump. Piping connections should not exert any stress on the pump volute or fittings.

Suction Piping (Inlet)

(Horizontal Pumps)

Suction line must provide adequate suction pressure and even (Laminar) liquid flow for proper pump operation. Air, entrapped in the suction line due to leaks or improper piping design, may cause the pump to lose prime. Non-priming pumps must have their suction 'flooded' at start up (see datasheets for minimum NPSHR). Also, the suction line must provide sufficient pressure (NPSH) and even flow to pump inlet to prevent pump cavitation. The suction pipe entering the pump should be straight and a minimum length of 5 times and preferably 10 times the pump inlet diameter. Elbows, fittings or valves installed close to the pump inlet can disrupt liquid flow and cause cavitation. Suction lines must be at least the same diameter as the pump inlet or larger if possible.

Price Pump Company recommends against using foot valves in the suction line to maintain liquid in the pump when it's not operating. If foot valves are used, due to suction lift conditions, they must be properly maintained to avoid leaks resulting from wear or fouling. Suction piping must be designed to prevent vapor from being trapped in high spots in the piping. This condition may cause the pump to vapor lock.

Discharge Piping (Outlet)

To control flow and discharge head, it is advisable to install a valve (globe, ball, or other adjustable and non-leak type) in the discharge line adjacent to the pump. The valve may be closed during system repairs to prevent backflow. By installing a check valve in the discharge line, backflow can also be prevented during maintenance or during periods of pump stoppage.

Operation

All centrifugal pumps must be filled with liquid prior to start up. It is suggested that during initial start up the discharge valve be closed and then opened as the motor reaches full rpm's. If pump does not build up pressure as motor speed increases, shut down and make sure that liquid flow into pump is not restricted (see "Troubleshooting").

Note: A centrifugal pumps flow rate and head (pressure) will vary with the amount of resistance (pipe friction and flow restrictions) in the discharge line. As the valve on the discharge line opens, the flow rate and motor amperes draw will increase and head (pressure) will decrease. As the valve on the discharge line is closed, the flow rate and amperes draw will decrease and the head (pressure) will increase.

If resistance in the discharge line is not sufficient, the pump will operate at a condition of maximum flow, sometimes called "end of curve" performance. Maximum horse-power is required to operate at this point and motor overload may result. If excessive amperes draw and motor overload is occurring, reduce the system flow rate by installing a valve or orifice in the discharge line to control (restrict) the pumps flow rate. Alternatively, reduce pump head by trimming impeller to a smaller diameter.

Consult Price Pump or a local Price Pump distributor for assistance.

www.appsupport@pricepump.com

1. Pump fails to build head pressure:

Check for:

a. Pump not primed.

b. Incorrect pump rotation.

c. Driver speed too low.

d. Suction line restricted.

e. Driver failure.

f. Plugged or damaged impeller.

g. Pump or impeller undersized.

h. Pump cavitation.

i. Improper impeller clearance.

2. Pump fails to provide enough flow rate.

Check for:

a. System resistance too high.

b. Pump undersized.

c. Pump not primed.

d. Driver speed too low.

e. Poor suction conditions.

f. Improper impeller clearance.

3. Excessive noise or vibration during operation.

Check for:

a. Motor bearing failing.

b. Pump cavitation.

c. Improper impeller clearance.

4. Leaking mechanical seal.

Check for:

a. Improper assembly.

b. Worn or cracked seal faces.

c. Abrasive material in fluid.

d. Liquid flashing at seal faces (Fluid temperature too high).

e. Seal pressure rating too low for the service.

f. Chemical attack of seal components.

g. Seal operated dry or with a liquid having poor lubricating properties.

5. Pump gradually loses pressure and head.

Check for:

a. Increasing temperature causing cavitation or liquid vaporization.

b. Driver failure.

c. Suction lift too high.

d. Air entering suction line.

6. Motor overheating.

Check for:

a. Excessive flow and amp draw (Throttle discharge).

b. Low voltage or frequency.

c. Flow rate too low with resulting heat rise.

d. Bearing failure.

e. System temperature too high.

Before attempting any repairs under warranty, contact Price Pump to obtain factory authorization. Repairs carried out without authorization may void warranty. Many causes of pump failure are due to improper system design. Refer to the trouble shooting list in this manual before carrying out pump inspection or repair.

DISASSEMBLY

1. Disconnect power source to motor.

2. Disconnect electrical connections tagging wires carefully to preserve correct rotation. Loosen motor base.

3. Remove pump and motor assembly to repair area.

4. Remove volute from pump.

5. Unscrew and remove impeller lockdown bolt and lock washers. Slide impeller off shaft. (If 'keyed' shaft design, do not throw away the shaft key).

6. Remove seal head from the shaft. **Type 6A:** Remove seal head from bracket. **Type 21:** Slide seal head from the shaft. **Type 9:** Loosen set screws and slide seal head off shaft.

7. Remove four motor bolts and remove bracket from motor.

8. Remove seal seat from bracket. Use wooden or plastic dowel to remove the seat from the bracket.

REASSEMBLY

If PEO (pump end only) go assembling PEO.

1. Thoroughly clean the seat cavity of the bracket.

2. Thoroughly clean pump shaft. Assure that the shaft is not grooved and that there is no evidence of pitting or scoring. If the shaft is grooved, scored or worn, replace it.

3. Install the pump shaft onto the motor shaft, aligning set screws of the pump shaft with the keyway of the motor shaft. Install slinger between the pump shaft setscrews.

4. **Type 6A**

a. Place bracket on firm surface with seat cavity (pump end) up. Using a tool (1-19/64" ID x 1-5/8" OD x 1/2" deep), press seal into seal cavity with carbon face of seal (volute end up) up. Press until flange is seated in seal cavity of bracket. Press only on outer flange of seal. Avoid touching carbon surface.

b. Place bracket on motor (aligning the base if applicable). Secure bracket with four motor bolts.

c. Pull pump shaft forward until shoulder of pump shaft contacts back of bracket and slightly snug one setscrew to hold shaft in place.

d. Apply small amount of oil (vegetable or other light oil) on the pump shaft and I.D. of seat elastomer. Gently place seat on end of shaft with ceramic face down toward seal. After sliding impeller onto shaft, seat will be properly located.

e. Slide impeller onto shaft ensuring seat is pushed flush with shoulder of shaft and impeller hub.

f. Install shaft key (if applicable), impeller flat washer, lock washers and lockdown bolt. Tighten securely to 10ft.lbs. Caution: Serviceable Loctite (or equivalent) must be used on lockdown bolt. Lock washer pairs must be assembled 'cam face' to 'cam face'. See diagram.

g. Loosen pump shaft set screw.

h. Install new volute gasket or o-ring and mount volute to bracket. Secure with bolts and tighten evenly.

i. **Setting impeller clearance:**

Slide pump shaft forward until impeller touches volute. Slide shaft back .010-.015". Tighten pump shaft set screws. Turn shaft by hand to ensure impeller does not rub against volute. Proceed to step 9.

5. **For Type 21, 8, 9 seals:**

a. Place the bracket on a firm surface with the seat cavity (pump end) up.

b. Place a small amount of light oil on the seat cup or o-ring seat. Place the seat in the seat cavity with the polished face up toward the pump end.

c. Evenly push seat into cavity with fingers then gently tap seat into place with a wooden dowel or plastic rod (1-1/8" outside diameter). To help ensure the seat is not damaged place the cardboard disk supplied with the seal over the seat face.

6. Place bracket on motor (aligning the base if applicable). Secure bracket with four motor bolts.

7. Pull pump shaft forward until shoulder of pump shaft contacts back of bracket and slightly snug one setscrew to hold shaft in place

8. Install seal head assembly

For Type 21 Seals:

a. Lubricate shaft and seal elastomer with oil (vegetable or other light oil).

b. Install rotary seal head onto pump shaft and slide toward seat until carbon face contacts ceramic seat.

c. Install seal spring and retainer.

d. Installing impeller. Install key in pump shaft. Slide impeller onto shaft ensuring that the spring retainer does not slip between the shoulder of the shaft and the hub of the impeller. Install impeller flat washer, lock washers and lockdown. Tighten securely to 10 ft. lbs. **Caution:** Serviceable Loctite (or equivalent) must be used on lockdown bolt. Lock washer pairs must be assembled 'cam face' to 'cam face'. See diagram

e. Loosen pump shaft set screw.

f. Install new volute gasket/o-ring and mount volute to bracket. Secure with bolts and tighten evenly.

g. Slide pump shaft forward until impeller touches volute. Slide shaft back with a screwdriver **.010"-.015".** Tighten pump shaft set screws. Turn shaft by hand to ensure impeller does not rub against volute. Proceed to step 9.

For Type 8 & 9 Seals:

a. Install impeller. Install key in pump shaft. Slide impeller onto shaft and install impeller washer and lockdown bolt. Tighten securely.

b. Loosen pump shaft set screw.

c. Install new volute gasket/o-ring and mount volute to bracket. Tighten at least two bolts at this time.

d. Slide pump shaft forward until impeller touches volute. Slide shaft back **.010"-.015".** Tighten pump shaft set screws. Turn shaft by hand to ensure impeller does not rub against volute.

Remove volute and impeller.

e. Install seal head onto pump shaft sliding gently past shoulder of shaft. Slide seal head toward seat until carbon face contacts ceramic seat. Tighten seal head setscrews to pump shaft. **Remove clips in seal head and discard.**

j. Reinstall impeller, flat washer, lock washers and lockdown bolt. Tighten securely (10 ft. lbs.)

Caution: Serviceable Loctite (or equivalent) must be used on lockdown bolt. Lock washer pairs must be assembled 'cam face' to 'cam face'. See diagram

k. Install new volute gasket or o-ring and mount volute to bracket. Secure with bolts and tighten evenly.

l. Rotate pump shaft by hand to ensure impeller does not rub against volute.

9. Return pump to installation, reconnect electric connections.

10. Start pump momentarily to observe shaft rotation. If rotation corresponds to the rotation arrow, pump may be put into service. If rotation is incorrect, switch any two leads on 3-phase motors. Check wiring diagram of motor for proper single phase rotation.

11. Remove top pipe plug (if applicable) from the front of volute and prime pump thoroughly, making sure all entrapped air is purged.

12. Start pump allowing adequate time to purge all air from system. Observe any gauges, flow meters, etc. to see of pump performs properly.

DIAGRAM OF
LOCKDOWN ASSEMBLY

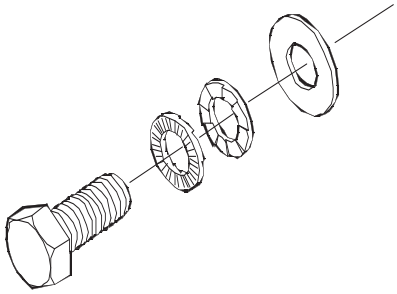

INSTALLING A PEO (PUMP END ONLY)

a. Place the bracket on a firm surface, loosen stub shaft setscrews and carefully remove shipping plug.

b. Place motor in an upright position with motor shaft pointing upward. Make sure motor shaft and end bell flange are free of burrs and surfaces are clean.

c. Align PEO stub shaft setscrews with motor shaft keyway and carefully slid the PEO onto the motor shaft until it sits firmly onto the motor end bell flange.

d. Oriented the PEO's discharge port or base to preferred motor configuration while referencing the motors electrical box position.

e. Install flange bolts and tighten. (Install pump base if applicable)

f. Reposition pump back onto motor base.

g. Refer to pump Reassembly Instructions and proceed to **setting the impeller clearance**.

Type 21 C Face Style Double Seal Installation

(For Type CD, RC, LT & MS Series Pumps)

Double Seal pumps are generally used for one of these reasons:

1. To avoid seal damage when pumping abrasives.

2. To manage seal temperature when pumping hot liquids.

3. To prevent pump fluid from leaking to atmosphere when pumping toxic or other hazardous liquids.

A double seal must have pressure to the seal chamber at a minimum of 5 PSI preferable 10 PSI above pump pressure.

Flow rate through seal chamber will depend upon pump fluid temperature. Minimum flow should be 1 GPM for CD, RC, LT & MS Series Pumps. Flow rates may have to be increased with higher temperatures. Check the seal chamber discharge fluid temperature to be sure fluid is below boiling. We suggest a 140°F to 150°F temperature range. If seal cooling liquid flashes, seal may become damaged. Seal chamber fluid should enter at the bottom and discharge at the top to avoid entrapped air in the chamber. Be sure to prime the secondary pumping system properly as you would any other system.

CAUTION: Always Pressurize the Seal Chamber before starting the main pump!

In a pumping system that starts and stops automatically, insure that both pumps start at the same time.

REASSEMBLY:

1. Clean seat cavity of the bracket and seal plate thoroughly.

2. Thoroughly clean pump shaft. Assure that the shaft is not grooved and that there is no evidence of pitting or fretting. Polish the shaft with extra fine emery cloth and clean the keyway. If the shaft is grooved, fretted or worn, replace it.

3. Install the pump shaft onto the motor shaft, aligning set screws of the pump shaft with the keyway of the motor shaft. Ensure all debris and burrs are removed from the motor shaft and that the slinger is in place.

4. Place bracket on motor (aligning the base if applicable). Secure bracket with four motor bolts.

5. Pull out pump shaft as far as it will go toward volute end and slightly tighten one set screw to hold shaft in place

6. Place a small amount of vegetable oil (or equivalent) on the seat cup. Install seats into seat plate and bracket with polished faces up. Evenly push seat into seat cavity with fingers, then gently tap seat into place with a wooden dowel or plastic rod (1-1/8" outside diameter). To help ensure the seat is not damaged, place the cardboard disk supplied with the seal under the end of the dowel to prevent damaging the seat face.

7. Install seal head assembly:

For Type 21:

a. Lubricate shaft and elastomer with vegetable oil or equivalent.

b. Install first rotary seal head onto pump shaft and slide toward seat using a twisting motion until carbon face touches seal seat.

c. Install second rotary seal head onto shaft sleeve with carbon facing towards pump end.

8. Install seal plate onto pump end of bracket with new gasket and tighten cap screws evenly (note: use pipe sealant on bolts).

9. Install impeller:

a. Install key in pump shaft.

b. Slide impeller onto shaft.

c. Install impeller washer and lockdown. Tighten to 10 ft-lbs.

10. Loosen pump shaft set screw.

11. Install new volute gasket or o-ring and mount volute. Secure with bolts and tighten evenly.

12. Move shaft back with a screwdriver **.010"-.015"**. Tighten pump shaft set screws. Turn shaft by hand to ensure impeller does not rub against volute.

13. Return pump to installation, reconnect electric connections.

14. Start pump momentarily to observe shaft rotation. If rotation corresponds to the rotation arrow on the pump, it may be put into service. If rotation is incorrect, switch any two leads on 3-phase motors to change rotation. Check wiring diagram of motor for single phase rotation correction.

15. Remove top pipe plug (if applicable) from the front of volute and prime pump thoroughly, making sure all air is purged. Turn shaft one revolution and then refill. Replace the pipe plug.

16. Start pump allowing adequate time to purge all air from system. Observe any gauges, flow meters, etc., to see if pump performs properly.

Double Seal Flush Piping Installation

1. Piping of the double seal arrangement should be done in accordance with all governmental regulations and safety codes.

2. All double seals require a barrier flush between the seals for proper lubrication and cooling. The barrier liquid must be maintained at 10-15 PSIG above the discharge pressure of the pump and it must be chemically compatible with the pumped liquid, material construction of the pump, and seals (5/8" double seals have 18-8 parts).

3. The barrier flush shall have a minimum flow rate in accordance with the graph below. If water is used as a fluid, the inlet temperature should not exceed 140°F.

4. A positive pressure must be maintained to the barrier flush between the seal faces even when the pump is not running. To conserve the barrier liquid a solenoid valve (Item 1) may be installed and connected electrically in parallel with the motor so the barrier fluid flows only when the pump is running. Note: The maximum pressure of the barrier fluid at the inlet is 150 PSIG.

5. The inlet should be connected to the bottom and the outlet to the top of the seal cavity.

Procedures for Checking Double Seals for Internal Leakage

Option 1 - for use with 2 flow meters.

Install flow meters on the inlet and outlet lines. Normal operating conditions will be indicated by equal or near equal flow on both flow meters. If the inlet flow meter shows more flow than the outlet, this could indicate excessive leakage.

Option 2 - for use with 1 flow meter.

1. Shut off flow at outlet needle valve (Item 2).

2. Shut off inlet gate valve (Item 8) - for 15 seconds maximum.

3. If pressure in seal cavity drops rapidly rather than gradually while the gate valve is shut, the seal is leaking excessively.

4. To restart open gate valve first then reset valve on outlet.

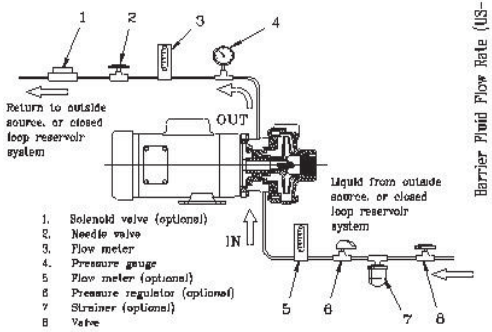

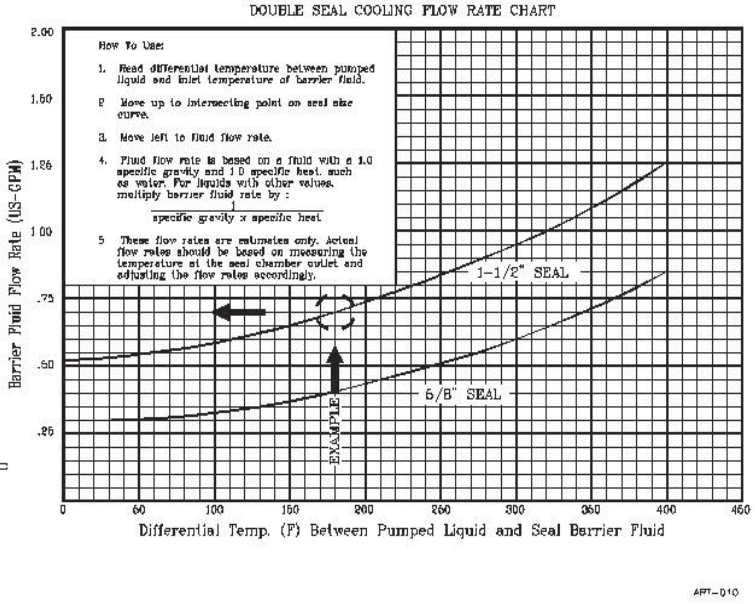

THIS PAGE LEFT INTENTIONALLY BLANK

Key #	Description	Quantity	RC200 Part #	RC300 Part #
A.	Volute SS	1	3710-0	3712-0
B.	Pipe Plugs 1/8”	2	0559	0559
C.	Impeller Specify diameter **			
	SS (Hex bore)	1	3711- (specify dia.)	3713- (specify dia.)
D.	O-ring, Viton	1	3070	3070
E.	Bracket	1	0972	0972
F[1]	Mounting Base	1	0197	0197
F[2]	Volute Bolts	8	0917	0917
G[1]	Motor Bolts		0593	0593
	Base	2		
	No Base	4		
G[2]	Motor Bolts		0673	0673
	Base	2		
	No Base	0		
H.	Hex Shaft w/ setscrews 5/8” ID (56C motor)	1	3714-1	3714-1
H.	Hex Shaft w/ setscrews 7/8” ID (143TC, 145TC, 182C, 184C motor)	1	3715-1	3715-1
J.	Slinger (For 5/8” shaft pumps only)	1	0522	0522
	Seal with Seat			
K[1]	T.21 Fluorocarbon (std.)	1	0553	0553
K[2]	T.9 PTFE (optional)	1	1150	1150
K[3]	Double Seal/Seat (opt):			
	T.21 Fluorocarbon	2	0985	0985
	T.21 Neoprene	2	0984	0984
	T.21 EPR	2	1023	1023
	Double Seal Plate	1	0973	0973
	Plate Gasket, PTFE	1	0974	0974
	Seal Plate Cover Bolts	3	0256	0256
L.	T.21 Quench Opt (For 5/8” shaft pumps only) Fluorocarbon Lip Seal	1	0891	0891
M.	Impeller Lockdown Bolt	1	0596	0596
N.	Impeller Lockdown Washer	1	2423	2423
P.	Impeller Lock Washer	2	2344	2344
Q[1]	Motor, Electric (For 5HP 184C or other footed motors, only use bracket.)	1	Specify P/N	Specify P/N
Q[2]	Power Frames			
	For use with 5/8” ID Shaft	1	5478	5478
	For use with 7/8” ID Shaft	1	5501	5501
Q[3]	Air Motor	1	Specify P/N	Specify P/N
RC - Repair Parts Kit				
	For **56C 5/8” Hex** shaft	1	2207	--------
	For **56C 7/8” Hex** shaft	1	--------	2207-1

(Includes: Hexed Shaft w/ SS , Slinger (5/8” shaft only), Impeller Lockdown Bolt, 2ea. Impeller Lockdown Washers)

** Double seal pumps use double seal impellers, for example; P/N 3711DS - (specify dia.)

PRICE® PUMP CO.

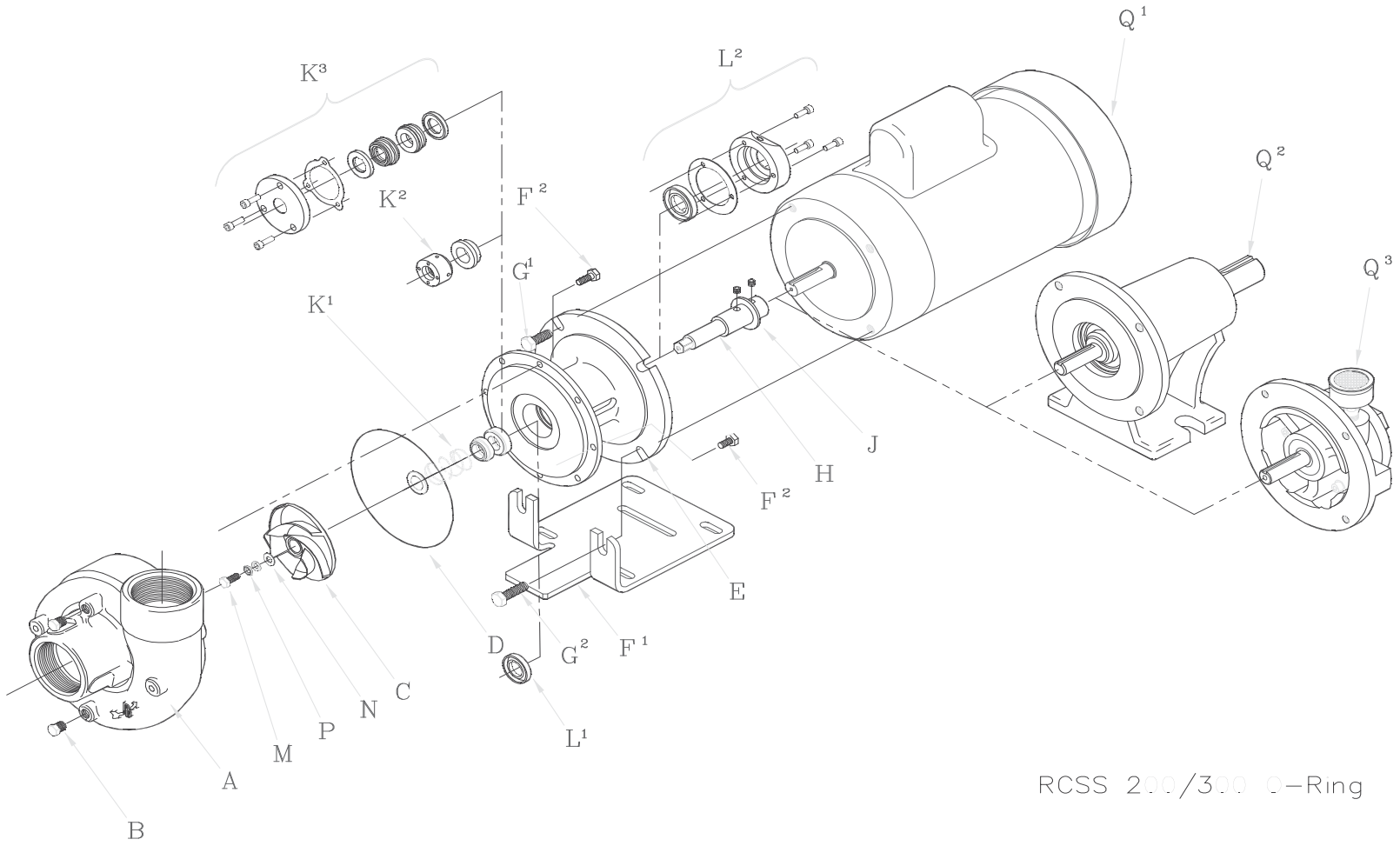

Price® Pump Co.
21775 Eighth Street East * Sonoma, CA 95476-0329 * (707) 938-8441 * Fax (707) 938-0764

Key #	Description	Quantity	RC200 Part #	RC300 Part #
A.	Volute Cast Iron	1	0183-0	0120-0
A.	Volute Bronze	1	3716-0	3717-0
B.	Pipe Plugs 1/8"	2	0557	0557
C.	Impeller - Specify diameter **			
	Cast Iron (Hex Bore)	1	4185 - (specify dia.)	4186 - (specify dia.)
	Bronze (Hex Bore)	1	4115 - (specify dia.)	4116 - (specify dia.)
	Stainless Steel (Hex Bore)	1	3711- (specify dia.)	3713 - (specify dia.)
D.	O-ring (Buna std.)	1	3074	3074
E[1]	Bracket w/ Foot	1	2426	2426
E[2]	Bracket w/o Foot	1	2428	2428
F.	Volute Bolts	8	0573	0573
G.	Motor Bolts	4	0588	0588
H.	Shaft w/ setscrews 5/8" ID, Hex (56C motor)	1	3714-1	3714-1
H.	Shaft w/ setscrews 7/8" ID, Hex (143TC, 145TC, 182C, 184C motor)	1	3715-1	3715-1
J.	Slinger (For 5/8" shaft pumps only)	1	0522	0522
	Seal with Seat			
K[1]	T.6A Buna (std.)	1	0538	0538
K[2]	T.21 Fluorocarbon (optional)	1	0553	0553
K[3]	T.9 PTFE (optional)	1	1150	1150
K[4]	Double Seal/Seat (opt):			
	T.21 Fluorocarbon	2	0985	0985
	T.21 Neoprene	2	0984	0984
	T.21 EPR	2	1023	1023
	Double Seal Plate	1	0973	0973
	Plate Gasket, PTFE	1	0974	0974
	Seal Plate Cover Bolts	3	0256	0256
L[1]	T.6A Quench Lip Seal, Fluorocarbon	1	0899	0899
L[2]	T.21 Quench (5/8" shaft pumps only)			
	Quench Plate	1	0308	0308
	Plate Gasket, Syn. Fiber	1	0504	0504
	Seal Plate Cover Bolts	3	0267	0267
	Fluorocarbon Lip Seal	1	0891	0891
M.	Impeller Lockdown Bolt	1	0596	0596
N.	Impeller Lockdown Washer	1	2423	2423
P.	Impeller Lock Washer	2	2344	2344
R[1]	Motor, Electric (For 5HP 184C or other footed motors, use P/N 2428 bracket.)	1	Specify P/N	Specify P/N
R[2]	Power Frames			
	For use with 5/8" ID Shaft	1	5478	5478
	For use with 7/8" ID Shaft	1	5501	5501
R[3]	Air Motor	1	Specify P/N	Specify P/N
RC - Repair Parts Kit				
	For **56C 5/8" Hex** shaft	1	2207	--------
	For **56C 7/8" Hex** shaft	1	--------	2207-1

(Includes: Hex Shaft w/ SS Slinger (5/8" shaft only), Impeller Lockdown Bolt , Washer and Key)

** Double seal pumps use d ouble seal impellers, for example ; P/N 4185DS - (specify dia.)

PRICE® PUMP CO.

RCCI_P.dwg rev. C

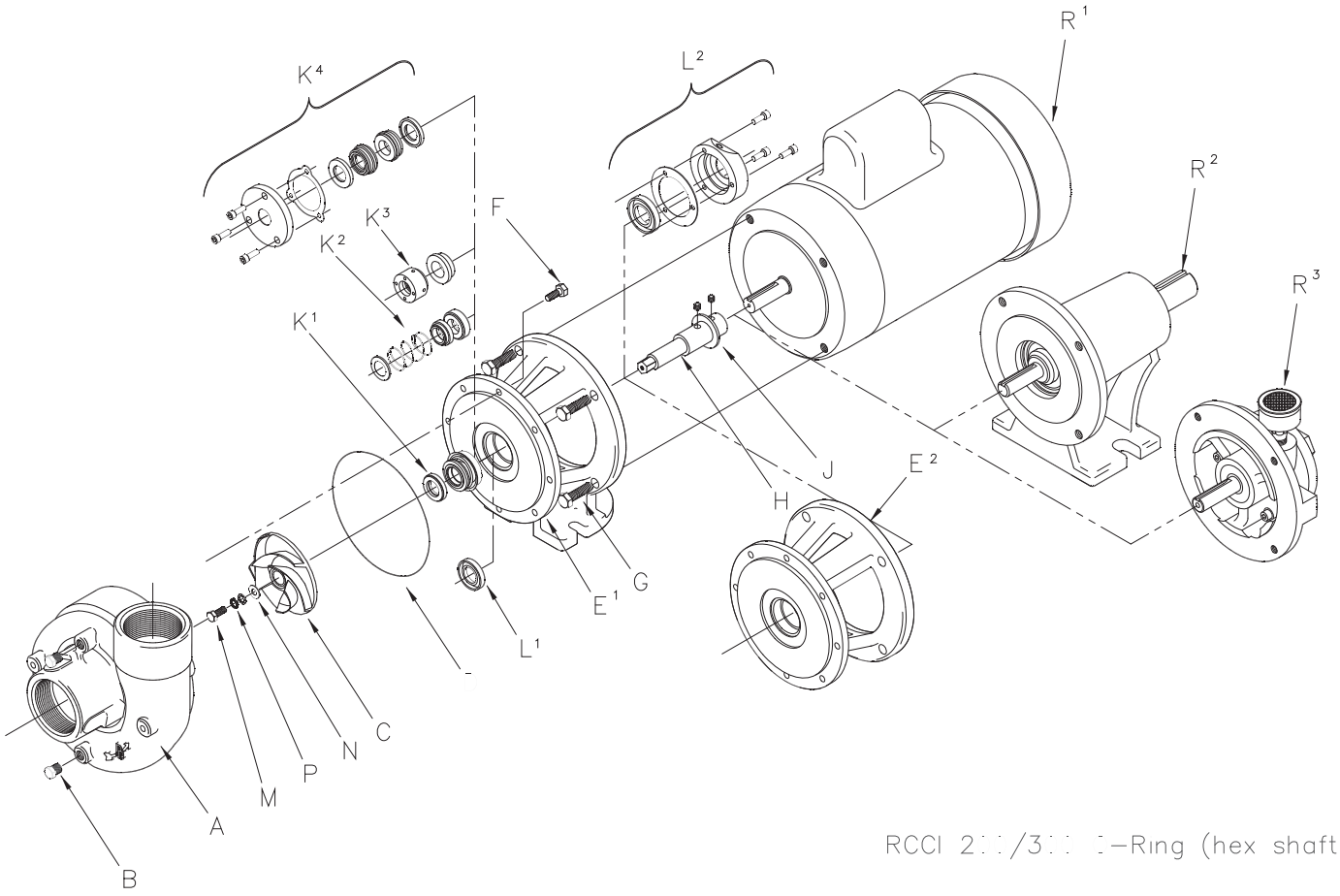

RCCI 2::/3:: :-Ring (hex shaft)

Price® Pump C:.
21775 Eighth Street East * Sonoma, CA 95476-0329 * (707) 938-8441 * Fax (707) 938-0764

PRICE CENTRIFUGAL PUMP CAUTIONS & WARNINGS

- **CAUTION:** Price Pump centrifugal pumps must be operated above minimum flow rate to avoid damage.
- **CAUTION:** All Price Pump centrifugal pumps require the suction to be flooded.
- **CAUTION:** It is recommended that all piping connections to the pump be flexible.
- **WARNNING:** Verify chemical compatibility of the pump materials of construction with the fluid being pumped.
- **WARNNING:** Price centrifugal pumps are not designed for use in sanitary or food applications.
- **CAUTION:** Use only Price Pump original equipment factory replacement parts.
- **WARNNING:** Price pump fluid temperature limits must be observed. Maximum operating temperature is 300°F.
- **CAUTION:** The pump should be thoroughly flushed and drained before disassembly.
- **CAUTION:** For larger pump motor units, weight may exceed 65 1bs. (30 kg).

CAUTION: Maximum working pressure for seals:

- Type 6 Seal **75 PSI** (5.2 bar)
- Type 6A Seal **75 PSI** (5.2 bar)
- Type 8 Seal **325 PSI** (22.4 bar)
- Type 9 Seal **350 PSI** (24.1 bar)
- Type 21 Seal **150 PSI** (10.3 bar)
- Type 2106 Seal **150 PSI** (10.3 bar)

CAUTION: Maximum solid size by pump

- HP75 / MS50 **0.030"** (0.76mm)
- SP150 **0.060"** (1.50mm)
- LT25 **0.120"** (3.05mm)
- F50/75/95 **0.150"** (3.81mm)
- OH75 **0.150"** (3.81mm)
- CD100/150 **0.150"** (3.81mm)
- CL150 **0.150"** (3.81mm)
- RC200/300 **0.380"** (9.60mm)
- XJ-JB100 **0.120"** (3.05mm)
- XJ-JB150 **0.250"** (6.40mm)
- XJ-JB200 **0.440"** (11.2mm)
- XL-XT100 **0.120"** (3.05mm)
- XL-XT150 **0.250"** (6.40mm)
- XL-XT200 **0.440"** (11.2mm)

- HP75 / MS50 **0.5 GPM** (1.9 LPM)
- SP150 **10 GPM** (38 LPM)
- LT25 **0.5 GPM** (1.9 LPM)
- F50/75/95 **5.0 GPM** (19 LPM)
- OH75 **7.0 GPM** (26 LPM)
- CD100 **12 GPM** (45 LPM)
- CD150 **25 GPM** (94 LPM)
- CL150 **40 GPM** (150 LPM)
- RC200 **10 GPM** (38 LPM)
- RC300 **50 GPM** (189 LPM)
- XJ-JB150 **20 GPM** (75 LPM)
- XJ-JB150 **40 GPM** (150 LPM)
- XJ-JB200 **90 GPM** (340 LPM)
- XL-XT100 **10 GPM** (38 LPM)
- XL-XT150 **35 GPM** (132 LPM)
- XL-XT200 **50 GPM** (189 LPM)

GENERAL TERMS OF SALE FOR PRODUCTS

1. GENERAL

A. Seller's price is based on these sales terms and conditions. The agreement and inclusion of other or amended terms in this contract will result in a change (including increase) in Seller's pric e (as may be contained in any price books or quotations) to reflect such other or amended terms . This contract shall represent the final, complete and exclusive statement of the agreement between the parties and may not be modified, supplemented, explained or waived by parole evidence, any Terms and Conditions contained in Buyer's purchase order or request for quotation, any course of dealings between the parties, Seller's performance or delivery, or in any other way. The Terms and Conditions of this contr act may only be modified or waived in a written document signed by an Officer of Seller. These terms are intended to cover all activity of Seller and Buyer hereunder, including sales and use of products, parts and work and all related matters (references t o products include parts and references to work include construction, installation and start -up). Any reference by Seller to Buyer's specifications and similar requirements are only to describe the products and work covered hereby and no warranties or oth er terms therein shall have any force of effect. Any information provided by Seller including, but not limited to, suggestions as to specific equipment does not imply any guarantee of specific suitability and/or material compatibility in a particular appl ication, since many factors outside the control of Seller may affect the suitability of products in a particular application. Catalogs, circulars, similar pamphlets and information contained on websites of the Seller are issued for general information pur poses only and shall not be deemed to modify the provisions hereof.

B. The agreement formed hereby and the language herein shall be construed and enforced under the Uniform Commercial Code as in effect in the State of California on the date hereof.

2. TAXES

Any sales, use or other similar type taxes imposed on this sale or on this transaction and/or any import or export duties or fees as may be assessed or imposed on or as a result of deliveries under this transaction are not included in the price . Such taxes shall be billed separately to the Buyer. Seller will accept a valid exemption certificate from the Buyer if applicable; however, if an exemption certificate previously accepted is not recognized by the governmental taxing authority involved and the Seller is required to pay the tax covered by such exemption certificate. Buyer agrees to promptly reimburse Seller for the taxes paid.

3. PERFORMANCE, INSPECTION AND ACCEPTANCE

A. Unless Seller specifically assumes installation, construction or start-up responsibility, all products shall be finally inspected and accepted within thirty (30) days after arrival at point of delivery. Where seller has responsibility for installation, construction or start -up all work shall be finally inspected and accepted with thirty (30) days after completion of the applicable work by Seller. All claims whatsoever by Buyer, (including claims for shortages) except only those provided for under the WARRANTY AND LIMITATION OF LIABILITY and PATENTS Clauses, hereof, must be asserted in writing by Buyer within said thirty (30) day period or they are waived. If this contract involves partial performance, all such claims must be asserted within said thirty - (30) day period for each partial performance. There shall be n o revocation of acceptance. Rejection may be only for defects substantially impairing the value of products or work and Buyer's remedy for lesser defects shall be those provided for under the WARRANTY AND LIMITATION OF LIABILITY Clause.

B. Seller shall not be responsible for non -performance or for delays in performance occasioned by any causes beyond Seller's reasonable control, including, by way of example and not limitation, to labor difficulties, delays of vendors or carriers, fires, governmental act ions, or shortages of material, components, labor, or manufacturing facilities. Any delays so occasioned shall affect a corresponding extension of Seller's performance dates, which are, in any event, understood to be approximate. IN NO EVENT SHALL BUYER BE ENTITLED TO INCIDENTAL OR CONSEQUENTIAL DAMAGES FOR LATE PERFORMANCE OR FOR A FAILURE TO PERFORM. Seller reserves the right to make partial shipments and to ship products, parts or work which may be completed prior to the scheduled performance date.

C. In the event that Seller has agreed to mount motors, turbines, gears, or other products which are not manufactured by Seller and which are not an integral part of Seller's manufactured product, and a delay in the delivery of such products to Seller occ urs that will cause a delay in Seller's performance date, Seller reserves the right to ship its product upon completion of manufacture and to refund an equitable portion of the amount originally included in the purchase price for mounting without incurring liability for non -performance.

D. Seller reserves to itself the right to change its specifications, drawings and standards if such changes will not impair the performance of its products, and parts, and further those products , and parts, will meet any of Buyer's specifications and other specific product requirements which are a part of this agreement. Seller is a global supplier of products and utilizes parts and products obtained worldwide, and Seller's products supplied under this contract shall be s ubject to Seller's sole determination as to all manufacturing, sourcing, assembly and supply unless otherwise specifically agreed in writing.

E. The manufacture and inspection of products and parts shall be to Seller's Engineering and Quality Assurance st andards, plus such other inspections or tests of documentation as are specifically agreed to by Seller. Requirements for any additional inspection, tests, documentation, or Buyer witness of manufacture, test, and/or inspection shall be subject to addition al charges.

4. TITLE AND RISK OF LOSS

Title and risk of loss shall pass to buyer upon delivery of products at the designated "Ex Works" as defined by Incoterms, unless other wise agreed by the parties.

5. EROSION AND CORROSION

It is specifically unde rstood that products and parts sold hereunder are not warranted for operation with erosive or corrosive fluids or for operation with any fluid or under any operating condition in variance with the specifications of this contract . No product or part shall b e deemed to be defective by reason of failure to resist erosive or corrosive action of any fluid and Buyer shall have no claim whatsoever against Seller therefore. No product shall be deemed defective by reason of any effect on Seller's products of the ac tion or results (such as vibration) of any goods or system (such as piping) not supplied by Seller.

6. BUYER'S RESPONSIBILITY

The design specifications of the equipment require the operation of the equipment within certain parameters and m ay call for the use of speed controls, safety devices, set points or other control devices to insure that the operation remains within design parameters. Buyer agrees and understands that the equipment must be operated and maintained within design specific ations and operated within the specifications of the contract, irrespective of whether controls or devices are otherwise required.

7. WARRANTY AND LIMITATION OF LIABILITY.

A. Seller warrants only that its product and parts, when shipped, will be free fr om defects in materials and workmanship. All claims for defective products or parts under this warranty must be made in writing immediately upon discovery and, in any event, within two (2) years of shipment by seller and all claims for defective work must be made in writing immediately upon discovery. Defective items must be held for Seller's inspection and returned to the sellers' point of original shipment upon request.

ANY UNAUTHORIZED DISSASSEMBLY, ALTERATION OF OR TAMPERING WITH ANY PRODUCT OR COMPONENT MAY "VOID" THE WARRANTY, IN THAT SUCH ACTION WILL RESULT IN SELLER BEING RELEASED AND RELIEVED FROM ITS OBLIGATIONS UNDER THIS WARRANTY AND FOR ANY FURTHER COSTS OR ACTIONS UNDER CLAUSE 7.C, FOLLOWING, AND THE BUYER ASSUMING SOLE RESPONSIBILITY FOR THE COSTS AND RESULTS OF SUCH ACTION.

THE FOREGOING IS EXPRESSLY IN LIEU OF ALL OTHER WARRANTIES WHATSOEVER, EXPRESS, IMPLIED AND STATUTORY, INCLUDING WITHOUT LIMITATION, THE IMPLIED, WARRANTIES OF MERCHANTABILITY AND FITNESS.

B. ANY PRODUCT (S) SOLD HEREU NDER WHICH ARE NOT MANUFACTURED BY SELLER ARE NOT WARRANTED BY SELLER and shall be covered only by the express warranty, if any, of the manufacturer thereof. With respect to products and parts not manufactured by Seller, Seller's only obligation shall be to assign to Buyer, to the extent possible, whatever warranty Seller obtains from the manufacturer.

C. Upon Buyer's submission of a claim as provided above and its substantiation, Seller shall at its option either (i) repair or replace its product, part o r work at the original place of shipment, or (ii) refund an equitable portion of the purchase price.

D. THE FOREGOING IS SELLER'S ONLY OBLIGATION AND BUYER'S EXCLUSIVE REMEDY FOR BREACH OF WARRANTY AND, EXCEPT FOR THE REMEDIES PERMITTED UNDER THE PERFORMANCE, INSPECTION AND ACCEPTANCE AND THE PATENTS CLAUSES HEREOF, THE FOREGOING IS BUYER EXCLUSIVE REMEDY AGAINST SELLER FOR ALL CLAIMS ARISING HEREUNDER OR RELATING HERETO WHETHER SUCH CLAIMS ARE BASED ON BREACH OF CONTRACT, TORT (INCLUDING NEGLIGENCE OR S TRICT LIABILITY) , INDEMNITY OR OTHER THEORIES. BUYER'S FAILURE TO SUBMIT A CLAIM AS PROVIDED ABOVE SHALL SPECIFICALLY WAIVE ALL CLAIMS FOR DAMAGES OR OTHER RELIEF, INCLUDING BUT NOT LIMITED TO CLAIMS BASED ON LATENT DEFECTS. IN NO EVENT SHALL BUYER BE EN TITLED TO INDIRECT, SPECIAL, INCIDENTAL OR CONSEQUENTIAL DAMAGES, NOR FOR DAMAGES FOR LOSS OF USE, LOST PROFITS OR REVENUE, INTEREST, LOST GOODWILL, WORK OR PRODUCTION STOPPAGE, IMPAIRMENT OF OTHER GOODS, INCREASED EXPENSES OF OPERATION, OR THE COST OF PURCHASING REPLACEMENT POWER OR OTHER SERVICES BECAUSE OF SERVICE INTERRUPTIONS. FURTHERMORE, IN NO EVENT SHALL SELLER'S TOTAL LIABILITY FOR DAMAGES OF BUYER EXCEED THE PURCHASE PRICE OF THE PRODUCTS OR PARTS MANUFACTURED BY SELLER AND UPON WHICH SUCH LIABIL ITY IS BASED. ANY ACTION ARISING HEREUNDER RELATED HERETO, WHETHER BASED ON BREACH OF CONTRACT, TORT (INCLUDING NEGLIGENCE) OR OTHER THEORIES, MUST BE COMMENCED WITHIN ONE (1) YEAR AFTER THE CAUSE OF ACTION ACCRUES OR IT SHALL BE BARRED.

8. PURCHASER'S R EPRESENTATIONS & WARRANTIES

Purchaser represents and warranties that the products(s) covered by this contract shall not be used in or in connection with a nuclear facility or application. The parties agree that this representation and warranty is material and is being relied on by seller. This provision may be modified in a separate writing signed by an officer of Price Pump Co.

9. PATENTS

Seller agrees to assume the defense of any suit for infringement of any patents brought against Buyer to the extent of such suit charges infringement of an apparatus or product claim by Seller's product in and of itself, provided (i) said product is built entirely to Seller's design, (ii) Buyer notifies Seller in writing of the filing of such suit within ten (10) days a fter the service of process thereof, and (iii) Seller is given complete control of the defense of such suit, including the right to defend, settle and make changes in the product for the purpose of avoiding infringement of any process or method claims. Pr ovided however, Seller will not defend any suit for infringement of a claimed patent where such alleged infringement is the result of following specific instruction furnished by Seller.

10. EXTENT OF SUPPLY

Only products as listed in Seller's proposal are included in this agreement. It must not be assumed that Seller has included anything beyond same.

11. MANUFACTURING SOURCES

To maintain delivery schedules, Seller reserves the right to have all or any part of the Buyer's order manufactured at an y of Sellers', sellers' licensees or sub contractors' plants, globally.

12. TERMS OF PAYMENT

Net 30 days from date of invoice .

13. ARBITRATION

In the event a dispute arises between the parties relating to or arising out of this agreement, the parties agree to attempt to have their senior management amicably settle the matter. In the event that the matter cannot be settled, the parties shall submit all disputes relating to this Agreement (whether contract, tort, products liability or otherwise) to bind ing Arbitration before a panel of arbitrators under the Commercial Dispute Resolution Procedures of the American Arbitration Association. Each party shall appoint an arbitrator and the third shall be selected in accordance with the rules of the American A rbitration Association. Judgment upon the award may be entered in any court having jurisdiction. The parties shall cooperate in providing reasonable disclosure of relevant documents. Each party shall bear its own expenses, and the costs and fees of the ar bitration shall be borne as allocated by the Arbitrator.

P-6101,2,3 - Beta - BT4b - BT4B0708PVT2000UD010A01Flow: 1.88GPH / 7.10L/HPressure: 102PSI / 07BAR"

ProMinent®

Operating instructions

Solenoid Metering Pump

Beta® b BT4b and BT5b

EN

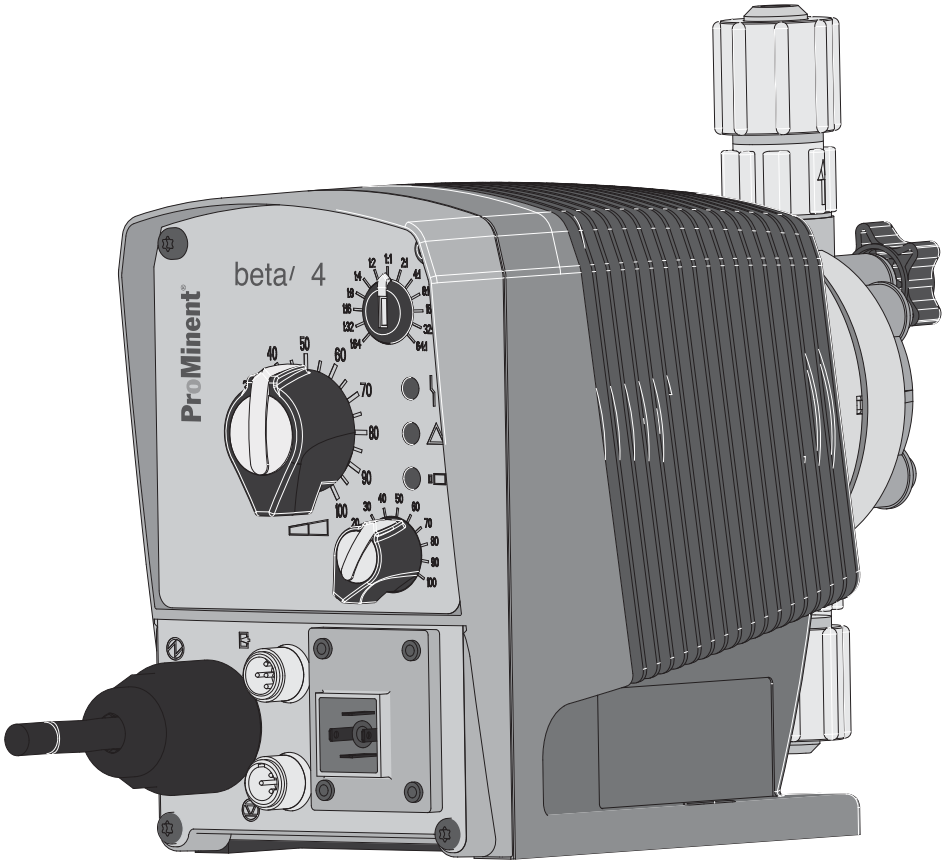

Please carefully read these operating instructions before use. · Do not discard.
The operator shall be liable for any damage caused by installation or operating errors.
The latest version of the operating instructions are available on our homepage.

Supplementary information



Fig. 1: Please read!

Read the following supplementary information in its entirety! You will benefit more from using the operating instructions should you already know this information.

The following are highlighted separately in the document:

- Enumerated lists

→ Instructions

⇨ Outcome of the instructions

↳ *'State the identity code and serial number' on page 2*: Links to points in this chapter

- refer to ... : References to points in this document or another document

[Keys]

Information

This provides important information relating to the correct operation of the unit or is intended to make your work easier.

Safety Information

Safety information is identified by pictograms - see Safety Chapter.

Validity

These operating instructions conform to current EU regulations applicable at the time of publication.

State the identity code and serial number

Please state identity code and serial number, which you can find on the nameplate when you contact us or order spare parts. This enables us to clearly identify the unit type and material versions.

Table of contents

1 Identity code 5
2 About this pump 7
3 Safety Chapter 8
4 Storage, Transport and Unpacking 13
5 Overview of Equipment and Control Elements 14
5.1 Overview of Equipment 14
5.2 Control Elements 15
5.2.1 Pulse control switch 15
5.2.2 Stroke Length Adjustment Button 15
5.2.3 Multifunctional Switch 15
5.2.4 Functional and Fault Indicators 16
5.2.5 "External control" terminal 16
5.2.6 "Level switch" terminal 16
6 Functional description 17
6.1 Liquid End 17
6.2 Drive Unit 17
6.3 Capacity 17
6.4 Self-Bleeding 17
6.5 Operating modes 17
6.6 Functions 18
6.7 Relay 18
6.8 Hierarchy of Operating Modes, Functions and Fault Statuses 18
7 Assembly 19
8 Installation, hydraulic 20
8.1 Installing hose lines 21
8.1.1 Installation of Metering Pumps Without Bleed Valve 21
8.1.2 Installation of Metering Pumps With Bleed Valve 23
8.1.3 Installation of Metering Pumps With Self-bleeding (SEK Type) 24
8.1.4 Basic installation notes 25
9 Electrical Installation 27
9.1 Supply voltage connector 28
9.1.1 Mains voltage 28
9.2 Supply voltage connector - low voltage 28
9.3 Description of the Terminals 29
9.3.1 "External control" terminal 29
9.3.2 "Level switch" terminal 31
9.4 Relay 32
9.4.1 Relay functions 32
9.4.2 "Fault indicating relay" output (identity code 1 + 3) 32
9.4.3 "Fault indicating relay" + "Pacing relay" output (identity code 4 + 5) 33
10 Start up 34
11 Operation 37
11.1 Manual 37
11.1.1 Capacity 37
11.1.2 Functions 37
11.1.3 External contact 38
11.1.4 External analog 39
11.2 Remote operation 39
12 Maintenance 40

13 Repairs ... 42
13.1 Cleaning valves ... 43
13.2 Replacing the diaphragm ... 44
14 Troubleshooting ... 47
14.1 Faults without a fault message ... 47
14.2 Fault messages ... 48
14.3 Warning messages ... 48
14.4 All Other Faults ... 48
15 Decommissioning ... 49
16 Technical data ... 51
16.1 Performance data ... 51
16.2 Accuracy ... 53
16.2.1 Standard Liquid End ... 53
16.2.2 Self-Bleeding Liquid End ... 53
16.3 Viscosity ... 53
16.4 Material Data ... 54
16.5 Electrical data ... 54
16.6 Temperatures ... 56
16.7 Climate ... 56
16.8 Degree of Protection and Safety Requirements ... 57
16.9 Compatibility ... 57
16.10 Sound pressure level ... 57
16.11 Shipping weight ... 57
17 Dimensional drawings ... 58
18 Diagrams for setting the metering capacity ... 64
19 Exploded Views of Liquid Ends ... 70
20 Further order information ... 107
21 EC Declaration of Conformity for Machinery ... 109
22 EC Declaration of Conformity for Machinery ... 110
23 Index ... 111

1 Identity code

Product range Beta b							
BT4b	Type	Capacity					
		bar	l/h				
	1000	10	0.74				
	1601	16	1.10				
	1602	16	2.20				
	1604	16	3.60				
	0708	7	7.10				
	0413	4	12.30				
	0220	2	19.00				
BT5b							
	2504	25	2.90				
	1008	10	6.80				
	0713	7	11.00				
	0420	4	17.10				
	0232	2	32.00				
		Material of dosing head/valves					
		PP	Polypropylene/PVDF. With the self-bleeding version (SEK): polypropylene/polypropylene				
		NP	Clear acrylic/PVDF. With the self-bleeding version (SEK): Clear acrylic/PVC				
		PV	PVDF/PVDF				
		TT	PTFE/PTFE				
		SS	Stainless steel 1.4404/1.4404				
			Material of seals/diaphragm				
			T	PTFE/PTFE coated			
			E	EPDM/PTFE coated, only for PP and NP self-bleeding (SEK)			
			B	FPM-B/PTFE coated, only for PP and NP self-bleeding (SEK)			
			W	Diaphragm additionally with FPM coating for media containing silicate			
				Dosing head design			
				0	without bleed valve, without valve spring only for NP, TT, SS and type 0232		
				1	without bleed valve, with valve spring only for NP, TT, SS and type 0232		
				2	with bleed valve, without valve spring only for PP, PV, NP not for type 0232		
				3	with bleed valve, with valve spring only for PP, PV, NP not for type 0232		
				4	version for higher-viscous media only for PVT, type 1604, 2504, 0708, 1008, 0413, 0713, 0220, 0420		
				7	self-bleeding (SER) only for PV/NP, not for types 1000, 1601 and 0232		
				9	self-bleeding (SEK) only for PP/NP, not for types 1000 and 0232		
					Hydraulic connector		
					0	Standard connection in line with technical data	
					5	Connector for 12/6 tube, discharge side only	
					9	Connector for 10/4 tube, discharge side only	

Product range Beta b																
						Design										
						0	Standard									
							Logo									
							0	with ProMinent logo								
								Electrical connections								
								U	100 ... 230 V ± 10%, 50/60 Hz*							
									Cable and plug							
									A	2 m European						
									B	2 m Swiss						
									C	2 m Australian						
									D	2 m USA						
									1	2 m open end						
										Relay						
										0	No relay					
										1	fault indicating relay (NC) (change-over relay)					
										3	fault indicating relay (NO) (change-over relay)					
										4	as 1 + pacing relay, (ONE each)					
										5	as 3 + pacing relay, (ONE each)					
											Accessories					
											0	without accessories				
											1	with foot and injection valve, 2 m PVC suction line, 5 m PE metering line				
												Control type				
												0	no lock			
												1	with lock: manual operation locked when external cable plugged in			
												H	External without PCS stop			
													Control version			
													0	Standard		
													A	External analogue 0...20 mA / 4...20 mA		
														Options		
														00	no options	

2 About this pump

Properties of the device

This solenoid metering pump Beta b is equipped with all adjustment and activation functions for modern water treatment and the dosing of chemicals. It has pulse step-up and pulse step-down compared with the preceding model. This enables it to adapt more precisely to external signal generators. The result is the simpler and more precise adjustment of chemical consumption to the actual need. It also has a 10 percent increase in efficiency and energy efficiency over the preceding model. The Beta b can be simply adjusted during operation.

3 Safety Chapter

Identification of safety notes

The following signal words are used in these operating instructions to denote different severities of danger:

Signal word	Meaning
WARNING	Denotes a possibly dangerous situation. If this is disregarded, you are in a life-threatening situation and this can result in serious injuries.
CAUTION	Denotes a possibly dangerous situation. If this is disregarded, it could result in slight or minor injuries or material damage.

Warning signs denoting different types of danger

The following warning signs are used in these operating instructions to denote different types of danger:

Warning signs	Type of danger
	Warning – automatic start-up.
	Warning – high-voltage.
	Warning – danger zone.

Intended Use

- Only use the pump to meter liquid feed chemicals.
- Only use the pump after it has been correctly installed and started up in accordance with the technical data and specifications contained in the operating instructions.
- Observe the general limitations with regard to viscosity limits, chemical resistance and density - see also ProMinent resistance list in the Product Catalogue or at www.prominent.com!
- All other uses or modifications are prohibited.
- The pump is not intended for the metering of gaseous media and solids.
- The pump is not intended for the metering of flammable media without implementing suitable protective measures.
- The pump is not intended for the metering of explosive media.
- The pump is not intended for operation in areas at risk from explosion.
- The pump is not intended for exterior applications without the implementation of suitable protective measures.
- The pump should only be operated by trained and authorised personnel, see the following "Qualifications" table.
- You are obliged to observe the information contained in the operating instructions at the different phases of the unit's service life.

Safety Information



WARNING!

Warning about personal and material damage

The pump can start to pump, as soon as it is connected to the mains voltage.

– Install an emergency cut-off switch in the pump power supply line or integrate the pump in the emergency cut-off management of the system.



WARNING!

Danger of electric shock

A mains voltage may exist inside the pump housing.

– If the pump housing has been damaged, you must disconnect it from the mains immediately. It may only be returned to service after an authorised repair.



WARNING!

Warning of dangerous or unknown feed chemical

Should a dangerous or unknown feed chemical be used: It may escape from the hydraulic components when working on the pump.

– Take appropriate protective measures before working on the pump (e.g. safety glasses, safety gloves, ...). Observe the safety data sheet for the feed chemical.
– Drain and flush the liquid end before working on the pump.



WARNING!

Fire danger

When pumping inflammable media the operator must take suitable safety precautions.



WARNING!

Danger from hazardous substances!

Possible consequence: Fatal or very serious injuries.

Please ensure when handling hazardous substances that you have read the latest safety data sheets provided by the manufacture of the hazardous substance. The actions required are described in the safety data sheet. Check the safety data sheet regularly and replace, if necessary, as the hazard potential of a substance can be re-evaluated at any time based on new findings.

The system operator is responsible for ensuring that these safety data sheets are available and that they are kept up to date, as well as for producing an associated hazard assessment for the workstations affected.



CAUTION!

Warning of feed chemical spraying around

Feed chemical can spray out of the hydraulic components if they are manipulated or opened due to pressure in the liquid end and adjacent parts of the system.

– Disconnect the pump from the mains power supply and ensure that it cannot be switched on again by unauthorised persons.
– Depressurise the system before commencing any work on hydraulic parts.



CAUTION!

Warning of feed chemical spraying around

The metering pump can generate a multiple of its rated pressure. Hydraulic parts can rupture if a discharge line is blocked.

– Correctly install a relief valve in the discharge line downstream of the metering pump.



CAUTION!

Warning of feed chemical spraying around

An unsuitable feed chemical can damage the wetted parts of the pump.

– Take into account the resistance of the wetted materials when selecting the feed chemical - see the ProMinent Product Catalogue or visit our homepage.



CAUTION!

Danger of injury to personnel and material damage

The use of untested third party components can result in injury to personnel and material damage.

– Only fit parts to metering pumps that have been tested and recommended by ProMinent.



CAUTION!

Danger from incorrectly operated or inadequately maintained pumps

Danger can arise from a poorly accessible pump due to incorrect operation and poor maintenance.

– Ensure that the pump is accessible at all times.
– Adhere to the maintenance intervals.



CAUTION!

Danger from incorrect metering

Should a different liquid end size be fitted, this will change the metering behaviour of the pump.

– Have the pump reprogrammed in the works.



CAUTION!

Warning against illegal operation

Observe the regulations that apply where the device is installed.

Fixed separating protective equipment

- Dosing head
- Housing
- Hood (houses the control elements)

The dosing head may only be removed by the customer in accordance with the "Repair" chapter.

The housing and the hood may only be removed by ProMinent customer service department.

Information in the event of an emergency

In an emergency, either pull out the mains plug, turn the multifunctional switch to "Stop" or press the Emergency Stop switch installed on the customer's side or disconnect the pump from the mains power supply in line with the emergency shut-down management guidelines for your system!

If feed chemical escapes, additionally ensure that the hydraulic system around the pump is at atmospheric pressure. Adhere to the safety data sheet for the feed chemical.

Qualification of personnel

Task	Qualification
Storage, transport, unpacking	Instructed person
Assembly	Technical personnel, service
Planning the hydraulic installation	Qualified personnel who have a thorough knowledge of metering pumps
Hydraulic installation	Technical personnel, service
Installation, electrical	Electrical technician
Operation	Instructed person
Maintenance, repair	Technical personnel, service
Decommissioning, disposal	Technical personnel, service
Troubleshooting	Technical personnel, electrical technician, instructed person, service

Explanation of the table:

Qualified personnel

A qualified employee is deemed to be a person who is able to assess the tasks assigned to him and recognise possible dangers based on his/her technical training, knowledge and experience, as well as knowledge of pertinent regulations.

Note:

A qualification of equal validity to a technical qualification can also be gained by several years of employment in the relevant field of work.

Electrical technician

An electrical technician is able to complete work on electrical systems and recognise and avoid possible dangers independently based on his/her technical training and experience, as well as knowledge of pertinent standards and regulations.

The electrical technician should be specifically trained for the working environment in which he is employed and know the relevant standards and regulations.

An electrical technician must comply with the provisions of the applicable statutory directives on accident prevention.

Instructed person

An instructed person is deemed to be a person who has been instructed and, if required, trained in the tasks assigned to him/her and possible dangers that could result from improper behaviour, as well as having been instructed in the required protective equipment and protective measures.

Service

The Service department refers to service technicians, who have received proven training and have been authorised by ProMinent to work on the system.

Sound pressure level

Sound pressure level LpA < 70 dB according to EN ISO 20361

at maximum stroke length, maximum stroke rate, maximum back pressure (water)

4 Storage, Transport and Unpacking

Safety Information

WARNING!

The transporting of pumps which have been used with radioactive feed chemicals is forbidden!

They will also not be accepted by ProMinent!

WARNING!

Only return metering pumps for repair in a cleaned state and with a flushed liquid end - refer to "Decommissioning!

Only return metering pumps with a completed Decontamination Declaration form. The Decontamination Declaration constitutes an integral part of an inspection / repair order. A unit can only be inspected or repaired when a Declaration of Decontamination Form is submitted that has been completed correctly and in full by an authorised and qualified person on behalf of the pump operator.

The "Decontamination Declaration Form" can be found on our homepage.

CAUTION!

Danger of material damage

The device can be damaged by incorrect or improper storage or transportation!

- The unit should only be stored or transported in a well packaged state - preferably in its original packaging.
- The packaged unit should also only be stored or transported in accordance with the stipulated storage conditions.
- The packaged unit should be protected from moisture and the ingress of chemicals.

Ambient conditions

Data	Value	Unit
Minimum storage and transport temperature	-20	°C
Maximum storage and transport temperature	+60	°C
Maximum air humidity *	95	% rel. humidity

* non-condensing

Scope of delivery

Compare the delivery note with the scope of delivery:

- Metering pump with mains cable
- Connector kit for hose/pipe connection (optional)
- Product-specific operating instructions with EC Declaration of Conformity
- Optional accessories

5 Overview of Equipment and Control Elements

5.1 Overview of Equipment

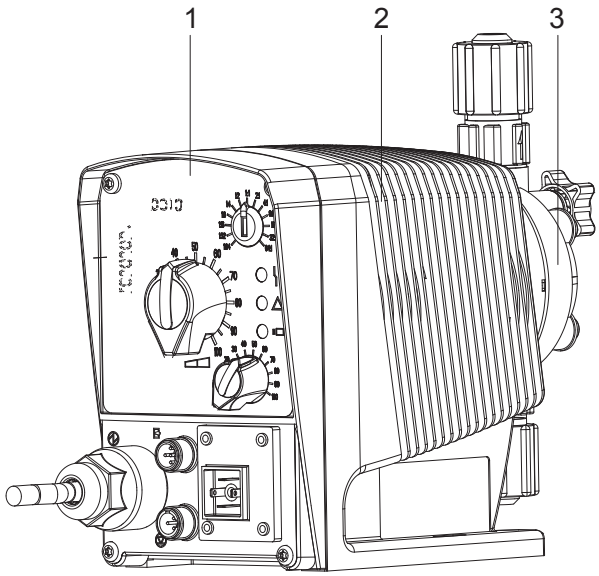

Fig. 2: Complete overview

1 Control unit
2 Drive unit
3 Liquid end

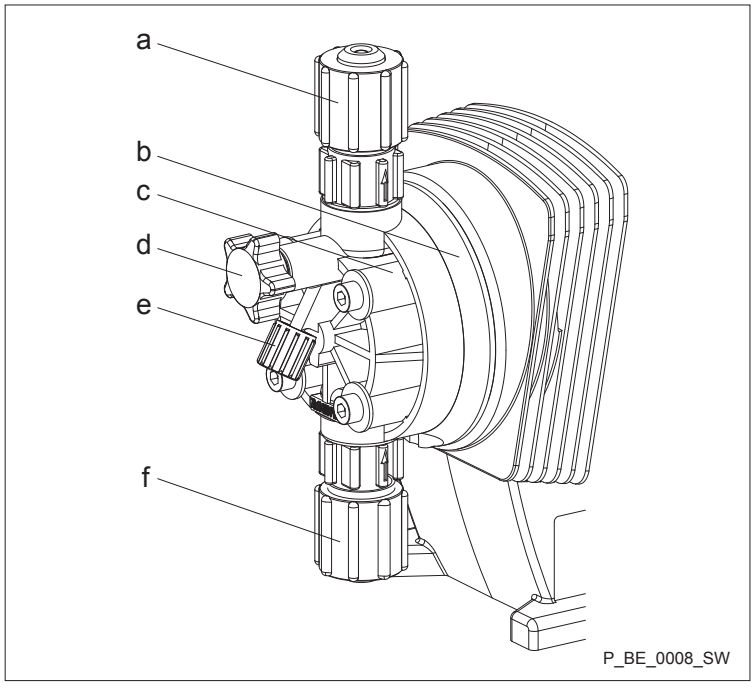

Fig. 3: Overview of liquid end (PV)

a Discharge valve
b Backplate
c Dosing head
d Bleed valve
e Bypass hose sleeve
f Suction valve

5.2 Control Elements

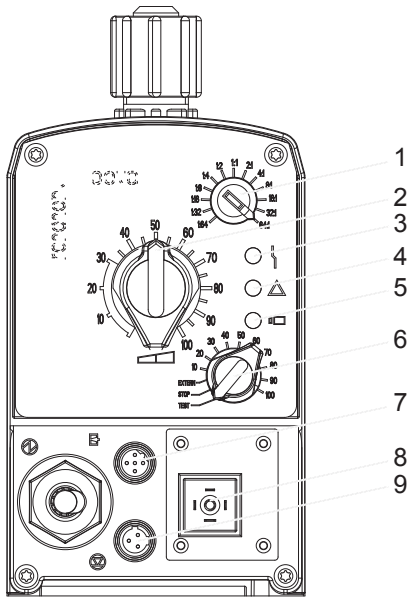

P_BE_0011_SW

Fig. 4

1 Pulse control switch
2 Stroke Length Adjustment Button
3 Fault indicator (red)
4 Warning indicator (yellow)
5 Operating indicator (green)
6 Multifunctional Switch
7 "External control" terminal
8 Relay connection (optional)
9 "Level switch" terminal

5.2.1 Pulse control switch

In **"External Contact" operating mode**, the pulse control switch either triggers a series of strokes or steps down an incoming series of contacts by a single contact (at the "external control" terminal).

In **"External Analogue" operating mode**, the stroke rate can be controlled by an mA signal via the pulse control switch. To do so, the multifunctional switch has to be turned to "Extern".

5.2.2 Stroke Length Adjustment Button

The stroke length adjustment button can be used to adjust the stroke length.

5.2.3 Multifunctional Switch

The multifunctional switch can be used to set the following functions, operating modes and stroke rate.

The operating modes that can be set are:

- Test (priming function)
- Stop (optionally missing)
- Extern (Contact)
- External (analogue, optional)
- Manual (setting stroke rate in 10% increments)

5.2.4 Functional and Fault Indicators

Fault indicator (red)

The fault indicator lights up if the fluid level in the dosing tank falls below the second switching point of the level switch (20 mm residual filling level in the dosing tank).

The fault indicator lights up if the current falls below 3.8 mA (only with 4...20 mA) or exceeds 23 mA in "External Analogue" operating mode.

This LED flashes in the event of an undefined operating status.

Warning indicator (yellow)

The warning indicator lights up if the fluid level in the dosing tank falls below the first switching point of the level switch.

Operating indicator (green)

The operating indicator lights up if the pump is ready for operation and there are no fault or warning alerts. It goes out quickly as soon as the pump has performed a stroke.

5.2.5 "External control" terminal

The "external control" terminal is a five-pole panel terminal.

It enables the following functions and operating modes to be used:

- Pause
- External contact
- External Analogue (optional)
- Auxiliary frequency (external frequency changer)



The two- and four-pole cables used to date can continue to be used. The "Auxiliary frequency" function can, however, only be used with a five-pole cable.

5.2.6 "Level switch" terminal

A 2-stage level switch with pre-warning and end switch-off can be connected.

6 Functional description

6.1 Liquid End

The dosing process is performed as follows: The diaphragm is pressed into the dosing head; the pressure in the dosing head closes the suction valve and the feed chemical flows through the discharge valve out of the dosing head. The diaphragm is now drawn out of the dosing head; the discharge valve closes due to the negative pressure in the dosing head and fresh feed chemical flows through the suction valve into the dosing head. One cycle is completed.

6.2 Drive Unit

The diaphragm is driven by an electromagnet, which is controlled by an electronic controller.

6.3 Capacity

The capacity is determined by the stroke length and the stroke rate.

The stroke length is adjusted by the stroke length adjustment knob within a range of 0 ... 100 %. A stroke length of between 30 ... 100 % (SEK type: 50 ... 100 %) is recommended to achieve the specified reproducibility!

Data	Value	Unit
Recommended stroke length, standard type	30 ... 100	%
Recommended stroke length, SEK type	50 ... 100	%

The stroke rate can be set within a range of 10 ... 100 % using the multifunctional switch.

6.4 Self-Bleeding

Self-bleeding liquid ends (SEK types) are capable of independent priming when a discharge line is connected and diverting existent air pockets via a bypass. During operation they are also capable of conveying away gases which are produced, independently of the operating pressure in the system. It is also possible to dose precisely in a depressurised state due to the integral back pressure valve.

6.5 Operating modes

The operating modes are selected by means of the multifunctional switch.

"Manual" operating mode

As soon as the stroke rate has been set by the multifunctional switch, the pump finds itself in "Manual" operating mode. 100% corresponds to 180 strokes/min.

"External contact" operating mode

The "External Contact" operating mode is described below in the "Operation" and "Installation, Electrical" chapters.

"External Analogue" operating mode

The "External Analogue" operating mode is described below in the "Operation" and "Installation, Electrical" chapters.

6.6 Functions

The functions are described below in the "Operation" chapter.

6.7 Relay

The pump has two connecting options.

Fault indicating relay option

The relay can switch a connected power circuit (e.g. for an alarm horn) in the event of warnings or fault messages (e.g. warning levels).

The relay can be retrofitted with the retrofit kit via a knock-out opening in the pump foot - refer to "Retrofitting relays".

Fault indicating and pacing relay option

This combined relay can generate a contact with each stroke via its pacing relay in addition to its function as a fault indicating relay.

The relay can be retrofitted with the retrofit kit via a knock-out opening in the pump foot - refer to "Retrofitting relays".

6.8 Hierarchy of Operating Modes, Functions and Fault Statuses

The different operating modes, functions and fault statuses have a different effect on if and how the pump reacts.

The following list shows the order:

1. - Test (priming)
2. - Fault, Stop, Pause
3. - Auxiliary frequency (external frequency changeover)
4. - Manual, Extern Contact

Comments:

re 1 - "Priming" can take place in any mode of the pump (providing it is functioning).

re 2 - "Fault", "Stop" und "Pause" stop everything apart from "Priming".

re 3 - The stroke rate of "Auxiliary frequency" always has priority over the stroke rate specified by an operating mode in 4.

7 Assembly

– *Compare the dimensions on the dimension sheet with those of the pump.*



WARNING!

Danger of electric shock

If water or other electrically conducting liquids penetrate into the drive housing, in any other manner than via the pump's suction connection, an electric shock may occur.

– Position the pump so that it cannot be flooded.



CAUTION!

Danger from incorrectly operated or inadequately maintained pumps

Danger can arise from a poorly accessible pump due to incorrect operation and poor maintenance.

– Ensure that the pump is accessible at all times.
– Adhere to the maintenance intervals.

Capacity too low

The liquid end valves can be disturbed by vibrations.

– *Secure the metering pump so that no vibrations can occur.*

Capacity too low

If the valves of the liquid end are not vertical, they cannot close correctly.

– *Suction and discharge valves must stand vertically upwards (for self-bleeding liquid end, the bleed valve).*

Mount the metering pump with the pump foot on a horizontal, level and load-bearing supporting surface.

8 Installation, hydraulic

Safety Information



CAUTION!

Warning of feed chemical spraying around

An unsuitable feed chemical can damage the wetted parts of the pump.

– Take into account the resistance of the wetted materials when selecting the feed chemical - see the ProMinent Product Catalogue or visit our homepage.



CAUTION!

Warning of feed chemical spraying around

Pumps which are not fully installed hydraulically can pump feed chemical from the outlet opening of the discharge valve as soon as they are connected to the mains power supply.

– First install the pump hydraulically, then electrically.
– In the event that you have failed to do so, turn the multi-functional switch to *[Stop]* (if fitted) or press an On / Off switch or Emergency Stop switch on site.



CAUTION!

Warning of feed chemical spraying around

Feed chemical can spray out of the hydraulic components if they are manipulated or opened due to pressure in the liquid end and adjacent parts of the system.

– Disconnect the pump from the mains power supply and ensure that it cannot be switched on again by unauthorised persons.
– Depressurise the system before commencing any work on hydraulic parts.



CAUTION!

Danger from rupturing hydraulic components

Peak loads during the dosing stroke can cause the maximum permissible operating pressure of the system and pump to be exceeded.

– The discharge lines are to be properly designed.



CAUTION!

Danger of personnel injury and material damage

The use of untested third party parts can result in personnel injuries and material damage.

– Only fit parts to metering pumps, which have been tested and recommended by ProMinent.

8.1 Installing hose lines

8.1.1 Installation of Metering Pumps Without Bleed Valve

Safety Information



CAUTION!

Warning of feed chemical spraying around

The pipes can loosen or rupture if they are not installed correctly.

- Route all hose lines so they are free from mechanical stresses and kinks.
- Only use original hoses with the specified hose dimensions and wall thicknesses.
- Only use clamp rings and hose nozzles that are intended for the hose diameter in question to ensure the long service life of the connections.



CAUTION!

Danger from rupturing hydraulic components

Hydraulic components can rupture if the maximum permissible operating pressure is exceeded.

- Always adhere to the maximum permissible operating pressure of all hydraulic components - please refer to the product-specific operating instructions and system documentation.
- Never allow the metering pump to run against a closed shut-off device.
- Install a relief valve.



CAUTION!

Hazardous feed chemicals can escape

Hazardous or extremely aggressive feed chemicals can leak out when using conventional bleeding procedures with metering pumps.

- Install a bleed line with return line into the storage tank.



CAUTION!

Hazardous feed chemicals can escape

Hazardous or extremely aggressive feed chemicals can leak out in the event that the metering pump is removed from the installation.

- Install a shut-off valve on the metering pump's pressure and discharge sides.



CAUTION!

Uncontrolled flow of feed chemical

Feed chemical can press through a stopped metering pump if there is back pressure.

- Use an injection valve or a vacuum breaker.

CAUTION!

Uncontrolled flow of feed chemical

Feed chemicals can leak through the metering pump in an uncontrolled manner in the event of excessive priming pressure.

– Do not exceed the maximum permissible priming pressure for the metering pump.

Align the pipes so that the metering pump and the liquid end can be removed from the side if necessary.

Installing hose lines - PP, NP, PV, TT designs

1. Cut off the ends of the hoses at right angles.
2. Pull the union nut (2) and clamp ring (3) over the hose (1) - see figure Fig. 5.
3. Push the hose end (1) up to the stop over the nozzle (4) and widen, if necessary.

Ensure that the O-ring and flat seal (5) is properly fitted to the valve (6).

Never re-use used PTFE seals. An installation sealed in this way is not watertight.

This type of seal is permanently distorted when subjected to pressure.

In order to enable it to be distinguished from the EPDM flat seal, the FPM flat seal PV design has a dot.

4. Place the hose (1) with the nozzle (4) onto the valve (6).
5. Clamp the hose connector: Tighten the union nut (2) while simultaneously pressing on the hose (1).
6. Re-tighten the hose connector: Pull on the hose (1) briefly, which is fastened to the dosing head and then tighten the union nut (2) once more.

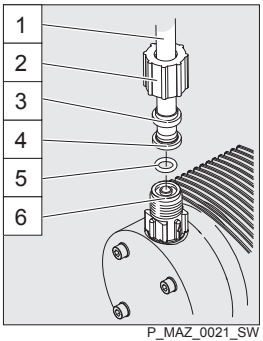

1 Hose
2 Union nut
3 Clamp ring
4 Nozzle
5 O-ring or flat seal
6 Valve

Fig. 5: PP, NP, PV and TT designs

Installing stainless steel pipe - SS design

1. Pull the union nut (2) and clamp rings (3, 4) over the pipe (1) with approx. 10 mm overhang - see *'Installing stainless steel pipe - SS design' on page 23*.
2. Insert the pipe (1) up to the stop in the valve (5).
3. Tighten the union nut (2).

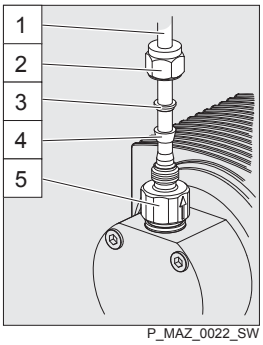

1 pipe
2 Union nut
3 Rear clamp ring
4 Front clamp ring
5 Valve

Fig. 6: SS design

Installing hose lines - SS design

CAUTION!

Warning of feed chemical spraying around

Connections can come loose in the event that hose lines are installed incorrectly on stainless steel valves.

– Only use PE or PTFE hose lines.
– In addition, insert a stainless steel support insert into the hose line.

8.1.2 Installation of Metering Pumps With Bleed Valve

Safety Information

CAUTION!

– All the installation and safety notes for metering pumps without bleed valves also apply.

Installation of the return line

A return line is also connected in addition to the suction and discharge line.

1. Attach the hose line to the return hose nozzle or to the liquid end bleed valve. PVC hose, soft, 6x4 mm is recommended.
2. Feed the free end of the return line back to the storage tank.
3. Shorten the return line so that it is not immersed in the feed chemical in the storage tank.

8.1.3 Installation of Metering Pumps With Self-bleeding (SEK Type)

Safety Information

CAUTION!

- All of the installation and safety notes for metering pumps without self-bleeding also apply.
- Do not exceed the maximum values for priming lift, priming pressure and viscosity of the feed chemical.
- Do not allow the suction side line cross-section to exceed the line cross-section on the suction valve.

Information about priming pressure

- *Make sure that the priming pressure on the suction end is at least equal to the return line pressure.*
- *Priming pressure in the return line restricts the bleeding function.*
- *However, operation with priming pressure in the return line and the suction end at atmospheric pressure is possible.*

Installation of the return line

A return line is also connected in addition to the suction and discharge line.

- *The return line is connected to the vertical valve on the upper side of the liquid end. It is factory-labelled with a red sleeve - see ‘Installation of the return line’ on page 24.*
- *The discharge line is connected to the horizontal valve.*

1. Attach the hose line to the return hose nozzle or to the liquid end bleed valve. PVC hose, soft, 6x4 mm is recommended.
2. Feed the free end of the return line back to the storage tank.
3. SEK only: Insert the return line into the anti-kink device on the bleed valve and screw it in place until the anti-kink device engages.

The anti-kink device prevents the return line from kinking, avoiding the risk of self-bleeding failure.

4. Shorten the return line so that it is not immersed in the feed chemical in the storage tank.

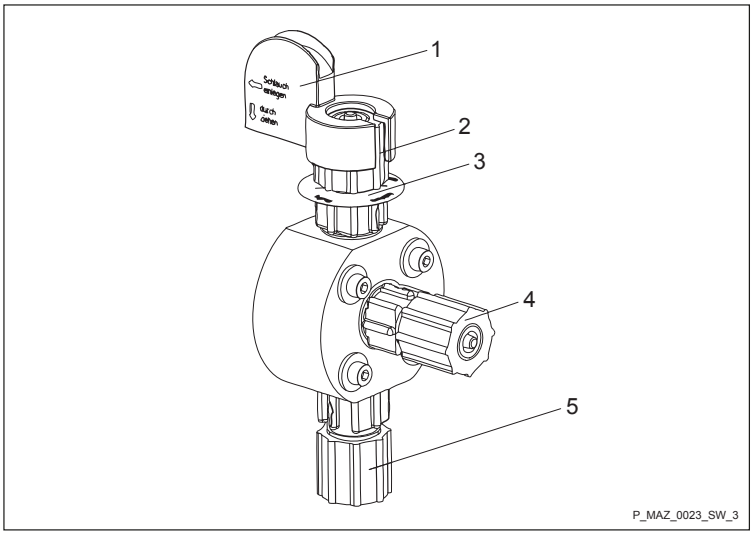

Fig. 7: SEK liquid end

1 Anti-kink device
2 Bleed valve for the return line into the storage tank, 6/4 mm
3 Red sleeve
4 Discharge valve for discharge line to the injection point, 6/4 - 12/9 mm
5 Suction valve for suction line in the storage tank, 6/4 - 12/9 mm

8.1.4 Basic installation notes

Safety notes

CAUTION!

Danger resulting from rupturing hydraulic components

Hydraulic components can rupture if the maximum permissible operating pressure is exceeded.

– Never allow the metering pump to run against a closed shut-off device.
– With metering pumps without integral relief valve: Install a relief valve in the discharge line.

CAUTION!

Hazardous feed chemicals can escape

With hazardous feed chemicals: Hazardous feed chemical can leak out when using conventional bleeding procedures with metering pumps.

– Install a bleed line with a return into the storage tank.

→ Shorten the return line so that it does not dip into the feed chemical in the storage tank.

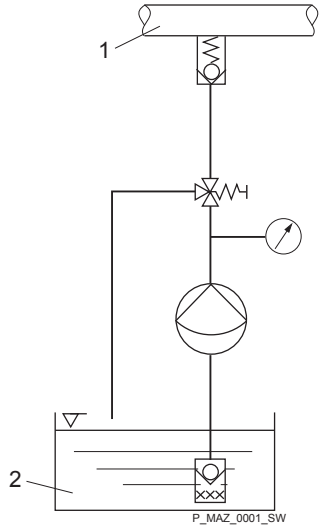

Fig. 8: Standard installation

1 Main line
2 Storage tank

Legend for hydraulic diagram

Symbol	Explanation	Symbol	Explanation
	Metering pump		Foot valve with filter meshes
	Injection valve		Level switch
	Multifunctional valve		Manometer

9 Electrical Installation



WARNING!

Danger of electric shock

A mains voltage may exist inside the device.

– Before any work, disconnect the device's mains cable from the mains.



WARNING!

Risk of electric shock

This pump is supplied with a grounding conductor and a grounding-type attachment plug.

– To reduce the risk of electric shock, ensure that it is connected only to a proper grounding-type receptacle.



WARNING!

Risk of electric shock

In the event of an electrical accident, the pump must be quickly disconnected from the mains.

– Install an emergency cut-off switch in the pump power supply line or
– Integrate the pump in the emergency cut-off management of the system and inform personnel of the isolating option.



WARNING!

Danger of electric shock

A mains voltage may exist inside the pump housing.

– If the pump housing has been damaged, you must disconnect it from the mains immediately. It may only be returned to service after an authorised repair.



CAUTION!

Material damage possible due to power surges

Should the pump be connected to the mains power supply in parallel to inductive consumers (such as solenoid valves, motors), inductive power surges can damage the controller when it is switched off.

– Provide the pump with its own contacts and supply with voltage via a contactor relay or relay.

Personnel: ■ Electrician

→ Install the pump in line with best working practice and in accordance with the operating instructions and applicable regulations.

9.1 Supply voltage connector



WARNING!

Unexpected startup is possible

As soon as the pump is connected to the mains, the pump may start pumping and consequently feed chemical may escape.

– Prevent dangerous feed chemicals from escaping.
– If you have not successfully prevented this, immediately press the *[STOP/START]* key or disconnect the pump from mains, e.g. via an emergency cu-off switch.



CAUTION!

If the pump is integrated into a system: Design the system so that potential hazardous situations are avoided by pumps starting up automatically subsequent to unintended power interruptions.



CAUTION!

Provide an option to disconnect the pump without Emergency Stop switch from the mains power supply.

9.1.1 Mains voltage

Parallel connection to inductive consumers

Should the pump be connected to the mains in parallel to inductive consumers (e.g. solenoid valves, motor), the pump must be electrically isolated when these consumers are switched off.

- Supply the pumps with voltage via a contactor relay or relay using separate contacts for the pump.
- If this is not possible then connect a varistor (part no. 710912) or an RC member, 0.22 µF / 220 Ω in parallel.

Interference suppression aids

Product	Part no.
Varistor:	710912
RC Gate, 0.22 µF / 220 Ω:	710802

9.2 Supply voltage connector - low voltage



WARNING!

Danger of electric shock

– For safety reasons, the low voltage pumps must be operated using only protective low voltage (SELV in accordance with EN 60335-1).



CAUTION!

Supply voltages that are too high destroy the pump.

– Do not connect the low voltage pump to voltages > 30 V.



- *The pump will generate a fault ("switch-off threshold for supply") in the event that the supply voltage to the pump is insufficient to ensure reliable function. The pump will recommence operation as soon as the supply voltage is restored.*
- *The fault indicator flashes additionally if the supply voltage is interrupted during a stroke, ("threshold for stroke abort"). Aborted strokes are not counted by the stroke counter. In doing so, the pump's electronic controller periodically checks the supply voltage ("wait time after stroke abort": 10 min). The pump will recommence operation if the supply voltage is sufficient.*
- *The pump's electrical system will shut down completely in the event that the supply voltage undershoots another threshold. The pump will come out of standby mode and recommence operation as soon as sufficient supply voltage is restored.*
- *The programmed thresholds apply to standard lead-acid batteries. ProMinent can match these to customer requirements.*
- *Use short large-diameter power leads in order to minimise faults. Use batteries with low internal resistance.*
- *If the pump is connected with incorrect polarity, it will not run because the polarity protection does not allow any current to flow.*

9.3 Description of the Terminals

9.3.1 "External control" terminal

The "external control" socket is a five-pin panel socket. It is compatible with two- and four-pole cables.

The "Auxiliary rate" function can only be used with a five conductor cable.

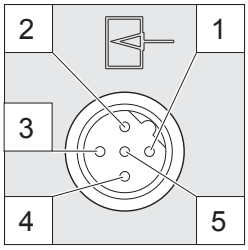

P_BE_0014_SW

Fig. 9: Pump assignment

Electrical interface for pin 1 "Pause" - pin 2 "External contact" - pin 5 "Auxiliary frequency"

Data	Value	Unit
Voltage with open contacts	5	V
Input resistance	10	kΩ
Max. pulse frequency	25	pulse/s
Min. pulse duration	20	ms
Min. pause between pulses	3	ms

Control via:

- potential-free contact (load: 0.5 mA at 5 V) or
- Semiconductor switch (residual voltage < 0.7 V)

Electrical interface for pin 3 "mA input" (with identity code characteristic "Control version": A - "External Analogue")

Data	Value	Unit
Input apparent ohmic resistance, approx.	120	Ω

Behaviour of the pump

At **approx. 0.1 mA (4.1 mA)** the metering pump makes its **first metering stroke**.
At **approx. 19.9 mA** the pump moves to continuous operation at **180 strokes / min** .
With current signals **above 23 mA**, the red fault indicator lights up, the pump stops and any fault indicating relay fitted switches (a **fault** is pending).
Only with 4...20 mA: With current signals **below 3.8 mA**, the red fault indicator lights up, the pump stops and any fault indicating relay fitted switches (**Fault** for example with a cable break).

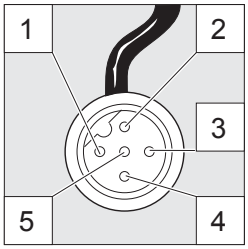

P_BE_0015_SW

Fig. 10: Cable assignment

Pin	Function	5-wire cable	2-wire cable
1	Pause	brown	bridged at pin 4
2	External contact	white	brown
3	mA input*	blue	-
4	Earth GND	black	white
5	Auxiliary frequency	grey	-

* with identity code characteristic "Control version": A - "External Analogue"

Refer to the functional description for the hierarchy of functions and operating modes.

"Pause" function

The pump does not work if:

- the cable is connected and pin 1 and pin 4 are open.

The pump works if:

- the cable is connected and pin 1 and pin 4 are connected.
- no cable is connected.

"External contact" operating mode

The pump performs one or more strokes if:

- Pin 2 and pin 4 are connected to each other for at least 20 ms. At the same time, pin 1 and pin 4 must also be connected to each other.

"External Analogue" operating mode

- The metering pump makes its first metering stroke at approx. 0.1 mA (4.1 mA) and enters into continuous operation at approx. 19.9 mA.

"Auxiliary frequency" operating mode

The pump works at a pre-set stroke rate if:

- Pin 5 and pin 4 are connected to each other. At the same time, pin 1 and pin 4 must also be connected to each other. The auxiliary frequency is factory-preset to the maximum stroke rate.

9.3.2 "Level switch" terminal

There is a connecting option for a 2-stage level switch with pre-warning and limit stop.

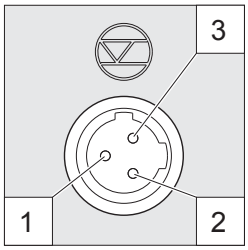

P_BE_0016_SW

Fig. 11: Pump assignment

Electrical interface

Data	Value	Unit
Voltage with open contacts	5	V
Input resistance	10	kΩ

Control via:

- potential-free contact (load: 0.5 mA at 5 V) or
- Semiconductor switch (residual voltage < 0.7 V)

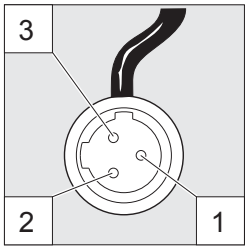

P_BE_0017_SW

Fig. 12: Cable assignment

Pin	Function	3-wire cable
1	Earth GND	black
2	Minimum pre-warning	blue
3	Minimum limit stop	brown

9.4 Relay

9.4.1 Relay functions

Beta b BT4b/BT5b

Identity code	Description	Type	Maximum voltage	Maximum current	Behaviour of relay type when retrofitting, as standard
0	no relay	-	-	-	-
1	Fault indicating relay	NC changeover contact	230 V	8 A	X
3	Fault indicating relay	NO changeover contact	230 V	8 A	-
4	Fault indicating relay	N/O	24 V	100 mA	X
	Pacing relay	N/O	24 V	100 mA	-
5	Fault indicating relay	N/O	24 V	100 mA	-
	Pacing relay	N/O	24 V	100 mA	-

Relay type switches in the event of...

Relay type	level Warning	level low	Calibrated stroke length Error	Processor Error
Fault indicating relay:	X	X	X	X

9.4.2 "Fault indicating relay" output (identity code 1 + 3)

A fault indicating relay can optionally be ordered. It is used to emit a signal when there is a fault with the pump and for the "Liquid level low, 1st stage" warning message and "Liquid level low 2nd stage" fault message.

A cut-off relay works when there are fault alerts from the pump and in the event of the "Liquid level low 2nd stage" alert.

The fault indicating relay can be retrofitted and is operational once attached to the relay board - refer to the "Operating Instructions for Retrofitting Relays for Beta b and delta".

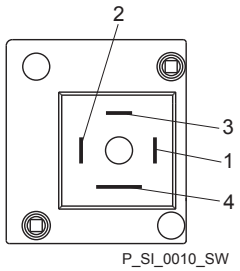

Fig. 13: Pump assignment

Electrical interface

Data	Value	Unit
Maximum contact load at 230 V and 50/60 Hz:	8	A
Minimum mechanical lifespan:	200,000	switching operations

Identity code 1 + 3

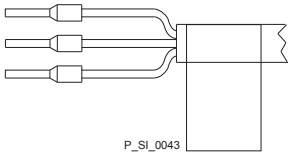

Fig. 14: Cable assignment

Pin assignment

To pin	VDE cable	Contact	CSA cable
1	white	NO (normally open)	white
2	green	NC (normally closed)	red
4	brown	C (common)	black

9.4.3 "Fault indicating relay" + "Pacing relay" output (identity code 4 + 5)

A fault indicating / pacing relay can optionally be ordered. The pacing output is electrically-isolated by means of an optocoupler with a semiconductor switch. The second switch is a relay.

The fault indicating /pacing relay can be retrofitted and is operational once attached to the relay board - refer to the "Operating Instructions for Retrofitting Relays for Beta b and delta".

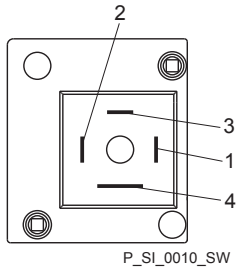

Fig. 15: Pump assignment

Electrical interface

for fault indicating relays:

Data	Value	Unit
Maximum contact load at 24 V and 50/60 Hz:	8	A
Minimum mechanical lifespan:	200,000	switching operations

for semiconductor switch pacing relay:

Data	Value	Unit
Residual voltage max. at I_c = 1 mA	0.4	V
Maximum current	100	mA
Maximum voltage	24	VDC
Pacing pulse duration, approx.	100	ms

Identity code 4 + 5

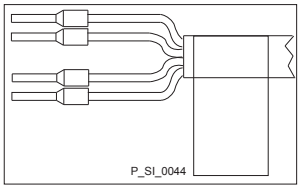

Fig. 16: Cable assignment

Pin assignment

To pin	VDE cable	Contact	Relay
1	yellow	NO (normally open)	Fault indicating relay
4	green	C (common)	Fault indicating relay
3	white	NO (normally open)	Pacing relay
2	brown	C (common)	Pacing relay

10 Start up

WARNING!

Dangerous reactions are possible due to contact of feed chemical with water

The feed chemical can mix and react in the liquid end with water remaining after testing in the factory.

- Read the safety data sheet on the feed chemical.
- Blast the liquid end with compressed air.
- Flush the liquid end with a suitable medium through the suction connector.

WARNING!

Fire hazard with flammable media

Only with combustible media: These may start to burn when combined with oxygen.

- During filling and draining of the liquid end, an expert must ensure that feed chemical does not come into contact with oxygen.

CAUTION!

Danger with dangerous feed chemicals

Contact with the feed chemical is possible provided the following handling instructions are adhered to.

- If the feed chemical is dangerous, take appropriate safety precautions when carrying out the following handling instructions.
- Adhere to the feed chemical safety data sheet.

CAUTION!

Warning of feed chemical spraying around

An unsuitable feed chemical can damage the parts of the pump that come into contact with the chemical.

- Take into account the resistance of the materials that will come into contact with the medium when selecting the feed chemical - refer to the ProMinent® Resistance List in the Product Catalogue or at www.prominent.com.

- *Reliable metering cannot be guaranteed after the metering pump has been idle for some time, as the feed chemical can crystallise in the valves and on the diaphragm. Regularly check the valves and diaphragm.*
- *Only adjust the stroke length when the pump is running.*
- *The metering pump should prime at 100% stroke length, as the priming lift depends on the stroke volume when the liquid end is empty. If the metering pump has to prime at a smaller stroke length and is not priming, reduce the priming lift (i.e. briefly lift up the storage tank with the feed chemical).*
- *SEK-type only: The suction lift corresponds to the priming lift, as some gas always remains in the liquid end with gaseous media.*

Starting up the metering pump

1. Fill the liquid end - *'Filling the liquid end' on page 35*.
2. Check the pump connectors and connections for leak-tightness.
3. Check the suction valve and discharge valve for leak-tightness and tighten if necessary.
4. Check the liquid end for leak-tightness and tighten the screws on the dosing head if necessary - see below for starting torque.
5. Only with bleed valve: Check whether the bleed valve is closed.
6. Start up the relief valve in the system in line with its operating instructions.
7. Start up the system.
8. After 24 hours of operation: Tighten the screws on the dosing head - see below for tightening torque.

Tightening torque

Data	Value	Unit
Tightening torque for screws:	4.5 ... 5.0	Nm

Draining the liquid end

With feed chemicals that should not come into contact with water.

1. Turn the pump so that the pressure connector is facing downwards.
2. Allow water to flow out of the liquid end.
3. Flush the suction connector from above with a suitable medium or blast with compressed air.

Filling the liquid end

With liquid ends without bleed valve:

1. Connect the suction line to the liquid end but not yet to the discharge line.
2. If fitted: Close the shut-off valve on the discharge side.
3. Connect a short, transparent section of hose to the discharge valve.
4. Switch on the metering pump and allow to work at maximum stroke length and stroke rate until some feed chemical becomes visible in the short section of hose.
   ⇨ The liquid end has been filled completely without bubbles.
5. Switch off the metering pump.
6. Connect the discharge line to the liquid end.
   ⇨ The metering pump is ready for operation.

With liquid ends with bleed valves (not SEK):

1. Connect the suction and discharge line to the liquid end.
2. Connect the return line.
3. Open the bleed valve by turning the star-shaped handle in a counter-clockwise direction.
   ⇨ You can now use the return line to bleed the pump.
4. Switch on the metering pump and allow to work at maximum stroke length and stroke rate until some feed chemical becomes visible in the return or discharge line.
   ⇨ The liquid end has been filled completely without bubbles.
5. Switch off the metering pump.
6. Close the bleed valve.
   ⇨ The metering pump is ready for operation.

With self-bleeding metering pumps (SEK type):

- *The return line is connected to the vertical valve on the top of the liquid end. It is labelled with a red sleeve ex-works.*
- *The discharge line is connected to the horizontal valve.*

1. Switch on the metering pump and allow to work at maximum stroke length and stroke rate until some feed chemical becomes visible in the return or discharge line.
   ⇨ The liquid end has been filled completely without bubbles.
2. Switch off the metering pump.
   ⇨ The metering pump is ready for operation.

Setting the precise dosage

Stroke length and stroke rate

- *Select as large a stroke length as possible with gaseous feed chemicals.*
- *Select as high a stroke rate as possible for good mixing.*
- *Do not set the stroke length to less than 30 % for precise metering using quantity-proportional metering.*

11 Operation



WARNING!

Fire hazard with flammable media

Only with combustible media: These may start to burn when combined with oxygen.

– During filling and draining of the liquid end, an expert must ensure that feed chemical does not come into contact with oxygen.



WARNING!

Danger of electric shock

Incompletely installed electrical options can allow moisture into the inside of the housing.

– Knock-out openings in the pump housing must be equipped with matching modules or be sealed in a leak-tight manner.



WARNING!

Danger of electric shock

A mains voltage may exist inside the pump housing.

– If the pump housing has been damaged, you must disconnect it from the mains immediately. It may only be returned to service after an authorised repair.

11.1 Manual

Personnel: ■ Instructed personnel

11.1.1 Capacity

The capacity is determined by the stroke length and the stroke rate.

The stroke length is adjusted by the stroke length adjustment knob within a range of 0 ... 100 %. A stroke length of between 30 ... 100 % (SEK type: 50 ... 100 %) is recommended to achieve the specified reproducibility!

Data	Value	Unit
Recommended stroke length, standard type	30 ... 100	%
Recommended stroke length, SEK type	50 ... 100	%

The stroke rate can be set within a range of 10 ... 100 % using the multi-functional switch.

11.1.2 Functions

The pump has the following functions:

"Pause" function

The pump can be remotely stopped via the "External Control" terminal. The "Pause" function only works via the "External Control" terminal.

"Stop" function (optional)

The pumps can be stopped by turning the multifunctional switch to "Stop" without disconnecting it from the mains power supply.

"Priming" function

Priming (transient conveyance at maximum frequency) can be provided by turning the multifunctional switch to "Test".

"Level switch" function

Information about the liquid/powder level in the feed chemical container is reported to the pump. To do so, a two-stage level switch must be fitted; it is connected to the "Level switch" terminal.

"Auxiliary rate" function

Enables switching of a stroke rate via the "External control" jack. This auxiliary rate has priority over the operating mode stroke rate settings . In the standard version, the "Auxiliary frequency" function is programmed to 100 % stroke rate.

11.1.3 External contact

"Extern" operating mode:

In the Extern Contact operating mode, either a series of strokes can be triggered or an inbound series of contacts can be stepped down via the pulse control switch by a single contact on the "External control" terminal. To do so, the multifunctional switch has to be turned to "Extern".

Explanation of the stepped-down values:

Settable values	Incoming contacts	Strokes performed
1:1	1	1
1:2	2	1
1:4	4	1
1:8	8	1
1:16	16	1
1:32	32	1
1:64	64	1

Explanation of stepped-up values:

Settable values	Incoming contacts	Strokes performed
1:1	1	1
2:1	1	2
4:1	1	4
8:1	1	8
16:1	1	16
32:1	1	32
64:1	1	64

11.1.4 External analog

"External Analogue" operating mode

In "External Analogue" operating mode, the stroke rate can be controlled by an mA signal via the pulse control switch. To do so, the multifunctional switch has to be turned to "Extern".

In the same way, a single contact via the pulse control switch at the "external control" terminal can either be used to trigger a series of strokes or to step down an incoming series of contacts. To do so, the multifunctional switch has to be turned to "Extern".

Explanation of the stepped-down values:

Settable values	Incoming contacts	Strokes performed
such as "External Analogue"	such as "External Analogue"	such as "External Analogue"
...	...	...
01:16	16	1
01:32	32	1
0-20 mA	-	corresponding to the mA signal

Explanation of stepped-up values:

Settable values	Incoming contacts	Strokes performed
such as "External Analogue"	such as "External Analogue"	such as "External Analogue"
...	...	...
16:1	1	16
32:1	1	32
4-20 mA	-	corresponding to the mA signal

11.2 Remote operation

There is an option to control the pump remotely via a signal cable - refer to your system documentation and to "Electrical Installation".

12 Maintenance

WARNING!

It is mandatory that you read the safety information and specifications in the "Storage, Transport and Unpacking" chapter prior to shipping the pump.

WARNING!

Fire hazard with flammable media

Only with combustible media: These may start to burn when combined with oxygen.

– During filling and draining of the liquid end, an expert must ensure that feed chemical does not come into contact with oxygen.

CAUTION!

Warning of feed chemical spraying around

Feed chemical can spray out of the hydraulic components if they are manipulated or opened due to pressure in the liquid end and adjacent parts of the system.

– Disconnect the pump from the mains power supply and ensure that it cannot be switched on again by unauthorised persons.
– Depressurise the system before commencing any work on hydraulic parts.

Third party spare parts for the pumps may lead to problems when pumping.

– *Use only original spare parts.*
– *Use the correct spare parts kits. In the event of doubt, refer to the exploded views and ordering information in the appendix.*

Standard liquid ends:

Interval	Maintenance work	Personnel
Quarterly*	■ Check the metering diaphragm for damage** - refer to "Repair". ■ Check that the hydraulic lines are fixed firmly to the liquid end. ■ Check that the suction valve and discharge valve are fitted tightly. ■ Check the tightness of the entire liquid end - particularly around the leakage hole - refer to *'Standard liquid ends:' on page 40*! ■ Check that the flow is correct: Allow the pump to prime briefly - turn the multifunctional switch briefly to "Test" ■ Check that the electrical connections are intact. ■ Check the integrity of the housing. ■ Check that the dosing head screws are tight.	Technical personnel

* Under normal loading (approx. 30 % of continuous operation)

Under heavy loading (e.g. continuous operation): Shorter intervals.

** Check the diaphragm frequently with feed chemicals that put particular pressure on the diaphragm, e.g. those containing abrasive additives.

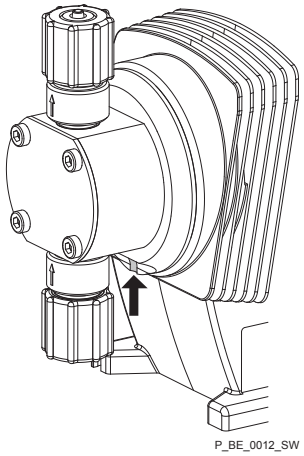

Fig. 17: Leakage hole

Liquid ends with bleed valve:

Interval	Maintenance work
Quarterly*	In addition: ■ Check that the bypass line is fixed firmly to the liquid end ■ Check that the bleed valve is tight. ■ Check the discharge and bypass line for kinks ■ Check that the bleed valve is operating correctly.

* Under normal loading (approx. 30 % of continuous operation)

Under heavy loading (e.g. continuous operation): Shorter intervals.

Tightening torque

Data	Value	Unit
Tightening torque for screws:	4.5 ... 5.0	Nm

13 Repairs

Safety Information



WARNING!

Danger of electric shock

Unauthorised repairs inside the pump can result in an electric shock.

For this reason, only allow a ProMinent branch or representative to perform repair inside the pump, in particular the following:

– Replacement of damaged mains connection lines
– Replacement of fuses
– Replacement of electronic control



WARNING!

Fire hazard with flammable media

Only with combustible media: These may start to burn when combined with oxygen.

– During filling and draining of the liquid end, an expert must ensure that feed chemical does not come into contact with oxygen.



WARNING!

It is mandatory that you read the safety information and specifications in the "Storage, Transport and Unpacking" chapter prior to shipping the pump.



WARNING!

Contact with the feed chemical

Parts that come into contact with the feed chemical are exposed and touched during repair work.

– Protect yourself against the feed chemical in case it is hazardous. Read the safety data sheet on the feed chemical.



CAUTION!

Warning of feed chemical spraying around

Feed chemical can spray out of the hydraulic components if they are manipulated or opened due to pressure in the liquid end and adjacent parts of the system.

– Disconnect the pump from the mains power supply and ensure that it cannot be switched on again by unauthorised persons.
– Depressurise the system before commencing any work on hydraulic parts.

Repairs that may be carried out by qualified technical personnel, in accordance with the operating instructions:

- Cleaning valves
- Replacing the diaphragm

All other repairs: Contact the responsible ProMinent branch!

13.1 Cleaning valves

Warning of faulty operation

Refer to the exploded drawings in the appendix when working on the unit.

Cleaning a discharge valve or a suction valve on types (PP, PV, NP) 1000, 1601, 1602, 1604, 2504

Warning of faulty operation

- *Discharge and suction valves differ from each other! Only take them apart one after each other, so that you do not confuse the components!*
- *Only use new components which fit your valve - both in terms of shape and chemical resistance!*
- *Recalibrate the pump after replacing a valve!*
- *Using an Allen key or similar, insert it into the smaller hole of the discharge connector and push the valve inserts out of it.*

A suction valve is constructed in almost the same way as a discharge valve.

Please note, however, that:

- the two valve inserts are identical here
- There is an additional spacer between the valve inserts.
- There is a shaped seal in the dosing head instead of an O-ring.
- The flow direction of the suction connector is the opposite to that of the discharge connector.

Cleaning a discharge valve or a suction valve on types (PP, PV, NP) 0708, 1008, 0220, 0420, 0413, 0713, 0232

Warning of faulty operation

- *Discharge and suction valves differ from each other! Only take them apart one after each other, so that you do not confuse the components!*
- *Only use new components which fit your valve - both in terms of shape and chemical resistance!*
- *With the PVT material version, the ball seat is integrated in the dosing head and so has to be cleaned separately!*
- *On the PVT material version, the discharge valve is a double ball valve!*
- *Using an Allen key or similar, insert it into the smaller hole of the discharge connector and push the valve inserts out of it.*

A suction valve is constructed in almost the same way as a discharge valve.

Please note, however, that:

- The flow direction of the suction connector is the opposite to that of the discharge connector.

13.2 Replacing the diaphragm

WARNING!
A little feed chemical may have accumulated behind the diaphragm in the backplate following a leak - depending on the design!

– Take this feed chemical into consideration when you are planning a repair - especially if it is hazardous!

- If necessary take protective measures.
- Adhere to the material safety data sheet for the feed chemical.
- Ensure that the system is at atmospheric pressure.

1. Empty the liquid end (turn the liquid end upside down and allow the feed chemical to run out; flush out with a suitable medium; flush the liquid end thoroughly when using hazardous feed chemicals!)
2. Turn the stroke adjustment dial as far as 0% stroke length when the pump is running (the drive axle is then difficult to turn).
3. Switch off the pump.
4. Unscrew the hydraulic connectors on the discharge and suction side.
5. With PP types with bleed valve: Firstly remove the bleed valve (grip), then lift off the cover of the liquid end with a screw driver.
6. Remove the screws (1).
7. Loosen the dosing head (2) and the backplate (4) from the pump housing (6) - but only loosen!
8. Hold the pump housing (6) with one hand and clamp the diaphragm (3) with the other hand between the dosing head (2) and the backplate (4).
9. Loosen the diaphragm (3) from the drive axle with a gentle backwards turn of the dosing head (2), diaphragm (3) and backplate (4) in an anticlockwise direction.
10. Unscrew the diaphragm (3) completely from the drive axle.
11. Remove the backplate (4) from the pump housing (6).
12. Check the condition of the safety diaphragm (5) and replace if necessary.
13. Push the safety diaphragm (5) onto the drive axle only until it lies flush with the pump housing (6) and no further!
14. Tentatively screw the new diaphragm (3) onto the drive axle until it can go no further.

    ⇨ The diaphragm (3) is now sitting at the stop of the thread.
15. Should this not work, remove dirt or swarf from the threads and screw the diaphragm (3) onto the drive axle correctly this time.

Ensure that the diaphragm is screwed exactly onto the drive axle otherwise the pump will subsequently not meter accurately!

16. Unscrew the diaphragm (3) again.
17. Place the backplate (4) on the pump housing (6).

CAUTION!
Leakage may become apparent at a later stage.
– Make sure that the leakage hole points downwards when the pump is installed later - please refer to !
– Place the backplate (4) immediately into the correct position on the pump housing (6)! Do not twist the backplate on the pump housing to prevent the safety diaphragm (5) becoming warped!

18. Place the diaphragm (3) into the backplate (4).

CAUTION!
Leakage may become apparent at a later stage.
– Do not over-tighten the diaphragm (3) in the following step!
– Ensure that the backplate (4) remains in its position so that the safety diaphragm does not become warped!

19. Hold the backplate (4) firmly and screw the diaphragm (3) in a clockwise direction until it is sitting tightly (the twisting resistance of the return spring can be felt).

20. Set the stroke length to 100%.

21. Place the dosing head (2) with the screws (1) onto the diaphragm (3) and the backplate (4) - ensure that the suction connector points downwards when the pump is in its subsequent fitting position.

22. Gently tighten the screws (1) and then tighten them diagonally. See below for the tightening torque.

23. With PP types with bleed valve: Allow the cover of the liquid end to rest in the dosing head, then press the grip on the bleed valve into the dosing head.

CAUTION!
Leakage possible
– Check the tightening torque of the screws after 24 hours of operation!
– With PP and PV dosing heads, check the tightening torque again after three months!

Tightening torque

Data	Value	Unit
Tightening torque for screws:	4.5 ... 5.0	Nm

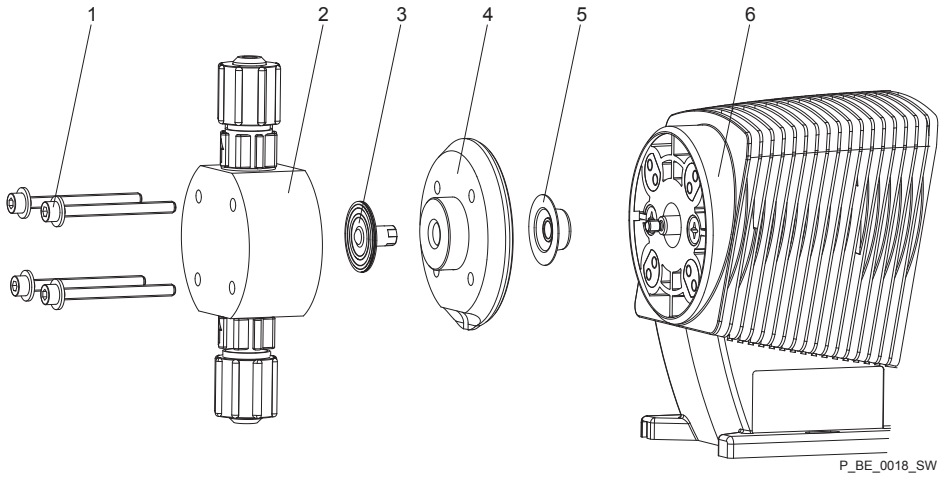

Fig. 18: Partially exploded view of liquid end

14 Troubleshooting

Safety Information



WARNING!

Warning of dangerous or unknown feed chemical

Should a dangerous or unknown feed chemical be used: It may escape from the hydraulic components when working on the pump.

– Take appropriate protective measures before working on the pump (e.g. safety glasses, safety gloves, ...). Observe the safety data sheet for the feed chemical.
– Drain and flush the liquid end before working on the pump.



WARNING!

Fire hazard with flammable media

Only with combustible media: These may start to burn when combined with oxygen.

– During filling and draining of the liquid end, an expert must ensure that feed chemical does not come into contact with oxygen.



CAUTION!

Warning of feed chemical spraying around

Feed chemical can spray out of the hydraulic components if they are manipulated or opened due to pressure in the liquid end and adjacent parts of the system.

– Disconnect the pump from the mains power supply and ensure that it cannot be switched on again by unauthorised persons.
– Depressurise the system before commencing any work on hydraulic parts.

14.1 Faults without a fault message

Fault description	Cause	Remedy	Personnel
Pump does not prime in spite of full stroke motion and bleeding.	Minor crystalline deposits on the ball seat due to the valves drying out.	Take the suction hose out of the storage tank and thoroughly flush out the liquid end.	Technical personnel
	Serious crystalline deposits on the ball seat due to the valves drying out.	Dismantle the valves and clean them - refer to "Repair"	Technical personnel
Fluid is escaping from the backplate.	The screws in the dosing head are too loose.	Tighten the screws in the dosing head crosswise - refer to "Repair" for tightening torque.	Instructed personnel
	The diaphragm is not leak-tight.	Replace the diaphragm - refer to "Repair".	Technical personnel
Green LED display (operating indicator) does not light up.	The wrong mains voltage or no mains voltage is connected.	Connect the pump correctly to the specified mains voltage - according to the specification on the nameplate	Electrician

14.2 Fault messages

Fault description	Cause	Remedy	Personnel
Red LED indicator (fault indicator) lights up and the pump stops	The fluid level in the storage tank has reached "Liquid level low 2nd stage".	Fill the storage tank.	Instructed personnel
	The pump is in "External Analogue" operating mode and the control current has risen above 23 mA (fault signal).	Clear the cause of the fault on the pump.	
	The pump is in "External Analogue" operating mode, set to "4-20 mA" and the control current has fallen below 4 mA.	Clear the cause of the low control current (e.g. cable break).	
	The multifunctional switch is not turned to "Extern" but an external cable is connected and the pump has the identity code feature "Control type" - "1" "with lock".	Either turn the multifunctional switch to "Extern" or remove the Extern cable from the pump	Technical personnel

14.3 Warning messages

Fault description	Cause	Remedy	Personnel
Yellow LED indicator (warning indicator) lights up	The fluid level in the storage tank has reached "Liquid level low 1st stage".	Fill the storage tank.	Instructed personnel

14.4 All Other Faults

Please contact the responsible ProMinent branch or representative!

15 Decommissioning

Decommissioning

WARNING!

Danger from chemical residues

There is normally chemical residue in the liquid end and on the housing after operation. This chemical residue could be hazardous to people.

- It is mandatory that the safety notes in the "Storage, Transport and Unpacking" chapter are read before shipping or transport.
- Thoroughly clean the liquid end and the housing of chemicals and dirt. Adhere to the material safety data sheet for the feed chemical.

WARNING!

Warning of dangerous or unknown feed chemical

Should a dangerous or unknown feed chemical be used: It may escape from the hydraulic components when working on the pump.

- Take appropriate protective measures before working on the pump (e.g. safety glasses, safety gloves, ...). Observe the safety data sheet for the feed chemical.
- Drain and flush the liquid end before working on the pump.

WARNING!

Fire hazard with flammable media

Only with combustible media: These may start to burn when combined with oxygen.

- During filling and draining of the liquid end, an expert must ensure that feed chemical does not come into contact with oxygen.

CAUTION!

Warning of feed chemical spraying around

Feed chemical can spray out of the hydraulic components if they are manipulated or opened due to pressure in the liquid end and adjacent parts of the system.

- Disconnect the pump from the mains power supply and ensure that it cannot be switched on again by unauthorised persons.
- Depressurise the system before commencing any work on hydraulic parts.

Danger of damage to the device

Take into account the information in the "Storage, Transport and Unpacking" chapter if the system is decommissioned for a temporary period.

1. Disconnect the pump from the mains/power supply.
2. Drain the liquid end by turning the pump upside down and allowing the feed chemical to run out.

3. Flush the liquid end with a suitable medium; flush the dosing head thoroughly when using hazardous feed chemicals!

Disposal



CAUTION!

Environmental hazard due to electronic waste

There are electronic components in the pump, which can have a toxic effect on the environment.

– Separate the electronic components from the remaining parts.
– Note the pertinent regulations currently applicable in your country!

16 Technical data

16.1 Performance data

Beta b operating at 180 strokes/minute and 100% stroke length

Type	Minimum pump capacity at maximum back pressure			Minimum pump capacity at medium back pressure			Connection size outside Ø x inside Ø	Suction lift*	Priming lift**	Maximum priming pressure on suction side
	bar	l/h	ml/stroke	bar	l/h	ml/stroke	mm	m WS	m WS	bar
Beta b										
1000	10	0.74	0.069	5.0	0.82	0.076	6x4	6.0	1.8	8
0700	7	0.8	0.074	3.5	0.88	0.074	6x4	6.0	1.8	8
0400	4	0.84	0.078	2.0	0.92	0.078	6x4	6.0	1.8	8
2001	20	0.96	0.089	10	1.5	0.13	6x3	6.0	2.0	8
1601	16	1.1	0.10	8.0	1.40	0.13	6x4	6.0	2.0	8
1001	10	1.3	0.12	5.0	1.5	0.14	6x4	6.0	2.0	8
0701	7	1.4	0.13	3.5	1.7	0.14	6x4	6.0	2.0	8
0401	4	1.5	0.14	2.0	2.0	0.18	6x4	6.0	2.0	8
2002	20	1.7	0.16	10	2.8	0.26	6x3	6.0	2.5	5.5
1602	16	2.2	0.20	8.0	2.5	0.24	6x4	6.0	2.5	5.5
1002	10	2.4	0.22	5.0	2.8	0.26	6x4	6.0	2.5	5.5
0702	7	2.6	0.24	3.5	3.1	0.29	6x4	6.0	2.5	5.5
0402	4	2.8	0.26	2.0	3.6	0.36	6x4	6.0	2.5	5.5
1604	16	3.6	0.33	8.0	4.3	0.40	6x4	5.0	3.0	3
1004	10	3.9	0.36	5.0	4.7	0.44	6x4	5.0	3.0	3
0704	7	4.2	0.39	3.5	5.1	0.47	6x4	5.0	3.0	3
0404	4	4.5	0.42	2.0	5.6	0.52	6x4	5.0	3.0	3
0708	7	7.1	0.66	3.5	8.4	0.78	8x5	4.0	2.0	2
0408	4	8.3	0.77	2	10.0	0.93	8x5	4.0	2.0	2
0413	4	12.3	1.14	2.0	14.2	1.31	8x5	3.0	2.5	1.5
0220	2	19.0	1.76	1.0	20.9	1.94	12x9	2.0	2.0	1
2504	25	2.9	0.27	12.5	3.7	0.34	8x4[1]	4.0	3.0	3
1605	16	4.1	0.38	8.0	4.9	0.45	8x5	4.0	3.0	3
1008	10	6.8	0.63	5.0	8.3	0.76	8x5	3.0	3.0	2
0713	7	11.0	1.02	3.5	13.1	1.21	8x5	3.0	3.0	1.5
0420	4	17.1	1.58	2.0	19.1	1.77	12x9	3.0	3.0	1
0232	2	32.0	2.96	1.0	36.2	3.35	12x9	2.0	2.0	0.8
Beta b Metering pumps with self-bleeding dosing head SEK* **										
1601	16	0.59	0.055	8.0	0.80	0.072	6x4	6.0	2.0	0.5
1001	10	0.72	0.067	5.0	0.60	0.08	6x4	6.0	2.0	0.5
0701	7	0.84	0.078	3.5	1.12	0.10	6x4	6.0	2.0	0.5

Type	Minimum pump capacity at maximum back pressure			Minimum pump capacity at medium back pressure			Connection size outside Ø x inside Ø	Suction lift*	Priming lift**	Maximum priming pressure on suction side
	bar	l/h	ml/ stroke	bar	l/h	ml/ stroke	mm	m WS	m WS	bar
0401	4	0.9	0.083	2.0	1.2	0.11	6x4	6.0	2.0	0.5
2002	20	0.78	0.07	10.0	1.8	0.17	6x4	6.0	2.5	0.5
1602	16	1.40	0.13	8.0	1.70	0.16	6x4	6.0	2.5	0.5
1002	10	1.7	0.16	5.0	2.0	0.18	6x4	6.0	2.5	0.5
0702	7	1.8	0.17	3.5	2.2	0.20	6x4	6.0	2.5	0.5
0402	4	2.1	0.19	2.0	2.5	0.23	6x4	6.0	2.5	0.5
1604	16	2.7	0.25	8.0	3.6	0.33	6x4	6.0	3.0	0.5
1004	10	3.3	0.30	5.0	3.9	0.36	6x4	6.0	3.0	0.5
0704	7	3.6	0.33	3.5	4.0	0.37	6x4	6.0	3.0	0.5
0404	4	3.9	0.36	2.0	4.2	0.39	6x4	6.0	3.0	0.5
0708	7	6.60	0.61	3.5	7.50	0.69	8x5	6.0	2.0	0.5
0408	4	7.5	0.64	2.0	8.1	0.77	8x5	6.0	2.0	0.5
0413	4	10.8	1.0	2.0	12.6	1.17	8x5	6.0	2.5	0.5
0220	2	16.2	1.5	1.0	18.0	1.67	12x9	6.0	2.0	0.5
1008	10	6.3	0.58	5.0	7.5	0.69	8x5	6.0	3.0	0.5
0713	7	10.5	0.97	3.5	12.3	1.14	8x5	6.0	2.5	0.5
0420	4	15.6	1.44	2.0	17.4	1.61	12x9	6.0	2.5	0.5
Beta b metering pumps with self-bleeding dosing head SER**										
1002	10	1.40	0.13	8.0	1.70	0.174	6x4	6.0	1.8	0.5
1004	10	2.7	0.25	8.0	3.6	0.33	6x4	6.0	1.8	0.5
0708	7	6.60	0.61	3.5	7.50	0.69	8x5	6.0	1.8	0.5
0413	4	10.8	1.0	2.0	12.6	1.17	8x5	6.0	1.8	0.5
0220	2	16.2	1.5	1.0	18.0	1.67	12x9	6.0	2.0	0.5
1008	10	6.3	0.58	5.0	7.5	0.69	8x5	6.0	1.8	0.5
0713	7	10.5	0.97	3.5	12.3	1.14	8x5	6.0	1.8	0.5
0420	4	15.6	1.44	2.0	17.4	1.61	12x9	6.0	1.8	0.5

* - Suction lift with a filled suction line and filled liquid end. With self-bleeding dosing head with air in the suction line.

** - Priming lift with clean and moist valves. Priming lift at 100% stroke length and free outlet or opened bleed valve.

*** - The given performance data constitutes guaranteed minimum values, calculated using water as the medium at room temperature. The bypass connection with a self-bleeding dosing head SEK is 6x4 mm.

*** - The given performance data constitutes guaranteed minimum values, calculated using water as the medium at room temperature.

[1] - The connector width is 6 mm on SST material versions.

Beta b Metering pumps with dosing heads for higher-viscosity media (HV) have a 10-20% lower capacity and are not self-priming. Connection G 3/4-DN 10 with hose nozzle d16-DN10.

16.2 Accuracy

16.2.1 Standard Liquid End

Data	Value	Unit
Capacity range of the series	-5 ... +10	% *
Reproducibility	±2	% **

* - at max. stroke length and max. operating pressure for all material versions

** - at constant conditions and min. 30 % stroke length

16.2.2 Self-Bleeding Liquid End

As the self-bleeding liquid end is used with outgassing media and when operating with air bubbles, no dosing accuracy or reproducibility can be provided.

The recommended minimum stroke length with self-bleeding dosing pumps is 50 %.

16.3 Viscosity

The liquid ends are suitable for the following viscosity ranges:

Version	Range	Unit
standard	0 ... 200	mPas
With valve springs	200 ... 500	mPas
Self-bleeding (SEK)	0 ... 50	mPas
HV (highly viscous)	500 ... 3000*	mPas

* Only when the installation is correctly adjusted

16.4 Material Data

Standard liquid ends

Version	Dosing head	Suction/Discharge connector	Seals	Valve balls
PPE	Polypropylene	Polypropylene	EPDM	Ceramic
PPB	Polypropylene	Polypropylene	FPM	Ceramic
PPT	Polypropylene	PVDF	PTFE	Ceramic
NPE	Acrylic glass	PVC	EPDM	Ceramic
NPB	Acrylic glass	PVC	FPM	Ceramic
NPT	Acrylic glass	PVDF	PTFE	Ceramic
PVT	PVDF	PVDF	PTFE	Ceramic
TTT	PTFE with carbon	PTFE with carbon	PTFE	Ceramic
SST	Stainless steel 1.4404	Stainless steel 1.4404	PTFE	Ceramic

Only the self-bleeding version in PPE, PPB, NPE and NPB material models with a valve spring made of hastealloy C and a valve insert made of PVDF. Diaphragm with a PTFE coating.

FPM = fluororubber

Pump

Housing parts: polyphenyl ether (PPE with fibreglass)

16.5 Electrical data

Version: 100 - 230 V ±10 %, 50/60 Hz, Beta b BT4b

Data	Value	Unit
Nominal power, approx.	6.4 ... 16.5	W
Current I eff	0.65 ... 0.1	A
Peak current	4.2 ...1.3	A
Switch on peak current, (within approx. 50 ms falling)	15	A
Fuse*	0.8	AT

Version: 100 - 230 V ±10 %, 50/60 Hz, Beta b BT5b

Data	Value	Unit
Nominal power, approx.	20 ... 25	W
Current I eff	0.9 ... 0.3	A
Peak current	5.9 ... 2.3	A
Switch on peak current, (within approx. 50 ms falling)	15	A
Fuse*	0.8	AT

* Fuses must have VDE, UL and CSA certification. E.G. type 19195 manufactured by Wickmann in compliance with IEC Publ. 127 - 2/3.

Power consumption

Type	Perform-ance	Type	Perform-ance	Type	Perform-ance
	W		W		W
1000	7.6	1602	12.2	0408	12.7
0700	6.4	1002	10.6	0413	16.5
0400	5.7	0702	9.3	0220	16.5
2001	10.5	0402	7.9	2504	21.2
1601	10.0	1604	16.5	1008	20.3
1001	8.3	1004	12.7	0713	21.2
0701	7.5	0704	11.1	0420	21.2
0401	6.9	0404	9.5	0232	24.9
2002	13.5	0708	16.5		

Design: 12 - 24 VDC# -8/+24 %, identity code M

Parameter	Beta b BT4b
Nominal power, approx.	17.4 W.
Nominal current (averaged at 180 H/min)	3.9 ... 1.9 A.
Peak current	15.6... 8.7 A.
closed current (no stroke)	32 ... 24 mA.
Fuse*	5 AT

SELV in accordance with EN 60335-1

* 5 AT, 5x20 mm, order no. 712028

The pump only works if the polarity is correct.

Design: 24 VDC# -15/+24 %, identity code N

Parameter	Beta b BT5b
Nominal power, approx.	24.4 W.
Nominal current (averaged at 180 H/min)	2.5 A.
Peak current	11.7 A.
Closed current (no stroke)	24 mA.
Fuse*	5 AT

SELV in accordance with EN 60335-1

* 5 AT, 5x20 mm, order no. 712028

The pump only works if the polarity is correct.

16.6 Temperatures

Pump, fully assembled

Data	Value	Unit
Storage and transport temperature:	-10 ... +50	°C
Ambient temperature in operation (power end/drive and control):	-10 ... +45	°C

Liquid end, long-term*

Maximum temperature, liquid end

Material version	Value	Unit
PP	50	°C
NP	40	°C
PV	50	°C
TT	50	°C
SS	50	°C

* long term at max. operating pressure, dependent on the ambient temperature and the feed chemical temperature

Minimum temperature, liquid end

Minimum temperature, liquid end

Material version	Value	Unit
All	-10	°C

Liquid end, short-term*

Maximum temperature, liquid end

Material version	Value	Unit
PPT	100	°C
NPT	60	°C
PVT	120	°C
TTT	120	°C
SST	120	°C

* Temp. max., for 15 min at max. 2 bar, dependent on the ambient and feed chemical temperatures

16.7 Climate

Data	Value	Unit
Maximum air humidity *:	95	% rel. humidity

* non-condensing

Exposure in a humid and alternating climate:

FW 24 according to DIN 50016

16.8 Degree of Protection and Safety Requirements

Degree of protection

Protection against accidental contact and humidity:

IP 65 according to DIN EN 60529

Safety requirements

Degree of protection:

1 - mains power connection with protective earth conductor

16.9 Compatibility

Some hydraulic parts of the Beta® b are identical to those of the Beta® a, gamma/ L and delta®.

There is most compatibility with pumps of the Beta® a, gamma/ L and delta® series with the following components and accessories:

- Signal cable gamma/Vario 2-, 4- and 5-wire for the "Extern" function
- Level switch 2-stage (gamma / Vario / Beta®)
- Dosing line cross-sections
- Standard gamma connector kit
- Chemical feed container
- Overall height (distance between the suction and discharge connector)
- Same use of accessories, such as back pressure valves, multifunctional valves, dosing monitor and flushing equipment

16.10 Sound pressure level

Sound pressure level

Sound pressure level LpA < 70 dB according to EN ISO 20361

at maximum stroke length, maximum stroke rate, maximum back pressure (water)

16.11 Shipping weight

Shipping weight of Beta b types - in kg

Material	BT4b						BT5b		
	1000, 0700, 0400	2001, 1601, 1001, 0701, 0401	2002, 1602, 1002, 0702, 0402	1604, 1004, 0704, 0404	0708, 0408, 0413	0220	2504, 1008, 0713	0420	0232
PP, NP, PV, TT	2.5	2.9	2.9	3.1	3.1	3.3	4.5	4.7	5.1
SS	3.0	3.6	3.6	3.9	3.9	4.4	5.3	5.8	6.6

17 Dimensional drawings

- *Compare the dimensions on the dimensional drawing and pump.*
- *All dimensions are in mm.*

Dimensional drawing Beta b, material version PP

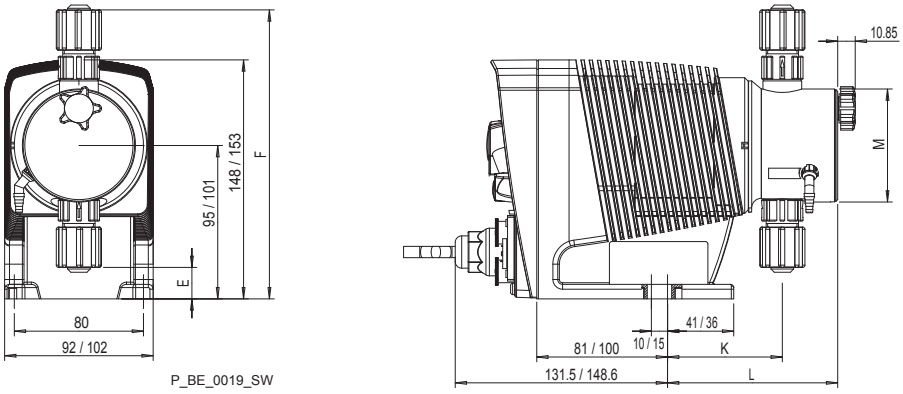

Fig. 19: Dimension drawing Beta b BT4b/BT5b, material version PP - dimensions in mm

	1000 - 1604	0708 - 0220	1008 - 0420	0232
E	19.5	7	14	1.5
F	179	186.5	191.5	200.5
K	71	77.5	74	77.5
L	105.5	111	107.5	94.5
M	Ø 70	Ø 90	Ø 90	Ø 110

Dimensional drawing Beta b, material version PP

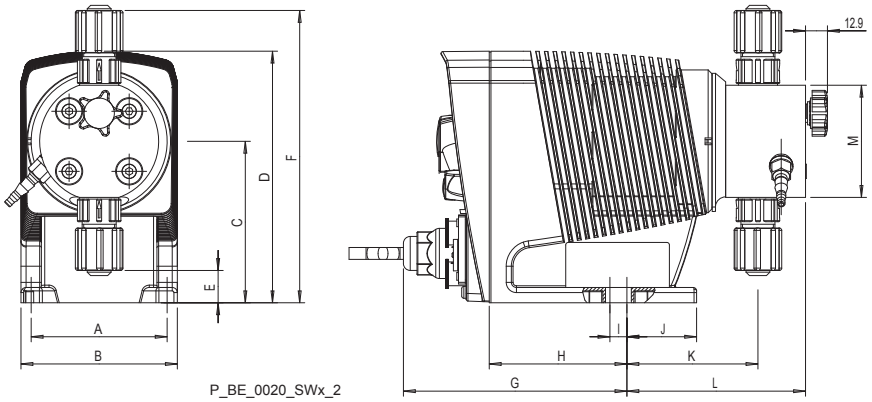

Fig. 20: Dimension drawing Beta b BT4b/BT5b, material version PP - dimensions in mm

	1000 - 1604	0708 - 0220	2504	1008 - 0420	0232
A	80	80	80	80	80
B	92	92	102	102	102
C	95	95	101	101	101
D	148	148	153	153	153
E	19	7.2	24.6	14	3.2
F	172	182.8	178.4	188	198.8
G	131.5	131.5	148.6	148.6	148.6
H	81	81	100	100	100
I	10	10	15	15	15
J	41	41	36	36	36
K	77	77.5	77.1	74.1	76
L	105	105.5	105.1	102.1	104.5
M	Ø 70	Ø 90	Ø 70	Ø 90	Ø 110

Dimensional drawing Beta b, material version PP and NP SEK

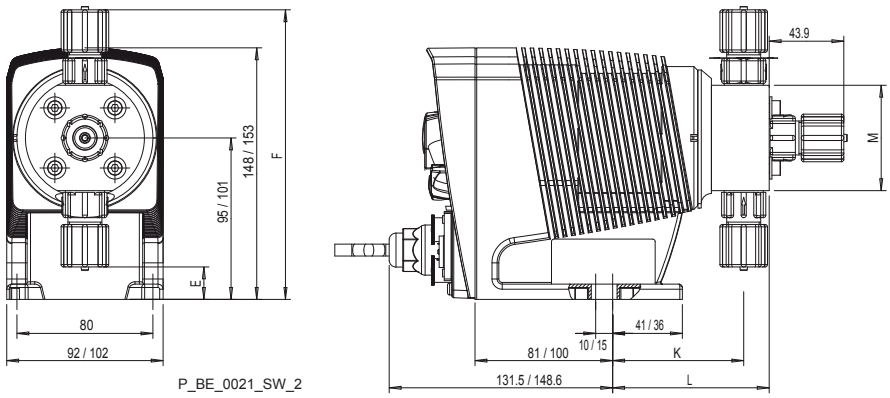

Fig. 21: Dimensional drawing Beta b BT4b/BT5b, material versions PP and NP with self-bleeding dosing head SEK - dimensions in mm

	1604	0708 - 0220	1008 - 0232
E	19	7.5	13.6
F	170.5	182.5	188.4
K	77	74	74
L	92	105.5	89
M	Ø 70	Ø 90	Ø 90

Dimensional drawing Beta b, material version PV

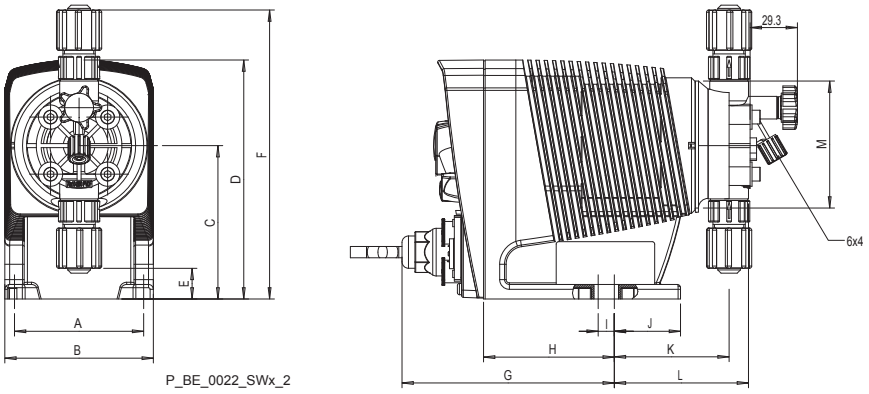

Fig. 22: Dimension drawing Beta b BT4b/BT5b, material version PV - dimensions in mm

	1604	0708 - 0220	1008 - 0420	0232
A	80	80	80	80
B	92	92	102	102
C	95	95	101	101
D	148	148	153	153
E	19	8.1	14.1	3.2
F	179	185.5	191.5	199
G	131.5	131.5	148.5	148.5
H	81	81	100	100
I	10	10	15	15
J	41	41	36	36
K	71	73	73	76
L	83	90	90	93
M	Ø 70	Ø 90	Ø 90	Ø 110

Dimensional drawing Beta b, material version PV HV

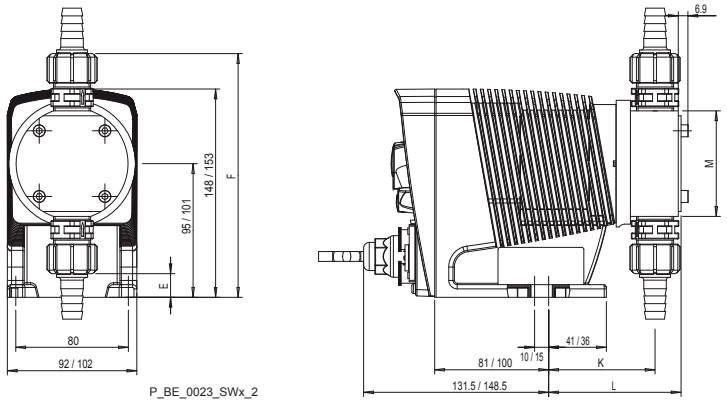

Fig. 23: Dimensional drawing Beta b BT4b/BT5b, material version PV for highly viscous feed chemicals - dimensions in mm

	1604	0708 - 0413	0220	1008 - 0713	0420
E	17	13	13	22.8	19
F	173	177	177	179.2	183
K	75.5	77	77	75.5	78.5
L	94	95	95	94	96.5
M	Ø 70	Ø 80	Ø 85	Ø 85	Ø 85

Dimensional drawing Beta b, material version TT

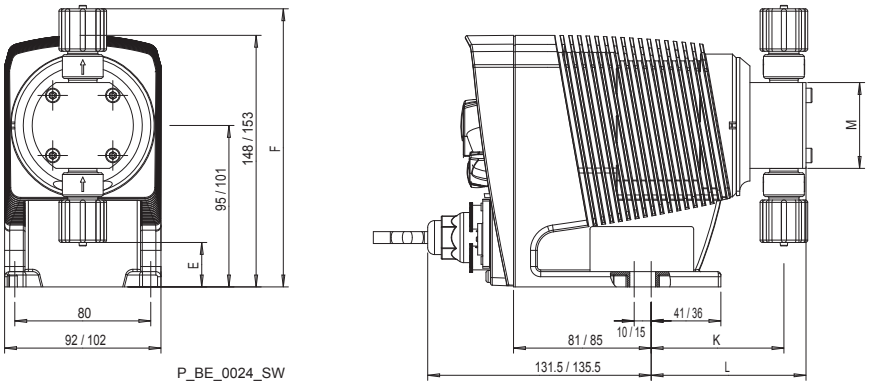

Fig. 24: Dimension drawing Beta b BT4b/BT5b, material version TT - dimensions in mm

	1000 - 1601	1602 - 1604	0708 - 0220	1008 - 0420	0232
E	26.2	21.3	-13.2	-7.2	-14.2
F	163.7	168.8	202.7	208.7	215.7
K	78	72	77	77.1	78
L	91	86	94	94	97
M	Ø 60	Ø 70	Ø 85	Ø 85	Ø 100

Dimensional drawing Beta b, material version SS

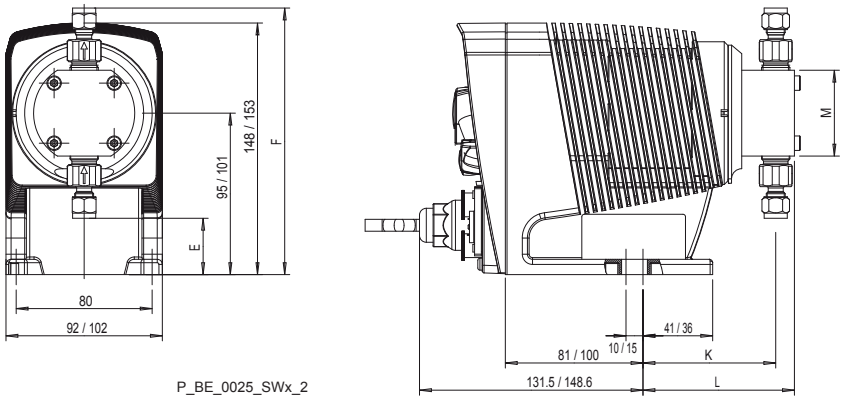

Fig. 25: Dimensional drawing Beta b BT4b/BT5b, material version SS - dimensions in mm

	1000 - 1601	1602 - 1604	0708 - 0220	2504	1008 - 0420	0232
E	33.2	24.4	-7.8	31.7	-1.8	-8
F	156.9	165.6	197.3	170.4	203.3	210
K	78	75	82	72	77	78
L	89	87	97	84	92	95
M	Ø 60	Ø 70	Ø 85	Ø 70	Ø 85	Ø 110

18 Diagrams for setting the metering capacity

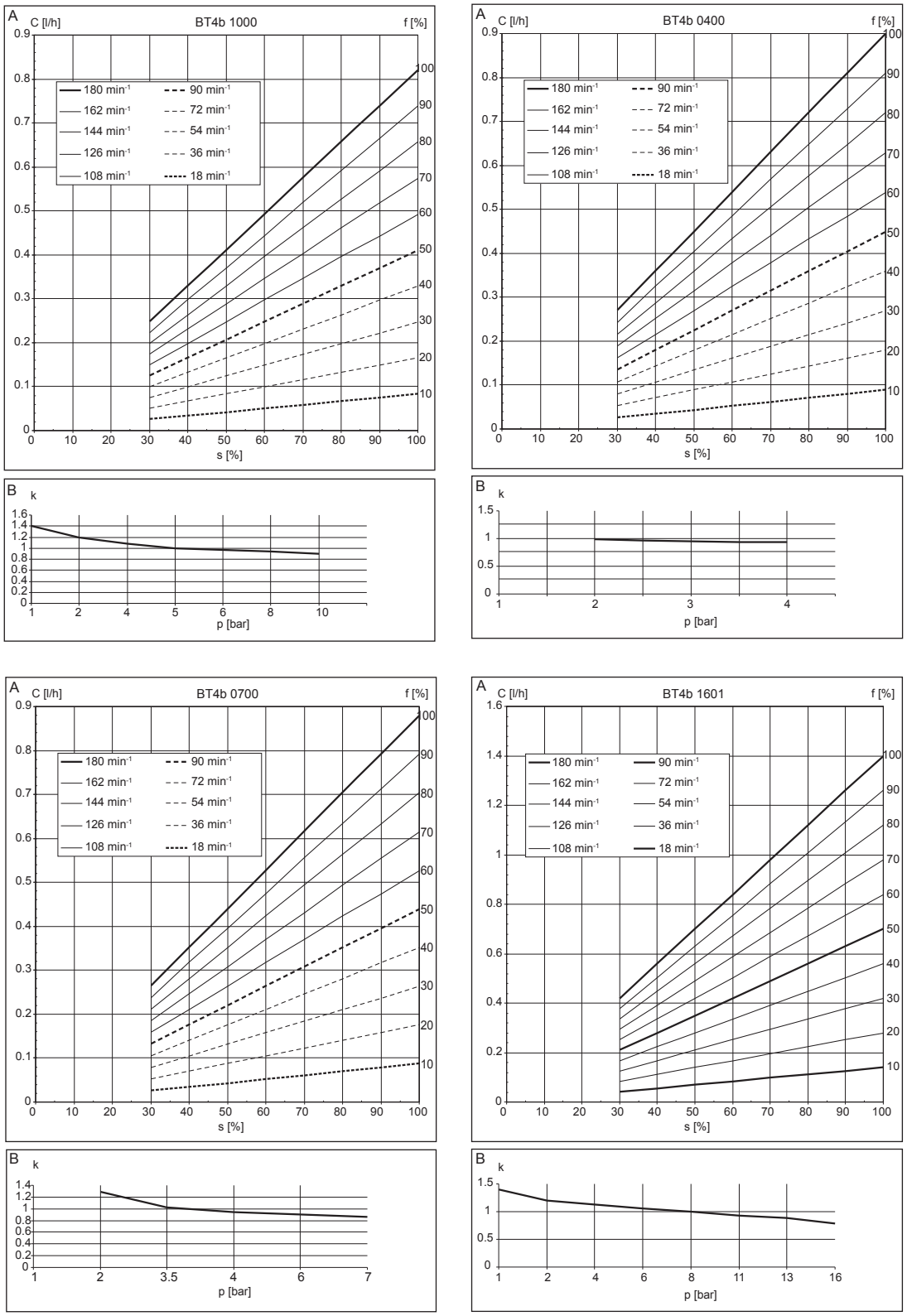

Fig. 26: A) Metering capacity C for medium back pressure dependent on the stroke length s for different stroke rates f. B) Corresponding correction factors k dependent on back pressure p.

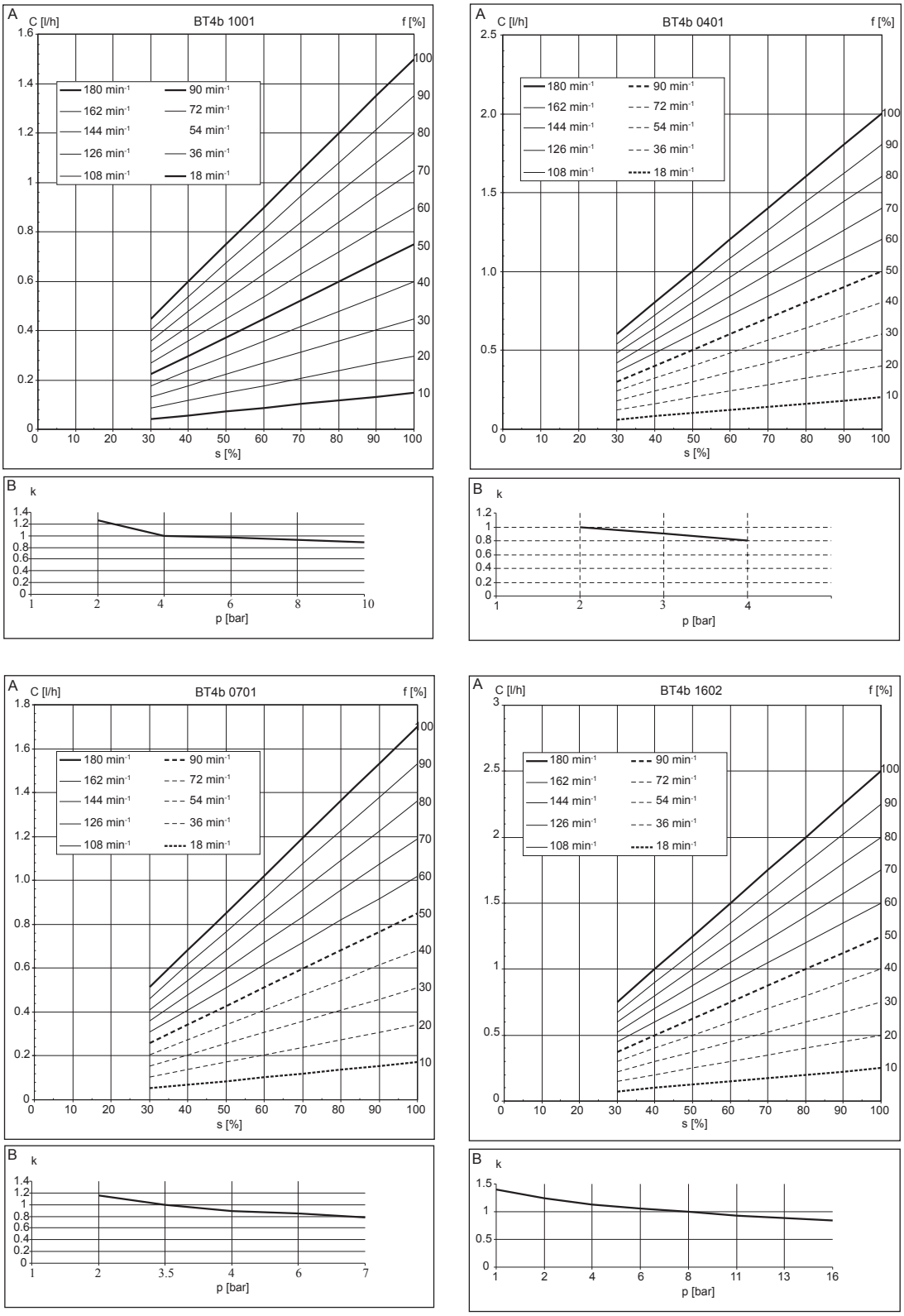

Fig. 27: A) Metering capacity C for medium back pressure dependent on the stroke length s for different stroke rates f. B) Corresponding correction factors k dependent on back pressure p.

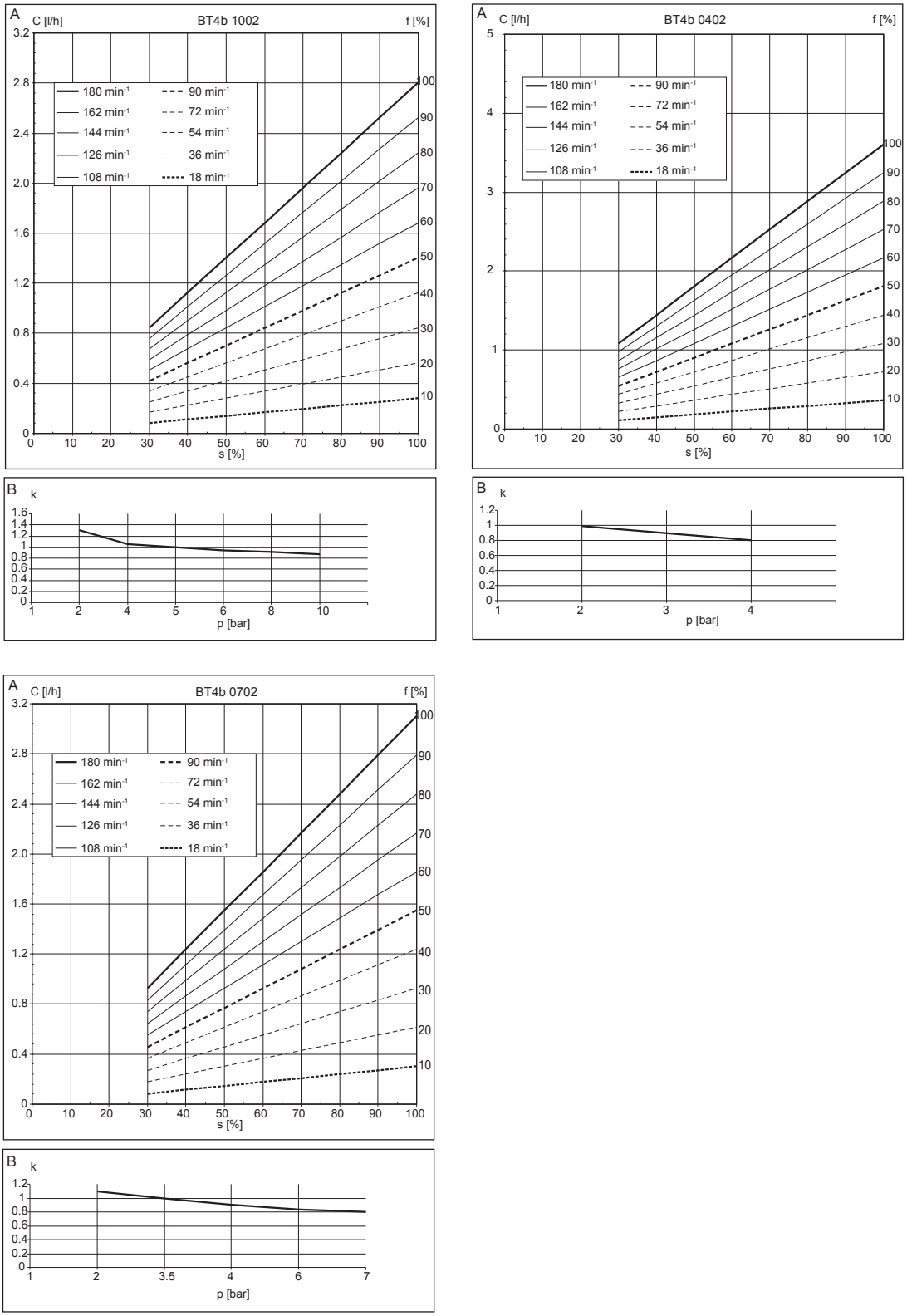

Fig. 28: A) Metering capacity C for medium back pressure dependent on the stroke length s for different stroke rates f. B) Corresponding correction factors k dependent on back pressure p.

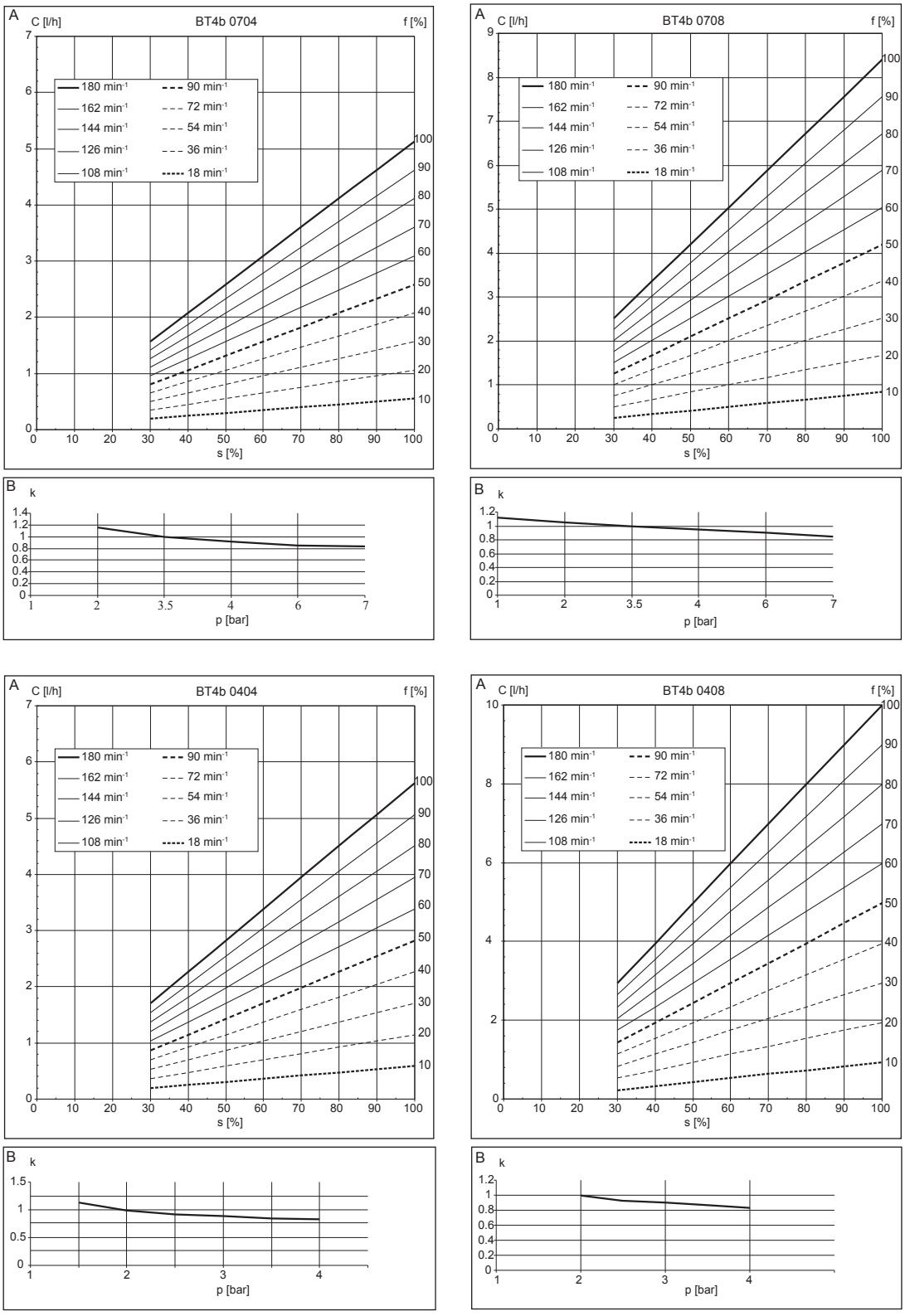

Fig. 29: A) Metering capacity C for medium back pressure dependent on the stroke length s for different stroke rates f. B) Corresponding correction factors k dependent on back pressure p.

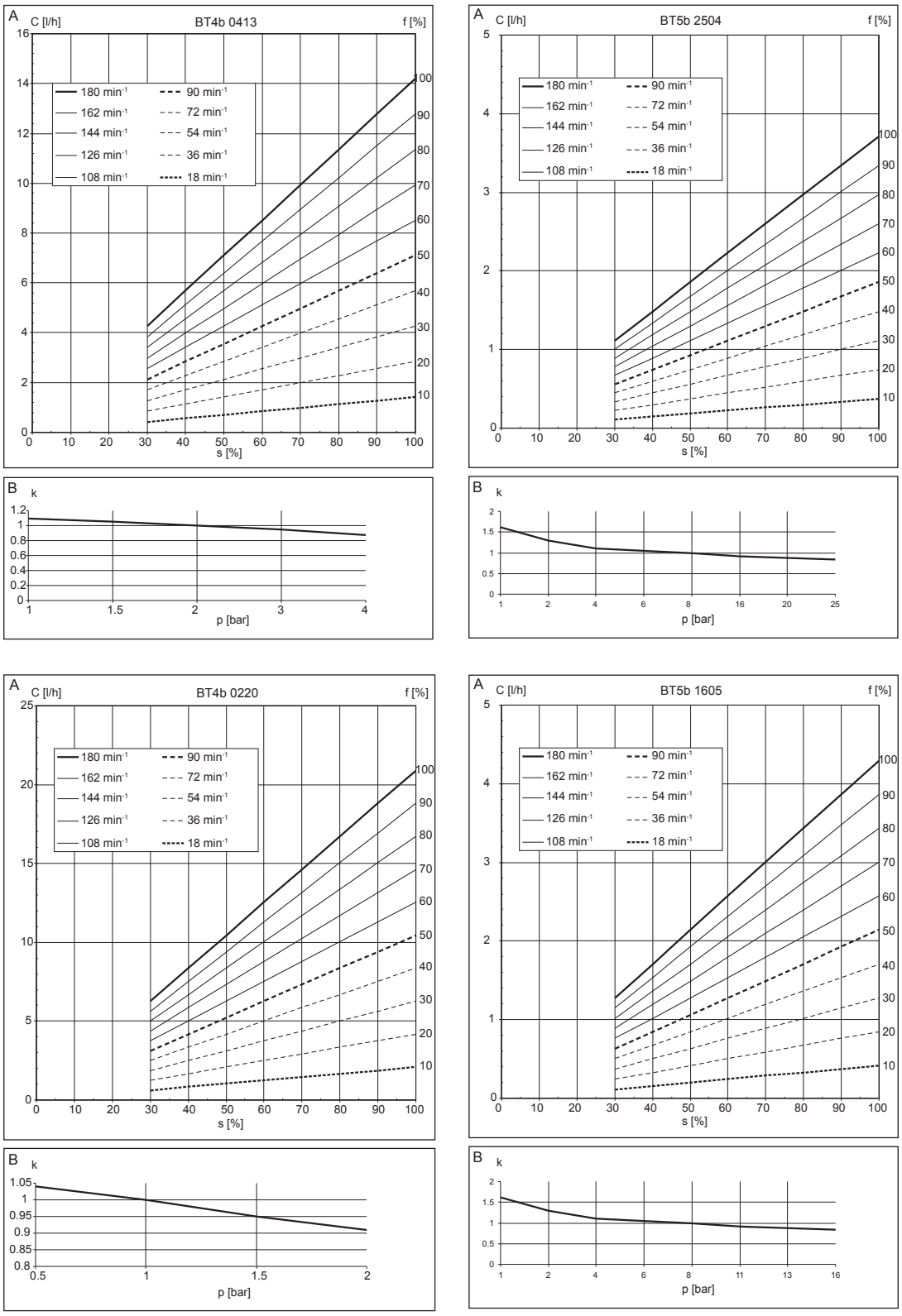

Fig. 30: A) Metering capacity C for medium back pressure dependent on the stroke length s for different stroke rates f. B) Corresponding correction factors k dependent on back pressure p.

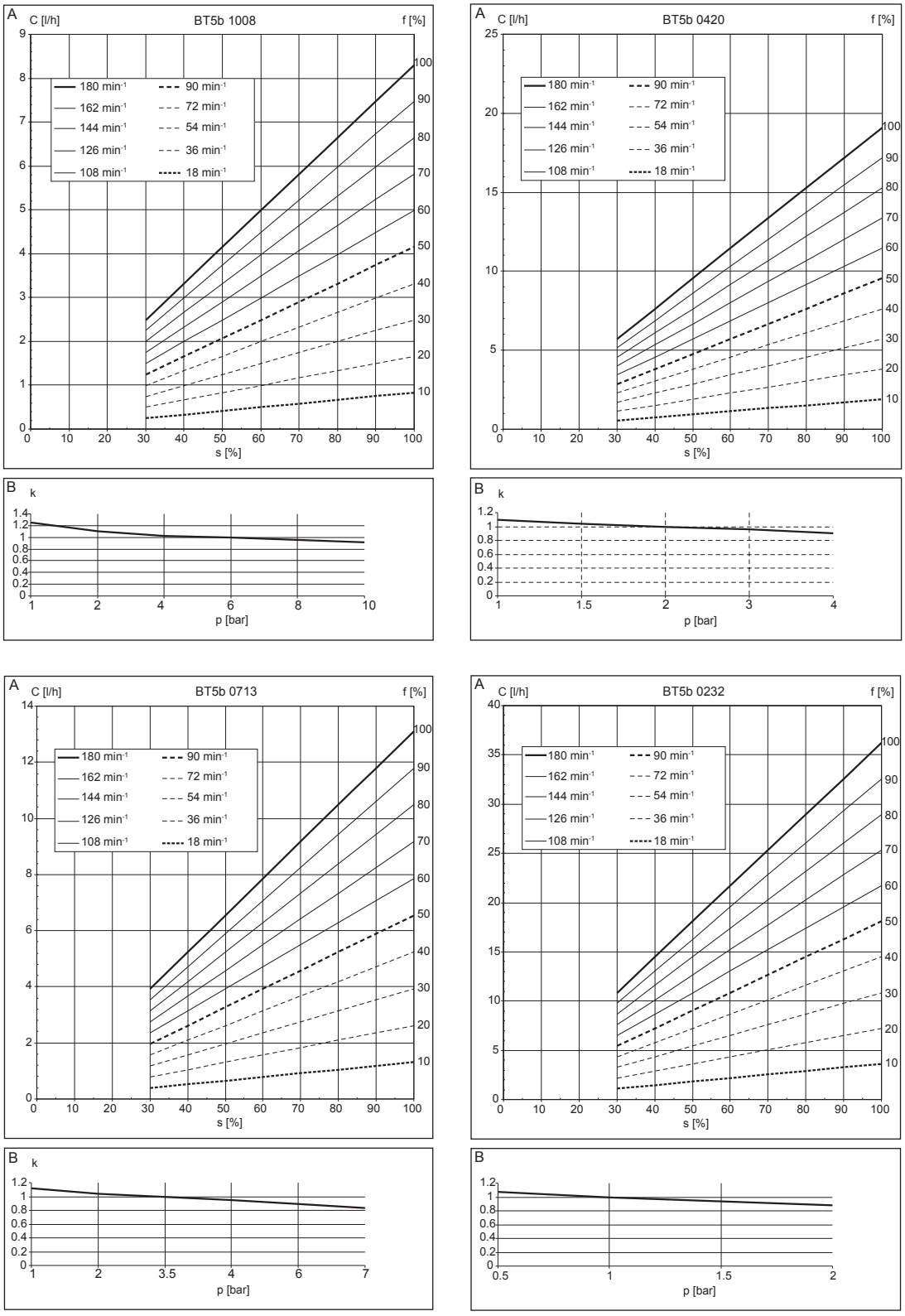

Fig. 31: A) Metering capacity C for medium back pressure dependent on the stroke length s for different stroke rates f. B) Corresponding correction factors k dependent on back pressure p.

19 Exploded Views of Liquid Ends

Liquid end Beta® 1000 - 1604 PP with bleed valve

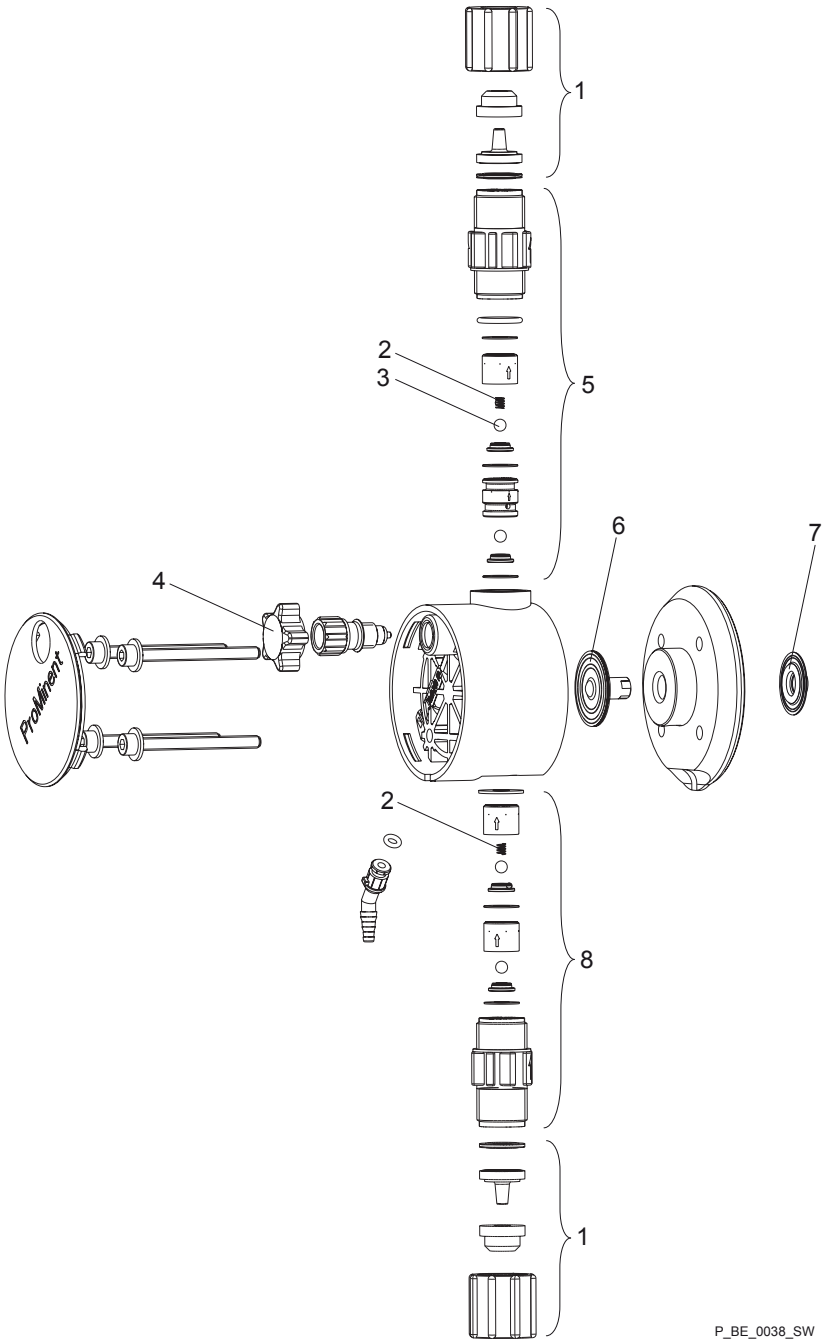

Fig. 32

Item	Description	Type 1000	Type 1601	Type 1602	Type 1604
1	Connector kit 6/4 PVT	1023246	1023246	1023246	1023246
3	4 Valve balls	404201	404201	404201	404201
4	Bleed valve	1021662	1021662	1021662	1021662

Spring (item 2) is a special accessory. The positions listed are included in the spare parts kit. Technical changes reserved.

Item	Description	Type 1000	Type 1601	Type 1602	Type 1604
5	Discharge valve, compl. 4.7-2 PVT	1023127	1023127	1023127	1023127
6	Diaphragm	1000244	1000245	1000246	1034612
7	Safety diaphragm	1006061	1006061	1006061	1006061
8	Suction valve, compl. 4.7-2 PVT	1023128	1023128	1023128	1023128

Spring (item 2) is a special accessory. The positions listed are included in the spare parts kit. Technical changes reserved.

Liquid end Beta® 0708 (1008) - 0220 (0420) PP with bleed valve

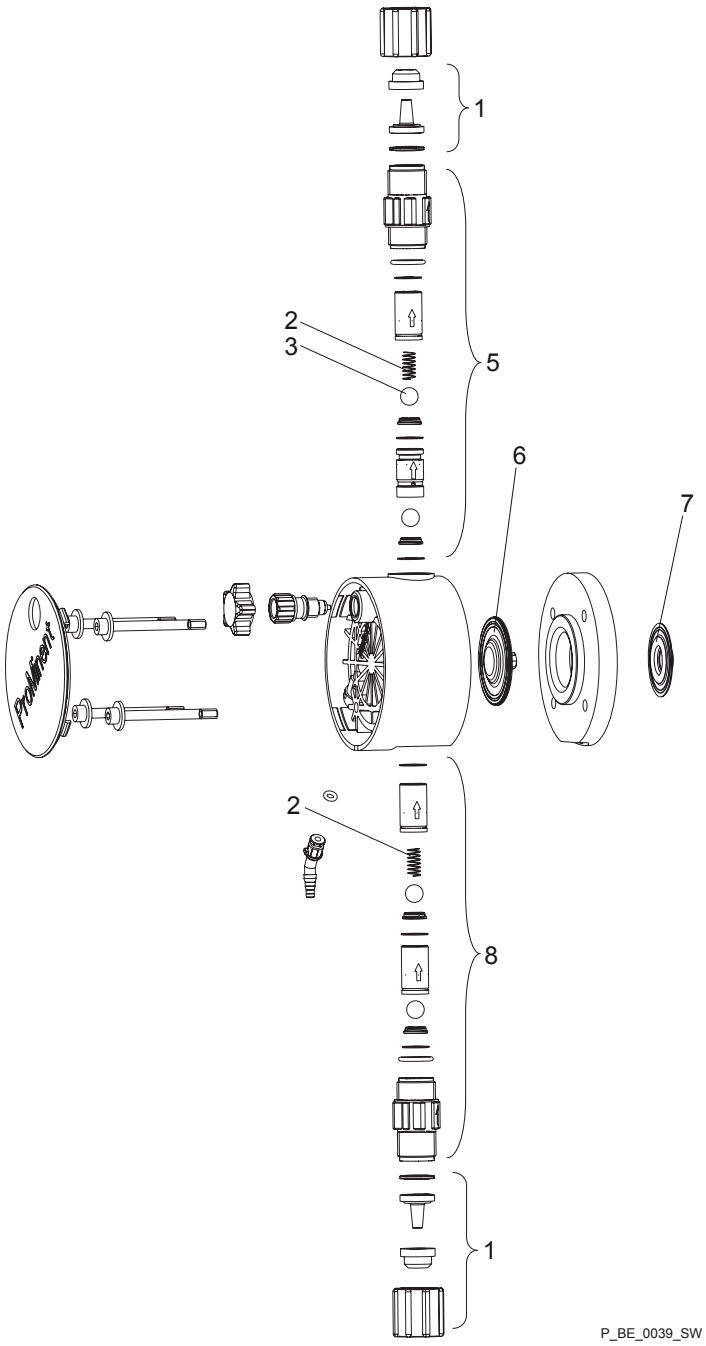

Fig. 33

Item	Description	Type 0708 (1008)	Type 0413 (0713)	Type 0220 (0420)
1	Connector kit 8/5 PVT	1023247	1023247	1023247
3	4 Valve balls	404281	404281	404281
4	Bleed valve	1021662	1021662	1021662
5	Discharge valve, compl. 9.2-2 PVT	1023125	1023125	1023125

Spring (item 2) is a special accessory. The positions listed are included in the spare parts kit. Technical changes reserved.

Item	Description	Type 0708 (1008)	Type 0413 (0713)	Type 0220 (0420)
6	Diaphragm	1000248	1000249	1000250
7	Safety diaphragm	1006061	1006061	1006061
8	Suction valve, compl. 9.2-2 PVT	1023126	1023126	1023126

Spring (item 2) is a special accessory. The positions listed are included in the spare parts kit. Technical changes reserved.

Liquid end Beta® 0232 PP without bleed valve

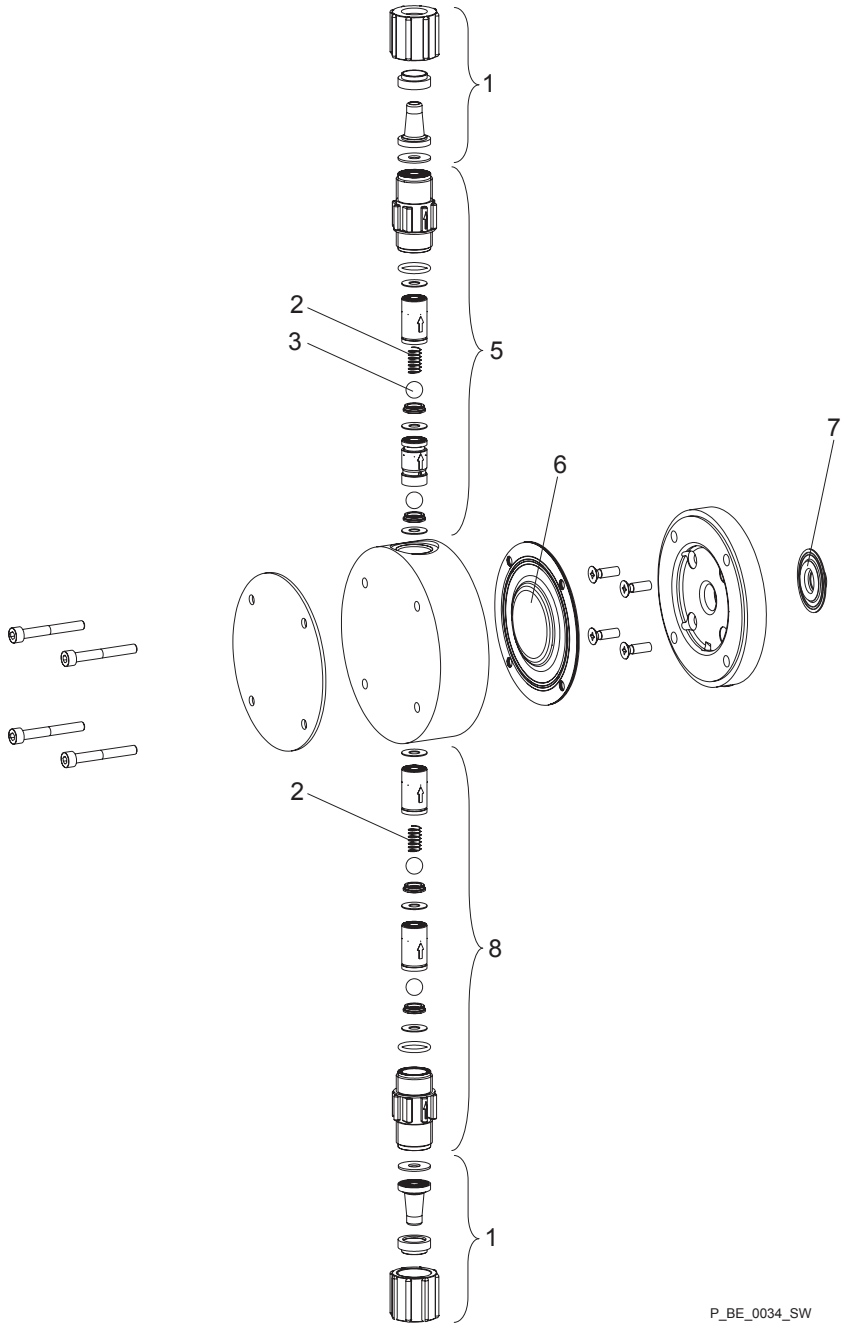

Fig. 34

Item	Description	Type 0232
1	Connector kit 12/9 PVT	1023248
3	4 Valve balls	404281
5	Discharge valve, compl. 9.2-2 PVT	1023125
6	Diaphragm	1000251

Spring (item 2) is a special accessory. The positions listed are included in the spare parts kit. Technical changes reserved.

Item	Description	Type 0232
7	Safety diaphragm	1006061
8	Suction valve, compl. 9.2-2 PVT	1023126

Spring (item 2) is a special accessory. The positions listed are included in the spare parts kit. Technical changes reserved.

Liquid end Beta® 1000 - 1604 NP with and without bleed valve

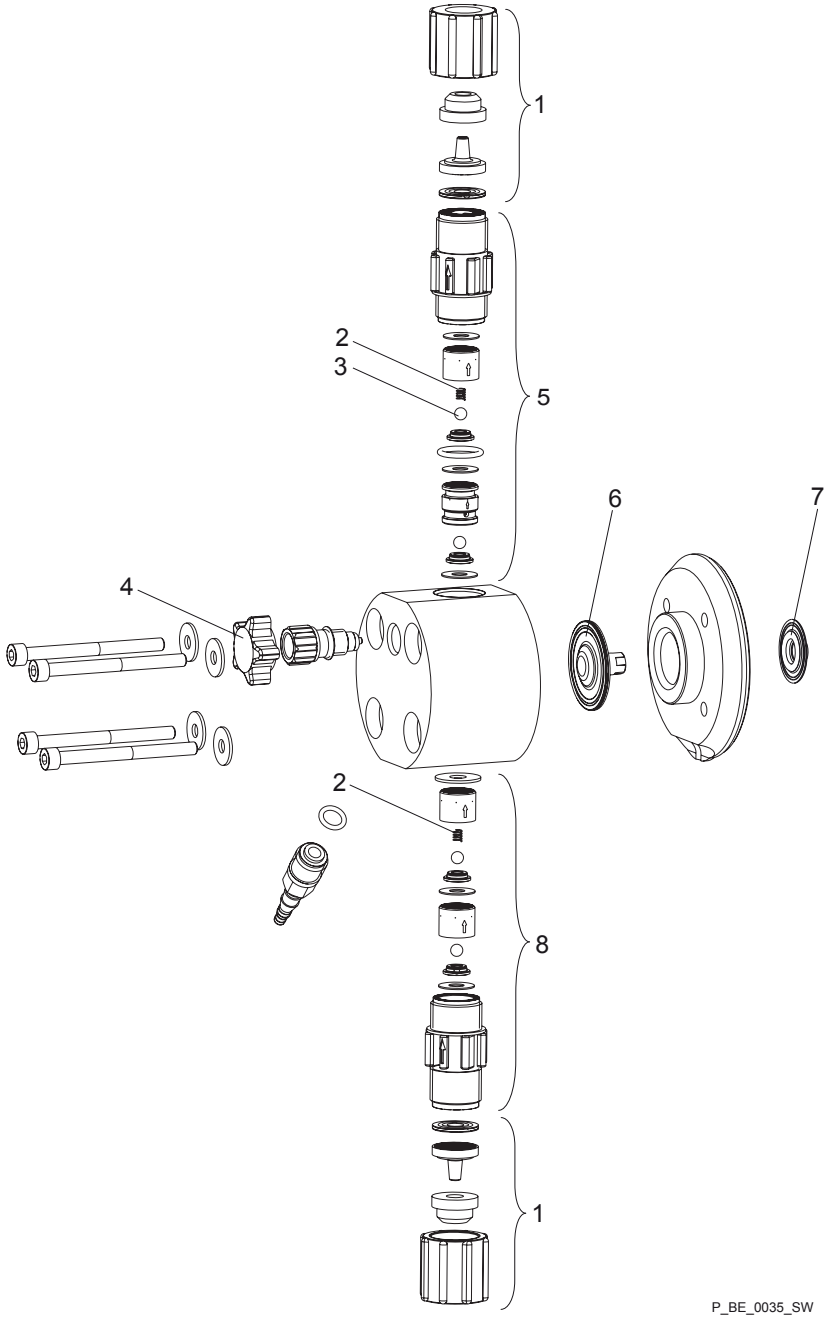

Fig. 35

Item	Description	Type 1000	Type 1601	Type 1602	Type 1604
1	Connector kit 6/4 PVT	1023246	1023246	1023246	1023246
3	4 Valve balls	404201	404201	404201	404201
4	Bleed valve	1021662	1021662	1021662	1021662
5	Discharge valve, compl. 4.7-2 PVT	1023127	1023127	1023127	1023127

Spring (item 2) is a special accessory. The positions listed are included in the spare parts kit. Technical changes reserved.

Item	Description	Type 1000	Type 1601	Type 1602	Type 1604
6	Diaphragm	1000244	1000245	1000246	1034612
7	Safety diaphragm	1006061	1006061	1006061	1006061
8	Suction valve, compl. 4.7-2 PVT	1023128	1023128	1023128	1023128

Spring (item 2) is a special accessory. The positions listed are included in the spare parts kit. Technical changes reserved.

Liquid end Beta® 0708 (1008) - 0220 (0420) NP with and without bleed valve

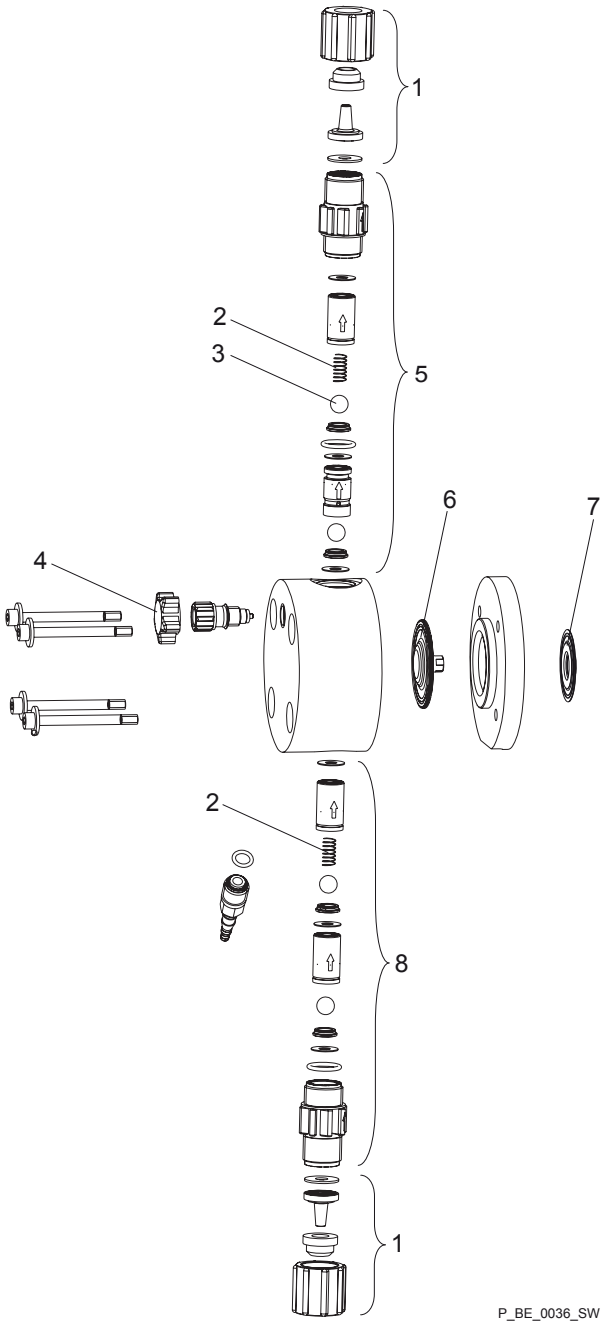

Fig. 36

Item	Description	Type 0708 (1008)	Type 0413 (0713)	Type 0220 (0420)
1	Connector kit 8/5 PVT	1023247	1023247	1023247
3	4 Valve balls	404281	404281	404281
4	Bleed valve	1021662	1021662	1021662
5	Discharge valve, compl. 9.2-2 PVT	1023125	1023125	1023125

Spring (item 2) is a special accessory. The positions listed are included in the spare parts kit. Technical changes reserved.

Item	Description	Type 0708 (1008)	Type 0413 (0713)	Type 0220 (0420)
6	Diaphragm	1000248	1000249	1000250
7	Safety diaphragm	1006061	1006061	1006061
8	Suction valve, compl. 9.2-2 PVT	1023126	1023126	1023126

Spring (item 2) is a special accessory. The positions listed are included in the spare parts kit. Technical changes reserved.

Liquid end Beta® 0232 NP with and without bleed valve

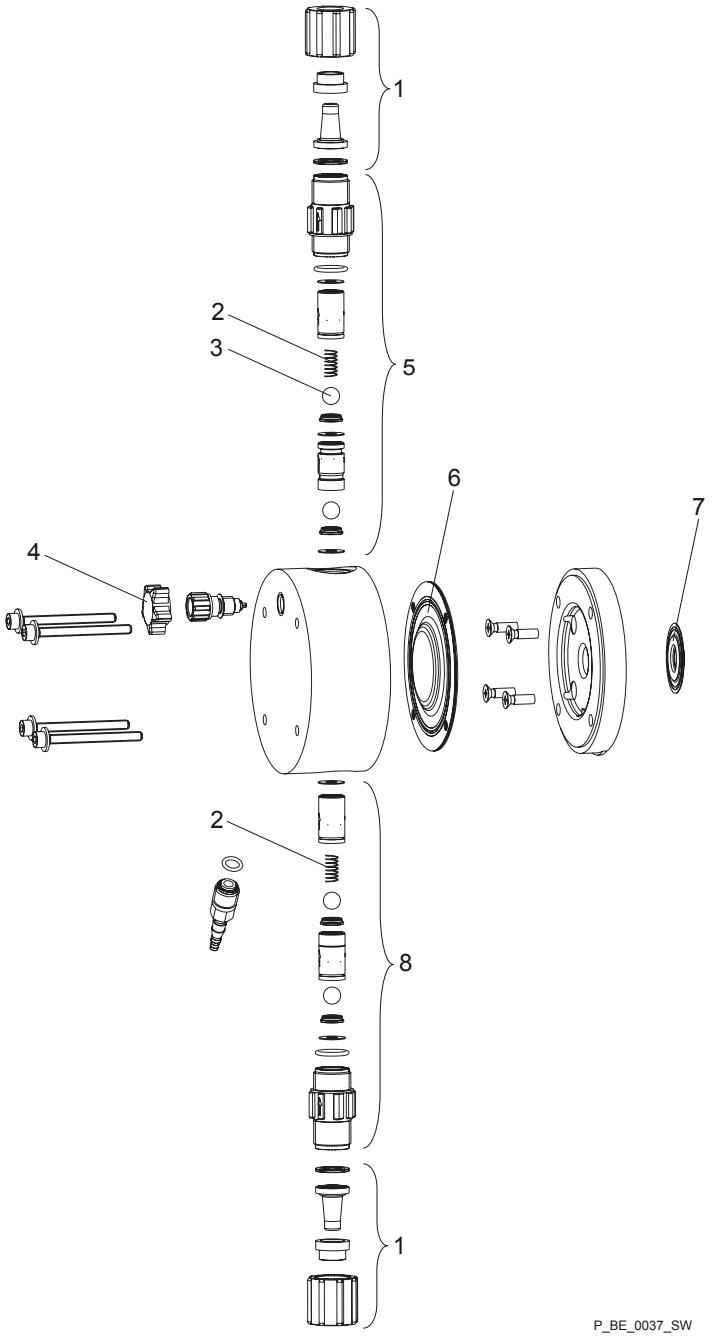

Fig. 37

Item	Description	Type 0232
1	Connector kit 12/9 PVT	1023248
3	4 Valve balls	404281
5	Discharge valve, compl. 9.2-2 PVT	1023125
6	Diaphragm	1000251

Spring (item 2) is a special accessory. The positions listed are included in the spare parts kit. Technical changes reserved.

Item	Description	Type 0232
7	Safety diaphragm	1006061
8	Suction valve, compl. 9.2-2 PVT	1023126

Spring (item 2) is a special accessory. The positions listed are included in the spare parts kit. Technical changes reserved.

Liquid end Beta® 1000 - 1604 PV with bleed valve

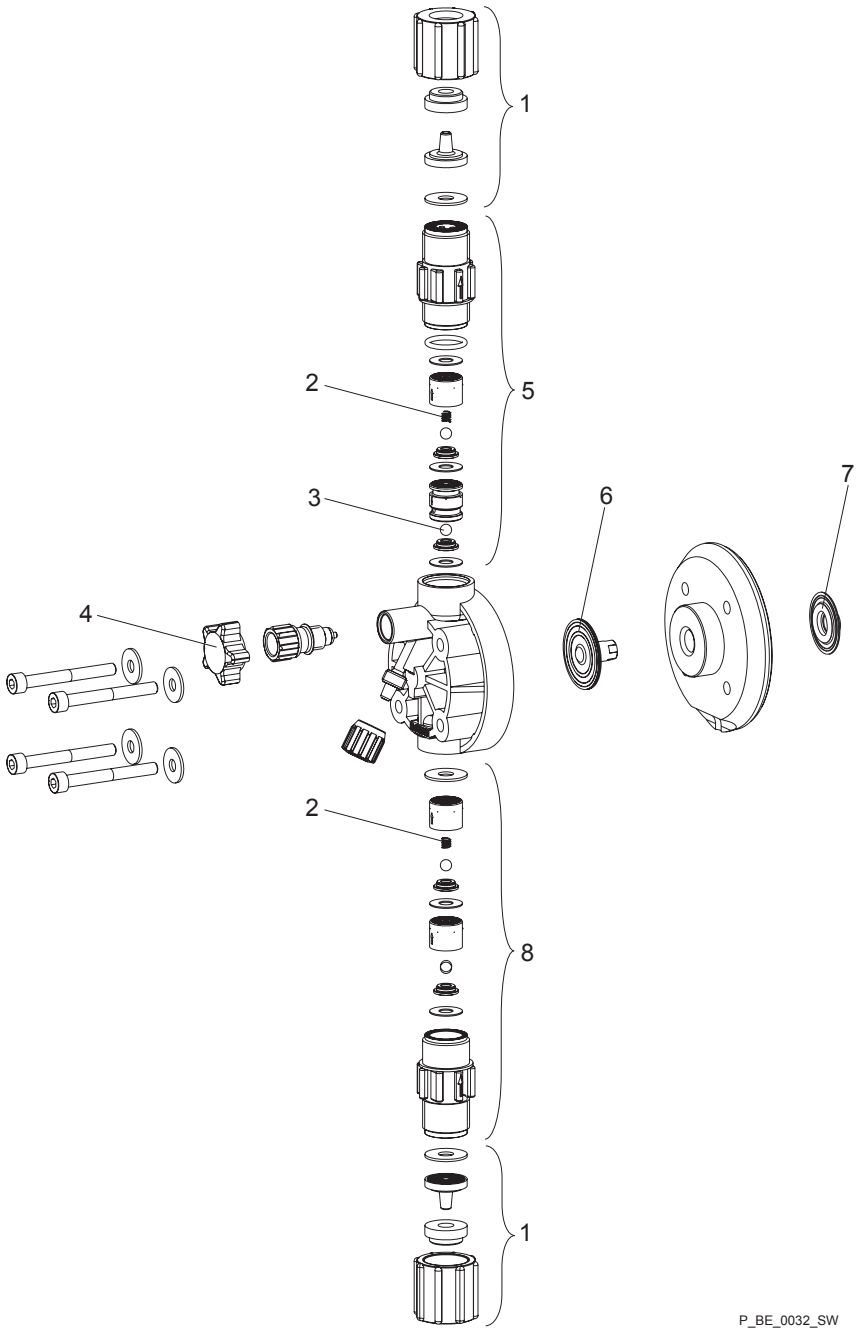

Fig. 38

Item	Description	Type 1000	Type 1601	Type 1602	Type 1604
1	Connector kit 6/4 PVT	1035660	1035660	1035660	1035660
3	4 Valve balls	404201	404201	404201	404201
4	Bleed valve	1021662	1021662	1021662	1021662
5	Discharge valve, compl. 4.7-2 PVT	1023127	1023127	1023127	1023127

Spring (item 2) is a special accessory. The positions listed are included in the spare parts kit. Technical changes reserved.

Item	Description	Type 1000	Type 1601	Type 1602	Type 1604
6	Diaphragm	1000244	1000245	1000246	1034612
7	Safety diaphragm	1006061	1006061	1006061	1006061
8	Suction valve, compl. 4.7-2 PVT	1023128	1023128	1023128	1023128

Spring (item 2) is a special accessory. The positions listed are included in the spare parts kit. Technical changes reserved.

Liquid end Beta® 0708 (1008) - 0220 (0420) PV with bleed valve

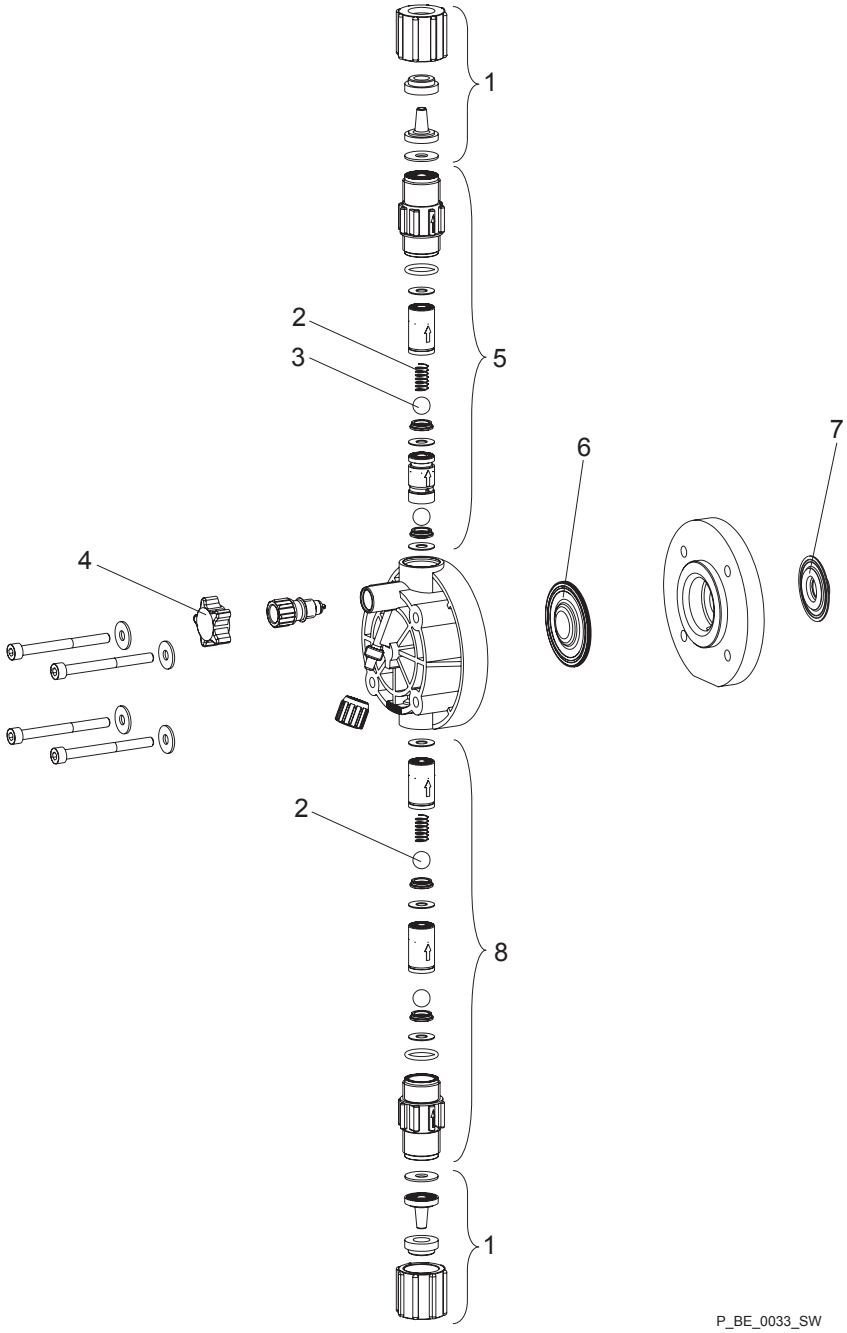

Fig. 39

Item	Description	Type 0708 (1008)	Type 0413 (0713)	Type 0220 (0420)
1	Connector kit 8/5 PVT (0220/0420: 12/9)	1035661	1035661	1035659
3	4 Valve balls	404281	404281	404281
4	Bleed valve	1021662	1021662	1021662
5	Discharge valve, compl. 9.2-2 PVT	1023125	1023125	1023125

Spring (item 2) is a special accessory. The positions listed are included in the spare parts kit. Technical changes reserved.

Item	Description	Type 0708 (1008)	Type 0413 (0713)	Type 0220 (0420)
6	Diaphragm	1000248	1000249	1000250
7	Safety diaphragm	1006061	1006061	1006061
8	Suction valve, compl. 9.2-2 PVT	1023126	1023126	1023126

Spring (item 2) is a special accessory. The positions listed are included in the spare parts kit. Technical changes reserved.

Liquid end Beta® 0232 PV without bleed valve

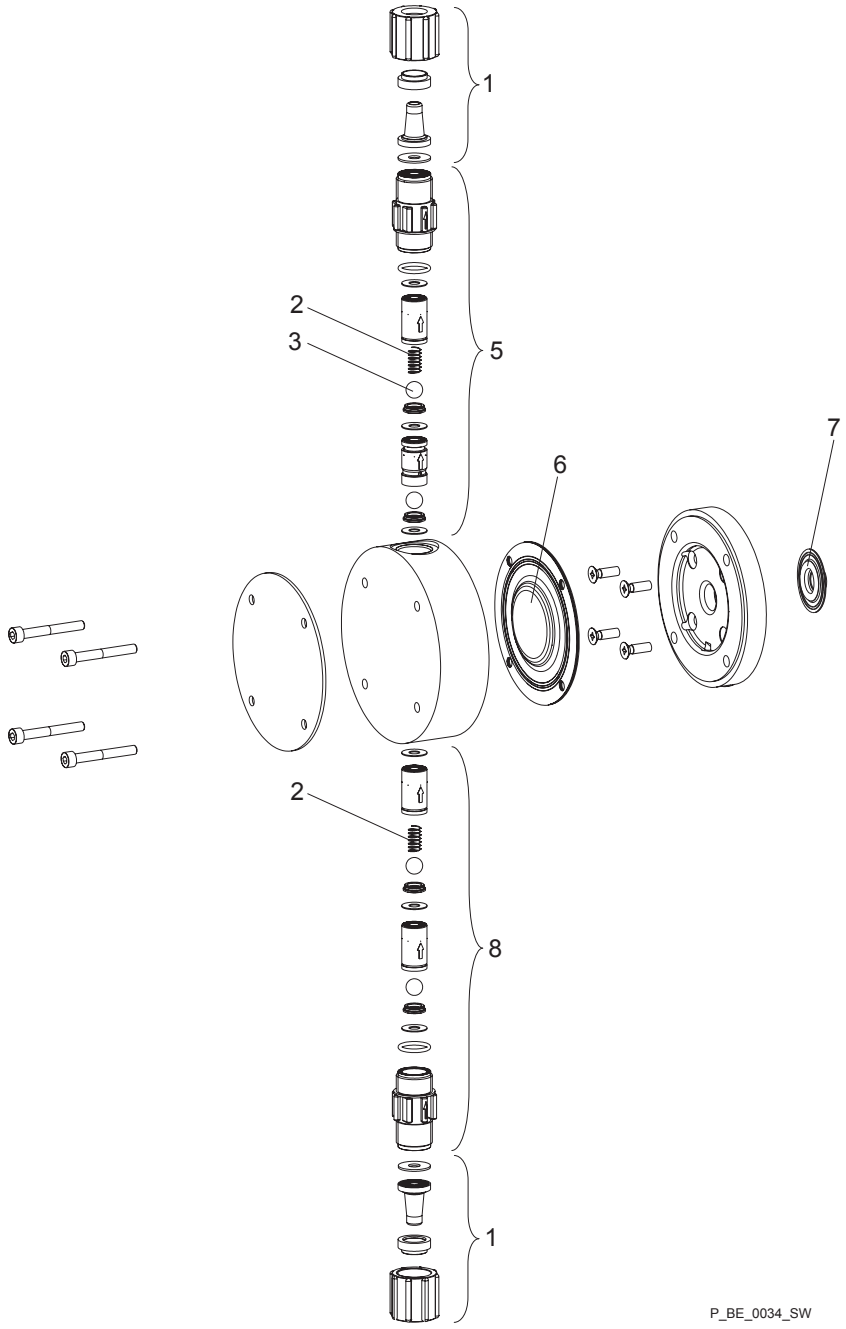

Fig. 40

Item	Description	Type 0232
1	Connector kit 12/9 FVD PVT	1035659
3	4 Valve balls	404281
5	Discharge valve, compl. 9.2-2 PVT	1023125
6	Diaphragm	1000251

Spring (item 2) is a special accessory. The positions listed are included in the spare parts kit. Technical changes reserved.

Item	Description	Type 0232
7	Safety diaphragm	1006061
8	Suction valve, compl. 9.2-2 PVT	1023126

Spring (item 2) is a special accessory. The positions listed are included in the spare parts kit. Technical changes reserved.

Liquid end Beta® 1604 - 0220 (0420) PV
HV, for highly viscous feed chemicals

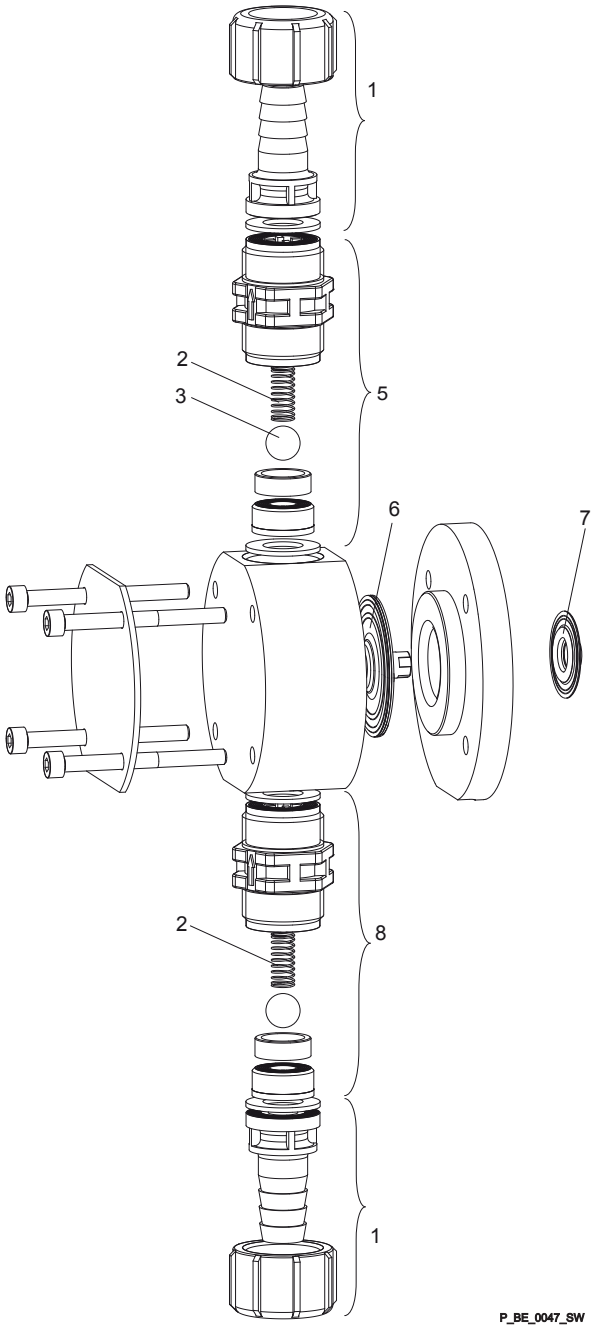

Fig. 41

Item	Description	Type 1604	Type 0708	Type 0413	Type 0220
1	Connector kit DN10 HV with PVT tube nozzle	1017405	1017405	1017405	1017405
3	4 Valve balls	404277	404277	404277	404277
6	Diaphragm	1006061	1006061	1006061	1006061
7	Safety diaphragm	1027414	1027414	1027414	1027414
The positions listed are included in the spare parts kit. Technical changes reserved.					

Liquid end Beta® 1000 - 1604 TT

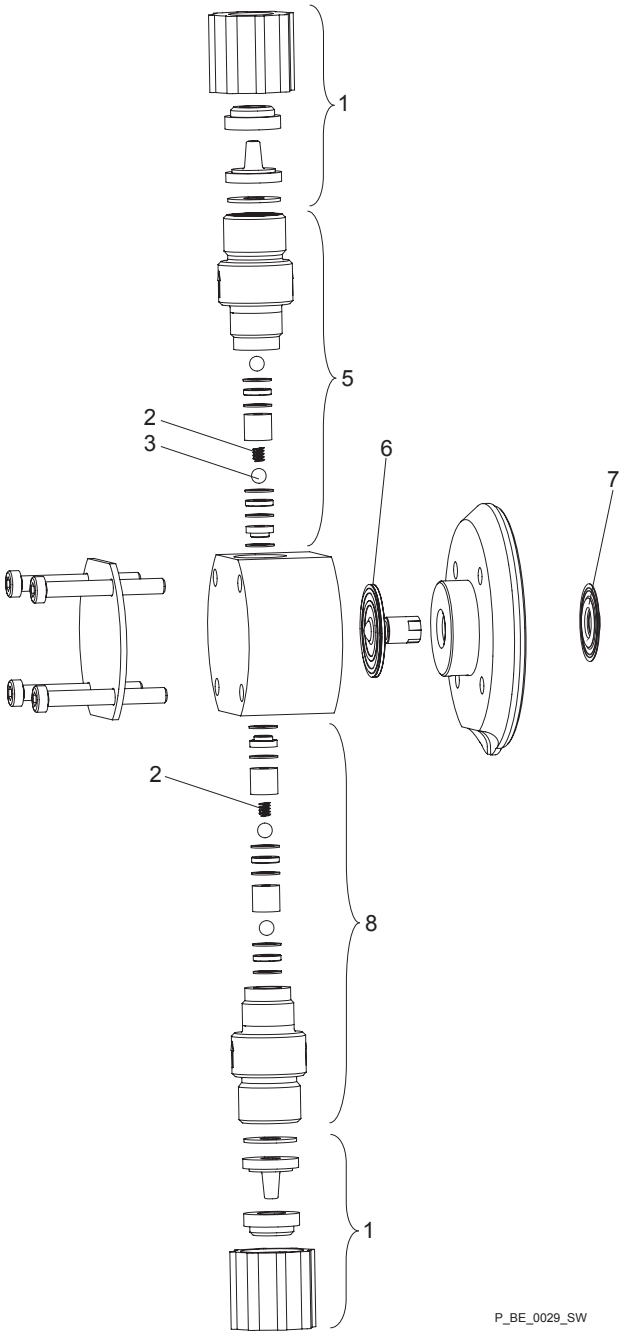

Fig. 42

Item	Description	Type 1000	Type 1601	Type 1602	Type 1604
1	Connector kit 6/4 TTT	817201	817201	817201	817201
3	4 Valve balls	404201	404201	404201	404201
5	Discharge valve, compl. 4.7-2 TTT	809406	809406	809406	809406
6	Diaphragm	1000244	1000245	1000246	1034612

Spring (item 2) is a special accessory. The positions listed are included in the spare parts kit. Technical changes reserved.

Item	Description	Type 1000	Type 1601	Type 1602	Type 1604
7	Safety diaphragm	1006061	1006061	1006061	1006061
8	Suction valve, compl. 4.7-2 TTT	809407	809407	809407	809407

Spring (item 2) is a special accessory. The positions listed are included in the spare parts kit. Technical changes reserved.

Liquid end Beta® 0708 (1008) - 0220 (0420) TT

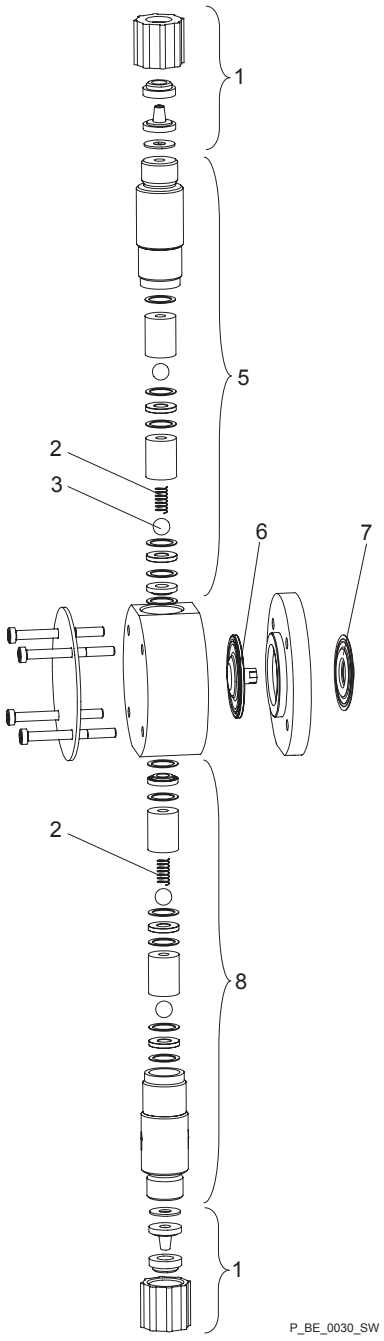

Fig. 43

Item	Description	Type 0708 (1008)	Type 0413 (0713)	Type 0220 (0420)
1	Connector kit 8/5 TTT	817204	817204	817204
3	4 Valve balls	404281	404281	404281
5	Discharge valve, compl. 9.2-2 TTT	809444	809444	809444
6	Diaphragm	1000248	1000249	1000250

Spring (item 2) is a special accessory. The positions listed are included in the spare parts kit. Technical changes reserved.

Item	Description	Type 0708 (1008)	Type 0413 (0713)	Type 0220 (0420)
7	Safety diaphragm	1006061	1006061	1006061
8	Suction valve, compl. 9.2-2 TTT	809445	809445	809445

Spring (item 2) is a special accessory. The positions listed are included in the spare parts kit. Technical changes reserved.

Liquid end Beta® 0232 TT

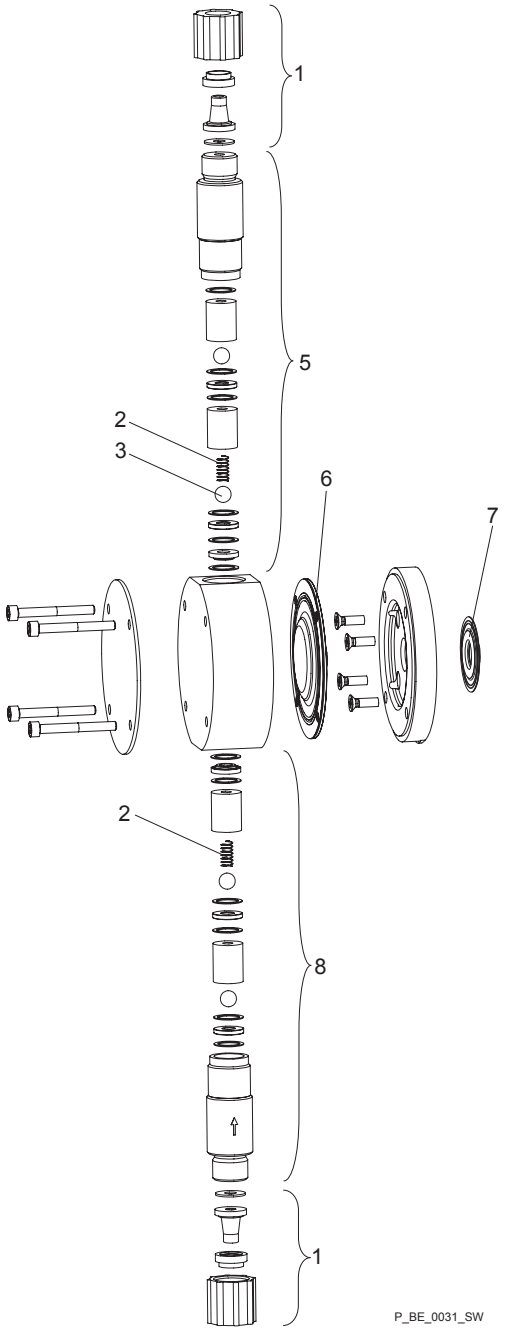

Fig. 44

Item	Description	Type 0232
1	Connector kit 12/9 TTT	817202
3	4 Valve balls	404281
5	Discharge valve compl. TTT	809444
6	Diaphragm	1000251

Spring (item 2) is a special accessory. The positions listed are included in the spare parts kit. Technical changes reserved.

Item	Description	Type 0232
7	Safety diaphragm	1006061
8	Suction valve compl. TTT	809445

Spring (item 2) is a special accessory. The positions listed are included in the spare parts kit. Technical changes reserved.

Liquid end Beta® 1000 - 1604 SS

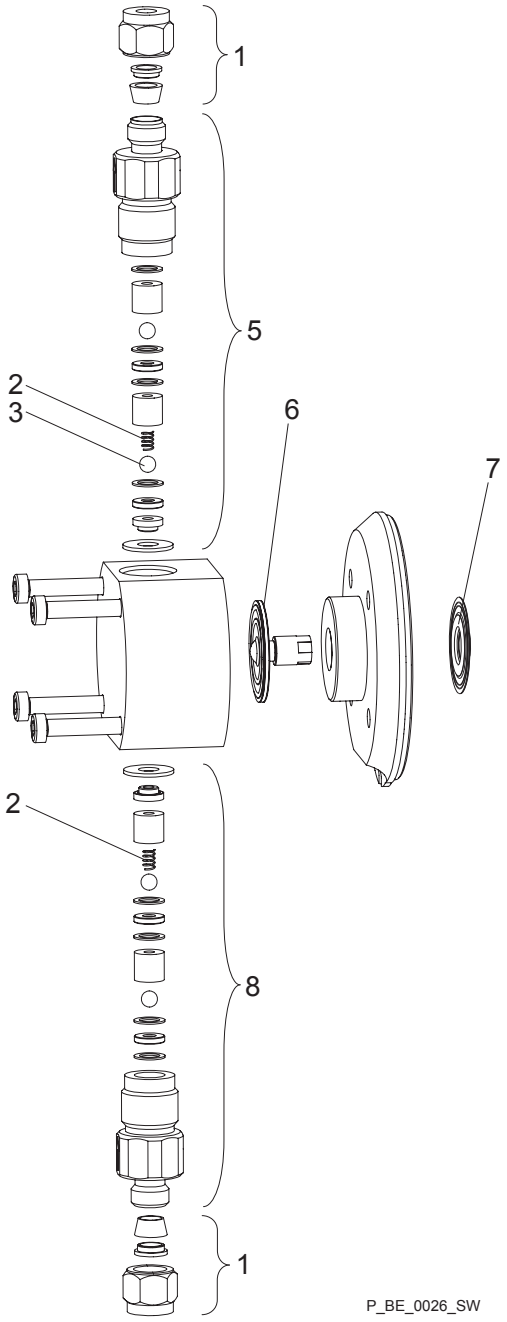

Fig. 45

Item	Description	Type 1000	Type 1601	Type 1602	Type 1604
1	Connector kit 6 mm SS	104233	104233	104233	104233
3	4 Valve balls	404201	404201	404201	404201
5	Discharge valve compl. 6 mm SST	809418	809418	809418	809418
6	Diaphragm	1000244	1000245	1000246	1034612

Spring (item 2) is a special accessory. The positions listed are included in the spare parts kit. Technical changes reserved.

Item	Description	Type 1000	Type 1601	Type 1602	Type 1604
7	Safety diaphragm	1006061	1006061	1006061	1006061
8	Suction valve compl. 6 mm SST	809419	809419	809419	809419

Spring (item 2) is a special accessory. The positions listed are included in the spare parts kit. Technical changes reserved.

Liquid end Beta® 0708 (1008) - 0220 (0420) SS

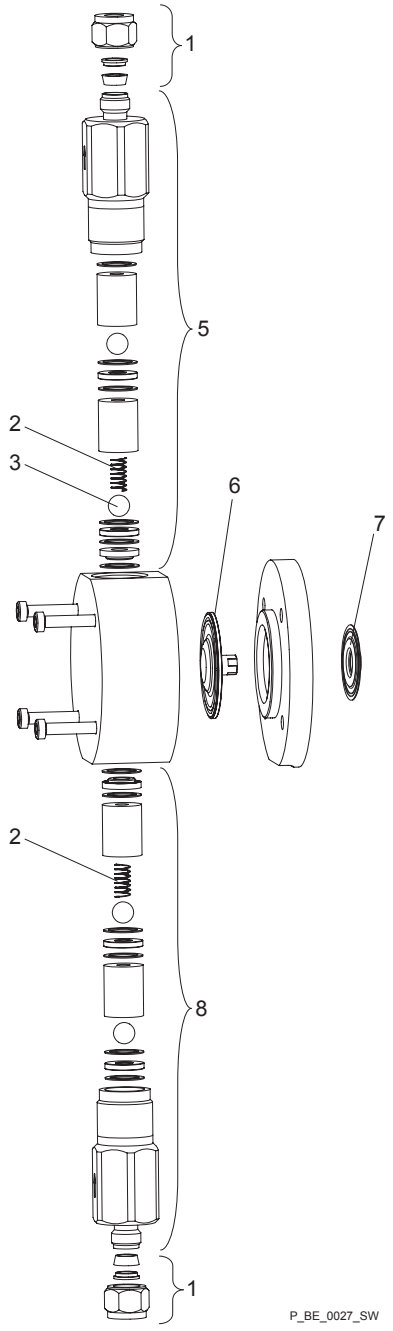

Fig. 46

Item	Description	Type 0708 (1008)	Type 0413 (0713)	Type 0220 (0420)
1	Connector kit SS	104237	104237	104245
3	4 Valve balls	404281	404281	404281
5	Discharge valve compl. SST	809494	809494	809446
6	Diaphragm	1000248	1000248	1000250

Spring (item 2) is a special accessory. The positions listed are included in the spare parts kit. Technical changes reserved.

Item	Description	Type 0708 (1008)	Type 0413 (0713)	Type 0220 (0420)
7	Safety diaphragm	1006061	1006061	1006061
8	Suction valve compl. SST	809495	809495	809447

Spring (item 2) is a special accessory. The positions listed are included in the spare parts kit. Technical changes reserved.

Liquid end Beta® 0232 SS

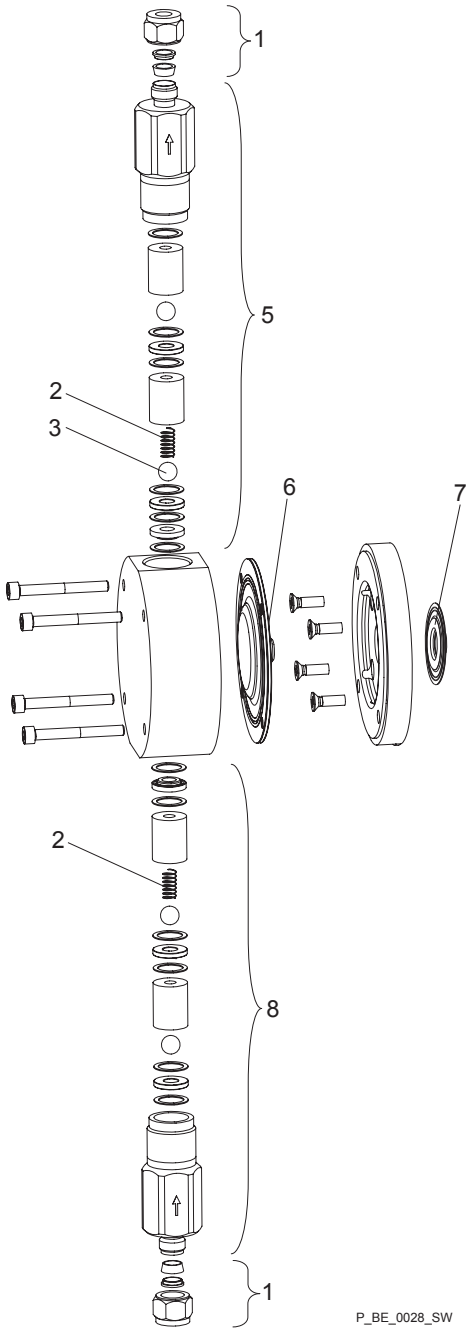

Fig. 47

Item	Description	Type 0232
1	Connector kit 12 mm SS	104245
3	4 Valve balls	404281
5	Discharge valve compl. 12 mm SST	809446
6	Diaphragm	1000251

Spring (item 2) is a special accessory. The positions listed are included in the spare parts kit. Technical changes reserved.

Item	Description	Type 0232
7	Safety diaphragm	1006061
8	Suction valve compl. 12 mm SST	809447

Spring (item 2) is a special accessory. The positions listed are included in the spare parts kit. Technical changes reserved.

Liquid end Beta® 1601 - 1604 PP SEK and 1601 - 1604 NP SEK, self-bleeding

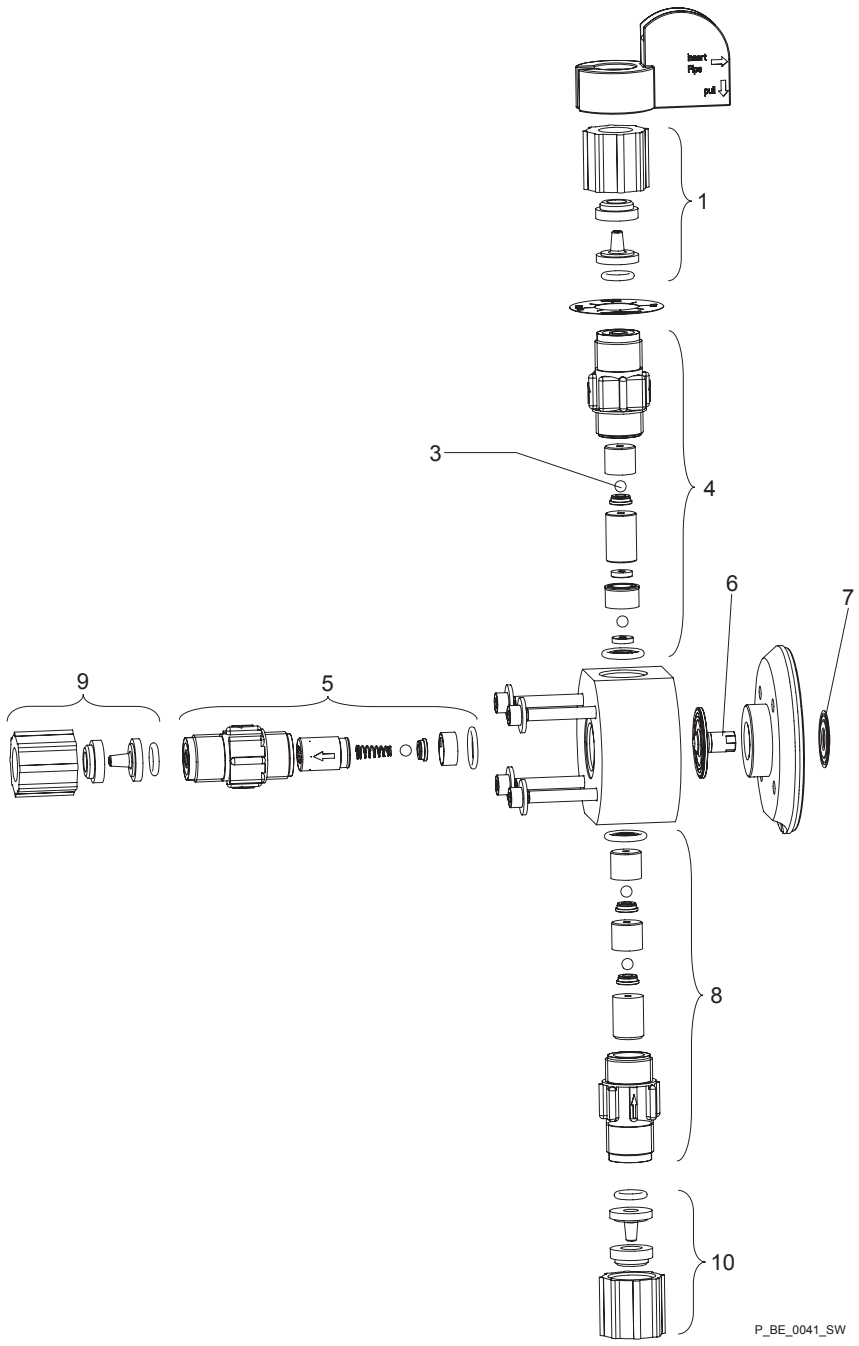

Fig. 48

Item	Part	Material version	Part no.
1, 9, 10	Connector kit 6/4	PPE	817160
1, 9, 10	Connector kit 6/4	PPB	817173
1, 9, 10	Connector kit 6/4	PCE	791161
1, 9, 10	Connector kit 6/4	PCB	817165
9, 10	Connector kit 8/5	PPE	817161
9, 10	Connector kit 8/5	PPB	817174

Item	Part	Material version	Part no.
9, 10	Connector kit 8/5	PCE	792058
9, 10	Connector kit 8/5	PCB	817066
9	With 2504: Connector kit 8/4	PCB	1035844
10	With 2504: Connector kit 6/4	PCE	791161
10	With 2504: Connector kit 6/4	PCB	817065
3	4 Valve balls		404201
4	Bleed valve	PPE	1001063
4	Bleed valve	PPB	1001062
4	Bleed valve	PCE	1001061
4	Bleed valve	PCB	1001060
5	Discharge valve compl.	PPE	1001067
5	Discharge valve compl.	PPB	1001066
5	Discharge valve compl.	PCE	1001065
5	Discharge valve compl.	PCB	1001064
6	Diaphragm 1601		1000245
6	Diaphragm 1602		1000246
6	Diaphragm 1604		1034612
7	Safety diaphragm		1006061
8	Suction valve compl.	PPE	792644
8	Suction valve compl.	PPB	792646
8	Suction valve compl.	PCE	792119
8	Suction valve compl.	PCB	792026

Spare parts kits for type:	Material version	Part no.
1601	PPE	1001756
1602	PPE	1001757
1604 with spring	PPE	1035335
1604 without spring	PPE	1035339
1601	PPB	1001762
1602	PPB	1001763
1604 with spring	PPB	1035336
1604 without spring	PPB	1035340
1601	NPE	1001660
1602	NPE	1001661

Spare parts kits for type:	Material version	Part no.
1604 without spring	NPE	1035337
1604 with spring	NPE	1035333
1601	NPB	1001666
1602	NPB	1001667
1604 without spring	NPB	1035338
1604 with spring	NPB	1035334

Sealing sets	Material	Part no.
1 Sealing set	EPDM	1001674
1 Sealing set	FPM	1001672

The positions listed are included in the spare parts kit.

Technical changes reserved.

Liquid end Beta® 0708 (1008) - 0220 (0420) PP / NP SEK, self-bleeding

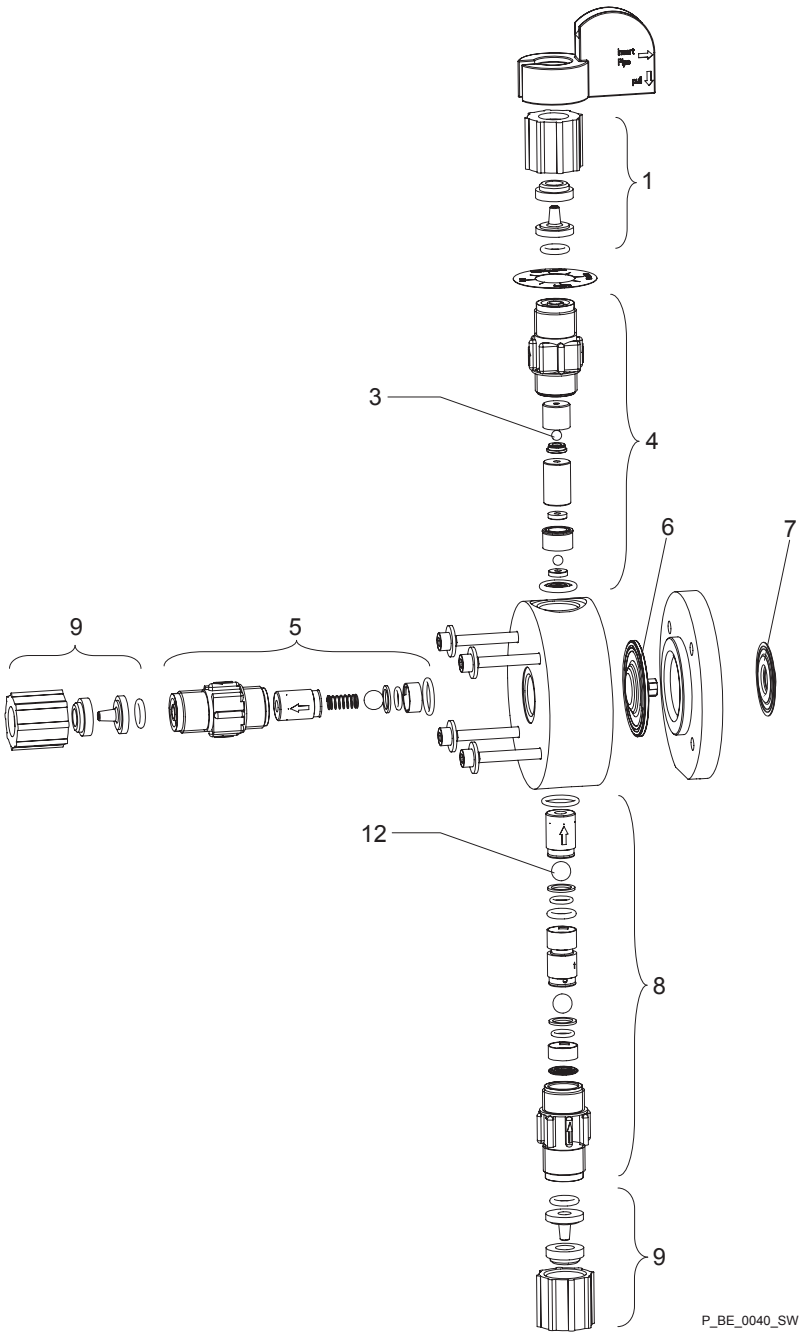

Fig. 49

Item	Part	Material version	Part no.
1	Connector kit 6/4	PPE	817160
1	Connector kit 6/4	PPB	817173
1	Connector kit 6/4	PCE	791161
1	Connector kit 6/4	PCB	817165
9	Connector kit 8/5	PPE	817161
9	Connector kit 8/5	PPB	817174

Item	Part	Material version	Part no.
9	Connector kit 8/5	PCE	792058
9	Connector kit 8/5	PCB	817066
9	Connector kit 12/9	PPE	817162
9	Connector kit 12/9	PPB	817175
9	Connector kit 12/9	PCE	790577
9	Connector kit 12/9	PCB	817067
3	4 Valve balls		404201
4	Bleed valve	PPE	1001063
4	Bleed valve	PPB	1001062
4	Bleed valve	PCE	1001061
4	Bleed valve	PCB	1001060
5	Discharge valve compl.	PPE	1001071
5	Discharge valve compl.	PPB	1001070
5	Discharge valve compl.	PCE	1001069
5	Discharge valve compl.	PCB	1001068
6	Diaphragm 0708		1000248
6	Diaphragm 0413		1000249
6	Diaphragm 0220		1000250
7	Safety diaphragm		1006061
8	Suction valve compl.	PPE	1001437
8	Suction valve compl.	PPB	1001436
8	Suction valve compl.	PCE	1001435
8	Suction valve compl.	PCB	1001434

Spare parts kits for type:	Material version	Part no.
0708 (1008)	PPE	1001759
0413 (0713)	PPE	1001760
0220 (0420)	PPE	1001761
0708 (1008)	PPB	1001765
0413 (0713)	PPB	1001766
0220 (0420)	PPB	1001767
0708 (1008)	NPE	1001663
0413 (0713)	NPE	1001664
0220 (0420)	NPE	1001665
0708 (1008)	NPB	1001669
0413 (0713)	NPB	1001670
0220 (0420)	NPB	1001671

Sealing sets	Material	Part no.
1 Sealing set	EPDM	1001674
1 Sealing set	FPM	1001672

The positions listed are included in the spare parts kit.

Technical changes reserved.

20 Further order information

Spare parts kits for SEK types

The information is given in the corresponding exploded views.

Spare parts kits for SER types

Type	NPT7 / PVT7
1602	1047830
1604	1047858
0708 (1008)	1047832
0413 (0713)	1047833
0220 (0420)	1047837

Spare parts kits for other types

Type	PP, NP, PV	TT	SS	HV types
1000	1023107	1001737	1001729	-
1601	1023108	1001738	1001730	-
1602	1023109	1001739	1001731	-
1604 (2504)	1035332	1035330	1035331	1035342
0708 (1008)	1023111	1001741	1001733	1019067
0413 (0713)	1023112	1001742	1001734	1019069
0220 (0420)	1023113	1001754	1001735	1019070
0232	1024124	1001755	1001736	-

Sealing sets for SEK types

The information is given in the corresponding exploded views.

Sealing sets for other types

Type	PP, NP	PV	TT, SS
1000, 1601, 1602, 1604	1023130	1023130	483907 *
0708 (1008) 0413 (0713) 0220 (0420)	1023129	1023129	483975
0232	1023129	1023129	483975
All HV types	-	1019364	-
* 11-part			

Relay retrofit kit for Beta® b

Name	Part no.
Fault indicating relay for Beta® b	1029309
Fault indicating and pacing relay for Beta® b	1029310

Interference suppression aids

Product	Part no.
Varistor:	710912
RC Gate, 0.22 µF / 220 Ω:	710802

Further sources of information

Further information on spare parts, accessories and options can be found in:

- the exploded drawings
- the identity code
- under www.prominent.com
- the ProMinent product catalogue

21 EC Declaration of Conformity for Machinery

In accordance with DIRECTIVE 2006/42/EC OF THE EUROPEAN PARLIAMENT AND OF THE COUNCIL, Appendix I, BASIC HEALTH AND SAFETY REQUIREMENTS, section 1.7.4.2. C.

We,

- ProMinent GmbH
- Im Schuhmachergewann 5 - 11
- D - 69123 Heidelberg,

hereby declare that the product specified in the following, complies with the relevant basic health and safety requirements of the EC Directive, on the basis of its functional concept and design and in the version distributed by us. Any modification to the product not approved by us will invalidate this declaration.

Extract from the EC Declaration of Conformity

Designation of the product:	Metering pump, product range Beta/4 and Beta/5
Product type:	BT4b _ _ _ _ _ _ _ _ _ _ _ U BT5b _ _ _ _ _ _ _ _ _ _ _ U
Serial number:	see nameplate on the device
Relevant EC directives:	Machinery Directive (2006/42/EC) EMC Directive (2004/108/EC) Compliance with the protection targets of the Low Voltage Directive 2006/95/EC according to Appendix I, No. 1.5.1 of the Machinery Directive 2006/42/EC RoHS Directive (2011/65/EU)
Harmonised standards applied, in particular:	EN 809: 2010 EN ISO 12100: 2010 EN 61010-1: 2010 EN 61000-6-2: 2005 EN 61000-6-3: 2011 EN 50581: 2013
Place, Date:	Heidelberg, 22.07.2014

You will find the EC Declaration of Conformity to download on our homepage.

22 EC Declaration of Conformity for Machinery

In accordance with DIRECTIVE 2006/42/EC OF THE EUROPEAN PARLIAMENT AND OF THE COUNCIL, Appendix I, BASIC HEALTH AND SAFETY REQUIREMENTS, section 1.7.4.2. C.

We,

- ProMinent GmbH
- Im Schuhmachergewann 5 - 11
- D - 69123 Heidelberg,

hereby declare that the product specified in the following, complies with the relevant basic health and safety requirements of the EC Directive, on the basis of its functional concept and design and in the version distributed by us. Any modification to the product not approved by us will invalidate this declaration.

Extract from the EC Declaration of Conformity

Designation of the product:	Metering pump, product range Beta/4 and Beta/5
Product type:	BT4b _ _ _ _ _ _ _ _ _ _ _ M BT4b _ _ _ _ _ _ _ _ _ _ _ N BT5b _ _ _ _ _ _ _ _ _ _ _ N
Serial number:	see nameplate on the device
Relevant EC directives:	EC Machinery Directive (2006/42/EC) EC EMC Directive (2004/108/EC) EU RoHS Directive (2011/65/EU)
Harmonised standards applied, in particular:	EN 809: 2010 EN ISO 12100: 2010 EN 61010-1: 2010 EN 61000-6-2: 2005 EN 61000-6-3: 2011 EN 50581: 2013
Place, Date:	Heidelberg, 22.07.2014

You will find the EC Declaration of Conformity on our homepage.

23 Index

1, 2, 3 ...

"External control" terminal 15, 16, 29, 37, 38
"Level switch" terminal 15, 16

A

About this pump 7
Accuracy 53
Anti-kink device 25
Applied harmonised standards 109, 110
Assembly 19
Auxiliary frequency 16, 18, 30, 31, 38

B

Backplate 14
Bleed valve 14, 23, 24, 25
Bypass hose sleeve 14

C

Capacity 17, 37
Cleaning valves 43
Compatibility 57
Connector size 51
Contacter relay 28
Contacts 38, 39
Control Elements 15
Control type 48

D

Decommissioning 49
Degree of protection 57
Designation of the product 109, 110
Dimensional drawings 58
Discharge valve 14, 25
Disposal 50
Dosing head 14
Draining the liquid end 49

E

Electrical data 54
Emergency 11
Extern Contact 18, 38
External 39
External analog 15, 16, 31, 39
External contact 15, 16, 30, 31
External frequency changeover 18
External frequency changer 16

F

Fault 18
Fault indicating and pacing relay option 18
Fault indicating relay 18, 32, 33
Fault indicator (red) 15, 16
Fault messages 48
Fault Statuses 18
Functions 15, 16, 18, 37

H

Hierarchy of Operating Modes 18

I

Identification of safety notes 8
Identity code 5
Inductive consumers 28
Information in the event of an emergency 11
Installation, electrical 27
Installation, hydraulic 20
Installing hose lines 21
Intended Use 8
IP 57

L

Leakage hole 40
level 32
Level switch 16, 31, 38

M

mA input 30
mA signal 39
Mains 38
Mains cables 28
Maintenance 40
Manual 15, 17, 18
Manual operation 37
Material Data 54
Metering pumps with bleed valve 23
Metering pumps with self-bleeding 24
Metering pumps without integral relief valve 25
Metering pumps without self-bleeding 21
Minimum Stroke Length 53
Multifunctional Switch 15, 17, 38

O

Operating indicator (green) 15, 16
Operating modes 15, 16, 17, 18
Operation 37
Ordering Information 107
Overview of Equipment 14

P

Pacing relay 33
Parallel connection 28
Pause 16, 18, 30, 37
Performance data 51
Power consumption 54
Priming 18, 38
Priming function 15
Priming pressure 24
Protection against contact and humidity 57
Protection class 57
Pulse control switch 15, 38, 39

Q

Qualification of personnel 11

R

Radioactive 13
RC member 28
Relay 18, 32
Relay connection 15
Relay retrofit kit 107
Relevant EC directives 109, 110
Remote operation 37, 39
Repairs 42
Replacing the diaphragm 44
Reproducibility 17, 37, 53
Return line 25
Return pipe 21, 23, 24

S

Safety Chapter 8
Safety declaration form 13
Safety requirements 57
Scope of Delivery 13
SEK 24
SEK types 17

Self-Bleeding 17
Semiconductor switch 33
Serial number 109, 110
Shipping weight 57
Sleeve 25
Sound pressure level 12, 57
Standard installation 26
Start up 34
Stop 18, 38
Storage 13
stroke length 17, 37
Stroke Length Adjustment Button 15
Stroke rate 15, 17, 37
Strokes 38, 39
Suction valve 14
Supply voltage 28
Symbols 26

T

Technical data 51
Test (function) 15, 18, 38
Transport 13
Troubleshooting 47

U

Unpacking 13

V

Varistor 28
Viscosity 53

W

Warning indicator (yellow) 15, 16
Warning message 32, 48
Warning sign 8



ProMinent GmbH
Im Schuhmachergewann 5-11
D-69123 Heidelberg
Telephone: +49 6221 842-0
Fax: +49 6221 842-419
Email: info@prominent.com
Internet: www.prominent.com

Heidelberg, 6, en_GB

© 2009

P-610x - Pump, Metering, Parts, Multi-function ValvePVDF, 87PSIG Size 2

Betriebsanleitung / Operating Instructions
Mode d'emploi / Instrucciones de servicio

ProMinent® Mehrfunktionsventil
ProMinent® Multi-Function Valve
Vanne multifonctions ProMinent®
Válvula multifuncional ProMinent®

D/GB/F/E

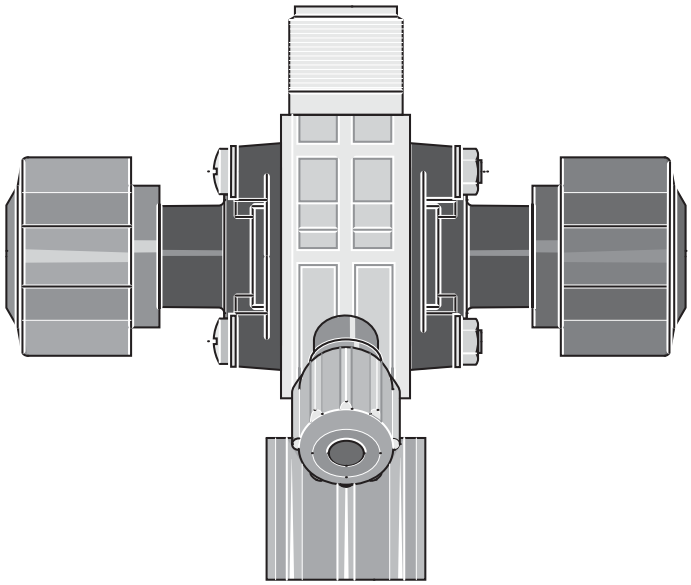

Teile Nr./Part No.: 987629 **ProMinent Dosiertechnik GmbH · 69123 Heidelberg · Germany** BA MAZ 623 10/04 G/GB/F/E

(D) Betriebsanleitung in Deutsch
von Seite 4 bis 8

(GB) Operating Instructions in English
from page 9 to page 14

(F) Mode d'emploi en français
de la page 15 à la page 20

(E) Instrucciones de servicio en español
de página 21 hasta página 26

Impressum:

Betriebsanleitung ProMinent® Mehrfunktionsventil
© ProMinent Dosiertechnik GmbH, 2000

Anschrift:

ProMinent Dosiertechnik GmbH
Im Schuhmachergewann 5-11
69123 Heidelberg · Germany

Telefon: 06221 842-0
Fax: 06221 842-617

info@prominent.com
www.prominent.com

Technische Änderungen vorbehalten.

Betriebsanleitung bitte zuerst vollständig durchlesen. Nicht wegwerfen! Bei Schäden durch Bedienungsfehler erlischt die Garantie!

Seite

1	**Aufbau**	4
2	**Funktionsbeschreibung**	4
3	**Bestimmungsgemäßer Gebrauch**	6
4	**Montage / Installation**	6
5	**Betrieb / Bedienung**	7
6	**Technische Daten / Bestellhinweise**	8

1 Aufbau

Die Funktionen des Mehrfunktionsventils werden durch je eine federbelastete Membran erzeugt. Es ist je ein Entlastungsmechanismus für die Druckhalte-Funktion und für die Überdruckfunktion vorgesehen.

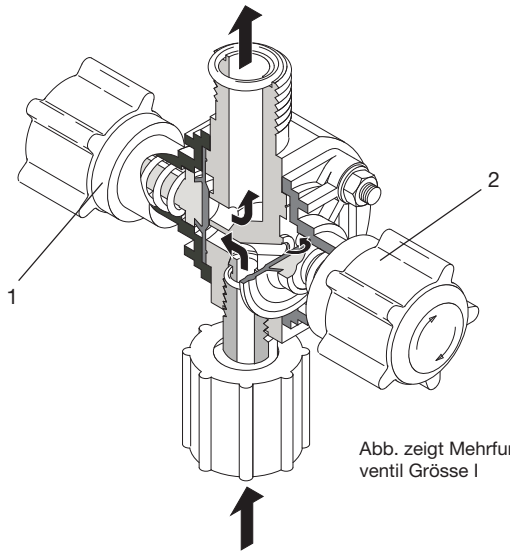

Abb. zeigt Mehrfunktionsventil Grösse I

2 Funktionsbeschreibung

Funktionen

- Erzeugung eines definierten Gegendruckes bei Dosierung gegen freien Auslauf.
  Das Aufheben dieser Funktion erfolgt durch Drehen am schwarzen Drehknopf im Uhrzeigersinn (1).
- Verhindern von Durchhebern aus dem Vorratsgebinde bei Unterdruck an der Dosierstelle.
  Das Aufheben dieser Funktion erfolgt durch Drehen am schwarzen Drehknopf im Uhrzeigersinn (1).

ACHTUNG

- **Multifunktionsventile sind keine absolut dicht schließende Absperrorgane.**

Wenn absolut kein Dosiermedium zur Dosierstelle gelangen darf, so ist ein zusätzliches Absperrorgan saugseitig der Pumpe vorzusehen.

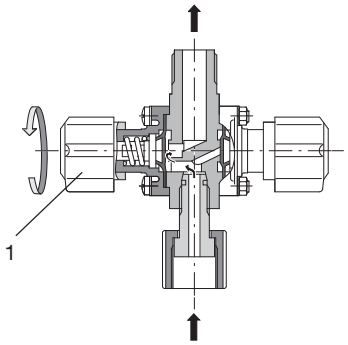

- Ansaughilfe bei der Inbetriebnahme der Pumpe gegen Druck. Das Lösen der Druckleitung ist nicht erforderlich. Dies erfolgt durch Drehen am roten Drehknopf (2).

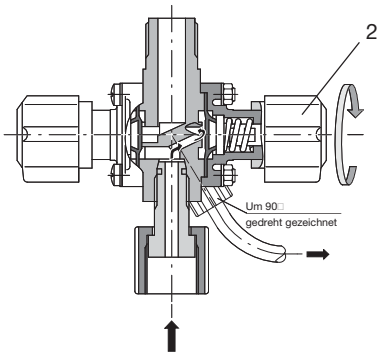

ACHTUNG

- **An der Dosierstelle muß ein Rückschlagventil installiert werden, da bei der Betätigung des Ventils der gesamte Inhalt der Anlage über den Bypass zurückfließen kann.**

- Entlastung der Dosierleitung bei Stillstand der Anlage (z.B. Reparatur). Dies erfolgt durch Drehen am roten Drehknopf (2).
- Überströmventil zum Schutz der Anlage gegen unzulässigen Überdruck, der von der Dosierpumpe verursacht wird. Rückführung über eine Bypassleitung. Diese Funktion erfolgt automatisch.

3 Bestimmungsgemäßer Gebrauch

Bestimmungsgemäßer Gebrauch

Schutz der Dosierleitung vor unzulässigem Überdruck, der durch die Dosierpumpe erzeugt wird, wenn ein in der Dosierleitung befindlicher Absperrhahn geschlossen wird.

- Das Multifunktionsventil darf nicht verwendet werden zum Schutz der Dosierleitung vor unzulässigem Überdruck, der andere Ursachen hat als der von der Dosierpumpe erzeugte Druck.
- Das Ventil darf **nicht** als Absperrorgan verwendet werden.

4 Montage / Installation

Sicherheitsanforderung, Sicherheitshinweise



ACHTUNG

- **Bei druckbeaufschlagten Systemen muss an der Dosierstelle ein Rückschlagventil installiert sein, da sonst bei Betätigung des Ventils der gesamte Inhalt der Anlage über den Bypass zurückfließen kann.**
- **Die Bypassleitung muß immer angeschlossen sein, da es beim Betrieb des Ventils nahe der Überdruckfunktion zu einem minimalen Überströmen in die Bypassleitung kommen kann.**
- **Multifunktionsventile sind keine absolut dicht schließenden Absperrorgane!**

Montagebeschreibung mechanisch/hydraulisch

Das Mehrfunktionsventil wird direkt auf den Druckanschluß der Pumpe aufgeschraubt. Das Ventil kann um 360□gedreht und ausgerichtet werden.

Abgangsseitig wird mittels Anschlußset bzw. GF-Verschraubung die Dosierleitung bzw. Dosierschlauch befestigt. Werkseitig ist in der O-Ringnut am Abgang ein EPDM O-Ring eingelegt. Für Anwendungen, bei denen EPDM nicht beständig ist, wird die Montage eines Viton® B O-Rings empfohlen. Dieser O-Ring (bräunlich) ist dem Ventil beigelegt.

Die Bypassleitung wird in den Vorratsbehälter zurückgeführt. Befestigung über Schlauchtülle und Überwurfmutter.

5 Betrieb / Bedienung



ACHTUNG

- **Die Bypassleitung muß immer angeschlossen sein, da es beim Betrieb des Ventils nahe der Überdruckfunktion zu einem minimalen Überströmen in die Bypassleitung kommen kann.**
- **Multifunktionsventile sind keine absolut dicht schließenden Absperrorgane!**

Bedienung und Einstellung Ansaughilfe

Durch Drehen des roten Drehknopfes (2) in Pfeilrichtung (Uhrzeigersinn) wird der Weg zum Bypass frei. Das Medium fließt in den Vorratsbehälter zurück.

HINWEIS

- **Dabei wird auch die Druckleitung teilweise entlastet und es kann Flüssigkeit am Bypass austreten.**

Die ProMinent Dosierpumpe ist jetzt auf „Ansaugen" zu stellen (s. hierzu auch Betriebsanleitung der Pumpe), bis Flüssigkeit in der Bypassleitung sichtbar wird.

Die Pumpe hat angesaugt und kann in Betrieb genommen werden. Nach dem Loslassen des roten Drehknopfes (2) geht dieser selbständig in die Ausgangsstellung zurück.

Entlastung der Druckleitung

Durch Herausdrehen des roten Drehknopfes (2) und des schwarzen Drehknopfes (1) im Uhrzeigersinn wird der Weg von der Druckleitung zum Bypass frei. Wird nur der rote Drehknopf (2) betätigt, so fällt der Druck in der Leitung auf ca. 1,5 bar ab.

Die beiden Knöpfe müssen solange herausgedreht bleiben, bis keine Flüssigkeit mehr an der Bypassöffnung austritt bzw. keine Flüssigkeit mehr in den Vorratsbehälter zurückfließt. Die Dosierleitung ist jetzt druckentlastet. Nach dem Loslassen der beiden Drehknöpfe, drehen sich beide wieder selbständig in ihre Ausgangsstellung zurück.

6 Technische Daten / Bestellhinweise

Mediumberührte Werkstoffe

Ventilkörper	PVDF
Membrane	PTFE-beschichtet
Dichtungen	Viton® oder EPDM
Adapter bei Größe III	PVC

Viton® ist ein eingetragenes Warenzeichen von DuPont Dow Elastomers.

Typ	Best. Nr.	Überström-Öffnungsdruck*	Anschluß-größe	Bypass-Anschluß
Größe I	792011.9	16 bar	6-12 mm	6/4 mm
Größe I	791715.6	10 bar	6-12 mm	6/4 mm
Größe I	1005745	6 bar	6-12 mm	6/4 mm
Größe II	792203.4	10 bar	6-12 mm	12/9 mm
Größe II	740427.0	6 bar	6-12 mm	12/9 mm
Größe III	792215.6	10 bar	DN 10	12/9 mm

* Der hier angegebene Überström-Öffnungsdruck ist der Druck, bei dem das Ventil zu öffnen beginnt. Je nach Pumpentyp kann der Druck bis zum vollständigen Öffnen des Ventils um bis zu 50 % höher liegen.

Einsatzbereich

Größe I	CONCEPT, Pneumados und Beta® 4: alle Typen gamma/ L: Typ 1000, 1601, 1602, 1005, 0708, 0413, 0220 und 1605
Größe II	alle Typen unter Größe I Beta® 5: Typ 1008, 0713, 0420 und 0232 gamma/ L: Typ 1008, 0713, 0420 und 0232
Größe III	Sigma/ 1 mit Anschlussgewinde DN 10

Technische Änderungen vorbehalten.

Please completely read through these operating instructions. Do not discard! The warranty shall be invalidated by damage caused by operating errors!

		Page
1	Design	10
2	Functional Description	10
3	Use for Intended Purpose	12
4	Mounting / Installation	12
5	Operation	13
6	Technical Data / Ordering Notes	14

1 Design

Each of the functions of the multi-function valve is produced by a spring-loaded diaphragm. The valve features a pressure relief mechanism for both the pressure retaining function as well as for the pressure relief function.

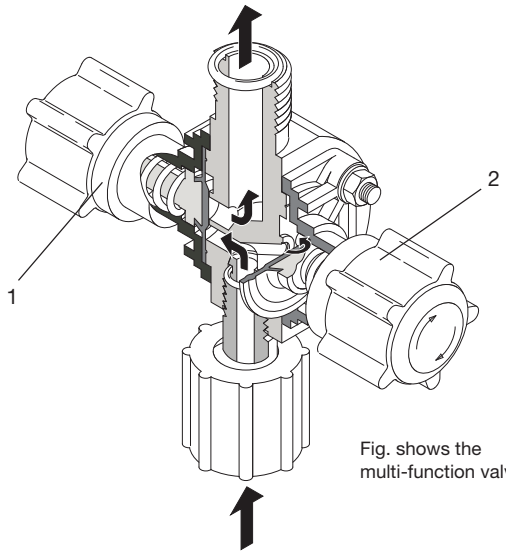

Fig. shows the multi-function valve, Size I

2 Functional Description

Functions

- Producing a defined backpressure for metering with respect to free outlet.
  Turn the black rotary knob clockwise (1) to disable this function.
- Prevents lift-through from the supply vessel in the case of vacuum at the metering point.
  Turn the black rotary knob clockwise (1) to disable this function.

IMPORTANT

- **Multi-function valves are not intended to act as fully sealing stop taps.**

If it is imperative that no metering chemical reaches the metering point, fit an additional stop cock to the suction side of the pump.

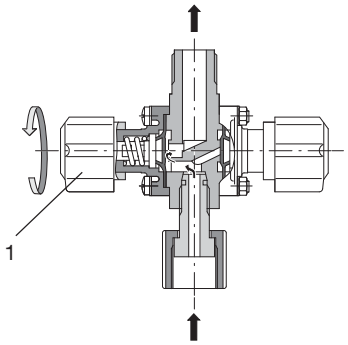

- Intake aid to prevent pressure when starting up pumps. It is not necessary to release the delivery line.
  Turn the red rotary knob (2) for this purpose.

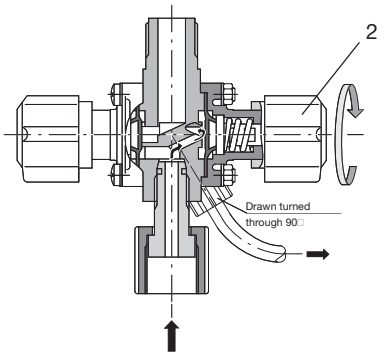

IMPORTANT

- **A non-return valve must be installed at the metering point since the entire content of the system can flow via the bypass when the valve is operated.**

- Depressurizing the metering line when the relevant system is at a standstill (e.g. repairs). Turn the red rotary knob (2) for this purpose.
- Overflow valve to protect the system from impermissible overpressure caused by the metering pump. Return flow via a bypass line. This function operates automatically.

3 Use for Intended Purpose

Use for Intended Purpose

To protect the metering line from impermissible overpressure caused by the metering pump when a stop cock valve is connected in the metering line.

- The multi-function valve may not be used to protect the discharge line from inadmissible excess pressure caused by anything other than the pressure generated by the metering pump.
- The valve must **not** be used as a shut-off.

4 Mounting / Installation

Safety Requirements, Notes on Safety



IMPORTANT

- **Pressurised systems must have a non-return valve fitted at the metering point because the entire contents of the system can flow back via the bypass when the valve is operated.**
- **The bypass line must always be connected since minimum overflow into the bypass line can occur during operation of the valve close to the pressure relief function.**
- **Multi-function valves are not intended to act as fully sealing stop taps!**

Mounting Description, Mechanical/Hydraulic

The multi-function valve is screwed directly on to the pressure connection of the pump. The valve can be turned and aligned through 360□.

The metering line or metering hose is secured on the outlet end by means of a connection set or GF screw fitting. An EPDM O-ring is fitted at the factory in the O-ring groove at the outlet. For applications in which EPDM is not suitable, it is advisable to fit a Viton B O-ring. This O-ring (brown) is supplied together with the valve.

The bypass line is routed into the supply vessel. It is secured by means of a hose grommet and union nut.

5 Operation



IMPORTANT

- **The bypass line must always be connected since minimum overflow into the bypass line can occur during operation of the valve close to the pressure relief function.**
- **Multi-function valves are not intended to act as fully sealing stop taps!**

Operation and Setting Intake Aid

Turn the red rotary knob (2) in the direction of the arrow (clockwise) to open the way to the bypass. The medium flows back into the supply tank.

NOTE

- **In this case, the delivery line is partly depressurized and liquid can flow out of the bypass.**

The ProMinent metering pump must now be set to “intake“ (refer to pump operating instructions) until liquid can be seen in the bypass line.

The pump is now primed and ready for use. After being released, the red rotary knob (2) reverts of its own accord back to its initial position.

Depressurizing the Delivery Line

The passage from the delivery line to the bypass is cleared by turning the red rotary knob (2) and the black rotary knob (1). The pressure drops in the line to approx. 1.5 bar if only the red rotary knob (2) is turned.

Both knobs must remain unscrewed until no more liquid flows out of the bypass line or no more liquid flows back into the supply tank. The metering line is now depressurized. Once released, both rotary knobs turn of their own accord back to their initial position.

6 Technical Data / Ordering Notes

Materials in Contact with Medium

Valve housing	PVDF
Diaphragm	PTFE-coated
Seals	Viton® or EPDM
Adapter for size III	PVC

Viton® is a registered trademark of DuPont Dow Elastomers.

Type	Order No.	Overflow opening pressure*	Connection size	Bypass connection
Size I	792011.9	16 bar	6-12 mm	6/4 mm
Size I	791715.6	10 bar	6-12 mm	6/4 mm
Size I	1005745	6 bar	6-12 mm	6/4 mm
Size II	792203.4	10 bar	6-12 mm	12/9 mm
Size II	740427.0	6 bar	6-12 mm	12/9 mm
Size III	792215.6	10 bar	DN 10	12/9 mm

* The overflow opening pressure stated here is the pressure at which the valve starts to open. Depending on the pump type, the pressure may be higher up to 50 % until complete opening of the valve.

Operating range

Size I	CONCEPT, Pneumados and Beta® 4: all types gamma/ L: type 1000, 1601, 1602, 1005, 0708, 0413, 0220 and 1605
Size II	all types below size I Beta® 5: type 1008, 0713, 0420 and 0232 gamma/ L: type 1008, 0713, 0420 and 0232
Size III	Sigma/ 1 with threaded connection DN 10

Subject to technical modifications.

Veuillez lire en premier lieu entièrement ce mode d'emploi. Ne surtout pas le jeter ! En cas de dommages occasionnés par des erreurs d'utilisation, il y a automatiquement perte du droit de garantie !

		Page
1	Structure	16
2	Description fonctionnelle	16
3	Utilisation conforme	18
4	Montage / Installation	18
5	Mise en service	19
6	Caractéristiques techniques / Remarques concernant la commande	20

1 Structure

Les fonctionnalités de la vanne multifonctions sont générées à chaque fois par une membrane équipée d'un ressort. Un mécanisme de décharge est prévu pour la fonction de maintien en pression et pour la fonction de surpression.

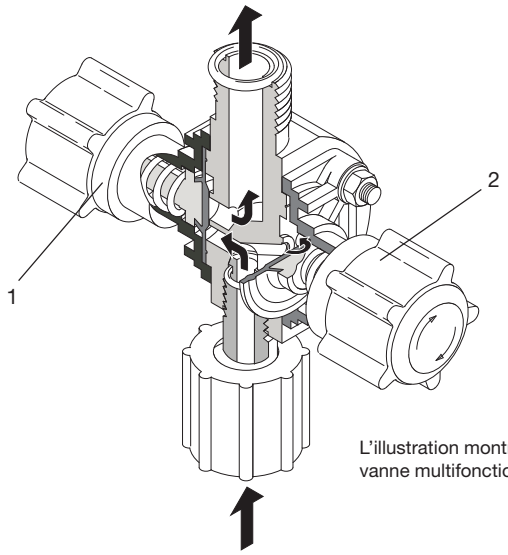

L'illustration montre une vanne multifonctions taille I

2 Description fonctionnelle

Fonctionnalités

- Génération d'une contre-pression définie pour un dosage contre une sortie libre.
  Cette fonction peut être arrêtée en tournant le bouton rotatif noir en sens horaire (1).
- Eviter les coups de siphon du réservoir en présence d'un vide au point de dosage.
  Cette fonction peut être arrêtée en tournant le bouton rotatif noir en sens horaire (1).

ATTENTION

- **Les vannes multifonctions ne sont pas des organes d'arrêt à fermeture absolument étanche.**

Si aucune quantité de fluide ne doit parvenir au point de dosage, il faut prévoir un organe d'arrêt supplémentaire côté aspiration de la pompe.

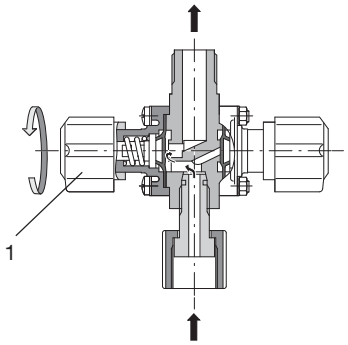

- Dispositif auxiliaire d'aspiration pour la mise en service de la pompe contre pression. Pas besoin de desserrer le tuyau de refoulement.
  Tourner à cet effet le bouton rotatif rouge (2).

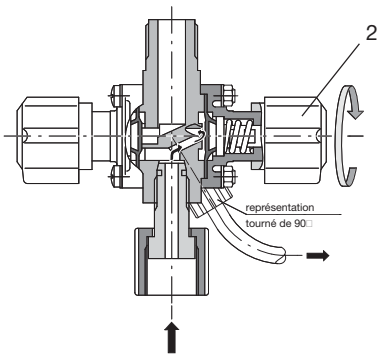

ATTENTION

- **Un clapet anti-retour doit être installé au point de dosage étant donné qu'en actionnant la vanne, le contenu total de l'installation est susceptible de recouler via la dérivation.**

- Décharge de la conduite de dosage à l'arrêt de l'installation (réparation par exemple). Tourner à cet effet le bouton rotatif rouge (2).
- Soupape de décharge pour protéger l'installation contre une surpression inadmissible provoquée par la pompe doseuse. Retour via une conduite de dérivation (bypass). Cette fonction s'exécute automatiquement.

3 Utilisation conforme

Utilisation conforme

Protection de la conduite de dosage contre une surpression non autorisée, générée par la pompe doseuse après la fermeture d'un robinet d'arrêt monté dans la conduite de dosage.

- La vanne multifonctions ne doit pas être utilisée pour la protection de la conduite de dosage contre une surpression inadmissible ayant d'autres causes que la pression générée par la pompe doseuse.
- La vanne **ne doit pas** être utilisée en tant qu'organe d'arrêt.

4 Montage / Installation

Exigences concernant la sécurité, consignes de sécurité



ATTENTION

- **Lors d'injection dans un système sous pression, un clapet anti-retour doit être installé au point de dosage sinon un retour de flux est susceptible d'être refoulé via le bypass de la vanne multifonctions lorsque celle-ci est actionnée.**
- **La conduite de bypass doit toujours être raccordée. Lorsque la pression d'exploitation de la pompe est proche de la pression de décharge de la vanne, il se peut qu'un peu de produit s'écoule du raccord de bypass.**
- **Les vannes multifonctions ne sont pas des organes d'arrêt à fermeture absolument étanche.**

Description du montage de l'installation mécanique/hydraulique

La vanne multifonctions se visse directement sur le raccord de refoulement de la pompe. La vanne peut être tournée et alignée de 360□.

Côté sortie, il convient de fixer le tuyau ou resp. la conduite de dosage au moyen du lot de raccordement ou via un raccord vissé GF. Un joint torique en EPDM est posé départ usine dans la rainure du joint torique en sortie. En cas d'utilisations pour lesquelles l'EPDM ne serait pas résistant, nous recommandons le montage d'un joint torique en Viton B. Ce joint torique (brunâtre) est joint à la vanne.

La conduite de dérivation est ramenée dans le réservoir. Elle est fixée par un embout de tuyau flexible et un écrou-raccord.

5 Mise en service / Commande



ATTENTION

- **La conduite bypass doit toujours être raccordée étant donné qu'en cas d'exploitation de la vanne à proximité de la fonction de surpression, un débordement minimal est susceptible de se produire dans la conduite de dérivation.**
- **Les vannes multifonctions ne sont pas des organes d'arrêt à fermeture absolument étanche.**

Commande et réglage
Dispositif auxiliaire d'aspiration

Tourner le bouton rotatif rouge (2) dans le sens de la flèche (sens horaire) pour dégager la voie vers le (bypass). Le milieu s'écoule de nouveau dans le réservoir.

REMARQUE

- **Ce faisant, la conduite de refoulement est partiellement déchargée et du liquide peut sortir du bypass.**

Dès à présent, commuter la pompe doseuse ProMinent® sur „Amorçage" (voir à cet effet également le mode d'emploi de la pompe), jusqu'à ce que du liquide devienne visible dans la conduite de dérivation.

La pompe s'est amorcée et peut être mise en service. En laissant revenir le bouton rotatif rouge (2), celui-ci reprend automatiquement sa position d'origine.

Décharge de la conduite de refoulement

En sortant le bouton rotatif rouge (2) et le bouton rotatif noir (1) par rotation dans le sens des aiguilles d'une montre, le parcours allant de la conduite de refoulement vers le bypass est libéré. En actionnant uniquement le bouton rotatif rouge (2), la pression dans la conduite tombe à 1,5 bar environ.

Les deux boutons doivent demeurer tournés jusqu'à ce que plus aucun liquide ne sorte de l'ouverture du bypass ou que plus aucun liquide ne soit refoulé dans le réservoir. La conduite de dosage est maintenant hors pression. En relâchant les deux boutons rotatifs, ceux-ci se remettent à tourner automatiquement sur leur position d'origine.

6 Caractéristiques techniques / Remarques concernant la commande

Matériaux en contact avec le milieu

Corps de la vanne	PVDF
Membranes	revêtues de PTFE
Joints	Viton® ou EPDM
Adapteur taille III	PVC

Viton® est une marque déposée de DuPont Dow Elastomers.

Type	Nº de commande	Pression d'ouverture de décharge*	Grandeur de raccordement	Raccord bypass
taille I	792011.9	16 bar	6-12 mm	6/4 mm
taille I	791715.6	10 bar	6-12 mm	6/4 mm
taille I	1005745	6 bar	6-12 mm	6/4 mm
taille II	792203.4	10 bar	6-12 mm	12/9 mm
taille II	740427.0	6 bar	6-12 mm	12/9 mm
taille III	792215.6	10 bar	DN 10	12/9 mm

* La pression d'ouverture de décharge indiquée ici constitue la pression à laquelle la vanne commence à s'ouvrir. En fonction du type de pompe, la pression jusqu'à l'ouverture complète de la vanne peut être jusqu'à 50 % plus élevée.

Domaine d'utilisation

taille I	CONCEPT, Pneumados et Beta® 4: tous types gamma/ L: type 1000, 1601, 1602, 1005, 0708, 0413, 0220 et 1605
taille II	tous types inférieurs à la taille I Beta® 5: type 1008, 0713, 0420 et 0232 gamma/ L: type 1008, 0713, 0420 et 0232
taille III	Sigma/ 1 avec taraudage de raccordement DN 10

Sous réserve de modifications.

Le rogamos lea primeramente en su totalidad las instrucciones de servicio. No las tire. En caso de daños ocasionados por error en el manejo del equipo, desaparece la garantía.

Página

1	Principio de funcionamiento	22
2	Características funcionales	22
3	Uso conforme a los fines previstos	24
4	Montaje / Instalación	24
5	Operación / Manejo	25
6	Características técnicas / Instrucciones para el pedido	26

1 Principio de funcionamiento

Las funciones de la válvula multifuncional son generadas, en cada caso, por una membrana sometida a la presión de un muelle. Están previstos un mecanismo de descarga para la función de mantenimiento de la presión y otro para la de sobrepresión.

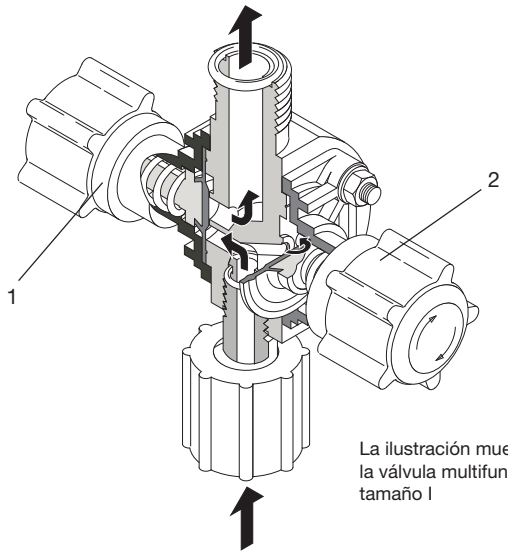

La ilustración muestra la válvula multifuncional tamaño I

2 Características funcionales

Funciones

- Generar una contrapresión definida en la dosificación a salida libre.
  La supresión de esta función se realiza girando el botón giratorio negro en sentido horario (1).
- Evitar el "efecto sifón" desde el depósito dosificador en caso de presión negativa en el punto de dosificación.
  La supresión de esta función se realiza girando el botón giratorio negro en sentido horario (1).

ATENCIÓN

- **Las valvulas multifuncionales no son órganos de cierre absolutamente herméticos.**

Si no debe llegar absolutamente ningún medio de dosificación al punto de dosificación debe instalarse un órgano de cierre adicional en el lado de aspiración de la bomba.

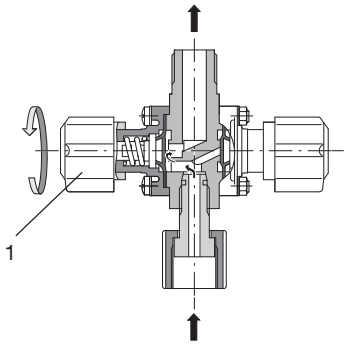

- Ayudar en la aspiración en la puesta en servicio de la bomba contra presión. No es necesario aflojar el tubo de presión. Esto se realiza girando el botón giratorio rojo (2).

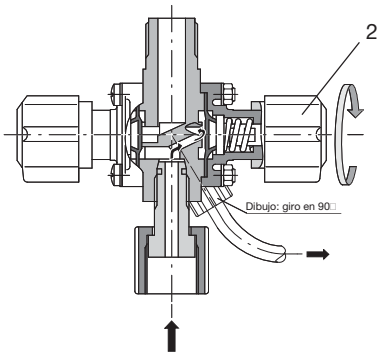

ATENCIÓN

- **En el punto de dosificación se debe instalar una válvula de retención, ya que al operar la válvula, todo el contenido de la instalación puede refluir a través de la derivación.**

- Descargar el tubo de dosificación cuando la instalación esté parada (p.ej. por motivos de reparación). Esto se realiza girando el botón giratorio rojo (2).
- Válvula de seguridad para proteger la instalación contra sobrepresiones inadmisibles generadas por la bomba dosificadora. Retorno a través de un tubo de derivación. Esta función es automática.

3 Uso conforme a los fines previstos

Uso conforme a los fines previstos

Protección del tubo dosificador contra sobrepresiones inadmisibles generadas por la bomba dosificadora al cerrar una llave de retención ubicada en el tubo dosificador.

- La válvula multifuncional no debe utilizarse para protección de la tubería de dosificación contra sobrepresión indebida, que tiene otras causas que la presión generada por la bomba dosificadora.
- La válvula **no** debe ser empleada como órgano de cierre.

4 Montaje / Instalación

Requisitos e indicaciones de seguridad



ATENCIÓN

- **En sistemas presurizados debe estar instalada una válvula antirretorno en los puntos de dosificación, ya que de lo contrario, al operarse la válvula todo el contenido de la instalación puede refluir a través de la derivación.**
- **El tubo de derivación debe mantenerse siempre conectado, ya que al operar la válvula cerca de la función de sobre-presión es posible que rebase una pequeña cantidad de líquido hacia el tubo de derivación.**
- **Las válvulas multifuncionales no son órganos de cierre absolutamente herméticos.**

Descripción del montaje mecánico / hidráulico

La válvula multifuncional se enrosca directamente en la conexión de presión de la bomba. La válvula tiene un giro de 360□y puede orientarse según conveniencia.

En el lado de salida, se fija el tubo o conducto dosificador mediante un juego de conexiones o bien la unión roscada GF. En la ranura anular en O del lado de salida, viene colocada de fábrica una junta toroidal de EPDM. Para las aplicaciones en las que el EPDM no sea resistente a los líquidos utilizados, se recomienda el montaje de una junta toroidal de Viton B. Esta junta toroidal (de color marrón) viene adjunta a la válvula.

El tubo de derivación se lleva nuevamente al depósito dosificador. Fijarlo mediante boquilla portatubo y tuerca de racor.

5 Operación / Manejo



ATENCIÓN

- **El tubo de derivación debe mantenerse siempre conectado, ya que al operar la válvula cerca de la función de sobre-presión es posible que rebase una pequeña cantidad de líquido hacia el tubo de derivación.**
- **Las válvulas multifuncionales no son órganos de cierre absolutamente herméticos.**

Operación y puesta a punto
Ayuda en la aspiración

Mediante giro del botón giratorio rojo (2) en la dirección de la flecha (sentido horario) queda libre la vía al bypass. El líquido a dosificar retorna al depósito dosificador.

NOTA

- **Se produce una descarga parcial del tubo de presión, por lo que puede salir líquido en la derivación.**

La bomba dosificadora ProMinent debe ponerse entonces en "aspirar" (véase tambièn al respecto las instrucciones de servicio de la bomba), hasta que aparezca líquido en el tubo de derivación.

La bomba ha aspirado y puede ser puesta en marcha. Al soltar el botón giratorio rojo (2), éste retorna automáticamente a la posición inicial.

Descarga del tubo de presión

Girando hacia fuera el botón giratorio rojo (2) y el botón giratorio negro (1) en el sentido de las agujas del reloj, queda libre el recorrido de la tubería de impulsión hasta el bypass. Si sólo es accionado el botón giratorio rojo (2), la presión en la tubería bajará hasta 1,5 bar, aproximadamente.

Ambos mandos deben permanecer en esa posición hasta que ya no salga líquido por el orificio de derivación ni que retorne líquido al depósito dosificador. El tubo de dosificación está entonces descargado de presión. Al soltar los dos mandos giratorios, éstos retornan automáticamente a su posición inicial.

6 Características técnicas / Instrucciones para el pedido

Materiales empleados para los elementos en contacto con el líquido a dosificar

Cuerpo de válvula	PVDF
Membrana	revestida de Teflón
Juntas	Viton® o EPDM
Pieza de ajuste para tamaño III	PVC

Viton® es una marca registrada de DuPont Dow Elastomers.

Tipo	No. de ref.	Presión de apertura de rebose*	Tamaño de conexión	Conexión de derivación
Tamaño I	792011.9	16 bar	6-12 mm	6/4 mm
Tamaño I	791715.6	10 bar	6-12 mm	6/4 mm
Tamaño I	1005745	6 bar	6-12 mm	6/4 mm
Tamaño II	792203.4	10 bar	6-12 mm	12/9 mm
Tamaño II	740427.0	6 bar	6-12 mm	12/9 mm
Tamaño III	792215.6	10 bar	DN 10	12/9 mm

* La presión de apertura de rebose indicada aquí es la presión a la que empieza a abrirse la válvula. Según el tipo de bomba, la presión hasta la apertura total de la válvula puede ser hasta el 50 % mayor.

Aplicaciones

Tamaño I	CONCEPT, Pneumados y Beta® 4: todos los tipos gamma/ L: tipo 1000, 1601, 1602, 1005, 0708, 0413, 0220 y 1605
Tamaño II	todos los tipos bajo tamaño I Beta® 5: tipo 1008, 0713, 0420 y 0232 gamma/ L: tipo 1008, 0713, 0420 y 0232
Tamaño III	Sigma/ 1 con rosca de unión DN 10

Sujeto a modificaciones técnicas.

Anschriften- und Liefernachweise durch den Hersteller /
Addresses and delivery through manufacturer /
Adresses et liste des fournisseurs fournies par le constructeuer /
Para informarse de las direcciones de los distribuidores, dirigirse al fabricante:

ProMinent Dosiertechnik GmbH
Im Schuhmachergewann 5-11 · 69123 Heidelberg
Germany
Tel.: +49 6221 842-0
Fax: +49 6221 842-419
info@prominent.com · www.prominent.com

P-701/702	12026	Motor, Teco, 1hp, 1800rpm, 143T	208-230/460V, 3ph, CSA/UR

TECO Westinghouse

OPERATION & MAINTENANCE MANUAL FOR THREE PHASE INDUCTION MOTORS

TECO-Westinghouse Motor Company
5100 North IH-35
Round Rock, Tx. 78681

INDEX PAGE

1. INTRODUCTION……. 1
2. ACCEPTING, INSPECTION, STORAGE, TRANSPORTATION…… 2
3. INSTALLATION…….. 4
   3.1 Site and environment for motor installation…….. 4
   3.2 Foundation…….. 4
   3.3 Installation of shaft coupling…….. 6
   3.4 Installation of belt drive…… 9
   3.5 Conveyance with chain or gear……. 10
   3.6 Electrical connections……. 11
4. OPERATION…… 12
   4.1 Examination before starting…… 12
   4.2 Starting operation…….. 15
5. MAINTENANCE…….. 17
   5.1 Major points in regular inspection and maintenance…….. 17
   5.2 Motor windings……... 18
   5.3 Cleaning of the interior of the motor…… 18
   5.4 Cleaning of the exterior of the motor……... 19
   5.5 Maintenance of anti-friction bearings…….. 19
      5.5.1 Frequency of re-lubrication…….. 19
      5.5.2 Kinds of grease…… 20
      5.5.3 Grease quantity…… 20
      5.5.4 Re-greasing…….. 20
      5.5.5 Oil re-lubrication……. 22
      5.5.6 Cleaning and installation of bearings…… 23
   5.6 Maintenance of sleeve bearings…… 24
      5.6.1 Daily inspection……... 24
      5.6.2 Regular examination…….. 24
      5.6.3 Disassembly……. 25
      5.6.4 Re-assembly……. 26
   5.7 Maintenance of slip rings (for Wound Rotor only)…… 27
   5.8 Maintenance of non-reverse ratchet mechanism (Vertical Motors only) 29
6. FAULT FINDING AND RECOGNITION…….. 31

1. INTRODUCTION

This and the following instruction address the more common situations encountered in motor installation, operation and maintenance. For the TWMC motor warranty to be and to remain in effect, the motor must be installed and operated in strict accordance with the outline drawing, motor nameplates and these instructions and must not be altered or modified in any unauthorized manner.

During the installation and operation of motors in heavy industrial applications there is a danger of live electrical parts and rotating parts. Therefore to prevent injury and/or damage the basic planning work for installation, transportation, assembly, operation, etc... needs to be done and checked by authorized and competent personnel only.

Since these instructions cannot cover every eventuality of installation, operation and maintenance, the following points should be considered and checked.

- The technical data and information on permissible use such as assembly, connection, ambient and operating conditions given in the related catalogue, operating instructions, nameplates and other production documentation.
- The general erection and safety regulations.
- The local and plant-specific specifications and requirements.
- The proper use of transport, lifting devices and tools.
- The use of personal protective equipment.

Following indications should be observed when reading these instructions.

Safety instructions are marked as follows:



Warning of electric hazards for personnel.



Warning of dangers for personnel.

ATTENTION!
Warning of damage for the motor or installation.

2. ACCEPTING, INSPECTION, STORAGE, TRANSPORTATION

Inspection upon receipt
Check to following points upon receipt:

- Are the nameplate ratings identical with what you ordered?
- Are dimensions and color in compliance with your specifications?
- Are the nameplate ratings for space heater, thermal protector, temperature detector, etc. identical with what you ordered?
- Is there any damage?
- Are all accessories and accompanying instruction manuals in good order?
- Please ensure that the arrow head indicator really indicates direction of rotation.
- If there are any specific requirements, please ensure they are in conformity with your specifications.

2.1 Storage
When motors are not in operation, the following precautionary measures should be undertaken to assure best performance.

2.2 Place
(a) High and dry, well ventilated without direct sun, dust or corrosive gas.
(b) Not located near to a boiler or freezer.
(c) Entirely free form vibration and easy for movements.
(d) Motors should be put on pallets to prevent moisture.

2.3 Moisture prevention
Since moisture can be very detrimental to electrical components, the motor temperature should be maintained about 3ºC above the dew point temperature by providing either external or internal heat. If the motor is equipped with space heaters, they should be energized at the voltage shown by the space heater nameplate attached to the motor. Incandescent light bulbs can be placed within the motor to provide heat. However, if used, they must not be allowed to come in contact with any parts of the motor because of the concentrated hot spot that could result.

2.4
Even during storage, the insulation resistance should be kept above the specified values.
(a) For measurement of insulation resistance and acceptable standard values, please refer to measures stated in 3.1.2 “Measurement of insulation resistance”.
(b) Insulation resistance test should be performed once every three months.

2.5

If the motor is not in operation for a long period (one week and above) after installation or has been in operation but stopped for a period of time, the following precautions must be taken.

(a) Protect the motor as measures stated in 2.2.3.
(b) Insulation resistance test should be performed as stated in 2.2.4.

2.6 Bearing protection

(a) If the motor has been provided with a shaft shipping brace to prevent shaft movement during transit, it must be removed before operating the motor. It is very important that this brace be re-installed exactly as it was originally, before the motor is moved form storage or any time when the motor is being transported. This prevents axial rotor movement that might damage the bearings.
(b) Motors equipped with sleeve bearings are shipped from the factory with the bearing oil reservoirs drained. In storage, the oil reservoirs should be properly filled to the center of the oil level gauge with a good grade of rust inhibiting oil. To keep the bearing journals well oiled and to prevent rusting, the motor shaft should be rotated several revolutions about every month ensuring the shaft does not come to rest in its original position. While the shaft is rotating, it should be pushed to both extremes of the endplay.
(c) Motors with anti-friction bearings are properly lubricated with the correct grade of grease at the factory and no further greasing is required in storage. The shaft should be rotated several revolutions about every month to maintain proper distribution of the grease within the bearings.
(d) Tilt-pad bearings are a type of sleeve bearing used in special design applications. Due to the nature of this bearing, a loose oil ring for delivering lubricant cannot be provided. Therefore, during the storage internal, oil must be periodically manually introduced into the pads and housing to prevent the occurrence of oxidation of the precision machined components.
    (1) Remove the pipe plug from the bearing cap located above the tilt-bearing shell.
    (2) Pour in approximately one cup of oil every month and rotate the shaft a few revolutions about every two (2) weeks.
    (3) For long periods of storage, the oil that accumulates in the housing should be removed.

ATTENTION!
Care should be taken to keep parts such as fitting surfaces, key, shaft extension and axial central hole from any collision with foreign matter. Grease should also be generously applied to prevent rusting.

2.7 Transportation

To keep the rotating parts of motors from moving, thus preventing damage and scratching during transportation, they should be held securely with a locking device. Remove all transit clamps before operating the motor. It is very important that this device be reinstalled exactly as it was originally, before the motor is moved from storage or any time when the motor is being transported. The vertical mounting type motors should be transported in the vertical position.

Do not use the hoisting hook/eyebolts to lift more that the motor itself. They are designed to support the motor only. Make sure the hoisting hook is correctly attached to the eyebolt(s)/lug(s) are fully screwed in before hoisting. Also note such parts as fan cover, ventilation box, bracket, slip-ring, etc. may have their own hoisting lugs which can only carry their own weight. Nothing extra should be attached while hoisting.
Do not twist the steel wires and make sure the eyebolts have been firmly screwed and the sling angle is correct.

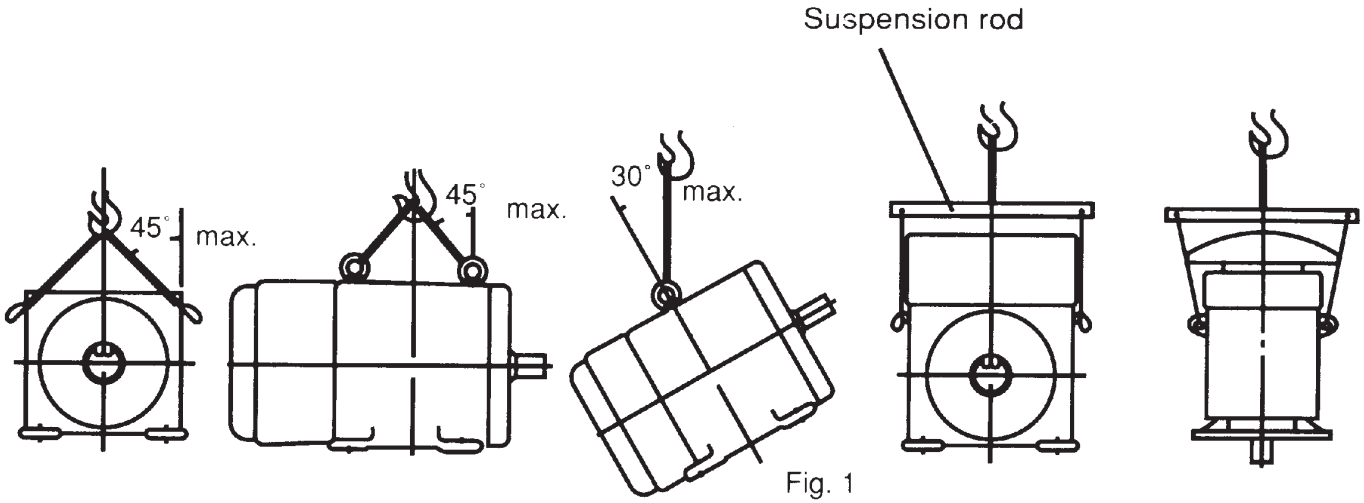

Fig. 1

3 INSTALLATION

Site and environment for motor installation

3.1.1

Standard environment and site conditions for the installation of motors are usually set as follows:

(a) Ambient temperature: -10~40ºC
(b) Humidity: Relative humidity below 90%RH for totally enclosed types, and below 80%RH for semi-enclosed types.
(c) Elevation: below 1000 meters or 3300 feet.
(d) Harmful gases, liquids, dusts, high moisture should be absent.
(e) Foundations should be strong and free of vibration.

If there are any special environmental conditions, please inform TWMC prior o ordering.

3.1.2 Ventilation and space

(a) Installation area should be well ventilated.
(b) The installation space should be large enough to facilitate heat dissipation and maintenance.

3.2 Foundation

3.2.1

Use rigid and solid sole plate or common bed as foundation.
For best motor performance, it is advisable to use a sole plate or common bed, particularly when using a shaft coupling.

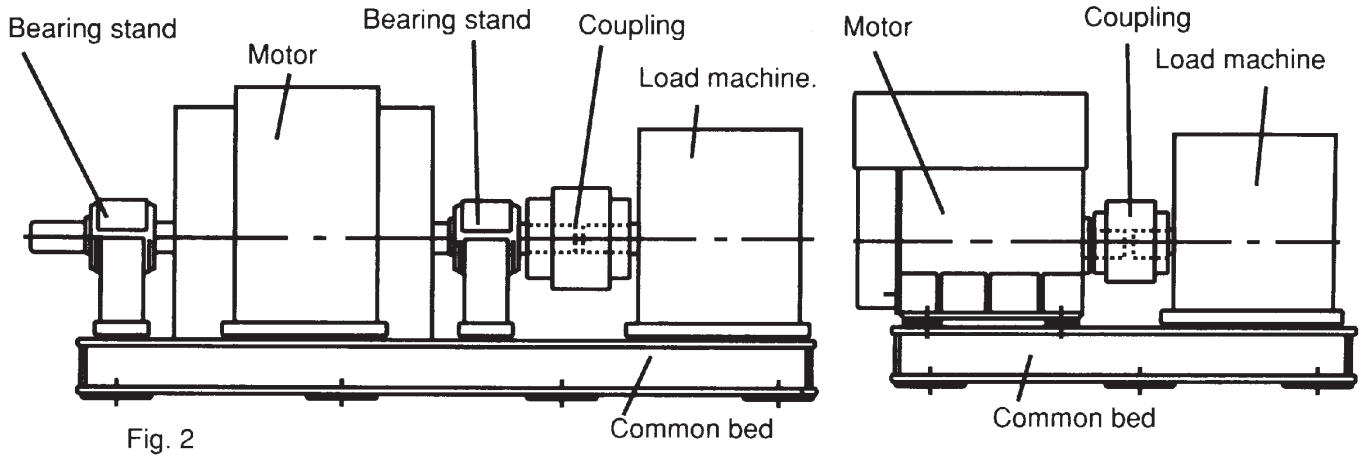

Fig. 2

3.2.2 Installation

(a) Select an appropriate foundation surface for the sole plate or common bed, which will be, considered the ultimate level.
(b) Align the position of the common bed with reference to that level.
(c) Align the level accuracy at least at four points such as bearing mounting, shaft extension etc. The accuracy should be within 0.04mm or .0015 inches
(d) Sole plate or common bed should be embedded in concrete foundation as illustrated in Fig. 3. Stiff pads should also be installed beneath the wedges, which are welded together at various spots about 400-500mm (15.75-19.70 inches) apart etc., to enable the foundation to carry evenly the weight of the whole motor.
(e) The base should be sturdy and rigid to keep it flat and level.
(f) Make sure the mortar and concrete are completely dry, and the precision of the level is acceptable, and then set the motor on the mounting foundation.
(g) Accurately install shaft couplings, belt sheaves etc., then weld the wedges solid to prevent untoward change in position.

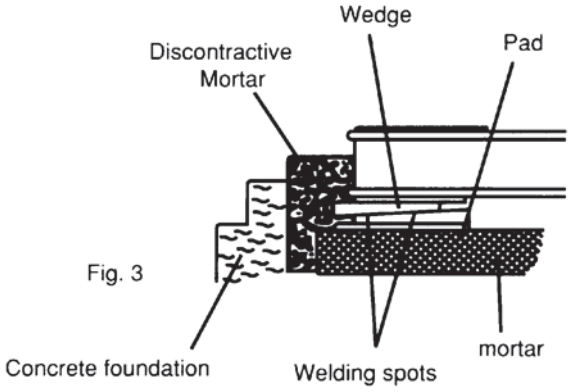

Fig. 3

3.2.3 The foundation of vertical induction motors: (Also the foundation of pump)

(a) Foundation of motor/pump must be rigid and secure to provide adequate support. There must be no vibration, twisting, misalignment etc. due to inadequate foundations.
(b) A massive concrete foundation is preferred in order to minimize vibration. Rigidity and stability are enhanced by prop plate and foundation bolt. As shown in Fig. 4.

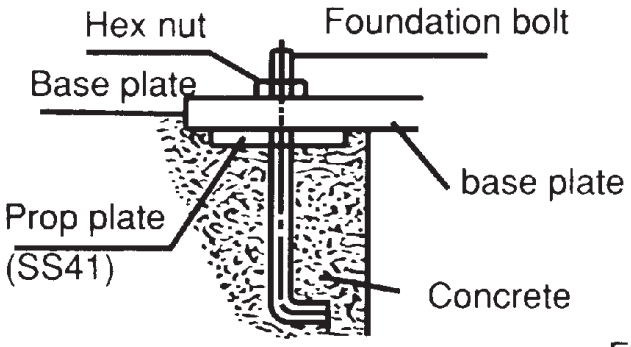

Fig. 4

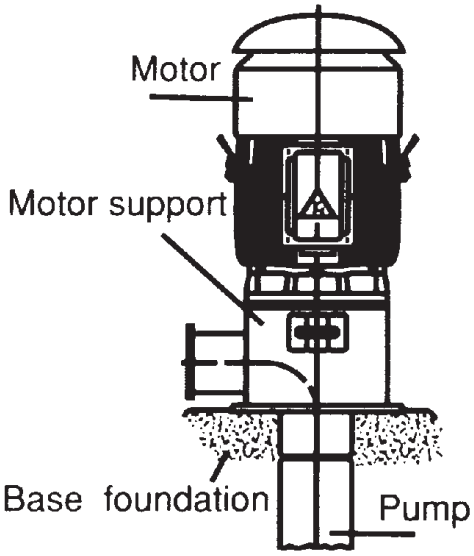

Fig. 5

3.2.4 Installation of vertical motors:

(a) All mounting surfaces must be clean and level.
(b) Foundation must be leveled at least at 4 points and guaranteed to be below 0.04mm (.0015 in.) flat and level.
(c) Make sure the mortar and concrete are completely dry, and the precision of the level is acceptable, and then set the motor on the mounting foundation.
(d) Accurately install shaft couplings.

3.3 Installation of shaft coupling

ATTENTION!
Motors must always be accurately aligned, and this applies especially where they are directly coupled.
Incorrect alignment can lead to bearing failure, vibration and even shaft fracture. As soon as bearing failure or vibration is detected, the alignment should be checked.

3.3.1

Field application of a coupling to the motor shaft should follow the procedures recommended by the coupling manufacturer. The motor shaft extension must not be subjected to either extreme heat or cold during coupling installation.

ATTENTION!
Basically, the coupling should be heated and pushed onto the shaft extension with slight axial force. Do not hammer coupling to prevent bearing damage.

3.3.2

Although the sleeve bearings are equipped with thrust faces, these are intended only to provide momentary axial restraint of rotor movement either during start-up or when operating the motor disconnected from the driven equipment. They must not be operated under a constant thrust load unless they were originally designed for this condition.

Motors with either sleeve or anti-friction bearings are suitable for connection to the driven load through a flexible coupling. Coupling solidly to the load is not acceptable. With sleeve bearings, the flexible coupling should be of the limited end float type to prevent the possibility of any end thrust from load being transmitted to the motor bearings, which could cause bearing damage. The recommended limits of end float are as follows:

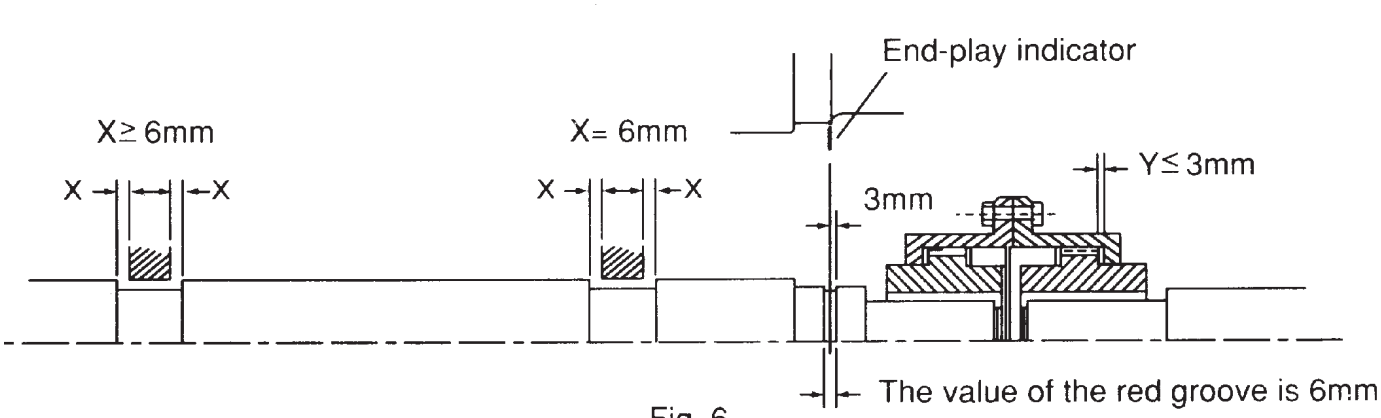

Fig. 6

(a) When the motor is in operation after installation, be sure that the end-play indicator is within the 6mm (.236 in.) of the groove on the shaft or aligned to the shaft shoulder immediately outboard of the drive-end bearing to assure there is low friction between shaft and bearing.

(b) Unless otherwise specified, the designed end-play value X of the groove for TWMC motors in general is within 6mm (.236 in.) as illustrated in Fig. 6. In essence, the endplay indicator is adjusted to point at the center of the groove or the drive-end shaft shoulder; thus X equals to 6±1mm or so, and the endplay value (Y) of the couplings should equal or be smaller than 3mm (.118 in.).

(c) If the desired value Y is grater than 3mmm (.118 in.) caused for instance by a thrust load and/or load machine with large end-play, please inform TWMC prior to entering an order.

3.3.3

In aligning the motor (and rotor) axially with the driven equipment, consideration should be given not only to the endplay indicator position but also to axial shaft expansion and increase in shaft centerline height due to thermal effects. In general, the axial shaft growth for motors can be disregarded since neither bearing is fixed and any shaft growth due to temperature increase will produce an elongation away from the coupling.

Shaft height growth (change in shaft centerline elevation) for TEFC machines can be calculated as follows:

$$\Delta=(0.0005\text{”}) \times (\text{motor foot to shaft £ dimension})$$

For non-TEFC machines, divide the number by 2.

3.3.4

It is desirable, in normal operation that the motor operates on its magnetic center, so that no axial force is exerted on the coupling.

The motor shaft and the driven shaft should be aligned within the following tolerances in both angular and parallel alignment:

Unit: mm

TIR	Range of rotating speed	Solid coupling	Flexible coupling
C	2500 rpm and above	0.03	0.03
	Below 2500 rpm	0.04	0.05
A	2500 rpm and above	0.03	0.03
	Below 2500 rpm	0.03	0.04

Angular misalignment is the amount by which the centerlines of driver and driven shafts are skewed. It can be measured using a dial indicator set up as shown in Fig. 7. The couplings are rotated together through 360 degrees so that the indicator does not measure runout of the coupling hub face. The shafts should be forced against either the in or out extreme of their end float while being rotated.

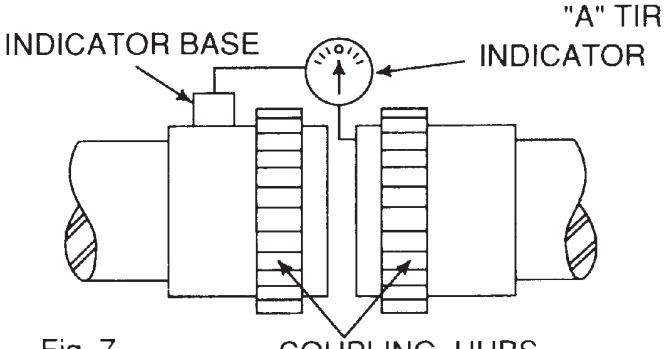

Fig. 7

TIR=Total indicator reading (by dial indicator)

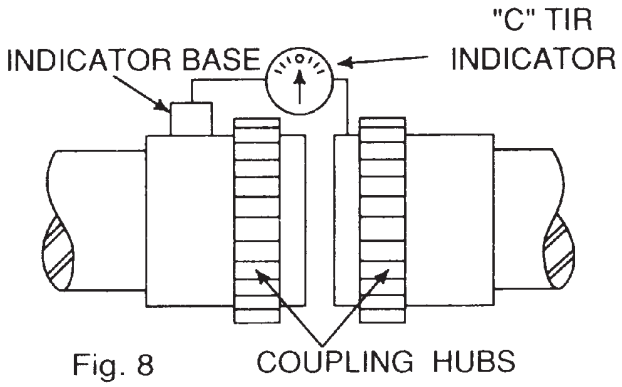

Fig. 8

Parallel misalignment is the amount by which the centerlines of the driver and driven shafts are out of parallel. It can be measured using a dial indicator set up as shown in Fig. 8. Again, the couplings are rotated together through 360 degrees so that the indicator does not measure runout of the coupling hub outside diameter.

3.3.5

After the motor has been properly aligned with the driven equipment and the hold-down bolts have been installed and tightened, for motors with fabricated frames, at least two dowel pins should be installed in two diagonally opposite motor feet.

3.3.6 Installation of shaft coupling: (Vertical hollow shaft motor only)

Bolted Coupling as shown in Fig. 9

(a) Bearings are provided to absorb some upward shaft thrust when the coupling is fitted.
(b) The coupling is fastened with bolts.
(c) This coupling type is not auto-release type.

Note: Standard high thrust motors can absorb momentary up-thrust load up to 30% of the standard down thrust load. If the up-thrust is long in duration (over 10 Seconds) and/or exceeds 30% of the standard high thrust rating, special design arrangements are required and standard motor is not suitable.

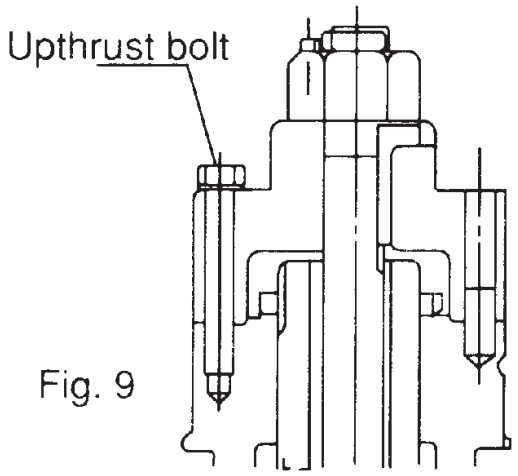

Fig. 9

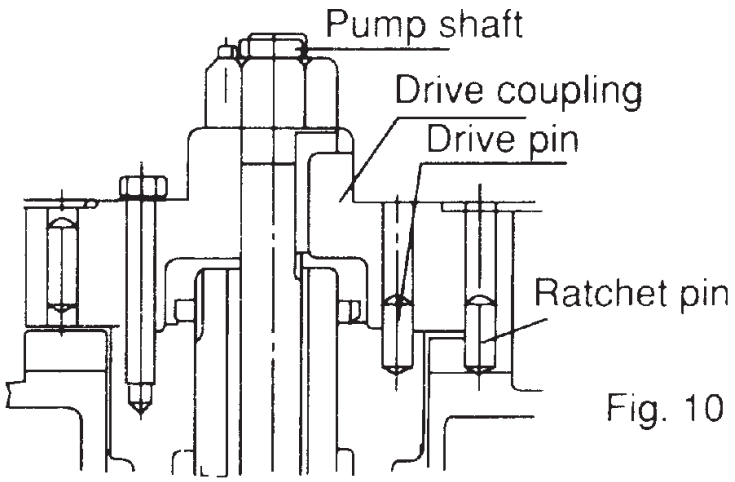

Fig. 10

3.3.7 Non-reverse ratchet/coupling, as Fig. 10 (If necessary)

The non-reverse coupling is also a bolted type and,

(a) It prevents the pump and motor from rotating in the reverse direction.
(b) It also prevents damage form over speeding and damage to pump shaft and bearings.
(c) The ratchet pins are lifted by the ratchet teeth and are held clear by centrifugal force and friction as the motor comes up to speed.
(d) When power is removed, speed decreases, and the pins fall. At the instant of reversal, a pin will catch in a ratchet tooth and prevent backward rotation.
(e) When installing the non-reverse coupling, do not use lubricant. Lubricant will interfere with proper operation. The top half of the coupling should seat solidly on the lower half and the pins should touch the bottom of the pockets between the teeth in the plate.
(f) As with the bolted coupling, the up-thrust capabilities are 30% of the standard high thrust rating for down thrust.

ATTENTION!
Do not apply non-reverse ratchets on applications in which the pump reversal time from shutdown (the instant the stop button is pressed) to zero speed is less than one second.

3.4 Installation for belt drive

In general, power transmission though direct flexible coupling is appropriate for large motors. Such motors are not suitable for belt, chain or gear connection unless specially designed for such service. However, for small and medium motors of which outputs within the ranges shown on table below, it is acceptable to use belt transmission as indicated. Beyond these ranges, do not apply belt sheaves unless specially designed.

3.4.1

The diameter ratio between conveyance sheaves should not be greater than 5 to 1 for flat belts, and 8 to 1 for V-belts. It is also advisable to limit the belt velocity to under 35m/sec (115 ft/sec) to limit belt abrasion and vibration. The smaller the outer diameter of the V-belt sheave, the greater the shaft bending stress will be. If the bending stress is in excess of the shaft fatigue stress, the shaft may break. Therefore, please inform TWMC when you have decided the size of the sheaves and the length of the belts upon ordering.

ATTENTION!
Place the sheave and belt as close as possible to the motor body (it is advisable to make x as shown in Fig. 11 equal to 0) to reduce the bending moment and improve shaft life.

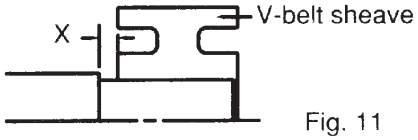

Fig. 11

3.4.2 Table of belt-sheave application for general electric motors

Output (KW/HP)			V-Belt Sheave							
			Conventional V-Belts				Narrow V-Belts			
4P	6P	8P	V-Belt Type	Number Of Belts	Min. PCD (mm)	Max Width (mm)	V-Belt Type	Number Of Belts	Min. PCD (mm)	Max Width (mm)
11/15	-	-	B	4	160	82	3V	4	125	48
-	11/15	-	B	5	170	101	3V	5	140	59
-	-	11/15	B	5	190	101	3V	6	160	69
15/20	-	-	B	5	170	101	3V	6	125	69
-	15/20	-	B	5	224	101	3V	6	160	69
-	-	15/20	C	4	224	111	5V	3	180	60
18.5/25	-	-	B	5	200	101	3V	6	140	69
-	18.5/25	-	C	4	224	111	5V	3	180	60
-	-	18.5/25	C	5	224	136	5V	4	180	78
22/30	-	-	B	5	224	101	5V	6	160	69
-	22/30	-	C	5	224	136	3V	4	180	78
-	-	22/30	C	5	250	136	5V	4	200	78
30/40	-	-	C	5	224	136	5V	4	180	78
-	30/40	-	C	5	265	136	5V	4	224	78
-	-	30/40	C	6	265	162	5V	5	224	95
37/50	-	-	C	6	224	162	5V	4	200	78
-	37/50	-	C	6	265	162	5V	4	224	78
-	-	37/50	C	7	280	187	5V	5	250	95
45/60	-	-	C	6	265	162	5V	4	224	78
-	45/60	-	C	7	280	187	5V	5	224	95
-	-	45/60	C	7	315	187	5V	6	250	113
55/75	-	-	C	7	265	187	5V	5	224	95
-	55/75	-	C	8	300	213	5V	6	250	113
-	-	55/75	D	5	355	196	5V	6	280	113
75/100	-	-	C	8	315	213	5V	6	250	113
-	75/100	-	D	6	355	233	5V	6	315	113
-	-	75/100	D	6	400	233	5V	6	355	113
-	90/120	-	D	6	400	233	5V	6	355	113
-	-	90/120	D	6	425	233	8V	4	355	124
-	110/150	-	D	7	400	270	8V	4	355	124
-	132/175	110/150	D	7	450	270	8V	4	400	124
-	160/200	132/175	D	9	450	344	8V	4	450	124

3.5 Conveyance with chain or gear

3.5.1

Make sure the loading capacity of shaft and bearings is appropriate for the size and installation position (overhung) of chain and gear. If necessary, please contact us to ensure the shaft and bearings will meet your requirements.

3.5.2
Pay close attention to ensure the parallelism of shafts.

3.5.3
The teeth of couplings should be correctly and precisely matched; the force conveyance centers should lie on the same line.

3.5.4
There should be no skip, jumping, vibration or unusual noises.

ATTENTION!
Do not hammer the conveyance devices such as couplings, belt sheaves, chain wheels, gears etc. onto the shaft. Those shaft fitments should be fitted and removed only by means of suitable devices. Heat shrinking may be a better alternative to avoid damaging bearings and components.



The exposed rotating parts should be covered to prevent accidents.

3.6 Electrical connections
All interconnecting wiring for controls and grounding should be in strict accordance with local requirements such as the USA National Electrical Code and UK IEE wiring regulations. Wiring of motor and control, overload protection and grounding should follow the instructions of connection diagrams attached to the motor.

3.6.1 Power
The rated conditions of operation for the motor are as shown on the nameplate. Within the limits, given below, of voltage and frequency variation from the nameplate values, the motor will continue to operate but with performance characteristics that may differ from those at rated conditions:

±10% of rated voltage
±5% of rated frequency
±10% combined voltage and frequency variation so long as frequency variation is no more than ±5% of rated.

Operating the motor at voltages and frequencies outside of the above limits can result in both unsatisfactory motor performance and damage to or failure of the motor.

3.6.2
The main lead box furnished with the motor has been sized to provide adequate space for the make-up of the connections between the motor lead cables and the incoming power cables.



The bolted joints between the motor lead and the power cables must be made and insulated in a workman-like manner following the best trade practices.

3.6.3
Either fabricated motors or fan cooled cast frame, motors are all provided with grounding pads or bolts.



The motor must be grounded by proper connection to the electrical system ground.

3.6.4

The rotation direction of the motor will be as shown by either a nameplate on the motor or the outline drawing. The required phase rotation of the incoming power for this motor rotation may also be stated. If either is unknown, the correct sequence can be determined in the following manner: While the motor is uncoupled from the load, start the motor and observe the direction of rotation. Allow the motor to achieve full speed before disconnecting it from the power source. Refer to the operation section of these instructions for information concerning initial start-up. If resulting rotation is incorrect, it can be reversed by interchanging any two (2) incoming cables.

3.6.5 Auxiliary devices

Auxiliary devices such as resistance temperature detectors, thermocouples, thermoguards, etc., will generally terminate on terminal blocks located in the auxiliary terminal box on the motor. Other devices may terminate in their own enclosures elsewhere on the motor. Such information can be obtained by referring to the outline drawing. Information regarding terminal designation and the connection of auxiliary devices can be obtained from auxiliary drawings or attached nameplates.

If the motor is provided with internal space heaters, the incoming voltage supplied to them must be exactly as shown by either a nameplate on the motor or the outline drawing for proper heater operation.



Caution must be exercised anytime contact is made with the incoming space heater circuit as space heater voltage is often automatically applied when the motor is shutdown.

4. OPERATION

4.1 Examination before start

4.1.1

When motors are installed in good manner, ensure the wiring is according to the diagram. Also, the following points should be noted:

(a) Make sure all wiring is correct.
(b) Ensure the sizes of cable wires are appropriate and all connections are well made for the currents they will carry.
(c) Ensure all connections are properly insulated for the voltage and temperature they will experience.
(d) Ensure the capacity of fuses, switches, magnetic switches and thermo relays etc. are appropriate and the contactors are in good condition.
(e) Make sure the frame and terminal box are grounded.
(f) Make sure that the starting method is correct.
(g) Make sure switches and starters are set at their right positions.
(h) Motor heaters must be switched off when the motor is running.

4.1.2 Measurement of insulation resistance



During and immediately after measuring, the terminals must not be touched as they may carry residual dangerous voltages. Furthermore, if power cables are connected, make sure that the power supplies are clearly disconnected and there are no moving parts.

(a) For rated voltage below 1000V, measured with a 500VDC megger.
(b) For rated voltage above 1000V, measured with a 1000VDC megger.
(c) In accordance with IEEE 43, clause 9.3, the following formula should be applied:

$$R \geq \left(\frac{\text{Rated voltage (v)}}{1000} + 1 \right) \times 10(M\Omega)$$

(d) On a new winding, where the contaminant causing low insulation resistance is generally moisture, drying the winding through the proper application of heat will normally increase the insulation resistance to an acceptable level. The following are several accepted methods for applying heat to the winding:
   (1) If the motor is equipped with space heaters, they can be energized to heat the winding.
   (2) Direct current (as from a welder) can be passed through the winding. The total current should not exceed approximately 50% of rated full load current. If the motor has only three leads, two must be connected together to form one circuit through the winding. In this case, one phase will carry the fully applied current and each of the others, one-half each. If the motor has six leads (3 mains and 3 neutrals), the three phases should be connected into one series circuit.



Ensure there is adequate guarding so live parts cannot be touched.

   (3) Heated air can either blown directly into the motor or into a temporary enclosure surrounding the motor. The source of heated air should preferably be electrical as opposed to fueled (such as kerosene) where a malfunction of the fuel burner could result in carbon entering the motor.

ATTENTION!
Caution must be exercised, when heating the motor with any source of heat other than self contained space heaters, to raise the winding temperature at a gradual rate to allow any entrapped moisture to vaporize and escape without rupturing the insulation. The entire heating cycle should extend over 15-20 hours.

Insulation resistance measurements can be made while the winding is being heated. However, they must be corrected to 40ºC for evaluation since the actual insulation resistance will decrease with increasing temperature. As an approximation for a new winding, the insulation resistance will approximately halve for each 10ºC increase in insulation temperature above the dew point temperature.

(e) Should the resistance fail to attain the specified value even after drying, careful examination should be undertaken to eliminate all other possible causes, if any.

4.1.3 Power Source

(a) Ensure the capacity of the power source is sufficient.
(b) Ensure the supply voltage and frequency ratings are identical to those on the nameplate.
(c) Voltage variation should be confined to within ±10% of the rated value and the phase to phase voltages should be balanced.

4.1.4 Bearing lubrication

(a) For sleeve bearing motors, the oil reservoir must be filled with oil to the correct level. On self-lubricated bearings, the standstill oil level will be at the center of the oil gauge. The proper oil is a rust and oxidation inhibited, turbine grade oil. Refer to the lubrication nameplate for the recommended viscosity.

(b) Motors, which are supplied with provision for flood lubrication, have an inlet orifice to meter the oil flow to the bearing. Refer to the outline drawing for these values. If the supply pressure does not match that stated on the outline, the orifice size must be adjusted to produce the specified flow rate. The drain adapter (also provided) has a weir plate fixed to the inside of the pipe to permit the establishment of the proper oil level. This weir plate must be located at the bottom of the pipe and must be parallel to the plane of the motor feet. To ensure optimum flow, the drain line should be vented to the atmosphere.

Oil inlet temperature:	Normal below 50ºC
	Alarm 60ºC
	Trip 65ºC

(c) If the motor is in storage for over three (3) months, refilling of some new oil should be undertaken before operation to prevent bearing damage due to dry friction. The oil level should be kept at the center of the oil gauge. If necessary, drain some oil after refilling.

(d) Motors that have been designed with anti-friction bearings for use with an oil mist lubrication system have been packed at the factory with a small amount of grease for short test runs. Continuous running should not be considered unless the oil mist system is installed and operating.

(e) Grease lubricant type

(1) The bearings have been well greased at the factory before delivery. However, regreasing is required if a significant period has elapsed between manufacture and use or in storage

(2) All motors with ZZ bearings will have SHELL Alvania R3 (*Lithium base grease*). All motors with open bearings will have Polyrex EM (polyurea base grease).

4.1.5 Cooling water for the cooler on water-cooled motors

Make sure the quality, volume and inlet temperature of cooling water for the motors are normal before the machine is in operation.

Water: General tower water or industrial water.	
Volume: Please see outline drawing	
Inlet temperature:	Normal below 30ºC
	Alarm 35ºC
	Trip 40ºC

ATTENTION!
Make sure all locks, which fasten the movable parts of the motors during transportation, are dismantled and the shaft can rotate freely.

ATTENTION!
Ensure there is no foreign matter or tools inside the motors before starting motors.

4.1.6
Make sure the transmission system, including belts, screws, bolts, nuts and set pins are in good condition.



The keys fitted to the shaft extensions are held by plastic tape only to prevent them from falling out during transportation or handling. The shaft key shall be removed to avoid flying out, when the motor is operated prior to the couplings etc. being fitted to the shaft extension.

4.1.7
Make sure the items above are examined. Test the motor running with or without load. Record and check according to "Maintenance" at 15-minute intervals during the first three hours of operation. Then regular examinations should take place at longer intervals. If all goes well the motor can be classified as "in good order".

4.2 Starting operation

4.2.1 Starting load
Initially run the motor unloaded prior to coupling to other machines. Unless otherwise specified, a motor usually starts with light load, which is then gradually increased, proportional to the square of the speed and at last reaches 100% load at full load speed.

4.2.2 Starting
Too frequent starts can be harmful to the motors. The following restrictions should be observed:

(a) Motor can be restarted should the initial start fail. Two starts are generally permissible when the motor is cold.
(b) Motor can be started only once when it is at normal running temperature.
(c) Should additional starts be necessary beyond the conditions stated above, the following restrictions should be noted:
    (1) Let the motor cool down for 60 minutes before restarting, fully loaded.
    (2) Let the motor cool down for 30 minutes before restarting, unloaded.
    (3) Two inching starts can be regarded as one normal start.

ATTENTION!
If the motor rotor fails to start turning within one or two seconds, shut off the power supply immediately.
Investigate thoroughly and take corrective action before attempting a restart.

Possible reasons for not starting are:
(1) Too low a voltage at the motor terminals.
(2) The load is too much for the rotor to accelerate.
(3) The load is frozen up mechanically.
(4) All electrical connections have not been made.
(5) Single-phase power has been applied.
(6) Any combination of the above.

4.2.3 Rotating direction

(a) Most TWMC motors are bi-directional. However, when some special types, such as high speed 2-Pole, certain large capacity motors, those with a non-reversing ratchet etc., should rotate in one direction, please ensure the rotation is in conformity with the directional arrow-mark shown on the attached nameplate.

(b) To reverse a bi-directional motor, cut the power and wait until the motor stops. Then interchange any two of the three phases.

4.2.4 Power source, Voltage, Current

(a) Ensure the voltage and frequency of the power source are identical to the ratings shown on the nameplate.

(b) Voltage variation should be confined to within ±10% of the rating and the three phase voltages should be in full balance

(c) Ensure the motor phase currents, when without load, are within ±5% of the average values.

4.2.5

Frequency variation should be confined to within ±5% of the rating. The aggregate variation of voltage and frequency should be confined to within ±10% of the absolute value of the ratings.

Starting time and unusual noises

ATTENTION!
Starting time is longer for the motors with large inertia. However, if starting time is longer than usual or if there is difficulty in starting, or there is abnormal noise, do not run the motor and refer to TWMC Service representative.

4.2.6 Sleeve bearing oil rings (sleeve bearing types only)

As the oil ring is used to carry lubricant to sleeve bearings, frequently check to ensure the oil ring is in motion.

4.2.7 Bearing temperature rise

Following the initial start-up, the bearing temperatures should be closely monitored. The rate of rise in bearing temperature is more indicative of impending trouble than is the actual temperature.

ATTENTION!
If the rate of rise in temperature is excessive or if the motor exhibits excessive vibration or noise, it should be shut down immediately and a thorough investigation made as to the cause before it is operated again.

If the bearing temperature rise and motor operation appear to be normal, operation should continue until the bearing temperature stabilizes.

Recommended limits on bearing temperature are as follows:

Sleeve Bearings	**Total measured temperature**
● By permanently installed detector	90ºC
● By temporary detector on top of the bearing sleeve near the oil ring	85ºC

Anti-Friction Bearings	Total measured temperature
● By permanently installed detector	100ºC
● By temporary detector measuring the outside of the bearing housing	95ºC

ATTENTION! (For sleeve bearing)

(1) It must be noted that when operating flood lubricated sleeve bearings without outside lubrication supplied, the bearing temperature must not be allowed to exceed 85ºC total temperature

(2) Under normal condition, for the self-lube bearing, the rate of temperature rise should be from 11 to 14ºC for the first ten (10) minutes after starting up and approximately 22ºC at thirty (30) minutes. The rate of bearing temperature rise is a function of the natural ventilation and operating conditions.

(3) When the rate of bearing temperature rise is less than 1ºC per half-hour, the bearing temperature is considered to be stabilized.

(4) If the total bearing temperature exceeds 95ºC, the motor should be shut down immediately.

Noise and Vibration

ATTENTION!
Any abnormal noise or vibration should be immediately investigated and corrected. Increased vibration can be indicative of a change in balance due to mechanical failure of a rotor part, a stator winding problem or a change in motor alignment.

5. MAINTENANCE

5.1 Major points in regular inspections and maintenance.



For safety, maintenance and repairs must only be carried out by properly trained personnel.



Some testing, such as insulation resistance, usually requires the motor to be stopped and isolated from power supplie(s).

Routine inspection and maintenance are usually performed by looking, listening, smelling and simple meters.



High temperature may arise under operating conditions on the motor surfaces, so that touching should be prevented or avoided. Keep away from moving and live parts. Unless deemed necessary, do not remove guards whilst assessing the motor.

Timely replacement of worn parts can assure longevity and prevent breakdown.

Routine inspection and regular inspection and maintenance are important in preventing breakdown and lengthening service life.

Owing to the varied time and circumstances, motors are used, it is difficult to set the items and periods for regular inspection and maintenance. However, as a guide it is recommended to be performed periodically according to factory maintenance program. Generally, the inspection scope determined by the following factors:

(a) Ambient temperature.
(b) Starting and stopping frequency.
(c) Troublesome parts usually affecting motor functions.
(d) Easily abraded parts.
(e) The important position of motor in the operational system of a factory should be duly recognized. Therefore, its health and wellbeing should be fully protected especially when it is operating in severe conditions.

5.2 Motor windings:

(a) Measurement of insulation resistance and standards to determine quality of insulation resistance, please refer to measures stated in 3.1.2 “Measurement of insulation resistance”.
(b) Inspection of coil-ends:
  (1) Grease and dust accumulated on coils may cause insulation deterioration and poor cooling effect.
  (2) Moisture must not accumulate. Keep coils warm when motor is not in use if moisture can be seen.
  (3) Discoloring. This is mainly caused by overheating.
(c) Ensure no untoward change of wedges from original position.
(d) Ensure the binding at the coil end is in its normal position.

5.3 Clean the interior of the motor:

(a) After a motor is in operation for some time, accumulation of dust, carbon powder and grease etc., on the inside is unavoidable, and may cause damage. Regular cleaning and examination is necessary to assure top performance.
(b) Points to note during cleaning:
  (1) If using compressed air or blower:
    (a) Compressed air should be free of moisture.
    (b) Maintain air pressure at 4 kg/cm², since high pressure can cause damage to coils.
  (2) Vacuum
    Vacuum cleaning can be used, both before and after other methods of cleaning, to remove loose dirt and debris. It is a very effective way to remove loose surface contamination from the winding without scattering. Vacuum cleaning tools should be non-metallic to avoid any damage to thee winding insulation
  (3) Wiping
    Surface contamination on the winding can be removed by wiping using a soft, lint-free wiping material. If the contamination is oily, the wiping material can be moistened (not dripping wet) with a safety type petroleum solvent. In hazardous locations, a solvent such as inhibited methyl chloroform may be used, but must be used sparingly and immediately removed. While this solvent is non-flammable under ordinary conditions, it is toxic and proper health and safety precautions should be followed while using it.

ATTENTION!
Solvents of nay type should never be used on windings provided with abrasion protection. Abrasion protection is a gray, rubber-like coating applied to the winding end-turns.



Adequate ventilation must always be provided in any area where solvents are being used to avoid the danger of fire, explosion or health hazards. In confined areas (such as pits) each operator should be provided with an airline respirator, a hose mask or a self-contained breathing apparatus. Operators should wear goggles, aprons and suitable gloves. Solvents and their vapors should never be exposed to open flames or sparks and should always be stored in approved safety containers.

(4) Keep core ducts completely clean. The difference in temperature rise could be around 10°C before and after cleaning

5.4 Clean the exterior of the motor:

(a) On open ventilated motors, screens and louvers over the inlet air openings should not be allowed to accumulate any build-up of dirt, lint, etc. that could restrict free air movement.

ATTENTION!
Screens and louvers should never be cleaned or disturbed while the motor is in operation because any dislodged dirt or debris can be drawn directly into the motor.

(b) If the motor is equipped with air filters, they should be replaced (disposable type) or cleaned and reconditioned (permanent type) at a frequency that is dictated by conditions. It is better to replace or recondition filters too often than not often enough.

(c) Totally enclosed air to air cooled and totally enclosed fan cooled motors require special cleaning considerations. The external fan must be cleaned thoroughly since any dirt build-up not removed can lead to unbalance and vibration. All of the tubes of the air-to-air heat exchanger should be cleaned using a suitable tube brush having synthetic fiber bristles (not wire of any type).

5.5 Maintenance of anti-friction bearings

5.5.1 Frequency of re-lubrication:

The life of grease varies greatly as a result of types of model, revolution speed, temperature, operational conditions etc. It is, therefore, impossible to be precise about replenishment intervals. However, for normal direct coupling transmission, the periods shown as Table 1 may be used as a guide.

Remarks:

(a) The periods shown in Table 1 should be halved where bearings are used for belt drive and/or in dirty or high ambient temperature or high humidity environments.

(b) Please refer to the lubrication nameplate, if attached to the motor.

(c) For bearing numbers outside the range of Table 1, please contact TWMC

(d) If the periods referred to in Table 1 for drive-end bearing and opposite drive-end are different, for the convenience of maintenance operation, please take the shorter one the required grease replenishment period of these bearings.

5.5.1 Kinds of grease:

All motors with ZZ bearings will have SHELL Alvania R3 (lithium base grease). All motors with open bearings will have Polyrex EM (polyurea base grease).
Certain T-frame models will utilize special grease and will be noted on the lubrication nameplate. Please us identical grease or its equivalents when maintaining lubrication schedule.

ATTENTION!
Do not mix different kinds of grease.
Mixing grease with different type of thickeners may destroy its composition and physical properties. Even if the thickeners are of the same type, possible differences in the additive may cause detrimental effects.

5.5.2 Grease quantity

The amount of grease per replenishment depends on the type, size and construction of the bearings. The maximum amount of one replenishment for each bearing is shown in Table 2.

5.5.3 Re-greasing

If re-lubrication is to be performed when the motor is running, stay clear of rotating parts.

It is advisable to re-grease when the motor is running to allow the new grease to be evenly distributed inside the bearing.
Before re-greasing, the inlet fitting should be thoroughly cleaned to prevent any accumulated dirt from being carried into the bearing with the new grease. The outlet of grease drainage should be opened to allow the proper venting of old grease.

Use a grease gun to pump grease through grease nipple into the bearings. After re-greasing, operate the motor for 10-30 minutes to allow any excess grease to vent out.

TABLE 1.

Bearing Number		600 RPM	720 RPM	750 RPM	900 RPM	1000 RPM	1200 RPM	1500 RPM	1800 RPM	3000 RPM	3600 RPM
62XX 63XX 72XX 73XX	6210										
	12									2000 Hrs.	
	13										
	14									1000 Hrs.	
	15										
	16									720 Hrs.	
	17							2000 Hrs.			
	18			3000 Hrs.							
	20										
	22										
	24							1500 Hrs.			
	26										
	28					2000 Hrs.		1000 Hrs.			
	30										
	32							500 Hrs.			
	34					1500 Hrs.					
	36										
	38			2000 Hrs.		1000 Hrs.					

Bearing Number		600 RPM	720 RPM	750 RPM	900 RPM	1000 RPM	1200 RPM	1500 RPM	1800 RPM
NU2XX NU3XX	NU214								
	15							2000 Hrs.	
	16								
	17								
	18			3000 Hrs.				1500 Hrs.	
	20								
	22							1000 Hrs.	
	24								
	26					2000 Hrs.			
	28							500 Hrs.	
	30								
	32								
	34			2000 Hrs.		1000 Hrs.			
	36								
	38	2000 Hrs.							
	40								
	44			1000 Hrs.					
	48	1000 Hrs.							

Bearing Number		600 RPM	720 RPM	750 RPM	900 RPM	1000 RPM	1200 RPM	1500 RPM	1800 RPM
222XX 223XX	22220							300 Hrs.	
	22								
	24		1000 Hrs.			500 Hrs.			
	26								
	28								
	30					300 Hrs.			
	32			500 Hrs.					
	34								
	36								
	38	500 Hrs.							
	40			300 Hrs.					
	44								
	48	300 Hrs.							

TABLE 2.

Bearing No.		Amount of replenishment
62XX 72XX NU2XX 2222XX	6210	30 g
	6212	40
	6213	50
	6214	50
	6215	60
	6216	60
	6217	80
	6218	80
	6220	100
	6222	120
	6224	120
	6226	140
	6228	160
	6230	180
	6232	200
	6234	250
	6236	300
	6238	350
	6240	400
	6244	450
	6248	500

Bearing No.		Amount of replenishment
63XX 73XX NU223XX 223XX	6310	40 g
	6312	60
	6313	80
	6314	80
	6315	100
	6316	100
	6317	120
	6318	120
	6320	160
	6322	220
	6324	270
	6326	300
	6328	400
	6330	450
	6332	500
	6334	600
	6336	700
	6338	800
	6340	900
	6344	900
	6348	900

*Fill new grease until it overflows and the old grease is entirely replaced.

5.5.4 Oil re-lubrication (For oil lubrication types only)

Maintain proper lubrication by checking the oil level periodically and adding oil when necessary. Because of the initial clearing action of the bearing and the expansion of the oil as it comes up to operating temperature, the oil level will be higher after the motor has been in operation for a while than it is with the motor at standstill.

Overfilling should be avoided not only because of the possibility that expansion may force the oil over the oil sleeve and on to the rotor, but also because too high an operating oil level prevents the bearing form clearing itself of excess oil. The resultant churning can cause extra loss, high temperatures, and oxidized oil. If, during operation, the oil level goes above the maximum shown on the sight gauge, drain enough oil to bring the level back within the recommended operating range. **Do not permit the operating level to fall below the minimum shown on the gauge.**

ATTENTION!
Should it ever become necessary to add excessive amount of make-up oil, investigate immediately for oil leaks.

Change the oil at regular intervals. The time between oil changes depends upon the severity of operating conditions and, hence, must be determined by the motor user. Two or three changes a year is typical, but special conditions, such as high ambient temperature, may require more frequent changes. Avoid operating the motor with oxidized oil.

Use only good grade, oxidation-corrosion-inhibited turbine oils produced by reputable oil companies.

The viscosity of the oil to be used depends upon the type and size of the bearings, its load and speed, the ambient temperature, and the amount and temperature of the cooling water (if used)). The lubrication nameplate or instructions with each motor specifies the viscosity range of oil suitable for average conditions. The usual oil viscosity range of oil suitable for average conditions. The usual oil viscosity recommendations are summarized in Table 3. Operation in ambient temperatures that are near or below freezing may require preheating the oil or the use of special oil. Whenever the motor is disassembled for general cleaning and reconditioning, the bearing housing may be washed out with a suitable cleaning solvent. Be sure that the oil-metering hole is clear, and then dry the housing thoroughly before re-assembly, and ensure all traces of cleaning solvent have been removed.

TABLE 3 Oil Viscosity**

Bearing function and location	Bearing Type	Oil Viscosity - SSU	
		@ 100°F	@ 200°F
Thrust Bearing	72XX, 73XX Angular contact ball And/or (62XX, 63XX)	150	45
	Spherical roller	300	53
	Plate (Kingsbury Type)	300	53

**Remark: When a lubrication nameplate attached to the motor, use lubrication oil it stipulates.

5.5.5 Cleaning and installation of bearings

(a) Apply the proper amount of grease to the disassembled parts of the bearing after they have been thoroughly cleaned with high quality cleaning oil. Then protect them from contamination before and during assembly.

(b) Bearing installation

ATTENTION!
Before installing the bearings, make sure that the shaft mounted parts inside the bearings are in place before installation.

Since the bearing is a high precision component, it is important to avoid ingression of dust and foreign matter, and hammering during cleaning and installation. Use extreme care and insure clean conditions during installation and assembly.

ATTENTION!
The best way for bearing installation is heat shrinking. Knocking and hammering during installation should be avoided absolutely.

The bearing should be heated in a bath of clean oil at a temperature of approximately 80°C. After warming, slide the bearings in place quickly and nimbly so that it has not shrunk before being fully in position.
Grease the bearing after the temperature returns to normal, and then reassemble the motor.

5.6 Maintenance of sleeve bearings

5.6.1 Daily inspections

(a) Ensure the volume and quality of lubrication oil are in compliance with specifications.

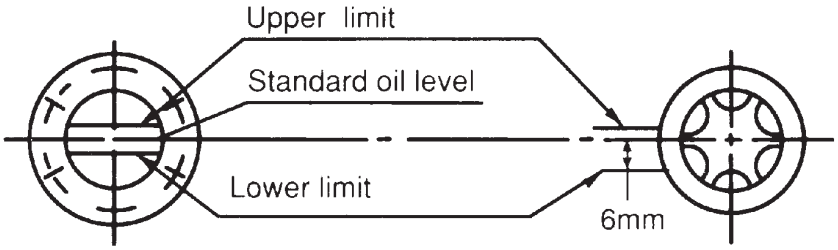

Fig. 12

(b) Ensure there is motion of the oil ring and it is not clamped.

(c) The indicator of the shaft endplay should be restricted within the specified range of the red groove of the shaft or the ±3mm (.118 in.) range of the drive-end shaft shoulder, or the bearing may be damaged.

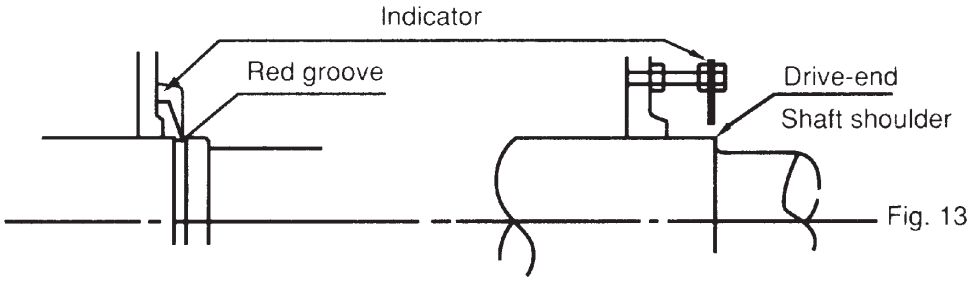

Fig. 13

5.6.2 Regular examination

(a) Periodical change of oil

The oil reservoirs of self (not flood) lubricated bearings should be drained and refilled about every six (6) months. More frequent changes may be needed on high speed (3600 rpm) motors or if severe oil discoloration or contamination occurs. In conditions where contamination does occur, it may be advisable to flush the reservoir with kerosene to remove any sediment before new oil is added. Proper care must be taken to thoroughly drain the reservoir of the flushing material before refilling with the new oil.

Refill the reservoir to the center of oil sight glass with a rust and oxidation inhibited turbine grade oil. Refer to the outline and lubrication nameplate for the correct viscosity.

(b) Quantity of lubrication oil

Please refer to the lubrication nameplate for oil quantity.

(c) Oil viscosity

(d)

ISO	Equivalents	Viscosity (SUS/100°F)
VG32	Esso Teresso 32	150
VG46	Esso Teresso 46	200
VG68	Esso Teresso 68	300

5.6.3 Disassembly

Prior to disassembling, ensure the power supplies are disconnected and there are no moving parts.

The bearing sleeve is of the spherically seated, self-aligning type. The opposite drive end bearing is normally insulated for larger motors (or when specified). On some motors, the insulation is bonded to the spherical seat of the bearing housing.

ATTENTION!
Extreme care must be exercised in removing the bearing sleeve from the insulated support to avoid damaging this insulation.

The following is the recommended procedure for removing the bearing sleeve:

(a) Remove the oil drain plug in the housing bottom and drain the oil sump.

(b) Remove all instrumentation sensors that are in contact with the bearing sleeve. These would include resistance temperature detectors, thermocouples, thermometers, etc..

(c) Remove the socket head bolts holding the bearing cap and the inner air seal. The end cover plate must also be removed if the non-drive end bearing is being disassembled. Remove the bearing cap and top half of the inner air seal. Place them on a clean, dry surface to avoid damage to the parting surfaces.

(d) Remove the top half of the bearing sleeve using suitable eyebolts in the tapped holes provided. Lift the bearing top straight up and avoid any contact with the shoulders of the shaft journals that might damage the thrust faces of the bearing. Place on a clean, dry surface taking care to prevent damage to either the parting surfaces or the locating pins that are captive n the top bearing half.

(e) Remove the screws at the partings in the oil ring and dismantle the ring by gently tapping the dowel pin ends with a soft face mallet. Remove the ring halves and immediately reassemble them to avoid any mix up I parts or damage to the surfaces at the partings.

(f) Pull up on the garter spring surrounding the floating labyrinth seal and carefully slip out the top half. Rotate the garter spring until the lock is visible. Twist counter-clockwise to disengage the lock, remove the garter spring then rotate the lower half of the seal out of the groove in the bearing housing. Note the condition of these floating labyrinth seals. If they are cracked or chipped, they must be replaced. Do not attempt to reuse a damaged seal.

(g) To remove the bottom bearing half, the shaft must be raised a slight amount to relieve pressure on the bearing. On the drive end, this can be done by jacking or lifting on the shaft extension. Protect the shaft. On the non-drive, jacing or lifting can be done using bolts threaded into the tapped holes provided in the shaft end.

(h) Roll the bottom bearing half to the top of the shaft journal and then lift it using suitable eyebolts threaded into the holes provided. Again avoid any contact with the shaft shoulders that could damage the bearing thrust faces. Place the lower bearing half on a clean, dry surface to protect the parting surfaces.

Use extreme care when rolling out the lower bearing half. Keep the hands and fingers well clear of any position where they might be caught by the bearing half if it were accidentally released and rotated back to its bottom position. Serious personal injury could result.

(i) Protect the shaft journal by wrapping it with clean, heavy paper or cardboard.

5.6.4 Re-assembly

Bearing re-assembly is basically a reverse of the disassembly procedures outlined above, with the following suggestions:

(a) The interior of the bearing housing should be cleaned and then flushed with clean oil or kerosene.

(b) The bearing halves and the shaft journal should be wiped clean using lint-free cloth soaked with clean oil.

(c) All parts should be carefully inspected for nicks, scratches, etc., in any contract surfaces. Such imperfections should be removed by an appropriate method such as stoning, scraping, filling, etc., followed by thorough cleaning.

(d) Before installing the floating labyrinth seal halves, observe their condition. Do not attempt to use a cracked or chipped seal. The bottom half seal has a set of drilled holes in its side face. These must be place at the bottom toward the inside of the bearing so that accumulating oil may drain back into the housing.

(e) Put a bead of Curil-T around the seal half O.D.'s on both sides adjacent to the garter spring groove. This will prevent oil by-passing the seal around its outside.

(f) Place the bottom seal half on top of the shaft and roll it into position. Install the top half and insert the garter spring pulling up on both ends to permit engaging the lock. Run a bead of Curil-T around the O.D's on both sides adjacent to the garter spring groove on this half also.

(g) Carefully reassemble the two oil ring halves. Inspect the dowel pins for burrs and straightness and make any corrections required. Do not force the ring halves together. Excessive force may alter the roundness or flatness of the oil ring which can change its oil delivery performance.

(h) Some of the pipe plugs in the housing are metric thread type. These are identified as those, which have a copper, lead, or similar material washer. If these plugs are removed,

be careful not to lose the washers. Before re-assembly, inspect the washers and replace them as required.

(i) Before installing the bearing cap, observe the position of the floating labyrinth seal. The "tab" must be on top to engage the pocket. Failure to position the seal properly will result in damage when the cap is assembled.

ATTENTION!
(1) Curil-T is the only approved compound for use in the assembly of the bearings on this motor. Other products may harden and impede the operation.
(2) During the re-assembly of the bearing parts, a thin layer of Curil-T should be applied to all gaskets and machined interface surfaces. This suggestion does not apply to the machined surfaces of the bearing liner halves.
(3) When seating the bearing shell, apply a thin layer of lube oil at the spherical surface of the liner. Slowly roll the lower bearing liner into the bearing housing making sure that the splinted surface of the liner and the housing are flush. Gradually lower the shaft onto the bearing. The weight of he shaft will help rotate the bearing liner so that the babbitt surface of the liner will match the slope of the journal. Sometimes it is required to use a rubber mallet to tap lightly on the bearing housing while slowly rolling the shaft to help this seating operation.

5.7 Maintenance of slip ring (For Wound Rotor Motors only)



Ensure motor is disconnected from power supplies and there are no accessible moving parts before maintenance operation.

5.7.1 Adjustment of carbon brush

(a) Brush pressure for normal operation:
- Electro-graphite brush…..0.2~0.25 kg/cm²

When frequent vibrations are evident or the brush is small (area below 0.5 cm²), the pressure should be greater than as shown.

(b) Adjustment of brush pressure:
The brush pressure should be adjusted to keep normal operation as it wears.
- The brush pressure may be reduced after use, so it is necessary to re-adjust. For adjustment, please turn adjusting screw, pressure adjusting pin or pressure adjusting plate as shown in Fig. 14 to obtain the correct tension (=0.23 x brush cross sectional area in cm²) ±10% kg.

(c) Brush pressure need not be adjusted if constant force spring is used as shown in Fig. 15 and Fig. 16.

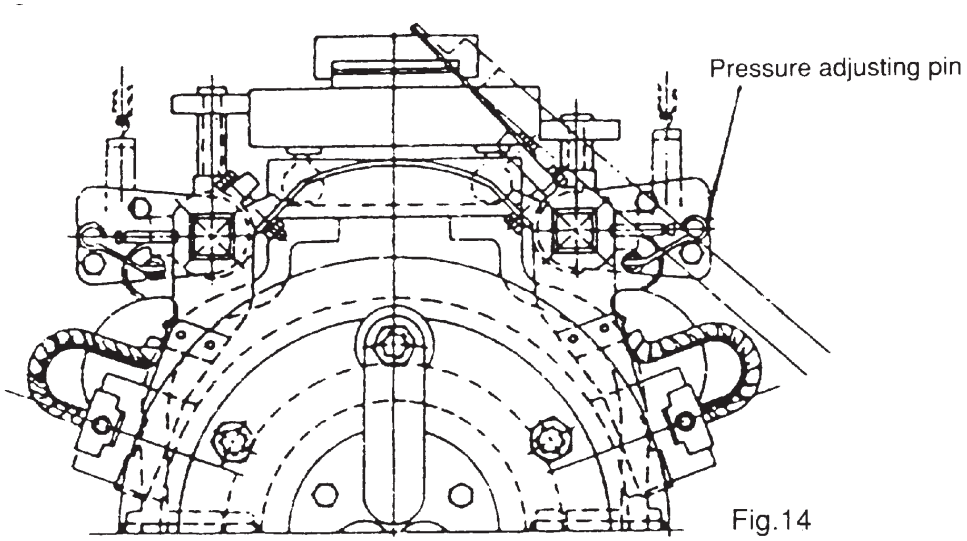

Fig.14

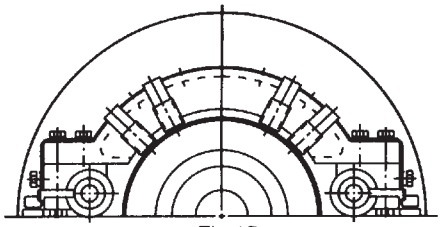
Fig.15

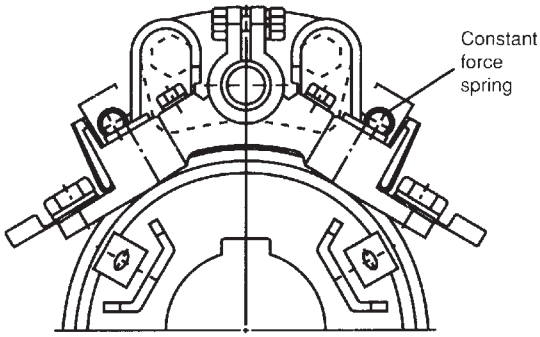

Fig.16

5.7.2 Brush replacement

The carbon brush is a part of the equipment which is easily worn away, replace it after it is worn to ½ ~ ¾ of original size.

(a) Brush material

The brush material is important to the performance of the motor. Only the most appropriate materials are chosen by TWMC, and are listed on the nameplate of the motor. It is important to know this when you replace the brush, so a recommended type is used.

(b) Dimensions

Brush, holder and gap between them, please refer to CNS 2322 C4051 or JIS C2802.

ATTENTION!
The gap between a brush and it holder is important for good performance and safety of the motor.

(c) Adjustment of new brushes (Shown in Fig. 17)

(1) Polish the new brush with a file until is assumes the appropriate contour of the slip ring which it touches.

(2) Place sand-paper (JIS R6252 No. 40…50) on the slip ring with the abrasive face of the paper against the brush to induce a closer contact by rubbing against each other.
(3) Repeat item 2 with fine sand –paper (JIS R6252 No. 100 to 200) until the contact surface between brush and slip ring exceeds 80%.
(4) Finally, clean the contaminated slip ring and brush with clean cloth or compressed air.

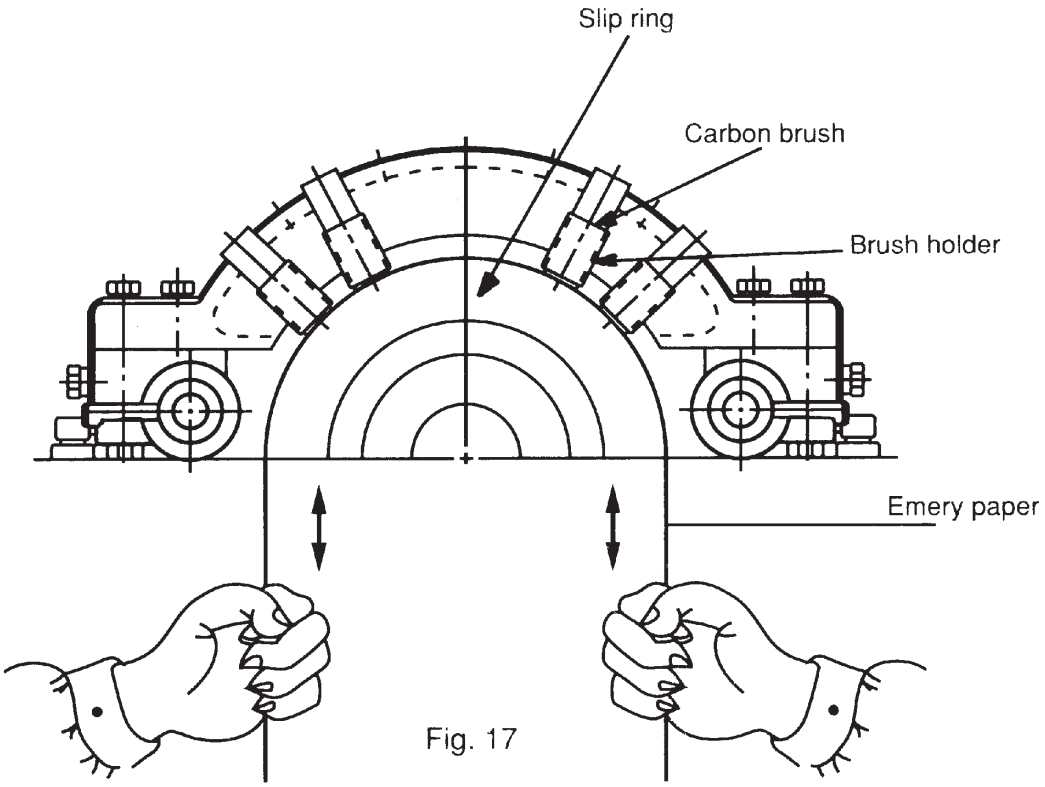

Fig. 17

5.8 Maintenance of non-reverse ratchet mechanism (For Vertical high Thrust Motor only)

5.8.1

In the pump piping system, a check valve and a stop valve should be installed in the discharge line. The check valve, placed between the pump and the stop valve, is to protect the pump from reverse flow and excessive backpressure. The stop valve is used in priming, starting and when shutting down the pump. It is advisable to close the stop valve before stopping the pump. This is especially important when the pump is operated against a high static head.

TWMC vertical high thrust motors are equipped with non-reverse ratchet (N.R.R.) mechanism only when requested by the pump manufacturer. Typical construction of the N.R.R. mechanism is shown as Fig 18 below.

The N.R.R. mechanism keeps the pump and motor from rotating in the reverse direction. Thus prevents damage from over-speeding and damage to water-lubricated pump shaft bearings

when, on shutdown, the falling water column tends to drive the pump in the reverse direction. In normal operation, the ratchet pins are lifted by the ratchet teeth and are held clear by centrifugal force and friction as the motor comes up to speed. When power is removed, the speed decreases and the pins fall. At the instant of reversal, a pin will catch in a ratchet tooth and prevent backward rotation.

5.8.2

The service life of ratchet pins depends not only on the reverse shock load between the pin and ratchet tooth when pump stopped but also the frequency of pump starting and stopping while in service. Provided that the pins are deformed due to this reverse shock load, then the up and down motion of the ratchet pins could be sluggish or jammed and that unusual noises shall arise.

The recommended replacement period for these ratchet pins is every three (3) years. If the reverse shock load is greater than 30% of motor rated torque or the starting frequency is more than twice per day, then the replacement period should be halved.

ATTENTION!
The check valve and stop valve in the discharge line should be regularly inspected and maintained to assure the normal function of these valves. This is important to protect the pump and motor from damage and increase the service life of the N.R.R. mechanism.

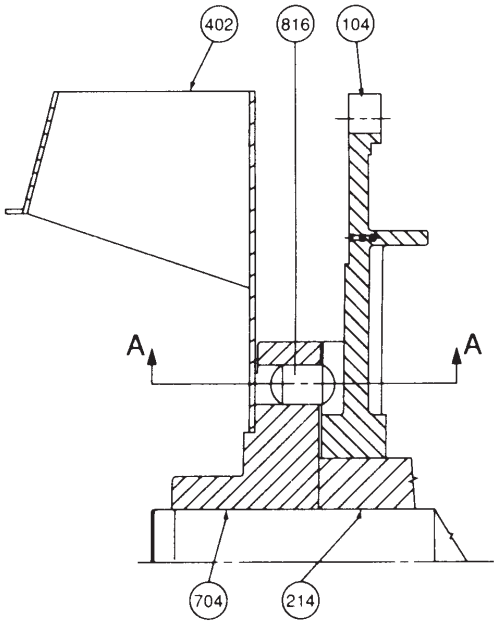

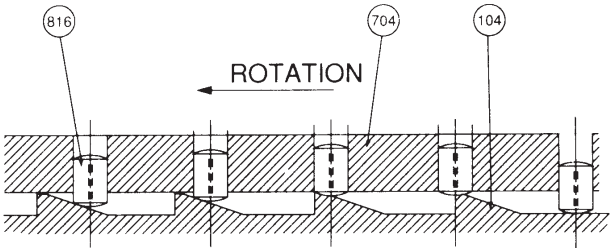

SECTION A-A

ITEM	NAME
104	RATCHET
214	BEARING SEAT
402	EXTERNAL FAN
704	RATCHET PIN CARRIER
816	RATCHET PIN

Fig. 18

6. FAULT FINDING AND RECOGNITION

Kinds of Breakdown	Symptoms	Possible Causes	Remedies
Fail to start without load	Motionless and soundless	Power-off	Consult power company
		Switch-off	Switch-on
		No fuse	Install fuse
		Broken wiring	Check wiring and repair
		Broken lead	Check wiring and repair
		Broken windings	Check windings and repair
	Fuse blowing. (Automatic switch trips off, slow start with electromagnetic noise)	Short circuit of circuit switches	Check circuit switches and replace
		Incorrect wiring	Check wiring according to nameplate
		Poor contact at terminal	Lock tightly
		Windings grounded	Factory repair
		Broken windings	Factory repair
		Poor contact of circuit switches	Check and repair
		Broken wiring	Check and repair
		Poor contact of starting switches	Check and repair
		Short circuit of starting switches	Check and repair
		Incorrect connections of starting switches	Connect according to nameplate
Loading after start	Fuse blowing. Fail to restart due to trip-off of automatic switch	Insufficient capacity of fuse	Replace fuse if wiring permits
		Overload	Lighten load
		High load at low voltage	Check circuit capacity and reduce load
	Overheating motor	Overload or intermittent overload	Lighten load
		Under-voltage	Check circuit capacity and power source
		Over-voltage	Check power source
		Ventilation duct clogged	Remove the foreign matter in the duct
		Ambient temperature exceeds 40°C	Correct insulation class to B or F, or lower ambient temperature
		Friction between rotor and stator	Factory repair
		Fuse blown (Single-phase rotating)	Install the specified fuse
		Poor contact of circuit switches	Check and repair
		Poor contact of circuit starting switches	Check and repair
		Unbalance three-phase voltage	Check circuit or consult power company

Kinds of Breakdown	Symptoms	Possible Causes	Remedies
Loading after start	Speed falls sharply	Voltage drop	Check circuit and powers source
		Sudden overload	Check machine
		Single-phase rotating	Check circuit and repair
	Switch overheat	Insufficient capacity of switch	Replace switch
		High load	Lighten load
	Bearing over-heating	High belt tension	Adjust belt tension
		Slack belt tension	Adjust belt tension
		Misalignment between motor and machine shafts	Re-align
		Over speed of bearing outer-ring	Adjust bracket
		High bearing noise	Replace the damaged bearing
Noise	Electromagnetic noise induced by electricity	Occurrence from its first operation	May be normal
		Sudden sharp noise and smoking	Short circuit of windings should be repaired at the factory
	Bearing noise	Noise of low shishi or Thru-Thru	May be normal
		Kala-Kala as a result of poor lubrication	Grease
		Kulo-Kulo as a result of poor lubrication	Clean bearing and grease
		Sa-Sa or larger noise	Replace the damaged bearing
	Mechanical noise caused by machinery	Loose belt sheave	Adjust key and lock the screw
		Loose coupling or skip	Adjust the position of couplings, lock key and screw
		Loose screw on fan cover	Lock fan cover screw tightly
		Fan rubbing	Adjust fan position
		Rubbing as a result of ingression of foreign matter	Clean motor interior and ventilation ducts
		Wind noise	Noise induced by air flowing through ventilation ducts
		Induced by conveyance machine	Repair machine
Vibration	Electromagnetic vibration	Short circuit of winding	Factory repair
		Open circuit of rotor	Factory repair
	Mechanical vibration	Unbalanced rotor	Factory repair
		Unbalanced fan	Factory repair
		Broken fan blade	Replace fan
		Unsymmetric centers between belt sheaves	Align central points
		Central points of couplings do not lie on the same level	Adjust the central points of couplings to the same level
		Improper mounting installation	Lock the mounting screws
		Motor mounting bed is not strong enough	Reinforce mounting bed

Remarks:

(1) Circuit switches: These include knife switches, electromagnetic switches, fuse and other connection switches etc.

(2) Starting switches: These include Delta-Star starters, compensate starters, reactance starters, resistor starters, starting controller's etc.

MOYNO

Always the Right Solution™

SERVICE MANUAL
MOYNO® 500 PUMPS
300 SERIES MOTORIZED
331, 332, 333, AND 344 MODELS

DESIGN FEATURES

Housing:	Cast iron/316 SS
Pump Rotor:	Chrome plated AISI 416 stainless steel/Chrome plated 316 stainless steel
Pump Stator:	NBR (Nitrile)
Seal:	Mechanical (carbon/ceramic)
Motor Shaft:	AISI 416 stainless steel/ANSI 316 stainless steel
Motor:	1/2 HP, 60 Hertz, 1725 rpm, totally enclosed, fan cooled (TEFC) C-Faced, 1 phase 115/230V or 3 phase 230/460V (other motor options available; consult sales representative)

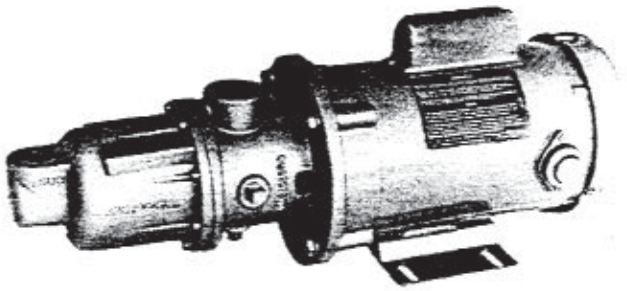

Note: Alternate elastomers available. Refer to Repair/Conversion kit numbers pages 3 and 4.

INSTALLATION

Mounting Position. Pump may be mounted in any position. When mounting vertically, it is necessary to keep bearings above seals to prevent possible seal leakage into bearings.

Pre-Wetting. Prior to connecting pump, wet pump elements and mechanical seal by adding fluid to be pumped into suction and discharge ports. Turn pump over several times in a clockwise direction to work fluid into pump elements.

Piping. Piping to pump should be self-supporting to avoid excessive strain on pump housings. See Table 1 for suction and discharge port sizes of each pump model. Use pipe "dope" or tape to facilitate disassembly and to provide seal on pipe connections.

Electrical. Follow the wiring diagram on the motor nameplate or inside the terminal box for the proper connections. The wiring should be direct and conform to local electrical codes. Check power connections for proper voltage. Voltage variations must not exceed ±10% of nameplate voltage. Motor is provided with internal automatic overload protection.

To prevent damage to pump, pump rotation must be clockwise when facing pump from motor end.

OPERATION

Self-Priming. With wetted pumping elements, the pump is capable of 25 feet of suction lift with pipe size equal to port size. Be sure suction lines are air tight or pump will not self prime. Self-priming capabilities will vary due to fluid viscosity.

DO NOT RUN DRY. Unit depends on liquid pumped for lubrication. For proper lubrication, flow rate should be at least 10% of rated capacity.

Pressure and Temperature Limits. See Table 1 for maximum discharge pressure of each model. Unit is suitable for service at temperatures shown in Table 2.

Storage. Always drain pump for extended storage periods by removing bottom drain plug in pump body.

Caution: Suction pressure should never be greater than discharge pressure.

Table 1. Pump Data

Pump Model	Suction Port (NPT)	Discharge Port (NPT)	Voltage Rating (VAC)	Discharge Pressure (psig)
331	3/4	3/4	See Motor Name Plate For Voltage Ratings	150
332	3/4	3/4	See Motor Name Plate For Voltage Ratings	100
333	3/4	3/4	See Motor Name Plate For Voltage Ratings	50
344	3/4	3/4	See Motor Name Plate For Voltage Ratings	†30

†With 3/4 HP motor, pressure is 40 psig.

Table 2. Temperature Limits

Elastomer	Temperature Limits
*NBR	10°-160°F
*EPDM	10°-210°F
*FPM	10°-240°F

*NBR = Nitrile
EPDM = Ethylene-Propylene-Diene Terpolymer
FPM = Fluoroelastomer

TROUBLESHOOTING

WARNING: Before making adjustments, disconnect power source and thoroughly bleed pressure from system prior to disassembly. Failure to do so could lead to electric shock or serious bodily harm.

Failure To Pump.

1. Motor will not start: Check power supply. Voltage must be ± 10% of nameplate rating when motor is in locked rotor condition. Check for faulty capacitor on 1 phase Models.
2. Motor runs and thermally kicks out: Check for excessive discharge pressure. Check for defective centrifugal switch on 1 phase Models. Increase ventilation to motor. Do not use less than #14 wire size.
3. Stator torn; possible excessive pressure: Replace stator, check pressure at discharge port.
4. Flexible joint broken; possible excessive pressure:

   Replace joint, check pressure at discharge port.
5. Wrong rotation (3 phase only): Rotation must be clockwise when facing pump from motor end. Reverse the connections of any two line leads to the motor.
6. Excessive suction lift or vacuum.

Pump Overloads.

1. Excessive discharge pressure: Check pressure at discharge port for maximum ratings given in Table 1.
2. Fluid viscosity too high: Limit fluid viscosity to 100 CP or 500 SSU.

Noisy Operation.

1. Excessive suction lift or vacuum: Maximum suction lift is 25 feet for water.
2. Suction line too small: Check pipe size. Be sure lines are free from obstructions.
3. Pump Cavitates: Pump speed is 1725 rpm. Viscosity of fluid should not exceed 100 CP or 500 SSU.
4. Flexible joint worn: Replace joint. Check pressure at discharge port.
5. Insufficient mounting: Mount to be secure to a firm base. Vibration induced noise can be reduced by using mount pads and short sections of hose on suction and discharge ports.

Seal Leakage.

1. Leakage at startup: If leakage is slight, allow pump to run several hours to let faces run in.
2. Persistent seal leakage: Faces may be cracked from freezing or thermal shock. Replace seal.

Pump Will Not Prime.

1. Air leak on suction side: Check pipe connections.

PUMP DISASSEMBLY

WARNING: Before disassembling pump, disconnect power source and thoroughly bleed pressure from system. Failure to do so could result in electric shock or serious bodily harm.

1. Remove suction and discharge piping. Drain pump body by removing drain plug (261B).
2. Remove screws (112) holding suction housing (2) to discharge housing (1). Remove suction housing (2) and stator (21).
3. Remove rotor (22) from flexible joint (24) by turning counterclockwise (RH thread). On pinned, 3 phase models, remove rotor pin (45) with suitable punch.
4. Flexible joint (24) can be removed from motor shaft by using a 3/16 allen wrench in end of joint and turning counterclockwise. On 3 phase motors, remove motor pin (46) with suitable punch, then remove joint:
5. Slide mechanical seal (69) off motor shaft.
6. Remove discharge housing (1) from adaptor flange (12) by removing screws (1 12B).
7. Carefully pry seal seat out of discharge housing (1). If any parts of mechanical seal are worn or broken, the complete seal assembly should be replaced. Seal components are matched parts and are not interchangeable.
8. Remove adapter flange (12) from motor (70) by removing screws (112A).
9. Remove slinger ring (77).

PUMP ASSEMBLY

1. Install slinger ring (77).
2. Attach adaptor flange (12) to motor housing using screws (112A).
3. Attach discharge housing (1) to adaptor flange (12) using screws (1128). Be sure to center seal bore on shaft.
4. Install mechanical seal (69) in discharge housing (1) using the following procedure:
   a. Clean and oil sealing faces using clean oil (not grease).

Caution: Do not use oil on EPDM parts. Substitute glycerin or soap and water.

   b. Oil outer surfaces of the seal seat, and push assembly over the motor shaft and into the discharge housing (1) seating it firmly and squarely.
   c. After cleaning and oiling the shaft, slide the seal body along the motor shaft until it meets the seal seat.
   d. Install seal spring and spring retainer on shaft.
5. Thread flexible joint (24) into motor shaft in a clockwise direction (RH thread). Tighten with 3/16 allen wrench. On 3 phase models, install motor pin (46).
6. Thread rotor (22) onto flexible joint (24) in a clockwise direction (RH thread). On 3 phase models, install rotor pin (45).
7. Slide stator (21) on rotor (22). On 331 & 332 models, insert rounded end of stator ring (135) into end of stator prior to installing stator on rotor.
8. Secure stator (21) and suction housing (2) to discharge housing (1) using screws (112).
9. Lubricate rotor and stator by filling Suction housing and discharge housing with fluid to be pumped.
10. Connect Suction and discharge piping and power source.

PARTS LIST

To determine part numbers for all parts except standard motors, enter table with item number from pump illustration. Then locate part number under applicable model number (first three digits). Parts listed down the center are applicable to all pump models. To determine part numbers for standard motor (item 70), enter table at item 70 with the last two digits of model number: motor description and part number are on that line.

Item No.	Description	Pump Model Numbers			
		331	332	333	344
1	Discharge Housing	Cast Iron 350-1016-000/Stainless Steel 350-1016-007			
2	Suction Housing	Cast Iron 330-1064-002/Stainless Steel 330-1911-002			
*21	Stator	340-3501-120	340-3502-120	340-3503-120	340-3504-120
*22	Rotor (Threaded) 416 S5	320-2729-000	330-0906-000	320-1394-000	320-1841-000
*22	Rotor (Pinned) 416 SS	320-2729-004	320-4559-004	320-1584-002	320-1569-002
24	Flexible Joint (Threaded)	Carbon Steel 320-1511-000/Stainless Steel 320-3759-000			
240	Flexible Joint (Pinned)	Carbon Steel 320-1612-000/Stainless Steel 320-4415-000			
*45	Shaft Pin (2 req.)	320-4069-002			
*69	Mechanical Seal	320-2424-000			
70	Standard Motor				
	-59 1PH TEFC 1750 RPM	330-4529-000			
	-60 3PH TEFC 1750 RPM, Pin	330-4528-100			
	-52 1PH TEFC 1750 RPM	330-4529-1 00			
	-50 3PH TEFC 1750 RPM	330-4528-003			
77	Slinger Ring	320-6382-000			
112	Screw, Cap (8 req.)	Carbon Steel 619-1430-103 (10-24 x 5/8)/Stainless Steel 619-1432-120 (10-24 x 3/4)			
112A	Screw, Hex Hd (4 req.)	Carbon Steel 619-1530-161 (3/8-16 x 1)/Stainless Steel 320-6715-005 (3/8-16 x 1)			
135	Stator Ring	Carbon Steel 320-7812-000 /Stainless Steel 362-1774-000			
215	Lock Washer (8 req.)	320-6464-000			
215A	Lock Washer (4 req.)	Carbon Steel 623-0010-411/Stainless Steel 320-6717-002			
261	Pipe Plug, 1/4 NPT	Carbon Steel 610-0120-021/Stainless Steel 610-0420-020			
	Rotor (Threaded) 316 SS	320-2933-000	320-2942-000	320-2936-000	320-2934-000
	Rotor (Pinned) 316 SS	320-2933-002			

*Recommended spare parts.
Used on 3 phase models.

REPAIR/CONVERSION KIT NUMBERS

Item No.	Description	All 331 Models (Threaded Only)			All 332 Models (Threaded Only)		
		NBR	EPDM	FPM	NBR	EPDM	FPM
—	Kit No.	311-9026-000	311-9025-000	311-9054-000	311-9027-000	311-9038-000	311-9055-000
21	• Stator	340-3501-120	340-3501-320	340-3501-520	340-3502-120	340-3502-320	340-3502-520
24	• Joint	*320-1511-000	320-6367-000	320-4670-000	*320-1511-000	320-6367-000	320-4670-000
69	• Seal	320-2424-000	320-6379-000	320-6501-000	320-2424-000	320-6379-000	320-6501-000
		All 333 Models (Threaded Only)			All 344 Models (Threaded Only)		
Item No.	Description	NBR	EPDM	FPM	NBR	EPDM	FPM
—	Kit No.	311-9029-000	311-9028-000	311-9056-000	311-9031-000	311-9030-000	311-9057-000
21	• Stator	340-3503-120	340-3503-320	340-3503-520	340-3504-120	340-3504-320	340-3504-520
24	• Joint	*320-1511-000	320-6367-000	320-4670-000	*320-1511-000	320-6367-000	320-4670-000
69	• Seal	320-2424-000	320-6379-000	320-6501-000	320-2424-000	320-6379-000	320-6501-000

NBR = Nitrile
EPDM = Ethylene-Propylene-Diene Terpolymer
FPM = Fluoroelastomer
*Carbon steel joint, for 316 SS joint use 320-3759-000.

REPAIR/CONVERSION KIT NUMBERS (CONT.)

		All 331 Models (Pinned Only)			All 332 Models (Pinned Only)		
Item No.	**Description**	**NBR**	**EPDM**	**FPM**	**NBR**	**EPDM**	**FPM**
–	Kit No.	311-9104-000	311-9108-000	311-9112-000	311-9105-000	311-9109-000	311-9113-000
21	• Stator	340-3501-120	340-3501-320	340-3501-520	340-3502-120	340-3502-320	340-3502-520
24	• Joint	*320-1612-000	320-6973-000	320-6984-000	*320-1612-000	320-6973-000	320-6984-000
69	• Seal	320-2424.000	320-6379-000	320-6501-000	320-2424-000	320-6379-000	320-6501-000
45	• Pin (2 req.)	320-4069-002			320-4069-002		
		All 333 Models (Pinned Only)			**All 344 Models (Pinned Only)**		
Item No.	**Description**	**NBR**	**EPDM**	**FPM**	**NBR**	**EPDM**	**FPM**
–	• Kit No.	311-9106-000	311-9110-000	311-9114-000	311-9107-000	311-9111~000	311-9115-000
21	• Stator	340-3503-120	340-3503-320	340-3503-520	340-3504-120	340-3504-320	340-3504-520
24	• Joint	*320-1612-000	320-6973-000	320-6984-000	*320-1612-000	320-6973-000	320-6984-000
69	• Seal	320-2424-000	320-6379-000	320-6501-000	320-2424-000	320-6379-000	320-6501-000
45	Pin (2 req.)	320-4069-002			320-4069-002		

ABRASION RESISTANT SEALS

Elastomer	All 331 – 334 Models
NBR	320-6460-000
EPDM	320-6502-000
FPM	320-6503-000

NBR = Nitrile
EPDM = Ethylene-Propylene-Diene Terpolymer
FPM = Fluoroelastomer
*Carbon steel joint, for 316 SS joint use 320-4415-000.

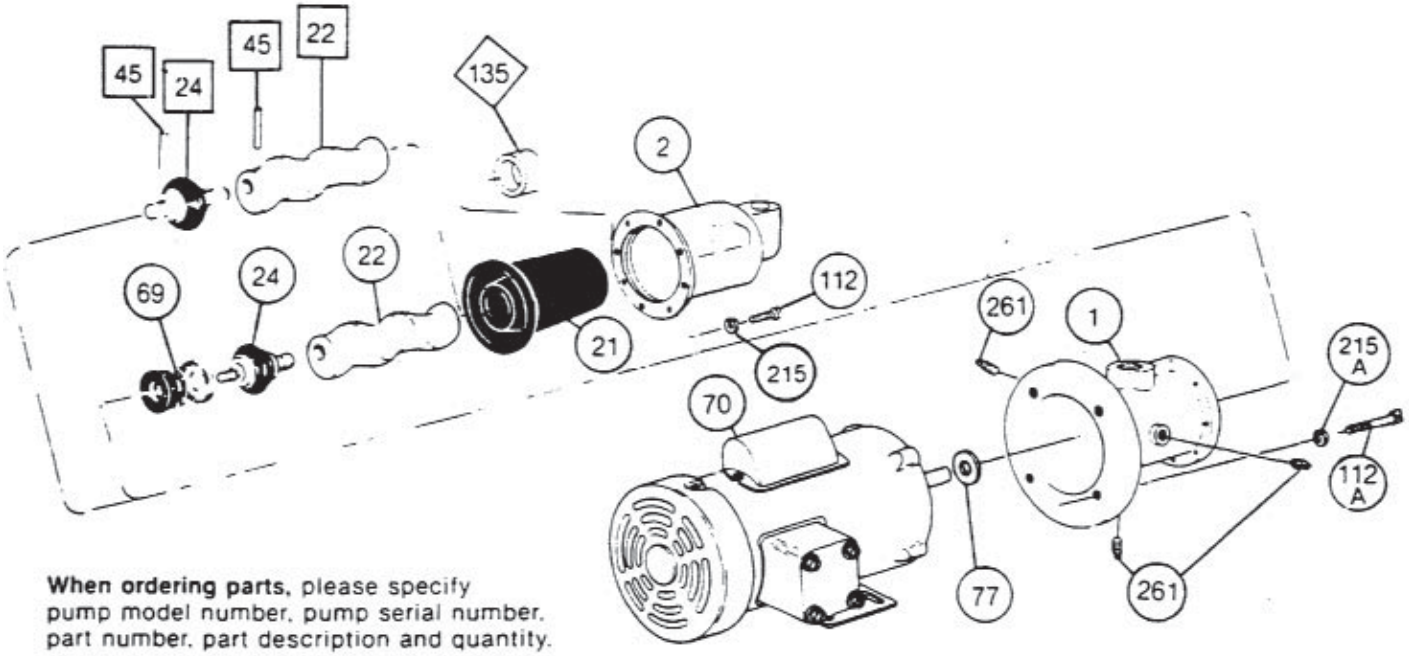

When ordering parts, please specify pump model number, pump serial number, part number, part description and quantity.

◇ Used only on 331 & 332 Models.

□ Used on 3 Phase Models

© 1999 by Moyno, Inc.
® Moyno is a registered trademark of Moyno, Inc.

Your Peace of Mind Is Our Top Priority®

Product information presented here reflects conditions at time of publication. Consult factory regarding discrepancies or inconsistencies.

ZOELLER® PUMP COMPANY

Zoeller Family of Water Solutions™

SECTION: 2.15.030
FM2780
0315
Supersedes
0114

TECHNICAL DATA SHEET
AQUA-MATE SERIES
Model 72 Submersible Dewatering Pump

PRODUCT SPECIFICATIONS

MOTOR	Horse Power	3/10
	Voltage	115
	Phase	1 Ph
	Hertz	60 Hz
	RPM	3400
	Type	Permanent split capacitor
	Insulation	Class B
	Amps	3.1
PUMP	Operation	Automatic or nonautomatic
	Auto On/Off Points	7-3/8" (18.7 cm) / 3-5/8" (9.2 cm)
	Discharge Size	1-1/2" NPT
	Solids Handling	3/8" (9 mm) spherical solids
	Cord Length	9' (3 m) standard
	Cord Type	UL listed, 3-wire, grounded plug
	Max. Head	18' (5.5 m)
	Max. Flow Rate	38 GPM (144 LPM)
	Max. Operating Temp.	110° F (43° C)
	Cooling	Oil free
	Motor Protection	Auto reset thermal overload
MATERIALS	Motor Housing	Engineered plastic
	Pump Housing	Engineered plastic
	Base	Engineered plastic
	Upper Bearing	Ball bearing
	Lower Bearing	Ball bearing
	Mechanical Seals	Carbon and ceramic
	Impeller Type	Non-clogging vortex
	Impeller	Engineered plastic
	Hardware	Stainless steel
	Motor Shaft	410 stainless steel
	Gasket	Buna-N o-ring

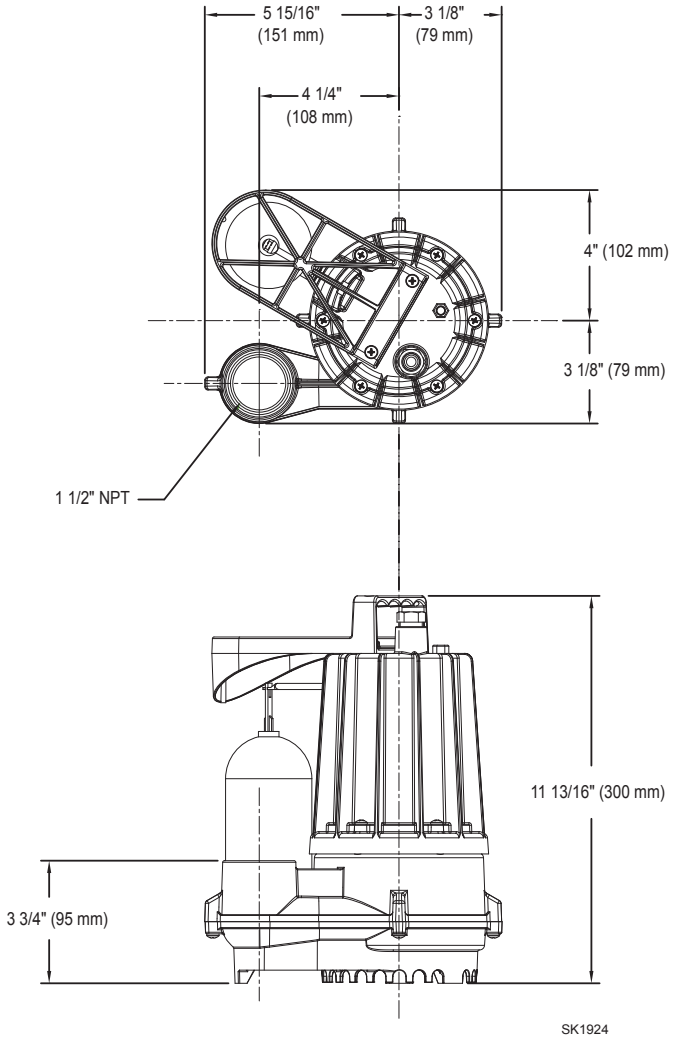

NOTE: See model comparison chart for specific details.

Certified to CSA Standard 227875

© Copyright 2015 Zoeller® Co. All rights reserved.

TOTAL DYNAMIC HEAD FLOW PER MINUTE

MODEL		72	
Feet	Meters	Gal.	Liters
5	1.5	38	144
10	3.0	30	114
15	4.6	14	53
Shut-off Head:		18 ft. (5.5 m)	

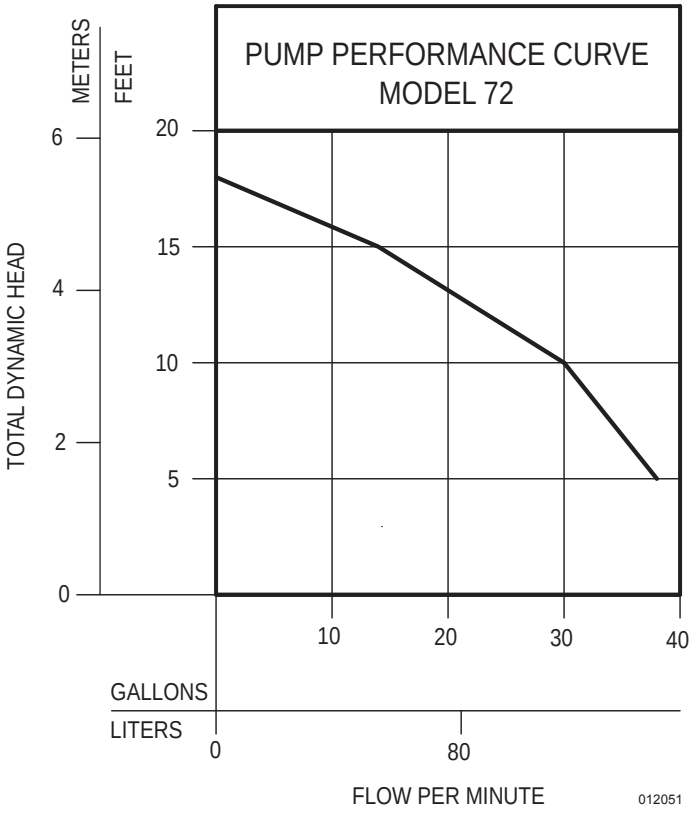

Model	MODEL COMPARISON										
	Seal	Mode	Volts	Ph	Amps	HP	Hz	Lbs	Kg	Simplex	Duplex
M72	Single	Auto	115	1	3.1	3/10	60	9.5	4.3	1	3
N72	Single	Non	115	1	3.1	3/10	60	9.5	4.3	2	2 & 3
BN72	Single	Non	115	1	3.1	3/10	60	9.5	4.3	*	---

* Single piggyback switch included.

SELECTION GUIDE

1. Integral float-operated mechanical switch, no external control required.
2. Single piggyback variable level float switch or double piggyback variable level float switch. Refer to FM0477.
3. See FM0477 for a residential alternator system.

OPTIONAL PUMP STAND P/N 10-2421

- Reduces potential clogging by debris
- Replaces rocks or bricks under the pump
- Made of durable, noncorrosive ABS
- Raises pump 2" (5 cm) off bottom of basin
- Provides the ability to raise intake by adding sections of 1½" or 2" (DN40 or DN50) PVC piping
- Attaches securely to pump
- Accommodates sump, dewatering and effluent applications

NOTE: Make sure float is free from obstruction.

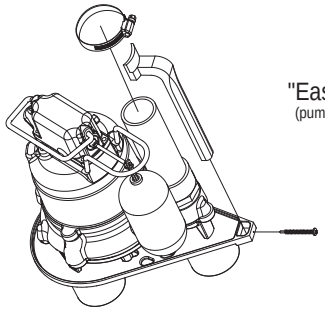

"Easy assembly"
(pump & discharge pipe not included.)

⚠ CAUTION All installation of controls, protection devices and wiring should be done by a qualified licensed electrician. All electrical and safety codes should be followed including the most recent National Electrical Code (NEC) and the Occupational Safety and Health Act (OSHA).

© Copyright 2015 Zoeller® Co. All rights reserved.
502-778-2731 | 800-928-7867 | 3649 Cane Run Road | Louisville, KY 40211-1961 | www.zoeller.com

Notice to installing contractor: Instructions must remain with installation.

Your Peace of Mind is Our Top Priority®

SECTION: 6.10.002
FM2676
1011
Supersedes
New

Product information presented here reflects conditions at time of publication. Consult factory regarding discrepancies or inconsistencies.

Zoeller Family of Water Solutions™

MAIL TO: P.O. BOX 16347 • Louisville, KY 40256-0347
SHIP TO: 3649 Cane Run Road • Louisville, KY 40211-1961
(502) 778-2731 • 1 (800) 928-PUMP • FAX (502) 774-3624

visit our web site: www.zoeller.com

NOTICE: VENT HOLE FOR CHECK VALVE SEE #3 IN CAUTION SECTION BELOW AND #4 ON PAGE 3

INSTALLATION INSTRUCTIONS
RECOMMENDED MODELS

DATE INSTALLED:
MODEL NUMBER:

P/N 151797

EFFLUENT*/SUMP/DEWATERING	SEWAGE
49 / 53 / 57 Series, 98 Series	264 Series
137 Series, 151 / 152 / 153 Series	266 / 267 / 268 Series

PREINSTALLATION CHECKLIST - ALL INSTALLATIONS

1. Inspect your pump. Occasionally, products are damaged during shipment. If the unit is damaged, contact your dealer before using. DO NOT remove the test plugs in the cover nor the motor housing.
2. Carefully read the literature provided to familiarize yourself with specific details regarding installation and use. These materials should be retained for future reference.

▲ WARNING — SEE BELOW FOR LIST OF WARNINGS

1. Make certain that the receptacle is within the reach of the pump's power supply cord. DO NOT USE AN EXTENSION CORD. Extension cords that are too long or too light do not deliver sufficient voltage to the pump motor. But, more important, they could present a safety hazard if the insulation were to become damaged or the connection end were to fall into the sump.
2. Make sure the pump electrical supply circuit is equipped with fuses or circuit breakers of proper capacity. A separate branch circuit is recommended, sized according to the "National Electrical Code" for the current shown on the pump nameplate.
3. Testing for ground. As a safety measure, each electrical outlet should be checked for ground using an Underwriters Laboratory Listed circuit analyzer which will indicate if the power, neutral and ground wires are correctly connected to your outlet. If they are not, call a qualified licensed electrician.
4. For Added Safety. Pumping and other equipment with a 3-prong grounded plug must be connected to a 3-prong grounded receptacle. For added safety the receptacle may be protected with a ground-fault circuit interrupter. When a pump needs to be connected in a watertight junction box, the plug can be removed and spliced to the supply cable with proper grounding. For added safety this circuit may be protected by a ground-fault circuit interrupter. The complete installation must comply with the National Electrical Code and all applicable local codes and ordinances.
5. FOR YOUR PROTECTION, ALWAYS DISCONNECT PUMP FROM ITS POWER SOURCE BEFORE HANDLING. Single phase pumps are supplied with a 3-prong grounded plug to help protect you against the possibility of electrical shock. DO NOT UNDER ANY CIRCUMSTANCES REMOVE THE GROUND PIN. The 3-prong plug must be inserted into a mating 3-prong grounded receptacle. If the installation does not have such a receptacle, it must be changed to the proper type, wired and grounded in accordance with the National Electrical Code and all applicable local codes and ordinances. Three phase pumps require motor starting devices with motor overload protection. See FM0486 for duplex installations.
6. The tank is to be vented in accordance with local plumbing code. Pumps must be installed in accordance with the National Electrical Code and all applicable local codes and ordinances. Pumps are not to be installed in locations classified as hazardous in accordance with National Electrical Code, ANSI/NFPA 70.
7. "Risk of electrical shock" Do not remove power supply cord and strain relief or connect conduit directly to the pump.
8. Installation and servicing of electrical circuits and hardware should be performed by a qualified licensed electrician.
9. Pump installation and servicing should be performed by a qualified person.
10. Risk of electric shock - These pumps have not been investigated for use in swimming pool and marine areas.
11. According to the state of California (Prop 65), this product contains chemicals known to the state of California to cause cancer and birth defects or other reproductive harm.

▲ CAUTION — SEE BELOW FOR LIST OF CAUTIONS

1. Check to be sure your power source is capable of handling the voltage requirements of the motor, as indicated on the pump name plate.
2. The installation of automatic pumps with variable level float switches or nonautomatic pumps using auxiliary variable level float switches is the responsibility of the installing party and care should be taken that the tethered float switch will not hang up on the pump apparatus or pit peculiarities and is secured so that the pump will shut off. It is recommended to use rigid piping and fittings and the pit be 18" or larger in diameter.
3. Information - vent hole purpose. It is necessary that all submersible sump, effluent, and sewage pumps capable of handling various sizes of solid waste be of the bottom intake design to reduce clogging and seal failures. If a check valve is incorporated in the installation, a vent hole (approx. 3/16") must be drilled in the discharge pipe below the check valve and pit cover to purge the unit of trapped air. Trapped air is caused by agitation and/or a dry basin. Vent hole should be checked periodically for clogging. The 53 / 57, and 98 Series pumps have a vent located in the pump housing opposite the float, adjacent to a housing lug, but an additional vent hole is recommended. The vent hole on a High Head application may cause too much turbulence. You may not want to drill one. If you choose not to drill a vent hole, be sure the pump case and impeller is covered with liquid before connecting the pipe to the check valve and no inlet carries air to the pump intake. NOTE: THE HOLE MUST ALSO BE BELOW THE BASIN COVER AND CLEANED PERIODICALLY. Water stream will be visible from this hole during pump run periods.
4. Pump should be checked frequently for debris and/or build up which may interfere with the float "on" or "off" position. Repair and service should be performed by Zoeller Pump Company Authorized Service Station only.
5. Dewatering and effluent sump pumps are not designed for use in pits handling raw sewage.
6. Maximum operating temperature for standard model pumps must not exceed 130°F (54°C).
7. Pump models 266, 267, 268, and 137 must be operated in an upright position. Do not attempt to start pump when tilted or laying on its side.
8. Do not operate a pump in an application where the Total Dynamic Head is less than the minimum Total Dynamic Head listed on the Pump Performance Curves.

NOTE: Pumps with the "UL" mark and pumps with the "US" mark are tested to UL Standard UL778. CSA Certified pumps are certified to CSA Standard C22.2 No. 108.

REFER TO WARRANTY ON PAGE 2.

© Copyright 2011 Zoeller Co. All rights reserved.

E-1131

Limited Warranty

Manufacturer warrants, to the purchaser and subsequent owner during the warranty period, every new product to be free from defects in material and workmanship under normal use and service, when properly used and maintained, for a period of three years from the date of original manufacture. Parts that fail within the warranty period, that inspections determine to be defective in material or workmanship, will be repaired, replaced or remanufactured at Manufacturer's option, provided however, that by so doing we will not be obligated to replace an entire assembly, the entire mechanism or the complete unit. No allowance will be made for shipping charges, damages, labor or other charges that may occur due to product failure, repair or replacement.

This warranty does not apply to and there shall be no warranty for any material or product that has been disassembled without prior approval of Manufacturer, subjected to misuse, misapplication, neglect, alteration, accident or act of God; that has not been installed, operated or maintained in accordance with Manufacturer's installation instructions; that has been exposed to outside substances including but not limited to the following: sand, gravel, cement, mud, tar, hydrocarbons, hydrocarbon derivatives (oil, gasoline, solvents, etc.), or other abrasive or corrosive substances, wash towels or feminine sanitary products, etc. in all pumping applications. The warranty set out in the paragraph above is in lieu of all other warranties expressed or implied; and we do not authorize any representative or other person to assume for us any other liability in connection with our products.

Contact Manufacturer at, 3649 Cane Run Road, Louisville, Kentucky 40211, Attention: Customer Service Department to obtain any needed repair or replacement of part(s) or additional information pertaining to our warranty.

MANUFACTURER EXPRESSLY DISCLAIMS LIABILITY FOR SPECIAL, CONSEQUENTIAL OR INCIDENTAL DAMAGES OR BREACH OF EXPRESSED OR IMPLIED WARRANTY; AND ANY IMPLIED WARRANTY OF FITNESS FOR A PARTICULAR PURPOSE AND OF MERCHANTABILITY SHALL BE LIMITED TO THE DURATION OF THE EXPRESSED WARRANTY.

Some states do not allow limitations on the duration of an implied warranty, so the above limitation may not apply to you. Some states do not allow the exclusion or limitation of incidental or consequential damages, so the above limitation or exclusion may not apply to you.

This warranty gives you specific legal rights and you may also have other rights which vary from state to state.

EASY DO'S & DON'T'S FOR INSTALLING A SUMP PUMP

1. DO read thoroughly all installation material provided with the pump.
2. DO inspect pump for any visible damage caused by shipping. Contact dealer if pump appears to be damaged.
3. DO clean all debris from the sump. Be sure that the pump will have a hard, flat surface beneath it. DO NOT install on sand, gravel or dirt.
4. DO be sure that the sump is large enough to allow proper clearance for the level control switch(es) to operate properly.
5. DO Always Disconnect Pump From Power Source Before Handling.
   DO always connect to a separately protected and properly grounded circuit.
   DO NOT ever cut, splice, or damage power cord (Only splice in a watertight junction box).
   DO NOT carry or lift pump by its power cord.
   DO NOT use an extension cord with a sump pump.
6. DO install a check valve and a union in the discharge line.
   DO NOT use a discharge pipe smaller than the pump discharge.
7. DO NOT use a sump pump as a trench or excavation pump, or for pumping sewage, gasoline, or other hazardous liquids.
8. DO test pump immediately after installation to be sure that the system is working properly.
9. DO cover sump with an adequate sump cover.
10. DO review all applicable local and national codes and verify that the installation conforms to each of them.
11. DO consult manufacturer for clarifications or questions.
12. DO consider a two pump system with an alarm where an installation may become overloaded or primary pump failure would result in property damages.
13. DO consider a D.C. Backup System where a sump or dewatering pump is necessary for the prevention of property damages from flooding due to A.C. power disruptions, mechanical or electrical problems or system overloading.
14. DO inspect and test system for proper operations at least every three months.

SERVICE CHECKLIST



▲ WARNING ELECTRICAL PRECAUTIONS- Before servicing a pump, always shut off the main power breaker and then unplug the pump - making sure you are wearing insulated protective sole shoes and not standing in water. Under flooded conditions, contact your local electric company or a qualified licensed electrician for disconnecting electrical service prior to pump removal.

▲ WARNING Submersible pumps contain oils which becomes pressurized and hot under operating conditions - allow 2½ hours after disconnecting before attempting service.

CONDITION	COMMON CAUSES
A. Pump will not start or run.	Check fuse, low voltage, overload open, open or incorrect wiring, open switch, impeller or seal bound mechanically, defective capacitor or relay when used, motor or wiring shorted. Float assembly held down. Switch defective, damaged, or out of adjustment.
B. Motor overheats and trips overload or blows fuse.	Incorrect voltage, negative head (discharge open lower than normal) impeller or seal bound mechanically, defective capacitor or relay, motor shorted.
C. Pump starts and stops too often.	Float tight on rod, check valve stuck or none installed in long distance line, overload open, level switch(s) defective, sump pit too small.
D. Pump will not shut off.	Debris under float assembly, float or float rod bound by pit sides or other, switch defective, damaged or out of adjustment.
E. Pump operates but delivers little or no water.	Check strainer housing, discharge pipe, or if check valve is used vent hole must be clear. Discharge head exceeds pump capacity. Low or incorrect voltage. Incorrect motor rotation. Capacitor defective. Incoming water containing air or causing air to enter pumping chamber.
F. Drop in head and/or capacity after a period of use.	Increased pipe friction, clogged line or check valve. Abrasive material and adverse chemicals could possibly deteriorate impeller and pump housing. Check line. Remove base and inspect.

If the above checklist does not uncover the problem, consult the factory - Do not attempt to service or otherwise disassemble pump. Service must be performed by Zoeller Authorized Service Stations. Go to www.zoellerpumps.com/servicestations **to find the Authorized Service Station in your area.**

© Copyright 2011 Zoeller Co. All rights reserved.

RECOMMENDED INSTALLATION FOR ALL APPLICATIONS

(1) Electrical wiring and protection must be in accordance with National Electrical Code and any other applicable state and local electrical requirements.
(2) Install proper Zoeller unicheck (combination union and check valve), preferably just above the basin to allow easy removal of the pump for cleaning or repair. On sewage, effluent or dewatering, if high head or below cover installation is required use 30-0164 on 1½" pipe, 30-0152 on 2" pipe and 30-0160 on 3" pipe. See (4) below.
(3) All installations require a basin cover to prevent debris from falling into the basin and to prevent accidental injury.
(4) When a Unicheck is installed, drill a 3/16" dia. hole in the discharge pipe even with the top of the pump. *NOTE: THE HOLE MUST ALSO BE BELOW THE BASIN COVER AND CLEANED PERIODICALLY.* (High Head unit see #3 under "Caution" on front page). Water stream will be visible from this hole during pump run periods.
(5) Securely tape or clamp power cord to discharge pipe, clear of the float mechanism(s).
(6) Use full-size discharge pipe.
(7) Basin must be in accordance with applicable codes and specifications.
(8) Pump must be level and float mechanism(s) clear of sides of basin before starting pump.
(9) Basin must be clean and free of debris after installation.
(10) Gate Valve or Ball Valve to be supplied by installer and installed according to any and all codes.
(11) Locate float switches as shown in sketches. The best place for the "off" point is above the motor housing and positioned 180° from the inlet. Never put "off" point below discharge on pump (Sewage & Effluent only). *NOTE: FOR AUTOMATIC PUMPS, USE DEWATERING INSTALLATION SKETCH.*
(12) Gas tight seals required to contain gases and odors.
(13) Vent gases and odors to the atmosphere through vent pipe (Sewage & Dewatering only).
(14) Install Zoeller Pump Stand (Model 10-2421) under pump to provide a settling basin. (Effluent & Dewatering only.)

For Effluent Only:

(15) Wire pump to power through a Zoeller watertight junction box or watertight splice. ***NOTE: Watertight enclosure is a must in damp areas. See No. 8 on front page of FM0732.***
(16) Refer to SSPMA Effluent Sizing Manual for determining "on" - "off" switches.
(17) Septic tank risers must be used for easy pump and filter access.

NOTE: Double seal pumps offer extra protection from damage caused by seal failure.

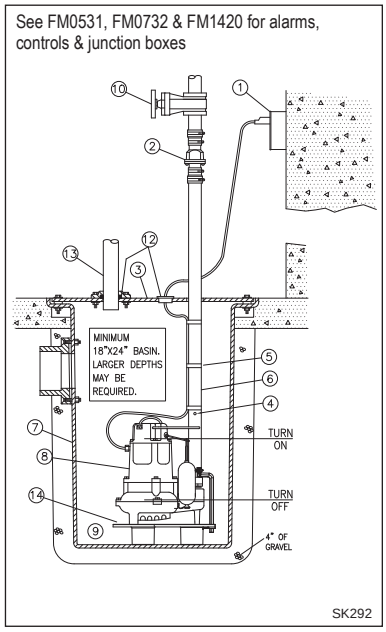

TYPICAL DEWATERING INSTALLATION

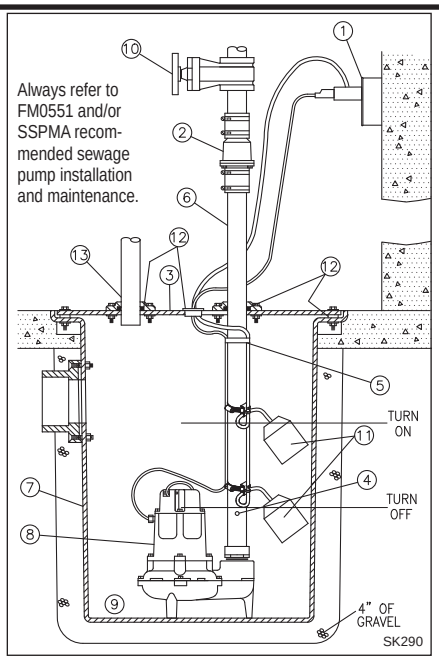

TYPICAL SEWAGE INSTALLATION

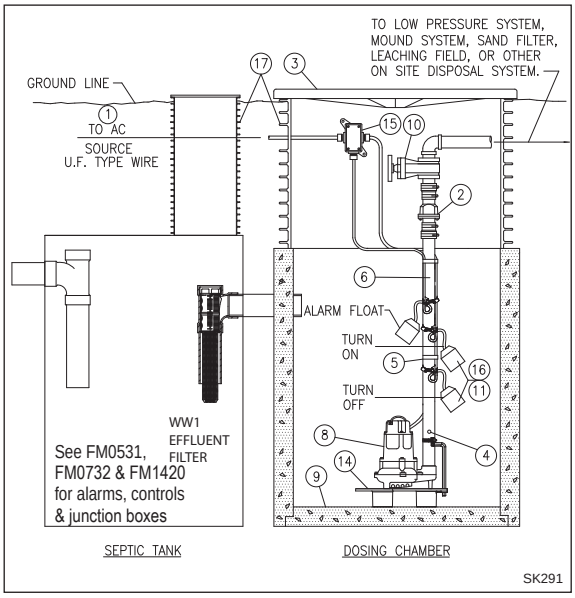

TYPICAL EFFLUENT INSTALLATION

All installations must comply with all applicable electrical and plumbing codes, including, but not limited to, National Electrical Code, local, regional, and/or state plumbing codes, etc. Not intended for use in hazardous locations.

SUGGESTED METHODS OF FLOAT INSTALLATION

On some installations it may be desirable to install an independent hanger for the level control switches to avoid possible hang ups on the pumps, piping, valves, etc. Float hangers are available from Zoeller Company on Catalog Sheet FM0526 or can be fabricated from standard pipe and fittings.

TYPICAL FLOAT HANGER ON STEEL COVER PITS

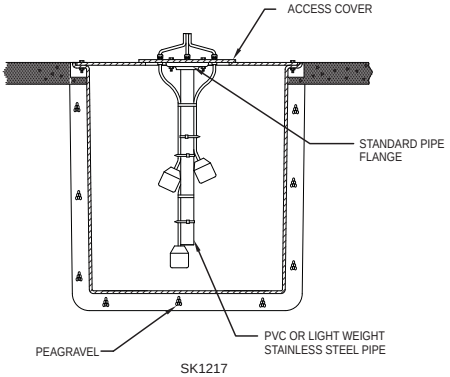

TYPICAL FLOAT HANGER ON CONCRETE PITS OR SEPTIC TANK RISERS

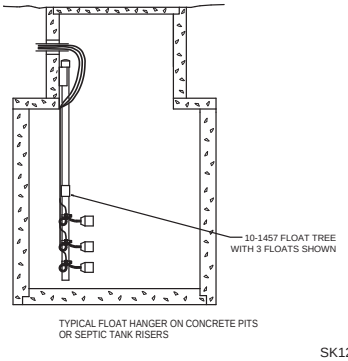

© Copyright 2011 Zoeller Co. All rights reserved.

WD & WH MODEL INSTALLATION

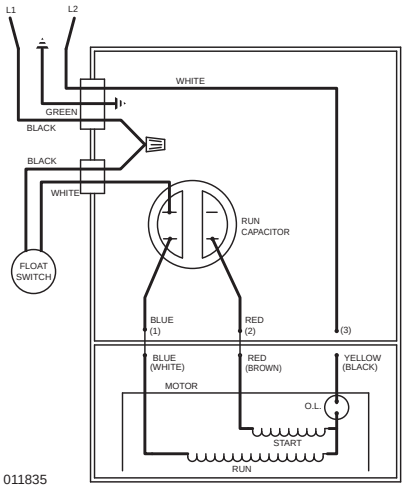

011835

WIRING DIAGRAM FOR MODELS
WD - 230V, 1 Ph, 60 Hz.
WH - 200/208V, 1 Ph, 60 Hz.

Determining Pumping Range in Inches (1 inch - 2.5 cm)

Tether Length	5 min.	10	15	20	22 max.
Pumping Range	9	13.5	18	22	24

Use only as a guide. Due to weight of cable, pumping range above horizontal is not equal to pumping range below horizontal. Ranges are based on testing in nonturbulent conditions. Range may vary due to water temperature and cord shape. As tether length increases, so does the variance of the pumping range.

Models WD & WH are fully automatic. A float switch is included and factory wired in the pump circuit to provide automatic operation once the float switch is secured properly to the outlet pipe. Use the diagram above to secure the float switch properly and obtain the proper tether to customize the on-off cycle to each application.

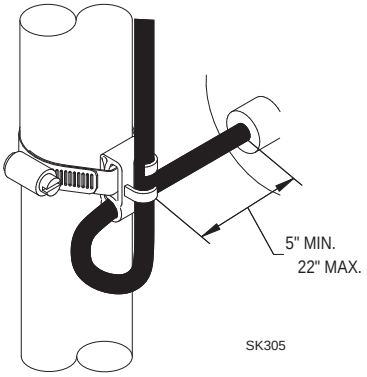

20 AMP SWITCH (WD & WH MODELS)

Note: Failure to keep within proper tether limits may prevent reliable switch operation.

Note: Cable must be mounted in horizontal position.

SINGLE PHASE WIRING INSTRUCTIONS

▲ WARNING FOR YOUR PROTECTION, ALWAYS DISCONNECT PUMP FROM ITS POWER SOURCE BEFORE HANDLING. Single phase pumps are supplied with a 3-prong grounded plug to help protect you against the possibility of electrical shock. DO NOT UNDER ANY CIRCUMSTANCES REMOVE THE GROUND PIN. The 3-prong plug must be inserted into a mating 3-prong grounded receptacle. If the installation does not have such a receptacle, it must be changed to the proper type, wired and grounded in accordance with the National Electrical Code and all applicable local codes and ordinances.

▲ WARNING "Risk of electrical shock" Do not remove power supply cord and strain relief or connect conduit directly to the pump.

▲ WARNING Installation and checking of electrical circuits and hardware should be performed by a qualified licensed electrician.

▲ WARNING Units supplied without a plug (single and three phase) and single phase nonautomatic units with a 20 amp plug must have a motor control and liquid level control provided at time of installation. The control device should have suitable voltage, ampere, frequency, grounding and horsepower rating for the pump to which it is connected.

THREE PHASE WIRING INSTRUCTIONS

▲ WARNING FOR YOUR PROTECTION, ALWAYS DISCONNECT PUMP FROM ITS POWER SOURCE BEFORE HANDLING.

To automatically operate a nonautomatic three phase pump, a control panel is required. Follow the instructions provided with the panel to wire the system. For automatic three phase pumps see automatic 3 phase wiring diagram located to the far right.

Before installing a pump, check the pump rotation to ensure that wiring has been connected properly to power source, and that the green lead of power cord (See wiring diagram), is connected to a valid ground. Momentarily energize the pump, observing the directions of kick back due to starting torque. Rotation is correct if kick back is in the opposite direction of rotation arrow on the pump casing. If rotation is not correct, switching of any two power leads other than ground, should provide the proper rotation.

All three phase pumps require motor starting devices with motor overload protection. See FM0486 for duplex installations. Pumps must be installed in accordance with the National Electrical Code and all applicable local codes and ordinances. Pumps are not to be installed in locations classified as hazardous in accordance with National Electrical Code, ANSI/NFPA 70.

NONAUTOMATIC 3 PHASE

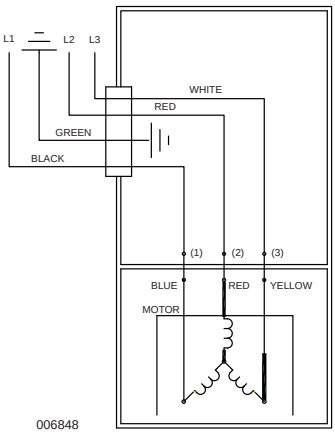

006848

AUTOMATIC 3 PHASE

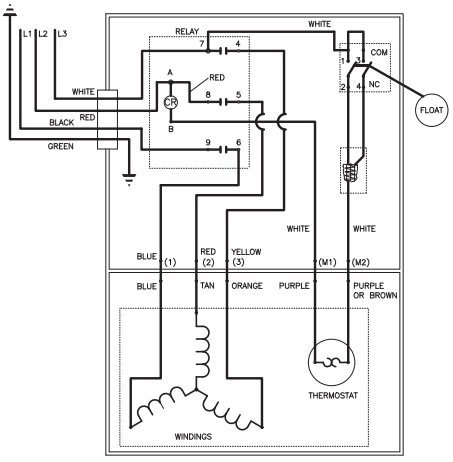

006848

013071

IMPORTANT NOTICE: Some insurance policies, both commercial and residential, extend coverage for damages incurred by product failure. You will need to have possession of the product to support your claim in most cases. Zoeller Pump Co. will exchange the unit or refund the original purchase price once the claim is settled with the insurer in the case where you need to retain possession of the product to support a damage claim you submit to your insurance company.

© Copyright 2011 Zoeller Co. All rights reserved.

Aviso al contratista instalador: Las instrucciones deberán permanecer con la instalación.

FM2676S

Su Tranquilidad es Nuestra Prioridad®

La siguiente información sobre este producto refleja las condiciones existentes en la fecha de publicación. Se debe consultar a la fábrica cualquier discrepancia o inconsistencia que existiera.

Zoeller Family of Water Solutions™

ENVIAR CORRESPONDENCIA A: P. O. Box 16347 • Louisville, KY 40256-0347 USA
ENVIAR A: 3649 Cane Run Road • Louisville KY, 40211-1961 USA
+1 (502) 778-2731 • *Fax: +1* (502) 774-3624

Visite nuestro sitio web: www.zoeller.com

FECHA DE INSTALACIÓN:
NÚMERO DE MODELO:

INSTRUCCIONES DE INSTALACIÓN
MODELOS RECOMENDADOS

AVISO: AGUJERO DE VENTILACIÓN PARA LA VÁLVULA DE RETENCIÓN, VEA EL NRO. 3 EN LA SECCIÓN DE PRECAUCIONES A CONTINUACIÓN Y EL NRO. 4 EN LA PÁGINA 3.

EFLUENTES*/SUMIDERO/ACHIQUE	AGUAS CLOACALES
49 / 53 / 57 Series, 98 Series	264 Series
137 Series, 151 / 152 / 153 Series	266 / 267 / 268 Series

LISTA DE VERIFICACIÓN DE PRE-INSTALACIÓN - TODAS LAS INSTALACIONES

1. Inspeccione su bomba. Ocasionalmente, los productos se dañan durante el envío. Si la unidad está dañada, comuníquese con su vendedor antes de usarla. NO quite los tapones de prueba de la cubierta ni del cárter del motor.
2. Lea cuidadosamente toda la literatura provista para familiarizarse con los detalles específicos relacionados con la instalación y uso. Estos materiales deberán guardarse para referencia futura.

▲ ADVERTENCIA

VER ABAJO LA LISTA DE ADVERTENCIAS

1. Asegúrese de que el tomacorriente esté al alcance del cable de alimentación eléctrica de la bomba. NO USE UN CABLE DE EXTENSIÓN. Los cables de extensión que son demasiado largos o livianos no suministran voltaje suficiente al motor de la bomba. Más importante aún, presentan un peligro a la seguridad si el aislante se daña o el extremo de conexión cae dentro del sumidero.
2. Asegúrese de que el circuito de alimentación eléctrica de la bomba esté equipado con fusibles o interruptores de circuito de capacidad adecuada. Se recomienda un circuito auxiliar, del tamaño de acuerdo al "Código Eléctrico Nacional" para la corriente que se muestra en la etiqueta de nombre de la bomba.
3. Prueba de puesta a tierra. Como medida de seguridad, cada tomacorriente debe verificarse para puesta a tierra usando un analizador de circuitos aprobado por el Underwriters Laboratory, el cual indicará si los alambres de energía, neutrales y de puesta a tierra están conectados correctamente a su tomacorriente. Si no lo están, llame a un técnico electricista calificado.
4. Para mayor seguridad. El equipo de bombeo y otro equipo eléctrico con enchufes de 3 patillas deben conectarse a un tomacorriente para 3 patillas con puesta a tierra. Para mayor seguridad, el tomacorriente puede estar protegido con un interruptor de circuito de falla a tierra. Cuando una bomba necesita ser conectada a una caja de conexión hermética, el enchufe puede ser retirado y empalmado al cable de alimentación eléctrica propiamente conectado a tierra. Para mayor seguridad, este circuito puede ser protegido mediante un interruptor de circuito de falla a tierra. La instalación completa deberá cumplir con el Código Eléctrico Nacional y todas las ordenanzas y códigos locales aplicables.
5. PARA SU PROTECCIÓN, SIEMPRE DESCONECTE LA BOMBA DE LA FUENTE DE ALIMENTACIÓN ELÉCTRICA ANTES DE MANIPULARLA. Las bombas monofásicas se suministran con enchufes de 3 patillas con puesta a tierra para ayudar a protegerle contra la posibilidad de choque eléctrico. NO RETIRE BAJO NINGUNA CIRCUNSTANCIA LA CLAVIJA DE PUESTA A TIERRA. Los enchufes de 3 patillas se deben introducir en un tomacorriente para 3 patillas apropiado. Si la instalación no posee un tomacorriente de este tipo, se debe cambiar por uno apropiado, cableado y con puesta a tierra de acuerdo al Código Eléctrico Nacional y a todas las ordenanzas y códigos locales aplicables. Las bombas trifásicas requieren dispositivos de arranque del motor con protección contra sobrecarga. Vea FM0486 para instalaciones duplex.
6. El tanque se debe ventilar conforme a los códigos de plomería locales. Las bombas se deben instalar conforme al Código Eléctrico Nacional y a todos los códigos y ordenanzas locales que correspondan. Las bombas no se deben instalar en sitios peligrosos conforme a la clasificación del Código Eléctrico Nacional, ANSI/NFPA 70.
7. "Riesgo de choque eléctrico". No quite el cable de alimentación eléctrica ni el dispositivo de alivio de tensión y no conecte un conductor directamente a la bomba.
8. La instalación y verificación de los circuitos eléctricos y del equipo deberán llevarse a cabo por un técnico electricista calificado.
9. La instalación y verificación de la bomba deberá llevarse a cabo por una persona calificada.
10. Riesgo de choque eléctrico – No se ha investigado el uso de estas bombas en áreas marinas y en piscinas.
11. Este producto contiene sustancias químicas que de acuerdo al estado de California pueden causar cáncer y defectos congénitos u otros daños a la salud reproductiva.

REFIÉRASE A LA GARANTÍA EN LA PÁGINA 2.

▲ PRECAUCIÓN

VER ABAJO LA LISTA DE PRECAUCIONES

1. Asegúrese de que la fuente de energía eléctrica sea capaz de manejar los requisitos de voltaje del motor, según se indica en la etiqueta de nombre de la bomba.
2. La instalación de bombas automáticas con interruptores de flotador de nivel variable o las bombas no automáticas que usan interruptores de flotador de nivel variable auxiliares es responsabilidad del instalador y deberá verificarse que el interruptor de flotador atado no se enganchará en el aparato de la bomba ni en las peculiaridades del foso y que está fijado de manera que permita la parada de la bomba. Se recomienda usar tubería y empalmes rígidos y que el foso tenga 45 cm (18 pulg.) o más de diámetro.
3. Información - Objetivo del agujero de ventilación. Es necesario que todas las bombas sumer-gibles de sumidero, efluentes y de aguas cloacales capaces de manejar residuos sólidos de varios tamaños tengan la entrada en la parte inferior para reducir el atascamiento y las fallas del sello. Si se incorpora a la instalación una válvula de retención, deberá perforarse un agujero de ventilación [de aprox. 5 mm (3/16 pulg.)] en la tubería de descarga debajo de la válvula de retención y de la tapa del foso a fin de purgar la unidad del aire atrapado. La causa de aire atrapado puede ser agitación y/o un estanque seco. Deberá revisarse periódicamente el agujero de ventilación para verificar que no esté atascado. Las bombas de las series 53, 57 ó 98 poseen una ventilación ubicada en la caja de la bomba del lado opuesto al flotador, junto a una aleta de la caja. Sin embargo, se recomienda un agujero de ventilación adicional. Un agujero de ventilación en una aplicación de carga elevada podría causar demasiada turbulencia. Es posible que usted prefiera no perforar uno. Si decide no perforar un agujero de ventilación, asegúrese de que la caja de la bomba y el impulsor estén cubiertos de líquido antes de conectar la tubería a la válvula de retención y que no haya ningún tipo de entrada de aire en la vía de entrada de la bomba. NOTA: EL AGUJERO TAMBIÉN DEBERÁ ESTAR POR DEBAJO DE LA TAPA DEL SUMIDERO Y SE DEBERÁ LIMPIARLO PERIÓDICAMENTE. Se verá un chorro de agua saliendo del agujero durante los períodos de bombeo.
4. Se debe revisar la bomba frecuentemente para asegurarse de que no hay escombros y/o acumulación que pueda interferir con la posición "on" (encendido) o "off" (apagado) del flotador. La reparación y servicio deberá hacerse solamente por personal de una Estación de servicio autorizada por Zoeller Pump Company.
5. Las bombas de achique y de efluentes no se diseñan para uso en fosos con aguas cloacales crudas.
6. La temperatura de funcionamiento máxima para bombas de modelo estándar no debe superar 54°C (130°F).
7. Las bombas modelos 266, 267, 268, y 137 se deben operar en posición vertical. No intente encender la bomba cuando esté inclinada o apoyada sobre uno de sus lados.
8. No opere la bomba en una aplicación donde la carga dinámica total sea menor que la carga dinámica total mínima que se indica en la Curva de rendimiento de la bomba.

AVISO: Las bombas con la marca "UL" y "US" han sido probadas de acuerdo al estándar UL778. Las bombas "aprobadas por CSA" están certificadas de acuerdo al estándar CSA C22.2 No. 108.

© Copyright 2011 Zoeller Co. All rights reserved.

E-1135

GARANTÍA LIMITADA

El Fabricante garantiza, al comprador y el propietario subsiguiente durante el período de garantía, que cada producto nuevo está libre de defectos en materiales y mano de obra bajo condiciones de uso y servicio normales, cuando se usa y mantiene correctamente, durante un período de tres años a partir de la fecha de fabricación original del producto. Las partes que fallen durante el período de garantía, un año a partir de la fecha de compra por parte del usuario final, lo que ocurra primero, cuyas inspecciones determinen que presentan defectos en materiales o mano de obra, serán reparadas, reemplazadas o remanufacturadas a opción del Fabricante, con la condición sin embargo de que por hacerlo no estemos en la obligación de reemplazar un ensamblaje completo, el mecanismo entero o la unidad completa. No se dará concesión alguna por costos de envío, daños, mano de obra u otros cargos que pudieran surgir por falla, reparación o reemplazo del producto.

Esta garantía no aplica a y no se ofrecerá garantía alguna por ningún material o producto que haya sido desarmado sin aprobación previa del Fabricante, o que haya sido sometido a uso indebido, aplicación indebida, negligencia, alteración, accidente o acto fortuito; que no haya sido instalado, usado o mantenido según las instrucciones de instalación del Fabricante; que haya sido expuesto a sustancias foráneas que incluyen pero no se limitan a lo siguiente: arena, grava, cemento, lodo, alquitrán, hidrocarburos, derivados de hidrocarburos (aceite, gasolina, solventes, etc.), u otras sustancias abrasivas o corrosivas, toallas para lavar o productos sanitarios femeninos, etc. en todas las aplicaciones de bombeo. La garantía presentada en el párrafo anterior deja sin efecto cualquier otra garantía expresa o implícita; y no autorizamos a ningún representante u otra persona para que asuma por nosotros ninguna otra responsabilidad con respecto a nuestros productos.

Comuníquese con el Fabricante en 3649 Cane Run Road, Louisville, KY 40211 EE.UU., Attention: Customer Service Department, para obtener cualquier reparación necesaria o reemplazo de partes o información adicional sobre nuestra garantía.

EL FABRICANTE EXPRESAMENTE RECHAZA RESPONSABILIDAD POR DAÑOS ESPECIALES, EMERGENTES O INCIDENTALES O POR INCUMPLIMIENTO DE LA GARANTÍA EXPRESA O IMPLÍCITA; Y CUALQUIER GARANTÍA IMPLÍCITA DE IDONEIDAD PARA UN FIN PARTICULAR Y DE COMERCIALIZACIÓN SE LIMITARÁ A LA DURACIÓN DE LA GARANTÍA EXPRESA.

Algunos estados no permiten limitaciones en la duración de una garantía implícita, de forma que la limitación anterior podría no aplicar a usted. Algunos estados no permiten la exclusión o limitación de daños incidentales o emergentes, de forma que la limitación o exclusión anterior podría no aplicar a usted.

Esta garantía le otorga a usted derechos legales específicos y podría tener otros derechos que varían de un estado a otro.

LO QUE DEBE Y NO DEBE HACER PARA INSTALAR UNA BOMBA DE SUMIDERO

1. LEA completamente todo el material sobre la instalación provisto con la bomba.
2. INSPECCIONE la bomba para ver si hay cualquier daño visible causado durante el envío. Comuníquese con el vendedor si la bomba está dañada.
3. RETIRE todos los escombros del sumidero. Asegúrese de que la bomba se apoyará sobre una superficie dura, plana y estable. NO LA INSTALE sobre arena, grava o tierra.
4. ASEGÚRESE de que el sumidero sea suficientemente grande para permitir el funcionamiento correcto de los interruptores de control de nivel.
5. SIEMPRE desconecte la bomba de la fuente de alimentación eléctrica antes de manipularla.
   SIEMPRE conecte la bomba a un circuito protegido separadamente y con puesta a tierra adecuado.
   JAMÁS corte, empalme o dañe el cable de alimentación eléctrica. (Empalme únicamente cuando hay una caja de conexión hermética.)
   JAMÁS transporte o levante la bomba por su cable de alimentación eléctrica.
   JAMÁS use un cable de extensión con una bomba de sumidero.
6. INSTALE una válvula de retención y una unión en la tubería de descarga.
   JAMÁS use una tubería de descarga de menor tamaño que la descarga de la bomba.
7. JAMÁS use una bomba de sumidero como una bomba excavadora o para zanjas, ni para bombear aguas cloacales, gasolina u otros líquidos peligrosos.
8. PRUEBE la bomba inmediatamente después de su instalación para asegurarse de que el sistema funciona correctamente.
9. CUBRA el foso con una tapa adecuada para sumidero.
10. EXAMINE todos los códigos nacionales y locales aplicables y verifique que la instalación esté de acuerdo a cada uno de ellos.
11. CONSULTE con el fabricante si necesita aclaraciones o tiene preguntas.
12. CONSIDERE un sistema de dos bombas con alarma en donde la instalación puede sobrecargarse o la falla de una bomba primaria causaría daños a la propiedad.
13. CONSIDERE un sistema de apoyo de CD en donde una bomba de achique o sumidero es necesaria para prevenir daños a la propiedad debido a inundación causada por interrupciones en el suministro de energía eléctrica, problemas mecánicos o eléctricos, o sobrecarga del sistema.
14. INSPECCIONE y pruebe el funcionamiento del sistema por lo menos cada 3 meses.

LISTA DE VERIFICACIÓN DE SERVICIO



▲ ADVERTENCIA PRECAUCIONES ELÉCTRICAS - Antes de proporcionar algún servicio a la bomba, desactive siempre el interruptor principal de suministro de energía eléctrica y desenchufe la bomba. Asegúrese de usar zapatos protectores con suelas aislantes y de no estar parado en el agua. Bajo condiciones de inundación, llame a su compañía eléctrica local o a un técnico electricista calificado para desconectar el servicio eléctrico antes de quitar la bomba.



▲ ADVERTENCIA Las bombas sumergibles contienen aceites que se presurizan y calientan bajo condiciones operativas.
Deje que pasen 2½ horas después de apagarla antes de proceder con el servicio.

CONDICIÓN		CAUSAS COMUNES
A.	La bomba no arranca o no funciona.	Verifique el fusible, voltaje bajo, protección contra sobrecarga abierta, cableado abierto o incorrecto, interruptor abierto, impulsor o sello trabado mecánicamente, capacitor o relé defectuoso, motor o cableado eléctrico en corto circuito. Conjunto del flotador enganchado. Interruptor defectuoso, dañado o fuera de punto.
B.	El motor se sobrecalienta y activa la protección contra sobrecarga o desconecta el fusible.	Voltaje incorrecto, carga negativa (descarga abierta menos de lo normal), impulsor o sello trabado mecánicamente, capacitor o relé defectuoso, motor en corto circuito.
C.	La bomba se encienda y se apaga muy a menudo.	El flotador está apretado en la varilla, la válvula de retención está atascada o no hay una instalada en una línea de larga distancia, protección contra sobrecarga abierta, interruptores defectuosos, foso del sumidero demasiado pequeño.
D.	La bomba no se apaga.	Hay escombros debajo del conjunto del flotador, el flotador o la varilla del flotador están trabados por los lados del foso u otros, interruptor defectuoso, dañado o fuera de punto.
E.	La bomba funciona pero sin o con poca agua.	Verifique la caja del filtro y la tubería de descarga, o si se usa una válvula de retención, el agujero de ventilación debe estar abierto. La carga de descarga excede la capacidad de la bomba. Voltaje bajo o incorrecto. Rotación incorrecta del motor. Capacitor defectuoso. El agua de entrada contiene aire o hace que el aire entre en la bomba.
F.	Caída en la carga y/o capacidad después de un período de uso.	Aumento de fricción en la tubería, línea o válvula de retención atascada. Material abrasivo o productos químicos adversos podrían haber deteriorado el impulsor o el cárter de la bomba. Revise la línea. Quite la base e inspeccione.

Si la lista de verificación arriba mencionada no revela el problema, consulte con la fábrica. No intente proporcionar algún servicio o desarmar la bomba. Las Estaciones de servicio autorizadas por Zoeller deberán proporcionar dicho servicio.
Visite el sitio www.zoellerpumps.com/servicestations para encontrar la estación de servicio autorizada para su zona.

© Copyright 2011 Zoeller Co. All rights reserved.

INSTALACIÓN RECOMENDADA PARA TODAS LAS APLICACIONES

1. El cableado y la protección eléctrica deben estar de acuerdo con el Código Eléctrico Nacional y todos los otros requisitos eléctricos locales y estatales aplicables.
2. Instale el "Unicheck" (combinación de unión y válvula de retención) apropiado de Zoeller, luego arriba del estanque para que se pueda quitar fácilmente la bomba para su limpieza o reparación. Si los sistemas para aguas cloacales, efluentes o achique requieren instalación de carga elevada o por debajo de la tapa, use 30-0164 en tubería de 38 mm (1½ pulg.), 30-0152 en tubería de 51 mm (2 pulg.) y 30-0160 en tubería de 76 mm (3 pulg.). Vea el número 4 más abajo.
3. Todas las instalaciones requieren una tapa para prevenir que escombros caigan dentro del estanque y prevenir lesiones accidentales.
4. Cuando instale un "Unicheck", perfore un agujero de 5 mm (3/16 pulg.) de diámetro en la tubería de descarga al mismo nivel de la parte superior de la bomba. NOTA: EL AGUJERO TAMBIÉN DEBERÁ ESTAR POR DEBAJO DE LA TAPA DEL ESTANQUE Y SE DEBE LIMPIARLO PERIÓDICAMENTE. (Para unidades de carga elevada, ver el número 3 de la lista de "Precauciones" en la página 1.) Se verá un chorro de agua saliendo del agujero durante los períodos de bombeo.
5. Fije firmemente el cable de alimentación eléctrica al tubo de descarga con cinta o abrazadera.
6. Use tubería de descarga de tamaño completo.
7. El estanque debe estar de acuerdo con los códigos y las especificaciones aplicables.
8. La bomba debe estar nivelada y el mecanismo del flotador libre de los lados del estanque antes de encender la bomba.
9. El estanque debe estar limpio y libre de escombros después de la instalación.
10. El instalador deberá suministrar una válvula de paso directo o una válvula de bola y instalarla de acuerdo con cualesquiera y todos los códigos.
11. La ubicación de los interruptores de flotador es como se muestra en el esquema a la izquierda. El punto "off" (apagado) debe estar por encima del cárter del motor y a 180° de la entrada. NOTA: PARA BOMBAS AUTOMATICAS, UTILICE EL ESQUEMA PARA LA INSTALACION PARA ACHIQUE MÁS ABAJO.
12. Los sellos herméticos contra gases son necesarios en todas las instalaciones de aguas cloacales a fin de contener los gases y olores.
13. Ventile los gases y olores a la atmósfera a través del tubo de ventilación. (sólo para cloaca y achique).
14. Instale el soporte para bomba Zoeller (Modelo 10-2421) debajo de la bomba para proporcionar un sumidero de decantación (sólo para efluente y achique).

Para efluente solamente:

15. La conexión del cableado de la bomba a la fuente de alimentación eléctrica debe hacerse a través de una caja de conexión hermética Zoeller o un empalme hermético. NOTA: La caja hermética es obligatoria en áreas húmedas. Vea FM0732. Vea el número 8 en la página 1.
16. Consulte el Manual sobre tamaños de efluentes del SSPMA para determinar la posición de los interruptores "on-off" (encendido-apagado).
17. Se debe usar tubos verticales en el tanque séptico para tener fácil acceso a la bomba y al filtro.
    NOTA: Las bombas de sello doble ofrecen protección adicional contra los daños causados por falla del sello.

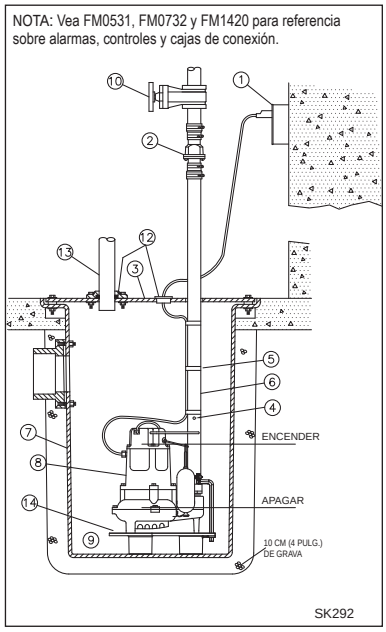

INSTALACIÓN TÍPICA PARA ACHIQUE

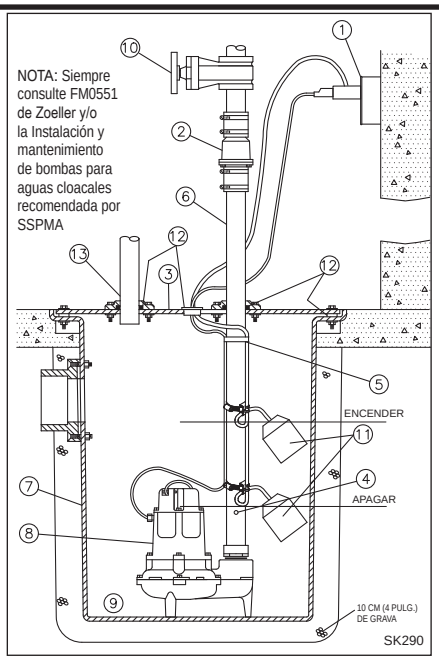

INSTALACIÓN TÍPICA PARA AGUAS CLOACALES

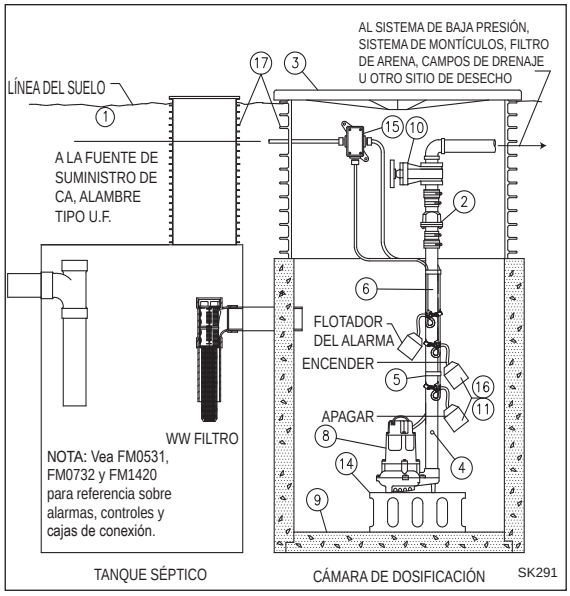

INSTALACIÓN TÍPICA PARA EFLUENTES

Todas las instalaciones deben cumplir con todos los códigos eléctricos y de instalación sanitaria aplicables, incluyendo, pero sin limitarse al Código Eléctrico Nacional, los códigos locales, regionales y/o los códigos estatales de instalación sanitaria, etc. No se debe usar las instalaciones en lugares peligrosos.

MÉTODOS SUGERIDOS PARA LA INSTALACIÓN DEL FLOTADOR

En algunas instalaciones es deseable instalar un soporte colgante independiente para los interruptores de control de nivel para evitar posibles enganches en las bombas, tubería, válvulas, etc. Los soportes colgantes del flotador se pueden comprar de Zoeller Company según la Hoja de catálogo FM0526, o fabricarse de tubería y empalmes comunes.

SOPORTE COLGANTE PARA FLOTADOR TÍPICO EN FOSOS CON TAPA DE ACERO

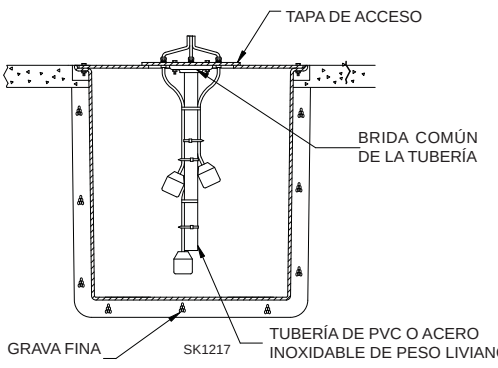

SOPORTE COLGANTE PARA FLOTADOR TÍPICO EN FOSOS DE CONCRETO O TUBOS VERTICALES PARA TANQUES SÉPTICOS

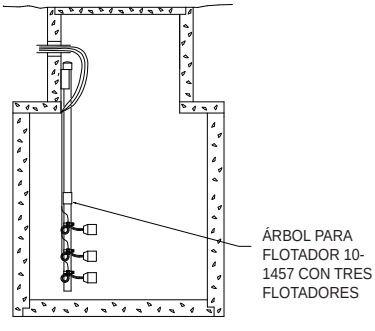

© Copyright 2011 Zoeller Co. All rights reserved.

INSTRUCCIONES PARA LA INSTALACIÓN DE LOS MODELOS WD Y WH

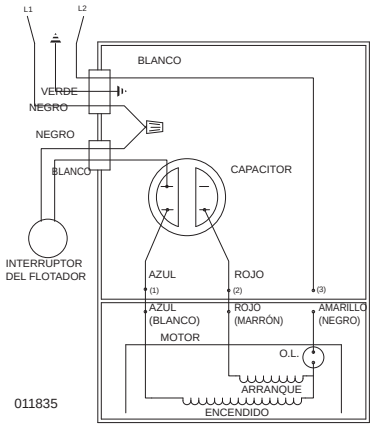

DIAGRAMA DE CABLEADO PARA LOS MODELOS:
WD-230V, 1 FASE, 60 CICLOS
WH-200/208V, 1 FASE, 60 CICLOS

Determinación del rango de bombeo en pulgadas
(1 pulg. = 2,5 cm)

Longitud de la atadura	5	10	15	20	22
	mín.				máx.
Rango de bombeo	9	13.5	18	22	24

Usar solamente como guía. Debido al peso del cable, el rango de bombeo sobre la horizontal no es igual al rango de bombeo debajo de la horizontal. Los rangos se basan en pruebas en condiciones no turbulentas. El rango puede variar debido a la temperatura del agua y a la forma del cable. A medida que aumenta la longitud de la atadura, también aumenta la variación en el rango de bombeo.

Los modelos WD y WH son completamente automáticos. Se incluye un interruptor de flotador con cableado de fábrica en el circuito de la bomba para proveer una operación automática una vez que el interruptor de flotador se haya atado correctamente a la tubería de salida. Use el diagrama de arriba para asegurar correctamente el interruptor de flotador y obtener la atadura apropiada para adecuar el ciclo de encendido-apagado a cada aplicación.

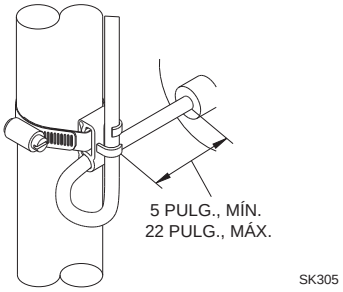

INTERRUPTOR DE 20 AMPERIOS
(MODELOS WD Y WH)

Nota: No tener en cuenta los límites adecuados de la atadura podría alterar el funcionamiento seguro del interruptor.
Nota: El cable debe ser instalado en posición horizontal.

INSTRUCCIONES PARA EL CABLEADO MONOFÁSICO

▲ ADVERTENCIA PARA SU PROTECCIÓN, SIEMPRE DESCONECTE LA BOMBA DE LA FUENTE DE ALIMENTACIÓN ELÉCTRICA ANTES DE MANIPULARLA. Las bombas monofásicas se suministran con enchufes de 3 patillas con puesta a tierra para ayudar a protegerle contra la posibilidad de choque eléctrico. NO RETIRE BAJO NINGUNA CIRCUNSTANCIA LA CLAVIJA DE PUESTA A TIERRA. Los enchufes de 3 patillas se deben introducir en un tomacorriente para 3 patillas apropiado. Si la instalación no posee un tomacorriente de este tipo, se debe cambiar por uno apropiado, cableado y con puesta a tierra de acuerdo al Código Eléctrico Nacional y a todas las ordenanzas y códigos locales aplicables.

▲ ADVERTENCIA "Riesgo de choque eléctrico". No quite el cable de alimentación eléctrica ni el dispositivo de alivio de tensión y no conecte un conductor directamente a la bomba.

▲ ADVERTENCIA La instalación y verificación de los circuitos eléctricos y del equipo deberán llevarse a cabo por un técnico electricista calificado.

▲ ADVERTENCIA A las unidades que se suministran sin enchufe (monofásico y trifásico) y a las unidades monofásicas no automáticas que poseen un enchufe de 20 amperios se les debe conectar un control de motor y un control de nivel de líquidos durante la instalación. Los niveles de voltaje, amperaje, frecuencia, puesta a tierra y potencia del dispositivo de control deben ser apropiados para la bomba a la cual se conecta.

INSTRUCCIONES PARA EL CABLEADO TRIFÁSICO

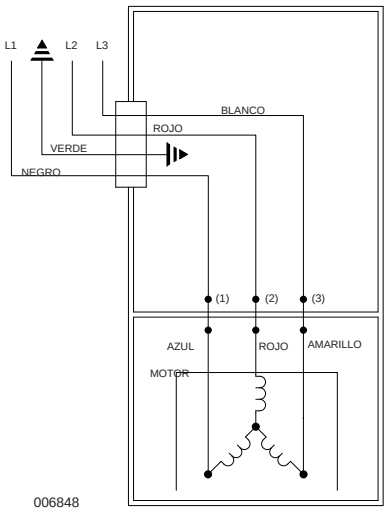

Las bombas trifásicas no son automáticas. Para operarlas automáticamente se requiere un panel de control. Siga las instrucciones provistas con el panel para completar el cableado del sistema. Para bombas trifásicas automáticas, ver el diagrama de cableado para bombas trifásicas automáticas a la derecha.

Antes de instalar una bomba, verifique la rotación de la misma para asegurarse de que los cables se hayan conectado correctamente a la fuente de alimentación eléctrica y que el conductor verde del cable de alimentación eléctrica (vea el diagrama de cableado) está conectado con puesta a tierra adecuada. Active momentáneamente la bomba, observando la dirección del retroceso debido a la torsión de arranque. La rotación es correcta si el retroceso está en dirección opuesta a la flecha de rotación en la caja de la bomba. Si la rotación no es correcta, cambiar dos de cualquiera de los conductores eléctricos, excepto el con puesta a tierra, proveerá la rotación apropiada.

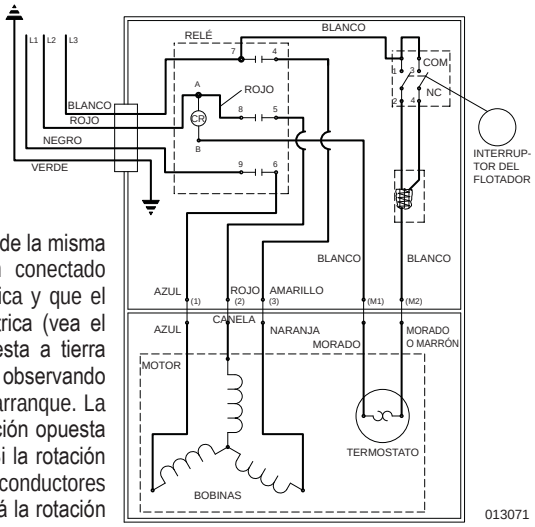

Todas las bombas trifásicas requieren dispositivos de arranque del motor con protección contra sobrecarga. Vea FM0514 para instalaciones simplex o FM0486 para instalaciones duplex. Las bombas se deben instalar de acuerdo al Código Eléctrico Nacional y a todas las ordenanzas y códigos locales aplicables. Las bombas no se deben instalar en sitios clasificados como peligrosos según el Código Eléctrico Nacional ANSI/NFPA 70.

▲ ADVERTENCIA PARA SU PROTECCIÓN, SIEMPRE DESCONECTE LA BOMBA DE LA FUENTE DE ALIMENTACIÓN ELÉCTRICA ANTES DE MANIPULARLA.

AVISO IMPORTANTE: Ciertas pólizas de seguro, tanto comerciales como residenciales, extienden la cobertura a los daños causados por la falla del producto. En la mayoría de los casos, usted deberá conservar el producto para respaldar su reclamo. Zoeller Pump Co. reemplazará la unidad o reembolsará el precio de compra original una vez que la compañía de seguros liquide el reclamo, en el caso de que usted necesite conservar el producto para respaldar un reclamo por daños que le haya presentado a su compañía de seguros.

© Copyright 2011 Zoeller Co. All rights reserved.

E-1138

Avis à l'installateur - Les instructions doivent rester avec l'installation.

FM2676F

Que vous dormiez en paix est notre priorité®

Les renseignements présentés ici reflètent les conditions au moment de la publication. Consulter l'usine en cas de contradiction ou d'inconsistance.

Zoeller Family of Water Solutions™

ADRESSE POSTALE : P.O. BOX 16437 • Louisville, KY 40256-0347 USA
ADRESSE PHYSIQUE : 3649 Cane Run Road • Louisville, KY 40211-1961 USA
TÉL : +1 (502)778-2731 • FAX +1 (502) 774-3624

www.zoeller.com

AVIS : TROU D'ÉVENT POUR LE CLAPET DE SÉCURITÉ VOIR N° 3 CI-DESSOUS ET N° 4 PAGE 3.

DATE D'INSTALLATION :
NUMÉRO DE MODÈLE :

INSTRUCTIONS D'INSTALLATION
MODÈLES RECOMMANDÉS

EFFLUENTS* / PUISARD / ASSÈCHEMENT	ÉGOUT
Série 49 / 53 / 57	Série 264
Série 137, Série 151 / 152 / 153	Série 266 / 267 / 268

LISTE DE VÉRIFICATIONS AVANT L'INSTALLATION - TOUTES LES INSTALLATIONS

1. Inspecter la pompe. De temps en temps, la pompe est endommagée en cours d'expédition. Si la pompe est endommagée, contacter le distributeur avant de l'utiliser. NE PAS enlever les bouchons test du couvercle ni du compartiment moteur.
2. Il faut lire attentivement tous les documents fournis pour se familiariser avec les détails spécifiques de l'installation et de l'utilisation. Il faut conserver ces documents pour pouvoir les consulter ultérieurement.

⚠ AVERTISSEMENT — **VOIR PLUS BAS POUR LA LISTE DES AVERTISSEMENTS**

1. Il faut vérifier que la prise est à portée du cordon d'alimentation de la pompe. NE PAS UTILISER DE RALLONGE. Les rallonges trop longues ou de trop faible capacité ne fournissent pas la tension nécessaire au moteur de la pompe, mais, encore plus important, elles peuvent être dangereuses si l'isolant est endommagé ou si l'extrémité avec le branchement tombe dans un endroit humide ou mouillé.
2. **Vérifier que le circuit d'alimentation de la pompe est équipé de fusibles ou de disjoncteurs de capacité appropriée.** Il est recommandé d'installer un circuit indépendant de capacité suffisante, conforme aux codes électriques nationaux pour la capacité indiquée sur la plaque d'identification de la pompe.
3. **Vérification de la mise à la terre.** Pour des raisons de sécurité, il faut vérifier la terre de chaque prise électrique en utilisant un analyseur de circuit sur la liste d'Underwriters Laboratory qui indique si les fils de phase, de neutre et de terre de la prise sont branchés correctement. S'ils ne sont pas branchés correctement, appeler un électricien agréé qualifié.
4. Pour des raisons de sécurité, les pompes et autre équipement équipés d'un fil à trois broches, avec mise à la terre, doivent être branchés sur une prise à trois broches. Pour des raisons de sécurité, la prise doit être protégée par un disjoncteur différentiel. Quand la pompe est branchée dans un boîtier de branchement étanche, il est possible d'enlever la fiche et de faire le branchement directement sur l'alimentation avec mise à la terre appropriée. Pour des raisons de sécurité, ce circuit peut être protégé par un disjoncteur différentiel. L'installation doit être conforme au code national d'électricité et tous les règlements locaux.
5. POUR DES RAISONS DE SÉCURITÉ, IL FAUT TOUJOURS DÉBRANCHER L'ALIMENTATION DE LA POMPE AVANT DE LA MANIPULER. Les pompes monophasées sont équipées d'un cordon avec fiche à trois broches de mise à terre pour protéger contre les électrocutions. IL NE FAUT JAMAIS ENLEVER LA BROCHE DE MISE À TERRE. Il faut brancher la fiche à trois broches dans une prise à trois broches de mise à terre. Si le circuit n'est pas équipé d'une telle prise, il faut en installer une en respectant le code national d'électricité et toute la législation et réglementation locales en vigueur. Les pompes triphasées doivent être équipées d'un dispositif de mise en marche avec protection thermique du moteur. Consulter la norme FM0486 pour les installations duplex.
6. La ventilation du réservoir doit être conforme au code de plomberie local. Les pompes doivent être installées conformément au code national d'électricité et à toute la législation et réglementation locales en vigueur. Les pompes ne doivent pas être installées dans des endroits classifiés à risque, conformément à la norme ANSI/NFPA 70 du Code national américain de l'électricité.
7. Risque d'électrocution. Ne pas enlever le cordon d'alimentation ni le distributeur de tension mécanique, ni brancher le conduit directement à la pompe.
8. L'installation et la vérification de l'équipement électrique doivent être faites par un électricien qualifié.
9. L'installation et la vérification de la pompe doivent être faites par une personne qualifiée.
10. Risque d'électrocution. L'usage de ce type de pompe dans une piscine de natation et des zones marines n'a pas été étudié.
11. Ce produit contient des produits chimiques dont l'état de la Californie a déterminer comme étant la cause de cancer et de déficiences à la naissance ou autres dommages reproductifs.

⚠ MISE EN GARDE — **VOIR PLUS BAS POUR LA LISTE DES MISES EN GARDE**

1. Vérifier que le circuit d'alimentation a une capacité suffisante pour alimenter le moteur, comme indiqué sur la pompe ou sur la plaque d'identification de l'appareil.
2. L'installateur est responsable de l'installation des pompes automatiques avec des interrupteurs à niveau variable ou des pompes non-automatiques utilisant des interrupteurs auxiliaires à niveau variable et il doit s'assurer que l'interrupteur à flotteur est installé fermement pour qu'il n'accroche pas à la pompe ni au puits pour permettre l'arrêt de la pompe. Il est recommandé d'utiliser du tuyau et des raccords rigides et le puits doit avoir un diamètre supérieur à 45 cm (18").
3. Renseignements sur le trou d'évent. Il est nécessaire que la pompe submersible, les pompes à effluents et d'égout capables de passer des solides de différentes tailles aient leur alimentation à la base pour réduire le colmatage et la défaillance des joints. Si l'installation comprend un clapet de sécurité, il faut percer un trou d'évent d'environ 5 mm (3/16") dans le tuyau de refoulement au-dessous du clapet de sécurité et le couvercle pour purger l'air de l'appareil. L'air emprisonné est causé par l'agitation et / ou un puits sec. Il faut vérifier périodiquement que le trou d'évent n'est pas colmaté. Les carters de pompe de la série 53 / 57 et 98 sont équipés d'un trou d'évent à l'opposé du flotteur, près du goujon du carter, du goujon du carter, mais un trou d'évent est recommandé. Le trou d'évent de l'application à une hauteur de refoulement dynamique élevée peut causer une turbulence trop élevée. Il peut être désirable de ne pas le percer. S'il est décidé de ne pas percer de trou d'évent, il faut s'assurer que le carter et le rotor de la pompe sont couverts de liquide avant de brancher le tuyau sur le clapet anti-retour et qu'aucune conduite d'aspiration n'amène de l'air à l'admission de la pompe. REMARQUE - LE TROU DOIT AUSSI ÊTRE AU-DESSOUS DU COUVERCLE DU PUITS ET IL FAUT LE NETTOYER RÉGULIÈREMENT. Un jet d'eau sera visible de cette orifice durant les périodes de fonctionnement de la pompe.
4. Il faut vérifier fréquemment qu'il n'y a pas de débris ni d'accumulation pouvant interférer avec le déplacement du flotteur de marche / arrêt. Les réparations ne doivent être faites que par un centre de réparation agréé par Zoeller Pump Company.
5. Les pompes d'assèchement mécanique et d'effluents sont conçues pour pompage d'eau usée non traitée dans un puits.
6. La température de fonctionnement maximale d'une pompe standard ne peut pas être plus de 54°C (130°F).
7. Il faut utiliser les pompes modèles 266, 267, et 137 en position verticale. Il ne faut pas essayer de mettre la pompe en marche quand elle est inclinée ou couchée sur le côté.
8. Il ne faut pas faire fonctionner la pompe dans une application où la hauteur de refoulement dynamique est inférieure à la hauteur de refoulement dynamique minimale donnée dans les courbes de refoulement et de capacité.

REMARQUE - Les pompes avec annotations "UL" et "US" sont vérifiées d'après la norme UL778. Les pompes certifiées CSA sont vérifiées d'après la norme C22.2 no 108.

SE RÉFÉRER À LA GARANTIE EN PAGE 2.

© Copyright 2011 Zoeller Co. All rights reserved.

E-1139

GARANTIE LIMITÉE

Le fabricant garantit à l'acheteur et au propriétaire ultérieur pendant la période de garantie, tout produit neuf contre tout vice de matériel et de main-d'œuvre, en utilisation normale et quand utilisé et entretenu correctement, pendant une période de 3 ans de la date de fabrication initiale. Les pièces devenant défectueuses pendant la période de garantie, et que des inspections prouvent contenir des vices de fabrication ou de main-d'œuvre, seront réparées, remplacées ou rénovées au choix du Fabricant, à condition qu'en faisant cela nous ne soyons pas obligés de remplacer l'ensemble, le mécanisme complet ou l'appareil complet. Aucune provision n'est faite pour les frais d'expédition, les dégâts, la main-d'œuvre ni d'autres frais causés par la défaillance, la réparation ou le remplacement du produit.

Cette garantie ne s'applique pas et ne couvre aucun matériel ou produit qui a été démonté sans l'autorisation préalable du Fabricant, soumis à un usage abusif, des applications incorrectes, de la négligence, des modifications, des accidents ou un cas de force majeure ; qui n'a pas été installé, utilisé ou entretenu selon les instructions d'installation du Fabricant; qui a été exposé, y compris, mais non de façon limitative, à du sable, des gravillons, du ciment, de la boue, du goudron, des hydrocarbures ou des dérivés d'hydrocarbures (huile, essence, solvants, etc.) ou à d'autres produits abrasifs ou corrosifs, serviettes ou produits d'hygiène féminine etc., dans toutes les applications de pompage. La garantie mentionnée ci-dessus remplace toutes les autres garanties expresses ou implicites et nous n'autorisons aucun représentant ou autre personne à accepter la responsabilité en notre nom pour nos produits.
Prendre contact avec le Fabricant, 3649 Cane Run Road, Louisville, KY 40211, à l'attention du Service à la Clientèle, pour obtenir des réparations, des pièces de remplacement ou des renseignements supplémentaires concernant la garantie.

LE FABRICANT REFUSE EXPRESSÉMENT TOUTE RESPONSABILITÉ POUR LES DÉGÂTS SPÉCIAUX, INDIRECTS OU SECONDAIRES OU POUR LES RUPTURES DE GARANTIE EXPRESSES OU IMPLICITES; ET TOUTE GARANTIE IMPLICITE D'APPLICABILITÉ À UNE UTILISATION SPÉCIFIQUE OU DE COMMERCIALITÉ EST LIMITÉE À LA DURÉE DE LA GARANTIE EXPRESSE.

Certaines provinces ne permettent pas les limitations de la durée de la garantie implicite et il est possible que cette limitation ne s'applique pas. Certaines provinces ne permettent pas l'exclusion ou la limitation des dégâts secondaires ou indirects, et il est possible que cette limitation ou exclusion ne s'applique pas.

Cette garantie vous donne des droits spécifiques reconnus par la loi et vous pouvez également avoir d'autres droits qui varient d'une province à l'autre.

CONSEILS POUR L'INSTALLATION D'UNE POMPE DE PUISARD

1. IL FAUT lire toutes les instructions d'installation fournies avec la pompe.
2. IL FAUT vérifier que les appareils n'ont pas été endommagés en cours d'expédition. Contacter le distributeur si la pompe a été endommagée.
3. IL FAUT nettoyer tous les débris dans le puisard. Vérifier qu'il y a une surface dure et plate à l'emplacement désiré pour la pompe. NE PAS installer la pompe sur du sable, du gravier ou de la terre.
4. IL FAUT vérifier que le puisard est assez large pour avoir de l'espace suffisant pour le bon fonctionnement des interrupteurs de commande de niveau.
5. IL FAUT toujours débrancher l'alimentation de la pompe avant de la manipuler.
   IL FAUT toujours brancher la pompe sur un circuit séparé mis à la terre.
   IL NE FAUT JAMAIS couper, faire une épissure ou endommager un cordon d'alimentation. (Pour faire une raccordement, il faut utiliser un boîtier de raccordement étanche.
   IL NE FAUT PAS utiliser le cordon d'alimentation pour transporter ou soulever la pompe.
   IL NE FAUT PAS utiliser de rallonge pour une pompe de puisard.
6. IL FAUT installer un clapet de sécurité et un raccord sur la conduite de refoulement. IL NE FAUT PAS utiliser une conduite de refoulement de diamètre inférieur à celui du refoulement de la pompe.
7. IL NE FAUT PAS utiliser une pompe de puisard comme pompe de tranchée ou d'excavation, ou pour pomper des égouts, de l'essence ou tout autre liquide dangereux.
8. IL FAUT essayer la pompe immédiatement après l'installation pour être certain que le système fonctionne correctement.
9. IL FAUT recouvrir la pompe de puisard d'un couvercle de puisard approprié.
10. IL FAUT étudier tous les codes locaux et nationaux applicables et vérifier que l'installation est conforme.
11. IL FAUT consulter le fabricant pour obtenir des clarifications ou des réponses aux questions.
12. IL FAUT considérer un système à deux pompes avec une alarme quand l'installation peut être surchargée ou si une défaillance de la pompe primaire causait des dégâts importants.
13. IL FAUT considérer un système de secours en courant alternatif quand une pompe de puisard ou d'séchage mécanique est nécessaire pour éviter des dégâts matériels en cas d'inondation à la suite d'une panne d'alimentation secteur, de problème mécanique ou électrique ou de surcharge du système.
14. IL FAUT inspecter le système et vérifier son fonctionnement au moins tous les trois mois.

LISTE DE VÉRIFICATIONS POUR L'ENTRETIEN



AVERTISSEMENT PRÉCAUTIONS AVEC LE SYSTÈME ÉLECTRIQUE – Avant de réparer la pompe, il faut toujours ouvrir le circuit et débrancher la pompe, en prenant soin de porter des chaussures à semelle isolante et de ne pas se tenir dans l'eau. En cas d'inondation, contacter la compagnie d'électricité ou un électricien agréé pour couper l'alimentation avant de déposer la pompe.

AVERTISSEMENT Les pompes submersibles contiennent de l'huile qui peut être sous pression ou devenir chaude en cours de fonctionnement. Attendre 2 heures et demi après l'avoir débranchée avant de travailler sur la pompe.

CONDITION	CAUSES FRÉQUENTES
A. La pompe ne démarre pas ou ne fonctionne pas.	Vérifier que le fusible est en bon état, que la tension est normale, que le circuit n'est pas surchargé et que le câblage est correct, que l'interrupteur n'est pas ouvert, que le rotor ou le joint n'est pas bloqué, que le condensateur ou le relais n'est pas défectueux, si installé, qu'il n'y a pas de court-circuit dans le moteur ou le bobinage. Flotteur bloqué en position basse. Interrupteur défectueux, endommagé ou mal réglé.
B. Le moteur surchauffe et déclenche le disjoncteur ou la sécurité thermique.	Mauvaise tension, hauteur de refoulement négative (refoulement ouvert au-dessous de la normale), blocage mécanique du rotor ou du joint, moteur court-circuité.
C. La pompe se met en marche et s'arrête trop fréquemment.	Flotteur grippé sur la tige, clapet de sécurité coincé ou pas de clapet installé sur une conduite longue, clapet de sécurité ouvert, interrupteurs de niveau défectueux, puits trop petit.
D. La pompe ne s'arrête pas.	Débris sous le flotteur, flotteur ou tige du flotteur coincé contre la paroi du puits, interrupteur défectueux, endommagé ou mal réglé.
E. La pompe fonctionne mais son débit est faible ou non existant.	Vérifier le carter de crépine, le tuyau de refoulement ou, si un clapet de sécurité est installé, le trou d'évent. La hauteur de refoulement est supérieure à la capacité de la pompe. Mauvaise tension. Mauvaise direction de rotation de la pompe. Condensateur défectueux. L'eau d'alimentation contient de l'air ou provoque l'entrée d'air dans la chambre de la pompe.
F. Baisse de capacité ou de hauteur de refoulement après une période d'utilisation.	Augmentation de la friction dans le tuyau de refoulement, tuyau ou clapet de sécurité colmaté. Des produits abrasifs ou des produits chimiques peuvent détériorer le rotor et le carter de pompe. Inspecter la conduite. Déposer la base et inspecter.

Si les vérifications ci-dessus ne résolvent le problème, consulter l'usine. Ne pas essayer de réparer ou de démonter la pompe. Toutes les réparations doivent être faites par un centre de réparation agréé par Zoeller. Visitez le site Web www.zoellerpumps.com/servicestations pour trouver le centre de service agréé le plus proche.

© Copyright 2011 Zoeller Co. All rights reserved.

INSTALLATION RECOMMANDÉE POUR TOUTES APPLICATIONS

(1) Les circuits et les protections électriques doivent être conformes aux normes des codes électriques nationaux, provinciaux et locaux.
(2) Installer un Unicheck (raccord / clapet de sécurité combiné) de Zoeller approprié, de préférence juste au-dessus du puits pour permettre la dépose de la pompe pour le nettoyage ou les réparations. Pour les égouts, les effluents ou les eaux d'assèchement mécanique, utiliser le modèle 30-0164 avec des tuyaux de 1-1/2" (38 mm), modèle 30-0152 avec des tuyaux de 2" (51 mm) et le modèle 30-0160 avec des tuyaux de 3" (76 mm) s'il faut une grande hauteur de refoulement ou en cas d'installation sous un couvercle. Voir (4) ci-dessous.
(3) Tous les puits doivent avoir un couvercle pour empêcher les débris d'y tomber et éviter les chutes accidentelles.
(4) Quand un Unicheck est installé, percer un trou de 5 mm (3/16") dans le tuyau de refoulement, de niveau avec le dessus de la pompe. Les pompes de la série 50 et 90 ont un trou d'évent intégré. REMARQUE – LE TROU DOIT AUSSI ÊTRE AU-DESSOUS DU COUVERCLE DU PUITS ET IL FAUT LE NETTOYER RÉGULIÈREMENT (pompes à hauteur de refoulement élevée, voir n° 3 de la première page « MISE EN GARDE »). Un jet d'eau sera visible de cette orifice durant les périodes de fonctionnement de la pompe.
(5) Attacher fermement le cordon d'alimentation électrique sur le tuyau de refoulement en utilisant du chatterton ou des colliers.
(6) Utiliser un tuyau de refoulement de pleines dimensions.
(7) Le puits doit être conforme à tous les règlements applicables.
(8) Avant la mise en service, la pompe doit être de niveau et le mécanisme du flotteur ne doit pas toucher les bords du puits.
(9) Après l'installation, le puits doit être propre et ne doit pas contenir de débris.
(10) L'installateur doit fournir la vanne d'arrêt et l'installer en respectant tous les codes.
(11) Identifier les interrupteurs à flotteur indiqués dans les illustrations. Le point d'arrêt doit être au-dessus du carter du moteur et à 180° de l'admission. Le point d'arrêt ne se doit trouver jamais au-dessous du refoulement de la pompe (uniquement pour les systèmes d'eaux usées et d'effluent). REMARQUE - pour les pompes automatiques, utiliser le schéma d'installation pour l'assèchement ci-dessous.
(12) Pour éviter la propagation des gaz et des odeurs, toutes les installations doivent avoir des joints étanches.
(13) Les gaz et les odeurs sont évacués à l'atmosphère au moyen d'un tuyau d'évent. (uniquement pour les systèmes d'eaux usées et d'assèchement).
(14) Installer la base de pompe Zoeller (modèle 10-2421) sous la pompe pour formir un bassin de décantation (uniquement pour les systèmes d'effluent et d'assèchement). ***Uniquement pour les systèmes d'effluent :***
(15) Brancher l'alimentation de la pompe par l'intermédiaire d'un boîtier étanche Zoeller ou d'une épissure étanche. ***REMARQUE – Le boîtier étanche est une nécessité absolue dans un milieu humide. Voir le n° 8 à la première page de FM0732.***
(16) Consulter le manuel de dimensions pour les égouts de SSPMA afin de déterminer le modèle d'interrupteur de marche / arrêt à utiliser.
(17) Un accès à la fosse septique doit être prévu pour l'entretien du filtre et de la pompe.

REMARQUE – Les pompes à joint double offrent une protection supplémentaire contre les dommages causés par la défaillance du joint.

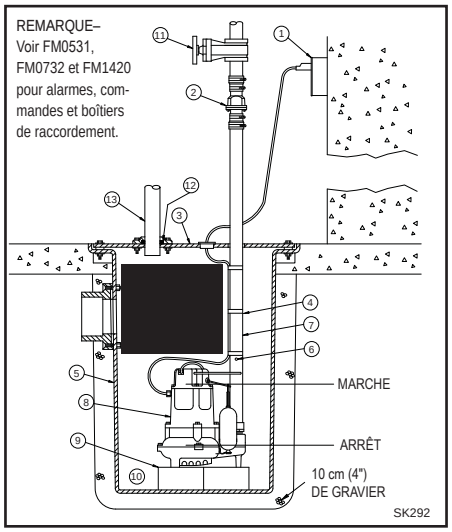

INSTALLATION TYPIQUE
POUR L'ASSÈCHEMENT MÉCANIQUE

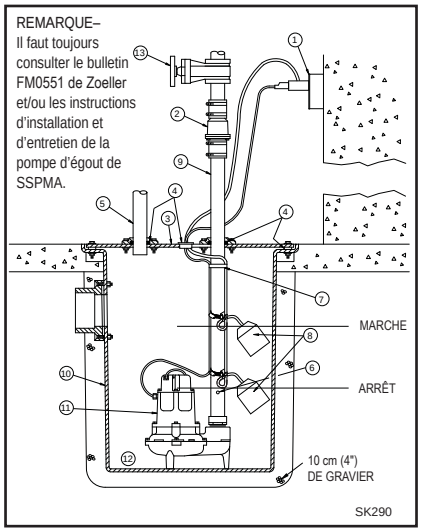

INSTALLATION TYPIQUE
POUR ÉGOUT

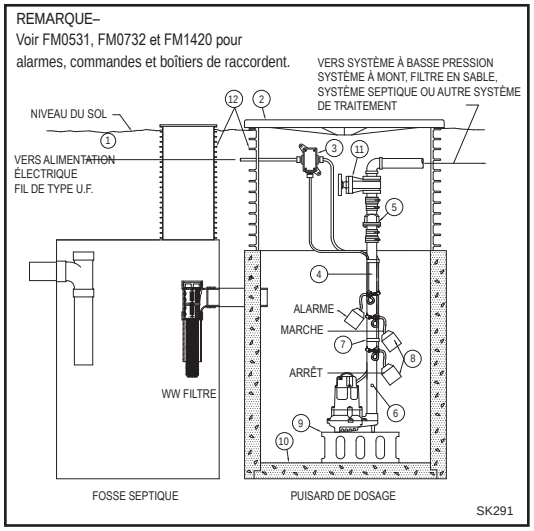

INSTALLATION TYPIQUE
POUR LES EFFLUENTS

Toutes les installations doivent être conformes aux codes électriques et de plomberie applicables, y compris, mais pas limité aux codes électriques nationaux, locaux, régionaux et aux codes de plomberie provinciaux. Pas conçu pour utilisation dans les endroits dangereux.

MÉTHODES SUGGÉRÉES POUR L'INSTALLATION DU FLOTTEUR

Pour certaines installations, il peut être nécessaire d'installer un support indépendant pour les interrupteurs de commande de niveau pour éviter des accrochages possibles sur la pompe, la tuyauterie, les vannes, etc. Il est possible de fabriquer les supports de flotteur en utilisant des tuyaux et des raccords standard pour faciliter la dépose en cas de réparation. Les supports de flottes sont disponible chez Zoeller tel que décrit au feuillet FM0526 ou peuvent être fabriqué avec de la tuyauterie et des raccords standard.

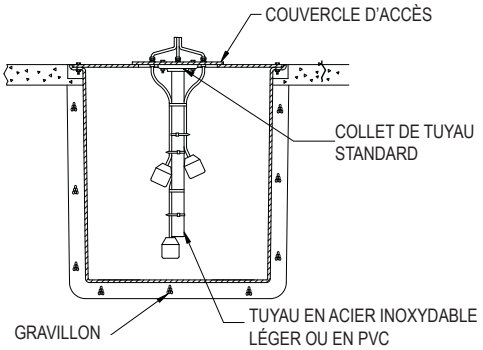

SUPPORT TYPIQUE DE FLOTTEUR POUR COUVERCLE DE PUITS EN ACIER

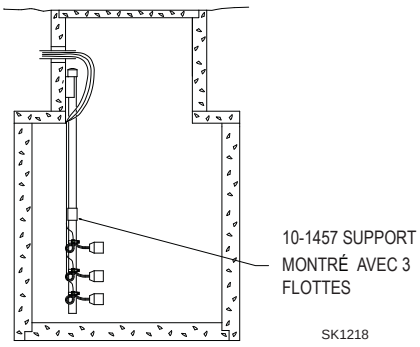

SUPPORT DE FLOTTES TYPIQUE POUR PUISARD EN BÉTON OU POUR PUIT D' ACCÉS DE FOSSE SEPTIQUE

© Copyright 2011 Zoeller Co. All rights reserved.

Installation des modèles WD et WH

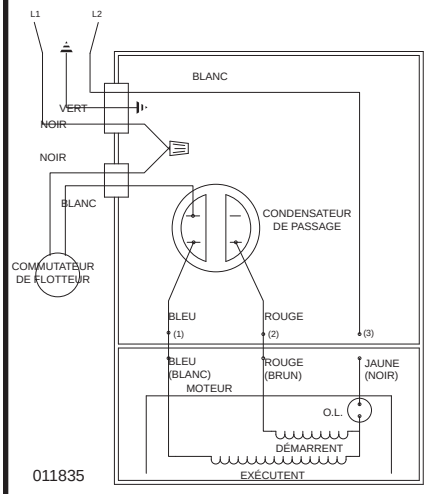

SCHÉMA ÉLECTRIQUE POUR LES MODÈLES
WD - 230 V, monophasé, 60 Hz
WH - 200/208, monophasé, 60 Hz

Définition de la plage de pompage en pouces (1 pouce = 2,5 cm)

Longueur du bras d'attache	5 min.	10	15	20	22 max.
Plage de pompage	9	13.5	18	22	24

Ce tableau ne doit être utilisé que comme guide. À cause du poids du câble, la plage de pompage au-dessus de l'horizontale n'est pas égale à la plage de pompage au-dessous de l'horizontale. Les plages sont basées sur des essais sans turbulence. La plage peut varier en fonction de la température de l'eau et de la forme du cordon. Plus le bras est long, plus les variations de plage de pompage sont importantes.

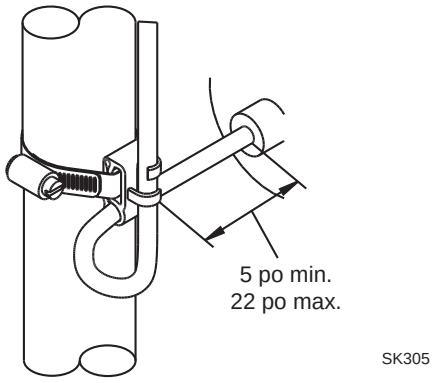

Interrupteur 20 amps (modèles WD et WH)

Les modèles WD et WH sont entièrement automatiques. Un interrupteur à flotteur est inclus et branché dans le circuit de la pompe pour permettre le fonctionnement automatique après avoir installé l'interrupteur à flotteur correctement sur le tuyau de refoulement. Il faut utiliser le schéma ci-dessus pour attacher correctement l'interrupteur à flotteur et obtenir un bras approprié pour modifier le cycle de marche-arrêt pour chaque application.

Remarque – L'interrupteur risque de mal fonctionner si le câble d'attache n'est pas maintenu dans les limites appropriées.

Remarque – Le câble doit être installé horizontalement.

Instructions de branchement monophasé

AVERTISSEMENT POUR DES RAISONS DE SÉCURITÉ, IL FAUT TOUJOURS DÉBRANCHER L'ALIMENTATION ÉLECTRIQUE DE LA POMPE AVANT L'INTERVENTION. Les pompes monophasées sont fournies avec une fiche à trois broches pour aider à protéger contre les risques d'électrocution. IL NE FAUT JAMAIS ENLEVER LA BROCHE DE TERRE. La fiche à trois broches doit être branchée dans une prise à trois alvéoles correspondantes. Si le circuit d'alimentation n'a pas une telle prise, il faut installer une prise du type approprié, branchée et mise à la terre selon le code national de l'électricité et tous les codes et règlements locaux appropriés.

AVERTISSEMENT « Risque d'électrocution ». Il ne faut pas enlever le cordon d'alimentation et le serre-câble ni brancher directement la pompe. L'installation et la vérification des circuits électriques et de la quincaillerie doivent être faites par un électricien qualifié.

AVERTISSEMENT Les unités non équipées d'une fiche (monophasée et triphasée) et les unités non automatiques monophasées à fiche de 20 ampères doivent être dotées d'une commande de moteur et d'un régulateur de niveau de liquide lors de l'installation. La tension, l'intensité, la fréquence, la mise à la terre et la puissance du dispositif de commande doivent s'accorder à la pompe sur lequel il est branché.

Instructions de branchement triphasé

Pompe non-automatique triphasée

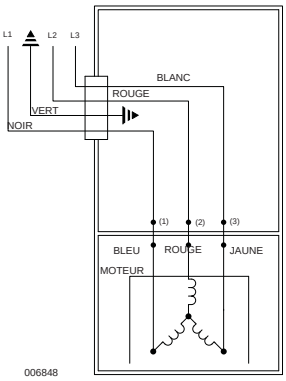

Les pompes triphasées ne sont pas automatiques. Pour qu'elles fonctionnent automatiquement, il faut installer un panneau de commande. Pour brancher le système, suivre les instructions fournies avec le panneau de commande. Pour trois phases automatique les pompes voient le diagramme de câblage automatique de 3 phases situé vers le droit.

Avant d'installer la pompe, vérifier la rotation de la pompe pour être certain que les fils ont été branchés correctement sur l'alimentation et que le fil vert du cordon d'alimentation (voir schéma électrique) est branché sur une bonne terre. Mettre la pompe momentanément sous tension et observer la direction du retour causé par le couple de démarrage. La rotation est correcte si le retour est en sense contraire à la flèche de rotation dans le carter de la pompe. Si la rotation n'est pas correcte, inverser deux des fils de phase pour obtenir la bonne direction de rotation.

Toutes les pompes triphasées doivent être équipées d'un dispositif de démarrage, avec dispositif de protection contre la surcharge. Voir FM0486 pour les installations duplex. La pompe doit être branchée conformément au code national de l'électricité et tous les codes et règlements locaux appropriés. Il ne faut pas installer les pompes dans un endroit classé dangereux conformément au code national de l'électricité, ANSI/NFPA 70.

Pompe automatique triphasée

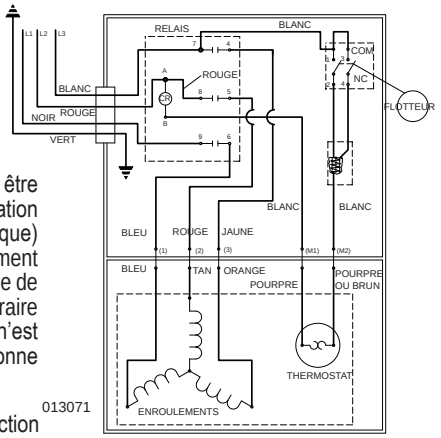

AVERTISSEMENT POUR DES RAISONS DE SÉCURITÉ, IL FAUT TOUJOURS DÉBRANCHER L'ALIMENTATION ÉLECTRIQUE DE LA POMPE AVANT L'INTERVENTION.

REMARQUE IMPORTANTE. – Certaines polices d'assurance commerciales et résidentielles couvrent les dommages résultant d'une défaillance du **produit. Dans la plupart des cas, vous devez être en possession du produit pour déposer une réclamation. Zoeller Pump Co. s'engage à remplacer l'appareil ou à rembourser le prix d'achat original après que l'assureur aura réglé la réclamation dans un cas où vous êtes tenu d'être en possession du produit pour documenter une réclamation soumise à votre assureur.**

© Copyright 2011 Zoeller Co. All rights reserved.

Your Peace of Mind is Our Top Priority®

Product information presented here reflects conditions at time of publication. Consult factory regarding discrepancies or inconsistencies.

Zoeller Family of Water Solutions™

MAIL TO: P.O. BOX 16347 • Louisville, KY 40256-0347
SHIP TO: 3649 Cane Run Road • Louisville, KY 40211-1961
(502) 778-2731 • 1 (800) 928-PUMP • FAX (502) 774-3624

SECTION: 6.10.396
FM1790
0300
Supersedes
NEW

visit our web site: www.zoeller.com

REPLACEMENT PARTS LIST FOR MODELS:

M72 AUTOMATIC 115V
N72 NONAUTOMATIC 115V
M76 AUTOMATIC 115V
N76 NONAUTOMATIC 115V

Consult factory for all other models

TO ORDER REPLACEMENT PARTS:

PLEASE FURNISH THE FOLLOWING INFORMATION:

- Model Number.
- Part Number of Pump.
- Part Number and Description of part.

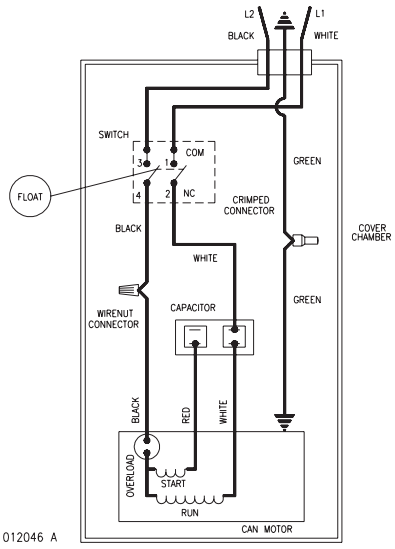

WIRING DIAGRAM FOR MODEL
M72
7/99 THRU CURRENT

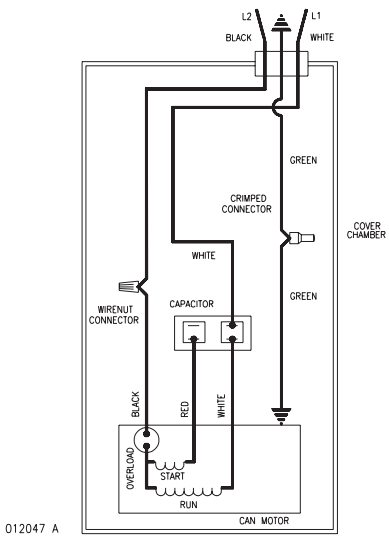

WIRING DIAGRAM FOR MODEL
N72
7/99 THRU CURRENT

© Copyright 2012 Zoeller Co. All rights reserved.

REPLACEMENT PARTS LIST FOR MODELS: "M72", "N72", "M76" and "N76".

MODEL: M72			Rev. A
REF. NO.	DESCRIPTION	QTY	7/99 thru Current
1	Guard/Handle	1	012029
2	Float-Polypropylene	1	034019
3	Float-Rod	1	054062
4	Guide	1	012043
5	Base	1	012028
6	Pump Housing	1	012027
7	Screw	13	012042

MODEL: N72			Rev. A
REF. NO.	DESCRIPTION	QTY	7/99 thru Current
1	Handle	1	012030
2	N/A	N/A	N/A
3	N/A	N/A	N/A
4	N/A	N/A	N/A
5	Base	1	012028
6	Pump Housing	1	012027
7	Screw	13	012042

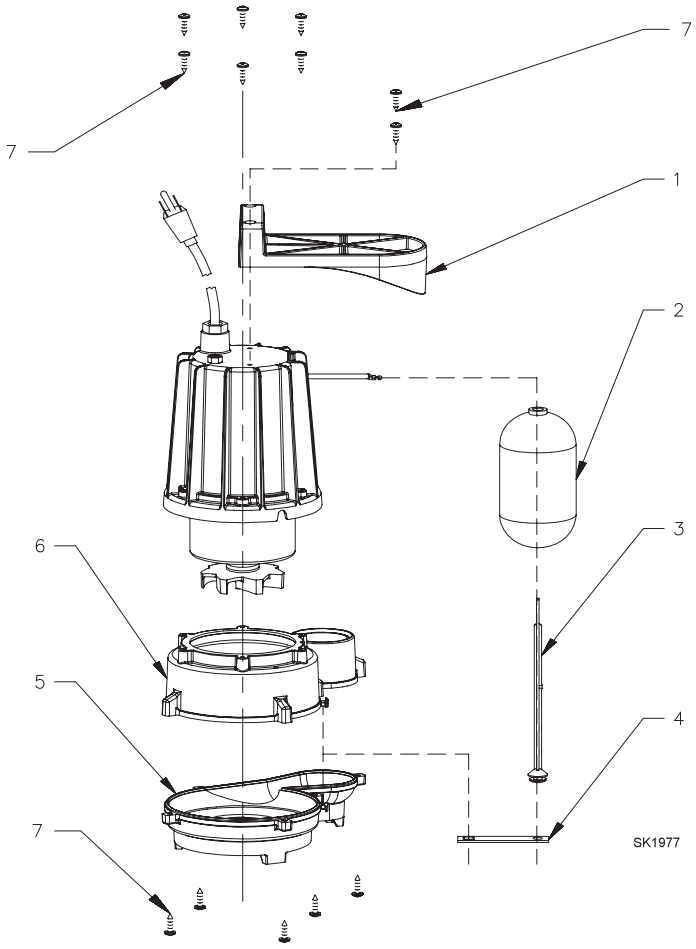

MODEL: M76			Rev. A
REF. NO.	DESCRIPTION	QTY	02/00 thru Current
1	Guard/Handle	1	012029
2	Float-Polypropylene	1	034019
3	Float-Rod	1	002524
4	Guide	1	012043
5	Base	1	012028
6	Pump Housing	1	012048
7	Screw	13	012042

MODEL: N76			Rev. A
REF. NO.	DESCRIPTION	QTY	02/00 thru Current
1	Handle	1	012030
2	N/A	N/A	N/A
3	N/A	N/A	N/A
4	N/A	N/A	N/A
5	Base	1	012028
6	Pump Housing	1	012048
7	Screw	13	012042

ZOELLER®

MAIL TO: P.O. BOX 16347 • Louisville, KY 40256-0347
SHIP TO: 3649 Cane Run Road • Louisville, KY 40211-1961
(502) 778-2731 • 1 (800) 928-PUMP • FAX (502) 774-3624

Your Peace of Mind is Our Top Priority®

visit our web site: www.zoeller.com

© Copyright 2012 Zoeller Co. All rights reserved.

Assembly and operating instructions

DULCOMETER®, Compact Controller
Measured variable: pH / ORP

PH-501 - Transmitter, pH, Prominent Dulcometer pH or ORP4-20mA output, 7781499

EN



Please carefully read these operating instructions before use. · Do not discard.
The operator shall be liable for any damage caused by installation or operating errors.
The latest version of the operating instructions are available on our homepage.

Part no.: 986214
E-1145
BA DM 207 08/15 EN

General non-discriminatory approach

In order to make it easier to read, this document uses the male form in grammatical structures but with an implied neutral sense. It is aimed equally at both men and women. We kindly ask female readers for their understanding in this simplification of the text.

Supplementary information

Please read the supplementary information in its entirety.

Information



This provides important information relating to the correct operation of the unit or is intended to make your work easier.

Safety Information

The safety information includes detailed descriptions of the hazardous situation, see
↳ *Chapter 2.1 'Explanation of the safety information' on page 8*

The following symbols are used to highlight instructions, links, lists, results and other elements in this document:

More symbols

Symbol	Description
1. ▶	Action, step by step
⇨	Outcome of an action
↳	Links to elements or sections of these instructions or other applicable documents
■	List without set order
[Button]	Display element (e.g. indicators) Operating element (e.g. button, switch)
'Display /GUI'	Screen elements (e.g. buttons, assignment of function keys)
`CODE`	Presentation of software elements and/or texts

Table of contents

1 Identity code 6

2 Introduction 8

2.1 Explanation of the safety information 8

2.2 Users' qualifications 10

3 Safety and responsibility 12

3.1 General Safety Information 12

3.2 Correct and proper use 13

4 Functional description 15

4.1 Flow diagram 16

4.2 Overview of the first level menu 17

5 Assembly and installation 20

5.1 Scope of delivery 22

5.2 Mounting (mechanical) 22

5.2.1 Wall mounting 22

5.2.2 Pipe mounting 24

5.2.3 Control panel mounting 25

5.3 Installation (electrical) 33

5.3.1 Cable Cross-Sections and Cable End Sleeves 34

5.3.2 Installation of coaxial cable to guard terminal XE1 34

5.3.3 Installation (electrical) 39

5.4 Switching of inductive loads 39

6 Commissioning 41

6.1 Initial commissioning 41

6.2 Selection of the measured variable 41

6.3 Setting the controller during commissioning 41

7 Operating diagram 43

7.1 Overview of equipment/Control elements 43

7.2 Adjusting display contrast 44

7.3 Continuous display 45

7.4 Info display 45

7.5 Password 47

8 Operating menus for the measured variables pH and ORP 48

8.1 pH sensor calibration (CAL) 48

8.2 Redox sensor calibration (CAL) ... 56
8.3 Setting limit values *[LIMITS]* ... 58
8.4 Setting the control *[CONTROL]* ... 60
8.5 Input setting (INPUT) ... 63
8.6 Output setting (OUTPUT) ... 66
8.7 DEVICE setting ... 70

9 Control parameters and functions ... 71
9.1 DULCOMETER® Compact Controller function states ... 71
9.2 STOP/START key ... 73
9.3 Priming (PRIME) ... 74
9.4 Hysteresis limit ... 75
9.5 Temperature correction variable for pH ... 76
9.6 Checkout time for measured variable and correction variable ... 77
9.7 Checkout time control ... 77
9.8 Power relay "P-REL" as limit value relay ... 78
9.9 Setting and functional description of "Relay Used as a Solenoid Valve" ... 79
9.10 Alarm relay ... 81
9.11 "Error logger" operating mode ... 81

10 Maintenance ... 82
10.1 Changing the fuse, DULCOMETER® Compact Controller ... 82
10.2 Fault reporting and troubleshooting ... 83

11 Technical data DULCOMETER® Compact Controller ... 86
11.1 Permissible ambient conditions ... 86
11.2 Sound Pressure Level ... 86
11.3 Material data ... 87
11.4 Chemical Resistance ... 87
11.5 Dimensions and weights ... 88

12 Electrical data ... 89

13 Spare parts and accessories ... 92

14 Replacing spare part units ... 93
14.1 Replacing the top part of the housing ... 93
14.2 Replacing the lower part of the housing (wall/tube retaining bracket) ... 95
14.3 Replacing the lower part of the housing (control panel installation) ... 97

15 Standards complied with and Declaration of Conformity ... 100

16 Disposal of Used Parts 101
17 Index 102

1 Identity code

DCCa	DULCOMETER® Compact,								
	Mounting type								
	E	Spare part units							
	W	Wall/pipe mounting IP 67							
	S	With fitting kit for control panel mounting IP 54							
		Design							
		00	With ProMinent® logo						
		E1	Spare part unit, controller housing lower part (processor/PCB), fully assembled						
		E2	Spare part unit, controller housing top part (processor/PCB), fully assembled						
			Operating voltage						
			6	90 … 253 V, 48/63 Hz					
				Measured variable					
				C0	Free chlorine				
				NG	pH/ORP (switchable)				
				L3	Conductive conductivity (designation: COND_C)				
				L6	Inductive conductivity (designation: COND_I)				
					Hardware extension				
					0	None			
					Approvals				
					01	CE (Standard)			
						Certificates			
						0	None		
							Operating instructions language		
							EN	German	KR	Korean

DCCa	DULCOMETER® Compact,									
							EN	English	LT	Lithuanian
							ES	Spanish	LV	Latvian
							IT	Italian	NL	Dutch
							FR	French	PL	Polish
							FI	Finish	PT	Portuguese
							BG	Bulgarian	RO	Romanian
							ZH	Chinese	SV	Swedish
							CZ	Czech	SK	Slovakian
							EL	Greek	SL	Slovenian
							HU	Hungarian	RU	Russian
							YES	Japanese	TH	Thai

2 Introduction

Data and functions

These operating instructions describe the technical data and functions of the DULCOMETER® Compact Controller, measured variable pH / ORP.

2.1 Explanation of the safety information

Introduction

These operating instructions provide information on the technical data and functions of the product. These operating instructions provide detailed safety information and are provided as clear step-by-step instructions.

The safety information and notes are categorised according to the following scheme. A number of different symbols are used to denote different situations. The symbols shown here serve only as examples.

DANGER!

Nature and source of the danger

Consequence: Fatal or very serious injuries.

Measure to be taken to avoid this danger

Danger!

– Denotes an immediate threatening danger. If this is disregarded, it will result in fatal or very serious injuries.

WARNING!

Nature and source of the danger

Possible consequence: Fatal or very serious injuries.

Measure to be taken to avoid this danger

Warning!

– Denotes a possibly hazardous situation. If this is disregarded, it could result in fatal or very serious injuries.

CAUTION!

Nature and source of the danger

Possible consequence: Slight or minor injuries, material damage.

Measure to be taken to avoid this danger

Caution!

– Denotes a possibly hazardous situation. If this is disregarded, it could result in slight or minor injuries. May also be used as a warning about material damage.

NOTICE!

Nature and source of the danger

Damage to the product or its surroundings

Measure to be taken to avoid this danger

Note!

– Denotes a possibly damaging situation. If this is disregarded, the product or an object in its vicinity could be damaged.

Type of information

Hints on use and additional information

Source of the information, additional measures

Information!

– *Denotes hints on use and other useful information. It does not indicate a hazardous or damaging situation.*

2.2 Users' qualifications

WARNING!

Danger of injury with inadequately qualified personnel!

The operator of the plant / device is responsible for ensuring that the qualifications are fulfilled.

If inadequately qualified personnel work on the unit or loiter in the hazard zone of the unit, this could result in dangers that could cause serious injuries and material damage.

– All work on the unit should therefore only be conducted by qualified personnel.
– Unqualified personnel should be kept away from the hazard zone

Training	Definition
Instructed personnel	An instructed person is deemed to be a person who has been instructed and, if required, trained in the tasks assigned to him/her and possible dangers that could result from improper behaviour, as well as having been instructed in the required protective equipment and protective measures.
Trained user	A trained user is a person who fulfils the requirements made of an instructed person and who has also received additional training specific to the system from ProMinent or another authorised distribution partner.
Trained qualified personnel	A qualified employee is deemed to be a person who is able to assess the tasks assigned to him and recognize possible hazards based on his/her training, knowledge and experience, as well as knowledge of pertinent regulations. The assessment of a person's technical training can also be based on several years of work in the relevant field.

Training	Definition
Electrician	Electricians are deemed to be people, who are able to complete work on electrical systems and recognize and avoid possible hazards independently based on his/her technical training and experience, as well as knowledge of pertinent standards and regulations. Electricians should be specifically trained for the working environment in which the are employed and know the relevant standards and regulations. Electricians must comply with the provisions of the applicable statutory directives on accident prevention.
Customer Service department	Customer Service department refers to service technicians, who have received proven training and have been authorised by ProMinent to work on the system.



Note for the system operator

The pertinent accident prevention regulations, as well as all other generally acknowledged safety regulations, must be adhered to!

3 Safety and responsibility

3.1 General Safety Information

WARNING!

Live parts!

Possible consequence: Fatal or very serious injuries

- Measure: Disconnect the mains power supply prior to opening the housing
- De-energise damaged, defective or manipulated units by disconnecting the mains plug

WARNING!

Unauthorised access!

Possible consequence: Fatal or very serious injuries

- Measure: Ensure that there can be no unauthorised access to the unit

WARNING!

Operating errors!

Possible consequence: Fatal or very serious injuries

- The unit should only be operated by adequately qualified and technically expert personnel
- Please also observe the operating instructions for controllers and fittings and any other component groups, such as sensors, measuring water pumps ...
- The operator is responsible for ensuring that personnel are qualified

CAUTION!

Electronic malfunctions

Possible consequence: Material damage to destruction of the unit

- The mains connection cable and data cable should not be laid together with cables that are prone to interference
- Measure: Take appropriate interference suppression measures

NOTICE!

Correct and proper use

Damage to the product or its surroundings

- The unit is not intended to measure or regulate gaseous or solid media
- The unit may only be used in accordance with the technical details and specifications provided in these operating instructions and in the operating instructions for the individual components

NOTICE!

Correct sensor operation / Run-in time

Damage to the product or its surroundings

- Correct measuring and dosing is only possible if the sensor is working perfectly
- It is imperative that the run-in times of the sensors are adhered to
- The run-in times should be allowed for when planning initial operation
- It may take a whole working day to run-in the sensor
- Please read the operating instructions for the sensor

NOTICE!

Correct sensor operation

Damage to the product or its surroundings

- Correct measuring and dosing is only possible if the sensor is working perfectly
- Check and calibrate the sensor regularly

NOTICE!

Compensation of control deviations

Damage to the product or its surroundings

- This controller cannot be used in control circuits which require rapid compensation (< 30 s)

3.2 Correct and proper use

NOTICE!

Compensation for control deviations

Damage to the product or its surroundings

- The controller can be used in processes, which require compensation of > 30 seconds

NOTICE!

Correct and proper use

The unit is intended to measure and regulate liquid media. The marking of the measured variables is located on the controller and is absolutely binding.

The unit may only be used in accordance with the technical details and specifications provided in this operating manual and in the operating manuals for the individual components (such as, for example, sensors, fittings, calibration devices, metering pumps etc.).

Any other uses or modifications are prohibited.

4 Functional description

Brief functional description

The DULCOMETER® Compact Controller for pH and redox measured variables provides basic functions for water treatment applications. It has a fixed configuration with the following features:

- Measured variables pH and redox (can be switched over on the DULCOMETER® Compact Controller)
- Language independent operation (use of abbreviations, such as *[INPUT]*, *[OUTPUT]*, *[CONTROL]*, *[ERROR]*)
- Illuminated display
- 3 LEDs indicate the operating states (*[f-REL]* active, *[P-REL]* active, error)
- Sensor monitoring of pH
- P or PID control characteristics
- Selectable control direction (raise or lower measured value)
- Impulse frequency relay *[f-REL]* for metering pump control
- Power relay *[P-REL]*, configurable as alarm, limit value or pulse width modulated (PWM) control output for metering pumps
- Analogue output 0/4…20 mA, can be configured as a measured value or correction variable
- Suction function for all actuators
- Digital input to switch off the DULCOMETER® Compact Controller or to process a sample water limit contact by remote control
- Temperature sensor input (Pt 1000) for temperature compensation of the pH value
- Protection class IP67 (wall/pipe mounting), protection class IP54 (control panel mounting)

Applications:

- Waste water treatment
- Treatment of drinking water
- Swimming pool water treatment

4.1 Flow diagram

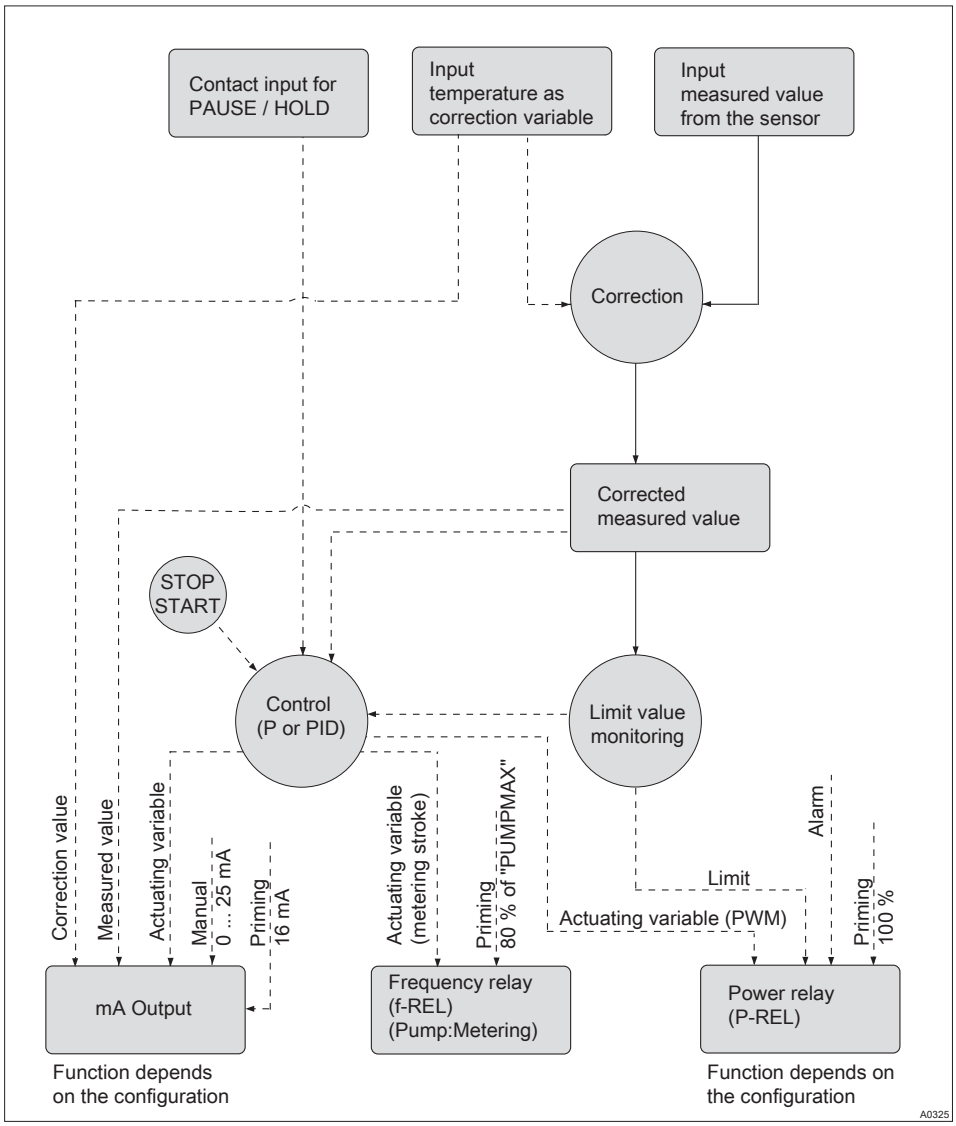

Fig. 1: Flow diagram

4.2 Overview of the first level menu

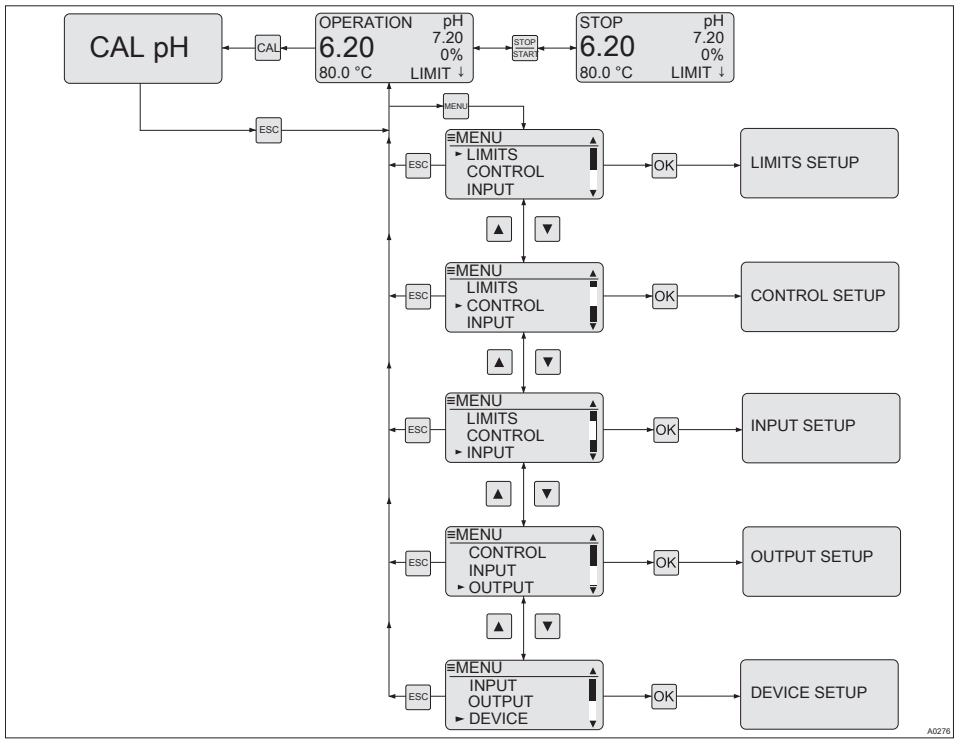

Fig. 2: Overview of the first level menu; shown for pH

Display view	Selection with:	Reference	Function
OPERATION pH 6.20 7.20 0% 80.0 °C LIMIT ↓		*Chapter 7 'Operating diagram' on page 43*	
CAL			Changes to the calibration menu.

Display view	Selection with:	Reference	Function
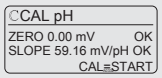	CAL	*Chapter 8.1 'pH sensor calibration (CAL)' on page 48*	The calibration menu enables calibration of controller and sensor.
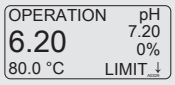			
STOP START			Stop/Start the control and metering function.
	STOP START	*Chapter 9.2 'STOP/START key' on page 73*	By pressing the STOP key, the control is stopped. The STOP key can be pressed independently of the currently displayed menu. However the STOP state is only shown in the continuous display.
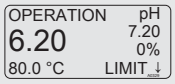	MENU	*Chapter 7.3 'Continuous display' on page 45*	Changes from the continuous display to the setting menu.
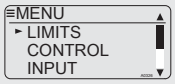	OK	*Chapter 8.3 'Setting limit values [LIMITS]' on page 58*	Enables the setting of the limit value for limit value monitoring.
▲ ▼			
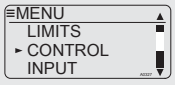	OK	*Chapter 8.4 'Setting the control [CONTROL]' on page 60*	Enables parameter setting for the control.
▲ ▼			

Display view	Selection with:	Reference	Function
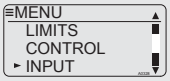	OK	*Chapter 8.5 'Input setting (INPUT)' on page 63*	Enables setting of the measured value input parameter.
			
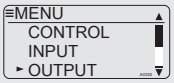	OK	*Chapter 8.6 ' Output setting (OUTPUT)' on page 66*	Enables setting of the mA output parameter.
			
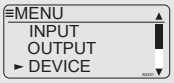	OK	*Chapter 8.7 'DEVICE setting' on page 70*	Enables adjustment of the password and the controller *[RESTART]* function.

5 Assembly and installation

- **User qualification, mechanical installation:** trained qualified personnel, see ↳ *Chapter 2.2 'Users' qualifications' on page 10*
- **User qualification, electrical installation:** Electrical technician, see ↳ *Chapter 2.2 'Users' qualifications' on page 10*

⚠ CAUTION!

Possible consequence: Material damage.

The hinge between the front and rear part of the housing cannot absorb high levels of mechanical loading. When working on the DULCOMETER® Compact Controller, firmly hold the top section of the controller housing.

⚠ CAUTION!

Check band for strain relief

Possible consequence: Material damage.

The ribbon cable and its socket cannot be mechanically loaded. Hence it is essential that when mounting the controller in the control panel mounting, the check strap (part number 1035918) is fitted for strain relief and mechanical securing. Without the check strap, the ribbon cable or its socket could be damaged if they were to fall out of the controller upper housing.

! NOTICE!

Mounting position and conditions

- The controller conforms to IP 67 degree of protection (wall/pipe mounting) or IP 54 (control panel mounting) requirements. This degree of protection is only achieved if all seals and cable glands are correctly fitted.
- The (electrical) installation should only take place after (mechanical) installation
- Ensure that there is unimpeded access for operation
- Ensure safe and low-vibration fastening
- Avoid direct sunlight
- Permissible ambient temperature of the controller at the installation location: -10 ... +60 °C at max. 95% relative air humidity (non-condensing)
- Take into consideration the permissible ambient temperature of the sensors and other components connected
- The controller is only suitable for operation in closed rooms. If operated outside, the controller must be protected against the environment by a suitable protective enclosure

Read-off and operating position

- *Install the device in a favourable position for reading and operating (preferably at eye level)*

Mounting position

– *Leave sufficient free space for the cables*

Packaging material

Dispose of packaging material in an environmentally responsible way. All packaging components carry the corresponding recycling code.

5.1 Scope of delivery

The following parts belong to the standard scope of delivery of a DULCOMETER® Compact Controller.

Description	Quantity
Assembled device	1
Cable connection set DMTa/DXMa (metr.)	1
Operating instructions	1

5.2 Mounting (mechanical)

The DULCOMETER® Compact Controller is suitable for mounting on a wall, pipe or control panel.

Mounting materials (contained in the scope of supply):

Description	Quantity
Wall/tube retaining bracket	1
Round head screws 5x45 mm	2
Washer 5.3	2
Rawlplug Ø 8 mm, plastic	2

5.2.1 Wall mounting

Mounting (mechanical)

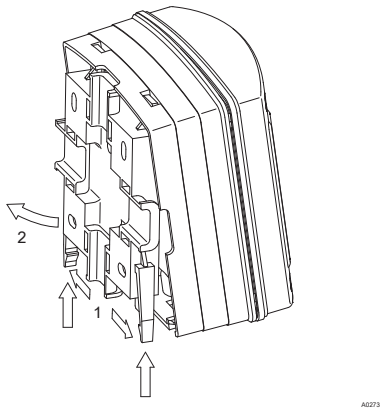

Fig. 3: Removing the wall/pipe bracket

1. Remove the wall/pipe bracket. Pull the two snap-hooks (1) outwards and push upwards
2. Fold out the wall/pipe bracket (2) and pull out in a downwards direction
3. Mark two drill holes diagonal to each other by using the wall/pipe bracket as a drilling template
4. Drill holes: Ø 8 mm, d = 50 mm

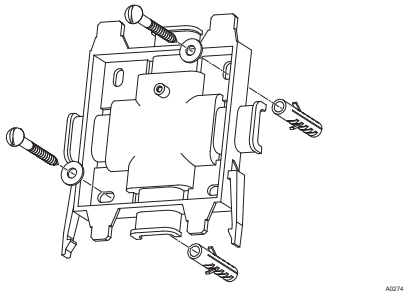

Fig. 4: Screwing on the wall/pipe bracket using washers

5. Screw on the wall/pipe bracket using the washers
6. Suspend the DULCOMETER® Compact Controller at the top in the wall/pipe bracket and push using light pressure at the bottom against the wall/pipe bracket. Then press upwards until the DULCOMETER® Compact Controller audibly snaps into position.

5.2.2 Pipe mounting

Mounting (mechanical)

Pipe diameter

Pipe diameter: 25 mm to 60 mm.

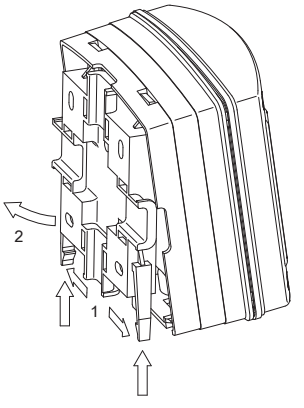

Fig. 5: Removing the wall/pipe bracket

1. Remove the wall/pipe bracket. Pull the two snap-hooks (1) outwards and push upwards
2. Fold out the wall/pipe bracket (2) and pull out in a downwards direction
3. Secure the wall/pipe bracket using cable ties (or pipe clips) to the pipe

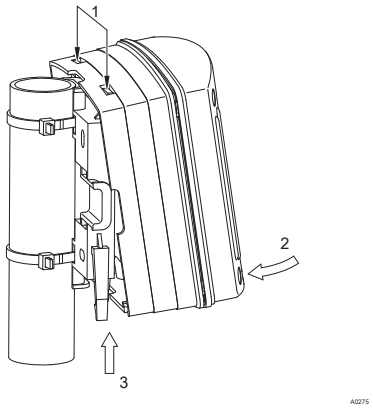

Fig. 6: Suspend and secure the DULCOMETER® Compact Controller

4. Suspend the DULCOMETER® Compact Controller at the top (1) in the wall/pipe bracket and push using light pressure at the bottom (2) against the wall/pipe bracket. Then press upwards (3) until the DULCOMETER® Compact Controller audibly snaps into position

5.2.3 Control panel mounting

Mounting kit for control panel installation of the DULCOMETER® Compact Controller: Order number 1037273

Description	Quantity
Drilling template sheet 3872-4	1
PT screw (3.5 x 22)	3
Profile seals	2
Strain relief strip DF3/DF4	1
PT screw (3.5 x 10)	2
Individual parts packed in transparent cover / Mounting kit is not contained in the standard scope of supply	

CAUTION!

Material thickness of control panel

Possible consequence: material damage

– The thickness of the material of the control panel should be at least 2 mm to ensure secure fixing

In the mounted state, the DULCOMETER® Compact Controller extends approx. 30 mm from the control panel.

Preparing the control panel

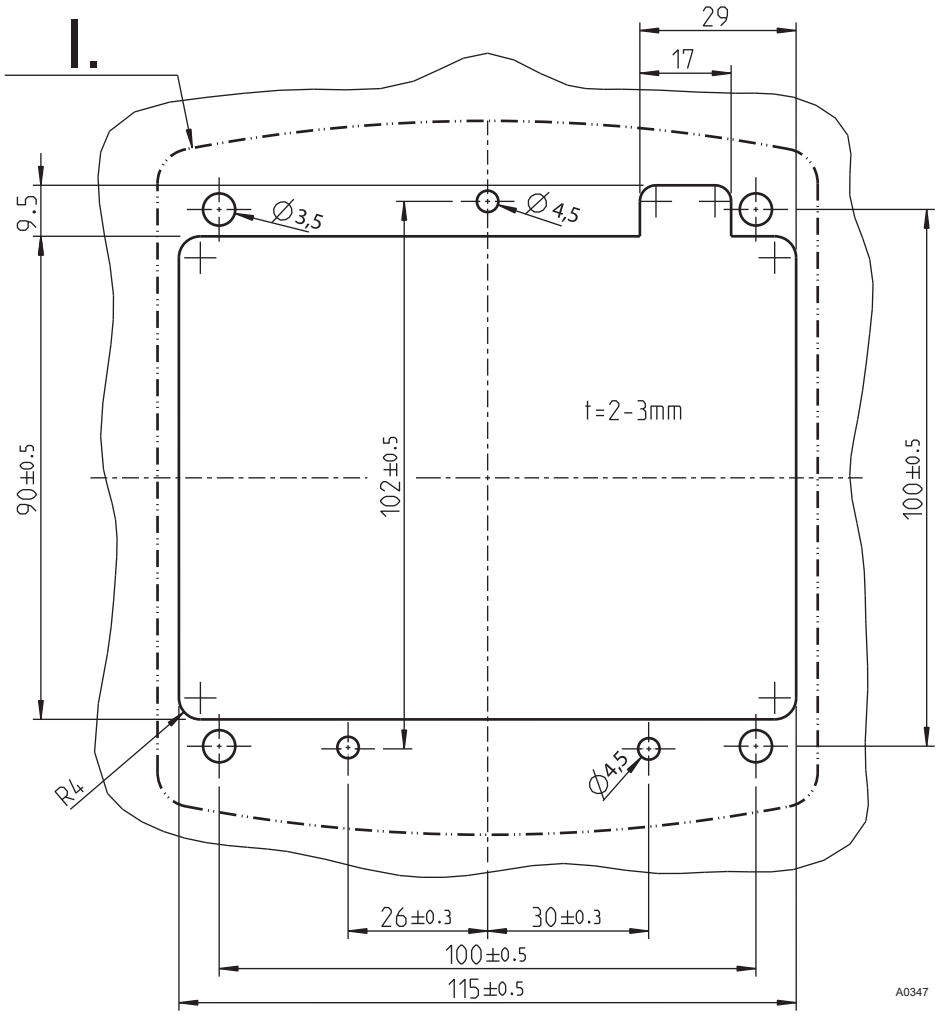

Fig. 7: The drawing is not to scale and is intended for information purposes only.

I. Outline contour of the DULCOMETER® Compact Controller housing

1. Mark the exact position of the DULCOMETER® Compact Controller on the control panel using the drilling template

2.

Core hole

Adhere to the 3.5 mm Ø as the core hole diameter for screwing in the fixing bolts.

Drill four holes for the bolts for the top section of the controller housing using a 3.5 mm Ø drill bit

3. Drill three holes for the bolts for the bottom section of the controller housing using a 4.5 mm Ø drill bit

4. Drill four holes using an 8 mm Ø drill bit and use a jigsaw to cut the cut-out

⇨ Deburr all the edges.

Fitting the DULCOMETER® Compact Controller into the cut-out in the control panel

NOTICE!

Ribbon cable base

The base for the ribbon cable is firmly soldered onto the PCB. The base cannot be removed. Open the base lock (3) to loosen the ribbon cable, see Fig. 8

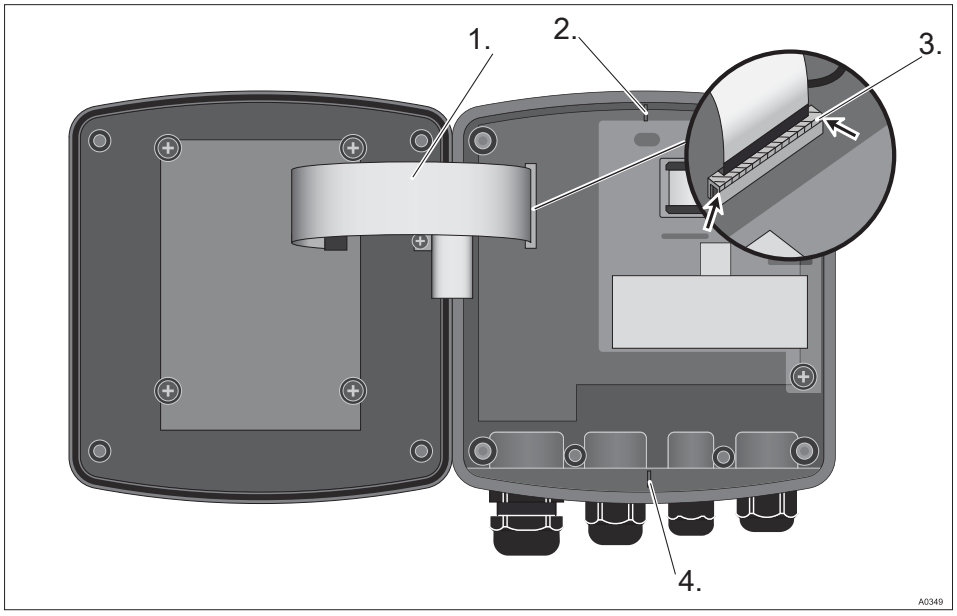

Fig. 8: Loosening the ribbon cable

1. Undo four screws and open the DULCOMETER® Compact Controller
2. Open the right and left lock (3) (arrows) on the base and pull the ribbon cable (1) out of the socket
3. Use pliers to break off the catches (2 and 4). These are not needed for control panel installation

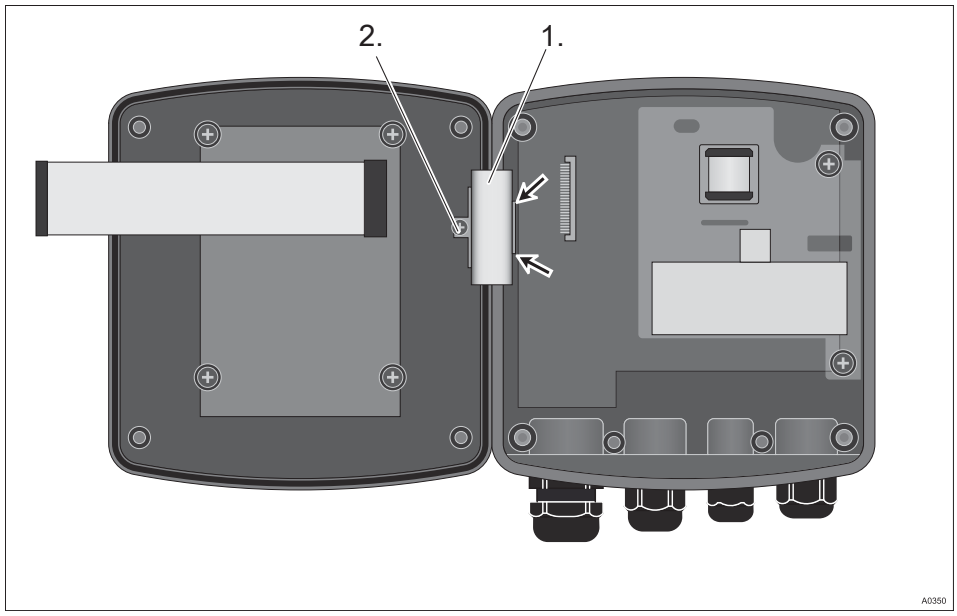

Fig. 9: Dismantle the hinge

4. Remove the screw (2), unclip the hinge (1) on the bottom section of the controller housing (arrows) and remove the hinge

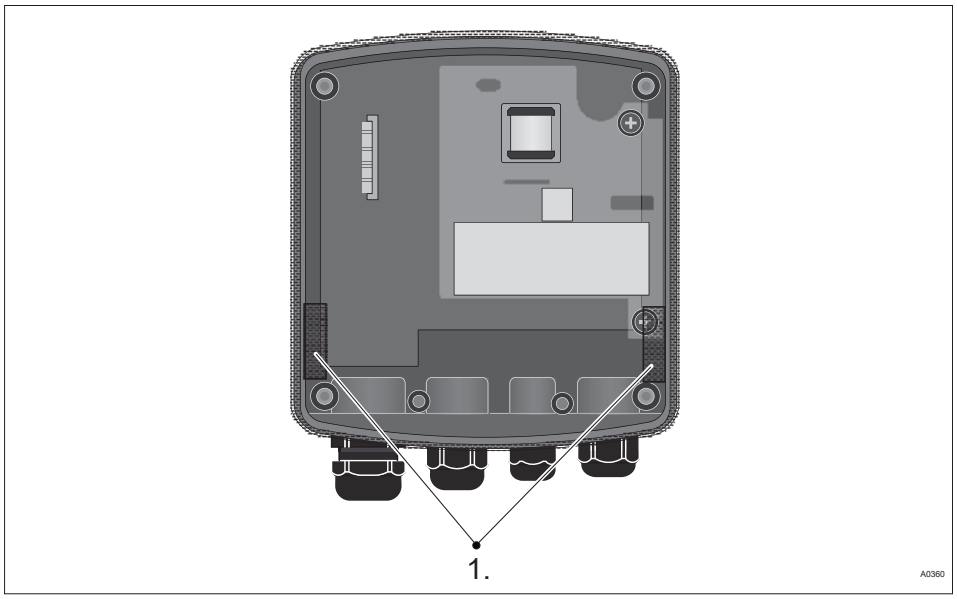

Fig. 10: Fitting the profile seal on the bottom section of the controller housing

5. Position the profile seal evenly around the upper edge of bottom section of the DULCOMETER® Compact Controller housing. Arrange the clips (1) as shown in the figure

   ⇨ Ensure that the profile seal evenly surrounds the upper edge of the housing.

6. Insert the bottom section of the DULCOMETER® Compact Controller housing with the profile seal from behind into the cut-out and use three screws to secure it in place

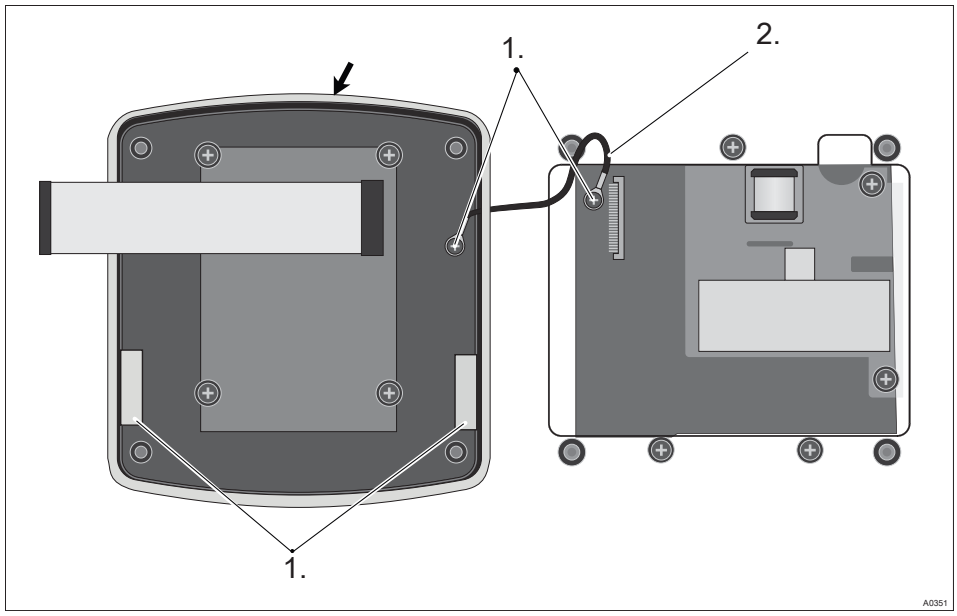

Fig. 11: Fitting the profile seal onto the top section of the controller housing

7. Position the profile seal (arrow) evenly into the groove in the top section of the DULCOMETER® Compact Controller housing. Arrange the clips (3) as shown in the figure

8. Secure the strain relief (2) using two screws (1)

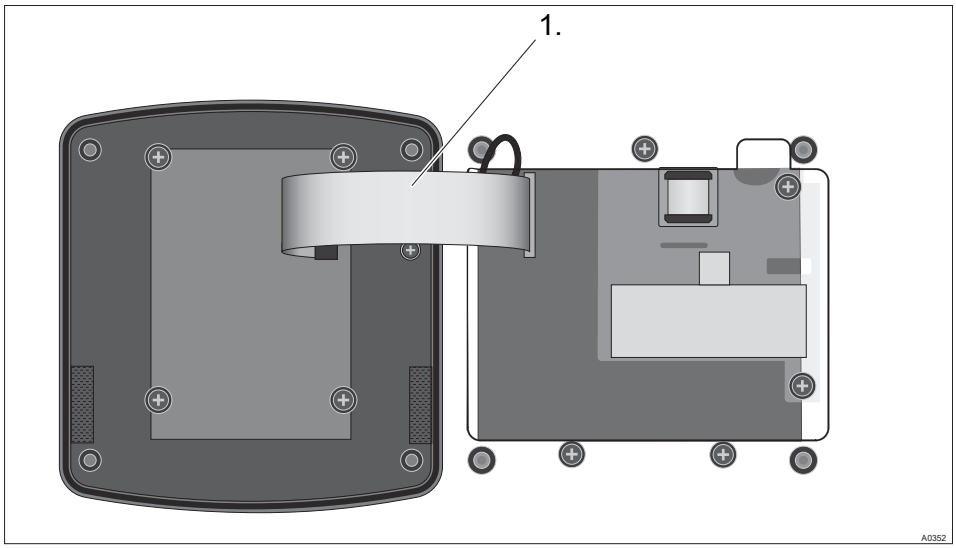

Fig. 12: Push and lock the ribbon cable in its base

9. Push and lock the ribbon cable (1) in its base
10. Screw the top section of the controller housing onto the bottom section of the DULCOMETER® Compact Controller housing
11. Once again check that the profile seals are fitted properly
    ⇨ IP 54 degree of protection can only be provided if the control panel is mounted correctly

5.3 Installation (electrical)

WARNING!

Live parts!

Possible consequence: Fatal or very serious injuries

- Measure: Disconnect the electrical power supply to the device before opening the housing and secure to prevent unintentional reconnection
- Disconnect damaged or defective devices or devices that have been tampered with and prevent unintended reconnection
- The provision of a suitable isolating device (emergency-off switch, etc.) is the responsibility of the plant operator

The signal leads of the DULCOMETER® Compact Controller must not be routed alongside interference-prone cabling. Faults could lead to malfunctions of the DULCOMETER® Compact Controller.

5.3.1 Cable Cross-Sections and Cable End Sleeves

	Minimum cross-section	Maximum cross-section	Stripped insulation length
Without cable end sleeve	0.25 mm^2	1.5 mm^2	
Cable end sleeve without insulation	0.20 mm^2	1.0 mm^2	8 - 9 mm
Cable end sleeve with insulation	0.20 mm^2	1.0 mm^2	10 - 11 mm

5.3.2 Installation of coaxial cable to guard terminal XE1

CAUTION!

Maximum length of the coaxial cable 10 m

Incorrect measured value due to too long a coaxial cable

Possible consequence: Slight or minor injuries, material damage.

The maximum length of the coaxial cable may not exceed 10 m when using redox or pH sensors. The measurement signal can otherwise be falsified by the effects of interference.

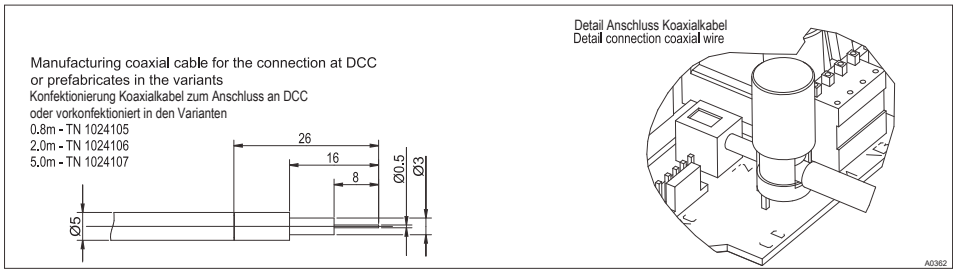

Fig. 13: Installation of Coaxial Cable to Guard Terminal XE1

When installing the coaxial cable for the guard terminal XE 1, the lengths of insulation to be removed from the coaxial cable must be adhered to. The guard terminal *'is tightened'* by hand.

5.3.2.1 Terminal diagram / wiring

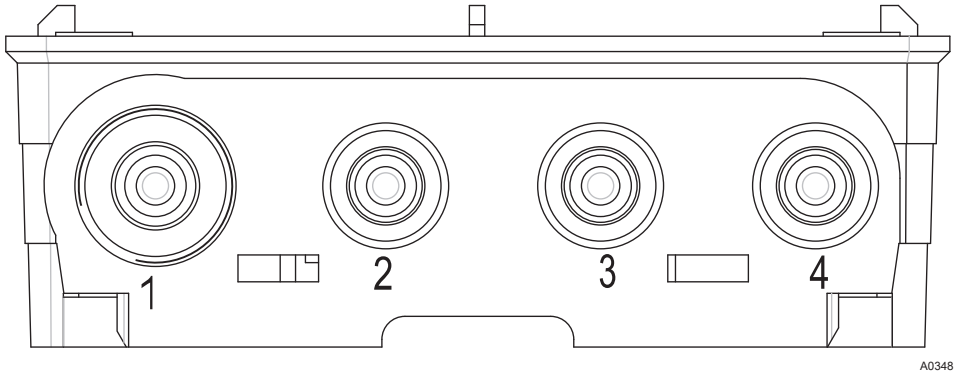

Fig. 14: Threaded connector number

Wiring

Threaded connector no. Size	Description	Terminal Description	Terminal number	Pol	Function	Recommended cable ⌀	Remarks
1 / M20	ph/redox Input 1		XE 1	Ref. El.	pH/ redox sensor	⌀ 5	Guide cable through multiple M20 / 2x**5** mm seal inserts
			XE 2	meas. sig			
	Temp. input Pt 1000	XE 4	1	+	Temp. sensor	⌀ 5	
			2	-			
2 / M16	Wire jumper **or** potential equaliser	XE 3			] Short circuit	⌀ 4,5 *	Guide 4-core cable through multiple M 16 / 2x**4,5** mm seal inserts
		XE 3	1	free	Potential equaliser***		

Threaded connector no. Size	Description	Terminal Description	Terminal number	Pol	Function	Recommended cable ⌀	Remarks
			2	Ref. volt.			
	Standard signal output	XA 1	1	+ 15 V	e.g. recorder / actuator		
			2	-			
	Contact input	XK 1	1	+	Pause	⌀ 4,5 *	Guide 4-core cable through multiple M 16 / 2x**4,5** mm seal inserts
			2	-			
	Relay output (f-relay)	XR 2	1		Frequency controlled metering pump		
			2				
*** To achieve protection class IP 67 please use original Prominent cable, part number 1036759**							
***** When using as a potential equaliser, the short circuit bridge ⌋ must be removed!**							
3 / M16	Relay output **or** Relay output **or** Relay output (P-relay)	XR1	1	COM	Solenoid valve / metering pump ** raise / lower	⌀ 5	Guide cable through single M16 seal insert
			2	NO			
		XR1	1	COM	Limit relay		
			2	NO			
		XR1	1	COM	Alarm relay		
			3	NC			

Threaded connector no. Size	Description	Terminal Description	Terminal number	Pol	Function	Recommended cable ⌀	Remarks
** An RC suppressor must be connected (not part of the scope of delivery)							
4 M16	Mains connection	XP 1	1	N	85 ... 253 V eff.	⌀ 6,5	Guide cable through single M16 seal insert
			2	L			

Legend to the "Wiring" table

Abbreviation	Meaning
Pol.	Polarity
Ref. El.	Reference electrode
meas sig.	Measurement signal (glass electrode)
Ref. pot.	Internal reference potential
f-relay	Pump frequency relay
P-relay	Power relay
COM	Common relay contact (root)
NO	Contact *'normally opened'*
NC	Contact *'normally closed'*

Terminal diagram

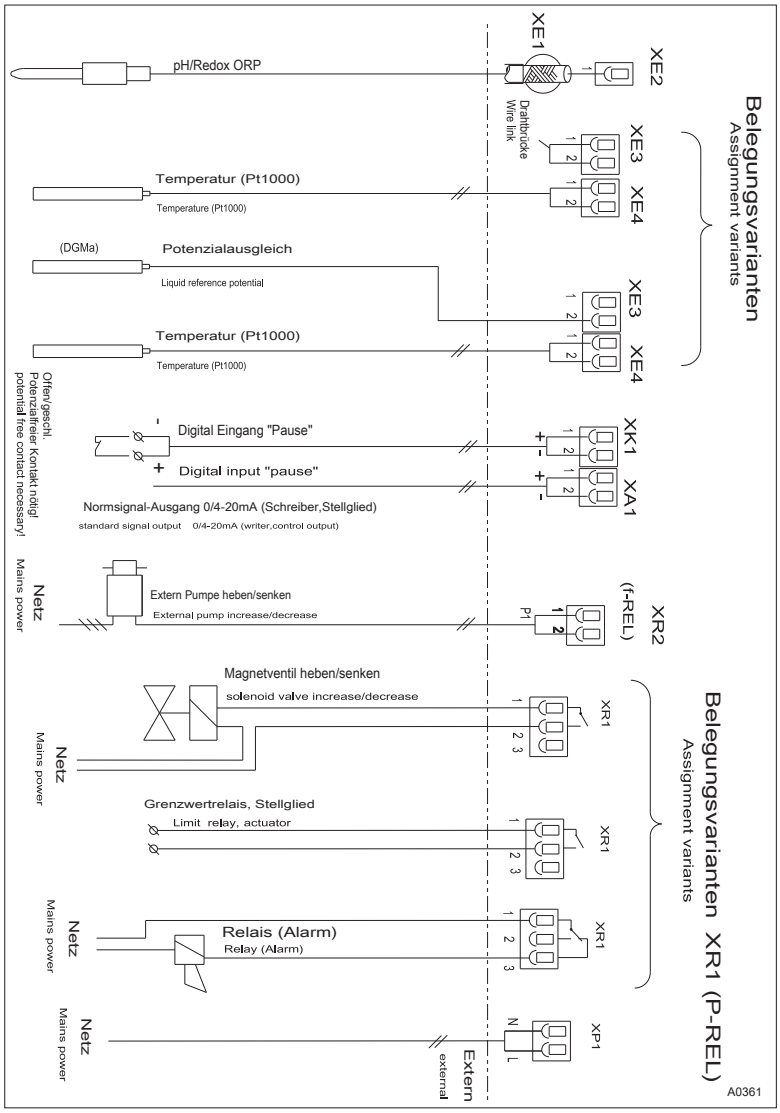

Fig. 15: Terminal diagram

5.3.3 Installation (electrical)

The cable must be routed in a site-provided cable duct to ensure strain relief

1. Undo the four housing screws
2. Slightly lift the controller housing top section forwards and fold it to the left

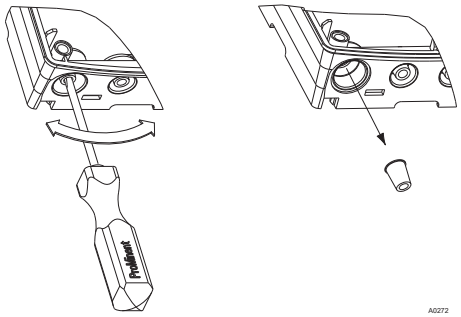

Fig. 16: Punch out threaded holes

3. *Large threaded connection (M 20 x 1.5)*

   Small threaded connection (M 16 x 1.5)

   Punch out as many threaded connections on the bottom side of the controller housing bottom section as required
4. Guide the cable into the respective reducing inserts.
5. Insert the reducing inserts into the threaded connectors
6. Guide the cable into the controller.
7. Connect the cable as indicated in the terminal diagram
8. Screw the required threaded connections in and tighten
9. Tighten the clamping nuts of the threaded connections so that they are properly sealed
10. Click the controller housing top section on to the controller housing bottom section
11. Manually tighten the housing screws
12. Once again check the seating of the seal. Only if the mounting is correct, is protection class IP 67 (wall/pipe mounting) or IP 54 (control panel mounting) achieved

5.4 Switching of inductive loads

If you connect an inductive load, i.e. a consumer which uses a coil (e.g. an alpha motorised pump), then you must protect your controller with a protective circuit. If in doubt, consult an electrical technician for advice.

The RC member protective circuit is a simple, but nevertheless very effective, circuit. This circuit is also referred to as a snubber or Boucherot member. It is primarily used to protect switching contacts.

When switching off, the connection in series of a resistor and capacitor means that the current can be dissipated in a damped oscillation.

Also when switching on, the resistor acts as a current limiter for the capacitor charging process. The RC member protective circuit is highly suitable for AC voltage supplies.

The magnitude of the resistance R of the RC member is determined according to the following equation:

$R=U/I_L$

(Where U= Voltage across the load and I_L = current through the load)

The magnitude of the capacitor is determined using the following equation:

$C=k * I_L$

k=0,1...2 (dependent on the application).

Only use capacitors of class X2.

Units: R = Ohm; U = Volt; I_L = Ampere; C = µF

If consumers are connected which have a high starting current (e.g. plug-in, switched mains power supplies), then a means of limiting the starting current must be provided.

The switching-off process can be investigated and documented using an oscilloscope. The voltage peak at the switch contact depends on the selected RC combination.

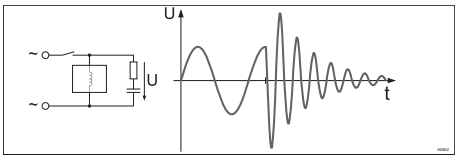

Fig. 17: Switching-off process shown on the oscillogram.

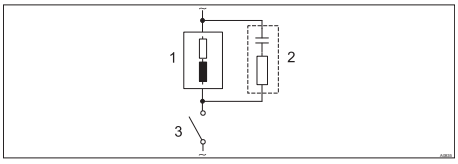

Fig. 18: RC protective circuit for the relay contacts

Typical AC current application with an inductive load:

- 1) Load (e.g. alpha motor-driven pump)
- 2) RC-protective circuit
  - Typical RC protective circuit at 230 V AC:
  - Capacitor *[0.22µF/X2]*
  - Resistance *[100 Ohm / 1 W]* (metal oxide (pulse resistant))
- 3) Relay contact (XR1, XR2, XR3)

6 Commissioning

- **Users' qualification:** trained user, see *Chapter 2.2 'Users' qualifications' on page 10*

WARNING!

Sensor run-in periods

This can result in hazardous incorrect metering

– Correct measuring and metering is only possible if the sensor is working perfectly
– Please read the operating manual for the sensor
– The sensor must be calibrated after commissioning

Following completion of mechanical and electrical assembly, the DULCOMETER® Compact Controller should be integrated into the measuring point.

6.1 Initial commissioning

When first switching on the DULCOMETER® Compact Controller the DULCOMETER® Compact Controller is in a STOP state.

Selection of the measurement variable, controller setting and setting of the various, process-dependent, parameters takes place next. *Chapter 8 'Operating menus for the measured variables pH and ORP' on page 48*.

6.2 Selection of the measured variable

The pH and redox measurement variables are set in the *'INPUT'* menu.

NOTICE!

Reset to factory settings

If you set or switch the measurement variable, all parameters in the controller are reset to the factory settings for the selected measurement variable.

You must then reset all the controller functions.

6.3 Setting the controller during commissioning

NOTICE!

Reset to factory settings

When switching over the metering direction, all actuators in the DULCOMETER® Compact Controller are reset to the factory settings for the selected metering direction.

For safety reasons, all actuators are deactivated. The base load is reset to 0 %. All parameters relating to the actuator, are reset to the factory setting.

Consequently all parameters relating to the actuator, must be reset.

The DULCOMETER® Compact Controller only controls *'one-way'*. Only one position or one negative control variable can be calculated. The direction of the control variable is set in the *'PUMP'* menu. There is no dead zone. In this sense, control cannot be *'switched off'* (except with *'STOP'* or *'PAUSE'*).

The value of the P-proportion of the control (Xp) is specified with the DULCOMETER® Compact Controller in the units of the corresponding measurement variable (e.g. 1.5 pH).

For pure P-control and a separation between the set and actual values, which corresponds to the Xp value, the calculated control variable is +100 % (with the setting *'raise'*) or -100 % (with the setting *'lower'*).

7 Operating diagram

7.1 Overview of equipment/Control elements

- **User qualification:** instructed user, see *Chapter 2.2 'Users' qualifications' on page 10*

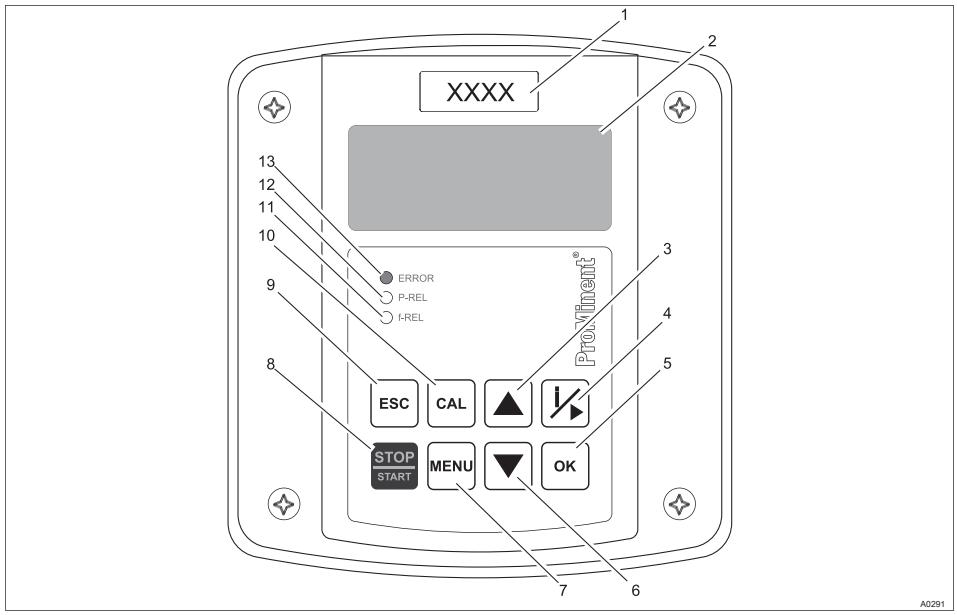

Fig. 19: Overview of equipment/Control elements

Function	Description
1st respective measured variable	Affix the measured variable label here
2. LCD display	
3. UP key	Too increase a displayed number value and to jump upwards in the operating menu
4. INFO/RIGHT key	Opens the info menu or moves the cursor one place to the right

Function	Description
5. OK key	To apply, confirm or save a displayed value or status or to acknowledge an alarm
6. DOWN key	Too decrease a displayed number value and to jump down in the operating menu
7. MENU key	Accesses the controller operating menu
8. STOP/START key	Starts and stops control and metering function
9. ESC key	Jumps a level back in the operating menu, without storage or changing entries or values
10. CAL key	For accessing the calibration menu and navigating within the calibration menu.
11. f-REL LED	Shows the activated state of the f-relay
12. P-REL LED	Shows the activated state of the P-relay
13. ERROR LED	Indicates a controller error state. A text message is displayed simultaneously in the LCD continuous display

7.2 Adjusting display contrast

If the DULCOMETER® Compact Controller is set to *'continuous display'* , you can set the contrast of the LCD-display. By pressing the ▲ key you can adjust the LCD display contrast so it is darker. By pressing the ▼ key you can adjust the LCD display contrast so it is lighter. Here each key press represents a contrast level. I.e. the key must be pressed once for each contrast level.

7.3 Continuous display

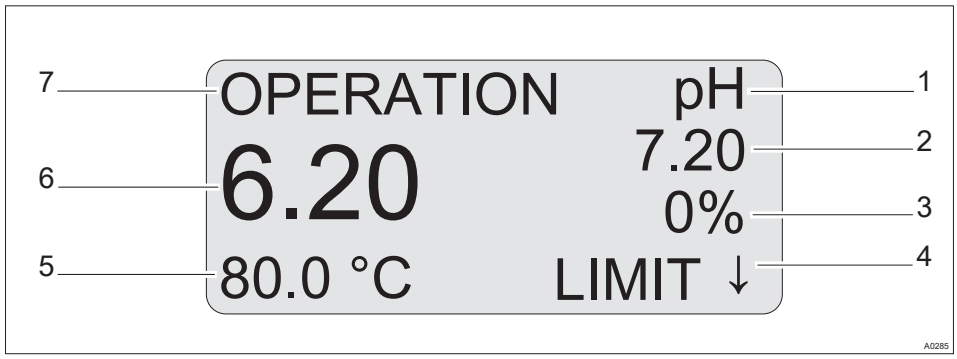

Fig. 20: Continuous display

1 Measured variable
2 Setpoint
3 Control variable
4 Possible error text: e.g. "Limit↓" (Direction of the limit value transgression, e.g. here lower limit value transgression)
5 Temperature (Correction variable)
6 Measured value (actual value)
7 Mode

7.4 Info display

In the info display, the most important parameters for each menu item of the first menu level are displayed.

Access to the info display from the continuous display is by pressing the key. Pressing the key again calls the next info display. Pressing the ESC key recalls the continuous display again.

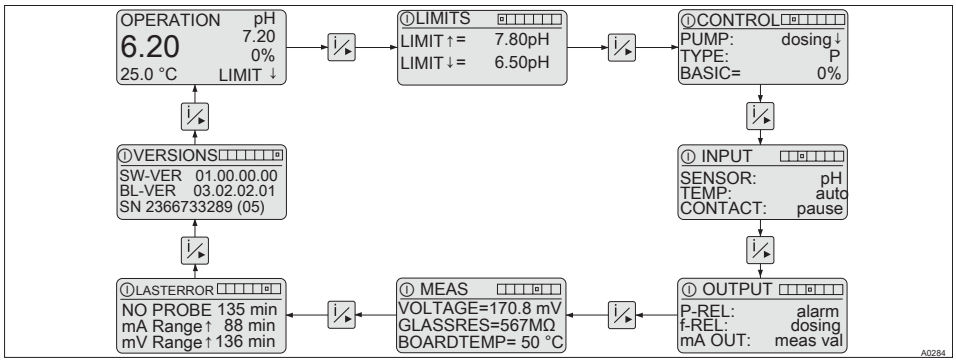

Fig. 21: Info display

Using the OK key you can jump from the currently displayed info display directly to the selection menu of this info display.

Using the ESC key you can jump back to the info display.

Info display "MEAS"

The "MEAS" info display shows the following measured values:

- *[VOLTAGE]: currently measured sensor mV value*
- *[GLASSRES]: measured glass resistance of connected pH sensors for media temperatures of 15 °C to 80 °C. The displayed value is only valid when used with ProMinent pH sensors*
- *[BOARDTEMP]: Current housing interior temperature*

7.5 Password

Access to the setting menu can be limited using a password. The DULCOMETER® Compact Controller is supplied with the password *'5000'*. Using the preset password *'5000'* the DULCOMETER® Compact Controller is setup so that all menus can be accessed without any limitations.

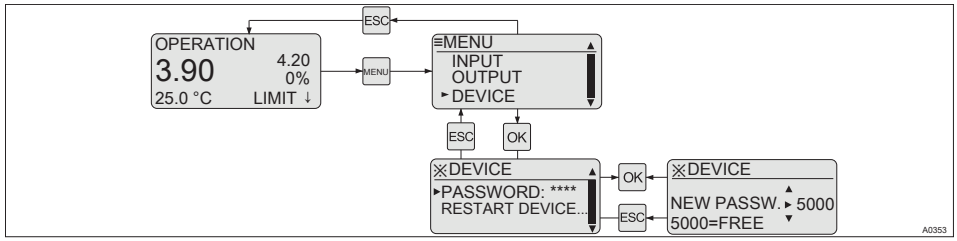

Fig. 22: Password setting

Password	Possible values			
Factory setting	Increment	Lower value	Upper value	Remarks
5000	1	0000	9999	5000 = *[FREE]*

8 Operating menus for the measured variables pH and ORP

- **User qualification:** instructed user, see *Chapter 2.2 'Users' qualifications' on page 10*

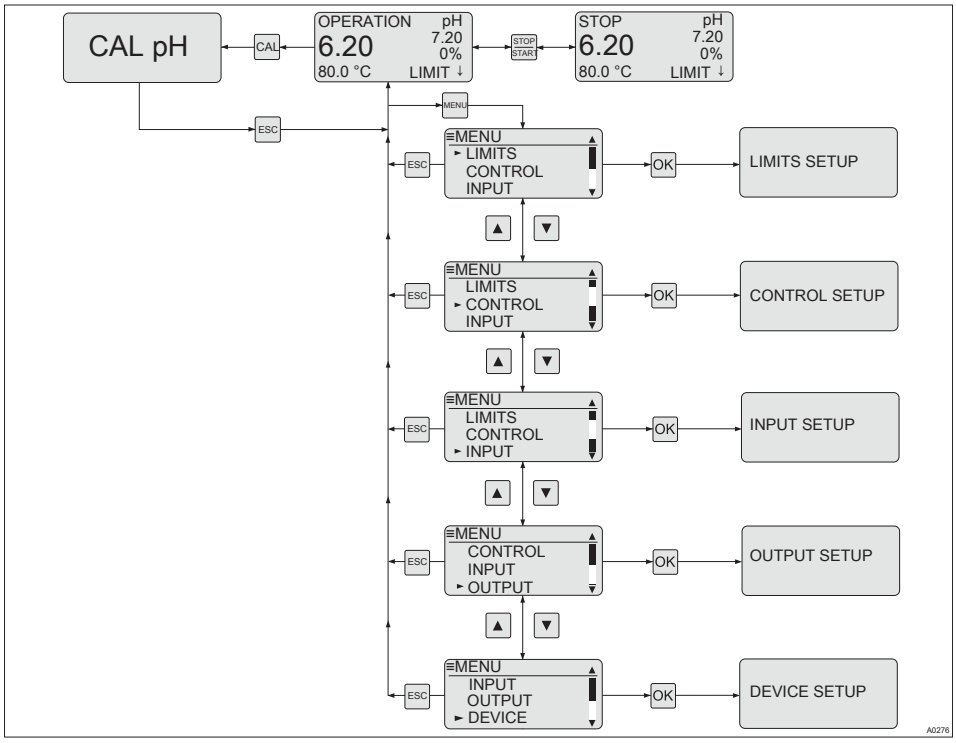

Fig. 23: Operating menu overview

8.1 pH sensor calibration (CAL)

Correct sensor operation

- *Correct measuring and metering is only possible if the sensor is working perfectly*
- *Observe the sensor operating instructions*
- *The carrying out of a 2-point calibration is strongly recommended and is to be preferred to a single point calibration*

During calibration, the DULCOMETER® Compact Controller sets the control outputs to *'0'*. Exception to this: a basic load or a manual control variable has been set. This remains active. The mA standard signal output is frozen.

When calibration/testing has been completed successfully, all of the error checks relating to the reading are restarted. The DULCOMETER® Compact Controller saves all the determined data for zero point and slope when the calibration is successful.

Used buffer

Dispose of the used buffer solution. Related info: see buffer solution safety data sheet.

Setting		Possible values			
	Starting value	Increment	Lower value	Upper value	Remarks
Buffer temperature	Measured value	0.1 °C	0 °C	120 °C	The temperature can only be adjusted under *'TEMP'* *'auto'* or *'manual'*
Buffer values	Start value = 7.00 pH (ZERO) 4.00 pH (SLOPE)	0.01 pH	0.00 pH	14.00 pH	Limit value ZERO = 6..8 pH Limit value SLOPE = < 6 pH; > 8 pH

2-Point Calibration

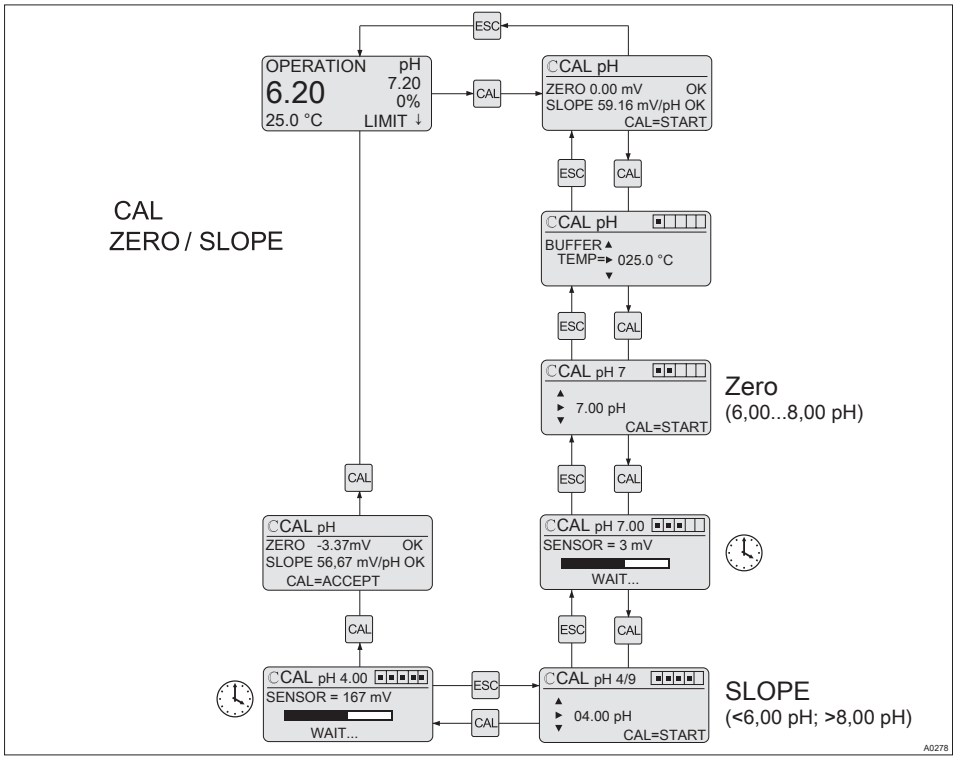

Fig. 24: 2-Point calibration pH sensor

Valid calibration values

Valid calibration:

- *Zero point -60 mV…+60 mV*
- *Slope 40 mV/pH…65 mV/pH*

Two test containers with a buffer solution are required for calibration. The pH value of the buffer solutions should be at least 1.5 pH units apart. Thoroughly rinse the sensor with water when changing the buffer solution.

1. Select the calibration menu CAL
2. Start the calibration CAL
3. If temperature has been selected (only if *'TEMP'* is set to *'auto'* or *'manual'*), then set the buffer temperature with the keys ▲, ▼ and 1/x
4. Confirm the entry by pressing the OK key
5. Set the pH-value of the buffer *'ZERO'* using the keys ▲, ▼ and 1/x
6. Immerse sensor in the buffer solution containing test container 1 (e.g. pH 7). In so doing, slightly move the sensor
7. Then press CAL
   ⇨ Calibration is running 🕘.
8. Then press CAL to accept the value
   ⇨ if CAL=ACCEPT is shown in the display and the displayed mV value is stable.
9. Remove the sensor from the buffer solution, rinse thoroughly in water and then dry with a cloth (pad dry, don't rub!)
10. Set the pH-value of the buffer *'SLOPE'* using the keys ▲, ▼ and 1/x
11. Immerse sensor in the buffer solution containing test container 2 (e.g. pH 4). In so doing, slightly move the sensor
12. Then press CAL
    ⇨ Calibration is running 🕘.
13. Then press CAL to accept the value
    ⇨ if CAL=ACCEPT is shown in the display and the displayed mV value is stable.
14. The determined values for the zero point and slope are displayed

⇨ The calibration is now saved as successful if the values for *'ZERO'* and *'SLOPE'* are both *'OK'*.

Incorrect calibration

Should the result of the calibration lie outside the specified tolerance limits, an error message appears 'ERR'. In this case the current calibration will not be applied.

Check the prerequisites for the calibration and clear the error. Then repeat the calibration

15. Then press CAL to confirm the result or to terminate the calibration (if necessary, as unsuccessful)

1-Point slope calibration

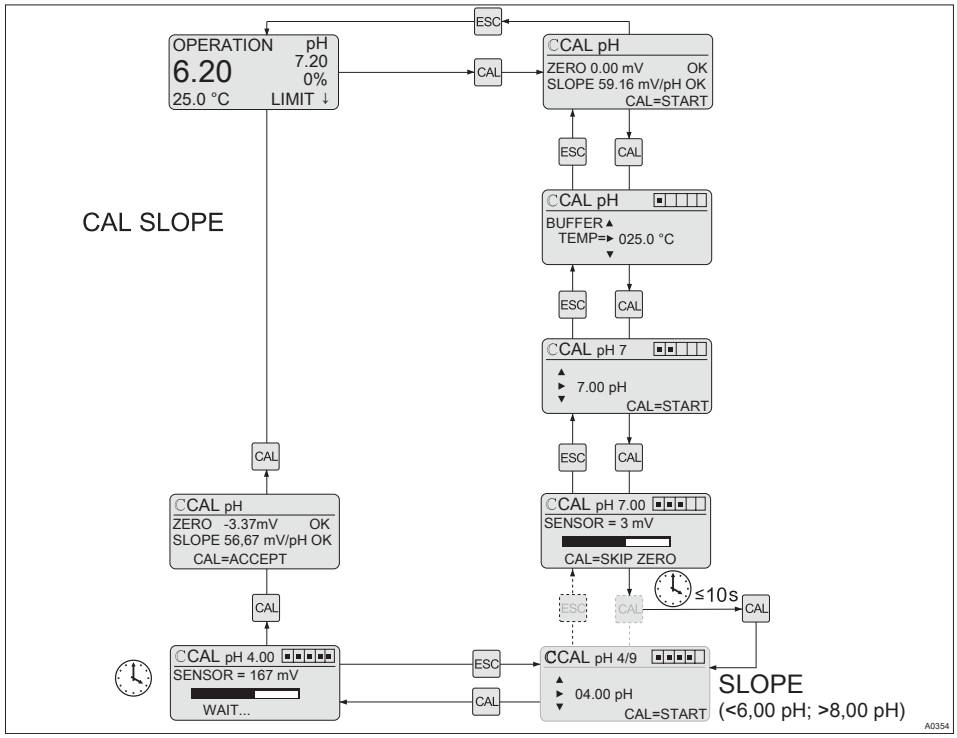

Fig. 25: Single point slope calibration

Valid calibration values

Valid calibration:

– *Slope 40 mV/pH…65 mV/pH*

One test container with a buffer solution is required for calibration. Again with the single point calibration the buffer values for *'ZERO'* and *'SLOPE'* must be at least 1.5 pH units apart. If these buffer values are not recognised, then you must carry out a 2-point calibration.

1. Select the calibration menu CAL
2. Start the calibration CAL

3. If temperature has been selected (only if *'TEMP'* is set to *'auto'* or *'manual'*), then set the buffer temperature with the keys ▲, ▼ and 1/x

4. Confirm the entry by pressing the OK key or CAL key

5. Do not set the pH-value of the buffer *'ZERO'* . Press the CAL key to confirm and if *'CAL=SKIP ZERO'* appears (within no more than 10 s), press the CAL key again

   ⇨ You have skipped the zero point calibration and are now in the slope calibration screen

6. Set the pH-value of the buffer *'SLOPE'* using the keys ▲, ▼ and 1/x

7. Immerse sensor in the buffer solution containing test container (e.g. pH 4). In so doing, slightly move the sensor

8. Then press CAL

   ⇨ Calibration is running 🕘.

9. Then press CAL to accept the value

10. The determined values for the zero point and slope are displayed

    ⇨ The calibration is now saved as successful if the values for *'ZERO'* and *'SLOPE'* are both *'OK'*.

> ***Incorrect calibration***
>
> *Should the result of the calibration lie outside the specified tolerance limits, an error message appears 'ERR'. In this case the current calibration will not be applied.*
>
> *Check the prerequisites for the calibration and clear the error. Then repeat the calibration*

11. Then press CAL to confirm the result or to terminate the calibration (if necessary, as unsuccessful)

Single point zero point calibration

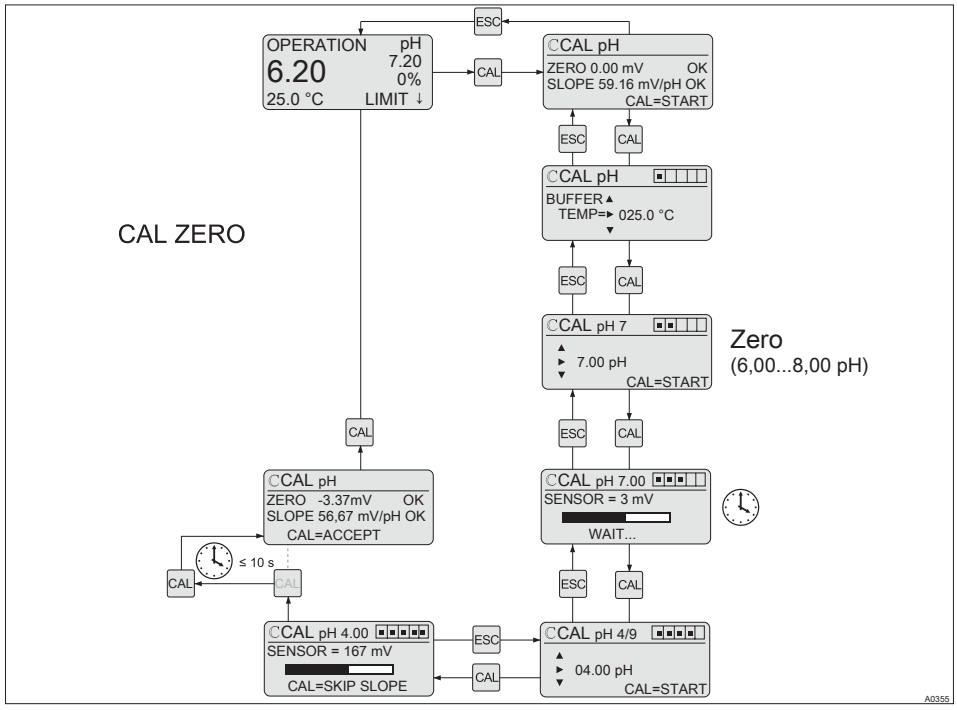

Fig. 26: Single point zero point calibration

Valid calibration values

Valid calibration:

– *Zero point -60 mV…+60 mV*

One test container with a buffer solution is required for calibration. Again with the single point calibration the buffer values for *'ZERO'* and *'SLOPE'* must be at least 1.5 pH units apart. If these buffer values are not recognised, then you must carry out a 2-point calibration.

1. Select the calibration menu CAL
2. Start the calibration CAL

3. If temperature has been selected (only if *'TEMP'* is set to *'auto'* or *'manual'*), then set the buffer temperature with the keys ▲, ▼ and 1/x
4. Confirm the entry by pressing the OK key again
5. Set the pH-value of the buffer *'ZERO'* using the keys ▲, ▼ and 1/x
6. Immerse sensor in the buffer solution containing test container (e.g. pH 7). In so doing, slightly move the sensor
7. Then press CAL
   ⇨ Calibration is running.
8. Then press CAL to accept the value
9. Do not set the pH-value of the buffer *'SLOPE'*. Press the CAL key to confirm and if *'CAL=SKIP SLOPE'* appears (within no more than 10 s), press the CAL key again
   ⇨ The calibration is now saved as successful if the values for *'ZERO'* and *'SLOPE'* are both *'OK'*.

Incorrect calibration

Should the result of the calibration lie outside the specified tolerance limits, an error message appears 'ERR'. In this case the current calibration will not be applied.

Check the prerequisites for the calibration and clear the error. Then repeat the calibration

10. Then press CAL to confirm the result or to terminate the calibration (if necessary, as unsuccessful)

8.2 Redox sensor calibration (CAL)

Redox sensor calibration

The redox sensor cannot be calibrated. It is only possible to set an 'OFFSET' of the order of ± 40 mV and then make a comparison using this value. Should the redox sensor differ by more than ± 40 mV from the reference value, then it must be checked in accordance with the requirements of the sensor operating instructions.

Correct sensor operation

– *Correct measuring and metering is only possible if the sensor is working perfectly*
– *Observe the sensor operating instructions*

During the calibration: the DULCOMETER® Compact Controller sets the control outputs to *'0'*. Exception to this: a basic load or a manual control variable has been set. This remains active. The mA standard signal output is frozen.

Used buffer

Dispose of the used buffer solution. Related info: see buffer solution safety data sheet.

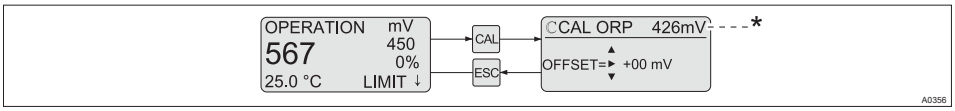

*Fig. 27: Redox sensor calibration (CAL) * corrected value*

A container with a redox buffer solution (e.g. 465 mV) is needed for testing.

1. Select the Test menu CAL
2. Immerse redox sensor in the redox buffer solution containing test container (e.g. 465 mV)
3. Wait until the mV value has stabilised
4. Adjust the displayed mV values using the keys ▲, ▼ and ↵ to the mV value of the redox buffer solution in the test container. Confirm the value by pressing CAL . The OFFSET value is transferred into the measuring parameters

   ⇨ ESC quits the test menu without transferring the OFFSET value into the measuring parameters.
5. If the redox sensor is unclean or defective, it must be cleaned as described in the redox sensor operating instructions, or alternatively replaced

8.3 Setting limit values *[LIMITS]*

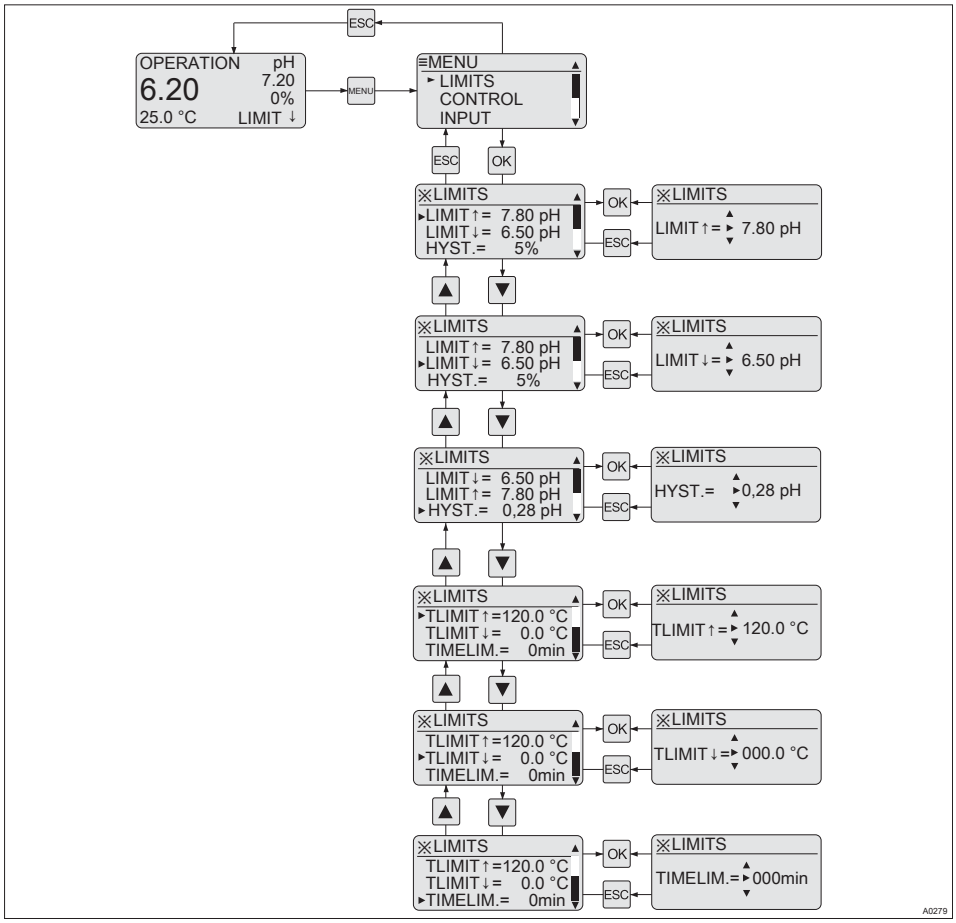

Fig. 28: Setting limit values [LIMITS]

Setting		Possible values			
Display	Starting value	Increment	Lower value	Upper value	Remark
[LIMIT ↑ pH]	8.50 pH	0.01 pH	0.00	14.00	upper pH limit value
[LIMIT ↓ pH]	6.50 pH	0.01 pH	0.00	14.00	lower pH limit value
[LIMIT ↑ ORP]	800	1 mV	-1000 mV	1000 mV	upper ORP limit value
[LIMIT ↑ ORP]	600	1 mV	-1000 mV	1000 mV	lower ORP limit value
[HYST.]	0.28 pH	0.01 pH	0.00	14.00	hysteresis for pH
	20 mV	1 mV	-1000 mV	1000 mV	hysteresis for ORP
[TLIMIT ↑ °C]	120.0 °C	0.1 °C	0.0 °C	120.0 °C	upper limit correction value °C
[TLIMIT ↓ °C]	0.0 °C	0.1 °C	0.0 °C	120.0 °C	lower limit correction value °C
[TLIMIT ↑ °F]	248.0 °F	0.1 °F	32.0 °F	248.0 °F	upper limit correction value °F
[TLIMIT ↓ °F]	32.0 °F	0.1 °F	32.0 °F	248.0 °F	lower limit correction value °F
[TIMELIM.]	0 min = OFF	1 minute	0	999	Checktime after a limit value has been exceeded or undershot pH / ORP

Hysteresis = *[HYST.]*

If the value has fallen below a limit value, then the limit value criteria are reset when the measured value has reached the value of the limit value plus hysteresis.

If the value has fallen below a limit value, then the limit value criteria are reset when the measured value has reached the value of the limit value minus hysteresis.

If the limit value criteria no longer exist on expiry of *[TIMELIM]* , then the control is automatically reactivated.

8.4 Setting the control *[CONTROL]*

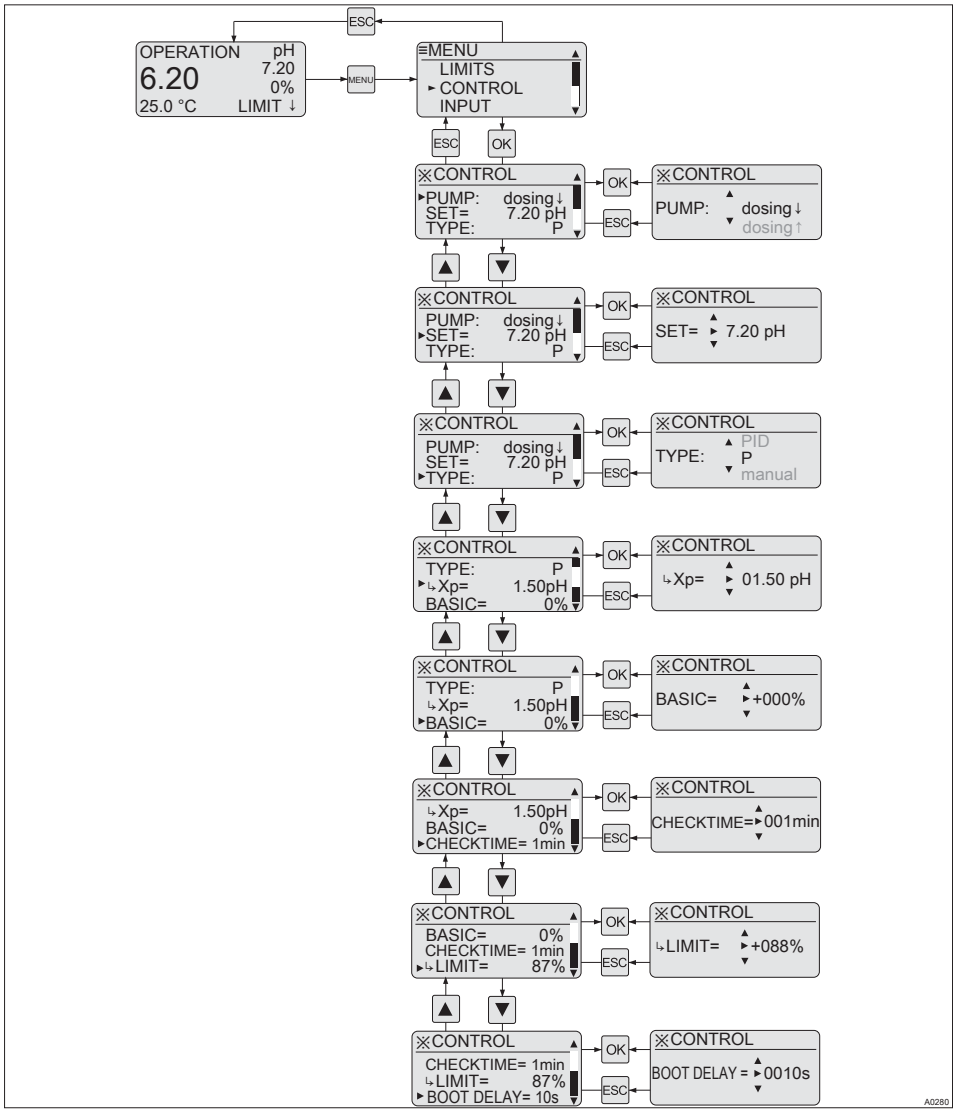

Fig. 29: Setting the control [CONTROL]

Setting		Possible values			
	Starting value	Increment	Lower value	Upper value	Remark
[PUMP]	dosing ↓	dosing ↓ dosing ↑			Mono-directional control direction [2]
[SET]	7.20 pH	0.01 pH	0.00 pH	14.00 pH	pH setpoint
[SET]	750 mV	1 mV	-1000 mV	1000 mV	ORP voltage set-point
[TYPE]	P	P Manual PID			Controller type
[↳Xp]	1.50 pH	0.01 pH	0.01 pH	70.00 pH	P-proportion of the pH control variable
[↳Xp]	100 mV	1 mV	1 mV	3000 mV	P-proportion of the ORP control variable
[↳Ti]	0 s	1 s	0 s	9999 s	PID control integral action time (0 seconds = no I-proportion)
[↳Td]	0 s	1 s	0 s	2500 s	PID control derivative action time (0 seconds = no D-proportion)
[BASIC] [1]	0%	1%	- 100%	100%	Basic load
[↳MANUAL] [1]	0%	1%	- 100%	100%	Manual control value
[CHECK-TIME]	0 min	1 min	0 min	999 min	Control checktime 0 minutes = off

Setting		Possible values			
	Starting value	Increment	Lower value	Upper value	Remark
[↳LIMIT][1]	0%	1%	- 100%	100%	Checktime limit. No basic load, only PID control value
[BOOT DELAY]	0 s	1 s	0 s	9999 s	Control delay period after the start of the meas-uring point. After it is switched on, the unit only meas-ures but does not control during this period.

1 = in an upwards direction with mono-directional control: 0 .. +100% (setting with PUMP: dosing↑), in a downwards direction: -100..0% (setting with PUMP: dosing↓).

2 = When switching over the metering direction, all actuators in the DULCOMETER® Compact Controller are reset to the factory settings for the selected metering direction.

8.5 Input setting (INPUT)

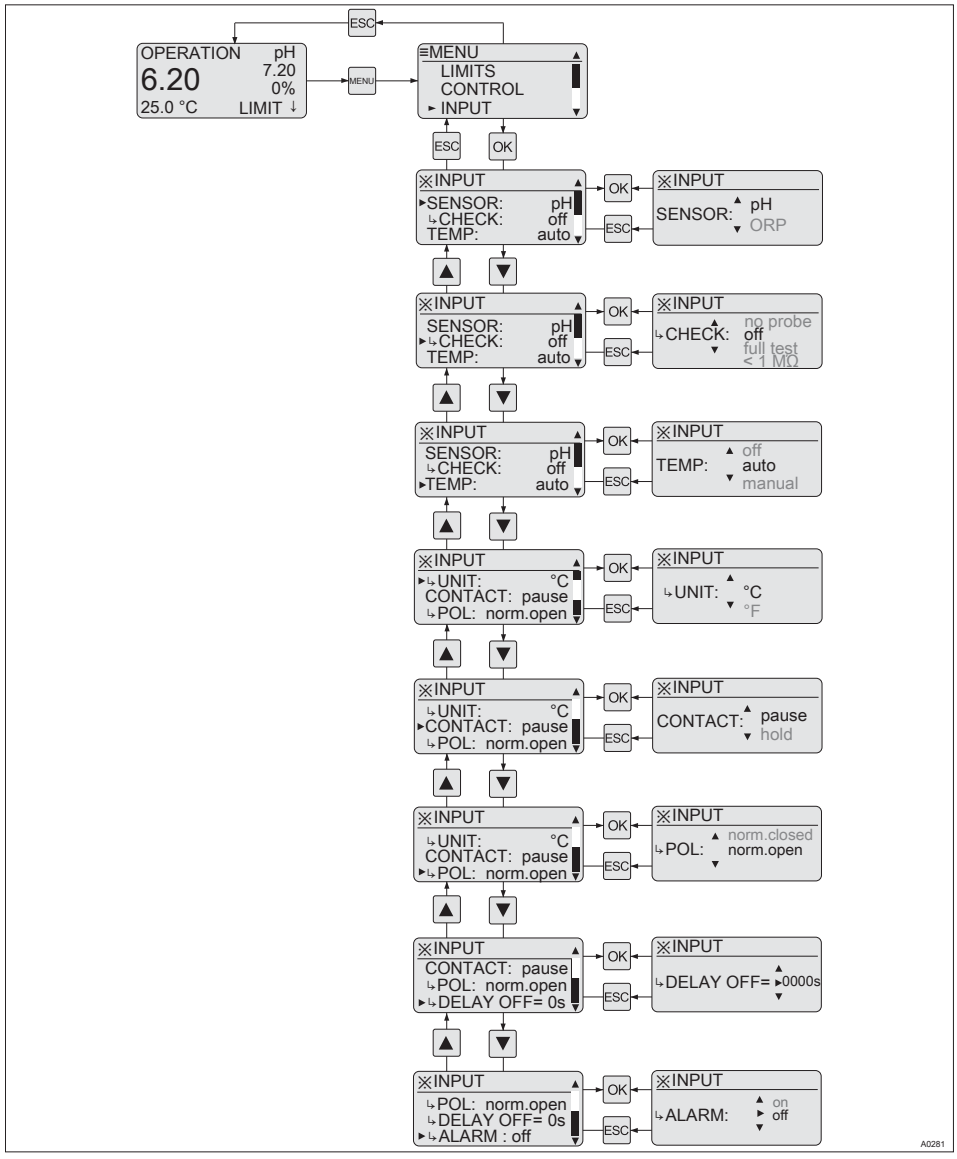

Fig. 30: Input setting (INPUT)

Setting		Possible values			
Display	Starting value	Increment	Lower value	Upper value	Remarks
Sensor	pH	pH			Process variables switchover pH <--> redox [1.]
		ORP			
↳CHECK	off	off			Sensor monitoring *'off'*
		< 1 MΩ			Sensor break check (glass break)
		no probe			Check for presence
		full test			Check for sensor break and presence
TEMP	off	auto			Pt 1000
		manual			manual
		off			Correction off
↳UNIT	°C	°C			Correction variable unit
		°F			
↳VALUE	25.0 °C	0.1 °C	0.0 °C	120.0 °C	Manual correction variable °C
↳VALUE	77.0 °F	0.1 °F	32 °F	248 °F	Manual correction variable °F
CONTACT	pause	pause			Configuration digital contact input
		hold			
↳POL	norm.open	norm.open			Polarity of the contact input
		norm.closed			

[1.] Attention: If this setting is changed, all parameters are reset to the corresponding factory settings

Setting		Possible values			
Display	Starting value	Increment	Lower value	Upper value	Remarks
↳DELAY OFF	0 s	1 s	0 s	1000 s	Contact input switch-off delay. Switching off of the contact input is delayed by this period.
↳ALARM	OFF	ON			Switch on and off use of the alarm relay *'PAUSE/ HOLD'*
		OFF			
1. Attention: If this setting is changed, all parameters are reset to the corresponding factory settings					

↳CHECK = With configured pH measured variables, it is possible to monitor a sensor connected to the potentiometric input for fault states. This check is disabled as standard.

Monitoring for sensor breakage: The sensor breakage check (glass breakage) identifies a defective sensor due to its low internal resistance. Correctly functioning pH sensors have very high resistances with internal resistances in the high MΩ range. The DULCOMETER® Compact Controller is capable of recognising broken sensors from their internal resistance. This function should be deactivated if very low resistance sensors are used.

Check for presence: The "Presence check" identifies a disconnected sensor or a broken cable. This function should be disabled if pH sensors are used which have a high internal resistance across their entire operating range.

8.6 Output setting (OUTPUT)

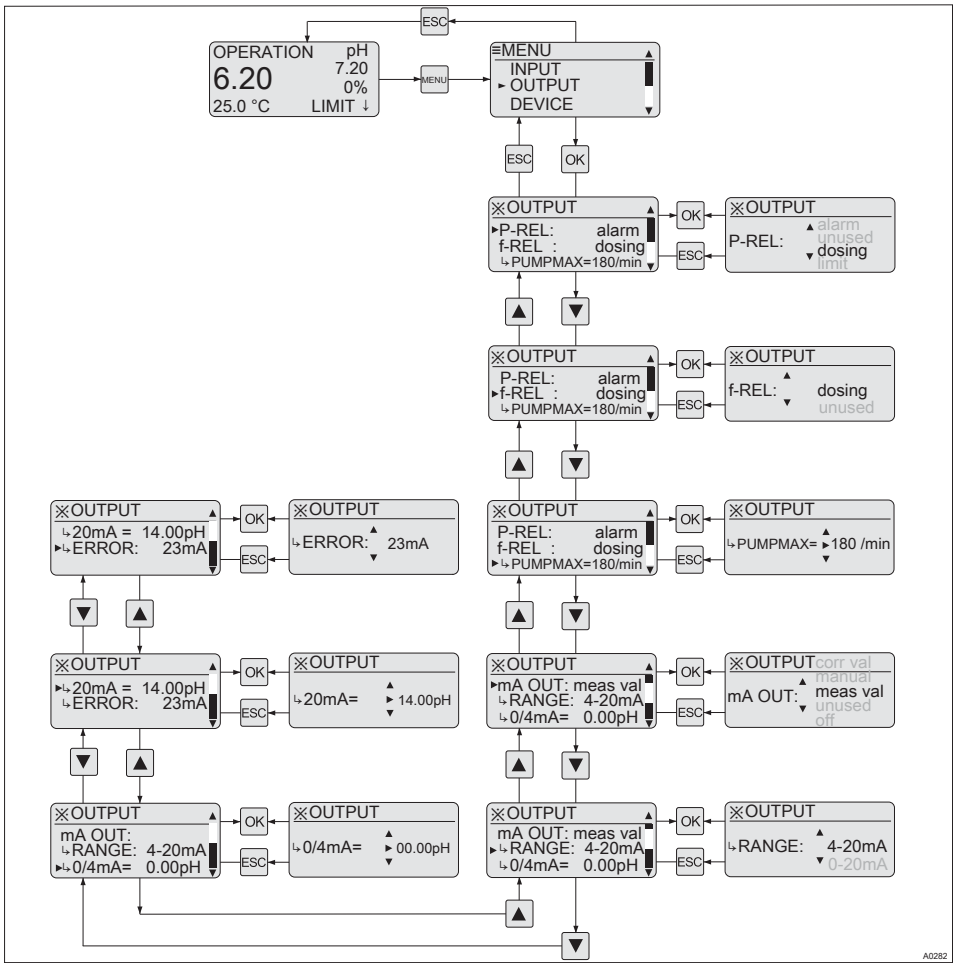

Fig. 31: Output setting (OUTPUT)

Setting		Possible values			
	Starting value	Increment	Lower value	Upper value	Remarks
P-REL (Power relay)	alarm	alarm			Alarm relay
		unused			off
		dosing			PWM relay
		limit			Limit relay
↳PERIOD	60 s	1 s	30 s	6000 s	Cycle time of the PWM control (P-REL = dosing)
↳MIN ON [1]	10 s	1 s	5 s	PERIOD/4 or 999	Minimum switch on period using PWM control (P-REL = dosing)
↳DELAY ON	0 s	1 s	0 s	9999 s	Switch-on delay limit value relay (P-REL = limit)
↳DELAY OFF	0 s	1 s	0 s	9999 s	Switch-off delay limit value relay (P-REL = limit)
f-REL	dosing	dosing			Activation of the low power relay (frequency relay)
		unused			

Setting		Possible values			
	Starting value	Increment	Lower value	Upper value	Remarks
↳PUMPMAX	1 rpm	1	1	500	Maximum stroke rate of the low power relay (frequency relay)
mA OUT (Output value of the mA standard signal output)	meas val	off			off
		meas val			meas val
		corr val			corr val
		dosing			dosing = control value
		manual			manual
↳RANGE	4 - 20 mA	0 - 20 mA			Range of the mA standard signal output
		4 - 20 mA			
↳0/4 mA	2.00 pH	0.01 pH	0.00 pH	14.00 pH	pH value assigned 0/4 mA
↳20 mA	12.00 pH	0.01 pH	0.00 pH	14.00 pH	pH value assigned 20 mA
↳0/4 mA	0 mV	1 mV	-1000 mV	1000 mV	Redox value assigned 0/4 mA
↳20 mA	1000 mV	1 mV	-1000 mV	1000 mV	Redox value assigned 20 mA
↳0/4 mA	0.0 °C	0.1 °C	0.0 °C	120.0 °C	Temp. value assigned 0/4 mA
↳20 mA	100.0 °C	0.1 °C	0.0 °C	120.0 °C	Temp value assigned 20 mA

Setting		Possible values			
	Starting value	Increment	Lower value	Upper value	Remarks
↳0/4 mA	32.0 °F	0.1 °F	32.0 °F	248.0 °F	Temp. value assigned 0/4 mA
↳20 mA	212.0 °F	0.1 °F	32.0 °F	248.0 °F	Temp value assigned 20 mA
↳20 mA [2]	- 100 %	1 %	10 %/ - 10 %	100 % / - 100 %	Control value assigned 20 mA (0/4 mA is fixed as 0%)
↳VALUE	4.00 mA	0.01 mA	0.00 mA	25.00 mA	Manual output current value
↳ERROR	off	23 mA			Output current value upon fault, 23 mA
		0/3.6 mA			Output current value upon fault, 0/3.6 mA
		off			off = no fault current is output

1 = The parameter maximum occurs at PERIOD/4 or 999, whichever is smaller

2 = dependent on metering direction, the limits are either -10% and -100% or +10% and +100%

8.7 DEVICE setting

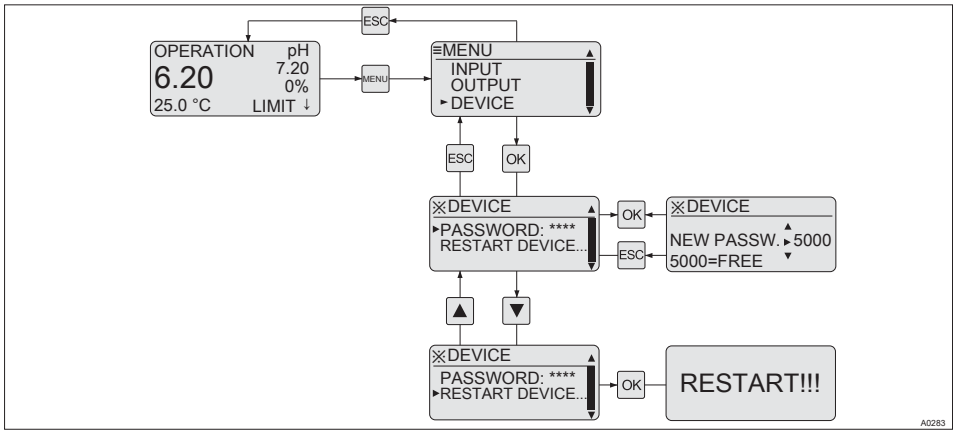

Fig. 32: Device setting

Setting		Possible values			
	Starting value	Increment	Lower value	Upper value	Remarks
Password	5000	1	0000	9999	5000 = no password protection
Restart device					Controller is restarted

9 Control parameters and functions

- **User qualification:** trained user, see ↳ *Chapter 2.2 'Users' qualifications' on page 10*

9.1 DULCOMETER® Compact Controller function states

DULCOMETER® Compact Controller function states have the following priority:

- 1. *'STOP'*
- 2. *'PAUSE/HOLD'*
- 3. *'CAL'* (calibration)
- 4. *'OPERATION'* (normal mode)

"CAL" (calibration) peculiarities

- Control goes to basic load, mA measurement outputs are frozen
- New faults are detected, however they have no effect on the alarm relay or the mA output
- Detection of measurement variable relevant faults during *'CAL'* (calibration process) are suppressed (e.g. LIMIT↑)

"PAUSE" peculiarities

- Control is switched to 0% control variable. The I-proportion is saved
- New faults are detected, however they have no effect on the alarm relay or the mA output
- Special case alarm relay in *'PAUSE'*: If activated the output relay switches to *'PAUSE'* (error message CONTACTIN)

"HOLD" peculiarities

- Control and all other outputs are frozen
- New faults are detected, however they have no effect on the alarm relay or the mA output. However the effect of already existing faults (e.g. fault current) remains
- Special case alarm relay: Activation of the frozen alarm relay is permitted (= no alarm), if all faults have been acknowledged or have disappeared
- Special case alarm relay in *'HOLD'*: If activated the output relay switches to *'HOLD'* (error message CONTACTIN)

"STOP" peculiarities

- Control OFF
- New faults are detected, however they have no effect on the alarm relay or the mA output
- The alarm relay is switched off in *'STOP'*

Peculiarities of the "START" event, i.e. switching from "STOP" to "OPERATION" (normal mode)

- Fault detection starts afresh, all existing faults are deleted

Generally applicable information

- If the cause of a fault disappears, then the fault message in the LCD footer disappears.
- A previously existing *'PAUSE/HOLD'* state is not influenced by starting a *'CAL'* (calibration) process. If during *'CAL'* (calibration) the functional state *'PAUSE/HOLD'* is released, then all states will remain frozen until the end of the *'CAL'* (calibration) process.

- If *'CAL'* (calibration) is started while functional state *'OPERATION'* (normal mode) is active, then the functional state *'PAUSE/HOLD'* is ignored until *'CAL'* (calibration) completes. However STOP/START is possible at any time
- An alarm can be acknowledged or removed as follows: By clearing all faults by pressing the STOP START key and the OK key while the continuous display is visible

9.2 STOP/START key

The control function is started / stopped by pressing the STOP START key. The STOP START key can be pressed independently of the currently displayed menu. However, the [STOP]state is only shown in the continuous display.

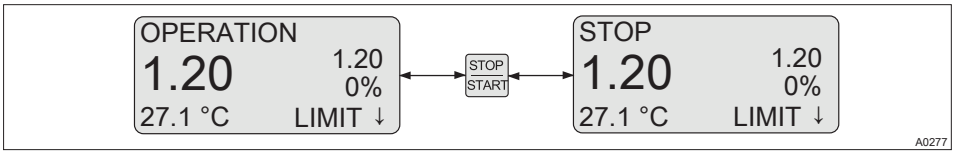

Fig. 33: STOP START-Key

When the controller is first switched on, the controller is in *[STOP]*status.

Upon certain defined fault conditions, the controller switches to the *[STOP]*status. The control is then off (= 0 % control variable).

To differentiate between the fault-related *[STOP]* and the operating status *[STOP]* by pressing the STOP START key, instead of *[STOP]*the identifier *[ERROR STOP]* is displayed.

Pressing the STOP START key causes operating status *[ERROR STOP]* to change to operating status *[STOP]* . Pressing STOP START once more causes the controller to be started again.

In *[STOP]*state, the controller must be started manually by pressing the STOP START key.

[STOP] of the controller causes the following:

- Control is stopped
- The P-relay functioning as a limit value relay and a PWM relay are switched to the de-energised state
- The P-relay acting as an alarm relay activates (no alarm)

Restarting of the controller causes the following:

- If a *[STOP]*state existed, then the controller must be manually started after being switched back on.
- Fault detection starts afresh, all existing faults are deleted

9.3 Priming (PRIME)

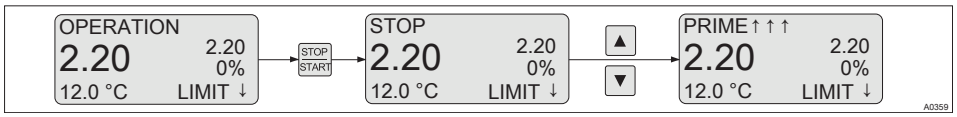

Fig. 34: Priming, e.g. to vent a pump

While the continuous display is visible and the states *'STOP'* or *'OPERATION'* are active, simultaneously pressing ▲ and ▼ causes the priming function *'PRIME'* to be started.

At the same time, dependent on the configuration of the controller, the output relay (P-REL) is actuated at 100 %, the frequency relay (f-REL) is actuated at 80 % of "PUMPMAX" and 16 mA is output at the mA output. However this is only the case if these outputs are set as actuator *'dosing'*.

The power relay (P-REL) starts after priming in an activated state.

You can use this function, for example, to transport the feed chemical up to the pump to vent the metering line.

9.4 Hysteresis limit

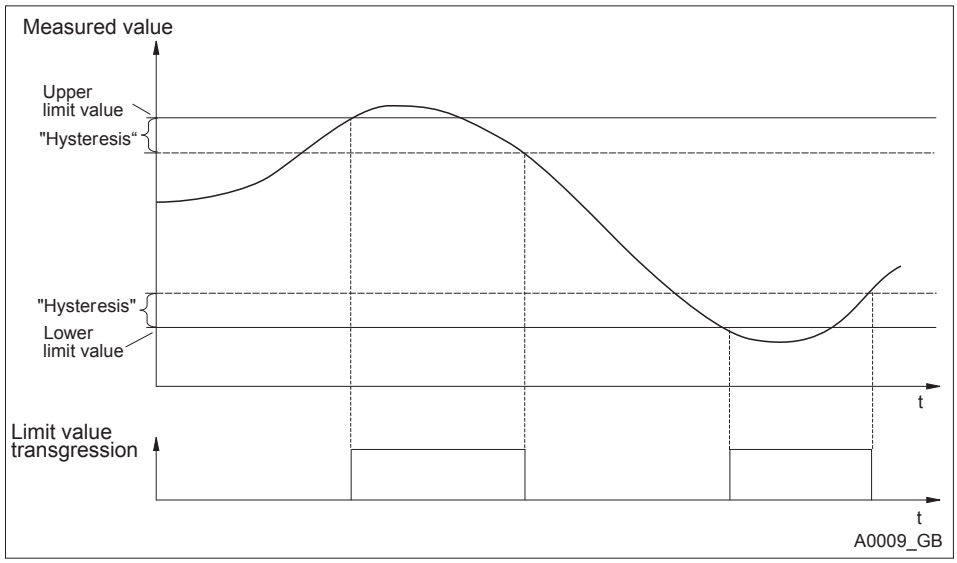

Fig. 35: Hysteresis

Upper limit value = LIMIT↑ Lower limit value = LIMIT↓

The range between LIMIT↑ and LIMIT↓ is the **valid measuring range.**

The DULCOMETER® Compact Controller has fixed *'hysteresis'*.

Measured variable	Hysteresis
pH	0.28 pH
Redox	20 mV

The *'Hysteresis'* acts to cause an increase in the limit value transgression, i.e. if the *'Limit↑'* of e.g. pH 7.5 was exceeded, then the criterion for a limit value transgression is only removed again when the value falls below pH 7.22. The hysteresis behaviour for a *'Limit↓'* functions in an analogue way (the hysteresis value is here added to the Limit↓), for example *'Limit ↓'* pH 4.00, hysteresis pH 0.28, then the limit value transgression criterion is only removed again when the pH exceeds 4.28.

9.5 Temperature correction variable for pH

The correction variable compensates for the effect of the temperature of the medium on the measured value. The correction variable is the temperature of the medium to be measured. The temperature of the medium affects the pH value to be measured.

Operating modes

- *[off]*: No temperature compensation takes place
  - For measurements which do not require temperature compensation
- *[auto]*: The DULCOMETER® Compact Controller evaluates the temperature signal of the connected temperature sensor
  - For measurements using a temperature sensor (Pt1000) (0 -120 °C)
- *[manual]*: The temperature of the medium to be measured has to be measured by the user. The measured value is then entered using the keys ▼ and ▲ in the parameter *'VALUE'* in the DULCOMETER® Compact Controller and saved using the key OK
  - For measurements where the medium to be measured has a constant temperature, which has to be taken into account in the control process

9.6 Checkout time for measured variable and correction variable

Error text	Description
LIMIT ERR	Checkout time of the measured variable
TLIMITERR	Checkout time of the correction variable

If upon the expiry of the checkout time, the valid measuring range is not reached, then the DULCOMETER® Compact Controller exhibits the following behaviour:

- **LIMIT ERR:** The control is switched off. An error current is emitted, provided the output is configured as a measured variable output
- **TLIMITERR:** The control is switched off. An error current is emitted, provided the output is configured as a correction variable output or a measured variable output

Initially the transgression of a limit is only a limit value transgression. This leads to a *'WARNING'*. Switching on the control time *'TIMELIM'* (> 0 minutes), creates an alarm from the limit value transgression. In the event of a *[TLIMITERR]* a, the control switches to *[STOP]*.

9.7 Checkout time control

Monitoring of the control path

The checkout time monitors the control path. The checkout time mechanism permits detection of possible defective sensors.

Dead time determination

Each control path has a dead time. The dead time is the time, which the control path requires to detect a change or addition of metered chemicals using its own instrumentation.

You must select the checkout time so that it is greater than the dead time. You can determine the dead time, by operating the metering pump in manual mode and, for example, dosing acid.

NOTICE!

Dead time determination

You should only determine the dead time if the current process cannot be negatively influenced by the manual metering.

You must determine the time, which the control path (i.e. the entirety of controllers, sensors, measurement water, flow gauges, etc.) requires to detect a first change in the measured value starting from the beginning of dosing. This time is the *'dead time'*. A safety margin, e.g. 25%, must be added to this dead time. You must allocate an appropriate safety margin for your own particular process.

The parameter *'LIMIT'* can be used to set a limit for the control variable. If the control variable exceeds this limit value, the CHECKTIME fault is triggered (checkout time of the control has elapsed). The control is switched to basic load and a fault current output.

9.8 Power relay "P-REL" as limit value relay

The power relay *'P-REL'* can be configured as a limit value relay. It always act only on the measurement variable, whereby the limits are set in *'LIMITS'* . The relay is activated upon infringement of either the top or lower limit values.

Constant checking is carried out to determine whether a limit has been infringed and if this is interrupted with the power relay configured *'P-REL= limit'* for at least *'DELAY ON'* seconds, then the relay is activated. If the limit value transgression disappears for at least *'DELAY OFF'* seconds, then the limit value relay is again deactivated.

The limit value relay is deactivated immediately upon: *'STOP'*, user calibration, *'PAUSE'* and *'HOLD'*.

9.9 Setting and functional description of "Relay Used as a Solenoid Valve"

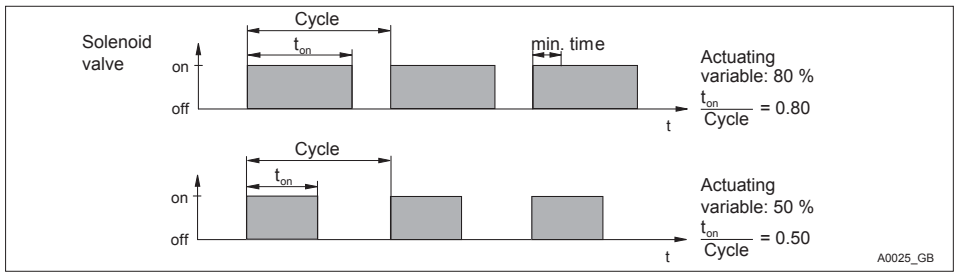

Fig. 36: Solenoid valve (= P-REL: dosing)

min. time *[MIN ON]* Cycle = *[PERIOD]* (in seconds)

Solenoid valve switching times

The switching times of the relay (solenoid valve) depend on the cycle time, the control variable and the 'min. time' (smallest permissible switch-on time for the connected device). The actuating variable determines the ratio t_{on}/cycle and thus also the switching times.

The 'min. time' affects the switching times in two situations:

1. Theoretical switching time < min. time

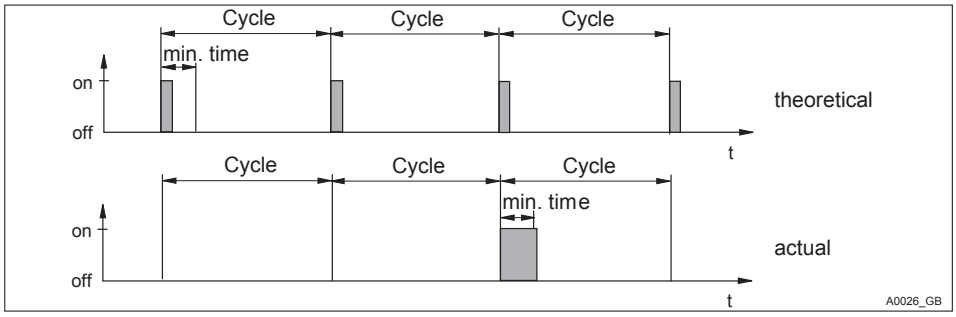

Fig. 37: Theoretical switching time < min. time

min. time *[MIN ON]*
Cycle = *[PERIOD]* (in seconds)

The DULCOMETER® Compact Controller does not switch on for a certain number of cycles until the sum of the theoretical switching times exceeds *'min. time'* . Then it switches for the duration of this total time.

2. Theoretical switching time > (cycle - min. time)

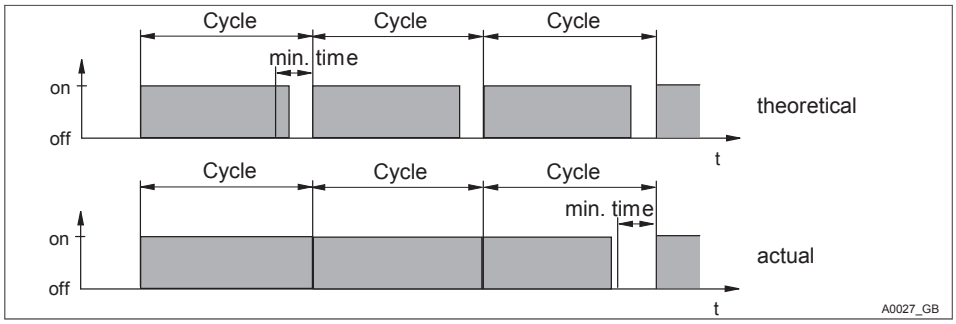

Fig. 38: Theoretical switching time > (cycle - min. time) and calculated switching time < cycle

min. time *[MIN ON]*
Cycle = *[PERIOD]* (in seconds)

The DULCOMETER® Compact Controller does not switch off for a certain number of cycles until the differences between the cycle and the theoretical switching time exceed *'min. time'* .

9.10 Alarm relay

The alarm relay triggers in *'OPERATION'* (normal mode) if an error occurs which has been defined as *'ERROR'* and not just as *'WARNING'*.

The error message *'ALARM'* in the continuous display is marked with a ✻ (star) and can be acknowledged with the OK key. The alarm and the ✻ will then disappear.

9.11 "Error logger" operating mode

The last three errors are displayed. Also displayed is how long ago (in minutes) they occurred. When a new fault occurs, the oldest fault is deleted.

Faults are only shown which occur in operating status *'OPERATION'*, i.e. not in operating status *'STOP'*, *'CAL'* (user calibration), *'HOLD'* or *'PAUSE'*.

Only *'ERRORs'* are shown, not *'WARNINGS'*, e.g. a *'LIMIT ERR'* is shown, but not *'LIMIT↑'*.

A fault, whose display has lasted for 999 minutes is automatically deleted from the *'Error Logger'*. The *'Error Logger'* is neither saved nor backed up in the event of power loss.

10 Maintenance

- **Users' qualification:** trained user, see *Chapter 2.2 'Users' qualifications' on page 10*

The DULCOMETER® Compact Controller is maintenance free.

10.1 Changing the fuse, DULCOMETER® Compact Controller

WARNING!

Danger from electrical voltage

Possible consequence: Fatal or very serious injuries.

- The DULCOMETER® Compact Controller does not have a mains switch
- When working inside the control unit, disconnect the control unit from the mains power via an external switch or by removing the external fuse

NOTICE!

Use only 5 x 20 mm micro-fuses

Possible consequence: Damage to the product or its surroundings

- 5x20 T 0.315 A
- Part number 732404

Fuse change

The mains fuse is located in a sealed fuse holder in the inside of the device.

1. Disconnect the controller from the mains power
2. Open the controller and fold the controller housing top section to the left
3. Remove the PCB cover
4. Remove the micro-fuse using a suitable tool
5. Fit the micro-fuse using a suitable tool
6. Refit the PCB cover
7. Replace controller housing top section and close the controller

10.2 Fault reporting and troubleshooting

- **Users' qualification for diagnostics:** trained user, see *Chapter 2.2 'Users' qualifications' on page 10*. Further measures depend on the type and scope of possible troubleshooting measures to be carried out.

Fault reporting and troubleshooting

Display	Description / cause	Status[1]	Mode[2]	Measured variable output[3]	Correction variable output[4]
pH/mV RANGE ↓	Input voltage too low	Error	Basic load	Fault current	-
pH/mV RANGE↑	Input voltage too high	Error	Basic load	Fault current	-
T RANGE ↓	Measured temperature beneath measuring range	Error	Basic load	Fault current	Fault current
T RANGE ↑	Measured temperature above measuring range	Error	Basic load	Fault current	Fault current
CAL ERROR	No valid user calibration exists	Error	-	-	-
NO PROBE	If activated: pH sensor monitoring outputs: no sensor	Error	Basic load	Fault current	-
PROBE ERR	If activated: pH sensor monitoring outputs: sensor break	Error	Basic load	Fault current	-
CHECK-TIME	Control checkout time elapsed	Error	Basic load	Fault current	-
mA RANGE ↑	mA output current has an upper limit	Error	-	-	-

Display	Description / cause	Status[1]	Mode[2]	Measured variable output[3]	Correction variable output[4]
mA RANGE ↓	mA output current has a lower limit	Error	-	-	-
LIMIT ↑	Measured variable exceeds upper set limit	Warning	-	-	-
LIMIT ↓	Measured variable falls below lower set limit	Warning	-	-	-
T LIMIT ↑	Correction variable exceeds upper set limit	Warning	-	-	-
T LIMIT ↓	Correction variable falls below lower set limit	Warning	-	-	-
LIMIT ERR	Set checkout time for monitoring the measurement variable limits has elapsed	Error	Stop	Fault current	-
TLIMITERR	Set checkout time for monitoring the correction variable limits has elapsed	Error	Stop	Fault current	Fault current
NO CAL	No valid user calibration exists	Warning	-	-	-
CONTACTIN	If activated: Power relay is activated in *'PAUSE/HOLD'*	Error	-	-	-

1 = *[Status]* Error status after occurrence of the fault (error means: alarm relay deactivates, *'*'* is displayed before the error message, can be acknowledged with OK)

2 = *[Mode]* Resulting controller mode (relates to control variable and thus, as necessary, mA output)

3 = *[Measured variable output]* Consequence for the current output, if this is set as *'a measured variable output'*

4 = *[Correction variable output]* Consequence for the current output, if this is set as *'a correction variable output'*

11 Technical data DULCOMETER® Compact Controller

11.1 Permissible ambient conditions

Degree of protection (IP)

The controller fulfils the IP 67 degree of protection requirements (wall/pipe mounting) or IP 54 (control panel mounting). This degree of protection is only achieved if all seals and threaded connectors are correctly fitted.

Permissible ambient operating conditions

Temperature	-10 °C ... 60 °C
Air humidity	< 95 % relative air humidity (non-condensing)

Permissible ambient storage conditions

Temperature	-20 °C ... 70 °C
Air humidity	< 95 % relative air humidity (non-condensing)

11.2 Sound Pressure Level

No noise generation measurable

11.3 Material data

Part	Material
Housing lower and upper section	PC-GF10
Bracket rear side housing bottom section	PPE-GF20
Operating film	Polyester PET membrane
Seal	Expanded PUR
Cover screws	Stainless steel A2
Profile seal (control panel mounting)	Silicone

11.4 Chemical Resistance

The device is resistant to normal atmospheres in plant rooms

11.5 Dimensions and weights

Complete device:	128 x 137 x 76 mm (W x H x D)
Packaging:	220 x 180 x 100 mm (W x H x D)
Weight of device without packaging:	approx. 0.5 kg
Gross weight of device with packaging:	approx. 0.8 kg

12 Electrical data

Mains connection	
Nominal voltage range	100 – 230 VAC ±10 %
Frequency	50 – 60 Hz
Current consumption	50 – 100 mA

The mains connection is isolated from other switching parts by reinforced insulation. The device has no mains switch; a fuse is fitted.

Power relay (P-relay)	
Loading of switching contacts	5 A; no inductive loads

Outputs galvanically isolated from other switching parts by reinforced insulation.

Digital input	
Open circuit voltage	15 V DC max.
Short circuit current	approx. 6 mA
Max.switching frequency	Static For switching processes such as *'PAUSE'*, *'HOLD'*, etc.

NOTICE!

Do not supply with voltage

For the connection of an external semi-conductor or mechanical switch.

mA Output	0 - 20 mA	4 - 20 mA	manual
Current range	0 – 20.5 mA	3.8 – 20.5 mA	0 - 25 mA
In the event of a fault	0 or 23 mA	3.6 or 23 mA	
Max. load	480 Ω at 20.5 mA		
Max. output voltage	19 V DC		
Overvoltage-resistant up to:	±30 V		
Output accuracy	0.2 mA		

Galvanically isolated from all other connections (500 V)

mV input	
Measuring range	-1 V ... + 1 V 0 pH ... 14 pH
Measurement accuracy	±0.25 % of the measuring range
Sensor monitoring of input (low resistance threshold) (can be switched off)	< 500 kΩ ... 1 MΩ (short circuit)
Sensor monitoring of input (high resistance threshold) (can be switched off)	no pH sensor connected
Display glass sensor resistance of ProMinent pH sensor	0 ... 5000 MΩ
Overvoltage-resistant up to:	±5 V

Pump control (f-relay)	
Max. switching voltage:	50 V (protective low voltage)
Max. switching current:	50 mA
Max. residual current (open):	10 µA
Max. resistance (closed):	60 Ω
Max. switching frequency (HW) at 50% filling factor	100 Hz

Digital output galvanically isolated from all other connections via OptoMos relay.

Temperature input	
Temperature measuring range:	0...120 °C
Measuring flow:	approx. 1.3 mA
Measuring accuracy:	±0.8 % of measuring range
Overvoltage-resistant up to:	±5 V
Short circuit-resistant	Yes

For connection of a Pt1000 temperature sensor using a 2-wire system. Not galvanically isolated from the mV input

13 Spare parts and accessories

Spare parts	Part number
Fine fuse 5x20 T 0.315 A	732404
Wall/tube retaining bracket	1002502
Guard terminal top part (knurled nut)	733389
Measured variable labels	1002503
DMT fixing strap	1002498
Cable connection set DMTa/DXMa (metric)	1022312
Controller housing lower part (processor/PCB), fully assembled	Identity code DCCA_E_E1 ...
Controller housing top part (display/operating part), fully assembled	Identity code DCCA_E_E2 ...

Accessories	Part number
Mounting kit for control panel installation	1037273
Check strap	1035918

14 Replacing spare part units

- **User qualification, mechanical installation:** trained qualified personnel, see ↳ *Chapter 2.2 'Users' qualifications' on page 10*
- **User qualification, electrical installation:** Electrical technician, see ↳ *Chapter 2.2 'Users' qualifications' on page 10*

⚠ CAUTION!

Check strap for strain relief

Possible consequence: Material damage.

The ribbon cable and its base cannot be mechanically stressed. Hence it is essential when mounting the controller in the control panel, that the check strap (part number 1035918) is fitted for strain relief and mechanical fixing. Without the check strap, the ribbon cable or its base could be damaged if they were to fall out of the top part of the controller housing.

14.1 Replacing the top part of the housing

! NOTICE!

Ribbon cable base

The base of the ribbon cable is firmly soldered onto the PCB. The base cannot be removed. Open the base lock (3) to loosen the ribbon cable, see Fig. 39

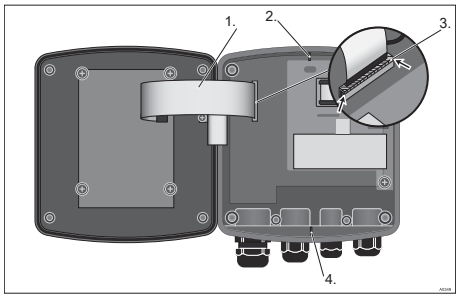

Fig. 39: Loosening the ribbon cable

1. Undo four screws and open the DULCOMETER® Compact Controller
2. Open the right and left lock (3) (arrows) on the base and pull the ribbon cable (1) out of the socket
3. The catches (2 and 4) are not needed with units for control panel installation.

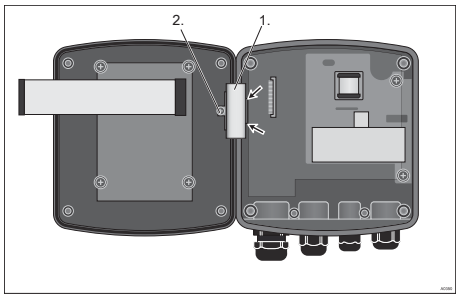

Fig. 40: Dismantling the hinge

4. Remove the screw (2), unclip the hinge (1) on the lower part of the controller housing (arrows) and remove the hinge

5. With control panel installation: Remove the two screws and remove the strain relief

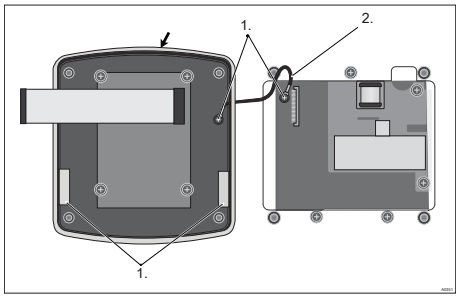

Fig. 41: With control panel installation: Fit the profile seal onto the top part of the controller housing

6. With control panel installation: Position the profile seal (arrow) evenly into the groove in the top part of the DULCOMETER® Compact Controller housing. Arrange the flaps (3) as shown in the figure

7. With control panel installation: Secure the strain relief (2) using two screws (1)

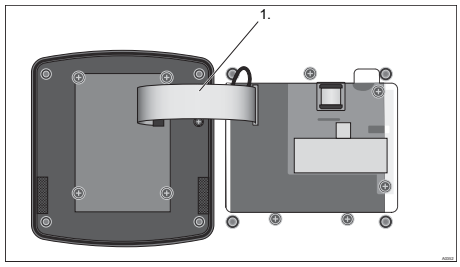

Fig. 42: Pushing and locking the ribbon cable in its base

8. Push and lock the ribbon cable (1) in its base

9. Fit the hinge

10. Screw the top part of the controller housing onto the lower part of the DULCOMETER® Compact Controller housing

11. With control panel installation: Re-check that the profile seals are fitted properly

    ⇨ Re-check that the seal is seated properly. Only if the mounting is correct, can IP 67 (wall/pipe mounting) or IP 54 (control panel mounting) degree of protection be achieved

14.2 Replacing the lower part of the housing (wall/tube retaining bracket)

Complete commissioning of the controller

Once the lower part of the housing has been replaced, it is necessary to fully commission the measuring and control point, as the new lower part of the housing does not have specific settings, only factory settings.

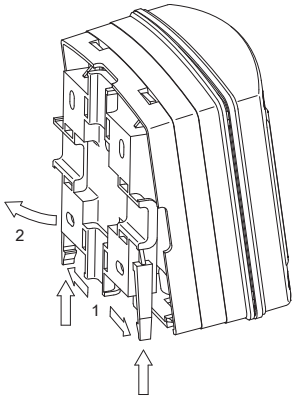

Fig. 43: Removing the wall/tube retaining bracket

1. Remove the wall/tube retaining bracket. Pull the two snap-hooks (1) outwards and push upwards

NOTICE!

Ribbon cable base

The base of the ribbon cable is firmly soldered onto the PCB. The base cannot be removed. Open the base lock (3) to loosen the ribbon cable, see Fig. 39

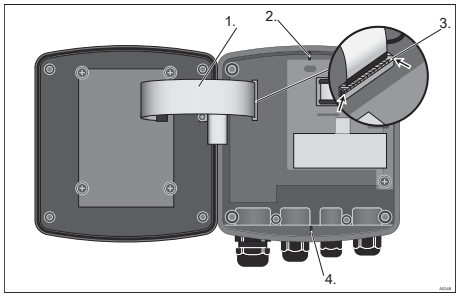

Fig. 44: Loosening the ribbon cable

2. Undo four screws and open the DULCOMETER® Compact Controller

3. Open the right and left lock (3) (arrows) on the base and pull the ribbon cable (1) out of the base. The catches (2 and 4) are used to aligned the two halves of the housing.

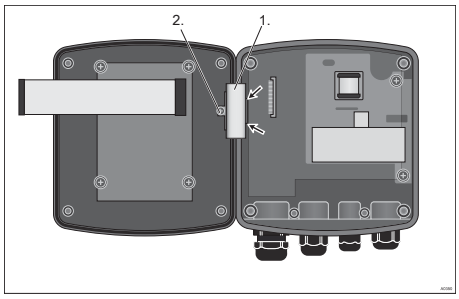

Fig. 45: Dismantling the hinge

4. Remove the screw (2), unclip the hinge (1) on the lower part of the controller housing (arrows) and remove the hinge

5. Label the cable connectors fitted to distinguish them and remove the cables from the lower part of the controller

Preparing the new lower part of the controller housing

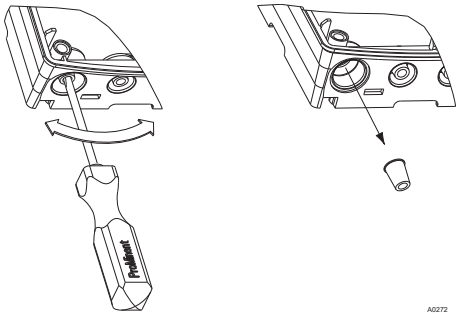

Fig. 46: Punching out the threaded holes

6.

Large threaded connection (M 20 x 1.5)

Small threaded connection (M 16 x 1.5)

Punch out as many threaded holes on the bottom of the lower part of the controller housing as required

Fit the cable and threaded connectors

7. Guide the cable into the respective reducing inserts

8. Insert the reducing inserts into the threaded connectors

9. Guide the cable into the controller

10. Connect the cable as indicated in the terminal diagram

11. Screw in the required threaded connectors and tighten

12. Tighten the threaded connector clamping nuts so that they are properly sealed

Refit the controller

13. Fit the hinge

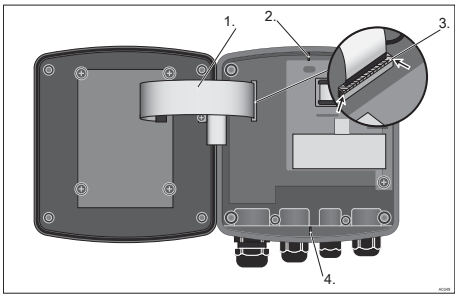

Fig. 47: Fix the ribbon cable

14. Push and lock the ribbon cable (1) in its base. The catches (2 and 4) are used to aligned the two halves of the housing.

15. Screw the top part of the controller housing onto the lower part of the DULCOMETER® Compact Controller housing

16. Re-check that the seal is seated properly. IP 67 degree of protection (wall/pipe-mounting) can only be provided if the installation is correct

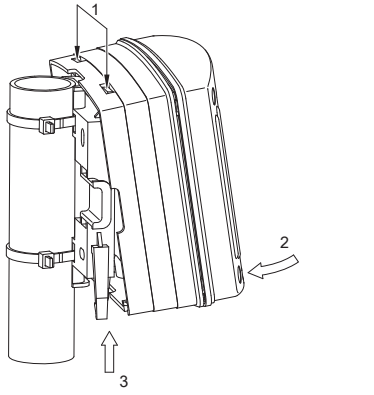

Fig. 48: Suspend and secure the DULCOMETER® Compact Controller

17. Suspend the DULCOMETER® Compact Controller at the top (1) in the wall/tube retaining bracket and push using light pressure at the bottom (2) against the wall/pipe retaining bracket. Then press upwards (3) until the DULCOMETER® Compact Controller audibly snaps into position

14.3 Replacing the lower part of the housing (control panel installation)

Complete commissioning of the controller

Once the lower part of the housing has been replaced, it is necessary to fully commission the measuring and control point, as the new lower part of the housing does not have specific settings, only factory settings.

NOTICE!

Ribbon cable base

The base of the ribbon cable is firmly soldered onto the PCB. The base cannot be removed. Open the base lock (3) to loosen the ribbon cable, see Fig. 39

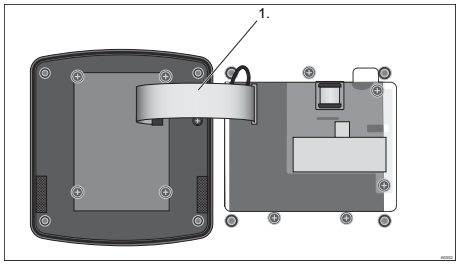

Fig. 49: Loosen the ribbon cable from the base

1. Undo four screws and open the DULCOMETER® Compact Controller

2. Open the right and left lock on the base and pull the ribbon cable (1) out of the base.

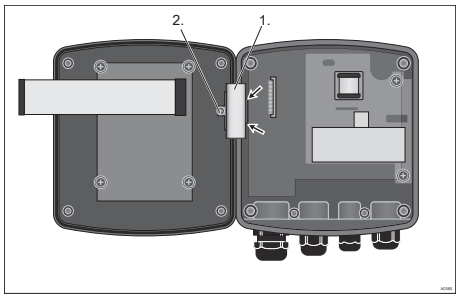

Fig. 50: Dismantling the hinge

3. Remove the screw (2), unclip the hinge (1) on the lower part of the controller housing (arrows) and remove the hinge

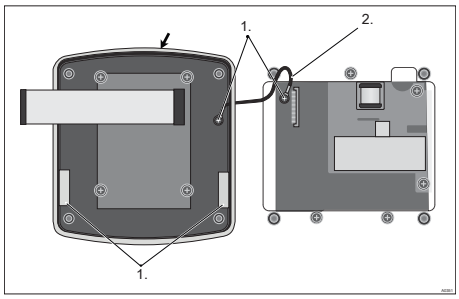

Fig. 51: Removing the strain relief

4. Remove the strain relief (2). Remove the screws (1) to do so.

5. Check the profile seal (arrow), then position the profile seal evenly into the groove in the top part of the DULCOMETER® Compact Controller housing. Arrange the flaps (3) as shown in the figure

6. Remove the top part of the controller housing (3 fixing bolts)

7. Label the cable connectors fitted to distinguish them and remove the cables from the lower part of the controller

Preparing the new lower part of the controller housing

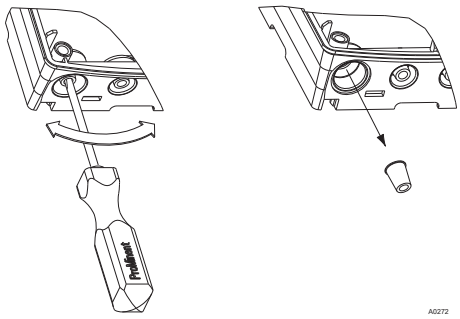

Fig. 52: Punching out the threaded holes

8.

Large threaded connection (M 20 x 1.5)

Small threaded connection (M 16 x 1.5)

Punch out as many threaded holes on the bottom of the lower part of the controller housing as required

Fit the cable and threaded connectors

9. Guide the cable into the respective reducing inserts

10. Insert the reducing inserts into the threaded connectors

11. Guide the cable into the controller

12. Connect the cable as indicated in the terminal diagram

13. Screw in the required threaded connectors and tighten

14. Tighten the threaded connector clamping nuts so that they are properly sealed

Refit the controller

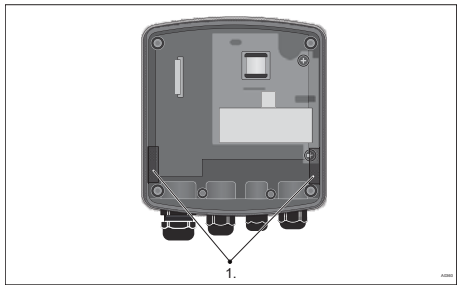

Fig. 53: Fitting the profile seal on the lower part of the controller housing

15. Use pliers to break off the catches. They are not needed for control panel installation

    Position the profile seal evenly around the top edge of the lower part of the DULCOMETER® Compact Controller housing. Arrange the flaps (1) as shown in the figure

    ⇨ Ensure that the profile seal evenly surrounds the top edge of the housing.

16. Insert the lower part of the DULCOMETER® Compact Controller housing with the profile seal from behind into the cut-out and use three screws to secure it in place

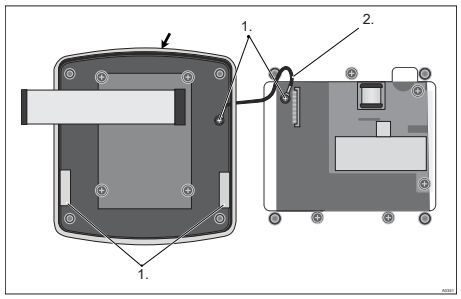

Fig. 54: Fit the profile seal onto the top part of the controller housing

17. Position the profile seal (arrow) evenly into the groove in the top part of the DULCOMETER® Compact Controller housing. Arrange the flaps (3) as shown in the figure

18. Secure the strain relief (2) using two screws (1)

19. Fit the hinge

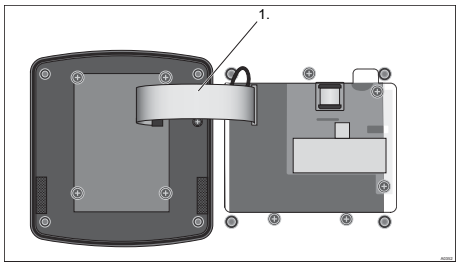

Fig. 55: Pushing and locking the ribbon cable in its base

20. Push and lock the ribbon cable (1) in its base

21. Screw the top part of the controller housing onto the lower part of the DULCOMETER® Compact Controller housing

22. Re-check that the profile seals are fitted properly

    ⇨ IP 54 degree of protection can only be provided if the control panel is mounted correctly

15 Standards complied with and Declaration of Conformity

The EC Declaration of Conformity for the controller is available to download on our homepage.

EN 60529 Specification for degrees of protection provided by housings (IP code)

EN 61000 Electromagnetic Compatibility (EMC)

EN 61010 Safety requirements for electrical equipment for measurement, control and laboratory use - Part 1: General requirements

EN 61326 Electrical equipment for measuring, control and laboratory use - EMC requirements (for class A and B devices)

16 Disposal of Used Parts

- **User qualification:** instructed user, see *Chapter 2.2 'Users' qualifications' on page 10*

NOTICE!

Regulations governing the disposal of used parts

– Note the current national regulations and legal standards which apply in your country

The manufacturer will take back decontaminated used units providing they are covered by adequate postage.

Decontaminate the unit before returning it for repair. To do so, remove all traces of hazardous substances. Refer to the Material Safety Data Sheet for your feed chemical.

A current Declaration of Decontamination is available to download on the ProMinent website.

17 Index

1, 2, 3 ...

1-Point slope calibration 53
2-Point Calibration 50

A

Access 19
Accessibility 20
Accessories 92
Action, step by step 2
Ambient conditions 86

B

Basic functions 15
Bottom section of the control housing . 28

C

Cable connection set 22
Cable ties 24
Calibration 50
Check strap 92
Check strap for strain relief 93
Chemical Resistance 87
Coaxial cable 10 m 34
Configuration 15
Contrast setting 44
Control elements 43
Control panel cut-out 26, 28

D

Deburr the edges 26
Declaration of Conformity 100
Degree of protection IP 54 . . . . . 28, 39
Degree of protection IP 67 . . . . . 20, 39
Dimensions 88
Drill 26
Drill holes 23
Drilling template 26

E

Error Logger 81

F

Fine fuse 5x20 T 0.315 A 92

G

General non-discriminatory approach . . 2
Guard terminal XE 1 34

H

Hinge 20
Hysteresis 59

I

Identity code 6
Incorrect metering 41
Interference-prone cables 33

L

Large threaded connection (M 20 x 1.5) 39
LEDs 15
Legend to the "Wiring" table 37
Links to elements or sections of these instructions or other applicable documents 2

M

Material thickness of control panel . . . 25
Max. switching current: 91
Max. switching voltage: 91
Measured variables 15
More symbols 2
Mounting (mechanical) 22
Mounting kit 25
Mounting materials 22
Mounting position 21

N

Noise generation 86
Non-discriminatory approach 2

O

Operating position 21

Original Prominent cable 37
Overview of equipment 43

P

Pipe bracket 23
Pipe diameter 24
plant rooms 87
Preparing the control panel 26
Profile seal 28
Punch out threaded holes 39
PWM control output 15

Q

Question: Are the ribbon cable or its attaching parts mechanically loadable? 20
Question: What degree of protection (IP) does the device meet? 20
Question: What is the purpose of the check strap (part number 1035918)? . 20
Question: Where can I find the Declaration of Conformity? 100
Question: Which standards are complied with? 100

R

Reading position 21
Recycling 21
Reducing inserts 39
Replacing spare part units 93
Replacing the lower part of the housing (control panel installation) . . . 97
Replacing the lower part of the housing (wall/tube retaining bracket) . . 95
Replacing the top part of the housing . 93
Reset 41

S

Safety information 8
Selectable control direction 15
Sensor monitoring 91
Single point zero point calibration 55
Small threaded connection (M 16 x 1.5) 39
Snap-hooks 23
Sound Pressure Level 86
Spare parts 92
Standard scope of delivery 22
Standards complied with 100
Strain relief 28, 39
Swimming pool water treatment 15

T

Temperature compensation 15, 76
Terminal diagram 38
Threaded connector number 35
Top section of the control housing . . . 28
Treatment of drinking water 15

U

Users' qualifications 10

V

Venting 74

W

Wall/pipe bracket 23
Washer 22
Waste water treatment 15
Weights 88
Wiring 37



ProMinent GmbH
Im Schuhmachergewann 5 - 11
69123 Heidelberg, Germany
Telephone: +49 6221 842-0
Fax: +49 6221 842-419
Email: info@prominent.com
Internet: www.prominent.com

986214, 4, en_GB

© 2015

INDUMART Canada
www.indumart.com

Fillable Standard Pressure Gauges

PI-201/2 - Gauge, Pressure, 0-30psi, Indumart, P16T2-FG-30
PI-301 - Gauge, Pressure, 0-15psi, Indumart, P16T2-FG-15
PI-301/2 - Gauge, Pressure, 0-30psi, Indumart, P16T2-FG-30
PI-401/2 - Gauge, Pressure, 0-30psi, Indumart, P16T2-FG-30
PI-501/2 - Gauge, Pressure, 0-30psi, Indumart, P16T2-FG-30
PI-551/2 - Gauge, Pressure, 0-30psi, Indumart, P16T2-FG-30
PI-553/554 - Gauge, Pressure, 0-60psi, Indumart, P16T2-FG-60
PI-703/704 - Gauge, Pressure, 0-60psi, Indumart, P16T2-FG-60
PI-601/602 - Gauge, Pressure, 0-15psi, Indumart, P16K2-FG-15

SERIES: P16

Dial: 1½", 2", 2½", 4"
Accuracy: 1.6%, 2.5%

DESCRIPTION

Indumart *P16 Series* Fillable Standard Pressure Gauges are used at measuring points with high dynamic alternating loads and strong vibrations and pulses. The glycerin filling of the case provides lubrication of the moving parts which protects the measuring system against wear and at the same time ensures smooth pointer movement and thus good readability.

Indumart *P16 Series* pressure gauges have a high level of functional safety and long service lives. These gauges are suitable for applications in hydraulics, compressors and pumps.

Various types of wall or panel mounting configurations are available.



SPECIFICATIONS

Accuracy	1.6% (2½" & 4" dials); 2.5% (1½" & 2" dials)
Dial Sizes	1½" (40 mm), 2" (50 mm), 2½" (63 mm), 4" (100 mm)
Case	St. steel (standard)
Bezel	St. steel; crimped bezel
Connection	Centre back or bottom
Thread	⅛" NPT (1½" dial only), ¼" NPT (2", 2½", 4" dials) ½" NPT (option for 4" dial), BSP thread (option)
Window	Plexiglas
Bourdon Tube	Brass (std.), st. steel (option)
Max. Temperature	60°C
Range	0...10 to 0...8000 psi; 0...60 to 0...60000 kPa; 0...0.6 to 0...600 bar Vacuum and compound ranges are available; see the Range Table

ORDER CODES

Model P16 ☐ ☐ – ☐

CONNECTION
Back — K
Bottom — T

DIAL SIZE
40 mm (1½") — 0
50 mm (2") — 1
63 mm (2½") — 2
100 mm (4") — 4

OPTIONS (more than one option may be selected)

Glycerine Filling	FG
Silicon Filling	FS
St. Steel Internal	IT
½" Process Connection (100 mm dial only)	TH
BSP Thread	TB
Back Flange for Wall Mounting (not for 40 mm dial)	MK
Front Flange for Panel Mounting (not for 40 mm dial)	MF
Clamp with 2 Screws (63 mm dial only)	MS

Example: P16T2-FG,IT

DIMENSIONS (mm) & WEIGHT

	Ø40 mm	Ø50 mm	Ø63 mm	Ø100 mm
D1	45	55	68	111
D2	41	51	63	100
H1	70	75	84	145
H2	47	52	57	74
L	29	30	30	35
Weight (g)	100	100	150	400

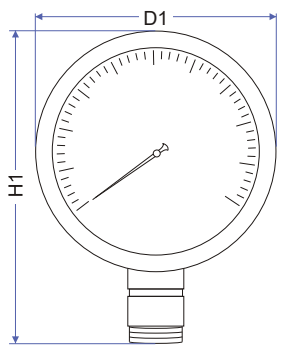

Bottom connection

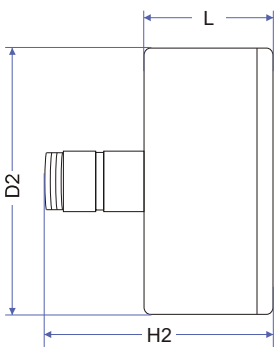

Centre back connection

Specifications may change without prior notice.

Series 1800 Low Differential Pressure Switches for General Industrial Service

Specifications — Installation and Operating Instructions

PSL-301 - Switch, Pressure, 1823-2
PSL501 - Switch, Pressure, 1823-40
PSL-601/2 - Switch, Pressure, 1823-40
PSL-7911 - Switch, Pressure, 1823-2



Model 1823 pressure switch. UL and CSA Listed, FM and CENELEC approved.

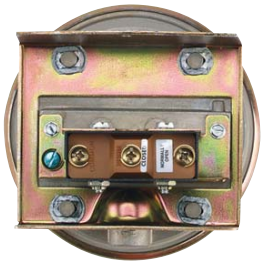

Series 1823 pressure switch. Conduit enclosure removed to show electric switch.

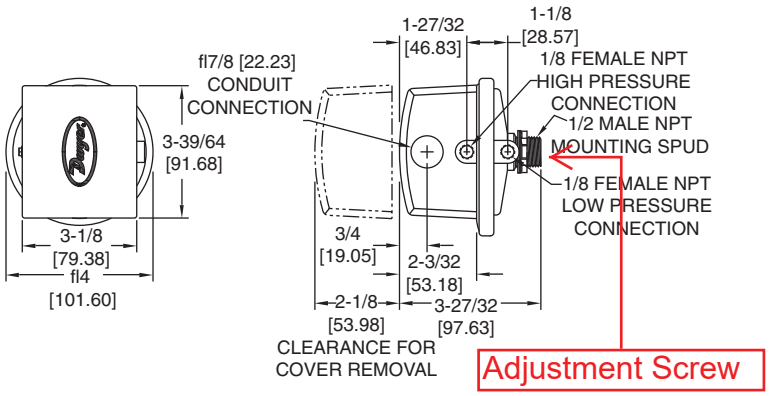

Construction and dimensions. Series 1823 pressure switches.

One of our most popular pressure switches. Combines small size and low price with 2% repeatability for enough accuracy for all but the most demanding applications. Set point adjustment inside the mounting switch on one side of a wall or panel with adjustment easily accessible on the opposite side.

***Model 1823 shown; (1823 replaces 1820, 1821 and 1822 which are similar).**

Environmental (MIL) Switch

Unlisted Model 1820 can be furnished with special snap switch sealed against the environment for high humidity and/or for government applications. Similar to standard Model 1823 except dead band is slightly greater. Specify Model 1820 (Range No.) "MIL" in ordering.

SERIES 1823 SWITCHES — OPERATING RANGES & DEADBANDS

Model Number	Operating Range, Inches W.C.	Approximate Dead Band	
		At Min. Set Point	At Max. Set Point
1823-00	0.07 to 0.22	0.05	0.05
1823-0	0.15 to 0.5	0.06	0.06
1823-1	0.3 to 1.0	0.08	0.08
1823-2	0.5 to 2.0	0.10	0.12
1823-5	1.5 to 5.0	0.14	0.28
1823-10	2.0 to10	0.18	0.45
1823-20	3 to 22	0.35	0.70
1823-40	5 to 44	0.56	1.10
1823-80	9 to 85	1.30	3.0

SPECIFICATIONS

Service: Air and non-combustible, compatible gases.

Wetted Materials: Consult Factory.

Temperature Limits: -30 to 180°F (-34 to 82.2°C). 1823-00, -20 to 180°F (-28.9 to 82.2°C).

Pressure Limits: 10 psig (68.95 kPa) continuous, 25 psig (172.4 kPa) surge.

Switch Type: Single-pole double-throw (SPDT).

Repeatability: ±2%.

Electrical Rating: 15 A @ 120-480 VAC, 60 Hz. Resistive 1/8 HP @125 VAC, 1/4 HP @ 250 VAC, 60 Hz. De-rate to 10 A for operation at high cycle rates.

Electrical Connections: 3 screw type, common, normally open and normally closed.

Process Connections: 1/8″ female NPT.

Mounting Orientation: Diaphragm in vertical position. Consult factory for other position orientations.

Set Point Adjustment: Screw type inside mounting spud.

Weight: 1 lb, 5 oz (595 g).

Agency Approvals: CE, UL, CSA, FM.

DWYER INSTRUMENTS, INC.
P.O. BOX 373 • MICHIGAN CITY, INDIANA 46361, U.S.A.
Phone: 219/879-8000 www.dwyer-inst.com
Fax: 219/872-9057 e-mail: info@dwyer-inst.com

INSTALLATION

1. Select a location free form excessive vibration and where oil or water will not drip upon the switch. See special housings for unusual conditions.
2. **While not required, positioning the pressure connections down is recommended.** Mount the switch with the diaphragm in a vertical plane. Switch with the diaphragm in a vertical plane. Switch must be recalibrated for each change in operating position.
3. Connect switch to source of pressure differential. Metal tubing with 1/4" O.D. is recommended but any tubing system which will not restrict the air flow is satisfactory. Note that the low pressure connection may be made to the 1/2" spud at the back of the switch if desired. If so connected, drill 1/16" diameter holes in the Spring Retainer flange and the head of Adjustment Screw to provide opening to the switch interior and plug the other low pressure connection.
4. Electrical connections to the standard single pole, double throw snap switch are provided by means of screw terminals marked "common", "norm open", and "norm closed". The normally open contacts close and the normally closed contact open when pressure increases beyond the set point.
5. Switch loads should not exceed the maximum specified current rating of 15 amps resistive. Switch capabilities decrease with high load inductance or rapid cycle rates. whenever and application involves one or more of these factors, the user may find it desirable to limit the switched current to 10 amps or less in the interest of prolonged switch life.

ADJUSTMENT

1. If the switch has been factory preset, check the set-point before placing in service to assure it has not shifted in transit.
2. If switching has not been preset or it is desired to change the point, observe the following procedure:
   a. To adjust the set point turn the slotted Adjustment Screw clockwise to increase the set point and counterclockwise to decrease the set point.
   b. The following is a recommended procedure for calibrating or checking calibration: Use a "T" assembly with three rubber tubing leads, all as short as possible and the entire assembly offering minimum flow restriction. Run one lead to the pressure switch, another to a manometer of known accuracy and appropriate range, and apply pressure through the third tube. Make final approach to the set point slowly. Note the manometer and pressure switch will have different response characteristics due to different internal volumes, lengths of tubing, oil drainage, etc. Be certain switch is checked in position it will assume in use, i.e. vertical, horizontal, etc.

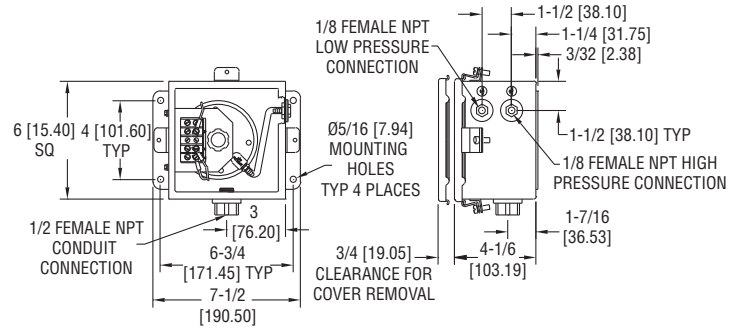

Weatherproof Enclosure

16 ga. steel enclosure for unusually wet or oily conditions. Withstands 200 hour salt spray test. Gasketed cover. Weight 5-1/2 lb (2.5 kg). Switch must be installed at factory. Specify "WP" in addition to switch catalog number.

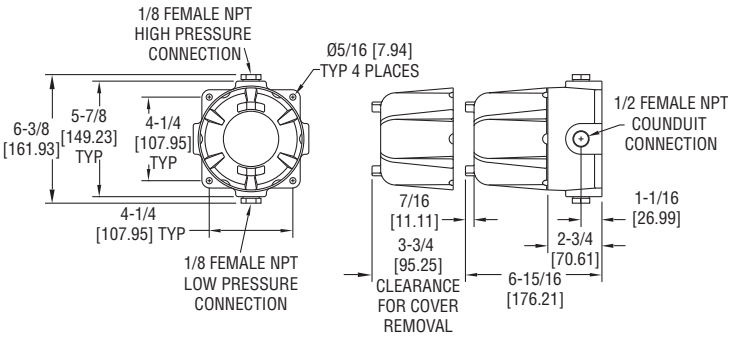

Explosion-Proof Housing

Cast iron base and aluminum dome cover. Approximate weight 7-1/2 lb (3.4 kg). Specify "EXPL" in addition to switch catalog number.

DWYER INSTRUMENTS, INC.
P.O. BOX 373 • MICHIGAN CITY, INDIANA 46361, U.S.A.
Phone: 219/879-8000 www.dwyer-inst.com
Fax: 219/872-9057 e-mail: info@dwyer-inst.com

SERIE 1800 Interruptor Para Baja Presión Diferencial



Model 1823 pressure switch. UL and CSA Listed, FM approved.

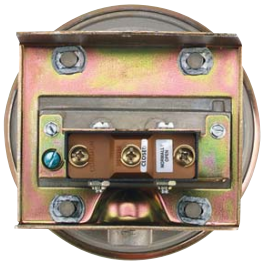

Series 1823 pressure switch. Conduit enclosure removed to show electric switch.

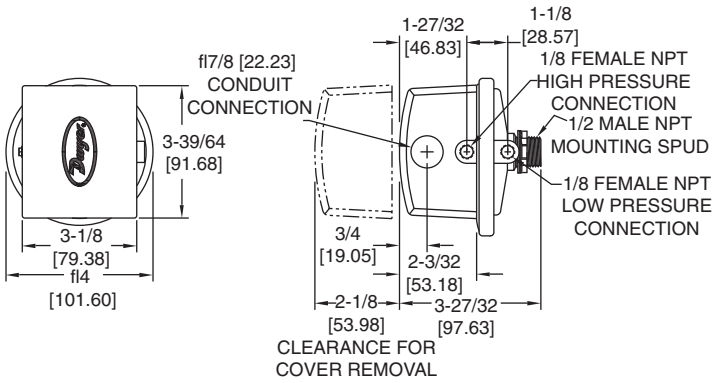

Construction and dimensions. Series 1823 pressure switches.

Uno de nuestros mas populares interruptores de presión. Combina un pequeño tamaño y bajo precio, con una repetibilidad del 2%, exactitud suficiente para las aplicaciones con mas demanda. El ajuste del punto de operación en un extremo, permite instalar el interruptor de un lado en las pared o tablero, permitiendo acceso al tornillo de ajuste.

Interruptor para Ambiente Húmedo (MIL)

El modelo 1820 puede ser fabricado son un sello especial a prueba de intemperie, o para aplicaciones con alta humedad. Similar al modelo 1823, excepto que la banda de operación es mayor.

Especifique el modelo 1820 (Rango No.) “Mil” en su orden.

Model Number	Operating Range, Inches W.C.	Approximate Dead Band	
		At Min. Set Point	At Max. Set Point
1823-00	0.07 to 0.22	0.05	0.05
1823-0	0.15 to 0.5	0.06	0.06
1823-1	0.3 to 1.0	0.08	0.08
1823-2	0.5 to 2.0	0.10	0.12
1823-5	1.5 to 5.0	0.14	0.28
1823-10	2.0 to10	0.18	0.45
1823-20	3 to 22	0.35	0.70
1823-40	5 to 44	0.56	1.10
1823-80	9 to 85	1.30	3.0

Especificaciones:
Interruptor de presión diferencial operado por diafragma de 4”, para activar un interruptor de presión tipo simple polo doble tiro. El diafragma esta controlado por un resorte calibrado que se puede ajustar para fijar la presión diferencial exacta a la cual el interruptor actuara. El movimiento del diagragma es transmitido al botón del interruptor por un medio mecánico. Interruptor Dwyer Instruments, Inc. Catalogo No. 1823-__ __ para el rango de operación requerido.

SPECIFICATIONS

Service: Air and non-combustible, compatible gases.

Wetted Materials: Consult Factory.

Temperature Limits: -30 to 180°F (-34 to 82.2°C). 1823-00, -20 to 180°F (-28.9 to 82.2°C).

Pressure Limits: 10 psig (68.95 kPa) continuous, 25 psig (172.4 kPa) surge.

Switch Type: Single-pole double-throw (SPDT).

Repeatability: ±2%.

Electrical Rating: 15 A @ 120-480 VAC, 60 Hz. Resistive 1/8 HP @125 VAC, 1/4 HP @ 250 VAC, 60 Hz. De-rate to 10 A for operation at high cycle rates.

Electrical Connections: 3 screw type, common, normally open and normally closed.

Process Connections: 1/8″ female NPT.

Mounting Orientation: Diaphragm in vertical position. Consult factory for other position orientations.

Set Point Adjustment: Screw type inside mounting spud.

Weight: 1 lb, 5 oz (595 g).

Agency Approvals: CE, UL, CSA, FM.

DWYER INSTRUMENTS, INC.
P.O. BOX 373 • MICHIGAN CITY, INDIANA 46361, U.S.A.
Phone: 219/879-8000 **www.dwyer-inst.com**
Fax: 219/872-9057 **e-mail: info@dwyer-inst.com**

INSTALACIÓN:

1. Seleccione una ubicación libre de vibración excesiva, en donde el agua o aceite no entre al interruptor. Revise encapsulados especiales para aplicaciones especiales.
2. Mientras no se requiera otra, las conexión de presión inferior es recomendada. Monte el interruptor con el diafragma en posición vertical, el interruptor debe recalibrarse para cada cambio de posición.
3. Conecte el interruptor a la fuente de presión diferencial. Tubo metálico con diámetro de 1/4" es recomendado, pero cualquier sistema de tubería que no restrinja el flujo de aire es bueno.
4. Conexiones eléctricas estándar de los interruptores SPDT, común, NA y NC. Los contactos cambian cuando se incrementa la presión del punto de operación.
5. La carga del interruptor no debe exceder los 15 Amp. Especificados. Las capacidades decrecen con altas cargas inductivas y ciclos rápidos de actuación, por lo que en estos casos los limites de corriente deben ser 10 Amp. 0 menores para incrementar la vida del interruptor.

AJUSTES:

1. Si el interruptor ha sido calibrado en fabrica, revise el punto de operación antes de ponerlo en servico.
2. De lo contrario, siga los siguientes pasos:
   A. Para ajustar el punto de operación, gire el tornillo de calibración en sentido de las manecillas del reloj para aumentar el valor y en contra de las manecillas del reloj para dis minuir el valor del punto de operación.
   B. Lo siguiente se recomienda para calibrar o revisar la calibración: Use una T con tres mangueras plásticas, tan pequeñas como sean posible. Conecte una manguera al interruptor de presión, otra al manómetro y por la tercera aplique la presión de esta forma podrá ajustar el interruptor a la presión requerida lo mas exacto posible.

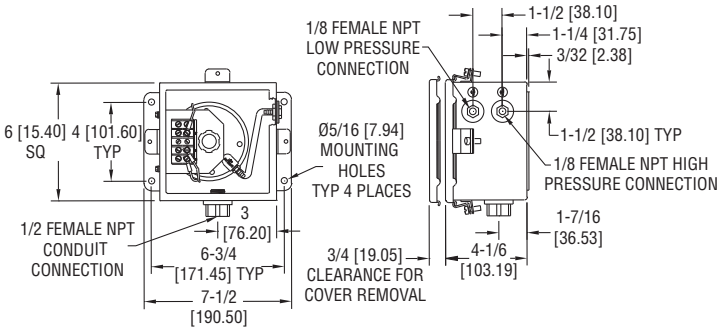

Encapsulado a Prueba de Intemperie
Encapsulado de acero para condiciones húmedas y/o aceitosas, soporta pruebas de 200 horas de spray salino, pesa 5-1/2 libras. El interruptor debe ser instalado en la planta al momento de su fabricación. Especifique "WP" mas el modelo del interruptor en catalogo.

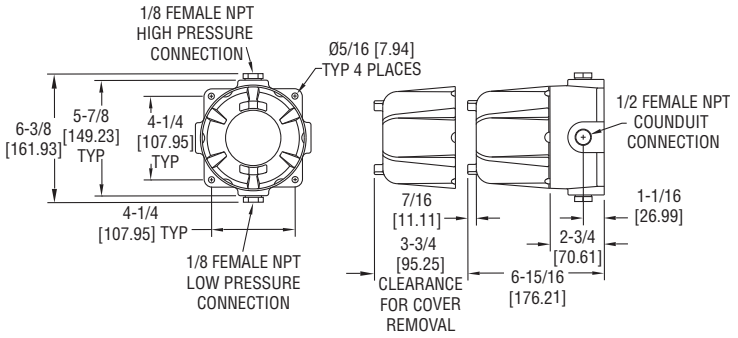

Encapsulado a Prueba de Explosión
Encapsulado a base de Hierro y Aluminio, pesa aproximadamente 7-1/2 libras. Especifique "EXPL" mas modelo del interruptor en catalogo.

©Copyright 2003 Dwyer Instruments, Inc.
Printed in U.S.A. 7/03

FR# 24-440256-00 Rev. 1

DWYER INSTRUMENTS, INC.
P.O. BOX 373 • MICHIGAN CITY, INDIANA 46361, U.S.A.

Phone: 219/879-8000 www.dwyer-inst.com
Fax: 219/872-9057 e-mail: info@dwyer-inst.com

PSL-7911 - Meter, Flow, Pitot Tube, 4"

newterra™
smart technology. sustainable solutions.℠

PITOT TUBE AIR FLOW METERS
PFLOW SERIES

Application:

newterra Pitot Tube Air Flow Meters are designed to be a cost effective, accurate flow meters that are calibrated for your site-specific conditions. The unique self draining design allows the meter to function in process lines with high humidity and moisture content as well as dry air lines. The PFLOW meter takes two pressure readings in your process line, one at a high-pressure, zero velocity and one at a low-pressure, full velocity. The pressure differential is used to calibrate the meter for a desired flow and operating conditions. When ordering the flow meter, it is critical to supply: operating temperature, pressure or vacuum in psia, and the pipe ID. The PFLOW meter can be supplied with any scale range required in scfm (25deg C, 14.7psia) or acfm at your listed operating conditions.

Construction:

The high, static pressure is measured using a 304 Stainless Steel probe inserted into the process line. The probe is designed with 4 measurement ports that provide an average reading for flow through your process pipe. Multiple ports on the static pressure line ensure that you can maintain an accurate reading while the tube is self-draining. The low pressure point is measured by tapping a 1/4" hole in the process line ahead of the high-pressure port. This tapping is completed on the top of the pipe to minimize moisture collection in the pressure communication lines. The differential pressure gauge is connected to the pressure ports using 3/8" Buna-N and the brass connections are capable of handling temperatures as high as 250 deg F. The Dwyer Magnehelic ® gauge provides a large, clear and accurate display of your airflow reading.

Standard Features:

- 304SS static pressure probe
- Brass compression fittings and Buna-N pressure communication tubing
- Direct read display can be calibrated for your specific operating conditions. Display can read ACFM or SCFM but SCFM is recommended as there is less error when the meter is operating above or below the calibrated pressure. Other units are available on request.
- Large 4" display for accurate reading
- Standard gauges are shipped loose for installation in an existing pipeline. The gauges can be wall mounted in site-specific locations. A pipe bracket can be purchased.

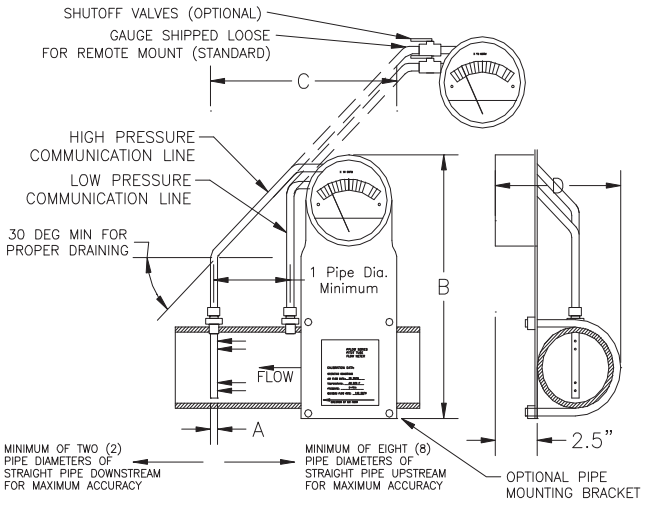

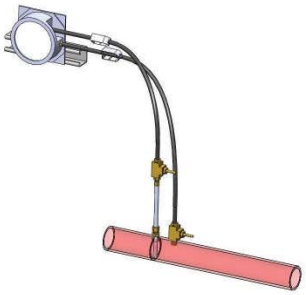

Dimensions Chart:

Part Number	A	B	C	D	Pipe
1" PFLOW	1/4"	12"	12"	4.75"	1"
1-1/2" PFLOW	3/8"	12"	12"	5.25"	1.5"
2" PFLOW	3/8"	12"	12"	5.75"	2"
3"PFLOW	1/2"	12"	12"	6.75"	3"
4"PFLOW	1/2"	14"	14"	7.75"	4"
6"PFLOW	1/2"	14"	14"	9.75"	6"
8"PFLOW	1/2"	14"	14"	12"	8"

Larger pitot tubes can be supplied as required.

newterra
smart technology. sustainable solutions.™

PITOT TUBE AIR FLOW METERS
PFLOW SERIES

Specifications:

Maximum Air Temperature:	250 °F (standard) 300 °F (high temp version)	Accuracy:	2.5 % of scale at calibration point
Max. Operating Pressure	15 psig (standard unit) 35 psig (medium pressure unit) 80 psig (high pressure unit)	Pressure Drop:	Less than 2" WC pressure drop in high flow applications
Repeatability:	1% of scale at calibration point		

The following table provides recommended flow rates for each meter at a given operating pressure range. These values are suitable for temperatures between 70-100 deg F. For meter applications outside this temperature range and outside of the operating pressure ranges listed below please contact our sales department for help in choosing a suitable meter.

Operating pressure	Recommended Operating Flow rates (SCFM)				
	0-5 psi	5-10 psi	0-10" Hg	10-20" Hg	20-26" Hg
PFLOW 1"	15-40	17-50	12-35	8-25	6-20
PFLOW 1-1/2"	35-90	40-115	25-75	20-60	15-50
PFLOW 2"	60-160	70-200	50-150	30-100	25-80
PFLOW 3"	135-360	150-450	100-300	75-250	50-180
PFLOW 4"	250-650	275-800	200-550	120-450	100-320
PFLOW 6"	550-1500	600-1800	450-1200	275-1000	200-750
PFLOW 8"	1000-2500	1100-3200	750-2250	500-1750	350-1250

Calibration and Correction Factors:

Each PFLOW pitot tube is calibrated for a specific operating temperature and pressure. If the pitot tube operates at a different pressure or temperature than the original design, the flow measurement can be adjusted with the following equation: (Units of $Flow_1$ and $Flow_2$ will be the same)

$Flow_1 = Flow_2 \times (P_2/P_1 \times ((T_1+460) / (T_2+460))^{1/2}$

Pressure units: psia, Temperature units: °F

Options Table:

Option	Description
Orientation:	The flow meter gauge can be oriented for flows from Left to Right, Right to Left, Up or Down as required for your specific application.
Site Specific Calibration and Gauge Range:	The following information is required to calibrate the flow meter for your specific application: Operating Pressure (psia): Operating Temperature (°F or °C): Operating Flow Rate (acfm or scfm or other scales as required): Maximum Flow rate (better accuracy is achieved when the operating flow rate is approximately ¾ of the scale range of the flow meter)
4-20ma Option	Flow meters can be ordered with 4-20ma outputs for control systems. Three versions are available: Nema 7 (Class 1 Div 1) FM or CSA approved Two Wire Connection: 24VDC+, Signal Output Power Consumption: 20mA 316SS Wetted parts Nema 4 (Weatherproof) or Nema 1 (General Purpose) Three Wire Connection: 24VDC+, 24VDC-, Signal Output Accuracy on all 4-20ma outputs: 2.5% of full scale for meter Aluminum with Silicon diaphragm
Shutoff Valves	The pressure gauges are not designed to operate with water collecting within the internal components. If you will be operating with hot wet air or condensing air streams, then it is recommended that we install shutoff valves in the pressure communication lines to isolate the gauge from the process lines when the operator is not taking a flow reading.
Pre Installed Section of Pipe	The flow meters can be preinstalled in a section of pipe with any configuration of material and fittings on the end. This will allow the PFLOW meter to be factory installed and tested in this section of pipe before leaving our facility.
Pipe Mounting Bracket	A pipe-mounting bracket can be supplied to allow the gauge to mount directly on the pipe as shown in the above picture.

newterra
smart technology. sustainable solutions.

PITOT TUBE AIR FLOW METERS
PFLOW SERIES

Company Name: _____ Purchase Order Number: _____

Contact Name: _____ Contact Number (PH/FAX):_____/_____

(Note: Please include relevant credit information to set up an account if required.
Ship to Address: _____

Billing Address: _____

Credit Card Orders (Please check card type)

❑ VISA ❑ MASTERCARD

Credit Card Number: _____ Expiry Date (m/y): _____ / _____

Meter Size: (please check box)

❑ 1” ❑ 2” ❑ 4” ❑ 8”

❑ 1-1/2” ❑ 3” ❑ 6”

Process Pipe Material and Schedule: (please check box)

❑ Schedule 40 PVC ❑ Schedule 40 Steel

❑ Schedule 80 PVC ❑ Schedule 80 Steel

For other Materials and Schedule Specify Inner Diameter of Pipe: _____

Orientation: (please check box)

❑ Flow from Left to Right ❑ Flow Up

❑ Flow from Right to Left ❑ Flow Down

4-20mA Output (please check box)

❑ Nema 7, Class 1 Div 1, 316SS, with flow gauge ❑ Nema 7, Class 1 Div 1, 316SS, no direct read display

❑ Nema 4, Weatherproof, with flow gauge ❑ Nema 4, Weatherproof, no direct read display

❑ Nema 1, General Purpose, with flow gauge ❑ Nema 1, General Purpose, no direct read display

❑ None

Calibration Information (Required Information):

Operating Pressure: _____ **Operating Temperature:** _____

Elevation or Atmospheric Pressure: _____

Operating Flow Rate: _____ **Maximum Flow Rate*:** _____

Scfm units are preferred but any flow units can be provided. The operating flow rate should be approximately ¾ of full scale to allow for an accurate reading at that flow rate. Note Lowest accurate reading is at ¼ of full scale.
*Options for Maximum Flow Rates include:1, 2, 3, 4, 5, 6, 7, 8, 9, 10, 11, 12, 13, 15, 20, 25, 30, 35, 40, 45, 50, 55, 60, 65, 70, 75, 80, 85, 90, 95, 100 and any scale can be multiplied by 10, 100, 1000, 10000

Switch-Tek

Powered Level Switch

LZ12, LU10, LP15 and LO10 Series Manual



Flowline Inc.
10500 Humbolt Street
Los Alamitos, CA 90720
Tel: (562) 598-3015
Fax: (562) 431-8507
www.flowline.com

About Switch-Pak™ Powered Level Switches: This manual contains information on all four series of powered level switches; Vibration (LZ12 series), Ultrasonic (LU10 series), Optic Leak (LO10 series) and SuperGuard Capacitance (LP15 series). The switches all feature two outputs: 1) a 4 or 20 mA current switch and 2) a 60VA SPST dry contact relay. All four series are manufactured with thermoplastics, including the cable, making them submersible in design and ideal for corrosive applications. Package the switches with either Flowline controllers (LC10 or LC40 series) or interface directly to another controller or PLC.

Table of Contents

Specifications: 3
Sensor Information: 4
Vibration Switch (LZ12 Series): 4
Maintenance Alarm: 5
Ultrasonic Switch (LU10 Series): 6
Optic Leak Detection (LO10 Series): 7
SuperGuard RD Capacitance Switch (LP15 Series): 8
Safety Precautions: 9
Make a Fail-Safe System:: 10
Installation: 11
Through Wall Installation: 11
Top Wall Installation: 11
Electrical: 12
Wiring: 13
Wiring to a Flowline Controller: 13
Switching Inductive Loads: 13
Wiring the Relay Output: 14
Intrinsically Safe Control Drawings (LU10 series only): 15-16
Wiring as a P-Channel or N-Channel Output: 17
Maintenance: 18
Cleaning procedure: 18
LZ12 Maintenance Alarm: 18
Testing the Installation: 19
Warranty, Returns & Limitations: 20

Common Specifications:

Orientation:	Universal	Pressure:	150 psi (10 bar) @ 25 °C., derated @ 1.667 psi (.113 bar) per °C. above 25° C.
Accuracy:	± 1 mm in water		
Repeatability:	± 0.5 mm in water		
Supply voltage:	12-36 VDC	Sensor rating:	NEMA 6 (IP68)
	12-30 VDC (LZ12 Only)	Cable type:	4-conductor, #22 AWG (shielded)
Consumption:	25 mA maximum	Cable length:	10' (3m) - Standard
Contact type:	(1) SPST relay		25' (7.6m) or 50' (15.2m) - Special
Contact rating:	60VA (125 VAC max / 1A max)	Process mount:	3/4" NPT (3/4" G / R)
Contact output:	Selectable NO/NC	Mount. gasket:	Viton® (G / R version only)
Process temp.:	F: -40° to 176°	Classification:	General purpose
	C: -40° to 80°	CE compliance:	EN 61326 EMC / EN 61010-1 safety

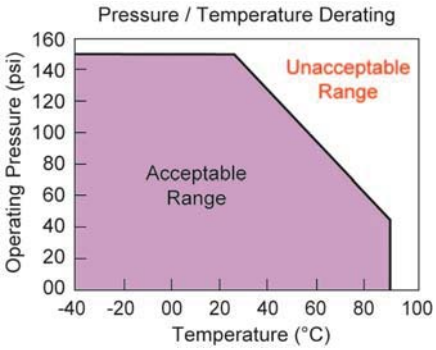

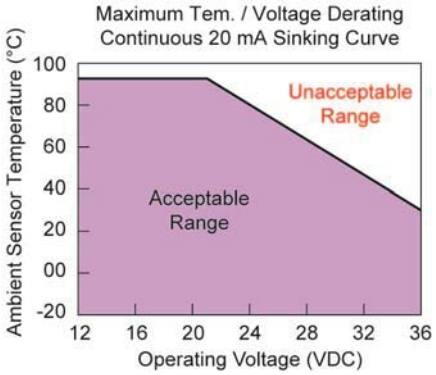

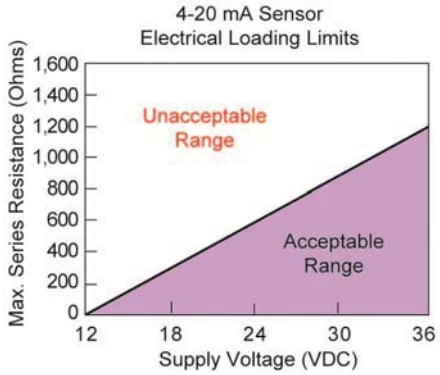

Vibration Switch (LZ12 Series): The Tuning Fork vibration switch operates at a nominal frequency of 400 Hz. As the switch becomes immersed in a liquid or slurry, a corresponding frequency shift occurs. When the measured frequency shift reaches the set point value, the switch changes state indicating the presence of a liquid or slurry medium. For optimum performance and proactive maintenance, the sensor automatically adjusts for coating, and if necessary, outputs a preventative maintenance alarm.

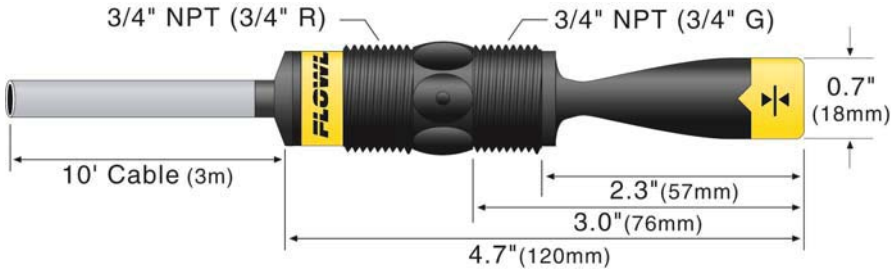

⚠ ***Do not squeeze the forks together. Doing so could damage or break the sensor and void the warranty.***

When powering up the LZ12, the start-up procedure requires the switch to cycle through a wet condition for 1/2 second in order to determine an initial resonance.

LZ12 Specifications:

Sensor material:	Ryton® (glass fill) Viton® cable grommet	Maint. alarm: Cable jacket mat'l:	NPN transistor, 10 mA max. PP
Process Temp.:	F: -40° to 176° C: -40° to 80°	Cable type:	5-conductor, #24 AWG (shielded)

Configurations:

Part Number	Material (body)	Material (cable)	Thread (inside x outside)
LZ12-1405	Ryton	Polypropylene	¾" NPT x ¾" NPT
LZ12-1425	Ryton	Polypropylene	¾" R x ¾"G

Maintenance Alarm (LZ12 Vibration only): For optimum performance and proactive maintenance, the sensor automatically adjusts for coating, and if necessary, outputs a preventative maintenance alarm. The Yellow wire is a NPN transistor designed to switch when a build-up of material prevents the vibration switch from operating at its operational frequency. Use the Yellow wire to identify when the Vibration switch requires cleaning. To wire the maintenance output wire to an LED, follow the wiring diagram below. The Yellow wire is connected to the LED and a 2.2kΩ resistor in series and referenced back to the (+) of the power supply.

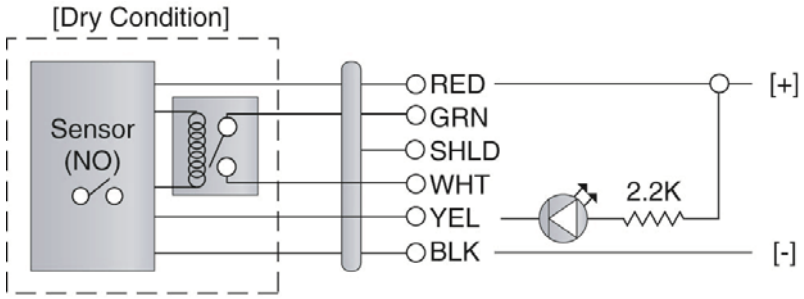

Sensor Power
[RED & BLK wires] / 36 VDC Max.
5 ±1mA Dry / 22 ±1mA Wet
Relay Rating
[GRN & WHT wires] / 60 VA
Maintenance Alarm
[YEL wire] / NPN Transistor / 10mA Max.

To wire the maintenance output wire to a PLC, follow the wiring diagram below. The Yellow wire is connected to the PLC input with a 10 kΩ resistor parallel to the PLC input and the (+) of the power supply.

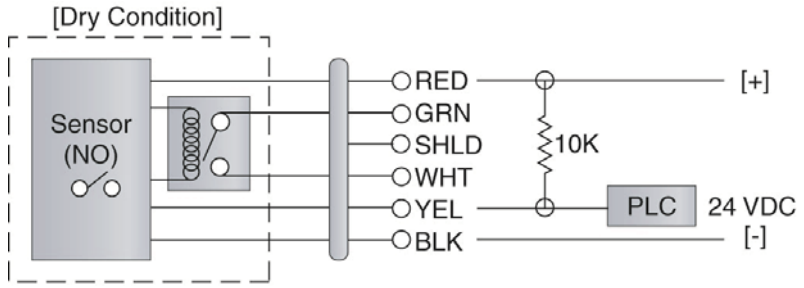

Sensor Power
[RED & BLK wires] / 36 VDC Max.
5 ±1mA Dry / 22 ±1mA Wet
Relay Rating
[GRN & WHT wires] / 60 VA
Maintenance Alarm
[YEL wire] / NPN Transistor / 10mA Max.

Ultrasonic Switch (LU10 Series): The Ultrasonic level switch generates a 1.5 MHz ultrasonic wave from a miniature piezoelectric transducer located on one side of the gap within it's sensing tip. Another piezo transducer, located on the other side of the gap, acts as a microphone, picking up the sound wave. When liquid enters the gap, there is a change in the speed the wave crosses the gap. This change in the speed of sound identifies whether the sensor is in liquid or in air.

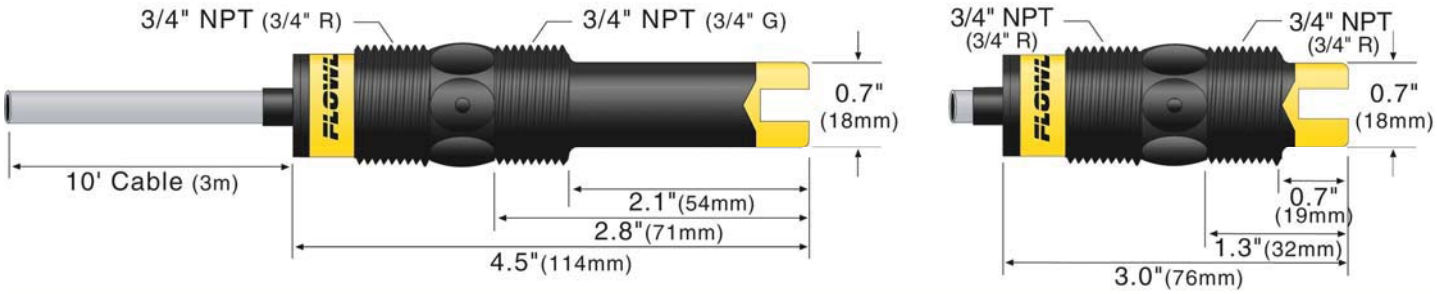

⚠ ***The sensor should be installed so that the liquid will drip out of the gap when the sensor becomes dry.***

LU10 Specifications:

Sensor material:	1_ _5: PP 2_ _5: PFA	Cable jacket mat'l:	1_ _5: PP 2_ _5: PFA
Classification:	Intrinsically safe	Parameters:	CSA: Vmax = 32V, Imax = 300 mA, Pmax = 1.3 W; Ci = 0 µF, Li = 0 µH EEx: Ui = 32V; Ii = 300 mA; Pi = 1.3 W; Ci = 0 µF; Li = 0 µH
Approvals:	CSA: Class I, Groups A, B, C & D; Class II, Groups E, F and G; Class III EEx: Class 1, Division 1, Groups A, B, C, D; EEx ib IIC T6	Certificates:	CSA: LR 79326 EEx: LCIE 01.E6048 X

Configurations:

Part Number	Length	Material (body)	Material (cable)	Thread cable side x sensor side
LU10-1305	Short (3")	Polypropylene	Polypropylene	(¾" NPT) x (¾" NPT)
LU10-1325	Short (3")	Polypropylene	Polypropylene	(¾" R) x (¾"R)
LU10-1405	Long (4.5")	Polypropylene	Polypropylene	(¾" NPT) x (¾" NPT)
LU10-1425	Long (4.5")	Polypropylene	Polypropylene	(¾" R) x (¾"G)
LU10-2305	Short (3")	PFA	PFA	(¾" NPT) x (¾" NPT)
LU10-2325	Short (3")	PFA	PFA	(¾" R) x (¾"R)
LU10-2405	Long (4.5")	PFA	PFA	(¾" NPT) x (¾" NPT)
LU10-2425	Long (4.5")	PFA	PFA	(¾" R) x (¾"G)

Optic Leak Detection Switch (LO10 Series): The Optic Leak Detector use principles of optical refraction to detect the presence or absence of fluid. A pulsed infrared light beam is internally generated by a light emitting diode and aimed at the slanted optical tip of the sensor. If the tip is dry, the light beam bounces at a 90 degree angle to a receiving photo transistor, indicating a dry condition. If the tip is immersed in liquid, the light beam will refract out into the liquid instead of being reflected to the photo transistor, indicating a wet condition.

⚠ **The LO10 series is designed as a leak detection switch. The switch should be installed in applications where under normal conditions, it remains away from the liquid and will only come into contact during a leak.**

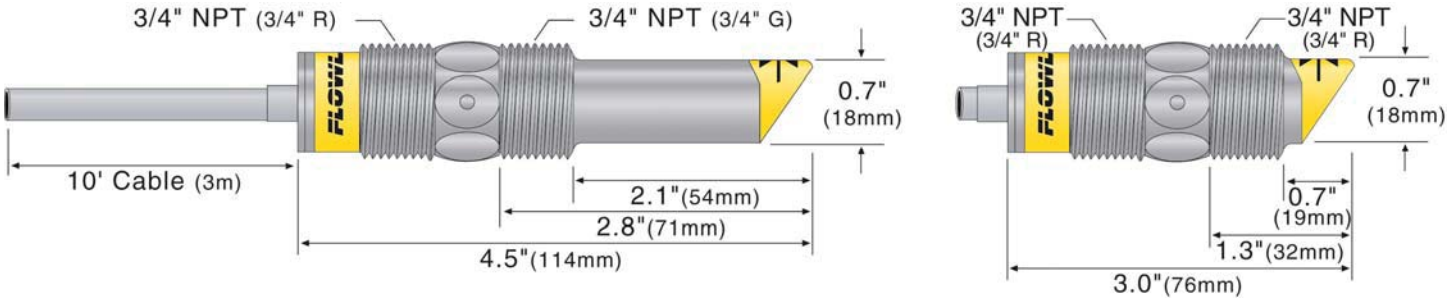

⚠ ***The Optic Leak Detector cannot detect the presence or absence of specular application liquids that reflect light (such as milk), or viscous liquids (such as paint) that form a coating on the sensor tip.***

LO10 Specifications:

Sensor material: 1_ _5: PP 2_ _5: PFA	Cable jacket mat'l: 1_ _5: PP 2_ _5: PFA

Configurations:

Part Number	Length	Material (body)	Material (cable)	Thread cable side X sensor side
LO10-1305	Short (3")	Polypropylene	Polypropylene	(¾" NPT) x (¾" NPT)
LO10-1325	Short (3")	Polypropylene	Polypropylene	(¾" R) x (¾"R)
LO10-1405	Long (4.5")	Polypropylene	Polypropylene	(¾" NPT) x (¾" NPT)
LO10-1425	Long (4.5")	Polypropylene	Polypropylene	(¾" R) x (¾"G)
LO10-2305	Short (3")	PFA	PFA	(¾" NPT) x (¾" NPT)
LO10-2325	Short (3")	PFA	PFA	(¾" R) x (¾"R)
LO10-2405	Long (4.5")	PFA	PFA	(¾" NPT) x (¾" NPT)
LO10-2425	Long (4.5")	PFA	PFA	(¾" R) x (¾"G)

SuperGuard Capacitance Switch (LP15 Series): The SuperGuard level switch generates a pulse-wave radio frequency signal from the capacitance electrode located in the sensing tip of each sensor. When liquid comes into contact with the sensing tip, the capacitance as measured by the sensor changes based on the dielectric constant of the liquid. The guard circuit rejects the negative effects of coating buildup on the probe by eliminating the coating signal path between the active and reference electrodes.

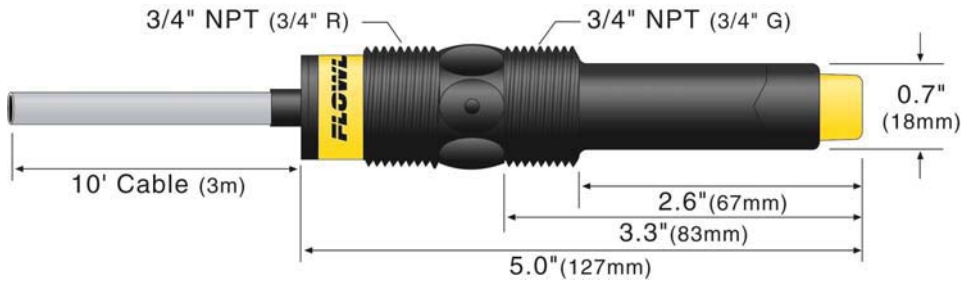

⚠ ***The sensor's operation may vary based on the dielectric properties of various application liquids. The LP15 series sensor is factory-calibrated to be used with liquids with a dielectric value between 20 and 80. Liquids with a dielectric constant less than 20 will not be detected by an LP15 series sensor.***

Table of Common Dielectric Constants: NOTE: Liquids with a dielectric constant less than 20 will not be detected by an LP15 series level switch.

Acetone 21	Chlorotoluene 4.7	Ethylene chloride .. 10.5	Isobutyl methyl ketone 13	Nitrotoluene 25	Trichloroethylene 3.4
Acetoaldehyde 22.2	Chloroform ....4.5 to 5.0	Ethyl acetate 6.4	Jet fuel 1.7	Naphthalene ..2.3 to 2.5	Trichloroacetic acid 4.5
Acetyl methyl hexyl ketone 28	Chlorine, liquid 2.0	Ethyl salicylate 8.6	Lead carbonate 18	Oils, vegetable 2.5 to 3.5	Terephthalic acid ..... 1.5 to 1.7
Alcohol ..... 16 to 31	Carbon tetrachloride 2.2	Ethyl stearate 2.9	Lead nitrate 38	Oils, mineral ..2.3 to 2.4	Thinner 3.7
Ammonia ..... 15 to 25	Cyan 2.6	Ethyl silicote 4.1	Methyl salicylate 9.0	Oils, petroleum .....1.8 to 2.2	Urea 3.5
Acetic acid .... 4.1 to 6.2	Cyclohexane methanol 3.7	Formic acid 59	Methanol 33	Oleic acid 2.5	Vinyl chloride .. 2.8 to 6
Butyl chloride 9.6	D.I. Water 20	Ferric oleate 2.6	Methyl alcohol .33 to 38	Propane, liquid .....1.8 to 1.9	Vinyl alcohol 1.8 to 2.0
Barium chloride 9 to 11	Ethyl toluene 2.2	Freon 2.2	Margarine, liquid .....2.8 to 3.2	Potassium nitrate .....5.0 to 5.9	Water, 20°C 80
Benzene 2.3	Ethyl alcohol 23	Glycerine 47	Methyl acetate 7.3	Potassium chloride .. 5.0	Water, 100°C 48
Benzine 2.3	Ethylene glycol 37	Glycol 30	N-butyl formate 2.4	Stearic acid 2.3	
Barium nitrate 5.6	Ethylene oxide 14	Glycol nitrite 27	Nitrobenzene ...26 to 35	Toluene 2.4	
Bromine 3.1	Ethylene dichloride .....11 to 17	Gasoline ..... 2 to 2.2			
Chlorobenzene . 4.7 to 6		Hydrochloric acid ... 4.6			
		Isobutyric acid 2.7			

LP15 Specifications:

Dielectric range:	>20 constants	Sensor material:	PP
Conductive range:	>100 miromhos	Cable jacket mat'l:	PP

Configurations:

Part Number	Material (body)	Material (cable)	Thread cable side x sensor side
LP15-1405	Polypropylene	Polypropylene	(¾" NPT) x (¾" NPT)
LP15-1425	Polypropylene	Polypropylene	(¾" R) x (¾"G)

About Manual: PLEASE READ THE ENTIRE MANUAL PRIOR TO INSTALLING OR USING THIS PRODUCT. This manual includes information on all models of Flowline Switch-Tek™ Powered Level Switches: LZ12, LU10, LP15 and LO10 series. Please refer to the part number located on the sensor label to verify the exact model which you have purchased.

User's Responsibility for Safety: FLOWLINE manufactures a wide range of liquid level switches and technologies. While each of the these switches are designed to operate in a wide variety of applications, it is the user's responsibility to select a switch model that is appropriate for the application, install it properly, perform tests of the installed system, and maintain all components. The failure to do so could result in property damage or serious injury.

Proper Installation and Handling: Because this is an electrically operated device, only properly trained staff should install and/or repair this product. Use a proper sealant with all installations. *Note: Always install the 3/4" Viton gasket with all versions of Switch-Tek™ with metric threads. The G threaded version will not seal unless the gasket is properly installed.* Never over tighten the sensor within the fitting, beyond a maximum of 80 inch-pounds torque. Always check for leaks prior to system start-up.

Material Compatibility: The LU10 and LO10 series sensors are available in two different wetted materials. Models L_10-1__5 are made of Polypropylene (PP). Models L_10-2__5 are made of Perfluoroalkoxy (PFA). The LZ12 series is made of made of Ryton® (40% glass filled) and the LP15 series is made of PP. Make sure that the model you have selected is compatible with the application liquid. To determine the chemical compatibility between the sensor and its application liquids, refer to an industry reference such as the Compass Corrosion Guide (available from Compass Publications, phone 858-589-9636).

Wiring and Electrical: The supply voltage used to power the sensor should never exceed a maximum of 36 volts DC *(30 VDC for LZ12 series)*. Electrical wiring of the sensor should be performed in accordance with all applicable national, state, and local codes.

Flammable, Explosive and Hazardous Applications: Only the LU10-___5 series switch is rated for use in hazardous locations. Refer to the Certificate of Compliance for all applicable intrinsically safe ratings and entity parameters. Refer to the National Electric Code (NEC) for all applicable installation requirements in hazardous locations. **DO NOT USE THE LZ12, LP15 OR LO10 SERIES GENERAL PURPOSE SWITCH IN HAZARDOUS LOCATIONS.**

Warning

The rating for the relay is 60 VA (125 VAC max / 1A max).

Flowline's Switch-Tek™ level switches are not recommended for use with electrically charged application liquids. For most reliable operation, the liquid being measured may need to be electrically grounded.

Always install the 3/4" Viton gasket with all versions of the powered sensors with metric threads. The G threaded version will not seal unless the gasket is installed properly.

Make a Fail-Safe System: Design a fail-safe system that accommodates the possibility of switch and/or power failure. FLOWLINE recommends the use of redundant backup systems and alarms in addition to the primary system. Adding a redundant high level float switch to the system is a cost effective means to prevent costly tank overflows.

All of the Switch-Tek™ Powered Level Sensors have a single internal relay. The normally open (NO) or normally closed (NC) operation is user selected based on the desired system control. Always design a fail-safe system that accommodates for the possibility of functional and/or power failure to the instrument. The "normal" relay state is where the relay coil is de-energized and the relay indicator is OFF. Therefore, if power is cut OFF to the switch it will de-energize the relay. Make sure that the de-energized state is the safe state in your system design. As such, if switch power is lost, a pump will turn OFF if it is connected to the normally open side of the relay.

Through Wall Installation: Flowline's Switch-Tek™ level switches may be installed through the top, side or bottom of a tank wall. The sensor has male 3/4" NPT threads on either side of a 15/16" wrench flat. This enables the user to select the sensor's mounting orientation, installed outside of the tank in, or inside of the tank out.

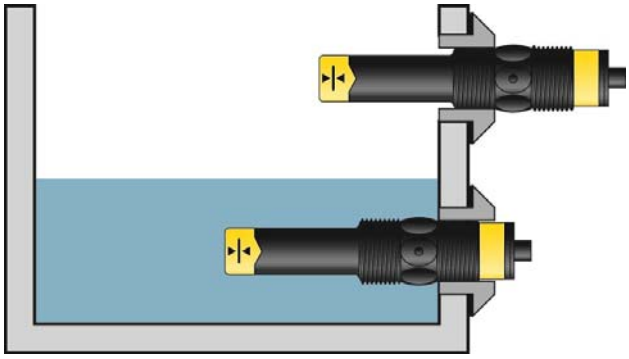

⚠ ***Always install the 3/4" Viton gasket with the metric (long sensor length) versions of the L_ _ _-_ _2_. The G threaded version of the Switch-Tek™ will not seal unless the gasket is installed properly.***

Top Wall Installation: The powered level switches may be installed through the top wall of a tank. Flowline's Smart Trak LM10 series mounting system is an in-tank fitting which enables users to install up to four FLOWLINE sensors of any technology, to any depth, along the entire length of track. Smart Trak may be installed through the top wall of any tank using a standard 2" NPT tank adapter. If no tank top installation is available, Flowline's side mount bracket, LM50-1001, enables Smart Trak to be installed directly to the side wall of a tank. *Do not use PFA Teflon sensors with Smart-Trak.*

Flowline's Switch Pak LM45 series mounting system is an in-tank fitting which enables users to install one FLOWLINE sensor, of any technology, to a specific depth. The Flowline sensor may be installed onto the 3/4" NPT adapter at the end of the Switch Pak. Switch Pak may be installed through the top wall of any tank using a standard 2" NPT tank adapter. Flowline's side mount bracket, model LM50-1001, may also be used if top wall installation is not available.

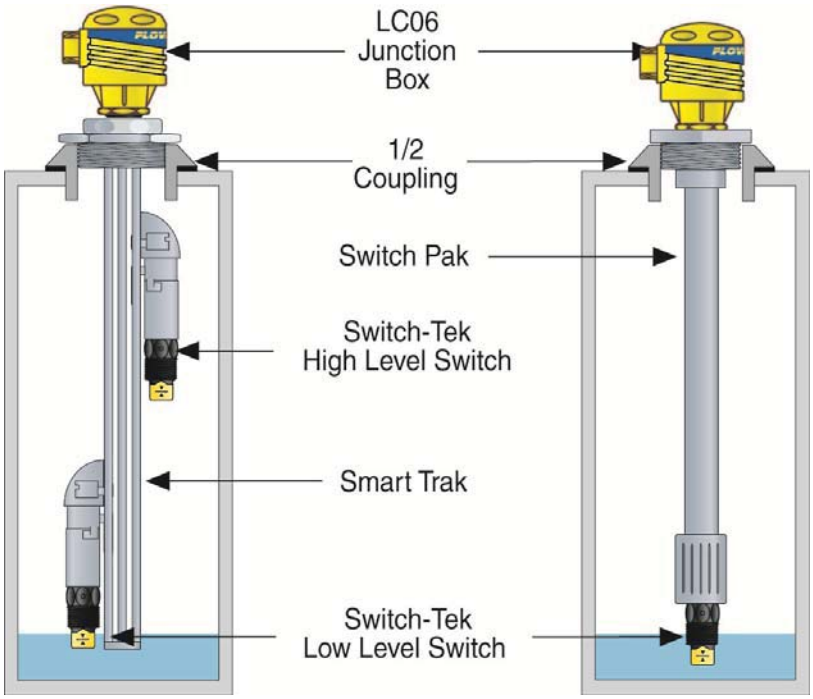

Supply Voltage: The supply voltage to the Switch-Tek™ level switch should never exceed a maximum of 36 VDC. Flowline controllers have a built-in 13.5 VDC power supply which provides power to all of Flowline's electrically powered sensors. Alternative controllers and power supplies, with a minimum output of 12 VDC up to a maximum output of 36 VDC (30 VDC with LZ12 series), may also be used with the Switch-Tek™ level switch.

Required Cable Length: Determine the length of cable required between the Switch-Tek™ level switch and its point of termination. Allow enough slack to ensure the easy installation, removal and/or maintenance of the sensor. The cable length may be extended up to a maximum of 1000 feet, using a well-insulated, 14 to 20 gauge shielded four conductor cable.

Wire Stripping: Using a 10 gauge wire stripper, carefully remove the outer layer of insulation from the last 1-1/4" of the sensor's cable. Unwrap and discard the exposed foil shield from around the signal wires, leaving the drain wire attached if desired. With a 20 gauge wire stripper, remove the last 1/4" of the colored insulation from the signal wires.

Signal Outputs (Current sensing): The standard method used by Flowline controllers; this technology uses only two wires (Red and Black). The sensor draws 5 mA when it is dry, and 22 mA when wet. NC/NO status must be set by the controller. The White and Green wires are not used.

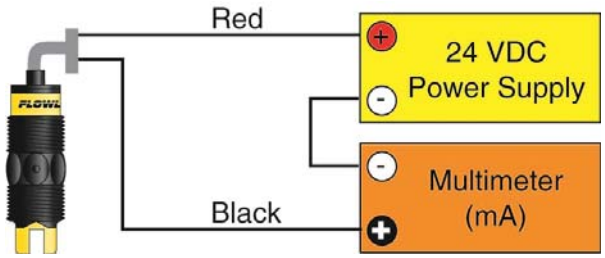

Signal Output (Relay switching): Allows the sensor to switch a small load on or off directly, using an internal 1A relay (60 VAC/60 VDC). Only model LU10-___5 uses the relay and features 4 wires (red, black, white and green) and a shield wire. The NO/NC status is set by the polarity of the voltage feeding the red and black wires. The green wire is the common for the relay and the white wire is the NO or NC, depending on the polarity of red and black.

Normally Open Wiring:



Normally Closed Wiring:

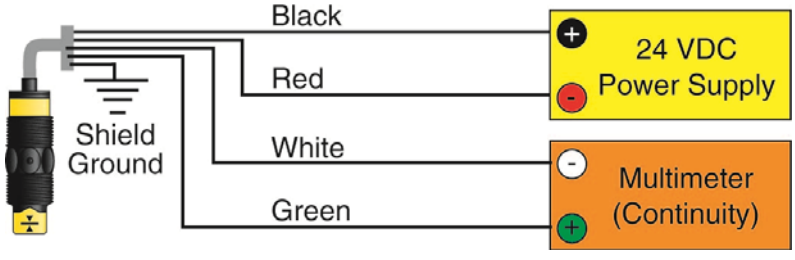

Wiring to a FLOWLINE Controller

LC40 Series Controller (4 or 20 mA output)**:**
LC42-1001 Shown

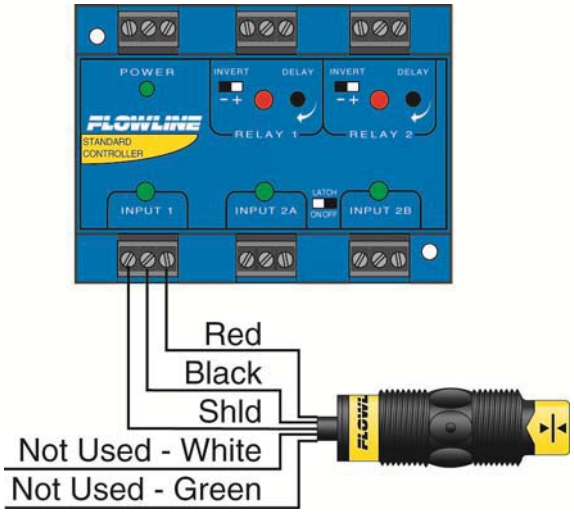

LC10/LC11 Series Controller (4 or 20 mA output)**:**
LC11-1001 shown

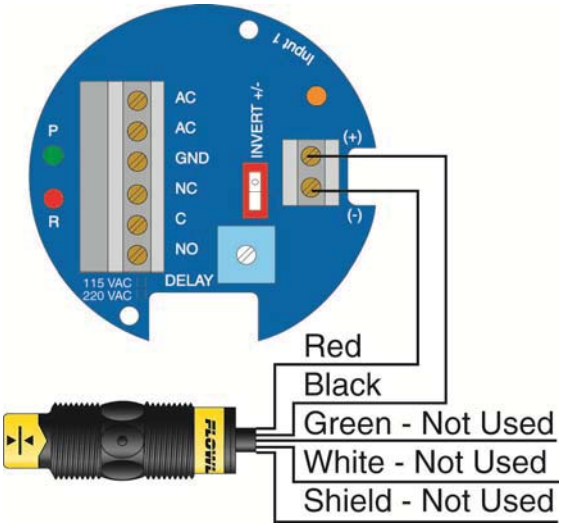

Switching Inductive Loads: The use of suppressors (snubbers) is strongly recommended when switching inductive loads to prevent disrupting the microprocessor's operation. The suppressors also prolong the life of the relay contacts. Suppression can be obtained with a catch diode for DC circuits and a resistor-capacitor (RC) for AC circuits.

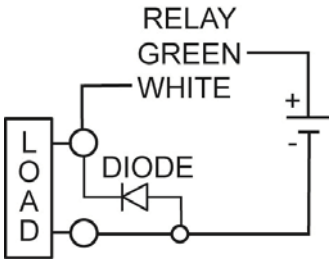

Catch Diode

- Always use stepper relays between the sensor and external loads. For DC circuits use a catch diode such as 1N4148, shown on left.

Refer to the following circuits for RC network assembly and installation:

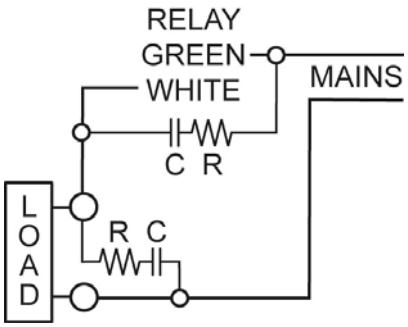

Choose R and C as follows:

- R: 0.5 to 1 Ohms for each volt across the contacts
- C: 0.5 to 1 µF for each amp through closed contacts

Notes:

1. Use capacitors rated for 250 VAC.
2. RC networks may affect load release time of solenoid loads. Check to confirm proper operation.
3. Install the RC network at the meters relay screw terminals. An RC network may also be installed across the load. Experiment for best results.

Wiring the Relay Output: Switch-Tek™ requires 12 - 36 VDC (30 VDC max. for LZ12 series) power to operate the sensor and switch the relay. All illustrations below identify a Dry switch state as the normal position of the relay.

Switching a Normally Open DC Load:
The Red wire connects to Positive (+) of the power supply and the Black wire connects to Negative (-). The LOAD can be attached to either the Green or White wires. Complete the circuit by connecting the Green to (+) VDC power or White to (-) VDC power (see illustration below).

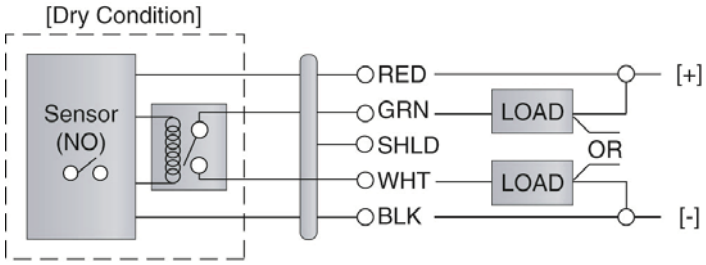

Switching a Normally Closed DC Load:
The Black wire connects to Positive (+) of the power supply and the Red wire connects to Negative (-). The LOAD can be attached to either the Green or White wires. Complete the circuit by connecting the Green to (+) VDC power or White to (-) VDC power (see illustration below).

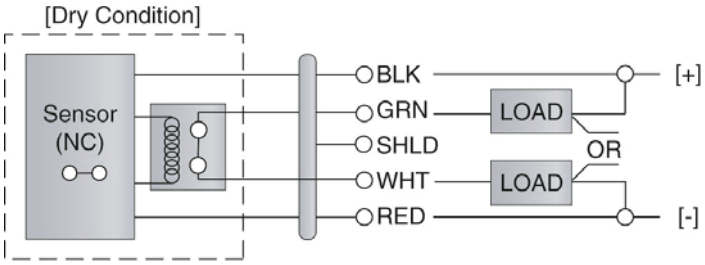

Sensor Power	*Relay Rating*
[RED & BLK wires] / 36 VDC Max. 5 ±1mA Dry / 22 ±1mA Wet	[GRN & WHT wires] / 60 VA

Switching a Normally Open AC Load:
The Red wire connects to Positive (+) of the DC power supply and the Black wire connects to Negative (-). The LOAD can be attached to the Green wire and the Hot of the VAC power. Connect the White to the Neutral of the VAC power (see illustration below).

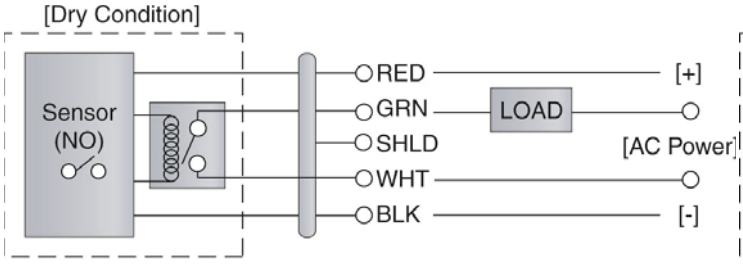

Switching a Normally Closed AC Load:
The Black wire connects to Positive (+) of the DC power supply and the Red wire connects to Negative (-). The LOAD can be attached to the Green wire and the Hot of the VAC power. Connect the White to the Neutral of the VAC power (see illustration below).

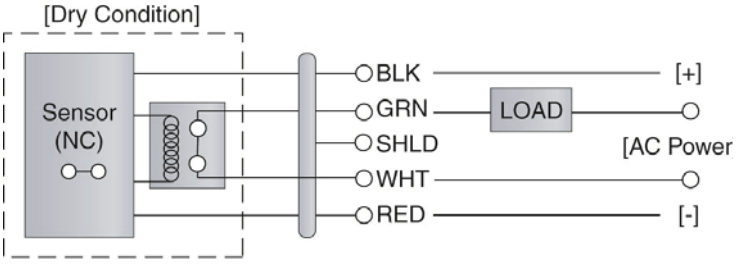

Sensor Power	*Relay Rating*
[RED & BLK wires] / 36 VDC Max. 5 ±1mA Dry / 22 ±1mA Wet	[GRN & WHT wires] / 60 VA

Models LU10-___5 Only: The LU10-___5 level switch has been approved for use in Class I, Groups A, B, C & D; UNDER CERTIFICATE NUMBER LR 79326-4. DO NOT USE THE LZ12, LP15 or LO10 SERIES IN INTRINSICALLY SAFE APPLICATIONS. The Entity parameter for the LU10-_ _ _5 are:

Vmax = 32 VDC / Imax = 0.5 A / Ci = 0 µF / Li = 0 mH

Intrinsically Safe Control Drawing:

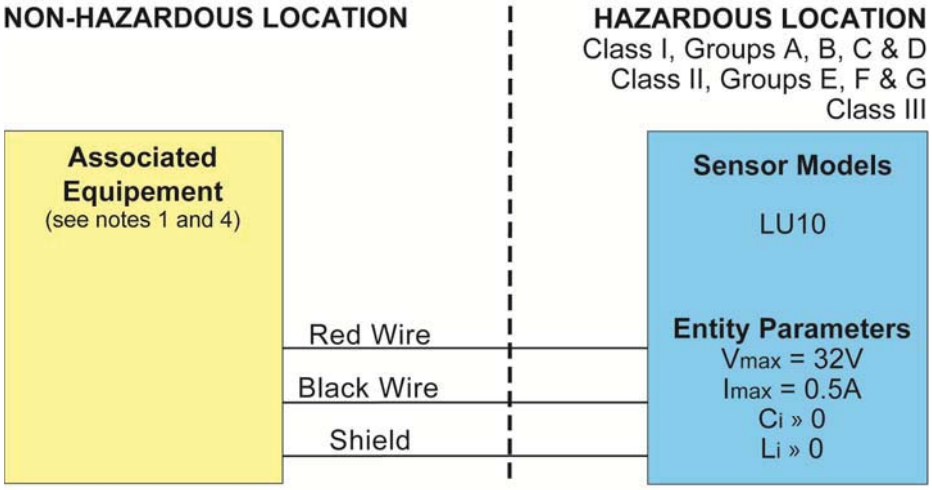

Notes:
1. CSA certified associated equipment with entity parameters.
2. $V_{max} \geq V_{oc}$, $I_{max} \geq I_{sc}$, $C_i + C_{cable} \leq C_a$., $L_i + L_{cable} \leq L_a$.
3. Installation should be in accordance with CEC Part I, or NFPA 70.
4. Associated equipment must be installed per manufacturers instructions

Sensor Drawing: LSD1
Rev. B 10-01-02

Wiring to a Flowline Controller: LC90 Series Controller (4 or 20 mA Signal Output)

LC90 Series
Entity Parameter
Voc = 17.47 VDC
Isc = 0.4597 A
Ca = 0.494 µF
La = 0.119 µH

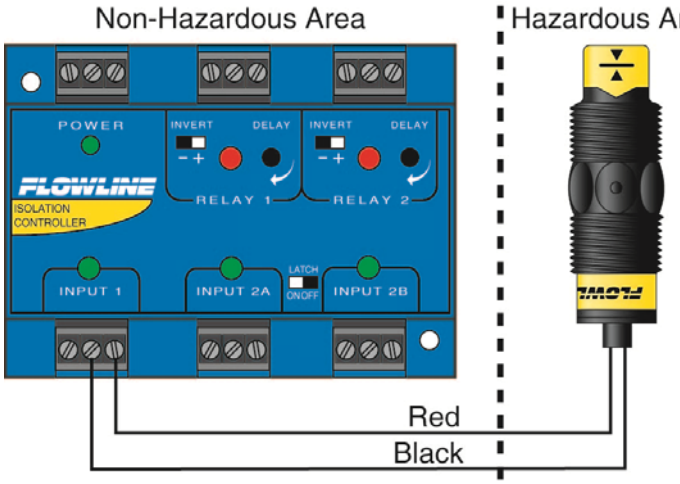

LU10 series
Entity Parameter
Vmax = 32 VDC
Imax = 0.5 A
Ci = 0 µF
Li = 0 µH

Models LU10-___5 Only: The LU10-___5 level switch has been approved for use in Class I, Division 1, Groups A, B, C & D; EEx ib IIC T6; UNDER CERTIFICATE NUMBER LCIE 01.E6048X. DO NOT USE THE LZ12, LP15 or LO10 SERIES IN INTRINSICALLY SAFE APPLICATIONS. The Entity parameter for the LU10-___5 are:

North America - Vmax = 32 VDC / Imax = 0.5 A / Pmax = 1.3 W / Ci = 0 µF / Li = 0 µH
Europe - Ui = 32 VDC / Ii = 0.5 A / Pi = 1.3 W / Ci = 0 µF / Li = 0 µH

Intrinsically Safe Control Drawing:

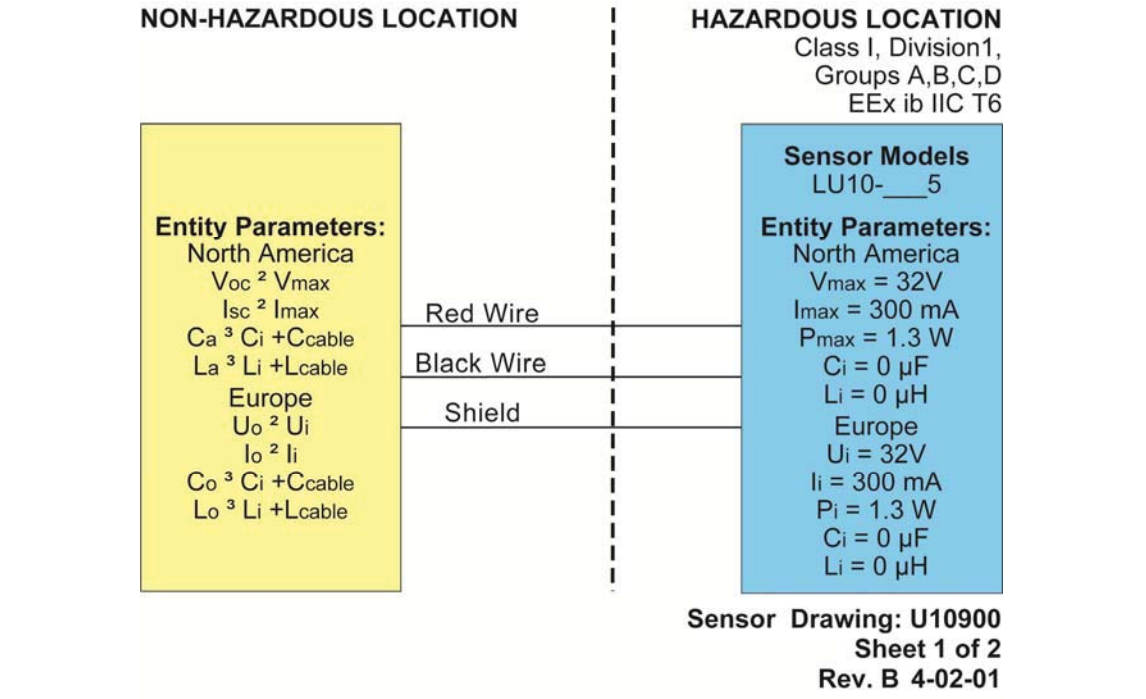

Sensor Drawing: U10900
Sheet 1 of 2
Rev. B 4-02-01

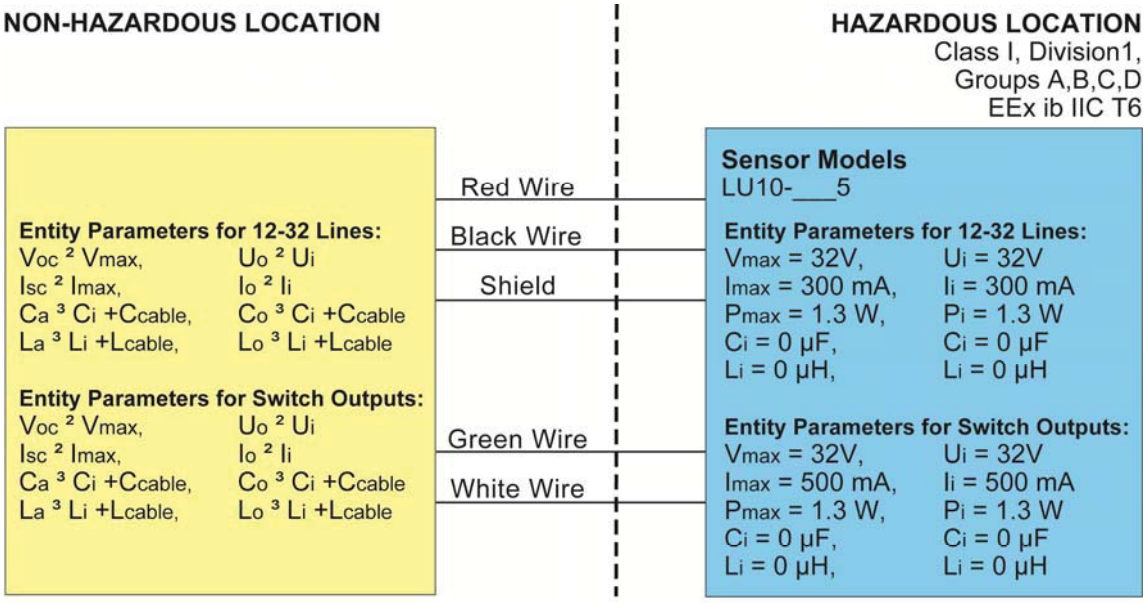

Notes: PARAMETERS DEPEND ON OUTPUT TYPE
1. Installation should be in accordance with CEC Part 1, or NFPA 70.
2. Associated Equipment shall be CSA certified with entity parameters connected in accordance with manufacturers instructions.

Sensor Drawing: U10900
Sheet 2 of 2
Rev. B 4-02-01

Wiring as a P-Channel or N-Channel output: The Switch-Tek™ can be substituted for either a P-Channel (PNP, sourcing) output or an N-Channel (NPN, sinking) output.

Normally Open DC Load as a P-Channel Output:
The Red wire connects to Positive (+) of the power supply and the Black wire connects to Negative (-). The Green wire is jumped to the Red wire while the White wire is connected to the LOAD. Jumper the LOAD to the Negative (-) to complete the circuit.

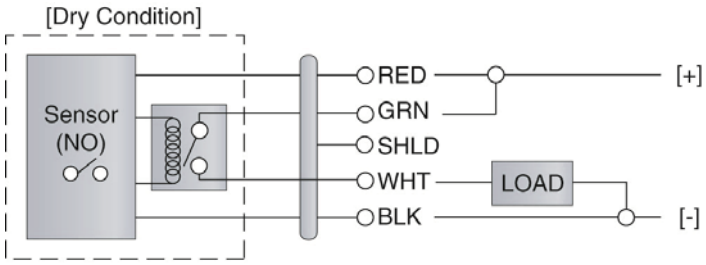

Normally Closed DC Load as a P-Channel Output:
The Black wire connects to Positive (+) of the power supply and the Red wire connects to Negative (-). The Green wire is jumped to the Black wire while the White wire is connected to the LOAD. Jumper the LOAD to the Negative (-) to complete the circuit.

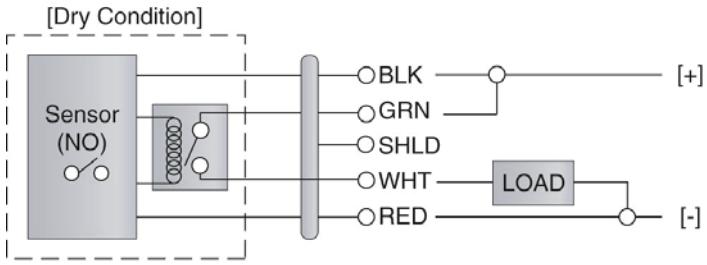

Sensor Power	*Relay Rating*
[RED & BLK wires] / 36 VDC Max. 5 ±1mA Dry / 22 ±1mA Wet	[GRN & WHT wires] / 60 VA

Normally Open DC Load as a N-Channel Output:
The Red wire connects to Positive (+) of the power supply and the Black wire connects to Negative (-). The White wire is jumped to the Black wire while the Green wire is connected to the LOAD. Jumper the LOAD to the Positive (+) to complete the circuit.

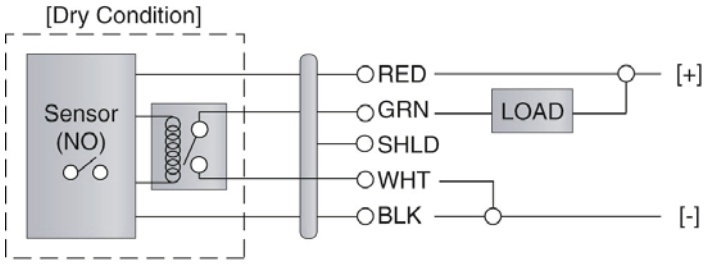

Normally Closed DC Load as a N-Channel Output:
The Black wire connects to Positive (+) of the power supply and the Red wire connects to Negative (-). The White wire is jumped to the Red wire while the White wire is connected to the LOAD. Jumper the LOAD to the Positive (+) to complete the circuit.

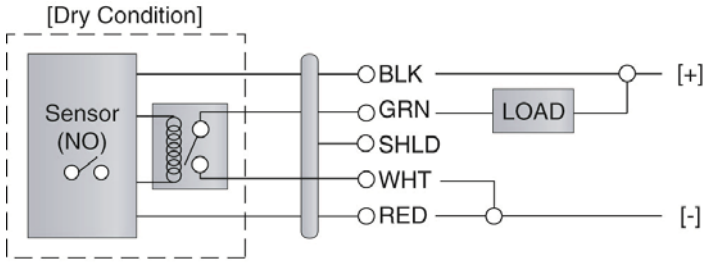

Sensor Power	*Relay Rating*
[RED & BLK wires] / 36 VDC Max. 5 ±1mA Dry / 22 ±1mA Wet	[GRN & WHT wires] / 60 VA

General: The Switch-Tek™ level switch requires no periodic maintenance except cleaning as required. It is the responsibility of the user to determine the appropriate maintenance schedule, based on the specific characteristics of the application liquids.

Cleaning procedure:

1. **Power:** Make sure that all power to the switch, controller and/or power supply is completely disconnected.
2. **Switch removal:** In all through-wall installations, make sure that the tank is drained well below the sensor prior to removal. Carefully, remove the sensor from the installation.
3. **Cleaning the switch:** Use a soft bristle brush and mild detergent, carefully wash the Switch-Tek™ level switch. Do not use harsh abrasives such as steel wool or sandpaper, which might damage the surface sensor. Do not use incompatible solvents which may damage the sensor's PP, PFA, PVDF or Ryton plastic body.
4. **Sensor installation:** Follow the appropriate steps of installation as outlined in the Installation section of this manual.

Maintenance Output to LED (LZ12 Only):
To wire the maintenance output wire to an LED, follow the wiring diagram below. The Yellow wire is connected to the LED and a 2.2kΩ resistor in series and referenced back to the (+) of the power supply.

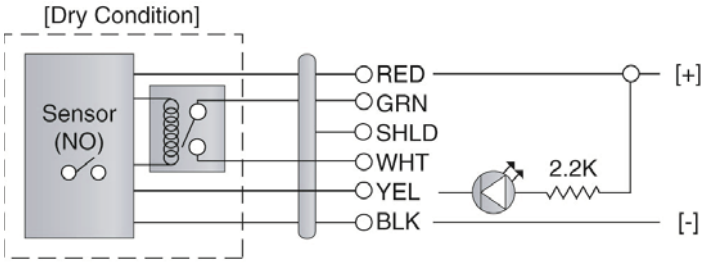

Maintenance Output to PLC (LZ12 Only):
To wire the maintenance output wire to a PLC, follow the wiring diagram below. The Yellow wire is connected to the PLC input with a 10 kΩ resistor parallel to the PLC input and the (+) of the power supply.

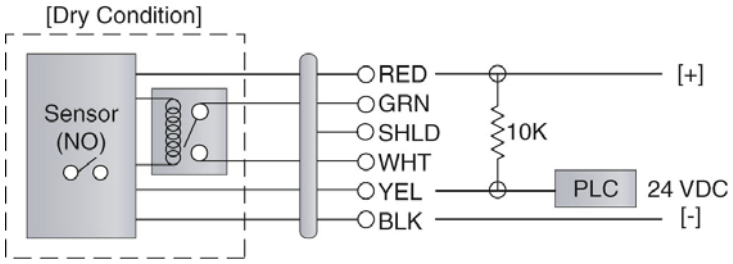

Sensor Power	*Relay Rating*	*Maintenance Alarm*
[RED & BLK wires] / 36 VDC Max. 5 ±1mA Dry / 22 ±1mA Wet	[GRN & WHT wires] / 60 VA	[YEL wire] / NPN Transistor / 10mA Max.

Testing the installation:

1. **Power:** Turn on power to the controller and/or power supply.
2. **Immersing the switch:** Immerse the sensing tip in its application liquid, by filling the tank up to the switches point of actuation. An alternate method of immersing the switch during preliminary testing is to hold a cup filled with application liquid up to the switch's tip.
3. **Test:** With the switch being fluctuated between wet and dry states, the switch indicator light in the controller should turn on and off. If the controller doesn't have an input indicator, use a voltmeter or ammeter to ensure that the switch produces the correct signal (see below).
4. **Point of actuation:** Observe the point at which the rising or falling fluid level causes the switch to change state, and adjust the installation of the switch if necessary.

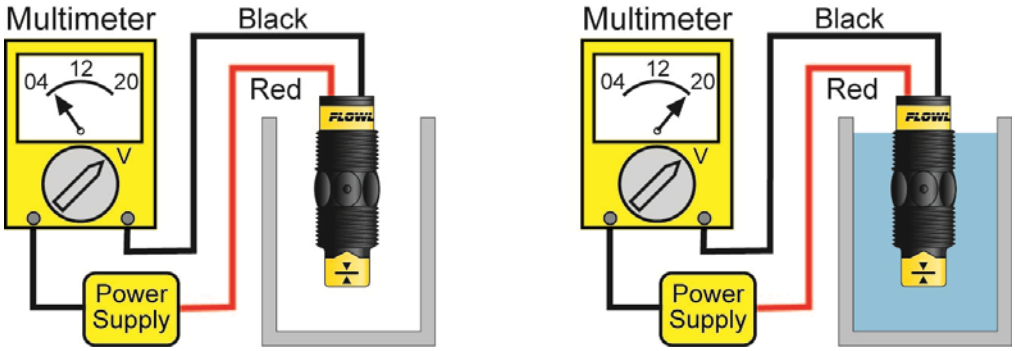

Example: Testing the LU10 series with a Multimeter set to read current (mA). When wired NO [Red to (+)], the meter will read 5mA, ±1mA when dry and will read 20mA, ±1mA when wet.

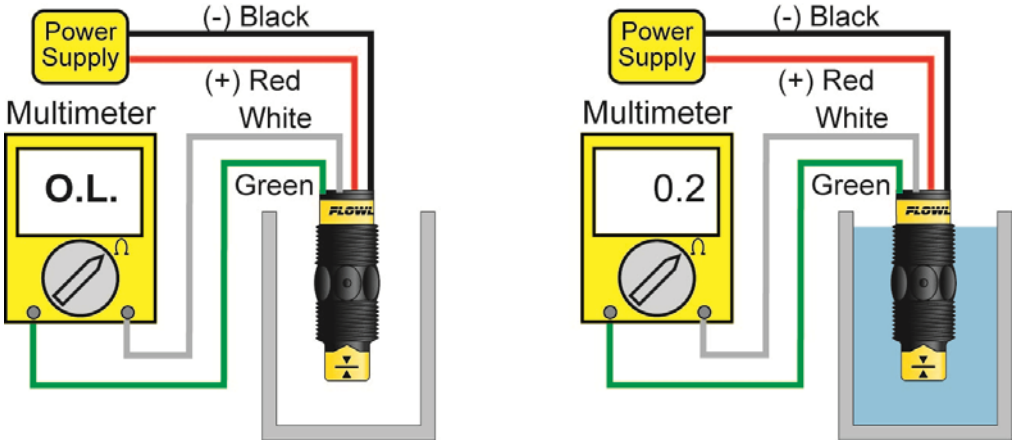

Example: Testing the LU10 series with a multimeter set to read resistance (ohms). When wired NO [Red to (+)], the meter will read O.L when dry and will read some small amount of resistance (ex. 0.2 Ohms) when wet.

Warranty

Flowline warrants to the original purchaser of its products that such products will be free from defects in material and workmanship under normal use and service in accordance with instructions furnished by Flowline for a period of two years from the date of manufacture of such products. Flowline's obligation under this warranty is solely and exclusively limited to the repair or replacement, at Flowline's option, of the products or components, which Flowline's examination determines to its satisfaction to be defective in material or workmanship within the warranty period. Flowline must be notified pursuant to the instructions below of any claim under this warranty within thirty (30) days of any claimed lack of conformity of the product. Any product repaired under this warranty will be warranted only for the remainder of the original warranty period. Any product provided as a replacement under this warranty will be warranted for the full two years from the date of manufacture.

Returns

Products cannot be returned to Flowline without Flowline's prior authorization. To return a product that is thought to be defective, go to www.flowline.com, and submit a customer return (MRA) request form and follow the instructions therein. All warranty and non-warranty product returns to Flowline must be shipped prepaid and insured. Flowline will not be responsible for any products lost or damaged in shipment.

Limitations

This warranty does not apply to products which: 1) are beyond the warranty period or are products for which the original purchaser does not follow the warranty procedures outlined above; 2) have been subjected to electrical, mechanical or chemical damage due to improper, accidental or negligent use; 3) have been modified or altered; 4) anyone other than service personnel authorized by Flowline have attempted to repair; 5) have been involved in accidents or natural disasters; or 6) are damaged during return shipment to Flowline. Flowline reserves the right to unilaterally waive this warranty and dispose of any product returned to Flowline where: 1) there is evidence of a potentially hazardous material present with the product; or 2) the product has remained unclaimed at Flowline for more than 30 days after Flowline has dutifully requested disposition. This warranty contains the sole express warranty made by Flowline in connection with its products. ALL IMPLIED WARRANTIES, INCLUDING WITHOUT LIMITATION, THE WARRANTIES OF MERCHANTABILITY AND FITNESS FOR A PARTICULAR PURPOSE, ARE EXPRESSLY DISCLAIMED. The remedies of repair or replacement as stated above are the exclusive remedies for the breach of this warranty. IN NO EVENT SHALL FLOWLINE BE LIABLE FOR ANY INCIDENTAL OR CONSEQUENTIAL DAMAGES OF ANY KIND INCLUDING PERSONAL OR REAL PROPERTY OR FOR INJURY TO ANY PERSON. THIS WARRANTY CONSTITUTES THE FINAL, COMPLETE AND EXCLUSIVE STATEMENT OF WARRANTY TERMS AND NO PERSON IS AUTHORIZED TO MAKE ANY OTHER WARRANTIES OR REPRESENTATIONS ON BEHALF OF FLOWLINE. This warranty will be interpreted pursuant to the laws of the State of California. If any portion of this warranty is held to be invalid or unenforceable for any reason, such finding will not invalidate any other provision of this warranty.

For complete product documentation, video training, and technical support, go to www.flowline.com.

For phone support, call 562-598-3015 from 8am to 5pm PST, Mon - Fri.

(Please make sure you have the Part and Serial number available.)

SCR-201/2 - Filter, Rotary screen, Newterra 17" wide SCR-50

newterra
smart technology. sustainable solutions.

Waste Water Inlet Screens – SCR SERIES

newterra Inlet Screens are specifically designed to protect newterra MicroClear™ flat sheet membranes from fouling due to excessive debris from waste water plant influent. The SCR series is designed to complement the newterra small to medium size wastewater MBR plants. Typically the screens would be used at the inlet to the Equalization Basin or the Aeration Basin. The SCR units are rotating brush design with 0.5mm crossflow wedgewire screens, and are designed to minimize complexity while achieving superior performance.

Standard Features:

- 304 SS construction
- 1/4 HP Gearbox/motor (waterproof aluminum)
- Easily replaceable heavy duty brushes
- Standard inlet on Top,Sides,Back
- Internal inlet baffling to provide full screen contact no matter which inlet is chosen
- Bag support
- High Level Switch Coupling
- Gravity Outlet
- Simple, reliable shear pin shaft/motor protection
- Can ship knocked down, easily assembled on site

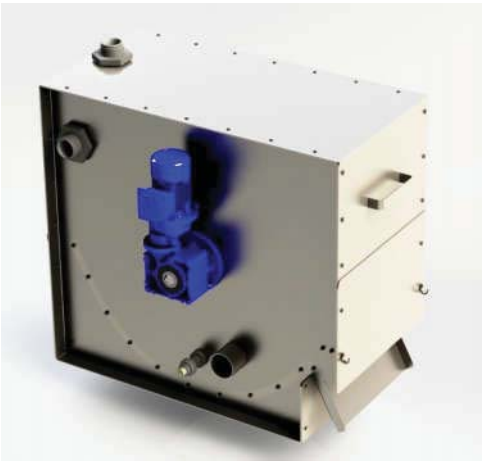

Options:

- Stands
- Discharge Pump Tank
- Complete Packages c/w pumps and controls

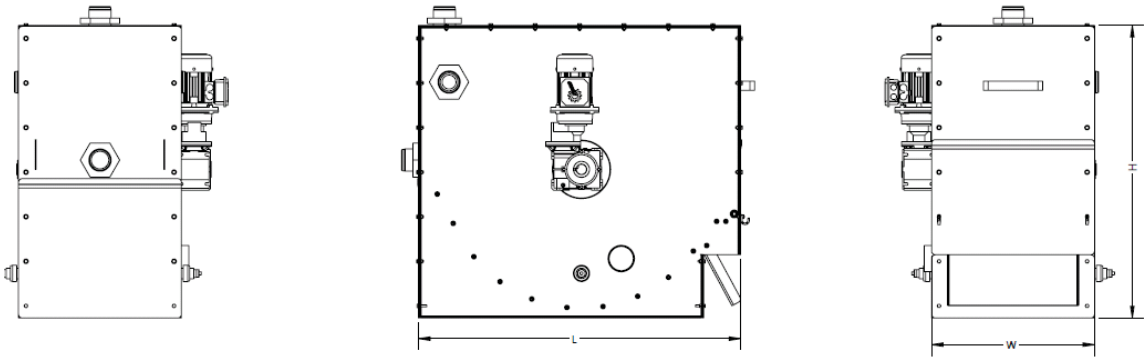

Dimension Chart:

Part Number	Width "W"	Standard Height "H"	Standard Overall Length "L"	Shipping Weight [lbs]	Inlet Size	Outlet Size	Nominal Flowrate gpm	Nominal Flowrate lps	Nominal Flowrate gpd	Nominal Flowrate m3/day
SCR-50	23"	39"	43"	150	2"	Open Bottom	50	3.2	72,000	273
SCR-100	41"	39"	43"	200	3"	Open Bottom	100	6.4	144,000	547

Nominal flowrates based on typical municipal characteristics

Intelligent Drivesystems, Worldwide Services

SCR-201/2 - Gear Motor, 230/460V 50/60 3P, 60/50hz 1/4hp
SK1SI63/H10-56C-63L/4 FRD DIV2 NSD+ 400:1
Nord Gear, 4.3 RPM, CSA CL1 DIV2"

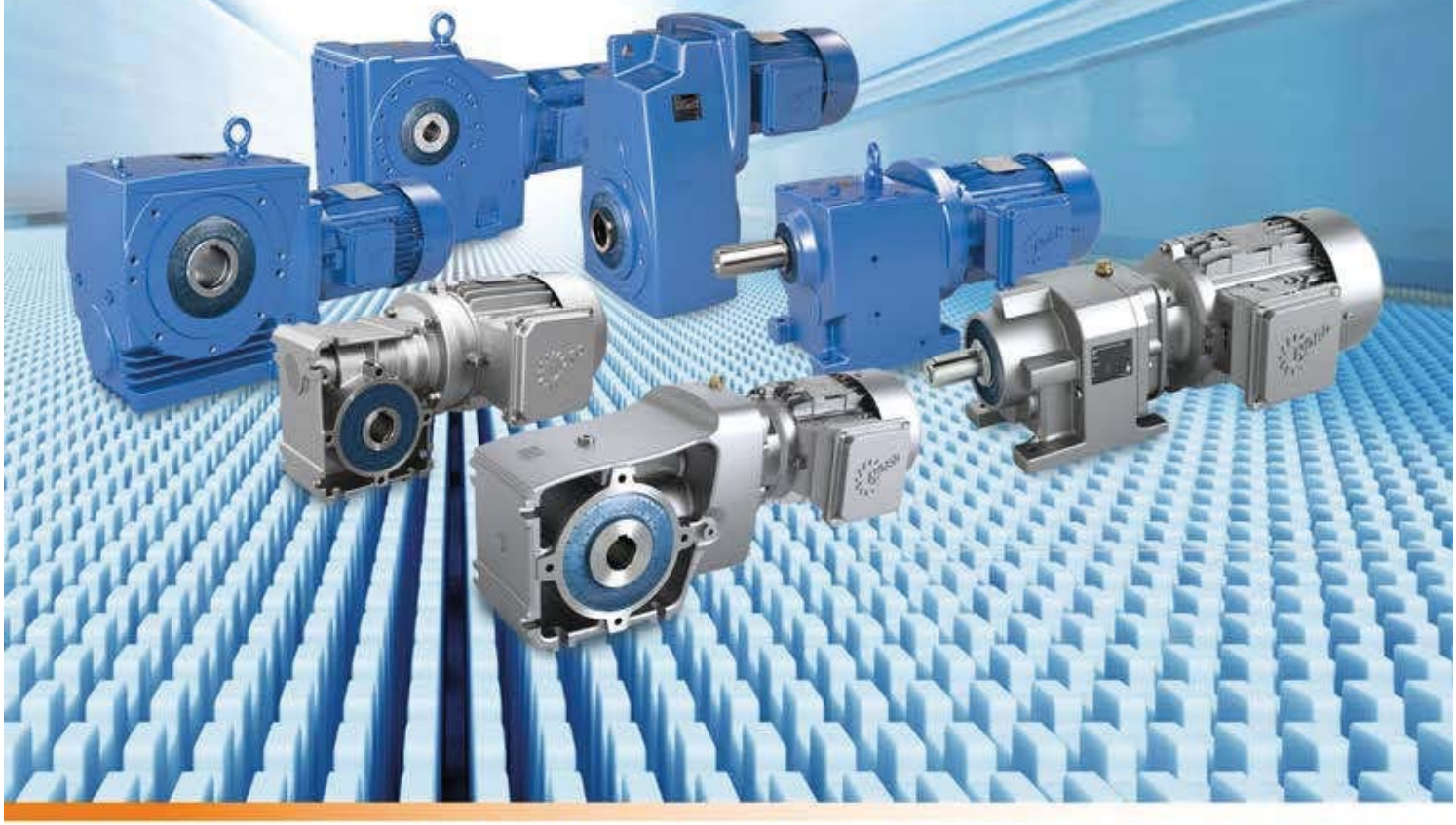

EN

B 1000

Gear units

Operating and Assembly Instructions

NORD DRIVESYSTEMS

E-1278



General safety and operating instructions

1. General

Depending on its protection class, the device may have live, bare, moving or rotating parts or hot surfaces during operation,.

Unauthorised removal of covers, improper use, incorrect installation or operation causes a risk of serious personal injury or material damage.

All transport, installation, commissioning and maintenance work must be carried out by qualified specialist personnel (national accident prevention regulations must be observed).

Within the meaning of this basic safety information, qualified specialist personnel are persons who are familiar with the installation, assembly, commissioning and operation of the product and who have the training and experience to recognise and avoid any hazards and risks.

2. Correct use

NORD products may only be used according to the information in the catalogue and the associated technical documentation.

Compliance with the operating and installation instructions is a **prerequisite for fault-free operation** and for the fulfilment of any warranty claims. **These operating and installation instructions must be read** before working with the device!

These operating and installation instructions contain important information about **servicing**. They must therefore be kept **close to the device**.

All details regarding technical data and permissible conditions at the installation site must be complied with.

3. Transport, storage

Information regarding transport, storage and correct handling must be complied with.

4. Installation

The device must be protected against impermissible loads. In particular, during transport and handling, components must not be deformed or changed. Touching of electronic components and contacts must be avoided.

5. Electrical Connection

When working on live three-phase motors, the applicable national accident prevention regulations must be complied with (e.g. BGV A3, formerly VBG 4).

The electrical installation must be implemented according to the applicable regulations (e.g. cable cross-section, fuses, earth lead connections).

Information regarding EMC-compliant installation – such as shielding, earthing and installation of cables – can be found in the three-phase motor documentation. Compliance with the limiting values specified in the EMC regulations is the responsibility of the manufacturer of the system or machine.

6. Operation

Appropriate safety measures must be taken for applications where failure of the device may result in injury.

Where necessary, systems in which NORD devices are installed must be equipped with additional monitoring and protective equipment according to the applicable safety requirements, e.g. legislation concerning technical equipment, accident prevention regulations, etc.

All covers and guards must be kept closed during operation.

7. Maintenance and repairs

After the device has been disconnected from the power supply, live equipment components and power connections should not be touched immediately, because of possible charged capacitors.

Further information can be found in this documentation.

These safety instructions must be kept in a safe place!

Documentation

Name:	B 1000
Part No.:	6052802
Series:	Gear units and geared motors
Type series:	
Gear unit types:	**Helical gear unit** **NORDBLOC helical gear units** **Standard helical gear units** **Parallel shaft gear units** **Bevel gear units** **Helical worm gear units** **MINIBLOC worm gear units** **UNIVERSAL worm gear units**

Version list

Title, Date	Order number	Comments
B 1000, February 2013	6052802 / 0713	-
B 1000, September 2014	6052802 / 3814	General corrections
B 1000, April 2015	6052802 / 1915	New gear unit types SK 10382.1 + SK 11382.1
B 1000, March 2016	6052802 / 0916	General corrections New bevel gear units SK 920072.1 + SK 930072.1
B 1000, September 2016	6052802 / 3816	General corrections New SK 071.1 helical gear unit, SK 171.1, SK 371.1, SK 571.1, SK 771.1;

Table 1: Version list B 1000

Copyright notice

As an integral component of the device described here, this document must be provided to all users in a suitable form.
Any editing or amendment or other utilisation of the document is prohibited.

Publisher

Getriebebau NORD GmbH & Co. KG
Getriebebau-Nord-Straße 1 • 22941 Bargteheide, Germany • http://www.nord.com/
Fon +49 (0) 45 32 / 289-0 • Fax +49 (0) 45 32 / 289-2253

Table of Contents

1 Notes 8
1.1 General information 8
1.2 Safety and information symbols 8
1.2.1 Explanation of labels used 8
1.3 Correct use 9
1.4 Safety information 10
1.5 Other documents 11
1.6 Disposal 11

2 Description of gear unit 12
2.1 Type designations and gear unit types 12
2.2 Type plate 14

3 Assembly instructions, storage, preparation, installation 15
3.1 Transporting the gear unit 15
3.2 Storage 16
3.3 Long-term storage 16
3.4 Preparing for installation 18
3.5 Installing the gear unit 20
3.6 Fitting hubs on the gear shafts 21
3.7 Fitting push-on gear units 22
3.8 Fitting shrink discs 25
3.9 Fitting the covers 27
3.10 Fitting the covers 27
3.11 Fitting a standard motor 28
3.12 Installation of a servo motor (Option SEP / SEK) 30
3.13 Fitting the cooling coil to the cooling system 31
3.14 Installation of an oil expansion tank, Option OA 32
3.15 Subsequent paintwork 32

4 Commissioning 33
4.1 Check the oil level 33
4.2 Activating the automatic lubricant dispenser 33
4.3 Operation with lubricant cooling 34
4.4 Running-in time for the worm gear unit 35
4.5 Checklist 35

5 Service and maintenance 36
5.1 Service and Maintenance Intervals 36
5.2 Service and Maintenance Work 37

6 Appendix 42
6.1 Configurations and maintenance 42
6.2 Lubricants 55
6.3 Lubricant quantities 57
6.4 Helical gear unit 58
6.5 Torque values 65
6.6 Troubleshooting 66
6.7 Leaks and seals 67
6.8 Repair information 68
6.8.1 Repairs 68
6.8.2 Internet information 68
6.9 Abbreviations 68

List of illustrations

Fig. 1: Type plate (example) with explanation of the type plate fields 14
Figure 2: Activating the vent plug 19
Figure 3: Activating the vent plug 19
Figure 4: Removing the vent plug and fitting the special pressure vent 19
Figure 5: Example of a simple pulling device 21
Figure 6: Correct assembly of drive elements 21
Figure 7: Applying lubricant to the shaft and the hub 22
Figure 8: Removing the factory-fitted closing cap 23
Figure 9: Gear unit mounted to shaft with a shoulder using the fastening element 23
Figure 10: Gear unit mounted to shaft without a shoulder using the fastening element 23
Figure 11: Dismantling using dismantling device 23
Figure 12: Mounting the rubber buffer (Option G or VG) on parallel shaft gear units 24
Fig. 13: Attaching the torque support on bevel gear and worm gear units 24
Figure 14: Hollow shaft with shrink disc 25
Figure 15: Fitting the covers, Option SH, Option H, and Option H66 27
Fig. 16: Removal and fitting of the cover cap 27
Figure 17: Fitting the coupling onto the motor shaft - various types of coupling 29
Figure 18: Cooling cover 31
Figure 19: Installing the expansion tank 32
Figure 20: Activating the automatic lubricant dispenser with standard motor mounting 33
Figure 21: Adhesive label 34
Figure 22: Checking the oil level with a dipstick 39
Figure 23: Replacing the automatic lubricant dispenser with standard motor mounting 39
Figure 24: Oil level check with oil level tank 43

List of tables

Table 1: Version list B 1000 3
Table 2: Disposal of materials 11
Table 3: Type designations and gear unit types 13
Table 4: Allocation of cylinder types to coupling sizes 30
Table 5: Roller bearing greases 55
Table 6: Lubricant table 57
Table 7: Lubricant quantities for helical gear units 58
Table 8: Lubricant quantities for NORDBLOC 59
Table 9: Lubricant quantities for NORDBLOC helical gear units 60
Table 10: Lubricant quantities for standard helical gear units 61
Table 11: Lubricant quantities for parallel shaft gear units 62
Table 12: Lubricant quantities for bevel gear units 63
Table 13: Lubricant quantities for Helical worm gear units 64
Table 14: Torque values 65
Table 15: Overview of malfunctions 66
Table 16: Definition of leaks according to DIN 3761 67

1 Notes

1.1 General information

Read the Operating Manual carefully prior to performing any work on or putting the gear unit into operation. Strict compliance with the instructions in this Operating Manual is essential. This Operating Manual and all associated special documentation must be kept in the immediate vicinity of the gear unit.

Getriebebau NORD accepts no liability for damage to persons, materials or assets as a result of the non-observance of this Operating Manual, operating errors or incorrect use. General wearing parts, e.g. radial seals are excluded from the warranty.

If additional components are attached to or installed on or in the gear unit (e.g. motor, cooling system, pressure sensor etc.) or components (e.g. cooling system) are supplied with the order, the operating instructions for these components must be observed.

If geared motors are used, compliance with the Motor Operating Manual is also necessary.

If you do not understand the contents of this Operating Manual or additional operating instructions, please consult Getriebebau NORD!

1.2 Safety and information symbols

1.2.1 Explanation of labels used

DANGER	Indicates an immediate danger, which may result in death or serious injury.
WARNING	Indicates a possibly dangerous situation, which may result in death or serious injury.
CAUTION	Indicates a possibly dangerous situation, which may result in slight or minor injuries.
NOTICE	Indicates a possibly harmful situation, which may cause damage to the product or the environment.
Note	Indicates hints for use and useful information.

1.3 Correct use

These gear units generate a rotational movement and are intended for use in commercial systems. The gear unit must only be used according to the information in the technical documentation from Getriebebau NORD.

Commissioning (start of proper operation) is prohibited until it has been established that the machine complies with the local laws and directives. The EMC Directive 2004/108/EC and the Machinery Directive 2006/42/EC in their currently valid scope of application must be complied with in particular.

DANGER! — **Explosion hazard**

Serious injury and material damage due to explosion are possible.

Use in explosion hazard areas is prohibited.

WARNING — **Injury to persons**

Appropriate safety measures must be taken for applications where failure of a gear unit or geared motor may result in injury.

Safeguard a wide area around the hazard zone.

WARNING — **Material damage and personal injury**

If the gear unit is not used as designed, this may cause damage to the gear unit or the premature failure of components. Personal injury as a result of this cannot be ruled out.

Strict compliance with the technical data on the type plate is essential. The documentation must be observed.

1.4 Safety information

Observe all safety information, including that provided in the individual sections of this Operating Manual. All national and other regulations on safety and accident prevention must also be observed.

DANGER! **Severe personal injury**

Serious physical and property damage may result from inappropriate installation, non-designated use, incorrect operation, non-compliance with safety information, unauthorised removal of housing components or safety covers and structural modifications to the gear unit.

- All work, e.g. transportation, storage, installation, electrical connection, commissioning, servicing, maintenance and repair must only be performed by qualified specialist personnel.
- Observe the Operating Manual
- Observe the safety information
- Observe the safety and accident prevention regulations.
- Tighten the drive elements or secure the parallel key before switching on.
- Do not make any structural modifications.
- Do not remove any safety devices.
- If necessary, wear hearing protection when working in the immediate vicinity of the gear unit.
- All rotating components must be provided with guards. In standard cases, covers are fitted by NORD . The covers must always be used if contact protection is not provided by other methods.

DANGER! **Injury to persons**

The surfaces of gear units or geared motors may become hot during or shortly after operation. Danger of burns!

- Installation and maintenance work must only be performed when gear unit is at a standstill and has cooled down. The drive must be isolated and secured to prevent accidental start-up.
- Wear protective gloves.
- Shield hot surfaces with contact guards.
- Do not store inflammable objects or substances in the immediate vicinity of the gear unit.

WARNING **Injury to persons**

Serious injury and material damage due to improper transport are possible.

- No additional loads may be attached.
- Transportation aids and lifting gear must have an adequate load-bearing capacity.
- Pipes and hoses must be protected from damage.

⚠ CAUTION **Injury to persons**

Danger of cuts from exterior edges of attachment adapters, flanges and covers.

Contact freezing with metallic components in case of low temperatures.

In addition to personal protective equipment, wear suitable protective gloves and suitable goggles during assembly, commissioning, inspection and maintenance, in order to prevent injuries.

It is recommended that repairs to NORD Products are carried out by the NORD Service department.

1.5 Other documents

Further information may be obtained from the following documents:

- Gear unit catalogues (G1000, G1012, G1014, G1035, G1050, G2000),
- Operating and maintenance instructions for the electric motor,
- if applicable, the Operating Manuals for attached or supplied options

1.6 Disposal

Observe the current local regulations. In particular, lubricants must be collected and disposed of correctly.

Gear unit components	Material
Gear wheels, shafts, rolling bearings, parallel keys, locking rings, …	Steel
Gear unit housing, housing components, …	Grey cast iron
Light alloy gear unit housing, light alloy gear unit housing components, …	Aluminium
Worm gears, bushes, ...	Bronze
Radial seals, sealing caps, rubber components,…	Elastomers with steel
Coupling components	Plastic with steel
Flat seals	Asbestos-free sealing material
Gear oil	Additive mineral oil
Synthetic gear oil (type plate code: CLP PG)	Polyglycol-based lubricants
Cooling spiral, embedding material of the cooling spiral, screw fittings	Copper, epoxy, yellow brass

Table 2: Disposal of materials

2 Description of gear unit

2.1 Type designations and gear unit types

Gear unit types / Type designations
Helical gear units
SK 11E, SK 21E, SK 31E,SK 41E, SK 51E (1-stage)
SK 02, SK 12, SK 22, SK 32, SK 42, SK 52, SK 62N (2-stage)
SK 03, SK 13, SK 23, SK 33N, SK 43, SK 53 (3-stage)
SK 62, SK 72, SK 82, SK 92, SK 102 (2-stage)
SK 63, SK 73, SK 83, SK 93, SK 103 (3-stage)
NORDBLOC helical gear units
SK 320, SK 172, SK 272, SK 372, SK 472, SK 572, SK 672, SK 772, SK 872, SK 972 (2-stage)
SK 273, SK 373, SK 473, SK 573, SK 673, SK 773, SK 873, SK 973 (3-stage)
SK 071.1, SK 371.1, SK 571.1, SK 771.1 (1-stage)
SK 072.1, SK 172.1, SK 372.1, SK 572.1, SK 672.1, SK 772.1, SK 872.1, SK 972.1 (2-stage)
SK 373.1, SK 573.1, SK 673.1, SK 773.1, SK 873.1, SK 973.1 (3-stage)
Standard helical gear units
SK 0, SK 01, SK 20, SK 25, SK 30, SK 33 (2-stage)
SK 10, SK 200, SK 250, SK 300, SK 330 (3-stage)
Parallel shaft gear unit
SK 0182NB, SK 0282NB, SK 1282, SK 2282, SK 3282, SK 4282, SK 5282, SK 6282, SK 7282, SK 8282, SK 9282, SK 10282, SK 11282 (2-stage)
SK 1382NB, SK 2382, SK 3382, SK 4382, SK 5382, SK 6382, SK 7382, SK 8382, SK 9382, SK 10382, SK 10382.1, SK 11382, SK 11382.1, SK 12382 (3-stage)
Bevel gear units
SK 92072, SK 92172, SK 92372, SK 92672, SK 92772; SK 920072.1, SK 92072.1, SK 92172.1, SK 92372.1, SK 92672.1, SK 92772.1, SK 93072.1, SK 93172.1, SK 930072.1, SK 93372.1, SK 93672.1, SK 93772.1 (2-stage)
SK 9012.1, SK 9016.1, SK 9022.1, SK 9032.1, SK 9042.1, SK 9052.1, SK 9062.1, SK 9072.1, SK 9082.1, SK 9086.1, SK 9092.1, SK 9096.1 (3-stage)
SK 9013.1, SK 9017.1, SK 9023.1, SK 9033.1, SK 9043.1, SK 9053.1 (4-stage)
Helical worm gear units
SK 02040, SK 02050, SK 12063, SK 12080, SK 32100, SK 42125 (2-stage)
SK 13050, SK 13063, SK 13080, SK 33100, SK 43125 (3-stage)
MINIBLOC worm gear units
SK1 S32, SK1 S40, SK 1S50, SK 1S63, SK 1SU..., SK 1SM31, SK 1SM40, SK 1SM50, SK 1SM63 (1-stage)
SK 2S32NB, SK 2S40NB, SK 2S50NB, SK 2S63NB, SK 2SU…, SK 2SM40, SK 2SM50, SK 2SM63 (2-stage)

Gear unit types / Type designations					
UNIVERSAL worm gear units SK 1SI31, SK 1SI40, SK 1SI50, SK 1SI63, SK 1SI75, SK 1SIS31, …, SK 1SIS75, SK 1SID31, …, SK 1SID63, SK 1SMI31, …, SK 1SMI75, SK 1SMID31, …, SK 1SMID63, SK 1SIS-D31, …, SK 1SIS-D63 (1-stage), SK 2SMID40, SK 2SMID50, SK 2SMID63, SK 2SID40, …, SK 2SID63 (2-stage)					
Versions / Options					
-	Foot mounting with solid shaft	D	Torque support	IEC	Standard IEC motor mounting
A	Hollow shaft version	K	Torque bracket	NEMA	Standard NEMA motor attachment
V	Solid shaft version	S	Shrink disc	W	With free drive shaft
L	Solid shaft both sides	VS	Reinforced shrink disc	VI	Viton radial seals
Z	Output flange B14	EA	Hollow shaft with internal spline	OA	Oil expansion tank
F	Output flange B5	G	Rubber buffer	OT	Oil level tank
X	Foot mounting	VG	Reinforced rubber buffer	SO1	Synthetic oil ISO VG 220
XZ	Base and output flange B14	R	Back stop	CC	Casing cover with cooling spiral
XF	Base and output flange B5	B	Fastening element	DR	Pressure venting
AL	Reinforced axial output bearings	H	Covering cap as contact guard	H10	Modular contrate pre-stage
5	Reinforced output shaft (Standard helical gear units)	H66	Covering cap IP66	/31	Worm pre-stage
V	Reinforced drive shaft (Standard helical gear units)	VL	Reinforced bearings	/40	Worm pre-stage
		VL2	Agitator version		
		VL3	Drywell agitator version		

Table 3: Type designations and gear unit types

Double gear units consist of two single gear units. They are to be treated as per the instructions in this Manual, i.e. as two individual gear units.

Type designation for double gear units: e.g. SK 73 /22 (consisting of single gear units SK 73 and SK 22)

2.2 Type plate

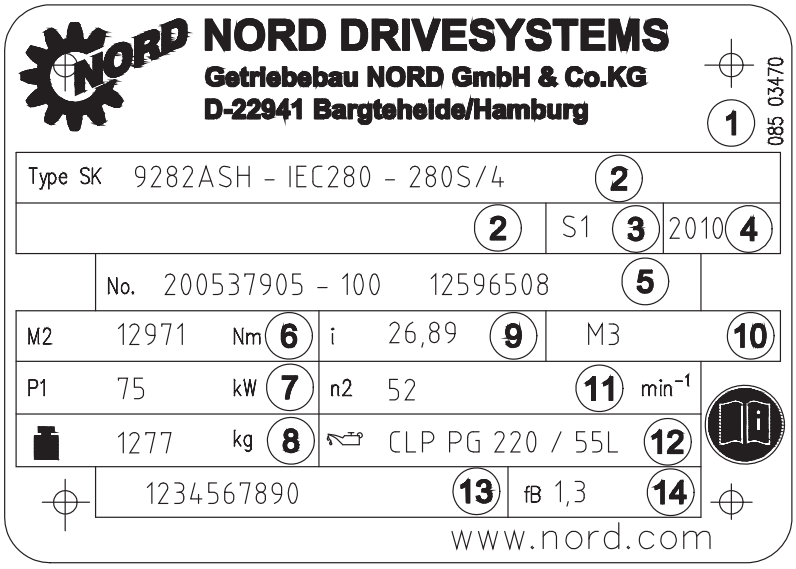

	Explanation
1	Matrix or bar code
2	NORD gear unit type
3	Operating mode
4	Year of manufacture
5	Serial number
6	Rated torque of gear unit output shaft
7	Drive power
8	Weight according to ordered version
9	Overall gear unit ratio
10	Installation orientation
11	Rated speed of gear unit output shaft
12	Lubricant type, viscosity and quantity
13	Customer's part number
14	Operating factor

Fig. 1: Type plate (example) with explanation of the type plate fields

3 Assembly instructions, storage, preparation, installation

Please observe all general safety instructions (please see chapter 1.4 "Safety information"), the safety information in the individual sections and the proper use (please see chapter 1.3 "Correct use")bestimmungsgemäße Verwendung</dg_ref_source_inline>.

3.1 Transporting the gear unit

WARNING — **Hazard due to heavy loads**

Severe injuries and material damage due to falling or tipping heavy loads are possible.

- Standing under the gear unit during transport is **extremely dangerous**.
- To prevent injury, **the danger area must be generously cordoned off.**
- Only transport using the eyebolts attached to the gear unit.
- No additional loads may be attached.
- If geared motors have an additional eyebolt attached to the motor, this must also be used.
- The thread of the eyebolt must be fully screwed in.
- Avoid pulling the eyebolts at an angle.

NOTICE — **Gear unit damage**

Damage to the gear unit due to improper use is possible.

- Prevent damage to the gear unit. Impacts to the free ends of the shafts may cause internal damage to the gear unit.
- Use adequately dimensioned and **suitable means of transportation**. Lifting tackle must be designed for the weight of the gear unit. The weight of the gear unit can be obtained from the dispatch documents.

3.2 Storage

For short-term storage before commissioning, please observe the following:

Store in the installation position (please see chapter 6.1 "Configurations and maintenance") and secure the gear unit against falling,

- Lightly oil bare metal housing surfaces and shafts
- Store in a dry place.
- Temperature in the range from – 5 °C to + 50 °C without large fluctuations,
- Relative humidity less than 60 %,
- No direct exposure to sunlight or UV light,
- No aggressive, corrosive substances (contaminated air, ozone, gases, solvents, acids, alkalis, salts, radioactivity etc.) in the immediate vicinity,
- No vibration or oscillation

3.3 Long-term storage

CAUTION — **Injury to persons**

Incorrect, or excessively long storage may result in malfunctions of the gear unit.

Perform an inspection of the gear unit prior to commissioning if the permissible storage time has been exceeded.

Information — **Long-term storage**

For storage or standstill periods in excess of 9 months, Getriebebau NORD recommends the long-term storage option.

With the long-term storage option and the use of the measures listed below, storage for up to 2 years is possible. As the actual influences on the unit greatly depend on the local conditions, these times should only be regarded as guide values.

Conditions of the gear unit and storage area for long-term storage prior to commissioning:

- Store in the installation position (please see chapter 6.1 "Configurations and maintenance") and secure the gear unit against falling.
- Transportation damage to the external paint must be repaired. Check that a suitable rust inhibitor is applied to the flange bearing surfaces. If necessary apply a suitable rust inhibitor to the surfaces.
- Gear units with the long-term storage option are completely filled with lubricant or have VCI corrosion protection agent mixed with the gear oil (see adhesive label on the gear unit, or are not filled with oil, but rather with small quantities of VCI concentrate.
- The sealing band in the vent plug must not be removed during storage. The gear unit must remain sealed tight.
- Store in a dry place.
- In tropical regions, the gear unit must be protected against damage by insects
- Temperature in the range from – 5 °C to + 40 °C without large fluctuations,
- Relative humidity less than 60 %,
- No direct exposure to sunlight or UV light,
- No aggressive, corrosive substances (contaminated air, ozone, gases, solvents, acids, alkalis, salts, radioactivity etc.) in the immediate vicinity,
- No vibration or oscillation

Measures during storage or standstill periods

- If the relative humidity is <50 % the gear unit can be stored for up to 3 years.

Measures before commissioning

- If the storage or standstill period exceeds 2 years or the temperature during short-term storage has greatly deviated from the standard range, the lubricant in the gear unit must be replaced before commissioning.
- If the gear unit is completely filled, the oil level must be reduced before commissioning.
- For gear units without oil filling, the oil level for the version must be filled before commissioning. The VCI concentrate may remain in the gear unit. Lubricant quantities and types must be filled according to the details on the type plate.

3.4 Preparing for installation

⚠ CAUTION — **Injury to persons**

Transport damage may cause malfunctions of the gear unit, which may cause material damage or personal injury.

Please inspect the delivery for transport and packaging damage immediately on receipt. Report any damage to the carrier immediately. Gear units with transport damage must not be commissioned.

The drive unit must be inspected and may only be installed if no damage is apparent. In particular the radial seals and the sealing caps must be inspected for damage.

Pay attention to leaked lubricants, they may cause slips.

All bare metal surfaces and shafts of the gear unit are protected against corrosion with oil, grease or corrosion protection agents before shipping.

Thoroughly remove all oil, grease or corrosion protection agents and any dirt from the shafts and flange surfaces before assembly.

In applications where an incorrect rotational direction may result in damage or potential risk, the correct rotational direction of the output shaft is to be established by test running the drive when uncoupled and guaranteeing such for subsequent operation.

Gears with integrated return stops are marked with arrows on the drive/driven sides. The arrows point in the rotation direction of the gear unit. When connecting the motor and during motor control, it must be ensured that the gear unit can only operate in the direction of rotation. (For further explanations see catalogue G1000 and WN 0-000 40)

NOTICE — **Gear unit damage**

For gear units with an integrated back stop, switching the drive motor to the blocked direction of rotation, i.e. incorrect direction of rotation, may result in damage to the gear unit.

Take care that the direction of rotation is correct.

Ensure that no aggressive or corrosive substances are present in the area surrounding the installation site or are subsequently expected during operation, which attack metal, lubricants or elastomers. In case of doubt, please contact Getriebebau NORD and take the recommended action.

Oil expansion tanks (Option OA) must be fitted in accordance with works standard WN 0-530 04. For gear units with an M10x1 vent plug, works standard WN 0-52135 must be also be observed during installation.

Oil level tanks (Option OT) must be fitted in accordance with works standard WN 0-521 30.

If venting of the gear unit is provided, the vent or the pressure vent must be activated before commissioning. To activate, remove the transport securing device (sealing cord). Position of the vent plug (please see chapter 6.1 "Configurations and maintenance").

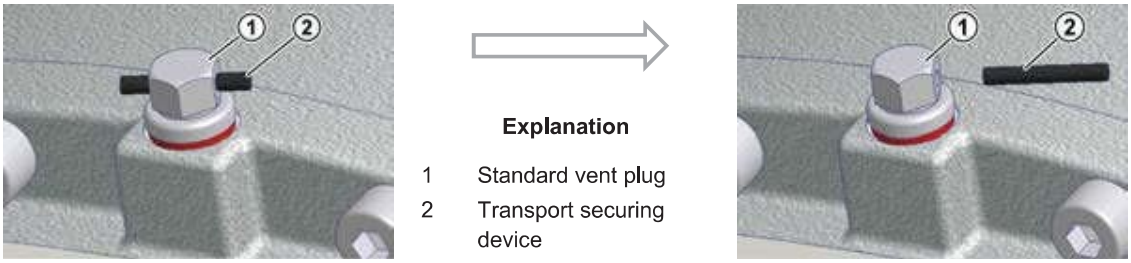

Figure 2: Activating the vent plug

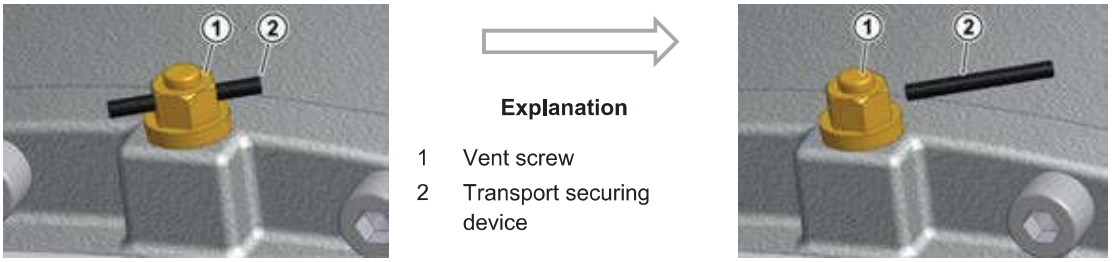

Figure 3: Activating the vent plug

Before commissioning, the vent plug must be replaced with the special pressure vent which is supplied as a loose part.

This is done by unscrewing the vent fitting and replacing it with the special pressure vent and seal (refer to Section 6.1 "Configurations and maintenance"). Double gear units consist of two single units and are equipped with 2 oil chambers and 2 pressure vents.



Figure 4: Removing the vent plug and fitting the special pressure vent

(please see chapter 6.5 "Torque values")

3.5 Installing the gear unit

⚠ WARNING — **Danger of burns**

The surfaces of gear units or geared motors may become hot during or shortly after operation.

Hot surfaces which can be touched directly must be protected with a contact guard.

⚠ WARNING — **Danger to persons**

If the foundation or the fastening of the gear unit is not adequately dimensioned, the gear unit may detach, fall down or rotate in an uncontrolled manner.

The foundation and the gear unit fastening must be appropriately designed for the weight and the torque. All bolts must be used to fasten the gear unit

NOTICE — **Damage to the gear unit due to overheating**

The gear unit may be damaged by overheating.

When installing, check that the cooling air from the motor fan can circulate around the geared motor and the gear unit without obstruction.

The eyebolts screwed into the gear units must be used during installation. No additional load may be attached to the gear unit.

If geared motors have an additional eyebolt attached to the motor, this must also be used. Avoid pulling the eyebolts at an angle. Observe the safety information (please see chapter 1.4 "Safety information").

The base and/or flange to which the gear unit is fitted should be vibration-free, torsionally strong and flat. The smoothness of the mating surface on the base or flange must be according to tolerance class K according to DIN ISO 2768-2. All contamination to the bolting surfaces of gear unit and base and/or flange must be thoroughly removed.

The gear housing must always be earthed. With geared motors, earthing via the motor connection must be ensured.

The gear unit must be precisely aligned with the drive shaft of the machine in order to prevent additional forces from being imposed on the gear unit due to distortion.

Welding of the gear unit is prohibited. The gear unit must not be used as the earth connection for welding work, as this may cause damage to the bearings and gear wheels.

The gear unit must be installed in the correct orientation(please see chapter 6.1 "Configurations and maintenance"). (UNIVERSAL SI and SM gear unit types do not depend on the configuration). Changes to the installation position after delivery require adjustment of the quantity of oil, and often other measures such as e.g. the installation of encapsulated roller bearings. **Damage may result if the stated installation position is not observed.**

All gear unit feet and/or all flange bolts on each side must be used. Bolts must have a minimum quality of 8.8. The bolts must be tightened to the correct torques (please see chapter 6.5 "Torque values"). Tension-free bolting must be ensured, particularly for gear units with a foot and flange.

The oil inspection screws, oil drain screws and the vent valves must be accessible.

3.6 Fitting hubs on the gear shafts

NOTICE — **Gear unit damage**

The gear unit may be damaged by axial forces.

Do not subject the gear unit to harmful axial forces when fitting the hubs. In particular, do not hit the hubs with a hammer.

Drive and driven elements, e.g. coupling and chain-wheel hubs must be mounted onto the drive and driven shaft of the gear unit using suitable pullers that will not apply damaging axial forces onto the gear unit.

Information — **Installation**

Use the end thread of the shafts for pulling. Fitting can be aided by coating the hub with lubricant or heating it up to approx. 100 °C beforehand.

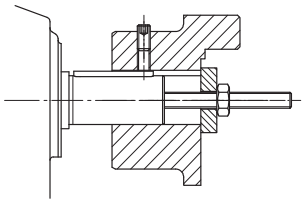

Figure 5: Example of a simple pulling device

DANGER — **Severe personal injury**

There is a danger of injury due to rapidly rotating drive and driven elements.

Drive and driven elements, such as belt drives, chain drives, shrink disks, fans and couplings must be fitted with contact protection.

Drive and driven elements may only subject the drive unit to the maximum radial forces F_R and axial forces F_A which are specified in the catalogue. Observe the correct tension, particularly on belts and chains.

Additional loads due to unbalanced hubs are not permitted.

The transverse force must be applied to the gear unit as closely as possible.

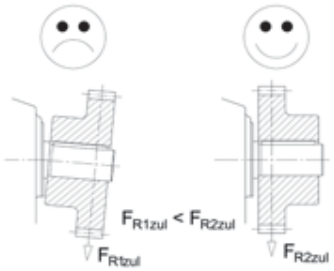

Figure 6: Correct assembly of drive elements

3.7 Fitting push-on gear units

NOTICE — **Gear unit damage**

The bearings, gear wheels, shafts and housing may be damaged by incorrect fitting.

- Observe the assembly instructions.
- The push-on gear unit must be fitted onto the shaft using a suitable puller, which will not exert damaging axial forces on the gear unit. In particular, do not hit the gear unit with a hammer.

Assembly and subsequent dismantling is aided by applying an anti-corrosive lubricant to the shaft before fitting (e.g. NORD Anti-Corrosion Part No. 089 00099). Excess grease or anti-corrosion agent may escape after assembly and may drip off. Clean these points on the output shaft after a running-in time of approx. 24 hours. This escape of grease is not due to a leak in the gear unit.

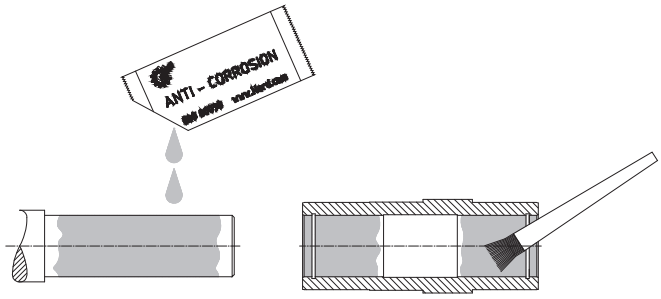

Figure 7: Applying lubricant to the shaft and the hub

Information — **Fastening element**

The gear unit can be fitted to shafts with and without a shoulder using the fastening element (Option B). Tighten the bolt of the fastening element to the correct torque (please see chapter 6.5 "Torque values"). For gear units with option H66, the factory-fitted closing cap must be removed before assembly.

For push-on gear units with option H66 and fastening element (Option B) the pressed-in closing cap must be pushed out before fitting the gear unit. The pressed-in closing cap may be destroyed during dismantling. As standard a second closing cap is supplied as a loose spare part. After fitting the gear unit, fit the new / new condition closing cap as described in Section 3.9 "Fitting the covers".

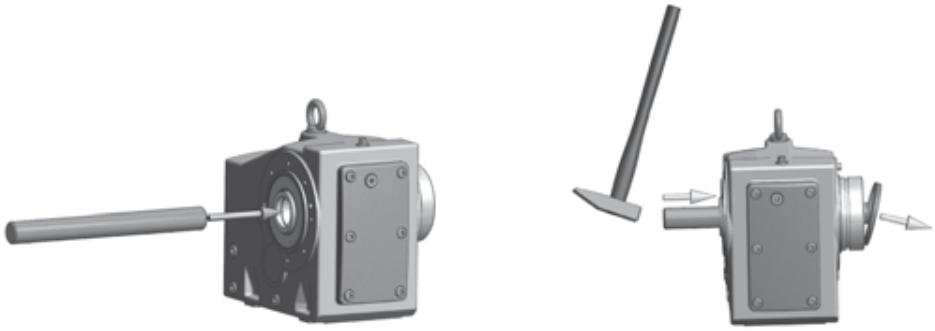

Figure 8: Removing the factory-fitted closing cap

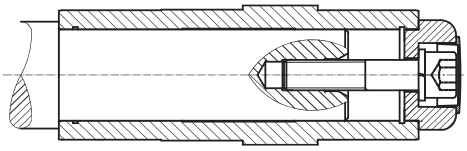

Figure 9: Gear unit mounted to shaft with a shoulder using the fastening element

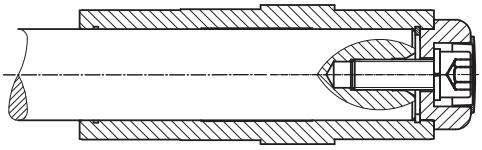

Figure 10: Gear unit mounted to shaft without a shoulder using the fastening element

A gear unit can be dismantled from a shaft with a shoulder using the following device, for example.

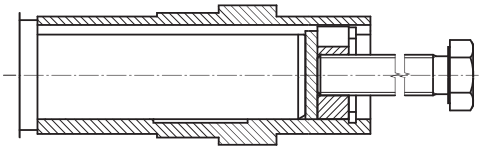

Figure 11: Dismantling using dismantling device

When assembling push-on gears with torque supports, the support must not be distorted. Tension-free mounting is aided by the rubber buffer (Option G or VG).

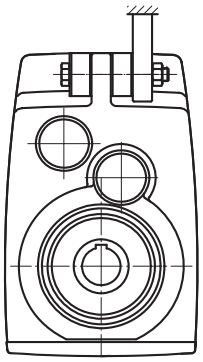

Figure 12: Mounting the rubber buffer (Option G or VG) on parallel shaft gear units

To fit the rubber buffer, tighten the screw fastening until there is no play between the contact surfaces when there is no load.

Then turn the fastening nut half a turn in order to pre-tension the rubber buffer (only applies for screw fastenings with adjusting threads). Greater pre-tension is not permissible

WARNING — **Risk of injury**

The gear unit may suddenly rotate around the shaft if the bolts are loosened.

Secure the screw fastening against loosening, e.g. with Loctite 242 or a second nut.

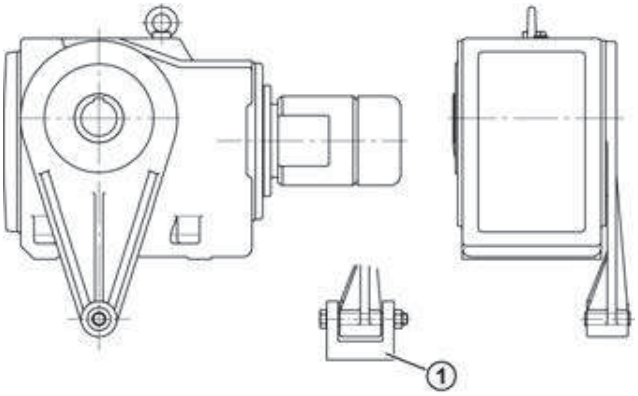

	Explanation
1	Always support torque support on both sides

Fig. 13: Attaching the torque support on bevel gear and worm gear units

Tighten the fastenings of the torque support with the correct tightening torques (please see chapter 6.5 "Torque values") and secure against loosening (e.g. Loctite 242, Loxeal 54-03).

3.8 Fitting shrink discs

⚠ CAUTION — **Risk of injury**

Risk of injury from incorrect mounting and dismantling of the shrink disc.

Observe the instructions.

NOTICE — **Gear unit damage**

If the tensioning bolts are tightened without the solid shaft inserted, the hollow shaft may be permanently deformed.

Do not tighten bolts if the solid shaft is not inserted!

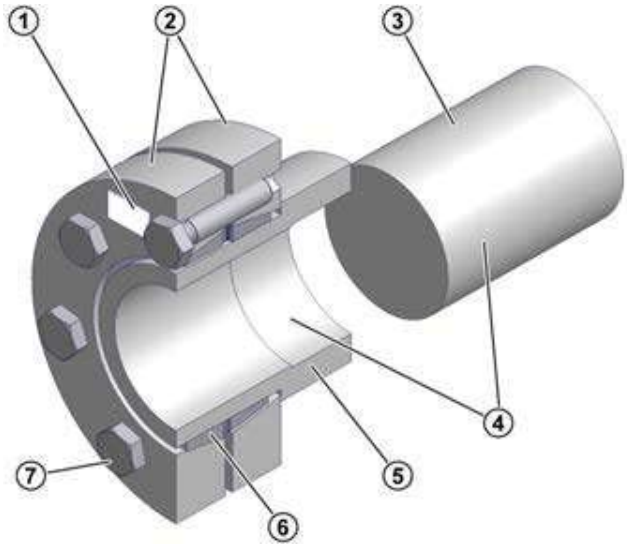

	Explanation
1	Shrink disc, type, part no. and torque details for tensioning screws
2	Tensioning flanges
3	Solid shaft of machine
4	Shaft and hollow shaft bore **FREE OF GREASE**
5	Hollow shaft of gear unit
6	Double half-slotted inner ring
7	Tensioning screws DIN 931 (933) -10.9

Figure 14: Hollow shaft with shrink disc

The shrink discs are supplied by the manufacturer ready for fitting. They must not be dismantled prior to fitting.

The solid shaft of the machine runs **free of grease** in the hollow shaft of the gear unit.

Assembly sequence

1. Remove any transport securing devices.
2. Loosen but do not remove tightening bolt and tighten gently by hand until there is no play between the flanges and the inner ring.
3. Slide the shrink disc onto the hollow shaft until the outer clamping flange is flush with the hollow shaft. The shrink disc is easier to slide on if the bore of the inner ring is lightly greased.
4. Prior to mounting, grease the solid shaft only in the area which will later come into contact with the bronze bush in the hollow shaft of the gear unit. Do not grease the bronze bush, in order to prevent grease penetrating the area around the shrink connection.
5. The hollow shaft of the gear unit must be completely de-greased and **completely free of grease.**
6. In the area of the shrink connection the solid shaft of the machine must be degreased and **completely free** of grease.
7. Insert the solid shaft of the machine into the hollow shaft so as to completely fill the area around the shrink connection.
8. Position the clamping flange by gently tightening the bolts.
9. Tighten the tensioning bolts successively in a clockwise direction by several turns – not crosswise – with approx. ¼ rotation per turn. Tighten the bolts with a torque wrench to the torque indicated on the shrink disc.
10. When the tensioning bolts have been tightened, there must be an even gap between the clamping flanges. If this is not the case, the gear unit must be dismantled and the shrink disc connection checked for correct fit.

Dismantling sequence:

1. Loosen the tensioning bolts successively in a clockwise direction by several turns with approx. ¼ rotation per turn. Do not remove the bolts from their thread.
2. Loosen the clamping flanges from the cone of the inner ring.
3. Remove the gear unit from the solid shaft of the machine.

If a shrink disk has been in use for a long period or is dirty, it must be dismantled, cleaned and the conical surfaces coated with Molykote G Rapid Plus or a similar lubricant before it is refitted. The threads and head surfaces of the screws must be treated with grease without Molykote. Any damaged or corroded elements must be replaced.

3.9 Fitting the covers

WARNING — **Risk of injury**

There is a danger of injury due to shrink discs and freely rotating shaft journals.

- Use a cover (Option H and Option H66) as a guard.
- If this does not achieve sufficient protection against contact according to the required protection type, the machinery and plant constructor must ensure this by means of special attached components.

All fixing screws must be used and tightened to the correct torque (please see chapter 6.5 "Torque values"). For covers with Option H66, press in the new / new condition closing cap by tapping it lightly with a hammer.



Figure 15: Fitting the covers, Option SH, Option H, and Option H66

3.10 Fitting the covers

WARNING — **Risk of injury**

There is a danger of injury due to freely rotating shaft journals.

- Use a cover cap as a guard
- If this does not achieve sufficient protection against contact according to the required protection type, the machinery and plant constructor must ensure this by means of special attached components.

Many versions of the universal worm gear unit are supplied with plastic cover caps as standard. These cover caps protect the shaft sealing ring against the entry of dust and other possible contamination. The cover caps can be removed by hand without the use of tools and pushed onto the A or B side.

The cover cap must be removed before installing the universal worm gear unit. After installation is complete, the cover cap must be pushed into the threaded holes on the output flange on the corresponding side. Care must be taken that the cover cap is removed and pushed on vertically, in order not to damage the expansion elements of the cover cap.



Fig. 16: Removal and fitting of the cover cap

3.11 Fitting a standard motor

The maximum permitted motor weights indicated in the table below must not be exceeded when attaching the motor to an IEC/NEMA adapter:

Maximum permitted motor weights														
IEC motor size	63	71	80	90	100	112	132	160	180	200	225	250	280	315
NEMA motor size		56C	143T	145T	182T	184T	210T	250T	280T	324T	326T	365T		
Max. motor weight [kg]	25	30	40	50	60	80	100	200	250	350	500	700	1000	1500

WARNING **Risk of injury**

Severe injuries may be caused by rapidly rotating parts when installing and servicing couplings.

Secure the drive unit against accidental switch-on.

Assembly procedure to attach a standard motor to the IEC adapter (Option IEC/NEMA adapter)

1. Clean the motor shaft and flange surfaces of the motor and the IEC /NEMA adapter and check for damage. The mounting dimensions and tolerances of the motor must conform to DIN EN 50347/NEMA MG1 Part 4.
2. Push the coupling sleeve onto the motor shaft so that the motor parallel key engages into the groove in the sleeve on tightening.
3. Tighten the coupling sleeve on the motor shaft in accordance with the motor manufacturer's instructions until it touches the collar. With motor sizes 90, 160, 180 and 225, any spacer bushes must be positioned between the coupling sleeve and the collar. With standard helical gear units, dimension B between the coupling sleeve and the collar must be observed (see Figure 17). Certain NEMA adapters require adjustment of the coupling in accordance with the specifications indicated on the adhesive plate.
4. If the coupling half contains a threaded pin, the coupling must be secured axially on the shaft. The threaded pin must be coated prior to use with a securing lubricant e.g. Loctite 242, Loxeal 54-03 and tightened to the correct torque (please see chapter 6.5 "Torque values").

.

5. Sealing of the flange surfaces of the motor and the IEC/NEMA adapter is recommended if the motor is installed outdoors or in a humid environment. Before the motor is installed, the flange surfaces must be completely coated with surface sealant Loctite 574 or Loxeal 58-14 so that the flange seals after mounting.
6. Mount the motor on the IEC/NEMA adapter. Do not forget to fit the gear rim or the splined sleeve provided (see illustration below).
7. Tighten the bolts of the IEC/NEMA adapter with the correct torque (please see chapter 6.5 "Torque values").

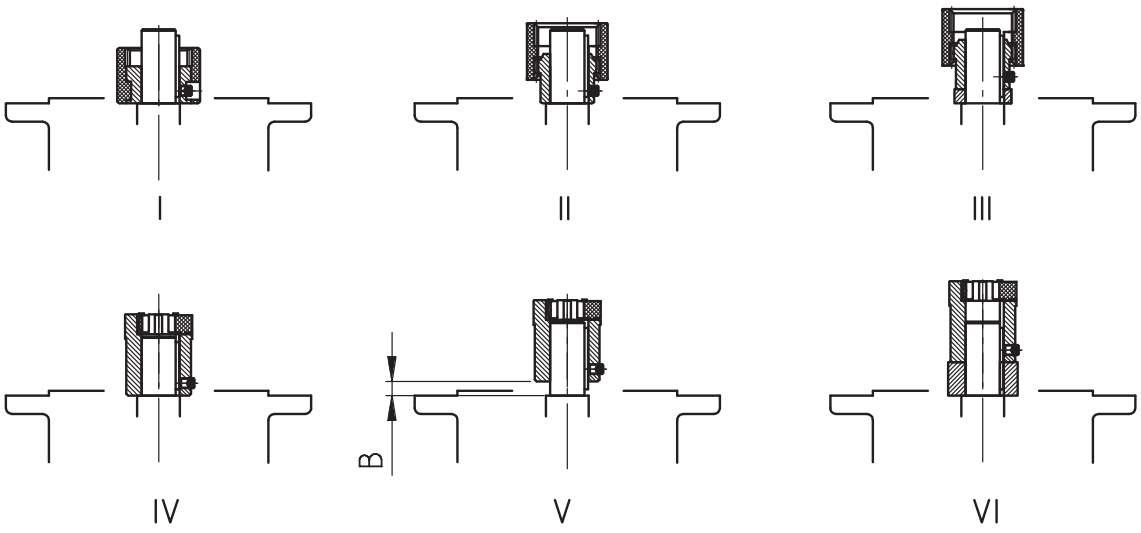

Figure 17: Fitting the coupling onto the motor shaft - various types of coupling

I Curved tooth coupling

II Curved tooth coupling, two-part

III Curved tooth coupling, two-part with spacer bush

IV Claw coupling, two-part

V Claw coupling, two-part, observe dimension B:

Standard helical gear unit: SK 0, SK 01, SK 20, SK 25, SK 30, SK 33 (2-stage) SK 010, SK 200, SK 250, SK 300, SK 330 (3-stage)		
	IEC size 63	IEC size 71
Dimension B (Fig. V)	B = 4.5 mm	B = 11.5 mm

VI Claw coupling two-part with spacer bush

3.12 Installation of a servo motor (Option SEP / SEK)

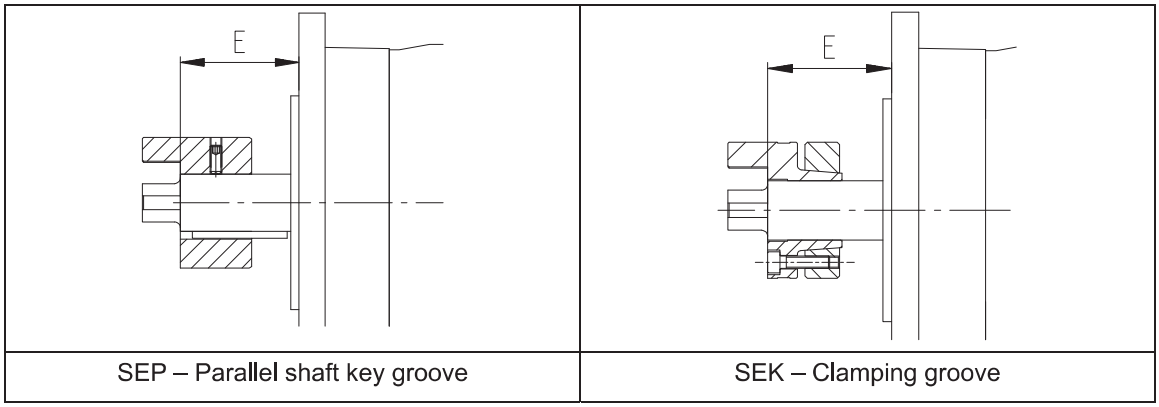

SEP – Parallel shaft key groove	SEK – Clamping groove

E = Coupling installation size of flange system

Cylinder type	Coupling size*	Installation size E [mm]
SE. 100	GS 19	40
SE. 130	GS 24	50
SE. 165	GS 28	58
SE. 215	GS 28	80
	GS 48	80
SE. 300	GS 48	82
*) All coupling sizes are available as SEP or SEK versions, the ring gear has a hardness of (Shore) 98 Sh-A-GS, colour red		

Table 4: Allocation of cylinder types to coupling sizes

To prevent damage to the coupling, the dimension E which is stated in Table 12 must be complied with!

Assembly sequence for the connection of a servo motor to the servo adapter (Option SEP / SEK)

Please refer to the coupling manufacturer's operating/installation instructions for the assembly of the two halves of the coupling.

3.13 Fitting the cooling coil to the cooling system

WARNING — **Risk of injury**

Possibility of injury due to pressure discharge.

Ensure that the pressure is released from the cooling circuit before carrying out any work on the gear unit.

The cooling coil is installed in the casing cover. Cutting ring screw threads according to DIN 2353 are located at the casing cover for the connection of a pipe with an external diameter of 10 mm.

Remove the closing cap from the screw neck prior to assembly to avoid any contamination of the cooling system. The screw necks should be connected with the coolant circuit, which must be provided by the operator. The flow direction of the coolant is irrelevant.

Make sure not to twist the screw necks during or after assembly as the cooling coil may be damaged. It must be ensured that no external forces act on the cooling coil.

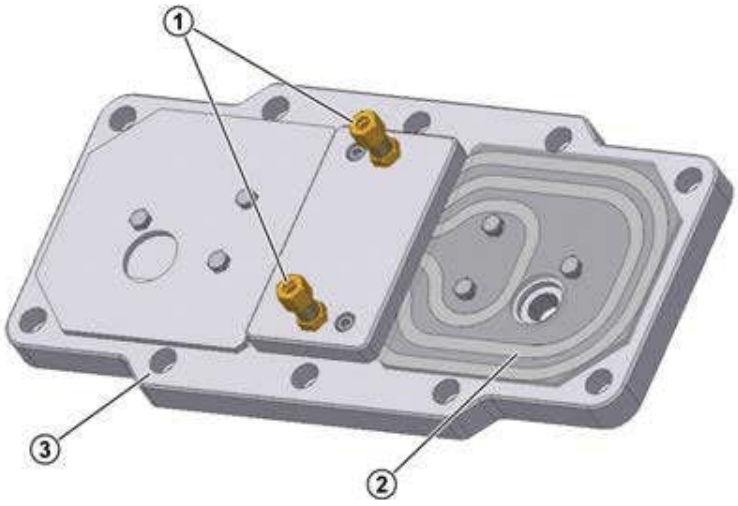

	Explanation
1	Cutting ring screw threads
2	Cooling coil
3	Housing cover

Figure 18: Cooling cover

3.14 Installation of an oil expansion tank, Option OA

The expansion tank must be installed vertically with the hose connection facing downwards and the vent plug upwards. Please note the attached factory standard 0-530-04 for the installation.

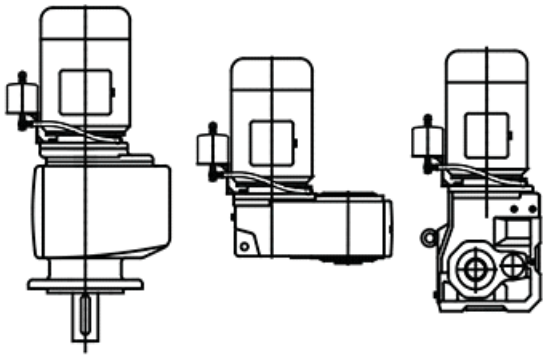

Figure 19: Installing the expansion tank

3.15 Subsequent paintwork

NOTICE	Damage to the device

For retrospective painting of the gear unit, the radial seals, rubber elements, pressure venting valves, hoses, type plates, adhesive labels and motor coupling components must not come into contact with paints, lacquers or solvents, as otherwise components may be damaged or made illegible.

4 Commissioning

4.1 Check the oil level

The oil level must be checked prior to commissioning (please see chapter 5.2 "Service and Maintenance Work").

4.2 Activating the automatic lubricant dispenser

Some gear unit types with standard motor (Option IEC/NEMA) have an automatic lubricant dispenser for the roller bearings. This dispenser must be activated prior to commissioning. The cartridge case cover of the adapter for attaching an IEC/NEMA standard motor has a red information sign for the activation of the lubricant dispenser. A grease escape opening which is closed with a G1/4 cap screw is located opposite to the lubricant dispenser. After activation of the lubricant dispenser, the cap screw can be removed and replaced with the grease collection container (Part No. 28301210) which is supplied separately with the delivery.

Activating the automatic lubricant dispenser:

1. Loosen and remove the cylindrical screws.
2. Remove the cartridge cover.
3. Screw the activation screw into the lubricant dispenser until the lug breaks off at the defined fracture point
4. Re-fit the cartridge cover and fasten it with the cylindrical screw (please see chapter 6.5 "Torque values").
5. Mark activation date on the adhesive label indicating the month/year

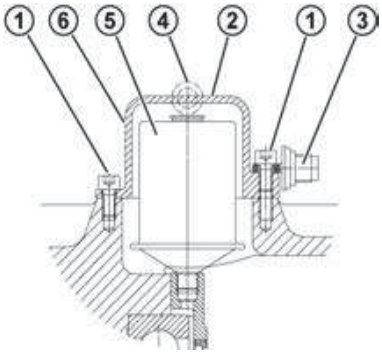

Explanation	
1	Cylindrical screw M8 x 16
2	Cartridge cover
3	Activation screw
4	Lug
5	Lubricant sensor
6	Position of adhesive label

Figure 20: Activating the automatic lubricant dispenser with standard motor mounting

Adhesive label:

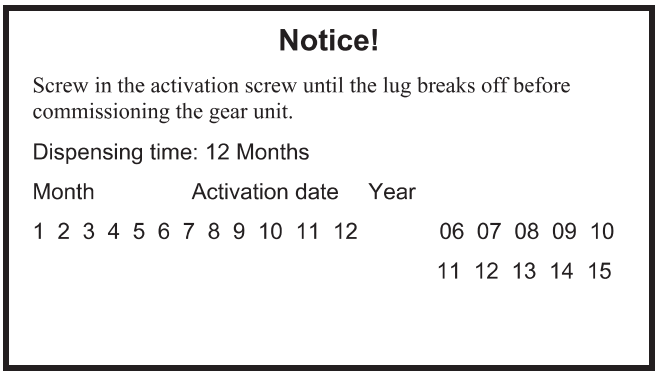

Figure 21: Adhesive label

4.3 Operation with lubricant cooling

Water cooling

NOTICE	Gear unit damage

The gear unit may be damaged by overheating.

The drive may only be commissioned after the cooling spiral has been connected to the cooling circuit, and the cooling circuit has been put into operation.

The coolant must have a similar thermal capacity as water (specific thermal capacity at 20°C c=4.18 kJ/kgK). Industrial water without any air bubbles or sediments is recommended as a coolant. The hardness of the water must be between 1 dH and 15 dH; the pH value must be between pH 7.4 and pH 9.5. No aggressive liquids may be added to the coolant!

The **coolant pressure** must not exceed **8 bar**. The required **quantity of coolant** is **10 litres/minute**, and the **coolant inlet temperature** must not exceed 40°C; we recommend **10°C.**

We also recommend fitting a pressure reducer or similar at the coolant inlet to avoid damage due to excessive pressure.

If there is a danger of frost the operator should add a suitable anti-freeze solution to the cooling water.

The **temperature of the cooling water** and the **cooling water flow rate** must be supervised and ensured by the operator.

Air/Oil cooler

The version and all important data for the air/oil cooler can be obtained from Catalogue G1000, or contact the manufacturer of the cooling unit.

4.4 Running-in time for the worm gear unit

Information **Running-in time**

In order to achieve maximum efficiency of the worm gear unit, the gear unit must be subjected to a running-in period of approx. 25 h – 48 h under maximum load.

There may be a reduction in efficiency before the running-in period is complete.

4.5 Checklist

Checklist		
Subject of check	**Date checked:**	**Information see Section**
Is the vent plug activated or the pressure vent screwed in?		3.4
Does the required configuration conform with the actual installation?		6.1
Are the external gear shaft forces within permitted limits (chain tension)?		3.6
Is the torque support correctly fitted?		3.7
Are contact guards fitted to rotating components?		3.9
Is the automatic lubricant dispenser activated?		4.2
Is the cooling cover connected to the cooling circuit?		3.13 4.3

5 Service and maintenance

WARNING **Danger of burns**

The surfaces of gear units or geared motors may become hot during or shortly after operation.

- Installation and maintenance work must only be performed when gear unit is at a standstill and has cooled down. The drive must be isolated and secured to prevent accidental start-up.
- Wear protective gloves.
- Shield hot surfaces with contact guards.

5.1 Service and Maintenance Intervals

Service and Maintenance Intervals	Service and Maintenance Work	Information see Section
At least every six months	• Visual inspection • Check for running noises • Check the oil level • Re-grease / remove excess grease (only applicable for free drive shaft / Option W and for agitator bearings / Option VL2 / VL3) • Replace the automatic lubricator / remove excess grease (for operating times < 8 h / day): (A replacement interval of 1 year is permissible for the lubricant dispenser) (Only for IEC / NEMA standard motor mounting). Empty or replace the lubricant collection container with every second replacement of the lubricant dispenser.	5.2
For operating temperatures up to 80 °C every 10000 operating hours, at least every 2 years	• Change the oil (The interval is doubled if filled with synthetic products) • Cleaning or replacing the vent plug • Replace shaft sealing rings if worn	5.2
Every 20000 operating hours, at least every 4 years	• Re-lubrication of the bearings in the gear unit	5.2
At least every 10 years	• General overhaul	5.2

Information — **Oil change intervals**

The oil change intervals apply for normal operating conditions and operating temperatures up to 80 °C. The oil change intervals are reduced in the case of extreme conditions (operating temperatures higher than 80 °C, high humidity, aggressive environment and frequent fluctuations in the operating temperature).

5.2 Service and Maintenance Work

WARNING — **Severe personal injury**

Severe injury and material damage may be caused by incorrect servicing and maintenance work.

Servicing and maintenance work must only be performed by qualified specialist personnel. Wear the necessary protective clothing for servicing and maintenance work (e.g. industrial footwear, protective gloves, goggles, etc.)

WARNING — **Severe personal injury**

Risk of injury due to rapidly rotating and hot machine components.

Installation and maintenance work must only be performed when gear units are at a standstill and have cooled down. The drive must be isolated and secured to prevent accidental start-up.

WARNING — **Severe personal injury**

Particles or liquids thrown up during servicing and maintenance can cause injuries.

- Observe the safety information when cleaning with compressed air or a pressure washer.

WARNING — **Danger of burns**

Danger of burns due to hot oil.

- Allow the gear unit to cool down before carrying out maintenance or repair work.
- Wear protective gloves.

NOTICE — **Leaks**

Take care that no dirt or water enters the shaft sealing rings or the vents when cleaning

Dirt or water in the shaft sealing rings may cause leaks.

Visual inspection

The gear unit must be checked for leaks. In addition, the gear unit must be inspected for external damage and cracks in the hoses, hose connections and rubber buffers. Have the gear unit repaired in case of leaks, e.g. dripping gear oil or cooling water, damage or cracks. Please contact the NORD service department.

Information — **Shaft sealing rings**

Shaft sealing rings are rubbing seals and have sealing lips made from an elastomer material. These sealing lips are lubricated with a special grease at the factory. This reduces the wear due to their function and ensures a long service life. An oil film in the region of the rubbing sealing lip is therefore normal and is not due to leakage.(please see chapter 6.7 "Leaks and seals")

Check for running noises

If the gear unit produces unusual running noises and/or vibrations, this could indicate damage to the gear unit. In this case the gear should be shut down and a general overhaul carried out.

Check the oil level

Section 6.1 "Configurations and maintenance" describes the versions and the corresponding oil level screws. With double gear units, the oil level must be checked on both units. The pressure vent must be at the position marked in Section 6.1 "Configurations and maintenance"Bauformen und Wartung</dg_ref_source_inline>.

The oil level does not need to be checked on gear units without oil level screw (please see chapter 6.1 "Configurations and maintenance").

Gear unit types that are not supplied full of oil must be filled before the oil level is checked.

Check the oil level with an oil temperature of between 20 °C to 40 °C.

1. The oil level may only be checked when the gear unit is at a standstill and has cooled down. The gear unit must be secured to prevent accidental switch-on.
2. The oil level screw corresponding to the version must be screwed out (please see chapter 6.1 "Configurations and maintenance").

Information — **Checking the oil level**

At the first oil level check a small amount of oil may escape, as the oil level may be below the lower edge of the oil level hole.

3. **Gear units with oil level screw:** The correct oil level is at the lower edge of the oil level hole. If the oil level is too low, this must be corrected using the correct type of oil. An oil level glass is available instead of the oil level screw
4. **Gear units with an oil level tank:** The oil level must be checked in the oil level tank with the aid of the dipstick plug (thread G1 1/4). The oil level must be between the upper and lower marking when the dipstick is fully screwed in (see Figure 22). Top up the oil level with the relevant type of oil as necessary. These gearboxes may only be operated in the configuration stated in Section 6.1 "Configurations and maintenance".
5. The oil level screw or the cap screw with dipstick and all other loosened screws must be correctly re-tightened.

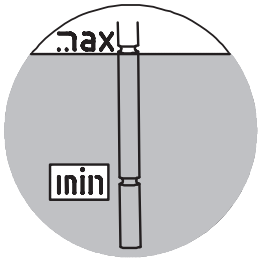

Figure 22: Checking the oil level with a dipstick

Re-greasing

Some gear unit designs (free drive shaft, Option W, agitator designs VL2 and VL3) are equipped with a re-greasing device.

For agitator versions VL2 and VL3, the vent screw located opposite to the grease nipple must be unscrewed before re-greasing. Grease should be injected until a quantity of 20 - 25 g escapes from the vent hole. After this, the vent plug must be reinserted and tightened.

For Option W and some IEC adapters, the outer roller bearing must be re-greased with approx. 20 - 25 g of grease via the grease nipple provided. Remove any excess grease from the adapter.

Recommended grease: Petamo GHY 133N (please see chapter 6.2 "Lubricants") (Fa. Klüber Lubrication).

Replacing the automatic lubricant dispenser

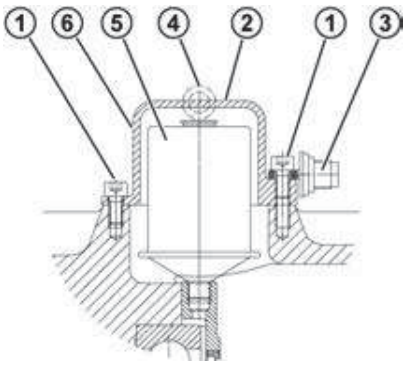

	Explanation
1	Cylindrical screws M8 x 16
2	Cartridge cover
3	Activation screw
4	Lug
5	Lubricant sensor
6	Position of adhesive label

Figure 23: Replacing the automatic lubricant dispenser with standard motor mounting

The cartridge cover must be unscrewed. The lubrication dispenser is screwed out and replaced with a new component (Part No. 283 0100). Remove any excess grease from the adapter. Then activate (please see chapter 4.2 "Activating the automatic lubricant dispenser").

Empty or replace the grease collection container (Part No. 28301210) with every second replacement of the lubricant container. To empty the container, unscrew it from the screw fitting. The container has an internal piston, which can be pressed back with a rod with a maximum diameter of 10 mm. Collect the grease which is pressed out and dispose of it correctly. Due to the shape of the container, a residual quantity of grease remains in the container. After emptying and cleaning the container, it can be screwed back into the drain hole in the IEC adapter. Replace the container with a new one if it is damaged.

Change the oil

The figures in Section 6.1 "Configurations and maintenance" show the oil drain screw, the oil level screw and the pressure vent screw for various designs.

Procedure:

1. Place a catchment vessel under the oil drain screw or the oil drain cock.
2. Completely remove the oil level screw or screwed sealing plug with dipstick if an oil level tank is being used and unscrew oil drain screw.

WARNING — **Danger of burns**

Danger of burns due to hot oil.

- Allow the gear unit to cool down before carrying out maintenance or repair work.
- Wear protective gloves.

3. Drain all the oil from the gear unit.
4. If the sealing ring of the oil drain screw or oil level screw is damaged in the thread, a new oil level screw must be used or the thread must be cleaned and coated with securing lubricant, e.g. Loctite 242, Loxeal 54-03 prior to insertion.
5. Screw the oil drain screw into the hole and tighten to the correct torque (please see chapter 6.5 "Torque values").
6. Using a suitable filling device, refill with oil of the same type through the oil level hole until oil emerges from the oil level hole. (The oil can also be filled through the pressure vent screw or a sealing plug located higher than the oil level). If an oil level tank is used, fill the oil through the upper inlet (thread G1¼) until the oil level is set as described in Section 5.2 "Service and Maintenance Work".
7. Wait at least 15 minutes, or at least 30 minutes if an oil level tank is used, and then check the oil level. Proceed as described in Section 5.2 "Service and Maintenance Work".

Information — **Oil level**

The oil does not need to be changed on gear units without oil level screw (please see chapter 6.1 "Configurations and maintenance"). These gear units are lubricated for life.

Standard helical gear units have no oil level screw. Here, the oil is topped up through the pressure vent bolt using the quantities listed in the table in Section 6.4 "Helical gear unit".

Cleaning or replacing the vent plug

Unscrew the vent screw and thoroughly clean it (e.g. with compressed air) and fit the vent screw in the same place, If necessary, use a new vent screw with a new sealing ring.

Replace the shaft sealing ring

Once the shaft sealing ring has reached the end of its service life, the oil film in the region of the sealing lip increases and a measurable leakage with dripping oil occurs. **The shaft sealing ring must then be replaced.** The space between the sealing lip and the protective lip must be filled approximately 50 % with grease on fitting (recommended grease: PETAMO GHY 133N). Take care that after fitting, the new shaft sealing ring does not run in the old wear track.

Re-lubricating bearings

For bearings which are not oil-lubricated and whose holes are completely above the oil level, replace the roller bearing grease (recommended grease: PETAMO GHY 133N). Please contact the NORD service department.

General overhaul

For this, the gear unit must be completely dismantled. The following work must be carried out:

- Clean all gear unit components
- Examine all gear unit components for damage
- All damaged components must be replaced
- All roller bearings must be replaced
- Replace back stops if fitted
- Replace all seals, radial seals and Nilos rings
- Replace plastic and elastomer components of the motor coupling

The general overhaul must be carried out by qualified personnel in a specialist workshop with appropriate equipment in observance of national regulations and laws. We recommend that the general overhaul is carried out by the NORD Service department.

6 Appendix

6.1 Configurations and maintenance

Explanation of symbols for the following version illustrations:



Venting



Oil level



Oil drain

Information **Gear unit - Lubrication**

SK 320, SK 172, SK 272, SK 372 as well as SK 273 and SK 373, SK 01282 NB, SK 0282 NB, SK 1382 NB and UNIVERSAL / MINIBLOC gear units are lubricated for life. These gear units do not have an oil filler screw.

UNIVERSAL / MINIBLOC worm gear units

NORD UNIVERSAL / MINIBLOC worm gear units are suitable for all installation positions. They have an oil filler which is independent of the configuration.

As an option, types SI and SMI can be equipped with a vent screw. Gear units with vents must be installed in the stated position.

Types SI, SMI, S, SM and SU as 2-stage gear unit types and types SI, SMI as worm gear units for direct motor mounting have an oil filler which depends on the configuration and must be installed in the stated position.

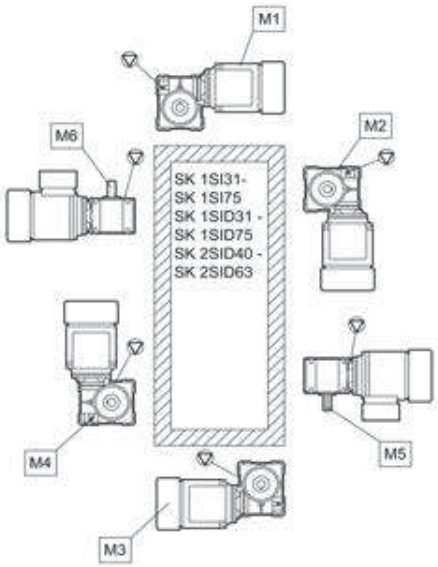

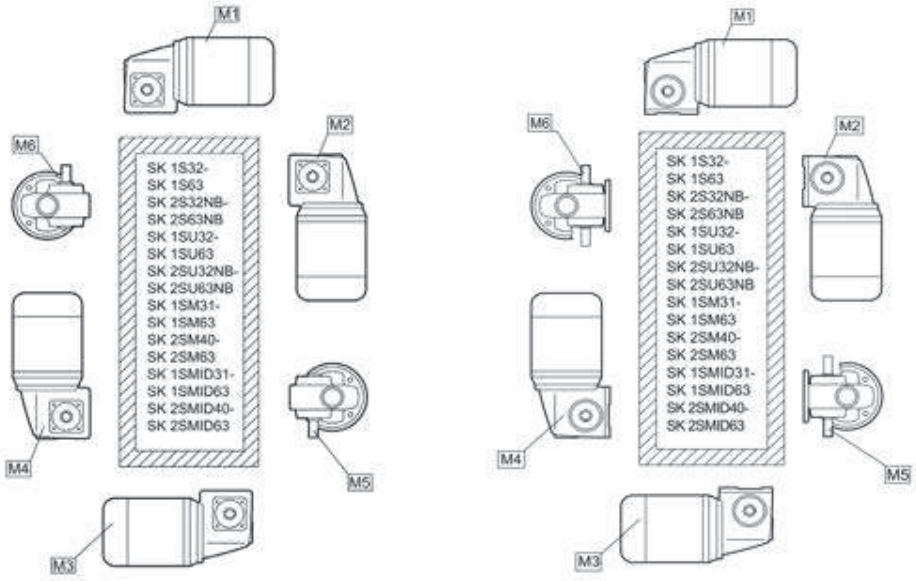

Parallel shaft gear units with oil level tank

The following applies for SK 9282, SK 9382, SK 10282, SK 10382, SK 10382.1, SK 11282, SK 11382, SK 11382.1 and SK 12382 in the M4 configuration with oil level tank:

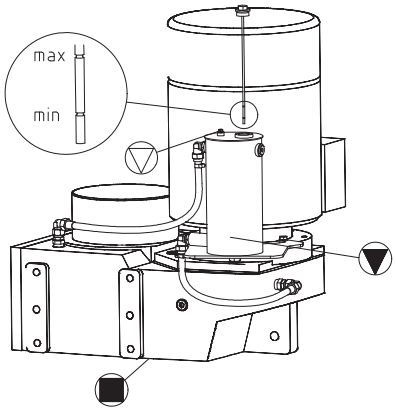

Figure 24: Oil level check with oil level tank

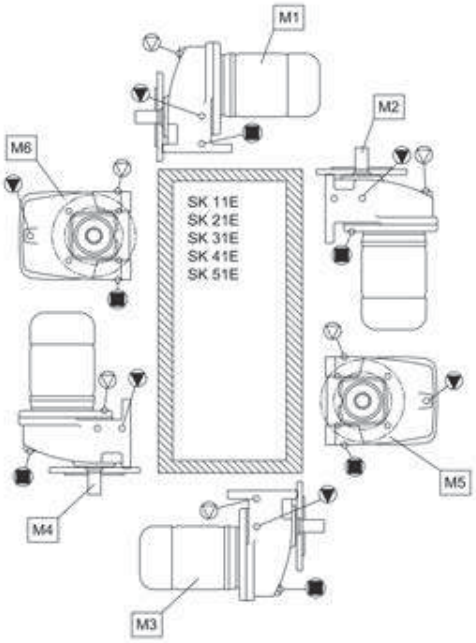
M1
M2
M6
SK 11E
SK 21E
SK 31E
SK 41E
SK 51E
M5
M4
M3

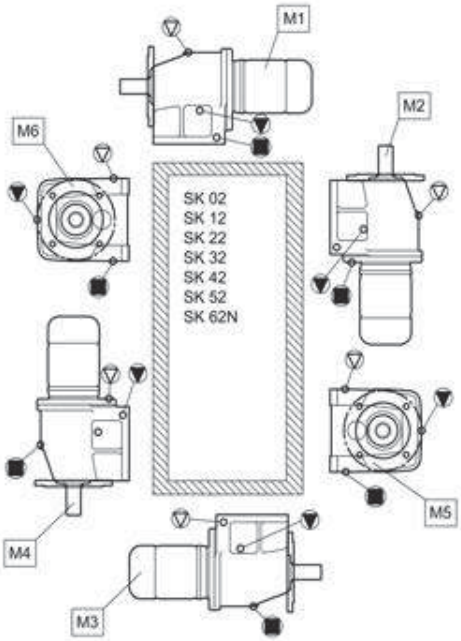
M1
M2
M6
SK 02
SK 12
SK 22
SK 32
SK 42
SK 52
SK 62N
M5
M4
M3

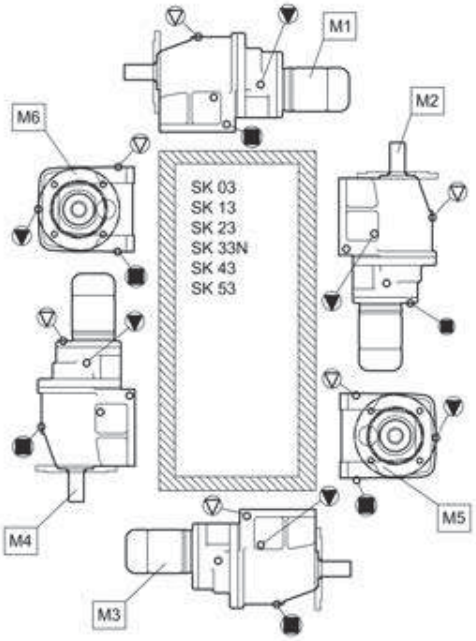
M1
M2
M6
SK 03
SK 13
SK 23
SK 33N
SK 43
SK 53
M5
M4
M3

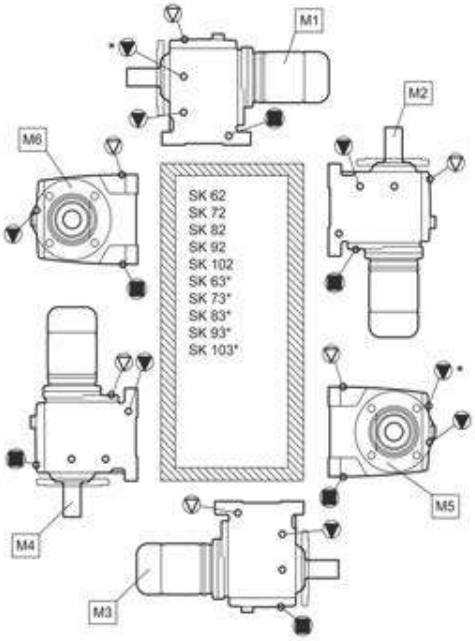
M1
M2
M6
SK 62
SK 72
SK 82
SK 92
SK 102
SK 63*
SK 73*
SK 83*
SK 93*
SK 103*
M5
M4
M3

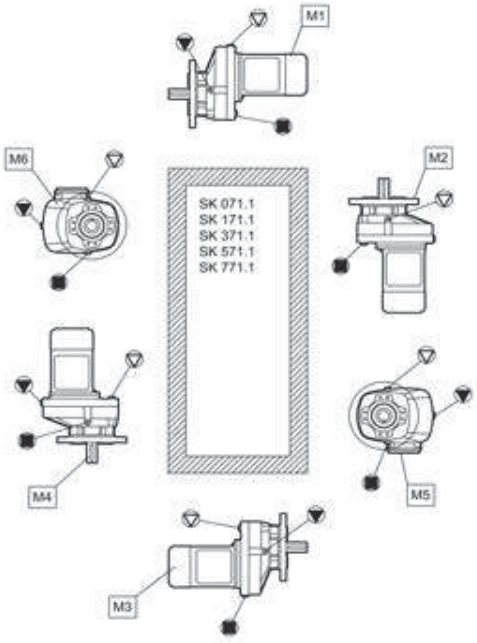
M1
M6
M2
SK 071.1
SK 171.1
SK 371.1
SK 571.1
SK 771.1
M4
M5
M3

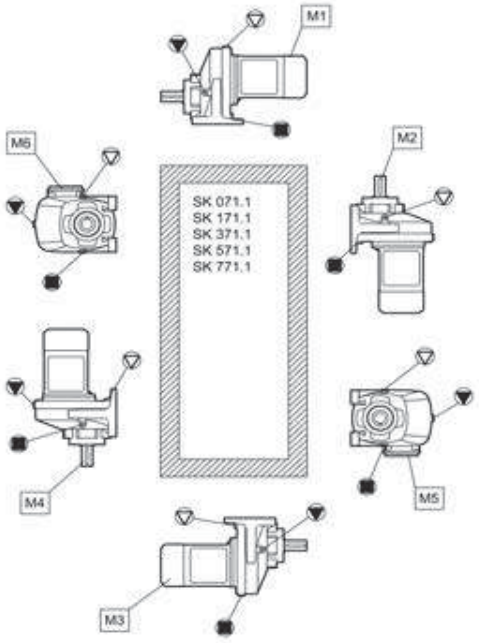
M1
M6
M2
SK 071.1
SK 171.1
SK 371.1
SK 571.1
SK 771.1
M4
M5
M3

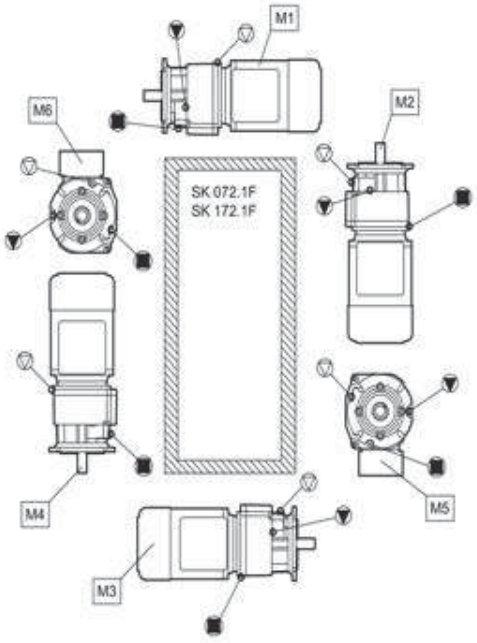
M1
M6
M2
SK 072.1F
SK 172.1F
M4
M5
M3

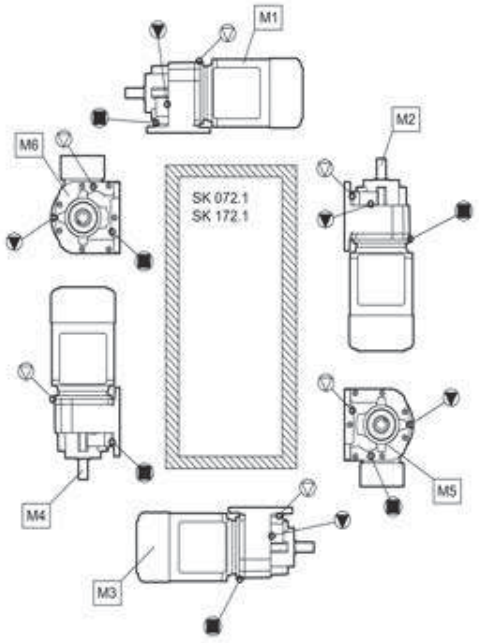
M1
M6
M2
SK 072.1
SK 172.1
M4
M5
M3

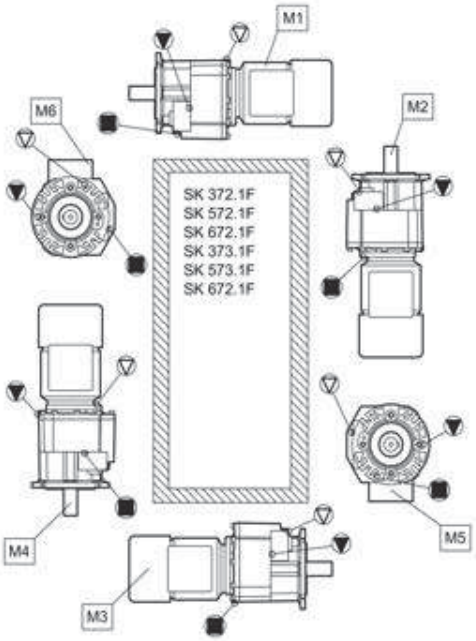
M1
M2
M3
M4
M5
M6
SK 372.1F
SK 572.1F
SK 672.1F
SK 373.1F
SK 573.1F
SK 672.1F

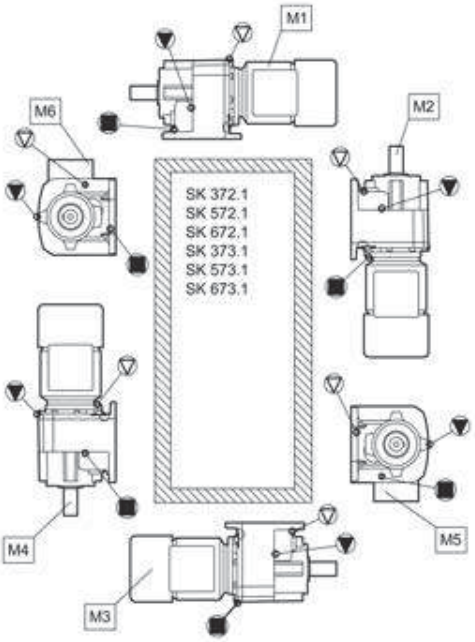
M1
M2
M3
M4
M5
M6
SK 372.1
SK 572.1
SK 672.1
SK 373.1
SK 573.1
SK 673.1

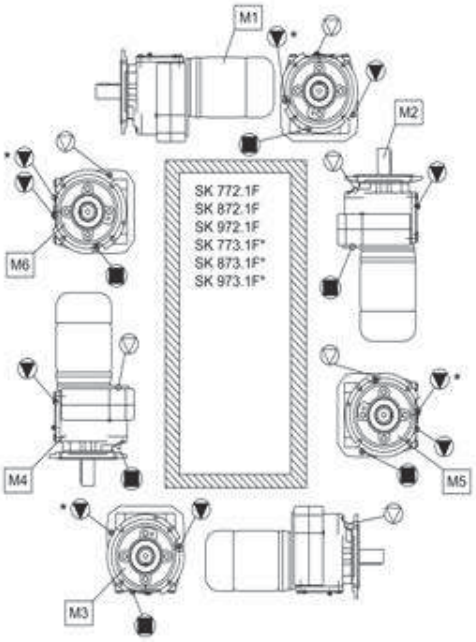
M1
M2
M3
M4
M5
M6
SK 772.1F
SK 872.1F
SK 972.1F
SK 773.1F*
SK 873.1F*
SK 973.1F*

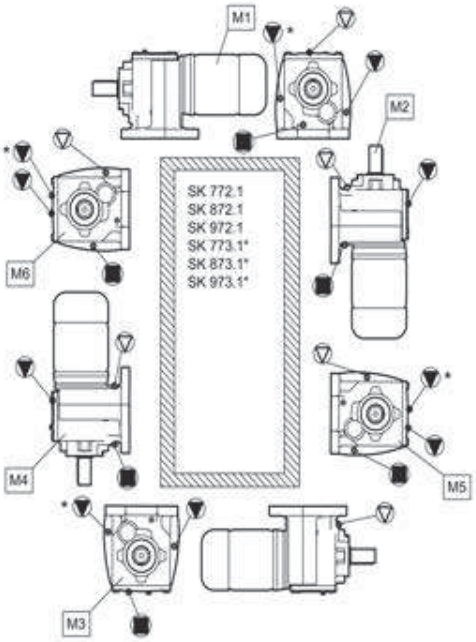
M1
M2
M3
M4
M5
M6
SK 772.1
SK 872.1
SK 972.1
SK 773.1*
SK 873.1*
SK 973.1*

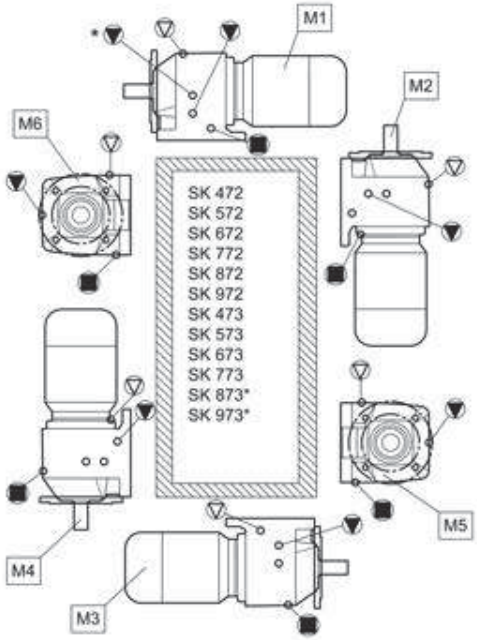
M1
M2
M6
SK 472
SK 572
SK 672
SK 772
SK 872
SK 972
SK 473
SK 573
SK 673
SK 773
SK 873*
SK 973*
M5
M4
M3

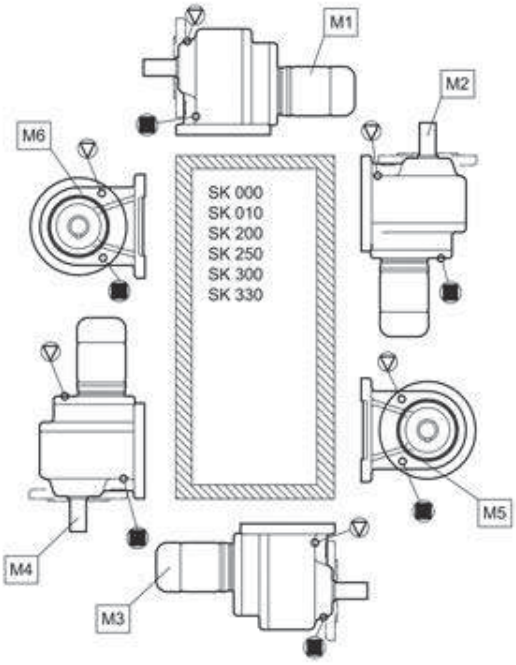
M1
M2
M6
SK 000
SK 010
SK 200
SK 250
SK 300
SK 330
M5
M4
M3

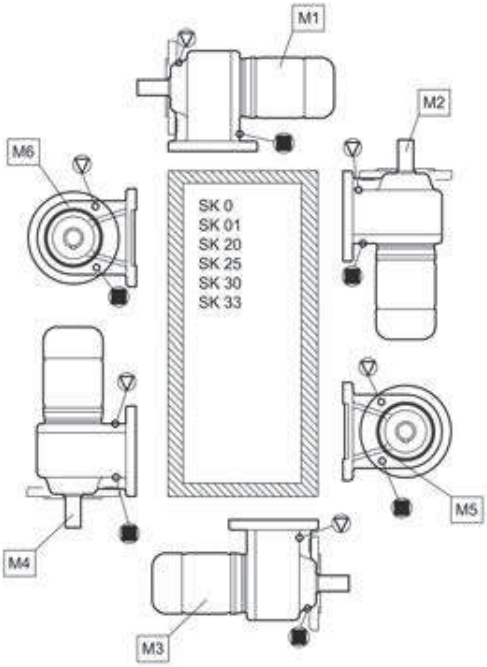
M1
M2
M6
SK 0
SK 01
SK 20
SK 25
SK 30
SK 33
M5
M4
M3

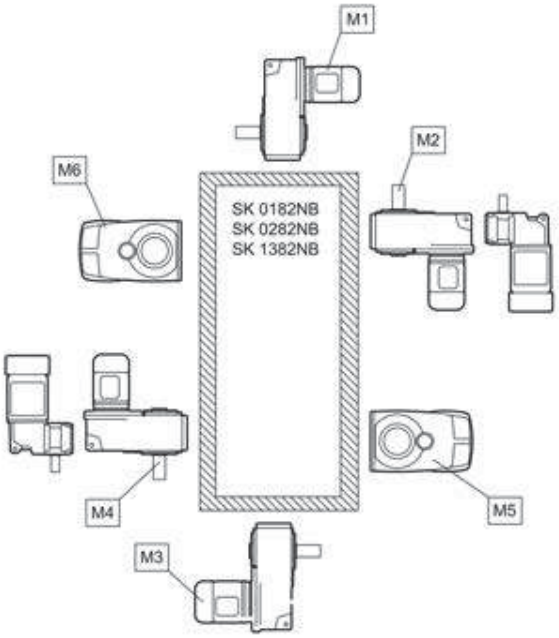
M1
M2
M6
SK 0182NB
SK 0282NB
SK 1382NB
M4
M5
M3

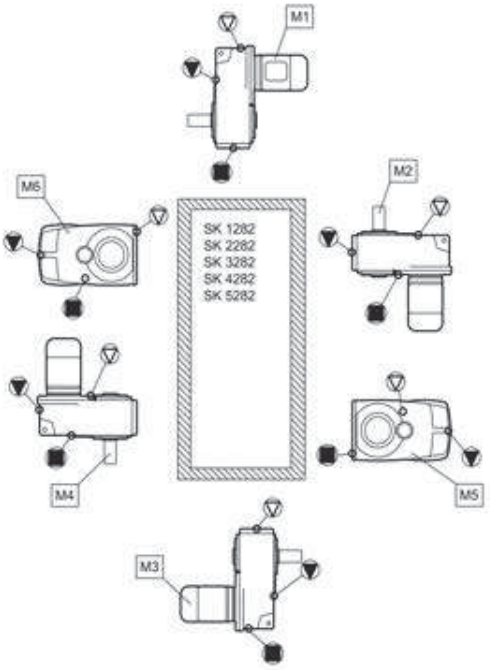
M1
M6
M2
SK 1282
SK 2282
SK 3282
SK 4282
SK 5282
M4
M5
M3

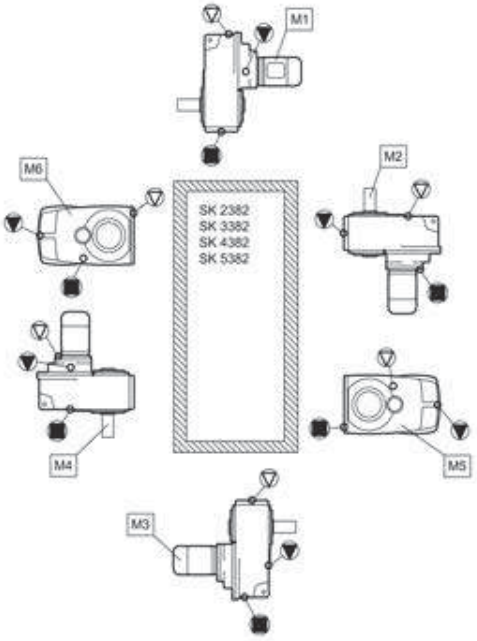
M1
M6
M2
SK 2382
SK 3382
SK 4382
SK 5382
M4
M5
M3

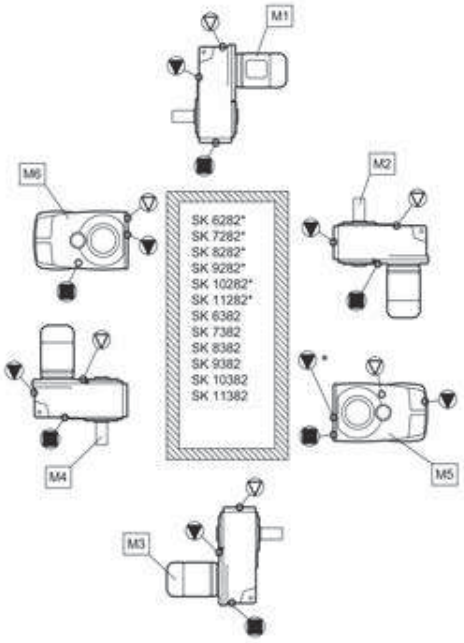
M1
M6
M2
SK 6282*
SK 7282*
SK 8282*
SK 9282*
SK 10282*
SK 11282*
SK 6382
SK 7382
SK 8382
SK 9382
SK 10382
SK 11382
M4
M5
M3

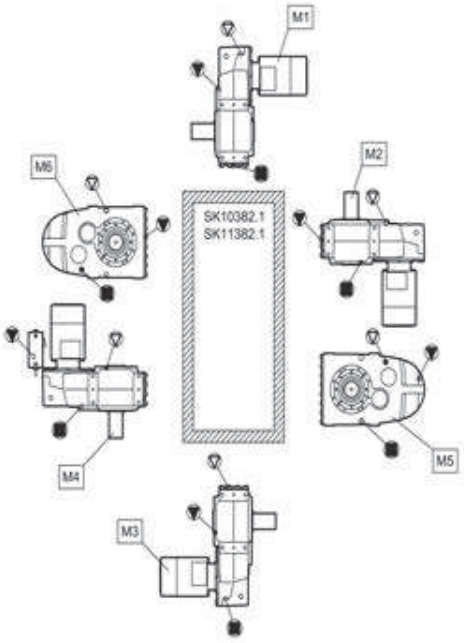
M1
M6
M2
SK10382.1
SK11382.1
M4
M5
M3

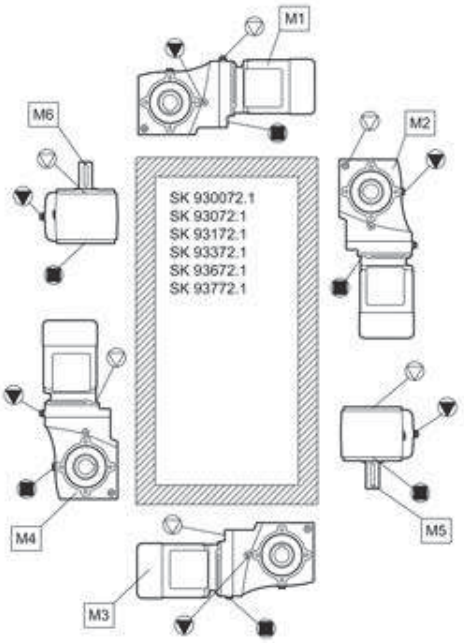
M1
M6
M2
SK 930072.1
SK 93072.1
SK 93172.1
SK 93372.1
SK 93672.1
SK 93772.1
M4
M5
M3

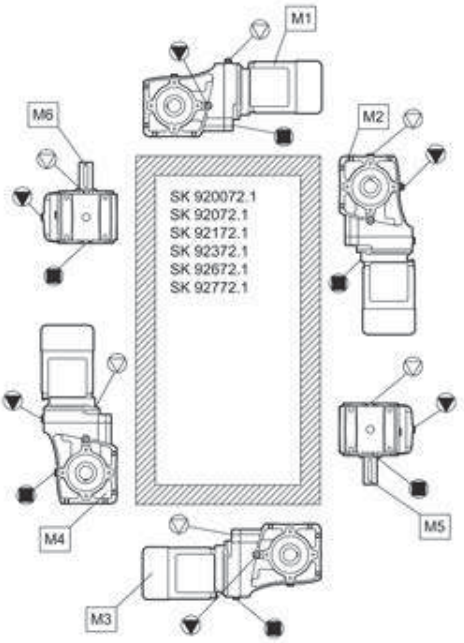
M1
M6
M2
SK 920072.1
SK 92072.1
SK 92172.1
SK 92372.1
SK 92672.1
SK 92772.1
M4
M5
M3

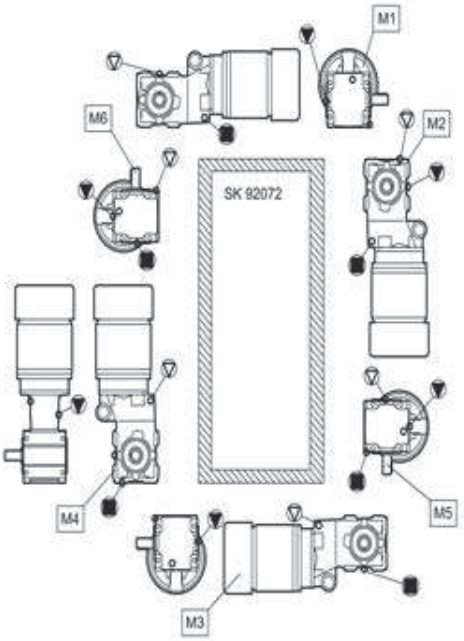
M1
M6
M2
SK 92072
M4
M5
M3

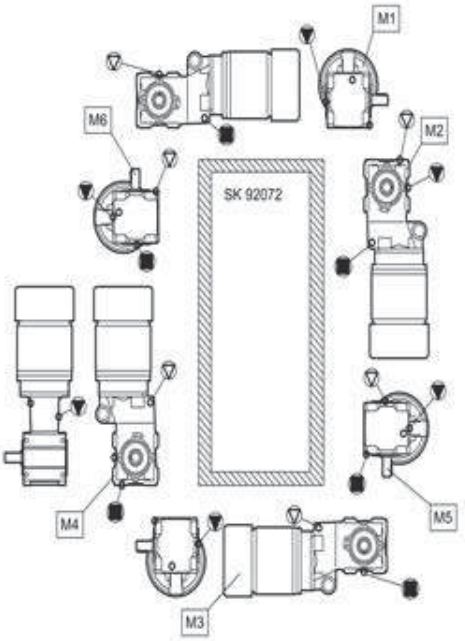
M1
M6
M2
SK 92072
M4
M5
M3

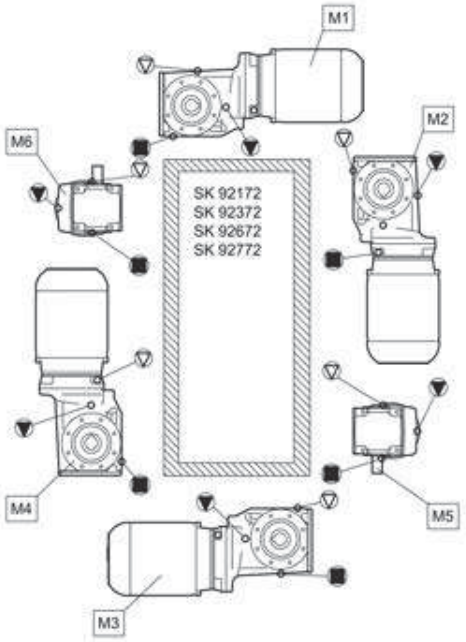
M1
M2
M6
SK 92172
SK 92372
SK 92672
SK 92772
M4
M5
M3

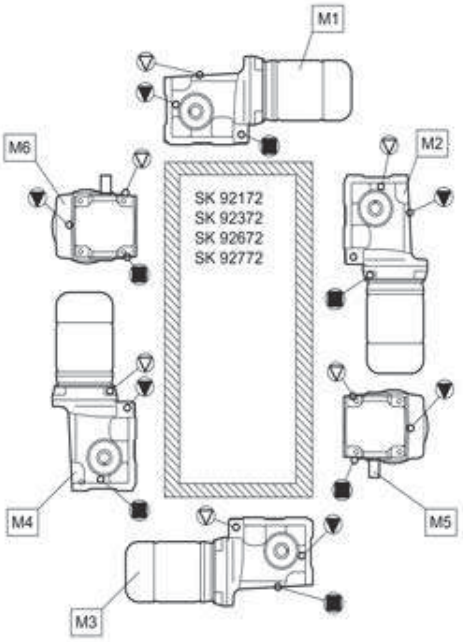
M1
M2
M6
SK 92172
SK 92372
SK 92672
SK 92772
M4
M5
M3

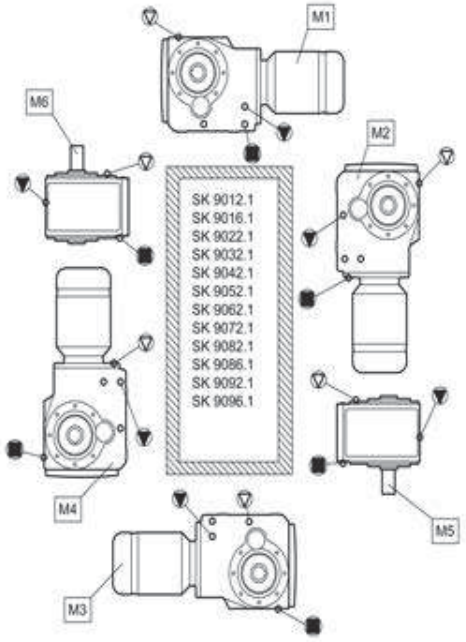
M1
M6
M2
SK 9012.1
SK 9016.1
SK 9022.1
SK 9032.1
SK 9042.1
SK 9052.1
SK 9062.1
SK 9072.1
SK 9082.1
SK 9086.1
SK 9092.1
SK 9096.1
M4
M5
M3

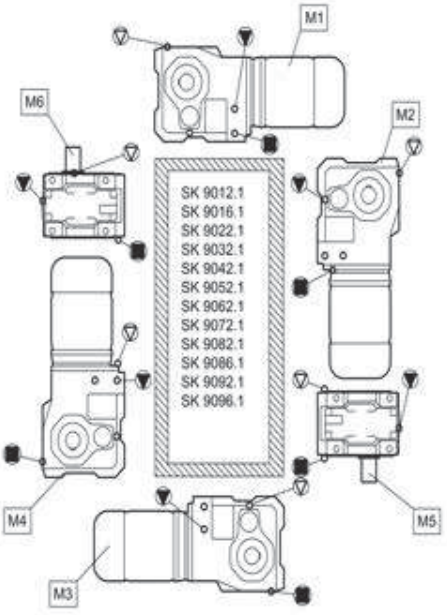
M1
M6
M2
SK 9012.1
SK 9016.1
SK 9022.1
SK 9032.1
SK 9042.1
SK 9052.1
SK 9062.1
SK 9072.1
SK 9082.1
SK 9086.1
SK 9092.1
SK 9096.1
M4
M5
M3

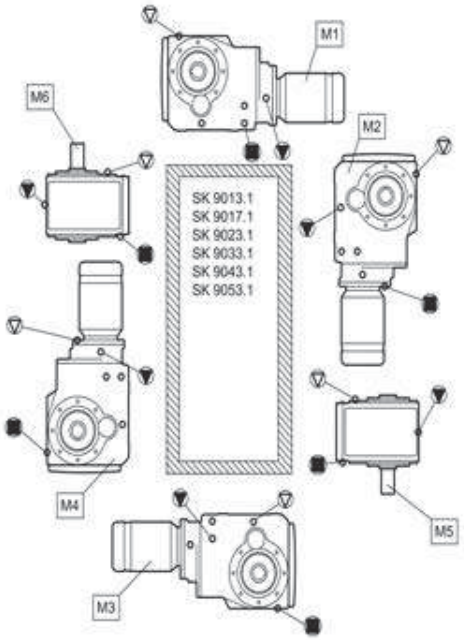
M1
M6
M2
SK 9013.1
SK 9017.1
SK 9023.1
SK 9033.1
SK 9043.1
SK 9053.1
M4
M5
M3

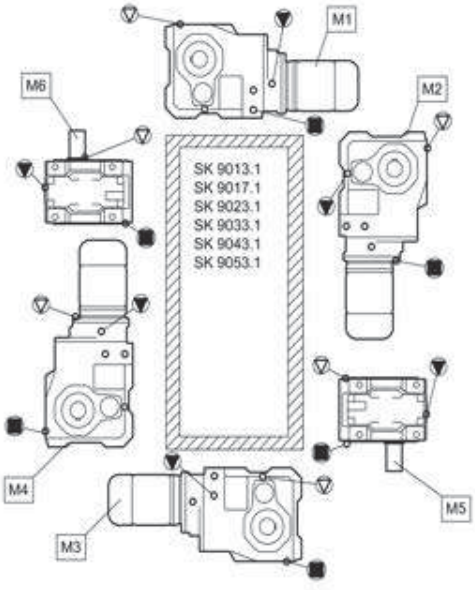
M1
M6
M2
SK 9013.1
SK 9017.1
SK 9023.1
SK 9033.1
SK 9043.1
SK 9053.1
M4
M5
M3

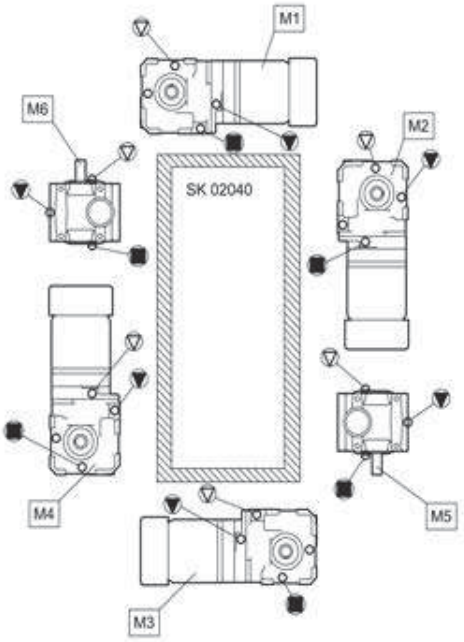
M1
M6
M2
SK 02040
M4
M5
M3

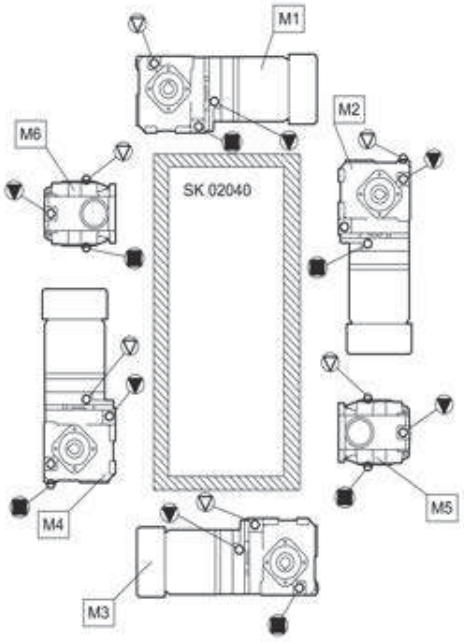
M1
M6
M2
SK 02040
M4
M5
M3

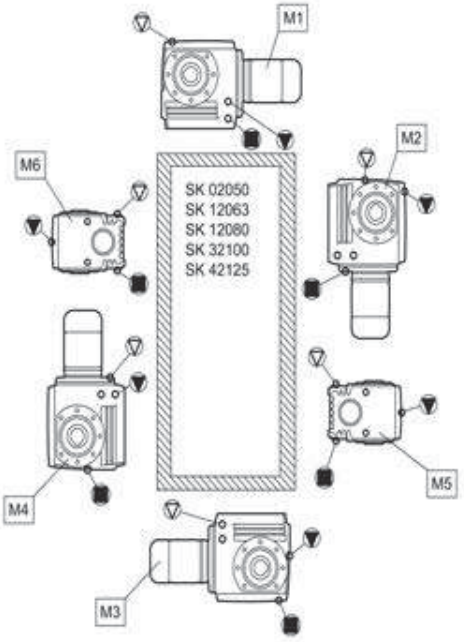
M1
M6
M2
SK 02050
SK 12063
SK 12080
SK 32100
SK 42125
M4
M5
M3

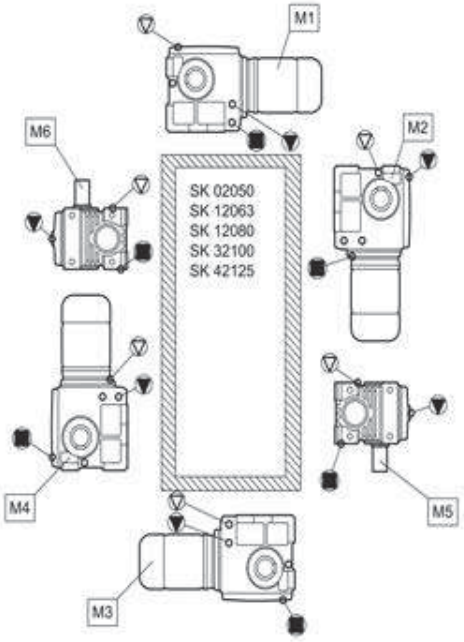
M1
M6
M2
SK 02050
SK 12063
SK 12080
SK 32100
SK 42125
M4
M5
M3

Remote Bulb Control (Continued)

Selection Charts (Continued)

Replacement Parts

Code Number	Description
CVR28A-617R	Concealed adjustment cover
CVR28A-618R	Visible scale cover
KNB20A-602R	Replacement Knob Kit

Accessories

A packing nut is available for closed tank application.
Specify the part number **FTG13A-600R**.

Bulb wells (WEL14A Series) are available for liquid immersion applications.
Refer to the selection chart or to *Bulb Wells Catalog Page, LIT-1922135*.

Technical Specifications

Electrical Ratings

Motor Ratings VAC	120	208	240
Wide Range – Adjustable Differential			
AC Full Load A	16.0	9.2	8.0
AC Locked Rotor A	96.0	55.2	48.0
Non-Inductive A [1]	22 A, 120 to 277 VAC		
Pilot Duty – 125 VA, 24 to 600 VAC			
Fixed Differential and Close Differential			
AC Full Load A	6.0	3.4	3.0
AC Locked Rotor A	36.0	20.4	18.0
Non-Inductive A	10 A, 24 to 277 VAC		
Pilot Duty – 125 VA, 24 to 277 VAC			
Case Compensated – Fixed Differential A19AAC-4			
AC Full Load A	16.0	9.2	8.0
AC Locked Rotor A	96.0	55.2	48.0
Non-Inductive A [1]	22 A, 120 to 277 VAC		
Pilot Duty – 125 VA, 24 to 600 VAC			
A19AAD-12			
AC Full Load A	6.0	3.4	3.0
AC Locked Rotor A	36.0	20.4	18.0
Non-Inductive A	10 A, 24 to 277 VAC		
Pilot Duty – 125 VA, 24 to 277 VAC			
Manual Reset			
AC Full Load A	16.0	9.2	8.0
AC Locked Rotor A	96.0	55.2	48.0
Non-Inductive A	16.0	9.2	8.0
Pilot Duty – 125 VA, 24 to 600 VAC			

1. SPST and N.O. contact of SPDT control;
   SPDT N.C. contact- 16 amps 120 to 277 VAC

The performance specifications are nominal and conform to acceptable industry standards. For applications at conditions beyond these specifications, consult the local Johnson Controls office. Johnson Controls, Inc. shall not be liable for damages resulting from misapplication or misuse of its products. © 2009 Johnson Controls, Inc.

TSLL/TSH - Switch, Temperature Thermostat, CN TF115-001
TSLL7911 - Switch, Temperature Thermostat, CN TF115-001
TSLL-7941 - Switch, Temperature Thermostat, CN TF115-001

PECO
AUTOMATION AND CONTROLS

NEMA 4X RAINTIGHT THERMOSTAT INSTALLATION AND OPERATING INSTRUCTIONS

INSTRUCCIONES DE INSTALACION Y OPERACION DEL THERMOSTATO A PRUEBA DE LLUVIA NEMA 4X

THERMOSTAT NEMA 4X ÉTANCHE AUX INTEMPÉRIES INSTRUCTION D'INSTALLATION ET D'UTILISATION

⚠ WARNING

To prevent overheating or fire, use this control as an operating or regulating thermostat. ALWAYS USE A BACKUP CONTROL OR ALARM if a control failure could cause the controlled appliance to overheat or could cause a fire

Where thermostat is capable of cycling directly between heating and cooling loads, failure to provide a load transfer switch will result in thermostat failure.

Do not install, use or operate if product appears damaged, the enclosure is cracked or broken or if the sensor has been bent, crimped or is dirty.

APPROPRIATE APPLICATION

This thermostat has been tested by CSA and Underwriters Laboratories Inc. (UL), meets the requirements for NEMA 4X equipment and is suitable for use under the National Electrical Code (NEC), Article 547-7, when used with appropriate watertight connectors (not included).

INSTALLATION

⚠ WARNING

To avoid electrical shock or damage to equipment, disconnect all power before installing or servicing.

To avoid potential fire and/or explosion, do not use in potentially flammable or explosive atmospheres.

Installation must be made by a trained, qualified service person in accordance with the National Electrical Code (NEC) and all applicable local codes and ordinances. Installation should meet all applicable national, state and local codes. Refer to the appropriate wiring diagram included. Locate the thermostat (local sensing models) or sensing bulb (remote sensing models) for optimum temperature sensing of the controlled space. Thermostat operation will be affected by unusual heat or cold, such as direct sunlight, near windows or doors or on outside walls.

All fittings and materials used for the installation should be approved, suitable and installed properly for the intended application. For water tightness, the cord seal or conduit hub should be UL listed and marked 4X. The conduit hub is to be tightened onto the conduit before installing in the enclosure.

Where applicable, remove knockout(s) by impacting near the inside edge of the knockout to be removed. **IMPORTANT: Do not impact, dent or use the sensor for support. This will cause calibration and/or thermostat failure.**

⚠ WARNING

READ INSTRUCTION CAREFULLY BEFORE ATTEMPTING TO INSTALL, OPERATE OR SERVICE THIS THERMOSTAT. Failure to observe safety information and comply with instructions could result in PERSONAL INJURY, DEATH AND/OR PROPERTY DAMAGE.
Retain these instructions for future reference. This product, when installed, will be part of an engineered system whose specifications and performance characteristics are not designed or controlled by PECO. You must review your application and national and local codes to assure that your installation will be functional and safe.

Even though this thermostat is sealed, water or dust could enter through improperly sealed wiring. A drip loop should be provided to prevent water and other liquids from entering the thermostat housing. The cord or conduit connections to the enclosure must be water and dust tight. The cover must be tightened securely to compress the gasket and provide a watertight seal. Use only screws provided. Do not over-tighten.

Maximum sensing element withstand temperature is 35°F (20°C) above the highest temperature setting. Maximum temperature for the plastic enclosure is 140°F 60°C.

⚠ CAUTION

For use in wet or humid environments or where water tightness is required, failure to use suitable watertight connections and suitable drip loop could allow water to enter the enclosure resulting in thermostat failure.

Use copper wire only. Insulate or wire-nut all unused leads.

Use the grounding provisions provided for connection to the line ground and equipment ground wire.

OPERATION AND CHECK-OUT

Allow one hour or necessary amount of time for the thermostat and system to stabilize for normal operation. This thermostat is factory calibrated and requires no correction on site.

TO CHECK OPERATION OF HEATING SYSTEMS:

1. Disconnect power.
2. Place the heat/cool selector switch, if applicable, in the heat position.
3. Adjust the thermostat set point to at least 10°F (5°C) below the temperature of the controlled space.
4. Restore power.
5. Slowly adjust the thermostat knob to raise the set point. When the set point reaches the approximate temperature of the controlled space, the heating equipment should start.

TO CHECK OPERATION OF COOLING SYSTEMS:

1. Disconnect power.
2. Place the heat/cool selector switch, if applicable, in the cool position.
3. Adjust the thermostat set point to at least 10°F (5°C) above the temperature of the controlled space.
4. Restore power.
5. Slowly adjust the thermostat knob to lower the set point. When the set point reaches the approximate temperature of the controlled space, the cooling equipment should start.

LIMITED WARRANTY

1. WARRANTY COVERAGE. PECO warrants to the original user of its products that the products will. at the date of initial purchase, meet the applicable specification for such products and will be free from any defects in materials or manufacture under normal use for 18 months after date of manufacture.
2. DISCLAIMER OF WARRANTY OF PRODUCT SUITABILITY. PECO makes no warranty to the purchaser or any third party that its products are suitable for a particular application or design. Many states and localities have differing codes or regulations governing the installation and/or use of PECO products. PECO cannot guarantee compliance with such regulations; purchaser is solely responsible for safe and correct installation and use of the product and for compliance with applicable codes and regulations.
3. EXCLUSION OF IMPLIED WARRANTIES. This warranty is the only warranty applicable to this product and excludes all other warranties, including any WARRANTY OF MERCHANTABILITY, any warranty of fitness for a particular purpose, and any implied warranties otherwise arising from course of dealing or usage of trade, except where the product purchased is subject to consumer product warranty laws, in which case ANY APPLICABLE IMPLIED WARRANTIES ARE LIMITED TO 18 MONTHS, or such shorter period as permitted or required under applicable law.
Some States do not allow limitations on how long an implied warranty lasts, so the above limitations may not apply to you.
4. REMEDIES FOR NONCONFORMITY. If the product purchased does not conform to the applicable warranty, PECO will provide, at its option and in accordance with the procedures in the following section, one of the following remedies: (1) repair of the nonconforming product, (2) replacement with a conforming product, (3) refund of the original purchase price, THESE REMEDIES SHALL BE THE EXCLUSIVE AND SOLE REMEDY for any breach of warranty.
5. TO OBTAIN WARRANTY SERVICE. For any product believed to be defective within the limited warranty period, first write or call dealer from whom product was purchased. Dealer will give additional directions. If unable to resolve satisfactorily, write to PECO at the address below, giving dealer's name, address, date and number of dealer's invoice, and describe the nature of the defect.
6. LIMITATION OF LIABILITY. PECO WILL NOT BE LIABLE FOR ANY INCIDENTAL, SPECIAL, INDIRECT OR CONSEQUENTIAL DAMAGES resulting from any defect in the product purchased. Some States do not allow the exclusion or limitation of incidental or consequential damages, so the above limitation or exclusion may not apply to you.

This warranty gives you specific legal rights, and you may also have other rights which vary from State to State.
Manufactured by PECO, Inc.
4709 SE 18th Avenue - Portland, OR 97202 - USA
P.O. Box 82189 - Portland, OR 97282 - USA

⚠ ADVERTENCIA

LEALAS INSTRUCCIONES CUIDADOSAMENTEANTES DE TRATAR DE INSTALAR, OPERAR O HACER EL SERVICIO EN ESTE TERMOSTATO.
Si no se observa la información de seguridad y si no se siguen las instrucciones se pueden producir LESIONES PERSONALES, LAMUERTE Y/O DAÑO A LA PROPIEDAD. Guarde estas instrucciones para referencia en el futuro.Cuando este producto se instale, formará parte de un sistema de ingeniería cuyas especificaciones y características de rendimiento no han sido diseñadas ni son controladas por PECO. Es necesario que estudie su aplicación y los códigos lacales y nacionales para asegurarse que su instalación funcionará bien y es segura.

APLICACION CORRECTA

Este termostato ha sido probado por CSA y por Underwriters Laboratories Inc. (UL), cumple con los requisitos del equipo NEMA 4X y es adecuado para usarse según el Artículo 547-4 del National Electrical Code (NEC), cuando se usacon los conectores impermeablescorrectos (novienen incluidos).

INSTALACION

⚠ ADVERTENCIA

Para evitar el choque eléctrico o el daño en el equipo, desconecte toda la energía antes de instalarlo o de hacerle el servicio. Para evitar incendios potenciales y/o la explosión, no lo use en atmósferas potencialmente inflamables o explosivas.

Una persona calificada y capacitada en el servicio tiene que hacer la instalación, según el National Electrical Code (NEC) y según todos los códigos y regulaciones locales. La instalación tiene que cumplir con todos los códigos nacionales, estatales y locales aplicables. Refiérase al diagrama del cableado apropiado que viene incluido.

Ubique el termostato (modelos sensores locales) o la bombilla sensora (modelos sensores remotos) para lograr una percepción óptima de la temperatura del espacio controlado. La operación del termostato se verá afectada por el calor o el frío fuera de lo común, tal como la luz directa del sol, cerca delas ventanas o puertas o en las paredes exteriores.

Todos los accesorios y los materiales que se usan para la instalación tienen que ser aprobados, adecuados y ser instalados correctamente para la aplicación que se les va a dar. El sello del cordón o el cubo del conductor deben estar en la lista de UL y tienen que estar marcados 4X para lograr que sean impermeables. El cubo del conductor tiene que estar apretado en éste antes de instalarlo en la caja.

Cuando sea aplicable, remueva el(los) disco(s) removible(s) golpeando cerca del borde interior del disco removible que se removerá. **IMPORTANTE: no golpee, ni abolle, ni doble, ni use el sensor como soporte. Esto hara fallar la calibracion y/o el termostato.**

⚠ ADVERTENCIA

Para prevenir el sobrecalentamiento o los incendios, use este control solamente como un termostato de operación o regulador. SIEMPRE USE UN CONTROL DE REFUERZO O UNA ALARMA en los casos cuando el artefacto controlado se puede sobrecalentar o se puede producir un incendio si el control falla, Cuando el termostato puede pasar por el ciclo directamente entre las cargas de calefacción y las de enfriamiento, si no se proporciona un interruptor de transferencia de carga, el termostato puede fallar. No instale, ni use, ni opere el producto si parece dañado, si la caja eatá partida o rota o si el sensorse ha doblado, plegado o esta sucio.

A pesar de que termostato está sellado, el agua o el polvo podrían enrtar a través del cableado mal sellado. Se tiene que proporcionar un ojal de goteo para impedir que el agua u otros líquidos entren en la caja del termostato. Las conexiones del cordón o del conductor que van a la caja tienen que ser impermeables y a prueba de polvo. La cubierta tiene que estar apretada en forma segura para comprimir la empaquetadura y proporcionar el sello impermeable. Use solamente los tornillos que vienen incluidos. No los apriete demasiado.

La temperatura máxima que puede soportarel elemento sensor es 20°C (35°F) sobre el ajuste de temperatura más alto. La temperatura máxima para la caja de plástico es 60°C (140°F).

⚠ PRECAUCION

Para usarlo en ambientes mojados o húmedos o en donde se necesita que sea impermeable, si no se usan las conexiones impermeables correctas y el ojal de goteo correcto, el agua podría entrar en la caja haciendo que el termostato falle. Use cables de cobre solamente, aisle o ponga tuercas de cables en todos los conductores que no están en uso. Use las estipulaciones para la conexión a tierra que vienen incluidas para la conexión a tierra de la línea y con el cable de conexión a tierra del equipo.

OPERACION Y REVISION

Permita una hora o el tiempo necesario para que el termostato y el sistema se estabilicen para la operación normal. Este termostato ha sido calibrado en la fábrica y no necesita corregirse en el lugar en donde se va a usar.

COMO REVISAR LA OPERACION DE LOS SISTEMAS DE CALEFACCION:

1. Desconecte la energía.
2. Ponga el interruptor selector de calefacción/enfriamiento, si es aplicable, en la posición de calefacción.
3. Ajuste el punto de control del termostato a por lo menos 5°C (10°F) por debajo de la temperatura del espacio controlado.
4. Vuelva a conectar la energía.
5. Lentamente ajusté la manilla del termostato para elevar el punto de control. Cuando el punto de control alcance la temperatura aproximada del espacio controlado, el equipo de calefacción debería arrancar.

COMO REVISAR LA OPERACION DE LOS SISTEMAS DE ENFRIAMIENTO:

1. Desconecte la energía.
2. Ponga el interruptor de calefacción/enfriamiento, si es aplicable en la posición de enfriamiento.
3. Ajuste el punto de control del termostato a por lo menos 5°C (10°F) sobre la temperatura del espacio controlado.
4. Vuelva a conectar la energía.
5. Ajuste lentamente la manilla del termostato para bajar el punto de control. Cuando el punto de control alcance la temperatura aproximada del espacio controlado, el equipo de enfriamiento debería arrancar.

GARANTIA LIMITADA

1. COBERTURA DE LA GARANTIA. PECO le garantiza al usuario original de sus productos, que en la fecha de la compra inicial, cumplen con las especificaciones aplicables y no tendrán defectos ni en los materiales ni en la fabricación, si se someten al uso normal, por 18 meses después de la fecha de fabricación.
2. DECLINACION DE RESPONSABILIDAD DE LA GARANTIA POR LA ADAPTACION DEL PRODUCTO. PECO no le garantiza al comprador, ni a terceros, que sus productos se adaptan a una aplicación o diseño en particular. Muchos estados y jurisdicciones cuentan con códigos o regulaciones diferentes que gobiernan la instalación y/o el uso de los productos de PECO. PECO no puede garantizarque se cumplan dichas regulaciones; el comprador es el único responsable por la instalación segura y correcta, por el uso del producto y por el cumplimiento con los códigos y regulaciones aplicables.
3. EXCLUSION DE LAS GARANTIAS IMPLICITAS. Esta garantía es la única que se aplica a este producto y se excluyen todas las demás garantías. incluyéndpse toda GARANTIA DE COMERCIALIZACION, cualquier garantía de adecuación para un propósito en particular y cualquier garantía implícita que de alguna otra forma se presente en el curso de las transac-ciones o uso comercial, excepto en el caso cuando el producto comprado esté sujeto a las leyes de las garantías del producto, en cuyo caso TODA GARANTIA IMPLICITA APLICABLE QUEDA LIMITADA A 18 MESES, o a un período de tiempo más corto, según lo permita o lo exija la ley aplicable.
Algunos estados no permiten limitaciones en cuanto a la duración de las garantías implícitas, de modo que las limitaciones anteriores puede que no se apliquenen su caso.
4. RECURSOS EN EL CASO DE DISCONFORMIDAD. Si el productocomprado no está de acuerdo con la garantía aplicada, PECO proporcionará, a su discreción, y según los procedimientos de la sección siguiente, uno de los recursos siguientes: (1) reparación del producto en disconformidad, (2) lo cambiará por uno conforme, (3) reembolsará el precio de compra original. ESTOS RECURSOS SERAN LOS UNICOS Y EXCLUSIVOS en el caso de cualquier violación de la garantía.
5. COMO OBTENER SERVICIO DEBIDO A LA GARANTIA. En elcaso de que se crea que cualquier poducto tenga defectos, dentro del período cubierto por la garantía limitada, primero escriba o llame al distribuidor a quien se le compró el producto. El distribuidor le dará las instrucciones adicionales. Si no se puede resolver la situación en forma satisfactoria, escriba a PECO a la dirección a continuación, dando el nombre y la dirección del distribuidor, la fecha y el número de la factura del distribuidor y describa la naturaleza del defecto.
6. LIMITACION DE RESONSABILIDAD. PECO NO SERA RESPONSIBLE POR DAÑOS CONCOMITANTES. ESPECIALES, INDIRECTOS O EMERGENTES que surjan por cualquier defecto del producto comprado. Algunos estados no permiten la exclu-sión o la limitación de los daños concomitantes o emergentes, de modo que la limitación o exclusión anteriores puede que no se apliquen en su caso.

Esta garantía le otorga derechos legales específicos y puede que también tenga otros derechos que varían de Estado a Estado.

Fabricado por PECO, Inc.
4709 SE 18th Avenue - Portland, OR 97202 - USA
P.O. Box 82189 - Portland, OR 97282 - USA

© COPYRIGHT 2002 PECO, Inc. ALL RIGHTS RESERVED

⚠ AVERTISSEMENT

LIRE ATTENTIVEMENT LES INSTRUCTIONS AVANT DE COMMENCER À INSTALLER, UTILISER OU FAIRE LE SERVICE DE CE THERMOSTAT. Négliger d'observer les conseils de sécurité et d'appliquer les instructions peut être la cause de BLESSURES CORPORELLES, MORT ET/OU DOMMAGES MATÉRIELS. Conserver ces instructions pour références ultérieures. Quand il est installé, cet appareil fera partie d'un système indutriel dont les spécifications et les caractéristiques de rendement ne sont pas concues ou contrôlées par PECO. L'application et les codes nationaux et locaux doivent être revus pour assurer que l'installation sera fonctionnelle et sans danger.

APPLICATION APPROPRIÉE

Ce thermostat qui a été soumis aux tests de CSA et de Underwriters Laboratory, Inc, (UL) est en accord avec les conditions requises pour les équipements NEMA 4X et est acceptable pour usage sous les normes National Electrical Code (NEC), Article 547-4, quand utilisé avec les connecteurs étanches appropriés (pas inclus).

INSTALLATION

⚠ AVERTISSEMENT

Pour éviter les chocs électriques ou les dommages matériels, débrancher l'alimentation électrique avant d'installer ou de faire le service.
Pour éviter un incendie et/ou une explosion possible, ne pas utiliser dans un environnement potentiellement inflammable ou explosif.

L'installation doit être faite par un technicien de service qualifié et être en accord avec le National Electrical Code (NEC) et tous les codes nationaux et locaux applicables. Se reporter au diagramme de câblage approprié inclus.

Situer le thermostat (modèles à détection sur place) ou la sonde (modèles à détection éloignée) pour obtenir une détection optimum de la température de l'espace contrôlé. Le fonctionnement du thermostat est affecté par une chaleur ou un froid inhabituel, tel que l'exposition directe au soleil, près d'une fenêtre, un porte ou un mur extérieur.

Tous les raccords et matériaux utilisés pour l'installation doivent être approuvés, adaptés et correcternent installés en fonction de l'application prévue. Pour l'étanchéité, le joint du câble ou raccord de conduit doit être classé UL et être marqué 4X. Le raccord de conduit doit être fixé sur le conduit avant de l'installer dans le boîtier.

Si applicable, les parties éjectables doivent être retirées par impact près du bord intérieur de la partie éjectable qui doit être retirée. IMPORTANT: NE PAS TAPER, ÉBRÉCHER, TORDRE OU UTILISER LA SONDE COMME SUPPORT. CECI CAUSERAIT LA DÉFAILLANCE DU CALIBRAGE ET/OU DU THERMOSTAT.
SONDE COMME SUPPORT. CECI CAUSERAIT LA DÉFAILLANCE DU CALIBRAGE ET/OU DU THERMOSTAT.

⚠ AVERTISSEMENT

Pour éviter la surchauffe ou le feu, utiliser ce contrôle uniquement comme un thermostat de fonctionnement ou de réglage. TOUJOURS UTILISER UN CONTRÔLE OU UNE ALARME DE REDONDANCE si une défaillance du contrôle pourrait causer la surchauffe de l'appareil contrôlé ou pourrait causer un incendie. Si le thermostat est capable d'entrer en cycle directement entre des charges de chauffage et de refroidissement, négliger d'installer un commutateur de transfert de charge résultera en défaillance du thermostat. Ne pas installer, utiliser ou faire fonctionner si l'appareil semble endommagé, si le boîtier est fendu ou cassé, ou si la sonde a été tordue, pilée ou est sale.

Bien que ce thermostat soit scellé, l'eau ou la poussière peuvent y entrer par un câblage mal étanchéifié. Une boucle d'égouttage doit être prévue pour empêcher l'eau ou tout autre liquide d'entrer dans le boîtier du thermostat. La connexion de câble ou de conduit avec le boîtier doit être hermétique à l'eau et à la poussière. Le couvercle doit être solidement fixé pour compresser le joint et créer l'étanchéité. Utiliser uniquement les vis fournies. Ne pas surserrer.

L'élément de sonde maximum peut supporter une température de 20°C (35°F) au-dessus du réglage de la plus haute température. La température maximum pour le boîtier plastique est de 60°C (140°F).

⚠ ATTENTION

Pour usage dans un environnement mouillé ou humide ou si l'étanchéité est requise, négliger d'utiliser des connexions adaptées pour l'étanchéité et une boucle d'égouttage appropriée pourrait permettre la pénétration d'eau dans le boîtier et causer la défaillance du thermostat.

Utiliser uniquement des fils de cuivre, isoler ou placer sous cônes d'isolation tous les conducteurs inutilisés. Utiliser les bornes de mise à la terre prévues pour connexion sur la ligne de prise de terre et le fil de terre de l'équipement.

FONCTIONNEMENT ET VÉRIFICATION

Attendre une heure ou la période de temps nécessaire pour que le systéme et le thermostat se stabilisent sur un fonctionnement normal. Ce thermostat a été calibré à l'usine et il ne nécessite aucun ajustement sur place.

POUR VÉRIFIER LE FONCTIONNEMENT DES SYSTÈMES DE CHAUFFAGE:

1. Débrancher l'alimentation électrique
2. Si applicable, place le sélecteur chaud/froid sur la position "chaud".
3. Ajuster le réglage du thermostat sur un point au moins 5°C (10°F) au-dessous de la température de l'espace contrôlé.
4. Rebrancher l'alimentation életrique.
5. Ajuster lentement la molette du thermostat pour monter le point de réglage. Quand le oint de réglage atteint le température approximative de l'espace contrôlé, l'équipement de chauffage doit se mettre en marche.

POUR VÉRIFIER LE FONCTIONNEMENT DES SYSTÈMES DE REFROIDISSEMENT:

1. Débrancher l'alimentation électrique.
2. Si applicable, placer le sélecteur chaud/froid sur la position "froid".
3. Ajuster le réglage du thermostat sur un point au moins 5°C (10°F) au-dessos de la température de l'espace contrôlé.
4. Rebrancher l'alimentation électrique.
5. Ajuster lentement la molette du thermostat pour descendre le point de réglage. Quand le point de réglage atteint le température approximative de l'espace contrôlé, l'équipement de climatisation doit se mettre en marche.

GARANTIE LIMITÉE

1. COUVERTURE GARANTIE. PECO garantit au premier utilisateur de ses produits, que les produits sont, à la date de l'achat initial, en accord avec les spécifications applicables pour ces productions et seront, sous usage normal, sans défauts de matières premières ou de main d'oeuvre pendant 18 mois à partir de la date de fabrication.
2. DÉSISTEMENT DE GARANTIE D'APTITUDE DU PRODUIT. PECO ne donne aucune garantie à l'acheteur ou à toute autre tierce personne concernant l'adaptabilité de ses prodeits poue une application ou une conception particulière. De nombreuses juridictions ont des codes différents ou des règlements gouvernant l'installation et/ou l'usage des produits de PECO. PECO ne peut pas garantir l'observance de ces règlements, l'acheteur est seul responsable de installation et de l'usage correct et sans danger de ce produit ainsi que de l'observance des codes et règlements applicables.
3. EXCLUSION DE GARANTIES IMPLIQUÉES. Cette garantie est la seule applicable à ce produit, et elle exclue toutes autres garanties, compris toute GARANTIE DE COMMERCIALISATION, toute garantie d'adaptabilité à un usage particulier, et toutes garanties impliquées au cours de transactions commerciales, sauf là où le produit acheté est soumis aux lois de garantie de produit aux consommateurs, dans tous les cas TOUTES GARANTIES IMPLIQUÉES APPLICABLES SONT LIMITÉES À 18 MOIS, ou à une période Plus courte si permise ou requise par la loi applicable.
Certaines juridictions ne permettent de limitations de la durée de la garantie, donc les limitations ci-dessus peuvent ne pas s'appliquer dans le cas présent.
4. REMÈDES CONTRE LA NON-CONFORMITÉ. Si le produit acheté n'est pas conforme à la garantie applicable, PECO fournira, à son choix et en accord avec le processus de la section suivante, l'un des remèdes suivants : (1) réparation du produit non-conforme. (2) remplacement par un produit conforme. (3) remboursement du prix d'achat d'origine. CES REMÈDES SERONT LES REMÈDES SEULS ET EXCLUSIFS pour toute infraction à la garantie.
5. POUR OBTENIR LE SERVICE SOUS GARANTIE. Pour tout produit considéré défectueux au cours de la période couverte par la garantie, commencer par écrire ou appeler le concessionnaire chez qui le produit a été acheté. Le concessionnaire doit donner des directions additionnelles. Si un accord satisfaisant ne peut pas être obtenu, écrire à PECO à l'adresse ci-dessous, en donnant le nom et l'adresse du concessionnaire, la date et le numéro de la facture du concessionnaire et en décrivant la nature du défaut.
6. LIMITATION DE RESPONSABILITÉ. PECO NE SERA PAS RESPONSABLE DE TOUS DOMMAGES IMPRÉVUS, SPÉCIAUX, INDIRECTS OU FORTUITS résultant d'un produit acheté défectuex. Certaines juridictions ne permettent pas l'exclusion ou la limitation des dommages indirects ou fortuits, donc la limitation ou exclusion ci-dessus peut ne pas s'appliquer dans le cas présent.

Cette garantie donne des droits légaux spécifiques, et il peut y avoir d'autres droits variants de juridiction à juridiction.

Fabriqué par PECO, Inc.
4709 SE 18th Avenue - Portland, OR 97202 - USA
P.O. Box 82189 - Portland, OR 97282 - USA

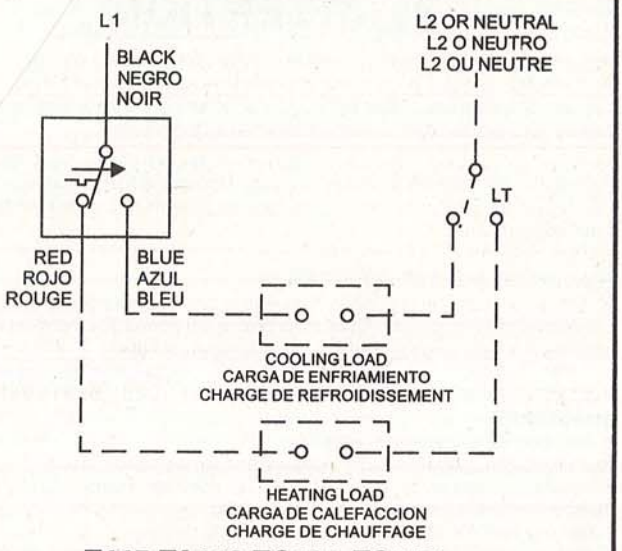

T115 TA119 TC109 TC119

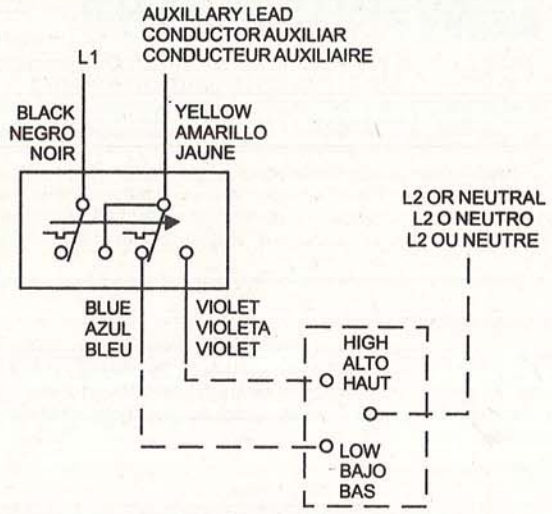

TJ109 MODELS

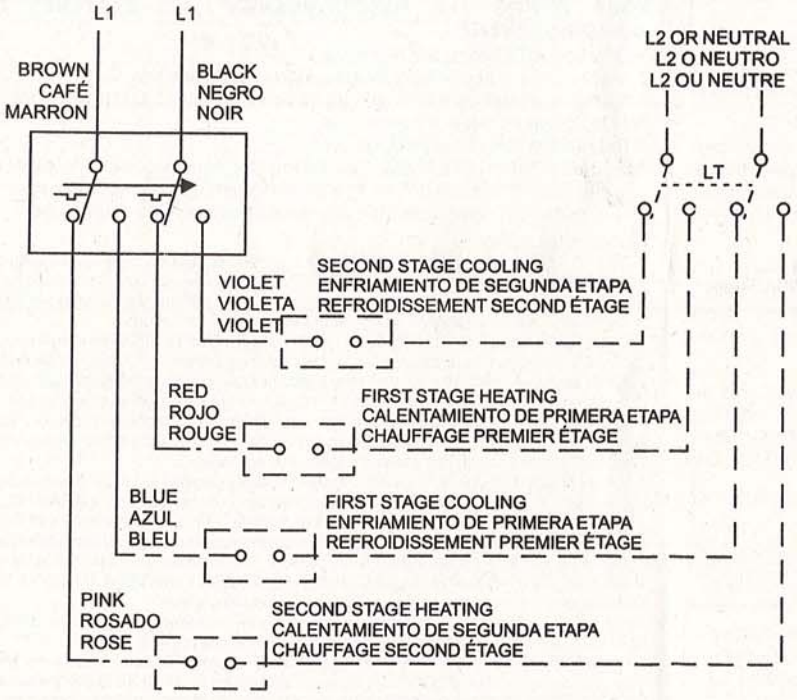

TH109

LEGEND
LEYENDA
LÉGENDE

THERMOSTAT WIRING
CABLEADO DEL TERMOSTATO
CABLAGE DU THERMOSTAT

FIELD WIRING
CABLEADO EN EL TERRENO
CABLAGE SUR PLACE

INDICATES SEQUENCE ON TEMPERATURE RISE
INDICA LA SECUENCIA CUANDO LA TEMPERATURA SE
INDIQUE LA SE SÉQUENCE DE LA MONTÉE DE TEMPÉRATURE

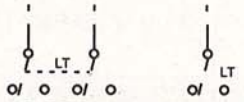

LOAD TRANSFER SWITCH
INTERRUPTOR DE TRANSFERENCIA DE CARGA
INTERRUPTEUR DE TRANDFERT DE CHARGE

⚠ WARNING
ADVERTENCIA
AVERTISSEMENT

-TO INSURE WATER TIGHTNESS, THE ENCLOSED GASKET MUST BE INSTALLED UNDER THE WIRING CAP.

-PARA ASEGURAR LA ESTANQUIDAD AL AGUA, LA JUNTA SUMINISTRADA DEBERÁ INSTALARSE DEBAJO DEL CASQUETE DEL ALAMBRADO.

-POUR ASSURER L'ÉTANCHÉITÉ À L'EAU, LE JOINT STATIQUE (FOURNI) DOIT ÊTRE INSTALLÉ SOUS LE CULOT POUR CÂBLAGE.

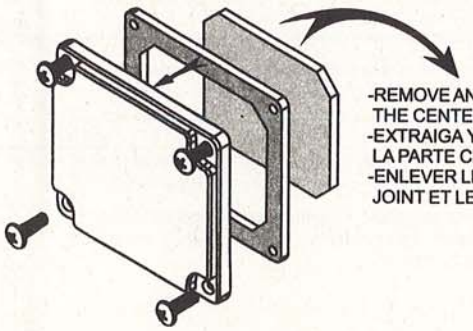

-REMOVE AND DISCARD THE CENTER OF THE GASKET
-EXTRAIGA Y DESCARTE LA PARTE CENTRAL DE LA JUNTA
-ENLEVER LE CENTRE DU JOINT ET LE METTRE AU REBUT

© COPYRIGHT 2002 PECO, Inc. ALL RIGHTS RESERVED

ifm electronic

VT-701/ 702 - Transmitter, Pressure/ Vacuum, IFM efector, PG2409 Scale -14.5- 14.5 PSI 4-20mA

CE

Operating instructions
Electronic manometer

efectorsoo®

PG24xx

UK

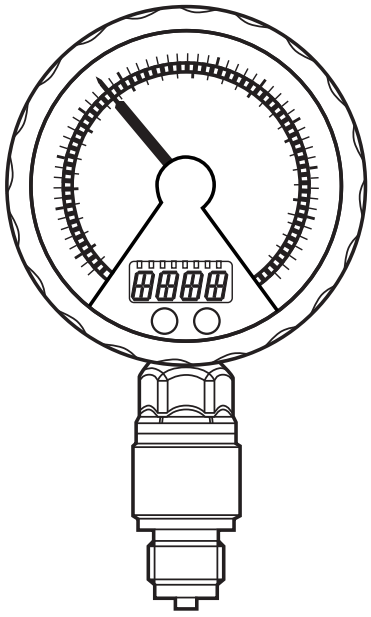

706086/00 08/2011

E-1375

Contents

1 Preliminary note 3
1.1 Symbols used 3

2 Safety instructions 3

3 Functions and features 4
3.1 Applications 4

4 Function 5
4.1 Processing of the measured signals 5
4.2 Pressure monitoring / switching function 6
4.3 Pressure monitoring / analogue function 7
4.4 Customer-specific calibration 8

5 Installation 9

6 Electrical connection 10

7 Operating and display elements 11

8 Menu 12
8.1 Menu structure: main menu 12
8.2 Explanation of the main menu 13
8.3 Menu structure: level 2 (extended functions) 14
8.4 Explanation of the menu level 2 15

9 Parameter setting 16
9.1 General parameter setting 16
9.2 Configuration of the digital display (optional) 18
9.3 Set output signals 19
9.3.1 Set output functions 19
9.3.2 Set switching limits 19
9.3.3 Scale analogue value for OUT2 19
9.4 User settings (optional) 20
9.4.1 Carry out zero point calibration 20
9.4.2 Set delay time for OUT1 20
9.4.3 Set switching logic for OUT1 20
9.4.4 Set damping for the switching signal 20
9.4.5 Set damping for the analogue signal 21
9.4.6 Calibrate curve of measured values 21

9.5 Service functions 22
9.5.1 Read min/max values for system pressure 22
9.5.2 Reset all parameters to factory setting 22
10 Operation 22
10.1 Read set parameters 22
10.2 Error indications 22
11 Scale drawing 23
12 Technical data 24
13 Setting ranges 25
14 Factory setting 27

1 Preliminary note

1.1 Symbols used

▶ Instruction

> Reaction, result

[…] Designation of pushbuttons, buttons or indications

→ Cross-reference

Important note
Non-compliance can result in malfunctions or interference.

Information
Supplementary note.

2 Safety instructions

- Please read this document prior to set-up of the unit. Ensure that the product is suitable for your application without any restrictions.
- If the operating instructions or the technical data are not adhered to, personal injury and/or damage to property can occur.
- Check the compatibility of the product materials (→ 12 Technical data) with the media to be measured in all applications.
- Use in gases at pressures > 25 bar only after contacting the manufacturer ifm.

- High-pressure units (250 bar, 400 bar) are supplied with an integrated damping device to comply with the regulations for UL approval and to avoid any risk of injury in case of bursting when bursting pressure is exceeded.

  Any manipulation of the damping device is not permissible.
  When the damping device is removed, there is no damping function any more. ATTENTION: risk of injury!
  For units with cULus approval this approval becomes invalid when the damping device is removed.

For the scope of validity cULus:
The Sensor shall be connected only by using any R/C (CYJV2) cord, having suitable ratings.

The device shall be supplied from an isolating transformer having a secondary Listed fuse rated either
a) max 5 amps for voltages 0~20 Vrms (0~28.3 Vp) or
b) 100/Vp for voltages of 20~30 Vrms (28.3~42.4 Vp).

3 Functions and features

The unit monitors the system pressure in a plant.

3.1 Applications

Type of pressure: relative pressure

Order no.	Measuring range (in brackets: extended display range)		Permissible overpressure		Bursting pressure	
	bar	PSI	bar	PSI	bar	PSI
PG2409	-1...1 (1.6)	-14.52...14.52 (23.22)	10	145	30	435
PG2450	0...400 (600)	0...5800 (8700)	800	11600	1200	17400
PG2451	0...250 (400)	0...3625 (5800)	600	8700	1000	14500
PG2452	0...100 (160)	0...1449 (2322)	300	4350	700	9400
PG2453	-1...25 (40)	-14.5...362.5 (580.0)	100	1450	350	5070
PG2454	-1...10 (16)	-14.4...145 (232)	50	725	150	2175
PG2455	-1...4 (6.4)	-14.5...58 (92.8)	30	435	100	1450
PG2456	-0.125...2.5 (4)	-1.8...36.25 (58.00)	20	290	50	725
PG2457	-0.05...1 (1.6)	-0.72...14.5 (23.20)	10	145	30	435

Order no.	Measuring range (in brackets: extended display range)		Permissible overpressure		Bursting pressure	
	mbar	inH2O	bar	inH2O	bar	inH2O
PG2458	-12.5...250 (400)	-5.0..100.4 (160.6)	10	4015	30	12044
PG2489	-5...100 (160)	-2.00...40.16 (64.24)	4	1606	30	12044

Avoid static and dynamic overpressure exceeding the given overload pressure by taking appropriate measures.
The indicated bursting pressure must not be exceeded.
Even if the bursting pressure is exceeded only for a short time, the unit may be destroyed. ATTENTION: risk of injury!
Use in gases at pressures > 25 bar only after contacting the manufacturer ifm.

4 Function

4.1 Processing of the measured signals

- The unit generates 2 output signals according to the parameter settings.

OUT1	• Switching signal for system pressure limit value.
OUT2	• Analogue signal (4...20 mA, 20...4 mA).

- The unit displays the current system pressure.

Analogue display: circular scale with pointer.
Digital display (alphanumeric display, 4 digits).

- In addition, an LED ring with one of the following display options is available:

Display of set point and reset point.
Trend display (rising pressure / falling pressure).
Lag indicator function for maximum value or minimum value.
Display of pulsating signals and pressure peaks.

4.2 Pressure monitoring / switching function

OUT1 changes its switching state if it is above or below the set switching limits (SP1, rP1). The following switching functions can be selected:

- Hysteresis function / normally open: [OU1] = [Hno] (→ fig. 1).
- Hysteresis function / normally closed: [OU1] = [Hnc] (→ fig. 1).
  First the set point (SP1) is set, then the reset point (rP1) with the requested difference.
- Window function / normally open: [OU1] = [Fno] (→ fig. 2).
- Window function / normally closed: [OU1] = [Fnc] (→ fig. 2).
  The width of the window can be set by means of the difference between SP1 and rP1. SP1 = upper value, rP1 = lower value.

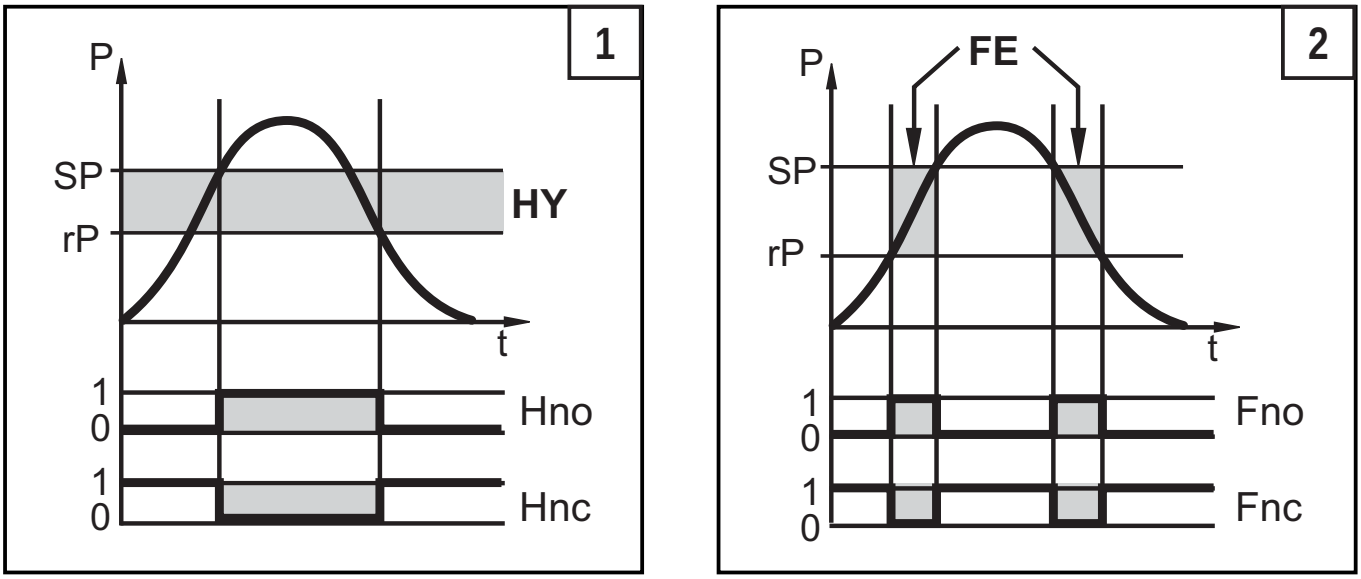

P = system pressure; HY = hysteresis; FE = window

4.3 Pressure monitoring / analogue function

The analogue output can be configured.

- [OU2] defines whether the set measuring range is provided as 4...20 mA ([OU2] = [I]) or as 20...4 mA ([OU2] = [InEG]).

Scaling can be set by means of the teaching process or by entering a value for the ASP and AEP parameters.

- Teaching the analogue start point [tASP] or setting the parameter [ASP] defines at which measured value the analogue signal is 4 mA (20 mA at [InEG]).
- Teaching the analogue end point [tAEP] or setting the parameter [AEP] defines at which measured value the output signal is 20 mA (4 mA at [InEG]).

UK

Minimum distance between [ASP] and [AEP] = 25 % of the final value of the measuring range.

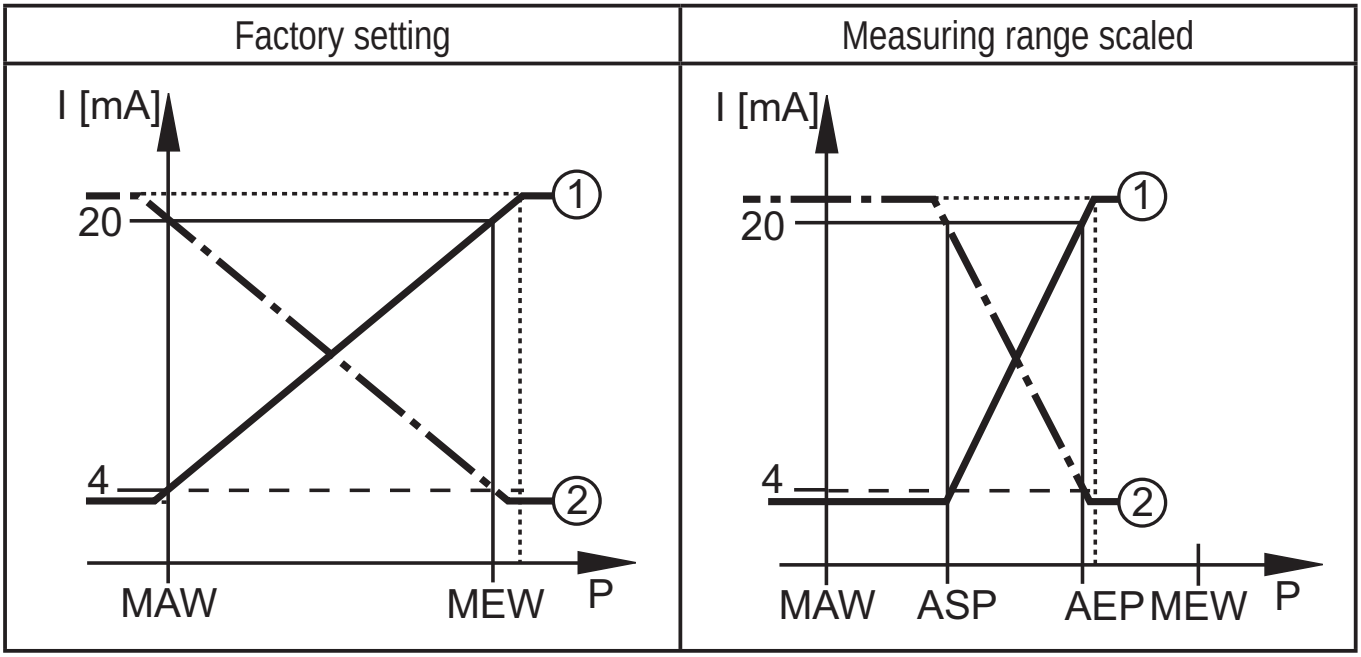

P = system pressure , MAW = initial value of the measuring range, MEW = final value of the measuring range

①: [OU2] = [I]; ②: [OU2] = [InEG]

In the set measuring range the output signal is between 4 and 20 mA ([OU2] = [I]) or between 20 and 4 mA ([OU2] = [InEG]).

It is also indicated:

- System pressure above the measuring range:
  - Output signal 20 to 20.5 mA at [OU2] = [I].
  - Output signal 4 to 3.8 mA at [OU2] = [InEG].
- System pressure below the measuring range:
  - Output signal 4 to 3.8 mA at [OU2] = [I].
  - Output signal 20 to 20.5 mA at [OU2] = [InEG].

4.4 Customer-specific calibration

The customer-specific calibration changes the curve of measured values compared to the real measured values (shifting / change of the gradient; → 9.4.6 [CAL]).

- Two calibration points can be defined (CP1, CP2). The two points are independent of each other. They must be within the measuring range and not in the extended display range.
- The zero point calibration [COF] influences the calibration of the curve of measured values. Recommendation: set [COF] to 0 (→ 9.4.1 [COF]), then calibrate the curve of measured values.

After a change the calibration can be reset to factory setting (→ 9.5.2 [rES]).

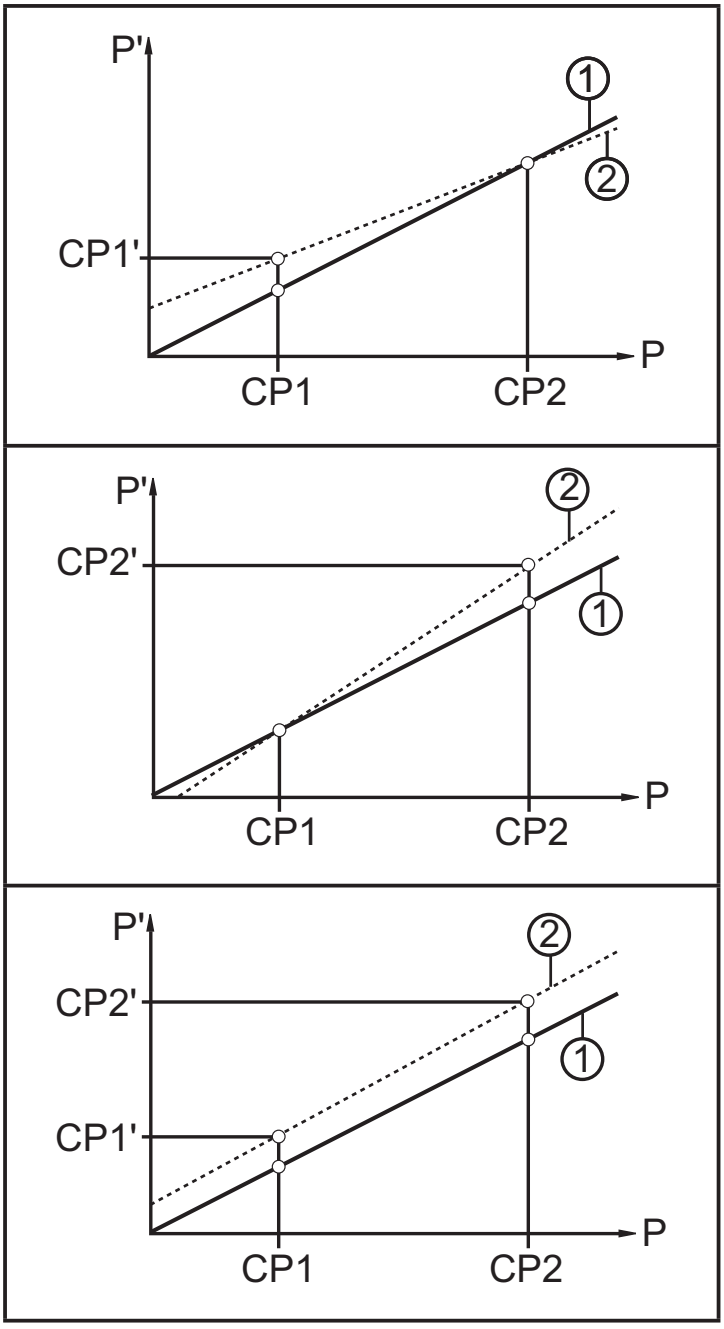

- P = measured pressure;
  P‘ = modified measured value
- CP1 = calibration point 1;
  CP1‘ = modified measured value for CP1
- CP2 = calibration point 2;
  CP2‘ = modified measured value for CP2
- 1 = curve of measured values at factory setting
- 2 = curve of measured values after calibration

5 Installation

Before installing and removing the unit: make sure that no pressure is applied to the system. Note: If 0% is displayed and no pointer is visible, this does not mean that no pressure is applied to the system !

We recommend horizontal installation for high medium temperatures.

The unit can be fixed to different process connections. Options are as follows:

1	**Installation with seals to DIN EN 837-1**
	▶ Insert the unit and the seal into the process connection with cylindrical pipe thread G½ and tighten. All seals to DIN EN 837-1 can be used if they are suitable for process connections with cylindrical pipe thread, e.g. flat seals or double-edge sealing rings.
2	**Installation with sealing tape**
	▶ Insert the unit and the sealing tape into the process connection with G½ internal thread (e.g. welding adapter) and tighten.
3	**Installation at flange G½ (based on DIN 3852-11)**
	The sealing ring on the sensor is used as process seal. The upper sealing area on the process connection must be flush with the tapped hole and have a surface characteristic of min. Rz 6.3. ▶ Grease the sensor thread with a suitable paste. ▶ Insert the unit into the process connection. ▶ Tighten it using a spanner. Tightening torque: 35 Nm.

After installation the analogue display can be rotated / adapted to the installation position (to do so wear protective gloves).

6 Electrical connection

The unit must be connected by a qualified electrician.
The national and international regulations for the installation of electrical equipment must be adhered to.
Voltage supply according to EN 50178, SELV, PELV.

▶ Disconnect power.
▶ Connect the unit as follows:

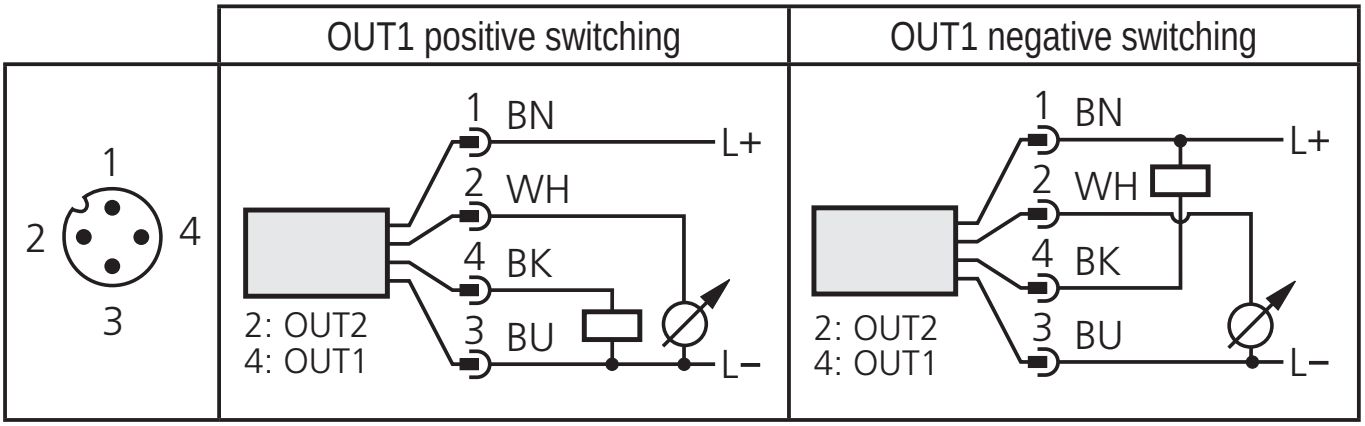

Pin 1	Ub+
Pin 3	Ub-
Pin 4 (OUT1)	• Binary switching output pressure monitoring
Pin 2 (OUT2)	• Analogue output for system pressure

Core colours of ifm sockets:
1 = BN (brown), 2 = WH (white), 3 = BU (blue), 4 = BK (black)

7 Operating and display elements

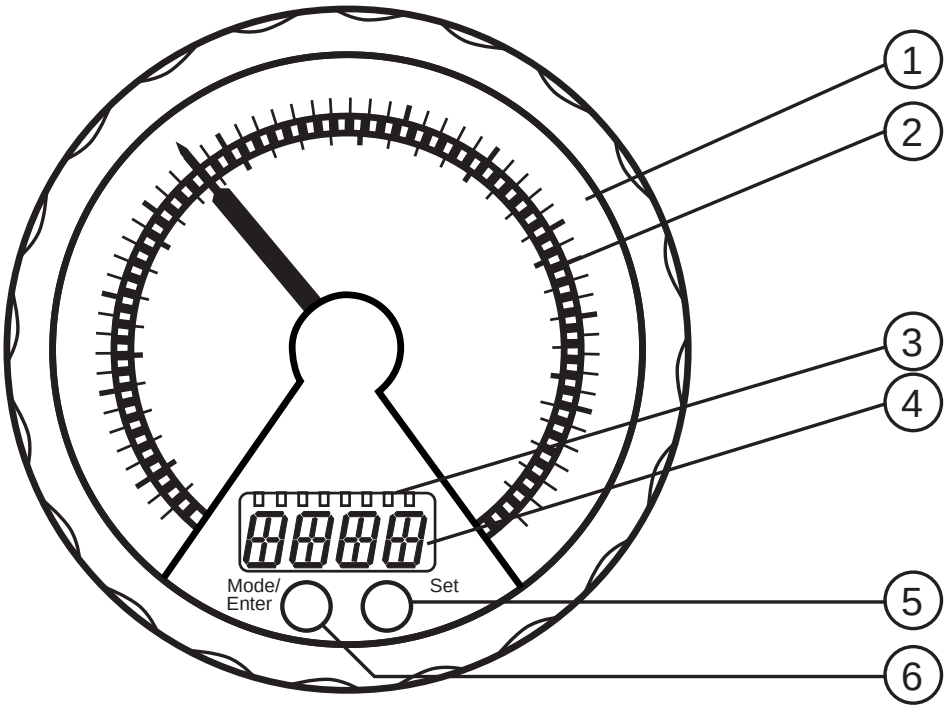

UK

1: Analogue display

- Display of the current system pressure in bar and PSI or mbar and inH2O.

2: LED ring

According to the setting of parameter [LED] (→ 9.2):
- Display of set point and reset point.
- Lag indicator function for maximum value or minimum value.
- Display of pulsating signals and pressure peaks.
- Trend display: rising pressure or falling pressure.

3: Indicator LEDs

- LED 1 = system pressure of the digital display in bar.
- LED 2 = system pressure of the digital display in mbar.
- LED 3 = system pressure of the digital display in PSI.
- LED 4 = system pressure of the digital display in inH2O.
- LED 6 = system pressure in % of the scaling (range ASP to AEP) or COF value in %.
- LEDs 5, 7 = not used.
- LED 8 = switching status OUT1 (lights if output 1 is switched)

4: Alphanumeric display, 4 digits

- Display of the current system pressure.
- Display of the parameters and parameter values.

5: Touch button Set*

- Setting of the parameter values (continuously by touching permanently; step by step by touching briefly several times).

6: Touch button Mode/Enter*
- Selection of the parameters and acknowledgement of the parameter values.

* The two touch buttons are activated simply by touching / deactivated by releasing the touch button.
The touch button must be completely covered to be activated.
Slow covering (e.g. liquid flows over the display) does not activate the touch button.

8 Menu

8.1 Menu structure: main menu

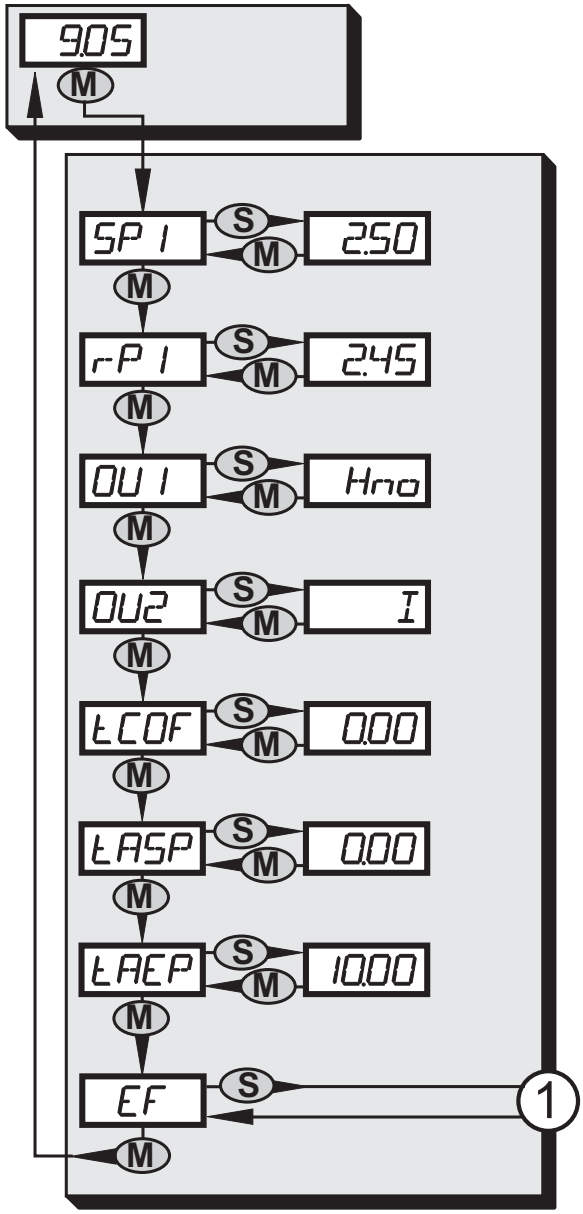

1: Change to menu level 2 (extended functions)

8.2 Explanation of the main menu

SP1/rP1	Upper / lower limit value for system pressure at which OUT1 switches.
OU1	Output function for OUT1: • Switching signal for the pressure limit values: hysteresis function [H ..] or window function [F ..], either normally open [. no] or normally closed [. nc].
OU2	Output function for OUT2: • Analogue signal for the current system pressure: 4...20 mA [I], 20...4 mA [InEG].
tCOF	Teach zero-point calibration.
tASP	Teach analogue start point for system pressure: set measured value at which 4 mA is provided (20 mA if [OU2] = [InEG]).
tAEP	Teach analogue end point for system pressure: set measured value at which 20 mA is provided (4 mA if [OU2] = [InEG]).
EF	Extended functions / opening of menu level 2.

8.3 Menu structure: level 2 (extended functions)

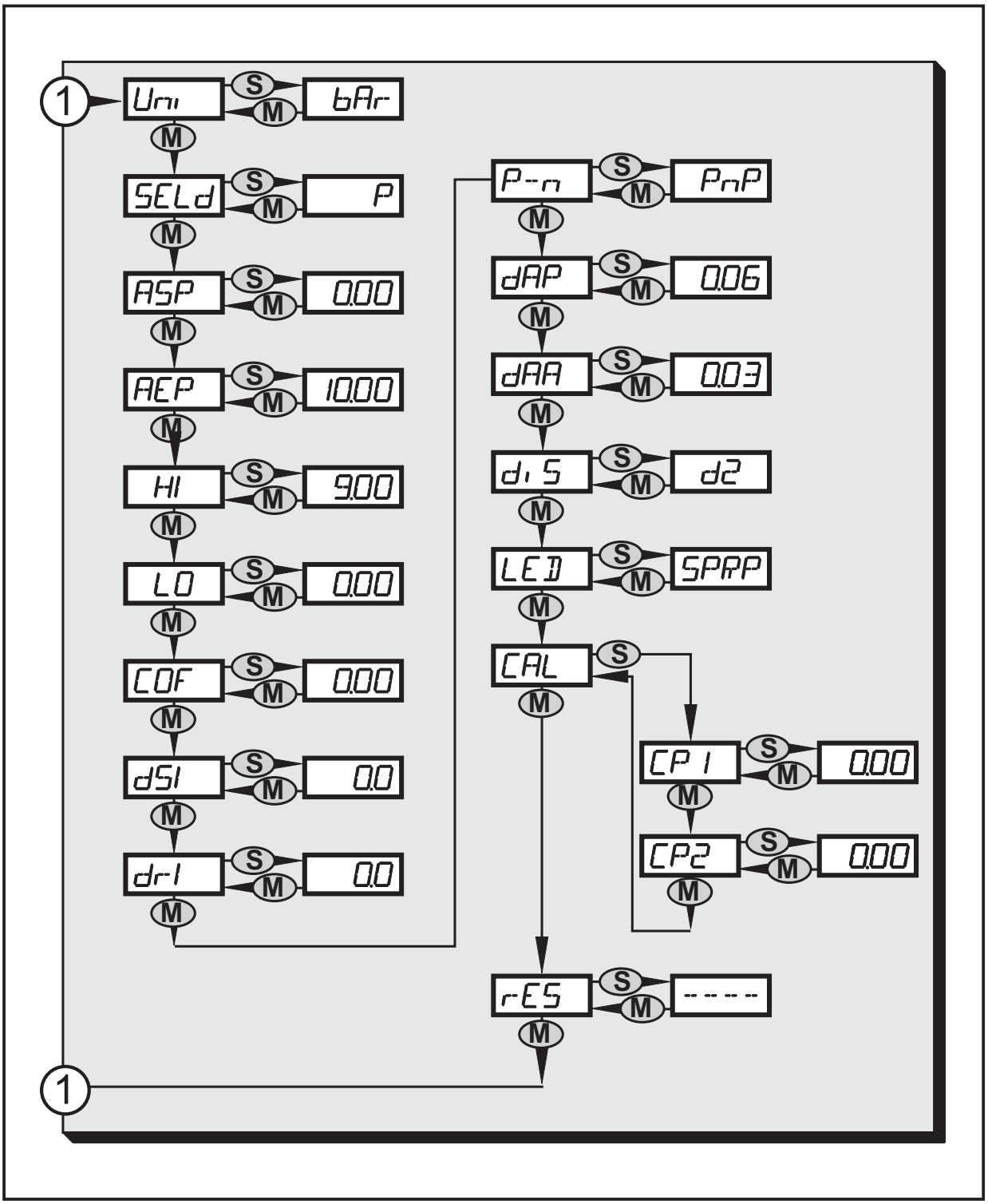

1: Change to the main menu

8.4 Explanation of the menu level 2

Uni	Standard unit of measurement for system pressure (bar or PSI).
SELd	Display mode: • Pressure in the unit set in [Uni]. • Pressure in % of the set scaling of the analogue output.
ASP	Analogue start point for system pressure: measured value at which 4 mA is provided (20 mA if [OU2] = [InEG]).
AEP	Analogue end point for system pressure: measured value at which 20 mA is provided (4 mA if [OU2] = [InEG]).
HI	Maximum value memory for system pressure.
LO	Minimum value memory for system pressure.
COF	Zero-point calibration.
dS1	Switch-on delay for OUT1.
dr1	Switch-off delay for OUT1.
P-n	Switching logic for OUT1: pnp or npn.
dAP	Damping for switching outputs and display.
dAA	Damping for analogue output (OUT2).
diS	Update rate and orientation of the display.
LED	Setting for the LED ring.
CAL	Calibration function (setting the curve of measured values).
CP1	Calibration point 1
CP2	Calibration point 2
rES	Restore factory settings.

9 Parameter setting

During parameter setting the unit remains in the operating mode. It continues its monitoring function with the existing parameters until the parameter setting has been completed.

Exceptions: changes to the parameters COF (→ 9.4.1), CP1 and CP2 (→ 9.4.6) take effect immediately.

9.1 General parameter setting

3 steps must be taken for each parameter setting:

1	**Select parameter** ▶ Touch [Mode/Enter] until the requested parameter is displayed.	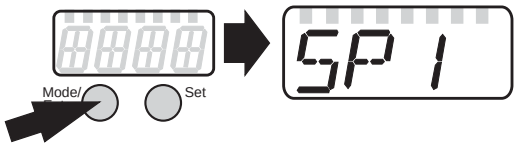
2	**Set parameter value** ▶ Touch [Set] and keep it touched. > Current setting value of the parameter flashes for 5 s. > After 5 s: setting value is changed: step by step by touching briefly several times or continuously by touching permanently.	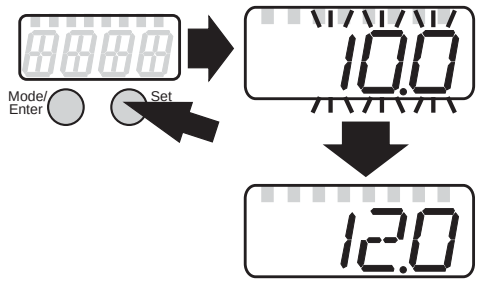
	Numerical values are incremented continuously. To reduce the value: let the display move to the maximum setting value. Then the cycle starts again at the minimum setting value.	
3	**Acknowledge parameter value** ▶ Touch [Mode/Enter] briefly. > The parameter is displayed again. The new setting value is saved.	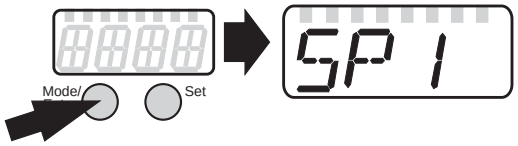
Set other parameters ▶ Start again with step 1.		
Finish parameter setting ▶ Touch [Mode/Enter] several times until the current measured value is displayed or wait for 15 s. > The unit returns to the operating mode.		

- Timeout:

  If no touch button is activated for 15 s during parameter setting, the unit returns to the operating mode with unchanged values.

- Change from menu level 1 to menu level 2:

▶ Touch [Mode/Enter] until [EF] is displayed.	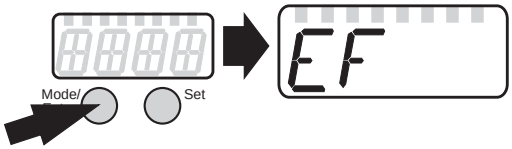
▶ Touch [Set] briefly. > The first parameter of the submenu is displayed (here: [Uni]). If the menu level 2 is protected by an access code, "Cod1" flashes in the display. ▶ Touch [Set] and keep it touched until the valid code no. appears. ▶ Touch [Mode/Enter] briefly. On delivery by ifm electronic: no access restriction.	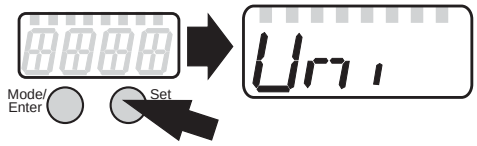

- Locking / unlocking

  The unit can be locked electronically to prevent an unintentional operation.

▶ Make sure that the unit is in the normal operating mode. ▶ Touch [Set], ▶ additionally touch [Mode/Enter] and keep both buttons touched for 10 s. > The LED for the current unit of measurement flashes, the current system pressure continues to be displayed. After 10 s the display goes out for approx. 1 s. ▶ Release [Mode/Enter] and [Set] again. Both buttons must be released within 4 s. If this does not happen, the unit remains unlocked. > [Loc] is displayed, the unit is locked. . During operation the indicator LED for the display unit (→ chapter 7) is flashing if you try to open the menu.
For unlocking: ▶ Make sure that the unit is in the normal operating mode. ▶ TTouch [Set], ▶ additionally touch [Mode/Enter] and keep both buttons touched for 10 s. > The LED for the current unit of measurement flashes, the current system pressure continues to be displayed. After 10 s the display goes out for approx. 1 s. ▶ Release [Mode/Enter] and [Set] again. Both buttons must be released within 4 s. If this does not happen, the unit remains unlocked. > [uLoc] is displayed, the unit is unlocked.

On delivery: unlocked.

UK

9.2 Configuration of the digital display (optional)

▶ Select [Uni] and set the unit of measurement: - [bAr] / [mbAr]. - [PSI] / [inHO].	
▶ Select [SELd] and set type of indication: - [P]: system pressure in the unit set in Uni. - [P%]: system pressure in % of the set scaling of the analogue output; the following applies: 0 % = ASP value / 100 % = AEP value. Note: display “0 %” does not mean that no pressure is applied to the system.	
▶ Select [diS] and set the update rate of the display: - [d1]: update of the measured values every 50 ms. - [d2]: update of the measured values every 200 ms. - [d3]: update of the measured values every 600 ms. - [OFF] = The measured value display is deactivated in the Run mode. Touching one of the buttons indicates the current measured value for 15 s. Touching the [Mode/Enter] button again activates the display mode. The indicator LEDs remain active even if the display is deactivated.	
▶ Select [LED] and set the display function for the digital display and LED ring: - [SPRP]: One LED on the LED ring indicates the set point and a second LED the reset point. - [HInd]: 2 adjacent LEDs on the LED ring mark the lag indicator for maximum value ([HInd], high indication). - [LInd]: 2 adjacent LEDs on the LED ring mark the lag indicator for minimum value ([LInd], low indication). To reset: ▶ Touch [Set] for 1 second. > The two LEDs jump to the current position of the pointer. - [Ph]: Display of pulsating signals and pressure peaks: - In case of quick pressure changes (quickly pulsating signals) the digital display and LED ring indicate the minimum value and the maximum value. - In case of one-time short pressure peaks the digital display and LED ring show the indication for a longer time. - [Pdir]: The LED ring indicates the trend of the pressure changes (5 LEDs below the pointer for rising pressure; 5 LEDs above the pointer for falling pressure). A damping set with dAP or dAA also has an effect on this display.	

9.3 Set output signals

9.3.1 Set output functions

▶ Select [OU1] and set the switching function: - [Hno] = hysteresis function/NO. - [Hnc] = hysteresis function/NC. - [Fno] = window function/NO. - [Fnc] = window function/NC.	
▶ Select [OU2] and set the analogue function: - [I] = current signal proportional to pressure 4…20 mA. - [InEG] = current signal proportional to pressure 20…4 mA.	

UK

9.3.2 Set switching limits

▶ Select [SP1] and set the value at which the output switches.	
▶ Select [rP1] and set the value at which OUT1 switches off. rP1 is always smaller than SP1. The unit only accepts values which are lower than SP1.	

9.3.3 Scale analogue value for OUT2

▶ Set the minimum pressure requested in the system. ▶ Touch [Mode/Enter] until [tASP] appears. ▶ Touch [Set] and keep it touched. > Current setting value flashes. ▶ Release [Set] when the display stops flashing. > New setting value is displayed. ▶ Touch [Mode/Enter] briefly. > The current system pressure is defined as start value for the analogue signal.	
▶ Set the maximum pressure requested in the system. ▶ Touch [Mode/Enter] until [tAEP] appears. ▶ Touch [Set] and keep it touched. > Current setting value flashes. ▶ Release [Set] when the display stops flashing. > New setting value is displayed. ▶ Touch [Mode/Enter] briefly. > The current system pressure is defined as end value for the analogue signal.	
ASP / AEP can only be set automatically within defined limits (→ 12.1 Setting ranges). If automatic setting is carried out at an invalid pressure value, [UL] or [OL] is displayed. After acknowledgement by [Mode/Enter] [Err] flashes, the ASP value / AEP value is not changed.	

As an alternative: ▶ Select [ASP] and set the measured value at which 4 mA is provided (20 mA at [OU2] = [InEG]). ▶ Select [AEP] and set the measured value at which 20 mA is provided (4 mA at [OU2] = [InEG]). Minimum distance between ASP and AEP = 25 % of the final value of the measuring range (turn-down 1:4).	

9.4 User settings (optional)

9.4.1 Carry out zero point calibration

▶ Select [COF] and set a value between -5 % and 5 % of the final value of the measuring range. The internal measured value "0" is shifted by this value.	
As an alternative: automatic adjustment of the offset in the range 0 bar ± 5 %. ▶ Make sure that no pressure is applied to the system. ▶ Touch [Mode/Enter] until [tCOF] appears. ▶ Touch [Set] and keep it touched. > The current offset value (in %) flashes briefly. > The current system pressure is displayed. ▶ Release [Set]. ▶ Touch [Mode/Enter] briefly (= to confirm the new offset value).	

9.4.2 Set delay time for OUT1

[dS1] = switch-on delay / [dr1] = switch-off delay. ▶ Select [dS1] or [dr1] and set a value between 0.1 and 50 s (at 0.0 the delay time is not active).	

9.4.3 Set switching logic for OUT1

▶ Select [P-n] and set [PnP] or [nPn].	

9.4.4 Set damping for the switching signal

▶ Select [dAP] and set a value between 0.01 and 30 s. dAP value = response time between pressure change and change of the switching status in seconds. [dAP] influences the switching frequency: f_{max} = 1 ÷ 2dAP. [dAP] also has an effect on the display.	

9.4.5 Set damping for the analogue signal

▶ Select [dAA] and set a value between 0.01 and 30 s. dAA value = response time between pressure change and change of the analogue signal in seconds.	

9.4.6 Calibrate curve of measured values

If the unit is to adopt the settings for the calibration points, the following conditions must be adhered to:

- CP1 and CP2 must be within the measuring range (i.e. between ASP and AEP).
- CP1 and CP2 must not be in the extended display range.
- Minimum distance between the calibration points CP1 and CP2 = 5 % of the final value of the measuring range.
- Maximum correction value = ± 2 % of the final value of the measuring range.

UK

▶ Set a defined reference pressure between ASP and AEP in the system. ▶ Select [CAL]. ▶ Touch [Set] briefly. > [CP1] is displayed. ▶ Touch [Set] for 5 s. > The pressure measured by the unit is displayed. ▶ Touch [Set] until the set reference pressure is indicated (measured pressure = reference pressure) or the corresponding analogue signal is provided to OUT2. ▶ Touch [Mode/Enter] briefly. > [CP1] is displayed. ▶ Touch [Mode/Enter] briefly. > [CP2] is displayed. Continue with a) or b).	
a) Finish calibration: ▶ Touch [Mode/Enter] briefly. > [CAL] is displayed. b) Change a 2nd point on the curve of measured values: ▶ Set a second defined reference pressure in the system. ▶ Touch [Set] for 5 s. > The pressure measured by the unit is displayed. ▶ Touch [Set] until the set reference pressure is indicated (measured pressure = reference pressure) or the corresponding analogue signal is provided to OUT2. ▶ Touch [Mode/Enter] briefly. > [CP2] is displayed. ▶ Touch [Mode/Enter] briefly. > [CAL] is displayed, the process is finished.	

9.5 Service functions

9.5.1 Read min/max values for system pressure

▶ Select [HI] or [LO] and touch [Set] briefly. [HI] = maximum value, [LO] = minimum value. Delete memory: ▶ Select [HI] or [LO]. ▶ Touch [Set] and keep it touched until [----] is displayed. ▶ Touch [Mode/Enter] briefly.	

9.5.2 Reset all parameters to factory setting

▶ Select [rES]. ▶ Touch [Set] and keep it touched until [----] is displayed. ▶ Touch [Mode/Enter] briefly. It is recommended to take down your own settings in the table before carrying out a reset (→13 Factory setting).	

10 Operation

After power on, the unit is in the Run mode (= normal operating mode). It carries out its measurement and evaluation functions and provides output signals according to the set parameters.

Operating indicators → 7 Operating and display elements.

Reset the lag indicator (if [LED] = [HInd] or [LInd]):

▶ Touch [Set] for 1 second.

> The two lag indicator LEDs jump to the current position of the pointer.

10.1 Read set parameters

▶ Touch [Mode/Enter] until the requested parameter is displayed.

▶ Touch [Set] briefly.

> The unit displays the corresponding parameter value for about 15 s. After another 15 s it returns to the Run mode.

10.2 Error indications

[OL]	Overload pressure (measuring range exceeded).
[UL]	Underload pressure (below measuring range).
[SC1]	Short circuit in OUT1. The output is switched off as long as the short circuit persists.
[Err]	Flashing: internal error, invalid entry.

The messages SC1 and Err are displayed even if the display is switched off.

11 Scale drawing

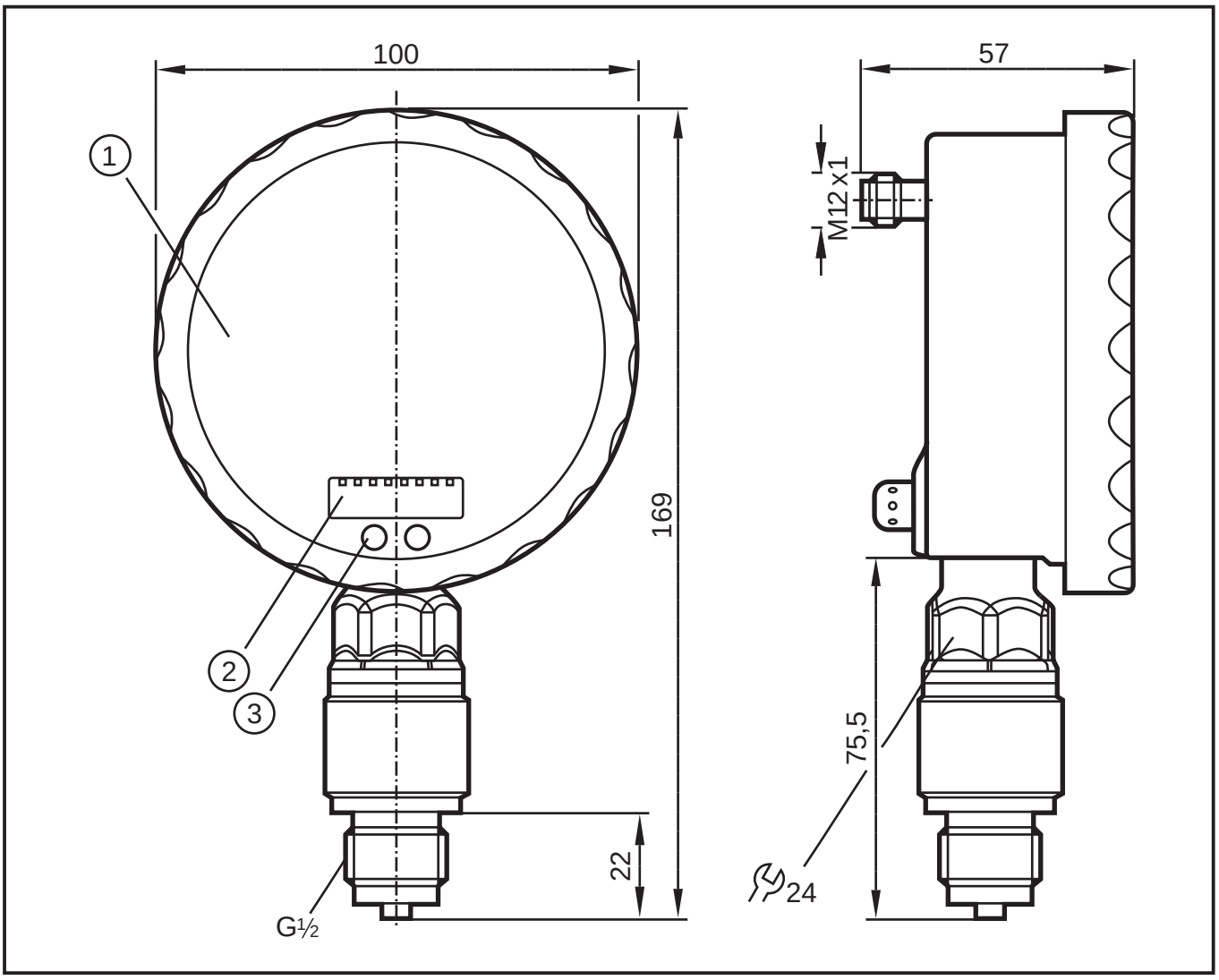

Dimensions in mm
1: analogue display
2: digital display
3: touch button (programming button)

12 Technical data

Operating voltage [V] ..... 18...32 DC
Current consumption [mA] ..... < 70 (24 V)
Current rating [mA] 250
Short-circuit protection; reverse polarity protection / overload protection, integrated watchdog
Voltage drop [V] ..... < 2
Power-on delay time [s] 6
Min. response time switching output [ms] 9
Switching frequency [Hz] 75
Analogue output ..... 4...20 mA / 20...4 mA
Max. load [Ω] ..... (Ub - 10) x 50
Step response time analogue output [ms] 28

Accuracy / deviations (in % of the span)[1)]

	PG2409 PG2452 ... PG2458	PG2450 PG2451 PG2489
Switch point accuracy	< ± 0.5	< ± 0.6
Switch point accuracy in the extended display range	< ± 1.5	< ± 1.5
Characteristics deviation	< ± 0.25 (BFSL) < ± 0.5 (LS)	< ± 0.35 (BFSL) < ± 0.6 (LS)
Hysteresis	< 0.25	< 0.5
Repeatability (in case of temperature fluctuations < 10 K)	< ± 0.1	< ± 0.1
Long-term stability (in % of the span / 6 months)	< ± 0.1	< ± 0.1

Temperature coefficients (TEMPCO) in the compensated temperature range 0 ...70°C (in % of the span per 10 K)

	PG2409 PG2452 ... PG2458	PG2450 PG2451 PG2489
Greatest TEMPCO of the zero point	< ± 0.2	< ± 0.3
Greatest TEMPCO of the span	< ± 0.2	< ± 0.3

Materials (wetted parts)	stainless steel 316L / 1.4404 ceramics (Al2O3); FPM
Housing materials	stainless steel 316L / 1.4404; PA; FPM (Viton); PTFE; viewing glass: laminated safety glass 4 mm
Protection rating	IP 67 / IP 69K
Protection class	III
Insulation resistance [MΩ]	> 100 (500 V DC)
Shock resistance [g]	50 (DIN IEC 68-2-27, 11 ms)
Vibration resistance [g]	20 (DIN IEC 68-2-6, 10 - 2000 Hz)
Switching cycles min.	100 million
Ambient temperature [°C]	-20 ... 80
Medium temperature [°C]	-25...80
Storage temperature [°C]	-40...100
EMC EN 61000-4-2 ESD:	4 / 8 kV
EN 61000-4-3 HF radiated:	10 V/m
EN 61000-4-4 Burst:	2 kV
EN 61000-4-5 Surge:	0.5 / 1 kV
EN 61000-4-6 HF conducted:	10 V

UK

[1] 1) All indications are referred to a turn-down of 1:1

13 Setting ranges

		SP1		rP1		ASP		AEP		ΔP
		min	max	min	max	min	max	min	max	
PG2409	bar	-0.992	1.600	-1.000	1.592	-1.000	1.100	-0.500	1.600	0.004
	PSI	-14.40	23.22	-14.52	23.10	-14.52	15.96	-7.26	23.22	0.06
PG2450	bar	2	600	0	598	0	500	100	600	1
	PSI	30	8700	0	8670	0	7250	1450	8700	10
PG2451	bar	1.0	400.0	0.0	399.0	0.0	350.0	50.0	400.0	0.5
	PSI	15	5800	0	5785	0	5075	725	5800	5
PG2452	bar	0.4	160.0	0.0	159.6	0.0	135.0	25.0	160.0	0.2
	PSI	6	2322	0	2316	0	1959	363	2322	3

ΔP = step increment

		SP1		rP1		ASP		AEP		ΔP
		min	max	min	max	min	max	min	max	
PG2453	bar	-0.90	40.00	-1.00	39.90	-1.00	33.75	5.25	40.00	0.05
	PSI	-13.0	580.0	-14.5	578.5	-14.5	489.5	76.0	580.0	0.5
PG2454	bar	-0.96	16.00	-1.00	15.96	-1.00	13.50	1.50	16.00	0.02
	PSI	-14.0	232.0	-14.4	231.6	-14.4	195.8	21.8	232.0	0.2
PG2455	bar	-0.98	6.40	-1.00	6.38	-1.00	5.40	0.00	6.40	0.01
	PSI	-14.2	92.8	-14.5	92.5	-14.5	78.3	0.0	92.8	0.1
PG2456	bar	-0.115	4.000	-0.125	3.990	-0.125	3.350	0.525	4.000	0.005
	PSI	-1.65	58.00	-1.80	57.85	-1.80	48.60	7.60	58.00	0.05
PG2457	bar	-0.046	1.600	-0.050	1.596	-0.050	1.340	0.200	1.600	0.002
	PSI	-0.66	23.20	-0.72	23.14	-0.72	19.58	2.90	23.20	0.02
PG2458	mbar	-11.5	400.0	-12.5	399.0	-12.5	337.5	50.0	400.0	0.5
	inH2O	-4.6	160.6	-5.0	160.2	-5.0	135.6	20.0	160.6	0.2
PG2489	mbar	-4.6	160.0	-5.0	159.6	-5.0	135.0	20.0	160.0	0.2
	inH2O	-1.84	64.24	-2.00	64.08	-2.00	54.24	8.00	64.24	0.08

ΔP = step increment

14 Factory setting

	Factory setting	User setting
SP1	25.0 % VMR*	
rP1	24.9 % VMR*	
OU1	Hno	
OU2	I	
COF / tCOF	0.0	
ASP / tASP	0 % VMR*	
AEP / tAEP	100 % VMR*	
Uni	bAr / mbAr	
SELd	P	
dS1	0.0	
dr1	0.0	
P-n	pnp	
dAP	0.06	
dAA	0.03	
dis	d2	
LED	SPRP	
CP1	0.00	
CP2	0.00	

* = the indicated percentage of the final value of the measuring range (VMR) of the corresponding sensor is set.

More information at www.ifm.com

newterra ltd.
1291 California Avenue, Brockville, ON K6V 5W3
(800) 420-4056 / www.newterra.com

APPENDIX F

Material Safety Data Sheets

© 2017 by **newterra**, ltd.
All rights reserved. No part of this document may be reproduced or transmitted in any form or by any means, electronic, mechanical, photocopying, recording, or otherwise, without prior written permission of **newterra** ltd.

MATERIAL SAFETY DATA SHEET

Aluminium Sulphate Solution

Section 01 - Chemical And Product And Company Information

Product Identifier ..... Aluminium sulphate solution

Product Use ..... Coagulating agent in municipal and industrial water and wastewater treatment, additive in papermaking.

Supplier Name..... ClearTech Industries Inc.
2302 Hanselman Avenue
Saskatoon, SK. S7L 5Z3
Canada

Prepared By..... ClearTech Industries Inc. Technical Department
Phone: (306)664-2522

Preparation Date..... November 26, 2009

24-Hour Emergency Phone..... 306-664-2522



Section 02 - Composition / Information on Ingredients

Hazardous Ingredients.....	Aluminum sulphate hydrate	45-55%
CAS Number.....	Aluminum sulphate hydrate	16828-12-9

Synonym (s).....Liquid alum; aluminum sulfate solution; papermaker's alum; sulphuric acid, aluminum salt.

Section 03 - Hazard Identification

Inhalation..... Inhalation of mists can be irritating to the respiratory tract and lungs.

Skin Contact / Absorption…….... Mild to moderate irritation can occur. Aluminum is very poorly absorbed through the skin and toxic effects would not be expected following short-term skin contact.

Eye Contact.....…….. May result in mild to moderate irritation to eyes.

Ingestion.....……. Amounts ingested incidental to industrial handling are not likely to cause injury. Large amounts may cause abdominal pain, nausea, vomiting. Can cause burns of the mouth, bleeding stomach, incoordination, muscle spasms, and kidney injury.

Exposure Limits…….. ACGIH/TLV-TWA= 2mg/m^3(Soluble Aluminum Salts)
OSHA/PEL-TWA= 2mg/m^3(Soluble Aluminum Salts)

Section 04 - First Aid Measures

Inhalation.....…….. Remove victim to fresh air. Give artificial respiration only if breathing has stopped. If breathing is difficult, give oxygen. Seek immediate medical attention.

Skin Contact / Absorption…….. Remove contaminated clothing. Wash affected area with soap and water. Seek medical attention if irritation occurs or persists.

Eye Contact.....…….... Flush immediately with water for at least 20 minutes. Forcibly hold eyelids apart to ensure complete irrigation of eye tissue. Seek immediate medical attention.

Ingestion.....……. Do not induce vomiting. If vomiting occurs, lean victim forward to prevent breathing in vomitus. Give large amounts of water. Do not give anything by mouth to an unconscious or convulsing person. Seek immediate medical attention.

Additional Information.....…….... Not available

Section 05 - Fire Fighting

Conditions of Flammability…….... Non-flammable

Means of Extinction.....…….... Product itself does not burn. However, decomposition product sulfur trioxide will react with water to form sulfuric acid. Use appropriate extinguishing agent.

Flash Point.....……. Not applicable

Auto-ignition Temperature……. Not applicable

Upper Flammable Limit …….. Not applicable

Lower Flammable Limit..…….…. Not applicable

Hazardous Combustible Products... Under fire conditions (or at temperatures greater than 650°C), product decomposes to give off sulfur trioxide, an oxidizing agent which will support combustion.

Special Fire Fighting Procedures..... Wear NIOSH-approved self-contained breathing apparatus and protective clothing.

Explosion Hazards…….... Liquid alum may react with some metals, to give flammable, potentially explosive hydrogen gas. Hydrogen gas can accumulate to explosive concentrations inside confined spaces. Follow appropriate NFPA codes.

Section 06 - Accidental Release Measures

Leak / Spill.....……. Wear appropriate personal protective equipment. Ventilate area. Stop or reduce leak if safe to do so. Prevent material from entering sewers. Cover spill with dry earth, sand or other non-combustible material.

Deactivating Materials..……... Lime, limestone, soda ash, sodium bicarbonate, dilute sodium hydroxide or dilute aqua ammonia.

Section 07 - Handling and Storage

Handling Procedures.....……. Use proper equipment for lifting and transporting all containers. Use sensible industrial hygiene and housekeeping practices. Wash thoroughly after handling. Avoid all situations that could lead to harmful exposure.

Storage Requirements.....……..…. Store in a cool, dry, well-ventilated place. Keep container tightly closed, and away from incompatible materials. Store at temperatures below 40°C and above 0°C.

Section 08 - Personal Protection and Exposure Controls

Protective Equipment

Eyes..…….... Chemical goggles, full-face shield, or a full-face respirator is to be worn at all times when product is handled. Contact lenses should not be worn; they may contribute to severe eye injury.

Respiratory..... A NIOSH/MSHA approved air-purifying respirator equipped with acid gas/fume, mist cartridges for concentrations up to 20 mg/m^3. An air-supplied respirator if concentrations are higher or unknown.

Gloves..... Impervious gloves of chemically resistant material (rubber or PVC) should be worn at all times. Wash contaminated clothing and dry thoroughly before reuse.

Clothing..... Body suits, aprons, and/or coveralls of chemical resistant material should be worn at all times. Wash contaminated clothing and dry thoroughly before reuse.

Footwear..... Impervious boots of chemically resistant material should be worn at all times.

Engineering Controls

Ventilation Requirements..... Mechanical ventilation (dilution or local exhaust), process or personnel enclosure and control of process conditions should be provided. Supply sufficient replacement air to make up for air removed by exhaust systems.

Other..... Emergency shower and eyewash should be in close proximity.

Section 09 - Physical and Chemical Properties

Physical State..... Liquid

Odor and Appearance..... Pale straw coloured, clear odourless liquid.

Odor Threshold..... Not available

Specific Gravity (Water=1)..... 1.335

Vapor Pressure (mm Hg, 20C)..... Not available

Vapor Density (Air=1)..... Not available

Evaporation Rate..... Not available

Boiling Point..... 101°C

Freeze/Melting Point..... -16°C

pH..... 1.9-2.3

Water/Oil Distribution Coefficient.... Not available

Bulk Density..... Not available

% Volatiles by Volume..... Not available

Solubility in Water..... Completely miscible

Molecular Formula..... $Al_2(SO_4)_3$ $14H_2O$

Molecular Weight..... 594.14

Section 10 - Stability and Reactivity

Stability..... Stable under normal conditions.

Incompatibility..... Corrosive to carbon steel, aluminum, and zinc. Reacts with strong bases to form aluminum hydroxide.

Hazardous Products of Decomposition.. May react with many metals including carbon steel and aluminum to form flammable gases including sulphur oxides and hydrogen. Liquid alum is stable below 60°C.

Polymerization..... Will not occur

Section 11 - Toxicological Information

Irritancy..... Corrosive

Sensitization..... Not available

Chronic/Acute Effects..... Skin irritation may be aggravated in individuals with existing skin lesions. Breathing of vapors or sprays (mists) may aggravate acute or chronic asthma and chronic pulmonary disease such as emphysema and bronchitis.

Synergistic Materials..... Not available

Animal Toxicity Data..... LD_{50}(mouse,oral)= >9000 mg/kg
LD_{50}(rat,oral)= >9000 mg/kg

Carcinogenicity..... Sulfuric acid mist: Classified 1 (Proven for humans) by IARC, 1 (Known to be human carcinogens) by NTP

Sulfuric acid mist: Classified A2 (Suspected for humans) by ACGIH

Reproductive Toxicity..…..…….. Not available

Teratogenicity.....…...…….. Not available

Mutagenicity.....…….....……. Not available

Section 12 - Ecological Information

Fish Toxicity.....…….. LD_{50}(72 hrs, goldfish)= 100mg/L

Biodegradability.....…….... The products of biodegradation are more toxic than the original product.

Environmental Effects……. May be harmful to aquatic life. Toxicity is primarily associated with the acidic pH. Acidic soil conditions develop where contamination with this material occurs.

Section 13 - Disposal Consideration

Waste Disposal.....…...…….. Dispose in accordance with all federal, provincial, and/or local regulations including the Canadian Environmental Protection Act.

Section 14 - Transportation Information

TDG Classification

Class……..……..…... 8

Group.....…….....…….. III

PIN Number.....…….…….. UN 3264

Other……..... Secure containers (full and/or empty) with suitable hold down devises during shipment.

Section 15 - Regulatory Information

WHMIS Classification.....……...E

NOTE: THE PRODUCT LISTED ON THIS MSDS HAS BEEN CLASSIFIED IN ACCORDANCE WITH THE HAZARD CRITERIA OF THE CANADIAN CONTROLLED PRODUCTS REGULATIONS. THIS MSDS CONTAINS ALL INFORMATION REQUIRED BY THOSE REGULATIONS.

NSF Certification.....Product is certified under NSF/ANSI Standard 60 for coagulation and flocculation at a maximum dosage of 330mg/L.

Section 16 - Other Information

Note: The responsibility to provide a safe workplace remains with the user. The user should consider the health hazards and safety information contained herein as a guide and should take those precautions required in an individual operation to instruct employees and develop work practice procedures for a safe work environment. The information contained herein is, to the best of our knowledge and belief, accurate. However, since the conditions of handling and use are beyond our control, we make no guarantee of results, and assume no liability for damages incurred by the use of this material. It is the responsibility of the user to comply with all applicable laws and regulations.

Attention: Receiver of the chemical goods / MSDS coordinator

As part of our commitment to the Canadian Association of Chemical Distributors (CACD) Responsible Distribution® initiative, ClearTech Industries Inc. and its associated companies require, as a condition of sale, that you forward the attached Material Safety Data Sheet(s) to all affected employees, customers, and end-users. ClearTech will send any available supplementary handling, health, and safety information to you at your request.

If you have any questions or concerns please call our customer service or technical service department.

ClearTech Industries Inc. - Locations

Corporate Head Office: 2302 Hanselman Avenue, Saskatoon, SK, S7L 5Z3
Phone: 306-664-2522
Fax: 306-665-6216

www.ClearTech.ca

Location	Address	Postal Code	Phone Number	Fax Number
Richmond, B.C.	12431 Horseshoe Way	V7A 4X6	604-272-4000	604-272-4596
Calgary, AB.	5516E - 40th St. S.E.	T2C 2A1	403-279-1096	403-236-0989
Edmonton, AB.	11750 - 180th Street	T5S 1N7	780-452-6000	780-452-4600
Saskatoon, SK.	2302 Hanselman Avenue	S7L 5Z3	306-933-0177	306-933-3282
Regina, SK.	555 Henderson Drive	S42 5X2	306-721-7737	306-721-8611
Winnipeg, MB.	340 Saulteaux Crescent	R3J 3T2	204-987-9777	204-987-9770
Mississauga, ON.	7480 Bath Road	L4T 1L2	905-612-0566	905-612-0575

24 Hour Emergency Number - All Locations - 306-664-2522



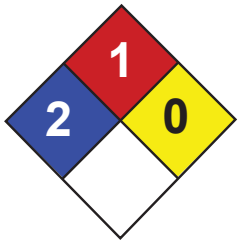

Health	2
Fire	1
Reactivity	0
Personal Protection	E

Material Safety Data Sheet
Citric acid MSDS

Section 1: Chemical Product and Company Identification

Product Name: Citric acid

Catalog Codes: SLC5449, SLC2665, SLC4453, SLC1660, SLC3451

CAS#: 77-92-9

RTECS: GE7350000

TSCA: TSCA 8(b) inventory: Citric acid

CI#: Not available.

Synonym: 2-Hydroxy-1,2,3-propanetricarboxylic acid

Chemical Name: Citric Acid

Chemical Formula: C6H8O7

Contact Information:

Sciencelab.com, Inc.
14025 Smith Rd.
Houston, Texas 77396

US Sales: **1-800-901-7247**
International Sales: **1-281-441-4400**

Order Online: ScienceLab.com

CHEMTREC (24HR Emergency Telephone), call: 1-800-424-9300

International CHEMTREC, call: 1-703-527-3887

For non-emergency assistance, call: 1-281-441-4400

Section 2: Composition and Information on Ingredients

Composition:

Name	CAS #	% by Weight
Citric acid	77-92-9	100

Toxicological Data on Ingredients: Citric acid: ORAL (LD50): Acute: 5040 mg/kg [Mouse]. 3000 mg/kg [Rat].

Section 3: Hazards Identification

Potential Acute Health Effects:
Hazardous in case of eye contact (irritant), of inhalation (lung irritant). Slightly hazardous in case of skin contact (irritant, sensitizer), of ingestion. The amount of tissue damage depends on length of contact. Eye contact can result in corneal damage or blindness. Skin contact can produce inflammation and blistering. Severe over-exposure can produce lung damage, choking, unconsciousness or death.

Potential Chronic Health Effects:
Slightly hazardous in case of skin contact (sensitizer). CARCINOGENIC EFFECTS: Not available. MUTAGENIC EFFECTS: Not available. TERATOGENIC EFFECTS: Not available. DEVELOPMENTAL TOXICITY: Not available. The substance may be toxic to teeth. Repeated or prolonged exposure to the substance can produce target organs damage. Repeated exposure of the eyes to a low level of dust can produce eye irritation. Repeated skin exposure can produce local skin destruction, or dermatitis. Repeated inhalation of dust can produce varying degree of respiratory irritation or lung damage.

Section 4: First Aid Measures

Eye Contact:
Check for and remove any contact lenses. In case of contact, immediately flush eyes with plenty of water for at least 15 minutes. Cold water may be used. Get medical attention.

Skin Contact:
In case of contact, immediately flush skin with plenty of water. Cover the irritated skin with an emollient. Remove contaminated clothing and shoes. Cold water may be used.Wash clothing before reuse. Thoroughly clean shoes before reuse. Get medical attention.

Serious Skin Contact:
Wash with a disinfectant soap and cover the contaminated skin with an anti-bacterial cream. Seek medical attention.

Inhalation:
If inhaled, remove to fresh air. If not breathing, give artificial respiration. If breathing is difficult, give oxygen. Get medical attention.

Serious Inhalation: Not available.

Ingestion:
Do NOT induce vomiting unless directed to do so by medical personnel. Never give anything by mouth to an unconscious person. Loosen tight clothing such as a collar, tie, belt or waistband. Get medical attention if symptoms appear.

Serious Ingestion: Not available.

Section 5: Fire and Explosion Data

Flammability of the Product: May be combustible at high temperature.

Auto-Ignition Temperature: 1010°C (1850°F)

Flash Points: Not available.

Flammable Limits: LOWER: 0.28 Kg/M3 (Dust) UPPER: 2.29 Kg/M3 (Dust)

Products of Combustion: These products are carbon oxides (CO, CO2).

Fire Hazards in Presence of Various Substances:
Slightly flammable to flammable in presence of heat. Non-flammable in presence of shocks.

Explosion Hazards in Presence of Various Substances:
Slightly explosive in presence of open flames and sparks. Non-explosive in presence of shocks.

Fire Fighting Media and Instructions:
SMALL FIRE: Use DRY chemical powder. LARGE FIRE: Use water spray, fog or foam. Do not use water jet.

Special Remarks on Fire Hazards: As with most organic solids, fire is possible at elevated temperatures

Special Remarks on Explosion Hazards:
Fine dust dispersed in air in sufficient concentrations, and in the presences of an ignition source is a potential dust explosion hazard.

Section 6: Accidental Release Measures

Small Spill:
Use appropriate tools to put the spilled solid in a convenient waste disposal container. Finish cleaning by spreading water on the contaminated surface and dispose of according to local and regional authority requirements.

Large Spill:
Stop leak if without risk. Do not get water inside container. Do not touch spilled material. Use water spray to reduce vapors. Prevent entry into sewers, basements or confined areas; dike if needed. Eliminate all ignition sources. Call for assistance on disposal. Finish cleaning by spreading water on the contaminated surface and allow to evacuate through the sanitary system.

Section 7: Handling and Storage

Precautions:
Keep away from heat. Keep away from sources of ignition. Ground all equipment containing material. Do not ingest. Do not breathe dust. Avoid contact with eyes. Wear suitable protective clothing. In case of insufficient ventilation, wear suitable respiratory equipment. If ingested, seek medical advice immediately and show the container or the label. Keep away from incompatibles such as oxidizing agents, reducing agents, metals, alkalis.

Storage: Keep container tightly closed. Keep container in a cool, well-ventilated area.

Section 8: Exposure Controls/Personal Protection

Engineering Controls:
Use process enclosures, local exhaust ventilation, or other engineering controls to keep airborne levels below recommended exposure limits. If user operations generate dust, fume or mist, use ventilation to keep exposure to airborne contaminants below the exposure limit.

Personal Protection:
Safety glasses. Lab coat. Gloves (impervious). Dust respirator. Be sure to use an approved/certified respirator or equivalent. The dust respirator should be used for conditions where exposure has exceeded recommended exposure limits, dust is apparent, and engineering controls(adequate ventilation) are not feasible.

Personal Protection in Case of a Large Spill:
Splash goggles. Full suit. Dust respirator. Boots. Gloves. A self contained breathing apparatus should be used to avoid inhalation of the product. Suggested protective clothing might not be sufficient; consult a specialist BEFORE handling this product.

Exposure Limits:
No exposure guidelines have been established. ACGIH, NIOSH and OSHA have not developed exposure limits for this product. The exposure limits given below are for particulates not otherwise classified: ACGIH: 10 mg/m3 TWA (Total Inhalable fraction); 3 mg/m3 TWA (Respirable fraction) OSHA: 15 mg/m3 TWA (Total dust); 5 mg/m3 TWA (Respirable Fraction)

Section 9: Physical and Chemical Properties

Physical state and appearance: Solid. (Crystalline powde)

Odor: Odorless.

Taste: Acid. (Strong.)

Molecular Weight: 192.13 g/mole

Color: Not available.

pH (1% soln/water): Not available.

Boiling Point: Decomposes.

Melting Point: 153°C (307.4°F)

Critical Temperature: Not available.

Specific Gravity: 1.665 (Water = 1)

Vapor Pressure: Not applicable.

Vapor Density: Not available.

Volatility: Not available.

Odor Threshold: Not available.

Water/Oil Dist. Coeff.: The product is more soluble in water; log(oil/water) = -1.7

Ionicity (in Water): Not available.

Dispersion Properties: See solubility in water, diethyl ether.

Solubility:
Soluble in cold water, hot water, diethyl ether. Insoluble in benzene.

Section 10: Stability and Reactivity Data

Stability: The product is stable.

Instability Temperature: Not available.

Conditions of Instability: Excess heat, incompatible materials

Incompatibility with various substances: Reactive with oxidizing agents, reducing agents, metals, alkalis.

Corrosivity:
Corrosive in presence of aluminum, of zinc, of copper. Non-corrosive in presence of glass.

Special Remarks on Reactivity:
Incompatible with oxidizing agents, potassium tartrate, alkali, alkaline earth carbonates and bicarbonates, acetates, and sulfides, metal nitrates

Special Remarks on Corrosivity: Will corrode copper, zinc, aluminum and their alloys.

Polymerization: Will not occur.

Section 11: Toxicological Information

Routes of Entry: Inhalation. Ingestion.

Toxicity to Animals: Acute oral toxicity (LD50): 3000 mg/kg [Rat].

Chronic Effects on Humans: May cause damage to the following organs: teeth.

Other Toxic Effects on Humans:
Hazardous in case of inhalation (lung irritant). Slightly hazardous in case of skin contact (irritant, sensitizer), of ingestion.

Special Remarks on Toxicity to Animals: LDL[Rabbit] - Route: oral; Dose: 7000mg/kg

Special Remarks on Chronic Effects on Humans: Not available.

Special Remarks on other Toxic Effects on Humans:
Acute Potential Health Effects: Skin: Causes mild to moderate skin irritation. May cause skin sensitization, an allergic reaction, which becomes evident upon re-exposure to this material. Eyes: Causes moderate to severe eye irritation and possible injury. Ingestion: May cause gastrointestinal (digestive) tract irritation with nausea, vomiting, diarrhea. Excessive intake may cause erosion of teeth and hypocalcemia (calcium deficiency in blood). May affect behavior/central nervous system (tremor, convulsions, muscle contraction or spasticity). Inhalation: Causes moderate respiratory tract and mucous membrane irritation. Chronic Potential Health Effects: Frequent intake of citrated beverages may cause erosion of dental enamel and irritation of mucous membranes.

Section 12: Ecological Information

Ecotoxicity: Not available.

BOD5 and COD: Not available.

Products of Biodegradation:
Possibly hazardous short term degradation products are not likely. However, long term degradation products may arise.

Toxicity of the Products of Biodegradation: The product itself and its products of degradation are not toxic.

Special Remarks on the Products of Biodegradation: Not available.

Section 13: Disposal Considerations

Waste Disposal:
Waste must be disposed of in accordance with federal, state and local environmental control regulations.

Section 14: Transport Information

DOT Classification: Not a DOT controlled material (United States).

Identification: Not applicable.

Special Provisions for Transport: Not applicable.

Section 15: Other Regulatory Information

Federal and State Regulations: TSCA 8(b) inventory: Citric acid

Other Regulations: EINECS: This product is on the European Inventory of Existing Commercial Chemical Substances.

Other Classifications:

WHMIS (Canada): CLASS E: Corrosive solid.

DSCL (EEC):
R36/37/38- Irritating to eyes, respiratory system and skin. S26- In case of contact with eyes, rinse immediately with plenty of water and seek medical advice. S37/39- Wear suitable gloves and eye/face protection.

HMIS (U.S.A.):

Health Hazard: 2

Fire Hazard: 1

Reactivity: 0

Personal Protection: e

National Fire Protection Association (U.S.A.):

Health: 2

Flammability: 1

Reactivity: 0

Specific hazard:

Protective Equipment:
Gloves (impervious). Lab coat. Dust respirator. Be sure to use an approved/certified respirator or equivalent. Wear appropriate respirator when ventilation is inadequate. Safety glasses.

Section 16: Other Information

References: Not available.

Other Special Considerations: Not available.

Created: 10/09/2005 04:56 PM

Last Updated: 05/21/2013 12:00 PM

The information above is believed to be accurate and represents the best information currently available to us. However, we make no warranty of merchantability or any other warranty, express or implied, with respect to such information, and we assume no liability resulting from its use. Users should make their own investigations to determine the suitability of the information for their particular purposes. In no event shall ScienceLab.com be liable for any claims, losses, or damages of any third party or for lost profits or any special, indirect, incidental, consequential or exemplary damages, howsoever arising, even if ScienceLab.com has been advised of the possibility of such damages.







Material Safety Data Sheet
Sodium Hypochlorite, 5% MSDS

Section 1: Chemical Product and Company Identification

Product Name: Sodium Hypochlorite, 5%

Catalog Codes: SLS1654

CAS#: Mixture.

RTECS: Not applicable.

TSCA: TSCA 8(b) inventory: Sodium hypochlorite; Sodium hydroxide; Water

CI#: Not applicable.

Synonym: Chlorine Bleach, Bleach, Soda Bleach, Chlorox; Sodium Hypochlorite, Solution, 5% Available Chlorine

Chemical Name: Hypochlorous acid, sodium salt, solution

Chemical Formula: Not applicable.

Contact Information:

Sciencelab.com, Inc.
14025 Smith Rd.
Houston, Texas 77396

US Sales: **1-800-901-7247**
International Sales: **1-281-441-4400**

Order Online: ScienceLab.com

CHEMTREC (24HR Emergency Telephone), call: 1-800-424-9300

International CHEMTREC, call: 1-703-527-3887

For non-emergency assistance, call: 1-281-441-4400

Section 2: Composition and Information on Ingredients

Composition:

Name	CAS #	% by Weight
Sodium hypochlorite	7681-52-9	4-7
Sodium hydroxide	1310-73-2	<1
Water	7732-18-5	>92

Toxicological Data on Ingredients: Sodium hypochlorite: ORAL (LD50): Acute: 5800 mg/kg [Mouse]. 8910 mg/kg [Rat].

Section 3: Hazards Identification

Potential Acute Health Effects:
Very hazardous in case of skin contact (irritant), of eye contact (irritant), of ingestion, . Hazardous in case of skin contact (corrosive), of eye contact (corrosive). Slightly hazardous in case of inhalation (lung sensitizer). Non-corrosive for lungs. Liquid or spray mist may produce tissue damage particularly on mucous membranes of eyes, mouth and respiratory tract. Skin contact may produce burns. Inhalation of the spray mist may produce severe irritation of respiratory tract, characterized by coughing, choking, or shortness of breath. Prolonged exposure may result in skin burns and ulcerations. Over-exposure by inhalation may cause respiratory irritation. Inflammation of the eye is characterized by redness, watering, and itching. Skin inflammation is characterized by itching, scaling, reddening, or, occasionally, blistering.

Potential Chronic Health Effects:
Slightly hazardous in case of skin contact (sensitizer). CARCINOGENIC EFFECTS: Classified 3 (Not classifiable for human.) by IARC [Sodium hypochlorite]. MUTAGENIC EFFECTS: Mutagenic for bacteria and/or yeast. [Sodium hypochlorite]. Mutagenic for mammalian somatic cells. [Sodium hydroxide]. TERATOGENIC EFFECTS: Not available. DEVELOPMENTAL TOXICITY: Not available. The substance may be toxic to lungs, mucous membranes, skin, eyes. Repeated or prolonged exposure to the substance can produce target organs damage. Repeated or prolonged contact with spray mist may produce chronic eye irritation and severe skin irritation. Repeated or prolonged exposure to spray mist may produce respiratory tract irritation leading to frequent attacks of bronchial infection.

Section 4: First Aid Measures

Eye Contact:
Check for and remove any contact lenses. In case of contact, immediately flush eyes with plenty of water for at least 15 minutes. Cold water may be used. Get medical attention immediately.

Skin Contact:
In case of contact, immediately flush skin with plenty of water for at least 15 minutes while removing contaminated clothing and shoes. Cover the irritated skin with an emollient. Cold water may be used.Wash clothing before reuse. Thoroughly clean shoes before reuse. Get medical attention immediately.

Serious Skin Contact:
Wash with a disinfectant soap and cover the contaminated skin with an anti-bacterial cream. Seek medical attention.

Inhalation:
If inhaled, remove to fresh air. If not breathing, give artificial respiration. If breathing is difficult, give oxygen. Get medical attention immediately.

Serious Inhalation:
Evacuate the victim to a safe area as soon as possible. Loosen tight clothing such as a collar, tie, belt or waistband. If breathing is difficult, administer oxygen. If the victim is not breathing, perform mouth-to-mouth resuscitation. Seek medical attention.

Ingestion:
Do NOT induce vomiting unless directed to do so by medical personnel. Never give anything by mouth to an unconscious person. Loosen tight clothing such as a collar, tie, belt or waistband. Get medical attention if symptoms appear.

Serious Ingestion: Not available.

Section 5: Fire and Explosion Data

Flammability of the Product: Non-flammable.

Auto-Ignition Temperature: Not applicable.

Flash Points: Not applicable.

Flammable Limits: Not applicable.

Products of Combustion: Not available.

Fire Hazards in Presence of Various Substances: combustible materials, metals, organic materials

Explosion Hazards in Presence of Various Substances:
Slightly explosive in presence of open flames and sparks. Non-explosive in presence of shocks.

Fire Fighting Media and Instructions: Not applicable.

Special Remarks on Fire Hazards:
Releases chlorine when heated above 35 deg. C. The substance itself is non-combustible and does not burn. However, when heated to decomposition it emits corrosive and/or toxic fumes. May ignite combustibles. Fire risk in contact with organic materials. Contact with metals may evolve flammable hydrogen gas.

Special Remarks on Explosion Hazards:
Anydrous Sodium Hypochlorite is very explosive. Primary amines and calcium hypochlorite or sodium hypochlorite react to form normal chloroamines, which are explosive. Interaction of ethyleneimine with sodium (or other) hypochlorite gives the explosive N-chloro cmpd. Removal of formic acid from industrial waste streams with sodium hypochlorite soln becomes explosive at 55 deg C. Several explosions involving methanol and sodium hypochlorite were attributed to formation of methyl hypochlorite, especially in presence of acid or other esterification catalyst. Use of sodium hypochlorite soln to destroy acidified benzyl cyanide residues caused a violent explosion, thought to have been due to formation of nitrogen trichloride. (Sodium hypochlorite)

Section 6: Accidental Release Measures

Small Spill:
Dilute with water and mop up, or absorb with an inert dry material and place in an appropriate waste disposal container.

Large Spill:
Corrosive liquid. Oxidizing material. Stop leak if without risk. Absorb with DRY earth, sand or other non-combustible material. Do not get water inside container. Avoid contact with a combustible material (wood, paper, oil, clothing...). Keep substance damp using water spray. Do not touch spilled material. Use water spray curtain to divert vapor drift. Prevent entry into sewers, basements or confined areas; dike if needed. Call for assistance on disposal. Be careful that the product is not present at a concentration level above TLV. Check TLV on the MSDS and with local authorities.

Section 7: Handling and Storage

Precautions:
Keep locked up.. Keep container dry. Keep away from heat. Keep away from sources of ignition. Keep away from combustible material.. Do not ingest. Do not breathe gas/fumes/ vapor/spray. Never add water to this product. In case of insufficient ventilation, wear suitable respiratory equipment. If ingested, seek medical advice immediately and show the container or the label. Avoid contact with skin and eyes. Keep away from incompatibles such as reducing agents, combustible materials, organic materials, metals, acids.

Storage:
Keep container tightly closed. Keep container in a cool, well-ventilated area. Separate from acids, alkalies, reducing agents and combustibles. See NFPA 43A, Code for the Storage of Liquid and Solid Oxidizers. Air Sensitive Sensitive to light. Store in light-resistant containers.

Section 8: Exposure Controls/Personal Protection

Engineering Controls:
Provide exhaust ventilation or other engineering controls to keep the airborne concentrations of vapors below their respective threshold limit value.

Personal Protection:
Face shield. Full suit. Vapor respirator. Be sure to use an approved/certified respirator or equivalent. Gloves. Boots.

Personal Protection in Case of a Large Spill:
Splash goggles. Full suit. Vapor respirator. Boots. Gloves. A self contained breathing apparatus should be used to avoid inhalation of the product. Suggested protective clothing might not be sufficient; consult a specialist BEFORE handling this product.

Exposure Limits:
Sodium hypochlorite TWA: 1 CEIL: 1 (ppm as Cl2) STEL: 1 (ppm as Cl2) from ACGIH (TLV) [United States] Sodium hydroxide STEL: 2 (mg/m3) from ACGIH (TLV) [United States] TWA: 2 CEIL: 2 (mg/m3) from OSHA (PEL) [United States] CEIL: 2 (mg/m3) from NIOSH Consult local authorities for acceptable exposure limits.

Section 9: Physical and Chemical Properties

Physical state and appearance: Liquid.

Odor: Characteristic. Chlorine-like (Slight.)

Taste: Not available.

Molecular Weight: Not applicable.

Color: Colorless to light greenish yellow

pH (1% soln/water): Neutral.

Boiling Point: Decomposition temperature: 40°C (104°F)

Melting Point: Not available.

Critical Temperature: Not available.

Specific Gravity: 1.07 - 1.093 (Water = 1)

Vapor Pressure: 2.3 kPa (@ 20°C)

Vapor Density: The highest known value is 0.62 (Air = 1) (Water).

Volatility: Not available.

Odor Threshold: Not available.

Water/Oil Dist. Coeff.: Not available.

Ionicity (in Water): Not available.

Dispersion Properties: See solubility in water.

Solubility: Easily soluble in cold water.

Section 10: Stability and Reactivity Data

Stability: The product is stable.

Instability Temperature: Not available.

Conditions of Instability: Incompatible materials. light, air, heat

Incompatibility with various substances: Reactive with reducing agents, combustible materials, organic materials, metals, acids.

Corrosivity:
Extremely corrosive in presence of aluminum. Corrosive in presence of stainless steel(304), of stainless steel(316). Non-corrosive in presence of glass.

Special Remarks on Reactivity:
Decomposed by carbon dioxide from air. Slowly decomposes on contact with air. Unstable in air unless mixed with sodium hydroxide. Incompatible with ammonium acetate, ammonium carbonate, ammonium nitrate, ammonium oxalate, and ammonium phosphate. Decompostion of sodium hypochlorite takes place within a few seconds with these salts. Also incompatible with primary amines, phenyl acetonitrile, ethyleneimine, methanol, acidified benzyl cyanide, formic acid, urea, nitro compounds, methylscellulose, celloluse, aziridine, ether, ammonia. Mixing this product with chemicals (e.g. ammonia, acids, detergents, etc.) or organic matter (e.g. urine, feces, etc.) will release chlorine gas. Chloramine gas may be evolved when ammonia and bleach are mixed. Decomposed by hot water. Sensitive to light. Exposure to light accelerates decompositon.

Special Remarks on Corrosivity:
Sodium Hypochlorite is extremely corrosive to brass, and moderately corrosive to bronze. There is no corrosivity information for copper.

Polymerization: Will not occur.

Section 11: Toxicological Information

Routes of Entry: Absorbed through skin. Eye contact. Inhalation. Ingestion.

Toxicity to Animals: Acute oral toxicity (LD50): 5800 mg/kg [Mouse]. (Sodium hypochlorite).

Chronic Effects on Humans:
CARCINOGENIC EFFECTS: Classified 3 (Not classifiable for human.) by IARC [Sodium hypochlorite]. MUTAGENIC EFFECTS: Mutagenic for bacteria and/or yeast. [Sodium hypochlorite]. Mutagenic for mammalian somatic cells. [Sodium hydroxide]. Contains material which may cause damage to the following organs: lungs, mucous membranes, skin, eyes.

Other Toxic Effects on Humans:
Very hazardous in case of skin contact (irritant), of ingestion, . Hazardous in case of skin contact (corrosive), of eye contact (corrosive). Slightly hazardous in case of inhalation (lung sensitizer, lung corrosive).

Special Remarks on Toxicity to Animals: Not available.

Special Remarks on Chronic Effects on Humans: May affect genetic material (mutagenic) (Sodium hypochlorite)

Special Remarks on other Toxic Effects on Humans:
Potential Health Effects: Can cause severe irritation and possible burns to skin and eyes. Eye contact may also cause corneal and conjunctival edema, conjunctival hemorrhages. Contact with skin may also cause vesicular eruptions and eczematoid dermatitis which becomes evident upon re-exposure. Prolonged or repeated eye contact may cause conjunctivitis. Ingestion can cause burns to the digestive tract. Symptoms may include: 1. pain and inflammation of the mouth, pharynx, esophagus, and stomach, 2. erosion of the mucous membranes (chiefly of the stomach), nausea, vomiting, choking, coughing, hemorrhage, 3. circulatory collapse with cold and clammy skin (due to methemoglobinemia), cyanosis, and shallow respirations, 4. confusion, delirium, coma, 5. edema of the pharynx, glottis, larynx with stridor and obstruction, 6. perforation of the esophagus, or stomach, with mediastinitis or peritonitis. Inhalation causes slight to severe respiratory tract irritation and delayed pulmonary edema. Prolonged or repeated inhalation may cause allergic respiratory reaction (asthma).

Section 12: Ecological Information

Ecotoxicity: Not available.

BOD5 and COD: Not available.

Products of Biodegradation:
Possibly hazardous short term degradation products are not likely. However, long term degradation products may arise.

Toxicity of the Products of Biodegradation: The product itself and its products of degradation are not toxic.

Special Remarks on the Products of Biodegradation: Not available.

Section 13: Disposal Considerations

Waste Disposal:
Dilute with water and flush to sewer of local ordinances allow, otherwise, whatever cannot be saved for recovery or recycling should be managed in an appropriate and approved waste disposal facility. Waste must be disposed of in accordance with federal, state and local environmental control regulations.

Section 14: Transport Information

DOT Classification: Class 8: Corrosive material

Identification: : Hypochlorite solution UNNA: 1791 PG: III

Special Provisions for Transport: Not available.

Section 15: Other Regulatory Information

Federal and State Regulations:
Illinois toxic substances disclosure to employee act: Sodium hydroxide Illinois chemical safety act: Sodium hydroxide New York release reporting list: Sodium hydroxide Rhode Island RTK hazardous substances: Sodium hydroxide Pennsylvania RTK: Sodium hypochlorite; Sodium hydroxide Florida: Sodium hypochlorite Minnesota: Sodium hypochlorite; Sodium hydroxide Massachusetts RTK: Sodium hypochlorite; Sodium hydroxide New Jersey: Sodium hypochlorite; Sodium hydroxide Louisiana spill reporting: Sodium hydroxide TSCA 8(b) inventory: Sodium hypochlorite; Sodium hydroxide; Water CERCLA: Hazardous substances.: Sodium hypochlorite: 100 lbs. (45.36 kg); Sodium hydroxide: 1000 lbs. (453.6 kg);

Other Regulations: OSHA: Hazardous by definition of Hazard Communication Standard (29 CFR 1910.1200).

Other Classifications:

WHMIS (Canada): CLASS E: Corrosive liquid.

DSCL (EEC):
R8- Contact with combustible material may cause fire. R31- Contact with acids liberates toxic gas. R36/38- Irritating to eyes and skin. S28- After contact with skin, wash immediately with plenty of water. S36/37/39- Wear suitable protective clothing, gloves and eye/face protection. S45- In case of accident or if you feel unwell, seek medical advice immediately (show the label where possible).

HMIS (U.S.A.):

Health Hazard: 3

Fire Hazard: 0

Reactivity: 0

Personal Protection:

National Fire Protection Association (U.S.A.):

Health: 1

Flammability: 0

Reactivity: 0

Specific hazard:

Protective Equipment:
Gloves. Full suit. Vapor respirator. Be sure to use an approved/certified respirator or equivalent. Wear appropriate respirator when ventilation is inadequate. Face shield.

Section 16: Other Information

References: Not available.

Other Special Considerations: Not available.

Created: 10/09/2005 06:32 PM

Last Updated: 05/21/2013 12:00 PM

The information above is believed to be accurate and represents the best information currently available to us. However, we make no warranty of merchantability or any other warranty, express or implied, with respect to such information, and we assume no liability resulting from its use. Users should make their own investigations to determine the suitability of the information for their particular purposes. In no event shall ScienceLab.com be liable for any claims, losses, or damages of any third party or for lost profits or any special, indirect, incidental, consequential or exemplary damages, howsoever arising, even if ScienceLab.com has been advised of the possibility of such damages.

Gardner Denver

H.M.I.S.	
Health:	0
Flammability:	1
Reactivity:	0

These ratings should be used only as a part of a fully implemented H.M.I.S. program.

Material Safety Data Sheet

Section I - Product Identification

Trade Name and Synonyms	Part Numbers:	
AEON-PD	**28G23; 28G24; 28G25; 28G28; 28G40; 28G41**	Health Emergency Phone Number **(217) 222-5400** **Safety Department**
Manufacturer's Name Gardner Denver, Inc.		
Address 1800 Gardner Expressway - Quincy, IL 62305		Transport Emergency Phone Number **(800) 424-9300 (CHEMTREC)**
Product Identification Positive Displacement Blower Lubricant		
Chemical Names and Synonyms Polyalphaolefin	**Use or Description** Gear Oil	

Section II - Composition/Information on Ingredients

Chemical Family:	Synthetic Hydrocarbon	**CAS Number**	Proprietary
Formula:	$C_{10n}H_{20n+2}$		

Section III - Chemical and Physical Properties

Appearance:	Blue Liquid	**Specific Gravity:**	(water=1):0.84-0.89
Odor:	None	**Vapor Pressure:**	<0.01mmHg@20°C
Volatile, Percent by Volume:	0%	**Solubility in Water:**	Insoluble
Boiling Point:	>600°F	**Evaporation Rate (butyl acetate=1):**	Nil

Section IV - Hazards Identification

Threshold Limit Value:	5mg/m^3 ACGIH
Situations to Avoid	Avoid breathing oil mists.

This product is non-hazardous. The product contains no known carcinogens. No special warning labels are required under OSHA 29 CFR 1910. 1200.

Section V - First Aid Measures

Eye Contact:	Flush eyes with water for 15 minutes and consult physician.
Skin Contact:	Upon contact with skin, wash with soap and water.
Inhalation:	Product is not toxic by inhalation. If oil mist is inhaled, remove to fresh air and consult physician.
Ingestion:	Consult physician at once. **DO NOT INDUCE VOMITING.** May cause nausea and diarrhea.

To the best of our knowledge the toxicity of this product has not been fully investigated. Analogous compounds are considered to be essentially non-toxic.

Section VI - Fire Fighting Measures

Flash Point: 405-495℉	**Method:** Cleveland Open Cup - COC
Flammable Limits:	Not established
Autoignition Temperature:	No data
Extinguishing Media:	Dry chemical; CO_2 foam; water spray (fog)
Fire Fighting Instructions:	Burning fluid may evolve irritating/noxious fumes. Firefighters should use NIOSH/MNSA Approved self-contained breathing apparatus. Use water to cool fire-exposed containers. Use water carefully near exponed liquid to avoid frothing and splashing of hot liquid.
NFPA Classification:	Not established

Section VII - Stability and Reactivity

Chemical Stability	Stable
Conditions to Avoid:	Excessive heat
Incompatibility with other Materials:	Strong oxidizers
Hazardous Decomposition Products:	Analogous compounds evolve carbon monoxide, carbon dioxide, and other unidentified fragments when burned.
Hazardous Polymerization:	Will not occur.

Section VIII - Accidental Release Measures

Safeguards (Personnel):	Wear suitable protective equipment, especially goggles.
Initial Containment:	Stop source of spill. Dike spill area. Use absorbent materials to soak up fluid (i.e. sand, sawdust, and commercially available materials.)
Spill Clean-Up:	Wash spill area with large amount of water. Properly dispose of all materials

Section IX - Handling and Storage

Handling (Personnel):	Do not take internally. Avoid contact with skin, eyes, and clothing. Upon contact with skin, wash with soap and water. Flush eyes with water for 15 minutes and consult physician. Wash contaminated clothing before reuse.
Handling (Physical Aspects):	
Storage:	Keep container tightly sealed when not in use.

Section X - Exposure Controls/Personal Protection

ENGINEERING CONTROLS:	
Ventilation:	Local exhaust
PERSONAL PROTECTIVE EQUIPMENT:	
Respiratory Protection:	Use in well ventilated area
Protective Gloves:	Not required, but recommended, especially for prolonged exposure.
Eye Protection:	Goggles
Other Protective Equipment:	
EXPOSURE GUIDELINES:	
Applicable Exposure Limits:	

Section XI - Toxicological Information

Animal Data:	No specific animal toxicological data available for this product.

Section XII - Ecological Information

Ecotoxicological Information:	No specific aquatic data available for this product.

Section XIII - Disposal Considerations

Waste Disposal:	Incinerate this product and all associated wastes in a licensed facility in accordance with Federal, state, and local regulations.
Container Disposal:	

Section XIV - Transportation Information

Shipping Information:	DOT - Not regulated. ICAO/IMO - Not restricted.

Section XV - Regulatory Information

U.S. FEDERAL REGULATIONS:	
OSHA Hazard Determination:	Under normal conditions of use, this material is not known to be hazardous as defined by OSHA's Hazard Communication Standard, 29 CFR 1910.1200.
CERCLA/Superfund:	This material is not known to contain hazardous substances in sufficient quantity to make it subject to CERCLA regulations.
SARA, Title III, 302/304:	This material is not known to contain extremely hazardous substances.
Title III Hazard Classifications Sections 311, 312:	Acute: No Chronic: No Reactivity: No Pressure: No Fire: No
SARA Title III, 313:	This material is not known to contain any chemical(s) at a level of 1.0% or greater (0.1% for carcinogens) on the list of Toxic Chemicals and subject to release reporting requirements.
TSCA:	Material and/or components are listed in the TSCA Inventory of Chemical Substances (40 CFR 710).
RCRA:	This material has been evaluated for RCRA characteristics and does not meet hazardous waste criteria if discarded in its purchased form. Because of product use, transformation, mixing, processing, etc., which may render the resulting material hazardous, it is the product user's responsibility to determine at the time of disposal whether the material meets RCRA hazardous waste criteria.
Clean Water Act:	This material is not known to contain any ingredient(s) subject to the Act.
STATE REGULATIONS (U.S.):	
California "Prop 65":	Product may contain ingredient(s) known to the State of California to cause cancer, birth defects, or other reproductive harm, but the degree of exposure poses a health risk that is below the Prop 65 No Significant Risk Level for the listed chemical(s).
Pennsylvania Worker & Community Right to Know Act:	This material is not known to contain any ingredient(s) subject to the Act.
CANADIAN REGULATIONS:	This is not a WHMIS controlled product. Transport/Medical Emergency Phone Number: 613-348-3616.

Section XVI - Other Information

NFPA, NPCA-HMIS:		
NFPA Rating:		
Health	0	Personal Protection B
Flammability	1	
Reactivity	0	
NPCA-HMIS Rating:		
Health		Personal Protection B
Flammability		
Reactivity		

This information in this material safety data sheet should be provided to all who use, handle, store, transport, or are otherwise exposed to this product.

NOVOZYMES BIOLOGICALS, INC.
111 Kessler Mill Road
Salem, VA 24153

Telephone number: 540-389-9361 Fax: 540-389-9364

Emergency Contact: 540-389-9361 CHEMTREC: 1-800-424-9300

Material Safety Data Sheet **Date: 03/31/2006**

SECTION I—PRODUCT IDENTIFICATION

NAME: –BI-CHEM ® DC CWT Blend CAN	PRODUCT CODE - 7009848

DOT CLASS: Not Regulated.
UN NUMBER: NA
PROPER SHIPPING NAME: NA

HMIS RATING & CANADIAN WHMIS CLASSIFICATION

HEALTH	1	CANADIAN WHMIS CLASSIFICATION:	D 2 B
FIRE	0		
REACTIVITY	0		

SECTION II - INGREDIENTS

ALL COMPONENTS APPEAR ON THE TSCA INVENTORY AND CANADIAN DSL LIST. COMPONENTS NOT LISTED ARE EITHER NON HAZARDOUS OR IN CONCENTRATIONS OF LESS THAN 1%.

Ingredient Name	CAS Number	OSHA PEL	ACGIH TLV/TWA
Viable Bacterial Cultures	NA	NA	NA

SECTION III – PHYSICAL CHARACTERISTICS

Boiling Point	No Data	**Appearance and Odor**	Tan free flowing grain like substance, earthly odor.
Bulk Density	Approximately 0.66-0.77 gm/cm3	**Melting Point**	No Data
NA	6.5 - 8.5	**Vapor Density**	No Data
Vapor Pressure	No Data	**Solubility**	Minimal

NOVOZYMES BIOLOGICALS, INC.
111 Kessler Mill Road
Salem, VA 24153

Telephone number: 540-389-9361 Fax: 540-389-9364

Emergency Contact: 540-389-9361 CHEMTREC: 1-800-424-9300

SECTION IV – FIRE/EXPLOSION

Flash Point:	No data
Flash Point Method Used:	NA
LEL:	Not know
UEL:	Not known

Extinguishing Media: Water spray, carbon dioxide or dry chemical.

Special Fire Fighting Procedures: None

Unusual Fire and Explosion Hazards: None known.

SECTION V – REACTIVITY DATA

Stable: X **Unstable:**

Incompatibility: Strong acids or alkali compounds may inactivate biological cultures.

Hazardous Decomposition or By Products: Not Known.

Hazardous Polymerization: Will not occur.

SECTION VI – HEALTH HAZARD DATA

Acute Health Affects

Routes of Entry:	**Inhalation:** yes	**Absorption:** no	**Ingestion:** yes	**Eyes:** yes

Eyes: This product may cause eye irritation.

Skin Contact: Could cause mild skin irritation after prolonged contact.

Inhalation: Inhaling dust from this product could cause irritation to the lungs and mucus membranes.

Ingestion: Ingestion of this product could cause irritation to the mouth and throat or cause choking.

Signs and Symptoms of Over Exposure: None Known

NOVOZYMES BIOLOGICALS, INC.
111 Kessler Mill Road
Salem, VA 24153

Telephone number: 540-389-9361 Fax: 540-389-9364

Emergency Contact: 540-389-9361 CHEMTREC: 1-800-424-9300

Aggravated Medical Conditions: None known, however persons with respiratory problems should avoid breathing dust from this product.

Supplemental Health Information: None

Emergency First Aid Procedures

Eye Contact: Rinse eyes with water for fifteen minutes, if irritation persists, see a physician.

Inhalation: Move person to fresh air and avoid breathing dust from product. If breathing problems develop, seek the care of a physician.

Skin Contact: Wash the product off the skin with soap and water; if irritation develops seek the care of a physician.

Ingestion: Do not induce vomiting, if victim is choking clear airway and seek medical attention.

SECTION VII – SPILL OR LEAK PROCEDURE

Steps to be taken in case material is spilled or leaked:

Waste Disposal Method: Contain and collect material, place in proper container for reuse or disposal.
Dispose of materials in accordance with all federal, state and local laws.

Precautions To Be Taken In Handling and Storage: Store in a location away from children, food items and potable water.
Store in an area out of the direct sunlight, keep container closed when not in use, avoid storing in a damp environment.
Always wash hands with soap and water before handling food or smoking.
Use good chemical hygiene practices when working with any chemical.

Other Precautions: None

SECTION VIII – CONTROL MEASURES (PPE)

Respiratory Protection: Use a NIOSH approved dust mask to control nuisance dust.

Protective Gloves: Recommended. Disposable nitrite exam gloves are suitable for preventing prolonged contact with the skin.

Eye Protection: Safety glasses with side shields are recommended.

Other Protective Clothing: None required, however, avoid prolonged contact with the skin from soiled clothing.

Ventilation: Local exhaust should be sufficient. Avoid creating dust from the product. If used in a manner that creates dust, mechanical ventilation may be necessary.

NOVOZYMES BIOLOGICALS, INC.
111 Kessler Mill Road
Salem, VA 24153

Telephone number:	540-389-9361	Fax:	540-389-9364	
Emergency Contact:	540-389-9361		CHEMTREC:	1-800-424-9300

The information and recommendations contained in this Material Safety Data Sheet have been compiled from sources believed to be reliable and to represent current opinion on the subject when the MSDS was prepared. No warranty, guaranty or representation is made as to the correctness or sufficiency of the information. The user of this product must decide what safety measures are necessary to safely use this product, either alone or in combination with other products, and determine its environmental regulatory compliance obligations under any applicable federal, state and local laws.

Safety Data Sheet

MicroC® 2000

1. PRODUCT AND COMPANY IDENTIFICATION

Product Name:	MicroC® 2000	**Publication Date:**	May 31, 2015
Product Code:	NA	**Replaces:**	February 26, 2015
Product Use:	A reducing agent for biological processes		

Supplier Information:

Environmental Operating Solutions, Inc	Phone:	508-743-8440
160 MacArthur Blvd., Unit 6	Fax:	508-743-8443
Bourne, MA 02532	Website:	www.microc.com

EMERGENCY TELEPHONE NUMBER: **CHEMTREC** **800-424-9300**

2. HAZARDS IDENTIFICATION

OSHA Regulatory Status:
This product when used as intended is not hazardous according to 29 CFR 1910.1200

Note: When vaporized, glycerin mist may cause irritation of the respiratory tract.

Potential Health Effects

Routes of Exposure	Ingestion, inhalation, skin contact, eye contact
Eyes	May cause slight irritation
Skin	May cause slight irritation
Inhalation	High mist concentrations may cause irritation of respiratory tract.
Ingestion	May be harmful if swallowed in large quantities

3. COMPOSITION / INFORMATION ON INGREDIENTS

Chemical Name	CAS #	% by Weight
Glycerin; glycerol	56-81-5	70-74%
Water	7732-18-5	22-26%
Sodium Chloride	7647-14-5	4-6%
Methanol	67-56-1	< 1%

4. FIRST AID MEASURES

Eye Contact	Immediately flush eyes thoroughly with plenty of water for 15 minutes and consult a physician immediately.
Skin Contact	Remove contaminated clothing and wash affected area with water and soap. Consult physician if irritation develops
Inhalation	Remove individual to fresh air. Seek medical attention if breathing problems persist
Ingestion	Do not induce vomiting. Rinse mouth thoroughly. Seek medical attention.
General Advice	If individual feels unwell following the exposure to the product consult a physician immediately. Present this Safety Data Sheet to the doctor in attendance
Note to physician	Treat patient symptomatically

5. FIRE FIGHTING MEASURES

Flammability Summary (OSHA and NFPA)	Non-flammable Material
Protection of Firefighters:	Wear suitable protective equipment. Wear self contained breathing apparatus if necessary
Extinguishing Media	Use equipment appropriate to the main source of the fire. Water spray, alcohol foam, dry chemical or CO2. Water or alcohol foam may cause frothing
Specific hazards arising from the chemical	Carbon oxides

6. ACCIDENTAL RELEASE MEASURES

Personal Protection for Spills	Keep unnecessary personnel away from spill. Use personal protective equipment. Ventilate area of leak or spill. Avoid breathing vapors and mist.
Methods for Containment	Eliminate all sources of ignition. Stop flow of material if safe to do so. Dike spilled material. Absorb spill with inert absorbent material. Sand, earth and vermiculite are suitable absorbent materials.
Environmental Precautions	Prevent further leakage. Contain spill if safe to do so. Do not let product enter storm drains if possible.

7. HANDLING AND STORAGE

Precautions for Safe Handling	See other relevant sections of this SDS. Avoid contact with skin and eyes. Avoid breathing mist. Use with adequate ventilation. Do not handle and store near open flames, high heat or sources of ignition.
Storage	Keep containers closed when not in use. Minimize evaporative losses. Keep away from ignition sources.
Incompatible Materials for Storage	None known

8. EXPOSURE CONTROLS / PERSONAL PROTECTION

INSUFFICIENT DATA ON MIXTURE. DATA ON INDIVIDUAL COMPONENTS PROVIDED BELOW

Component	Concentration in Product	ACGIH TLV	OSHA TABLE Z-1 Limits for Air Contaminants	NIOSH
Glycerin CAS No: 56-81-5	70-74% w/w	Form: Glycerin Mist TWA: 10 mg/m3	Form: Total Dust PEL: 15 mg/m3 Form: Respirable Fraction PEL: 5 mg/m3	Insufficient Data on Glycerin Mist
Methanol CAS No: 67-56-1	< 1 % w/w	TWA: 260 mg/m3	PEL: 260 mg/m3	TWA: 260 mg/m3

Engineering Controls — Use proper equipment and storage conditions to control airborne levels below recommended exposure limits.

Personal Protective Equipment

Eye Protection: — Use normal eye protection practices such as safety glasses with side shields. Use chemical goggles if risk of splashing is high.

Skin Protection — Handle with chemical resistant gloves. Dispose of contaminated gloves after use. Nitrile gloves recommended.

Respiratory Protection — If workers could be exposed to concentrations above the exposure limits in Section 8, use a full face respirator with multipurpose combination cartridges.

9. PHYSICAL AND CHEMICAL PROPERTIES

Physical State	Liquid	**Flash Point**	None to Boil (ASTM D93)
Color	Light brown	**Boiling Point**	Not determined
Odor	Musty – Sweet Odor	**Evaporation Rate**	Not determined
Odor Threshold	Not determined	**UEL/LEL**	Not determined
		Flammability (solid, gas)	Not determined
pH	4.00-11.00	**Vapor Pressure**	Not determined
Solubility in Water	Highly soluble in water	**Vapor Density**	Not determined
		Relative Density	Not Determined
Bulk Density	10.22 lbs/gal	**Partition Coefficient**	Not determined
Specific gravity	1.225@ 20°C	**Autoignition Temperatures**	
		Decomposition Temperature	Not determined
Viscosity	45 cPs @ 20C		

10. STABILITY AND REACTIVITY

Reactivity	Avoid contact with oxidizing agents (e.g. nitric acid, peroxides, chromates)
Chemical Stability	Stable under normal storage conditions
Possibility of hazardous reactions	None known
Conditions to Avoid	Heat, flames, sparks. Contact with oxidizing agents
Incompatible Materials	None known
Hazardous Decomposition Products	Oxides of carbon under high heat

11. TOXICOLOGY

INSUFFICIENT DATA ON MIXTURE. DATA ON INDIVIDUAL COMPONENTS PROVIDED BELOW

Eye Contact	The components in this product may result in mild eye irritation from contact with liquid or vapors. Symptoms include redness, swelling, watering.
Skin Contact	The components in this product may result in mild skin irritation. Symptoms include redness, itching, burning, dermatitis.
Inhalation	Breathing high mist concentrations may be harmful. Inhalation can cause irritation of the throat and lungs.
Ingestion	Ingestion of this product may result in nausea, vomiting and diarrhea. Aspiration into the lungs can cause damage and inflammation to the lungs.
Target Organs	Lungs, Kidneys
Prolonged Exposure	Symptoms include nausea, headache, vomiting

Glycerin; Glycerol CAS No. 56-81-5

Acute Toxicity	Dermal LD50 = > 10,000 mg/kg (Rabbit) Inhalation LC50 = > 570 mg/m^3 1 hr (Rat) Oral LD50 = 12,600 mg/kg (Rat)
Carcinogenicity	Not listed by ACGIH, IARC, NIOSH, NTP or OSHA
Mutagenicity	No data available
Reproductive Toxicity	No data available

Methanol 67-56-1

Acute Toxicity	Dermal LD50 = 15,800 mg/kg (Rabbit) Inhalation LC50 = 64,000 mg/m^3 4 hr (Rat) Oral LD50 = 5,600 mg/kg (Rat)
Carcinogenicity	Not listed by ACGIH, IARC, NIOSH, NTP or OSHA
Mutagenicity	No data available
Reproductive Toxicity	No data available

12. ECOLOGICAL INFORMATION

Ecotoxicity	Glycerin: 96 hr LC50: 51,000-57,000 mg/L (Rainbow Trout), > 5000 mg/L Goldfish Methanol: 96 hr LC50: > 15,400-29,400 mg/L (Fish)
Persistence and degradability	No data available
Bioaccumulative potential	No data available
Mobility in soil	No data available
Other adverse effects	No data available

13. DISPOSAL CONSIDERATIONS

This product as supplied is not classified as a RCRA hazardous waste according to 40 CFR 261. However it should be fully characterized prior to disposal as contamination with other materials may subject it to hazardous waste regulations. RCRA requires the user of the product to determine whether the product meets RCRA criteria for hazardous waste. Always consult with local, state and federal regulations prior to disposal.

14. TRANSPORTATION INFORMATION

US Domestic DOT	Not Regulated
Shipping Name	Glycerin; Glycerol
IMDG	Not dangerous goods
IATA	Not dangerous goods
Marine pollutant	No

15. REGULATORY INFORMATION

United States

Toxic Substances Control Act

The components of this product are listed on the TSCA Inventory of Existing Chemical Substances

Section 302 (EHS) TPQ	Not applicable
Section 304 (EHS) TPQ	Not applicable

SARA Section 311/312 Hazard Categories

Acute - NO
Chronic – NO
Physical - None
Pressure Hazard - NO
Fire Hazard - NO

SARA Section 313

This product may contain trace amounts of a chemical that is subject to reporting requirements of SARA

Methanol CAS # 67-56-1 Typical % Weight in Product 0.0-0.10%

CERCLA

This product may contain trace amounts of a chemical that is subject to reporting requirements of CERCLA
Methanol RQ # 5,000. Typical % Weight in Product 0.0-0.10%

Clean Water Act Section 311 Hazardous Substances (40 CFR 117.3): None

State Right to Know Regulations

Chemical Name: Glycerin	
California – Proposition 65	Not applicable
Massachusetts Right to Know	Glycerin
Minnesota Hazardous Substances List	Glycerin mist
New Jersey Right to Know	None
Pennsylvania Right to Know	Glycerin
Rhode Island Right to Know	Glycerin

16. ADDITIONAL INFORMATION

MSDS REVISION STATUS: May 31, 2015| Replaces February 26, 2015

THIS MATERIAL SAFETY DATA SHEET (MSDS) HAS BEEN PREPARED IN COMPLIANCE WITH THE FEDERAL OSHA HAZARD COMMUNICATION STANDARD, 29 CFR 1910.1200. THE INFORMATION IN THIS MSDS SHOULD BE PROVIDED TO ALL WHO WILL USE, HANDLE, STORE, TRANSPORT, OR OTHERWISE BE EXPOSED TO THIS PRODUCT. WE BELIEVE THIS INFORMATION TO BE RELIABLE AND UP TO DATE AS OF ITS PUBLICATION DATE, BUT MAKE NO WARRANTY THAT IT IS. IF THIS MSDS IS MORE THAN THREE YEARS OLD YOU SHOULD CONTACT THE SUPPLIER TO MAKE CERTAIN THAT THE INFORMATION IS CURRENT.





Health	2
Fire	0
Reactivity	1
Personal Protection	E

Material Safety Data Sheet
Sodium carbonate MSDS

Section 1: Chemical Product and Company Identification

Product Name: Sodium carbonate

Catalog Codes: SLS3481, SLS1264, SLS4105, SLS1894, SLS3316

CAS#: 497-19-8

RTECS: VZ4050000

TSCA: TSCA 8(b) inventory: Sodium carbonate

CI#: Not available.

Synonym: Crystal Carbonate, Disodium Carbonate, Sal Soda, Soda Asha, Washing Soda

Chemical Name: Sodium Carbonate, Anhydrous

Chemical Formula: Na2-C-O3

Contact Information:

Sciencelab.com, Inc.
14025 Smith Rd.
Houston, Texas 77396

US Sales: **1-800-901-7247**
International Sales: **1-281-441-4400**

Order Online: ScienceLab.com

CHEMTREC (24HR Emergency Telephone), call: 1-800-424-9300

International CHEMTREC, call: 1-703-527-3887

For non-emergency assistance, call: 1-281-441-4400

Section 2: Composition and Information on Ingredients

Composition:

Name	CAS #	% by Weight
Sodium carbonate	497-19-8	100

Toxicological Data on Ingredients: Sodium carbonate: ORAL (LD50): Acute: 4090 mg/kg [Rat]. 6600 mg/kg [Mouse]. DUST (LC50): Acute: 2300 mg/m 2 hours [Rat]. 1200 mg/m 2 hours [Mouse].

Section 3: Hazards Identification

Potential Acute Health Effects: Hazardous in case of skin contact (irritant), of eye contact (irritant), of ingestion, of inhalation (lung irritant).

Potential Chronic Health Effects:
Slightly hazardous in case of skin contact (sensitizer). CARCINOGENIC EFFECTS: Not available. MUTAGENIC EFFECTS: Not available. TERATOGENIC EFFECTS: Not available. DEVELOPMENTAL TOXICITY: Not available. The substance may be toxic to upper respiratory tract, skin, eyes. Repeated or prolonged exposure to the substance can produce target organs damage.

Section 4: First Aid Measures

Eye Contact:
Check for and remove any contact lenses. In case of contact, immediately flush eyes with plenty of water for at least 15 minutes. Cold water may be used. Get medical attention.

Skin Contact:
In case of contact, immediately flush skin with plenty of water. Cover the irritated skin with an emollient. Remove contaminated clothing and shoes. Cold water may be used.Wash clothing before reuse. Thoroughly clean shoes before reuse. Get medical attention.

Serious Skin Contact:
Wash with a disinfectant soap and cover the contaminated skin with an anti-bacterial cream. Seek immediate medical attention.

Inhalation:
If inhaled, remove to fresh air. If not breathing, give artificial respiration. If breathing is difficult, give oxygen. Get medical attention.

Serious Inhalation: Not available.

Ingestion:
Do NOT induce vomiting unless directed to do so by medical personnel. Never give anything by mouth to an unconscious person. Loosen tight clothing such as a collar, tie, belt or waistband. Get medical attention if symptoms appear.

Serious Ingestion: Not available.

Section 5: Fire and Explosion Data

Flammability of the Product: Non-flammable.

Auto-Ignition Temperature: Not applicable.

Flash Points: Not applicable.

Flammable Limits: Not applicable.

Products of Combustion: Emits Na2O fumes when heated to decompositon.

Fire Hazards in Presence of Various Substances: Not applicable.

Explosion Hazards in Presence of Various Substances:
Risks of explosion of the product in presence of mechanical impact: Not available. Risks of explosion of the product in presence of static discharge: Not available.

Fire Fighting Media and Instructions: Not applicable.

Special Remarks on Fire Hazards:
Sodium carbonate can ignite and burn fiercely in contact with fluoride. Sodium Carbonate in contact with fluorine decomposed at ordinary temperature with incandescence.

Special Remarks on Explosion Hazards:
Reacts explosively with red-hot aluminum metal. Sodium carbonate + ammonia in arabic gum solution will explode.

Section 6: Accidental Release Measures

Small Spill:
Use appropriate tools to put the spilled solid in a convenient waste disposal container. If necessary: Neutralize the residue with a dilute solution of acetic acid. Finish cleaning by spreading water on the contaminated surface and dispose of according to local and regional authority requirements.

Large Spill:
Use a shovel to put the material into a convenient waste disposal container. Neutralize the residue with a dilute solution of acetic acid. Finish cleaning by spreading water on the contaminated surface and allow to evacuate through the sanitary system.

Section 7: Handling and Storage

Precautions:
Do not ingest. Do not breathe dust. Wear suitable protective clothing. In case of insufficient ventilation, wear suitable respiratory equipment. If ingested, seek medical advice immediately and show the container or the label. Avoid contact with skin and eyes. Keep away from incompatibles such as acids.

Storage:
Hygroscopic. Keep container tightly closed. Keep container in a cool, well-ventilated area. Do not store above 24°C (75.2°F). Hygroscopic

Section 8: Exposure Controls/Personal Protection

Engineering Controls:
Use process enclosures, local exhaust ventilation, or other engineering controls to keep airborne levels below recommended exposure limits. If user operations generate dust, fume or mist, use ventilation to keep exposure to airborne contaminants below the exposure limit.

Personal Protection:
Splash goggles. Lab coat. Dust respirator. Be sure to use an approved/certified respirator or equivalent. Gloves.

Personal Protection in Case of a Large Spill:
Splash goggles. Full suit. Dust respirator. Boots. Gloves. A self contained breathing apparatus should be used to avoid inhalation of the product. Suggested protective clothing might not be sufficient; consult a specialist BEFORE handling this product.

Exposure Limits: Not available.

Section 9: Physical and Chemical Properties

Physical state and appearance: Solid. (Solid powder.)

Odor: Odorless.

Taste: Alkaline.

Molecular Weight: 105.99 g/mole

Color: White.

pH (1% soln/water): 11.5 [Basic.]

Boiling Point: Not available.

Melting Point: 851°C (1563.8°F)

Critical Temperature: Not available.

Specific Gravity: Density: 2.532 (Water = 1)

Vapor Pressure: Not applicable.

Vapor Density: Not available.

Volatility: Not available.

Odor Threshold: Not available.

Water/Oil Dist. Coeff.: Not available.

Ionicity (in Water): Not available.

Dispersion Properties: See solubility in water.

Solubility:

Soluble in hot water, glycerol. Partially soluble in cold water. Insoluble in acetone, alcohol.

Section 10: Stability and Reactivity Data

Stability: The product is stable.

Instability Temperature: Not available.

Conditions of Instability: Incompatible materials, moisture

Incompatibility with various substances:
Reactive with acids. Slightly reactive to reactive with moisture.

Corrosivity: Non-corrosive in presence of glass.

Special Remarks on Reactivity:
Hygroscopic. Combines with water with evolution of heat. Incompatible with phosphorus pentoxide, lithium, fluorine, fluoride, ammonia + silver nitrate, 2,4,6-trinitrotoluene, ammonia, acids, sodium sulfide + water, hydrogen peroxide, red hot alumium metal, sodium sulfide, zinc, calcium hydroxide. Sodium Carbonate is decomposed by acids with effervescence. Reacts violently with F2, Lithium, and 2,4,6-trinitrotoluene. Sodium begins to decompose at 400 C to evolve CO2.

Special Remarks on Corrosivity: Hot concentrated solutions of sodium carbonate are mildly corrosive to steel.

Polymerization: Will not occur.

Section 11: Toxicological Information

Routes of Entry: Inhalation. Ingestion.

Toxicity to Animals:
WARNING: THE LC50 VALUES HEREUNDER ARE ESTIMATED ON THE BASIS OF A 4-HOUR EXPOSURE. Acute oral toxicity (LD50): 4090 mg/kg [Rat]. Acute toxicity of the dust (LC50): 1200 mg/m3 2 hours [Mouse].

Chronic Effects on Humans: May cause damage to the following organs: upper respiratory tract, skin, eyes.

Other Toxic Effects on Humans: Hazardous in case of skin contact (irritant), of ingestion, of inhalation (lung irritant).

Special Remarks on Toxicity to Animals: LDL (Lowest Published Lethal Dose) [Man] - Route: Oral; Dose: 714 mg/kg

Special Remarks on Chronic Effects on Humans: May cause adverse reproductive effects based on animal test data

Special Remarks on other Toxic Effects on Humans:
Acute Potential Health Effects: Skin: Causes skin irritation with possible burns depending on the concentration, site (abraded or intact skin), and duration of exposure. Eyes: Causes eye irritation and possible burns. Concentrated solutions may cause permanent corneal injury (permanent corneal opacity). Ingestion: Sodium carbonate ingestion may cause irritation of the digestive tract resulting in nausea, vomiting, diarrhea, thirst, abdominal pain depending on concentration and amount ingested. May also affect the cardiovascular system . Inhalation: Dust may cause respiratory tract and mucous membrane irritation with coughing and shortness of breath (dyspnea), pulmonary edema. Chronic Potential Health Effects: Chronic inhalation may result in decreased pulmonary function, nasal congestion, nosebleeds, perforation of the nasal septum. Other effects of chronic exposure are skin (dermatitis and ulceration), and gastrointestinal complaints. However, the effects of chronic exposure seem to be reversible if exposure is decreased.

Section 12: Ecological Information

Ecotoxicity: Not available.

BOD5 and COD: Not available.

Products of Biodegradation:
Possibly hazardous short term degradation products are not likely. However, long term degradation products may arise.

Toxicity of the Products of Biodegradation: The products of degradation are less toxic than the product itself.

Special Remarks on the Products of Biodegradation: Not available.

Section 13: Disposal Considerations

Waste Disposal:
Waste must be disposed of in accordance with federal, state and local environmental control regulations.

Section 14: Transport Information

DOT Classification: Not a DOT controlled material (United States).

Identification: Not applicable.

Special Provisions for Transport: Not applicable.

Section 15: Other Regulatory Information

Federal and State Regulations: TSCA 8(b) inventory: Sodium carbonate

Other Regulations: EINECS: This product is on the European Inventory of Existing Commercial Chemical Substances.

Other Classifications:

WHMIS (Canada): CLASS D-2B: Material causing other toxic effects (TOXIC).

DSCL (EEC):
R36/37/38- Irritating to eyes, respiratory system and skin. S22- Do not breathe dust. S26- In case of contact with eyes, rinse immediately with plenty of water and seek medical advice.

HMIS (U.S.A.):

Health Hazard: 2

Fire Hazard: 0

Reactivity: 1

Personal Protection: E

National Fire Protection Association (U.S.A.):

Health: 2

Flammability: 0

Reactivity: 1

Specific hazard:

Protective Equipment:
Gloves. Lab coat. Dust respirator. Be sure to use an approved/certified respirator or equivalent. Wear appropriate respirator when ventilation is inadequate. Splash goggles.

Section 16: Other Information

References: Not available.

Other Special Considerations: Not available.

Created: 10/10/2005 08:26 PM

Last Updated: 05/21/2013 12:00 PM

The information above is believed to be accurate and represents the best information currently available to us. However, we make no warranty of merchantability or any other warranty, express or implied, with respect to such information, and we assume no liability resulting from its use. Users should make their own investigations to determine the suitability of the information for their particular purposes. In no event shall ScienceLab.com be liable for any claims, losses, or damages of any third party or for lost profits or any special, indirect, incidental, consequential or exemplary damages, howsoever arising, even if ScienceLab.com has been advised of the possibility of such damages.

newterra ltd.
1291 California Avenue, Brockville, ON K6V 5W3
(800) 420-4056 / www.newterra.com

APPENDIX G

GLOSSARY & TERMS

© 2016 by **newterra**, ltd.
All rights reserved. No part of this document may be reproduced or transmitted in any form or by any means, electronic, mechanical, photocopying, recording, or otherwise, without prior written permission of **newterra** ltd.

newterra ltd.
1291 California Avenue, Brockville, ON K6V 5W3
(800) 420-4056 / www.newterra.com

Glossary & Terms

The following section defines abbreviations and technical terms used within this manual and the wastewater treatment industry in general.

1. ACRONYMS & ABBREVIATIONS

ACRONYM	DEFINITION
AT	Aeration Tank
BOD	Biological Chemical Oxygen Demand
cBOD	Carbonaceous Biological Oxygen Demand
CaCO3	Calcium Carbonate
CIP	Clean In Place
COD	Chemical Oxygen Demand
DO	Dissolved Oxygen
E-Coli	Escherichia coli - Gram-negative, rod-shaped bacterium
EQ	Equalization Tank
FOG	Fat, Oil and Grease
kPa	Kilo Pascal
L	Liter
LMH	Liters / m^2 of Membrane Area per Hour (Flux)
MBR	Membrane Bioreactor
MLSS	Mixed Liquor Suspended Solids
MLVSS	Mixed Liquor Volatile Suspended Solids
MT	Membrane Tank
NaOCl	Sodium Hypochlorite
NaOH	Sodium Hydroxide
NH_3 -N	Ammonia as Nitrogen (unionized)
NH_4 -N	Ammonium as Nitrogen (ionized)
NO_3 -N	Nitrate Nitrogen

© 2016 by **newterra**, ltd.
All rights reserved. No part of this document may be reproduced or transmitted in any form or by any means, electronic, mechanical, photocopying, recording, or otherwise, without prior written permission of **newterra** ltd.

ACRONYM	DEFINITION
NO_2 -N	Nitrite Nitrogen
NTU	Nephelometric Turbidity Unit
O_2	Molecular Oxygen
OUR	Oxygen Uptake Rate
PC	Primary Clarifier
P&ID	Process and Instrumentation Diagram
pH	Measure of Acidity & Alkalinity
PLC	Programmable Logic Controller
ppb	parts per billion
ppm	parts per million
psi	pounds per square inch
PSL	Pressure Switch Low
RAS	Return Activated Sludge
SDI	Silt Density Index
TP	Total Phosphorus
TMP	Transmembrane Pressure
TKN	Total Kjeldahl Nitrogen
TN	Total Nitrogen
TDS	Total Dissolved Solids
TS	Total Solids
TSS	Total Suspended Solids
VFD	Variable Frequency Drive
VSS	Volatile Suspended Solids
UF	Ultrafiltration
UV	Ultraviolet
WAS	Waste Activated Sludge
WWTP	Waste Water Treatment Plant

© 2016 by **newterra**, ltd.
All rights reserved. No part of this document may be reproduced or transmitted in any form or by any means, electronic, mechanical, photocopying, recording, or otherwise, without prior written permission of **newterra** ltd.

2. TECHNICAL TERMS DEFINITION

ACID	Substance which solution has a pH below 7.0, sour taste, releases hydroxyl ions in water and reacts with bases.
ACTIVATED SLUDGE	The floc produced in wastewater due to the growth of bacteria and other organisms in the presence of dissolved oxygen.
ACTIVATED SLUDGE PROCESS	Activated sludge is a process for treating sewage and industrial wastewaters using air and a biological floc composed of bacteria and protozoa.
ACTUATED VALVE	Valve with an actuator that is controlled by an external command.
ADVANCED WASTEWATER TREATMENT	Process designed to produce an effluent of higher quality than normally achieved by secondary treatment processes.
AEROBIC	Life or processes that require, or are not destroyed by, the presence of free elemental oxygen.
AEROBIC BACTERIA	Bacteria that require the presence of oxygen to live and grow.
AEROBIC DIGESTION	The aerobic digestion process is a treatment process that utilizes aerobic microbes to stabilize the solids. The microbes digest solids from primary sedimentation processes, and those from secondary treatment processes. Due to the length of time that the solids remain under aeration, the long solids retention time allows for the microbes to feed off of the cell contents of other dying/decaying microbes under digestion. This is referred to as "endogenous respiration" or "endogenous stabilization." There will be an "inert faction" between 20 and 25% by weight, in the resulting stabilized solids. This inert faction will consist of fine inorganic solids, organic solids, and cell components that will not be degradable by

© 2016 by **newterra**, ltd.
All rights reserved. No part of this document may be reproduced or transmitted in any form or by any means, electronic, mechanical, photocopying, recording, or otherwise, without prior written permission of **newterra** ltd.

the process.

AEROBIC ZONE

An environment where there is dissolved air or free oxygen.

AIR DIAPHRAGM METERING PUMP

Air diaphragm metering pump provides chemical dosing at measured rates. The dosing is set manually and it is regulated either by the amount of compressed air driving the pump or by setting the backpressure of the pumps.

AIR FLOW SWITCH (PSL)

Located on the supplemental aeration piping, used to indicate when a specific flow rate has been reached for a blower. This flow rate identifies low aeration to the aeration or membrane tank, triggering an alarm or alert.

AIR SCOURING

Diffusers placed below the membrane modules generate air bubbles in water that scour (rub) the membrane surface and keep it clean.

ALARM

A visible or audible indication of abnormal situation. An alarm may be an operator interface screen message, a light, a buzzer or another form of communication to the operator.

ALKALINE

A solution having an excess of hydroxyl (OH) ions - with pH greater than 7.0.

ALKALINITY

The capacity of water or wastewater for neutralizing an acid. Alkalinity in wastewater results from the presence of carbonate, bicarbonate, and hydroxide. Alkalinity in water helps to resist changes in pH caused by addition of acids. Generally expressed as an amount of $CaCO_3$ equivalent.

ANAEROBIC

Life or processes that require, or are not destroyed by, the absence of free elemental oxygen.

ANAEROBIC BACTERIA

Any bacteria that can survive in partial or complete absence of oxygen by using molecular oxygen found in

© 2016 by **newterra**, ltd.
All rights reserved. No part of this document may be reproduced or transmitted in any form or by any means, electronic, mechanical, photocopying, recording, or otherwise, without prior written permission of **newterra** ltd.

newterra ltd.
1291 California Avenue, Brockville, ON K6V 5W3
(800) 420-4056 / www.newterra.com

nitrates and sulfates.

ANAEROBIC BIOLOGICAL REACTOR	Anaerobic (in the absence of oxygen) decomposition breaks down large molecules into small molecules increasing the rate of methane generation, which can be used for energy recovery.
ANALOG	An electrical signal that is proportional to the size of the variable being monitored or controlled.
ANOXIC	Conditions where some species other than oxygen acts as the electron donor for biochemical reactions.
AUTOMATIC FLOW VALVE	This valve is used when regular changes are required in the state of the valve (fully open or fully closed only). It is controlled by the PLC.
BACKPULSE / BACKFLUSH / BACKWASH	A mode of operation in which the flow of permeate is reversed through the membrane. During backwash, accumulated solids go away from the membrane surface due to the combined effects of the membrane air scouring and backwash of permeate.
BIOCHEMICAL (BIOLOGICAL) OXYGEN DEMAND	A measure of the amount of oxygen consumed in the biological process breaking down organic matter in water – the greater the BOD, the greater the degree of pollution.
BIOCIDE	A chemical for preventing biological growth.
BIOLOGICAL TREATMENT (or BIOTREATMENT)	Process whereby dissolved organic chemical constituents are removed through biodegradation.
BIOMASS	The mixture of biodegradable material, bacteria, and biosolids present in a biological wastewater treatment system.
BIOSOLIDS	Material from sludge treatment, which contains organic matter and plant nutrient; unlike excess waste activated sludge, biosolids have undergone a treatment to decrease or eliminate pathogenic organisms. Biosolids

© 2016 by **newterra**, ltd.
All rights reserved. No part of this document may be reproduced or transmitted in any form or by any means, electronic, mechanical, photocopying, recording, or otherwise, without prior written permission of **newterra** ltd.

can be beneficially recycled.

BLOWER	Blowers are used to introduce air in order to create an aerobic environment for BOD removal and for scouring the membranes to prevent membrane fouling.
MODULE (for newterra MicroClear® MBR)	Membrane filtration unit; it is a group of interlocked MicroClear® cassettes, fastened together to act as a single unit.
CHEMICAL OXYGEN DEMAND	A test used to estimate the amount of organic matter within a sample using a strong chemical oxidizing agent. The COD is generally higher than the BOD (for sewage BOD / COD ratio varies from 0.4 to 0.8).
COAGULANT	An agent that causes fine or suspended impurities to group together (coagulate).
COMBINED SEWER	A sewer system that carries both sanitary sewage and stormwater (SW) runoff.
CONDITIONING FOULING	First stage of membrane fouling through adsorption of material.
CONTAMINANT	A source of contamination, an impurity and any substance in water which is not H_2O.
CRITICAL FLUX	Flux below which permeability decline is considered negligible.
DENITRIFICATION	Biochemical reduction of nitrate to nitrogen gas.
EFFLUENT	Wastewater – treated or untreated – that flows out of a treatment plant, sewer, or industrial outfall.
ELECTRON DONOR	Species capable of donating an electron to a suitable

© 2016 by **newterra**, ltd.
All rights reserved. No part of this document may be reproduced or transmitted in any form or by any means, electronic, mechanical, photocopying, recording, or otherwise, without prior written permission of **newterra** ltd.

newterra ltd.
1291 California Avenue, Brockville, ON K6V 5W3
(800) 420-4056 / www.newterra.com

	acceptor and is oxidized as a result.
EQUALIZATION TANK	Used for equalization of flow and composition of wastewater.
F/M (RATIO)	Food-to-microorganism ratio (F/M) – rate at which substrate is fed to the biomass compared to the mass of biomass solids.
FEED	Feed is the term use to define fluid entering a membrane module or wastewater treatment plant.
FILTER CAKE	Accumulated particles on a filter surface.
FILTRATE	Portion of the feed stream which has passed through a filter; also known as “permeate” in membrane system.
FLOC	Aggregated solid (biomass) particle.
FLUX (or PERMEATE VELOCITY)	Quantity of material (water) passing through an area of membrane per unit time – usually expresses LMH ($L/m^2.h$), or gfd ($gal/ft^2.d$).
FOULING	Processes leading to deterioration of flux due to surface or internal blockage of the membrane.
GLYCERIN	Glycerin is the commercial form of glycerol. It is used for membrane long term preservation to avoid membrane drying.
HOUSING	Vessel which holds a membrane module.
HYDRAULIC LOADING RATE	Rate at which water enters the reactor.

© 2016 by **newterra**, ltd.
All rights reserved. No part of this document may be reproduced or transmitted in any form or by any means, electronic, mechanical, photocopying, recording, or otherwise, without prior written permission of **newterra** ltd.

newterra ltd.
1291 California Avenue, Brockville, ON K6V 5W3
(800) 420-4056 / www.newterra.com

HYDRAULIC RETENTION TIME (HRT)	The time required to displace the working volume of a bioreactor. HRT (d) = Bioreactor volume (L) / Feed flow rate (L/d).
INFILTRATION	Entry of water into a sewer system from sources other than infiltration – such as defective pipes, pipe joints, connections, or manhole walls.
INFLOW	Entry of water into a sewer system through such sources as defective pipes, pipe joints, connections, or manhole walls.
INPUTS / OUTPUTS	Inputs / Outputs refer to the direction of the electronic signal in reference to the PLC. They can be either digital or analog signals.
INTENSIVE / RECOVERY CLEAN	Cleaning with aggressive chemicals to recover membrane permeability.
IRREVERSIBLE / PERMANENT FOULING	Not removed by physical cleaning but removed by chemical cleaning.
LAND APPLICATION	Treatment or disposal of wastewater or wastewater solids by spending it on land under controlled conditions.
LEVEL SWITCH	Level switches are placed in tanks to indicate water level.
MICROORGANISMS	Microscopic organisms, either plant or animal, invisible or barely visible to the naked eye. Examples: algae, bacteria, fungi, protozoa, and viruses.
MAINTENANCE CLEANING	Cleaning with less aggressive chemicals to maintain membrane permeability.
MEMBRANE	A porous synthetic material which acts as a highly efficient barrier or filter in the range of molecular dimensions – allowing passage of ions, water and other solvents, and very small molecules – but most impermeable to macromolecules. Membrane classes include – MF (microfiltration), UF (ultrafiltration), NF (nanofiltration), RO (reverse osmosis).

© 2016 by **newterra**, ltd.
All rights reserved. No part of this document may be reproduced or transmitted in any form or by any means, electronic, mechanical, photocopying, recording, or otherwise, without prior written permission of **newterra** ltd.

MEMBRANE BIOREACTOR	A biological wastewater treatment system that uses a membrane to separate water from biomass.
MEMBRANE CONFIGURATION	In membrane separation technology, configuration of a membrane product describes its construction or membrane spatial arrangement. Basic membrane configurations include hollow fiber, spiral, tubular, and flat-sheet.
MEMBRANE PACKING DENSITY	Membrane area per unit volume.
MEMBRANE TANK / BASIN	Tank/basin wherein membrane cassettes are placed.
MESOPHILIC	Thriving at intermediate temperatures: 20 to 45 ^{0}C (15 ^{0}C optimum).
MESOPORE	Pore with diameter between 2 and 50 µm.
METHANOGENS	Microorganisms producing methane as a metabolic byproduct.
MICROFILTRATION (MF)	A process using a membrane class to separate relatively large particles – 0.1 to 3 µm in diameter, with relatively low applied pressures. In crossflow microfiltration system, feed solution flows perpendicular to the filter surface.
MIXED LIQUOR SUSPENDED SOLIDS (MLSS, mg/L))	A measure of the quantity of suspended solids in the aeration tank of an activated sludge treatment system.
MIXED LIQUOR VOLATILE SUSPENDED SOLIDS (MLVSS, mg/L)	The portion of MLSS that vaporizes when heated to 550°C (1022° F).
MODULE (membrane)	Smallest practical unit containing one or more membranes and supporting structures.

© 2016 by **newterra**, ltd.
All rights reserved. No part of this document may be reproduced or transmitted in any form or by any means, electronic, mechanical, photocopying, recording, or otherwise, without prior written permission of **newterra** ltd.

newterra ltd.
1291 California Avenue, Brockville, ON K6V 5W3
(800) 420-4056 / www.newterra.com

NITRIFICATION	Biochemical oxidation of ammonia to nitrate.
NUTRIENTS	Any substance that is assimilated by organisms and promotes growth; generally applied to nitrogen and phosphorus in wastewater, but also applied to other essential and trace elements.
OPERATION AND MAINTENANCE (O&M)	Organized procedure for causing a piece of equipment or a treatment plant to perform its intended functions and for keeping the equipment or plant in such a condition that it is able to continually and reliably perform its intended function.
(ORGANIC) LOADING RATE	Rate at which (organic) matter is introduced into the reactor.
PERMEABLE	Porous to the passage or penetration by fluids.
PERMEABILITY	The ratio of the flux and transmembrane pressure at that flux (L/m^2 / h/ kPa or gfd/psi).
PERMEATE	Water or fluid which has passed through the membrane; also referred to as “filtrate”.
PERMEATE PUMP	Vacuum pump which draws permeate through the membrane, as in MBR.
PERMIT	A legal document issued by the government agency. In wastewater treatment, a discharge permit requires that the plant operator achieve specific water quality standards and discharge limits by a certain date, and also establishes monitoring and reporting requirements.
PLATE-AND-FRAME	Synonymous with “flat-sheet”.
PLUG FLOW	Flow in which no back-mixing or dispersion occurs along the length of the pipe or reactor.

© 2016 by **newterra**, ltd.
All rights reserved. No part of this document may be reproduced or transmitted in any form or by any means, electronic, mechanical, photocopying, recording, or otherwise, without prior written permission of **newterra** ltd.

POLLUTANT	A contaminant at high enough concentration to endanger the aquatic environment or public health.
PORE	An opening in a membrane or filter matrix.
POROUS	Ability of certain substances to pass fluids due to an open physical structure.
POROUS PLUGGING	Type of membrane fouling – due to pore blockage.
POROUS MEMBRANE	Membrane of low selectivity operating by physical straining alone.
PRETREATMENT	In membrane wastewater treatment systems, pretreatment is the initial processing of wastewater to prolong the life of a membrane system and to optimize membrane performance. Pretreatment includes screening, equalization, oil & grease removal, primary clarification, aeration to oxidize colloidal and dissolved organics in wastewater.
RECEIVING STREAM	A river, lake, ocean, or other water course into which wastewater or treated effluent is discharged.
RELAXATION	Ceasing permeation whilst continuing to scour the membrane with air bubbles.
RESISTANCE	Resistance to flow – proportional to flow rate-to-pressure ratio.
RETENTATE	Water or fluid which is rejected by the membrane – portion of the feed solution in UF and RO that does not pass through the membrane; also called “concentrate” or “reject”.
REVERSIBLE OR TEMPORARY FOULING	Gross solids attached to the membrane surface and which can be removed by physical cleaning relatively easily – such as backflushing or relaxation.

© 2016 by **newterra**, ltd.
All rights reserved. No part of this document may be reproduced or transmitted in any form or by any means, electronic, mechanical, photocopying, recording, or otherwise, without prior written permission of **newterra** ltd.

SANITARY SEWER	A sewerage system that carries only household and commercial wastewater / sewage.
SCALING	Buildup of precipitated salts on a surface – such as pipes, tanks, boiler tubes, membrane surface (in RO, UF) resulting in a physical or chemical change.
SECONDARY TREATMENT - CONVENTIONAL	Generally, a level of treatment that produces removal efficiencies of 85 percent for BOD and suspended solids – sometimes used interchangeably with the concept of biological wastewater treatment, where wastewater is mixed with air or oxygen and sludge to encourage the growth of bacteria that “eat” organic pollutants.
SEWER	An artificial, usually subterranean conduit, used to carry off sewage or wastewater.
SILT DENSITY INDEX (SDI)	A test used to measure the level of suspended solids in feed water (especially for RO). It is a measure of the tendency of water to foul a membrane, based on a timed flow through a membrane filter (0.45 µm), at a constant pressure, also known as “fouling index”.
SHEAR (STRESS)	Force applied to a body which tends to produce a change in its shape, but not its volume.
SIDE-STREAM	Stream outside the bioreactor.
STACK	Smallest practical unit containing one or more membranes and supporting structures.
SUBSTRATE	Surface or medium on which an organism grows or is attached.
SUPERNATANT	Liquid clarified by sedimentation.

© 2016 by **newterra**, ltd.
All rights reserved. No part of this document may be reproduced or transmitted in any form or by any means, electronic, mechanical, photocopying, recording, or otherwise, without prior written permission of **newterra** ltd.

SURFACE POROSITY	Percentage of the surface area occupied by the pores.
SUSPENDED SOLIDS	Solid pollutants that either float on the surface of, or are suspended in, wastewater.
SUSTAINABLE FLUX	Flux for which the TMP (transmembrane pressure) increases gradually at an acceptable rate, such that chemical cleaning is not necessary.
THERMOPHILIC	Thriving at relatively high temperatures (49- 57 ^{0}C (45 ^{0}C optimum).
TOTAL SOLIDS	Total dissolved and undissolved solids in water or wastewater.
TRANSMEMBRANE PRESSURE	Pressure difference from the feed side of the membrane to the permeate side.
TURBIDITY	A suspension of fine particles in water that obscure the light rays and cause cloudiness and will not readily settle due to small particle size. Measure of the clarity of an otherwise clean liquid – cloudy or hazy appearance in a naturally clear liquid. Typically, turbidity of the MBR permeate is less than 1 N.T.U.
TURBIDITY UNITS	Measurement of relative ability of a solution to allow a light beam to pass through it; usual units are N.T.U. (Nephelometric Turbidity Units).
ULTRAFILTER	A mechanical unit used in the membrane separation process.
ULTRAFILTRATE	A synonym for UF “permeate”.

© 2016 by **newterra**, ltd.
All rights reserved. No part of this document may be reproduced or transmitted in any form or by any means, electronic, mechanical, photocopying, recording, or otherwise, without prior written permission of **newterra** ltd.

ULTRAFILTRATION (UF)	Membrane separation process based on size exclusion. UF operates in the molecular weight cut-off (MWCO) range from 1,000 MWCO to 200,000 MWCO, or 0.002 µm to 0.1 µm. Emulsified oils, suspended solids, bacteria, and large molecules are rejected by UF membranes. Water and small molecules – dyes, surfactants, dissolved salts, and solvents pass through in the permeate.
VOLUMETRIC MASS TRANSFER COEFFICIENT	A combination of the overall liquid mass transfer coefficient and the specific area for mass transfer .The term measures the mass transfer of oxygen into the liquid via air bubbles.
WASTEWATER	Spent or used water from a community or industry that contains dissolved and/or suspended matter.
α or β FACTOR	Factors applied to correct biological aeration demand for dissolved and suspended solids content of biomass.

© 2016 by **newterra**, ltd.
All rights reserved. No part of this document may be reproduced or transmitted in any form or by any means, electronic, mechanical, photocopying, recording, or otherwise, without prior written permission of **newterra** ltd.

newterra ltd.
1291 California Avenue, Brockville, ON K6V 5W3
(800) 420-4056 / www.newterra.com

APPENDIX H

Biological Treatment & Monitoring Parameters

© 2016 by **newterra**, ltd.
All rights reserved. No part of this document may be reproduced or transmitted in any form or by any means, electronic, mechanical, photocopying, recording, or otherwise, without prior written permission of **newterra** ltd.

newterra ltd.
1291 California Avenue, Brockville, ON K6V 5W3
(800) 420-4056 / www.newterra.com

Biological Treatment and Monitoring Parameters

This section offers the introduction of some key terms for biological control and wastewater quality description. It is important that the operators become familiar with how these parameters are obtained and what each of these terms mean and how each relates to the MBR wastewater treatment process operation.

1. Removal of substrates in wastewater

Carbonaceous pollutants removal

The concept of carbonaceous pollutants treatment is very simple. The bacteria remove small organic carbon molecules by 'eating' them. As a result, the bacteria grow, and the wastewater is cleaned. Although there are many thousands of chemical reactions involved in the metabolism of a bacterium, three major processes that are relevant to the biological treatment of sewage are ingestion, respiration, and growth and division.

Some of organic carbons go along the pathway of catabolism or respiration and end up as carbon dioxide, and they are lost to the system. The remaining organic carbons follow the anabolism or growth pathway and end up in new biomass, and these carbons are therefore retained in the system. The purpose of respiration is also to provide the energy that is required for growth and for the maintenance of the bacterium.

These three processes of ingestion, respiration and growth are very highly coupled or meshed. No one process can go faster than the other. One implication of this is that, for instance, if you measure the respiration rate, you are indirectly also measuring the rate of growth and the rate of carbon ingestion.

Growth is the driver and rate-limiting step. Every bacterium has a genetically programmed maximum rate of growth that will be achieved under ideal conditions. As it grows, it withdraws carbon compounds from the internal pool in its cytoplasm. Carbon flows in from the mixed liquor in order to keep this pool topped up. At the same time, energy is used for biosynthesis and growth, and hence the catabolism pathways of respiration also withdraw carbon from the internal pool, and this also results in carbon being drawn in by ingestion.

The three processes correspond to the major processes that we shall see when we examine the operation of the treatment works in aeration basin. Ingestion, respiration and growth and division correspond to biodegradation, aeration requirement and biomass production respectively.

© 2016 by **newterra**, ltd.
All rights reserved. No part of this document may be reproduced or transmitted in any form or by any means, electronic, mechanical, photocopying, recording, or otherwise, without prior written permission of **newterra** ltd.

newterra ltd.
1291 California Avenue, Brockville, ON K6V 5W3
(800) 420-4056 / www.newterra.com

Whilst the concept is very simple, the control of the treatment process is very complex, because of the large number of variables that can affect it. Whilst the major substrate requirement is for carbon growth is also dependent on the intake of nitrogen and phosphorus. The optimum ratio of C:N:P in the mixed liquor is generally thought to be 100:5:1. Trace components, which include S, Na, Ca, Mg, K, and Fe are also required, and are available in abundance in domestic sewage. By contrast, the wastewater from brewing, pulp and paper, and food-processing industries can be deficient in nitrogen and phosphorus. Nutrients therefore need to be added to the mixed liquor to obtain maximum bacterial growth and to optimise carbonaceous treatment. From an operational point of view, lack or an insufficiency of a critical nutrient may result in incomplete treatment, because the bacteria are unable to grow optimally.

Growth can be inhibited, if oxygen concentration falls to very low levels in the aeration tank. This is because oxygen becomes limiting for respiration. Dissolved Oxygen (DO) is not limiting above concentrations of about 1.0 – 2.0 mg/L for bacteria in flocs and about 0.6 mg/L for dispersed bacteria. Below these critical concentrations, the respiration rate falls rapidly due to the unavailability of oxygen. Filamentous bacteria have a greater tolerance of low oxygen levels than floc bacteria. At DO concentrations below the critical concentration, filamentous bulking can occur, as their relative biomass increases.

Bacteria have a genetically determined viable temperature range. For most carbonaceous bacteria of the activated sludge, this is from about 0 to 35°C. However thermophyllic bacteria survive and grow between about 35°C and 60°C. In general, growth rate follows the rule of Arrhenius that chemical reactions double in rate for a 10°C increase in temperature. Thus as the temperature increases, the rate of growth, and hence requirement of oxygen for respiration, increases.

Toxic chemicals in the wastewater can enter the bacteria and inhibit one or more enzymes of the pathways involved in either anabolism or catabolism. If the catabolic reactions of respiration are affected, the rate of respiration and energy production is reduced and the rate of growth is therefore reduced. On the other hand, if the anabolic pathways of biosynthesis are inhibited, the rate of growth is reduced, and this is accompanied by a fall in the rate of respiration, as the requirement for energy is reduced. In the aeration tank, toxicity has the effect of reducing the rate at which organic carbon is degraded. This can be easily monitored by observing changes in the rate of respiration of the activated sludge.

Ammonia removal by nitrification

© 2016 by **newterra**, ltd.
All rights reserved. No part of this document may be reproduced or transmitted in any form or by any means, electronic, mechanical, photocopying, recording, or otherwise, without prior written permission of **newterra** ltd.

newterra ltd.
1291 California Avenue, Brockville, ON K6V 5W3
(800) 420-4056 / www.newterra.com

The ammonia (NH_4-N) removal is achieved by biological nitrification process. Biological nitrification is an aerobic process of conversion of ammonia to nitrite (NO_2-N) and then to nitrate (NO_3-N). Because of the low growth rate and poor cell yield of nitrifying bacteria, nitrification is generally a rate-limiting step in biological nitrogen removal process. The key requirement for nitrification to occur is that the net rate of accumulation of biomass (and hence the net rate of withdrawal of biomass from the system) is less than the growth rate of nitrifying bacteria. Long sludge retention time (SRT) used in MBR system ensures near complete nitrification with an effluent NH_4-N concentration of less than 1 mg/L (as long as influent wastewater characteristics stays within the design range).

Nitrification is affected by a number of environmental factors including pH, temperature, DO concentration, and toxicity. Nitrification is pH sensitive. A pH of 7.0 to 7.2 is normally used to maintain reasonable nitrification rates, with optimal rate occur at pH of 7.5 to 8.0. Alkalinity addition is required, if deficient, to maintain the proper operating pH range. Nitrifiers are much more sensitive to temperature than heterotrophic bacteria. To ensure sufficient nitrification, it is recommended that the MBR unit is operated at a temperature of greater than 15°C. Nitrification rate is also affected by DO level. Nitrifiers are strict aerobes, and thus the reaction rate is susceptible to inhibition at very low DO levels. A DO of 1 mg/L is considered as a minimum requirement to prevent any rate inhibition caused by insufficient DO level. No impact on nitrifiers growth rate is evident when the DO level is greater than 2 mg/L. Toxicity is typically not of concern for camp type wastewater, unless quat ammonia is being used as a disinfectant agent in the camp. Nitrification can easily be restored if non quat based disinfectant is being used.

Total nitrogen removal by nitrification/denitrification

Biological nitrification/denitrification is a two-step process. The first step is nitrification, which is conversion of NH_4-N to NO_3-N through the action of nitrifying bacteria. The second step is nitrate conversion (denitrification), which is carried out by facultative heterotrophic bacteria under anoxic conditions. In denitrification, nitrate serves as the electron acceptor in energy metabolism and is converted to various gaseous end products but principally molecular nitrogen, N_2, which is then stripped from the liquid stream.

Denitrification or reduction of nitrate to nitrogen gas under anoxic conditions depends on nitrate being produced in the nitrification process under aerobic conditions. For total nitrogen removal, first nitrification and then denitrification should occur efficiently to achieve the desired effluent quality. Denitrification releases nitrogen which escapes as an inert gas to the atmosphere while oxygen released stays dissolved in the liquid and thus reduces the overall oxygen requirement of the process. Denitrification also returns part of the alkalinity consumed during nitrification. Thus where feasible, denitrification can be incorporated to reduce energy cost and external alkalinity addition.

© 2016 by **newterra**, ltd.
All rights reserved. No part of this document may be reproduced or transmitted in any form or by any means, electronic, mechanical, photocopying, recording, or otherwise, without prior written permission of **newterra** ltd.

newterra ltd.
1291 California Avenue, Brockville, ON K6V 5W3
(800) 420-4056 / www.newterra.com

The heterotrophic bacteria that perform denitrification are typically less sensitive to inhibition from toxic chemicals compared to nitrifiers. However, toxicity is still a concern. Oxygen has been found to inhibit nitrate reduction by repressing the nitrate reduction enzyme, slowing the rate of nitrite reduction. A carbon source is also essential as electron donor for denitrification to take place. This source may be in the form of carbon internally available in sewage or artificially added (eg. as methanol). Typically, if influent BOD/TKN or COD/TKN is higher than 5 or 10, assuming COD/BOD ratio of 2, MBR treatment can meet stringent effluent total nitrogen requirement (i.e., < 5mg/L) without providing supplemental carbon.

Temperature has a significant influence on maximum growth rate of denitrifying population, and the maximum growth rate of denitrification roughly doubles for every 10°C increase in temperature between 5 and 25°C. The denitrification rate is strongly affected by the kinetic regime of the reactor. Plug-flow reactors and reactors in series will produce higher denitrification rates. This typically will happen when the availability of substrate limits the denitrification reaction. In contrast to nitrifying organisms, there has been less concern about pH influences on denitrification rates. Also, no significant effect on the denitrification rate has been reported for pH from 7.0 to 8.0.

Phosphorus removal

Phosphorus removal from wastewater can take place by biological or chemical methods. For each treatment method, the plant-layout and operation will be different and the consumption of energy and chemicals may be quite different.

The chemical phosphorus (P) removal relies on the transformation of soluble phosphorus to a particle form, which is then by solid-liquid separation processes, such as membrane separation. This reaction is deceptively simple and must be considered in light of the many competing reactions and their associated equilibrium constants and the effects of alkalinity, pH, trace elements found in wastewater. The overall chemical (usually lime, alum, iron and PAC) dose requirement for phosphorus removal depends on the phosphorus limit required in the permit and the design features of the treatment plant. An important operation parameter is the observed added chemical dose to the removed orthophosphate molar ratio for a plant. This parameter varies depending on the type of processes used for removing orthophosphate and particulate phosphate and the total phosphorus (TP) and orthophosphate residual required to attain permit limit. Dosages are generally established on the basis of bench-scale tests and occasionally by full-scale tests, especially if polymers are used. Typically, as the orthophosphate residuals decreased, the molar ratio of coagulant added to phosphorus removed increases.

In the biological phosphorus removal, the main actors are the polyphosphate accumulating organisms (PAOs) who take up large amounts of phosphorus from phosphates by exposing

© 2016 by **newterra**, ltd.
All rights reserved. No part of this document may be reproduced or transmitted in any form or by any means, electronic, mechanical, photocopying, recording, or otherwise, without prior written permission of **newterra** ltd.

newterra ltd.
1291 California Avenue, Brockville, ON K6V 5W3
(800) 420-4056 / www.newterra.com

them to alternating anaerobic and anoxic/aerobic conditions, and phosphorus is subsequently removed from the process as a result of sludge wasting.

2. Monitoring parameters

Biochemical Oxygen Demand (BOD)

One of the most commonly measured constituents of wastewater is the biochemical oxygen demand, or BOD. Wastewater is composed of a variety of inorganic and organic substances. Organic substances refer to molecules that are based on carbon and include fecal matter as well as detergents, soaps, fats, greases and food particles. These large organic molecules are easily decomposed by bacteria. However, oxygen is required for this process of breaking large molecules into smaller molecules and eventually into carbon dioxide and water. The amount of oxygen required for this process is known as the BOD. The Five-day BOD or BOD_5 is determined by incubating a sealed sample of wastewater for five days and measuring the loss of oxygen from the beginning to the end of the test.

The main focus of wastewater treatment plants is to reduce the BOD in the effluent discharged to natural waters. If effluent with high BOD levels is discharged into a stream or river, it will accelerate bacterial growth and consume the oxygen levels in the river. The oxygen may diminish to levels that are lethal for most fish and many aquatic insects.

Chemical Oxygen Demand (COD)

COD is the oxygen equivalent of organic material in wastewater that can be chemically oxidized using dichromate in an acid solution. COD does not differentiate between biologically available and inert organic matter, and it is a measure of the total quantity of oxygen required to oxidize all organic material into carbon dioxide and water. And, some inorganic substances that are oxidized by the dichromate will increase the apparent organic content of the wastewater sample. COD values are always greater than BOD values and overestimate the carbon that can be removed by the activated sludge, but COD measurements can be made in a few hours while BOD_5 measurements take five days.

Total Suspended Solids (TSS)

Wastewater usually contains large quantities of suspended solids that are organic and inorganic in nature. TSS is a laboratory measurement of the quantity of suspended solids present in wastewater, and it is determined by filtering a well-mixed sample through a weighed standard glass-fiber filter and the residue retained on the filter is dried to a constant weight at 103 to 105°C. The increase in weight of the filter represents the total suspended solids. TSS includes

© 2016 by **newterra**, ltd.
All rights reserved. No part of this document may be reproduced or transmitted in any form or by any means, electronic, mechanical, photocopying, recording, or otherwise, without prior written permission of **newterra** ltd.

the total suspended particulate matter, both inert and volatile, but does not include dissolved solids.

TSS is one of the two universally used effluent standards (along with BOD) by which the performance of treatment plants is judged for regulatory control purposes. As levels of TSS increase, a water body begins to lose its ability to support a diversity of aquatic life, because suspended solids can cause the increase of water temperature and decrease of dissolved oxygen and photosynthesis, and it also harm fish directly by clogging gills, reducing growth rates, and lowering resistance to disease.

Volatile Suspended Solids (VSS)

VSS is a measure of the volatile portion of the TSS (the volatile portion which burns off at 550°C). VSS is usually interpreted as an accurate estimate of the microbial or organic portion of TSS. VSS is determined from laboratory analysis of TSS samples.

Total Dissolved Solids (TDS)

TDS is a measurement of the total solids in the filtrate after filtering a wastewater sample.

Mixed Liquor Suspended Solids (MLSS)

MLSS is a measurement of the solids particulate matter (i.e., the TSS concentration) in a sample collected from the aeration or membrane tanks. The MLSS concentration result is used to determine when and how much sludge is to be wasted from the system. The initial target MLSS concentration is 10,000 mg/L.

Mixed Liquor Volatile Suspended Solids (MLVSS)

MLVSS is a measurement of the concentration of the volatile portion of the MLSS. MLVSS is interpreted as an approximate estimate of the microbial or organic portion of MLSS.

Turbidity

Turbidity is another indicator of the amount of material suspended in water, and it measures the amount of light that is scattered or absorbed. Photoelectric turbidimeters measure turbidity in nephelometric turbidity units (NTUs). Turbidity units are supposed to correspond to TSS concentrations, but this correlation is only approximate.

Nitrogen

© 2016 by **newterra**, ltd.
All rights reserved. No part of this document may be reproduced or transmitted in any form or by any means, electronic, mechanical, photocopying, recording, or otherwise, without prior written permission of **newterra** ltd.

newterra ltd.
1291 California Avenue, Brockville, ON K6V 5W3
(800) 420-4056 / www.newterra.com

Nitrogen compounds are of interest to wastewater treatment plant operators because of the importance of nitrogen in the life cycles of plants and animals. Nitrogen is a nutrient and occurs in many forms including ammonia, organic, nitrate and nitrite each of which may be tested for in a variety of ways. Raw domestic wastewater nitrogen is normally present in the organic nitrogen and ammonia forms, with small quantities of the nitrite and nitrate forms. Depending on the amount of nitrification which occurs within the plant, the effluent may contain either ammonia or nitrate nitrogen. Under normal circumstances, the nitrite form of nitrogen will not be present in large quantities due to its rapid oxidation or conversion to nitrate.

Ammonia nitrogen (NH_4-N) occurs partly in the form of ammonium ions (NH_4^+) and partly as ammonia (NH_3). Ammonia and organic forms of nitrogen are often measured as Total Kjeldahl Nitrogen (TKN). TKN is the sum of organic nitrogen, NH_3, and NH_4^+ in the chemical analysis of wastewater. Today, TKN or NH_4-N (NH_3 and NH_4^+) is a required parameter for regulatory reporting at many treatment plants, and as a means of monitoring plant operations, because the presence of large concentrations of ammonia in a stream or lake can create a large oxygen demand. This demand is caused by the conversion of ammonia to nitrate.

Nitrate can have serious health effects when it enters drinking water wells and is consumed. Nitrate and other forms of nitrogen can also have deleterious effects on the environment, especially in coastal areas where excess nitrogen stimulates the process known as eutrophication. For this reason, many alternative technologies have been designed to remove total nitrogen (TN), nitrate nitrogen (NO_3-N), nitrite nitrogen (NO_2-N) and TKN. These technologies use bacteria to convert ammonia and nitrate to gaseous nitrogen, N_2. In this form, nitrogen is inert and is released to the air.

Phosphorus

Both phosphorus and nitrogen are essential nutrients for the plants and animals that make up the aquatic food web. Since phosphorus is the nutrient in short supply in most fresh waters, even a modest increase in phosphorus can, under the right conditions, set off a whole chain of undesirable events in a stream including accelerated plant growth, algae blooms, low dissolved oxygen, and the death of certain fish, invertebrates, and other aquatic animals. Thus, there is presently much interest in controlling the amount of phosphorus compounds that enter surface waters from wastewater treatment plants.

The principal forms of phosphorus in wastewater are organically bound phosphorus, polyphosphates, and orthophosphates. Organically bound phosphorus originates from body and food waste and, upon biological decomposition of these solids, is converted to orthophosphates. Polyphosphates, which can be hydrolyzed to orthophosphates, are used in synthetic detergents, and used to contribute as much as one-half of the total phosphates in wastewater. Most household phosphate inputs now come from human waste and automatic dishwasher detergent.

© 2016 by **newterra**, ltd.
All rights reserved. No part of this document may be reproduced or transmitted in any form or by any means, electronic, mechanical, photocopying, recording, or otherwise, without prior written permission of **newterra** ltd.

newterra ltd.
1291 California Avenue, Brockville, ON K6V 5W3
(800) 420-4056 / www.newterra.com

Thus, the principal form of phosphorus in domestic wastewater is assumed to be orthophosphates, although the other forms may exist. Orthophosphates consist of the negative ions PO_4^{3-}, HPO_4^{2-}, and $H_2PO_4^{-}$. These may form chemical combinations with cations (positively charged ions).

The total phosphorus (TP) test measures all the forms of phosphorus in the wastewater sample. This is accomplished by first "digesting" (heating and acidifying) the sample to convert all the other forms to orthophosphate. Then the orthophosphate is measured by the ascorbic acid method. Because the sample is not filtered, the procedure measures both dissolved and suspended orthophosphate.

pH/Alkalinity

pH is a measure of the amount of free hydrogen ions in wastewater. Because pH is measured on a logarithmic scale, an increase of one unit indicates an increase of ten times the amount of hydrogen ions. The wastewater treatment bacteria operate most efficiently at a pH of 6.8-7.2 (somewhere around neutral). When the pH drops below 6.0 or rises above 8.5, activity drops off dramatically. As a result, under normal operating conditions, pH of the MBR contents should be in the range of 6.0 to 8.5. If the pH drifts too far out of this range then corrective action is required. A low pH must be increased as soon as possible by the addition of alkaline chemical. Extended aeration at low pH will cause severe membrane fouling as a result of poor biological activity. Measurements of pH can be obtained either in the field with a portable pH meter, or in the laboratory from samples collected by the operator.

Alkalinity is the capacity to neutralize acids, and the alkalinity in wastewater results from the presence of the hydroxides, carbonates and bicarbonates of elements such as calcium, magnesium, sodium, potassium, and ammonia. The alkalinity in wastewater helps to resist change in PH change. Sufficient alkalinity is very essential to the nitrification of wastewater.

Temperature

The biological activity within the MBR system is directly affected by the influent wastewater temperature and ambient temperature. Biological activity (i.e., the rate of removal of organic matter, nitrogen and phosphorus) decreases as the biomass temperature decreases. Membrane flux rate is also affected by temperature. In general, a warmer temperature improves system performance in terms of biological activity rate, and membrane flux rate up to a maximum at approximately 35˚C.

Dissolved Oxygen (DO)

© 2016 by **newterra**, ltd.
All rights reserved. No part of this document may be reproduced or transmitted in any form or by any means, electronic, mechanical, photocopying, recording, or otherwise, without prior written permission of **newterra** ltd.

newterra ltd.
1291 California Avenue, Brockville, ON K6V 5W3
(800) 420-4056 / www.newterra.com

The DO concentration in the aeration basin is measured with a DO meter/probe. The objective is to maintain a DO concentration of 1.0 – 2.0 mg/l at all times in the aeration tank.

Viscosity

The sludge viscosity is one parameter used to track the condition of the MBR sludge with system performance. Monitoring of viscosity testing may be required when treating certain type of industrial wastewaters.

Sludge Filterability

Sludge filterability is a key monitoring test to determine the condition of the MBR mixed liquor. Method for determining the sludge filterability is provided in Section 6.2.2.

Fats, Oil and Grease (FOG)

FOG includes the fats, oils, waxes and other related constituents found in wastewater, and is contributed to wastewater in butter, lard, margarine and vegetable fats and oils. FOG can coat and kill bacteria, causing the microorganisms to float out of the system, interfere with oxygen-transfer efficiency, and cause membrane fouling. If FOG is not removed from wastewater, it can interfere with the biological life in the surface waters and create unsightly films.

Bacterial Indicators

Another issue that must be addressed in wastewater treatment is the removal of pathogenic bacteria that can cause water-borne diseases. Wastewater operators need to be mindful of the potential contact with organisms that are responsible for typhoid, cholera, dysentery, and hepatitis.

Coliform bacteria are enteric bacteria. This means that they are found in the intestinal tract of warm-blooded animals, including humans. These bacteria, known as *E. coli* in humans, do not cause disease but are necessary for the digestion of food. The waterborne pathogens are also enteric bacteria and are part of the coliform family. Therefore, if coliform bacteria are present in the water, pathogens may also be present. The coliform bacteria live longer in water and are easier to detect by laboratory testing. This is the reason the coliform group has been chosen as the indicator organism for waterborne pathogens. If coliform bacteria are not present it is assumed there are no pathogens present either. The following are specific organisms that have been used as indicators of fecal contamination of wastewater.

Total Coliform: species of gram-negative rods that may ferment lactose with gas production at 35±0.5°C. The total coliform group includes four genera in the Enterobacteriaceae family. These are *Escherichia*, *Citrobacter, Enterobacter*, and *Klebsialla*. Of the group, the *Escherichia* genus (*E. coli* species) appears to be the most representative of fecal contamination.

© 2016 by **newterra**, ltd.
All rights reserved. No part of this document may be reproduced or transmitted in any form or by any means, electronic, mechanical, photocopying, recording, or otherwise, without prior written permission of **newterra** ltd.

newterra ltd.
1291 California Avenue, Brockville, ON K6V 5W3
(800) 420-4056 / www.newterra.com

Fecal Coliform: A fecal coliform bacteria group was established based on the ability to produce gas at an elevated incubation temperature (44.5±0.2°C for 24±2 h).

E. coli: The *E. coli* is one of the coliform bacteria populations and is more representative of fecal sources than other coliform genera.

Food to Microorganism Ratio (F:M)

Another important design parameter, the F:M ratio represents a ratio between the mass of food provided and the mass of microorganisms in the wastewater treatment system. The amount of food applied is estimated from the results of the BOD and COD tests. These oxygen demand tests provide a reliable approximation of the actual amount of food available to the microorganisms. The MLSS/MLVSS is a good approximation of the microorganism concentration in the sludge. The F:M ratio is, therefore, expressed in terms of kg BOD/(kg MLSS.d)/kg BOD/(kg MLVSS.d) or kg COD/(kg MLSS.d)/kg COD/(kg MLVSS.d).

© 2016 by **newterra**, ltd.
All rights reserved. No part of this document may be reproduced or transmitted in any form or by any means, electronic, mechanical, photocopying, recording, or otherwise, without prior written permission of **newterra** ltd.

newterra ltd.
1291 California Avenue, Brockville, ON K6V 5W3
(800) 420-4056 / www.newterra.com

APPENDIX I

Process and Chemicals Dosage Calculations

© 2016 by **newterra**, ltd.
All rights reserved. No part of this document may be reproduced or transmitted in any form or by any means, electronic, mechanical, photocopying, recording, or otherwise, without prior written permission of **newterra** ltd.

newterra ltd.
1291 California Avenue, Brockville, ON K6V 5W3
(800) 420-4056 / www.newterra.com

Process and Chemical Dosage Calculations

This section offers calculations for the membrane permeability, chemical dosing, monitoring parameters and excess sludge wasting.

Membrane Permeability

To check the effectiveness of a cleaning procedure, calculate the permeability of the membranes before / after the membrane cleaning.

Please refer to the example below:

Example: The permeate flowrate per module was recorded at 4,200 L/h at a membrane pressure of 0.06 bar. Membrane surface area per module (in case of MB3-3 module) is 315 m^2 . The membranes are operated on a 10 minute cycle, where permeate is withdrawn for 9 minutes followed by 1 minute of relaxation (no permeation). The temperature of the mixed liquor is 15 ºC.

1) Calculate instantaneous (gross) Flux (**J**), the quantity of wastewater passing through a unit area of membrane module per unit time (LMH or L/(m^2.h)). Flux is occasionally referred to as the permeate production or filtration velocity.

   a. Instantaneous (Gross) Flux:

$$J_{Inst} = \frac{\text{Flowrate}}{\text{Membrane Area}} = \frac{4200 L/h}{315 m^2} = 13.3 LMH$$

   b. Net Flux:

$$J_{Net} = \frac{\text{Flowrate}}{\text{Membrane Area}} \frac{PermeationTime}{CycleTime} = \frac{4200 L/h}{315 m^2} \frac{9\,\text{min}}{10\,\text{min}} = 12.0 LMH$$

   c. Temperature Corrected Flux:

$$J_{20^oC} = J_{Inst@15^oC} e^{\theta(20-T)} = 13.3 LMH * (2.718)^{0.0239*(20-15)} = 15.0 LMH$$

2) Calculate membrane permeability (**K**), the ratio of the flux and transmembrane pressure (TMP).

$$\text{K} = \frac{J_{20^oC}}{TMP} = \frac{15.0 LMH}{0.06 bar} = 250 LMH/bar$$

Note: this parameter has been incorporated on the touch screen and is being monitored via PLC on a continous basis

2016 by **newterra**, ltd.
All rights reserved. No part of this document may be reproduced or transmitted in any form or by any means, electronic, mechanical, photocopying, recording, or otherwise, without prior written permission of **newterra** ltd.

newterra ltd.
1291 California Avenue, Brockville, ON K6V 5W3
(800) 420-4056 / www.newterra.com

Chemical Dosing

To determine the quantity of a chemical required for dosing into the system, refer to the following calculation example.

Example: The aeration tank influent (domestic wastwater) flow rate is 5,000 L/h. The influent total phosphorus (TP) concentration is 10 mg/L, and effluent TP limit is 1 mg/L. The TP uptake through sludge production is 2.5 mg/L. The alum stock solution concentration is 48% by weight, and its density is 1310 kg/m^3. Calculate the alum dosage to aeration tank, Q_{Al}, for TP removal.

1) Determine the alum concentration needed for phosphorus removal in the aeration tank.

Table C.1: Molar ratio of Al (III) dose to phosphorus removed as a function of effluent TP concentration limit for domestic wastewater

Effluent TP limit (mg/L)	**Alum:Phosphorous** (mol/mol)
>= 1	1.0
0.1 - 1	2.0
0.05 – 0.1	2.5
< 0.05	3.5

- Select Al: P ratio = 1.0 mol/mol, because the effluent TP limit is 1 mg/L (See Table C.1)
- Determine the weight of Al required per unit weight of P:

$$\frac{Al}{P} = \frac{1.0 molAl/molP}{2 \times 26.98 g/mol / 666.5 g/mol} = 12.4 gAl/gP$$

- Calculate phosphorus required to be removed: 10 – 1 – 2.5 = 6.5 mg/L
- Determine the concentration of alum required, [Al], in the aeration tank:

$$[Al] = 12.4 gAl/gP \times 6.5 mg/L = 80.6 mg/L$$

2) Determine the amount of alum solution required per hour, Q_{Al}, which is the alum dosing pump flow rate:

$$Q_{Al} = \frac{5{,}000 L/h \times 80.6 mg/L}{48\% \times 1310 kg/m^3 \times 1{,}000 mg/g} = 0.64 L/h$$

2016 by **newterra**, ltd.
All rights reserved. No part of this document may be reproduced or transmitted in any form or by any means, electronic, mechanical, photocopying, recording, or otherwise, without prior written permission of **newterra** ltd.

newterra ltd.
1291 California Avenue, Brockville, ON K6V 5W3
(800) 420-4056 / www.newterra.com

Chemical Dosing with Dry Chemicals

To determine the quantity of dry chemical and water to use to make-up a chemical solution refer to the following two calculation examples:

Example: The alkalinity and pH in the system are to be maintained using soda ash (sodium carbonate). The solubility of soda ash is 22 %wt at 20 °C, and has a density of 2.54 g/cm^3. The chemical make-up tank can hold 300 L of solution. The soda ash is shipped in 25 kg bags. The influent flow rate is 100 m^3/d

1) Determine the amount of dry soda ash need to make-up a batch of soda ash solution:

- Use 20 %wt solution in order to more readily dissolve the soda ash
- Determine the density of the final solution:

$$\rho_{solution} = 0.2 * 2.54 g/cm^3 + (1-0.2) * 1.0 g/cm^3 = 1.31 g/cm^3$$

- Determine the mass of soda ash in 300 L of solution:

$$m_{Na_2CO_3} = 300L * 1.31 g/cm^3 * \frac{1000 cm^3/L}{1000 g/kg} * 0.2 kg_{Na2CO3}/kg_{Solution} = 78.6 kg$$

- Therefore 78.6 kg of soda ash are needed, or approximately 75 kg which is 3 X 25 kg bags.

2) Determine the amount of water to use to make-up the soda ash solution

- Determine the volume displaced by the soda ash:

$$V_{Na_2CO_3} = \frac{75kg}{2.54 g/cm^3} * \frac{1000 g/kg}{1000 cm^3/L} = 29.5L \text{ of elements}$$

- Determine the volume of water required:

$$V_{H_2O} = 300L - 29.5L = 270.5L$$

3) Determine the dosing rate to add 100 mg/L of alkalinity as $CaCO_3$ to the system.

- Determine the equivalent concentration as soda ash (Na_2CO_3):

$$[Alk]_{Na_2CO_3} = [Alk]_{CaCO_3} \frac{MM_{Na_2CO_3}}{MM_{CaCO_3}} = 100 mg/L \frac{106 mg/mmol}{100 mg/mmol} = 106 mg/L$$

2016 by **newterra**, ltd.
All rights reserved. No part of this document may be reproduced or transmitted in any form or by any means, electronic, mechanical, photocopying, recording, or otherwise, without prior written permission of **newterra** ltd.

newterra ltd.
1291 California Avenue, Brockville, ON K6V 5W3
(800) 420-4056 / www.newterra.com

- Determine the dosing rate of soda ash on a mass basis:

$$\dot{m}_{Na_2CO_3} = [Alk]_{Na_2CO_3} * Q_{\inf} = 106mg/L * 100m^3/d * \frac{1000L/m^3}{1000mg/g} = 10{,}600g/d$$

- Determine the dosing rate of soda ash solution on a volume basis:

$$Q_{Na_2CO_3} = \frac{\dot{m}_{Na_2CO_3}}{[Na_2CO_3]} = \frac{10{,}600g/d}{250g/L} = 42.4L/d$$

Example: A filter press is to be used to dewater sludge, and a polymer is to be used to flocculate the sludge. The polymer make-up concentration is to be 0.2% (2 g/L) and to be made up using dry polymer with a density of 0.8 g/mL. The polymer make-up tank has a capacity of 300 L. The flocculation tank has a capacity of 900 L. The wasted sludge has an MLSS concentration of 1% (10 g/L). The ratio of polymer to sludge should be 10 g/kg on a dry basis.

1) Determine the amount of dry polymer required to make up a batch of 0.2% polymer solution:

- Determine mass of dry polymer required

$$m_{DryPolymer} = [Polymer] * V_{PolymerSolution} = (2g/L) * (300L) = 600g$$

- Determine volume of dry polymer required

$$V_{DryPolymer} = \frac{m_{DryPolymer}}{\rho_{DryPolymer}} = \frac{600g}{0.8g/mL} = 750mL$$

- Therefore 750 mL of dry polymer, or 3 cups, are required to make-up a batch of 0.2% polymer solution.

2) Determine the dose of polymer solution required to flocculate a batch of sludge:

- Determine mass of solids to be flocculated on a dry basis

$$m_{DrySolids} = [MLSS] * V_{Sludge} = (10g/L) * (900L) = 9000g = 9kg$$

- Determine mass of polymer required to flocculate sludge on a dry basis

$$m_{DryPolymer} = Polymer:SolidsRatio * m_{DrySolids} = (10g/kg) * (9kg) = 90g$$

- Determine volume of polymer solution required to flocculate sludge

2016 by **newterra**, ltd.
All rights reserved. No part of this document may be reproduced or transmitted in any form or by any means, electronic, mechanical, photocopying, recording, or otherwise, without prior written permission of **newterra** ltd.

newterra ltd.
1291 California Avenue, Brockville, ON K6V 5W3
(800) 420-4056 / www.newterra.com

$$V_{PolymerSolution} = \frac{m_{DryPolymer}}{[Polymer]} = \frac{90g}{2g/L} = 45L$$

- Therefore 45 L of 0.2% polymer solution are required per batch to flocculate the 900 L of 1% sludge.

Monitoring Parameters

To determine the food to microorganism (F/M) ratio, BOD loading rate and solids retention time (SRT) refer to the following examples.

Example: The influent flow rate is 100 m^3/d with a BOD concentration of 400 mg/L (g/m3). The volume of the reactor (aeration tank and membrane tank) is 100 m^3 and contains mixed liquor with a suspended solids concentration of 10,000 mg/L and a MLVSS/MLSS ratio of 0.70. Excess sludge is wasted at a rate of 5 m^3/d

1) Determine the BOD loading:

$$BOD_{Loading} = \frac{[BOD]*Q_{\inf}}{V_{Reactor}} = \frac{(400g/m^3)*100m^3/d}{100m^3}$$

$$BOD_{Loading} = 400\frac{g}{m^3*d} = 0.4\frac{kg}{m^3*d}$$

2) Determine F/M ratio:

$$F/M = \frac{[BOD]*Q_{\inf}}{MLSS*\frac{MLVSS}{MLSS}V_{Reactor}} = \frac{(400g/m^3)*100m^3/d}{(10{,}000g/m^3)*(0.70)*(100m^3)}$$

$$F/M = 0.057\frac{kgBOD}{kgMLVSS*d}$$

3) Determine SRT:

$$SRT = \frac{V_{Reactor}}{Q_{WAS}} = \frac{100m^3}{5m^3/d}$$

$$SRT = 20d$$

2016 by **newterra**, ltd.
All rights reserved. No part of this document may be reproduced or transmitted in any form or by any means, electronic, mechanical, photocopying, recording, or otherwise, without prior written permission of **newterra** ltd.

Excess Sludge Wasting

Excess activated sludge is wasted periodically during the MBR operation. To determine the amount of excess sludge wasted, refer to the following calculation example.

Example: The measured MLSS concentration of activated sludge in aeration tank is 15,000 mg/L. Excess sludge has to be drained to keep its design concentration of 10,000 mg/L.The volume of aeration tank is 100 m^3. Calculate the volume of excess sludge (Vs) to be wasted.

$$V_s = \frac{(15{,}000 - 10{,}000)mg/L \times 100m^3 \times 1{,}000L/m^3}{15{,}000mg/L} = 33{,}333L$$

The operator can set the sludge wasting pump flowrate according to the above calculated volume.

2016 by **newterra**, ltd.
All rights reserved. No part of this document may be reproduced or transmitted in any form or by any means, electronic, mechanical, photocopying, recording, or otherwise, without prior written permission of **newterra** ltd.

newterra ltd.
1291 California Avenue, Brockville, ON K6V 5W3
(800) 420-4056 / www.newterra.com

Soda Ash Make-Up Instructions

1. Fill soda ash make-up tank approximately ¾ full of 20 °C water
    - MBR permeate may be used
2. Turn on mixer M-6101
3. Slowly add sodium carbonate to make up a 20%wt solution(Rule of thumb: 1 X 25 kg bag per 100 L)
    - This is based on 20 °C water. If water temperature is colder, the solubility will be lower.
    - Check between additions of each bag to ensure sodium carbonate is dissolving. If sodium carbonate is not dissolving, do not add any more.
4. Once fully dissolve, turn off mixer M-6101

Caution: This soda ash make-up process is exothermic (generates heat), and personal protective equipment for chemicals handling must be worn.

2016 by **newterra**, ltd.
All rights reserved. No part of this document may be reproduced or transmitted in any form or by any means, electronic, mechanical, photocopying, recording, or otherwise, without prior written permission of **newterra** ltd.

newterra ltd.
1291 California Avenue, Brockville, ON K6V 5W3
(800) 420-4056 / www.newterra.com

APPENDIX J

newterra MicroClear™ Membrane Clean Water Testing Sheet & Cleaning Log Sheet

© 2016 by **newterra**, ltd.
All rights reserved. No part of this document may be reproduced or transmitted in any form or by any means, electronic, mechanical, photocopying, recording, or otherwise, without prior written permission of **newterra** ltd.

newterra ltd.
1291 California Avenue, Brockville, ON K6V 5W3
(800) 420-4056 / www.newterra.com

newterra MicroClear™ MEMBRANE CLEAN WATER TESTING SHEET – MBR HYDRAULICS

Clean Water Test Information	
Date	
Performed By	
Observed By	

Plant Conditions	
Ambient Temperature	
Water Temperature	
Normal Operating Level	
Static Pressure at Normal Operating Level	

MEMBRANE TANK HYDRAULICS

Flux (LMH)	Flow Rate (Lpm)	TMP during steady flow (bar)	Permeability (LMH/bar)

© 2016 by **newterra**, ltd.
All rights reserved. No part of this document may be reproduced or transmitted in any form or by any means, electronic, mechanical, photocopying, recording, or otherwise, without prior written permission of **newterra** ltd.

newterra ltd.
1291 California Avenue, Brockville, ON K6V 5W3
(800) 420-4056 / www.newterra.com

newterra MicroClear™ MEMBRANE CLEANING LOG SHEET

Precautions have to be taken to handle membrane chemical cleaning.



Chemical cleaning is only to be carried out by qualified and trained personnel! Chemicals can lead to serious injuries. Always wear personal protective equipment (PPE) when handling chemicals! Obey the chemical safety handling procedure, as listed in the Material Safety Data Sheets.

Date	Type of Cleaning		Start time	Finish time	Sodium Hypochlorite (NaOCl)		Citric Acid ($C_6H_8O_7$)		Permeability * (LMH/bar)
	Maintenance (CEB)	Recovery (R)			Volume (L)	Conc. (mg/L)	Volume (L)	Conc. (mg/L)	

**Normal permeability after cleaning: 150 to 300 LMH/bar. Repeat the cleaning procedures if the normal permeability value is not attained.*

© 2016 by **newterra**, ltd.
All rights reserved. No part of this document may be reproduced or transmitted in any form or by any means, electronic, mechanical, photocopying, recording, or otherwise, without prior written permission of **newterra** ltd.

newterra ltd.
1291 California Avenue, Brockville, ON K6V 5W3
(800) 420-4056 / www.newterra.com

APPENDIX K

Control Narrative

© 2017 by **newterra**, ltd.
All rights reserved. No part of this document may be reproduced or transmitted in any form or by any means, electronic, mechanical, photocopying, recording, or otherwise, without prior written permission of **newterra** ltd.

1704432 - Agnico Eagle
System Control Narrative - Test Protocol

Revision	YYYY-MM-DD	Description	By
A	2017-05-25	Submittal	JJK
C	2017-05-11	As-Built	JJK

System Inputs

Module	Tag	Description	Input Type	HMI Display Units	Device Range and Units	Device Span/PLC Scale	Datalog (Y)	Trending (Y)	Notes	Input Verification
100	FIT-101	Flow Indicating Transmitter	Analog	GPM	0-760lpm	0-760lpm	Y	Y		
100	FQI-101	Flow Totalizer	Discrete N.O.	Pulse/Gal	1 liter/ Pulse					
100	LSHH-101	Level Switch High High	Discrete N.C.							
100	LSHH-102	Level Switch High High	Discrete N.C.							
100	LSHH-103	Level Switch High High	Discrete N.C.							
200	FIT-201	Flow Indicating Transmitter	Analog	GPM	0-760lpm	0-760lpm	Y	Y		
200	FQI-201	Flow Totalizer	Discrete N.O.	Pulse/Gal	1 liter/ Pulse					
200	LSHH-201	Level Switch High High	Discrete N.C.							
200	LSHH-202	Level Switch High High	Discrete N.C.							

System Inputs

Module	Tag	Description	Input Type	HMI Display Units	Device Range and Units	Device Span/PLC Scale	Datalog (Y)	Trending (Y)	Notes	Input Verification
200	LSHH-203	Level Switch High High	Discrete N.C.							
200	LSH-203	Level Switch High	Discrete N.C.							
200	LSL-203	Level Switch Low Low	Discrete N.O.							
300	LSHH-301	Level Switch High High	Discrete N.C.							
300	LT-301	Level Transmitter	Analog	%	0-10 ftWC	0-10 ftWC	Y	Y		
300	TT-301	Temperature Transmitter	Analog	°C	0-100c	0-100c	n	n	Added to System	
300	LSLL-301	Level Switch Low Low	Discrete N.O.						Must be above all immersion heaters in Tank	
300	PSL-301	Pressure Switch Low	Discrete N.C.		9-85"WC					

System Inputs

Module	Tag	Description	Input Type	HMI Display Units	Device Range and Units	Device Span/PLC Scale	Datalog (Y)	Trending (Y)	Notes	Input Verification
400	LSHH-401	Level Switch High High	Discrete N.C.							
400	TSL-401	Temperature Switch Low	Discrete N.C.							
400	LSLL-401	Level Switch Low Low	Discrete N.O.							
500	LSHH-501	Level Switch High High	Discrete N.C.							
500	LSLL-501	Level Switch Low Low	Discrete N.O.						Must be above all immersion heaters in Tank	
500	PH-501	pH Transmitter	Analog		0-14 pH		Y	Y		
500	DO-501	Dissolved Oxygen Transmitter	Modbus	ppm	0-10		Y	Y		
500	TT-501	Temperature Transmitter	Modbus	°C	0-100					
500	LT-501	Level Transmitter	Analog	%	0-10 ft		Y	Y		

System Inputs

Module	Tag	Description	Input Type	HMI Display Units	Device Range and Units	Device Span/PLC Scale	Datalog (Y)	Trending (Y)	Notes	Input Verification
500	PSL-501	Pressure Switch Low	Discrete N.C.		9-85"WC					
500	LSHH-502	Level Switch High High	Discrete N.C.							
500	LSLL-502	Level Switch Low Low	Discrete N.O.						Must be above all immersion heaters in Tank	
500	TSL-502	Temperature Switch Low	Discrete N.C.							
600	LSHH-601	Level Switch High High	Discrete N.C.							
600	LSH-601	Level Switch High	Discrete N.O.							
600	LSHH-602	Level Switch High High	Discrete N.C.							
600	LSH-602	Level Switch High	Discrete N.O.							
600	PSL-601	Pressure Switch Low	Discrete N.C.		9-85"WC					

System Inputs

Module	Tag	Description	Input Type	HMI Display Units	Device Range and Units	Device Span/PLC Scale	Datalog (Y)	Trending (Y)	Notes	Input Verification
600	PSL-602	Pressure Switch Low	Discrete N.C.		9-85"WC					
700	VT-701	Vacuum Transmitter	Analog	Bar	-1.0 - 1.0 Bar		Y	Y		
700	VT-702	Vacuum Transmitter	Analog	Bar	-1.0 - 1.0 Bar		Y	Y		
700	VFD-701	VFD Status	Communcation							
700	VFD-702	VFD Status	Communcation							
700	FIT-701	Flow Indicating Transmitter	Analog	GPM	0-300lpm		Y	Y		
700	FQI-701	Flow Totalizer	Discrete N.O.	Pulse/Gal	1liter / Pulse					
700	FIT-702	Flow Indicating Transmitter	Analog	GPM	0-300lpm		Y	Y		
700	FQI-702	Flow Totalizer	Discrete N.O.	Pulse/Gal	1liter / Pulse					

System Inputs

Module	Tag	Description	Input Type	HMI Display Units	Device Range and Units	Device Span/PLC Scale	Datalog (Y)	Trending (Y)	Notes	Input Verification
800	LSH-801	Level Switch High	Discrete N.C.							
800	LSL-801	Level Switch Low Low	Discrete N.O.							
900	LSHH-901	Level Switch High High	Discrete N.C.							
7900	PSL-7911	Pressure Switch Low	Discrete N.O.		0.4 - 1.6"WC				Proof of Continuous Ventilation.	
7900	LSHH-7911	Level Switch High High	Discrete N.C.							
7900	TSLL-7911	Temperature Switch Low Low	Discrete N.C.	°F	-30-100 °F					

System Inputs

Module	Tag	Description	Input Type	HMI Display Units	Device Range and Units	Device Span/PLC Scale	Datalog (Y)	Trending (Y)	Notes	Input Verification
7900	TSLL-7914	Temperature Switch Low Low	Discrete N.C.	°F	-30-100 °F					
7900	TSLL-7916	Temperature Switch Low Low	Discrete N.C.	°F	-30-100 °F					
7900	LSHH-7961	Level Switch High High	Discrete N.C.							
7900	LSHH-7962	Level Switch High High	Discrete N.C.							
7900	ES-7911	Emergency Stop - Building	Discrete N.C.							
7900	ES-7941	Emergency Stop - Building	Discrete N.C.							
7900	ES-7961	Emergency Stop - Building	Discrete N.C.							
500	VFD-501 Status									
500	VFD-502 Status									
500	VFD-501 Alarm									
500	VFD-502 Alarm									
700	VFD701 Alarm									
700	VFD702 Alarm									

System Inputs

Module	Tag	Description	Input Type	HMI Display Units	Device Range and Units	Device Span/PLC Scale	Datalog (Y)	Trending (Y)	Notes	Input Verification

System Setpoints

Module	Tag	Description	Factory Setpoint	Setpoint Range and Units	Setpoint Change Control	Alarm setpoint (Y/N)	Notes	Setoint Verification
100	FTAH-101-SP	Flow Transmitter Alarm High Setpoint	75	0-200 GPM	Open	Y		
200	FTAH-201-SP	Flow Transmitter Alarm High Setpoint	75	0-200 GPM	Open	Y		
300	LTL-301-SP	Level Transmitter Low Setpoint	10%	0-100%	Open			
300	LTHFLUX-301-SP	High Flux Level Setting	50%	0-100%			Puts the MBR Permeate pumps into High Flux Mode	
300	LTH-301-SP	Level Transmitter High Setpoint	80%	50-100%	Open			
500	LTL-501-SP	Level Transmitter Low Setpoint	70%	0-100%	Open			
500	LTH-501-SP	Level Transmitter High Setpoint	80%	0-100%	Open			

System Setpoints

Module	Tag	Description	Factory Setpoint	Setpoint Range and Units	Setpoint Change Control	Alarm setpoint (Y/N)	Notes	Setoint Verification
500	LT501-SLUDGE-SP	Waste Level for P-503	75%	0-100%	Open			
500	LT501-PERM-SP	Level Control for Permeate Pumps	75%	0-100%	Open		If Level drops below, permeate pumps will stop	
500	P503 WASTE HOUR	When P-503 will waste	12pm	0-23				
500	P503 WASTE SP	Time that P-503 wastes for	10min	0-99				
500	PH-501-SP	pH Normal Setpoint	7 pH	6-8pH	Open			
500	PHAH-501-SP	pH Alarm High Setpoint	8 pH	7 - 14 pH	Open	Y		
500	PHAL-501-SP	pH Alarm Low Setpoint	6 pH	0-7 pH	Open	Y		
500	DO-501-SP	Dissolved Oxygen Normal Setpoint	2 ppm	0-6 ppm	Open			
500	B500 I SP	Integral Gain setting DO PID Loop	10s	0-99				
500	B500 P SP	Proportional Gain setting DO PID Loop	100%	0-99				

System Setpoints

Module	Tag	Description	Factory Setpoint	Setpoint Range and Units	Setpoint Change Control	Alarm setpoint (Y/N)	Notes	Setoint Verification
500	B501 MAN SP	Manual Speed B-501	50%	0-100				
500	B502 MAN SP	Manual Speed B-502	50%	0-100				
500	DOAL-501-SP	Dissolved Oxygen Alarm Low Setpoint	0.5 ppm	0-6 ppm	Open	Y		
500	ALUM DOSE	Alum Dose setting (xGal per Pulse)	10 Gallons	0-99 Gallons	Open		Setpoint controls a single pulse of Alum P-6101 dosing.	
500	MICROC DOSE	Micro C Dose setting (xGal per Pulse)	10 Gallons	0-99 Gallons	Open		Setpoint controls a single pulse of Alum P-6101 dosing.	
500	TALL-501-SP	Temperature Alarm Low Low	10 deg C	5 - 25 deg C	Password	Y		
500	TTL-501-SP	Temperature Transmitter Low Setpoint	15 deg C	5-25 deg C	Open			
500	PAL-501-SP	Pressure Alarm Low Setpoint	28"WC (1PSIG)		On Device	Y		
500	TALL-502-SP	Temperature Alarm Low Low	10 deg C	5 - 25 deg C	Password	Y		

System Setpoints

Module	Tag	Description	Factory Setpoint	Setpoint Range and Units	Setpoint Change Control	Alarm setpoint (Y/N)	Notes	Setoint Verification
700	VT-701-SP	MBR-1 Vac Mode Permeate Setpoint	-0.1 bar	-0.2 - 0 bar	Open			
700	VT-701-HFSP	MBR-1 Vac Mode Permeate High Flux Setpoint	-0.15 bar	-0.2 - 0 bar	Open			
700	VTAH-701-SP	MBR-1 Vacuum Transmitter Alarm High	-0.3 bar	-0.3 - 0 bar	Open	Y		
700	VT-702-SP	MBR-2 Vac Mode Permeate Setpoint	-0.1 bar	-0.2 - 0 bar	Open			
700	VT-702-HFSP	MBR-2 Vac Mode Permeate High Flux Setpoint	-0.15 bar	-0.2 - 0 bar	Open			
700	VTAH-702-SP	MBR-2 Vacuum Transmitter Alarm High	-0.3 bar	-0.3 - 0 bar	Open	Y		
700	FT-701-SP	MBR-1 Flow Mode Permeate Setpoint	60 GPM	0-200	Open			
700	FT-701-HFSP	MBR-1 Flow Mode Permeate High Flux Setpoint	75%	0-200	Open			
700	FTAH-701-SP	MBR-1 Flow Transmitter Alarm High Setpoint	100	0-200	Open	Y		
700	FTAL-701-SP	MBR-1 Flow Transmitter Alarm Low Setpoint	10	0-200	Open	Y		

System Setpoints

Module	Tag	Description	Factory Setpoint	Setpoint Range and Units	Setpoint Change Control	Alarm setpoint (Y/N)	Notes	Setoint Verification
700	FT-702-SP	MBR-2 Flow Mode Permeate Setpoint	60 GPM	0-200	Open			
700	FT-702-HFSP	MBR-2 Flow Mode Permeate High Flux Setpoint	75GPM	0-200	Open			
700	FTAH-702-SP	MBR-2 Flow Transmitter Alarm High Setpoint	100	0-200	Open	Y		
700	FTAL-702-SP	MBR-2 Flow Transmitter Alarm Low Setpoint	10	0-200	Open	Y		
GLOBAL	BKWSH-TIME-SP	Backwash Time Setpoint	120s	0-999 s	Open			
GLOBAL	RELAX-SP	Number of Relaxes Before Backwash	6	0-999	Open			
GLOBAL	PERM-PULL-TIME	Permeate Pull Time	9m	0-30m	Open			
GLOBAL	RELAX-TIME	Membrane Relax Time	60s	0-999 s	Open			
GLOBAL	FLUX-SP	High Flux Setpoint	75%	50-100%	Open		Reading based on LT-301	

System Setpoints

Module	Tag	Description	Factory Setpoint	Setpoint Range and Units	Setpoint Change Control	Alarm setpoint (Y/N)	Notes	Setoint Verification
GLOBAL	SLUDGE-WASTE-TOD	Time of Day to Start Sludge Wasting	23hr	0-23 hr	Open			
GLOBAL	SLUDGE-WASTE-TIME	Duration of Sludge Wasting	60m	0-1000m	Open			

System Outputs and Modes of Operation

Module	Tag / Mode	Description	Control Logic	Alarm Interactions	Output Type	Hour Meter	Amp Meter	HOA Control	Output Verification	Logic Verification
		Start/Stop	The system will start when the start button is pressed on the HMI.							
		Start/Stop	The system will automatically restart after recovery from a power failure after a 30 second delay, unless the Start button is pressed first .							
		Start/Stop	To stop the system press the stop button on the HMI display.							
		Start/Stop	The system will shut down under some alarm conditions, see the modules below for these specific circumstances.							
		Start/Stop	All equipment will have to be put in “AUTO” in order to operate with the exception of heaters, auto-drain valves, building fans or self-governed equipment (such as screw compressors, air dryers, etc.).							
		Start/Stop	**Note:** when components are put in “HAND” mode the “AUTO” logic described below will be bypassed and the component will run regardless of inputs (unless the emergency stop button is activated). This is done for on-site testing and troubleshooting purposes. When a soft HOA switch (a software based toggle switch present in remote telemetry or HMI based systems) is used, a 2 minute safety timer is used on all components to prevent running them dry or excessive flooding due to operator error. Hand Timers can be Overridden by touching the pressing and holding the newterra watermark on the Control Bar. By enabling the override the user assumes responsibility for operating the system outside the control parameters set by newterra. While override is enabled all Hand timers and interlocks are ignored.							
N/A	N/A	HMI Datalogging	DO and pH will be logged and displayed on the HMI on the same plot.							
N/A	N/A	HMI Datalogging	Flux and Permeability data will be logged and displayed on the HMI on the same plot.							

System Outputs and Modes of Operation

Module	Tag / Mode	Description	Control Logic	Alarm Interactions	Output Type	Hour Meter	Amp Meter	HOA Control	Output Verification	Logic Verification
N/A	N/A	MBR-1 Enable	HMI will contain an MBR-1 Enable button. When selected, MBR-1 is enabled.							
N/A	N/A	MBR-2 Enable	HMI will contain an MBR-2 Enable button. When selected, MBR-2 is enabled.							
N/A	N/A	Flow Mode	HMI will contain a Flow Mode Enable button. When selected the permeate system will operate in Flow Mode.							
N/A	N/A	Vac Mode	HMI will contain a Vac Mode Enable button. When selected the permeate system will operate in Vac Mode.							
100	YC-101	Ready Contact	On when LSHH-101 / 102 / 103 and LSHH-201 / 202 and LSHH-203 are not ON	All LSHH's in the inlet area				HOA		
200	YC-201	Ready Contact	On when LSH-201 / 202 and LSHH-203 are not ON					HOA		
200	SCR-201	Inlet Screen	The inlet screen will be ON when influent flow is detected via flow transmitter FIT-201. The screen will run for 1 minute after influent flow has stopped via flow transmitter FIT-201. If the high high level switch LSHH-201 on the screen is ON then the inlet screen SCR-201 will be ON.		Discrete	Y		HOA		

System Outputs and Modes of Operation

Module	Tag / Mode	Description	Control Logic	Alarm Interactions	Output Type	Hour Meter	Amp Meter	HOA Control	Output Verification	Logic Verification
200	SCR-202	Inlet Screen	Same as SCR-201		Discrete	Y		HOA		
200	P-201	Screen Transfer Pump	The pump will be ON when the LSH-203 turn on as long as LT-301 < LTH-301-sp setpoint the pump will turn off when the LSL-201 turns off	LAHH-301	Discrete	Y		HOA		
200	P-202	Screen Transfer Pump	This pump runs duty standby with P-201 with a 5:1 rato	LAHH-301	Discrete	Y		HOA		
300	H-301	Tank Heater	On when TT-301 < 10C Off when TT-301 >15C	LALL-301	Discrete					
300	H-302	Tank Heater	Same as H-301	LALL-301	Discrete					
300	P-301	EQ Transfer Pump	The EQ pump will be ON when the EQ level transmitter LT-301 > LTL-301-SP and the aeration tank level transmitter LT-501 < LTH-501-SP The EQ pump will be OFF when the EQ level transmitter LT-301 < LTL-301-SP OR LSLL-301 = InActive OR the aeration tank level transmitter LT-501 > LTH-501-SP OR LSHH-401 is active Runs Duty with P-302 as Standby	Turns OFF LAHH-501 LAHH-401 LALL-301	Discrete	Y		HOA		
300	P-302	EQ Transfer Pump	This pump runs duty standby with P-201 with a 5:1 rato		Discrete	Y		HOA		
300	B-301	EQ Blower	The EQ blower will be ON when the System is in Run & LSLL-301 is active.		Discrete	Y		HOA		

System Outputs and Modes of Operation

Module	Tag / Mode	Description	Control Logic	Alarm Interactions	Output Type	Hour Meter	Amp Meter	HOA Control	Output Verification	Logic Verification
300	B-302	EQ Blower	Runs Duty standby with B-301 switching every 120 hours		Discrete	Y		HOA		
400	P-401	Pre-Anox Mixing Pump	The pump will be ON when the System is in Run & LSLL-401 is active.	LALL-401 PUMP IS OFF	Discrete	Y		HOA		
400	P-402	Pre-Anox Mixing Pump	Runs Duty standby with P-401 switching every 120 hours		Discrete	Y		HOA		
400	H-401	Tank Heater	On when TSL-401 is OFF	LALL-401	Discrete					
400	H-402	Tank Heater	On when TSL-401 is OFF	LALL-401	Discrete					
6100	P-6102	Alum Dosing Pump	Alum Dosing Pump P-6102 be ON when FIT-701 has reached a user adjustable volume of permeate via FT-701-DOSE setpoint. P-6102 will be ON for one pulse.		Discrete			HOA		
6100	P-6101	Caustic Dosing Pump	Caustic Dosing Pump P-6101 will be ON when PH-501 < PH-501-SP. The pump will be ON for 30s and OFF for 30s and will operate in pause mode		Discrete			HOA		
500	H-501	Tank Heater	On when TSL-501 is OFF	LALL-501	Discrete					

System Outputs and Modes of Operation

Module	Tag / Mode	Description	Control Logic	Alarm Interactions	Output Type	Hour Meter	Amp Meter	HOA Control	Output Verification	Logic Verification
500	H-502	Tank Heater	On when TSL-501 is OFF	LALL-501	Discrete					
500	P-503	Waste Activated Sludge Pump	The waste activated sludge pump will be ON at time of day setting SLUDGE-WASTE-TOD IF level switch LT501-SLUDGE-SP	LAHH-901: Pump will be OFF	Discrete			HOA		
500	H-503	Tank Heater	On when TSL-502 is OFF	LALL-502	Discrete					
500	H-504	Tank Heater	On when TSL-502 is OFF	LALL-502	Discrete					
500	P-501	Aeration Recirc Pump	The pump will run as long as LSLL-501 is Active	LALL-502: Pump will be OFF	Discrete	Y		HOA		
500	P-502	Aeration Recirc Pump	Runs Duty standby with p-501 switching every 120 hours		Discrete	Y		HOA		
500	B-501	Aeration Tank Aeration Blower	ON - Always Runs via PID loop to maintain DO-501-SP Runs Duty/Standby 120 hours with B-502.		Direct	Y		HOA		
500	B-502	Aeration Tank Aeration Blower	Runs via same logic as B-501. Runs Duty/Standby every 120 hours with B-501.		Direct	Y		HOA		

System Outputs and Modes of Operation

Module	Tag / Mode	Description	Control Logic	Alarm Interactions	Output Type	Hour Meter	Amp Meter	HOA Control	Output Verification	Logic Verification
550	P-553	Post Anox Mix Pump	The pump will run as long as LSLL-501 is Active	LALL-501: Pump will be OFF	Discrete	Y		HOA		
550	P-554	Post Anox Mix Pump	Runs Duty standby with p-501 switching every 120 hours		Discrete	Y		HOA		
6100	P-6103	Micro C Dosing Pump	Dosing Pump will be ON when FIT-701 or FT-702 has reached a user adjustable volume of permeate via DOSE setpoint.		Discrete			HOA		
550	P-551	Aeration Transfer Pump Feed to MBR-1	The aeration pump will feed MBR tank T-601. The pump will be ON when level transmitter LT-501 > LTL-501-SP and LSLL-501 = Active and LSLL-502 = Active and MBR-1 is Enabled. The aeration pump will be cycle ON/OFF when LT-501 < LTL-501-SP and be OFF if LSLL-501 = InActive OR LSLL-502 = InActive	LAHH-601: Pump will be OFF MBR-1 Disabled	Discrete	Y		HOA		
550	P-552	Aeration Transfer Pump Feed to MBR-2	The aeration pump will feed MBR tank T-602. The pump will be ON when level transmitter LT-501 > LTL-501-SP and LSLL-501 = Active and LSLL-502 = Active and MBR-2 is Enabled. The aeration pump will cycle ON/OFF when LT-501 < LTL-501-SP and be OFF if LSLL-501 = InActive OR LSLL-502 = InActive	LAHH-602: Pump will be OFF MBR-2 Disabled	Discrete	Y		HOA		
600	B-601	MBR Tank Blower	The membrane tank blower will be ON when the System is in Run. And the MBR 1 is enabled	MBR-1 Disabled	Discrete	Y		HOA		
600	B-602	MBR Tank Blower	The membrane tank blower will be ON when the System is in Run. And the MBR 2 is enabled	MBR-2 Disabled	Discrete	Y		HOA		

System Outputs and Modes of Operation

Module	Tag / Mode	Description	Control Logic	Alarm Interactions	Output Type	Hour Meter	Amp Meter	HOA Control	Output Verification	Logic Verification
700	P-701	Permeate Transfer Pump	The permeate pump will be ON when MBR-1 is Enabled & level switch LSH-601 = Active & LT-501 > LT501-PERM-SP The Pump will perform a PULL/RELAX Cycle. The pump will be ON for the duration specified by the PERM-PULL-TIME setpoint and then be OFF for the duration of the RELAX-TIME setpoint. This will generate one PULL/RELAX Cycle. The VFD Speed of the pump will operate based on the following: In FLOW MODE: The VFD Speed will operate based on a PID loop to maintain the flowrate setpoint FT-701-SP. IF the vacuum transmitter VT-701 > -0.25 bar then the pump will switch to VAC MODE. IF the level transmitter LT-301 > FLUX-SP, the pump will run via PID loop to maintain a high flow setpoint FT-701-HFSP In VAC MODE: The VFD Speed will operate based on a PID loop to maintain the vacuum setpoint VT-701-SP. IF the level transmitter LT-301 > FLUX-SP, the pump will run via PID loop to maintain a high flow setpoint VT-701-HFSP P-701 will be OFF if P-501 is OFF.	A-701: Pump Will b	Communication	Y		HOA		
700	P-702	Permeate Transfer Pump	The permeate pump will be ON when MBR-2 is Enabled & level switch LSH-602 = Active & & LT-501 > LT501-PERM-SP The Pump will perform a PULL/RELAX Cycle. The pump will be ON for the duration specified by the PERM-PULL-TIME setpoint and then be OFF for the duration of the RELAX-TIME setpoint. This will generate one PULL/RELAX Cycle. The VFD Speed of the pump will operate based on the following: In FLOW MODE: The VFD Speed will operate based on a PID loop to maintain the flowrate setpoint FT-702-SP. IF the vacuum transmitter VT-702 > -0.25 bar then the pump will switch to VAC MODE. IF the level transmitter LT-301 > FLUX-SP, the pump will run via PID loop to maintain a high flow setpoint FT-702-HFSP In VAC MODE: The VFD Speed will operate based on a PID loop to maintain the vacuum setpoint VT-702-SP. IF the level transmitter LT-301 > FLUX-SP, the pump will run via PID loop to maintain a high flow setpoint VT-702-HFSP P-702 will be OFF if P-502 is OFF.	A-703: Pump Will b	Communication	Y		HOA		
800	SV-801	Clean In Place Tank Fill Solenoid Valve	The Solenoid Valve SV-801 will be Open (Energized) when level switch LSH-801 is InActive and MBR-1 OR MBR-2 are not in Backwash. The Solenoid Valve SV-801will be Closed (De-Engergized) when LSH-801 is Active or IF MBR-1 OR MBR-2 are in Backwash.		Discrete			HOA		
700	MV-701	Backwash Actuated Valve	A Backwash is enabled once the permeate pumps for MBR-1 reach the number of PULL/RELAX cycles designated by the RELAX-SP on the HMI. the The actuated valve will be OPEN when MBR-1 is in Backwash and level switch LSH-801 is Active. If MBR-2 is already in backwash, MBR-1 will complete 1 additional PULL/RELAX Cycle before starting a Backwash Cycle.		Discrete			HOA		
700	MV-702	Backwash Actuated Valve	A Backwash is enabled once the permeate pumps for MBR-2 reach the number of PULL/RELAX cycles designated by the RELAX-SP on the HMI. the The actuated valve will be OPEN when MBR-2 is in Backwash and level switch LSH-801 is Active. If MBR-2 is already in backwash, MBR-1 will complete 1 additional PULL/RELAX Cycle before starting a Backwash Cycle.		Discrete			HOA		

System Outputs and Modes of Operation

Module	Tag / Mode	Description	Control Logic	Alarm Interactions	Output Type	Hour Meter	Amp Meter	HOA Control	Output Verification	Logic Verification
800	P-801	Backwash Transfer Pump	The backwash transfer pump will be ON when MBR-1 OR MBR-2 are in Backwash and level switch LSH-801 is Active The backwash transfer pump will be OFF after the duration of BKWSH-TIME-SP OR level switch LSL-801 becomes InActive.		Discrete			HOA		
7911	B-7911	Ventilation Blower	The continuous ventilation blower will always be ON. This blower is used as means to de-rate the screen building to a Class 1 Division 2 area. Air exchanges must be a minimum of 12 per hour,		Direct (not PLC controled)					
7901	HT-7911	Heat Trace	Always on internally controlled		Direct (not PLC controled)					
7901	HT-7912	Heat Trace	Always on internally controlled		Direct (not PLC controled)					
7901	HT-7913	Heat Trace	Always on internally controlled		Direct (not PLC controled)					
7901	H-7911	Building Heater	Always on internally controlled		Direct (not PLC controled)					
7901	H-7912	Building Heater	Always on internally controlled		Direct (not PLC controled)					
7904	B-7941	Aeration Exhaust Blower	On when B-501/502 is on OR B-601/602 is on		Discrete			Auto		
7904	H-7941	Building Heater	Always on internally controlled		Direct (not PLC controled)					
7906	H-7961	Building Heater	Always on internally controlled		Direct (not PLC controled)					

System Outputs and Modes of Operation

Module	Tag / Mode	Description	Control Logic	Alarm Interactions	Output Type	Hour Meter	Amp Meter	HOA Control	Output Verification	Logic Verification
7906	H-7962	Building Heater	Always on internally controlled		Direct (not PLC controled)					
7906	H-7963	Building Heater	Always on internally controlled		Direct (not PLC controled)					
7906	F-7963	Building Fan	Always on controlled by Wall Mount Termostat		Direct (not PLC controled)					

System Alarms

Module	Alarm	Alarm Description	Actuation Control	Delay	Email Notification (Y)	Self Resetting (Y)	System Shutdown (Y)	Notes	Alarm Verification
100	FTAH-101	Flow Transmitter Alarm High	FIT-101 > FTAH-101-SP	60s					
100	LAHH-101	Level Alarm High High	LSHH-101 = Active	5s		Y			
100	LAHH-102	Level Alarm High High	LSHH-102 = Active	5s		Y			
100	LAHH-103	Level Alarm High High	LSHH-103 = Active	5s		Y			
200	FTAH-201	Flow Transmitter Alarm High	FIT-201 > FTAL-201-SP	60s					
200	LAHH-201	Level Alarm High High	LSHH-201 = Active	5s		Y			
200	LAHH-202	Level Alarm High High	LSHH-202 = Active	5s		Y			
200	LAHH-203	Level Alarm High High	LSHH-203 = Active	5s		Y			

System Alarms

Module	Alarm	Alarm Description	Actuation Control	Delay	Email Notification (Y)	Self Resetting (Y)	System Shutdown (Y)	Notes	Alarm Verification
300	LAHH-301	Level Alarm High High	LSHH-301 = Active	5s		Y			
300	LALL-301	Level Alarm Low Low	LSLL-301 = Off	5s		Y			
400	LAHH-401	Level Alarm High High	LSHH-401 = Active	5s		Y			
400	LALL-401	Level Alarm Low Low	LSLL-401 = OFF	5s		Y			
500	LAHH-501	Level Alarm High High	LSHH-501 = Active	5s		Y			
500	LAHH-502	Level Alarm High High	LSHH-501 = Active	5s		Y			
500	PHAH-501	pH Alarm High	pH-501 > PHAH-501-SP	60s					
5800	PHAL-501	pH Alarm Low	pH-501 < PHAL-501-SP	60s					
500	DOAL-501	Dissolved Oxygen Alarm Low	DO-501 < DOAL-501-SP	15m					
500	DOALL-501	Dissolved Oxygen Alarm Low Low	DO-501 < DOAL-501-SP	4hrs					

System Alarms

Module	Alarm	Alarm Description	Actuation Control	Delay	Email Notification (Y)	Self Resetting (Y)	System Shutdown (Y)	Notes	Alarm Verification
500	TTAL-501	Low Temp TNK-501	TT-501<TTAL-501-SP						
500	PAL-501	Pressure Alarm Low	PSL-501 = InActive	5s		Y			
500	VFDA-501	VFD Fault							
500	VFDA-502	VFD Fault							
500	LALL-501	Low Low Level TNK-501	LSLL-501 = OFF						
500	LALL-502	Low Low Level TNK-502	LSLL-502 = OFF						
600	LAHH-601	Level Alarm High High	LSHH-601 = Active	5s		Y		Membrane Tank	
600	LAHH-602	Level Alarm High High	LSHH-602 = Active	5s		Y		Membrane Tank	
600	PAL-601	Pressure Alarm Low	PSL-601 = InActive	5s		Y		Membrane Blowers	

System Alarms

Module	Alarm	Alarm Description	Actuation Control	Delay	Email Notification (Y)	Self Resetting (Y)	System Shutdown (Y)	Notes	Alarm Verification
600	PAL-602	Pressure Alarm Low	PSL-602 = InActive	5s		Y		Membrane Blowers	
700	VTAH-701	Vacuum Transmitter Alarm High	VT-701 < VTAH-701-SP	5s		Y			
700	VTAH-702	Vacuum Transmitter Alarm High	VT-702 < VTAH-702-SP	5s		Y			
700	VFDA-701	VFD Fault							
700	VFDA-702	VFD Fault							
700	FTAH-701	Flow Transmitter Alarm High	FIT-701 > FTAH-701-SP	60s					
700	FTAL-701	Flow Transmitter Alarm Low	FIT-701 < FTAL-701-SP	60s					
700	FTAH-702	Flow Transmitter Alarm High	FIT-702 > FTAH-702-SP	60s					

System Alarms

Module	Alarm	Alarm Description	Actuation Control	Delay	Email Notification (Y)	Self Resetting (Y)	System Shutdown (Y)	Notes	Alarm Verification
700	FTAL-702	Flow Transmitter Alarm Low	FIT-702 < FTAL-702-SP	60s					
900	LAHH-901	Level Alarm High High	LSHH-901 = Active	5s		Y		Aerobic Digester Tank	
7910	PAL-7911	Pressure Alarm Low	PSL-7911 = InActive	5s		Y		Alarm indicates possible continuous ventilation failure, indicating risk that the room may become Class 1 Division 1 rated.	
7910	TALL-7911	Temperature Alarm Low Low	TSLL-7911 = Active	5s		Y			
7910	LAHH-7911	Level Alarm High High	LSHH-7911 = Active	Immediate					
7940	TALL-7941	Temperature Alarm Low Low	TSLL-7941 = Active	5s		Y			
7961	LAHH-7961	Level Alarm High High Sump	LSHH-7961 - OFF						
7960	TALL-7961	Low Low Temp Aalrm	LSLL-7961 = Active						

System Alarms

Module	Alarm	Alarm Description	Actuation Control	Delay	Email Notification (Y)	Self Resetting (Y)	System Shutdown (Y)	Notes	Alarm Verification
8200	ESA-8201	Emergency Stop Alarm	ESA-8201 = Active	Immediate		Y			
8200	PWR-FAIL	Power Failure		Immediate		Y			
8200	PLC FLT	PLC Fault Detected		Immediate		Y			
8200	PWR FLT	Phase Monitor Fault	JA-8201 = Active	Immediate		Y			

CONTAINER ENCLOSURES – CNTR SERIES

Application:

newterra Container Enclosures are a popular choice for housing large stationary systems. Containers are secure, cost effective and offer a wide range of options to customize appearance or functionality to suit customer requirements.

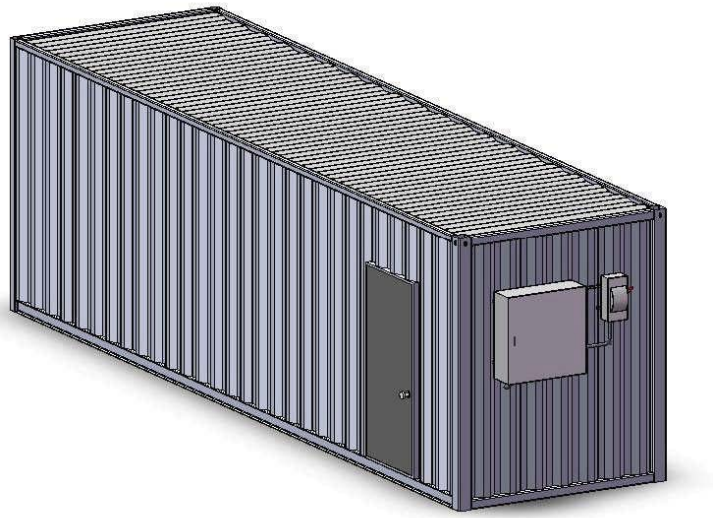

Constructions:

Heavy corrugated steel shell and steel beam structure with wood-plank flooring. Heavy steel double doors on one end are standard. Twenty-foot and forty-foot are standard length, but a custom length can be obtained by cutting one of the standard length units.

Standard Features:

- Painted exterior, plywood interior
- Waterproof sealed floor
- Double cargo doors on end (opening 89” H x 92” W); side door (32”)
- Lifting lugs at roof for crane lifting; lifting lugs at base for boom/crane lifting fork holes in base (20ft only)

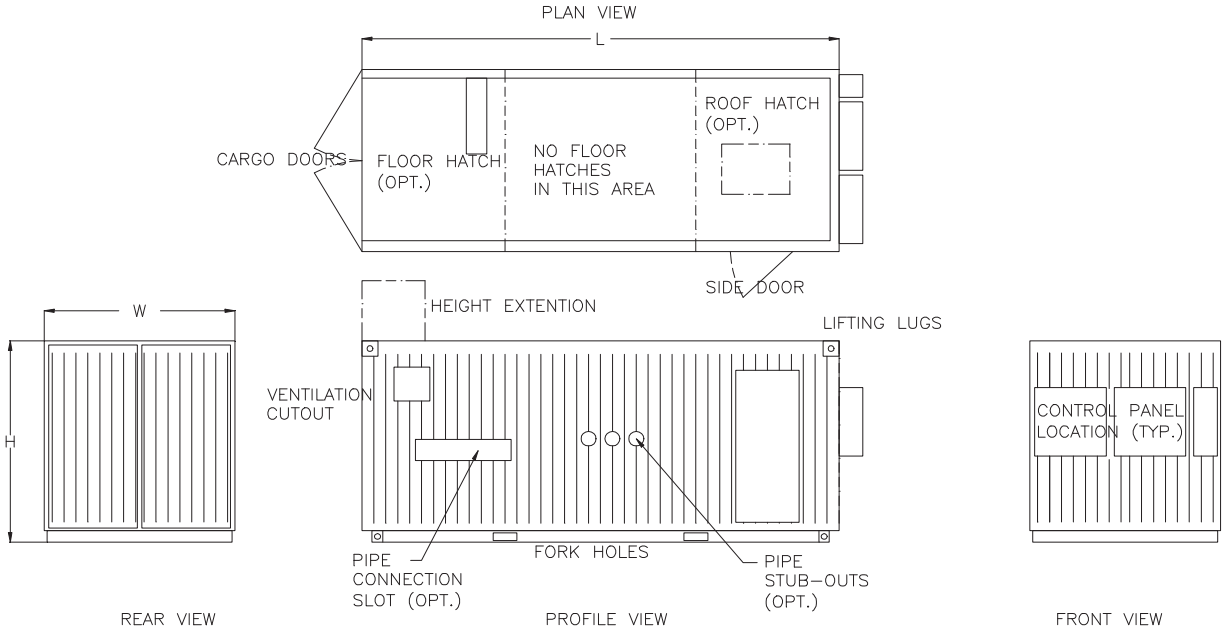

1325 California Avenue • P.O. Box 1517 • Brockville, ON • K6V 5Y6 • T: 800.420.4056 • F: 613.345.7633

Toronto • Brockville • Calgary • Montreal • Boston • Tampa • Macon • Seattle • Frankfurt newterra.com

newterra
smart technology. sustainable solutions.™

CONTAINER ENCLOSURES – CNTR SERIES

Dimension and Specification chart:

Part Number	Length	Width	Height	Weight Empty (lbs)	Std Cap. (lbs)	Interior Dimensions		
						Length	Width	Height
CNTR10	10’	8’	8’ 6”	3,000	9,000	9’ 8”	7’ 8”	7’ 10”
CNTR12	12’	8’	8’ 6”	3,800	10,800	11’ 8”	7’ 8”	7’ 10”
CNTR16	16’	8’	8’ 6”	4,500	14,400	15’ 5”	7’ 8”	7’ 10”
CNTR20	20’	8’	8’ 6”	5,000	18,000	19’ 4”	7’ 8”	7’ 10”
CNTR24	24’	8’	8’ 6”	5,800	21,600	22’ 4”	7’ 8”	7’ 10”
CNTR28	28’	8’	8’ 6”	6,400	25,200	27’ 4”	7’ 8”	7’ 10”
CNTR32	32’	8’	8’ 6”	7,200	28,800	31’ 4”	7’ 8”	7’ 10”
CNTR36	36’	8’	8’ 6”	8,000	32,400	35’ 4”	7’ 8”	7’ 10”
CNTR40	40’	8’	8’ 6”	8,800	36,000	39’ 4”	7’ 8”	7’ 10”

Options Table:

Option	Description
PE approval of structural drawings	Professional Engineer-stamped, wind-load hold-down documentation in compliance with local building code
Exterior Steel Siding	Industrial steel siding exterior
EPDM Roof	High-quality EPDM membrane roof
Process heat exchanger exhaust	Exhaust hatches can be inserted in wall to diffuse heat outside of building
Extra louver for added ventilation	For added ventilation and air circulation a louver can be installed into building wall
Sound Insulation	Layer of sound-insulation material built into walls blocks out operational noise
Rubber flooring	¾” thick rubber floor mats
Sump	2” sump in floor to detect flooding
Floor cutout	Floor hatch can be cutout to allow pipe entrance from underground
Roof extension or hatch	For tall equipment, roof extensions or hatches can be built into roof
Pipe stub outs	Pipe stub outs can be mounted on side of building
Pipe connection slot	Pipe-connection slot can be mounted on side of building
Ventilation Fan	Properly sized ventilation fan with thermostat
Heater	Properly sized heater with thermostat
Lighting	Proper lighting to allow for acceptable amount of light for work inside of the container
Thermal insulation	R7.2 insulation in walls and ceiling

MicroClear®

Technical Data Sheet **CASSETTE FILTER MCXL2** Article-No. 80200072

Completely welded filter cassette for the filtration of water. Typical applications:
Waste Water in membrane bioreactors, surface water. The cassette consists of:

- housing and header made of polypropylene (FDA approved)
- 23 active filter plates made of polypropylene (FDA approved)
- 2 protective plates made of polypropylene (FDA approved)
- laser welded membrane made of Polyethersulfone (KTW approved)

Parameter	Unit	Value
dimension of filter housing (incl. flange for aeration)	L x W x H cm	209 x 418 x 490
outlet diameter	mm	25
protective plates		2
number of active plates		23
total membrane surface area	m^2	8
possible flow[1] 2 chemical cleanings/year 1 chemical cleaning/year	l/m^2h	 30 15
max. flow	l/m^2h	50
membrane material[2]		PES/PVDF
pore size nom.[2]	µm	0.04-0.3
filtration pressure	bar	0.1-0.25
backflush pressure	bar	0.07-0.1
filter housing material		PP
weight	kg	approx. 11.5

[1] depending on wastewater characteristics
[2] membrane material selectable for specified applications or customers



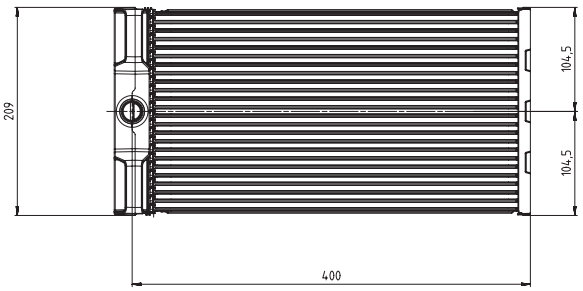

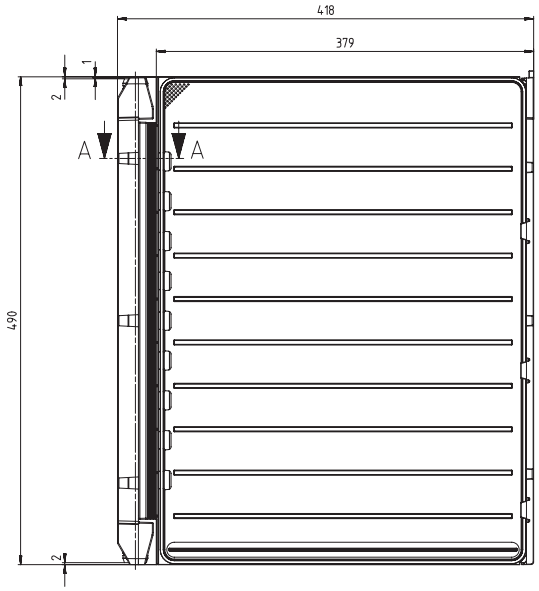

Revised: 13.01.2014
Design and specifications are subject to change without notice.

newterra gmbh
Steinbruchstrasse 8
35428 Langgoens
Germany

Tel +49 (0) 64 47 8 86 05 - 0
Fax +49 (0) 64 47 8 86 05 - 10
E-Mail info@microclear.de
Web www.microclear.de

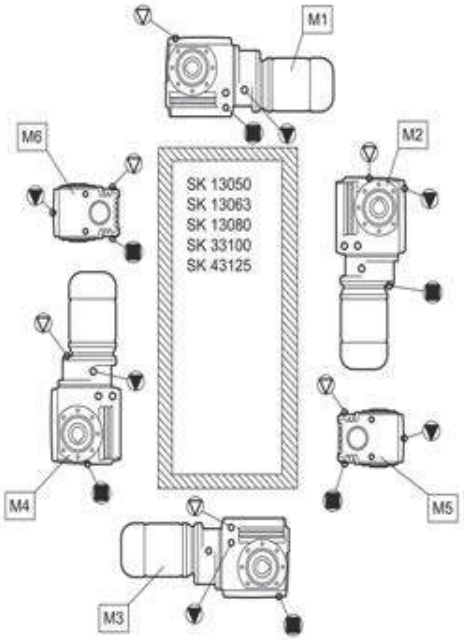
M1
M6
M2
SK 13050
SK 13063
SK 13080
SK 33100
SK 43125
M4
M5
M3

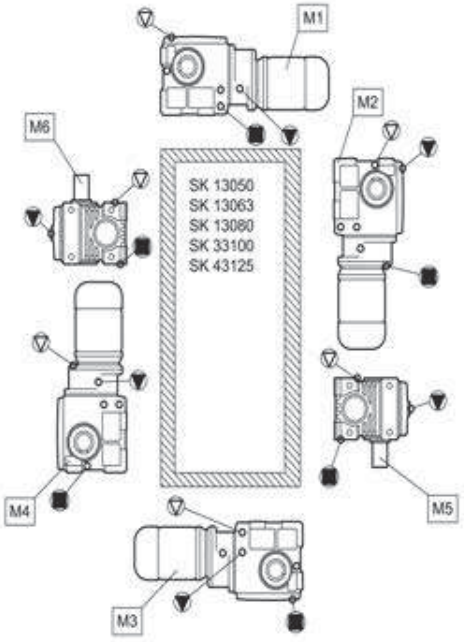
M1
M6
M2
SK 13050
SK 13063
SK 13080
SK 33100
SK 43125
M4
M5
M3

6.2 Lubricants

With the exception of type SK 11282, SK 11382, SK 12382 and SK 9096.1 gear units, all gear units are filled with lubricant ready for operation in the required installation position when delivered. This initial filling corresponds to a lubricant from the column for the ambient temperatures (normal version) in the lubricant table.

Roller bearing greases

This table shows comparable roller bearing greases from various manufacturers. The manufacturer can be changed for a given grease type. Getriebebau NORD must be contacted in case of change of grease type or ambient temperature range, as otherwise no warranty for the functionality of our gear units can be accepted.

Lubricant type	Ambient temperature	Castrol	FUCHS	KLÜBER LUBRICATION	Mobil	Shell
Mineral oil-based grease	-30 … 60 C	Tribol GR 100-2 PD	Renolit GP 2 Renolit LZR 2 H	-	Mobilux EP 2	Gadus S2 V100 2
	-50 … 40 C	Optitemp LG 2	Renolit WTF 2	-	-	-
Synthetic grease	-25 … 80 °C	Tribol GR 4747/220-2 HAT	Renolit HLT 2 Renolit LST 2	PETAMO GHY 133 N Klüberplex BEM 41-132	Mobiltemp SHC 32	
Biodegradable grease	-25 … 40 °C	-	Plantogel 2 S	Klüberbio M 72-82	Mobil SHC Grease 102 EAL	Naturelle Grease EP2

Table 5: Roller bearing greases

Lubricant table

This table shows comparable lubricants from various manufacturers. The manufacturer can be changed within a particular viscosity or lubricant type. Getriebebau NORD must be contacted in case of change of viscosity or lubricant type, as otherwise no warranty for the functionality of our gearboxes can be accepted.

Lubricant type	Details on type plate	DIN (ISO) / Ambient temperature	Castrol	FUCHS	KLÜBER	Mobil	Shell	TOTAL
Mineral oil	CLP 680	ISO VG 680 0...40 °C	Alpha EP 680 Alpha SP 680 Optigear BM 680 Optigear Synthetic 1100/680	Renolin CLP 680 Renolin CLP 680 Plus	Klüberoil GEM 1-680 N	Mobilgear 600 XP 680	Omala S2 G 680	Carter EP 680 Carter XEP 680
	CLP 220	ISO VG 220 -10…40 °C	Alpha EP 220 Alpha SP 220 Optigear BM 220 Optigear Synthetic 1100/220	Renolin CLP 220 Renolin CLP 220 Plus Renolin Gear 220 VCI	Klüberoil GEM 1-220 N	Mobilgear 600 XP 220	Omala S2 G 220	Carter EP 220 Carter XEP 220
	CLP 100	ISO VG 100 -15…25 °C	Alpha EP 100 Alpha SP 100 Optigear BM 100 Optigear Synthetic 1100/100	Renolin CLP 100 Renolin CLP 100 Plus	Klüberoil GEM 1-100 N	Mobilgear 600 XP 100	Omala S2 G 100	Carter EP 100
Synthetic oil (Polyglycol)	CLP PG 680	ISO VG 680 -20...40 °C	Alphasyn GS 680 Optigear Synthetic 800/680	Renolin PG 680	Klübersynth GH 6-680	Mobil Glygoyle 680	Omala S4 WE 680	Carter SY 680 Carter SG 680
	CLP PG 220	ISO VG 220 -25…80 °C	Alphasyn GS 220 Alphasyn PG 220 Optigear Synthetic 800/220	Renolin PG 220	Klübersynth GH 6-220	Mobil Glygoyle 220	Omala S4 WE 220	-
Synthetic oil (hydrocarbon)	CLP HC 460	ISO VG 460 -30…80 °C	Alphasyn EP 460 Optigear Synthetic PD 460	Renolin Unisyn CLP 460	Klübersynth GEM 4-460 N	Mobil SHC 634	Omala S4 GX 460	Carter SH 460
	CLP HC 220	ISO VG 220 -40…80 °C	Alphasyn EP 220 Optigear Synthetic PD 220	Renolin Unisyn CLP 220 Renolin Unisyn Gear VCI	Klübersynth GEM 4-220 N	Mobil SHC 630	Omala S4 GX 220	Carter SH 220
Bio-degradable oil	CLP E 680	ISO VG 680 -5…40 °C	-	Plantogear 680 S	-	-	-	-
	CLP E 220	ISO VG 220 -5…40 °C	Performance Bio GE 220 ESS Performance Bio GE 220 ESU	Plantogear 220 S	Klübersynth GEM 2-220	-	Naturelle Gear Fluid EP 220	-

Lubricant type	Details on type plate	DIN (ISO) / Ambient temperature	Castrol	FUCHS	KLÜBER LUBRICATION	Mobil	Shell	TOTAL
Food grade oil	CLP PG H1 680	ISO VG 680 -5…40 °C	Optileb GT 1800/680	Cassida Fluid WG 680	Klübersynth UH1 6-680	Mobil Glygoyle 680		-
	CLP PG H1 220	ISO VG 220 -25…40 °C	Optileb GT 1800/200	Cassida Fluid WG 220	Klübersynth UH1 6-220	Mobil Glygoyle 220		Nevastane SY 220
	CLP HC H1 680	ISO VG 680 -5…40 °C	Optileb GT 680	Cassida Fluid GL 680	Klüberoil 4 UH1-680 N	-		-
	CLP PG H1 220	ISO VG 220 -25…40 °C	Optileb GT 220	Cassida Fluid GL 220	Klüberoil 4 UH1-220 N	Mobil SHC Cibus 220		Nevastane XSH 220
Gear unit fluid grease		-25 … 60 °C	Tribol GR 100-00 PD Tribol GR 3020/1000-00 PD Spheerol EPL 00	Renolit Duraplex EP 00 Renolit LST 00	MICROLUBE GB 00 Klübersynth GE 46-1200	Mobil Chassis Grease LBZ Mobil Glygoyle Grease 00	Alvania EP(LF)2 -	Multis EP 00 Marson SY 00

Table 6: Lubricant table

6.3 Lubricant quantities

Information **Lubricants**

After changing the lubricant, and in particular after the initial filling, the oil level may change during the first few hours of operation, as the oil galleries and the hollow spaces only fill gradually during operation.

The oil level is still within the permissible tolerance.

If at the express request of the customer, an oil inspection glass is installed at an additional charge, we recommend that the customer corrects the oil level after an operating period of approx. 2 hours, so that when the gear unit is at a standstill and has cooled down, the oil level is visible in the inspection glass. Only then, is it possible to check the oil level by means of the inspection glass.

The filling quantities stated in the following tables are for guidance only. The precise quantities vary depending on the exact gear ratio. When filling, always observe the oil level screw hole as an indicator of the precise quantity of oil.

* Gear unit types SK 11282, SK 11382, SK 11382.1, SK 12382 and SK 9096.1 are normally supplied without oil.

6.4 Helical gear unit

[L]							[L]						
⇨ 6.1	M1	M2	M3	M4	M5	M6	⇨ 6.1	M1	M2	M3	M4	M5	M6
SK11E	0,25	0,50	0,65	0,50	0,40	0,40	SK11E F	0,30	0,50	0,50	0,45	0,40	0,40
SK21E	0,60	1,20	1,30	1,00	1,00	1,00	SK21E F	0,50	1,20	1,30	0,60	0,90	0,90
SK31E	1,10	2,00	2,20	1,70	1,50	1,50	SK31E F	0,90	1,80	1,65	1,30	1,25	1,25
SK41E	1,60	2,60	3,30	2,80	2,30	2,30	SK41E F	1,20	2,30	2,70	2,00	1,90	1,90
SK51E	1,80	3,50	4,10	4,00	3,80	3,80	SK51E F	1,80	3,50	4,10	3,00	3,80	3,80
[L]							[L]						
SK02	0,20	0,75	0,75	0,65	0,60	0,60	SK02 F	0,25	0,70	0,70	0,70	0,50	0,50
SK12	0,25	0,80	0,85	0,75	0,55	0,55	SK12 F	0,35	0,85	0,90	0,90	0,70	0,70
SK22	0,50	1,90	2,10	1,80	1,40	1,40	SK22 F	0,70	1,80	1,80	1,80	1,40	1,40
SK32	0,90	2,50	3,10	3,10	2,00	2,00	SK32 F	1,20	2,80	3,10	3,10	2,20	2,20
SK42	1,40	4,50	4,50	4,30	3,20	3,20	SK42 F	1,80	4,40	4,50	4,00	3,70	3,70
SK52	2,50	7,00	6,80	6,80	5,10	5,10	SK52 F	3,00	6,80	6,20	7,40	5,60	5,60
[L]							[L]						
SK62	6,50	15,00	13,00	16,00	15,00	15,00	SK62 F	7,00	15,00	14,00	18,50	16,00	16,00
SK72	10,00	23,00	18,00	26,00	23,00	23,00	SK72 F	10,00	23,00	18,50	28,00	23,00	23,00
SK82	14,00	35,00	27,00	44,00	32,00	32,00	SK82 F	15,00	37,00	29,00	45,00	34,50	34,50
SK92	25,00	73,00	47,00	76,00	52,00	52,00	SK92 F	26,00	73,00	47,00	78,00	52,00	52,00
SK102	36,00	79,00	66,00	102,00	71,00	71,00	SK102 F	40,00	81,00	66,00	104,00	72,00	72,00
[L]							[L]						
SK03	0,35	1,20	0,80	1,00	0,70	0,70	SK03 F	0,55	0,95	0,90	1,20	0,90	0,90
SK13	0,75	1,30	1,30	1,20	0,75	0,75	SK13 F	1,00	1,30	1,30	1,20	1,00	1,00
SK23	1,20	2,00	1,90	2,40	1,60	1,60	SK23 F	1,40	2,60	2,30	2,80	2,80	2,80
SK33N	1,75	3,00	3,40	4,00	2,30	2,30	SK33N F	2,20	3,00	3,40	4,20	2,30	2,30
SK43	3,00	5,60	5,20	6,60	3,60	3,60	SK43 F	3,50	5,70	5,00	6,10	4,10	4,10
SK53	4,50	8,70	7,70	8,70	6,00	6,00	SK53 F	5,20	8,40	7,00	8,90	6,70	6,70
[L]							[L]						
SK63	13,00	14,50	14,50	16,00	13,00	13,00	SK63 F	13,50	14,00	15,50	18,00	14,00	14,00
SK73	20,50	20,00	22,50	27,00	20,00	20,00	SK73 F	22,00	22,50	23,00	27,50	20,00	20,00
SK83	30,00	31,00	34,00	37,00	33,00	33,00	SK83 F	31,00	34,00	35,00	40,00	34,00	34,00
SK93	53,00	70,00	59,00	72,00	49,00	49,00	SK93 F	53,00	70,00	59,00	74,00	49,00	49,00
SK103	74,00	71,00	74,00	97,00	67,00	67,00	SK103 F	69,00	78,00	78,00	99,00	67,00	67,00

Table 7: Lubricant quantities for helical gear units

NORDBLOC

[L]							[L]						
⇨ 6.1	M1	M2	M3	M4	M5	M6	⇨ 6.1	M1	M2	M3	M4	M5	M6
SK072.1	0,16	0,32	0,21	0,23	0,18	0,20	SK072.1 F	0,16	0,32	0,21	0,23	0,18	0,20
SK172.1	0,27	0,59	0,42	0,45	0,32	0,39	SK172.1 F	0,27	0,59	0,42	0,45	0,32	0,39
SK372.1	0,45	1,05	0,75	1,00	0,60	0,65	SK372.1 F	0,45	1,05	0,75	1,00	0,60	0,65
SK572.1	0,75	1,90	1,50	2,00	1,10	1,15	SK572.1 F	0,75	1,90	1,50	2,00	1,10	1,15
SK672.1	1,10	2,60	2,15	2,70	1,55	1,65	SK672.1 F	1,10	2,60	2,15	2,70	1,55	1,65
SK772.1	1,30	3,80	2,40	3,20	1,60	2,50	SK772.1 F	1,30	3,80	2,40	3,30	1,70	2,40
SK872.1	2,90	7,80	4,60	6,40	2,50	4,00	SK872.1 F	3,20	7,50	5,10	6,70	2,60	4,30
SK972.1	4,50	12,00	7,50	11,50	4,20	7,50	SK972.1 F	4,50	12,50	8,00	12,50	4,50	7,70
SK772.1VL	2,00	3,80	2,40	3,20	1,60	2,50	SK772.1VL F	2,00	3,80	2,40	3,30	1,70	2,40
SK872.1VL	5,00	7,80	4,60	6,40	2,50	4,00	SK872.1VL F	5,00	7,50	5,10	6,70	2,60	4,30
SK972.1VL	8,50	12,00	7,50	11,50	4,20	7,50	SK972.1VL F	8,50	12,50	8,00	12,50	4,50	7,70
[L]							[L]						
SK373.1	0,45	1,05	0,75	1,00	0,60	0,65	SK373.1 F	0,45	1,05	0,75	1,00	0,60	0,65
SK573.1	0,75	1,90	1,50	2,00	1,10	1,15	SK573.1 F	0,75	1,90	1,50	2,00	1,10	1,15
SK673.1	1,10	2,60	2,15	2,70	1,55	1,65	SK673.1 F	1,10	2,60	2,15	2,70	1,55	1,65
SK773.1	2,30	3,80	3,30	3,20	2,40	3,10	SK773.1 F	2,00	3,50	3,20	2,90	2,30	3,00
SK873.1	4,20	7,80	5,90	6,40	4,10	5,90	SK873.1 F	4,10	7,60	6,90	6,60	5,00	6,60
SK973.1	7,50	12,00	10,50	11,50	7,50	10,50	SK973.1 F	7,40	12,20	11,10	11,60	8,00	10,90
SK773.1VL	2,30	3,80	3,30	3,20	2,40	3,10	SK773.1VL F	2,00	3,50	3,20	2,90	2,30	3,00
SK873.1VL	4,20	7,80	5,90	6,40	4,10	5,90	SK873.1VL F	4,10	7,60	6,90	6,60	5,00	6,60
SK973.1VL	7,50	12,00	10,50	11,50	7,50	10,50	SK973.1VL F	7,40	12,20	11,10	11,60	8,00	10,90
[L]													
SK071.1/071.1F	0,18	0,40	0,38	0,40	0,30	0,30							
SK171.1/171.1F	0,22	0,40	0,36	0,40	0,33	0,33							
SK371.1/371.1F	0,35	0,58	0,55	0,58	0,49	0,49							
SK571.1/571.1F	0,48	0,86	0,80	0,92	0,68	0,68							
SK771.1/771.1F	0,90	1,50	1,20	1,70	1,16	1,16							

Table 8: Lubricant quantities for NORDBLOC

NORDBLOC helical gear units

	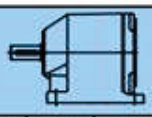							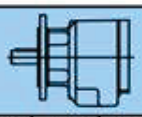					
[L]							[L]						
⇨ 6.1	M1	M2	M3	M4	M5	M6	⇨ 6.1	M1	M2	M3	M4	M5	M6
SK172	0,35	0,50	0,50	0,50	0,50	0,50	SK172 F	0,35	0,50	0,50	0,50	0,50	0,50
SK272	0,60	1,00	1,00	1,00	1,00	1,00	SK272 F	0,60	1,00	1,00	1,00	1,00	1,00
SK372	0,60	1,00	1,00	1,00	1,00	1,00	SK372 F	0,60	1,00	1,00	1,00	1,00	1,00
SK472	1,00	1,90	1,90	2,00	1,80	1,80	SK472 F	1,00	1,90	1,90	1,90	1,90	1,50
SK572	1,00	1,90	1,90	2,00	1,80	1,80	SK572 F	1,00	1,90	1,90	1,90	1,90	1,50
SK672	1,40	3,40	3,10	3,15	1,45	3,15	SK672 F	1,15	3,40	2,70	2,80	1,25	2,70
SK772	2,00	3,30	3,50	4,20	2,70	3,30	SK772 F	1,60	3,30	3,50	3,30	3,10	3,10
SK872	3,70	9,60	9,10	7,30	4,70	8,00	SK872 F	3,50	9,00	7,90	7,70	3,90	7,20
SK972	6,50	16,00	15,70	14,70	8,50	14,00	SK972 F	6,50	15,00	13,00	13,50	6,50	12,00
	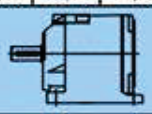							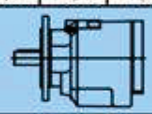					
[L]							[L]						
SK273	0,62	1,10	1,10	1,10	1,10	1,10	SK273 F	0,62	1,10	1,10	1,10	1,10	1,10
SK373	0,55	1,10	1,10	1,10	1,10	1,10	SK373 F	0,55	1,10	1,10	1,10	1,10	1,10
SK473	1,30	2,50	2,10	2,40	2,10	2,10	SK473 F	1,25	2,40	2,10	2,50	2,10	2,10
SK573	1,30	2,50	2,10	2,40	2,10	2,10	SK573 F	1,25	2,40	2,10	2,50	2,10	2,10
SK673	1,80	3,80	3,20	3,40	2,90	3,00	SK673 F	1,70	3,80	3,00	3,20	3,00	3,00
SK773	2,50	4,50	3,70	4,60	3,30	3,30	SK773 F	2,30	5,00	3,60	4,50	3,90	3,90
SK873	6,20	8,40	7,50	9,10	7,50	7,50	SK873 F	5,00	8,80	7,60	8,00	8,00	8,00
SK973	11,00	15,80	13,00	16,00	13,30	13,00	SK973 F	10,30	16,50	13,00	16,00	14,00	14,00

Table 9: Lubricant quantities for NORDBLOC helical gear units

Standard helical gear units

[L]							[L]						
⇨ 6.1	M1	M2	M3	M4	M5	M6	⇨ 6.1	M1	M2	M3	M4	M5	M6
SK20	0,55	1,00	0,55	1,00	0,55	0,55	SK20 F	0,35	0,60	0,35	0,60	0,35	0,35
SK0	0,13	0,22	0,13	0,22	0,13	0,13	SK0 F	0,13	0,22	0,13	0,22	0,13	0,13
SK01	0,22	0,38	0,22	0,38	0,22	0,22	SK01 F	0,22	0,38	0,22	0,38	0,22	0,22
SK25	0,50	1,00	0,50	1,00	0,50	0,50	SK25 F	0,50	1,00	0,50	1,00	0,50	0,50
SK33	1,00	1,60	1,00	1,60	1,00	1,00	SK33 F	1,00	1,50	1,00	1,50	1,00	1,00
SK30	0,90	1,30	0,90	1,30	0,90	0,90	SK30 F	0,70	1,10	0,70	1,10	0,70	0,70
SK300	1,20	2,00	1,20	2,00	1,20	1,20	SK300 F	1,25	1,50	1,20	1,80	1,30	0,95
SK330	1,80	2,80	1,80	2,80	1,80	1,80	SK330 F	1,60	2,50	1,60	2,90	1,90	1,40
SK200	0,80	1,30	0,80	1,30	0,80	0,80	SK200 F	0,65	0,95	0,70	1,10	0,80	0,50
SK010	0,38	0,60	0,38	0,60	0,38	0,38	SK010 F	0,35	0,65	0,40	0,74	0,50	0,30
SK250	1,20	1,50	1,20	1,50	1,20	1,20	SK250 F	0,90	1,40	1,00	1,60	1,30	0,80
SK000	0,24	0,40	0,24	0,41	0,24	0,24	SK000 F	0,24	0,41	0,24	0,41	0,24	0,24

Table 10: Lubricant quantities for standard helical gear units

Parallel shaft gear units

[L]							[L]						
⇨ 6.1	M1	M2	M3	M4	M5	M6	⇨ 6.1	M1	M2	M3	M4	M5	M6
SK0182NB A	0,40	0,55	0,55	0,40	0,40	0,40							
SK0282NB A	0,70	1,10	0,80	1,10	0,90	0,90							
							SK1382NB A	1,40	2,30	2,20	2,20	2,00	2,00
[L]							[L]						
SK1282 A	0,95	1,30	0,90	1,30	1,00	1,00	SK2382 A	2,30	2,70	2,10	3,20	2,00	2,00
SK2282 A	1,70	2,30	1,70	2,20	1,90	1,90	SK3382 A	3,80	4,30	3,00	5,50	3,00	3,00
SK3282 A	2,80	4,00	3,30	3,80	3,00	3,00	SK4382 A	6,10	6,90	4,90	8,40	5,00	5,00
SK4282 A	4,20	5,40	4,40	5,00	4,20	4,20	SK5382 A	12,50	12,00	6,70	14,00	8,30	8,30
SK5282 A	7,50	8,80	7,50	8,80	7,20	7,20	SK1382 A	1,45	1,60	1,15	1,70	1,10	1,10
[L]							[L]						
SK6282 A	17,00	15,50	12,50	17,50	11,00	14,00	SK6382 A	16,00	13,00	10,00	18,00	14,00	12,50
SK7282 A	25,50	21,00	20,50	27,00	16,00	21,00	SK7382 A	22,00	21,00	16,00	25,00	23,00	22,00
SK8282 A	37,50	33,00	30,50	44,00	31,00	31,00	SK8382 A	34,50	32,50	25,00	38,00	35,00	30,00
SK9282 A	74,50	70,00	56,00	80,00	65,00	59,00	SK9382 A	73,50	70,00	43,00	74,50	65,00	60,00
[L]							[L]						
SK10282 A	90	90	40	90	60	82	SK10382 A	85	90	73	100	80	80
SK11282 A	165	160	145	195	100	140	SK11382 A	160	155	140	210	155	135
							SK12382 A	160	155	140	210	155	135
							SK10382.1 A	76,0	80,0	71,0	92,5	71,5	66,5
							SK11382.1 A	127	133	118	194	124	112

* For further information see page 58

Table 11: Lubricant quantities for parallel shaft gear units

Bevel gear units

[L]							[L]						
⇨ 6.1	M1	M2	M3	M4	M5	M6	⇨ 6.1	M1	M2	M3	M4	M5	M6
SK92072	0,40	0,60	0,50	0,55	0,40	0,40	SK92072 A	0,40	0,60	0,55	0,55	0,40	0,40
SK92172	0,60	0,90	1,00	1,10	1,10	0,80	SK92172 A	0,50	1,00	0,90	1,05	0,90	0,60
SK92372	0,90	1,60	1,50	1,90	1,50	0,90	SK92372 A	1,20	1,60	1,50	1,90	1,30	1,30
SK92672	1,80	3,50	3,60	3,40	2,60	2,60	SK92672 A	1,60	2,80	2,50	3,30	2,40	2,40
SK92772	2,30	4,50	4,60	5,30	4,10	4,10	SK92772 A	2,80	4,40	4,50	5,50	3,50	3,50
[L]							[L]						
SK92072.1	0,26	0,49	0,42	0,54	0,29	0,31	SK93072.1	0,39	0,93	0,79	1,02	0,49	0,62
SK92172.1	0,34	0,61	0,52	0,67	0,42	0,48	SK93172.1	0,60	1,17	0,94	1,22	0,65	0,85
SK92372.1	0,43	0,92	0,73	0,83	0,55	0,61	SK93372.1	1,00	1,97	1,65	2,14	1,12	1,34
SK92672.1	0,85	1,60	1,20	1,50	1,02	1,02	SK93672.1	1,80	3,23	2,71	3,80	2,02	2,45
SK92772.1	1,30	2,65	1,86	2,45	1,60	1,60	SK93772.1	2,72	4,63	3,70	5,40	2,93	3,25
SK920072.1	0,21	0,47	0,36	0,34	0,28	0,28	SK930072.1	0,28	0,65	0,56	0,54	0,39	0,39
[L]							[L]						
SK9012.1	0,70	1,70	1,90	2,10	1,10	1,50	SK9012.1 A	1,00	1,90	1,90	2,20	1,20	1,70
SK9016.1	0,70	1,70	1,90	2,10	1,10	1,50	SK9016.1 A	1,00	1,90	1,90	2,20	1,20	1,70
SK9022.1	1,30	2,90	3,30	3,80	1,70	2,80	SK9022.1 A	1,60	3,50	3,50	4,20	2,30	2,80
SK9032.1	1,80	5,40	6,10	6,80	3,00	4,60	SK9032.1 A	2,10	4,80	6,40	7,10	3,30	5,10
SK9042.1	4,40	9,00	10,00	10,70	5,20	7,70	SK9042.1 A	4,50	10,00	10,00	11,50	6,50	8,20
SK9052.1	6,50	16,00	19,00	21,50	11,00	15,50	SK9052.1 A	7,50	16,50	20,00	23,50	11,50	18,00
SK9062.1	10,00	27,50	32,00	36,00	18,00	24,00	SK9062.1 A	12,00	27,50	33,00	38,50	19,00	26,00
SK9072.1	10,00	27,50	32,00	36,00	18,00	24,00	SK9072.1 A	12,00	27,50	33,00	38,50	19,00	26,00
SK9082.1	17,00	51,50	62,50	71,50	33,00	46,50	SK9082.1 A	21,00	54,00	66,00	80,00	38,00	52,00
SK9086.1	29,00	73,00	85,00	102,00	48,00	62,00	SK9086.1 A	36,00	78,00	91,00	107,00	53,00	76,00
SK9092.1	41,00	157,00	170,00	172,00	80,00	90,00	SK9092.1 A	40,00	130,00	154,00	175,00	82,00	91,00
SK9096.1	70,00	187,00	194,00	254,00	109,00	152,00	SK9096.1 A	80,00	187,00	193,00	257,00	113,00	156,00
[L]							[L]						
SK9013.1	1,35	2,10	2,15	2,75	1,00	1,80	SK9013.1 A	1,45	2,30	2,10	2,80	1,05	1,80
SK9017.1	1,30	2,00	2,10	2,70	1,00	1,70	SK9017.1 A	1,45	2,30	2,10	2,80	1,05	1,80
SK9023.1	2,20	3,20	3,60	4,70	2,20	2,90	SK9023.1 A	2,30	3,50	3,80	5,30	2,20	3,40
SK9033.1	3,10	5,70	6,30	8,00	3,40	4,80	SK9033.1 A	3,70	5,70	6,70	8,60	3,60	5,30
SK9043.1	5,00	10,10	11,00	13,30	5,70	8,10	SK9043.1 A	6,50	10,50	11,90	14,70	6,70	9,30
SK9053.1	10,00	17,00	20,00	24,50	11,50	16,50	SK9053.1 A	13,00	18,00	21,50	26,50	13,00	17,00

* For further information see page 58

Table 12: Lubricant quantities for bevel gear units

Helical worm gear units

[L]							[L]	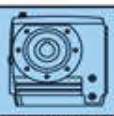					
⇨ 6.1	M1	M2	M3	M4	M5	M6		M1	M2	M3	M4	M5	M6
SK02040	0,40	0,80	0,75	0,65	0,50	0,50	SK02040 A	0,40	0,70	0,65	0,65	0,55	0,55
SK02050	0,40	1,40	1,10	1,30	0,70	0,70	SK02050 A	0,45	1,40	1,15	1,10	0,75	0,75
SK12063	0,60	1,80	1,20	1,60	1,00	1,00	SK12063 A	0,55	1,45	1,60	1,60	1,10	1,10
SK12080	0,90	3,10	2,40	3,00	1,80	1,80	SK12080 A	0,80	3,10	3,20	2,80	1,80	1,80
SK32100	1,50	6,30	5,60	5,50	3,60	3,60	SK32100 A	1,50	5,60	5,60	5,30	4,00	4,00
SK42125	2,80	11,80	10,20	10,00	6,20	6,20	SK42125 A	3,00	12,50	10,80	10,80	6,50	6,50
[L]	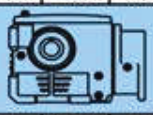						[L]	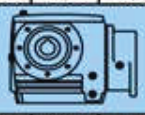					
SK13050	0,75	1,75	1,30	1,75	0,75	0,75	SK13050 A	0,90	1,80	1,30	1,65	1,30	1,30
SK13063	1,00	2,30	1,50	2,20	1,10	1,10	SK13063 A	1,05	2,10	1,80	2,10	1,40	1,40
SK13080	1,70	3,50	3,50	3,50	2,00	2,00	SK13080 A	1,60	3,60	2,90	3,75	2,00	2,00
SK33100	2,40	6,40	5,40	6,50	3,40	3,40	SK33100 A	2,60	6,00	5,80	6,00	3,50	3,50
SK43125	4,25	13,00	10,50	13,50	7,20	7,20	SK43125 A	4,60	13,60	11,40	14,30	7,60	7,60
[L]							[L]	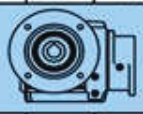					
SK02040 F	0,40	0,70	0,65	0,65	0,55	0,55							
SK02050 F	0,40	1,50	1,25	1,20	0,90	0,75	SK13050 F	0,75	1,80	1,50	1,70	1,05	0,90
SK12063 F	0,50	1,95	1,70	1,75	1,20	0,95	SK13063 F	1,00	2,30	1,90	2,20	1,35	1,10
SK12080 F	0,90	3,70	3,20	3,40	2,50	2,30	SK13080 F	1,60	3,80	3,50	3,90	2,70	2,50
SK32100 F	1,40	6,30	6,10	6,10	4,00	3,60	SK33100 F	2,65	7,20	6,40	7,60	4,30	3,80
SK42125 F	3,00	11,50	11,50	11,00	8,40	7,30	SK43125 F	4,70	15,00	13,00	16,00	9,00	7,70

Table 13: Lubricant quantities for Helical worm gear units

6.5 Torque values

Dimensions	Bolt Torques [Nm]					
	Screw connections in the strength classes			Cover screws	Threaded pin on coupling	Screw connections on protective covers
	8.8	10.9	12.9			
M4	3.2	5	6	-	-	-
M5	6.4	9	11	-	2	-
M6	11	16	19	-	-	6.4
M8	27	39	46	11	10	11
M10	53	78	91	11	17	27
M12	92	135	155	27	40	53
M16	230	335	390	35	-	92
M20	460	660	770	-	-	230
M24	790	1150	1300	80	-	460
M30	1600	2250	2650	170	-	-
M36	2780	3910	4710	-	-	1600
M42	4470	6290	7540	-	-	-
M48	6140	8640	16610	-	-	-
M56	9840	13850	24130	-	-	-
G½	-	-	-	75	-	-
G¾	-	-	-	110	-	-
G1	-	-	-	190	-	-
G1¼	-	-	-	240	-	-
G1½				300		-

Table 14: Torque values

Assembling the hose fittings

Oil the thread of the union nut, the cutting ring and the screw neck. Tighten the union nut with the wrench until the point where the union nut can only be turned with considerably more force. Turn the union nut of the screw fitting approx. 30° to 60° further but not more than 90°. For this the screw neck must be held with a wrench. Remove excess oil from the screw fitting

6.6 Troubleshooting

⚠ WARNING — **Injury to persons**

There is a slipping hazard in case of leaks.

Clean the soiled floor and machine components before starting troubleshooting.

⚠ WARNING — **Injury to persons**

Risk of injury due to rapidly rotating and hot machine components.

Troubleshooting must only be performed when gear units are at a standstill and have cooled down. The drive must be isolated and secured to prevent accidental start-up.

NOTICE — **Gear unit damage**

Damage to the gear unit is possible in case of faults.

Shut down the drive unit immediately in case of any faults in the gear unit.

Gear unit malfunctions		
Fault	**Possible cause**	**Remedy**
Unusual running noises, vibrations	Oil too low or bearing damage or gear wheel damage	Consult NORD Service
Oil escaping from the gear unit or motor	Defective seal	Consult NORD Service
Oil escaping from pressure vent	Incorrect oil level or incorrect, contaminated oil or unfavourable operating conditions	Oil change, use oil expansion tank (Option OA)
Gear unit becomes too hot	Unfavourable installation conditions or gear unit damage	Consult NORD Service
Shock when switching on, vibrations	Defective motor coupling or loose gear unit mounting or defective rubber element	Replace elastomer gear rim, tighten motor and gear unit fastening bolts, replace rubber element
Output shaft does not rotate although motor is running	Fracture in gear unit or defective motor coupling or shrink disc slippage	Consult NORD Service

Table 15: Overview of malfunctions

6.7 Leaks and seals

Gear units are filled with oil or grease to lubricate the moving parts. Seals prevent the escape of lubricants. A complete seal is not technically possible, as a certain film of moisture, for example on the radial shaft sealing rings is normal and advantageous for a long-term seal. In the region of vents, moisture due to oil may be visible due to the escape of oil mist because of the function. In the case of grease-lubricated labyrinth seals, e.g. Taconite sealing systems, used grease emerges from the sealing gap due to the principle of operation. This apparent leak is not a fault.

According to the test conditions as per DIN 3761, the leak is determined by the medium which is to be sealed, which in test bench tests exceeds the function-related moisture in a defined test period and which results in dripping of the medium which is to be sealed. The measured quantity which is then collected is designated as leakage.

Definition of leakage according to DIN 3761 and its appropriate use					
		Location of leak			
Term	**Explanation**	**Shaft sealing ring**	**in IEC adapter**	**Housing joint**	**Venting**
Sealed	No moisture apparent	No reason for complaint	No reason for complaint	No reason for complaint	No reason for complaint
Damp	Moisture film locally restricted (not an area)	No reason for complaint	No reason for complaint	No reason for complaint	No reason for complaint
Wet	Moisture film beyond the extent of the component	No reason for complaint	No reason for complaint	Repair if necessary	No reason for complaint
Measurable leakage	Recognisable stream, dripping	Repair recommended	Repair recommended	Repair recommended	Repair recommended
Temporary leakage	Temporary malfunction of the sealing system or oil leak due to transport *)	No reason for complaint	No reason for complaint	Repair if necessary	No reason for complaint
Apparent leakage	Apparent leakage, e.g. due to soiling, sealing systems which can be re-lubricated	No reason for complaint	No reason for complaint	No reason for complaint	No reason for complaint

Table 16: Definition of leaks according to DIN 3761

*) Previous experience has shown that moist or wet radial shaft sealing rings stop leaking later. Therefore, under no circumstances can replacement be recommended at this stage. The reason for momentary moisture may be e.g. small particles under the sealing lip.

6.8 Repair information

For enquiries to our technical and mechanical service departments, please have the precise gear unit type (type plate) and if necessary the order number (type plate) to hand.

6.8.1 Repairs

The device must be sent to the following address if it needs repairing:

Getriebebau NORD GmbH & Co. KG

Service Department

Getriebebau-Nord-Straße 1

22941 Bargteheide

No guarantee can be given for any attachments, such as encoders or external fans, if a gear unit or geared motor is sent for repair.

Please remove all non-original parts from the gear unit or geared motor.

Information **Reason for return**

If possible, the reason for returning the component or device should be stated. If necessary, at least one contact should be stated in case of queries.

This is important in order to keep repair times as short and efficient as possible.

6.8.2 Internet information

In addition, the country-specific operating and installation instructions in the available languages can be found on our Internet site: www.nord.com

6.9 Abbreviations

2D	Dust explosion protected gear units zone 21
2G	Explosion protected gear units with ignition protection class "c"
3D	Dust explosion protected gear units zone 22
ATEX	**AT**mospheres **EX**plosibles
B5	Flange fastening with through holes
B14	Flange fastening with threaded holes
CW	Clockwise, right-hand direction of rotation
CCW	Counter-clockwise, left-hand direction of rotation
°dH	Water hardness in German hardness degrees: 1°dH = 0.1783 mmol/l
DIN	German standards institute
EC	European Community
EN	European standard
FR	Radial transverse force
FA	Axial force
IE1	Motors with standard efficiency
IE2	Motors with high efficiency
IEC	International Electrotechnical Commission
NEMA	National Electrical Manufacturers Association
IP55	International Protection
ISO	International Standardisation Organisation
pH	pH value
PPE	Personal Protective Equipment
RL	Directive
VCI	Volatile Corrosion Inhibitor
WN	Getriebebau NORD factory standard

Key word index

A

Activating the vent 18
Address 68
Assembly 18

C

Coolant 34
Cooling cover 31
Correct use 9
Covers 27

D

Danger labels 8
Disposal of materials 11

F

Faults 66

G

Gear unit types 12
General overhaul 41
General safety information 10

H

Hose fitting 65

I

Inspection intervals 36
Installing the gear unit 20
Internet 68

L

Leakage 67
Long-term storage 16
Lubricant sensor 33
Lubricants 56

M

Maintenance 68
Maintenance intervals 36
Maintenance work
- Changing the oil 40
- Check for running noises 38
- Check the oil level 38
- Lubricant sensor 39
- Radial packing ring 41
- Re-greasing VL2, VL3 and IEC 39
- Standard vent plug 41
- Visual inspection 37

Motor weights for IEC adapters 28

O

Option H66 22

P

Painting the gear unit 32
Pulling devices 21
Push-on gear unit 22

R

Repairs 68
Roller bearing greases 55
Running-in time 35

S

Safety information 2
Service 68
Shrink disc 25
Standard motor 28
Storage 16

T

Tightening torques 65
Transport 15
Type plate 14



NORD DRIVESYSTEMS Group

Headquarters and Technology Center
in Bargteheide close to Hamburg, Germany

Innovative drive solutions
for more than 100 branches of industries

Mechanical products
Parallel shaft-, helical gear-, bevel gear- and worm gear units

Electrical products
IE2/IE3/IE4-Motors

Electronic products
Centralized and decentralized frequency inverters
and motor starters

7 state-of-the-art production plants
for all drive components

Subsidiaries in 36 countries on 5 continents
providing local stock, assembly, production,
technical support and customer service.

More than 3,200 employees around the world
providing application-specific solutions for our customers.

www.nord.com/locator

Headquarters:

Getriebebau NORD GmbH & Co. KG
Getriebebau-Nord-Straße 1
22941 Bargteheide, Germany
Fon +49 (0) 4532 / 289-0
Fax +49 (0) 4532 / 289-2253
info@nord.com, www.nord.com

Member of the NORD DRIVESYSTEMS Group

NORD
DRIVESYSTEMS

6052802 / 3816

TNK-101/2 - Tank, Closed Top, Cylindrical, 2100 gal, Norwesco - no drain, PN 40241
TNK-901 - Tank, Closed Top, Cylindrical, 2100 gal, Norwesco - no drain, PN 40241

NORWESCO®



Liquid Storage Tanks

Think Tanks. Think Norwesco.

2004 Edition

E-1348

NORWESCO

NORWESCO tanks are manufactured to strict quality guidelines to ensure years of high-performance use. Rugged, impact-resistant, one-piece seamless polyethylene construction makes our tanks suitable for the storage and/or transport of most liquid fertilizers, herbicides, insecticides and fungicides as well as a wide range of industrial chemicals. NORWESCO tanks are manufactured using resins that meet FDA specifications to ensure safe storage of potable water.

Quality, price, product line and leading edge technology make NORWESCO North America's largest manufacturer of rotationally molded tanks. Standard NORWESCO tanks will be delivered to you with a fitting installed when applicable. NORWESCO tanks may be ordered without a fitting as well.

Vertical Storage Tanks 2
Horizontal Leg Tanks 3
Drainable Leg Tanks 3
Elliptical Leg Tanks 3
Steel Supports & Accessories for Leg Tanks 4
Mini Bulk Tanks 5
Pickup Truck Tanks 5
PCO Tanks 5
Elliptical Tanks 6
Elliptical Tank Skids 6
Applicator Tanks 7
Inductor Tanks 7
Spot Sprayers 7
Applicator Saddle Assemblies 8
Inductor Stands 8
Cone Bottom Tanks 9
Polyethylene Cone Bottom Stands 10
Heavy Duty Cone Bottom Stands 10
Horizontal Box Tank 11
Sphere 11
Specialty Water Tanks 11
High Density Polyethylene Lids 12
Hinged Lid 12
Polyethylene Tank Repair Kits 12
Polypropylene Bulkhead Fittings 13
Polypropylene Bolted Fittings 14
Stainless Steel Bolted Fittings 14



Vertical Storage Tanks

Vertical storage tanks are most frequently used for bulk storage and mobile nursing applications. NORWESCO vertical tanks feature tie-down slots, built-in graduated gallon indicators, an offset fill-well and a self-vented, slosh-proof lid.

All NORWESCO vertical tanks are equipped with an outlet fitting and siphon tube.

Gallon Capacity	Diameter	Height	Fill Opening	Outlet/Drain Specification	Premium Weight Part No. White	Heavy Weight Part No. Blue
25 ∞	18"	29"	5"	¾"	41867	—
50 ∞	18"	53"	5"	¾"	41865	—
65 ∞	23"	42"	8"	1¼"	45192	—
75	23"	50"	8"	1¼"	41863	—
100	28"	43"	8"	1¼"	41861	
105	23"	63"	8"	2"	40803	—
150	30"	56"	8"	1¼"	41859	—
165	31"	55"	16"	2"	40281	—
200	30"	72"	8"	2"	41856	—
210	31"	69"	16"	2"	47401	—
250	30"	89"	8"	2"	41854	—
300	36"	78"	16"	2"	40213	—
305	46"	49"	16"	2"	40302	—
500	48"	72"	16"	2"	40148	40150
550	67"	42"	16"	2"	40023	—
750	48"	102"	16"	2"	40606	—
1000	64"	79"	16"	2"	40152	40154
1100	87"	51"	16"	2"	40070	40081
1350	71"	87"	16"	2"	40861	—
1500	64"	115"	16"	2"	40144	40146
1550	87"	65"	16"	2"	40235	40236
1700	87"	72"	16"	2"	40010	40012
2100	87"	87"	16"	2"	40178	40241
2100	102"	69"	16"	2"	41399	—
2500	95"	89"	16"	2"	40051	40052
3000	95"	107"	16"	2"	40754	40755
4000	102"	125"	16"	3"/2"	40312	—
4200	102"	131"	16"	2"	41403	—
5000	102"	152"	16"	3"/2"	40164	40166
5800	141"	97"	16"	3"/2"	40071	—
6000	102"	182"	16"	3"/2"	40226	40233
6100	120"	139"	16"	3"/2"	40659	40661
6500	120"	150"	16"	3"/2"	40224	40232
7800	120"	176"	16"	3"/2"	40663	40665
9000	141"	146"	16"	3"/2"	40543	40231
10000	141"	160"	16"	3"/2"	40545	40353
12000	141"	192"	16"	3" *	40539	40541
15000	141"	244"	16"	3" *	41334	41336

∞ Within UPS dimensional limits *316 Stainless Steel Bolted Fitting

PLEASE NOTE: Tank availability may vary according to manufacturing location. Please contact NORWESCO Customer Service or your NORWESCO distributor for specific details.
Tank dimensions and capacities may vary slightly and are subject to change without notice.

Horizontal Leg Tanks

With the broadest leg tank line available, NORWESCO manufactures a size that will fit your needs. Used primarily for transport and nursing applications, NORWESCO'S leg tanks feature molded-in legs that act as "baffles" to reduce sloshing. Please refer to page 4 for support bands.

Gallon Capacity	Diameter	Length	Fill Opening	Outlet/Drain Specification	No. of Bands	Premium Weight Part No. White	Heavy Weight Part No. Blue
35 ∞	20"	29"	5"	¾"	2 optional	45223	—
55 ∞	23"	33"	5"	¾"	2 optional	41873	—
65 ∞	23"	43"	5"	¾"	2 optional	45191	—
125	32"	41"	8"	2"	2 optional	40298	—
225	38"	49"	8"	2"	2 optional	40299	—
325	38"	68"	16"	2"	2 optional	40217	—
525	49"	71"	16"	2"	2 optional	40181	40193
725 *	49"	101"	16"	2"	3 required	40180	40194
1025 *	49"	139"	16"	2"	4 required	40089	40131
1325 *	66"	99"	16"	2"	4 required	41875	41877
5025 *	92"	190"	16" **	3"/2"	4 required	41879	41881

∞ Within UPS dimensional limits *Require full length support and bands **16" hinged lid



325 Gallon Horizontal Leg



1025 Gallon Horizontal Leg



Sloped For Complete Drainage **1010 Gallon Drainable Leg**

Drainable Leg Tanks

When complete drainage is necessary, these are the tanks of choice. They are designed primarily for use on fertilizer and chemical nurse trailers. All NORWESCO drainable tanks require full length bottom support as well as support bands. Please refer to page 4 for support bands.

Gallon Capacity	Width	Height	Length	Fill Opening	Outlet/Drain Specification	No. of Bands	Premium Weight Part No. White	Heavy Weight Part No. Blue
710 (horizontal)	47"	47"	104"	16"	2"	3 required	40655	40657
1010 (horizontal)	47"	47"	140"	16"	2"	4 required	40393	40395
1310 (horizontal)	66"	76"	99"	16"	—	4 required	41871	41872
1610 (elliptical)	69"	63"	140"	16"	—	4 required	40806	40808
2610 (elliptical)	90"	70"	140"	16"*	—	4 required	41382	41383
3210 (elliptical)	92"	74"	178"	16"*	—	4 required	40822	40824

*16" hinged lid

Elliptical Leg Tanks

This elliptical tank style is designed to provide the greatest capacity with the lowest center of gravity, making it the best design available for transporting larger volumes. NORWESCO elliptical tanks feature molded-in legs and flow-through baffles which work together to reduce sloshing and provide increased stability during transport. All NORWESCO elliptical leg tanks require full length bottom support as well as support bands. Please refer to page 4 for support bands.

Gallon Capacity	Width	Height	Length	Fill Opening	Outlet/Drain Specification	Premium Weight Part No. White	Heavy Weight Part No. Blue
1035	79"	53"	89"	16"	2"	40191	—
1235	65"	52"	128"	16"	2"	40239	—
1635	71"	57"	142"	16"	2"	40387	40388
2035	84"	55"	142"	16"	2"	40618	40623
2635	90"	71"	140"	16"	3"/2"	40547	40283
3135	88"	76"	151"	16"	3"/2"	40686	40688
4035	92"	77"	192"	16" *	3"/2"	41267	41269

*16" hinged lid



2035 Gallon Elliptical Leg

PLEASE NOTE: Tank availability may vary according to manufacturing location. Please contact NORWESCO Customer Service or your NORWESCO distributor for specific details.
Tank dimensions and capacities may vary slightly and are subject to change without notice.

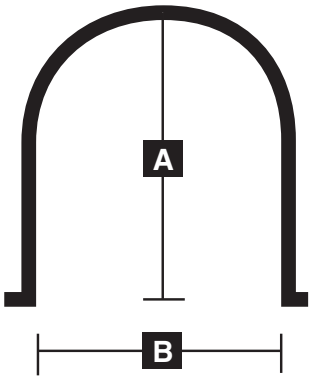

Steel Supports and Accessories

NORWESCO bands are custom fabricated to support the NORWESCO tanks and are galvanized or powder coated for added corrosion protection. Whether using the tank in a stationary position or for transport, bands are necessary to ensure that the tank retains its shape and integrity.

Horizontal Leg Tank Bands

Tank Size (Gallon)	A	B	No. of Bands	Part No.
35 ∞	18½"	18½"	2 optional	60520
55 ∞	22"	22"	2 optional	61745
65 ∞	22"	22"	2 optional	61745
125 ∞	30¾"	30½"	2 optional	61744
225 ∞	36¾"	36½"	2 optional	60478
325 ∞	36¾"	36½"	2 optional	60478
525	47¾"	47½"	2 optional	60057
725	47¾"	47½"	3 required	60057
1025	47¾"	47½"	4 required	60057
1325	64"	64"	3 required	63282
5025	90"	89½"	4 required	63284

∞ Within UPS dimensional limits

Drainable Leg Tank Bands

Tank Size (Gallon)	A	B	No. of Bands	Part No.
710	46¼"	45”	3 required	60584 short
1010 *	46¼"	45”	2 required	60584 short
1010 *	48”	45”	2 required	60585 long
1310	64”	64”	3 required	63282
1610	49”	66”	4 required	62434
2610 *	58”	87½"	2 required	63044 short
2610 *	62”	87½"	2 required	63045 long
3210 *	56”	89½"	2 required	62347 short
3210 *	60”	89½"	2 required	62348 long

* 2 short and 2 long bands are required for 1 tank

Elliptical Leg Tank Bands

Tank Size (Gallon)	A	B	No. of Bands	Part No.
1035	47¼"	77"	3 required	60325
1235	47¾"	64¾"	4 required	60477
1635	51”	68"	4 required	60586
2035	51¼"	81½"	4 required	62079
2635	65¼"	87½"	4 required	60353
3135	75¼"	85½"	4 required	62097
4035	70¼"	89½"	4 required	62832

Skid

Description	Part No.
Skid for 2610	63217
Skid for 3210 drainable leg tank	62906
Bolt Kit for 3210 (optional)	63024

Ladders

Description	Tank Size (Gallon)	Part No.
Ladder (optional)	2635 & 3135	60354
Ladder (optional)	2610 & 3210	63047
Ladder (optional)	4035	63033
Adaptor kit for ladder Δ	3135	62301

Δ This kit is required when using the ladder on the 3135 gallon tank

PLEASE NOTE: Tank availability may vary according to manufacturing location. Please contact NORWESCO Customer Service or your NORWESCO distributor for specific details.
Tank dimensions and capacities may vary slightly and are subject to change without notice.



Mini Bulk Tanks

NORWESCO mini bulk tanks are available in two sizes and are most frequently used for chemical dispensing. The tanks can be mounted on forklift accessible pads for ease of movement. A 2" polypropylene fitting is installed directly across from the manway.

Gallon Capacity	Diameter	Height	Fill Opening	Fitting	Premium Weight Part No. White
120	38"	29"	5"	2"	40318
220	42"	42"	5"	2"	40320

Pickup Truck Tanks

Designed to fit full-size, American-made pickups, the 325 and 425 sizes have low profiles for better rear vision. They feature fill openings offset to the side of the tank for safety and easy access. A tough circular design adds strength. The 210 gallon tank fits both "mini" pickups and full-size models.

Gallon Capacity	Top Width or Diameter	Bottom Width or Diameter	Overall Height	Fill Opening	Outlet/Drain Specification	Premium Weight Part No. White
210	60"/51"	48"/39"	28"	8"	2"	40300
325	62"	49"	32"	8"	2"	40160
425	65"	49"	37"	8"	2"	40102



PCO Tanks

A multi-purpose tank, the PCO is well suited for nursery, agricultural and lawn care applications. These tanks feature self-supporting legs and do not require any saddles or steel supports. Flat spots are molded into both ends to provide mounting areas for agitation equipment.



Gallon Capacity	Width	Height	Length	Fill Opening	Premium Weight Part No. White
30 ∞	19"	22"	25"	5"	41254
50 ∞	19"	20"	38"	8"	40664
100	30"	26"	38"	8"	40668
150	36"	26"	48"	8"	40669
200	36"	35"	48"	8"	41413
300	36"	37"	69"	16"	41381

∞ Within UPS dimensional limits

PLEASE NOTE: Tank availability may vary according to manufacturing location. Please contact NORWESCO Customer Service or your NORWESCO distributor for specific details. Tank dimensions and capacities may vary slightly and are subject to change without notice.

Elliptical Tanks

Designed for larger volume applicator needs, the NORWESCO elliptical tanks feature a low profile design and a low center of gravity for excellent visibility in the field and increased stability when towed. A deep sump permits complete drainage and the tanks feature an 8"or 16" fill-well. Please refer to information below for steel supports.



750 Gallon Elliptical

Gallon Capacity	Width	Height	Length	Fill Opening	Outlet/Drain Specification	Premium Weight Part No. White
200	40"	28"	66"	8"	1¼" & 1¼"	41252
300	48"	32"	70"	16"	1¼" & 1¼"	40327
500	57"	38"	82"	16"	1¼" & 1¼"	40328
750	69"	44"	88"	16"	2"	40329
1000	78"	51"	90"	16"	2"	40330
1600 *	78"	49"	138"	16"	2"	47111
2550 **	88"	69"	142"	16"	3"	47677

* Includes 1 stainless steel baffle ** The 2550 requires support bands

Elliptical Tank Skids (See dimensional drawings below.)

Tank Size (Gallon)	Tank Part No.	A	B	C	D	E	F	Part No.
200	41252	4"	24"	52"	57"	2" x 68"	8"	63015
300	40327	4"	34"	46¼"	54¼"	2" x 76"	8"	63016
500	40328	4"	34"	60"	68"	2" x 94"	8"	63018
750	40329	4"	38"	69½"	78"	2" x 112"	8"	60371
1000	40330	4"	46"	60"	72"	2" x 130"	8"	60372
1600	47111	10½"	40"	114½"	118¼"	3½" x 126"	6½"	67428
2550 *	47677	—	—	—	—	—	—	67456

* Band only, no skid. The 2550 requires 4 support bands, part #67456.

Replacement bands and hardware are available. Please contact NORWESCO Customer Service for details.

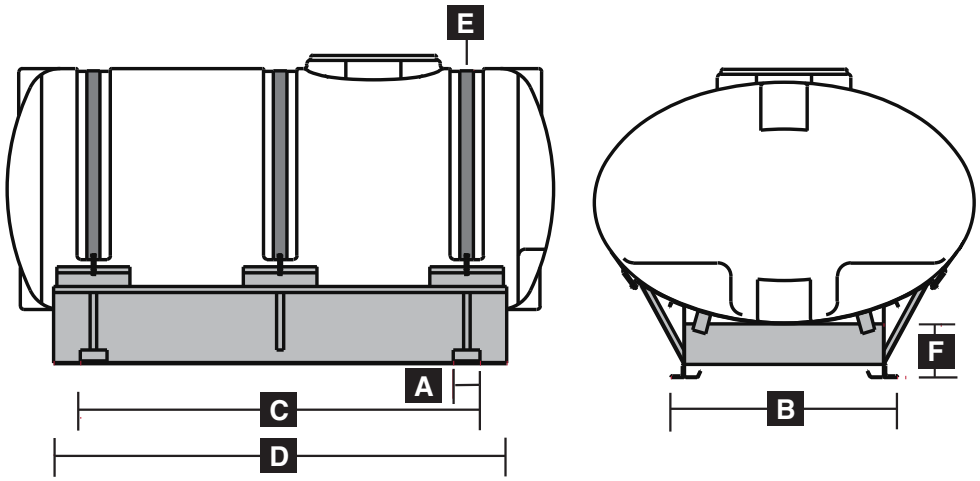

PLEASE NOTE: Tank availability may vary according to manufacturing location. Please contact NORWESCO Customer Service or your NORWESCO distributor for specific details.
Tank dimensions and capacities may vary slightly and are subject to change without notice.

Applicator Tanks, Inductor Tanks and Spot Sprayers

Whether you're looking for a new or replacement tank, you'll find it in the NORWESCO line. All NORWESCO applicator tanks feature a lid which threads directly into the fill-well of the tank to prevent the sloshing or leaking of tank contents during transport or application. The inductor tanks are suitable for mixing chemicals when filling a tank and are available in three sizes. The spot sprayers feature threaded inserts on the bottom of the tank for mounting purposes, on one side for wand/gun placement and on the top for a 12 volt pump. Please refer to page 8 for steel supports.



12 Gallon Applicator



150 Gallon x 32" Applicator



200 Gallon x 32" Applicator



500 Gallon Applicator

Applicator Tanks

Gallon Capacity	Diameter	Height/Length	Fill Opening	Outlet/Drain Specification	Premium Weight Part No. White
12 ∞	14" wide	12"/18"	5"	¾"	60521
20 ∞	15"	31"	5"	¾"	61737
30 ∞	23"	21"	5"	¾"	41799
55 ∞	23"	34"	5"	¾"	45193
85	23"	52"	5"	¾"	45105
110	30"	41"	8"	1¼" & 1¼"	45053
150	30"	58"	8"	1¼" & 1¼"	40648
150	32"	46"	8"	1¼" & 1¼"	45117
200	32"	62"	8"	1¼" & 1¼"	45059
200	38"	47"	8"	1¼" & 1¼"	45061
300	38"	68"	8"	1¼" & 1¼"	40135
400	42"	74"	8"	1¼" & 1¼"	40137
500	48"	75"	8"	1¼" & 1¼"	40274
150 Slim Line	28"	40"/50"	8"	1¼" & 1¼"	40777
200 Slim Line	24"	46"/61"	8"	1¼" & 1¼"	41305
200 Slim Line	31"	44"/48"	8"	1¼" & 1¼"	40780

∞ Within UPS dimensional limits

Inductor Tanks

Gallon Capacity	Diameter	Height/Length	Fill Opening	Outlet/Drain Specification	Premium Weight Part No. White
15 ∞	19"	23"	8"	2"	60214
35 ∞	23"	27"	8"	2"	45098
60	31"	31"	16"	2"	62205

∞ Within UPS dimensional limits



35 Gallon Inductor



14 and 25 Gallon Spot Sprayer

Spot Sprayers

Gallon Capacity	Width	Height/Length	Fill Opening	Outlet/Drain Specification	Premium Weight Part No. White
14 ∞	14"	11"/31"	5"	—	45115
25 ∞	18"	16"/36"	5"	—	62080

∞ Within UPS dimensional limits

PLEASE NOTE: Tank availability may vary according to manufacturing location. Please contact NORWESCO Customer Service or your NORWESCO distributor for specific details. Tank dimensions and capacities may vary slightly and are subject to change without notice.

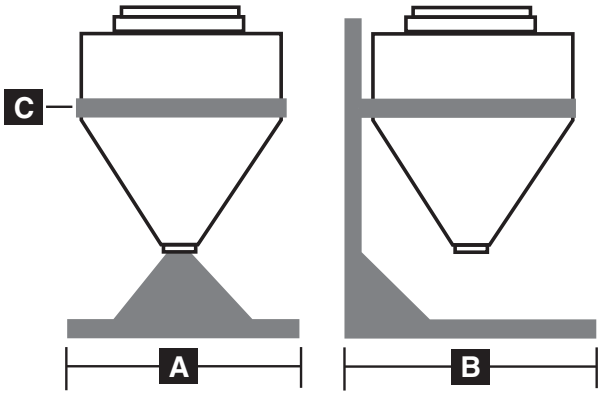

Applicator Saddle Assemblies and Inductor Stands

Designed to provide necessary support for the applicator/inductor tank during use. NORWESCO saddles include polyester straps, buckles and bolts to secure tanks, and inductor stands are supplied with all necessary hardware.

Inductor Tank Stands (See dimensional drawings above.)

Tank Size (Gallon)	Tank Part No.	A	B	C	Part No.
15 ∞	60214	26"	15"	2" x 56"	60313
35 ∞	45098	25"	18"	1½" x 35" (2)	65517
60 ∞	62205	33"	24"	1½" x 46" (2)	62204

∞ Within UPS dimensional limits

Applicator Tank Saddle Assemblies (See dimensional drawings below.)

Tank Size (Gallon)	Tank Part No.	A	B	C	D	E	F	G	Part No.
30 ∞	41799	3"	19"	13½"	13½"	2" x 54"	8"	7¾"	60321
55 ∞	45193	6"	18⅛"	24"	24"	2" x 48"	—	12"	60303
110 ∞	45053	6"	23¾"	28¾"	34¾"	2" x 72"	—	10¾"	60315
150 - 32" ∞	45117	6"	23¾"	28¾"	34¾"	2" x 72"	—	10¾"	60315
200 - 32"	45059	6"	24⅞"	36"	60"	2" x 96"	8"	13¼"	63019
200 - 38""	45061	6"	24¾"	34"	42"	2" x 96"	—	13¼"	63020
300 - 38"	40135	6"	24¾"	34"	60"	3" x 96"	8"	12"	63021
400 - 42"	40137	6"	30⅛"	42½"	60"	3" x 96"	8"	12"	63022
500 - 48"	40274	6"	30⅛"	42½"	60"	3" x 132"	8"	12"	63023

∞ Within UPS dimensional limits

Replacement bands and hardware are available.
Please contact NORWESCO Customer Service for details.

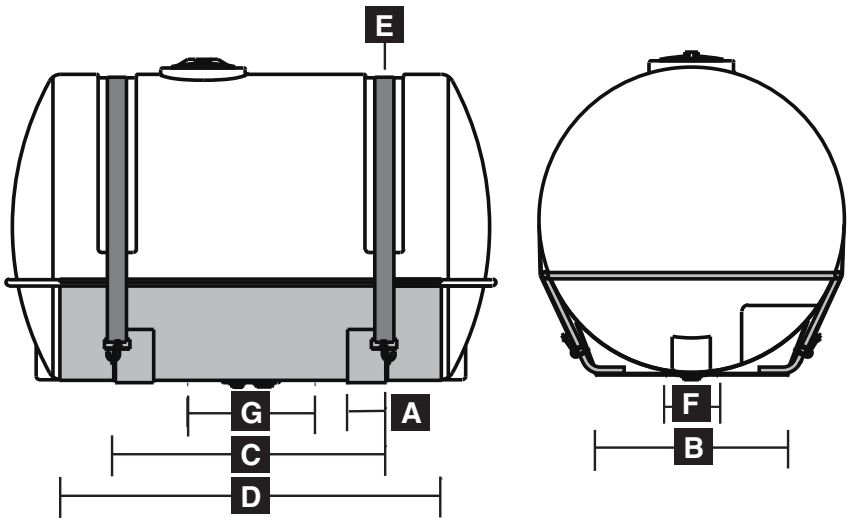

PLEASE NOTE: Tank availability may vary according to manufacturing location. Please contact NORWESCO Customer Service or your NORWESCO distributor for specific details.
Tank dimensions and capacities may vary slightly and are subject to change without notice.

Cone Bottom Tanks

NORWESCO offers a full range of cone bottom tanks designed for a variety of applications. The conical bottoms enable quick and complete drainage. As with all NORWESCO tanks, the cone bottom tanks are molded of rugged, high density polyethylene and are both impact and chemical resistant. Please refer to page 10 for polyethylene or steel stands.

Gallon Capacity	Diameter	Height	Slope	Fill Opening	Outlet/Drain Specification	Premium Weight Part No. White	Heavy Weight Part No. Blue
175 w/stand*	42"	49"/10"†	30˚	16"	2"	60113	—
300 w/stand*	48"	60"/9"†	30˚	16"	2"	62343	—
310 w/stand*	42"	71"/10"†	30˚	8"	2"	62441	—
500 w/stand*	48"	85"/9"†	30˚	16"	2"	40289	—
750	72"	55"	20˚	16"	2"	40811	—
750 w/stand*	72"	65"/10"†	20˚	16"	2"	40809	—
1050	72"	74"	20˚	16"	2"	40356	—
1050 w/stand*	72"	85"/11"†	20˚	16"	2"	40359	—
1600	88"	83"	30˚	16"	2"	40817	40819
1600 w/stand*	88"	94"/11"†	30˚	16"	2"	40813	40815
2500	95"	104"	30˚	16"	2"	40066	40129
2500 w/stand*	95"	114"/10"†	30˚	16"	2"	40672	40674
3000	95"	121"	30˚	16"	2"	40170	40172
3000 w/stand*	95"	131"/10"†	30˚	16"	2"	40797	40799
3000 15˚ slope**	91"	119"	15˚	16"	3"/2"	45141	—
5500	118"	146"	30˚	16"	3"/2"	40549	40316
6000	102"	195"	15˚	16"	3"/2"	40931	40933
7500	141"	149"	30˚	16"	3"/2"	40551	40409

*Polyethylene stand **Stand not available for this tank †Distance from bottom of cone to ground



500 Gallon Cone Bottom with Polyethylene Stand



1600 Gallon Cone Bottom with Polyethylene Stand



3000 Gallon Cone Bottom with Heavy Duty Stand

PLEASE NOTE: Tank availability may vary according to manufacturing location. Please contact NORWESCO Customer Service or your NORWESCO distributor for specific details. Tank dimensions and capacities may vary slightly and are subject to change without notice.

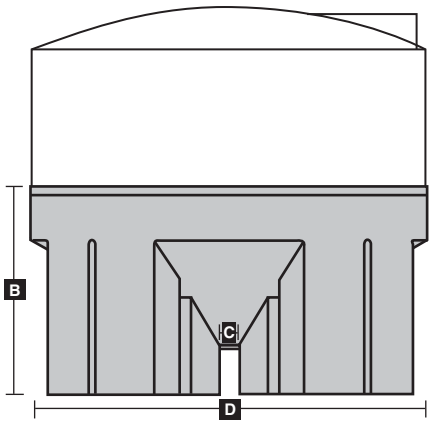

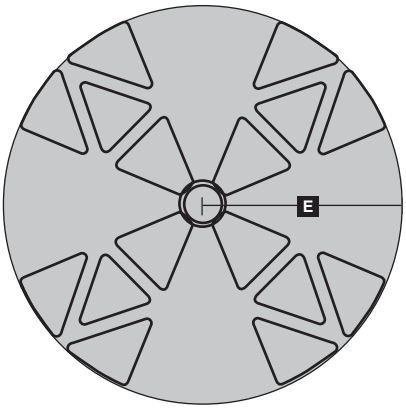

Polyethylene Cone Bottom Stands

Maintenance free, lightweight NORWESCO polyethylene stands offer unequaled corrosion resistance.

Tank Size (Gallon)	A	B	C	D	E
175	—	31½"	8"	42"	21"
300	—	32"	8"	48"	24 5/16"
310	—	31½"	8"	42"	21"
500	—	32"	8"	48 5/8"	24 5/16"
750	—	34"	10"	72 5/8"	36 5/16"
1050	—	34"	10"	72 5/8"	36 5/16"
1600	—	46"	10"	88"	44"
2500/3000 (30˚)	—	47"	10"	96 1/8"	48 1/16"

Heavy Duty Cone Bottom Stands

NORWESCO heavy duty cone bottom stands are manufactured from structural steel and offer a full dish for uniform support. An optional top band is available for the 2500/3000 steel stand when additional support is needed.

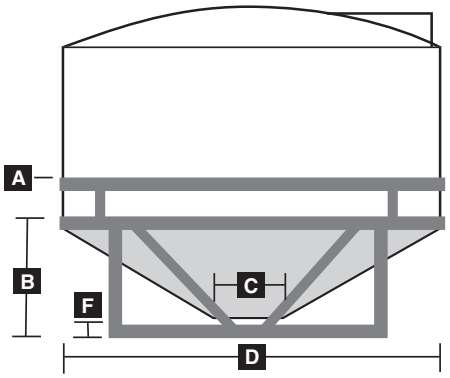

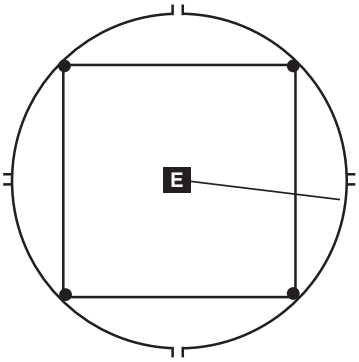

Tank Size (Gallon)	A	B	C	D	E	F	Part No.
2500/3000 (30˚)	—	36"	11"	96"	48"	11"	60059
5500	—	45"	11"	119"	59½"	12½"	60358
6000	—	25"	13"	102"	51"	12⅛"	62473
7500	—	49"	11"	140"	70"	10¾"	61860
2500/3000 (30˚)	Optional Top Band Assembly	—	—	—	—	—	60359

PLEASE NOTE: Tank availability may vary according to manufacturing location. Please contact NORWESCO Customer Service or your NORWESCO distributor for specific details. Tank dimensions and capacities may vary slightly and are subject to change without notice.

Specialty Tanks



Horizontal Box Tanks

The low profile design of this tank makes it ideal for use on trailers or in the back of a truck. The slosh reduction ribs provide excellent structural support. It can also be used as a stationary water storage tank.

Gallon Capacity	Width	Height	Length	Fill Opening	Outlet/Drain Specification	Premium Weight Part No. White
2400	90"	50"	150"	16"	2"	40912

Sphere

The 1000 gallon sphere is one of our more specialized tanks that is used on trailers/ nurse trailers. The advantage of using this type of tank and trailer combination is that is has a shorter wheel-base which means less sloshing and the design of the tank allows for easy mixing of product.

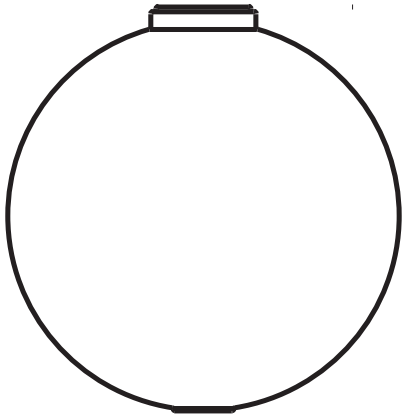

Gallon Capacity	Diameter	Height	Fill Opening	Outlet/Drain Specification	Premium Weight Part No.
1000	78"	82"	16"	—	41277

Specialty Water Tanks

These tanks have been specifically designed with residential and commercial applications in mind. The dimensions of the 375 or 400 gallon allow it to fit through a conventional doorway. The design of the 400 gallon tank allows it to be freestanding/self-supporting and eliminates the need for a steel support frame. The 375 comes standard with a steel support frame. The 1250 and 1500 gallon low profile tanks may be used for storage or transport. They are an excellent choice when height limitations are a factor and are the perfect height for putting under your cottage or cabin.



375 Gallon Tank with Frame



300 and 400 Gallon Freestanding Tank

Gallon Capacity	Width	Height	Length	Fill Opening	Outlet/Drain Specification	Premium Weight Part No. White

Free Standing Water Tank

300	29"	49"	62"	16"	1¼"	41869
400	29"	65"	62"	16"	1¼"	41247

Water Tank With Frame

375	30"	60"	62"	16"	1¼"	40480

Low Profile Water Tank

1250	80"	35"	132"	16"	2”	40756
1500	81"	41"	130"	16"	2”	41392



1250 and 1500 Gallon Low Profile Tank

PLEASE NOTE: Tank availability may vary according to manufacturing location. Please contact NORWESCO Customer Service or your NORWESCO distributor for specific details. Tank dimensions and capacities may vary slightly and are subject to change without notice.


A


B


C


D


E

High Density Polyethylene Lids

Description	Item Code	Part No.
16" Lid and ring with 4" center lid/air vent		60038
16" Lid with 4" center lid/air vent	A	60011
16" Ring only		60012
16" Lid, ventless with ring		60367
16" Lid, ventless	B	60365
Gasket for 16" non-hinged lid		62941
4" Lid (air vent assembly for 16" lid)		60019
8" Lid, ring and air vent		60032
8" Lid with air vent	C	60002
8" Ring only		60003
Air vent for 8"" lid only (snap on)		61727
5" Lid with ball check air vent (for tanks manufactured after 2/1/00)	D	62801
5" Lid with ball check air vent (for tanks manufactured prior to 2/1/00)	D	60322
5" Lid (for tanks manufactured after 2/1/00)	E	62476
5" Lid with 2" FPT		63264
Gasket for 5" lid, 60322, 62801 and 63264		60366
2" MPT vent cap with poly screen		63266
18" lanyard for 8" lid and 16" non-hinged lid (tethers lid to tank)		62531
Stainless steel screws for 8" and 16" rings		60081

Hinged Lid

This lid is manufactured from a co-polymer material for strength, durability and excellent chemical resistance. Our unique locking tab allows you to easily slip a padlock through it and secure your lid from theft or spills. The lid is interchangeable with a standard 16" lid and ring assembly if you choose to replace your existing lid.

- Easy open/close – opens a full 180 degrees
- Comes complete with a baffle vent assembly, allowing for adequate venting when bottom filling your tank.
- Unique locking tab
- All parts of lid may be ordered as repair parts

Description	Part No.
Complete lid assembly	62532



Hinged Lid Repair Parts

16" hinged lid with vent assembly, without ring	62826
Vent assembly	62827
Ring assembly	62828
Hinge assembly	62829
EPDM O-ring for lid	62830
Neoprene O-ring for ring	62831

Polyethylene Tank Repair Kits

The tank repair kit (welding gun and rod) includes a specially formulated welding wire containing copolymers and adhesives. Wire may be used to effectively repair linear polyethylene. Easy to use and requires only 110 volt power. The poly patch kit is ideal for repairing pinholes, hairline cracks and holes up to ½" in diameter. For best results, surface to be repaired should be above 32° F. The kit consists of epoxy, a small brush to apply the epoxy, a small piece of sandpaper to "roughen" the area to be patched, a piece of mastic to temporarily fill the hole/crack and a piece of fiberglass.

	Part No.
Poly welding gun & rod	60221
Poly welding rod 30'	61879
Poly patch kit	67412

PLEASE NOTE: Tank availability may vary according to manufacturing location. Please contact NORWESCO Customer Service or your NORWESCO distributor for specific details.
Tank dimensions and capacities may vary slightly and are subject to change without notice.

Polypropylene Bulkhead Fittings / EPDM Or Viton Gaskets

NORWESCO'S polypropylene fittings come standard with an EPDM gasket.
Viton gaskets are available as an option when EPDM may not be suitable for your application.



A

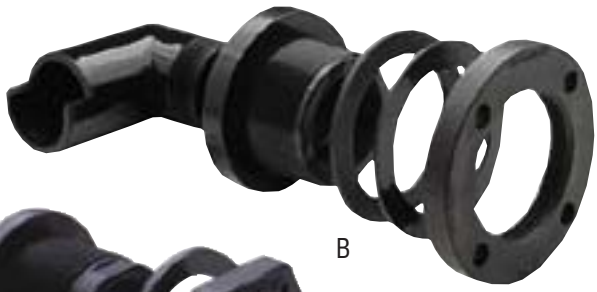

B



C

Description	Hole Size Required in Tank for Installation	Part No.	Item Code
½" Heavy duty double threaded polypropylene fitting	1⅜"	62834	A
¾" Double threaded polypropylene fitting	1⅜"	60401	A
EPDM gasket for ½" and ¾" (60401)		60402	
Viton gasket for ½" and ¾" (60401)		60360	
¾" Heavy duty double threaded polypropylene fitting	1⅝"	62798	A
EPDM gasket ¾" (62798)		62799	
Viton gasket for ¾" (62798)		62800	
1" Double threaded polypropylene fitting	2¼"	60427	A
1¼" Double threaded polypropylene fitting	2¼"	60403	A
1¼" Anti-vortex polypropylene fitting		63065	
EPDM gasket for 1" and 1¼"		60404	
Viton gasket for 1" and 1¼"		60361	
Anti-vortex adapter for 1¼"		62398	
1½" Double threaded polypropylene fitting	3"	60124	A
Siphon tube, 1½" x 12" long		63279	
2" Double threaded polypropylene fitting	3"	60405	A
2" Double threaded 316 stainless steel fitting, less gasket	3"	61767	
EPDM gasket for 1½" and 2" (60405 and 61767)		60406	
Type B Viton gasket for 1½" and 2" (60405 and 61767)		60523	
2" Heavy duty double threaded polypropylene fitting with siphon tube	3¼"	60337	B
EPDM gasket for 2" (60337)		60336	
Type B Viton gasket for 2" (60337)		60008	
Siphon tube, 2" short		60335	
Siphon tube, 2" x 12" long		63262	
2" MPT vent cap, anti-vortex, with poly screen		63266	
2" MPT vent cap, anti-vortex, without screen		63316	
Anti-vortex adapter for 2" Bulkhead fitting		62399	
2" Polypropylene dust plug		60021	
3" Double threaded polypropylene fitting (hex nut as shown in photo C)	4⅝" *	62299	
3" Double threaded polypropylene fitting with 2" reducer and siphon tube	4⅝" *	60339	C
EPDM gasket for 3"		60331	
Type B Viton gasket for 3"		60351	
2" Polypropylene reducer for 3"		60330	
Siphon tube, 3" short		60327	
Siphon tube, 3" x 12" long		63263	
4" Double threaded polypropylene fitting (hex nut as shown in photo C)	5¾"	62171	
EPDM gasket for 4"		62785	
Viton gasket for 4"		62786	
Siphon tube for 4"		62714	

*When installing fitting, use 4½" hole saw if tank is cold.

Bolted Fittings

Polypropylene Bolted Fittings / EPDM or Viton Gaskets (Require two gaskets.)

Bolted polypropylene fittings are equipped with 316 stainless steel bolts and come standard with EPDM gaskets. Viton gaskets are available as an option for the fittings.

Description	Part No.	Item Code
¾" Polypropylene bolted fitting with ss bolts and EPDM gaskets	60502	A
1" Polypropylene bolted fitting with ss bolts and EPDM gaskets	60505	A
EPDM gasket for ¾" and 1"	60498	
Type B Viton gasket for ¾" and 1"	60355	
1½" Polypropylene bolted fitting with ss bolts and EPDM gaskets	60513	A
2" Polypropylene bolted fitting with ss bolts and EPDM gaskets	60516	A
EPDM gasket for 1½" and 2"	60497	
Type B Viton gasket for 1½" and 2"	60356	
3" Polypropylene bolted fitting with ss bolts and EPDM gaskets	62471	
EPDM gasket for 3"	62048	
Type B Viton gasket for 3"	60602	


A

Stainless Steel Double Threaded Bolted Fittings

Bolts are threaded into the back plate of the fitting so there are no welds or bolt holes that can be potential points of leakage. These fittings come standard without a gasket (with the exception of the 4") and require a single gasket that is installed on the inside of the tank. Available gaskets are cross-linked polyethylene, EPDM or Viton (4" fitting comes standard with a cross-linked polyethylene gasket).

Description	Part No.	Item Code
½" 316 Stainless steel double threaded bolted fitting less gasket	63216	B
¾" 316 Stainless steel double threaded bolted fitting less gasket	63035	B
1" 316 Stainless steel double threaded bolted fitting less gasket	62948	B
EPDM gasket for ½", ¾" & 1" (1 required)	63205	
Type B Viton gasket for ½", ¾" & 1" (1 required)	63224	
Cross-linked polyethylene gasket for ½", ¾" & 1" (1 required)	62950	
1¼" 316 Stainless steel double threaded bolted fitting less gasket	63036	B
Cross-linked polyethylene gasket for 1¼" (1 required)	63041	
1½" 316 Stainless steel double threaded bolted fitting less gasket	63037	B
Cross-linked polyethylene gasket for 1½" (1 required)	63042	
2" 316 Stainless steel double threaded bolted fitting less gasket	63038	B
EPDM gasket for 1¼", 1½" and 2" (1 required)	63206	
Type B Viton gasket for 1¼", 1½" and 2" (1 required)	63225	
Cross-linked polyethylene gasket for 2" (1 required)	62848	
3" 316 Stainless steel double threaded bolted fitting less gasket	63039	C
EPDM gasket for 3" (1 required)	63223	
Type B Viton gasket for 3" (1 required)	63226	
Cross-linked polyethylene gasket for 3" (1 required)	63043	
4" 316 Stainless steel 8-bolt double threaded bolted fitting with gasket	63069	
Cross-linked polyethylene gasket for 4" (1 required)	63070	


B


C

Stainless Steel Single Threaded Bolted Fittings

Description	Part No.
2" 316 Stainless steel single threaded bolted fitting less gasket	62847
EPDM gasket for 1¼", 1½" and 2" (1 required)	63206
Type B Viton gasket for 1¼", 1½" and 2" (1 required)	63225
Cross-linked polyethylene gasket for 2" (1 required)	62848
3" 316 Stainless steel single threaded bolted fitting less gasket	63233
EPDM gasket for 3" (1 required)	63223
Type B Viton gasket for 3" (1 required)	63226
Cross-linked polyethylene gasket for 3" (1 required)	63043

NORWESCO

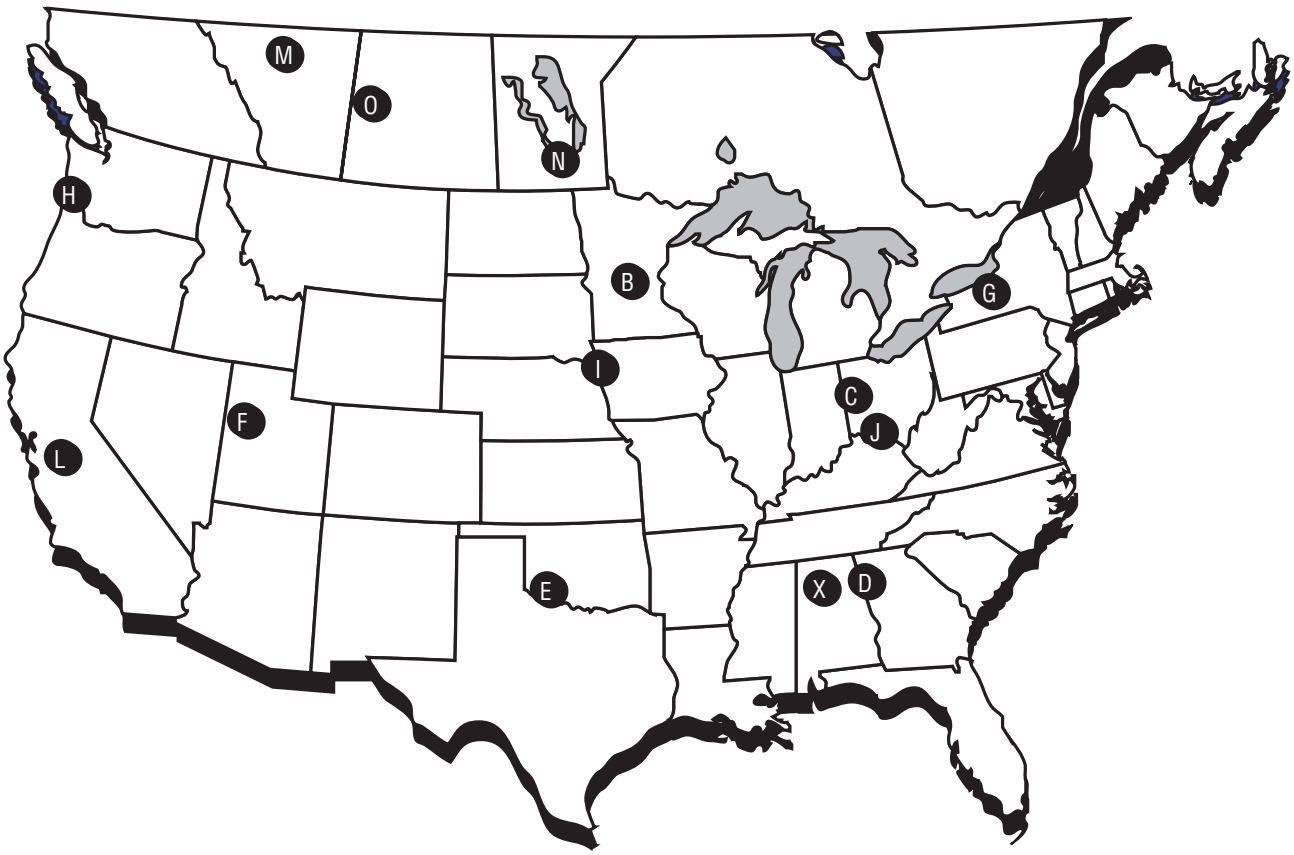

Manufacturing and Distribution

B. St. Bonifacius, Minnesota
C. Lancaster, Ohio
D. Griffin, Georgia
E. Shawnee, Oklahoma
F. Tooele, Utah
G. Owego, New York
H. Washougal, Washington
I. Sheldon, Iowa
L. Hanford, California
M. Edmonton, Alberta-Canada
N. Winnipeg, Manitoba-Canada
X. Albertville, Alabama
O. Saskatoon, Saskatchewan-Canada

Tank dimensions and capacities may vary slightly and are subject to change without notice.

Warranty

NORWESCO offers a three year warranty from date of manufacture on all premium weight tanks and a five year warranty on all heavy weight tanks. Should a defect appear within the warranty period NORWESCO will supply a new, equivalent tank in replacement thereof. NORWESCO'S liability is limited to the value of the tank itself and specifically excludes the cost of installation and/or removal or consequential damages. Please contact your chemical supplier or NORWESCO Customer Service for chemical resistance information.

NORWESCO
Norwesco, INC.

4365 Steiner Street
P.O. Box 439
St. Bonifacius, MN 55375-0439
Tel (952) 446-1945
Fax (800) 874-2371

www.norwesco.com

E-1363

©2004 NORWESCO, INC. LST20M0204

TNK-103 - Tank, closed top, cylindrical, ACO CT-450-DT

NOTES:

1. TANK IS MANUFACTURED TO ASTM-D-1998 STANDARD.
2. ALL DIMENSIONS ARE APPROXIMATE.

MATERIALS LIST		
ITEMS	DESCRIPTION	NOTES
A	CT-450-DT TANK	
B	16" LID WITH LOCKING STRAP	

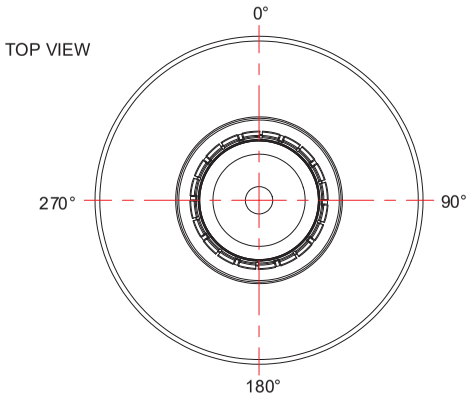

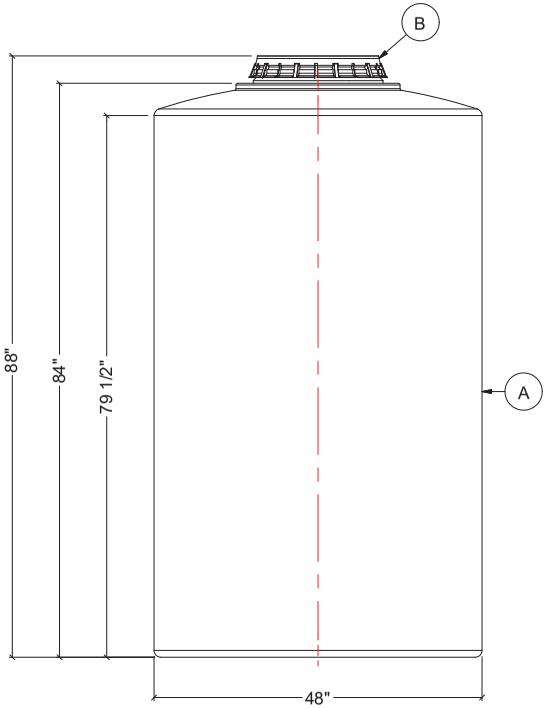

FRONT VIEW

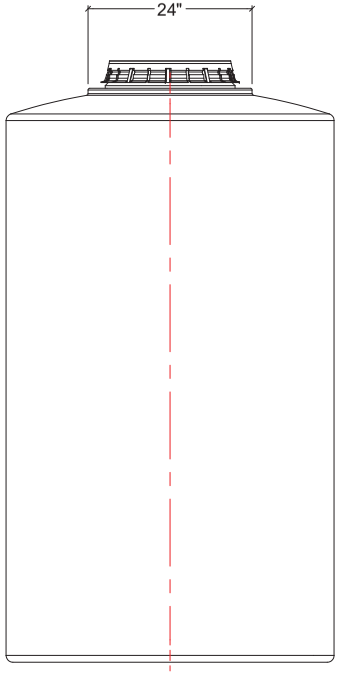

SIDE VIEW

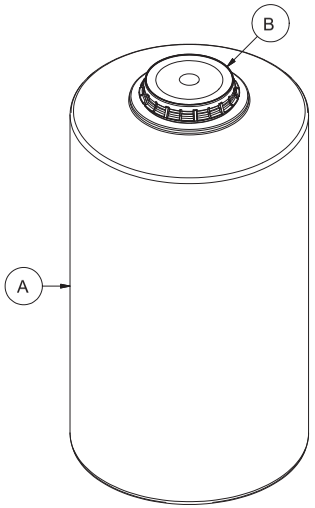

REV	DATE	DESCRIPTION	BY	APPD	REVD

REVISIONS

CUSTOMER

TITLE: 450 I.G. CLOSED TOP TANK

ACO JOB NO:

PURCHASE ORDER NO:

PURCHASER'S EQUIP. NO:

THIS DRAWING IS THE PROPERTY OF ACO CONTAINER SYSTEMS LTD. AND SHALL NOT BE COPIED OR TRANSFERRED WITHOUT THE WRITTEN CONSENT OF ACO CONTAINER SYSTEMS LTD.

ENGINEERS SEAL

ACO CONTAINER SYSTEMS LTD.

PICKERING - ONTARIO - CANADA

ACO CONTAINER SYSTEMS LTD.
794 MCKAY RD.
PICKERING, ONTARIO, CANADA
L1W 2Y4
TEL. 905-683-8222
FAX 905-683-2969

DESIGNED	
DRAWN	WM
CHECKED	
APPROVED	
SCALE	N.T.S.
DATE	10-12-09

DWG No CT-450-DT-1364 REV 0

TNK-201 - Tank, Open Top, Rectangular, 192 gal, 540 US Gal 72x36x48

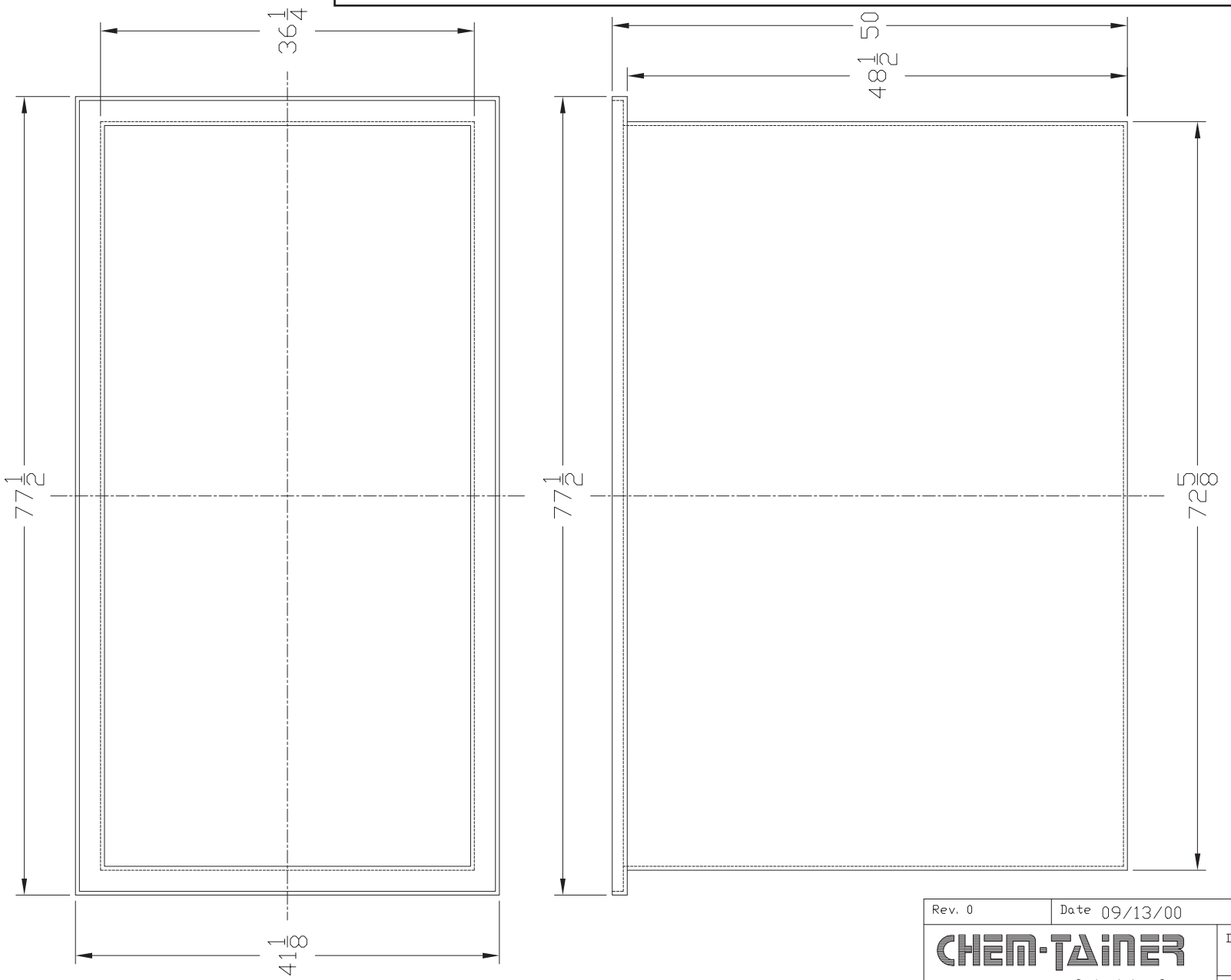

Rev. 0	Date 09/13/00	File Name 367248-5

CHEM-TAINER Industries Inc.
361 Neptune Ave. W.Babylon, NY 11704
(631) 661-8300 Fax: (631) 661-8209

Date 09/13/00	Mold Location CA
Drawn By: IIA	Cust. Rep.

TITLE
540 GAL. RECTANGULAR TANK

Part # R367248AB/CD	Dwg. # C-367248-15

THIS DRAWING & DESIGN IS
THE PROPERTY OF CHEM-TAINER INDUSTRIES INC.
IT MAY NOT BE USED FOR ANY PURPOSE
OTHER THAN BY THE OWNER. CHEM-TAINER DOES NOT
AUTHORIZE THE REPRODUCTION OR CONVEYANCE
OF ANY INFORMATION CONTAINED HEREIN.

ALL DIMENSIONS SHOWN ARE OUTSIDE PART DIMENSIONS IN INCHES, AND VARY BY THE STANDARD ROTATIONAL MOLDING TOLERANCE OF +2;-3%.

E31365

ELMRIDGE® Liqui-Jet® Mixing Eductors — ME Series

KEEPING SOLIDS IN SUSPENSION / DISPERSING CHEMICALS / MAINTAINING TANK CONCENTRATIONS / ELIMINATING THERMAL GRADIENTS

ELMRIDGE 'ME Series' Liqui-Jet Mixing Eductors vigorously and efficiently circulate the liquid contents of tanks without powered impellers or other insertion-type rotating mechanical devices. ELMRIDGE 'ME Series' Liqui-Jet Mixing Eductors operate on the same principle as our standard line of liquid-powered Jet-Apparatus. Liquid is pumped through the Eductor nozzle, emerging at a relatively high velocity, creating a localized zone of lower pressure. Tank contents are drawn to this lower pressure zone, where the momentum of the motive liquid is transferred to the tank liquid, causing the tank liquid to be 'pumped' and circulated. For every gallon of liquid pumped through the Eductor nozzle, up to five gallons of liquid is circulated. Note that Eductors can actually be 'aimed' at specific areas in the vessel. Operating characteristics (Water Motive / Water Suction), for standard models are shown below, and special units are also available to meet your specifications. Standard materials of construction are Glass Reinforced Polypropylene, PVDF, PVC, CPVC, Teflon®, Cast Iron, 316 Stainless Steel, Alloy 20, and Hastelloy C®. Other materials are available upon request. Threaded, flanged, or socket weld connections (except Cast Iron).



TANK MIXING

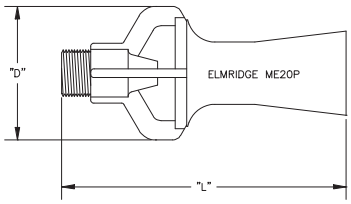

Dimensions

Model Number	Pressure Connection	D (inches)	L (inches)
ME05P	1/4" Male*	1-1/2"	3-1/8"
ME10P	3/8" Male*	2-1/8"	4-1/2"
ME20P	3/4" Male*	3"	6-3/8"
ME30P	1" Male*	3-13/16"	8-1/16"
ME40P	1-1/2" Male*	4-5/8"	9-7/8"
ME10M	3/8" Male*	1-3/4"	4-1/2"
ME20M	3/4" Male*	2-3/8"	6-3/4"
ME30M	1" Male*	2-7/8"	7-5/8"
ME40M	1-1/2" Male*	4-5/8"	9-7/8"
ME40	1-1/2" Female*	3-3/4"	9-1/2"
ME50	2" **	5-5/8"	12-1/4"
ME60	3" **	8-1/2"	17-5/8"
ME70	4" **	12-1/2"	26-1/4"
ME80	6" ***	17-1/4"	36-1/2"
ME90	8" ***	22"	48-5/8"

* NPT or BSPT

** NPT or BSPT Female or 150# ANSI FF Flange

*** 150# ANSI FF Flange only

Table 1 — Nozzle and Circulated Flow (usgpm) for ME Series Liqui-Jet Tank Mixing Eductors using 70 deg. F Water

Model Number	Flow Type	Operating Water Pressure (psi)								
		10	15	20	25	30	35	40	50	60
ME05P	Nozzle Flow	3.2	3.9	4.5	5.0	5.5	5.9	6.3	7.1	7.8
	Circ. Flow	16	20	23	25	28	30	32	36	39
ME10P	Nozzle Flow	7.5	9.2	10.6	11.9	13.0	14.0	15	17	18
	Circ. Flow	38	46	53	59	65	70	75	84	92
ME20P	Nozzle Flow	13.5	17	19	21	23	25	27	30	33
	Circ. Flow	68	83	95	107	117	126	135	151	165
ME30P	Nozzle Flow	20	24	28	32	35	37	40	45	49
	Circ. Flow	100	122	141	158	173	187	200	224	245
ME40P	Nozzle Flow	33	40	47	52	57	62	66	74	81
	Circ. Flow	165	202	233	261	286	309	330	369	404
ME10	Nozzle Flow	8.2	10	12	13	14	15	16	18	20
	Circ. Flow	33	40	46	52	57	61	66	73	80
ME20	Nozzle Flow	12	15	17	19	21	22	24	27	29
	Circ. Flow	48	59	68	76	83	90	96	107	118
ME30	Nozzle Flow	21	26	30	33	36	39	42	47	51
	Circ. Flow	84	103	119	133	145	157	168	188	206
ME40	Nozzle Flow	35	43	49	55	61	65	70	78	86
	Circ. Flow	140	171	198	221	242	262	280	313	343
ME50	Nozzle Flow	55	67	78	87	95	103	110	123	135
	Circ. Flow	275	337	389	435	476	514	550	615	674
ME60	Nozzle Flow	126	154	178	199	218	236	252	282	309
	Circ. Flow	630	772	891	996	1091	1179	1260	1409	1543
ME70	Nozzle Flow	285	349	403	451	494	533	570	637	698
	Circ. Flow	1425	1745	2015	2253	2468	2666	2850	3186	3491
ME80	Nozzle Flow	590	723	834	933	1022	1104	1180	1319	1445
	Circ. Flow	2950	3613	4172	4664	5110	5519	5900	6596	7226
ME90	Nozzle Flow	1062	1301	1502	1679	1839	1987	2124	2375	2601
	Circ. Flow	5310	6503	7509	8396	9197	9934	10620	11874	13007

Dimensions and Specifications are subject to change without notice

APPLICATION EXAMPLES

EXAMPLE 1:

The volume of a rectangular process tank is 5,000 US gallons (approximately 10'W x 15'L x 4.5'H). In order that the contents of the tank remain in homogenous solution, it is necessary that the tank volume be completely turned over (ie. completely recirculated), in a period of approx. 8 minutes. It has further been determined that eductor spacing not exceed 3' in order to utilize the eductor outlet plume to further agitate the bottom corners of the tank. There is an existing single header of sufficient capacity centered longitudinally along the bottom of the tank, and a pump that will supply sufficient volume at 30 psig.

1. Four eductors spaced on 3' centers on each side of the header pipe will meet the necessary spacing requirements.

2. The number of eductors required is:

   4 x 2 sides = 8 eductors

3. Total required recirculation flowrate is:

   5000 / 8 min. = 625 usgpm

4. Required recirculation flowrate per eductor is:

   625 / 8 eductors = 78.1 usgpm

5. An ME20 eductor has a circulated flowrate of 83 usgpm at 30 psig., therefore a quantity of (8) ME20 eductors could be used.

6. The nozzle flow of an ME20 eductor at 30 psig is 21 usgpm, therefore, the pump must be able to supply:

   8 x 21 = 168 usgpm at 30 psig

EXAMPLE 2:

A steam-jacketed hot oil (S.G. = 1.21), preheat tank is 20' high and 10' in diameter (approx. 11750 usgal). It is desired that a single eductor using a portion of the total oil inflow turn over the contents of the tank in approx. 12 minutes in order to reduce temperature gradients within the tank. Pump pressure must also be approximated; assume inflow rate is sufficient.

1. The static discharge pressure that the pump must overcome is:

   20 x 1.21 = 24.2 feet of water
   = 10.5 psig

2. Total required recirculation flowrate is:

   11750 / 12 = 979 usgpm

4 An ME60 eductor has a circulated flowrate of 1091 usgpm at 30 psig, however, the pump must be sized to supply the ME60 nozzle flowrate of 218 x SQRT(1/1.21) = 198 usgpm at:

   30 + 10.5 = 40.5 psig

TNK-801 - Tank, Open Top, Cylindrical, 60 Imp gal, OT-60

NOTES:

1. TANK IS MANUFACTURED TO ASTM-D-1998 STANDARD.
2. ALL DIMENSIONS ARE APPROXIMATE.

MATERIALS LIST		
ITEMS	DESCRIPTION	NOTES
A	OT-60 OPEN TOP TANK	
B	LID FOR OT-60	

TOP VIEW

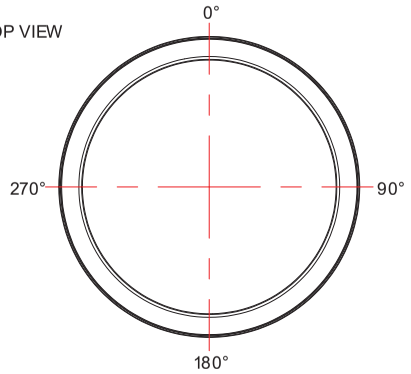

LID TOP VIEW

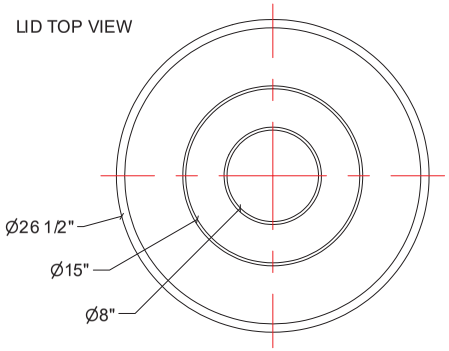

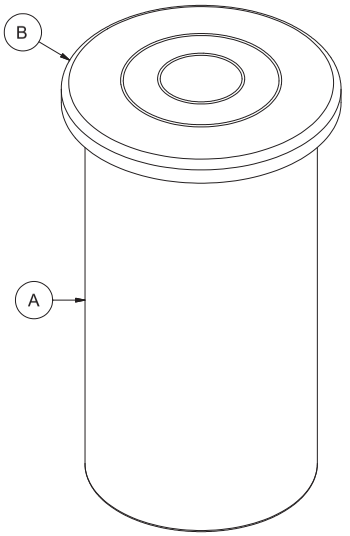

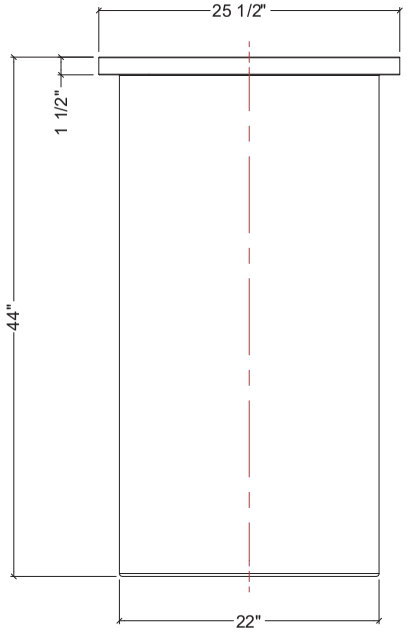

FRONT VIEW

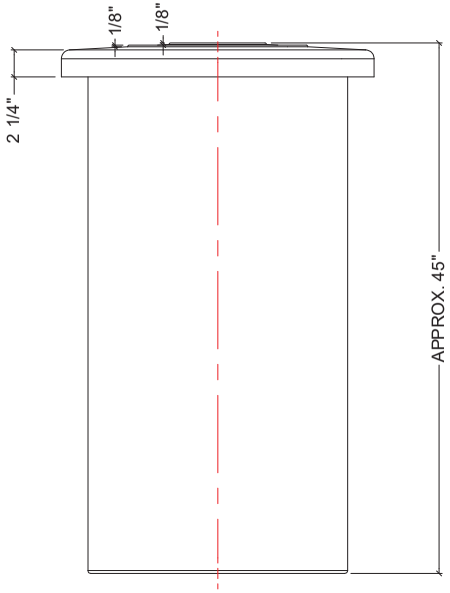

SIDE VIEW WITH LID

REV	DATE	DESCRIPTION	BY	APPD	REVD

REVISIONS

CUSTOMER

TITLE
60 I.G. OPEN TOP TANK WITH LID

ACO JOB NO:
PURCHASE ORDER NO:
PURCHASER'S EQUIP. NO:

THIS DRAWING IS THE PROPERTY OF ACO CONTAINER SYSTEMS LTD. AND SHALL NOT BE COPIED OR TRANSFERRED WITHOUT THE WRITTEN CONSENT OF ACO CONTAINER SYSTEMS LTD.

ENGINEERS SEAL

ACO CONTAINER SYSTEMS LTD.

PICKERING - ONTARIO - CANADA

ACO CONTAINER SYSTEMS LTD.
794 MCKAY RD.
PICKERING, ONTARIO, CANADA
L1W 2Y4
TEL. 905-683-8222
FAX 905-683-2969

DESIGNED	
DRAWN	WM
CHECKED	
APPROVED	
SCALE	N.T.S.
DATE	27-05-09

DWG No OT-60-L E1368 REV 0

A19 Series

Remote Bulb Control

Description

The A19 Series are single-stage temperature controls that incorporate environmentally friendly liquid-filled sensing elements.

Features

- wide temperature ranges available
- constant differential throughout the entire range
- compact enclosure
- fixed or adjustable differential available
- variety of sensing element styles
- unaffected by cross-ambient conditions

Applications

The A19 is suitable for temperature control in heating, ventilating, air conditioning, and refrigeration.

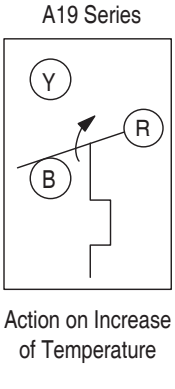

A19 Series
Terminal Arrangement for SPDT



A19ABC-24

Selection Charts

A19 Series Remote Bulb Control[1]

Code Number	Switch Action	Range °F (°C)	Diff F° (C°)	Bulb and Capillary	Bulb Well No. (order separately)	Range Adjuster	Max. Bulb Temp. °F (°C)
Adjustable Differential (Wide Range)							
A19ABA-40C [2]	SPST Open Low	-30 to 100 (-34 to 38)	3 to 12 (1.7 to 6.7)	3/8 in. x 4 in., 6 ft. Cap.	WEL14A-602R	Screwdriver Slot	140 (60)
A19ABC-4C	SPDT	50 to 130 (10 to 55)	3 1/2 to 14 (1.9 to 8)	3/8 in. x 5 in., 8 ft. Cap.	WEL14A-603R	Knob	170 (77)
A19ABC-24C [3]	SPDT	-30 to 100 (-34 to 38)	3 to 12 (1.7 to 6.7)	3/8 in. x 4 in., 8 ft. Cap.	WEL14A-602R	Convertible	140 (60)
A19ABC-36C	SPDT	-30 to 100 (-34 to 38)	3 to 12 (1.7 to 6.7)	3/8 in. x 4 in., 20 ft. Cap.	WEL14A-602R	Convertible	140 (60)
A19ABC-37C	SPDT	-30 to 100 (-34 to 38)	3 to 12 (1.7 to 6.7)	3/8 in. x 4 in., 10 ft. Cap.	WEL14A-602R	Screwdriver slot	140 (60)
A19ABC-74C	SPDT	-30 to 100 (-34 to 38)	3 to 12 (1.7 to 6.7)	3/8 in. x 4 in., 6 ft. Cap.	WEL14A-602R	Screwdriver slot	140 (60)
Fixed Differential							
A19AAF-12C	SPDT	25 to 225 (-4 to 107)	3 1/2 (1.9)	3/8 in. x 3 in., 10 ft. Cap.	WEL14A-602R	Screwdriver slot	275 (135)
Fixed Differential (Case Compensated)							
A19AAC-4C	SPDT	0 to 80 (-18 to 27)	5 (2.8)	3/8 in. x 4 in., 6 ft. Cap.	WEL14A-602R	Screwdriver slot	140 (60)
A19AAD-12C	SPST Open Low	-30 to 50 (-34 to 10)	2 1/2 (1.4)	3/8 in. x 4 in., 7 ft. Cap.	WEL14A-602R	Screwdriver slot	140 (60)
Fixed Differential (Close)							
A19AAD-5C [4]	SPST Open Low	30 to 50 (-1 to 10) (**Bulk Milk Cooler**)	2 1/2 (1.4)	3/8 in. x 2 5/8 in., 6 ft. Cap.	WEL16A-601R	Screwdriver slot	190 (88)
A19AAF-20C	SPDT	-30 to 100 (-34 to 38)	2 1/2 (1.4)	3/8 in. x 4 in., 6 ft. Cap.	WEL14A-602R	Screwdriver slot	140 (60)
A19AAF-21C	SPDT	40 to 90 (4 to 32)	1 1/2 (0.8)	3/8 in. x 5 3/4 in., 6 ft. Cap.	WEL14A-603R	Screwdriver slot	140 (60)
Manual Reset							
A19ACA-14C	SPST Open Low	-30 to 100 (-34 to 38)	Manual Reset	3/8 in. x 4 in. 6 ft .Cap.	WEL14A-602R	Screwdriver slot	140 (60)
A19ACA-15C	SPST Open Low	-30 to 100 (-34 to 38)	Manual Reset	3/8 in. x 4 in. 10 ft. Cap.	WEL14A-602R	Screwdriver slot	140 (60)
A19ADB-1C	SPST Open High	100 to 240 (38 to 116)	Manual Reset	3/8 in. x 3 1/2 in. 6 ft. Cap.	WEL14A-602R	Knob	290 (143)
A19ADN-1C	SPST Open High	100 to 240 (38 to 116)	Manual Reset	3/8 in. x 4 in. 6 ft. Cap.	WEL14A-602R	Screwdriver slot	290 (143)

1. Specify the control model code number, packing nut code number (if required), and bulb well code number (if required).
2. Replaces White-Rodgers 1609-101
3. Replaces White-Rodgers 1609-12, -13; Ranco 010-1408, -1409, - 1410, -1490, 060-110; Honeywell L6018C-1006, L6021A-1005, T675A-1011, -1508, -1516, -1821, T4301A-1008, T6031A-1011, T6031A-1029
4. Case-Compensated

The performance specifications are nominal and conform to acceptable industry standards. For applications at conditions beyond these specifications, consult the local Johnson Controls office. Johnson Controls, Inc. shall not be liable for damages resulting from misapplication or misuse of its products. © 2009 Johnson Controls, Inc.

Operation and Maintenance Manuel - Arsenic Water Treatment Plant, Version 2

Operation & Maintenance Manual
Sewage Treatment Plant (STP)

Prepared by:
Agnico Eagle Mines Limited – Meadowbank Division – Whale Tail Pit Project

EXECUTIVE SUMMARY

Agnico Eagle has prepared the following document which summarizes the operational and maintenance procedures to be followed at the Sewage Treatment Plant (STP).

This report documents the stand alone Operation & Maintenance Manual – Sewage Treatment Plant, includes the following requirements:

- The manual was prepared in accordance with the "Guidelines for the Preparation of an Operation and Maintenance Manual for Sewage and Solid Waste Disposal Facilities in the Northwest Territories, 1996", and adapted for the use of a mechanical contact water treatment facility;
- The manual includes contingency measures in the event of a plant malfunction; and
- The manual includes sludge management procedures.

IMPLEMENTATION SCHEDULE

This Plan will be implemented upon Board approval and subject to any modifications proposed by the NWB as a result of the review and approval process.

DISTRIBUTION LIST

Agnico Eagle Internal:

- Energy & Infrastructures Services Superintendent
- Energy & Infrastructures Services General Foreman
- Environmental Superintendent
- Senior environmental Coordinator
- Environmental Compliance Counselor
- Sewage Treatment Plant Operator

DOCUMENT CONTROL

Version	Date (YMD)	Section	Page	Revision
1	2018/12/30			Operation and Maintenance Manual
2	2019/02/19			Comment from ECCC, CIRNAC

Prepared By:

Thomas Genty

Signature numérique de Thomas Genty
Date : 2019.02.18 12:00:47 -05'00'

Thomas Genty
Water treatment Specialist

REGISTERED PROFESSIONAL ENGINEER
I. GAGNON
LICENSEE
NT/NU
L3940
2019-02-18

Israel Gagnon
Mechanical Eng.

Approved by:

Alain Parent

Signature numérique de Alain Parent
DN : cn=Alain Parent
Date : 2019.02.18 15:50:46 -05'00'

Alain Parent
Amaruq project Construction Superintendent

TABLE OF CONTENTS

1 INTRODUCTION 7

1.1 Purpose 7
1.2 Brief Description of the Project 7
1.3 Contact Information 11

2 DESCRIPTION 12

2.1 Sewage Treatment Plant (STP) 12
2.1.1 Process summary 12
2.1.2 Process description 19
2.1.3 Sludge Management Strategy 20

3 OPERATION AND MAINTENANCE 21

3.1 Pumping 21
3.2 Sewage collection 21
3.3 Sludge disposal 21
3.4 Control 21
3.5 Reagents 22
3.6 Biological operation 23
3.7 Membranne operation 23
3.8 Membrane cleaning 24
3.9 Service water 24
3.10 Operationnal performance Targets 24
3.11 General Operation & Maintenance, Sampling Procedures and Frequency 25
3.12 Troubleshooting and Maintenance Procedures 27
3.13 Record Keeping 28
3.14 Safety Procedures For Operators 29
3.15 Controlling Access to the STP 29

4 EMERGENCY RESPONSE 30

4.1 Fire 30
4.2 Spill 30
4.3 Plant Malfunction 30

LIST OF FIGURES

Figure 1 – Site Layout 8
Figure 2 – Location of STP in the Whail Tail Camp 9
Figure 3 – General Arrangement of STP 10
Figure 4 – Flowsheet 14
Figure 5 – Oils and grease removal, screening and equalization's tank 15
Figure 6 – Biological treatment 16
Figure 7 – Post Biological treatment 17
Figure 8 – Membrane filtration step 18
Figure 9 – Membrane filtration concept 20

LIST OF APPENDICES

Appendix A: MSDS Sheets
Appendix B: Drawings
Appendix C: Operations and Maintenance Manual

1 INTRODUCTION

1.1 PURPOSE

This Sewage Treatment Plant (STP) Operation and Maintenance Manual (OMM) for the Whale Tail Gold Project (the Project) has been prepared based on the "*Guidelines for the Preparation of an Operation and Maintenance Manual for Sewage and Solid Waste Disposal Facilities in the Northwest Territories, 1996, prepared by the Department of Municipal and Community Affairs, NWT*". The OMM has been adapted for the use of a mechanical contact water treatment facility.

This manual is a component of the Whale Tail Environmental Management System. The objectives of this plan are summarized as follows:

1. To define the location, design and operating procedures to be used in the treatment of sewage generated at the Project; and
2. To provide monitoring requirements for the STP.

The STP purpose is to treat domestic sewage from the camp and adjacent building which are not connected to the STP directly (sucker truck will discharge sewage from this building directly into the STP).

1.2 BRIEF DESCRIPTION OF THE PROJECT

Agnico Eagle Mines Limited—Meadowbank Division (Agnico Eagle) is developing Whale Tail Pit and Haul Road Project, approximately 55 km north of the Meadowbank mine, on a satellite deposit located on the Amaruq property in the Kivalliq Region of Nunavut (65°24'25" N, 96°41'50" W), to extend mine operations and milling at Meadowbank Mine. The 99,878-hectare Amaruq property is located on Inuit-owned and federal crown land.

A conventional open pit mining operation is forecasted on the Whale Tail deposit. Access to the site is via a 64-kilometer road from Meadowbank mine. On-site facilities will include a power plant, maintenance facilities, tank farm for fuel storage, Arsenic water treatment plant, sewage treatment plant (STP), drinking water treatment plant, as well as accommodation and kitchen facilities for approximately 400 people.

Figures 1, 2 and 3 illustrate the location and general arrangement of the STP.

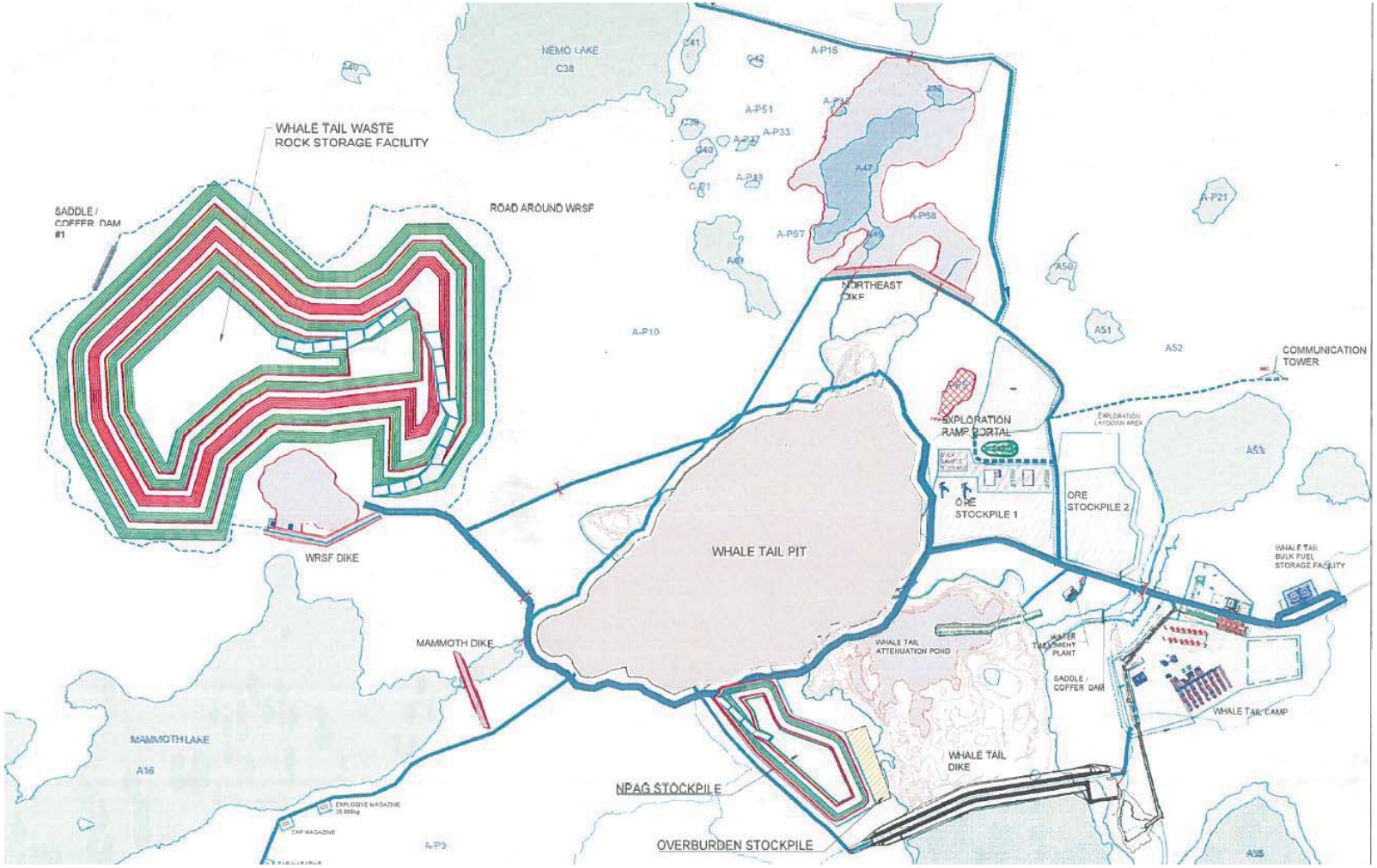

Figure 1 – Site Layout

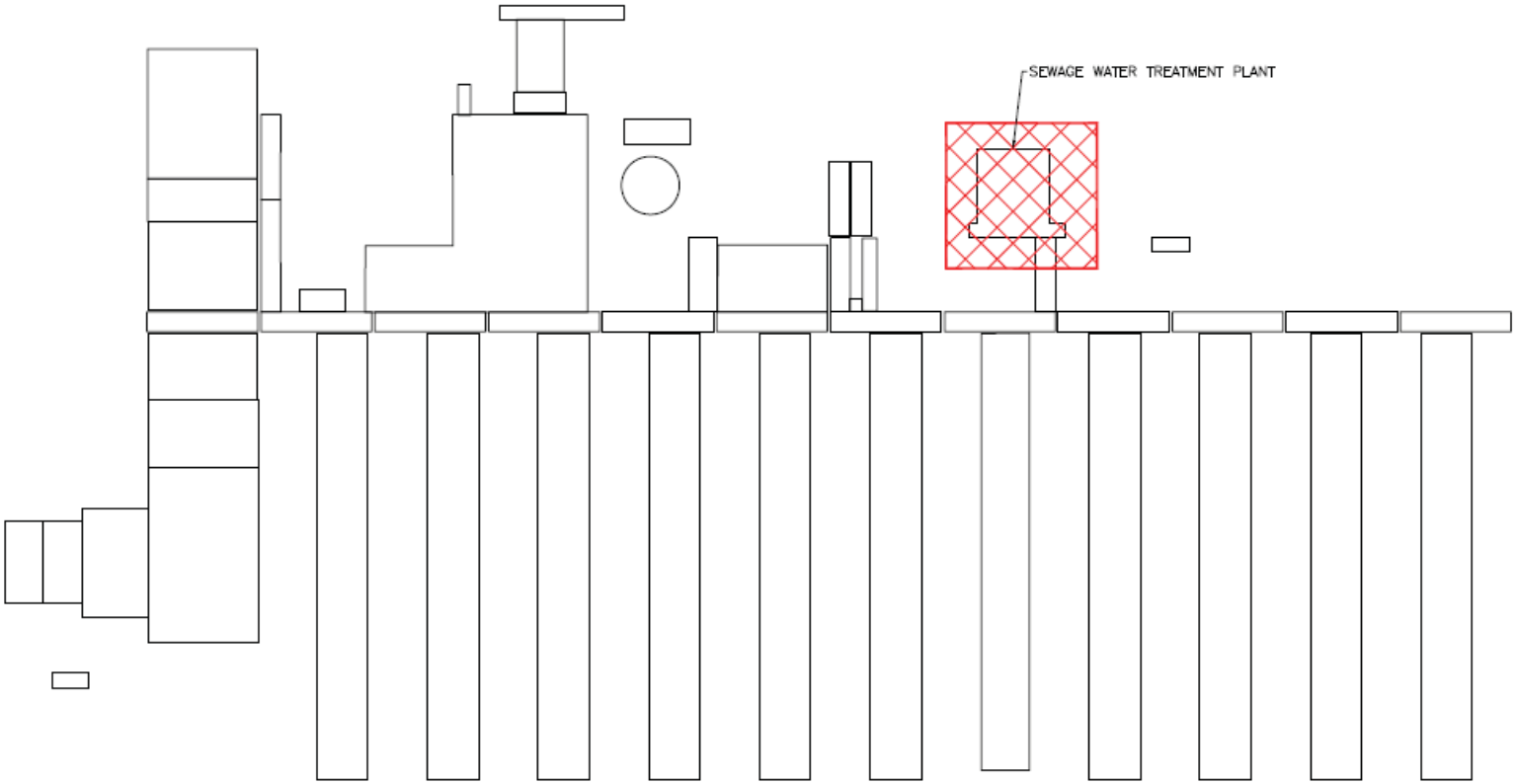

Figure 2 – Location of STP in the Whail Tail Camp

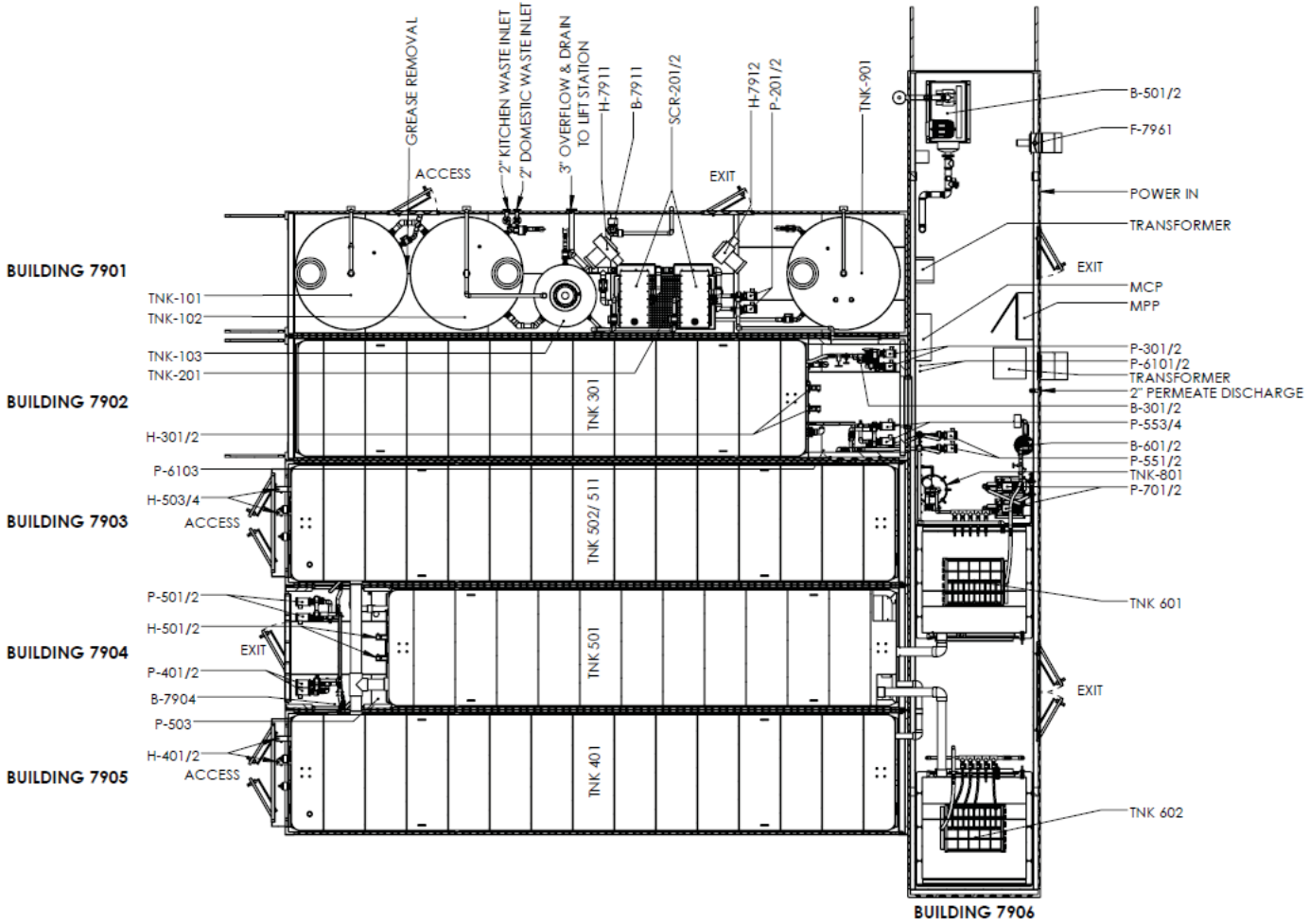

Figure 3 – General Arrangement of STP

1.3 CONTACT INFORMATION

The individuals responsible for the operation of the sewage treatment plant for the Project are the following:

Energy and Infrastructure Superintendent	819-856-3073
Energy and Infrastructure Supervisors	819 759-3555 ext 6731 or 6902

2 DESCRIPTION

2.1 SEWAGE TREATMENT PLANT (STP)

The plant is designed based on the occupation maximum of the camp for 400 persons (240L per day and per person). The design flows are presented in Table 1.

Table 1: Design flow rate

Parameters	Design Value	Unit
Per capita design flow	240	L/p/d
Number of persons	400	People
Average daily flow (ADF)	96	m^3/d
Maximum Daily Flow (MDF)	192	m^3/d
Peak Hourly Flow (PHF)	24	m^3/h
Overall time for speak to occur	2	hours
Maximum number of peak events per day	2	Qty

Table 2 presents the typical sewage composition used for the design (based on Meadowbank sewage quality).

Table 2: Sewage typical chemical composition

Parameters	Unit	Design Value
Biochemical Oxygen Demand (BOD_5)	mg/L	952
Total Suspended Solids (TSS)	mg/L	300
Total Kjeldahl Nitrogen (TKN)	mg/L	130
Ammonia nitrogen (NH_3-N)	mg/L	130
Oil and Grease	mg/L	30
pH	-	6 to 9.5
Water Temperature	^oC	10 to 25
Alkalinity	mg/L as $CaCO_3$	471.1

2.1.1 Process summary

The sewage treatment plant receives two streams of sewage as presented in Figure 4 (basic flowsheet of the STP). The first source is domestic sewage, which is fed directly to the fine screening process to remove any fibers or debris that might damage the membranes. The second source is kitchen sewage which is pre-treated in the oil and grease tanks to remove oil and grease prior to being fed into the fine

screens. The combined screened sewage is pumped to the equalization tank. The equalization tank buffers variability in the influent flow rate and concentrations of influent constituents, maintaining a consistent flow rate and sewage strength through the membrane bioreactor (MBR) system. Sewage is then pumped from the equalization tank to the pre-anoxic tank for denitrification.

In the pre-anoxic tank, screened sewage containing organics is combined with recycled mixed liquor from the aeration tank containing nitrates. Bacteria use some of the organics to drive the denitrification process, converting nitrate into nitrogen gas. This process occurs in an anoxic environment where there is minimal oxygen. As such a pump and eductors are used to mix the tank to prevent addition of oxygen. The denitrification process is used to meet the effluent nitrate operational target, reduce oxygen requirements and to recover alkalinity, thus reducing chemical consumption.

Mixed liquor from the anoxic tank flows by gravity to the first aerobic tank followed by the second aeration tank for aerobic biological degradation of the influent constituents (organics and ammonia). In the aerobic tanks, the nitrification process converts ammonia to nitrate in order to meet the effluent ammonia operational target. This process consumes alkalinity, so a caustic soda or soda ash dosing pump is used to control the pH. Additionally, liquid alum is dosed into the anoxic zone to precipitate phosphorus in order to meet the effluent phosphorus operational target. Mixed liquor flows by gravity from the second aeration tank to the post-anoxic tank for final denitrification polishing. In the post-anoxic tank there are minimal dissolved influent organics to drive the denitrification process. As such, an external carbon source in the form of MicroC is dosed to supplement the organics and drive the denitrification process.

Mixed liquor is pumped from the post-anoxic tank to the membrane tanks. The membrane tanks serve as additional volume for aerobic biological treatment to remove any excess MicroC (which would otherwise increase BOD in the effluent) and house the membrane filters used for solid-liquid separation. A treated effluent is drawn through the membranes by vacuum pumps.

Since the solid-liquid separation process results in an accumulation of solids in the membrane tank, the mixed liquor (containing both solids and filtrate) is continuously recycled to the first aeration tank. This prevents excessive solids build-up in the membrane tank, and maintains sufficient biomass in the anoxic and aeration tanks. The solids that accumulate in the system consist of biomass that has grown from the influent organics and ammonia, as well as non-biodegradable solids from the influent sewage. In order to maintain an optimal concentration of mixed liquor suspended solids (MLSS) (typically 10 g/L), a portion of the mixed liquor is periodically wasted by pumping from the Aeration Tank to the sludge holding tank. Wasted sludge in the sludge holding tank is thickened by decanting supernatant back to the screen tank. Thickened sludge accumulates in the sludge holding tanks until it is eventually pumped out for disposal.

The STP general flow diagram is illustrated in Figure 4 and Piping and Instrumentation Diagram (PID) in Figures 5 to 8. The following sections describe the STP components.

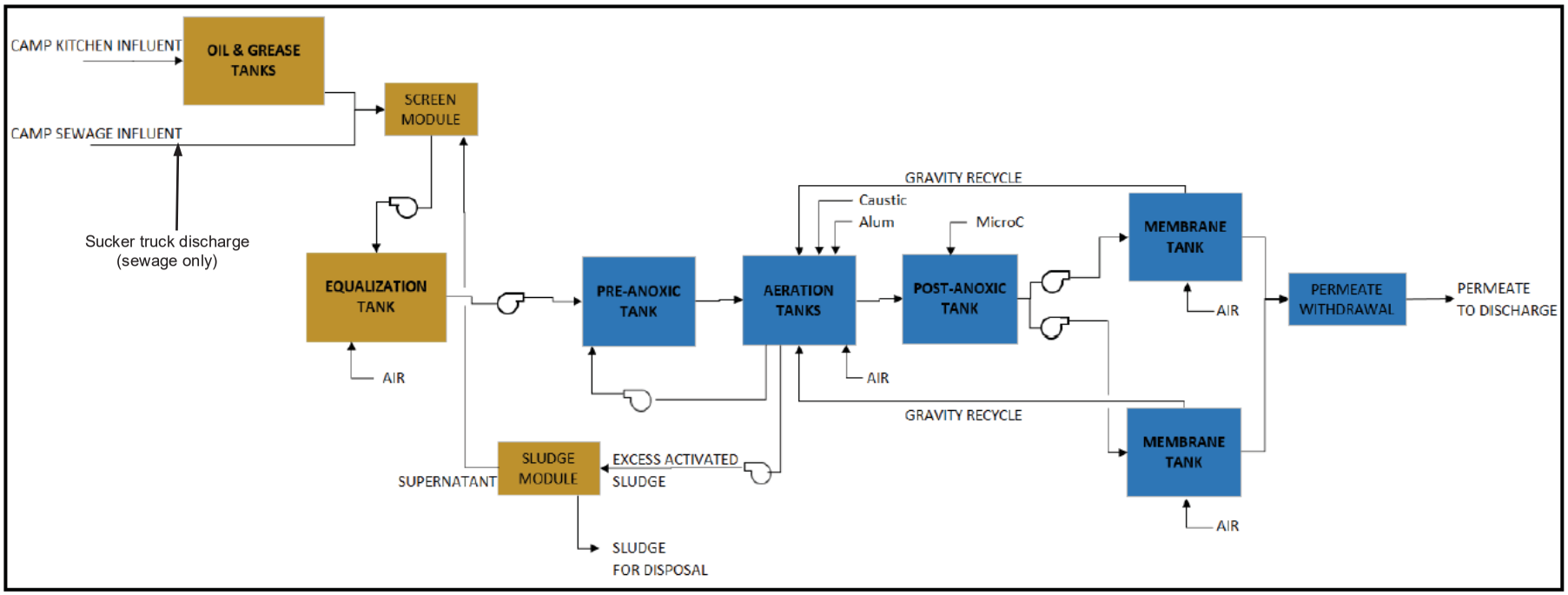

Figure 4 – Flowsheet

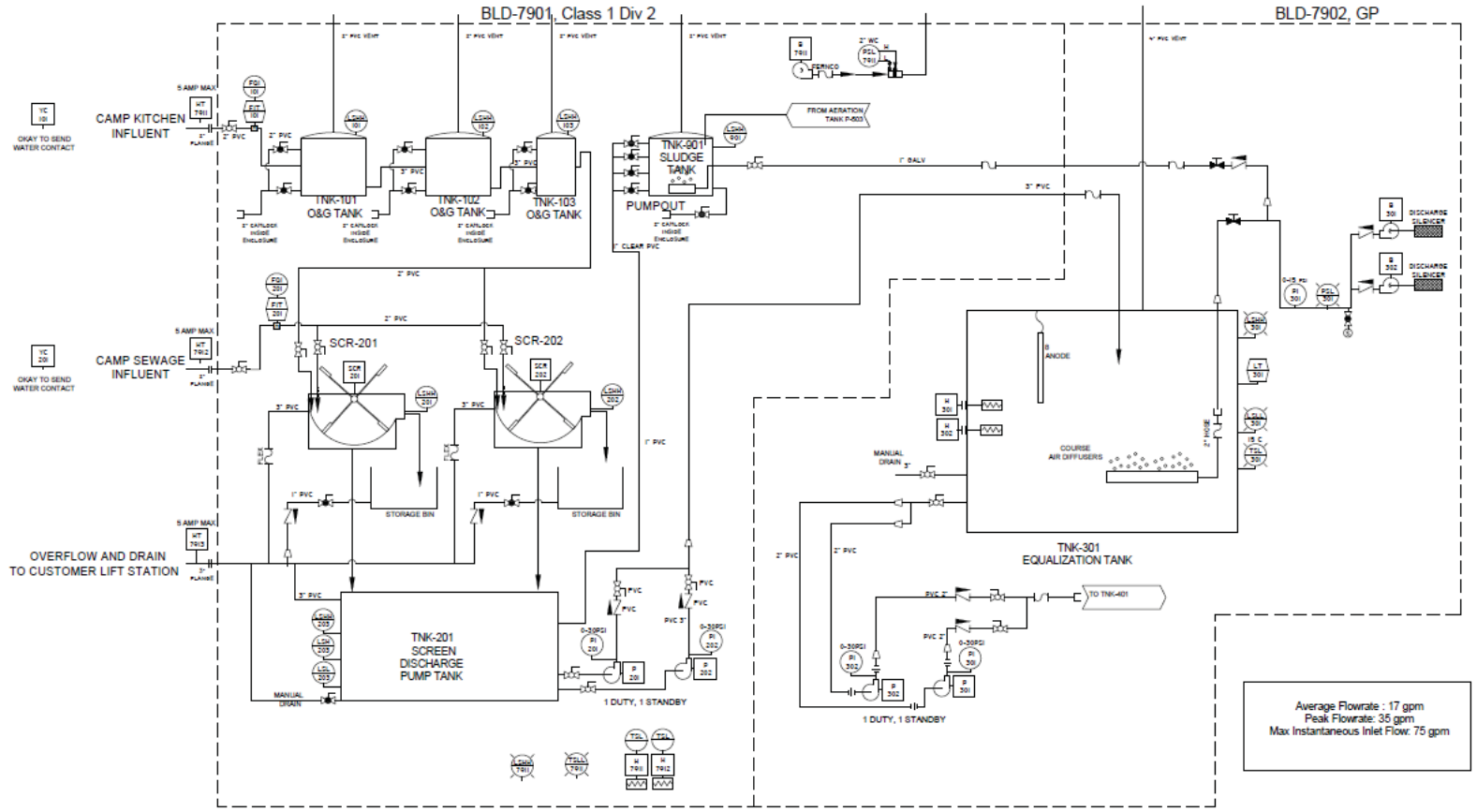

Figure 5 – Oils and grease removal, screening and equalization's tank

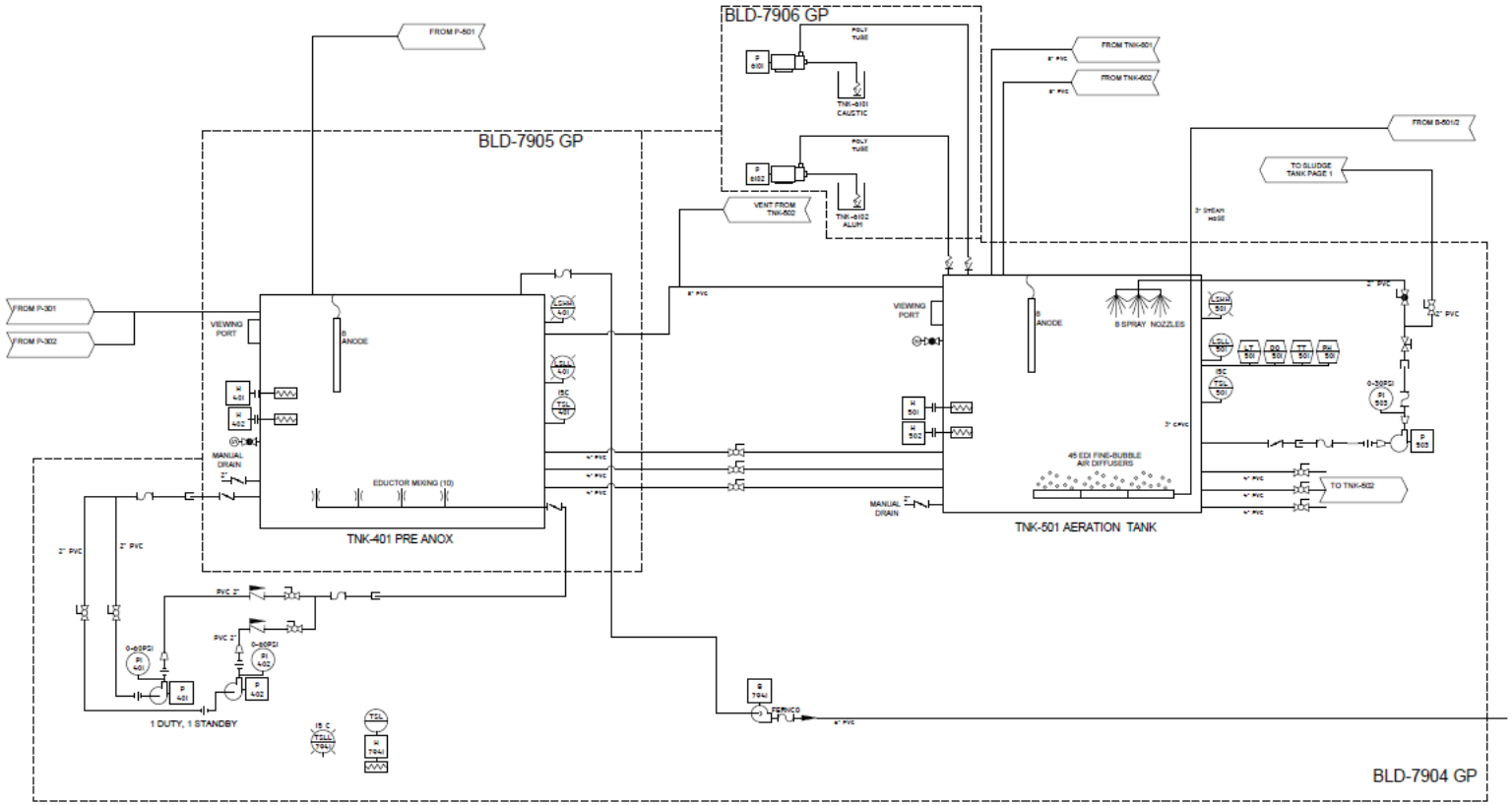

Figure 6 – Biological treatment

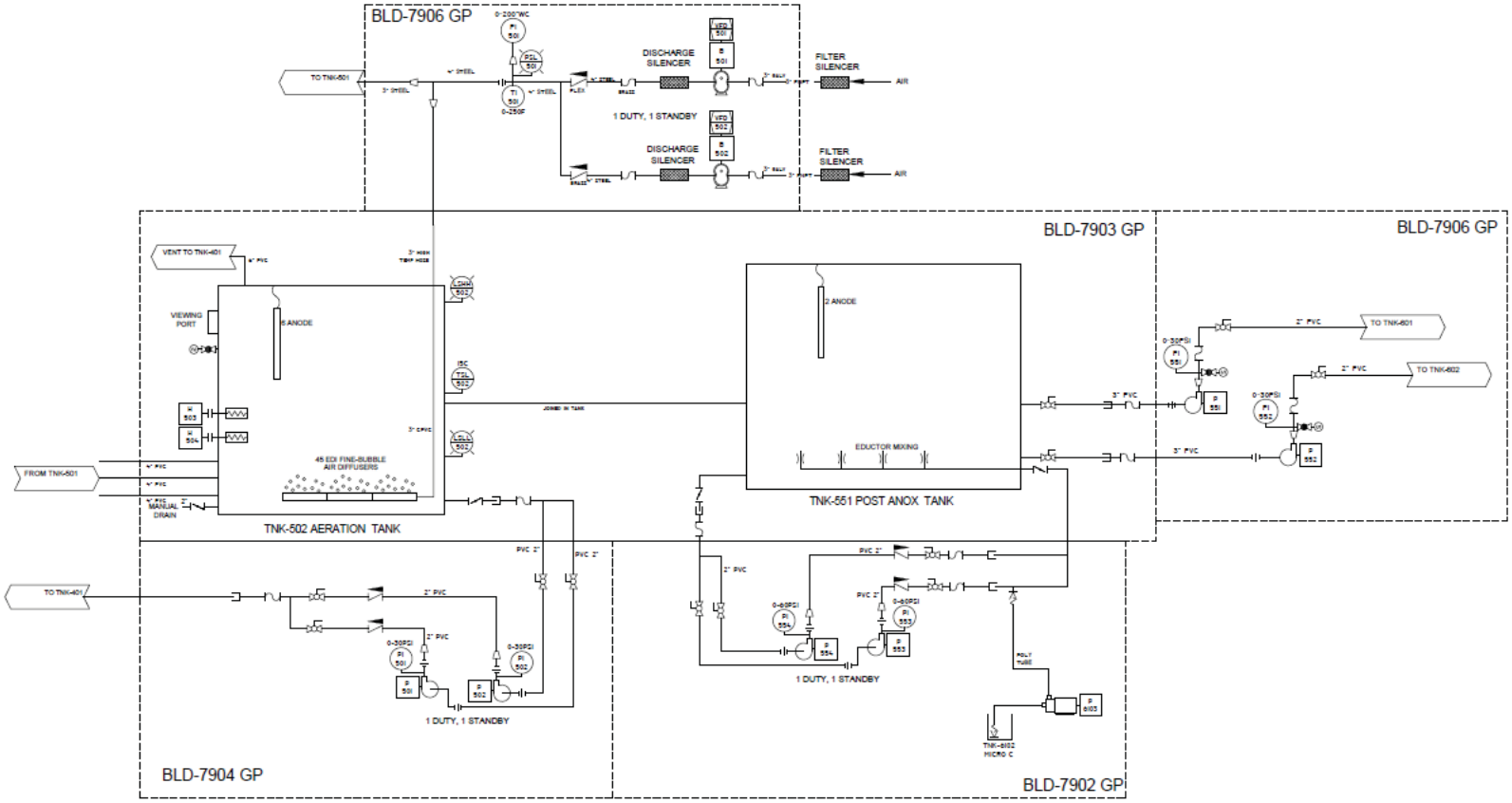

Figure 7 – Post Biological treatment

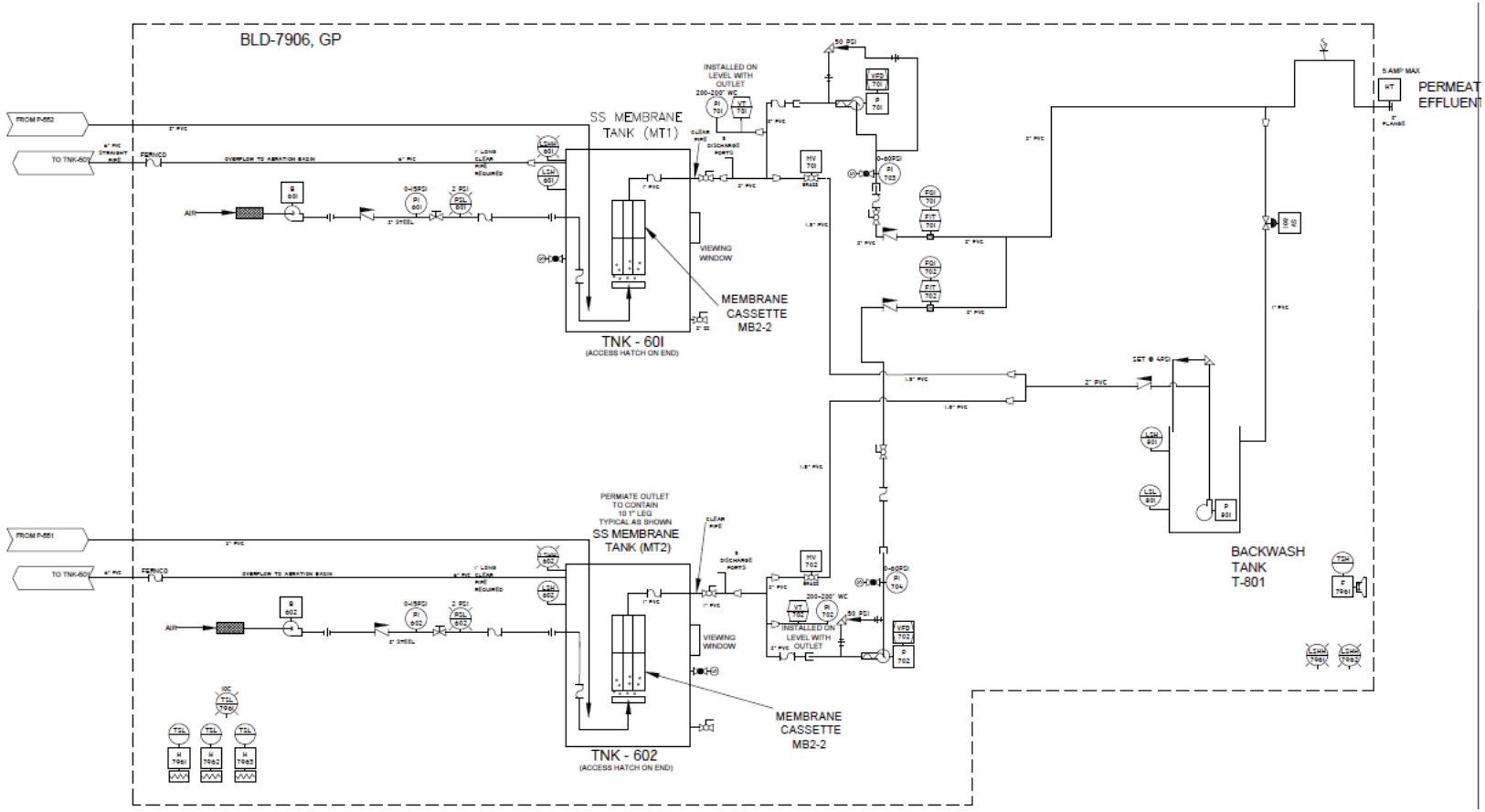

Figure 8 – Membrane filtration step

2.1.2 Process description

Oil and Grease (O/G) removal
Raw sewage from the kitchens entering the system can contain high levels of fats, oils and grease that can damage equipment and membranes downstream. To remove the oil and grease from the system a double trap grease interceptor is installed prior to the kitchen sewage entering the fine screen. Floating grease is removed via a vacuum truck hookup that will be used when the sludge tank is emptied. A pipe and vacuum truck hookup are also used to remove any debris that sunk to the bottom of the tanks. Vacuumed debris, oil and grease are to be disposed at the Meadowbank's tailings storage facility (TSF).

Fine Screening
Raw sewage entering the MBR system contains particulates and solids that could damage the equipment and membranes downstream. 0.5mm wedge wire fine screening protects the downstream equipment by removing large solids and fibrous material. Two screens are used for redundancy so that no unscreened influent enters the EQ tank. Redundant pumps are used to move the screened influent to the equalization tank.

Flow-Equalization
Throughout the day the flow and strength of the sewage will vary. To accommodate this, an equalization tank will buffer the flow and homogenize the loading. The equalization tank is aerated to maintain an aerobic environment to reduce odors and to maintain suspension of solids and pumps transfer sewage to biological treatment. This tank is provided with tank heaters. All wetted materials in this tank are either stainless steel or polypropylene to eliminate the possibility of corrosion. In addition, the tank has two liners, one primary, one secondary, with interstitial monitoring, providing the protection of a double wall tank.

Biological Treatment
In the anoxic zone, the pre-treated sewage is combined with return activated sludge from the aerobic tank and is kept mixed while maintaining a low level of dissolved oxygen (DO). Denitrification occurs as specific microorganisms convert nitrates to nitrogen gas – reducing the total nitrogen (TN) in the mixed liquor. Additionally, the anoxic stage optimizes the biological treatment process, which recovers alkalinity, aids in stabilizing pH, and improves energy efficiency by reducing overall aeration demand. In the aerobic zone, fine bubble diffusers create an aerobic environment where the organics contributing to biological oxygen demand (BOD) and ammonia are oxidized by the biology. Dissolved oxygen is continuously measured and aeration blowers controlled to maintain it in the range of 2 to 3 mg/L for process optimization and energy savings. In the post-anoxic zone, return activated sludge from the aerobic tank is kept mixed while maintaining a low level of dissolved oxygen (DO). The denitrification process continues in the post anoxic zone to reduce the TN even further.

Phosphorous Reduction
Chemical precipitation is used to remove inorganic phosphate. An aluminum sulphate or "Alum" solution is dosed into the mixed liquor causing dissolved phosphate to precipitate and coagulate. The suspended phosphate cannot pass through the Newterra MicroClearUltra Filtration membrane (UF), and the phosphate is eventually removed from the system as a solid with the waste activated sludge (WAS).

Membrane Filtration
After being treated biologically, the treated effluent is separated from the mixed liquor and solids by the Newterra MicroClear membrane modules and the permeate extraction system. The membrane

modules are continually air scoured to induce flow of mixed liquor over the flat sheet membrane surface and prevent fouling and buildup of solids on the membrane surface without the use of chemicals. The mixed liquor is then transferred to the inlet of the biological treatment to maintain even distribution of solids throughout the system and to introduce activated biology to the raw sewage. Newterra MicroClear membranes are produced with true ultrafiltration membrane material with 0.04 µm pore size, which blocks all bacteria and most viruses. Secondary disinfection is not required to exceed effluent requirements. Figure 9 presents a schematic view of the UF process.

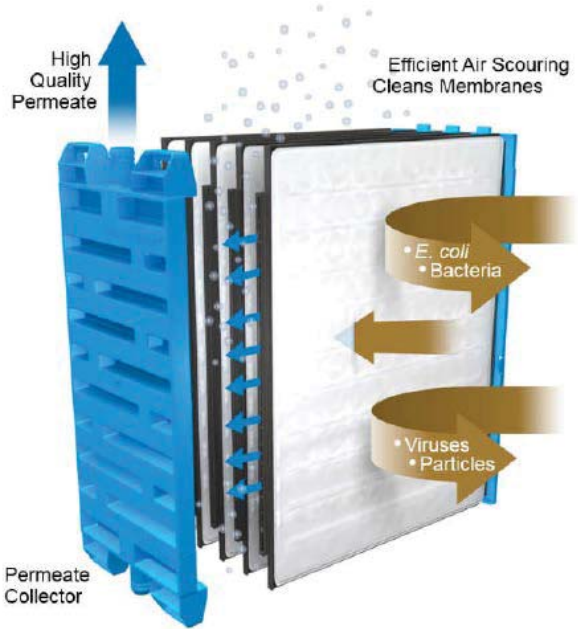

Figure 9 – Membrane filtration concept

2.1.3 Sludge Management Strategy

As solid-laden sewage enters the system and solid-free effluent is discharged, the suspended solids concentration in the mixed liquor suspended solids (MLSS) will increase. To maintain the proper level of MLSS, solids must be removed from the system as Waste Activated Sludge (WAS) which is mixed liquor discharged from the aerobic tank at approximately 0.8% dry. WAS is discharged to a tank for holding and decanting. The holding tank is aerated to maintain an aerobic environment to reduce odors. In the decanting process the WAS is allowed to settle and supernatant is pumped off, and returned to the MBR, thickening the sludge in the holding tank. By thickening the sludge to approximately 2% dry solids by weight, the total volume that must be disposed of is decreased, extending holding time and reducing operational costs. Level control in the tank indicates when the tank should be decanted or a vacuum truck should be scheduled to dispose of the WAS.

3 OPERATION AND MAINTENANCE

3.1 PUMPING

The system includes several pumps for the operation of the STP. All pumps are regularly inspected by the Operator who will ensure the pumps continue to operate efficiently and will address any deficiencies. If the pumps require maintenance, the Operator will report the situation and take appropriate action. Some of the pumps are installed with a standby unit that allows the Operator to switch from one pump to the other if necessary. In some specific situations, it may be necessary to temporarily shutdown the STP for servicing of the equipment.

A preventative maintenance program, as recommended by the pump supplier, will be followed to ensure the pumps are always kept in good working order.

3.2 SEWAGE COLLECTION

The sewage from the kitchen must pass through a grease trap (or similar facility for grease/fat removal). The large amount of oil and fat can harm treatment facility (e.g., clogging pumps and piping and cause foaming in the aeration tank). To avoid premature membrane fouling, maximum O/G concentrations should not exceed 30 mg/L.

The raw wastewater should not contain any of the following substances:

- Hydrocarbons – lubricants, gasoline, diesel, etc.;
- Paints, solvents, silica, silicon and polymers;
- Antibacterial solutions and products with quaternary ammonia;
- Large quantities of chemicals such as water softener, disinfectants, strong acids & alkalis, pesticides or photographic chemicals;
- Silicone based defoamers;
- Non-biodegradable solid waste (plastic, rubber products, disposable diapers, etc.);
- High amount of metals, such as iron, magnesium, calcium, barium and strontium.

3.3 SLUDGE DISPOSAL

Sludge will be disposed at Amaruq or Meadowbank site in the Waste Rock Storage Facility or the Tailings Storage Facility (Meadowbank only) or in a landfarm as a nutrient amendment as per the Water License Part F Item 3.

3.4 CONTROL

MBR (Membrane Bioreactor) treatment technology is an effective combination of an activated sludge biological treatment process with MBR membrane filtration technology. The STP can be operated in either manual or automatic mode. The system is designed to always run in auto mode. The manual option is provided mainly for maintenance purposes.

STP's control and automation system is based on several instruments measuring key parameter of the process, combined with a PLC. The STP don't require continuous operator intervention except for daily inspection and maintenance. The user interface can be accessed on-site from the control panel mounted touch-screen HMIs or remotely from a computer. Alarm messages can be set up to alert operators to issues.

The STP PLC is programmed to:

- Receive analogue and digital input signals from the switches and transmitters being controlled;
- Process the information using the structure and rules entered into the program;
- Generate outputs that control the equipment - turn equipment OFF or ON.
- Generate alarms if critical conditions are present
- Provide a HMI (Human Machine Interface) touch-screen for use of operator process monitoring and control.

More information are provided in the Operation and Maintenance Manual in Appendix.

3.5 REAGENTS

Some chemicals are required for treatment operation and also for Membrane cleaning. Chemicals will be used according to the MSDS recommendation. MSDS are provided in Appendix. Table 3 presents the estimated chemical consumption per year.

Table 3: Chemical consumption

Consumable		Usage Rate			
Purpose	Name	Value	Unit	Value	Unit
Supplemental Alkalinity	Dry Soda Ash	6.28	kg/d	2292	Kg/year
Phosphorus Removal	Liquid Alum, 48%	14.6	L/d	5346	L/year
Nitrate Removal	MicroC 2000	16.5	L/d	6025	L/year
Membrane Cleaning	Sodium Hyprochlorite, 12%	-	L/d	150	L/year

Sodium Carbonate (Soda Ash) is used for pH adjustment in case there is a deficiency in alkalinity in influent sewage and pH drops. It is hazardous in case of skin contact (irritant), of eye contact (irritant), of ingestion, of inhalation (lung irritant).

Sodium hypochlorite (NaOCl) and **Citric Acid** ($C_6H_8O_7$) are used for cleaning the membranes.

- Sodium hypochlorite is a common disinfectant, which can be an irritant or corrosive, depending on its concentration. It cannot be mixed with organics, ammonia compounds or acids. Contact with acids produces highly toxic chlorine gas. It has to be mixed only with pure water.
- Citric Acid is hazardous in case of skin contact (irritant, sensitizers), or ingestion, eye contact (irritant) and inhalation (lung irritants).

Aluminum Sulfate ($Al_2(SO_4)_3$) is used for Phosphorus Removal. Mild to moderate irritation can occur from unprotected contact. Aluminum is very poorly absorbed through the skin and toxic effects would not be expected following short-term skin contact. Inhalation of mists can be irritating to the respiratory tract and lungs.

MicroC 2000 is used for nitrate removal. Exposure to eyes may cause slight irritation. Exposure to Skin may cause slight irritation. Inhalation of high mist concentrations may cause irritation of respiratory tract.

3.6 BIOLOGICAL OPERATION

The following table presents target parameters required for a good operation of the STP.

Table 4: Biological system targets operational parameters

Parameter	Recommended	Range	Notes
MLSS (mg/L): Mixed Liquor Suspended Solids	10,000	8,000 – 15,000	Never operate the membranes if MLSS < 3,000 mg/l. Sludge wasting should be undertaken as required to maintain target MLSS
Temperature (°C)	15 - 35	10 – 35	Avoid sudden changes in temperature. Minimum operating temperature is 15 °C
pH	6.8 - 8.5	6.0 – 9.0	Membrane module can handle a change in pH. However it is recommended to keep pH between 6.8 - 8.5
Aeration Tank, DO (mg/L)	≥ 2.0	1.0 – 8.0	This can be maintained by adjusting the volume of air supplied to the aeration tank
Viscosity (mPa-s)	Not applicable	0 – 300	
Aeration Tank to Anoxic Tank Recirculation	400%	200 – 500%	
Membrane Tank to Aeration Tank Recirculation	400%	200 – 600%	
F:M (kg BOD/kg MLSS/d)	0.1	0.03 – 0.2	F:M = [Flow (m3/d) x BOD conc (mg/l)] / [Process volume (m3) x MLSS conc (mg/l)]
F:M (kg COD/kg MLSS/d)	0.15	0.05 – 0.3	F:M = [Flow (m3/d) x COD conc (mg/l)] / [Process volume (m3) x MLSS conc (mg/l)]
SRT : sludge retention time (days)	> 15	12 – 50	

3.7 MEMBRANE OPERATION

This section outlines the operating conditions that are required for proper sewage treatment, and longevity of the membranes.

Generally, the following points can be used to operate the MBR system properly:

- The MBR system is designed to treat wastewater with specified influent characteristics.
- Never operate the MBR tank below the minimum membrane submerged level. It is necessary to maintain a minimum of 250 mm liquid level above the membrane modules to ensure they are wet at all times and to allow for proper filtration.
- Always supply the required amount of air for scouring to the membrane module.
- Always filter sewage at or below design flow rate.
- Periodically, relax the membranes by ending filtration while allowing the membrane aeration scour to operate continuously and initiate backwash operation during membrane relaxation (default relaxation mode preset in PLC - permeation continues for 9 min and stops for 1 min).
- Always operate the MBR in accordance with the parameters listed in the supplier O&M Manual.
- Clean the membranes in-place with a dilute chemical in accordance with the supplier O&M Manual.

3.8 MEMBRANE CLEANING

In order to enhance life duration of the membrane, several cleaning are required as presented below.

In-situ Chemically Enhanced Backflush (CEB)
It is recommended that in-situ CEB be carried out before the trans membrane pressure (TMP) exceeds 0.25 bar (or permeability drops rapidly to 50 LMH/bar) This is typically done once every couple weeks/months depending on biomass characteristics and system operating condition. On certain occasions, membrane module/cassette may need to be physically inspected for membrane integrity if membrane permeability performance is not recovered after the cleaning (i.e., suspect of membrane deterioration). Hypochlorite is used for organic fooling and citric acid for inorganic acid.

Membrane Recovery Cleaning
The membrane recovery cleaning is to be done once a year at a minimum. On certain occasions, membrane cassette may need to be inspected for membrane integrity (suspect of membrane deterioration, membrane permeability performance does not recover after the cleaning, etc.).

- **Cleaning with High pH Solution:** This step is to be done if membrane fouling is a result of high fat, oil and grease. Sodium hydroxide can be used for this cleaning (400 mg/L, pH 12, 1 to 2 hours).
- **Cleaning with Sodium Hypochlorite** (500 mg/L free Cl_2, 12 hours)
- **Cleaning with Citric Acid** only in case of inorganic fouling (2 to 20 g/L during 2 h).
- **Checking Permeability.**

3.9 SERVICE WATER

For better cleaning performance, it is recommended to use:

- Potable water (permeate is acceptable if potable water is unavailable for the CEB cleaning),
- Water temperature is above 20^0C.

3.10 OPERATIONNAL PERFORMANCE TARGETS

The plant is designed to meet the following criteria presented in Table 5. Note that the treated water from STP is not directly discharged to the environment. The target concentrations presented in the following table for the treated water from STP, are set to limit effect on the receiving Environment after mixing with surface water into the Whale Tail attenuation pond and treatment in the AsWTP. There are no Water Licence criteria for the STP treated water. Reaching these values assure Agnico Eagle to operate the STP at a highest level of efficiency.

Table 5: STP treated water quality operational target

Parameters	Unit	Effluent
pH	s.u.	6.5 – 9.5
Oil, Grease	mg/L	<5
Biological Oxygen Demand (BOD)	mg/L	<25
Total Suspended Solids (TSS)	mg/L	<25
Total Kjeldahl Nitrogen (TKN)	mgN/L	-
Unionized Ammonia Nitrogen (NH3-N)	mgN/L	<1.25
Nitrate Nitrogen (NO3-N)	mgN/L	<5
Total Phosphorus (TP)	mgP/L	<0.5
Fecal Coliform	CFU/100 ml	<200
Total Residual Chlorine	mg/L	<0.02

3.11 GENERAL OPERATION & MAINTENANCE, SAMPLING PROCEDURES AND FREQUENCY

To ensure efficiency of STP, samples of water must be collected periodically. Table 6 presents sampling schedule to assess that STP performance comply with operational target values.

More samples can be taken at different locations in the plant to assess any default on STP operation.

Visual inspection is also important to verify STP operation. The following sign must be reported as soon as possible:

- **Plant Visual Checks Noise**
  During normal operation, there is a uniform humming sound at the plant. In case of an unusual noise, it could be an indication that the blower needs maintenance or repairs
- **Smell**
  The MBR is an aerobic system. During normal operation, the system has an earthy smell similar to that of a well-maintained compost pile. If other odors are noticed, the aeration process may not be operating or the system has been overloaded. Check the DO manually and the blower to verify the proper operation.
- **Effluent Aspect**
  Normally, the effluent is reasonably clear, colorless, and odorless. If the effluent becomes turbid, there is a pin hole in the membrane or a leakage in the piping. Take the unit out of operation and investigate. Check uniformity of membrane air distribution periodically to ensure air scouring is effective across all membrane plates.

Table 6: Monitoring program for operational efficiency assessment.

Parameters	Sewage	Aeration tank	Membrane tank	Effluent
Flow	daily			daily
Oil and Grease	As required			As required
Alkalinity	As required			
Biological Oxygen Demand	Weekly			Weekly
Total Suspended Solids	Weekly			Weekly
Total Kjeldahl Nitrogen / Total Nitrogen	Monthly			As required
Ammonia Nitrogen				As required
Nitrate				As required
Total Phosphorus	Weekly			Weekly
Mixed Liquor Suspended Solids (MLSS)			Weekly	
Mixed Liquor Volatile Suspended Solids (MLVSS)			As required	
Temperature		daily		
pH	As required	daily		Weekly
Dissolved Oxygen		daily		
Filterability			3 times weekly	
Turbidity				As required
Fecal Coliform / E-Coli				Weekly

Table 7 summarizes also Routine Operation and Maintenance Checkups. More details are provided in the supplier O&M Manual.

According to the water licence, Group 1 Parameters shall be analyzed four times per calendar year during operation and closure. The parameters are presented herein:

- pH, turbidity, hardness, alkalinity, chloride, fluoride, sulphate, total dissolved solids (TDS), total suspended solids (TSS), ammonia nitrogen, nitrite, nitrate, orthophosphate, total phosphorus, Total Metals (aluminum, arsenic, barium, cadmium, chromium, copper, iron, lead, manganese, mercury, molybdenum, nickel, selenium, silver, thallium and zinc).

Table 7: Routine Operation and Maintenance Checkups

Location	Item	Action	Comments
Grease trap	Periodic cleaning	As needed	Waste sent to Meadowbank TSF
Process	Visual check	Daily	Performance evaluation
	Flow rate in and out	Daily	
	Sampling	Daily / as requested	For water quality and performance evaluation
	Vacuum pressure on membrane	Daily	Evaluate Membrane fouling
Mechanical & process	Inspect Membrane	Weekly	
	Sensor cleaning and calibration	Weekly / yearly	
	Valves, fittings	Weekly	Prevent spill
	Membrane Cleaning	Quarterly/Yearly	Permeability recovery
	Aeration diffuser	Yearly	Process efficiency
	Pumps	Quarterly	Prevent spill
	Blower	Monthly	Process efficiency
	Screening device	Daily/ Weekly/ Quarterly	Prevent clogging, remove solid waste and dispose it
	Dosing pumps	Quarterly	Prevent spill
	Fan and heaters	Yearly	Health and safety of operator
Electrical	Leads	Quarterly	Health and safety of operator and Process efficiency
	Panel fan filter, inspection breaker, fuses, motor bold, clean dust	Monthly	Health and safety of operator Process efficiency
	PLC functionality	Weekly	Process efficiency

3.12 TROUBLESHOOTING AND MAINTENANCE PROCEDURES

MBR operation relies critically on the ability of the membrane unit to pass all flow incoming to the plant. If membrane permeability is impaired, the MBR plant cannot process all flow with potentially negative results even though effluent quality remains consistently high. Membrane fouling (and associated reduction of flux or increase of TMP) remains as an operational challenge.

Membrane fouling in MBR is a result of the interaction between the incoming water quality, mixed liquor filterability, system operation condition, and membrane material. There are four categories of membrane fouling.

Microbial/Biological Fouling
Microbial fouling is a result of the formation of biofilms on membrane surfaces. This structure protects bacterial cells from hydraulic shearing and from chemical attacks of biocides such as chlorine. Chemical cleaning would be required to restore permeability.

Particulate/Colloid Fouling
This type of fouling may be associated with high concentrations of colloidal solids present in mixed liquor. In most cases, particles and colloids do not really foul the membrane because the flux decline caused by their accumulation on the membrane surface is largely reversible by hydraulic cleaning measures such as backwash and air scouring. However, the accumulation of solids between the membranes can create increased membrane resistance to permeation and permanent physical membrane damage.

Inorganic Fouling
Inorganic fouling or precipitative fouling is caused by the accumulation of inorganic precipitates such as metal hydroxides, and “scales” on membrane surface or within pore structure. Chemical cleaning will be required in that case.

Organic Fouling
Organic fouling is the attachment of materials such as oil or grease to the membrane surface. Oil and grease trap will prevent this type of fouling and chemical cleaning is also achievable to restore permeability.

Excessive foaming (white foam accumulating over the liquid surface) in aeration and/or membrane tanks could also reduce performance of the STP. Remediation should be taken to eliminate foaming agent or restore design parameters of the plant.

Permeate bad quality can also indicate default in MBR membrane and operation.

Finally, biological system can also indicate default in operation.

- Black color of biomass indicates a lack of aeration,
- Increase of bacteria quantity in the reactor indicates a low sludge wasting,
- Unpleasant odor can indicate overload of the system, blower failure, etc.
- Water quality not achieved: Mixed liquor characteristics are not within proper operating standards.

Further details are available in the manufacturer’ operating manuals in Appendix.

3.13 RECORD KEEPING

Records of the operational, maintenance and sampling procedures will be kept daily in order to assist in the evaluation of the effectiveness of the STP.

The following will be recorded on a daily basis:

- Volume of effluent discharged to the whale tail attenuation pond;
- Sewage volume collected;
- Details of any maintenance undertaken at site;
- Volume of sewage sludge removed from the STP;
- Locations and methods of sewage sludge disposal;
- Water quality parameter results required to follow the STP performance.

The record sheets will be kept in the STP office.

3.14 SAFETY PROCEDURES FOR OPERATORS

Operators working in the STP facility must be trained prior to work so that they are aware of the health and safety risks as well as the operational procedures associated with the STP. The following are important safety considerations:

- The wastewater contains a mixture of viable bacteria and other biological organisms. A wastewater treatment plant poses a number of bacterial hazards and consequently potential health risk. Immunization protects operator against infection. The use of proper hygiene measures, protective equipment, good housekeeping and common sense prevent contact with pathogens. Ensure that hands are washed with an antibacterial soap and warm water and dried by disposable towels on a regular basis, especially prior eating. Do not expose cuts or open sores to wastewater. Any concern about possible infection should be brought to the attention of medical physician immediately.
- Follow local laws and regulations with respect to entering a confined space.
- Working within the plant, especially with chemicals, requires adequate personal protective equipment (PPE) for Operators. This includes wearing steel toed boots, hard hat, rubber aprons, safety glasses with side shields and gloves.
- Operators are required to conduct good housekeeping of the working area to minimize the risk of incidents.
- Lock-out/tag-out procedures must be applied when servicing equipment.
- The MSDS for reagents used in the STP will be readily available for the operator at all times.
- Eyewash stations are located within proximity of reagent systems in the STP.

3.15 CONTROLLING ACCESS TO THE STP

Access to the STP will be restricted to authorized personnel only. Signs will be posted at the STP entrance.

4 EMERGENCY RESPONSE

4.1 FIRE

In case of fire at the STP, the on-site emergency response team (ERT) will be notified as per Agnico Eagle's protocol. Instructions from the on-site emergency response team will be followed by all personnel at the STP. Further details of fire response are provided in the "*Risk Management & Emergency Response Plan*". The STP will include the necessary fire safety protection measures in accordance with the Nunavut and North West Territories Mine Act.

4.2 SPILL

In the event of a spill at the STP, the Environment Department will be notified immediately and provide support, as required. In the event of a large spill, the on-site ERT will be notified as per Agnico Eagle's protocol. Instructions from the ERT will be followed by all personnel at the STP. All spill will be reported and treated according to the "*Spill Contingency Plan".*

4.3 PLANT MALFUNCTION

If there is a major problem or failure in the STP it would be most likely due to changes in the influent (raw sewage) (i.e. high strength sewage (BOD high) killing bacteria in the STP) or membrane failure. In this case, there would be visible effluent problems (part of daily operational checks), poor water quality, and increased odours that the operator would note. If this occurs, a sample will be taken to try to determine the source of the problem.

The following other contingent measures can be applied by Agnico Eagle in the event of a malfunction at the STP:

- Cut back on allowable camp water until the malfunction is corrected and use the equalization tank to retard the peak flow;
- Shut down the malfunctioning unit until the malfunction is repaired and use only one of the two parallel units until repairs are completed (for equipment in parallel);
- Bypassing untreated STP influent around the malfunctioning unit. Sucker truck can collect sewage from the equalization tank and carry it to Meadowbank facilities. Sewage would then be stored into the Tailing storage facility or would be treated into the sewage treatment plant (STP) at Meadowbank depending on the available capacity remaining.
- Shut down temporarily all water use in the camp until the repairs are completed;

Appendix A: Reagent MSDS Sheets

SAFETY DATA SHEET

NC00525
MICROC 2000

Preparation Date: 09/Mar/2018 Version: 1

1. IDENTIFICATION

Product identifier

Product Name MICROC 2000

Other means of identification

Product Code(s) NC00525

Synonyms none

Recommended use of the chemical and restrictions on use

Recommended Use Reducing agent for biological purposes

Restricted Uses No information available

Initial Supplier Identifier
Univar Canada Ltd.
9800 Van Horne Way
Richmond, BC V6X 1W5
Telephone: 1-866-686-4827

Emergency telephone number

24 Hour Emergency Phone Number (CANUTEC): 1-888-226-8832 (1-888-CAN-UTEC)

2. HAZARD IDENTIFICATION

Hazardous Classification of the substance or mixture

none

Label elements

Hazard pictograms None

Hazard statements

SAFETY DATA SHEET

SDS00221
Sodium Hypochlorite 12%

Preparation Date: 09/Feb/2018 Version: 4

1. IDENTIFICATION

Product identifier

Product Name Sodium Hypochlorite 12%

Other means of identification

Product Code(s) SDS00221

Synonyms Sodium oxychloride; Soda bleach liquor; Javel water; Clorox; Javex.

Recommended use of the chemical and restrictions on use

Recommended Use Chemical intermediate Bleaching agent Laboratory reagent. Pulp and paper. Water treatment. Disinfectant

Restricted Uses No information available

Initial Supplier Identifier
Univar Canada Ltd.
9800 Van Horne Way
Richmond, BC V6X 1W5
Telephone: 1-866-686-4827

Emergency telephone number

24 Hour Emergency Phone Number (CANUTEC): 1-888-226-8832 (1-888-CAN-UTEC)

2. HAZARD IDENTIFICATION

Hazardous Classification of the substance or mixture

Corrosive to metals	Category 1
Skin corrosion/irritation	Category 1
Sub-category B	
Serious eye damage/eye irritation	Category 1

Label elements

Hazard pictograms



Signal Word: Danger

Hazard statements
May be corrosive to metals
Causes severe skin burns and eye damage

Precautionary Statements

Prevention
Do not breathe dust/fume/gas/mist/vapors/spray
Wash face, hands and any exposed skin thoroughly after handling
Wear protective gloves/protective clothing/eye protection/face protection

Immediately call a POISON CENTER or doctor
IF IN EYES: Rinse cautiously with water for several minutes. Remove contact lenses, if present and easy to do. Continue rinsing
IF ON SKIN (or hair): Take off immediately all contaminated clothing. Rinse skin with water or shower
Wash contaminated clothing before reuse
IF INHALED: Remove person to fresh air and keep comfortable for breathing
IF SWALLOWED: Rinse mouth. DO NOT induce vomiting

Storage
Store locked up
Store in a well-ventilated place. Keep container tightly closed

Disposal
Dispose of contents/container to an approved waste disposal plant

Very toxic to aquatic life with long lasting effects

3. COMPOSITION/INFORMATION ON INGREDIENTS

Substance

Not applicable.

Mixture

Chemical Name	CAS No	Weight-%	Synonyms
Water	7732-18-5	80 - 90%	Water
Sodium Hypochlorite, Solution	7681-52-9	10 - 20%	Sodium Hypochlorite, Solution

4. FIRST AID

Description of first aid measures

General advice
Immediate medical attention is required. Show this safety data sheet to the doctor in attendance.

Inhalation
Remove to fresh air. If breathing has stopped, give artificial respiration. Get medical attention immediately. Do not use mouth-to-mouth method if victim ingested or inhaled the substance; give artificial respiration with the aid of a pocket mask equipped with a one-way valve or other proper respiratory medical device. If breathing is difficult, (trained personnel should) give oxygen. Delayed pulmonary edema may occur.

Eye contact
Rinse immediately with plenty of water, also under the eyelids, for at least 15 minutes. Keep eye wide open while rinsing. Do not rub affected area. Remove contact lenses, if present and easy to do. Continue rinsing. Get immediate medical advice/attention.

Skin contact
Wash off immediately with soap and plenty of water while removing all contaminated clothes and shoes. Get immediate medical advice/attention.

Ingestion
Do NOT induce vomiting. Clean mouth with water and drink afterwards plenty of water. Never give anything by mouth to an unconscious person. Get immediate medical advice/attention.

Self-protection of the first aider
Ensure that medical personnel are aware of the material(s) involved, take precautions to protect themselves and prevent spread of contamination. Avoid contact with skin, eyes or clothing. Avoid direct contact with skin. Use barrier to give mouth-to-mouth resuscitation. Wear personal protective clothing (see section 8).

Most important symptoms and effects, both acute and delayed:
Causes irritation of the mouth, nose and throat. Corrosive Causes burns to the mouth, throat and stomach. May cause severe skin irritation. Corrosive to the respiratory passage. Corrosive to eye tissue and may cause severe damage and blindness. Causes vomiting, nausea, and diarrhea. Repeated and/or prolonged exposures may cause productive cough, running nose, bronchopneumonia, pulmonary edema (fluid build-up in lungs) and reduction of pulmonary function. Coma, shock and death may occur. May cause whitening or bleaching of the skin. If mixed with acids or warmed to temperatures greater than 40 °Celsius, Sodium hypochlorite solutions release chlorine gas. This gas can cause severe irritation of the nose and throat. Exposures to high levels of chlorine gas may result in severe lung damage. Prolonged contact may lead to burns and blisters and may aggravate dermatitis.

Indication of any immediate medical attention and special treatment needed:

Note to physicians
Due to the severely irritating or corrosive nature of the material, swallowing may lead to ulceration and inflammation of the upper alimentary tract with hemorrhage and fluid loss. Also, perforation of the esophagus or stomach may occur, leading to mediastinitis or peritonitis and the resultant complications.

5. FIRE-FIGHTING MEASURES

Suitable Extinguishing Media
Use extinguishing media appropriate for surrounding fire.

Specific hazards arising from the substance or mixture
Closed containers may explode in fire. Keep containers cool to prevent rupture and release of material. Spilled material may cause floors and contact surfaces to become slippery.

Hazardous combustion products
Chlorine. Oxides of sodium. Oxygen. When heated to decomposition, it emits acrid smoke and irritating fumes.

Special protective equipment for fire-fighters
Firefighters should wear self-contained breathing apparatus and full firefighting turnout gear. Use personal protection equipment.

6. ACCIDENTAL RELEASE MEASURES

Personal precautions, protective equipment and emergency procedures

Attention! Corrosive material. Avoid contact with skin, eyes or clothing. Ensure adequate ventilation. Use personal protective equipment as required. Evacuate personnel to safe areas. Keep people away from and upwind of spill/leak.

Environmental precautions

Prevent further leakage or spillage if safe to do so. Should not be released into the environment. Do not allow to enter into soil/subsoil. Prevent product from entering drains.

Methods and materials for containment and cleaning up

Prevent further leakage or spillage if safe to do so.

7. HANDLING AND STORAGE

Precautions for safe handling

For industrial use only. Handle and open containers with care. Avoid contact with eyes, skin and clothing. Do not ingest. Avoid inhalation of chemical. Empty containers may contain hazardous product residues. Keep the containers closed when not in use. Protect against physical damage. Use appropriate personnel protective equipment. When diluting, add this product to water in small amounts to avoid spattering. Never add water to this material.

Conditions for safe storage, including any incompatibilities

Store in a cool, dry, well ventilated area, away from heat and ignition sources. Keep away from direct sunlight. Do not freeze. Store away from organic chemicals, strong bases, metal powders, carbides, sulfides, and any readily oxidizable material. Storage area should be equipped with corrosion-resistant floors, sumps and should have controlled drainage to a recovery tank. Store below 29 °C. Store in a sealed polyethylene lined container.

8. EXPOSURE CONTROLS/PERSONAL PROTECTION

Control parameters

Exposure Limits This product, as supplied, does not contain any hazardous materials with occupational exposure limits established by the region specific regulatory bodies.

Chemical Name	Alberta OEL	British Columbia OEL	Ontario	Quebec OEL	Exposure Limit - ACGIH	Immediately Dangerous to Life or Health - IDLH
Water 7732-18-5	Not available	Not available	Not available	Not available	Not available	Not available
Sodium	Not available	Not available	Not available	Not available	Not available	Not available

Hypochlorite, Solution 7681-52-9						

Consult local authorities for recommended exposure limits

Appropriate engineering controls

Engineering controls
Local exhaust ventilation as necessary to maintain exposures to within applicable limits. Make up air should always be supplied to balance air exhausted (either generally or locally). Ventilation required when spraying or applying in a confined area. Ventilation should be explosion proof. Eliminate ignition sources.

Individual protection measures, such as personal protective equipment

Eye/face protection
Chemical safety goggles and/or full face shield to protect eyes and face, if product is handled such that it could be splashed into eyes.

Hand protection
Nitrile gloves. Neoprene gloves. Impervious gloves. Rubber gloves.

Skin and body protection
Neoprene coated apron or chemical resistant clothing. Impervious boots.

Respiratory protection
NIOSH approved supplied air respirator when airborne concentrations exceed exposure limits. Wear a NIOAH approved full facepiece respirator for acid gases or a self-contained breathing apparatus for air concentration levels up to 5 ppm.

General hygiene considerations
Avoid contact with skin, eyes or clothing. Wear suitable gloves and eye/face protection. Do not eat, drink or smoke when using this product. Remove and wash contaminated clothing and gloves, including the inside, before re-use. Contaminated work clothing should not be allowed out of the workplace. Regular cleaning of equipment, work area and clothing is recommended. Wash hands before breaks and immediately after handling the product.

9. PHYSICAL AND CHEMICAL PROPERTIES

Information on basic physical and chemical properties

Appearance

Physical state	Liquid
Color	Clear Green to yellow.
Odor	Chlorine
Odor threshold	No information available

PROPERTIES	**Values**	**Remarks • Method**
pH	11.5 - 13	
Melting point / freezing point	-25 °C / -13 °F	
Initial boiling point/boiling range	No data available	None known
Flash point	No data available	None known
Evaporation rate	No data available	None known
Flammability (solid, gas)	No data available	None known
Flammability Limit in Air		
Upper flammability limit:	No data available	
Lower flammability limit:	No data available	
Vapor pressure	17.5 mmHg	
Relative vapor density	No data available	None known

Specific Gravity	1.175	
Water solubility	Soluble in water	
Solubility in other solvents	No data available	
Partition coefficient	No data available	
Autoignition temperature	No data available	None known
Decomposition temperature	No data available	None known
Kinematic viscosity	No data available	None known
Dynamic viscosity	No data available	None known
Explosive properties	No information available.	
Oxidizing properties	No information available.	
Molecular weight	No information available	
VOC Percentage Volatility	No information available	
Liquid Density	No information available	
Bulk density	No information available	

10. STABILITY AND REACTIVITY

Reactivity/Chemical Stability
Unstable above 40°C / 104 °F.

Possibility of hazardous reactions
Hypochlorites may react with primary amines to form nitrogen trichloride which explodes spontaneously in air. Hypochlorite bleach reacts with urea to form nitrogen trichloride which explodes spontaneously in air. Some metals accelerate the decomposition of Sodium Hypochlorite. Nickel. Copper. Tin. Iron and its alloys. Manganese.

Hazardous polymerization
Will not occur.

Conditions to avoid
High temperatures. Exposure to light.

Incompatible materials
Strong oxidizers. Acids. Reducing agents. Ammonia. Metals.

Hazardous decomposition products
Chlorine. Oxides of sodium. Oxygen. When heated to decomposition, it emits acrid smoke and irritating fumes.

11. TOXICOLOGICAL INFORMATION

Information on likely routes of exposure

Inhalation
Causes irritation of the mouth, nose and throat. Corrosive to the respiratory passage. Repeated and/or prolonged exposures may cause productive cough, running nose, bronchopneumonia, pulmonary edema (fluid build-up in lungs) and reduction of pulmonary function. If mixed with acids or warmed to temperatures greater than 40 °Celsius, Sodium hypochlorite solutions release chlorine gas. This gas can cause severe irritation of the nose and throat. Exposures to high levels of chlorine gas may result in severe lung damage.

Eye contact
Corrosive to eye tissue and may cause severe damage and blindness.

Skin contact
Corrosive. May cause severe skin irritation. May cause whitening or bleaching of the skin. Prolonged contact may lead to burns and blisters and may aggravate dermatitis.

Ingestion
Causes burns to the mouth, throat and stomach. Corrosive. Causes vomiting, nausea, and diarrhea. Coma, shock and death may occur.

Information on toxicological effects

Symptoms
Corrosive effects on the skin and eyes may be delayed, and damage may occur without the sensation or onset of pain. Aspiration may cause lung damage.

Numerical measures of toxicity

Acute toxicity

The following values are calculated based on chapter 3.1 of the GHS document .

ATEmix (oral) 68,333.00 mg/kg
ATEmix (dermal) 83,417.00 mg/kg

Unknown acute toxicity No information available

Chemical Name	Oral LD50	Dermal LD50	Inhalation LC50
Water 7732-18-5	> 90 mL/kg (Rat)	Not available	Not available
Sodium Hypochlorite, Solution 7681-52-9	= 8.91 g/kg (Rat)	> 10000 mg/kg (Rabbit)	Not available

Delayed and immediate effects as well as chronic effects from short and long-term exposure

Skin corrosion/irritation
Corrosive. May cause severe skin irritation. May cause whitening or bleaching of the skin. Prolonged contact may lead to burns and blisters and may aggravate dermatitis.

Serious eye damage/eye irritation
Corrosive to eye tissue and may cause severe damage and blindness.

Respiratory or skin sensitization
No information available.

Germ cell mutagenicity
No information available.

Carcinogenicity
No information available.

The table below indicates whether each agency has listed any ingredient as a carcinogen.

Chemical Name	ACGIH	IARC	NTP	OSHA
Water 7732-18-5	Not available	Not available	Not available	Not available
Sodium Hypochlorite, Solution 7681-52-9	Not available	Group 3	Not available	Not available

Legend
IARC (International Agency for Research on Cancer)
Group 3 - Not Classifiable as to Carcinogenicity in Humans

Reproductive toxicity
No information available.

Specific target organ systemic toxicity - single exposure

No information available.

Specific target organ systemic toxicity - repeated exposure
No information available.

Aspiration hazard
No information available.

12. ECOLOGICAL INFORMATION

Ecotoxicity

.

Chemical Name	Ecotoxicity - Freshwater Algae Data	Ecotoxicity - Fish Species Data	Toxicity to microorganisms	Crustacea
Water 7732-18-5	Not available	Not available	Not available	Not available
Sodium Hypochlorite, Solution 7681-52-9	Not available	0.06 - 0.11 mg/L LC50 (Pimephales promelas) 96 h flow-through 4.5 - 7.6 mg/L LC50 (Pimephales promelas) 96 h static 0.4 - 0.8 mg/L LC50 (Lepomis macrochirus) 96 h static 0.28 - 1 mg/L LC50 (Lepomis macrochirus) 96 h flow-through 0.05 - 0.771 mg/L LC50 (Oncorhynchus mykiss) 96 h flow-through 0.03 - 0.19 mg/L LC50 (Oncorhynchus mykiss) 96 h semi-static 0.18 - 0.22 mg/L LC50 (Oncorhynchus mykiss) 96 h static	Not available	EC50: 0.033 - 0.044mg/L (48h, Daphnia magna)

Persistence and degradability No information available.

Bioaccumulation No information available.

Chemical Name	Partition coefficient
Water 7732-18-5	Not available
Sodium Hypochlorite, Solution 7681-52-9	Not available

Other adverse effects No information available.

13. DISPOSAL CONSIDERATIONS

Waste treatment methods

Dispose of in accordance with local regulations. Dispose of waste in accordance with environmental legislation.

Do not reuse empty containers.

14. TRANSPORT INFORMATION

TDG (Canada):

UN Number	UN1791
Shipping name	HYPOCHLORITE SOLUTION
Class	8
Packing Group	III
Marine pollutant	Not available.

DOT (U.S.)

UN Number	UN1791
Shipping name	HYPOCHLORITE SOLUTION
Class	8
Packing Group	III
Marine pollutant	Not available

15. REGULATORY INFORMATION

Safety, health and environmental regulations/legislation specific for the substance or mixture

NSF International

Certified to NSF/ANSI 60

Additional information
Maximum use for potable water 95 mg/L. Only products bearing the NSF Mark on the product, product packaging, and/or documentation shipped with the product are Certified.

U.S. Regulatory Rules

Chemical Name	CERCLA/SARA - Section 302:	SARA (311, 312) Hazard Class:	CERCLA/SARA - Section 313:
Water - 7732-18-5	Not Listed	Not Listed	Not Listed
Sodium Hypochlorite, Solution - 7681-52-9	Not Listed	Listed	Not Listed

International Inventories

TSCA	Complies
DSL/NDSL	Complies

Legend:
TSCA - United States Toxic Substances Control Act Section 8(b) Inventory
DSL/NDSL - Canadian Domestic Substances List/Non-Domestic Substances List

16. OTHER INFORMATION, INCLUDING DATE OF PREPARATION OF THE LAST REVISION

NFPA:	**Health hazards** 3	**Flammability** 0	**Instability** 0	**Physical and chemical properties** -
HMIS Health Rating:	**Health hazards** 3	**Flammability** 0	**Physical hazards** 0	**Personal protection** X

Legend Section 8: EXPOSURE CONTROLS/PERSONAL PROTECTION

TWA	TWA (time-weighted average)	STEL	STEL (Short Term Exposure Limit)
Ceiling	Maximum limit value	*	Skin designation

Prepared By: The Environment, Health and Safety Department of Univar Canada Ltd.

Preparation Date: 09/Feb/2018
Revision Date: 09/Feb/2018

Disclaimer

NOTICE TO READER:

Univar expressly disclaims all express or implied warranties of merchantability and fitness for a particular purpose, with respect to the product or information provided herein, and shall under no circumstances be liable for incidental or consequential damages.

Do not use ingredient information and/or ingredient percentages in this SDS as a product specification. For product specification information refer to a Product Specification Sheet and/or a Certificate of Analysis. These can be obtained from your local Univar Sales Office.

All information appearing herein is based upon data obtained from the manufacturer and/or recognized technical sources. While the information is believed to be accurate, Univar makes no representations as to its accuracy or sufficiency. Conditions of use are beyond Univar's control and therefore users are responsible to verify this data under their own operating conditions to determine whether the product is suitable for their particular purposes and they assume all risks of their use, handling, and disposal of the product, or from the publication or use of, or reliance upon, information contained herein. This information relates only to the product designated herein, and does not relate to its use in combination with any other material or in any other process.

©2015 Univar Inc. All rights reserved. Univar, the hexagon, the Univar logo and MasterLine are the registered trademarks of Univar Inc.

End of Safety Data Sheet

The mixture does not meet the criteria for classification.

Prevention
Wash hands thoroughly after handling
Wear protective gloves/protective clothing/eye protection/face protection
In case of inadequate ventilation wear respiratory protection

Response
Read the label and safety data sheet before use.
Flush eyes with plenty amounts of water.
If eye irritation persists: Get medical advice/attention
Wash skin with plenty of water.
If skin irritation occurs: Get medical advice/attention
Move person to fresh air.
Do NOT induce vomiting. Never give anything by mouth to an unconscious or convulsing person. Seek immediate medical attention. If vomiting occurs spontaneously, keep head below hips to prevent aspiration of liquid into the lungs.

Storage
Store in accordance with good industrial practices.

Disposal
Disposal of all wastes must be done in accordance with municipal, provincial and federal regulations

3. COMPOSITION/INFORMATION ON INGREDIENTS

Substance

Not applicable.

Mixture

Chemical Name	CAS No	Weight-%	Synonyms
Glycerine	56-81-5	70 - 80%	Glycerine
Water	7732-18-5	20 - 30%	Water
Sodium Chloride	7647-14-5	0 - 10%	Sodium Chloride
Methanol	67-56-1	0 - 10%	Methanol

4. FIRST AID

Description of first aid measures

Inhalation
Remove to fresh air.

Eye contact
Rinse thoroughly with plenty of water for at least 15 minutes, lifting lower and upper eyelids. Consult a physician.

Skin contact
Wash skin with soap and water.

Ingestion
Clean mouth with water and drink afterwards plenty of water.

Most important symptoms and effects, both acute and delayed:
May cause slight eye irritation Symptoms include pain, redness and tearing. May cause slight skin irritation. Prolonged or repeated contact may cause discomfort and local redness. High concentrations of mist or vapor may cause irritation of the respiratory tract. May be harmful if swallowed

Indication of any immediate medical attention and special treatment needed:

Note to physicians
Treatment based on sound judgment of physician and individual reactions of patient.

5. FIRE-FIGHTING MEASURES

Suitable Extinguishing Media
Use extinguishing agent suitable for type of surrounding fire. Water spray. Alcohol foam. Dry chemical or CO2. Water or Foam may cause frothing.

Specific hazards arising from the substance or mixture
No information available.

Hazardous combustion products
See section 10 for more information.

Special protective equipment for fire-fighters
Firefighters should wear self-contained breathing apparatus and full firefighting turnout gear. Use personal protection equipment.

6. ACCIDENTAL RELEASE MEASURES

Personal precautions, protective equipment and emergency procedures

Ensure adequate ventilation. Avoid breathing vapors or mists.

Environmental precautions

See Section 12 for additional Ecological Information.

Methods and materials for containment and cleaning up

Prevent further leakage or spillage if safe to do so. Eliminate all ignition sources.

7. HANDLING AND STORAGE

Precautions for safe handling

Handle in accordance with good industrial hygiene and safety practice. Avoid contact with skin, eyes or clothing. Avoid breathing vapors or mists. Keep away from heat, hot surfaces, sparks, open flames and other ignition sources. No smoking.

Conditions for safe storage, including any incompatibilities

Keep containers tightly closed in a cool, well-ventilated place. Keep away from sources of ignition.

8. EXPOSURE CONTROLS/PERSONAL PROTECTION

Control parameters

Exposure Limits .

Chemical Name	Alberta OEL	British Columbia OEL	Ontario	Quebec OEL	Exposure Limit - ACGIH	Immediately Dangerous to Life or Health - IDLH
Glycerine 56-81-5	TWA: 10 mg/m^3	TWA: 10 mg/m^3 TWA: 3 mg/m^3	Not available	TWA: 10 mg/m^3	Not available	Not available
Water 7732-18-5	Not available	Not available	Not available	Not available	Not available	Not available
Sodium Chloride 7647-14-5	Not available	Not available	Not available	Not available	Not available	Not available
Methanol 67-56-1	TWA: 200 ppm TWA: 262 mg/m^3 STEL: 250 ppm STEL: 328 mg/m^3 Skin	TWA: 200 ppm STEL: 250 ppm Skin	TWA: 200 ppm STEL: 250 ppm Skin	TWA: 200 ppm TWA: 262 mg/m^3 STEL: 250 ppm STEL: 328 mg/m^3 Skin	250 ppm STEL 200 ppm TLV-TWA	6000 ppm

Consult local authorities for recommended exposure limits

Appropriate engineering controls

Engineering controls
Showers
Eyewash stations
Ventilation systems.

Individual protection measures, such as personal protective equipment

Eye/face protection
Chemical goggles; also wear a face shield if splashing hazard exists.

Hand protection
Use gloves chemically resistant to this material, examples of preferred glove barrier materials include:. Nitrile gloves.

Skin and body protection
Skin contact should be prevented through the use of suitable protective clothing, gloves and footwear, selected for conditions of use and exposure potential. Consideration must be given both to durability as well as permeation resistance.

Respiratory protection
If exposure exceeds occupational exposure limits, use an appropriate NIOSH-approved respirator.

General hygiene considerations
Handle in accordance with good industrial hygiene and safety practice.

9. PHYSICAL AND CHEMICAL PROPERTIES

Information on basic physical and chemical properties

Appearance

Physical state	Liquid
Color	Light brown

Odor	MUSTY to Sweet
Odor threshold	No information available

PROPERTIES	Values	Remarks • Method
pH	4 - 11	
Melting point / freezing point	No data available	None known
Initial boiling point/boiling range	No data available	None known
Flash point	No data available	None known
Evaporation rate	No data available	None known
Flammability (solid, gas)	No data available	None known
Flammability Limit in Air		
Upper flammability limit:	No data available	
Lower flammability limit:	No data available	
Vapor pressure	No data available	None known
Relative vapor density	No data available	None known
Specific Gravity	1.225@ 20°C	
Water solubility	Soluble in water	
Solubility in other solvents	No data available	None known
Partition coefficient	No data available	
Autoignition temperature	No data available	None known
Decomposition temperature	No data available	None known
Kinematic viscosity	45 cPs @ 20C	
Dynamic viscosity	No data available	None known
Explosive properties	No information available.	
Oxidizing properties	No information available.	

Molecular weight	No information available
VOC Percentage Volatility	No information available
Liquid Density	No information available
Bulk density	10.22 lbs/gal

10. STABILITY AND REACTIVITY

Reactivity/Chemical Stability
Stable under normal conditions

Possibility of hazardous reactions
None under normal processing.

Conditions to avoid
Heat, flames and sparks.

Incompatible materials
Oxidizing agents. Nitric acid. Peroxides. Chromates.

Hazardous decomposition products
Oxides of carbon.

11. TOXICOLOGICAL INFORMATION

Information on likely routes of exposure

Inhalation
High concentrations of mist or vapor may cause irritation of the respiratory tract.

Eye contact
May cause slight eye irritation.

Skin contact
May cause slight skin irritation.

Ingestion
May be harmful if swallowed.

Information on toxicological effects

Symptoms
Prolonged exposure may cause headaches, nausea, dizziness, eye, skin and respiratory irritation.

Numerical measures of toxicity

Acute toxicity

The following values are calculated based on chapter 3.1 of the GHS document .

ATEmix (oral) 13,548.00 mg/kg
ATEmix (dermal) 13,903.00 mg/kg

Unknown acute toxicity No information available

Chemical Name	Oral LD50	Dermal LD50	Inhalation LC50
Glycerine 56-81-5	= 12600 mg/kg (Rat)	> 10 g/kg (Rabbit)	> 570 mg/m^3 (Rat) 1 h
Water 7732-18-5	> 90 mL/kg (Rat)	Not available	Not available
Sodium Chloride 7647-14-5	= 3 g/kg (Rat)	Not available	> 42 g/m^3 (Rat) 1 h
Methanol 67-56-1	= 6200 mg/kg (Rat)	= 15840 mg/kg (Rabbit)	= 22500 ppm (Rat) 8 h

Delayed and immediate effects as well as chronic effects from short and long-term exposure

Skin corrosion/irritation
May cause slight irritation with discomfort and local redness.

Serious eye damage/eye irritation
Symptoms include pain, redness and tearing.

Respiratory or skin sensitization
No information available.

Germ cell mutagenicity
No information available.

Carcinogenicity
No information available.

Chemical Name	ACGIH	IARC	NTP	OSHA
Glycerine 56-81-5	Not available	Not available	Not available	Not available
Water 7732-18-5	Not available	Not available	Not available	Not available
Sodium Chloride 7647-14-5	Not available	Not available	Not available	Not available
Methanol 67-56-1	Not available	Not available	Not available	Not available

Reproductive toxicity
No information available.

Specific target organ systemic toxicity - single exposure
No information available.

Specific target organ systemic toxicity - repeated exposure
No information available.

Aspiration hazard
No information available.

12. ECOLOGICAL INFORMATION

Ecotoxicity

.

Chemical Name	Ecotoxicity - Freshwater Algae Data	Ecotoxicity - Fish Species Data	Toxicity to microorganisms	Crustacea
Glycerine 56-81-5	Not available	51 - 57 mL/L LC50 (Oncorhynchus mykiss) 96 h static	Not available	Not available
Water 7732-18-5	Not available	Not available	Not available	Not available
Sodium Chloride 7647-14-5	Not available	5560 - 6080 mg/L LC50 (Lepomis macrochirus) 96 h flow-through 12946 mg/L LC50 (Lepomis macrochirus) 96 h static 6020 - 7070 mg/L LC50 (Pimephales promelas) 96 h static 7050 mg/L LC50 (Pimephales promelas) 96 h semi-static 6420 - 6700 mg/L LC50 (Pimephales promelas) 96 h static 4747 - 7824 mg/L LC50 (Oncorhynchus mykiss) 96 h flow-through	Not available	EC50: =1000mg/L (48h, Daphnia magna) EC50: 340.7 - 469.2mg/L (48h, Daphnia magna)
Methanol 67-56-1	Not available	28200 mg/L LC50 (Pimephales promelas) 96 h flow-through 100 mg/L LC50 (Pimephales promelas) 96 h static 19500 - 20700 mg/L LC50 (Oncorhynchus mykiss) 96 h flow-through 18 - 20 mL/L LC50 (Oncorhynchus mykiss) 96 h static 13500 - 17600 mg/L LC50 (Lepomis macrochirus) 96 h flow-through	Not available	Not available

Persistence and degradability No information available.

Bioaccumulation No information available.

Component Information

Chemical Name	Partition coefficient
Glycerine 56-81-5	-1.76
Water 7732-18-5	Not available
Sodium Chloride 7647-14-5	Not available
Methanol 67-56-1	-0.77

Other adverse effects No information available.

13. DISPOSAL CONSIDERATIONS

Waste treatment methods

Dispose of in accordance with local regulations. Dispose of waste in accordance with environmental legislation.

Do not reuse empty containers.

14. TRANSPORT INFORMATION

TDG (Canada):

UN Number	Not applicable
Shipping name	Not regulated
Class	Not applicable
Packing Group	Not applicable
Marine pollutant	Not available.

DOT (U.S.)

UN Number	Not applicable
Shipping name	Not regulated
Class	Not applicable
Packing Group	Not applicable
Marine pollutant	Not available

15. REGULATORY INFORMATION

Safety, health and environmental regulations/legislation specific for the substance or mixture

U.S. Regulatory Rules

Chemical Name	CERCLA/SARA - Section 302:	SARA (311, 312) Hazard Class:	CERCLA/SARA - Section 313:
Glycerine - 56-81-5	Not Listed	Not Listed	Not Listed
Water - 7732-18-5	Not Listed	Not Listed	Not Listed
Sodium Chloride - 7647-14-5	Not Listed	Not Listed	Not Listed
Methanol - 67-56-1	Not Listed	Listed	Listed

International Inventories

TSCA	Complies
DSL/NDSL	Complies

Legend:
TSCA - United States Toxic Substances Control Act Section 8(b) Inventory

DSL/NDSL - Canadian Domestic Substances List/Non-Domestic Substances List

16. OTHER INFORMATION, INCLUDING DATE OF PREPARATION OF THE LAST REVISION

NFPA:	**Health hazards** 0	**Flammability** 0	**Instability** 0	**Physical and chemical properties** -
HMIS Health Rating:	**Health hazards** 0	**Flammability** 0	**Physical hazards** 0	**Personal protection** X

Legend Section 8: EXPOSURE CONTROLS/PERSONAL PROTECTION

TWA	TWA (time-weighted average)	STEL	STEL (Short Term Exposure Limit)
Ceiling	Maximum limit value	*	Skin designation

Prepared By: The Environment, Health and Safety Department of Univar Canada Ltd.

Preparation Date: 09/Mar/2018
Revision Date: 09/Mar/2018

Disclaimer

NOTICE TO READER:

Univar expressly disclaims all express or implied warranties of merchantability and fitness for a particular purpose, with respect to the product or information provided herein, and shall under no circumstances be liable for incidental or consequential damages.

Do not use ingredient information and/or ingredient percentages in this SDS as a product specification. For product specification information refer to a Product Specification Sheet and/or a Certificate of Analysis. These can be obtained from your local Univar Sales Office.

All information appearing herein is based upon data obtained from the manufacturer and/or recognized technical sources. While the information is believed to be accurate, Univar makes no representations as to its accuracy or sufficiency. Conditions of use are beyond Univar's control and therefore users are responsible to verify this data under their own operating conditions to determine whether the product is suitable for their particular purposes and they assume all risks of their use, handling, and disposal of the product, or from the publication or use of, or reliance upon, information contained herein. This information relates only to the product designated herein, and does not relate to its use in combination with any other material or in any other process.

©2015 Univar Inc. All rights reserved. Univar, the hexagon, the Univar logo and MasterLine are the registered trademarks of Univar Inc.

End of Safety Data Sheet

SAFETY DATA SHEET

SDS00404
ALS Aluminum Sulphate

Preparation Date: 07/Nov/2017 Version: 3

1. IDENTIFICATION

Product identifier

Product Name ALS Aluminum Sulphate

Other means of identification

Product Code(s) SDS00404

Synonyms none

Recommended use of the chemical and restrictions on use

Recommended Use Water treatment (potable and waste water). Paper applications.

Restricted Uses No information available

Initial Supplier Identifier
Univar Canada Ltd.
9800 Van Horne Way
Richmond, BC V6X 1W5
Telephone: 1-866-686-4827

Emergency telephone number

24 Hour Emergency Phone Number (CANUTEC): 1-888-226-8832 (1-888-CAN-UTEC)

2. HAZARD IDENTIFICATION

Hazardous Classification of the substance or mixture

Corrosive to metals	Category 1
Serious eye damage/eye irritation	Category 1

Label elements

Hazard pictograms



Signal Word: Danger

Hazard statements
May be corrosive to metals
Causes serious eye damage

Precautionary Statements

Prevention
Wash face, hands and any exposed skin thoroughly after handling
Keep only in original container
Wear eye/face protection

Response

IF IN EYES: Rinse cautiously with water for several minutes. Remove contact lenses, if present and easy to do. Continue rinsing
If eye irritation persists: Get medical advice/attention
IF ON SKIN (or hair): Remove/Take off immediately all contaminated clothing. Rinse skin with water/shower
IF SWALLOWED: Call a POISON CENTER or doctor if you feel unwell
Rinse mouth

In case of fire: Use dry sand, dry chemical or alcohol-resistant foam to extinguish

Storage
Store locked up
Store in a well-ventilated place. Keep container tightly closed

Disposal
Disposal of all wastes must be done in accordance with municipal, provincial and federal regulations

Other Information
Unknown acute toxicity No information available

3. COMPOSITION/INFORMATION ON INGREDIENTS

Substance

Chemical Name	CAS No	Weight-%	Synonyms
Sulfuric acid, aluminum salt	10043-01-3	20 - 30%	Sulfuric acid, aluminum salt

4. FIRST AID

Description of first aid measures

General advice
Show this safety data sheet to the doctor in attendance.

Inhalation
Remove to fresh air.

Eye contact
Rinse thoroughly with plenty of water for at least 15 minutes, lifting lower and upper eyelids. Consult a physician.

Skin contact
Wash with soap and water. Take off contaminated clothing and wash before reuse. Get medical attention if irritation develops and persists.

Ingestion
Do NOT induce vomiting. Clean mouth with water and drink afterwards plenty of water. Never give anything by mouth to an unconscious person. Call a physician.

Most important symptoms and effects, both acute and delayed:
May cause digestive tract irritation. May cause respiratory tract irritation May cause moderate skin irritation. Direct contact may cause moderate irritation.

Indication of any immediate medical attention and special treatment needed:

Note to physicians
Treatment based on sound judgment of physician and individual reactions of patient.

5. FIRE-FIGHTING MEASURES

Suitable Extinguishing Media
Use extinguishing media appropriate for surrounding fire.

Specific hazards arising from the substance or mixture
Use water spray to cool fire-exposed containers and structures. Under fire conditions, toxic, corrosive fumes are emitted.

Hazardous combustion products
Thermal decomposition: after completely dry and heated to decomposition will produce sulphur oxides and aluminum oxides.

Special protective equipment for fire-fighters
Firefighters should wear self-contained breathing apparatus and full firefighting turnout gear. Use personal protection equipment.

6. ACCIDENTAL RELEASE MEASURES

Personal precautions, protective equipment and emergency procedures

Use personal protective equipment as required. Wash thoroughly after handling.

Environmental precautions

Prevent further leakage or spillage if safe to do so. Prevent from entering into soil, ditches, sewers, waterways and/or groundwater. Consult local authorities.

Methods and materials for containment and cleaning up

Small spills: soak up with absorbent material and scoop into containers. Large spills : prevent contamination of waterways. Dike and pump into suitable containers. Clean up residual with absorbent material, place in appropriate container and flush with water. Neutralize with lime or limestone powder.

7. HANDLING AND STORAGE

Precautions for safe handling

Empty containers may contain hazardous product residues. Use appropriate personnel protective equipment. Wash thoroughly after handling. Avoid contact with eyes, skin and clothing.

Conditions for safe storage, including any incompatibilities

Place away from incompatible materials. Containers of this material may be hazardous when empty since they retain product residues (vapors, liquid). Suitable material: Stainless steel, rubber-coated steel, plastic, plastic with fiberglass reinforcement. Unsuitable material: Common metal. Do not store in aluminum, copper, copper alloys and galvanized containers. Shelf life: 12 months in original, sealed container. Keep at temperatures between 0 and 30 °C. Reason: Quality.

8. EXPOSURE CONTROLS/PERSONAL PROTECTION

Control parameters

Exposure Limits .

Chemical Name	Alberta OEL	British Columbia OEL	Ontario	Quebec OEL	Exposure Limit - ACGIH	Immediately Dangerous to Life or Health - IDLH
Sulfuric acid, aluminum salt 10043-01-3	TWA: 2 mg/m^3	Not available	Not available	TWA: 2 mg/m^3	Not available	Not available

Consult local authorities for recommended exposure limits

Appropriate engineering controls

Engineering controls
Local exhaust ventilation as necessary to maintain exposures to within applicable limits.

Individual protection measures, such as personal protective equipment

Eye/face protection
Chemical goggles; also wear a face shield if splashing hazard exists.

Hand protection
Appropriate chemical resistant gloves should be worn.

Skin and body protection
Skin contact should be prevented through the use of suitable protective clothing, gloves and footwear, selected for conditions of use and exposure potential. Consideration must be given both to durability as well as permeation resistance.

Respiratory protection
If exposure exceeds occupational exposure limits, use an appropriate NIOSH-approved respirator.

General hygiene considerations
Handle in accordance with good industrial hygiene and safety practice.

9. PHYSICAL AND CHEMICAL PROPERTIES

Information on basic physical and chemical properties

Appearance

Physical state	Liquid
Color	Colorless Clear
Odor	Slight ACIDIC
Odor threshold	No information available

PROPERTIES	Values	Remarks • Method
pH	<2.5	
Melting point / freezing point	-13 °C / 9 °F	
Initial boiling point/boiling range	110 °C / 230 °F	None known
Flash point	No data available	None known
Evaporation rate	similar to water	
Flammability (solid, gas)	No data available	None known
Flammability Limit in Air		None known
Upper flammability limit:	No data available	
Lower flammability limit:	No data available	
Vapor pressure	40 mmHg @ 35°C	
Relative vapor density	No data available	None known
Specific Gravity	1.2 - 1.36	
Water solubility	Completely soluble	
Solubility in other solvents	No data available	
Partition coefficient	No data available	None known
Autoignition temperature	No data available	None known
Decomposition temperature	No data available	None known
Kinematic viscosity	No data available	None known
Dynamic viscosity	No data available	None known
Explosive properties	No information available.	
Oxidizing properties	Not oxidizing.	
Molecular weight	No information available	
VOC Percentage Volatility	No information available	
Liquid Density	No information available	
Bulk density	No information available	

10. STABILITY AND REACTIVITY

Reactivity/Chemical Stability
Stable under normal conditions

Possibility of hazardous reactions
No additional remark.

Conditions to avoid
Avoid contact with mineral acids, excessive heat and bases/alkalis.

Incompatible materials
Metals such as iron or steel which are subject to corrosion. Carbon steel, aluminum, carbon, brasses and nylon.

Hazardous decomposition products

Thermal decomposition: after completely dry and heated to decomposition will produce sulphur oxides and aluminum oxides. Decomposition : 650 °C/ 1202 °F.

11. TOXICOLOGICAL INFORMATION

Information on likely routes of exposure

Inhalation
May cause respiratory tract irritation.

Eye contact
Direct contact may cause moderate irritation.

Skin contact
May cause moderate skin irritation.

Ingestion
May cause digestive tract irritation.

Information on toxicological effects

Symptoms
No additional information available.

Numerical measures of toxicity

Acute toxicity

The following values are calculated based on chapter 3.1 of the GHS document .
ATEmix (oral) 1,930.00 mg/kg

Unknown acute toxicity No information available

Chemical Name	Oral LD50	Dermal LD50	Inhalation LC50
Sulfuric acid, aluminum salt 10043-01-3	= 1930 mg/kg (Rat)	Not available	Not available

Delayed and immediate effects as well as chronic effects from short and long-term exposure

Skin corrosion/irritation
May cause moderate skin irritation.

Serious eye damage/eye irritation
Direct contact may cause moderate irritation.

Respiratory or skin sensitization
No information available.

Germ cell mutagenicity
No information available.

Carcinogenicity
No information available.

Chemical Name	ACGIH	IARC	NTP	OSHA
Sulfuric acid, aluminum salt 10043-01-3	Not available	Not available	Not available	Not available

Reproductive toxicity
No information available.

Specific target organ systemic toxicity - single exposure
No information available.

Specific target organ systemic toxicity - repeated exposure
No information available.

Aspiration hazard
No information available.

12. ECOLOGICAL INFORMATION

Ecotoxicity
May lower pH of waterways and adversely effect aquatic life.

Chemical Name	Ecotoxicity - Freshwater Algae Data	Ecotoxicity - Fish Species Data	Toxicity to microorganisms	Crustacea
Sulfuric acid, aluminum salt 10043-01-3	Not available	Not available	Not available	Not available

Persistence and degradability No information available.

Bioaccumulation No information available.

Chemical Name	Partition coefficient
Sulfuric acid, aluminum salt 10043-01-3	Not available

Other adverse effects No information available.

13. DISPOSAL CONSIDERATIONS

Waste treatment methods

Dispose of in accordance with local regulations. Dispose of waste in accordance with environmental legislation.

Do not reuse empty containers.

14. TRANSPORT INFORMATION

TDG (Canada):

UN Number	UN3264
Shipping name	CORROSIVE LIQUID, ACIDIC, INORGANIC, N.O.S. (ALUMINUM SULPHATE)
Class	8
Packing Group	III
Marine pollutant	Not available.

DOT (U.S.)

UN Number	UN3264
Shipping name	CORROSIVE LIQUID, ACIDIC, INORGANIC, N.O.S. (ALUMINUM SULPHATE)
Class	8

Packing Group	III
Marine pollutant	Not available

15. REGULATORY INFORMATION

Safety, health and environmental regulations/legislation specific for the substance or mixture

NSF International



Additional information
Maximum use for potable water 400 mg/L. Only products bearing the NSF Mark on the product, product packaging, and/or documentation shipped with the product are Certified.

U.S. Regulatory Rules

Chemical Name	CERCLA/SARA - Section 302:	SARA (311, 312) Hazard Class:	CERCLA/SARA - Section 313:
Sulfuric acid, aluminum salt - 10043-01-3	Not Listed	Listed	Not Listed

International Inventories

TSCA	Complies
DSL/NDSL	Complies

Legend:
TSCA - United States Toxic Substances Control Act Section 8(b) Inventory
DSL/NDSL - Canadian Domestic Substances List/Non-Domestic Substances List

16. OTHER INFORMATION, INCLUDING DATE OF PREPARATION OF THE LAST REVISION

NFPA:	**Health hazards** 1	**Flammability** 0	**Instability** 0	**Physical and chemical properties** -
HMIS Health Rating:	**Health hazards** 1	**Flammability** 0	**Physical hazards** 0	**Personal protection** X

Legend Section 8: EXPOSURE CONTROLS/PERSONAL PROTECTION

TWA	TWA (time-weighted average)	STEL	STEL (Short Term Exposure Limit)
Ceiling	Maximum limit value	*	Skin designation

Prepared By: The Environment, Health and Safety Department of Univar Canada Ltd.

Preparation Date: 07/Nov/2017
Revision Date: 07/Nov/2017

Disclaimer
NOTICE TO READER:
Univar expressly disclaims all express or implied warranties of merchantability and fitness for a particular purpose, with respect to the product or information provided herein, and shall under no circumstances be liable for incidental or consequential damages.

Do not use ingredient information and/or ingredient percentages in this SDS as a product specification. For

product specification information refer to a Product Specification Sheet and/or a Certificate of Analysis. These can be obtained from your local Univar Sales Office.

All information appearing herein is based upon data obtained from the manufacturer and/or recognized technical sources. While the information is believed to be accurate, Univar makes no representations as to its accuracy or sufficiency. Conditions of use are beyond Univar's control and therefore users are responsible to verify this data under their own operating conditions to determine whether the product is suitable for their particular purposes and they assume all risks of their use, handling, and disposal of the product, or from the publication or use of, or reliance upon, information contained herein. This information relates only to the product designated herein, and does not relate to its use in combination with any other material or in any other process.

©2015 Univar Inc. All rights reserved. Univar, the hexagon, the Univar logo and MasterLine are the registered trademarks of Univar Inc.

End of Safety Data Sheet

SAFETY DATA SHEET

SDS00256
SODA ASH 58% DENSE

Preparation Date: 10/Jan/2018 Version: 2

1. IDENTIFICATION

Product identifier

Product Name SODA ASH 58% DENSE

Other means of identification

Product Code(s) SDS00256

Synonyms Sodium carbonate, anhydrous. Carbonic acid, disodium salt; Disodium carbonate; Soda ash

Recommended use of the chemical and restrictions on use

Recommended Use Soda salts. Manufacture of glass. Soap Cleaners and water softeners. Pulp and paper. Photographical agent. Water treatment. pH adjustment

Restricted Uses No information available

Initial Supplier Identifier
Univar Canada Ltd.
9800 Van Horne Way
Richmond, BC V6X 1W5
Telephone: 1-866-686-4827

Emergency telephone number

24 Hour Emergency Phone Number (CANUTEC): 1-888-226-8832 (1-888-CAN-UTEC)

2. HAZARD IDENTIFICATION

Hazardous Classification of the substance or mixture

Serious eye damage/eye irritation	Category 1
Specific target organ toxicity (single exposure)	Category 3

Label elements

Hazard pictograms



Signal Word: Danger

Hazard statements
Causes serious eye damage
May cause respiratory irritation

Precautionary Statements

Prevention
Do not breathe dust/fume/gas/mist/vapors/spray
Wash face, hands and any exposed skin thoroughly after handling
Wear protective gloves/protective clothing/eye protection/face protection

IF IN EYES: Rinse cautiously with water for several minutes. Remove contact lenses, if present and easy to do. Continue rinsing
IF ON SKIN (or hair): Take off immediately all contaminated clothing. Rinse skin with water or shower
IF INHALED: Remove person to fresh air and keep comfortable for breathing
IF SWALLOWED: Rinse mouth. DO NOT induce vomiting

Storage
Store locked up
Store in a well-ventilated place. Keep container tightly closed

Disposal
Disposal of all wastes must be done in accordance with municipal, provincial and federal regulations

Direct skin contact may cause slight or mild, transient irritation. Ingestion may cause gastrointestinal irritation, nausea, vomiting and diarrhea.

Unknown acute toxicity No information available

3. COMPOSITION/INFORMATION ON INGREDIENTS

Substance

Chemical Name	CAS No	Weight-%	Synonyms
Sodium Carbonate	497-19-8	90 - 100%	Sodium Carbonate

4. FIRST AID

Description of first aid measures

General advice
Immediate medical attention is required. Show this safety data sheet to the doctor in attendance.

Inhalation
Remove to fresh air. If breathing has stopped, give artificial respiration. Get medical attention immediately. Do not use mouth-to-mouth method if victim ingested or inhaled the substance; give artificial respiration with the aid of a pocket mask equipped with a one-way valve or other proper respiratory medical device. If breathing is difficult, (trained personnel should) give oxygen. Delayed pulmonary edema may occur.

Eye contact
Rinse immediately with plenty of water, also under the eyelids, for at least 15 minutes. Keep eye wide open while rinsing. Do not rub affected area. Remove contact lenses, if present and easy to do. Continue rinsing. Get immediate medical advice/attention.

Skin contact
Wash off immediately with soap and plenty of water while removing all contaminated clothes and shoes. Get immediate medical advice/attention.

Ingestion
Do NOT induce vomiting. Clean mouth with water and drink afterwards plenty of water. Never give anything by mouth to an unconscious person. Get immediate medical advice/attention.

Self-protection of the first aider
Ensure that medical personnel are aware of the material(s) involved, take precautions to protect themselves and prevent spread of contamination. Avoid contact with skin, eyes or clothing. Avoid direct contact with skin. Use barrier to give mouth-to-mouth resuscitation. Wear personal protective clothing (see section 8).

Most important symptoms and effects, both acute and delayed:
May cause gastrointestinal irritation, nausea, vomiting and diarrhea. May cause severe eye irritation. Symptoms include redness, swelling, itching and pain. Material is irritating to mucous membrane and upper respiratory tract. Exposure can cause coughing, chest pains and difficulty in breathing Effects may include pain, marked redness and swelling.

Indication of any immediate medical attention and special treatment needed:

Note to physicians
Treatment based on sound judgment of physician and individual reactions of patient.

5. FIRE-FIGHTING MEASURES

Suitable Extinguishing Media
Use extinguishing media appropriate for surrounding fire. Does not burn.

Specific hazards arising from the substance or mixture
Not flammable.

Hazardous combustion products
Carbon dioxide. Decomposition temperature: >400°C / 752 °F.

Special protective equipment for fire-fighters
Firefighters should wear self-contained breathing apparatus and full firefighting turnout gear. Use personal protection equipment.

6. ACCIDENTAL RELEASE MEASURES

Personal precautions, protective equipment and emergency procedures

Attention! Corrosive material. Avoid contact with skin, eyes or clothing. Ensure adequate ventilation. Use personal protective equipment as required. Evacuate personnel to safe areas. Keep people away from and upwind of spill/leak.

Environmental precautions

Prevent further leakage or spillage if safe to do so. Should not be released into the environment. Do not allow to enter into soil/subsoil. Prevent product from entering drains.

Methods and materials for containment and cleaning up

Stop leak if you can do it without risk. Shovel, sweep up or use industrial vacuum cleaner to pick up. Sweep up and place in an appropriate closed container. Avoid raising dust.

7. HANDLING AND STORAGE

Precautions for safe handling

Use good personal hygiene. Avoid prolonged contact with eyes or prolonged skin contact. Avoid breathing in dust. When dissolving, add to water cautiously while stirring; solutions can get hot.

Conditions for safe storage, including any incompatibilities

Store in a cool, dry, well ventilated area. Prolonged storage may cause product to cake and become damp from atmospheric moisture. Store away from acids.

8. EXPOSURE CONTROLS/PERSONAL PROTECTION

Control parameters

Exposure Limits This product, as supplied, does not contain any hazardous materials with occupational exposure limits established by the region specific regulatory bodies.

Chemical Name	Alberta OEL	British Columbia OEL	Ontario	Quebec OEL	Exposure Limit - ACGIH	Immediately Dangerous to Life or Health - IDLH
Sodium Carbonate 497-19-8	Not available	Not available	Not available	Not available	Not available	Not available

Consult local authorities for recommended exposure limits

Appropriate engineering controls

Engineering controls
Local exhaust ventilation as necessary to maintain exposures to within applicable limits.

Individual protection measures, such as personal protective equipment

Eye/face protection
Safety glasses with side shields or chemical goggles.

Hand protection
Appropriate chemical resistant gloves should be worn. Break through time >8 hours. Butyl rubber gloves. Natural rubber gloves. Neoprene gloves. Nitrile gloves. Polyvinylchloride (PVC) gloves. Viton gloves. Silver Shield (R). NOTICE: The selection of a specific glove for a particular application and duration of use in a workplace should also take into account all relevant workplace factors such as, but not limited to: Other chemicals which may be handled, physical requirements (cut/puncture protection, dexterity, thermal protection), potential body reactions to glove materials as well as the instructions/specifications provided by the glove supplier.

Skin and body protection
As a minimum, wear long-sleeve shirts, trousers, and gloves for routine product use.

Respiratory protection
For dusty or misty conditions, wear NIOSH-approved dust or mist respirator.

General hygiene considerations
Avoid contact with skin, eyes or clothing. Wear suitable gloves and eye/face protection. Do not eat, drink or smoke when using this product. Remove and wash contaminated clothing and gloves, including the inside, before re-use. Contaminated work clothing should not be allowed out of the workplace. Regular cleaning of equipment, work area and clothing is recommended. Wash hands before breaks and immediately after handling the product.

9. PHYSICAL AND CHEMICAL PROPERTIES

Information on basic physical and chemical properties

Appearance	
Physical state	Solid
Color	White
Odor	Odorless
Odor threshold	No information available

PROPERTIES	Values	Remarks • Method
pH	11.3-11.4 (1% solution), 11.6 (5% solution), 11.7 (10% solution) @ 20°C	
Melting point / freezing point	851 °C / 1563.8 °F	
Initial boiling point/boiling range	No data available	None known
Flash point	No data available	None known
Evaporation rate	No data available	None known
Flammability (solid, gas)	No data available	None known
Flammability Limit in Air		
Upper flammability limit:	No data available	
Lower flammability limit:	No data available	
Vapor pressure	No data available	None known
Relative vapor density	No data available	None known
Specific Gravity	2.533 @ 20°C	
Water solubility	Soluble in water	
Solubility in other solvents	No data available	
Partition coefficient	No data available	
Autoignition temperature	No data available	None known
Decomposition temperature	>400°C/752°F	
Kinematic viscosity	No data available	None known
Dynamic viscosity	No data available	None known
Explosive properties	No information available.	
Oxidizing properties	No information available.	

Molecular weight	105.99
VOC Percentage Volatility	No information available
Liquid Density	No information available
Bulk density	No information available

10. STABILITY AND REACTIVITY

Reactivity/Chemical Stability
Stable

Possibility of hazardous reactions
Contact with acids will release carbon dioxide gas. Can react violently with red hot aluminum metal; fluorine gas; lithium; and 2,4,6-trinitrotoluene.

Hazardous polymerization
Will not occur.

Conditions to avoid
Hygroscopic (absorbs moisture from the air). Simultaneous exposure to soda ash and lime dusts (CaO). In the presence of moisture (i.e. perspiration) the two materials combine to form corrosive caustic soda (NaOH) which may cause burns.

Incompatible materials
Acids. Soda Ash is corrosive to aluminum, lead, and zinc and zinc brasses when in solution and to aluminum when high humidity is present. Silver nitrate. Magnesium. Fluorine. Lithium. Calcium hypochlorite.

Hazardous decomposition products
Carbon dioxide. Decomposition temperature: >400°C / 752 °F.

11. TOXICOLOGICAL INFORMATION

Information on likely routes of exposure

Inhalation
Material is irritating to mucous membrane and upper respiratory tract. Exposure can cause coughing, chest pains and difficulty in breathing.

Eye contact
Causes serious eye damage. Effects may include pain, marked redness and swelling.

Skin contact
Symptoms include redness, swelling, itching and pain.

Ingestion
May cause gastrointestinal irritation, nausea, vomiting and diarrhea.

Information on toxicological effects

Symptoms
Excessive contact may produce "soda ulcers" on hands and perforation of the nasal septum. Sensitivity reactions may occur from prolonged and repeated exposure.

Numerical measures of toxicity

Acute toxicity

The following values are calculated based on chapter 3.1 of the GHS document .
ATEmix (oral) 4,098.00 mg/kg

Unknown acute toxicity No information available

Chemical Name	Oral LD50	Dermal LD50	Inhalation LC50
Sodium Carbonate 497-19-8	= 4090 mg/kg (Rat)	Not available	= 2300 mg/m³ (Rat) 2 h

Delayed and immediate effects as well as chronic effects from short and long-term exposure

Skin corrosion/irritation
Symptoms include redness, swelling, itching and pain.

Serious eye damage/eye irritation
Causes serious eye damage. Effects may include pain, marked redness and swelling.

Respiratory or skin sensitization

No information available.

Germ cell mutagenicity
No information available.

Carcinogenicity
No information available.

Chemical Name	ACGIH	IARC	NTP	OSHA
Sodium Carbonate 497-19-8	Not available	Not available	Not available	Not available

Reproductive toxicity
No information available.

Specific target organ systemic toxicity - single exposure
May cause respiratory irritation.

Specific target organ systemic toxicity - repeated exposure
No information available.

Aspiration hazard
No information available.

12. ECOLOGICAL INFORMATION

Ecotoxicity

.

Chemical Name	Ecotoxicity - Freshwater Algae Data	Ecotoxicity - Fish Species Data	Toxicity to microorganisms	Crustacea
Sodium Carbonate 497-19-8	Not available	310 - 1220 mg/L LC50 (Pimephales promelas) 96 h static 300 mg/L LC50 (Lepomis macrochirus) 96 h static	Not available	EC50: =265mg/L (48h, Daphnia magna)

Persistence and degradability No information available.

Bioaccumulation No information available.

Chemical Name	Partition coefficient
Sodium Carbonate 497-19-8	Not available

Other adverse effects No information available.

13. DISPOSAL CONSIDERATIONS

Waste treatment methods

Disposal of all wastes must be done in accordance with municipal, provincial and federal regulations.

Do not reuse empty containers.

14. TRANSPORT INFORMATION

TDG (Canada):

UN Number	Not applicable
Shipping name	Not regulated
Class	Not applicable
Packing Group	Not applicable
Marine pollutant	Not available.

DOT (U.S.)

UN Number	Not applicable
Shipping name	Not regulated
Class	Not applicable
Packing Group	Not applicable
Marine pollutant	Not available

15. REGULATORY INFORMATION

Safety, health and environmental regulations/legislation specific for the substance or mixture

NSF International

Certified to NSF/ANSI 60

Additional information
Only products bearing the NSF Mark on the product, product packaging, and/ordocumentation shipped with the product are Certified. Maximum use of potable water 100 mg/L.

U.S. Regulatory Rules

Chemical Name	CERCLA/SARA - Section 302:	SARA (311, 312) Hazard Class:	CERCLA/SARA - Section 313:
Sodium Carbonate - 497-19-8	Not Listed	Not Listed	Not Listed

International Inventories

TSCA	Complies
DSL/NDSL	Complies

Legend:
TSCA - United States Toxic Substances Control Act Section 8(b) Inventory
DSL/NDSL - Canadian Domestic Substances List/Non-Domestic Substances List

16. OTHER INFORMATION, INCLUDING DATE OF PREPARATION OF THE LAST REVISION

NFPA:	**Health hazards** 3	**Flammability** 0	**Instability** 0	**Physical and chemical properties** -
HMIS Health Rating:	**Health hazards** 3	**Flammability** 0	**Physical hazards** 0	**Personal protection** X

Legend Section 8: EXPOSURE CONTROLS/PERSONAL PROTECTION

TWA	TWA (time-weighted average)	STEL	STEL (Short Term Exposure Limit)
Ceiling	Maximum limit value	*	Skin designation

Prepared By: The Environment, Health and Safety Department of Univar Canada Ltd.

Preparation Date: 10/Jan/2018
Revision Date: 10/Jan/2018

Disclaimer

NOTICE TO READER:

Univar expressly disclaims all express or implied warranties of merchantability and fitness for a particular purpose, with respect to the product or information provided herein, and shall under no circumstances be liable for incidental or consequential damages.

Do not use ingredient information and/or ingredient percentages in this SDS as a product specification. For product specification information refer to a Product Specification Sheet and/or a Certificate of Analysis. These can be obtained from your local Univar Sales Office.

All information appearing herein is based upon data obtained from the manufacturer and/or recognized technical sources. While the information is believed to be accurate, Univar makes no representations as to its accuracy or sufficiency. Conditions of use are beyond Univar's control and therefore users are responsible to verify this data under their own operating conditions to determine whether the product is suitable for their particular purposes and they assume all risks of their use, handling, and disposal of the product, or from the publication or use of, or reliance upon, information contained herein. This information relates only to the product designated herein, and does not relate to its use in combination with any other material or in any other process.

©2015 Univar Inc. All rights reserved. Univar, the hexagon, the Univar logo and MasterLine are the registered trademarks of Univar Inc.

End of Safety Data Sheet

MATERIAL SAFETY DATA SHEET

Revision date: *06/15/2011* **Revision number:** *3*

1. PRODUCT AND COMPANY IDENTIFICATION

Product Name BioRemove 5895

Contact Manufacturer
Novozymes Biologicals Inc.
5400 Corporate Circle
Salem, VA, USA 24153

Information Telephone Number 1-540-389-9361

Emergency Telephone Number 1-800-424-9300 (Chemtrec) 24 hours every day

Health Hazard	1
Fire Hazard	0
Reactivity	0

2. HAZARDS IDENTIFICATION

CAUTION

Emergency Overview

Contact may cause eye and skin irritation

Appearance Opaque **Physical State** Liquid **Odor** Slight fermentation odor

Potential Health Effects

Principle Routes of Exposure Eye contact, Skin contact, Inhalation

Acute Effects

Eyes May cause slight irritation
Skin Substance may cause slight skin irritation
Inhalation May cause irritation of respiratory tract
Ingestion Ingestion may cause gastrointestinal irritation, nausea, vomiting and diarrhoea

Chronic Effects

Chronic Toxicity No information available

See Section 11 for additional Toxicological information.

Aggravated Medical Conditions No information available

Potential Environmental Effects There is no known ecological information for this product
See Section 12 for additional Ecological information

3. COMPOSITION/INFORMATION ON INGREDIENTS

Hazardous Components

Chemical Name	CAS-No	Weight %
Water	7732-18-5	95-100%
Viable Bacteria Cultures	Not Applicable	1-5%

Ingredients not listed are either non-hazardous or under reportable concentrations

4. FIRST AID MEASURES

Eye Contact Rinse thoroughly with plenty of water for at least 15 minutes and consult a physician

Skin Contact Wash off immediately with soap and plenty of water

Inhalation Move to fresh air

Ingestion Clean mouth with water and afterwards drink plenty of water

Notes to Physician Treat symptomatically

5. FIRE-FIGHTING MEASURES

Flammable Properties	Slightly flammable according to HMIS criteria
Suitable Extinguishing Media	Use water spray, alcohol-resistant foam, dry chemical or carbon dioxide.
Unsuitable Extinguishing Media	None
Hazardous Combustion Products	None
Specific Hazards Arising from the Chemical	May cause allergic respiratory reaction.
Protective Equipment and Precautions for Firefighters	Self-contained breathing apparatus and standard turn-out apparel

6. ACCIDENTAL RELEASE MEASURES

Personal Precautions	For personal protection see section 8
Environmental Precautions	Spilled preparation should be removed immediately to avoid formation of dust from dried preparation. Take up by mechanical means preferably by a vacuum cleaner equipped with a high efficiency filter. Flush remainder carefully with plenty of water. Avoid splashing and high pressure washing (avoid formation of aerosols). Ensure sufficient ventilation. Wash contaminated clothing. .
Methods for cleaning up	Avoid formation of dust and aerosols Spilled preparation should be removed immediately to avoid formation of dust from dried preparation. Take up by mechanical means preferably by a vacuum cleaner equipped with a HEPA (High Efficiency Particulate Air) filter. Flush remainder carefully with plenty of water. Avoid splashing, high pressure washing or compressed air cleaning to avoid formation of aerosols. Ensure sufficient ventilation. Wash contaminated clothing.

For personal protection see section 8

7. HANDLING AND STORAGE

Handling	Avoid formation of dust and aerosols Ensure adequate ventilation
General Precautions	The Substance should be handled under conditions of good industrial hygiene and in conformity with any local regulations in order to avoid unnecessary exposure..
Storage	Keep tightly closed in a dry and cool place.
Temperature	Keep in a dry, cool and well-ventilated place.
Storage Conditions	In unbroken packaging - dry and protect from the sun. The product has been formulated for optimal stability. Extended storage or adverse conditions such as higher temperatures or higher humidity may lead to a higher dosage requirement.
Conditions To Avoid	Avoid Temperatures above 45 C to preserve biological stability. Avoid freezing temperatures. Strong Acids or alkali compounds may inactivate biological cultures. Avoid strong oxidizing agents.
Incompatible Materials	Strong acids or alkali compounds may inactivate biological cultures

8. EXPOSURE CONTROLS / PERSONAL PROTECTION

Occupational exposure controls

Engineering Controls	Ensure adequate ventilation, especially in confined areas Maintain good conditions of industrial hygiene. Some processes may require enclosures, local exhaust ventilation, or other engineering controls to control airborne levels. Additional handling and healthy/safety information is available upon request

Personal Protective Equipment

Respiratory Protection	In case of insufficient ventilation wear suitable respiratory equipment that meets HEPA/P100 specifications
Eye Protection	Safety glasses with side-shields
Skin Protection	Long sleeved clothing
Hand Protection	Protective gloves
General Hygiene Considerations	Handle in accordance with good industrial hygiene and safety practices
Environmental exposure controls	Local authorities should be advised if significant spillages cannot be contained

9. PHYSICAL AND CHEMICAL PROPERTIES

Appearance	Opaque
Physical State	Liquid
Odor	Slight fermentation odor
pH	7.0-8.0
Boiling Point/Range	No information available
Melting Point/Range	No information available
Flash Point	No information available
Flammability (solid, gas)	No information available
Explosive Properties	No information available
Oxidizing Properties	No information available
Vapor Pressure	No information available
Relative density	No data available
Solubility	No information available
Partition Coefficient (n-octanol/water)	No information available

The physical data presented above are typical values and should not be construed as a specification

10. STABILITY AND REACTIVITY

Chemical stability	Stable under recommended storage conditions
Conditions to Avoid	Stable under normal conditions Excessive temperature variations below 32F or above 155F
Materials to avoid	None
Hazardous Decomposition Products	None
Possibility of Hazardous Reactions	None

11. TOXICOLOGICAL INFORMATION

Acute Toxicity

Ingestion, LD50 Rat Oral (mg/kg):	Not Determined
Inhalation, LC50 Rat inhalation (mg/l/4hr)	Not Determined
Skin, LD50 Rat Dermal (mg/kg)	Not Determined
Eye Irritation	Not Determined

Chronic Toxicity

Sensitization	According to our experience and to the information provided to us, the product does not have any harmful effects if it is used and handled as specified

This product is formulated using a range of microorganisms specially selected from the natural environment

12. ECOLOGICAL INFORMATION

Ecotoxicity

This product is not expected to pose an environmental hazard. No Toxicity Data is available specifically for soil organisms, plants and terrestrial animals.

Environmental Effects	The data available do not support any environmental hazard
Persistence/Degradability	The organic components of the product are biodegradable.
Bioaccumulative Potential	According to experience not expected
Mobility	Not available
Other adverse effects	No known effect

13. DISPOSAL CONSIDERATIONS

Waste Disposal Method	Dispose of contents/container in accordance with local regulation.
Contaminated Packaging	Dispose of wastes in an approved waste disposal facility.

14. TRANSPORT INFORMATION

Transport Regulations	Not dangerous goods
IMDG/IMO	Not regulated
RID	Not regulated
ADR	Not regulated
ICAO	Not regulated
IATA	Not regulated
DOT	Not regulated

15. REGULATORY INFORMATION

International Inventories

TSCA	Complies
PICCS	Complies
KECL	Complies
ENCS	Complies
CHINA	Complies
AICS	Complies
DSL/NDSL	Complies

USA, Federal Regulations

SARA 313
Section 313 of Title III of the Superfund Amendments and Reauthorization Act of 1986 (SARA). This product does not contain any chemicals which are subject to the reporting requirements of the Act and 40 CFR Part 372.

SARA 311/312 Hazardous Categorization

Acute Health Hazard	No
Chronic Health Hazard	No
Fire Hazard	No
Sudden Release of Pressure Hazard	No
Reactive Hazard	No

USA, State Regulations

California Proposition 65 This product contains the following Proposition 65 chemicals:

Canada

WHMIS Hazard Class Controlled product hazard class D2 A (respiratory sensitizer)

WHMIS Statement This product has been classified in accordance with the hazard criteria of the Controlled Products Regulations (CPR) and the SDS contains all the information required by the CPR.

16. OTHER INFORMATION

Disclaimer

The information provided on this MSDS is correct to the best of our knowledge, information and belief at the date of its publication. The information given is designed only as a guide for safe handling, use, processing, storage, transportation, disposal and release and is not to be considered as a warranty or quality specification. The information relates only to the specific material designated and may not be valid for such material used in combination with any other material or in any process, unless specified in the text. Furthermore, as the conditions of use are beyond the control of Novozymes, it is the responsibility of the customer to determine the conditions of safe use of these products.



Report version 1 / ANSI / English

End of Material Safety Data Sheet

Appendix B: Drawings

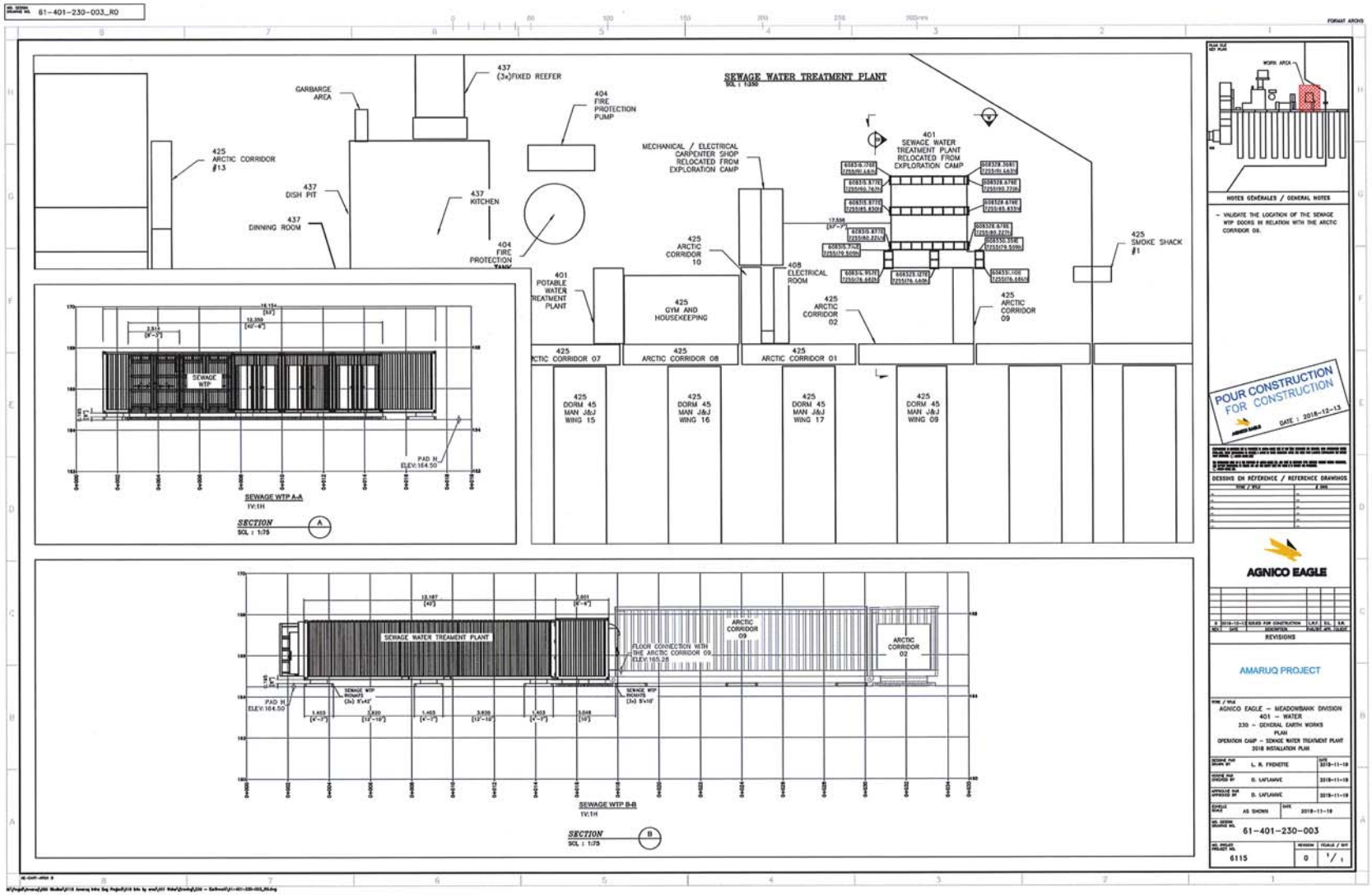

61-401-230-003_R0
FORMAT ARCHS
SEWAGE WATER TREATMENT PLANT
SCL : 1:250
GARBARGE AREA
437 (3x)FIXED REEFER
404 FIRE PROTECTION PUMP
425 ARCTIC CORRIDOR #13
437 DISH PIT
437 KITCHEN
437 DINNING ROOM
404 FIRE PROTECTION TANK
MECHANICAL / ELECTRICAL CARPENTER SHOP RELOCATED FROM EXPLORATION CAMP
401 SEWAGE WATER TREATMENT PLANT RELOCATED FROM EXPLORATION CAMP
425 ARCTIC CORRIDOR 10
408 ELECTRICAL ROOM
425 SMOKE SHACK #1
401 POTABLE WATER TREATMENT PLANT
425 GYM AND HOUSEKEEPING
425 ARCTIC CORRIDOR 02
425 ARCTIC CORRIDOR 09
425 ARCTIC CORRIDOR 07
425 ARCTIC CORRIDOR 08
425 ARCTIC CORRIDOR 01
425 DORM 45 MAN J&J WING 15
425 DORM 45 MAN J&J WING 16
425 DORM 45 MAN J&J WING 17
425 DORM 45 MAN J&J WING 09
SEWAGE WTP
PAD H ELEV:164.50
SEWAGE WTP A-A
1V:1H
SECTION A
SCL : 1:75
SEWAGE WATER TREAMENT PLANT
ARCTIC CORRIDOR 09
ARCTIC CORRIDOR 02
FLOOR CONNECTION WITH THE ARCTIC CORRIDOR 09 ELEV:165.28
SEWAGE WTP RICHARDS (3x) 5'x42'
SEWAGE WTP RICHARDS (3x) 5'x10'
PAD H ELEV:164.50
SEWAGE WTP B-B
1V:1H
SECTION B
SCL : 1:75
WORK AREA
NOTES GÉNÉRALES / GENERAL NOTES
- VALIDATE THE LOCATION OF THE SEWAGE WTP DOORS IN RELATION WITH THE ARCTIC CORRIDOR 09.
POUR CONSTRUCTION
FOR CONSTRUCTION
DATE : 2018-12-13
DESSINS EN RÉFÉRENCE / REFERENCE DRAWINGS
AGNICO EAGLE
REVISIONS
AMARUQ PROJECT
AGNICO EAGLE – MEADOWBANK DIVISION
401 – WATER
230 – GENERAL EARTH WORKS
PLAN
OPERATION CAMP – SEWAGE WATER TREATMENT PLANT
2018 INSTALLATION PLAN
L. R. FRENETTE
D. LAFLAMME
D. LAFLAMME
AS SHOWN
2018-11-19
61-401-230-003
6115
0
1/1

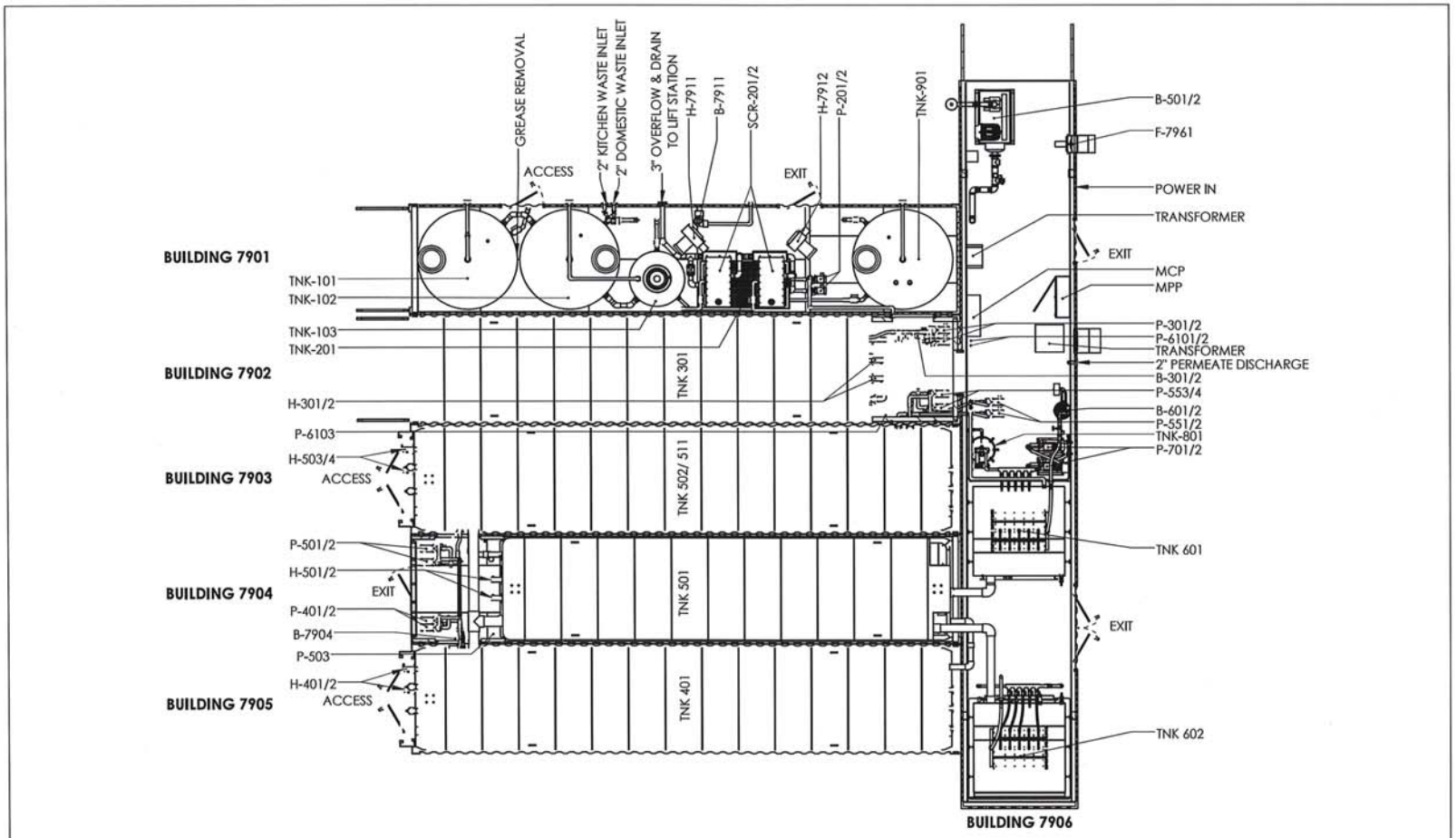

GENERAL TOLERANCES
.XX ± 1/8"
.XXX ± 1/16"
UNLESS OTHERWISE SPECIFIED DIMENSIONS ARE IN INCHES

THIS INFORMATION IS THE PROPERTY OF newterra AND CANNOT BE REUSED OR REPRODUCED WITHOUT WRITTEN CONSENT.

LEVEL	DATE	BY	REVISION
C1	11/08/17	AH	AS BUILT
B1	07/06/17	GH	FOR PRODUCTION
B	06/06/17	GH	FOR PRODUCTION
A2	25/05/17	GH	REVISED LAYOUT
A	19/05/2017	GH	FOR REVIEW

DWG. NO:
PROJECT NUMBER: 1704432
TITLE: SYSTEM LAYOUT
CUSTOMER: AGNICO EAGLE
DRAWN BY: GH
DATE: 19/05/17
SHEET 1 OF 4

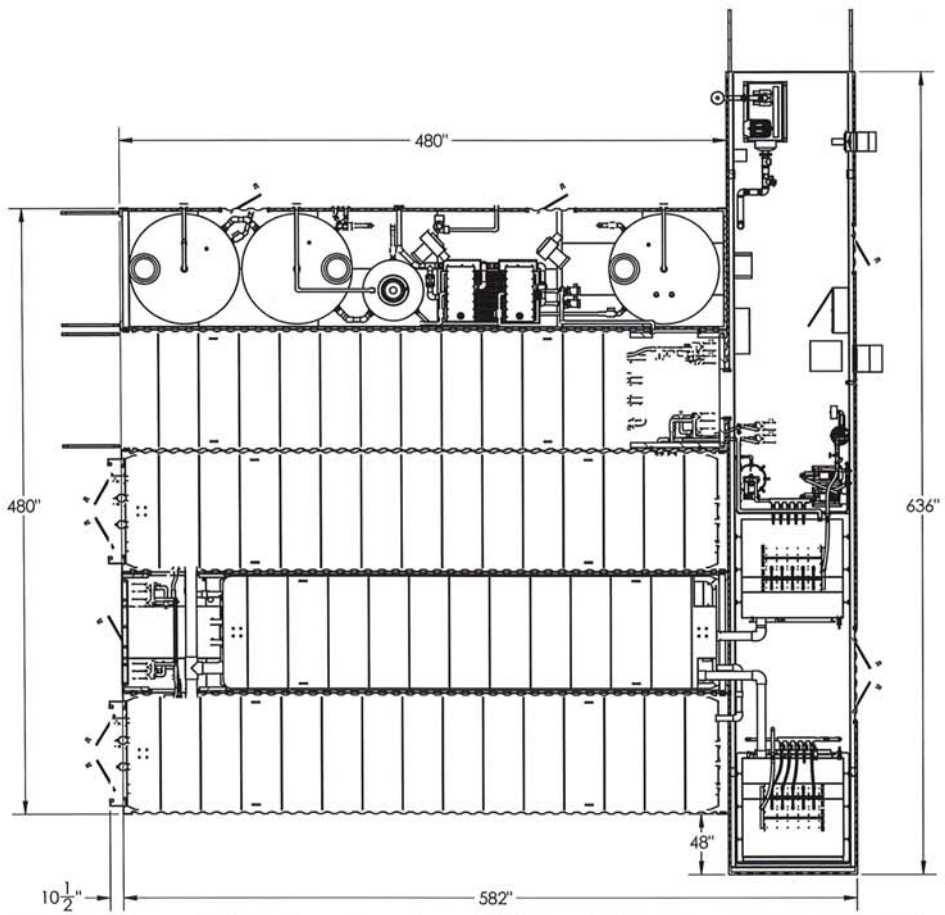

GENERAL TOLERANCES
.XX ± 1/8"
.XXX ± 1/16"
UNLESS OTHERWISE SPECIFIED
DIMENSIONS ARE IN INCHES

newterra

THIS INFORMATION IS THE PROPERTY OF newterra AND CANNOT BE REUSED OR REPRODUCED WITHOUT WRITTEN CONSENT.

LEVEL	DATE	BY	REVISION
C1	11/08/17	AH	AS BUILT
B1	07/06/17	GH	FOR PRODUCTION
B	06/06/17	GH	FOR PRODUCTION
A2	25/05/17	GH	REVISED LAYOUT
A	19/05/2017	GH	FOR REVIEW

DWG. NO: 1704432
TITLE: SYSTEM LAYOUT
CUSTOMER: AGNICO EAGLE
DRAWN BY: GH
DATE: 19/05/17
SHEET 2 OF 4

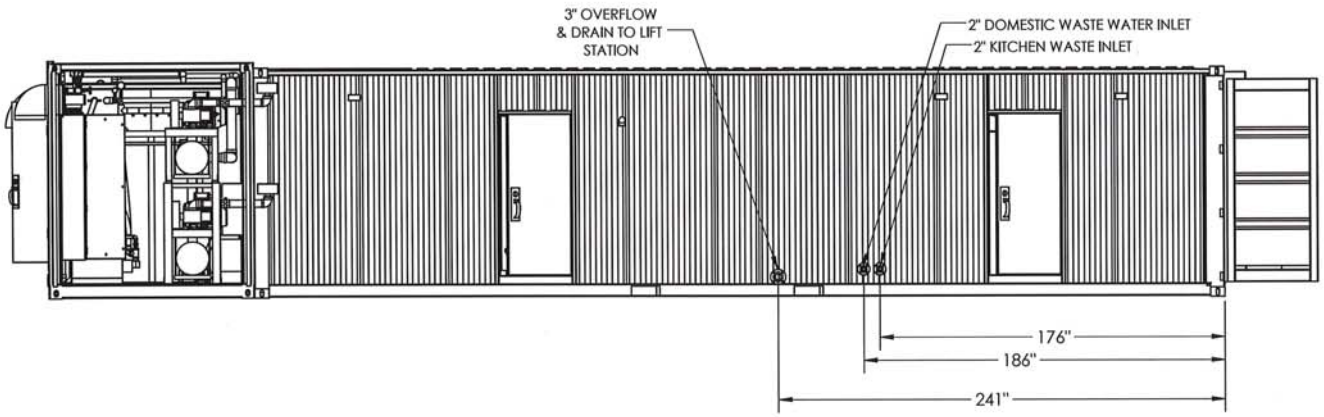

GENERAL TOLERANCES
.XX ± 1/8"
.XXX ± 1/16"
UNLESS OTHERWISE SPECIFIED DIMENSIONS ARE IN INCHES

newterra

THIS INFORMATION IS THE PROPERTY OF newterra AND CANNOT BE REUSED OR REPRODUCED WITHOUT WRITTEN CONSENT.

LEVEL	DATE	BY	REVISION
C1	11/08/17	AH	AS BUILT
B1	07/06/17	GH	FOR PRODUCTION
B	06/06/2017	GH	FOR PRODUCTION

DWG. NO:
PROJECT NUMBER: 1704432
TITLE: SYSTEM LAYOUT
CUSTOMER: AGNICO EAGLE
DRAWN BY: GH
DATE: 06/06/17
SHEET 3 OF 4

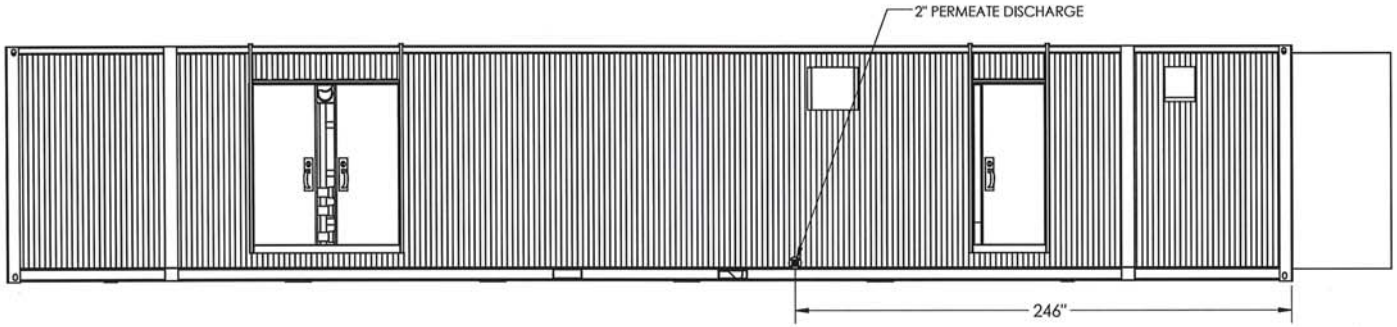

GENERAL TOLERANCES
.XX ± 1/8"
.XXX ± 1/16"
UNLESS OTHERWISE SPECIFIED DIMENSIONS ARE IN INCHES

THIS INFORMATION IS THE PROPERTY OF newterra AND CANNOT BE REUSED OR REPRODUCED WITHOUT WRITTEN CONSENT.

LEVEL	DATE	BY	REVISION
C1	11/08/17	AH	AS BUILT
B1	07/06/17	GH	FOR PRODUCTION
B	06/08/2017	GH	FOR PRODUCTION

DWG. NO:
PROJECT NUMBER: 1704432
TITLE: SYSTEM LAYOUT
CUSTOMER: AGNICO EAGLE
DRAWN BY: GH
DATE: 06/06/17
SHEET 4 OF 4

NO. DESSIN
DRAWING NO. 61-460-270-201-1_R0

FORMAT ARCH D

PART	QUANTITY	LENGTH	UNIT	DESCRIPTION	ORDER
1	1	± 3 360	FT	PIPING HDPE DR17 3 PO INSULATE	OC - 703225
2	8	-	EA	ELBOW 90° - 3" HDPE DR17 FLANGED ENDS	OC - 707903
-	8	-	EA	ELBOW 90° - 3" HDPE DR17 COMPLETE INSULATION KIT	OC - 707903
3	1	± 110	FT	PIPING HDPE DR17 3 PO INSULATE	OC - 703225
4	1	± 430	FT	PIPING HDPE DR17 3 PO INSULATE	OC - 703225
5	1	± 45	FT	PIPING HDPE DR17 3 PO INSULATE	OC - 703225
6	2	± 2.5	FT	PIPING HDPE DR17 3 PO INSULATE	OC - 703225
7	1	± 17	FT	PIPING HDPE DR17 3 PO INSULATE	OC - 703225
8	1	± 12	FT	PIPING HDPE DR17 3 PO INSULATE	OC - 703225
9	1	-	EA	REDUCER 3" TO 2" HDPE DR11 FLANGED ENDS	OC - 707903
-	64	-	EA	3" HDPE DR17 COMPLETE SLIPJOINT 2.5" INSULATION KIT	OC - 707903
-	49	-	EA	FLANGE ADAPTER 3" HDPE DR17	OC - 707903
-	49	-	EA	FLANGE RING CLASS150 FOR 3" HDPE DR17 STUB END	OC - 707903
-	16	-	EA	FLANGE ADAPTER 3" HDPE DR17 COMPLETE 2.5" INSULATION KIT	OC - 707903
-	33	-	EA	3" RED RUBBER FULL FACED GASKET 1/8"	OC - 707903
-	132	-	EA	5/8" UNC GRADE 5 BOLT - 4" LENGTH (3" FLANGE)	OC - 707903
-	132	-	EA	5/8" UNC GRADE 5 NUT	OC - 707903
-	264	-	EA	5/8" WASHER 1/8" THICK	OC - 707903
-	-	-	EA	10 FEET 5/8" UNC ROD	OC - 707903

NOTE: ALL LENGTH AND QUANTITY NEED TO BE VALIDATED ON CONSTRUCTION SITE.

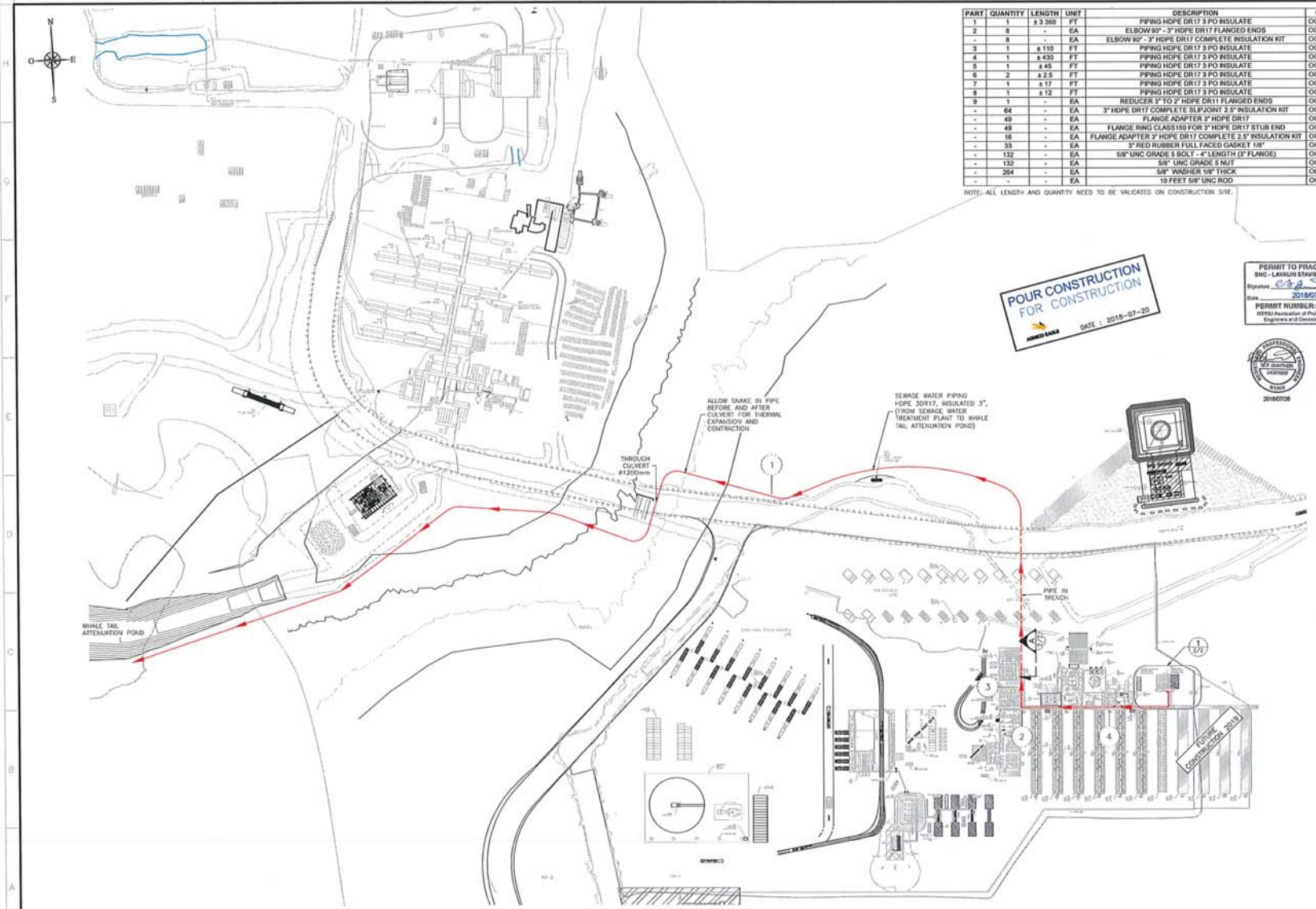

PLAN VIEW
SCL: N.T.S.

POUR CONSTRUCTION
FOR CONSTRUCTION
AGNICO EAGLE
DATE : 2018-07-20

PERMIT TO PRACTICE
SNC - LAVALIN STAVIBEL INC.
Signature
Date 2018/07/26
PERMIT NUMBER: P 718
NT/NU Association of Professional Engineers and Geoscientists

2018/07/26

PLAN CLÉ
KEY PLAN



NOTES GÉNÉRALES / GENERAL NOTES

1. ALL LENGTH AND QUANTITY NEED TO BE VALIDATED ON CONSTRUCTION SITE.

——— PIPING ON GROUND
- - - - - - PIPING IN TRENCH

THE DESIGN AND MATERIALS ON THIS DRAWING ARE ASSUMED BY AGNICO EAGLE.

SNC-LAVALIN
SNC-Lavalin Stavibel Inc.
155, rue Gamble Ouest
Rouyn-Noranda (Québec) J9X 3N7
Tél. : 819 764-5181 Fax : 819 797-0158
www.snclavalin.com

Project # : 644819-0000

DESSINS EN RÉFÉRENCE / REFERENCE DRAWINGS

TITRE / TITLE	# DWG
-	-
-	-
-	-
-	-
-	-
-	-

AGNICO EAGLE

NO.	DATE	DESCRIPTION	DESSINÉ PAR/DRAWN BY	C.H.D.	C.I.D.	A.P.A.
0	2018-07-20	ISSUED FOR CONSTRUCTION				

REVISIONS

TITRE / TITLE
AGNICO EAGLE – WHALE TAIL (AMARUQ)
460 – SEWAGE WATER TREATMENT PLANT
270 – PIPING
PLAN VIEW
SEWAGE WATER PIPING (ROUTING)
FROM TREATMENT PLANT TO ATTENUATION POND

DESSINÉ PAR / DRAWN BY	NICOLAS BORDELEAU G., TECH.	DATE 2018-06-12
VÉRIFIÉ PAR / CHECKED BY	KEVEN PLANTE-MARQUIS, ING.	2018-07-20
APPROUVÉ PAR / APPROVED BY	CHRISTIAAN VAN GUNTHER, ING.	2018-07-20
ÉCHELLE / SCALE	N.T.S.	DATE 2017-12-01

NO. DESSIN / DRAWING NO. 61-460-270-201

NO. PROJET / PROJECT NO.	REVISION	FEUILLE / SHT
6115	0	1/1

AE-GAR-460X 0

N:\Projet\Amaruq\200 Studies\810 Amaruq Infra Eng Project\For approval\Plan & profile\61-460-270-201-1_R0.dwg

NO. DESSIN DRAWING NO. 61-460-270-201-1_R0

FORMAT ARCH D

POUR CONSTRUCTION
FOR CONSTRUCTION
AGNICO EAGLE
DATE : 2018-07-20

PART	QUANTITY	LENGTH	UNIT	DESCRIPTION	ORDER
1	1	± 3 360	FT	PIPING HDPE DR17 3 PO INSULATE	OC - 703225
2	8	-	EA	ELBOW 90° - 3" HDPE DR17 FLANGED ENDS	OC - 707903
-	8	-	EA	ELBOW 90° - 3" HDPE DR17 COMPLETE INSULATION KIT	OC - 707903
3	1	± 110	FT	PIPING HDPE DR17 3 PO INSULATE	OC - 703225
4	1	± 430	FT	PIPING HDPE DR17 3 PO INSULATE	OC - 703225
5	1	± 45	FT	PIPING HDPE DR17 3 PO INSULATE	OC - 703225
6	2	± 2.5	FT	PIPING HDPE DR17 3 PO INSULATE	OC - 703225
7	1	± 17	FT	PIPING HDPE DR17 3 PO INSULATE	OC - 703225
8	1	± 12	FT	PIPING HDPE DR17 3 PO INSULATE	OC - 703225
9	1	-	EA	REDUCER 3" TO 2" HDPE DR11 FLANGED ENDS	OC - 707903
-	64	-	EA	3" HDPE DR17 COMPLETE SLIPJOINT 2.5" INSULATION KIT	OC - 707903
-	49	-	EA	FLANGE ADAPTER 3" HDPE DR17	OC - 707903
-	49	-	EA	FLANGE RING CLASS150 FOR 3" HDPE DR17 STUB END	OC - 707903
-	16	-	EA	FLANGE ADAPTER 3" HDPE DR17 COMPLETE 2.5" INSULATION KIT	OC - 707903
-	33	-	EA	3" RED RUBBER FULL FACED GASKET 1/8"	OC - 707903
-	132	-	EA	5/8" UNC GRADE 5 BOLT - 4" LENGTH (3" FLANGE)	OC - 707903
-	132	-	EA	5/8" UNC GRADE 5 NUT	OC - 707903
-	264	-	EA	5/8" WASHER 1/8" THICK	OC - 707903
-	-	-	EA	10 FEET 5/8" UNC ROD	OC - 707903

NOTE: ALL LENGTH AND QUANTITY NEED TO BE VALIDATED ON CONSTRUCTION SITE.

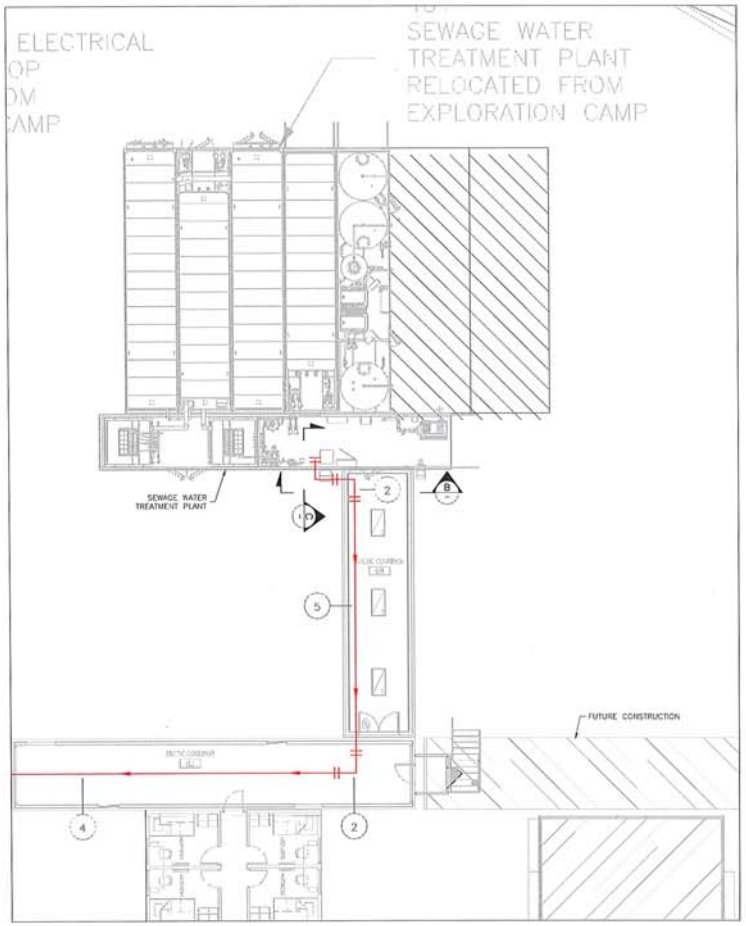

DETAIL 1 1/2
SCALE: N.T.S.

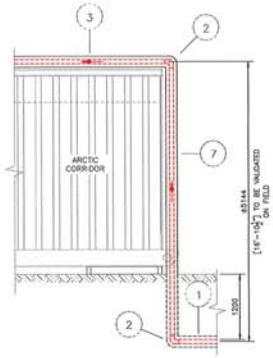

SECTION A 1/2
SCL. N.T.S.

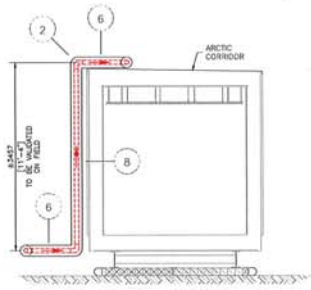

SECTION B -
SCL. N.T.S.

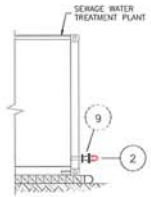

SECTION C -
SCL. N.T.S.

PERMIT TO PRACTICE
SNC-LAVALIN STAVIBEL INC.
Signature
Date 2018/07/26
PERMIT NUMBER: P 718
NT/NU Association of Professional Engineers and Geoscientists

2018/07/26



NOTES GÉNÉRALES / GENERAL NOTES

1. ALL LENGTH AND QUANTITY NEED TO BE VALIDATED ON CONSTRUCTION SITE.

——— PIPING ON GROUND
– – – – – PIPING IN TRENCH

THE DESIGN AND MATERIALS ON THIS DRAWING ARE ASSUMED BY AGNICO EAGLE.

SNC-LAVALIN
SNC-Lavalin Stavibel inc.
135, rue Gamble Ouest
Rouyn-Noranda (Québec) J9X 2R7
Tél. : 819 763-5181 Fax : 819 797-0708
www.snclavalin.com

Project # : 644819-0000

DESSINS EN RÉFÉRENCE / REFERENCE DRAWINGS

TITRE / TITLE	# DWG
-	-
-	-
-	-
-	-
-	-
-	-

AGNICO EAGLE

REV.	DATE	DESCRIPTION	DESSINÉ / DRAWN	APP.	CLIENT
0	2018-07-20	ISSUED FOR CONSTRUCTION	N.B.G.	C.I.G.	K.P.M.

REVISIONS

TITRE / TITLE
AGNICO EAGLE – WHALE TAIL (AMARUQ)
460 – SEWAGE WATER TREATMENT PLANT
270 – PIPING
DETAILS & SECTIONS
SEWAGE WATER PIPING (ROUTING)
FROM TREATMENT PLANT TO ATTENUATION POND

DESSINÉ PAR / Drawn BY	NICOLAS BORDELEAU G., TECH.	DATE 2018-06-12
VÉRIFIÉ PAR / CHECKED BY	KEVEN PLANTE-MARQUIS, ING.	2018-07-20
APPROUVÉ PAR / APPROVED BY	CHRISTIAN WH GUNTHER, ING.	2018-07-20
ÉCHELLE / SCALE	N.T.S.	DATE 2017-12-01

NO. DESSIN / DRAWING NO. 61-460-270-201

NO. PROJET / PROJECT NO.	REVISION	FEUILLE / SHT
6115	0	2 / 2

AE-GWT-460H 0

N:\Projet\Amaruq\000 Studies\6115 Amaruq Infra Eng Project\For approval\Plan & scale\61-460-270-201-1_R0.dwg

VALVES AND PIPING

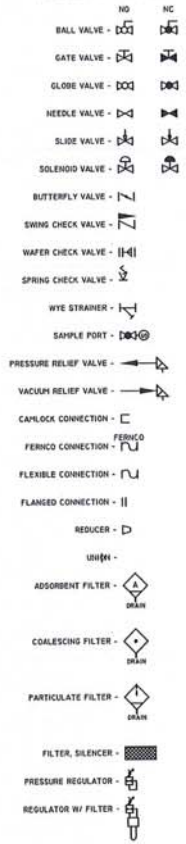

EQUIPMENT

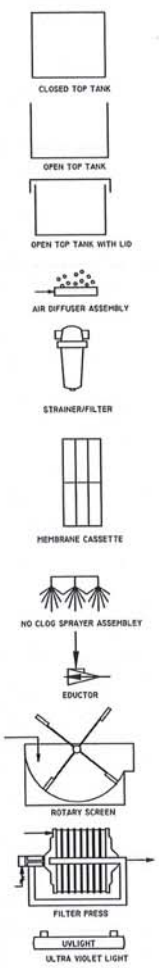

EQUIPMENT

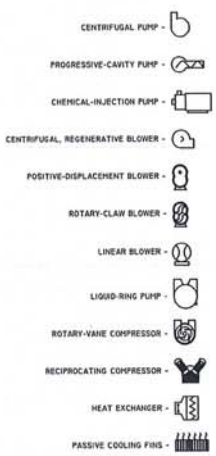

EQUIPMENT

AV - ACTUATED VAVLE
B - BLOWER
F - FAN
H - HEATER
MBR - MEMBRANE BIOLOGICAL REACTOR
MV - MODULATED VALVE
P - PUMP
SV - SOLENOID VALVE
TNK - TANK
UV - ULTRA VIOLET LIGHT
VFD - VARIABLE FREQUENCY DRIVE

FLOW MEASUREMENT

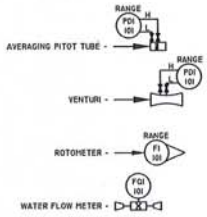

INSTRUMENT DESIGNATION

	INPUT	1ST MODIFIER	2ND MODIFIER	3RD MODIFIER	OUTPUT	1ST MODIFIER	
A							A
B						BLOWER	B
C	CYCLE					COMPRESSOR	C
D		DIFFERENTIAL				AIR DRYER	D
E							E
F	FLOW					FAN	F
G	GAS (LEL)		GAUGE				G
H				HIGH	HAND	HEATER	H
I	CURRENT		INDICATOR				I
J							J
K							K
L	LEVEL			LOW			L
M					MOTORIZED		M
N							N
O							O
P	PRESSURE				PNEUMATIC	PUMP	P
Q		QUANTITY					Q
R							R
S	SPEED		SWITCH		SOLENOID		S
T	TEMPERATURE		TRANSMITTER				T
U							U
V						VALVE	V
W							W
X							X
Y							Y
Z	POSITION						Z

SYSTEM POSITION DESIGNATION

1000 - LIFT STATION
2000 - INLET SCREEN
3000 - EQUALIZATION TANK
4901 - SCREEN DISCHARGE PUMP TANK
5000 - AERATION TANK
5500 - SLUDGE HOLDING TANK
6000 - MBR TANK
6100 - CHEMICAL INJECTION
7000 - PERMEATE
7500 - UV LIGHT
7900 - BUILDING,TRAILER OR SKID
8000 - DISCHARGE TANK
8200 - CONTROL PANEL
8300 - TELEMETRY
9900 - EXTRAS

INSTRUMENT IDENTIFICATION

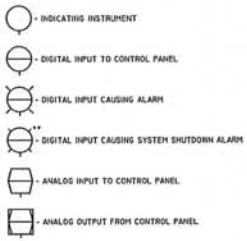

EXAMPLE

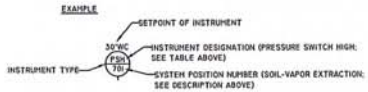



NOTES

newterra

PHONE:
(800) 420-4056

www.newterra.com

LEVEL	REVISION	DATE (mm/dd/yy)	BY
D	T-401 MIX PIPE SIZE	10/10/17	JJK
C	AS-BUILT	13/08/17	JJK
B	PRODUCTION	06/06/17	JJK
A2	SUBMITTAL REVISIONS	26/05/17	JJK
A	SUBMITTAL	23/05/17	JJK

PROJECT NUMBER: 1704432

TITLE AND LOCATION: P&ID AMARUQ MINE

CUSTOMER: AGNICO EAGLE MINE

DRAWN BY: MH | DATE: | SHEET: 4 | SHEETS: 4

THIS INFORMATION IS THE PROPERTY OF newterra AND CANNOT BE REUSED OR REPRODUCED WITHOUT THE WRITTEN CONSENT OF newterra

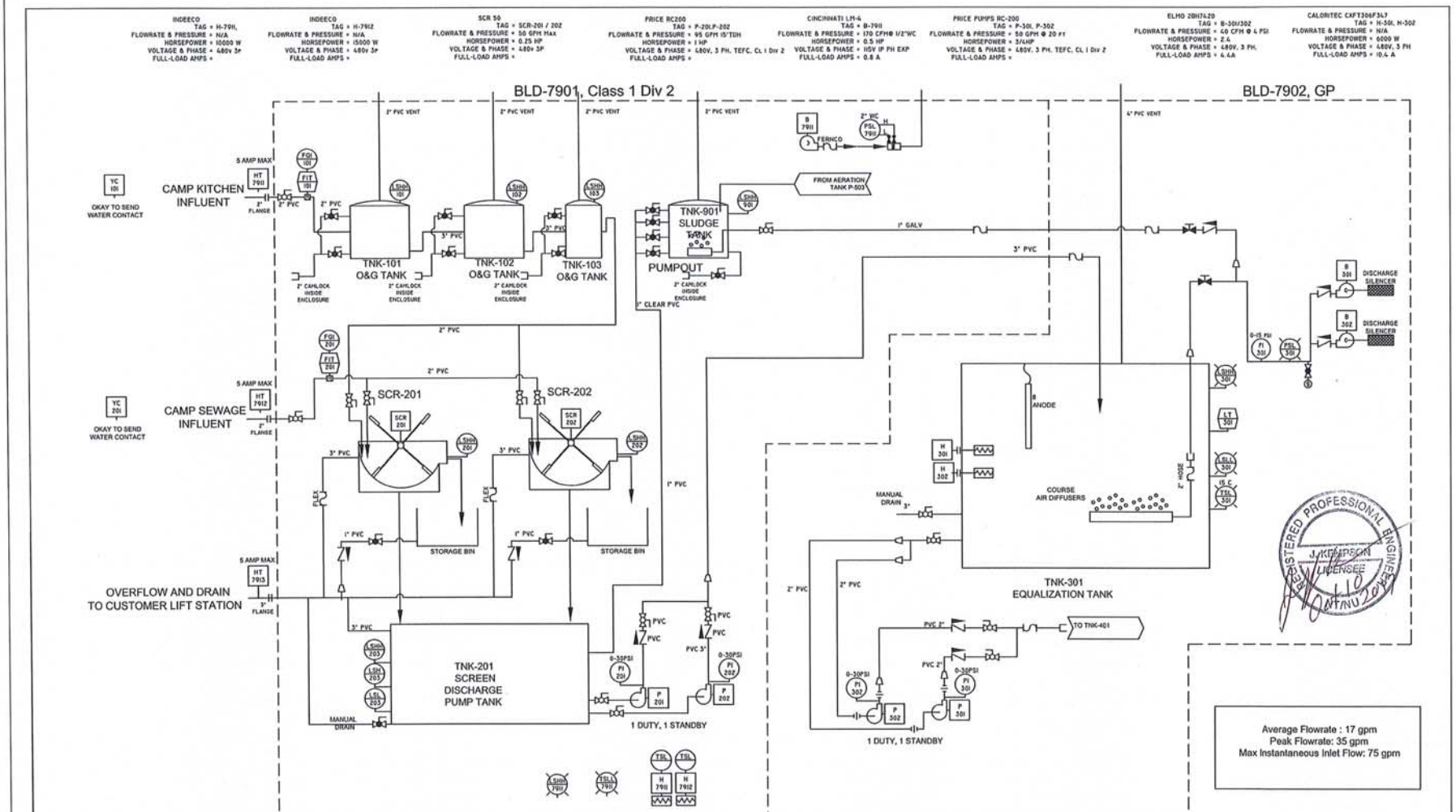

NOTES

IS INPUT WIRING TO BE WIRED FOR OUTDOORS, ACCORDING CEC FOR HAZARDOUS LOCATIONS.

WIRING TO BE CLASS I DIVISION 2, AS PER THE CEC.

newterra

PHONE: (800) 420-4056

www.newterra.com

LEVEL	REVISION	DATE (mm/dd/yy)	BY
D	T-401 MIX PIPE SIZE	10/10/17	JJK
C	AS-BUILT	13/08/17	JJK
B	PRODUCTION	06/06/17	JJK
A2	SUBMITTAL REVISIONS	26/05/17	JJK
A	SUBMITTAL	23/05/17	JJK

PROJECT NUMBER: 1704432

TITLE AND LOCATION: P&ID AMARUQ MINE

CUSTOMER: AGNICO EAGLE MINE

DRAWN BY: MH | DATE: | SHEET 1 | SHEETS 4

THIS INFORMATION IS THE PROPERTY OF newterra AND CANNOT BE REUSED OR REPRODUCED WITHOUT THE WRITTEN CONSENT OF newterra

PRICE PUMPS RC-200
TAG = P-601,602
FLOWRATE & PRESSURE = 300 GPM @ 60 FT
HORSEPOWER = 5HP
VOLTAGE & PHASE = 480V, 3 PH, TEFC, CL 1 Div 2
FULL-LOAD AMPS =

CALORITEC CXFT306F347H83
TAG = H-601,602,501,502
FLOWRATE & PRESSURE = N/A
HORSEPOWER = 6000 W
VOLTAGE & PHASE = 480V, 3 PH
FULL-LOAD AMPS = 10.4 A

CINCINNATI LM6
TAG = B-794I
FLOWRATE & PRESSURE = 700 CFM@ 2"WC
HORSEPOWER = 1.5 HP
VOLTAGE & PHASE = 480V 3P PH
FULL-LOAD AMPS =

OMELLET OAC649088L
TAG = H-794I
FLOWRATE & PRESSURE = N/A
HORSEPOWER = 4800 W
VOLTAGE & PHASE = 480 V, 1 PH
FULL-LOAD AMPS = 8.34

PRICE PUMPS RC-200
TAG = P-503
FLOWRATE & PRESSURE = 50 GPM @ 10 FT
HORSEPOWER = 1/4 HP
VOLTAGE & PHASE = 480V, 3 PH, TEFC, CL 1 Div 2
FULL-LOAD AMPS =

PROMINENT BETA 4
TAG = P-601, 602
FLOWRATE & PRESSURE = 3.2 GPH@58PSI
HORSEPOWER = N/A
VOLTAGE & PHASE = 120 V, 1 PH
FULL-LOAD AMPS = N/A

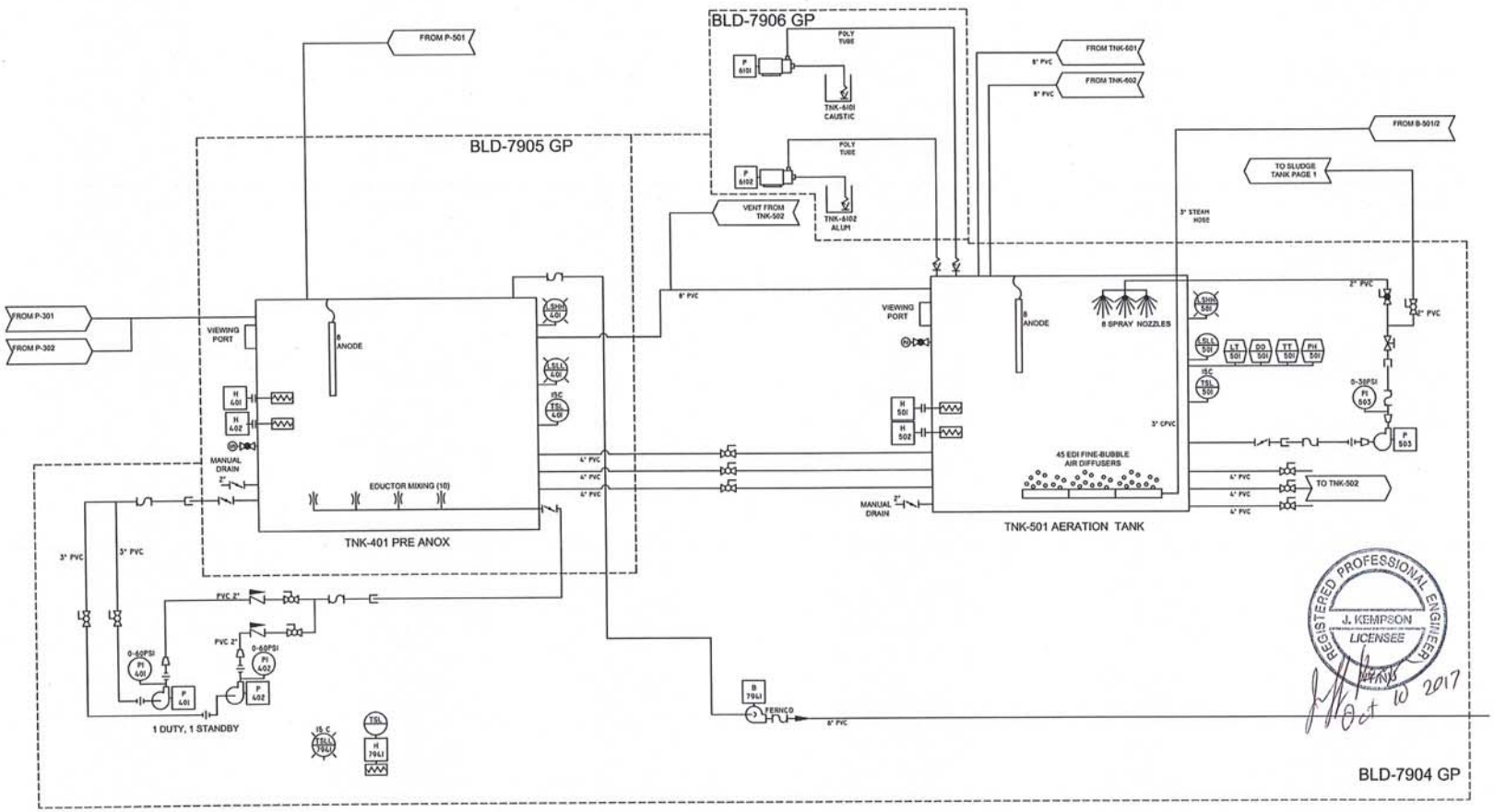

REGISTERED PROFESSIONAL ENGINEER
J. KEMPSON
LICENSEE
Oct 10 2017

NOTES

newterra

PHONE: (800) 420-4056
www.newterra.com

LEVEL	REVISION	DATE (mm/dd/yy)	BY
D	T-401 MIX PIPE SIZE	10/10/17	JJK
C	AS-BUILT	13/08/17	JJK
B	PRODUCTION	06/06/17	JJK
A2	SUBMITTAL REVISIONS	26/05/17	JJK
A	SUBMITTAL	23/05/17	JJK

PROJECT NUMBER: 1704432
TITLE AND LOCATION: P&ID AMARUQ MINE
CUSTOMER: AGNICO EAGLE MINE
DRAWN BY: MH
DATE:
SHEET: 2
SHEETS: 4

THIS INFORMATION IS THE PROPERTY OF newterra AND CANNOT BE REUSED OR REPRODUCED WITHOUT THE WRITTEN CONSENT OF newterra

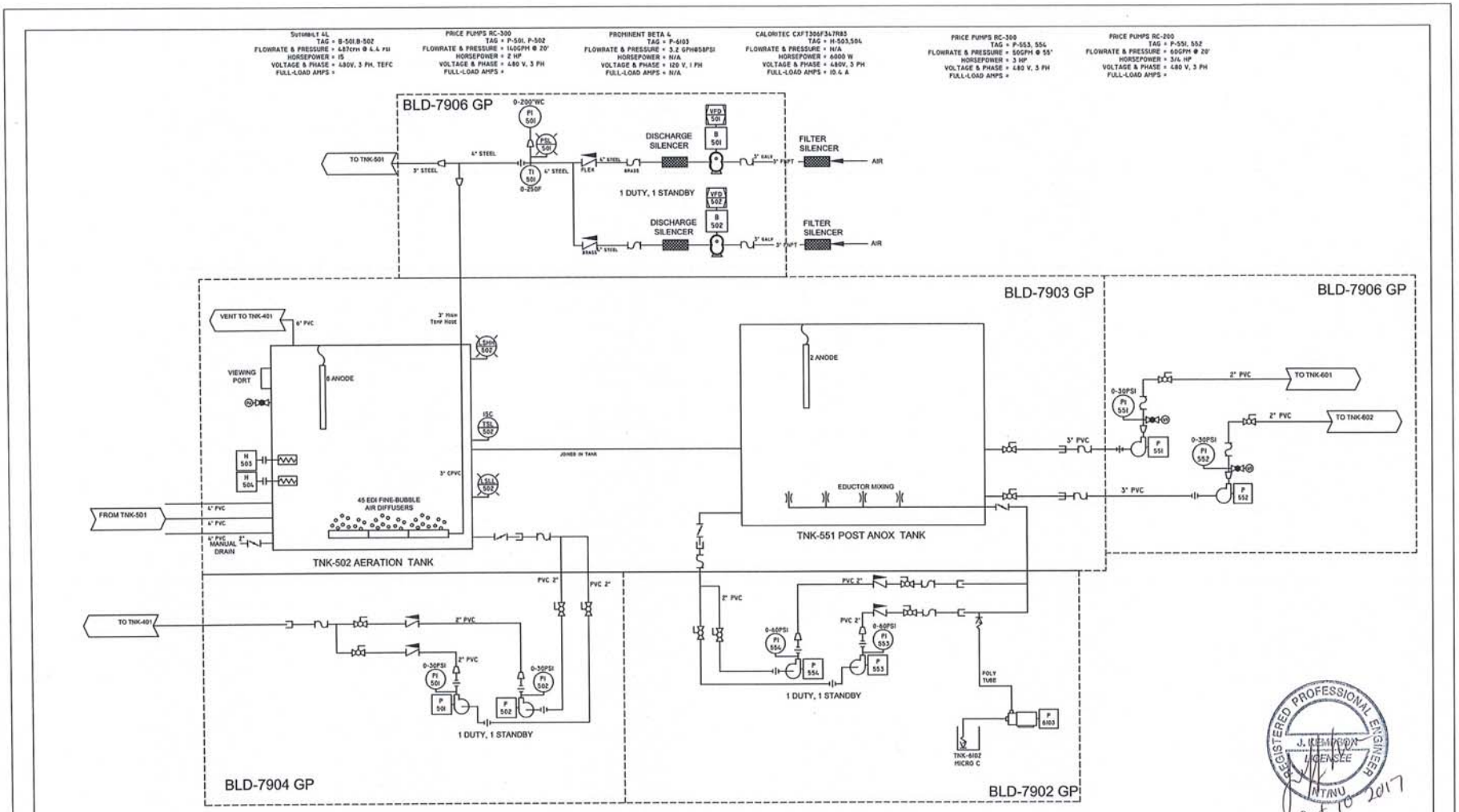

REGISTERED PROFESSIONAL ENGINEER
J. KEMPTON
LICENSEE
NT/NU
Oct 10 2017

NOTES

newterra

PHONE: (800) 420-4056

www.newterra.com

LEVEL	REVISION	DATE (mm/dd/yy)	BY
D	T-401 MIX PIPE SIZE	10/10/17	JJK
C	AS-BUILT	13/08/17	JJK
B	PRODUCTION	06/06/17	JJK
A2	SUBMITTAL REVISIONS	26/05/17	JJK
A	SUBMITTAL	23/05/17	JJK

PROJECT NUMBER: 1704432

TITLE AND LOCATION: P&ID AMARUQ MINE

CUSTOMER: AGNICO EAGLE MINE

DRAWN BY: MH | DATE: | SHEET: 3 | SHEETS: 4

THIS INFORMATION IS THE PROPERTY OF newterra AND CANNOT BE REUSED OR REPRODUCED WITHOUT THE WRITTEN CONSENT OF newterra

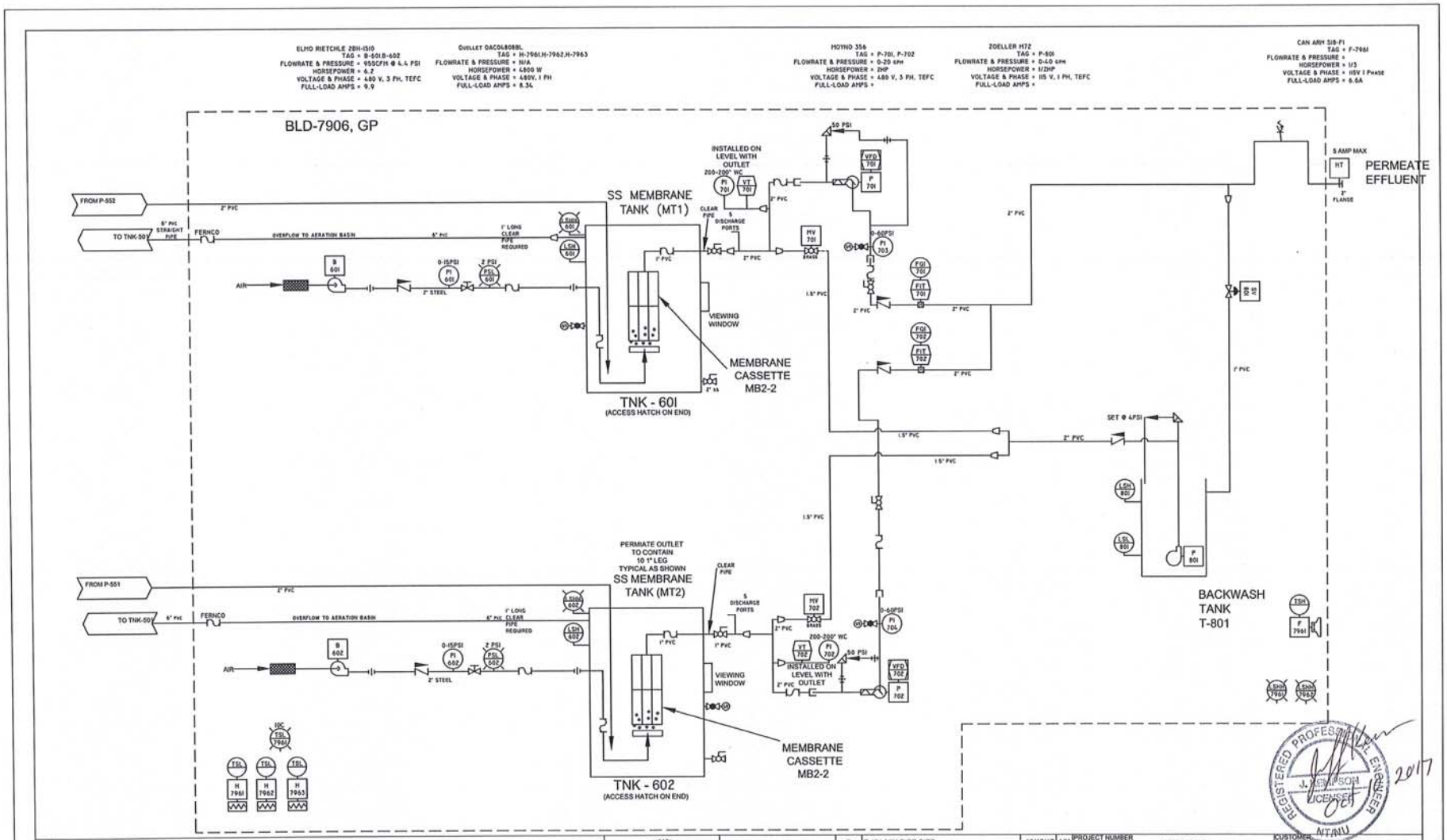

NOTES

newterra

PHONE:
(800) 420-4056
www.newterra.com

LEVEL	REVISION	DATE (mm/dd/yy)	BY
D	T-401 MIX PIPE SIZE	10/10/17	JJK
C	AS-BUILT	13/08/17	JJK
B	PRODUCTION	06/06/17	JJK
A2	SUBMITTAL REVISIONS	26/05/17	JJK
A	SUBMITTAL	23/05/17	JJK

PROJECT NUMBER: 1704432

TITLE AND LOCATION: P&ID AMARUQ MINE

CUSTOMER: AGNICO EAGLE MINE

DRAWN BY: MH | DATE: | SHEET: 4 | SHEETS: 4

THIS INFORMATION IS THE PROPERTY OF newterra AND CANNOT BE REUSED OR REPRODUCED WITHOUT THE WRITTEN CONSENT OF newterra

Appendix C: Newterra Operation and Maintenance Manual

newterra ltd.
1291 California Avenue, Brockville, ON K6V 5W3
(800) 420-4056 / www.newterra.com

newterra MBR Wastewater Treatment Plant

OPERATION AND MAINTENANCE MANUAL

System:	**newterra MBR WWTP**
Location:	**Amaruq mine, Kivalliq District of Nunavut**
Client:	**Agnico Eagle**
Project:	**1704432**
Rev.:	**1**
Date:	**August 2017**

All rights reserved. No part of this document may be reproduced or transmitted in any form or by any means, electronic, mechanical, photocopying, recording, or otherwise, without prior written permission of **newterra** ltd.

newterra ltd.
1291 California Avenue, Brockville, ON K6V 5W3
(800) 420-4056 / www.newterra.com

© 2017 by **newterra**, ltd.
All rights reserved. No part of this document may be reproduced or transmitted in any form or by any means, electronic, mechanical, photocopying, recording, or otherwise, without prior written permission of **newterra** ltd.

newterra ltd.
1291 California Avenue, Brockville, ON K6V 5W3
(800) 420-4056 / www.newterra.com

TABLE OF CONTENTS

1.0 INTRODUCTION 8

2.0 SAFETY 10
2.1 Introduction 10
2.2 Personal Protective Equipment (PPE) 11
2.2.1 Head protection 11
2.2.2 Eye and Face Protection 11
2.2.3 Foot Protection 12
2.2.4 Hand Protection 12
2.2.5 Body Protection 12
2.2.6 Hearing Protection 13
2.3 Bacterial Safety 13
2.4 Chemical Safety 13
2.5 Electrical Safety 14
2.5.1 Lockout Procedures 14
2.6 Confined Spaces 15
2.7 Fire Safety 16
2.8 Responsibility for Safety 16
2.8.1 Management 16
2.8.2 Worker 16
2.8.3 Plant Safety – Simple Rules to Follow 17
2.9 Hazard Warning Signs/Symbols 18
2.10 First aid 19
2.10.1 CPR Poster 20

3.0 WASTEWATER TREATMENT PLANT DESIGN BASIS 22
3.1 newterra MicroClear™ MBR Process Specification 22
3.2 MicroClear™ MB2-2 Membrane Module Characteristics 23
3.3 MicroClear™ MCXL Membrane Cassette Characteristics 23
3.4 Influent/Effluent Wastewater Characteristics 24
3.5 Estimated Chemical Consumption 24
3.6 Prohibited Items 25
3.7 Removal of Oily Materials 25
3.8 MicroClear™ Membrane Compatibility Chart 26

4.0 PLANT INSTALLATION, INSPECTION, AND TESTING 28
4.1 System Overview 28
4.2 Site Conditions Requirements 29
4.3 Inspection upon Delivery 29
4.4 Plant Initial Set up 30
4.4.1 Installation Checklist 30
4.4.1.1 Customer's Scope List 30
4.4.1.2 Civil Checklist 31
4.4.1.2 Electrical Checklist 31
4.4.1.3 Mechanical Checklist 32
4.4.2 System Electrical Specifications 32
4.5 Plant Initial Testing 33
4.5.1 Dry Test 33

© 2017 by **newterra**, ltd.
All rights reserved. No part of this document may be reproduced or transmitted in any form or by any means, electronic, mechanical, photocopying, recording, or otherwise, without prior written permission of **newterra** ltd.

newterra ltd.
1291 California Avenue, Brockville, ON K6V 5W3
(800) 420-4056 / www.newterra.com

4.5.2 Hydraulic Test 33
4.5.2.1 EQ, Anox and Aeration Tanks 34
4.5.2.2 Membrane Tank 34
4.5.2.3 O&G and 901 Tanks 35

5.0 OPERATION OF NEWTERRA MICROCLEAR™ MBR 36
5.1 Control System – Main SCADA Control, PLCs and HMIs 36
5.1.2 HMI Control Screen 36
5.1.3 HOA (Hand/Off/Auto) Screen 38
5.1.4 Process Screens 39
5.1.5 HMI Alarm Screen 41
5.2 WWTP Buildings/Utilities 43
5.2.1 Power Supply 43
5.2.2 E-Stop 43
5.2.3 Building Temperature Control 43
5.2.3.1 Logic 43
5.2.3.2 Alarms 44
5.2.4 Ventilation 44
5.2.4.1 Logic 44
5.2.4.2 Alarms 44
5.3 Process Narrative 45
5.4 Kitchen Inlet Module (TNK-101/2/3) Module 47
5.4.1 Function 47
5.4.2 Inputs 47
5.4.3 Setpoints 48
5.4.4 Logic 48
5.4.5 Alarms 48
5.5 Fine Screens (SCR-201/202) Module 49
5.5.1 Function 49
5.5.2 Inputs 49
5.5.3 Setpoints 50
5.5.4 Logic 50
5.5.5 Alarms 50
5.6 Equalization Tank (TNK-301) Module 51
5.6.1 Function 51
5.6.2 Inputs 51
5.6.3 Setpoints 52
5.6.4 Logic 52
5.6.5 Alarms 53
5.7 Pre-Anox Tank (TNK-401) Module 54
5.7.1 Function 54
5.7.2 Inputs 54
5.7.3 Setpoints 55
5.7.4 Logic 55
5.7.5 Alarms 55
5.8 Aeration Tanks (TNK-501/502) - Biological Treatment Module 56
5.8.1 Function 56
5.8.2 Inputs 57
5.8.3 Setpoints 57
5.8.4 Logic 58

© 2017 by **newterra**, ltd.
All rights reserved. No part of this document may be reproduced or transmitted in any form or by any means, electronic, mechanical, photocopying, recording, or otherwise, without prior written permission of **newterra** ltd.

newterra ltd.
1291 California Avenue, Brockville, ON K6V 5W3
(800) 420-4056 / www.newterra.com

5.8.5 Alarms 60
5.9 Post-Anox Tank (TNK-551) Module 61
5.9.1 Function 61
5.9.2 Inputs 61
5.9.3 Setpoints 61
5.9.4 Logic 62
5.9.5 Alarms 62
5.10 Membrane and Permeate Module 63
5.10.1 Function 63
5.10.2 Inputs 64
5.10.3 Setpoints 64
5.10.4 Logic 66
5.10.5 Alarms 68
5.10.6 Blower Control 69
5.10.7 CIP Cleaning 69
5.11 Sludge Holding Tank Module (TNK-901) 70
5.11.1 Function 70
5.11.2 Inputs 70
5.11.3 Setpoints 71
5.11.4 Logic 71
5.11.5 Alarms 71
5.12 Setpoints 72
5.12.1 PLC Date & Time 72
5.12.2 Factory Defaults 73
5.13 Statistics 73
5.14 PLC Status 74

6.0 PLANT START-UP, OPERATING GUIDELINES AND MONITORING 76
6.1 MBR Plant Start-Up 76
6.1.1 Mechanical & Electrical Start-up Procedure 76
6.1.2 Process Start-up 76
6.2 MBR System Operating Guidelines and Monitoring 81
6.2.1 Operating Guidelines 81
6.2.1.1 Membrane Filtration Operational Conditions 82
6.2.1.2 MBR – Recommended Biological Operational Conditions 83
6.2.2 Sampling 84
6.2.2.1 Filterability Test 85
6.2.3 Suggested Test Equipment for Monitoring 86
6.2.3.1 Filterability - Laboratory Glassware and Filter Paper 86
6.2.3.2 Turbidity, Phosphorus - Hach DR900 (and reagents) 87
6.2.3.3 DO and pH - Hach HQ40d with probe or Equivalent 87
6.2.3.4 Sludge Settling - Settleometer 88
6.2.3.5 TSS - Aysix model 3150 hand held TSS meter or Equivalent 88
6.2.3.6 Hach CEL Advanced Wastewater Laboratory 88
6.2.4 Record Keeping 89
6.2.5 Process Trending 89

7.0 SYSTEM MAINTENANCE 90
7.1 Plant Visual Checks 90
7.1.1 Air Scouring Patterns in Membrane Tanks 91

© 2017 by **newterra**, ltd.
All rights reserved. No part of this document may be reproduced or transmitted in any form or by any means, electronic, mechanical, photocopying, recording, or otherwise, without prior written permission of **newterra** ltd.

newterra ltd.
1291 California Avenue, Brockville, ON K6V 5W3
(800) 420-4056 / www.newterra.com

7.2 Schedule for Routine Operation and Maintenance Checkups 92
7.3 MBR Membrane Cleaning 97
7.3.1 Membrane In-situ Chemically Enhanced Backflush (CEB) 97
7.3.1.1 Procedure – Backwash Solution Preparation 98
7.3.1.2 Procedure – Organic Fouling Solution 99
7.3.1.3 Procedure – Organic Fouling Solution 100
7.3.1.4 Procedure 100
7.3.2 Membrane Recovery Cleaning 101
7.3.2.1 Step 1 - Preparation 102
7.3.2.2 Step 2 – Cleaning with High pH Solution 102
7.3.2.3 Step 3 - Cleaning with Sodium Hypochlorite (NaOCl) 103
7.3.2.4 Step 4 - Cleaning with Citric Acid 104
7.3.2.5 Step 5 - Resume normal operation 104
7.3.2.6 Step 6 - Checking Permeability 104
7.3.3 Membrane Physical Check 105
7.4 Sludge Decanting (TNK-901) 108
7.5 Trouble Shooting 109
7.5.1 MBR Membrane Fouling 109
7.5.1.1 Microbial/Biological Fouling 109
7.5.1.2 Particulate/colloid Fouling 109
7.5.1.3 Inorganic Fouling 110
7.5.1.4 Organic Fouling 110
7.5.1.5 Fouling Prevention 111
7.5.1.5 MBR WWTP Fouling Control & Troubleshooting Chart 112
7.5.1.5.1 Air Scouring 112
7.5.2 MBR Alarm Trouble Shooting 114
7.5.3 MBR Process Trouble Shooting 119
7.5.3.1 Biological System 119
7.5.3.2 Foaming 121
7.5.3.3 Permeate 122
7.5.3.4 Membrane air system 124
7.5.3.5 Membrane Cleaning 124
7.5.3.6 Mechanical / Electrical Issues 125
7.5.4 P-201/2, 301/2, 401/2, 501/2, 553/4, 551/2 - Trouble Shooting 126
7.5.5 P-701/702 Trouble Shooting 127
7.5.6 P-801 Trouble Shooting 128
7.5.7 B-501/502 - Trouble Shooting 128
7.5.8 B-301/302, B-601/602 - Trouble Shooting 129
7.5.9 LT-301/501 - Trouble Shooting 130
7.5.10 PH-501 - Trouble Shooting 135
7.5.11 MV-701/702 - Trouble Shooting 137

8.0 SHUT DOWN 139
8.1 MBR Temporary Shut Down 139
8.2 MBR Permanent Shut Down / Winterizing 139
8.2.1 Process Shut Down Procedure 139
8.2.2 Cleaning - General 139
8.2.3 Membranes 139
8.3 General Components 141
8.4 Blowers – B-501/502 143

© 2017 by **newterra**, ltd.
All rights reserved. No part of this document may be reproduced or transmitted in any form or by any means, electronic, mechanical, photocopying, recording, or otherwise, without prior written permission of **newterra** ltd.

newterra ltd.
1291 California Avenue, Brockville, ON K6V 5W3
(800) 420-4056 / www.newterra.com

8.4 Chemical Dosing Pumps – P-6101/6102/6103 144

9.0 SERVICE & SUPPORT 146
9.1 Commissioning and Start-up 146
9.1.1 Startup/Commissioning 146
9.1.2 Training 146
9.2 Post commissioning Services 147
9.2.1 Technical Support 147
9.2.2 Spare Parts 147
9.2.3 Assistance in telemetry control and monitoring 148
9.2.4 Site visits and system audits 149

10.0 WARRANTY 150

List of Appendices

Appendix A Drawings
Appendix B Packing Slips
Appendix C Commissioning Checklists
Appendix D Recommended Spare Parts List
Appendix E Technical Specs and Brochures for Parts and Equipment
Appendix F Material Safety Data Sheets
Appendix G Glossary & Terms
Appendix H Biological Treatment & Monitoring Parameters
Appendix I Process and Chemicals Dosage Calculations
Appendix J newterra MicroClear™ Membrane Cleaning Log Sheet
Appendix K Control Narrative

© 2017 by **newterra**, ltd.
All rights reserved. No part of this document may be reproduced or transmitted in any form or by any means, electronic, mechanical, photocopying, recording, or otherwise, without prior written permission of **newterra** ltd.

newterra ltd.
1291 California Avenue, Brockville, ON K6V 5W3
(800) 420-4056 / www.newterra.com

1.0 INTRODUCTION

The purpose of this manual is to provide necessary information for the Installation, Operation and Maintenance of the Wastewater Treatment Plant equipment.

ATTENTION	**The newterra MicroClear™ MBR wastewater treatment plant (WWTP) functions optimally if the operating procedures described in this manual are followed. If you have any questions after reading through this manual, please contact newterra ltd.**

- This O&M Manual must be kept on-site and available to employees at all time.
- It is IMPERATIVE that employees read the manual BEFORE working in the plant.
- Employees must read ***Section 2*** – Health and Safety.
- Technical Support Department contacts are provided in ***Section 9***.



WARNING: ***Failure to comply with the instructions provided in this manual can cause equipment & property damage or severe personal injury, and will render the warranty null and void.***

© 2017 by **newterra**, ltd.
All rights reserved. No part of this document may be reproduced or transmitted in any form or by any means, electronic, mechanical, photocopying, recording, or otherwise, without prior written permission of **newterra** ltd.

newterra ltd.
1291 California Avenue, Brockville, ON K6V 5W3
(800) 420-4056 / www.newterra.com

© 2017 by **newterra**, ltd.
All rights reserved. No part of this document may be reproduced or transmitted in any form or by any means, electronic, mechanical, photocopying, recording, or otherwise, without prior written permission of **newterra** ltd.

newterra ltd.
1291 California Avenue, Brockville, ON K6V 5W3
(800) 420-4056 / www.newterra.com

2.0 SAFETY

2.1 Introduction

This section provides general personal and environmental safety information for newterra MBR WWTP operators.

Always refer to local codes and regulations.

Specific equipment and parts safety information can be found in Appendix E. Material Safety Data Sheets (MSDSs) include detailed information regarding health & safety of chemicals used in wastewater treatment process and are presented in Appendix F. These are sample MSDS sheets and need to be replaced by the actual vendor MSDS sheets.
Information and guidelines outlined in this manual **must** be followed at all times prior to system installation and during operation and maintenance.

ESSENTIAL FOR SAFE OPERATION:

- Installation and operation of the newterra system must only be carried out by **trained and qualified** personnel.
- All necessary **safety precautions must** be carefully exercised, including but not limited to proper use of personal protective equipment considering given working environment and conditions.
- All **electrical installations and troubleshooting must** only be carried out by licensed electricians.
- All **plumbing work must** only be carried out by licensed plumbers or qualified personnel.
- Please keep in mind that trees and shrubs taller than two meters located in close proximity to the newterra system may become a safety concern at the time of installation or service.

DEFINITION OF SAFETY AND WARNING SIGNS USED IN THE MANUAL



ATTENTION SYMBOL

Special attention is required to ensure compliance with instructions concerning correct operating sequences to prevent damage to the plant or its function.



GENERAL WARNING SIGN

This symbol accompanies all important instructions or warnings associated with risks of injury as well as possible equipment damage.

© 2017 by **newterra**, ltd.
All rights reserved. No part of this document may be reproduced or transmitted in any form or by any means, electronic, mechanical, photocopying, recording, or otherwise, without prior written permission of **newterra** ltd.

newterra ltd.
1291 California Avenue, Brockville, ON K6V 5W3
(800) 420-4056 / www.newterra.com

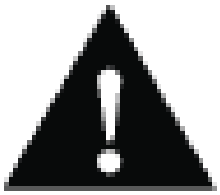

WARNING

CRITICAL WARNING SIGN

Warns against an unsafe situation or practice associated with severe injury as well as major equipment damage.

2.2 Personal Protective Equipment (PPE)

Personal protective equipment (PPE) refers to protective clothing, gloves, helmets, goggles, or other garments or equipment designed to protect the wearer's body from injury or infection. The hazards addressed by protective equipment include physical, electrical, heat, chemicals, biohazards, and airborne particulate matter. ”Protective clothing" is applied to traditional categories of clothing, and "protective gear" applies to items such as pads, guards, shields, masks, and others.

The purpose of personal protective equipment is to reduce employee exposure to hazards when engineering and administrative controls are not feasible or effective to reduce these risks to acceptable levels. PPE is needed when there are hazards present. PPE has the serious limitation that it does not eliminate the hazard at source and may result in employees being exposed to the hazard if the equipment fails.
The following list includes the minimum scope of PPE that should be available to system operators:

2.2.1 Head protection

Hard hats, bump caps, or helmets are types of protection that should be considered if there is a hazard of head injury. Head injuries can occur under various circumstances including as the result of a slip or fall, working in confined areas or where there are low ceilings, where there may be falling objects. Hard hats should be worn at all times when overhead work is being conducted.

2.2.2 Eye and Face Protection

Eye protection with side shields should be used at all times while inside the newterra system as there may be a danger of flying objects, particles, liquids, sprays or other matter entering the eyes. Protection can take many forms including:

- safety glasses,
- goggles, or
- full face protection. This should be used if handling chemicals, waste product or working around pressurized lines (air of liquid).

© 2017 by **newterra**, ltd.
All rights reserved. No part of this document may be reproduced or transmitted in any form or by any means, electronic, mechanical, photocopying, recording, or otherwise, without prior written permission of **newterra** ltd.

newterra ltd.
1291 California Avenue, Brockville, ON K6V 5W3
(800) 420-4056 / www.newterra.com

2.2.3 Foot Protection

Foot protection should be used at all times within the newterra system. Foot protection is usually in the form of steel-toed work boots, with a steel shank to protect the bottom of the foot from puncture wounds. In wet environments, steel-toed boots that are waterproof and slip-resistant may be necessary.

2.2.4 Hand Protection

Hand protection should be worn within the newterra system. The workplace can create many hazards for hands, whether from chemicals, cuts or burns. No single glove can provide appropriate protection for every work situation, so it is important to assess the risk for each task and select a glove that provides specialized protection.

The following is a list of gloves and their suggested appropriate application:

- Coated fabric gloves: This type of glove can provide protection against some moderate concentrated chemicals. They can be used in laboratory work provided they are strong enough to protect against the specific chemical being handled.
- Rubber, plastic or synthetic gloves: These types of glove can be used when cleaning or working with oils, solvents and other chemicals.
- Leather gloves: These should be used when welding, as the leather can resist sparks and moderate heat. The risk of cuts and abrasions also can be minimized by wearing leather gloves.
- Kevlar gloves: These have a wide variety of industrial applications. They are cut- and abrasion-resistant and provide protection against both heat and cold.
- Chemical/liquid-resistant gloves: Several types of gloves help protect against specific chemicals:
    - Butyl rubber gloves: nitric acid, sulfuric acid, hydrochloric acid and peroxide
    - Natural latex/rubber gloves: water solutions or acids, alkalis, salts, and ketones
    - Neoprene gloves: hydraulic fluids, gasoline, alcohols and organic acids
    - Nitrile rubber gloves: chlorinated solvents

2.2.5 Body Protection

Body protection may be required in various situations including dusty environments or when spraying liquid pesticides or handling dangerous chemicals. The hazard to be controlled will determine the type of protection that is most appropriate, for example, an apron, coveralls or a full rain suit. As a minimum, the operator should be wearing work coveralls.

© 2017 by **newterra**, ltd.
All rights reserved. No part of this document may be reproduced or transmitted in any form or by any means, electronic, mechanical, photocopying, recording, or otherwise, without prior written permission of **newterra** ltd.

2.2.6 Hearing Protection

Hearing protection should be worn in work environments where noise levels exceed 85 decibels – such as around blowers and air compressors. There are many types of hearing protection, including earplugs or muffs. Hearing protection that is suitable for the work environment and provides adequate noise reduction should be chosen. Disposable ear plugs or headset style are acceptable.

2.3 Bacterial Safety

The wastewater contains a mixture of viable bacteria and other biological organisms. A wastewater treatment plant poses a number of bacterial hazards and consequently potential health risk. Immunization protects operator against infection. The use of proper hygiene measures, protective equipment, good housekeeping and common sense prevent contact with pathogens.

These measures prevent infection!



Ensure that hands are washed with an antibacterial soap and warm water and dried by disposable towels on a regular basis, especially prior eating!
Do not expose cuts or open sores to wastewater!
Use personal protective equipment (PPE) at all times in wastewater treatment facility!
Any concern about possible infection should be brought to the attention of medical physician immediately!

2.4 Chemical Safety

The following chemicals are used in operation of newterra MBR WWTP:

- **Sodium Carbonate (Soda Ash)** is used for pH adjustment, in case there is a deficiency in alkalinity in influent sewage and pH drops. It is hazardous in case of skin contact (irritant), of eye contact (irritant), of ingestion, of inhalation (lung irritant).
- **Sodium hypochlorite (NaOCl)** and **Citric Acid ($C_6H_8O_7$)** are used for cleaning the membranes.
    - **Sodium hypochlorite (NaOCl)** is a common disinfectant, which can be an irritant or corrosive, depending on its concentration. It cannot be mixed with organics, ammonia compounds or acids. ***Contact with acids produces highly toxic chlorine gas***. ***It has to be mixed only with pure water.***
    - **Citric Acid ($C_6H_8O_7$)** is hazardous in case of skin contact (irritant, sensitizer), or ingestion, eye contact (irritant) and inhalation (lung irritant).

© 2017 by **newterra**, ltd.
All rights reserved. No part of this document may be reproduced or transmitted in any form or by any means, electronic, mechanical, photocopying, recording, or otherwise, without prior written permission of **newterra** ltd.

newterra ltd.
1291 California Avenue, Brockville, ON K6V 5W3
(800) 420-4056 / www.newterra.com

- **Aluminium Sulphate ($Al_2(SO_4)_3$)** is used for Phosphorus Removal. Mild to moderate irritation can occur from unprotected contact. Aluminum is very poorly absorbed through the skin and toxic effects would not be expected following short-term skin contact. Inhalation of mists can be irritating to the respiratory tract and lungs.

- **MicroC 2000** is used for nitrate removal.
  - Exposure to eyes may cause slight irritation
  - Exposure to Skin may cause slight irritation
  - Inhalation of high mist concentrations may cause irritation of respiratory tract.

When handling chemicals, it is important to wear proper personal protective equipment such as chemical goggles with combination full face shield, protective clothing with chemical splash apron and chemical-resistant rubber gloves.



The above descriptions are preliminary warnings only. The MSDSs for each of the chemicals should be consulted prior to using or handling any of the chemicals.
Sample MSDSs for chemicals used in the PWTP process can be found in Appendix F of this Manual.



WARNING

Mixing chemicals can result in dangerous reactions, including violent splashing, fires, explosions and release of toxic gases!
Chemicals should only be used for their intended uses!

2.5 Electrical Safety

Power may be supplied to control panels from various sources. Even if the disconnect is in the OFF position, certain electrical components inside the panel may be energized and servicing should not be conducted unless all incoming power is disconnected. Refer to the electrical drawings in Appendix A of this manual.

Ensure that the system is properly grounded before applying power to the system. Installation and servicing is only to be performed by **qualified authorized personnel**.

2.5.1 Lockout Procedures

Lockout procedures must be followed prior to performing mechanical or electrical maintenance to ensure that equipment has been de-energized. All relevant local guidelines and procedures must be applied. The person who locked out the device, should be the only person to remove the lockout.

© 2017 by **newterra**, ltd.
All rights reserved. No part of this document may be reproduced or transmitted in any form or by any means, electronic, mechanical, photocopying, recording, or otherwise, without prior written permission of **newterra** ltd.

newterra ltd.
1291 California Avenue, Brockville, ON K6V 5W3
(800) 420-4056 / www.newterra.com

When equipment is to be locked out, employers, supervisors and workers should follow accepted lockout principles, including:

- Pre-planning for the lockout by identifying all energy sources, switches, etc.
- Where lockout is complex, a written sequence in checklist form should be prepared for equipment access, lockout/tagout, clearance, release and start-up.
- All workers affected by the lockout should be notified.
- Equipment should be shut down by normal means by turning of switches and closing valves etc.
- Equipment should be isolated from energy sources by disconnecting or blocking the sources of energy.
- Lockout and tag the energy isolating devices by padlock or some other locking device that the worker has control over as well as a tag indicating that the equipment has been shut down.
- Verify that all energy sources have been isolated by attempting to cycle the equipment prior to working on it.
- When work is completed, release equipment from lockout.
- Test equipment

2.6 Confined Spaces

"**confined space**" means a fully or partially enclosed space:

- that is not both designed and constructed for continuous human occupancy, and
- in which atmospheric hazards may occur because of its construction, location or contents or because of work that is done in it.

If you have a space that is fully or partially enclosed, the two conditions – (a) and (b) above – must both apply before the space can be considered a "confined space".

"**atmospheric hazards**" means:

- the accumulation of flammable, combustible or explosive agents,
- an oxygen content in the atmosphere that is less than 19.5 per cent or more than 23 per cent by volume, or
- the accumulation of atmospheric contaminants, including gases, vapours, fumes, dusts or mists, that could,
    - result in acute health effects that pose an immediate threat to life, or
    - interfere with a person's ability to escape unaided from a confined space.

Follow local laws and regulations with respect to entering a confined space.

© 2017 by **newterra**, ltd.
All rights reserved. No part of this document may be reproduced or transmitted in any form or by any means, electronic, mechanical, photocopying, recording, or otherwise, without prior written permission of **newterra** ltd.

If a workplace includes a confined space that workers may enter to perform work, it is highly recommended that written program for the confined space is developed and maintained in accordance with this local regulations and policies before a worker enters the confined space. A confined space program is a written document that would include: a method for recognizing each confined space to which the program applies; a method for assessing the hazards to which workers may be exposed; a method for the development of confined space entry plans; a method for training workers; and, an entry permit system.

2.7 Fire Safety

Exposed hot surfaces can create potential burn/ignition hazards. Blowers and air compressors compress ambient air, causing heat to be generated. This heat can bring the temperature of the air compressor head and blower piping to a level that can cause burns to exposed flesh.
Follow local laws and regulations with respect to Fire Safety and regulations.

2.8 Responsibility for Safety

2.8.1 Management

Management is responsible for providing a safe working environment. This is accomplished partly by:

- Ensuring that all facilities and equipment are built and maintained in accordance with the appropriate safety standards
- Providing adequate funds for equipment and plant maintenance
- Establishing, promoting, and enforcing a ***safety policy***
- Establishing a safety training program
- Supplying easy accessible eyewash and first-aid stations and proper personal protective equipment (PPE) for personnel servicing wastewater treatment facility.

2.8.2 Worker

- To develop a positive and professional attitude towards safety.
- To avoid mistakes caused by indifference to safety, poor work habits, lack of attentiveness, rushing the job, failure to observe established safety procedures and poor physical condition.



***Remember the "ABC" of accident prevention*:**
ALWAYS BE CAREFUL!!!

© 2017 by **newterra**, ltd.
All rights reserved. No part of this document may be reproduced or transmitted in any form or by any means, electronic, mechanical, photocopying, recording, or otherwise, without prior written permission of **newterra** ltd.

newterra ltd.
1291 California Avenue, Brockville, ON K6V 5W3
(800) 420-4056 / www.newterra.com

In addition to ***"being careful"***, it is the responsibility of all workers to:

- Work in accordance with established safety procedures
- Follow the established safety rules
- Wear appropriate personal protective equipment (PPE)
- Report all accidents, no matter how minor
- Report potential safety hazards
- Participate in safety programs

2.8.3 Plant Safety – Simple Rules to Follow



Common sense plays a very important part in the safe operation of any type of plant!

- Wear the appropriate personal protective equipment at all times.
- Keep walkways clear of snow and ice, and loose objects such as pails, shovels, tools, etc.
- Clean up spills of oil, grease, chemicals, or other substances immediately.
- Keep all tools and similar equipment clean, in good condition, and properly stored when not in use.
- Replace all manhole covers, access trap doors, etc. as soon as possible. Erect a safety barrier if it is necessary to leave the opening uncovered.
- Wear a safety belt whenever there is the possibility of falling even a short distance, or when working over water.
- Lock out and tag electrical equipment before working on it or the associated equipment.
- Ensure that moving machinery is properly guarded. Wear ear protection in noisy environments.
- Ensure that fire-fighting equipment is in good working condition.

© 2017 by **newterra**, ltd.
All rights reserved. No part of this document may be reproduced or transmitted in any form or by any means, electronic, mechanical, photocopying, recording, or otherwise, without prior written permission of **newterra** ltd.

2.9 Hazard Warning Signs/Symbols

Below is a sample of possible hazard warning signs/symbols that may be provided with the newterra system. It is recommended that the operator become familiar with the warning signs in the system.



© 2017 by **newterra**, ltd.
All rights reserved. No part of this document may be reproduced or transmitted in any form or by any means, electronic, mechanical, photocopying, recording, or otherwise, without prior written permission of **newterra** ltd.

newterra ltd.
1291 California Avenue, Brockville, ON K6V 5W3
(800) 420-4056 / www.newterra.com

2.10 First aid

First aid is emergency care given immediately to an injured person. The purpose of first aid is to minimize injury and future disability. In serious cases, first aid may be necessary to keep the victim alive.

It often consists of a one-time, short-term treatment and requires little technology or training to administer. First aid can include cleaning minor cuts, scrapes, or scratches; treating a minor burn; applying bandages and dressings; drinking fluids to relieve heat stress, etc.

Operators must know the location of emergency telephone number(s), First Aid Kits, emergency eye wash stations and first aid attendant(s).

In over 98% of locations in the United States and Canada, dialing "9-1-1" from any telephone will link the caller to an emergency dispatch office—called a Public-Safety Answering Point (PSAP) by the telecom industry—which can send emergency responders to the caller's location in an emergency. In approximately 96 percent of the U.S., the Enhanced 9-1-1 system automatically pairs caller numbers with a physical address.

Follow local laws and regulations with respect to First Aid procedures and reporting.

© 2017 by **newterra**, ltd.
All rights reserved. No part of this document may be reproduced or transmitted in any form or by any means, electronic, mechanical, photocopying, recording, or otherwise, without prior written permission of **newterra** ltd.

newterra ltd.
1291 California Avenue, Brockville, ON K6V 5W3
(800) 420-4056 / www.newterra.com

2.10.1 CPR Poster

CPR for an Adult or Child

1

- Check the scene to ensure it is safe. If it is safe to do so, check the person and the person's ABCs (Airway, Breathing, Circulation).
- Call EMS/9-1-1 and get an AED or have someone else do this.



2

- Place the heel of one hand on the middle of the chest. Place the other hand on top.
- Do 30 compressions. Push hard, push fast.



3

- Open the airway by tilting the head back and lifting the chin. Pinch the nostrils closed and give 2 breaths.
- Repeat the cycle of 30 compressions and 2 breaths.
- Continue CPR until an AED arrives or more advanced care takes over.



The information on this poster does not replace formal First Aid & CPR training.

To find a Red Cross First Aid course in your area scan the QR code, or:
redcross.ca/firstaid | 1.877.356.3226

CANADIAN RED CROSS

© 2017 by **newterra**, ltd.
All rights reserved. No part of this document may be reproduced or transmitted in any form or by any means, electronic, mechanical, photocopying, recording, or otherwise, without prior written permission of **newterra** ltd.

newterra ltd.
1291 California Avenue, Brockville, ON K6V 5W3
(800) 420-4056 / www.newterra.com

© 2017 by **newterra**, ltd.
All rights reserved. No part of this document may be reproduced or transmitted in any form or by any means, electronic, mechanical, photocopying, recording, or otherwise, without prior written permission of **newterra** ltd.

newterra ltd.
1291 California Avenue, Brockville, ON K6V 5W3
(800) 420-4056 / www.newterra.com

3.0 WASTEWATER TREATMENT PLANT DESIGN BASIS

This section presents the design basis of the newterra MicroClear™ Membrane Bioreactor (MBR) Wastewater Treatment Plant (WWTP), including the influent constituent loading rates, hydraulic capacity and specifications for the membrane module and cassettes used. This section also includes a list of prohibited chemicals that should not be added to the influent wastewater and chemicals that should not come in contact with the membranes. The system is designed to meet effluent discharge criteria presented in this section below.

3.1 newterra MicroClear™ MBR Process Specification

Design loading	**SI Units**
Design Hydraulic Load	96 m^3/d
Organic Load	87.1 kgBOD/d
TKN Load	12.5 kgTKN/d
Phosphorus Load	1.15 kgTP/d
Process Tanks	**SI Units**
Three (3) Oil & Grease Tanks (TNK-101/TNK-102/TNK-103) with a total volume	12 m^3
One (1) Equalization Tank (TNK-301) with effective volume	40 m^3
One (1) Pre-Anoxic Tank (TNK-401) with effective volume	46 m^3
Two (2) Aeration Tanks (TNK-501/TNK-502) with total effective volume	76.5 m^3
One (1) Post-Anoxic Tank (TNK-401) with effective volume	8.6 m^3
Two (2) Membrane Tanks (TNK-601/TNK-602) each with effective volume	8.0 m^3
Two (2) Sludge Holding Tank (TNK-901) each with effective volume	7.0 m^3
Membrane Bioreactor (MBR) including anoxic tanks, aeration tanks and membrane tanks - total effective volume	**147.1 m^3**
Design Hydraulic Retention Time (HRT)	36.8 h
Sludge Age	26.5 d
Mixed Liquor Return Ratio - from Membrane Tank to Aerobic Tanks	5 x
Mixed Liquor Return Ratio - from Aerobic Tanks to Pre-Anoxic Tank	8 x
Design net flux (average)	13 LMH
Design Sludge Wasting Rate	5.36 m^3/d
Minimum design operating temp	**10 °C**

© 2017 by **newterra**, ltd.
All rights reserved. No part of this document may be reproduced or transmitted in any form or by any means, electronic, mechanical, photocopying, recording, or otherwise, without prior written permission of **newterra** ltd.

newterra ltd.
1291 California Avenue, Brockville, ON K6V 5W3
(800) 420-4056 / www.newterra.com

3.2 MicroClear™ MB2-2 Membrane Module Characteristics

MicroClear™ MB2-2 membrane module	SI Units
MB2-2 modules in MBR	2
MCXL cassettes in MB2-2 module	20
Total Area of MB2-2 module	160 m^2
MB2-2 Module Dimensions (L x W x H)	1.302 m x 1.124 m x 1.379 m
Housing materials	Stainless steel

3.3 MicroClear™ MCXL Membrane Cassette Characteristics

MicroClear™ MCXL membrane cassette	
Membrane Material	Polyethersulfone (PES)
Individual Cassette Area	8 m^2
Pore Size	0.04 µm
Cut Off	150 kDalton
Filtration Pressure	0.1 – 0.25 bar
Backwash Pressure	0.07 – 0.1 bar
Cassette Dimension	0.416 m x 0.209 m x 0.490 m

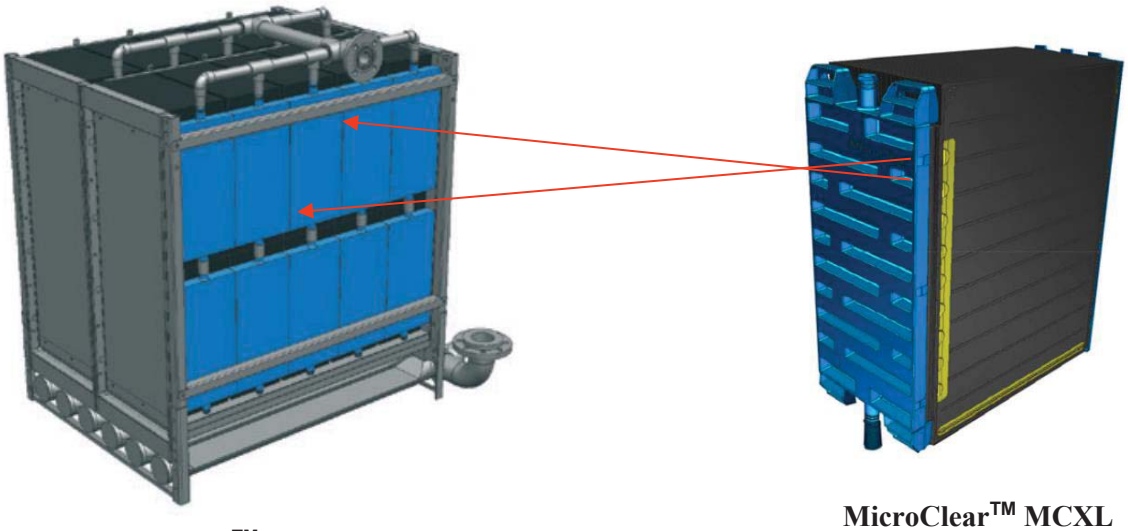

MicroClear™ MB2-2 membrane module

MicroClear™ MCXL membrane cassette

© 2017 by **newterra**, ltd.
All rights reserved. No part of this document may be reproduced or transmitted in any form or by any means, electronic, mechanical, photocopying, recording, or otherwise, without prior written permission of **newterra** ltd.

newterra ltd.
1291 California Avenue, Brockville, ON K6V 5W3
(800) 420-4056 / www.newterra.com

3.4 Influent/Effluent Wastewater Characteristics

The newterra MBR shall treat wastewater from the mine camp with the following characteristics upon entering the newterra MBR.

Parameters	Unit	Influent*	Effluent
pH	s.u.	6 - 9	6.5 – 8.5
Fat, Oil, Grease (FOG)	mg/L	< 30	< 5
Biological Oxygen Demand (BOD)	mg/L	907.5	< 25
Total Suspended Solids (TSS)	mg/L	262.5	< 25
Total Kjeldahl Nitrogen (TKN)	mgN/L	130	-
Unionized Ammonia Nitrogen (NH_3-N)	mgN/L	-	< 1.25
Nitrate Nitrogen (NO_3-N)	mgN/L	-	< 5
Total Phosphorus (TP)	mgP/L	12	< 0.5
Fecal Coliform	CFU/100mL	-	< 200**
Total Residual Chlorine	mg/L	-	< 0.02
Alkalinity (assumed)	mg/L as $CaCO_3$	471	-
Total Dissolved Solids(TDS)	mg/L	< 1,200	-

3.5 Estimated Chemical Consumption

Consumable		Usage Rate			
Purpose	Name	Value	Unit	Value	Unit
Supplemental Alkalinity	**Dry Soda Ash**	6.28	kg/d	2292	kg/year
Phosphorus Removal	**Liquid Alum, 48%**	14.6	L/d	5346	L/year
Nitrate Removal	**MicroC 2000**	16.5	L/d	6025	L/year
Membrane Cleaning	**Sodium Hypochlorite, 12%**	-	L/d	150	L/year

© 2017 by **newterra**, ltd.
All rights reserved. No part of this document may be reproduced or transmitted in any form or by any means, electronic, mechanical, photocopying, recording, or otherwise, without prior written permission of **newterra** ltd.

newterra ltd.
1291 California Avenue, Brockville, ON K6V 5W3
(800) 420-4056 / www.newterra.com

3.6 Prohibited Items

The raw wastewater should not contain any of the following substances:

- Hydrocarbons – lubricants, gasoline, diesel, etc.;
- Paints, solvents, silica, silicones and polymers;
- Antibacterial solutions, and products with quaternary ammonia;
- Large quantities of chemicals such as water softener, disinfectants, strong acids & alkalis, pesticides or photographic chemicals;
- Silicone based defoamers;
- Non-biodegradable solid waste (plastic, rubber products, disposable diapers, etc.);
- High amount of metals, such as iron, magnesium, calcium, barium and strontium.



TOXIC MATERIALS SHOULD NOT BE THROWN INTO THE DRAIN!

3.7 Removal of Oily Materials

The wastewater must pass through a grease trap (or similar facility for grease/fat removal), if there is kitchen usage onsite. The large amount of oil and fat can harm treatment facility (e.g., clogging pumps and piping and cause foaming in the aeration tank). To avoid premature membrane fouling, maximum FOG concentrations should not exceed 30 mg/L.



Fats, oils and grease (FOG) must be removed prior to MBR. Removing of FOG significantly reduces membrane fouling, foaming potential and increases aeration efficiency.

The raw wastewater should also comply with the following compatibility chart. The lipophilic substances concentration must be lower than **50 mg/L.**

© 2017 by **newterra**, ltd.
All rights reserved. No part of this document may be reproduced or transmitted in any form or by any means, electronic, mechanical, photocopying, recording, or otherwise, without prior written permission of **newterra** ltd.

newterra ltd.
1291 California Avenue, Brockville, ON K6V 5W3
(800) 420-4056 / www.newterra.com

3.8 MicroClear™ Membrane Compatibility Chart

Group	Substances	Compatibility
Chlorinated solvents	Methylene Chloride, Chloroform, Carbon Tetrachloride, Chlorobezene, Trichloroethane (<1%)	**Not recommended**
Esters	Ethyl Acetate, Butyl Acetate, Butyl Acrylate (<1%)	**Not recommended**
Ethers	Ethyl Ether, Polyethylene Oxide (<1%)	**Not recommended**
H_2O_2	<2000 ppm	Very good
Inorganic acids	HF, HCl, H_2SO_4	pH 0 - 14
Ketones	Acetone, Methyl Ethyl Ketone	**Not recommended**
NaOCl	100,000 ppm x h	Very good
Organic acids	Sulfamic Acid, Formic Acid, Oleic Acid, Sulfonic Acid, Acetic Acid, Acrylic Acid, Lactic Acid	pH 0 - 14
Phenols		**Not recommended**
Silicones		**Not recommended**
Alcohols	Ethanol, Butanol, Isopropranol (<50%)	Good
Aldehydes	Formaldehyde (<1%)	Very good
Alkali		pH 0 - 14
	Dimethyl Formamide, Dimethyl, Acetamid Dioxane, N-Methyl, Pyrrolidone, Tetramethyl Acetamide	**Not recommended**
Aprotic Solvents	Benzene, Toluene, Xylene, Anthracene, Naphatalene, Gasoline	**Not recommended**
Aromatic hydrocarbon	Methoxyethanol, Ethoxyethanol, Buthoxyethanol	unknown

© 2017 by **newterra**, ltd.
All rights reserved. No part of this document may be reproduced or transmitted in any form or by any means, electronic, mechanical, photocopying, recording, or otherwise, without prior written permission of **newterra** ltd.

newterra ltd.
1291 California Avenue, Brockville, ON K6V 5W3
(800) 420-4056 / www.newterra.com

© 2017 by **newterra**, ltd.
All rights reserved. No part of this document may be reproduced or transmitted in any form or by any means, electronic, mechanical, photocopying, recording, or otherwise, without prior written permission of **newterra** ltd.

newterra ltd.
1291 California Avenue, Brockville, ON K6V 5W3
(800) 420-4056 / www.newterra.com

4.0 PLANT INSTALLATION, INSPECTION, AND TESTING

4.1 System Overview

The **newterra** MicroClear™ MBR WWTP is 96m3/day MBR for for the Amaruq Mine located in Nunavut. The system consists of five (5) modified 40 foot High Cube ISO shipping containers and one (1) modified 53 foot High Cube ISO shipping container. See below. .

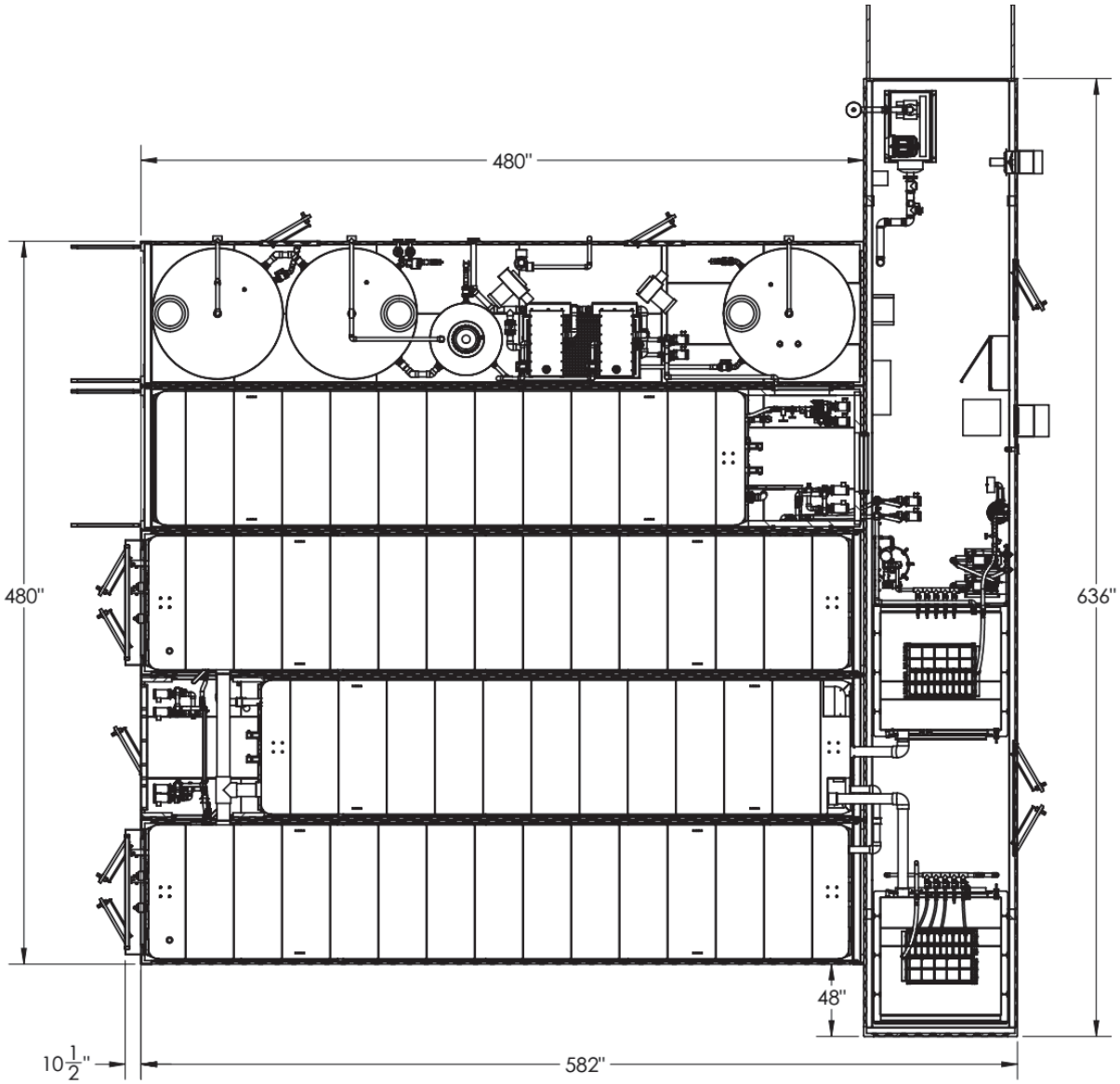

© 2017 by **newterra**, ltd.
All rights reserved. No part of this document may be reproduced or transmitted in any form or by any means, electronic, mechanical, photocopying, recording, or otherwise, without prior written permission of **newterra** ltd.

4.2 Site Conditions Requirements

- Installation site for the **newterra** MicroClear™ MBR WWTP should be close to the sewer drain and have a sufficient power source (refer to Electrical Drawings in Appendices B-F).
- Location must permit easy access for equipment capable of transporting, offloading, and handling of the designed loads.
- There should be adequate space around the containers for safe operation and maintenance.
- The firm base (foundation) must be built to support the full operating weight of the plant to prevent buildings from shifting and pipe/electrical conduit connection failure – pilings are recommended.



The firm base for the container must be level and must be capable of supporting the operating weight.

WARNING: ***Always check with the local utility companies for the location of water lines, electrical and telephone cables, or any additional hazards below grade, prior to excavation. Failure to do so could result in severe bodily injury or death.***

4.3 Inspection upon Delivery

The **newterra** MicroClear™ MBR WWTP is carefully manufactured, checked, and tested at the manufacturing plant. All equipment is pre-wired, pre-piped, mounted inside the enclosures and factory tested. Upon receiving the system, please perform the following:

- Place the container onto the prepared firm base to avoid sagging, equipment vibration, and shifting. When lifting the containers, ensure that lifting equipment is clear of overhead obstructions such as power lines, trees or rooftops. Be careful during this procedure!
- Be careful when offloading the containers to prevent damage to the internal pipe work.
- Check the containers for any signs of shipping damages.

© 2017 by **newterra**, ltd.
All rights reserved. No part of this document may be reproduced or transmitted in any form or by any means, electronic, mechanical, photocopying, recording, or otherwise, without prior written permission of **newterra** ltd.

newterra ltd.
1291 California Avenue, Brockville, ON K6V 5W3
(800) 420-4056 / www.newterra.com

- Inspect the containers to ensure that no components or parts are missing (refer to the Packing List – see Appendix B). Also, inspect for visual damage of the tanks, pumps, blowers, piping, and control panel.

- If the containers, equipment inside and any parts shipped loose are free of damage, proceed with the installation.

For any damages or loss of equipment, **please notify newterra ltd. at (800) 420-4056 immediately.**

4.4 Plant Initial Set up

WARNING: ***The installer must ensure that the installation site is safe from hazards. These could include excavations left open overnight, debris left lying around, and tanks & equipment not properly blocked. Provisions must be made to eliminate the potential hazards by roping off and proper shoring around the excavations, cleaning up at the end of each workday, and proper storage of equipment. Failure to do so could result in severe injury or death.***

4.4.1 Installation Checklist

At Appendix C is the installation and commissioning checklist for the system. Below is a summary of installation activities.

4.4.1.1 Customer's Scope List

- Placement and anchoring (if required) of equipment
- Interconnecting piping supply and installation
- Interconnecting electrical and controls supply and installation including connection inside newterra's control panel
- Electrical power supply to our electrical panel, lightning, grounding, etc.
- Permitting
- Potable water supply to the plant site for plant hydraulic test during startup
- Seed sludge
- Wastewater testing
- Chemicals supply and storage
- Treated effluent and waste sludge disposal
- All site civil work including design

© 2017 by **newterra**, ltd.
All rights reserved. No part of this document may be reproduced or transmitted in any form or by any means, electronic, mechanical, photocopying, recording, or otherwise, without prior written permission of **newterra** ltd.

newterra ltd.
1291 California Avenue, Brockville, ON K6V 5W3
(800) 420-4056 / www.newterra.com

4.4.1.2 Civil Checklist

- Ensure that a potable water supply is available (used for hydraulic testing during start-up, membrane cleaning, washing hands and for performing onsite testing).
- Ensure availability of on-site emergency eyewash station and personal protection equipment.
- Remove hatch covers from the interconnecting ports.
- All doors are closing, latching and locking
- Weather stripping has been installed around each door
- Door sweeps have been installed on each door
- Louvers and hoods have been installed and sealed
- Install Liquid Rubber Container Seal as per drawing at Appendix C.

4.4.1.2 Electrical Checklist

- Connect electrical power to the Main Disconnect from available source ensuring correct phase rotation (See Electrical Drawings at Appendix A for power source specifications).
- Connect electrical power to the Control Panel (See System Layout drawing in Appendices A for locations)
- Ensure that proper electrical grounding and lightning protection is available.
- Switch Main Switch Panel's isolator to the ON position.
- Check all internal lighting and heating for correct operation.
- Install packed external lighting into brackets above the doorways.
- All internal electrical connections have been terminated
- Confirm Phase Monitor is not in alarm
- Site voltage measured:
    - L1/L2 - L2/L3 - L3/L1 - L1/GRD - L2/GRD - L3/GRD:
- Check field wiring and piping as per drawings
- Check panel for loose wiring, Correct as required
- Check voltage on AC transformer
- Check voltage on DC transformer
- Check I.S. barrier is grounded as per input drawing

© 2017 by **newterra**, ltd.
All rights reserved. No part of this document may be reproduced or transmitted in any form or by any means, electronic, mechanical, photocopying, recording, or otherwise, without prior written permission of **newterra** ltd.

newterra ltd.
1291 California Avenue, Brockville, ON K6V 5W3
(800) 420-4056 / www.newterra.com

4.4.1.3 Mechanical Checklist

- All hoses and mechanical connections have been hooked up
- Ensure all unions and fittings are tight, as some are loosened to prevent stress in shipping
- Check alignment of motors, Correct as required
- Check all motor belt tensions, Correct as required
- Check alignment of pulleys for all belt driven blowers
- Verify membrane modules are secure within the membrane tanks – i.e. verify wheel chocks are in the correct location and that there is no lateral movement (less than an inch) of the membrane modules on the wheel tracks in the tanks.
- Confirm Tank Diffusers and Educators have not moved during shipping
- Calibrate pH sensor

4.4.2 System Electrical Specifications

Verify site power per system design criteria. Additional detail is at Appendix A.

ELECTRICAL SPECIFICATIONS	
VOLTAGE	600V
PHASE	3Ø
FREQUENCY	60 Hz
FULL LOAD AMPS	172A
MAIN DISCONNECT SIZE	400A - FUSED @ 250A
SCCR SYMMETRICAL (kAMPS)	10
SYSTEM APPROVAL AND CLASSIFICATION	cMET - CL1Div2
PANEL APPROVAL AND CLASSIFICATION	cMETus to UL698A

Please refer to the as-built electrical drawings in Appendices A of this manual.

ATTENTION	**Only trained and certified electricians should make the electrical connections.**

© 2017 by **newterra**, ltd.
All rights reserved. No part of this document may be reproduced or transmitted in any form or by any means, electronic, mechanical, photocopying, recording, or otherwise, without prior written permission of **newterra** ltd.

newterra ltd.
1291 California Avenue, Brockville, ON K6V 5W3
(800) 420-4056 / www.newterra.com

4.5 Plant Initial Testing

The newterra MicroClear™ MBR WWTP (except the membrane modules) undergoes electrical and leakage tests in our manufacturing facility prior to shipment; however, fittings could shift during shipment, so it is our standard practice to perform initial testing on the plant after installation, including **dry and hydraulic tests.**

The following subsection is presented for one single process train; if multiple trains are provided, performing the dry test and hydraulic test for each train is identical.

4.5.1 Dry Test

The following tasks have to be performed **before** potable water is introduced into the system:

- Ensure that all tanks are clean and free of any dirt or debris (this is to prevent obstruction or damage to the piping, pumps, and membranes).
- Ensure that all connections have been provided and joints have been tightened.
- Check the placement of the air diffusers in the equalization tank(s) and the aeration tank(s) if incorrectly positioned, proper adjustment has to be performed.
- Ensure that a functional check of the electrical and control system has been performed (please refer to the newterra Commissioning Checklist presented in Appendix H).
- Confirm heater/fan and air conditioner operations

4.5.2 Hydraulic Test

The hydraulic test is performed using potable water to:

- Check for and fix any leakage;
- Check the setting of level switches/transmitters;
- Check the hydraulic flow through the plant;
- Check if all the ancillary equipment and controls of the plant function as per design;
- Recalibrate instruments (if applicable);
- Perform clean water test on membranes.
- Perform clean water test on the chemical distribution system.

© 2017 by **newterra**, ltd.
All rights reserved. No part of this document may be reproduced or transmitted in any form or by any means, electronic, mechanical, photocopying, recording, or otherwise, without prior written permission of **newterra** ltd.

newterra ltd.
1291 California Avenue, Brockville, ON K6V 5W3
(800) 420-4056 / www.newterra.com

4.5.2.1 EQ, Anox and Aeration Tanks

- Fill the tanks in order - TNK-301, 401, 501, 502, 551, 601, 602 with potable water, run the pumps and check for any signs of leakage.
- Perform electrical and instrumentation (E&I) functional checks and adjustment of level switches.
- Turn on the air blower(s) for the blower(s) for aeration tank(s), and check for:
    - Buoyancy of air diffusers and if this occurs, empty the tank and fix;
    - Air leakages: if this occurs, tighten up the fittings;
- Manually check water temperature and DO (dissolved oxygen): with a hand-held DO meter and adjust air flow to keep it up to 0.5 – 1 mg/L for equalization tank(s) and 2 - 3 mg/L for aeration tank(s); check the DO readings on the touch screen.
- DO Control System: check automatic ON/OFF of Aeration Tank air blowers at low and high settings of DO without the return of aerated water from the membrane tanks to aeration tanks (i.e. turn off transfer pump(s) from aeration tank(s) to membrane tank(s) and turn of recirculation pump(s) from membrane tank(s) to aeration tank(s), if included), and record blower ON/OFF duration.

4.5.2.2 Membrane Tank

- Enable membrane operation using the HMI
- Start the transfer pump(s) from the aeration tank(s) to the membrane tank(s) and fill the membrane tank(s) with potable water.
- Start the air blowers for the membrane tank(s) and check for an even distribution of air across the membrane filter area and air bubble uniformity above the membrane module/cassette.
- Check hydraulic flow pattern through the membranes and between membrane module/ cassette and tank wall.
- Make a clean copy of the **Clean Water Testing Sheet** presented in **Appendix J** of this O&M Manual.
- Record all checked parameters in the **Clean Water Testing Sheet.**
- Start the permeate (vacuum) pumps.
- Record the vacuum (TMP) on the gauge(s) on the permeate line [for clean water could be 0.05 to 0.07 bar (20” to 29” WC)].
- Record water temperature and DO with a hand-held DO meter.
- Gradually increase the permeate flow while recording the vacuum (TMP) on the gauges up to the anticipated peak wastewater flow.

Forward a complete **Clean Water Testing Sheet** to **newterra** for analysis.

© 2017 by **newterra**, ltd.
All rights reserved. No part of this document may be reproduced or transmitted in any form or by any means, electronic, mechanical, photocopying, recording, or otherwise, without prior written permission of **newterra** ltd.

newterra ltd.
1291 California Avenue, Brockville, ON K6V 5W3
(800) 420-4056 / www.newterra.com

4.5.2.3 O&G and 901 Tanks

- Fill the tanks in order - TNK-101, 102, 103 and 901 with potable water, run the pumps and check for any signs of leakage.
- Confirm diffuser operation in TNK-901. Adjust as necessary.

© 2017 by **newterra**, ltd.
All rights reserved. No part of this document may be reproduced or transmitted in any form or by any means, electronic, mechanical, photocopying, recording, or otherwise, without prior written permission of **newterra** ltd.

5.0 OPERATION of newterra MicroClear™ MBR

MBR (Membrane Bioreactor) treatment technology is an effective combination of an activated sludge biological treatment process with MicroClear MBR membrane filtration technology.

This section provides a description of the treatment process and how it is controlled. For a more complete understanding, review the **Process & Instrumentation Diagram** and **System Layout** provided in **Appendix A** of this manual as well. The detailed Control Narrative with factory setpoints, alarms and logic, please see **Appendix K**.

Most of the equipment in the **newterra** WWTP can be operated in either manual or automatic mode. The system is designed to always run in auto mode. The manual option is provided mainly for maintenance purposes.

5.1 Control System – Main SCADA Control, PLCs and HMIs

The **newterra** MicroClear™ MBR is controlled by a PLC (Programmable Logic Controller). The system is programmed to:

- Receive analog and digital input signals from the switches and transmitters being controlled;
- Process the information using the structure and rules entered into the program;
- Generate outputs that control the equipment - turn equipment OFF or ON.
- Generate alarms if critical conditions are present
- Provide a HMI (Human Machine Interface) touch-screen for ease of operator process monitoring and control.

5.1.2 HMI Control Screen

An example of an HMI Control Screen is provided below:



© 2017 by **newterra**, ltd.
All rights reserved. No part of this document may be reproduced or transmitted in any form or by any means, electronic, mechanical, photocopying, recording, or otherwise, without prior written permission of **newterra** ltd.

System Operation

- (RUNNING/STOPPED) Indicates whether the system is currently in the **RUN** mode or turned off
- **START** button puts the system in **RUN** mode as long as there are no alarms preventing the start up of the system
- **STOP** button stops the system operation
- **RESET** button is used to clear alarms after they have been addressed
- Clarifier blowers, equalization tank blowers and the building fan if on, continue to run even after the **STOP** button has been pressed

The MBR will always remain in auto run mode, unless the kill switch is pressed or power is down.

The MBR will automatically restart after power failure.

A menu to navigate through the process and data information screens is provided at the bottom right corner of the HMI screen.

When the **MENU** button is pressed, it shows a list of individual screens with a scroll bar.

- To go to any of the listed screens, touch the icon.
- To go back to the main screen, touch the **X** button.



© 2017 by **newterra**, ltd.
All rights reserved. No part of this document may be reproduced or transmitted in any form or by any means, electronic, mechanical, photocopying, recording, or otherwise, without prior written permission of **newterra** ltd.



Screen-shots presented in this manual are for example only and may not be representative of ideal operation.

5.1.3 HOA (Hand/Off/Auto) Screen

This screen displays all devices controlled by the PLC. Under normal operation (auto mode), all devices are set in the AUTO position.

- Each PLC controlled motor or valve in the system has a Hand/Off/Auto (HOA) Switch to control its operation.
- The HAND (H) position of a switch is used for testing and troubleshooting of the system. As a safety precaution to prevent damage to equipment, the equipment will operate for two minutes in hand mode and will then turn OFF and revert to the (O) position. Operators must be present when equipment is operated in the manual mode.



© 2017 by **newterra**, ltd.
All rights reserved. No part of this document may be reproduced or transmitted in any form or by any means, electronic, mechanical, photocopying, recording, or otherwise, without prior written permission of **newterra** ltd.

5.1.4 Process Screens

The main process screens are accessed from the main menu of the HMI control screen. These process screens are:

- Inlet
- EQ & Anox
- Aeration
- MBR

Note: In the following sections are the detailed descriptions of the main processes.



Switches are indicated on the HMI as follows:

- LSHH – level switch high high
- LSH – level switch high
- LSLL – level switch low low
- TSLL – temperature switch low low
- LSL – level switch low
- PSL – pressure switch low

Status of the switches are indicated as follows:

Grey when **OFF**
Green when **ON**
RED when in Alarm

© 2017 by **newterra**, ltd.
All rights reserved. No part of this document may be reproduced or transmitted in any form or by any means, electronic, mechanical, photocopying, recording, or otherwise, without prior written permission of **newterra** ltd.

newterra ltd.
1291 California Avenue, Brockville, ON K6V 5W3
(800) 420-4056 / www.newterra.com

Tank levels are indicated by level switch positions and percent full values where level transmitters are provided. For example, the following screen shows LSLL as green, LSHH as grey and the percent full as 44.1% in TNK-501. This indicates that the tank is 44.1% full, and the water level is above LSLL and below LSHH.

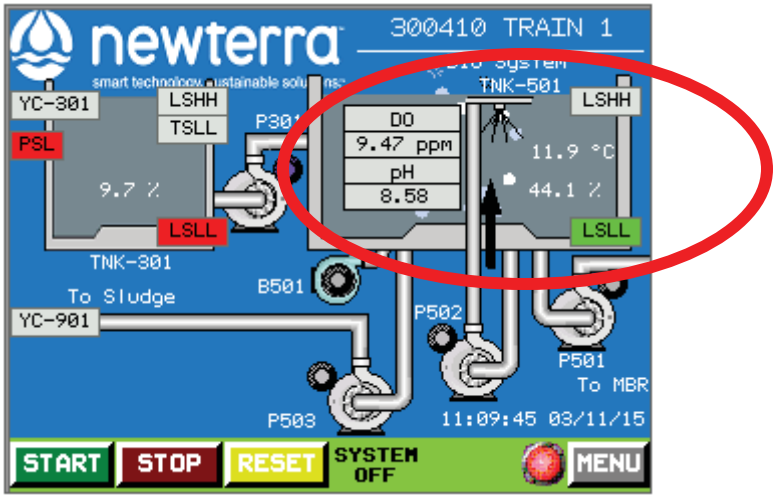

NOTE: Touching a device on the process screen will open an HOA popup for that device.

- The device status indicator color coding is as follows:

Indicator Color	Operational Status
Yellow	Manual operation
Orange	Interlock
Red	Failure
Green	ON / OK
Purple	Interlock / Communication failure
Pink	Unknown
Black	Faulty contactor
Grey	Off

© 2017 by **newterra**, ltd.
All rights reserved. No part of this document may be reproduced or transmitted in any form or by any means, electronic, mechanical, photocopying, recording, or otherwise, without prior written permission of **newterra** ltd.

newterra ltd.
1291 California Avenue, Brockville, ON K6V 5W3
(800) 420-4056 / www.newterra.com

5.1.5 HMI Alarm Screen

- When the **ALARMS** button is flashing red, it indicates an alarm is present in the system. Press the **ALARMS** button to be routed to the Active Alarms Screen.
- To clear alarms, first press the yellow **RESET** button then press the flashing **ALARMS** button to verify that the condition causing the alarm has been cleared.

All alarms are visually indicated on a beacon stack on the roof of the exterior of the container and an alarm light on the system control panel:

- Green – System OK
- Red Solid – Warning Alarm
- Red Flashing – Critical Alarm
- No Light – Loss of Power

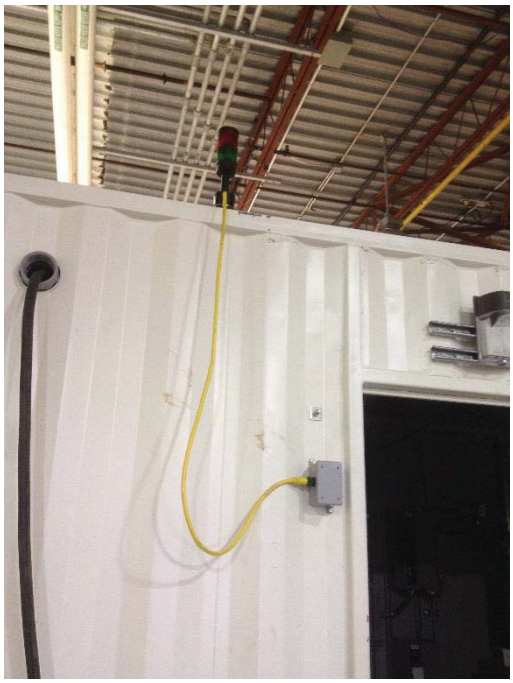

© 2017 by **newterra**, ltd.
All rights reserved. No part of this document may be reproduced or transmitted in any form or by any means, electronic, mechanical, photocopying, recording, or otherwise, without prior written permission of **newterra** ltd.

newterra ltd.
1291 California Avenue, Brockville, ON K6V 5W3
(800) 420-4056 / www.newterra.com

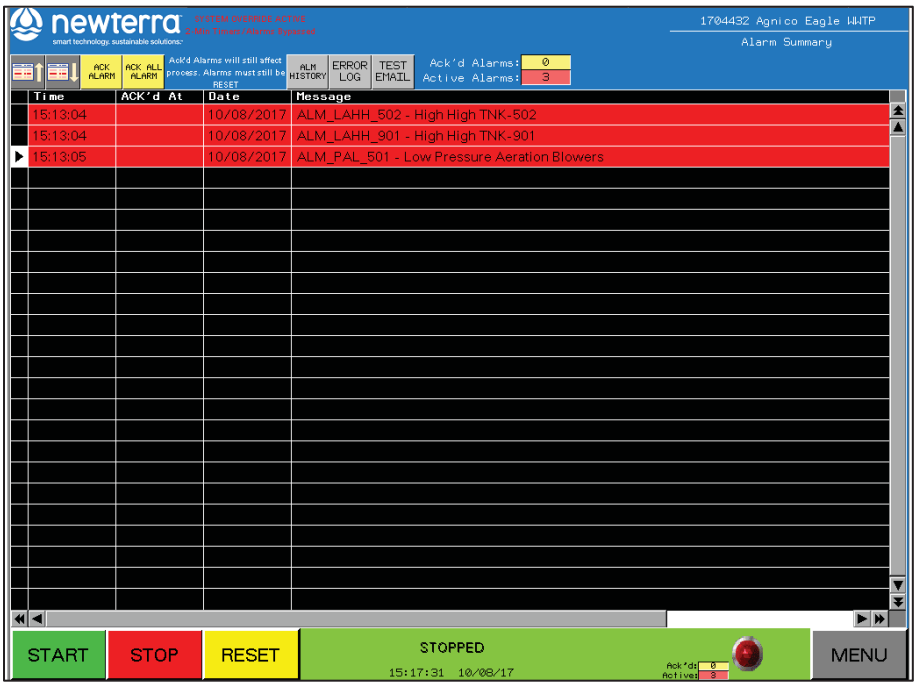



NOTE: All high level alarms (identified as LSHH on P&ID and HMI) indicate a critical situation for imminent tank overflow and could result in pump(s) shutting off to avoid overflow situations.

© 2017 by **newterra**, ltd.
All rights reserved. No part of this document may be reproduced or transmitted in any form or by any means, electronic, mechanical, photocopying, recording, or otherwise, without prior written permission of **newterra** ltd.

newterra ltd.
1291 California Avenue, Brockville, ON K6V 5W3
(800) 420-4056 / www.newterra.com

5.2 WWTP Buildings/Utilities

5.2.1 Power Supply

A power monitor has been installed in the main power distribution panel to ensure proper power and phase rotation is delivered to the system.

Alarms

Alarm	Alarm Description	Actuation Control	Delay	Self Resetting (Y)
ESA-8201	Emergency Stop Alarm	ESA-8201 = Active	Immediate	Y
PWR-FAIL	Power Failure		Immediate	Y
PLC FLT	PLC Fault Detected		Immediate	Y
PWR FLT	Phase Monitor Fault	JA-8201 = Active	Immediate	Y

5.2.2 E-Stop

Emergency stop buttons are located:



- On the Main Control Panel in each of the Screen Buildings
- On the Control Panel installed in each process train
- On the Main Control Panel in the Sludge Building
- Main Control Panel in each of the Receiving Stations
- There is an E-Stop PLC alarm if pressed.

5.2.3 Building Temperature Control

The electric heaters respond to the temperature set point set on the individual heater TSL temperature switches. If the building temperature falls below the temperature switch settings, electric heaters will turn on.

5.2.3.1 Logic

TAG	Description	Control Logic	Output Type
H-7911	Building Heater	Always on internally controlled	Direct (not PLC controled)
H-7912	Building Heater	Always on internally controlled	Direct (not PLC controled)
H-7941	Building Heater	Always on internally controlled	Direct (not PLC controled)
H-7961	Building Heater	Always on internally controlled	Direct (not PLC controled)
H-7962	Building Heater	Always on internally controlled	Direct (not PLC controled)
H-7963	Building Heater	Always on internally controlled	Direct (not PLC controled)

© 2017 by **newterra**, ltd.
All rights reserved. No part of this document may be reproduced or transmitted in any form or by any means, electronic, mechanical, photocopying, recording, or otherwise, without prior written permission of **newterra** ltd.

newterra ltd.
1291 California Avenue, Brockville, ON K6V 5W3
(800) 420-4056 / www.newterra.com

5.2.3.2 Alarms

Alarm	Alarm Description	Actuation Control	Delay	Self Resetting (Y)
TALL-7911	Temperature Alarm Low Low	TSLL-7911 = Active	5s	Y
TALL-7941	Temperature Alarm Low Low	TSLL-7941 = Active	5s	Y
TALL-7961	Low Low Temp Aalrm	LSLL-7961 = Active		

5.2.4 Ventilation

A single fan (F-7963) located in the MBR Process container acts to exhaust the container during the warmer months. Temperature is monitored by the temperature sensor and a high setpoint turns the exhaust fan on. There are also exhaust blowers to de-rate classified areas.

5.2.4.1 Logic

Tag / Mode	Description	Control Logic	Output Type	HOA Control
B-7911	Ventilation Blower	The continuous ventilation blower will always be ON. This blower is used as means to de-rate the screen building to a Class 1 Division 2 area. Air exchanges must be a minimum of 12 per hour,	Direct (not PLC controled)	
B-7941	Aeration Exhaust Blower	On when B-501/502 is on OR B-601/602 is on	Discrete	Auto
F-7963	Building Fan	Always on controlled by Wall Mount Termostat	Direct (not PLC controled)	

5.2.4.2 Alarms

Alarm	Alarm Description	Actuation Control	Delay	Self Resetting (Y)	Notes
PAL-7911	Pressure Alarm Low	PSL-7911 = InActive	5s	Y	Alarm indicates possible continuous ventilation failure, indicating risk that the room may become Class 1 Division 1 rated.

© 2017 by **newterra**, ltd.
All rights reserved. No part of this document may be reproduced or transmitted in any form or by any means, electronic, mechanical, photocopying, recording, or otherwise, without prior written permission of **newterra** ltd.

newterra ltd.
1291 California Avenue, Brockville, ON K6V 5W3
(800) 420-4056 / www.newterra.com

5.3 Process Narrative

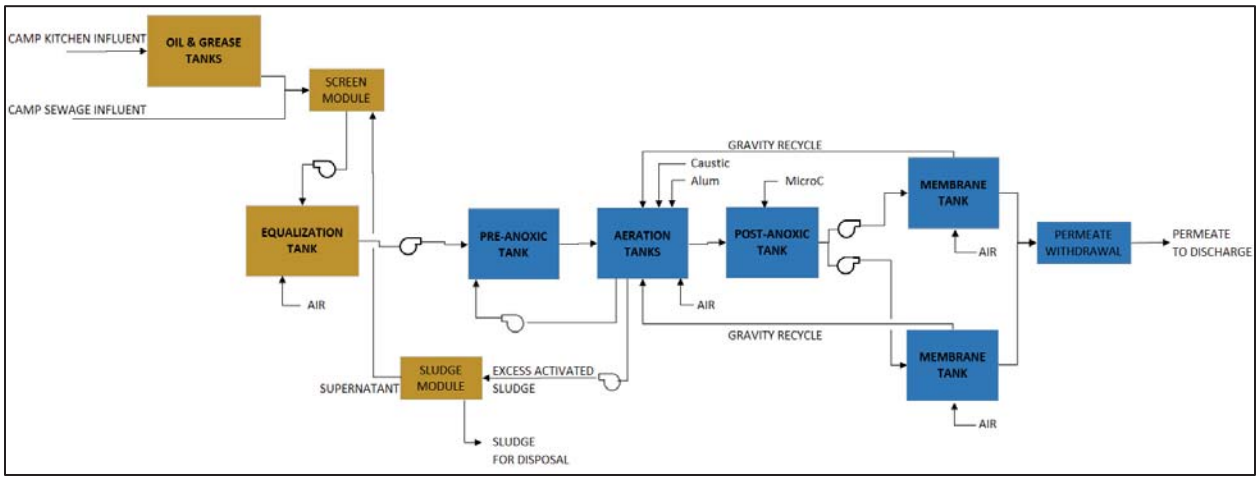

The wastewater treatment plant receives two streams of wastewater. The first source is domestic wastewater, which is fed directly to the fine to remove any fibers or debris that might damage the membranes. The second source is kitchen wastewater which is pre-treated in the oil and grease tanks to remove oil and grease prior to being fed into the fine screens. The combined screened wastewater is pumped to the equalization tank (TNK-301). The equalization tank buffers variability in the influent flow rate and concentrations of influent constituents, maintaining a consistent flow rate and wastewater strength through the MBR system. Wastewater is then pumped from the equalization tank to the pre-anoxic tank (TNK-401) for denitrification.

In the pre-anoxic tank screen wastewater containing organics is combined with recycled mixed liquor from the aeration tank containing nitrates. Bacteria use some of the organics to drive the denitrification process, converting nitrate into nitrogen gas. This process occurs in an anoxic environment where there is minimal oxygen. As such a pump and eductors are used to mix the tank to prevent addition of oxygen. The denitrification process is used to meet the effluent nitrate limit, reduce oxygen requirements and to recover alkalinity, thus reducing chemical consumption.

Mixed liquor from the anoxic tank flows by gravity to the first aerobic tank (TNK-501) followed by the second aeration tank (TNK-502) for aerobic biological degradation of the influent constituents (organics and ammonia). In the aerobic tanks the nitrification process converts ammonia to nitrate in order to meet the effluent ammonia limit. This process consumes alkalinity, so a caustic dosing pump is used to control the pH. Additionally, liquid alum is dosed into the anoxic zone to precipitate phosphorus in order to meet the effluent phosphorus limit. Mixed liquor flows by gravity from the second aeration tank to the post-anoxic tank (TNK-551) for final denitrification polishing. In the post-anoxic tank there are minimal dissolved influent organics to drive the denitrification process. As such, an external carbon source in the form of Micro C is dosed to supplement the organics and drive the denitrification process.

© 2017 by **newterra**, ltd.
All rights reserved. No part of this document may be reproduced or transmitted in any form or by any means, electronic, mechanical, photocopying, recording, or otherwise, without prior written permission of **newterra** ltd.

newterra ltd.
1291 California Avenue, Brockville, ON K6V 5W3
(800) 420-4056 / www.newterra.com

Mixed liquor is pumped from the post-anoxic tank to the membrane tanks (TNK-601 and TNK-602). The membrane tanks serve as additional volume for aerobic biological treatment to remove any excess MicroC (which would other cause BOD in the effluent) and house the membrane filters used for solid-liquid separation. Treated effluent is drawn through the membranes by vacuum pumps.

Since the solid-liquid separation process results in an accumulation of solids in the membrane tank, the mixed liquor (containing both solids and filtrate) is continuously recycled to the first aeration tank (TNK-501). This prevents excessive solids build-up in the membrane tank, and maintains sufficient biomass in the anoxic and aeration tanks. The solids that accumulate in the system consist of biomass that have grown from the influent organics and ammonia, as well as non-biodegradable solids from the influent wastewater. In order to maintain an optimal concentration of mixed liquor suspended solids (MLSS) (typically 10 g/L), a portion of the mixed liquor is periodically wasted by pumping from the Aeration Tank (TNK-501) to the sludge holding tank (TNK-901). Wasted sludge in the sludge holding tank is thickened by decanting supernatant back to the screen tank. Thickened sludge accumulates in the sludge holding tanks until it is eventually pumped out for disposal.

© 2017 by **newterra**, ltd.
All rights reserved. No part of this document may be reproduced or transmitted in any form or by any means, electronic, mechanical, photocopying, recording, or otherwise, without prior written permission of **newterra** ltd.

newterra ltd.
1291 California Avenue, Brockville, ON K6V 5W3
(800) 420-4056 / www.newterra.com

5.4 Kitchen Inlet Module (TNK-101/2/3) Module

A schematic of the Kitchen Inlet Module is located on the INLET HMI screen and shown below.

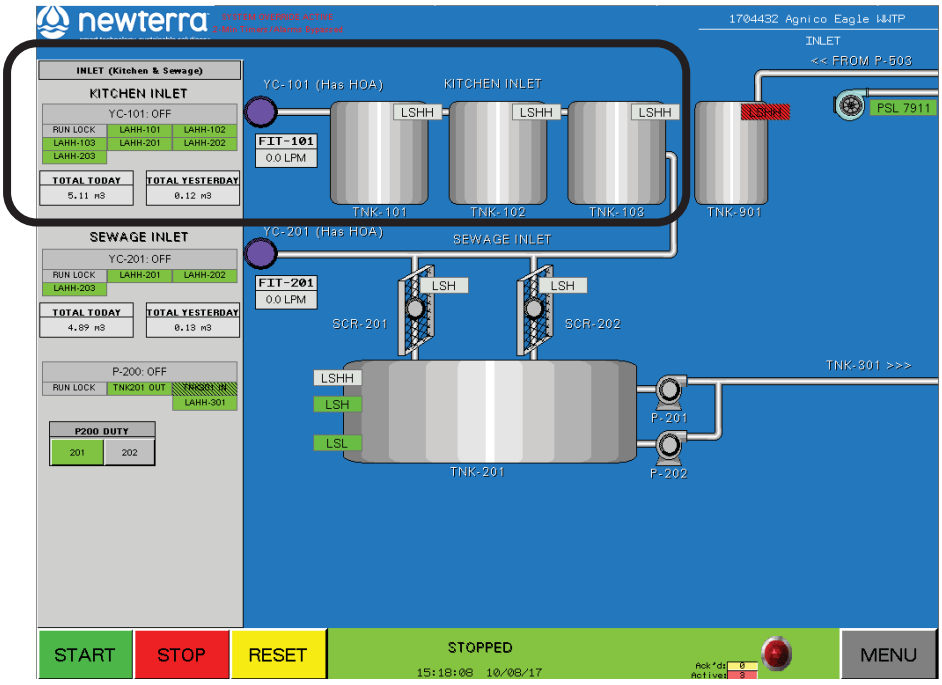

5.4.1 Function

The Waste Water Treatment Plant accepts waste water from the local kitchen which contains kitchen oils and greases. These need to be removed prior to being fed into the fine screens. This is done by using TNK-101/2/3 as grease traps. The kitchen waste water enters TNK-101, the solid food particles sink to the bottom, while lighter grease and oil floats to the top. The relatively grease-free water is then fed into TNK-102 where the process is repeated to further separate the oils and greases from the waste water. The same applies to TNK-103. The waste water is then fed to the fine screens.

5.4.2 Inputs

TAG	Description	Input Type	HMI Display Units	Device Range and Units	Device Span/PLC Scale	Datalog (Y)	Trending (Y)
FIT-101	Flow Indicating Transmitter	Analog	GPM	0-760lpm	0-760lpm	Y	Y
FQI-101	Flow Totalizer	Discrete N.O.	Pulse/Gal	1 liter/ Pulse			
LSHH-101	Level Switch High High	Discrete N.C.					
LSHH-102	Level Switch High High	Discrete N.C.					
LSHH-103	Level Switch High High	Discrete N.C.					

© 2017 by **newterra**, ltd.
All rights reserved. No part of this document may be reproduced or transmitted in any form or by any means, electronic, mechanical, photocopying, recording, or otherwise, without prior written permission of **newterra** ltd.

newterra ltd.
1291 California Avenue, Brockville, ON K6V 5W3
(800) 420-4056 / www.newterra.com

5.4.3 Setpoints

Tag	Description	Factory Setpoint	Setpoint Range and Units	Setpoint Change Control	Alarm setpoint (Y/N)
FTAH-101-SP	Flow Transmitter Alarm High Setpoint	75	0-200 GPM	Open	Y

5.4.4 Logic

TAG	Description	Control Logic	Alarm Interactions	HOA Control
YC-101	Ready Contact	On when LSHH-101 / 102 / 103 and LSHH-201 / 202 and LSHH-203 are not ON	All LSHH's in the inlet area	HOA

5.4.5 Alarms

Alarm	Alarm Description	Actuation Control	Delay	Self Resetting (Y)
FTAH-101	Flow Transmitter Alarm High	FIT-101 > FTAH-101-SP	60s	
LAHH-101	Level Alarm High High	LSHH-101 = Active	5s	Y
LAHH-102	Level Alarm High High	LSHH-102 = Active	5s	Y
LAHH-103	Level Alarm High High	LSHH-103 = Active	5s	Y

© 2017 by **newterra**, ltd.
All rights reserved. No part of this document may be reproduced or transmitted in any form or by any means, electronic, mechanical, photocopying, recording, or otherwise, without prior written permission of **newterra** ltd.

newterra ltd.
1291 California Avenue, Brockville, ON K6V 5W3
(800) 420-4056 / www.newterra.com

5.5 Fine Screens (SCR-201/202) Module

A schematic of the Fine Screens are located on the INLET HMI screen and shown below.

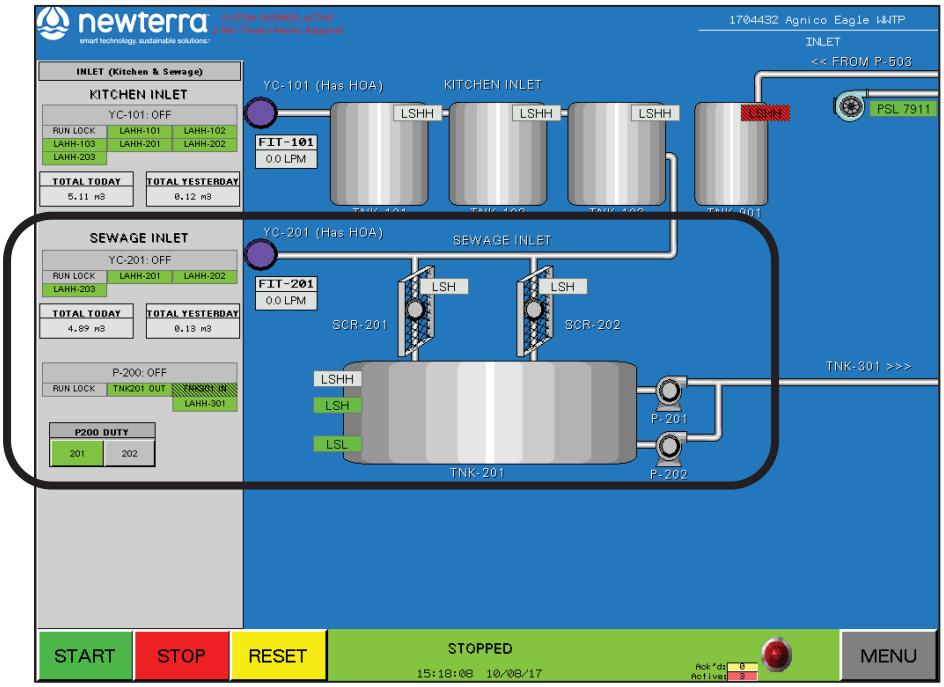

5.5.1 Function

Camp domestic and kitchen wastewater is into the fine screens (SCR-201/202). The screening process is provided to remove hair, and fibrous materials from the supplied wastewater that might damage the membranes. The screening are collected in burlap bags that need to be removed daily. The waste water is then pumped to the EQ Tank.

5.5.2 Inputs

TAG	Description	Input Type	HMI Display Units	Device Range and Units	Device Span/PLC Scale	Datalog (Y)	Trending (Y)
FIT-201	Flow Indicating Transmitter	Analog	GPM	0-760lpm	0-760lpm	Y	Y
FQI-201	Flow Totalizer	Discrete N.O.	Pulse/Gal	1 liter/ Pulse			
LSHH-201	Level Switch High High	Discrete N.C.					
LSHH-202	Level Switch High High	Discrete N.C.					
LSHH-203	Level Switch High High	Discrete N.C.					
LSH-203	Level Switch High	Discrete N.C.					
LSL-203	Level Switch Low Low	Discrete N.O.					

© 2017 by **newterra**, ltd.
All rights reserved. No part of this document may be reproduced or transmitted in any form or by any means, electronic, mechanical, photocopying, recording, or otherwise, without prior written permission of **newterra** ltd.

newterra ltd.
1291 California Avenue, Brockville, ON K6V 5W3
(800) 420-4056 / www.newterra.com

5.5.3 Setpoints

TAG	Description	Factory Setpoint	Setpoint Range and Units	Setpoint Change Control	Alarm setpoint (Y/N)
FTAH-201-SP	Flow Transmitter Alarm High Setpoint	75	0-200 GPM	Open	Y

5.5.4 Logic

TAG	Description	Control Logic	Alarm Interactions	Output Type	Hour Meter	HOA Control
YC-201	Ready Contact	On when LSH-201 / 202 and LSHH-203 are not ON				HOA
SCR-201	Inlet Screen	The inlet screen will be ON when influent flow is detected via flow transmitter FIT-201. The screen will run for 1 minute after influent flow has stopped via flow transmitter FIT-201. If the high high level switch LSHH-201 on the screen is ON then the inlet screen SCR-201 will be ON.		Discrete	Y	HOA
SCR-202	Inlet Screen	Same as SCR-201		Discrete	Y	HOA
P-201	Screen Transfer Pump	The pump will be ON when the LSH-203 turn on as long as LT-301 < LTH-301-sp setpoint the pump will turn off when the LSL-201 turns off	LAHH-301	Discrete	Y	HOA
P-202	Screen Transfer Pump	This pump runs duty standby with P-201 with a 5:1 rato	LAHH-301	Discrete	Y	HOA

5.5.5 Alarms

Alarm	Alarm Description	Actuation Control	Delay	Self Resetting (Y)
FTAH-201	Flow Transmitter Alarm High	FIT-201 > FTAL-201-SP	60s	
LAHH-201	Level Alarm High High	LSHH-201 = Active	5s	Y
LAHH-202	Level Alarm High High	LSHH-202 = Active	5s	Y
LAHH-203	Level Alarm High High	LSHH-203 = Active	5s	Y

© 2017 by **newterra**, ltd.
All rights reserved. No part of this document may be reproduced or transmitted in any form or by any means, electronic, mechanical, photocopying, recording, or otherwise, without prior written permission of **newterra** ltd.

newterra ltd.
1291 California Avenue, Brockville, ON K6V 5W3
(800) 420-4056 / www.newterra.com

5.6 Equalization Tank (TNK-301) Module

A schematic of the Equalization Tank (TNK-301) is located on the EQ & PRE-ANOXIC HMI screen and shown below.

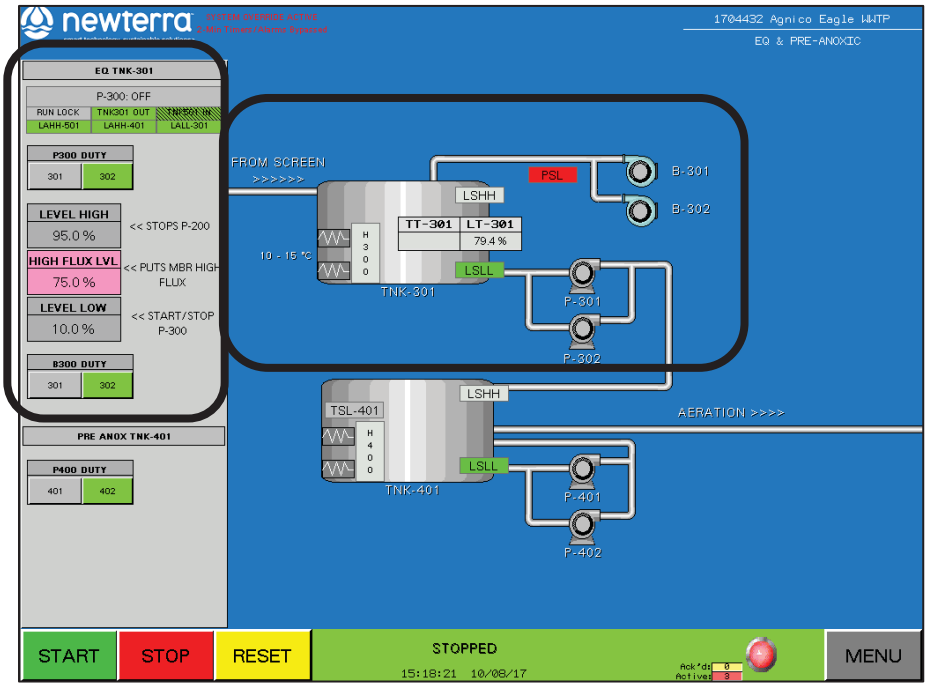

5.6.1 Function

The EQ Tank (TNK-301) buffers variability in the influent flow rate to maintain a consistent flow rate through the membranes and to reduce concentration fluctuations of influent constituents (i.e. BOD, TSS etc.) through the MBR treatment system. Wastewater entering the newterra MBR will first have undergone pre-treatment by fine screens and grease traps (kitchen waste). The waste water is then pumped to the Pre-Anox Tank.

5.6.2 Inputs

Tag	Description	Input Type	HMI Display Units	Device Range and Units	Device Span/PLC Scale	Datalog (Y)	Trending (Y)	Notes
LSHH-301	Level Switch High High	Discrete N.C.						
LT-301	Level Transmitter	Analog	%	0-10 ftWC	0-10 ftWC	Y	Y	
TT-301	Temperature Transmitter	Analog	°C	0-100c	0-100c	n	n	Added to System
LSLL-301	Level Switch Low Low	Discrete N.O.						Must be above all immersion heaters in Tank
PSL-301	Pressure Switch Low	Discrete N.C.		9-85"WC				

© 2017 by **newterra**, ltd.
All rights reserved. No part of this document may be reproduced or transmitted in any form or by any means, electronic, mechanical, photocopying, recording, or otherwise, without prior written permission of **newterra** ltd.

newterra ltd.
1291 California Avenue, Brockville, ON K6V 5W3
(800) 420-4056 / www.newterra.com

5.6.3 Setpoints

Tag	Description	Factory Setpoint	Setpoint Range and Units	Setpoint Change Control	Alarm setpoint (Y/N)	Notes
LTL-301-SP	Level Transmitter Low Setpoint	10%	0-100%	Open		
LTHFLUX-301-SP	High Flux Level Setting	50%	0-100%			Puts the MBR Permeate pumps into High Flux Mode
LTH-301-SP	Level Transmitter High Setpoint	80%	50-100%	Open		

5.6.4 Logic

Tag	Description	Control Logic	Alarm Interactions	Output Type	Hour Meter	HOA Control
H-301	Tank Heater	On when TT-301 < 10C Off when TT-301 >15C	LALL-301	Discrete		
H-302	Tank Heater	Same as H-301	LALL-301	Discrete		
P-301	EQ Transfer Pump	The EQ pump will be ON when the EQ level transmitter LT-301 > LTL-301-SP and the aeration tank level transmitter LT-501 < LTH-501-SP The EQ pump will be OFF when the EQ level transmitter LT-301 < LTL-301-SP OR LSLL-301 = InActive OR the aeration tank level transmitter LT-501 > LTH-501-SP OR LSHH-401 is active Runs Duty with P-302 as Standby	Turns OFF LAHH-501 LAHH-401 LALL-301	Discrete	Y	HOA
P-302	EQ Transfer Pump	This pump runs duty standby with P-201 with a 5:1 rato		Discrete	Y	HOA
B-301	EQ Blower	The EQ blower will be ON when the System is in Run & LSLL-301 is active.		Discrete	Y	HOA
B-302	EQ Blower	Runs Duty standby with B-301 switching every 120 hours		Discrete	Y	HOA

© 2017 by **newterra**, ltd.
All rights reserved. No part of this document may be reproduced or transmitted in any form or by any means, electronic, mechanical, photocopying, recording, or otherwise, without prior written permission of **newterra** ltd.

newterra ltd.
1291 California Avenue, Brockville, ON K6V 5W3
(800) 420-4056 / www.newterra.com

5.6.5 Alarms

Alarm	Alarm Description	Actuation Control	Delay	Self Resetting (Y)
LAHH-301	Level Alarm High High	LSHH-301 = Active	5s	Y
LALL-301	Level Alarm Low Low	LSLL-301 = Off	5s	Y

© 2017 by **newterra**, ltd.
All rights reserved. No part of this document may be reproduced or transmitted in any form or by any means, electronic, mechanical, photocopying, recording, or otherwise, without prior written permission of **newterra** ltd.

newterra ltd.
1291 California Avenue, Brockville, ON K6V 5W3
(800) 420-4056 / www.newterra.com

5.7 Pre-Anox Tank (TNK-401) Module

A schematic of the Pre-Anox Tank (TNK-401) is located on the EQ & PRE-ANOXIC HMI screen and shown below.

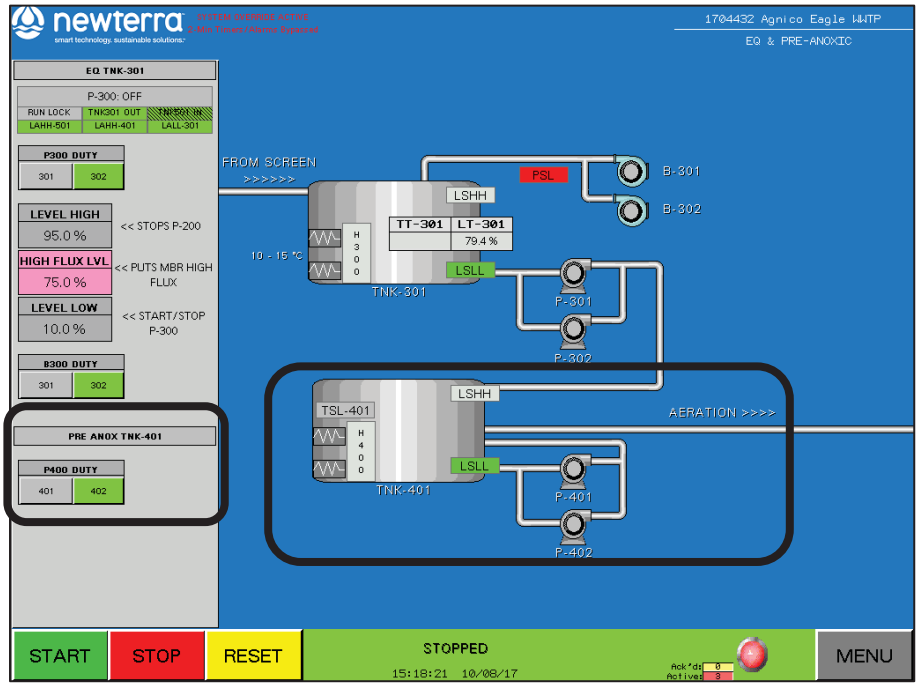

5.7.1 Function

In the pre-anoxic tank (TNK-401), the wastewater containing organics is combined with recycled mixed liquor from the aeration tank containing nitrates. Bacteria use some of the organics to drive the denitrification process, converting nitrate into nitrogen gas. This process occurs in an anoxic environment where there is minimal oxygen. As such, a pump and eductors are used to mix the tank to prevent addition of oxygen. The denitrification process is used to meet the effluent nitrate limit, reduce oxygen requirements and to recover alkalinity, thus reducing chemical consumption.

5.7.2 Inputs

Tag	Description	Input Type
LSHH-401	Level Switch High High	Discrete N.C.
TSL-401	Temperature Switch Low	Discrete N.C.
LSLL-401	Level Switch Low Low	Discrete N.O.

© 2017 by **newterra**, ltd.
All rights reserved. No part of this document may be reproduced or transmitted in any form or by any means, electronic, mechanical, photocopying, recording, or otherwise, without prior written permission of **newterra** ltd.

newterra ltd.
1291 California Avenue, Brockville, ON K6V 5W3
(800) 420-4056 / www.newterra.com

5.7.3 Setpoints

None

5.7.4 Logic

Tag	Description	Control Logic	Alarm Interactions	Output Type	Hour Meter	HOA Control
P-401	Pre-Anox Mixing Pump	The pump will be ON when the System is in Run & LSLL-401 is active.	LALL-401 PUMP IS OFF	Discrete	Y	HOA
P-402	Pre-Anox Mixing Pump	Runs Duty standby with P-401 switching every 120 hours		Discrete	Y	HOA
H-401	Tank Heater	On when TSL-401 is OFF	LALL-401	Discrete		
H-402	Tank Heater	On when TSL-401 is OFF	LALL-401	Discrete		

5.7.5 Alarms

Alarm	Alarm Description	Actuation Control	Delay	Self Resetting (Y)
LAHH-401	Level Alarm High High	LSHH-401 = Active	5s	Y
LALL-401	Level Alarm Low Low	LSLL-401 = OFF	5s	Y

© 2017 by **newterra**, ltd.
All rights reserved. No part of this document may be reproduced or transmitted in any form or by any means, electronic, mechanical, photocopying, recording, or otherwise, without prior written permission of **newterra** ltd.

newterra ltd.
1291 California Avenue, Brockville, ON K6V 5W3
(800) 420-4056 / www.newterra.com

5.8 Aeration Tanks (TNK-501/502) - Biological Treatment Module

The schematic of the Aeration Tanks (TNK-501/502) is located on the AERATION HMI screen and shown below.

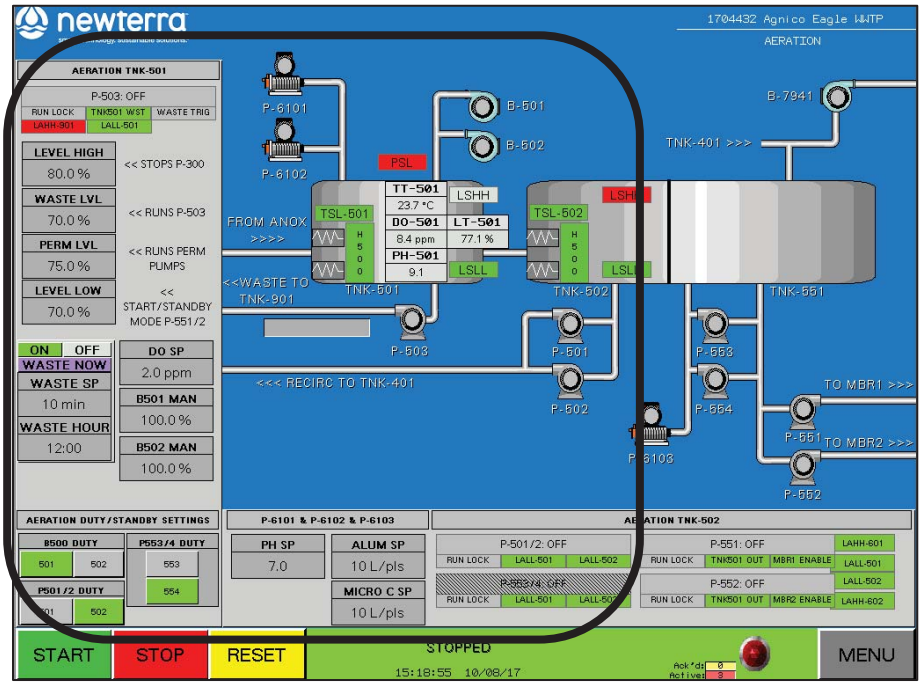

5.8.1 Function

Mixed liquor from the anoxic tank (TNK-401) flows by gravity to the first aerobic tank (TNK-501) followed by the second aeration tank (TNK-502) for aerobic biological degradation of the influent constituents (organics and ammonia). In the aerobic tanks (TNK-501/502), the nitrification process converts ammonia to nitrate in order to meet the effluent ammonia limit. This process consumes alkalinity, so caustic is dosed into TNK-501 (by pump P-6101) to control the pH. Additionally, liquid alum is dosed (by pump P-6102) into the anoxic zone to precipitate phosphorus in order to meet the effluent phosphorus limit.

pH measured by a pH probe (PH-501) in TNK-501.

Blowers (B-501/502) supply air to the submerged fine-bubble diffusers to ensure sufficient dissolved oxygen (DO) is available for biological oxidation and to keep solids in the water suspended. Dissolved Oxygen (DO) is measured by a DO Probe (DO-501) in TNK-501.

In order to maintain an optimal concentration of mixed liquor suspended solids (MLSS) (typically 10 g/L), a portion of the mixed liquor is periodically wasted by pumping from the Aeration Tank (TNK-501) to the sludge holding tank (TNK-901) by P-503.

© 2017 by **newterra**, ltd.
All rights reserved. No part of this document may be reproduced or transmitted in any form or by any means, electronic, mechanical, photocopying, recording, or otherwise, without prior written permission of **newterra** ltd.

newterra ltd.
1291 California Avenue, Brockville, ON K6V 5W3
(800) 420-4056 / www.newterra.com

5.8.2 Inputs

Tag	Description	Input Type	HMI Display Units	Device Range and Units	Datalog (Y)	Trending (Y)
LSHH-501	Level Switch High High	Discrete N.C.				
LSLL-501	Level Switch Low Low	Discrete N.O.				
PH-501	pH Transmitter	Analog		0-14 pH	Y	Y
DO-501	Dissolved Oxygen Transmitter	Modbus	ppm	0-10	Y	Y
TT-501	Temperature Transmitter	Modbus	°C	0-100		
LT-501	Level Transmitter	Analog	%	0-10 ft	Y	Y
PSL-501	Pressure Switch Low	Discrete N.C.		9-85"WC		
LSHH-502	Level Switch High High	Discrete N.C.				
LSLL-502	Level Switch Low Low	Discrete N.O.				
TSL-502	Temperature Switch Low	Discrete N.C.				

5.8.3 Setpoints

Tag	Description	Factory Setpoint	Setpoint Range and Units	Setpoint Change Control	Alarm setpoint (Y/N)
LTL-501-SP	Level Transmitter Low Setpoint	70%	0-100%	Open	
LTH-501-SP	Level Transmitter High Setpoint	80%	0-100%	Open	
LT501-SLUDGE-SP	Waste Level for P-503	75%	0-100%	Open	
LT501-PERM-SP	Level Control for Permeate Pumps	75%	0-100%	Open	
P503 WASTE HOUR	When P-503 will waste	12pm	0-23		
P503 WASTE SP	Time that P-503 wastes for	10min	0-99		
PH-501-SP	pH Normal Setpoint	7 pH	6-8pH	Open	
PHAH-501-SP	pH Alarm High Setpoint	8 pH	7 - 14 pH	Open	Y

© 2017 by **newterra**, ltd.
All rights reserved. No part of this document may be reproduced or transmitted in any form or by any means, electronic, mechanical, photocopying, recording, or otherwise, without prior written permission of **newterra** ltd.

newterra ltd.
1291 California Avenue, Brockville, ON K6V 5W3
(800) 420-4056 / www.newterra.com

Tag	Description	Factory Setpoint	Setpoint Range and Units	Setpoint Change Control	Alarm setpoint (Y/N)
PHAL-501-SP	pH Alarm Low Setpoint	6 pH	0-7 pH	Open	Y
DO-501-SP	Dissolved Oxygen Normal Setpoint	2 ppm	0-6 ppm	Open	
B500 I SP	Integral Gain setting DO PID Loop	10s	0-99		
B500 P SP	Proportional Gain setting DO PID Loop	100%	0-99		
B501 MAN SP	Manual Speed B-501	50%	0-100		
B502 MAN SP	Manual Speed B-502	50%	0-100		
DOAL-501-SP	Dissolved Oxygen Alarm Low Setpoint	0.5 ppm	0-6 ppm	Open	Y
ALUM DOSE	Alum Dose setting (xGal per Pulse)	10 Gallons	0-99 Gallons	Open	
MICROC DOSE	Micro C Dose setting (xGal per Pulse)	10 Gallons	0-99 Gallons	Open	
TALL-501-SP	Temperature Alarm Low Low	10 deg C	5 - 25 deg C	Password	Y
TTL-501-SP	Temperature Transmitter Low Setpoint	15 deg C	5-25 deg C	Open	
PAL-501-SP	Pressure Alarm Low Setpoint	28"WC (1PSIG)		On Device	Y
TALL-502-SP	Temperature Alarm Low Low	10 deg C	5 - 25 deg C	Password	Y

5.8.4 Logic

Tag	Description	Control Logic	Alarm Interactions	Output Type	Hour Meter	HOA Control
P-6102	Alum Dosing Pump	Alum Dosing Pump P-6102 be ON when FIT-701 has reached a user adjustable volume of permeate via FT-701-DOSE setpoint. P-6102 will be ON for one pulse.		Discrete		HOA
P-6101	Caustic Dosing Pump	Caustic Dosing Pump P-6101 will be ON when PH-501 < PH-501-SP. The pump will be ON for 30s and OFF for 30s and will operate in pause mode		Discrete		HOA
H-501	Tank Heater	On when TSL-501 is OFF	LALL-501	Discrete		

© 2017 by **newterra**, ltd.
All rights reserved. No part of this document may be reproduced or transmitted in any form or by any means, electronic, mechanical, photocopying, recording, or otherwise, without prior written permission of **newterra** ltd.

newterra ltd.
1291 California Avenue, Brockville, ON K6V 5W3
(800) 420-4056 / www.newterra.com

Tag	Description	Control Logic	Alarm Interactions	Output Type	Hour Meter	HOA Control
H-502	Tank Heater	On when TSL-501 is OFF	LALL-501	Discrete		
P-503	Waste Activated Sludge Pump	The waste activated sludge pump will be ON at time of day setting SLUDGE-WASTE-TOD IF level switch LT501-SLUDGE-SP	LAHH-901: Pump will be OFF	Discrete		HOA
H-503	Tank Heater	On when TSL-502 is OFF	LALL-502	Discrete		
H-504	Tank Heater	On when TSL-502 is OFF	LALL-502	Discrete		
P-501	Aeration Recirc Pump	The pump will run as long as LSLL-501 is Active	LALL-502: Pump will be OFF	Discrete	Y	HOA
P-502	Aeration Recirc Pump	Runs Duty standby with p-501 switching every 120 hours		Discrete	Y	HOA
B-501	Aeration Tank Aeration Blower	ON - AlwaysRuns via PID loop to maintain DO-501-SPRuns Duty/Standby 120 hours with B-502.		Direct	Y	HOA
B-502	Aeration Tank Aeration Blower	Runs via same logic as B-501. Runs Duty/Standby every 120 hours with B-501.		Direct	Y	HOA

© 2017 by **newterra**, ltd.
All rights reserved. No part of this document may be reproduced or transmitted in any form or by any means, electronic, mechanical, photocopying, recording, or otherwise, without prior written permission of **newterra** ltd.

newterra ltd.
1291 California Avenue, Brockville, ON K6V 5W3
(800) 420-4056 / www.newterra.com

5.8.5 Alarms

Alarm	Alarm Description	Actuation Control	Delay	Self Resetting (Y)
LAHH-501	Level Alarm High High	LSHH-501 = Active	5s	Y
LAHH-502	Level Alarm High High	LSHH-501 = Active	5s	Y
PHAH-501	pH Alarm High	pH-501 > PHAH-501-SP	60s	
PHAL-501	pH Alarm Low	pH-501 < PHAL-501-SP	60s	
DOAL-501	Dissolved Oxygen Alarm Low	DO-501 < DOAL-501-SP	15m	
DOALL-501	Dissolved Oxygen Alarm Low Low	DO-501 < DOAL-501-SP	4hrs	
TTAL-501	Low Temp TNK-501	TT-501<TTAL-501-SP		
PAL-501	Pressure Alarm Low	PSL-501 = InActive	5s	Y
VFDA-501	VFD Fault			
VFDA-502	VFD Fault			
LALL-501	Low Low Level TNK-501	LSLL-501 = OFF		
LALL-502	Low Low Level TNK-502	LSLL-502 = OFF		

© 2017 by **newterra**, ltd.
All rights reserved. No part of this document may be reproduced or transmitted in any form or by any means, electronic, mechanical, photocopying, recording, or otherwise, without prior written permission of **newterra** ltd.

5.9 Post-Anox Tank (TNK-551) Module

The schematic of the Post-Anox Tank (TNK-551) is located on the AERATION HMI screen and shown below.

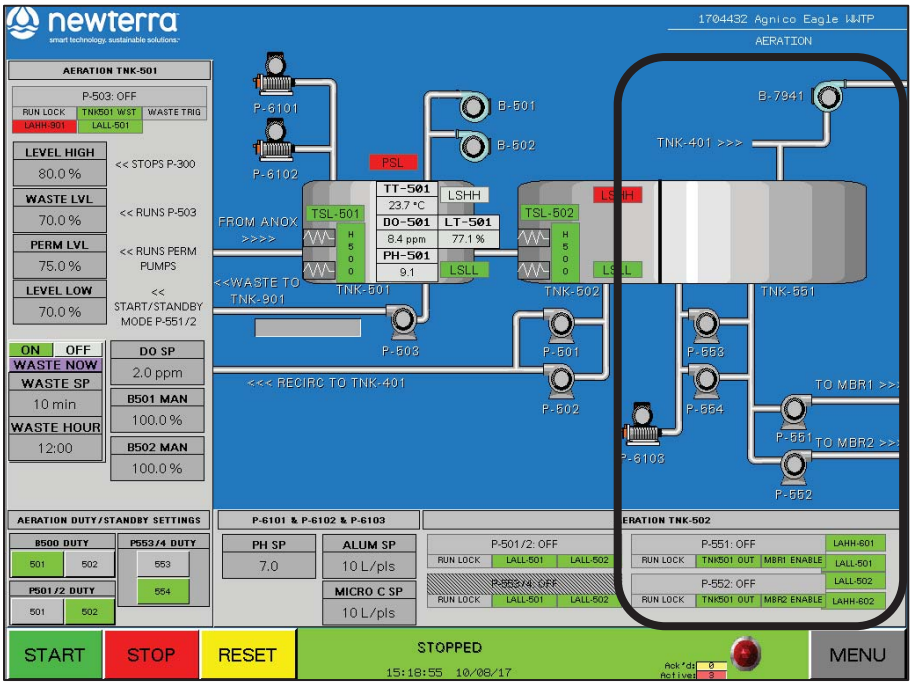

5.9.1 Function

Mixed liquor flows by gravity from the second aeration tank (TNK-502) to the post-anoxic tank (TNK-551) for final denitrification polishing. In the post-anoxic tank, there are minimal dissolved influent organics to drive the denitrification process. As such, an external carbon source in the form of Micro C is dosed (by P-6103) to supplement the organics and drive the denitrification process.

5.9.2 Inputs

None

5.9.3 Setpoints

None

© 2017 by **newterra**, ltd.
All rights reserved. No part of this document may be reproduced or transmitted in any form or by any means, electronic, mechanical, photocopying, recording, or otherwise, without prior written permission of **newterra** ltd.

newterra ltd.
1291 California Avenue, Brockville, ON K6V 5W3
(800) 420-4056 / www.newterra.com

5.9.4 Logic

Tag	Description	Control Logic	Alarm Interactions	Output Type	Hour Meter	HOA Control
P-553	Post Anox Mix Pump	The pump will run as long as LSLL-501 is Active	LALL-501: Pump will be OFF	Discrete	Y	HOA
P-554	Post Anox Mix Pump	Runs Duty standby with p-501 switching every 120 hours		Discrete	Y	HOA
P-6103	Micro C Dosing Pump	Dosing Pump will be ON when FIT-701 or FT-702 has reached a user adjustable volume of permeate via DOSE setpoint.		Discrete		HOA
P-551	Aeration Transfer Pump Feed to MBR-1	The aeration pump will feed MBR tank T-601. The pump will be ON when level transmitter LT-501 > LTL-501-SP and LSLL-501 = Active and LSLL-502 = Active and MBR-1 is Enabled. The aeration pump will be cycle ON/OFF when LT-501 < LTL-501-SP and be OFF if LSLL-501 = InActive OR LSLL-502 = InActive	LAHH-601: Pump will be OFF MBR-1 Disabled	Discrete	Y	HOA
P-552	Aeration Transfer Pump Feed to MBR-2	The aeration pump will feed MBR tank T-602. The pump will be ON when level transmitter LT-501 > LTL-501-SP and LSLL-501 = Active and LSLL-502 = Active and MBR-2 is Enabled. The aeration pump will cycle ON/OFF when LT-501 < LTL-501-SP and be OFF if LSLL-501 = InActive OR LSLL-502 = InActive	LAHH-602: Pump will be OFF MBR-2 Disabled	Discrete	Y	HOA

5.9.5 Alarms

None

© 2017 by **newterra**, ltd.
All rights reserved. No part of this document may be reproduced or transmitted in any form or by any means, electronic, mechanical, photocopying, recording, or otherwise, without prior written permission of **newterra** ltd.

newterra ltd.
1291 California Avenue, Brockville, ON K6V 5W3
(800) 420-4056 / www.newterra.com

5.10 Membrane and Permeate Module

The schematic of the Membrane (TNK-601/602) and Permeate (P-701/702) Module is located on the MBR 1 & MBR 2 HMI screen and shown below.

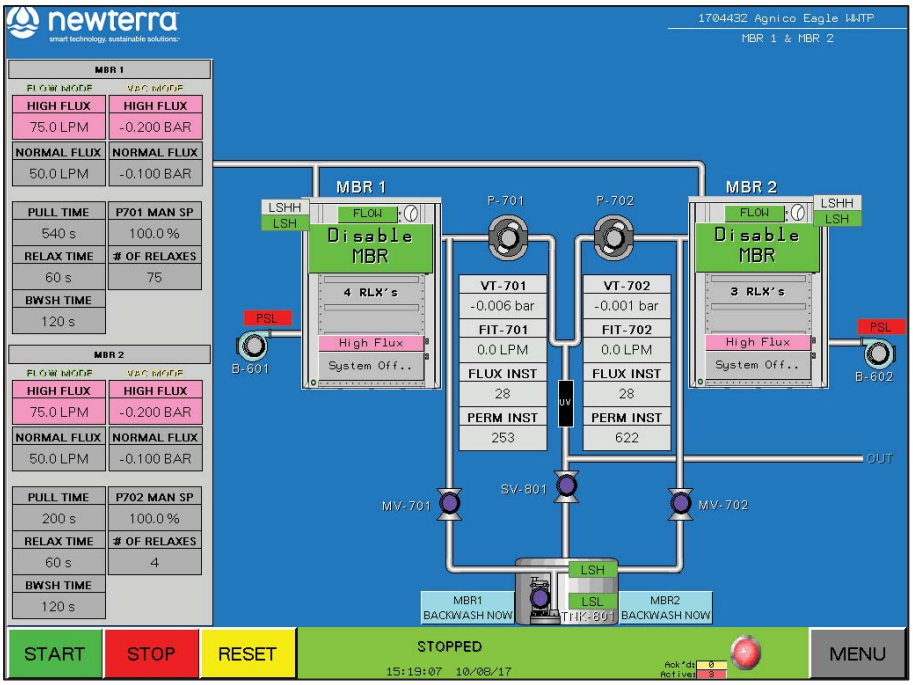

5.10.1 Function

Mixed liquor filtration and supplemental biological oxidation.

Since the solid-liquid separation process results in an accumulation of solids in the membrane tank, the mixed liquor (containing both solids and filtrate) is continuously recycled to the first aeration tank (TNK-501). This prevents excessive solids build-up in the membrane tank, and maintains sufficient biomass in the anoxic and aeration tanks. The solids that accumulate in the system consist of biomass that have grown from the influent organics and ammonia, as well as non-biodegradable solids from the influent wastewater.

Vacuum pumps (P-701 and P-702) draw the water through the membranes under a low vacuum of 0.07 to 0.25 bar.

© 2017 by **newterra**, ltd.
All rights reserved. No part of this document may be reproduced or transmitted in any form or by any means, electronic, mechanical, photocopying, recording, or otherwise, without prior written permission of **newterra** ltd.

newterra ltd.
1291 California Avenue, Brockville, ON K6V 5W3
(800) 420-4056 / www.newterra.com

5.10.2 Inputs

Tag	Description	Input Type	HMI Display Units	Device Range and Units	Datalog (Y)	Trending (Y)
LSHH-601	Level Switch High High	Discrete N.C.				
LSH-601	Level Switch High	Discrete N.O.				
LSHH-602	Level Switch High High	Discrete N.C.				
LSH-602	Level Switch High	Discrete N.O.				
PSL-601	Pressure Switch Low	Discrete N.C.		9-85"WC		
PSL-602	Pressure Switch Low	Discrete N.C.		9-85"WC		
VT-701	Vacuum Transmitter	Analog	Bar	-1.0 - 1.0 Bar	Y	Y
VT-702	Vacuum Transmitter	Analog	Bar	-1.0 - 1.0 Bar	Y	Y
VFD-701	VFD Status	Communcation				
VFD-702	VFD Status	Communcation				
FIT-701	Flow Indicating Transmitter	Analog	GPM	0-300lpm	Y	Y
FQI-701	Flow Totalizer	Discrete N.O.	Pulse/Gal	1liter / Pulse		
FIT-702	Flow Indicating Transmitter	Analog	GPM	0-300lpm	Y	Y
FQI-702	Flow Totalizer	Discrete N.O.	Pulse/Gal	1liter / Pulse		
LSH-801	Level Switch High	Discrete N.C.				
LSL-801	Level Switch Low Low	Discrete N.O.				

5.10.3 Setpoints

Tag	Description	Factory Setpoint	Setpoint Range and Units	Setpoint Change Control	Alarm setpoint (Y/N)	Notes
VT-701-SP	MBR-1 Vac Mode Permeate Setpoint	-0.1 bar	-0.2 - 0 bar	Open		
VT-701-HFSP	MBR-1 Vac Mode Permeate High Flux Setpoint	-0.15 bar	-0.2 - 0 bar	Open		
VTAH-701-SP	MBR-1 Vacuum Transmitter Alarm High	-0.3 bar	-0.3 - 0 bar	Open	Y	
VT-702-SP	MBR-2 Vac Mode Permeate Setpoint	-0.1 bar	-0.2 - 0 bar	Open		
VT-702-HFSP	MBR-2 Vac Mode Permeate High Flux Setpoint	-0.15 bar	-0.2 - 0 bar	Open		

© 2017 by **newterra**, ltd.
All rights reserved. No part of this document may be reproduced or transmitted in any form or by any means, electronic, mechanical, photocopying, recording, or otherwise, without prior written permission of **newterra** ltd.

newterra ltd.
1291 California Avenue, Brockville, ON K6V 5W3
(800) 420-4056 / www.newterra.com

Tag	Description	Factory Setpoint	Setpoint Range and Units	Setpoint Change Control	Alarm setpoint (Y/N)	Notes
VTAH-702-SP	MBR-2 Vacuum Transmitter Alarm High	-0.3 bar	-0.3 - 0 bar	Open	Y	
FT-701-SP	MBR-1 Flow Mode Permeate Setpoint	60 GPM	0-200	Open		
FT-701-HFSP	MBR-1 Flow Mode Permeate High Flux Setpoint	75%	0-200	Open		
FTAH-701-SP	MBR-1 Flow Transmitter Alarm High Setpoint	100	0-200	Open	Y	
FTAL-701-SP	MBR-1 Flow Transmitter Alarm Low Setpoint	10	0-200	Open	Y	
FT-702-SP	MBR-2 Flow Mode Permeate Setpoint	60 GPM	0-200	Open		
FT-702-HFSP	MBR-2 Flow Mode Permeate High Flux Setpoint	75GPM	0-200	Open		
FTAH-702-SP	MBR-2 Flow Transmitter Alarm High Setpoint	100	0-200	Open	Y	
FTAL-702-SP	MBR-2 Flow Transmitter Alarm Low Setpoint	10	0-200	Open	Y	
BKWSH-TIME-SP	Backwash Time Setpoint	120s	0-999 s	Open		
RELAX-SP	Number of Relaxes Before Backwash	6	0-999	Open		
PERM-PULL-TIME	Permeate Pull Time	9m	0-30m	Open		
RELAX-TIME	Membrane Relax Time	60s	0-999 s	Open		
FLUX-SP	High Flux Setpoint	75%	50-100%	Open		Reading based on LT-301
SLUDGE-WASTE-TOD	Time of Day to Start Sludge Wasting	23hr	0-23 hr	Open		
SLUDGE-WASTE-TIME	Duration of Sludge Wasting	60m	0-1000m	Open		

© 2017 by **newterra**, ltd.
All rights reserved. No part of this document may be reproduced or transmitted in any form or by any means, electronic, mechanical, photocopying, recording, or otherwise, without prior written permission of **newterra** ltd.

newterra ltd.
1291 California Avenue, Brockville, ON K6V 5W3
(800) 420-4056 / www.newterra.com

5.10.4 Logic

Tag	Description	Control Logic	Alarm Interactions	Output Type	Hour Meter
B-601	MBR Tank Blower	The membrane tank blower will be ON when the System is in Run. And the MBR 1 is enabled	MBR-1 Disabled	Discrete	Y
B-602	MBR Tank Blower	The membrane tank blower will be ON when the System is in Run. And the MBR 2 is enabled	MBR-2 Disabled	Discrete	Y
P-701	Permeate Transfer Pump	The permeate pump will be ON when MBR-1 is Enabled & level switch LSH-601 = Active & LT-501 > LT501-PERM-SP The Pump will perform a PULL/RELAX Cycle. The pump will be ON for the duration specified by the PERM-PULL-TIME setpoint and then be OFF for the duration of the RELAX-TIME setpoint. This will generate one PULL/RELAX Cycle. The VFD Speed of the pump will operate based on the following: In FLOW MODE: The VFD Speed will operate based on a PID loop to maintain the flowrate setpoint FT-701-SP. IF the vacuum transmitter VT-701 > -0.25 bar then the pump will switch to VAC MODE. IF the level transmitter LT-301 > FLUX-SP, the pump will run via PID loop to maintain a high flow setpoint FT-701-HFSP In VAC MODE: The VFD Speed will operate based on a PID loop to maintain the vacuum setpoint VT-701-SP. IF the level transmitter LT-301 > FLUX-SP, the pump will run via PID loop to maintain a high flow setpoint VT-701-HFSP P-701 will be OFF if P-501 is OFF.	VFDA-701: Pump Will be Off	Communication	Y

© 2017 by **newterra**, ltd.
All rights reserved. No part of this document may be reproduced or transmitted in any form or by any means, electronic, mechanical, photocopying, recording, or otherwise, without prior written permission of **newterra** ltd.

newterra ltd.
1291 California Avenue, Brockville, ON K6V 5W3
(800) 420-4056 / www.newterra.com

Tag	Description	Control Logic	Alarm Interactions	Output Type	Hour Meter
P-702	Permeate Transfer Pump	The permeate pump will be ON when MBR-2 is Enabled & level switch LSH-602 = Active & & LT-501 > LT501-PERM-SP The Pump will perform a PULL/RELAX Cycle. The pump will be ON for the duration specified by the PERM-PULL-TIME setpoint and then be OFF for the duration of the RELAX-TIME setpoint. This will generate one PULL/RELAX Cycle. The VFD Speed of the pump will operate based on the following: In FLOW MODE: The VFD Speed will operate based on a PID loop to maintain the flowrate setpoint FT-702-SP. IF the vacuum transmitter VT-702 > -0.25 bar then the pump will switch to VAC MODE. IF the level transmitter LT-301 > FLUX-SP, the pump will run via PID loop to maintain a high flow setpoint FT-702-HFSP In VAC MODE: The VFD Speed will operate based on a PID loop to maintain the vacuum setpoint VT-702-SP. IF the level transmitter LT-301 > FLUX-SP, the pump will run via PID loop to maintain a high flow setpoint VT-702-HFSP P-702 will be OFF if P-502 is OFF.	VFDA-703: Pump Will be Off	Communication	Y
SV-801	Clean In Place Tank Fill Solenoid Valve	The Solenoid Valve SV-801 will be Open (Energized) when level switch LSH-801 is InActive and MBR-1 OR MBR-2 are not in Backwash. The Solenoid Valve SV-801will be Closed (De-Engergized) when LSH-801 is Active or IF MBR-1 OR MBR-2 are in Backwash.		Discrete	
MV-701	Backwash Actuated Valve	A Backwash is enabled once the permeate pumps for MBR-1 reach the number of PULL/RELAX cycles designated by the RELAX-SP on the HMI.the The actuated valve will be OPEN when MBR-1 is in Backwash and level switch LSH-801 is Active. If MBR-2 is already in backwash, MBR-1 will complete 1 additional PULL/RELAX Cycle before starting a Backwash Cycle.		Discrete	
MV-702	Backwash Actuated Valve	A Backwash is enabled once the permeate pumps for MBR-2 reach the number of PULL/RELAX cycles designated by the RELAX-SP on the HMI. the The actuated valve will be OPEN when MBR-2 is in Backwash and level switch LSH-801 is Active. If MBR-2 is already in backwash, MBR-1 will complete 1 additional PULL/RELAX Cycle before starting a Backwash Cycle.		Discrete	

© 2017 by **newterra**, ltd.
All rights reserved. No part of this document may be reproduced or transmitted in any form or by any means, electronic, mechanical, photocopying, recording, or otherwise, without prior written permission of **newterra** ltd.

newterra ltd.
1291 California Avenue, Brockville, ON K6V 5W3
(800) 420-4056 / www.newterra.com

Tag	Description	Control Logic	Alarm Interactions	Output Type	Hour Meter
P-801	Backwash Transfer Pump	The backwash transfer pump will be ON when MBR-1 OR MBR-2 are in Backwash and level switch LSH-801 is Active The backwash transfer pump will be OFF after the duration of BKWSH-TIME-SP OR level switch LSL-801 becomes InActive.		Discrete	

5.10.5 Alarms

Alarm	Alarm Description	Actuation Control	Delay	Email Notification (Y)	Self Resetting (Y)
LAHH-601	Level Alarm High High	LSHH-601 = Active	5s		Y
LAHH-602	Level Alarm High High	LSHH-602 = Active	5s		Y
PAL-601	Pressure Alarm Low	PSL-601 = InActive	5s		Y
PAL-602	Pressure Alarm Low	PSL-602 = InActive	5s		Y
VTAH-701	Vacuum Transmitter Alarm High	VT-701 < VTAH-701-SP	5s		Y
VTAH-702	Vacuum Transmitter Alarm High	VT-702 < VTAH-702-SP	5s		Y
VFDA-701	VFD Fault				
VFDA-702	VFD Fault				
FTAH-701	Flow Transmitter Alarm High	FIT-701 > FTAH-701-SP	60s		
FTAL-701	Flow Transmitter Alarm Low	FIT-701 < FTAL-701-SP	60s		
FTAH-702	Flow Transmitter Alarm High	FIT-702 > FTAH-702-SP	60s		
FTAL-702	Flow Transmitter Alarm Low	FIT-702 < FTAL-702-SP	60s		

© 2017 by **newterra**, ltd.
All rights reserved. No part of this document may be reproduced or transmitted in any form or by any means, electronic, mechanical, photocopying, recording, or otherwise, without prior written permission of **newterra** ltd.

newterra ltd.
1291 California Avenue, Brockville, ON K6V 5W3
(800) 420-4056 / www.newterra.com

5.10.6 Blower Control

	**Blower for scouring air must be on 24/7, as failure of air supply can lead to clogging of the air diffusers and membranes.**

5.10.7 CIP Cleaning

Note: At design flow when the membrane discharge vacuum exceeds 0.2 bar (80" WC), as transmitted by VT-701, VT-702 and indicated locally at PI-701, PI-702, it is necessary to take the membrane tank offline for CIP cleaning. See **Section 7** for instructions on CIP cleaning.

© 2017 by **newterra**, ltd.
All rights reserved. No part of this document may be reproduced or transmitted in any form or by any means, electronic, mechanical, photocopying, recording, or otherwise, without prior written permission of **newterra** ltd.

newterra ltd.
1291 California Avenue, Brockville, ON K6V 5W3
(800) 420-4056 / www.newterra.com

5.11 Sludge Holding Tank Module (TNK-901)

A schematic of the Sludge Holding Tanks is located on the INLET HMI screen is shown below.

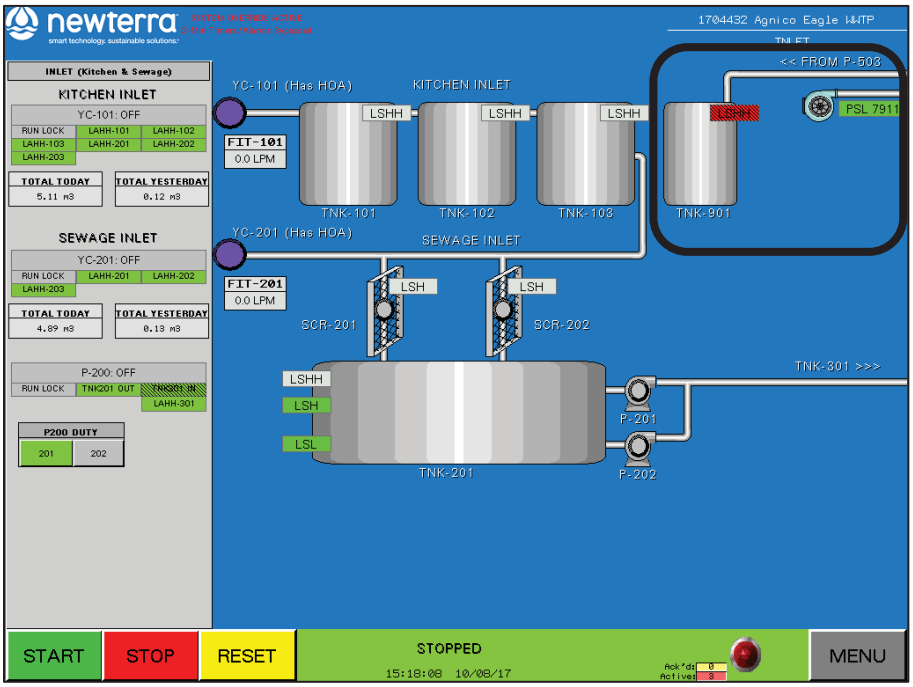

5.11.1 Function

To store and thicken waste activated sludge for later disposal off site.

In order to maintain an optimal concentration of mixed liquor suspended solids (MLSS) (typically 10 g/L), a portion of the mixed liquor is periodically wasted by pumping from the Aeration Tank (TNK-501) to the sludge holding tank (TNK-901). Wasted sludge in the sludge holding tank is thickened by decanting supernatant back to the screen tank. Thickened sludge accumulates in the sludge holding tanks until it is eventually pumped out for disposal.

5.11.2 Inputs

Tag	Description	Input Type
LSHH-901	Level Switch High High	Discrete N.C.

© 2017 by **newterra**, ltd.
All rights reserved. No part of this document may be reproduced or transmitted in any form or by any means, electronic, mechanical, photocopying, recording, or otherwise, without prior written permission of **newterra** ltd.

newterra ltd.
1291 California Avenue, Brockville, ON K6V 5W3
(800) 420-4056 / www.newterra.com

5.11.3 Setpoints

Tag	Description	Factory Setpoint	Setpoint Range and Units	Setpoint Change Control	Alarm setpoint (Y/N)
P503 WASTE HOUR	When P-503 will waste	12pm	0-23		
P503 WASTE SP	Time that P-503 wastes for	10min	0-99		

5.11.4 Logic

Tag	Description	Control Logic	Alarm Interactions	Output Type	Hour Meter	HOA Control
P-503	Waste Activated Sludge Pump	The waste activated sludge pump will be ON at time of day setting SLUDGE-WASTE-TOD IF level switch LT501-SLUDGE-SP	LAHH-901: Pump will be OFF	Discrete		HOA

5.11.5 Alarms

Alarm	Alarm Description	Actuation Control	Delay	Self Resetting (Y)
LAHH-901	Level Alarm High High	LSHH-901 = Active	5s	Y

© 2017 by **newterra**, ltd.
All rights reserved. No part of this document may be reproduced or transmitted in any form or by any means, electronic, mechanical, photocopying, recording, or otherwise, without prior written permission of **newterra** ltd.

newterra ltd.
1291 California Avenue, Brockville, ON K6V 5W3
(800) 420-4056 / www.newterra.com

5.12 Setpoints

The system Setpoints can be accessed from the SETPOINTS menu option.

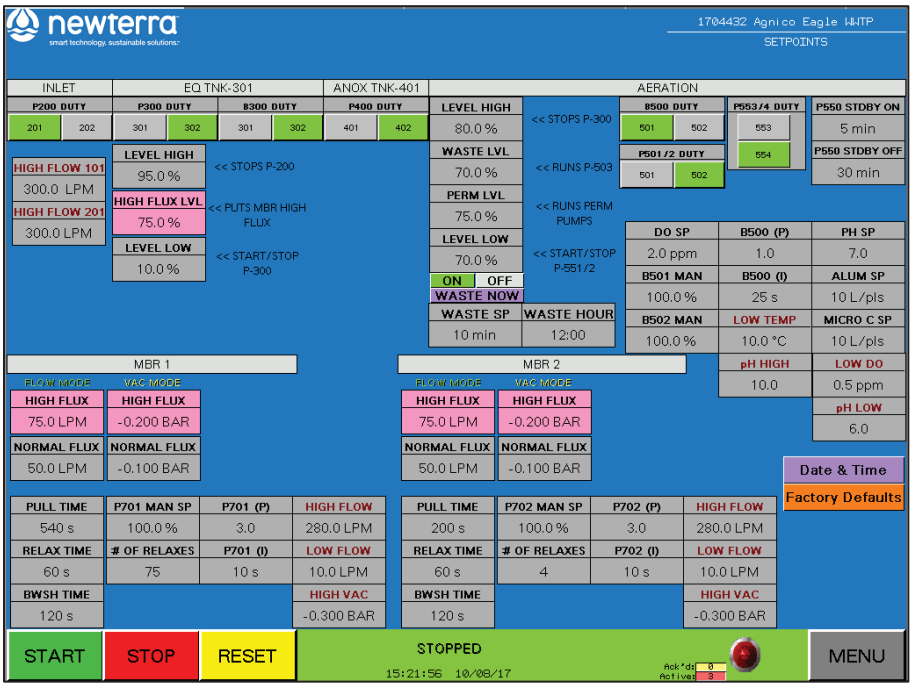

5.12.1 PLC Date & Time

The PLC Time and Date can be adjusted from the SETPOINTS HMI screen. Below is an example of the screen that will appear for the operator.



© 2017 by **newterra**, ltd.
All rights reserved. No part of this document may be reproduced or transmitted in any form or by any means, electronic, mechanical, photocopying, recording, or otherwise, without prior written permission of **newterra** ltd.

newterra ltd.
1291 California Avenue, Brockville, ON K6V 5W3
(800) 420-4056 / www.newterra.com

5.12.2 Factory Defaults

The Factory Defaults (setpoints) can be restored to the WWTP by pressing the Factory Default button from the SETPOINTS HMI screen. A confirmation screen will appear to the operator. See below. A listing of WWTP Factory Default values (setpoints) are at Appendix K.



5.13 Statistics

The system statistics can be accessed from the STATS menu option. Influent and Process Flow totals as well as motor run times are provided at this screen.

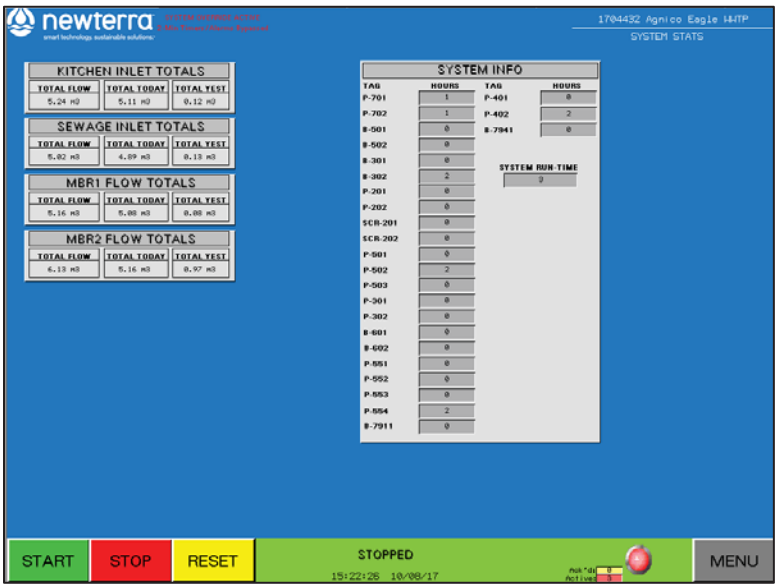

© 2017 by **newterra**, ltd.
All rights reserved. No part of this document may be reproduced or transmitted in any form or by any means, electronic, mechanical, photocopying, recording, or otherwise, without prior written permission of **newterra** ltd.

5.14 PLC Status

The system PLC status can be accessed from the SYSTEM INFO menu option.

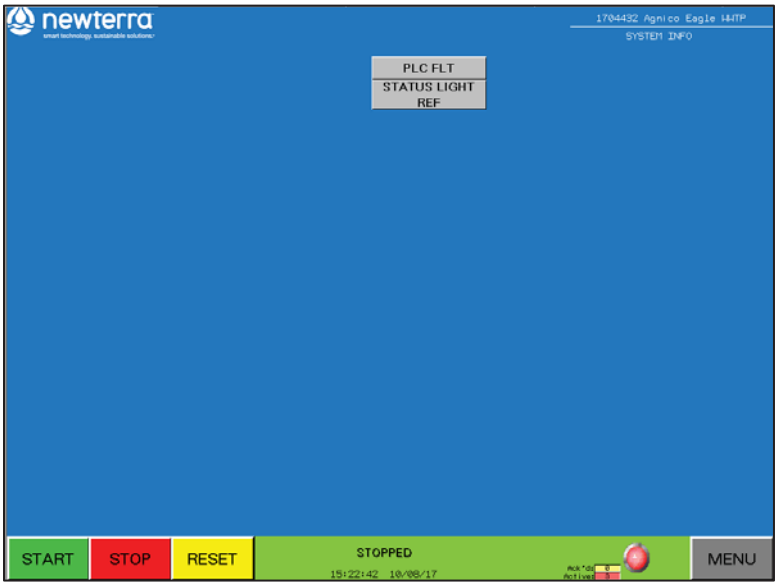

© 2017 by **newterra**, ltd.
All rights reserved. No part of this document may be reproduced or transmitted in any form or by any means, electronic, mechanical, photocopying, recording, or otherwise, without prior written permission of **newterra** ltd.

newterra ltd.
1291 California Avenue, Brockville, ON K6V 5W3
(800) 420-4056 / www.newterra.com

© 2017 by **newterra**, ltd.
All rights reserved. No part of this document may be reproduced or transmitted in any form or by any means, electronic, mechanical, photocopying, recording, or otherwise, without prior written permission of **newterra** ltd.

newterra ltd.
1291 California Avenue, Brockville, ON K6V 5W3
(800) 420-4056 / www.newterra.com

6.0 PLANT START-UP, OPERATING GUIDELINES AND MONITORING

6.1 MBR Plant Start-Up

6.1.1 Mechanical & Electrical Start-up Procedure

- If the system is being started for the first time, work your way through the **newterra Commissioning Checklist** presented in **Appendix C** of this O&M Manual.
- If the kill switch on the panel (red mushroom shaped button) is pulled out, then push it in to confirm that the MBR system is off.
- Push the reset button on the operator interface to reset all alarms.
- Make sure there are no obstructions over any moving parts, for example a jacket laying on a belt drive.
- Put all HAND/OFF/AUTO switches to AUTO **(A)** mode.
- Pull the kill Button (red button on panel) out to start the process.
- Push the start button on the Operator Interface.

6.1.2 Process Start-up

NOTE: Sludge from a nearby wastewater treatment plant can be used to start up another system if the treatment process is similar (i.e. nitrification, de-nitrification etc.).

1. Introduce the seed bacteria and fill the aeration tank according to one of the following two methods specific to the type of seed used:

Sludge Seed

a. Calculate the volume of seed sludge required to ensure that there is a minimum of 3,000 mg/L MLSS in the MBR system. The volume of seed sludge required can be calculated with the following formula.

$$V_s = \frac{3000 \times V_t}{MLSS_s}$$

Vs: Total volume of seed sludge for MBR system (m3)
Vt: Total effective volume of process tanks in MBR system (see section 3 of the manual) (m3)
MLSSs: MLSS concentration of seed sludge from a treatment system with similar processes (nitrification, de-nitrification etc.) (mg/L)

© 2017 by **newterra**, ltd.
All rights reserved. No part of this document may be reproduced or transmitted in any form or by any means, electronic, mechanical, photocopying, recording, or otherwise, without prior written permission of **newterra** ltd.

newterra ltd.
1291 California Avenue, Brockville, ON K6V 5W3
(800) 420-4056 / www.newterra.com

Arrange for delivery of fresh seed sludge from an activated sludge system employing a suspended growth type process. If it is possible, obtain seed sludge from a facility treating similar wastewater and operated with similar processes (nitrification etc).

b. If possible drain the water used for clean water testing from the aeration tank. This will minimize dilution of the seed bacteria.

c. Pump seed sludge through the screen module to remove any debris that might damage the membranes. This can usually be done by slowly dumping the seed into the closest lift station. Ensure screen process and feed pumps to aeration tank are in “AUTO” mode.

d. If a primary clarifier is included and there is a screen between the aeration tank and membrane tank: Add seed sludge directly to the aeration tank.

e. Once aeration tank liquid level has filled above 30% with seed sludge, turn aeration tank blowers to “AUTO” mode.

f. Continue adding remaining seed sludge.

g. Once all seed sludge has been pumped into the aeration tank take note of the liquid level. If the aeration tank is full then continue to Step 2. If the aeration tank is not full then continue to fill the aeration tank 15% of its total volume per day using raw wastewater. This is to avoid shocking the bacteria with excess BOD, reducing the risk of forming foam causing bacteria and reducing the impact of un-metabolized BOD on the membranes.

Dry Seed

a. If possible drain the water in the aeration tank used for clean water test. This will minimize dilution of the seed bacteria.

b. Turn screen module and feed pump(s) to aeration tank to “AUTO”.

c. Allow aeration tank to fill to 30% with raw wastewater, and then turn off screen module and feed pump(s).
d. Remove the access cover from the aeration tank.

e. Adjust the DO probe and pH probe positioning in the aeration tank until both probes are submerged in the wastewater.

f. Turn aeration tank blowers to “HAND” to ensure vigorous mixing when adding dry seed bacteria. Note: When set to “HAND” the blowers will only run for 2 minutes. If this time runs out before all the dry bacteria have been added, then the blowers must be set to “OFF” and then back to “HAND”.

© 2017 by **newterra**, ltd.
All rights reserved. No part of this document may be reproduced or transmitted in any form or by any means, electronic, mechanical, photocopying, recording, or otherwise, without prior written permission of **newterra** ltd.

newterra ltd.
1291 California Avenue, Brockville, ON K6V 5W3
(800) 420-4056 / www.newterra.com

g. Slowly add 25% of the supplied heterotrophic dry seed bacteria through the view port). The following quantities in Table 1 are typically shipped with standard camp systems, if the current system is not on this list please consult with a Process Engineer:

Table 1 - Seed bacteria quantities per standard camp model

Standard Camp Model	Dry Bacteria (Bioremove 5190) (lbs)	Nitrifying Bacteria (Bioremove 5895) (lbs)
50 Man	50	10
100 Man	50	10
300 Man	75	20
600 Man	75	20
1000 Man	100	30

h. Turn aeration tank blowers to “AUTO”.

i. Continue adding raw wastewater and dry seed bacteria according to the schedule outlined in Table 2 below:

Table 2 - Dry seed and wastewater dosing schedule

Day	Daily Wastewater Flowrate (% of Aeration Tank Volume)	Aeration Tank Fill Level (%)	Dry (heterotrophic) Seed to be Added (% of Total Supplied)
1	30%	30%	25%
2	10%	40%	20%
3	10%	50%	15%
4	15%	65%	10%
5	15%	80%	10%
6	15%	95%	10%
7	5%	100%	10%

j. As the aeration tank fills, continue to adjust the positioning of the DO and pH probes accordingly.

2. Once the aeration tank is full (liquid level >80%) the remaining equipment in the system can be started. Turn all equipment (except sludge wasting/processing equipment) to “AUTO”. Set the permeate flow rate at a value to achieve a flux of 6.5 lmh initially.

   Convert flux (lmh) to flow rate (lpm) as follows:

$$Flow\ rate\ (lpm) = \frac{Flux\ (lmh) * membrane\ surface\ area\ (m^2)}{60\ \left(\frac{min}{h}\right)}$$

   **** Verify the membrane cassette model – MCXL2 = 8 m^2 of surface area

3. Continue increasing the flux rate everyday according to the schedule in below.

© 2017 by **newterra**, ltd.
All rights reserved. No part of this document may be reproduced or transmitted in any form or by any means, electronic, mechanical, photocopying, recording, or otherwise, without prior written permission of **newterra** ltd.

newterra ltd.
1291 California Avenue, Brockville, ON K6V 5W3
(800) 420-4056 / www.newterra.com

NOTE: Day 1 refers to the day that the aeration tank is full. If dry seed was used this will be day 7. If nitrifying bacteria were provided begin dosing into the aeration tank according to the schedule in below.

Flux and nitrifying bacteria dosing schedule

Day	Flux (lmh)	Nitrifying Bacteria to be Added (% of Total Provided) [If Provided]
1	6.5	20%
2	6.9	20%
3	7.4	20%
4	7.9	20%
5	8.4	20%
6	9.0	-
7	9.6	-
8	10.2	-
9	10.9	-
10	11.6	-
11	12.4	-
12	13.2	-
13	14.1	-
14	15.1	-
15	16.1	-
16	17.1	-
17	18.0	-
18	18.0	-
19	18.0	-
20	18.0	-
21	18.0	-
22	18.0	-
23	18.0	-

4. Foaming may occur during start-up, which is normal. Foaming can be caused by a number of factors. Typically during start-up foaming is a result of a high food (BOD) to microorganism (F/M) ratio. This promotes the growth of long chained filamentous bacteria that increases the surface tension resulting in strong, long lasting foam. As the quantity of biomass builds, and the sludge age increases the normal non-filamentous bacteria will dominate, and the foam should subside. In the meantime foaming can be addressed by spraying water, food based defoamer (silicone based defoamer is strictly prohibited) addition, or aeration minimization in the aeration tank. Check for signs of toxicity and excessive fat, oil and grease.

5. If a defoamer is required, consult with a process engineer for recommendation of an acceptable antifoaming agent and dosing quantities.

© 2017 by **newterra**, ltd.
All rights reserved. No part of this document may be reproduced or transmitted in any form or by any means, electronic, mechanical, photocopying, recording, or otherwise, without prior written permission of **newterra** ltd.

newterra ltd.
1291 California Avenue, Brockville, ON K6V 5W3
(800) 420-4056 / www.newterra.com

6. Monitor the pH throughout the start-up process. An observed decline in pH is an indication that the nitrifying bacteria are beginning to remove ammonia. It is important, however, that the pH does not drop too low, as this can cause biological activity to be inhibited, which can then result in severe membrane fouling. During start-up it is beneficial to operate at a pH between 7.0 and 7.5 to ensure optimal performance and growth of bacteria.

   The pH should be maintained between 6.5 and 8.0 during normal operation.

ATTENTION	**It is advisable to start the MBR system with a minimum MLSS concentration of 3,000 mg/L to minimize foaming. The seed sludge should come from a plant which has a screen of 2 mm. It is critical to screen the seed sludge with 2 mm perforated screen prior to seeding for membrane protection.**

ATTENTION	**No untreated wastewater should enter the membrane tank. Make sure wastewater is completely biologically treated before it gets to the membrane tank**

© 2017 by **newterra**, ltd.
All rights reserved. No part of this document may be reproduced or transmitted in any form or by any means, electronic, mechanical, photocopying, recording, or otherwise, without prior written permission of **newterra** ltd.

newterra ltd.
1291 California Avenue, Brockville, ON K6V 5W3
(800) 420-4056 / www.newterra.com

6.2 MBR System Operating Guidelines and Monitoring

6.2.1 Operating Guidelines

This section outlines the operating conditions that are required for proper wastewater treatment, and longevity of the membranes. For instructions on how to control the system using the touch screen HMI, see **Section 5**. The operators are expected to run the MBR system at all times in accordance with the maintenance, operational procedures and details specified in this manual. The following two tables provide operating parameters that can be easily maintained, and define the range of operating values.

There may be situations where the system needs to operate outside of the conditions covered in this manual. If these conditions develop, please consult newterra ltd. to discuss operation and methods to optimize performance.

Generally, the following points can be used to operate the MBR system properly:

- The MBR system is designed to treat wastewater with specified influent characteristics.
- Never operate the MBR tank below the minimum membrane submerged level. It is necessary to maintain a minimum of 250 mm liquid level above the membrane modules to ensure they are wet at all times and to allow for proper filtration.
- Always supply the required amount of air for scouring to the membrane module.
- Always filter wastewater at or below design flow rate.
- Periodically, relax the membranes by ending filtration while allowing the membrane aeration scour to operate continuously and initiate backwash operation during membrane relaxation (default relaxation mode preset in PLC - permeation continues for 9 min and stops for 1 min).
- Always operate the MBR in accordance with the parameters listed in the following tables.
- Clean the membranes in-place with a dilute chemical in accordance with **Section 7** of the O&M Manual.

© 2017 by **newterra**, ltd.
All rights reserved. No part of this document may be reproduced or transmitted in any form or by any means, electronic, mechanical, photocopying, recording, or otherwise, without prior written permission of **newterra** ltd.

newterra ltd.
1291 California Avenue, Brockville, ON K6V 5W3
(800) 420-4056 / www.newterra.com

6.2.1.1 Membrane Filtration Operational Conditions

Parameter	Recommended Value	Notes
Diffuser Relaxation	10 minutes/day	Effluent filtration must be turned off, blower shuts down for 10 mins/day
Relax Time	1 min/10 min	Filtration must be off and blower are operating continuously
Backwashing	48 cycles	Built-in backwash mode during relaxation mode
In-situ Chemically Enhanced Backwash (CEB)	500 ppm as NaOCl	Requires 3 L to fully backwash one MCXL cassette. Frequency of CEB may vary. Refer to Membrane Cleaning Section 7.3 for cleaning procedure.
TMP	< 0.2 bar (2.9 psi)	Membranes to be cleaned once the TMP exceeds 0.2 bar (2.9 psi)

© 2017 by **newterra**, ltd.
All rights reserved. No part of this document may be reproduced or transmitted in any form or by any means, electronic, mechanical, photocopying, recording, or otherwise, without prior written permission of **newterra** ltd.

newterra ltd.
1291 California Avenue, Brockville, ON K6V 5W3
(800) 420-4056 / www.newterra.com

6.2.1.2 MBR – Recommended Biological Operational Conditions

Parameter	Recommended	Range	Notes
MLSS (mg/L)	10,000	8,000 – 15,000	Never operate the membranes if MLSS < 3,000 mg/l. Sludge wasting should be undertaken as required to maintain target MLSS
Temperature (°C)	15 - 35	10 – 35	Avoid sudden changes in temperature. Minimum operating temperature is 15 °C
pH (s.u.)	6.8 - 8.5	6.0 – 9.0	Membrane module can handle a change in pH, however it is recommended to keep pH between 6.8 - 8.5
Aeration Tank, DO (mg/L)	≥ 2.0	1.0 – 8.0	This can be maintained by adjusting the volume of air supplied to the aeration tank
Viscosity (mPa-s)	Not applicable	0 – 300	–
Aeration Tank to Anoxic Tank Recirculation	400%	200 – 500%*	Only applies if an anoxic tank is included. *The recycle ratio is a function of effluent NO_3-N/TN limit
Membrane Tank to Aeration Tank Recirculation	400%	200 – 600%	–
F:M (kg BOD/kg MLSS/d)	0.1	0.03 – 0.2	F:M = [Flow (m^3/d) x BOD conc (mg/l)] / [Process volume (m^3) x MLSS conc (mg/l)]
F:M (kg COD/kg MLSS/d)	0.15	0.05 – 0.3	F:M = [Flow (m^3/d) x BOD conc (mg/l)] / [Process volume (m^3) x MLSS conc (mg/l)]
SRT	> 15	12 – 50	

Process Troubleshooting Guide is presented in Section 7 of this O&M Manual.

© 2017 by **newterra**, ltd.
All rights reserved. No part of this document may be reproduced or transmitted in any form or by any means, electronic, mechanical, photocopying, recording, or otherwise, without prior written permission of **newterra** ltd.

newterra ltd.
1291 California Avenue, Brockville, ON K6V 5W3
(800) 420-4056 / www.newterra.com

6.2.2 Sampling

To ensure accurate system monitoring and the validity of laboratory test data, samples must be collected as outlined below. These are only recommended guidelines. It is imperative that scheduled testing protocols are performed in compliance with local regulatory agency requirements. Composite samples of the MBR systems may need to be sent out to a certified laboratory for testing, based on the local regulatory requirements.

Monitoring and Testing Requirements

Parameter***	Influent	Aeration Tank	Membrane Tank	MBR Effluent
Flow rate	D (PLC)			D (PLC)
Fat, Oil and Grease (FOG)	AR			AR
Alkalinity	AR			
Biological Oxygen Demand (BOD)	W			W
Total Suspended Solids (TSS)	W			W
Total Kjeldahl Nitrogen / Total Nitrogen (TKN / TN)	M			AR
Ammonia Nitrogen(NH_4-N)				AR
Nitrate Nitrogen (NO_3-N)				AR
Total Phosphorus (TP)	W			W
Mixed Liquor Suspended Solids (MLSS)			W	
Mixed Liquor Volatile Suspended Solids (MLVSS)			AR*	
Temperature		D (PLC)		
pH	AR	D (PLC)		W
Dissolved Oxygen (DO)		D (PLC)		
Filterability			TW	
Turbidity				AR**
Fecal Coliform / *E-Coli*				W

Legend: D = daily; W = weekly; TW = three times weekly; M = monthly; AR = as required.
* If MLVSS /MLSS ratio of a minimum of 0.7 is detected, MLVSS testing can be done periodically, on an “as required” basis.

**The effluent should be routinely checked for any signs of problem. Normally, the effluent is reasonably clear, colourless, and odourless. If the effluent becomes turbid, testing should be carried out required.

© 2017 by **newterra**, ltd.
All rights reserved. No part of this document may be reproduced or transmitted in any form or by any means, electronic, mechanical, photocopying, recording, or otherwise, without prior written permission of **newterra** ltd.

newterra ltd.
1291 California Avenue, Brockville, ON K6V 5W3
(800) 420-4056 / www.newterra.com

*** Explanation and definition of abbreviations, acronyms and terms used in the manual are presented in **Appendix G – Glossary & Terms and Appendix H – Biological Treatment & Monitoring Parameters.**

6.2.2.1 Filterability Test

The objective of the filterability test is to evaluate the condition of the working biomass. This is assessed by measuring the volume of filtrate passing through the filter paper. If filtrate is greater than 10 mL/10 min, then biomass filterability is acceptable; however, if it is less than 10 mL/10 min, modifications to the plant operating condition are required to prevent premature membrane fouling. See the Membrane Fouling Troubleshooting Guidelines table in Section 7.6.1 to determine the cause of the low filterability and how to correct operation to improve the filterability.

Laboratory Glassware and Filter Paper

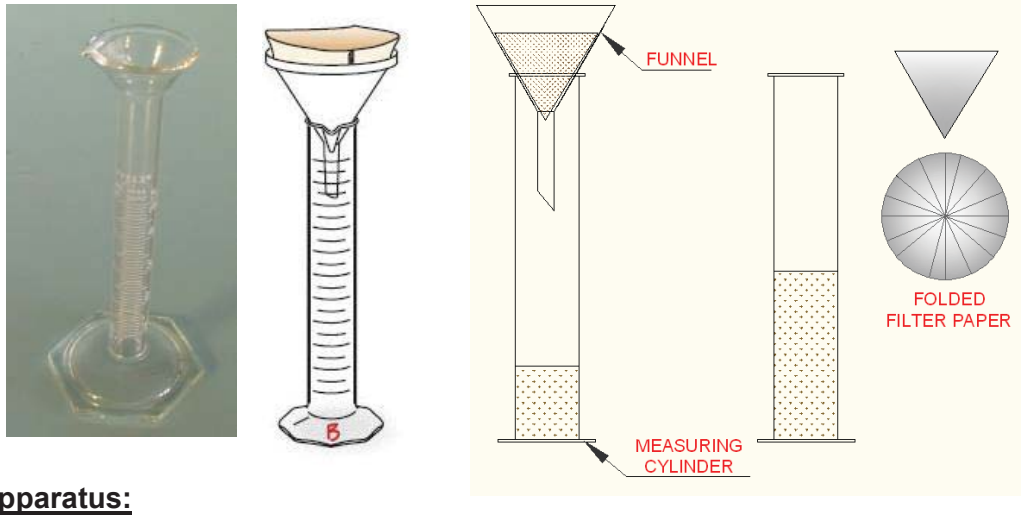

Apparatus:

Filterability Kit is distributed by **newterra ltd (Part # 24146).**

Measurement Procedure:

1. Pleat filter paper by folding in half, quarters etc.
2. Line the funnel with pleated filter paper and place the funnel in the graduated cylinder.
3. Collect 50 mL of activated sludge sample in a beaker and stir.
4. Pour the 50 mL sample into the funnel.
5. Start timer when the first drop of water filtered through the filter paper.
6. After 10 minutes of filtration, record the level of filtrate in the graduated cylinder.

© 2017 by **newterra**, ltd.
All rights reserved. No part of this document may be reproduced or transmitted in any form or by any means, electronic, mechanical, photocopying, recording, or otherwise, without prior written permission of **newterra** ltd.

newterra ltd.
1291 California Avenue, Brockville, ON K6V 5W3
(800) 420-4056 / www.newterra.com

Filterability (FT)	Action	State of urgency
> 10 ml	Excellent, no action req'	
5 - 10 ml	Tweak process operation	
< 5 ml	Process adjustment req	**Contact newterra ltd.**

6.2.3 Suggested Test Equipment for Monitoring

The following test equipment's will assist in the monitoring of the MWWTP but are not provided with the system.

6.2.3.1 Filterability - Laboratory Glassware and Filter Paper

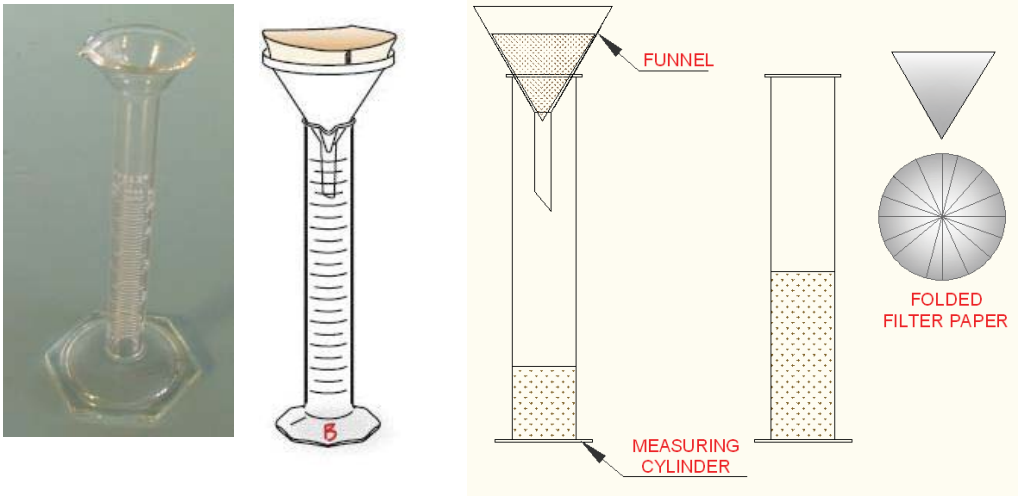

Apparatus:

- Filter paper - AMD Manufacturing, Part Number NO5C 18.5CM or equivalent;
- Funnel (75 mm diameter recommended);
- 50 mL graduated cylinder - Cole-Parmer Graduated Cylinder, Part Number RK-06134-67 or equivalent;
- Beaker (min 100 ml size) and stir rod
- Watch with seconds display or equivalent

© 2017 by **newterra**, ltd.
All rights reserved. No part of this document may be reproduced or transmitted in any form or by any means, electronic, mechanical, photocopying, recording, or otherwise, without prior written permission of **newterra** ltd.

newterra ltd.
1291 California Avenue, Brockville, ON K6V 5W3
(800) 420-4056 / www.newterra.com

6.2.3.2 Turbidity, Phosphorus - Hach DR900 (and reagents)



The hand-held DR 900 allows quick and easy access to most-used testing methods. This colorimeter is waterproof, dustproof and field durable. With an intuitive user interface, easy data transfer abilities, and the ability to test up to 90 of the most commonly tested water methods.

6.2.3.3 DO and pH - Hach HQ40d with probe or Equivalent



Designed for water applications, the Hach HQ40d portable meter is an advanced meter. HQd™ meters connect with smart probes that automatically recognize the testing parameter, calibration history, and method settings to minimize errors and setup time.
Portable meter measures critical water quality parameters - without the need for multiple instruments.
Intuitive user interface for simple operation and accurate results.
Meter kit includes field case, 4 AA batteries, protective meter glove, power adapter, USB/DC power adapter for data transfer, quick-start guide, user manual, and documentation CD.
DO and pH probes required.

© 2017 by **newterra**, ltd.
All rights reserved. No part of this document may be reproduced or transmitted in any form or by any means, electronic, mechanical, photocopying, recording, or otherwise, without prior written permission of **newterra** ltd.

6.2.3.4 Sludge Settling - Settleometer



The ability to observe and measure the rate and characteristics of solids separation is essential to control biological treatment processes that produce sludge.

6.2.3.5 TSS - Aysix model 3150 hand held TSS meter or Equivalent



Portable Suspended Solids Analyser

6.2.3.6 Hach CEL Advanced Wastewater Laboratory



Includes the DR 900 Colorimeter, HQd multi-meter with pH probe, reagent sets, apparatus, illustrated instrument and procedures manuals, and a rugged carrying case

© 2017 by **newterra**, ltd.
All rights reserved. No part of this document may be reproduced or transmitted in any form or by any means, electronic, mechanical, photocopying, recording, or otherwise, without prior written permission of **newterra** ltd.

newterra ltd.
1291 California Avenue, Brockville, ON K6V 5W3
(800) 420-4056 / www.newterra.com

6.2.4 Record Keeping

An essential component of quality control in any facility is sound record keeping. A log book covering the entire treatment system performance should be maintained, updated, and readily accessible to all operators. The log book should be used to record observations, set point alterations, and unusual conditions.

For each wet chemistry parameter analysis, a separate work-sheet has to be prepared. Work-sheet data for at least the previous year should be kept for possible consultation.

The second step in quality control is to train all operators to follow an established procedure for each test. Identical samples should be periodically tested for any parameter by different operators, and the variability among results should be compared. Consistent variability in results may lead to the technique improvement of operators.

Duplicate analysis of a sample should also regularly be done. And, split samples should regularly be sent to an outside accredited laboratory and analysis results should be compared with those done in-house.

In addition to summary sheets, it is highly recommended that data should be entered into prepared Excel spread-sheets. Spread-sheets greatly aid in the data presentation and manipulation, and would be of immeasurable value when report writing is required.

6.2.5 Process Trending

Other than pre-planned process changes or major upsets, process modifications should be based on trends shown in the process data. A trend is nothing more than an indication of real change in a process parameter over time. A trend chart is simply a graph of data being trended.

As the graph changes, upward or downward trends are detectable. Smoothing trends by graphing the 3-, 7-, or 30-day average of the data allows the trend to be shown more clearly. Because the individual data point may be questionable, the actual value of data point are less important compared with the trend regarding the process monitoring.

Trend graphs are a part of the Excel data spread-sheet; the operator can trend and analyse many parameters in just a few minutes in order to assess process performance.
When a trend is identified, its indication to the process can be evaluated, and corrective action may be carried out, if needed. Statistically, the more data points there are in a trend chart, the more reliable the trend.

© 2017 by **newterra**, ltd.
All rights reserved. No part of this document may be reproduced or transmitted in any form or by any means, electronic, mechanical, photocopying, recording, or otherwise, without prior written permission of **newterra** ltd.

7.0 SYSTEM MAINTENANCE

	**ATTENTION: MAINTENANCE SHOULD BE PERFORMED ONLY BY TRAINED PERSONNEL!** **When providing maintenance or cleaning the plant, avoid direct contact with wastewater, organic materials, etc.** **Always wear protective clothing, e.g. waterproof, protective gear, boots, and gloves to keep these materials from body. Wear face and eye protection as required by health & safety protocols and standards, especially when handling chemicals.**

CAUTION: Shut off all electrical power before working on the mechanical or electrical equipment.

The system should be routinely checked for any signs of operational problems. Such problems could include, but are not necessarily limited to, abnormally high peak flows, unpleasant odour, and diffuser clogging, and so on.

7.1 Plant Visual Checks

Noise	During normal operation, there is a uniform humming sound at the plant. In case of an unusual noise, it could be an indication that the blower needs maintenance or repairs.
Smell	The MicroClear™ MBR is an aerobic system. During normal operation, the system has an earthy smell similar to that of a well-maintained compost pile. If other odours are noticed, the aeration process may not be operating or the system has been overloaded. Check the DO manually and the blower to verify proper operation.
Sight	Normally, the effluent is reasonably clear, colourless, and odourless. If the effluent becomes turbid, there is a pin hole in the membrane or a leakage in the piping. Take the unit out of operation and investigate. **Check uniformity of membrane air distribution periodically to ensure air scouring is effective across all membrane plates.**

© 2017 by **newterra**, ltd.
All rights reserved. No part of this document may be reproduced or transmitted in any form or by any means, electronic, mechanical, photocopying, recording, or otherwise, without prior written permission of **newterra** ltd.

newterra ltd.
1291 California Avenue, Brockville, ON K6V 5W3
(800) 420-4056 / www.newterra.com

7.1.1 Air Scouring Patterns in Membrane Tanks

Membrane air scouring check is an essential routine maintenance procedure for **newterra** MBR WWTP to ensure membranes are receiving effective physical cleaning. Air scouring has to be observed for uniformity of bubbling action all across the membrane module/cassette on regular basis.

A visual inspection of the aeration patterns should be performed with the liquid level 2-3" (5 – 7.5 cm) above the top row of membranes and looking thru the tank viewport or inspection opening (see below).



Proper air scouring in membrane tank



Uneven aeration in membrane tank

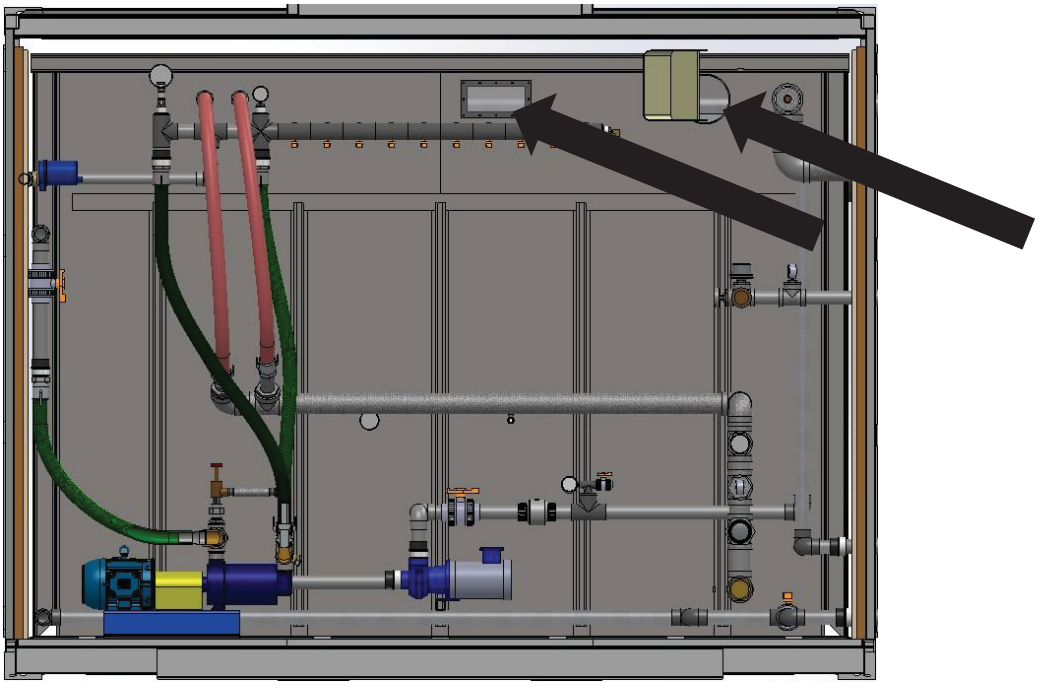

© 2017 by **newterra**, ltd.
All rights reserved. No part of this document may be reproduced or transmitted in any form or by any means, electronic, mechanical, photocopying, recording, or otherwise, without prior written permission of **newterra** ltd.

newterra ltd.
1291 California Avenue, Brockville, ON K6V 5W3
(800) 420-4056 / www.newterra.com

It is easy to observe aeration patterns through the clear window in the membrane tank(s). Operator should note any unusual patterns of air distribution. The visual inspection should also be performed before any membrane cassettes are removed from the membrane tank(s). Operator has to check for:

- damage of air diffusers - if this occurs, empty the tank and fix the diffuser;
- air leakages - if this occurs, tighten up the fittings.

If there is insufficient air scouring, localized dewatering (**clogging, sludging, caking and plugging**) may occur and may in turn lead to membrane fouling.

7.2 Schedule for Routine Operation and Maintenance Checkups

Location	Item	Day	Week	Month	Quarter	Year	Comments
Grease Traps	**TNK-101/102/103** **Grease traps must be cleaned whenever the grease film is approx. 1 foot thick in any tank. An unmaintained grease trap does not stop any grease waste from entering the WWTP system.**						Remove vac out grease film from top of tanks and any food particles from the bottom of tanks.
PROCESS	**Perform visual check**	X					Refer to Plant Visual Checks
	Record permeate flow rate	X					
	Record DO in the aeration tank	X					
	Record pH in the aeration tank	X					
	Record vacuum pressure at the membranes	X					Normal range: 0.07 – 0.25 bar (28” -100” WC)
Note: When the vacuum at the membranes reaches 0.25 bar/3.5 psig/100" WC), it may be necessary to stop the permeation and perform recovery cleaning (please see Section 7.6.1 for membrane fouling troubleshooting and subsection 7.3 for membrane cleaning procedures)							
MECHANICAL & PROCESS	**Inspect membranes and permeate withdrawal system**		**X**				1 hour
	Clean the DO sensor – DO-501 Replace DO probe every second year in accordance with vendor manual.		**X**				In accordance with vendor manual in Appendix E
	Clean and calibration (as required) PH-501					X	In accordance with vendor manual in Appendix E

© 2017 by **newterra**, ltd.
All rights reserved. No part of this document may be reproduced or transmitted in any form or by any means, electronic, mechanical, photocopying, recording, or otherwise, without prior written permission of **newterra** ltd.

newterra ltd.
1291 California Avenue, Brockville, ON K6V 5W3
(800) 420-4056 / www.newterra.com

Location	Item	Day	Week	Month	Quarter	Year	Comments
MECHANICAL & PROCESS	**Inspect and maintain valves & fittings for leaks.**		**X**				
	Membrane in-situ cleaning				X		2-4 hours
	Remove membrane module for mechanical cleaning and inspection					X	Drain membrane tank. Roll out membrane cassette. Remove membranes and inspect. (1 -2 days)
	Remove, inspect and maintain diffusers in aeration and membrane tanks					X	This involves a complete draining of tanks (1-2 days). In accordance with vendor manual in Appendix E
	P-201/202, 301/302, 401/402, 501/502, 553/554, 551/552 – Price Pumps **-General Condition (Temperature, Unusual Noises or Vibrations, Cracks, Leaks, Loose Hardware, Etc.)** **- Pump Performance (Gauges, Speed, Flow)** **-Clean electrical motor and keep ventilation openings clear**				**X**		See vendor manual at Appendix E.
	P-701/702 – Permeate Pumps **-General Condition (Temperature, Unusual Noises or Vibrations, Cracks, Leaks, Loose Hardware, Etc.)** **- Pump Performance (Gauges, Speed, Flow)** **-Clean electrical motor and keep ventilation openings clear** **-Do Not let the pump run dry!**				**X**		See vendor manual at Appendix E.

© 2017 by **newterra**, ltd.
All rights reserved. No part of this document may be reproduced or transmitted in any form or by any means, electronic, mechanical, photocopying, recording, or otherwise, without prior written permission of **newterra** ltd.

newterra ltd.
1291 California Avenue, Brockville, ON K6V 5W3
(800) 420-4056 / www.newterra.com

Location	Item	Day	Week	Month	Quarter	Year	Comments
MECHANICAL & PROCESS	**P-801 – Backwash Pump** **-General Condition (Temperature, Unusual Noises or Vibrations, Cracks, Leaks, Loose Hardware, Etc.)** **- Pump Performance (Gauges, Speed, Flow)**						Submersible pumps contain oils which becomes pressurized and hot under operating conditions - allow 2½ hours after disconnecting before attempting service.
	B-301/302 , 601/602 – EQ and Membrane Tank Blowers **-Clean electrical motor and keep ventilation openings clear** **-Check inlet filter. Clean or replace as necessary.**			**X** **X**			In accordance with vendor manual in Appendix E
	B-501/502 – Aeration Tank Blowers **-Clean electrical motor and keep ventilation openings clear** **- Check V-belts for tightness** **- Check and add fresh oil as required to maintain proper level.** **- Change blower oil.** **-Check inlet filter. Clean or replace as necessary.**		**X** **X**	**X** **X**		**X**	In accordance with vendor manual in Appendix E Semi-annual
	SCR-101/102 **-Inspect inspecting the unit for blockages and general cleaning. Inspection doors are located on the cover guard and screen body. Washing the screen with high water pressure may be necessary.**	**X**					

© 2017 by **newterra**, ltd.
All rights reserved. No part of this document may be reproduced or transmitted in any form or by any means, electronic, mechanical, photocopying, recording, or otherwise, without prior written permission of **newterra** ltd.

Location	Item	Day	Week	Month	Quarter	Year	Comments
	-Check for wear on the brushes and give the unit a thorough cleaning each week will ensure maximum efficiency. **-Check the oil level in the motor. Grease the bearings with the appropriate grease. Making adjustments to the brushes to maximize contact with perforated sheet.**		**X**	**X**			
	P-6101/6102/6103 – Dosing Pumps **-Check the metering diaphragm for damage** **-Check that the hydraulic lines are fixed firmly to the liquid end.** **-Check that the suction valve and discharge valve are fitted tightly.** **-Check the tightness of the entire liquid end - particularly around the leakage hole** **-Check that the flow is correct: Allow the pump to prime briefly - turn the multifunctional switch briefly to "Test"** **-Check that the electrical connections are intact.** **-Check the integrity of the housing.** **-Check that the dosing head screws are tight.**				**X**		In accordance with vendor manual in Appendix E
	Container Fans **-Dust and dirt on the exterior surface of the motor, fan panel and the entire fan wheel should be removed.** **-Inspect of all fasteners to ensure they have not loosened due to vibration.**					**X**	In accordance with vendor manual in Appendix E

© 2017 by **newterra**, ltd.
All rights reserved. No part of this document may be reproduced or transmitted in any form or by any means, electronic, mechanical, photocopying, recording, or otherwise, without prior written permission of **newterra** ltd.

newterra ltd.
1291 California Avenue, Brockville, ON K6V 5W3
(800) 420-4056 / www.newterra.com

Location	Item	Day	Week	Month	Quarter	Year	Comments
	Container Heaters **Once a year, remove the dust accumulation inside the heater using a vacuum cleaner or compressed air. Cleaning should be done while the heater is disconnected from the supply circuit.**					**X**	In accordance with vendor manual in Appendix E
ELECTRICAL	**Check electrical leads**				X		
	Check panel fan filter and replace/clean as necessary.			X			
	Inspect and maintain breakers, fuses, resets and anodes			X			
	Check motor mounting bolts			X			
	Clean dust away from electric motor			X			
	Check PLC and control panel functionality		X				



All connections (hoses, hose clamps, camlocks) have to be checked periodically (on a monthly basis) to make sure all of them are in good condition with no leaks.

© 2017 by **newterra**, ltd.
All rights reserved. No part of this document may be reproduced or transmitted in any form or by any means, electronic, mechanical, photocopying, recording, or otherwise, without prior written permission of **newterra** ltd.

newterra ltd.
1291 California Avenue, Brockville, ON K6V 5W3
(800) 420-4056 / www.newterra.com

7.3 MBR Membrane Cleaning

7.3.1 Membrane In-situ Chemically Enhanced Backflush (CEB)



Chemical cleaning is only to be carried out by qualified and trained personnel! Chemicals can lead to serious injuries. Always wear personal protective equipment (PPE) when handling chemicals! Obey the chemical safety handling procedure as listed in the Material Safety Data Sheets.

It is recommended that in-situ CEB be carried out before the TMP exceeds 0.25 bar (or permeability drops rapidly to 50 LMH/bar) This is typically done once every couple weeks/months depending on biomass characteristics and system operating condition.

On certain occasions, membrane module/cassette may need to be physically inspected for membrane integrity if membrane permeability performance is not recovered after the cleaning (i.e., suspect of membrane deterioration); please refer to subsection **7.3.3**.



The maximum backflush pressure of MicroClear™ MCXL filter is 0.1 bar or equivalent to a 100 cm water line. Only use gravity force to perform the backflush.

Note: Membrane have a maximum active chlorine tolerance of 100,000 ppm.h.

For better cleaning performance, it is recommended:

- Potable water (permeate is acceptable if potable water is unavailable)
- Water temperature is above 20 ^{0}C (better cleaning efficiency if water temperature ranges from 20 to 30 ^{0}C)

© 2017 by **newterra**, ltd.
All rights reserved. No part of this document may be reproduced or transmitted in any form or by any means, electronic, mechanical, photocopying, recording, or otherwise, without prior written permission of **newterra** ltd.

7.3.1.1 Procedure – Backwash Solution Preparation

Note: It is recommended that only one membrane module at a time be cleaned (backwash).

Prepare the backwash solution as follows:

1) If backwash tank TNK-801 is empty:
    a. Ensure membrane is enabled and pulling, and turn SV-801 solenoid valves on hand ("H") until backwash tank is filled with required volume for chemical backwash (3L per cassette X 20 cassettes per module = 60 L OR approx. 1/4 capacity of TNK-801). Note TNK-801 capacity is 272L.
    b. Turn SV-801 series solenoid valves off ("O")

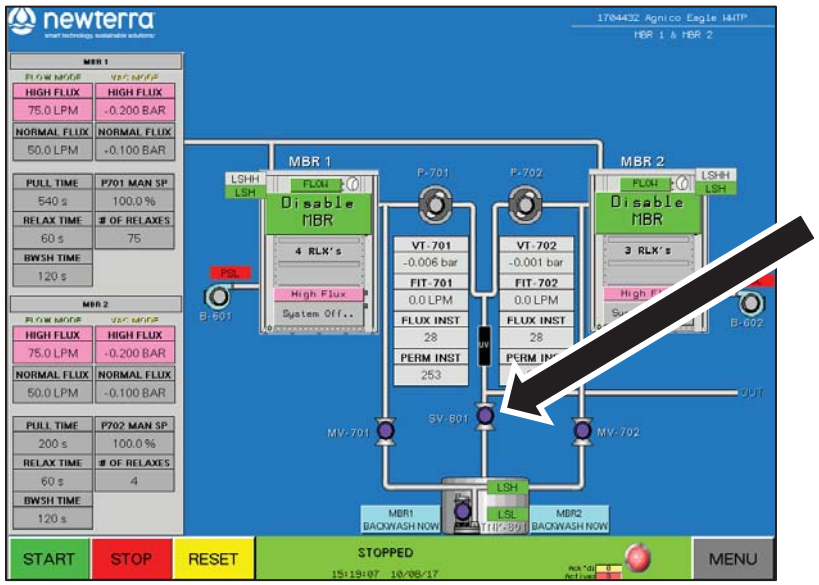

    c. Skip to step 3

© 2017 by **newterra**, ltd.
All rights reserved. No part of this document may be reproduced or transmitted in any form or by any means, electronic, mechanical, photocopying, recording, or otherwise, without prior written permission of **newterra** ltd.

2) If backwash tank TNK-801 is full:

   a. Disable membrane by holding down the disable membrane button for about 5 seconds

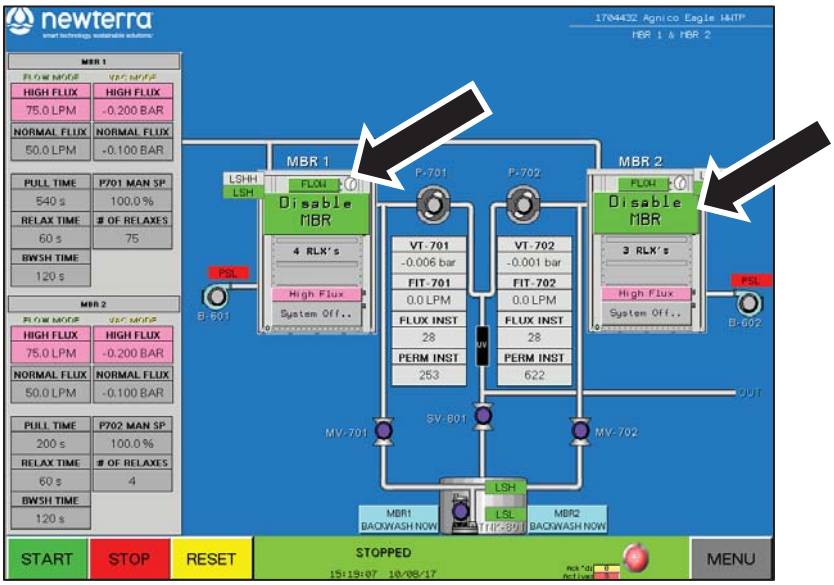

   b. Turn SV-801 solenoid valves to off (“O”)

   c. Turn MV-701/702 (depending on the membranes to be cleaned) motorized valves to hand (“H”)

   d. Turn pump P-801 to hand (“H”) until the backwash tank has drained to the required volume for chemical backwash (3L per cassette X 20 cassettes per module = 60 L OR approx. 1/4 capacity of TNK-801) – the exact volume can be determined by backwash tank level drop. Note TNK-801 capacity is 272L.

   e. Turn P-801 to off (“O”)

7.3.1.2 Procedure – Organic Fouling Solution

Organic Fouling - NaOCl: 500 mg/L solution (acceptable range of 200 to 1000 mg/L). Used for removal of organic fouling, which is the most common type of fouling in MBRs.

Volume of concentrated NaOCl required can be calculated with the following formula,

$$V_x = \frac{V_m \times 0.05}{C_s}$$

$\boldsymbol{V_m}$: Volume of the solution (Gallon, or Litre), equal to 3 L multiplying the number of MCXL cassettes 20 (60L per module);
$\boldsymbol{C_s}$: Concentrated NaOCl concentration (%)
$\boldsymbol{V_x}$: Volume of concentrated NaOCl required (Gallon, or Litre)

© 2017 by **newterra**, ltd.
All rights reserved. No part of this document may be reproduced or transmitted in any form or by any means, electronic, mechanical, photocopying, recording, or otherwise, without prior written permission of **newterra** ltd.

newterra ltd.
1291 California Avenue, Brockville, ON K6V 5W3
(800) 420-4056 / www.newterra.com

7.3.1.3 Procedure – Organic Fouling Solution

Inorganic Fouling - Citric Acid: 2 g/L solution (up to 20 g/L). Used for removal of inorganic fouling. This is typically only required for systems treating water with a high hardness.

Rinse membrane filter and backwash tank thoroughly with potable water to completely remove NaOCl solution before treatment with citric acid. Mixing NaOCl with citric acid releases toxic chlorine gas!

7.3.1.4 Procedure

1) Ensure MV-701/2 series motorized valves and SV-801 solenoid valve are set to off (“O”). The system is now ready for a chemical backwash. Note: only one membrane module should be backwashed at a time. The modules can be isolated by closing the permeate valves (there are valves per module)



2) Turn off all blowers in the membrane tank to be backwashed (B-601)
3) Turn the MV-701/702 motorized valve to hand (“H”) then turn pump P-801 to hand (“H”) until the backwash tank has drained.
4) Turn pump P-801 to off (“O”) and then turn the MV-701/702 motorized valve to off (“O”).
5) Let membranes soak for 45 mins or so.
6) After soaking membranes, turn the blowers back on (B-601) and allow blowers to scour for ~15 minutes.
7) After the 15 minute scour turn all valves and pump back to auto (“A”)
8) Turn SV-801 solenoid valves to off (“O”)

© 2017 by **newterra**, ltd.
All rights reserved. No part of this document may be reproduced or transmitted in any form or by any means, electronic, mechanical, photocopying, recording, or otherwise, without prior written permission of **newterra** ltd.

9) Enable membranes by holding down the enable membrane button for about 5 seconds
10) Allow membranes to permeate for 5 minutes, and then turn SV-801 solenoid valves back to auto (“A”)
11) Record TMP and flux, and ensure that the permeability has recovered
12) Repeat procedure for the second membrane module.

7.3.2 Membrane Recovery Cleaning

The membrane recovery cleaning is to be done once a year at a minimum. On certain occasions, membrane cassette may need to be inspected for membrane integrity (suspect of membrane deterioration, membrane permeability performance does not recover after the cleaning, etc.).



Disable operation of the membrane tank by pressing the disable membrane button on the screen.

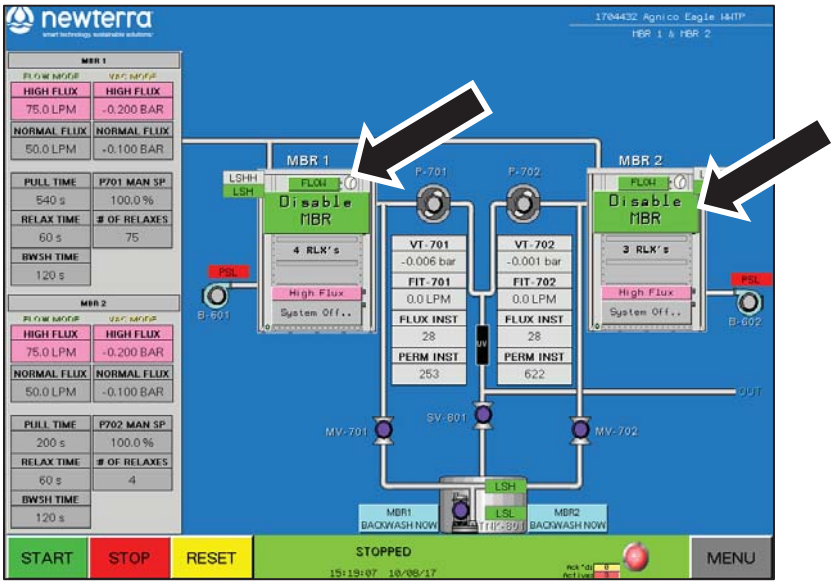

For better cleaning performance, it is recommended:

- Potable water is used
- Water temperature is above 20 ^{0}C (better cleaning efficiency if water temperature ranges from 20 to 30 ^{0}C)

© 2017 by **newterra**, ltd.
All rights reserved. No part of this document may be reproduced or transmitted in any form or by any means, electronic, mechanical, photocopying, recording, or otherwise, without prior written permission of **newterra** ltd.

newterra ltd.
1291 California Avenue, Brockville, ON K6V 5W3
(800) 420-4056 / www.newterra.com

7.3.2.1 Step 1 - Preparation

1. Turn off air scour – B-601/602

2. Drain all mixed liquor from the membrane.

3. Open the MBR tank hatch. Clean (wash down) the membrane tank with water and vacuum out the dirty liquid. Close the MBR tank hatch.

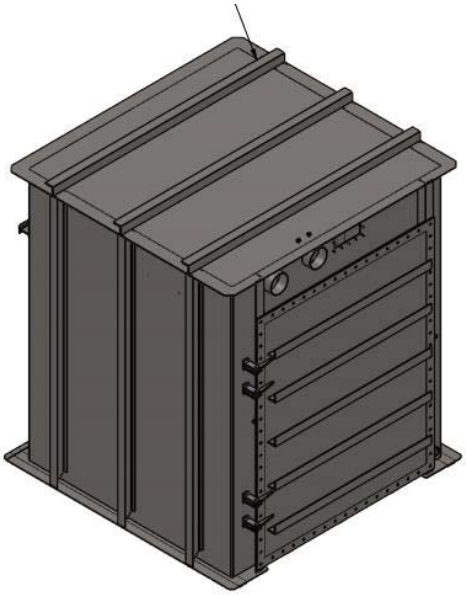

4. Fill the membrane tank with potable water until the membranes are completely covered. The membrane tank (TNK-601/2) holds approx. 8.0 m3 / 6000L.

7.3.2.2 Step 2 – Cleaning with High pH Solution

This step is to be done if membrane fouling is a result of high FOG. Note: FOG in influent wastewater should be maintained below 30 mg/L.

5. Confirm that the membrane tank (TNK-601/2) has been cleaned and refilled with water (Section 7.3.2.1).

6. Add a suitable chemical – normally caustic soda (Sodium hydroxide (NaOH)) - to the membrane tank to raise the pH to 12.

    a. Volume of NaOH required can be calculated as follows. A starting dose for NaOH would be 400 mg/L. For example: if using a 50% solution of sodium hydroxide, approximately 0.5 L of solution would be required per m3 of membrane tank. Additional NaOH may be required depending on the alkalinity of the water. The operator should measure pH after addition of 400 mg/L and add more until the pH is 12.

© 2017 by **newterra**, ltd.
All rights reserved. No part of this document may be reproduced or transmitted in any form or by any means, electronic, mechanical, photocopying, recording, or otherwise, without prior written permission of **newterra** ltd.

newterra ltd.
1291 California Avenue, Brockville, ON K6V 5W3
(800) 420-4056 / www.newterra.com

b. TNK-601 holds approx. 8 m3 or 8000L.

7. Turn on air scour for 2 min to mix the solution and turn it off during membrane soak.

8. Allow membranes to soak for 1 to 2 hours.

9. Drain spent solution.

7.3.2.3 Step 3 - Cleaning with Sodium Hypochlorite (NaOCl)

1. Turn off air scour

2. Confirm that the membrane tank (TNK-601) has been cleaned and refilled with water (Section 7.3.2.1).

3. Add NaOCl into the membrane tank to a concentration of 500 mg/L as free chlorine (max. 1,000 mg/L). Turn on air scour for 2 min to mix the solution and turn it off during membrane soak.

   Volume of NaOCl required can be calculated with the following formula:

$$V_x = \frac{V_m \times 0.05}{C_s}$$

   $\boldsymbol{V_m}$: Volume of membrane tank - TNK-601 holds approx. 8.0 m3 / 8000L.
   $\boldsymbol{C_s}$: NaOCl concentration (%)
   $\boldsymbol{V_x}$: Volume of NaOCl required (m3 or Litre)

4. Keep the membranes soaked for 8 to 12 hours in the NaOCl solution (longer soak time required if severe fouling is evident).

5. Drain spent NaOCl solution.

6. Rinse membrane filter thoroughly with potable water by filling and draining the entire tank. Rinse waters are drained to the sump/recycle back to the headwork.

7. Repeat step 6 to ensure all NaOCl has been thoroughly removed.

© 2017 by **newterra**, ltd.
All rights reserved. No part of this document may be reproduced or transmitted in any form or by any means, electronic, mechanical, photocopying, recording, or otherwise, without prior written permission of **newterra** ltd.

newterra ltd.
1291 California Avenue, Brockville, ON K6V 5W3
(800) 420-4056 / www.newterra.com

7.3.2.4 Step 4 - Cleaning with Citric Acid

This step is only required in case of inorganic fouling caused by the high hardness. The recommended concentration is 2 g/L solution (up to 20 g/L).



Rinse membrane filter thoroughly with potable water to completely remove NaOCl solution before treatment with citric acid. Mixing NaOCl with citric acid releases toxic chlorine gas!

1. Turn off air scour
2. Confirm that the membrane tank (TNK-601) has been cleaned and refilled with water (Section 7.3.2.1).
3. Add Critic Acid into the membrane tank to a concentration of 2 g/L solution (up to 20 g/L) – reducing the membrane tank to a pH of 2.0.
    a. Volume of Critic Acid required can be calculated as follows. A starting dose for Critic Acid would be 2g/L (up to 20g/L). For example: if using a 50% solution of Critic Acid, approximately 3.2 L of solution would be required per m3 of membrane tank. Additional Critic Acid may be required depending on the alkalinity of the water. The operator should measure pH after addition of 2g/L and add more until the pH is 2.
    b. TNK-601 holds approx. 8 m3 or 6000L.
4. Keep the membranes soaked in the citric acid solution for 2 hours (longer soak time required if severe fouling is evident).
5. Drain spent citric acid solution, rinse membranes thoroughly with potable water and drain all the rinse waters. Spent citric acid solution and rinse waters are drained.

7.3.2.5 Step 5 - Resume normal operation

Turn all equipment back to Automatic mode “A”, and enable the membranes.

7.3.2.6 Step 6 - Checking Permeability

Normal permeability after cleaning: 200 to 300 LMH/bar.

Repeat the cleaning procedures If normal permeability is not achieved.

© 2017 by **newterra**, ltd.
All rights reserved. No part of this document may be reproduced or transmitted in any form or by any means, electronic, mechanical, photocopying, recording, or otherwise, without prior written permission of **newterra** ltd.

newterra ltd.
1291 California Avenue, Brockville, ON K6V 5W3
(800) 420-4056 / www.newterra.com

Note: Membrane maintenance (CEB) and recovery cleaning has to be recorded according to Membrane Cleaning Log Sheet presented in Appendix J of the manual.

7.3.3 Membrane Physical Check



***WARNING**: A membrane cassette that has been in operation weighs more than dry membrane cassette before installation.*
Failure to comply with the instructions provided in this manual can cause equipment & property damage or severe personal injury, and will render the warranty null and void.

To removing membrane module from membrane tank

This procedure is required if the membranes are being inspected as part of routine maintenance for physical check or being replaced.



Once membrane inspection or replacement has begun, it must be completed promptly. It is important that the membranes DO NOT DRY OUT OR FREEZE during this procedure.

1. Confirm that the eStop switch on the main panel is pushed in. Confirm that the Main Disconnect is ON. Stop the system operations by using the HMI screen button.

2. Empty the MBR tank (TNK-601) via the tank drain valve or recycle back to Aeration Tank using P-601.

3. Open the MBR tank hatch.

4. Wash remainder of waste water in the tank with reuse water and vacuum out.

5. Install the cassette rails and Disconnect the permeate hoses from the top of the membranes.

6. Slide out the cassette and further clean the membranes.

Membrane module replacement - ***If membranes require changing*** verify membrane modules are secured within the membrane tanks after re-installing the new modules – i.e. verify wheel chocks are in the correct location and that there is no lateral movement (less than an inch) of the membrane modules on the wheel tracks in the tank.

7. Remove the membranes from the cassette. NOTE. The membranes are triple stacked. The bottom membrane has a plug in the bottom opening. Do not remove this plug. Note the membrane orientations for re-installation. The membranes are joined together with either a PVC union with two O-Rings on each side OR clear PVC hose and hose clamps.

© 2017 by **newterra**, ltd.
All rights reserved. No part of this document may be reproduced or transmitted in any form or by any means, electronic, mechanical, photocopying, recording, or otherwise, without prior written permission of **newterra** ltd.

newterra ltd.
1291 California Avenue, Brockville, ON K6V 5W3
(800) 420-4056 / www.newterra.com

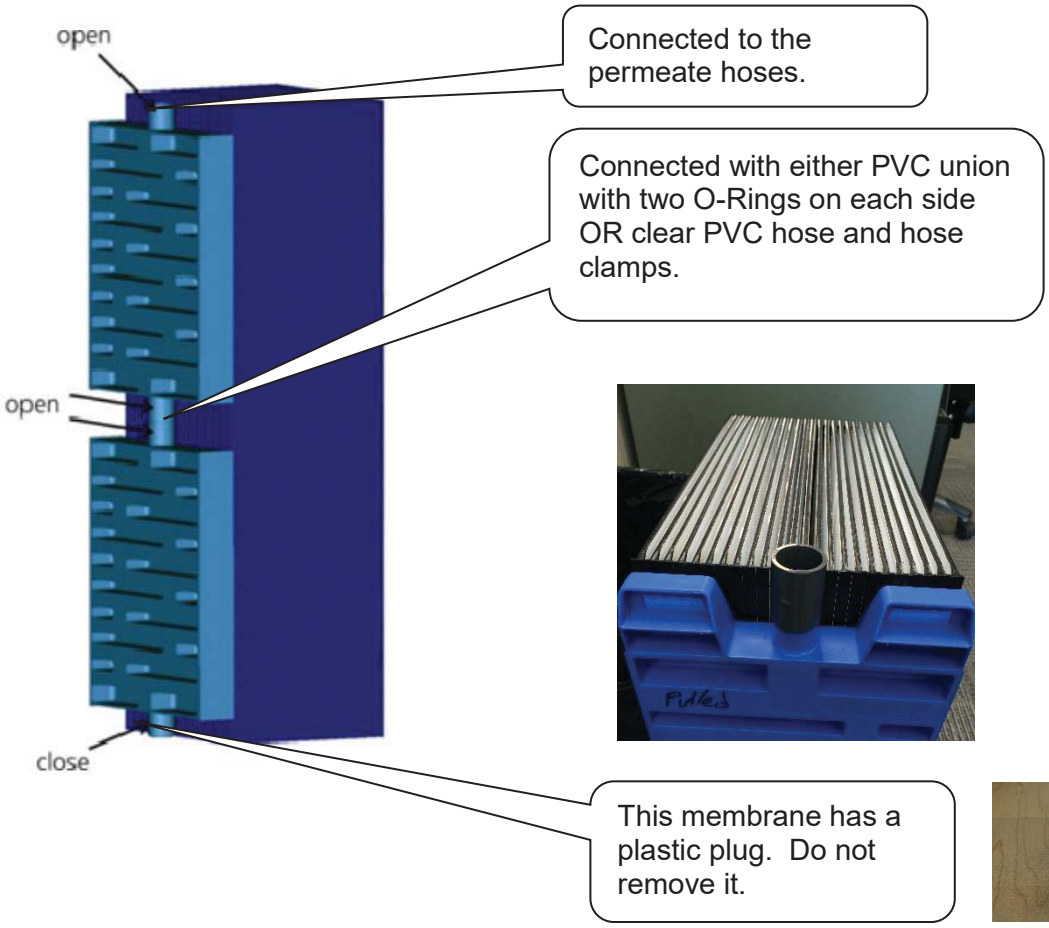

8. After membranes are separated, wash with clean water. Remove the blue backing plate and gently separate the membrane plates and clean with water to remove any debris. Replace backing plate.

© 2017 by **newterra**, ltd.
All rights reserved. No part of this document may be reproduced or transmitted in any form or by any means, electronic, mechanical, photocopying, recording, or otherwise, without prior written permission of **newterra** ltd.





9. Place bottom membrane cassettes in the MBR tank and then integrate top membranes into the triple stack configuration. Slide in the cassette and reconnect the permeate hoses. Close the MBR tank door and start system operation.

© 2017 by **newterra**, ltd.
All rights reserved. No part of this document may be reproduced or transmitted in any form or by any means, electronic, mechanical, photocopying, recording, or otherwise, without prior written permission of **newterra** ltd.

newterra ltd.
1291 California Avenue, Brockville, ON K6V 5W3
(800) 420-4056 / www.newterra.com

7.4 Sludge Decanting (TNK-901)

In order to maintain an optimal concentration of mixed liquor suspended solids (MLSS) (typically 10 g/L), a portion of the mixed liquor is periodically wasted by pumping from the Aeration Tank (TNK-501) to the sludge holding tank (TNK-901). Wasted sludge in the sludge holding tank is thickened by decanting supernatant back to the screen tank. Thickened sludge accumulates in the sludge holding tanks until it is eventually pumped out for disposal.

Excess sludge will be wasted by P-503 from the Aeration Tank (TNK-501) every 10 mins at noon. See below.

Tag	Description	Factory Setpoint	Setpoint Range and Units
P503 WASTE HOUR	When P-503 will waste	12pm	0-23
P503 WASTE SP	Time that P-503 wastes for	10min	0-99

In order to decant the water from the sludge, the air to TNK-901 diffuser must be turned off. See valve location below.

After the sludge has settled, that the operator would open the appropriate valve on TNK-901 to decent off the water.

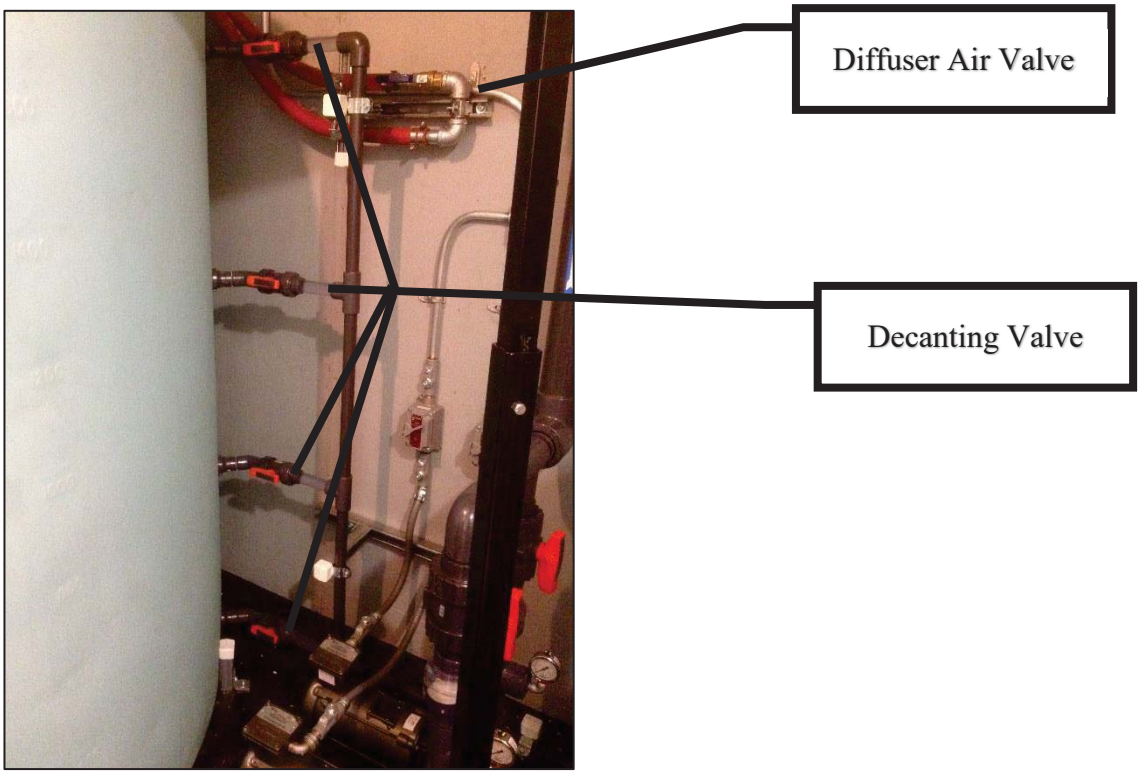

© 2017 by **newterra**, ltd.
All rights reserved. No part of this document may be reproduced or transmitted in any form or by any means, electronic, mechanical, photocopying, recording, or otherwise, without prior written permission of **newterra** ltd.

newterra ltd.
1291 California Avenue, Brockville, ON K6V 5W3
(800) 420-4056 / www.newterra.com

7.5 Trouble Shooting

7.5.1 MBR Membrane Fouling

Introduction

MBR operation relies critically on the ability of the membrane unit to pass all flow incoming to the plant. If membrane permeability is impaired, the MBR plant cannot process all flow with potentially catastrophic results even though effluent quality remains consistently high. This contrasts with typical operation of activated sludge system where the plant hydraulic capacity is rarely exceed but effluent quality is much more variable. Hence, membrane fouling (and associated reduction of flux or increase of TMP) remains as an operational challenge.

Membrane Fouling in MBR is a result of the interaction between the incoming water quality, mixed liquor filterability, system operation condition, and membrane material. There are four categories of membrane fouling. They are microbial fouling, particle/colloids fouling, inorganic fouling, and organic fouling. A brief description on the nature of fouling and control measures is summarized below.

7.5.1.1 Microbial/Biological Fouling

Microbial fouling is a result of formation of biofilms on membrane surfaces. Living materials, such as bacteria, fungus and algae, or soluble microbial products (SMP) and extracellular polymetric substances (EPS) bound to the activated sludge attach to the membrane; they start to multiple and produce EPS to form a viscous, slimy, hydrated gel. EPS typically consists of heteropolysaccharides and have high negative charge density. This gel structure protects bacterial cells from hydraulic shearing and from chemical attacks of biocides such as chlorine.

7.5.1.2 Particulate/colloid Fouling

This type of fouling may be associated with high concentrations of colloidal solids present in mixed liquor. In most cases, particles and colloids do not really foul the membrane because the flux decline caused by their accumulation on the membrane surface is largely reversible by hydraulic cleaning measures such as backwash and air scouring. However, the accumulation of solids between the membranes can create increased membrane resistance to permeation and permanent physical membrane damage.

To distinguish the different fouling phenomena, particles and colloids here are referred to biologically inert particles and colloids that are inorganic in nature.

© 2017 by **newterra**, ltd.
All rights reserved. No part of this document may be reproduced or transmitted in any form or by any means, electronic, mechanical, photocopying, recording, or otherwise, without prior written permission of **newterra** ltd.

newterra ltd.
1291 California Avenue, Brockville, ON K6V 5W3
(800) 420-4056 / www.newterra.com

7.5.1.3 Inorganic Fouling

Inorganic fouling or precipitative fouling is caused by the accumulation of inorganic precipitates such as metal hydroxides, and “scales” on membrane surface or within pore structure. Precipitates are formed when the concentration of chemical species exceeding their saturation concentrations. Scale can be caused by high pH and extremely hard feed water. For the ultrafiltration (UF) membranes in our MBR system, inorganic fouling can exist most likely due to interactions between ions and other fouling materials (i.e., organic polymers) via chemical bonding.

7.5.1.4 Organic Fouling

Organic fouling is the attachment of materials such as oil or grease to the membrane surface. It is common in MBR systems used for treating industrial effluent. Organic fouling often leads to surface and internal pore fouling. More importantly, organic fouling progressively leads to biological fouling (i.e., biofilm growth/build up on membrane surface). Sometimes the adsorption process is irreversible when the organic substances are hydrophobic or positively charged polymers with high molecular weight. Such organic substances including organics present as an emulsion must be removed in the pretreatment.

The following pictures are examples of clean membranes





The following pictures are examples of fouled membranes

© 2017 by **newterra**, ltd.
All rights reserved. No part of this document may be reproduced or transmitted in any form or by any means, electronic, mechanical, photocopying, recording, or otherwise, without prior written permission of **newterra** ltd.

newterra ltd.
1291 California Avenue, Brockville, ON K6V 5W3
(800) 420-4056 / www.newterra.com






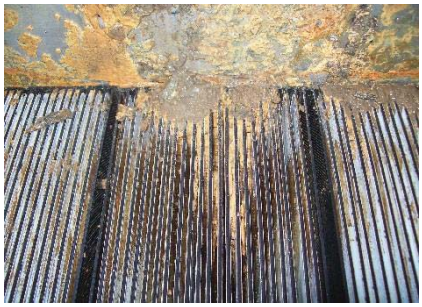

7.5.1.5 Fouling Prevention

Control of fouling and clogging in practice is generally limited to six main strategies:

1. Applying appropriate pretreatment to the feed water. Fine screen helps to eliminate the build-up of trash, hair, lint and other fibrous materials, and decrease the risk of solids accumulation.

2. Maintaining operation within the design conditions, such as HRT, SRT, MLSS, temp, BOD/COD loading, pH, DO, F/ M ratio. Sludge wasting is a key in controlling the target operating SRT (typically ≥ 15 day) in the system. Table F.1 shows some examples.

Relationship between various operating parameters and their effect on membrane fouling

Parameter	**Effect on membrane fouling**
MLSS concentration ↑ **or** ↓	Fouling potential ↑
SRT ↑ **or** ↓	Fouling potential ↑
HRT ↓	Fouling potential ↑
Temperature ↓	Viscosity ↑ **=>** membrane permeability ↓
Filamentous bacteria ↑	Viscosity ↑ **=>** membrane permeability ↓
Air scour intensity ↑	membrane permeability ↑
EPS ↑	Fouling rate ↑
SMP ↑	Fouling potential ↑

© 2017 by **newterra**, ltd.
All rights reserved. No part of this document may be reproduced or transmitted in any form or by any means, electronic, mechanical, photocopying, recording, or otherwise, without prior written permission of **newterra** ltd.

newterra ltd.
1291 California Avenue, Brockville, ON K6V 5W3
(800) 420-4056 / www.newterra.com

3. Employing appropriate physical or chemical cleaning protocols. For example, sodium hypochlorite and citric acid solutions are used to remove organic and inorganic foulants respectively.

4. Chemically or biochemically modifying the mixed liquor, such as addition of coagulants and powdered activated carbon (mostly in industrial effluent).

5. Reducing the flux. Particulate/colloid fouling is "reversible" in the sense that a reduction of the forward flux (through lowering of the membrane flux or solids concentration) or an increase of backwash intensity restores membrane permeability.

6. Ensure sufficient air scouring is being maintained to slough off excessive biofilm layer on the membrane surface.

7.5.1.5 MBR WWTP Fouling Control & Troubleshooting Chart

Combination of membrane physical cleaning operations as air **scouring, backwashing and relaxation** are efficient in membrane fouling control.

7.5.1.5.1 Air Scouring

Aeration generates a shear stress at the membrane surface, which provides a scouring action and reduces membrane cake fouling.

Membrane air scouring check is essential procedure for newterra MBR WWTP. Air scour has to be observed for uniformity of bubbling action all across the membrane module/cassette on regular basis. It is easy to observe through clear window in membrane tank. Operator should note any unusual patterns of air distribution. Operator has to check for:

- damage of air diffusers and if this occurs, empty the tank and fix the diffuser;
- air leakages: if this occurs, tighten up the fittings.

If there is insufficient air scouring, localized dewatering (**clogging, sludging, caking and plugging**) may occur and as a result, membrane fouling occurs.



Proper air scouring in membrane tank



Uneven aeration in membrane tank

© 2017 by **newterra**, ltd.
All rights reserved. No part of this document may be reproduced or transmitted in any form or by any means, electronic, mechanical, photocopying, recording, or otherwise, without prior written permission of **newterra** ltd.

newterra ltd.
1291 California Avenue, Brockville, ON K6V 5W3
(800) 420-4056 / www.newterra.com

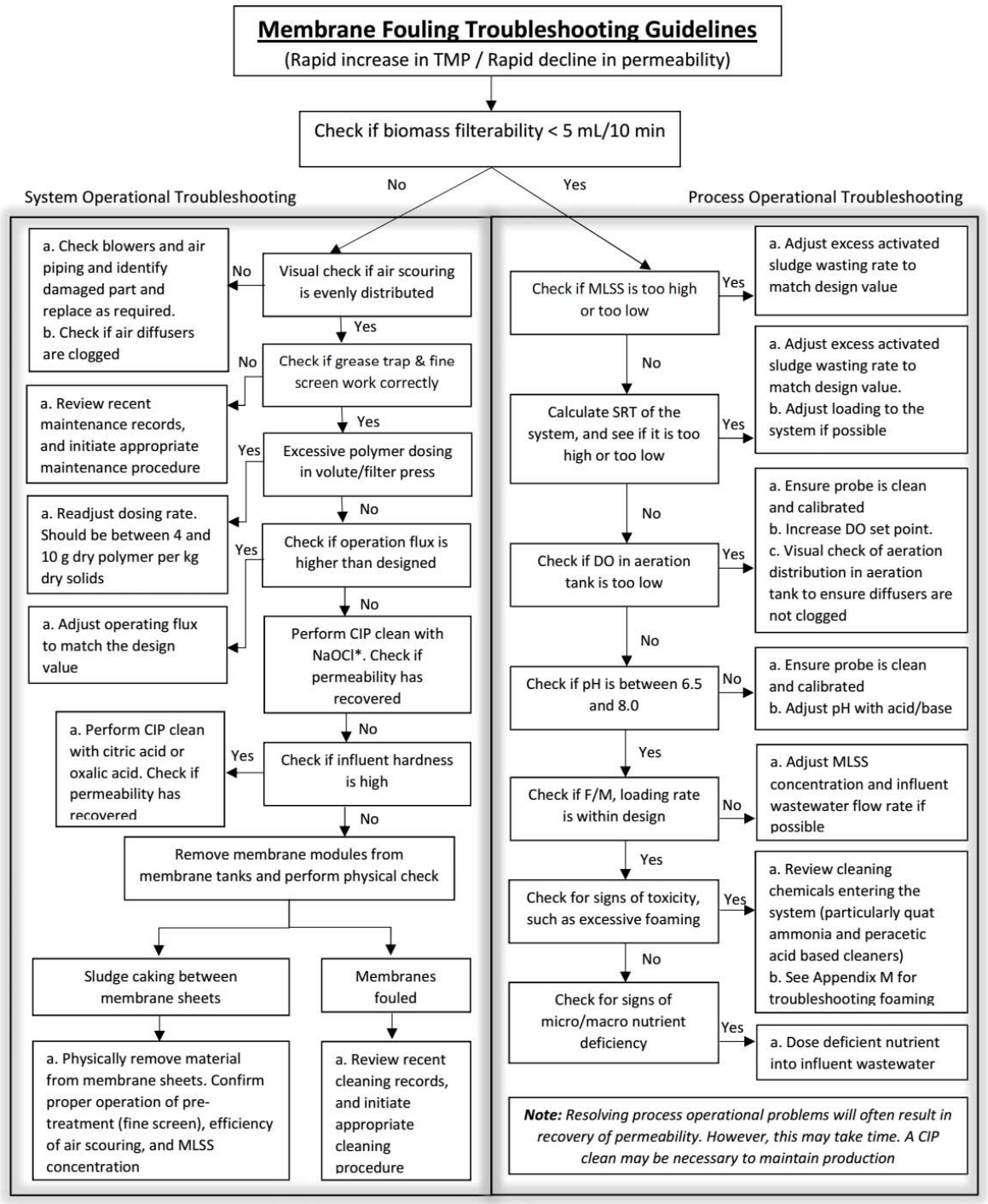

© 2017 by **newterra**, ltd.
All rights reserved. No part of this document may be reproduced or transmitted in any form or by any means, electronic, mechanical, photocopying, recording, or otherwise, without prior written permission of **newterra** ltd.

newterra ltd.
1291 California Avenue, Brockville, ON K6V 5W3
(800) 420-4056 / www.newterra.com

7.5.2 MBR Alarm Trouble Shooting

Alarm Name	Alarm Location	Alarm Description	Beacon Status	Troubleshooting Recommendation	Remedy Action
PLC ALM	CP	SHUTDOWN PLC Fault	FLASH	Turn off entire system. Wait 10 seconds before restoring power.	Please contact newterra -PLC problem
PWR FAIL ALM	CP	WARNING, Power Fail	SOLID	Power has failed to the unit	Press Reset
ESTOP ALM	Panel	E-Stop	FLASH	Check all locations of E-Stop Buttons to ensure they are not pushed in.	Pull out E-Stop
TALL-201	Clarifier	Temperature alarm low low	FLASH	Check for building heater malfunction. Assess influent water temperature	Replace heater. Take action to increase influent water temperature.
B-201/ B-202 Fail	Clarifier	Blower B-201/B-202 has potentially failed	FLASH	Check blower for failure. Check breaker	Replace blower B-201/B-202.
LAHH-401	SCREEN DISCHARGE	High high level alarm in Screen Module discharge tank	FLASH	Potential discharge tank pump P-401/P-402 failure Check Breaker	Replace pump
P-401 or P-402 FAIL	SCREEN PUMP	P-401/P-402 has potentially failed	FLASH	P-401/P-402 for failure. Check Breaker	Replace pump P-401/P-402

© 2017 by **newterra**, ltd.
All rights reserved. No part of this document may be reproduced or transmitted in any form or by any means, electronic, mechanical, photocopying, recording, or otherwise, without prior written permission of **newterra** ltd.

newterra ltd.
1291 California Avenue, Brockville, ON K6V 5W3
(800) 420-4056 / www.newterra.com

Alarm Name	Alarm Location	Alarm Description	Beacon Status	Troubleshooting Recommendation	Remedy Action
SCN-401 Or SCN-402 FAIL	SCREEN	Potential screen paddle wheel motor failure.	FLASH	Check screen motor for failure. Check Breaker	Replace motor
LAHH-301	EQ Tank	Level Alarm High High, EQ Tank	FLASH	Investigate if pump P-301, P-302 has failed, or system is receiving higher than design flow, or membrane is fouling.	Replace pump, divert flow, perform membrane chemical cleaning.
LALL-301	EQ TANK	Low Low Level Alarm	WARN	Check for level transmitter operation or upstream pipe obstruction or pump failure.	Clear obstruction or repair/replace faulty equipment.
P-301 or P-302 FAIL	EQ PUMP	Pump P-301 has potentially failed	FLASH	Check pump P-301 or P-302 for failure or if it is unplugged. Check Breaker	Plug in or replace pump P-301 or P-302.
PAL-301	EQ TANK	Pressure Alarm low on air inlet to EQ Tanks	FLASH	Check if blower B-301 or B-302 have failed. Check Breaker	Replace blowers if required.
LAHH-501 or LAHH-502	AERATION TANK	High High level alarm in Aeration Tank	FLASH	Check pump P-501/P-502 for failure	Replace faulty pump
LALL-501	AERATION TANK	Low Low Level Alarm	WARN	Check level in the tank and ensure Level switch or transmitter is functioning correctly.	Clear obstruction or repair/ replace faulty equipment

© 2017 by **newterra**, ltd.
All rights reserved. No part of this document may be reproduced or transmitted in any form or by any means, electronic, mechanical, photocopying, recording, or otherwise, without prior written permission of **newterra** ltd.

newterra ltd.
1291 California Avenue, Brockville, ON K6V 5W3
(800) 420-4056 / www.newterra.com

Alarm Name	Alarm Location	Alarm Description	Beacon Status	Troubleshooting Recommendation	Remedy Action
PHAL-501	AERATION TANKAERATION TANK	Low pH AlarmLow low in Aeration Tank	WARN WARN	Check if caustic injection system is working and or needs refill Check if the pH probe is fouled or if the probe requires calibration. Check setpoint temperature.	Replace caustic injection system or refill. Clean pH probe. Calibrate pH probe. Adjust set point temperature.
PHAH-501	AERATION TANKAERATION TANK	High pH alarm	WARN WARN	Check if caustic injection system is malfunctioning or if PH probe is calibrated or fouled.	Replace caustic soda injection. Calibrate pH probe or clean sensor
DOAL-501	AERATION TANKAERATION TANK	Dissolved Oxygen Alarm low	WARN WARN	Investigate if there is septic smell & check the mixing pattern. If system smells septic with no uniform mixing, air diffuser might be clogged, blowers may not work or plant is overloaded. Ensure DO probe is calibrated and clean.	Increase aeration rate to maintain DO above 1.5 mg/L, or replace clogged diffuser, or change blower, or calibrate or clean DO probe. Replace caustic soda injection. Calibrate pH probe or clean sensor
P-501 or P-502 FAIL	AERATION TANK	Pump P-501 or P-502 has potentially failed	FLASH WARN	Check pump P-501 or P-502 for failure. Check Breaker	Replace pump P-501 or P-502.

© 2017 by **newterra**, ltd.
All rights reserved. No part of this document may be reproduced or transmitted in any form or by any means, electronic, mechanical, photocopying, recording, or otherwise, without prior written permission of **newterra** ltd.

newterra ltd.
1291 California Avenue, Brockville, ON K6V 5W3
(800) 420-4056 / www.newterra.com

Alarm Name	Alarm Location	Alarm Description	Beacon Status	Troubleshooting Recommendation	Remedy Action
P-503 FAIL	AERATION TANK	Pump P-503 has potentially failed	FLASH FLASH	Check pump P-503 for failure. Check Breaker	Replace pump P-503
PAL-501	AERATION	Blower motor tripped off on overload Pressure	WARN FLASH FLASH	Check blower air line equipment and blower motor Check if 500 series blowers have failed	Replace faulty equipment Replace blowers if required
PAL-601 or PAL-602	MEMBRANE TANK	Pressure Alarm low on air inlet to correspondi ng Membrane Tank. Blower motor tripped off on overload	FLASH WARN	Check if blower B-601 or B-602 has failed. Check blower air line equipment and blower motor	Replace blower if required. Replace faulty equipment.
LAHH-601 or LAHH-602	MEMBRANE TANK	High High level alarm in Membrane	FLASH WARN	Check pump P-601 for failure	Replace pump P-601 Replace faulty equipment
FLT-701 or 702	PERM VFD 1 or 2	VFD Fault	FLASH WARN	Check VFD fault	Replace pump and VFD Replace faulty equipment
VTAL-701 or 702	MEMBRANE 1 or TANK 2	Low vacuum alarm on permeate line from MBR1 or MBR2	FLASH WARN	Check for vacuum leak and membrane or pump fail	Repair and replace as required

© 2017 by **newterra**, ltd.
All rights reserved. No part of this document may be reproduced or transmitted in any form or by any means, electronic, mechanical, photocopying, recording, or otherwise, without prior written permission of **newterra** ltd.

newterra ltd.
1291 California Avenue, Brockville, ON K6V 5W3
(800) 420-4056 / www.newterra.com

Alarm Name	Alarm Location	Alarm Description	Beacon Status	Troubleshooting Recommendation	Remedy Action
VTAH-701 or 702	MEMBRANE 1 or TANK 2	High vacuum alarm on permeate line from MBR1 or MBR2	FLASH WARN	Check for closed valve on permeate side or check membranes for severe fouling	Open valve or clean membranes Repair and replace as required
FTAL-701 or 702	MEMBRANE 1 or TANK 2	Low permeate flow alarm on permeate line from MBR1 or MBR2	FLASH WARN	Check for closed valve or permeate pump failure Check for closed valve on permeate side or check membranes for severe fouling	Open valve or repair/ replace permeate pump Open valve or clean membranes Repair and replace as required
FTAH-701 or 702	MEMBRANE 1 or TANK 2	High permeate flow alarm on permeate line from MBR1 or MBR2	FLASH WARN	Check for vacuum leak or membrane failure and operation of permeate pump	Repair and replace as required Open valve or repair/ replace permeate pump Open valve or clean membranes
UVA-811 or 812	PERM	UV-811 or UV-812 has failed.	FLASH WARN	Check if UV lamp has failed	Change UV lamp
UVA-BOTH	PERMEATE	UV-light 811 and UV-812 have failed	FLASH WARN	Check if UV lamp has failed Check if UV lamp has failed Check if UV lamp has failed	Change UV lamp Change UV lamp Change UV lamp Repair and replace as required
BACKWASH1 or BACKWASH2 FAILED	BACKWASH PERM1 or PERM2	Backwash to TNK-601 or TNK-602 failed	FLASH WARN	Backwash did not complete – system skipped backwash	Check function of back-wash pump and valve

© 2017 by **newterra**, ltd.
All rights reserved. No part of this document may be reproduced or transmitted in any form or by any means, electronic, mechanical, photocopying, recording, or otherwise, without prior written permission of **newterra** ltd.

newterra ltd.
1291 California Avenue, Brockville, ON K6V 5W3
(800) 420-4056 / www.newterra.com

Alarm Name	Alarm Location	Alarm Description	Beacon Status	Troubleshooting Recommendation	Remedy Action
P-901 FAIL	MEMBRANE PERM 1	Pump P-901 has potentially failed	FLASH WARN	Check pump P-901 for failure Check for vacuum leak or membrane failure and operation of permeate pump	Replace pump P-901 Repair and replace as required
TALL-7901	BLDG-7901	Low low Temperature alarm for building	FLASH WARN	Check if electric heaters have failed or if BLDG door is open	Repair or replace heater(s) if required. Repair and replace as required
B-7901 FAIL	AIR EXCHANGE BLDG-7901	Potential blower failure	FLASH WARN	Check motor breaker	Turn breaker on

7.5.3 MBR Process Trouble Shooting

The following **newterra MicroClear™ MBR WWTP troubleshooting guide** can be used as a quick reference. If any of the problems discussed in this section or other difficulties persist, consult **newterra** ltd.

7.5.3.1 Biological System

Condition	Possible Cause	Potential Remedies
Mixed liquor is black or dark brown	Insufficient aeration is supplied for mixed liquor and/or plant is under-loading	Increase aeration rate and keep it above 1 mg/L Waste more sludge Increase influent feed rate if required
Mixed liquor concentration is too high or too low	Sludge wasting rates are incorrect	Review operation of the activated sludge process and revise the sludge wasting rates as necessary
No mixing in tanks	Blowers failure	Check for electrical/blower failure, and replace blowers as necessary

© 2017 by **newterra**, ltd.
All rights reserved. No part of this document may be reproduced or transmitted in any form or by any means, electronic, mechanical, photocopying, recording, or otherwise, without prior written permission of **newterra** ltd.

newterra ltd.
1291 California Avenue, Brockville, ON K6V 5W3
(800) 420-4056 / www.newterra.com

Condition	Possible Cause	Potential Remedies
Unpleasant odour from tanks	Mechanical/electrical failure, e.g. blower and air piping are not operating correctly	Ensure good order of mechanical/electrical components
	System is overloading	Check the maximum flow and BOD loading rate to the MBR unit to see whether it is within the limits as per design specification Check the quality and contents of the flow into the MBR unit for any abnormal or prohibited substances
Effluent quality does not meet discharge criteria	Mixed liquor characteristics are not within proper operating standards	Improve the process operating conditions of the activated sludge system (confirm operating SRT and loading is within design and no present of toxic compounds)

© 2017 by **newterra**, ltd.
All rights reserved. No part of this document may be reproduced or transmitted in any form or by any means, electronic, mechanical, photocopying, recording, or otherwise, without prior written permission of **newterra** ltd.

newterra ltd.
1291 California Avenue, Brockville, ON K6V 5W3
(800) 420-4056 / www.newterra.com

7.5.3.2 Foaming

Condition	Possible Cause	Potential Remedies
Excessive foaming (white foam accumulating over the liquid surface) in aeration and/or membrane tanks	Influent inhibition/biomass toxicity occurs	Check the quality and contents of the flow into the MBR system for any abnormal or prohibited substances
	MBR system is overloading	Check the flow rates, BOD/COD loading and F:M ratio and then reduce flow/loading and/or increases MLSS concentration accordingly
	Mixed liquor characteristics are not within proper operating standards	Improve the operating conditions of the activated sludge system
	Membrane air scour system is over aerating	Review operation of the membrane scour system
	Foam control strategies are not operating correctly	Review foam removal equipment, anti-foam chemical dosing system (if applicable)
	MBR system are undergoing start-up	Remove foam and use approved defoamer as necessary (consult **newterra** Ltd);
		Control foam and ensure sprayer pump is running at all time during start-up,
		Ensure that MLSS concentration is increased, after start-up is completed

© 2017 by **newterra**, ltd.
All rights reserved. No part of this document may be reproduced or transmitted in any form or by any means, electronic, mechanical, photocopying, recording, or otherwise, without prior written permission of **newterra** ltd.

newterra ltd.
1291 California Avenue, Brockville, ON K6V 5W3
(800) 420-4056 / www.newterra.com

7.5.3.3 Permeate

Condition	Possible Cause	Potential Remedies
Cloudy permeate (The permeate turbidity or TSS is above the specific setpoint)	Faulty operation of instrumentation	Confirm proper operation of control systems and instrumentation, clean, replace, recalibrate as required
	Membrane cassette sheets are damaged	Take out membranes and visually inspect the individual membrane sheets, and repair or replace the membrane sheets as necessary
	Membrane module assembly are damaged	Identify damaged part, e.g. leaking tube, pipe, O-ring, gasket, and replace as required
	Permeate piping leak	Identify the leak and repair as required, e.g. tighten connections
Lower permeate flow than expected	Mechanical equipment failure	Ensure proper operation of permeate pumps
	Incorrect operation of permeate piping and valves	Check permeate piping for leaks
High TMP and lower permeability than expected	Membrane sludging	Confirm proper operation of pretreatment Take out membranes and visually inspect the individual membrane sheet. Remove sludge material from membrane sheets**
	Mixed liquor characteristics are contributing to poor filterability	Test the filterability of the mixed liquor; review and improve operating conditions of the activated sludge system as necessary
	Desired operating flux or flowrate is higher than design	Adjust operational flux or flowrate to match the design flux or flowrate

© 2017 by **newterra**, ltd.
All rights reserved. No part of this document may be reproduced or transmitted in any form or by any means, electronic, mechanical, photocopying, recording, or otherwise, without prior written permission of **newterra** ltd.

newterra ltd.
1291 California Avenue, Brockville, ON K6V 5W3
(800) 420-4056 / www.newterra.com

Condition	Possible Cause	Potential Remedies
	Membrane surface is fouled	Review recent cleaning records, and initiate appropriate cleaning procedure
	MLSS is too high, SRT is too low or insufficient dissolved oxygen in aerobic zone	Improve the characteristics of sludge by adjusting the activated sludge process operation
Uneven permeate and/or MLSS flow between membrane tanks	More recent completion of maintenance or recovery cleanings for one of the membrane tank	Review membrane cleaning records
	Uneven flow distribution to each membrane tank	Confirm proper operation of flow distribution system (pumps/control valves, etc)

© 2017 by **newterra**, ltd.
All rights reserved. No part of this document may be reproduced or transmitted in any form or by any means, electronic, mechanical, photocopying, recording, or otherwise, without prior written permission of **newterra** ltd.

newterra ltd.
1291 California Avenue, Brockville, ON K6V 5W3
(800) 420-4056 / www.newterra.com

7.5.3.4 Membrane air system

Condition	Possible Cause	Potential Remedies
Uneven aeration of membrane module	Membrane diffuser clogging; Loose air piping connections	Wash or clean the diffusers Tighten pipe connections
Uneven aeration in membrane tank	Membrane diffusers or membrane modules are not level	Level the equipment
Air scour rate fails to reach the specified values	Improper operation of membrane blowers and/or air scour system, malfunctioning diffusers	Repair or replace the blowers Review and repair air piping as necessary Repair the diffusers

7.5.3.5 Membrane Cleaning

Condition	Possible Cause	Potential Remedies
Increased frequency of cleaning	Mixed liquor characteristics are contributing to poor filterability Improper operation of membrane cleaning Membrane operate at higher flux than designed	Test the filterability of the mixed liquor Review and improve operating conditions of the activated sludge system as necessary Confirm cleaning is done correctly, such as controls, cleaning cycles or durations, chemical concentration, and dosing system Review MBR flow records
Cleaning fails to recover flux, permeability of membranes	Improper operation of membrane cleaning Improper operation of permeate pumps, piping, and control valves Irrecoverable fouling of membranes	Confirm cleaning is operated correctly, such as controls, cleaning cycles or durations, and chemical concentration etc. Repair equipment as necessary Review operating history with the goal of identifying contributing factors to fouling;

© 2017 by **newterra**, ltd.
All rights reserved. No part of this document may be reproduced or transmitted in any form or by any means, electronic, mechanical, photocopying, recording, or otherwise, without prior written permission of **newterra** ltd.

newterra ltd.
1291 California Avenue, Brockville, ON K6V 5W3
(800) 420-4056 / www.newterra.com

Condition	Possible Cause	Potential Remedies
		Perform membrane autopsy on membrane cassettes

7.5.3.6 Mechanical / Electrical Issues

Condition	Possible Cause	Potential Remedies
Indicator light at the control panel is on.	Air intake is blocked	Clean intake screens on blower housing Check air filter on blower for blockage
	Air discharge or vent line is blocked	Check discharge line and vent line visually or with drain cleaning equipment for obstructions
	MBR is flooded	Determine the cause of flooding, e.g., line obstruction, high flows, etc., and fix it
	Blower failed	Determine if blower failure was caused by an obstructed intake or discharge line Investigate overheating (i.e. internal thermal overload protection), short-circuiting, or other electrical failure, and mechanical failure (i.e. bearing failure) and correct it
Wastewater is backing up	Obstruction in the incoming sewer	Check the inlet pipe leading to the MBR visually or with drain-cleaning equipment
	Obstruction in the discharge piping	Check the permeate piping and later field piping visually or with drain-cleaning equipment
	Pumps failed	Check the operation of pumps as per pump manufacturer's specifications
	Flow rate to the MBR is too high	Check if the maximum flow rate to the MBR is within the limits as per design specification
Blower/pump not working	Fuse blown	Electrician to check
	Motor is overloading	Electrician to check
	Power failed	Electrician to check
System not in run mode	Kill switches are mistakenly pushed in	Ensure kill switches (on control panel/wall) are not pressed;
	Power failure/outage	Electrician to check

© 2017 by **newterra**, ltd.
All rights reserved. No part of this document may be reproduced or transmitted in any form or by any means, electronic, mechanical, photocopying, recording, or otherwise, without prior written permission of **newterra** ltd.

newterra ltd.
1291 California Avenue, Brockville, ON K6V 5W3
(800) 420-4056 / www.newterra.com

7.5.4 P-201/2, 301/2, 401/2, 501/2, 553/4, 551/2 - Trouble Shooting

TROUBLESHOOTING

1. Pump fails to build head pressure:

Check for:

a. Pump not primed.

b. Incorrect pump rotation.

c. Driver speed too low.

d. Suction line restricted.

e. Driver failure.

f. Plugged or damaged impeller.

g. Pump or impeller undersized.

h. Pump cavitation.

i. Improper impeller clearance.

2. Pump fails to provide enough flow rate.

Check for:

a. System resistance too high.

b. Pump undersized.

c. Pump not primed.

d. Driver speed too low.

e. Poor suction conditions.

f. Improper impeller clearance.

3. Excessive noise or vibration during operation.

Check for:

a. Motor bearing failing.

b. Pump cavitation.

c. Improper impeller clearance.

4. Leaking mechanical seal.

Check for:

a. Improper assembly.

b. Worn or cracked seal faces.

c. Abrasive material in fluid.

d. Liquid flashing at seal faces (Fluid temperature too high).

e. Seal pressure rating too low for the service.

f. Chemical attack of seal components.

g. Seal operated dry or with a liquid having poor lubricating properties.

5. Pump gradually loses pressure and head.

Check for:

a. Increasing temperature causing cavitation or liquid vaporization.

b. Driver failure.

c. Suction lift too high.

d. Air entering suction line.

6. Motor overheating.

Check for:

a. Excessive flow and amp draw (Throttle discharge).

b. Low voltage or frequency.

c. Flow rate too low with resulting heat rise.

d. Bearing failure.

e. System temperature too high.

© 2017 by **newterra**, ltd.
All rights reserved. No part of this document may be reproduced or transmitted in any form or by any means, electronic, mechanical, photocopying, recording, or otherwise, without prior written permission of **newterra** ltd.

newterra ltd.
1291 California Avenue, Brockville, ON K6V 5W3
(800) 420-4056 / www.newterra.com

7.5.5 P-701/702 Trouble Shooting

TROUBLESHOOTING

WARNING: Before making adjustments, disconnect power source and thoroughly bleed pressure from system prior to disassembly. Failure to do so could lead to electric shock or serious bodily harm.

Failure To Pump.

1. Motor will not start: Check power supply. Voltage must be ± 10% of nameplate rating when motor is in locked rotor condition. Check for faulty capacitor on 1 phase Models.
2. Motor runs and thermally kicks out: Check for excessive discharge pressure. Check for defective centrifugal switch on 1 phase Models. Increase ventilation to motor. Do not use less than #14 wire size.
3. Stator torn; possible excessive pressure: Replace stator, check pressure at discharge port.
4. Flexible joint broken; possible excessive pressure:

   Replace joint, check pressure at discharge port.
5. Wrong rotation (3 phase only): Rotation must be clockwise when facing pump from motor end. Reverse the connections of any two line leads to the motor.
6. Excessive suction lift or vacuum.

Pump Overloads.

1. Excessive discharge pressure: Check pressure at discharge port for maximum ratings given in Table 1.
2. Fluid viscosity too high: Limit fluid viscosity to 100 CP or 500 SSU.

Noisy Operation.

1. Excessive suction lift or vacuum: Maximum suction lift is 25 feet for water.
2. Suction line too small: Check pipe size. Be sure lines are free from obstructions.
3. Pump Cavitates: Pump speed is 1725 rpm. Viscosity of fluid should not exceed 100 CP or 500 SSU.
4. Flexible joint worn: Replace joint. Check pressure at discharge port.
5. Insufficient mounting: Mount to be secure to a firm base. Vibration induced noise can be reduced by using mount pads and short sections of hose on suction and discharge ports.

Seal Leakage.

1. Leakage at startup: If leakage is slight, allow pump to run several hours to let faces run in.
2. Persistent seal leakage: Faces may be cracked from freezing or thermal shock. Replace seal.

Pump Will Not Prime.

1. Air leak on suction side: Check pipe connections.

© 2017 by **newterra**, ltd.
All rights reserved. No part of this document may be reproduced or transmitted in any form or by any means, electronic, mechanical, photocopying, recording, or otherwise, without prior written permission of **newterra** ltd.

newterra ltd.
1291 California Avenue, Brockville, ON K6V 5W3
(800) 420-4056 / www.newterra.com

7.5.6 P-801 Trouble Shooting

CONDITION	COMMON CAUSES
A. Pump will not start or run.	Check fuse, low voltage, overload open, open or incorrect wiring, open switch, impeller or seal bound mechanically, defective capacitor or relay when used, motor or wiring shorted. Float assembly held down. Switch defective, damaged, or out of adjustment.
B. Motor overheats and trips overload or blows fuse.	Incorrect voltage, negative head (discharge open lower than normal) impeller or seal bound mechanically, defective capacitor or relay, motor shorted.
C. Pump starts and stops too often.	Float tight on rod, check valve stuck or none installed in long distance line, overload open, level switch(s) defective, sump pit too small.
D. Pump will not shut off.	Debris under float assembly, float or float rod bound by pit sides or other, switch defective, damaged or out of adjustment.
E. Pump operates but delivers little or no water.	Check strainer housing, discharge pipe, or if check valve is used vent hole must be clear. Discharge head exceeds pump capacity. Low or incorrect voltage. Incorrect motor rotation. Capacitor defective. Incoming water containing air or causing air to enter pumping chamber.
F. Drop in head and/or capacity after a period of use.	Increased pipe friction, clogged line or check valve. Abrasive material and adverse chemicals could possibly deteriorate impeller and pump housing. Check line. Remove base and inspect.

7.5.7 B-501/502 - Trouble Shooting

PROBLEM	POSSIBLE CAUSES	SOLUTION
Knocking	1. Unit out of time. 2. Distortion due to improper mounting or pipe strains. 3. Excessive pressure differential. 4. Worn gears. 5. Worn bearings.	1. Re-time impellers 2. Check mounting alignment and relieve pipe strains. 3. Reduce to manufacturer's recommended pressure. Examine relief valve, re-set if necessary. 4. Replace timing gears. 5. Replace bearings..
Excessive blower temperature.	1. Too much oil in gear case. 2. Too low operating speed. 3. Dirty air Filter. 4. Clogged filter or muffler. 5. Excessive pressure differential. 6. Worn impeller clearances. 7. Internal contact.	1. Reduce oil level. 2. Increase blower speed. 3. Clean or replace air filter 4. Remove cause of obstruction. 5. Reduce pressure differential across the blower. 6. Replace impeller. 7. Correct clearances.
Impeller end or tip drag.	1. Insufficient assembled clearances. 2. Case or frame distortion. 3. Excessive operating pressure. 4. Excessive operating temperature.	1. Correct clearances. 2. Check mounting and pipe strain. 3. Remove cause. 4. Remove cause
Lack of volume.	1. Slipping belts. 2. Worn clearances. 3. Dirty air filter	1. Tighten belts. 2. Re-establish proper clearances. 3. Clean or replace air filter.
Excessive bearing or gear wear.	1. Improper lubrication.	1. Correct lubrication level. Replace dirty oil.
Loss of oil.	1. Headplate, gear case or drive cover vents plugged. 2. Worn Seal.	1. Clean vents. 2. Replace seals.

© 2017 by **newterra**, ltd.
All rights reserved. No part of this document may be reproduced or transmitted in any form or by any means, electronic, mechanical, photocopying, recording, or otherwise, without prior written permission of **newterra** ltd.

newterra ltd.
1291 California Avenue, Brockville, ON K6V 5W3
(800) 420-4056 / www.newterra.com

7.5.8 B-301/302, B-601/602 - Trouble Shooting

Fault	Cause	Remedy	Carried out by
Motor does not start; no motor noise.	At least two power supply leads interrupted.	Eliminate interruption by fuses, terminals or power supply cables.	Electrician
Motor does not start; humming noise..	One power supply lead interrupted.	Eliminate interruption by fuses, terminals or power supply cables.	Electrician
	Impeller is jammed.	Open vacuum pump/compressor cover, remove foreign body, clean.	Service*)
		Check or correct impeller gap setting if necessary.	Service
	Impeller defective.	Replace impeller.	Service*)
	Rolling bearing on drive motor side or vacuum pump/compressor side defective.	Replace motor bearing or vacuum pump/compressor bearing.	Service*)
Protective motor switch trips when motor is switched on. Power consumption too high.	Winding short-circuit.	Have winding checked.	Electrician
	Motor overloaded. Throttling does not match specification on rating plate.	Reduce throttling.	Service*)
		Clean filters, mufflers and connection pipes if necessary.	Service*)
	Compressor is jammed.	See fault: "Motor does not start; humming noise." with cause: "Impeller is jammed.".	Service*)
Pump-motor unit does not generate any or generates insufficient pressure difference.	Leak in system.	Seal leak in the system.	Operator
	Wrong direction of rotation.	Reverse direction of rotation by interchanging two connecting leads.	Electrician
	Incorrect frequency (on pump-motor units with frequency converter).	Correct frequency.	Electrician
	Shaft seal defective.	Replace shaft seal.	Service*)
	Different density of pumped gas.	Take conversion of pressure values into account. Inquire with Service Department.	Service
	Change in blade profile due to soiling.	Clean impeller, check for wear and replace if necessary.	Service*)
Abnormal flow noises.	Flow speed too high.	Clean pipes. Use pipe with larger cross-section if necessary.	Operator
	Muffler soiled.	Clean muffler inserts, check condition and replace if necessary.	Service*)
Abnormal running noise.	Ball bearing lacking grease or defective.	Regrease or replace ball bearing.	Service*)
Compressor leaky.	Seals on muffler defective.	Check muffler seals and replace if necessary.	Service*)
	Seals in motor area defective.	Check motor seals and replace if necessary.	Service

*) Only when the maintenance manual is at hand: rectification by the operator.

© 2017 by **newterra**, ltd.
All rights reserved. No part of this document may be reproduced or transmitted in any form or by any means, electronic, mechanical, photocopying, recording, or otherwise, without prior written permission of **newterra** ltd.

newterra ltd.
1291 California Avenue, Brockville, ON K6V 5W3
(800) 420-4056 / www.newterra.com

7.5.9 LT-301/501 - Trouble Shooting

1.	**Symptom**:	***Transducer fails to give output of any kind.***
	Procedure:	Isolate the problem to either the transducer or the power supply/readout. See the Quick Check Procedures (above) for this check. If it can be determined that the transducer is no longer operable, remove it from service for further analysis. If the transducer output falls within the limits described above, the fault lies somewhere else in your system.
2.	**Symptom**:	***Transducer has failed and has been removed for analysis.***
	Procedure:	Inspect the cable for physical damage. Cuts in the cable jacket can result in liquid incursion into the transducer housing, which can cause permanent damage. If operational, the cable can be repaired by using a splice kit (P/N 830) supplied by Pressure Systems. Inspect the transducer housing. It should be intact and free of corrosion. If the outer surface of the transducer is pitted, this could be an indication of galvanic corrosion caused by stray ground currents. If this is the case, the transducer will probably require replacement. If the external case exhibits none of these characteristics, carefully unscrew the nosepiece and look into the pressure sensing end of the transducer. The concentric rings of the sensing diaphragm should be visible. If they are not, it could be that residue has accumulated on the diaphragm, preventing it from responding properly to pressure changes. The transducer can be cleaned by gently swishing the transducer back and forth in a bucket of warm, soapy water until the residue softens and washes off. (See **Cleaning Your Transducer**, page 8.) ***Under no circumstances should any object or tool be used to remove residue from the sensing diaphragm or else permanent damage will be done.*** If cleaning the diaphragm does not solve the problem, the transducer should be returned to the factory for repair or replacement.
3.	**Symptom**:	***Transducer develops a negative offset and gets worse over time (actual level exceeds specified level).***
	Procedure:	This may be a sign that moisture has entered the reference (vent) tube in the cable and is inside the transducer housing. This is usually the result of not maintaining the desiccant vent filter or of operating the transducer without a desiccant filter or aneroid bellows. If caught early enough, the transducer can be saved by coiling the cable and transducer in a pan and baking it in an oven at 50°C (122°F) for a minimum of 2 hours. *Be careful that the oven temperature does not exceed 50°C (122°F)* or both the transducer and the cable can be damaged. **Alternatively**, suspend both the cable and transducer in a vertical position (with vent tube down), overnight to allow water to drain from the transducer and vent tube.

© 2017 by **newterra**, ltd.
All rights reserved. No part of this document may be reproduced or transmitted in any form or by any means, electronic, mechanical, photocopying, recording, or otherwise, without prior written permission of **newterra** ltd.

newterra ltd.
1291 California Avenue, Brockville, ON K6V 5W3
(800) 420-4056 / www.newterra.com

4. **Symptom:** ***Transducer suddenly fails during or just after a nearby lightning event.***

   Procedure: This failure is usually caused by overvoltage due to ground transients resulting from a direct or indirect lightning event. These transients can travel distances of a mile or more. The transducer may be returned to the factory for repair and optional retrofit of our ***lightning protection system.*** This system carries a lifetime warranty against transducer damage due to lightning.

5. **Symptom:** ***Transducer response to pressure/level input changes becomes sluggish.***

   Procedure: This is usually a sign that the sensing end of the transducer has become fouled with residue. The transducer must be removed from service and the sensing diaphragm cleaned as described in Item 2, (warm, soapy water). If fouling persists, the transducer may be replaced with a Series 705 or Series 750 (non-fouling) transducer, which is specifically designed for trouble-free operation in a high residue environment.

6. **Symptom:** ***Output reading is within limits but "freezes" at one point.***

   Procedure: In certain environments "crust" may form over the sensing diaphragm, preventing the sensor from identifying change in level. Removing the transducer from service and cleaning it (as described in Item 2) will generally solve the problem. To combat marine growth, you might try wrapping the transducer with copper wire similar to that found in wire scouring pads for cleaning dishes. Marine growth occurs on the copper and eventually erodes the copper and drops off or the copper is manually removed during routine maintenance. Alternatively, there are various companies that will impregnate/coat the 316 stainless steel with anti-fouling chemicals of coatings. Level transducers temporarily removed from the well or sump should not be stored dry, but should be stored in a bucket of fresh water in order to prevent "crust" formation.

7. **Symptom:** ***Readings increase very slowly over time***.

   Procedure: Our cable is shipped coiled and consequently takes time to straighten when installed. Attaching a weight to the transducer (e.g., one of our sacrificial anodes) will help. To prevent cable stretch with lengths greater than 200 feet (60 m), secure the Kevlar fibers (just under the cable jacket) to your junction box or other secure object.

8. **Symptom:** ***No electrical output from your transducer.***

   Procedure: Check all electrical connections to ensure they are correct and secure. Double check your power supply or use a battery (as described previously) to ensure the transducer is getting power. If all checks OK, the problem could be a circuit board or the sensor in your transducer. The unit must be returned to the factory for evaluation. The most probable cause of this type of failure is damage to the submersible cable jacket allowing water to leak down the cable and into the transducer housing or lightning damage.

© 2017 by **newterra**, ltd.
All rights reserved. No part of this document may be reproduced or transmitted in any form or by any means, electronic, mechanical, photocopying, recording, or otherwise, without prior written permission of **newterra** ltd.

newterra ltd.
1291 California Avenue, Brockville, ON K6V 5W3
(800) 420-4056 / www.newterra.com

9.	**Symptom:**	***Formation of marine growth on a submersible transducer.***
	Procedure:	Certain transducer construction materials, for example, 316 stainless steel, attract marine life (snails) and algae. Clean the transducer diaphragm by soaking it in a bucket of warm water with a non-aggressive cleaning solution. You can also coat the transducer with marine grease. This may be the most effective and inexpensive way to protect your transducer.
10.	**Symptom:**	***Submersible transducer exhibits corrosion or pitting on body or diaphragm***
	Procedure:	Dissimilar metals (for example, your transducer housing and your pump housing) in an electrolytic environment (fluid in your well) can lead to *galvanic corrosion* of the metal that is nearer the anodic end of the galvanic series. Likewise, a voltage potential between the ground wire of the transducer and the ground of other equipment in the well can lead to *galvanic corrosion*. Installation of a P/N 820 or 825 sacrificial anode will help protect your transducer from *galvanic corrosion*. Our sacrificial anodes are made of a zinc alloy that, being nearer the anodic end of the galvanic series than the 316 stainless steel or titanium housing of the transducer, will corrode before the transducer.
11.	**Symptom:**	***The transducer is buried in dirt or silt and the readings seem to be erroneous.***
	Procedure:	Use of a piezometer nosepiece in this application would help. This nosepiece can be easily installed in the field and features a very fine screen to keep dirt from fouling the diaphragm, but allows the diaphragm to sense moisture levels.
12.	**Symptom:**	***Transducer has an offset error.***
	Procedure:	Our submersible transducers perform best when the sensing end is pointing in a downward manner. Keep in mind that you can experience offset error due to the position sensitivity or orientation change of the sensor. Offset errors are more prominent in low pressure applications with the sensing end of the transducer lying flat or pointing upward.

© 2017 by **newterra**, ltd.
All rights reserved. No part of this document may be reproduced or transmitted in any form or by any means, electronic, mechanical, photocopying, recording, or otherwise, without prior written permission of **newterra** ltd.

newterra ltd.
1291 California Avenue, Brockville, ON K6V 5W3
(800) 420-4056 / www.newterra.com

13. Symptom: ***I am testing a Series 700 4-20mA sensor for use with our data logger. On page A-2 of the KPSI Level and Pressure Transducers User's Manual, I see the standard 4-20mA configuration. Does the recording channel of my data logger become the mA meter?***

Procedure: Most data loggers cannot measure current (mA) directly. When this is the case a load resistor must be used to convert the current (mA) output into an appropriate voltage. If the User's Manual for your particular instrument does not illustrate a preferred method for recording current (mA) data then you should attach your transducer signal wires to your data logger in the following manner.

Transducer red wire **+** Data Logger Excitation Terminal
(The minimum excitation for a Series 700 Transducer is 9VDC)
Transducer black wire **–** Data Logger signal input (+) terminal

Attach a Load resistor between the Data Logger signal input (+) terminal and the Data Logger signal input (-) terminal.

Attach a separate piece of wire between the Data Logger signal input (-) and analog ground.

In this configuration you will turn your data logger into a milliammeter. The size of your load resistor can be calculated in the following manner.

D/0.02=R

Where:

Data logger input range = D
Full scale output of transducer = 0.02 A (20 mA)
Load Resistor Value = R

Pick an appropriate standard value

250 Ohms results in 1 to 5 VDC at 4 and 20 mADC
125 Ohms results in 0.5 to 2.5 VDC (500 to 2500 mVDC) at 4 and 20 mADC

At this point the discussion needs to address IR loss (voltage drop) in series circuits. Note that Series 700 transducers need a minimum of 9 VDC to operate correctly. When the transducer is operating correctly it will output a current which, when driven through a resistor, will generate some amount of voltage drop. If the resistor value is 250 Ohms then the voltage measured across that resistor will be 0.004 A * 250 Ohms = 1.000 VDC and 0.020 A * 250 Ohms = 5 VDC. Notice that, if the available voltage from the data logger is12 VDC then 12 VDC - 5 VDC = 7 VDC which is less than the voltage required by the transducer to operate. If this scenario were to occur the transducer would actually stop functioning correctly when its output reached 12 mADC (50% of transducer full scale range). In this case the appropriate choice for a load resistor value is 125 Ohms.

© 2017 by **newterra**, ltd.
All rights reserved. No part of this document may be reproduced or transmitted in any form or by any means, electronic, mechanical, photocopying, recording, or otherwise, without prior written permission of **newterra** ltd.

newterra ltd.
1291 California Avenue, Brockville, ON K6V 5W3
(800) 420-4056 / www.newterra.com

14. Symptom: ***I have a Series 700 4-20mA transducer rated for 7.5 PSIG attached to a pressure source that is outputting 7.5 PSIG. With 20VDC being supplied I am getting 19.94 mA. I can't find the upper range allowance for the sensor, but this seems low to me. Does this mA reading fall into the acceptable range for the transducer with the settings I've specified?***

Procedure: When evaluating a transducer it is sometimes convenient to make some broad generalizations in order to rapidly determine the condition of the unit. In general, transducers that output a 4-20 mADC signal have a 16 mADC span (4 - 20 = 16). If the transducers accuracy is reported as being some percentage of its full-scale range then the following table could be used in conjunction with the instructional notations to determine whether a more detailed analysis of data quality is required.

Model	Accuracy	Accuracy in mADC
700	1.00%FS	±0.16 ma
710	0.50%FS	±0.08 ma
720	0.25%FS	±0.05 ma
730	0.10%FS	±0.016 ma
735	0.05%FS	±0.008 ma

In order to approximately determine how many milliamps a transducer should output at a given depth.

1. Determine the depth (in feet) at which the transducer is sited.
2. Divide the depth value (from step 1) by the transducer full-scale range (in feet). - Record the value.
3. Multiply the value calculated in step 2 by 16 (the transducer span in milliamps).
4. Add 4 to the product of step 3. This is the approximate value in milliamps that should be output by the transducer at its current depth.

In order to approximately determine the depth of a transducer (in feet) using a given value of milliamps.

1. Divide the full-scale range of the transducer (in feet) by 16. Record this value.
2. Subtract 4 from the milliamp output of the transducer. Record this value
3. Multiply the result of step one by the result of step 2. This is the approximate depth at which the transducer is sited.

If the resulting numbers are reasonably close to some verified value for current water depth, then the unit is functioning. In order to determine the quality of measurement, additional steps need to be performed.

© 2017 by **newterra**, ltd.
All rights reserved. No part of this document may be reproduced or transmitted in any form or by any means, electronic, mechanical, photocopying, recording, or otherwise, without prior written permission of **newterra** ltd.

newterra ltd.
1291 California Avenue, Brockville, ON K6V 5W3
(800) 420-4056 / www.newterra.com

7.5.10 PH-501 - Trouble Shooting

Fault reporting and troubleshooting

Display	Description / cause	Status[1]	Mode[2]	Measured variable output[3]	Correction variable output[4]
pH/mV RANGE ↓	Input voltage too low	Error	Basic load	Fault current	-
pH/mV RANGE ↑	Input voltage too high	Error	Basic load	Fault current	-
T RANGE ↓	Measured temperature beneath measuring range	Error	Basic load	Fault current	Fault current
T RANGE ↑	Measured temperature above measuring range	Error	Basic load	Fault current	Fault current
CAL ERROR	No valid user calibration exists	Error	-	-	-
NO PROBE	If activated: pH sensor monitoring outputs: no sensor	Error	Basic load	Fault current	-
PROBE ERR	If activated: pH sensor monitoring outputs: sensor break	Error	Basic load	Fault current	-
CHECK-TIME	Control checkout time elapsed	Error	Basic load	Fault current	-
mA RANGE ↑	mA output current has an upper limit	Error	-	-	-

© 2017 by **newterra**, ltd.
All rights reserved. No part of this document may be reproduced or transmitted in any form or by any means, electronic, mechanical, photocopying, recording, or otherwise, without prior written permission of **newterra** ltd.

newterra ltd.
1291 California Avenue, Brockville, ON K6V 5W3
(800) 420-4056 / www.newterra.com

Display	Description / cause	Status[1]	Mode[2]	Measured variable output[3]	Correction variable output[4]
mA RANGE ↓	mA output current has a lower limit	Error	-	-	-
LIMIT ↑	Measured variable exceeds upper set limit	Warning	-	-	-
LIMIT ↓	Measured variable falls below lower set limit	Warning	-	-	-
T LIMIT ↑	Correction variable exceeds upper set limit	Warning	-	-	-
T LIMIT ↓	Correction variable falls below lower set limit	Warning	-	-	-
LIMIT ERR	Set checkout time for monitoring the measurement variable limits has elapsed	Error	Stop	Fault current	-
TLIMITERR	Set checkout time for monitoring the correction variable limits has elapsed	Error	Stop	Fault current	Fault current
NO CAL	No valid user calibration exists	Warning	-	-	-
CONTACTIN	If activated: Power relay is activated in *'PAUSE/HOLD'*	Error	-	-	-

1 = *[Status]* Error status after occurrence of the fault (error means: alarm relay deactivates, "*" is displayed before the error message, can be acknowledged with OK)

© 2017 by **newterra**, ltd.
All rights reserved. No part of this document may be reproduced or transmitted in any form or by any means, electronic, mechanical, photocopying, recording, or otherwise, without prior written permission of **newterra** ltd.

newterra ltd.
1291 California Avenue, Brockville, ON K6V 5W3
(800) 420-4056 / www.newterra.com

2 = *[Mode]* Resulting controller mode (relates to control variable and thus, as necessary, mA output)

3 = *[Measured variable output]* Consequence for the current output, if this is set as *'a measured variable output'*

4 = *[Correction variable output]* Consequence for the current output, if this is set as *'a correction variable output'*

7.5.11 MV-701/702 - Trouble Shooting

Conditions	Possibilities	Solutions
Motor does not operate	1. Is the supplied power and voltage correct? 2. Any blisters on the capacitor? 3. Are the gear trains free?	1. Checking by meter. 2. If so replace. 3. Remove motor to check.
Motor stops running	1. Is power supply short circuited? 2. Any foreign objects in flow stream?	1. Check wiring. 2. Check for obstructions.
Unable to fully open/close	1. Loose/Misaligned cam? 2. Bent valve stem? 3. Mechanical stop adjustment incorrect?	1. Adjust/Tighten using spanner. 2. Replace valve stem. 3. Check position of stops.
Valve stops operating when motor is running.	1. Gear worn out? 2. Sleeve adapter worn out or broken? 3. Broken valve stem or actuator transmission shaft?	1. Replace gear. 2. Replace sleeve adapter. 3. Replace valve stem or actuator transmission shaft.
Abnormal control for operating two or more actuators simultaneously.	1. Controlling circuit connects in tandem or parallel?	1. Please refer to the wiring diagram.
Motor overheats.	1. Is the voltage correct? 2. Is valve too tight to operate? 3. High working frequency? 4. Is motor stem or bearing binding?	1. Checking by meter. 2. Replace valve. 3. Check duty cycle. 4. Replace the binding parts.
Abnormal on/off angle on 3-phase voltage.	1. Wrong phase wiring?	1. Change phase wiring.
Occasional on/off actuator failure.	1. Simultaneous input power on/off.	1. Check if the selection switch is normal.
Vibration when valve is closed.	1. Motor brake spring fatigued or Teflon worn?	1. Replace spring or Teflon.

© 2017 by **newterra**, ltd.
All rights reserved. No part of this document may be reproduced or transmitted in any form or by any means, electronic, mechanical, photocopying, recording, or otherwise, without prior written permission of **newterra** ltd.

newterra ltd.
1291 California Avenue, Brockville, ON K6V 5W3
(800) 420-4056 / www.newterra.com

© 2017 by **newterra**, ltd.
All rights reserved. No part of this document may be reproduced or transmitted in any form or by any means, electronic, mechanical, photocopying, recording, or otherwise, without prior written permission of **newterra** ltd.

newterra ltd.
1291 California Avenue, Brockville, ON K6V 5W3
(800) 420-4056 / www.newterra.com

8.0 SHUT DOWN

8.1 MBR Temporary Shut Down

A temporary shutdown for a few days requires continuous aeration of the biomass to keep the DO level at least 2 mg/L and continuous biomass recycle between the bioreactors.

8.2 MBR Permanent Shut Down / Winterizing

Permanent shut down is required if system operation stops for at least 2 weeks without inflow. Permanent shut down includes the following procedure:

8.2.1 Process Shut Down Procedure

- Conduct a “Backwash Now” operation on the system
- Stop influent flow into the System
- Ensure all pumps are in the “OFF” position using the HOA HMI screen
- Ensure all Blowers are in the “AUTO” position using the HOA HMI screen. This is to be done until a vacuum truck can be provided or contracted locally to clean out the tanks.
- Ensure all automated valves are in the “OFF” position using the HOA HMI screen.
- Ensure that the MBR is disabled using the HMI screen button
- Conduct all maintenance procedures on Section 7 Table – regardless of schedule time

8.2.2 Cleaning - General

- Conduct general system interior cleaning
- Open all tanks, wash out with a garden hose and Vacuum out.
- Clean all sensors and level switches

8.2.3 Membranes

- Ensure that the membrane tanks (TNK-601/602) are drained before opening the membrane tanks.
- Open TNK-601/602 doors with hand/power tools.



© 2017 by **newterra**, ltd.
All rights reserved. No part of this document may be reproduced or transmitted in any form or by any means, electronic, mechanical, photocopying, recording, or otherwise, without prior written permission of **newterra** ltd.

newterra ltd.
1291 California Avenue, Brockville, ON K6V 5W3
(800) 420-4056 / www.newterra.com

- Using a garden hose, wash the inside of the tanks and vac out any remaining waste water. **DO NOT USE A PRESSURE WASHER!**
- Disconnect the permeate hoses from the top of membrane the membrane stack.
- Remove the membranes from the membrane frame using hand tools.



- **CAUTION** – the membranes are contaminated with waste water. PPE required.
- **NOTE**. The membranes are double stacked. The bottom membrane has a plug in the bottom opening. Do not remove this plug. Note the membrane orientations for re-installation. The membranes are joined together with either a PVC union with two O-Rings on each side OR clear PVC hose and hose clamps.

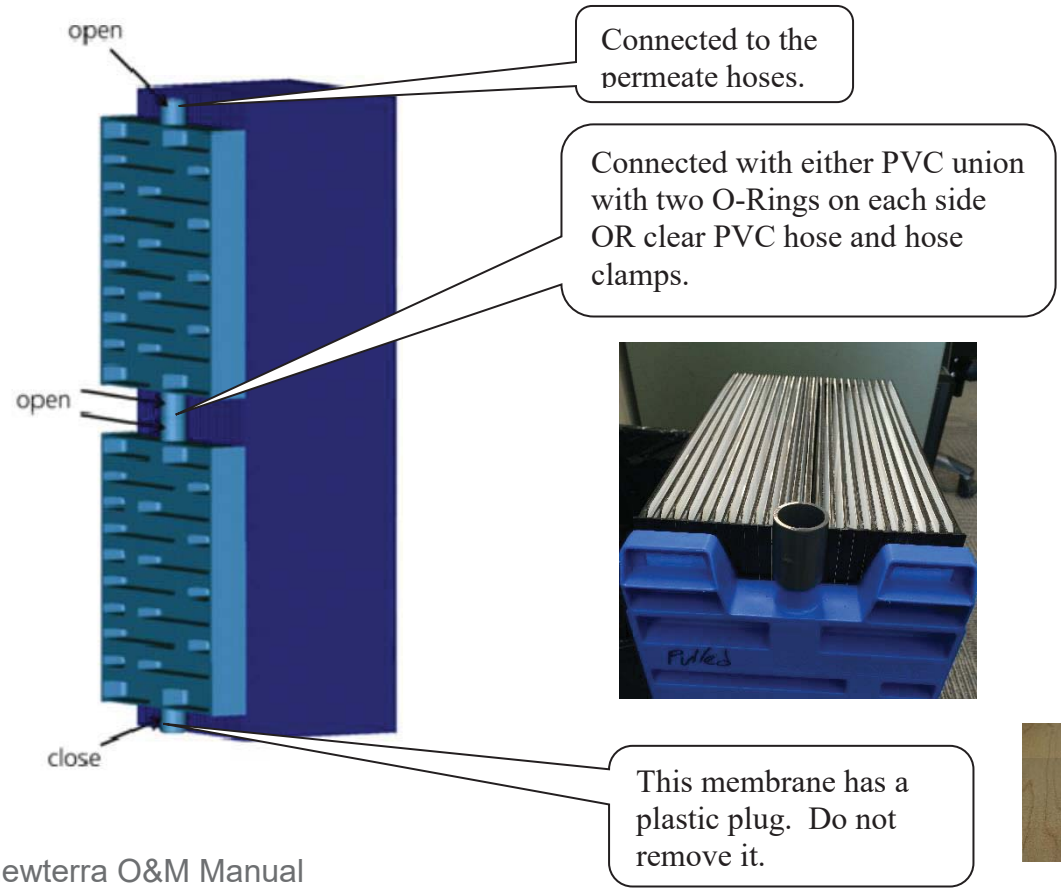

© 2017 by **newterra**, ltd.
All rights reserved. No part of this document may be reproduced or transmitted in any form or by any means, electronic, mechanical, photocopying, recording, or otherwise, without prior written permission of **newterra** ltd.

newterra ltd.
1291 California Avenue, Brockville, ON K6V 5W3
(800) 420-4056 / www.newterra.com

- After membranes are separated, wash with clean water. Remove the blue backing plate and gently separate the membrane plates and clean with water to remove any debris.





- Replace backing plate and let the membranes dry out.
- Shrink wrap the membrane cassettes in multiple film layers and seal the membranes cassettes with tape. Note and mark which membranes have the bottom plug in them.
- Store the preserved membrane cassettes at room temperature (never expose the membrane cassettes to frost, dust, or direct sunlight).

8.3 General Components

- Conduct all preventative maintenance as listed in Section 7.
- Drain/Vacuum Out and wash out all tanks.
- Clean and Wash out SCR-201/202
- Disassemble all PVC ball valves and drain any water inside (open and close to ensure trapped water escapes).
- Leave all valves ½ open during reinstallation
- Open all drain valves and leave open.
- Find all check valves and make sure water is not being held by valve (Wet/Dry Vac works well here).
- Drain / remove all pumps from tanks, ensure no water is left inside the pump.
- Use RV Antifreeze that is suitable for potable water systems
    - Refill any check valve

© 2017 by **newterra**, ltd.
All rights reserved. No part of this document may be reproduced or transmitted in any form or by any means, electronic, mechanical, photocopying, recording, or otherwise, without prior written permission of **newterra** ltd.

- Dump in 2 (qty) 4-L bottles in each tank

- Remove power from system.
- Double check and ensure that there is no water left in any pipes, fittings etc. If it is not possible to remove the water fill with antifreeze.
- Drain the chemical tanks and dispose of chemicals in accordance with manufacturer's recommendations and local regulations.
- Remove pH (PH-501) and DO (DO-501) probes from TNK-501 and store with membranes in a heated area ensure probes are kept wet.

- **NOTE: Remove DO probe tip from the DO sensor (DO-501) in accordance with vendor directions in Appendix E and store in the calibration chamber with the storage cap attached with a few drops of clean water. Store with the membranes in a heated area and ensure probe tip is kept wet.**

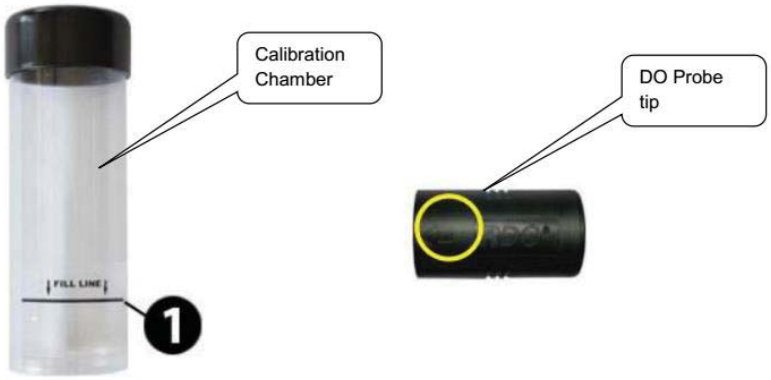

© 2017 by **newterra**, ltd.
All rights reserved. No part of this document may be reproduced or transmitted in any form or by any means, electronic, mechanical, photocopying, recording, or otherwise, without prior written permission of **newterra** ltd.

newterra ltd.
1291 California Avenue, Brockville, ON K6V 5W3
(800) 420-4056 / www.newterra.com

8.4 Blowers – B-501/502

STORAGE

Your Gardner Denver Blower was packaged at the factory with adequate protection to permit normal storage for up to six (6) months.

If the unit is to be stored under adverse conditions or for extended periods of time, the following additional measures should be taken to prevent damage.

1. Store the blower in a clean, dry, heated (if possible) area.
2. Make certain inlet and discharge air ports are tightly covered to prevent foreign material from entering the air box.
3. All exposed, non-painted surfaces should be protected against rust and corrosion.
4. Provide adequate protection to avoid accidental mechanical damage.
5. In high humidity or corrosive environments, additional measures may be required to prevent rusting of the blower internal surfaces.
6. To prevent rusting of gears, bearings, etc., the oil reservoirs may be filled with normal operating oil.

⚠ CAUTION
Before running the blower, drain the oil and replace to the proper operating level with clean, fresh lubricant.

7. Rotate the blower shaft (10 to 25 turns) weekly during storage. Inspect the blower shaft (near the shaft seal area) monthly and spray with rust inhibitor if needed.
8. For long term storage (over six (6) months), contact Gardner Denver Compressor Division Customer Service for recommendations.

REMOVING PROTECTIVE MATERIALS

The shaft extension is protected with rust inhibitor which can be removed with any standard solvent.

⚠ CAUTION
Follow the safety directions of the solvent manufacturer.

Blower inlet and outlet are temporarily capped to keep out dirt and other contaminants during shipment. These covers must be removed before start-up.

The internal surfaces of all Sutorbilt units are mist sprayed with a rust preventative to protect the machine during shipment. Remove this film upon initial startup, using any commercial safety solvent. Position the blower so that the inlet and discharge connections are in the vertical position (vertical airflow). On vertically mounted units, it will be necessary to lay the unit on its side supporting the ends of the unit so as not to restrict the port on the bottom side. Place a shallow pan on the under side of the unit. With the blower disconnected from power, spray the solvent in the top port, rotating the impellers by spinning the shaft manually. Continue this procedure until the unit is visibly clean.

⚠ WARNING
Rotating components will cause severe injury in case of personal contact. Keep hands and loose clothing away from blower inlet and discharge ports.

© 2017 by **newterra**, ltd.
All rights reserved. No part of this document may be reproduced or transmitted in any form or by any means, electronic, mechanical, photocopying, recording, or otherwise, without prior written permission of **newterra** ltd.

8.4 Chemical Dosing Pumps – P-6101/6102/6103

1. Disconnect the pump from the mains power supply.
2. Empty the liquid end by turning the pump upside down and allowing the feed chemical to run out.
3. Flush the liquid end with a suitable medium; flush the dosing head thoroughly when using hazardous feed chemicals!

© 2017 by **newterra**, ltd.
All rights reserved. No part of this document may be reproduced or transmitted in any form or by any means, electronic, mechanical, photocopying, recording, or otherwise, without prior written permission of **newterra** ltd.

newterra ltd.
1291 California Avenue, Brockville, ON K6V 5W3
(800) 420-4056 / www.newterra.com

© 2017 by **newterra**, ltd.
All rights reserved. No part of this document may be reproduced or transmitted in any form or by any means, electronic, mechanical, photocopying, recording, or otherwise, without prior written permission of **newterra** ltd.

newterra ltd.
1291 California Avenue, Brockville, ON K6V 5W3
(800) 420-4056 / www.newterra.com

9.0 SERVICE & SUPPORT

9.1 Commissioning and Start-up

newterra MicroClear™ MBR System's **commissioning & start-up** is the last step of the **newterra** project execution process.

As part of your order, the following on site services will be provided by experienced factory trained newterra representative:

- Includes five (5) 8-hour days of onsite startup/commissioning by one (1) factory trained newterra representative
- Includes five (5) 8-hour days of onsite training by one (1) factory trained newterra representative

9.1.1 Startup/Commissioning

Typical System Startup/Commissioning includes the following:

- Equipment checks - Electrical, mechanical, and controls
- Functional test - Equipment and control system
- Hydraulic test
- Operation during plant seeding

9.1.2 Training

On-site operator training including the following topics:

- General MBR theory & process
- Specific system instruction
    - Components
    - Controls and operating philosophy
    - Alarms and alarm troubleshooting
    - Maintenance
    - Troubleshooting
    - MBR fouling control (Biology, physical, and chemical)

© 2017 by **newterra**, ltd.
All rights reserved. No part of this document may be reproduced or transmitted in any form or by any means, electronic, mechanical, photocopying, recording, or otherwise, without prior written permission of **newterra** ltd.

newterra ltd.
1291 California Avenue, Brockville, ON K6V 5W3
(800) 420-4056 / www.newterra.com

9.2 Post commissioning Services

A comprehensive range of post commissioning services are available from **newterra** beyond system design and installation. Specific services include:

- Technical support (including after-hours emergency telephone support).
- Spare parts order and delivery.
- Training program.
- Plant optimization and upgrades.
- Telemetry control and monitoring.
- Assistance in preparing system performance reports (process data monitoring & analysis).
- Preventive maintenance cleaning (including membrane cleaning).
- System audits for reviewing the performance and efficiency of all MBR subsystems..

9.2.1 Technical Support

Technical support is available to assist in troubleshooting of **newterra** MBR systems during normal working hours 8:30 am to 5:00 pm (Eastern Time Zone for **newterra** ltd.). Telephone service is available via **1.800.420.4056**.

Emergency **24/7 telephone technical support –** This will be activated upon subscribing to **newterra's** 24/7 technical support service. If a problem cannot be resolved through telephone or e-mail support, **newterra** technicians and engineers are available for site visits.

9.2.2 Spare Parts

newterra has spare parts to provide quick response to any critical system breakdown. Contact **newterra** parts department at **1.800.420.4056.**

All parts and components associated with **newterra** MBR Systems are available from within service departments and manufacturing facilities of **newterra** ltd across Canada and abroad.

Potentially required spare parts are:

- membrane modules/membrane cassettes;
- parts for repair/replacement (valves, transmitters, switches, gauges, pH & DO probes, pump motors, analyzers, PLC components, fuses, etc.);
- maintenance spare parts (air blowers, air filters, pumps, immersion heaters, chemical metering pumps, etc.).

© 2017 by **newterra**, ltd.
All rights reserved. No part of this document may be reproduced or transmitted in any form or by any means, electronic, mechanical, photocopying, recording, or otherwise, without prior written permission of **newterra** ltd.

newterra ltd.
1291 California Avenue, Brockville, ON K6V 5W3
(800) 420-4056 / www.newterra.com

9.2.3 Assistance in telemetry control and monitoring

newterra SITE-LINK is a customized software program and hardware configuration which provides a real-time link to a treatment system via cellular modem or customer supplied internet connection using our secure Site-Link Server.

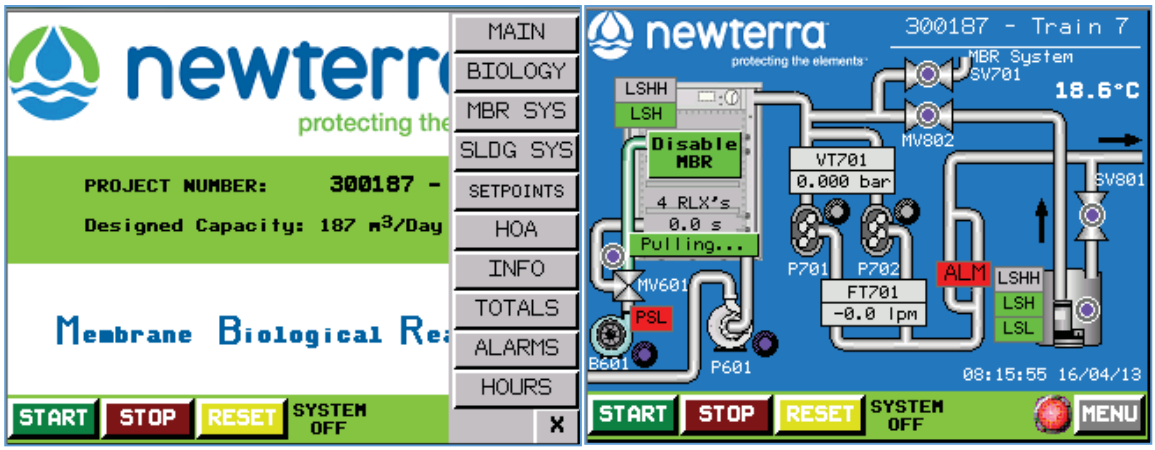

newterra Site-Link comes with the following customizable features:

- Customized P&ID layout with system status
- Start/Stop/Reset of system
- Manual control of all system components
- Data logging downloads in .csv format†
- Daily system status reports (E-Monitor)
- Alarm history including current alarm status
- Hour meters for applicable equipment
- Customization of all system set points†
- Live and historical trending
- Immediate text & email on alarm (E-Alarm)

†certain restrictions apply

The basic system requires that the customer provide a standard computer network cable to the control panel. If the customer's computer network is accessible to the internet, this system can also be monitored from any internet enabled computer. Static IP is not required but is recommended and must be provided by customer.

This system is not available if customer supplied internet connection or cellular service is not available at the site. During internet outages, reports cannot be sent and system status cannot be monitored remotely.

© 2017 by **newterra**, ltd.
All rights reserved. No part of this document may be reproduced or transmitted in any form or by any means, electronic, mechanical, photocopying, recording, or otherwise, without prior written permission of **newterra** ltd.

newterra ltd.
1291 California Avenue, Brockville, ON K6V 5W3
(800) 420-4056 / www.newterra.com

9.2.4 Site visits and system audits

Site visits and system audits can be arranged at an additional cost. Contact **newterra** for all financial aspects of **newterra** initial and post-commissioning services.

During a system audit, technical reviews of the performance of all **newterra** MBR subsystems and the efficiency of the biological process can be performed. Based on the site visit and agenda discussed with the client, we can assist in:

- Maintenance coordination and scheduling, including membrane maintenance and cleaning.
- Validation of chemical dosing settings.
- MBR System inspection for the proper operation of the membrane system in accordance with the O&M manual; equipment calibration, process optimization and upgrades.
- Continued on-site operator training and coaching.

© 2017 by **newterra**, ltd.
All rights reserved. No part of this document may be reproduced or transmitted in any form or by any means, electronic, mechanical, photocopying, recording, or otherwise, without prior written permission of **newterra** ltd.

newterra ltd.
1291 California Avenue, Brockville, ON K6V 5W3
(800) 420-4056 / www.newterra.com

10.0 WARRANTY

General Warranty Statement

1. **newterra** warrants and guarantees products of its manufacture against defective workmanship or material for a period of one year from the date of notice of readiness to ship.
2. This warranty is expressly and strictly limited to replacing, without charge, any part or parts which prove to **newterra**'s satisfaction upon examination, to have been defective in design, material or workmanship, and which have not been neglected, abused or misapplied, provided the buyer gives **newterra** immediate written notice upon discovery of any claimed defect.
3. During the warranty period, parts will be shipped as necessary with instructions to replace, which can be further elaborated over phone or email; visit(s) of our technician to site can be covered if there is a service agreement in place; otherwise, actual charges will be quoted to the owner at that time, if required.
4. **newterra** will also guarantee component parts manufactured by others to the extent of the guarantee made by the manufacturer of such equipment. In any case, guarantees on specific components will be extended a minimum of one year from date of notice of readiness to ship.

Warranty Exclusions

1. Warranty coverage does not include:
   - Freight, labor, travel, and living expenses associated with parts replacement
   - Normal maintenance items such as lubrication, fan belts, and cleaning of the equipment
   - System parts damaged as a result of customer changes to the system and/or PLC program without the written consent of **newterra**.
2. In the event that the customer, or any contractor employed by the customer, contracts an outside company, other than **newterra** for modification of system equipment, without knowledge of **newterra**, the warranty in that case may become null & void.
3. In the event that the customer, or any installation contractor employed by the customer, contracts outside **newterra** for installation work or erection of quoted equipment, the customer shall assume full responsibility for said contract.

Warranty Validation and Conditions

1. **newterra** highly recommends that the system be started up by a **newterra** factory trained technician to ensure the correct installation and trouble-free startup. The startup checklist provided in the O&M manual must be completed and returned to **newterra** to validate your equipment warranty which begins on the date of shipment from the factory.
2. In the event that the system is commissioned by a certified technician that is not an employee of **newterra**, the Startup Checklist must be returned to **newterra** within 15 days of the completion of startup

© 2017 by **newterra**, ltd.
All rights reserved. No part of this document may be reproduced or transmitted in any form or by any means, electronic, mechanical, photocopying, recording, or otherwise, without prior written permission of **newterra** ltd.

newterra ltd.
1291 California Avenue, Brockville, ON K6V 5W3
(800) 420-4056 / www.newterra.com

APPENDIX A

Drawings

© 2017 by **newterra**, ltd.
All rights reserved. No part of this document may be reproduced or transmitted in any form or by any means, electronic, mechanical, photocopying, recording, or otherwise, without prior written permission of **newterra** ltd.

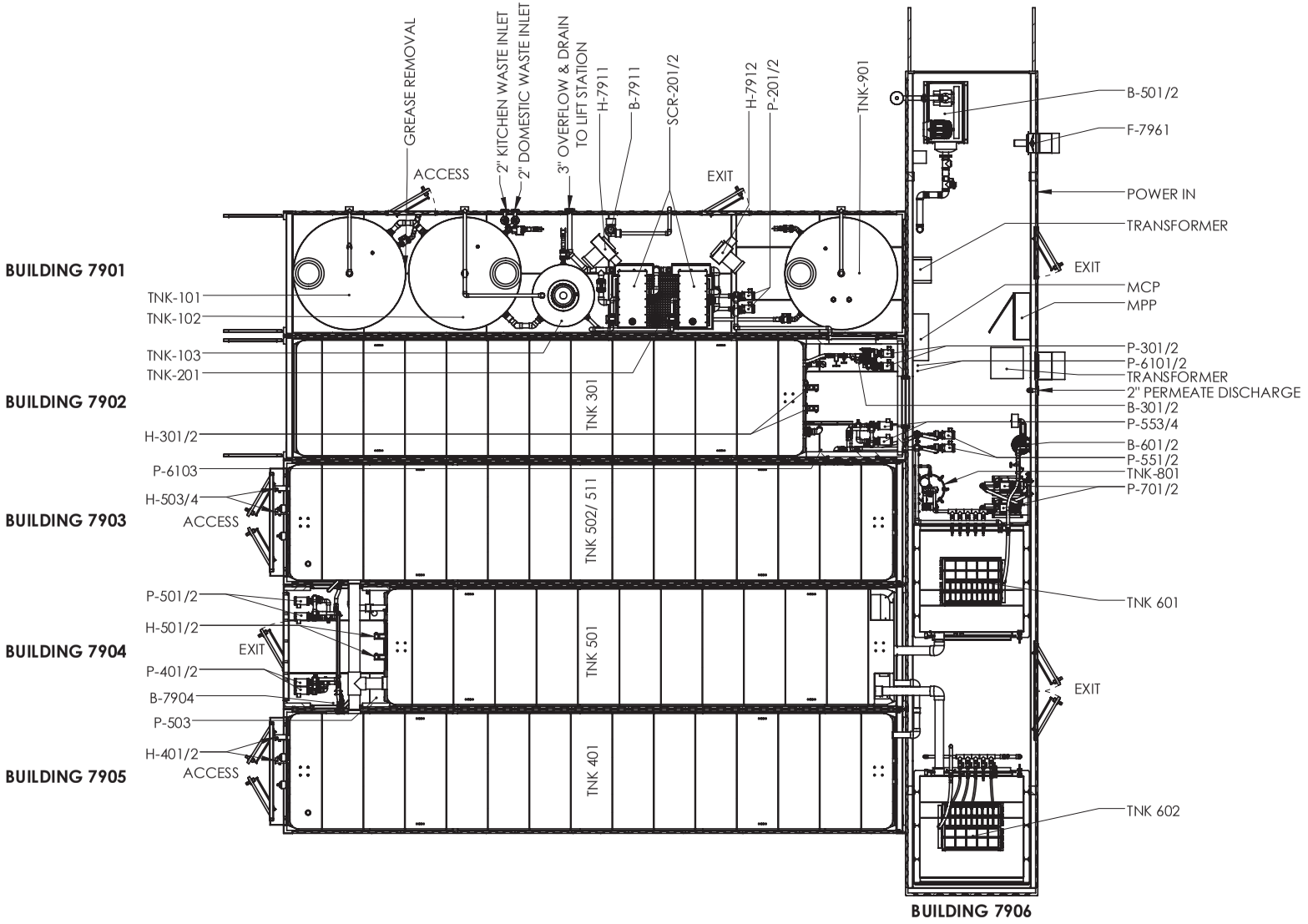

GENERAL TOLERANCES
.XX ± 1/8 "
.XXX ± 1/16 "
UNLESS OTHERWISE SPECIFIED DIMENSIONS ARE IN INCHES

THIS INFORMATION IS THE PROPERTY OF newterra AND CANNOT BE REUSED OR REPRODUCED WITHOUT WRITTEN CONSENT.

LEVEL	DATE	BY	REVISION
C1	11/08/17	AH	AS BUILT
B1	07/06/17	GH	FOR PRODUCTION
B	06/06/17	GH	FOR PRODUCTION
A2	25/05/17	GH	REVISED LAYOUT
A	19/05/2017	GH	FOR REVIEW

DWG. NO:

PROJECT NUMBER: 1704432

TITLE: SYSTEM LAYOUT

CUSTOMER: AGNICO EAGLE

DRAWN BY: GH

DATE: 19/05/17

SHEET 1 OF 4

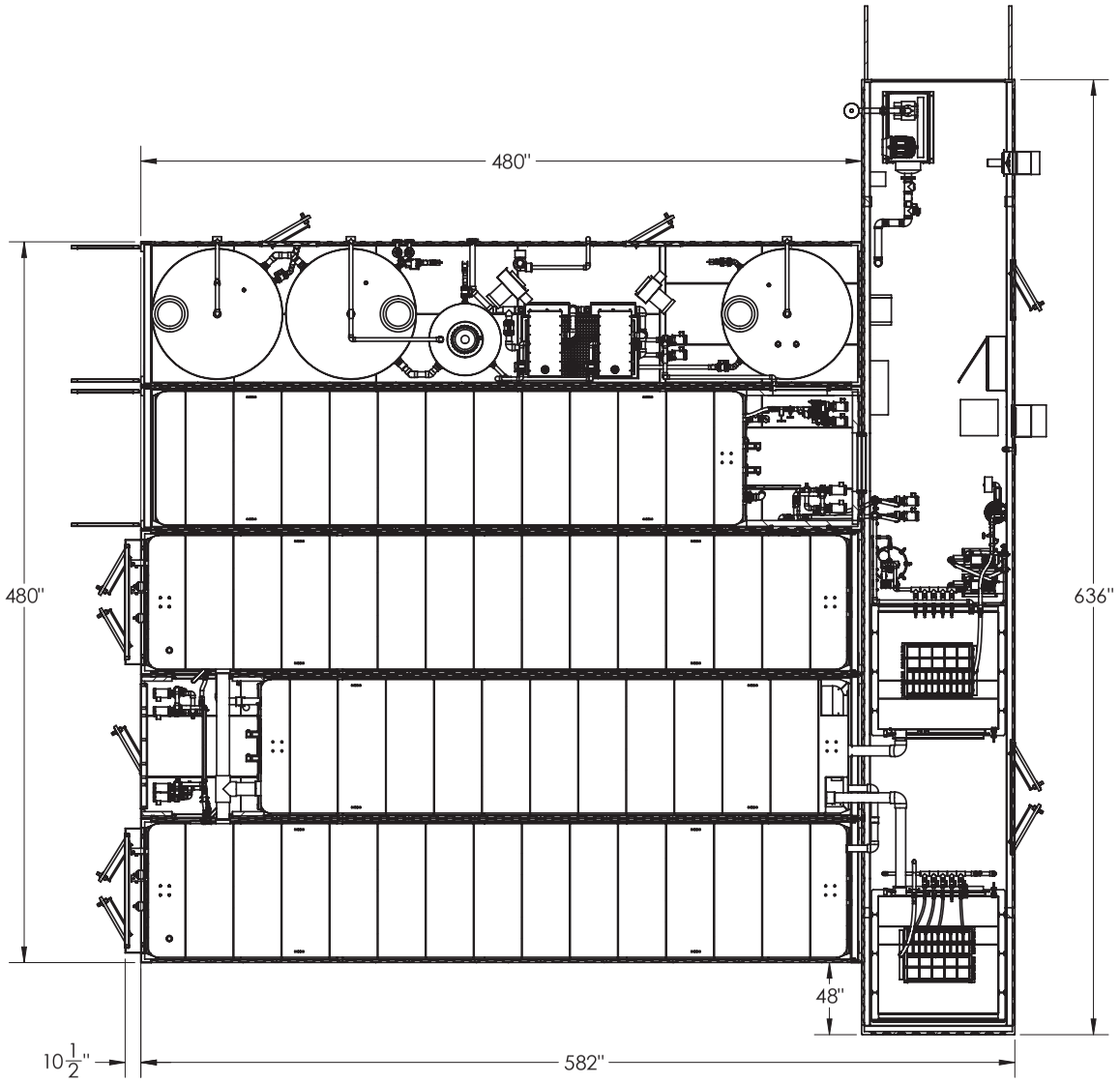

GENERAL TOLERANCES
.XX ± 1/8"
.XXX ± 1/16"
UNLESS OTHERWISE SPECIFIED DIMENSIONS ARE IN INCHES

THIS INFORMATION IS THE PROPERTY OF newterra AND CANNOT BE REUSED OR REPRODUCED WITHOUT WRITTEN CONSENT.

LEVEL	DATE	BY	REVISION
C1	11/08/17	AH	AS BUILT
B1	07/06/17	GH	FOR PRODUCTION
B	06/06/17	GH	FOR PRODUCTION
A2	25/05/17	GH	REVISED LAYOUT
A	19/05/2017	GH	FOR REVIEW

DWG. NO:

PROJECT NUMBER: 1704432

TITLE: SYSTEM LAYOUT

CUSTOMER: AGNICO EAGLE

DRAWN BY: GH

DATE: 19/05/17

SHEET 2 OF 4

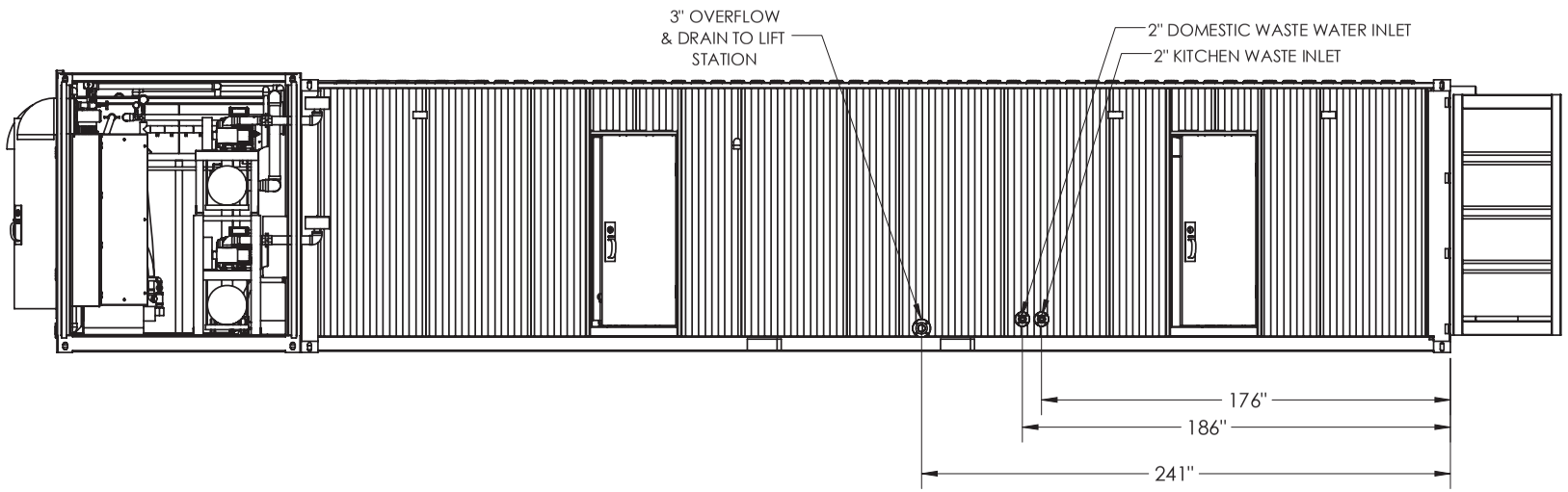

GENERAL TOLERANCES
.XX ± 1/8 "
.XXX ± 1/16 "
UNLESS OTHERWISE SPECIFIED DIMENSIONS ARE IN INCHES

THIS INFORMATION IS THE PROPERTY OF newterra AND CANNOT BE REUSED OR REPRODUCED WITHOUT WRITTEN CONSENT.

LEVEL	DATE	BY	REVISION
C1	11/08/17	AH	AS BUILT
B1	07/06/17	GH	FOR PRODUCTION
B	06/08/2017	GH	FOR PRODUCTION

DWG. NO:
PROJECT NUMBER: 1704432
TITLE: SYSTEM LAYOUT
CUSTOMER: AGNICO EAGLE
DRAWN BY: GH
DATE: 06/06/17
SHEET 3 OF 4

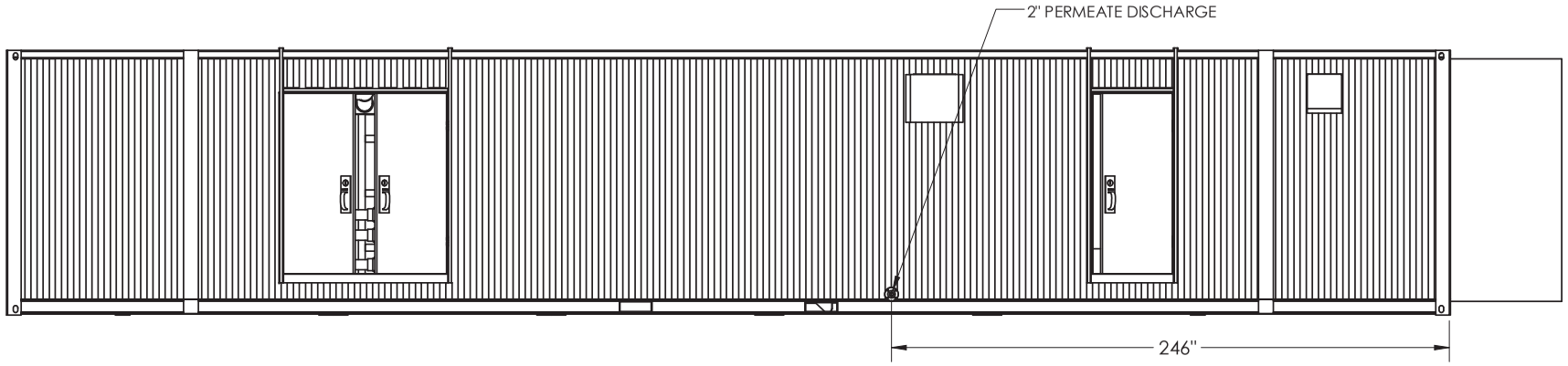

GENERAL TOLERANCES
.XX ± 1/8 "
.XXX ± 1/16 "
UNLESS OTHERWISE SPECIFIED DIMENSIONS ARE IN INCHES

THIS INFORMATION IS THE PROPERTY OF newterra AND CANNOT BE REUSED OR REPRODUCED WITHOUT WRITTEN CONSENT.

LEVEL	DATE	BY	REVISION
C1	11/08/17	AH	AS BUILT
B1	07/06/17	GH	FOR PRODUCTION
B	06/06/2017	GH	FOR PRODUCTION

DWG. NO:

PROJECT NUMBER: 1704432

TITLE: SYSTEM LAYOUT

CUSTOMER: AGNICO EAGLE

DRAWN BY: GH

DATE: 06/06/17

SHEET 4 OF 4

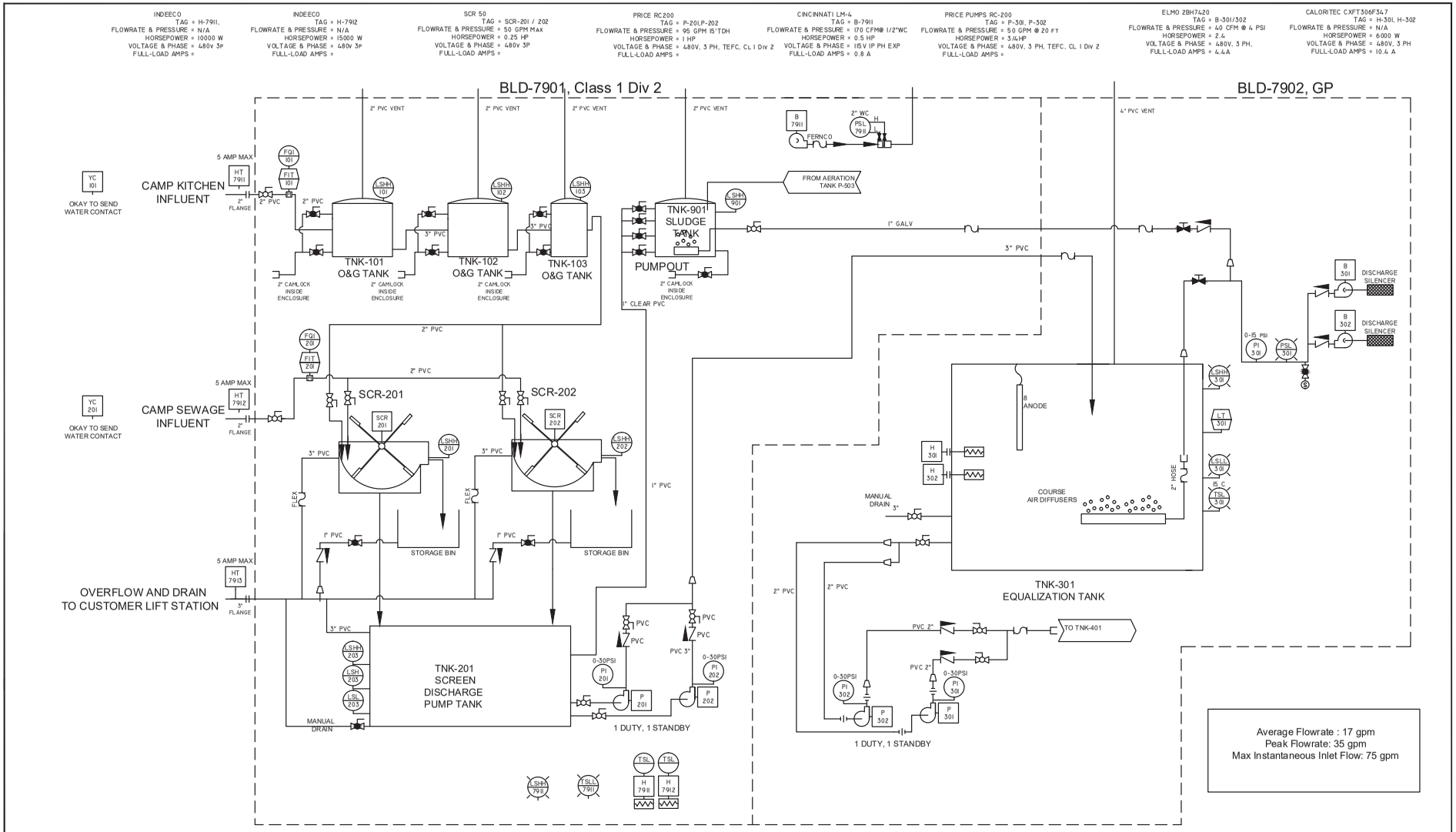

NOTES

IS INPUT WIRING TO BE WIRED FOR OUTDOORS, ACCORDING CEC FOR HAZARDOUS LOCATIONS.

WIRING TO BE CLASS I DIVISION 2, AS PER THE CEC.

newterra

PHONE: (800) 420-4056

www.newterra.com

LEVEL	REVISION	DATE (mm/dd/yy)	BY
C	AS-BUILT	13/08/17	JJK
B	PRODUCTION	06/06/17	JJK
A2	SUBMITTAL REVISIONS	26/05/17	JJK
A	SUBMITTAL	23/05/17	JJK

PROJECT NUMBER: 1704432

TITLE AND LOCATION: P&ID AMARUQ MINE

CUSTOMER: AGNICO EAGLE MINE

DRAWN BY: MH | DATE: | SHEET: 1 | SHEETS: 4

THIS INFORMATION IS THE PROPERTY OF newterra AND CANNOT BE REUSED OR REPRODUCED WITHOUT THE WRITTEN CONSENT OF newterra

PRICE PUMPS RC-200
TAG = P-401,402
FLOWRATE & PRESSURE = 300 GPM @ 60 FT
HORSEPOWER = 5HP
VOLTAGE & PHASE = 480V, 3 PH, TEFC, CL I Div 2
FULL-LOAD AMPS =

CALORITEC CXFT306F347R83
TAG = H-401,402,501,502
FLOWRATE & PRESSURE = N/A
HORSEPOWER = 6000 W
VOLTAGE & PHASE = 480V, 3 PH
FULL-LOAD AMPS = 10.4 A

CINCINNATI LM6
TAG = B-7941
FLOWRATE & PRESSURE = 700 CFM@ 2"WC
HORSEPOWER = 1.5 HP
VOLTAGE & PHASE = 480V 3P PH
FULL-LOAD AMPS =

OUELLET OAC04808BL
TAG = H-7941
FLOWRATE & PRESSURE = N/A
HORSEPOWER = 4,800 W
VOLTAGE & PHASE = 480 V, 1 PH
FULL-LOAD AMPS = 8.34

PRICE PUMPS RC-200
TAG = P-503
FLOWRATE & PRESSURE = 50 GPM @ 10 FT
HORSEPOWER = 1/4 HP
VOLTAGE & PHASE = 480V, 3 PH, TEFC, CL I Div 2
FULL-LOAD AMPS =

PROMINENT BETA 4
TAG = P-6101, 6102
FLOWRATE & PRESSURE = 3.2 GPH@58PSI
HORSEPOWER = N/A
VOLTAGE & PHASE = 120 V, 1 PH
FULL-LOAD AMPS = N/A

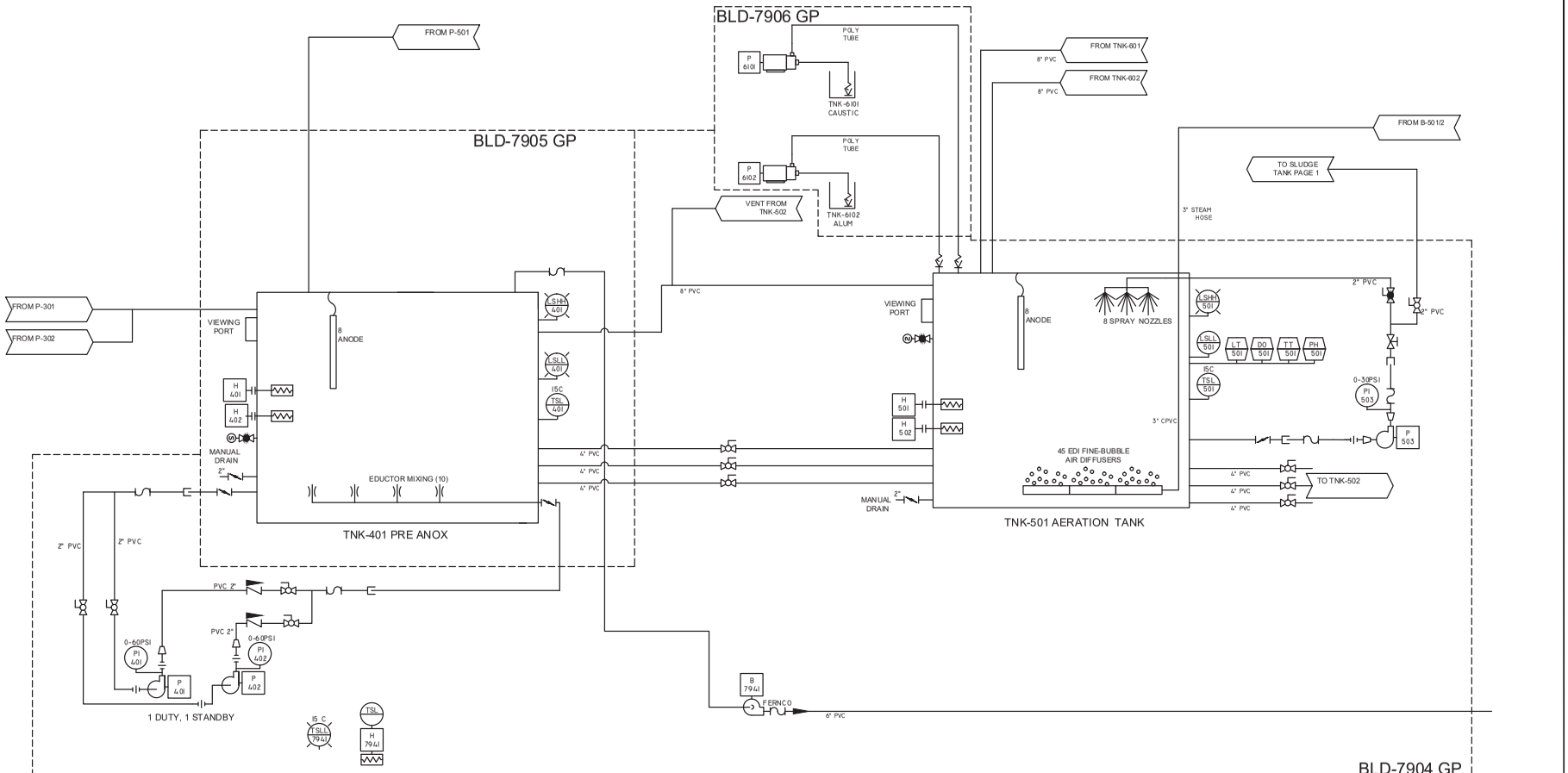

NOTES

newterra
PHONE: (800) 420-4056
www.newterra.com

LEVEL	REVISION	DATE (mm/dd/yy)	BY
C	AS-BUILT	13/08/17	JJK
B	PRODUCTION	06/06/17	JJK
A2	SUBMITTAL REVISIONS	26/05/17	JJK
A	SUBMITTAL	23/05/17	JJK

PROJECT NUMBER: 1704432
TITLE AND LOCATION: P&ID AMARUQ MINE
CUSTOMER: AGNICO EAGLE MINE
DRAWN BY: MH
DATE:
SHEET: 2
SHEETS: 4

THIS INFORMATION IS THE PROPERTY OF newterra AND CANNOT BE REUSED OR REPRODUCED WITHOUT THE WRITTEN CONSENT OF newterra

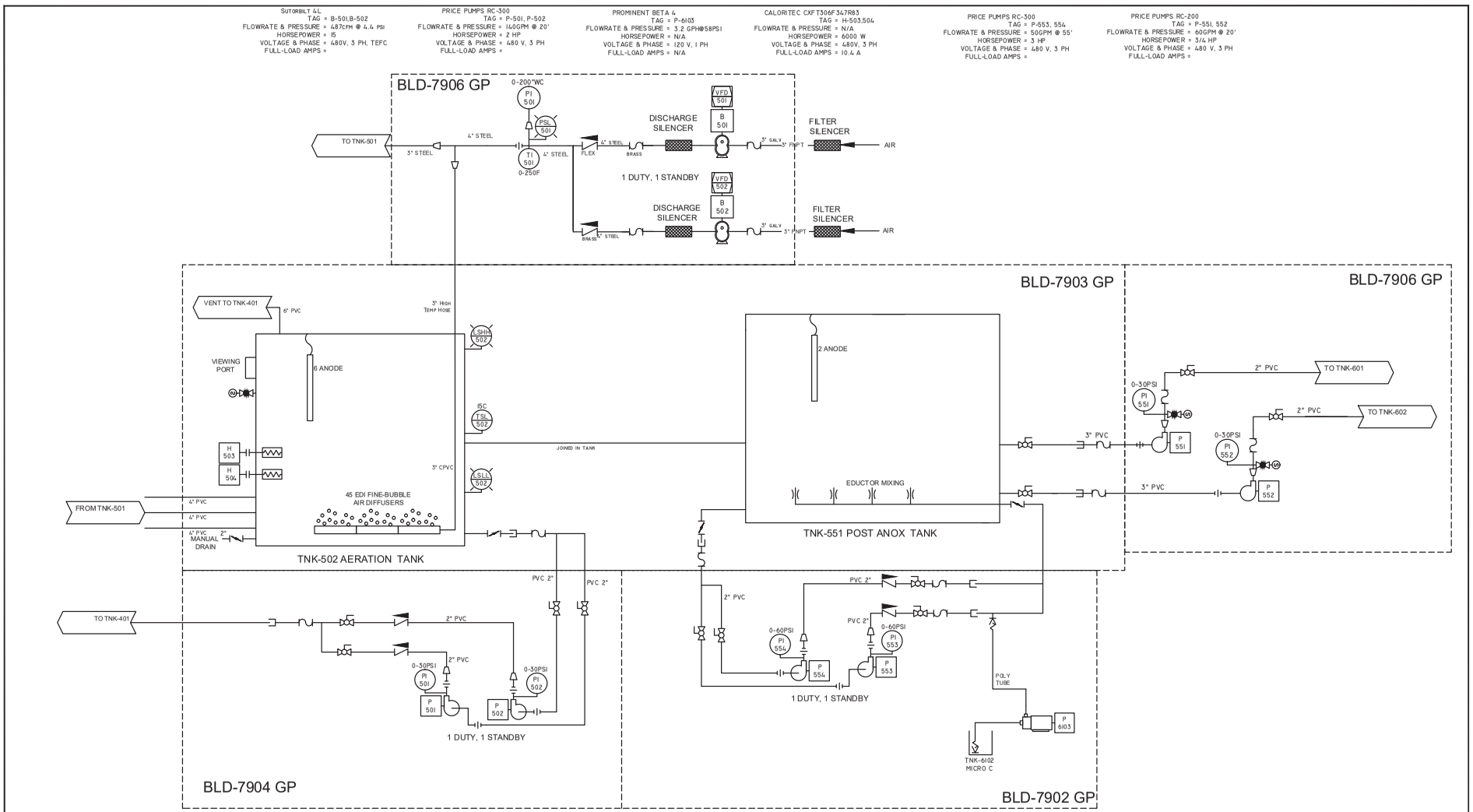

NOTES

newterra

PHONE:
(800) 420-4056

www.newterra.com

LEVEL	REVISION	DATE (mm/dd/yy)	BY
C	AS-BUILT	13/08/17	JJK
B	PRODUCTION	06/06/17	JJK
A2	SUBMITTAL REVISIONS	26/05/17	JJK
A	SUBMITTAL	23/05/17	JJK

PROJECT NUMBER: 1704432

TITLE AND LOCATION: P&ID AMARUQ MINE

CUSTOMER: AGNICO EAGLE MINE

DRAWN BY: MH | DATE: | SHEET: 3 | SHEETS: 4

THIS INFORMATION IS THE PROPERTY OF newterra AND CANNOT BE REUSED OR REPRODUCED WITHOUT THE WRITTEN CONSENT OF newterra

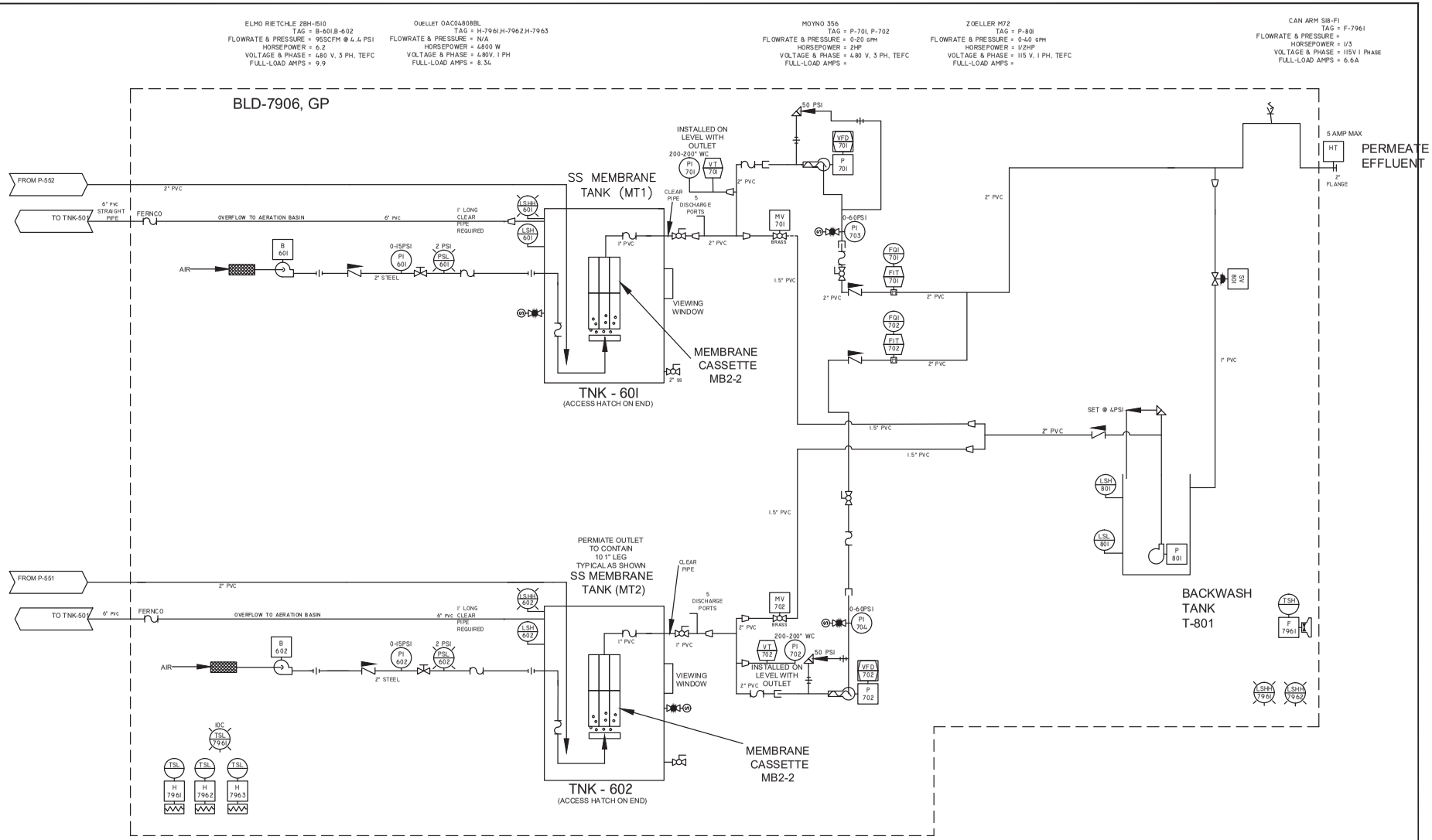

NOTES

newterra

PHONE: (800) 420-4056

www.newterra.com

LEVEL	REVISION	DATE (mm/dd/yy)	BY
C	AS-BUILT	13/08/17	JJK
B	PRODUCTION	06/06/17	JJK
A2	SUBMITTAL REVISIONS	26/05/17	JJK
A	SUBMITTAL	23/05/17	JJK

PROJECT NUMBER: 1704432

TITLE AND LOCATION: P&ID AMARUQ MINE

CUSTOMER: AGNICO EAGLE MINE

DRAWN BY: MH | DATE: | SHEET: 4 | SHEETS: 4

THIS INFORMATION IS THE PROPERTY OF newterra AND CANNOT BE REUSED OR REPRODUCED WITHOUT THE WRITTEN CONSENT OF newterra

VALVES AND PIPING

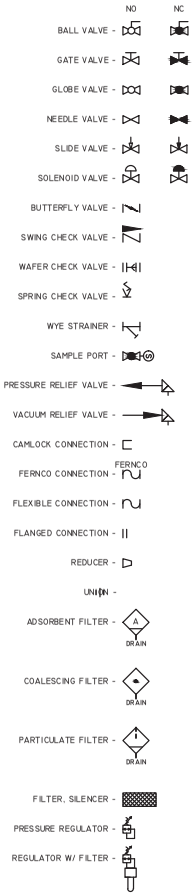

EQUIPMENT



EQUIPMENT

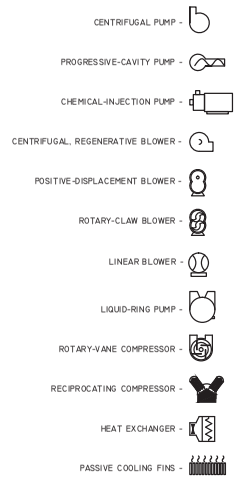

EQUIPMENT

AV - ACTUATED VAVLE
B - BLOWER
F - FAN
H - HEATER
MBR - MEMBRANE BIOLOGICAL REACTOR
MV - MODULATED VALVE
P - PUMP
SV - SOLENOID VALVE
TNK - TANK
UV - ULTRA VIOLET LIGHT
VFD - VARIABLE FREQUENCY DRIVE

FLOW MEASUREMENT

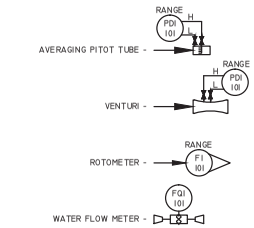

INSTRUMENT DESIGNATION

	INPUT	1ST MODIFIER	2ND MODIFIER	3RD MODIFIER	OUTPUT	1ST MODIFIER	
A							A
B						BLOWER	B
C	CYCLE					COMPRESSOR	C
D		DIFFERENTIAL				AIR DRYER	D
E							E
F	FLOW					FAN	F
G	GAS (LEL)		GAUGE				G
H				HIGH	HAND	HEATER	H
I	CURRENT		INDICATOR				I
J							J
K							K
L	LEVEL			LOW			L
M					MOTORIZED		M
N							N
O							O
P	PRESSURE				PNEUMATIC	PUMP	P
Q		QUANTITY					Q
R							R
S	SPEED		SWITCH		SOLENOID		S
T	TEMPERATURE		TRANSMITTER				T
U							U
V						VALVE	V
W							W
X							X
Y							Y
Z	POSITION						Z

INSTRUMENT IDENTIFICATION

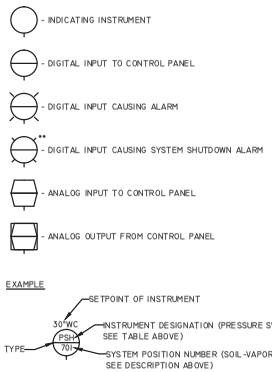

SYSTEM POSITION DESIGNATION

1000 - LIFT STATION
2000 - INLET SCREEN
3000 - EQUALIZATION TANK
4901 - SCREEN DISCHARGE PUMP TANK
5000 - AERATION TANK
5500 - SLUDGE HOLDING TANK
6000 - MBR TANK
6100 - CHEMICAL INJECTION
7000 - PERMEATE
7500 - UV LIGHT
7900 - BUILDING,TRAILER OR SKID
8000 - DISCHARGE TANK
8200 - CONTROL PANEL
8300 - TELEMETRY
9900 - EXTRAS

NOTES

newterra

PHONE:
(800) 420-4056

www.newterra.com

LEVEL	REVISION	DATE (mm/dd/yy)	BY
C	AS-BUILT	13/08/17	JJK
B	PRODUCTION	06/06/17	JJK
A2	SUBMITTAL REVISIONS	26/05/17	JJK
A	SUBMITTAL	23/05/17	JJK

PROJECT NUMBER: 1704432

TITLE AND LOCATION: P&ID AMARUQ MINE

CUSTOMER: AGNICO EAGLE MINE

DRAWN BY: MH | DATE: | SHEET: 4 | SHEETS: 4

THIS INFORMATION IS THE PROPERTY OF newterra AND CANNOT BE REUSED OR REPRODUCED WITHOUT THE WRITTEN CONSENT OF newterra

Project:

1704432 - AGNICO EAGLE MINE - C

newterra®

clean water. modular solutions. simple.™

Contents:

2	SYSTEM SPECIFICATIONS
3	LEGEND, ELECTRICAL
4	SINGLE LINE DIAGRAM, SHEET 1 OF 3
5	SINGLE LINE DIAGRAM, SHEET 2 OF 3
6	SINGLE LINE DIAGRAM, SHEET 3 OF 3
7	PLC/COMMUNICATION LAYOUT
8	PANEL LAYOUTS
9	SPARE SHEET
10	600V/480V POWER, DISTRIBUTION
11	480V POWER DISTRIBUTION, SHEET 1 OF 4
12	480V POWER DISTRIBUTION, SHEET 2 OF 4
13	480V POWER DISTRIBUTION, SHEET 3 OF 4
14	480V POWER DISTRIBUTION, SHEET 4 OF 4
15	SPARE SHEET
16	LV DISTRIBUTION PANEL, SHEET 1 OF 2
17	LV DISTRIBUTION PANEL, SHEET 2 OF 2
18	SPARE SHEET
19	MCP - 120VAC, CONTROL POWER
20	MCP - 24VDC, CONTROL POWER
21	MCP DISCRETE INPUTS, SHEET 1 OF 4
22	MCP DISCRETE INPUTS, SHEET 2 OF 4
23	MCP DISCRETE INPUTS, SHEET 3 OF 4
24	MCP DISCRETE INPUTS, SHEET 4 OF 4
25	MCP DISCRETE OUTPUTS, SHEET 1 OF 2
26	MCP DISCRETE OUTPUTS, SHEET 2 OF 2
27	MCP ANALOG INPUTS, SHEET 1 OF 2
28	MCP ANALOG INPUTS, SHEET 2 OF 2
29	MCP ANALOG OUTPUTS, DO/IT, PROBE & CUSTOMER CONNECTIONS
30	SPARE SHEET
31	MCP PANEL LAYOUT
32	MCP PANEL LAYOUT, TOP
33	MCP PANEL LAYOUT, BOTTOM
34	MPP 120VAC & 24VDC, CONTROL POWER
35	MPP OTB I/O, DISCRETE INPUTS/OUTPUTS
36	MPP DISCRETE INPUTS, SHEET 1 OF 2
37	MPP DISCRETE INPUTS, SHEET 2 OF 2
38	MPP DISCRETE INPUTS, & OUTPUTS
39	MPP RELAY OUTPUTS
40	MPP SPARE SHEET
41	MPP PANEL LAYOUT
42	MPP PANEL LAYOUT, TOP
43	MPP PANEL LAYOUT, MIDDLE
44	MPP PANEL LAYOUT, BOTTOM
45	JUNCTION BOX LAYOUTS, JB-7901'S
46	JUNCTION BOX LAYOUTS, JB-7902'S
47	JUNCTION BOX LAYOUTS, JB-7904'S
48	MPP BILL OF MATERIAL, MODULE 8201 - SHEET 1 OF 2
49	MPP BILL OF MATERIAL, MODULE 8201 - SHEET 2 OF 2
50	MCP BILL OF MATERIAL, MODULE 8202 - SHEET 1 OF 3
51	MCP BILL OF MATERIAL, MODULE 8202 - SHEET 2 OF 3
52	MCP BILL OF MATERIAL, MODULE 8202 - SHEET 3 OF 3
53	JB-7901-AC BILL OF MATERIAL, MODULE 8203 - SHEET 1 OF 11
54	JB-7901-DC BILL OF MATERIAL, MODULE 8203 - SHEET 2 OF 11
55	JB-7901-HV BILL OF MATERIAL, MODULE 8203 - SHEET 3 OF 11
56	JB-7901-IS BILL OF MATERIAL, MODULE 8203 - SHEET 4 OF 11
57	JB-7901OS-AC BILL OF MATERIAL, MODULE 8203 - SHEET 5 OF 11
58	JB-7902-AC BILL OF MATERIAL, MODULE 8203 - SHEET 6 OF 11
59	JB-7902-DC BILL OF MATERIAL, MODULE 8203 - SHEET 7 OF 11
60	JB-7902-HV BILL OF MATERIAL, MODULE 8203 - SHEET 8 OF 11
61	JB-7904-AC BILL OF MATERIAL, MODULE 8203 - SHEET 9 OF 11
62	JB-7904-DC BILL OF MATERIAL, MODULE 8203 - SHEET 10 OF 11
63	JB-7904-HV BILL OF MATERIAL, MODULE 8203 - SHEET 11 OF 11
64	BLD-7901 BILL OF MATERIAL, MODULE 8901 - SHEET 1 OF 2
65	BLD-7901 BILL OF MATERIAL, MODULE 8901 - SHEET 2 OF 2
66	BLD-7902 BILL OF MATERIAL, MODULE 8902
67	BLD-7904 BILL OF MATERIAL, MODULE 8904 - SHEET 1 OF 2
68	BLD-7904 BILL OF MATERIAL, MODULE 8904 - SHEET 2 OF 2
69	BLD-7905 BILL OF MATERIAL, MODULE 8905
70	BLD-7906 BILL OF MATERIAL, MODULE 8906 - SHEET 1 OF 2
71	BLD-7906 BILL OF MATERIAL, MODULE 8906 - SHEET 2 OF 2

THIS INFORMATION IS THE PROPERTY OF newterra ltd. AND CANNOT BE REUSED OR REPRODUCED WITHOUT THE WRITTEN CONSENT OF newterra ltd.

ELECTRICAL SPECIFICATIONS	
VOLTAGE	600V
PHASE	3Ø
FREQUENCY	60 Hz
FULL LOAD AMPS	172A
MAIN DISCONNECT SIZE	400A - FUSED @ 250A
SCCR SYMMETRICAL (kAMPS)	10
SYSTEM APPROVAL AND CLASSIFICATION	cMET - CL1Div2
PANEL APPROVAL AND CLASSIFICATION	cMETus to UL698A

WIRE LEGEND

BLACK: POWER
RED: 120VAC CONTROL
WHITE: NEUTRAL
BLUE: +24VDC & IS WIRING
BLU/WHT: 0VDC
YELLOW: INTERLOCKS

NOTES:

1325 CALIFORNIA AVE.
BROCKVILLE, ONTARIO
CANADA K6V 5Y6
PHONE: (613)498-1876
www.newterra.com

LEVEL	REVISION	DATE (dd/mm/yy)	BY
C	AS BUILT	14/08/17	DMB
B	FOR PRODUCTION	31/05/17	DMB
A1	FOR REVIEW	23/05/17	DMB
A	FOR SUBMITTAL	12/05/17	DMB

PROJ. NO: 1704432
TITLE AND LOCATION: SYSTEM SPECIFICATIONS

CUSTOMER: AGNICO EAGLE 600 MAN AMARUQ MINE

DRAWN BY:	DATE:	SHEET:	SHEETS:
DMB	08/05/17	2	71

1704432 - AGNICO EAGLE MINE - C

THIS INFORMATION IS THE PROPERTY OF newterra ltd.. AND CANNOT BE REUSED OR REPRODUCED WITHOUT THE WRITTEN CONSENT OF newterra ltd.

FLOW SWITCH, NORMALLY CLOSED

FLOW SWITCH, NORMALLY OPEN

FLOAT SWITCH, NORMALLY CLOSED

FLOAT SWITCH, NORMALLY OPEN

LIMIT SWITCH, NORMALLY CLOSED

LIMIT SWITCH, NORMALLY OPEN

PRESSURE SWITCH, CHANGE OVER CONTACTS

PRESSURE SWITCH, NORMALLY CLOSED OPENS ON PRESSURE INCREASE

PRESSURE SWITCH, NORMALLY OPEN CLOSES ON PRESSURE INCREASE

TEMPERATURE SWITCH, CHANGE OVER CONTACTS

TEMPERATURE SWITCH, NORMALLY CLOSED OPENS ON TEMPERATURE INCREASE

TEMPERATURE SWITCH, NORMALLY OPEN CLOSES ON TEMPERATURE INCREASE

PROXIMITY SWITCH, NORMALLY CLOSED

PROXIMITY SWITCH, NORMALLY OPEN

METAL OXIDE VARISTOR
MOV

S7296
DIODE

TANDEM TERMINAL BLOCK

PANEL TERMINAL BLOCK

JUNCTION BOX TERMINAL BLOCK

CUSTOMER TERMINAL BLOCK

FUSED TERMINAL BLOCK

TOGGLE SWITCH, NORMALLY OPEN

TOGGLE SWITCH, CHANGE OVER CONTACTS, 3 WAY

PUSH BUTTON, NORMALLY CLOSED

PUSH BUTTON, NORMALLY OPEN

PUSH BUTTON, NORMALLY CLOSED MUSHROOM HEAD

SELECTOR SWITCH, 2 POSITION
2 NORMALLY OPEN

SELECTOR SWITCH, 3 POSITION
2 NORMALLY OPEN

PILOT LIGHT, X=COLOR

COLOR CODE
A - AMBER
B - BLUE
G - GREEN
R - RED
W - WHITE

PILOT LIGHT, PUSH-TO-TEST
X=COLOR

BEACON LIGHT
X=COLOR

CONTACT, NORMALLY CLOSED

CONTACT, NORMALLY OPEN

TIME DELAY CONTACT, INSTANTANEOUS OPEN
TIMED CLOSED ON DE-ENERGIZE

TIME DELAY CONTACT, INSTANTANEOUS CLOSE
TIMED OPEN ON DE-ENERGIZE

TIME DELAY CONTACT, INSTANTANEOUS OPEN
TIMED CLOSE ON ENERGIZE

TIME DELAY CONTACT, INSTANTANEOUS CLOSE
TIMED OPEN ON ENERGIZE

COIL - RELAY, CONTACTOR
TIMER, MOTOR STARTER

ANNUNCIATOR, BELL

ANNUNCIATOR, HORN

ANNUNCIATOR, BUZZER

BATTERY

TRANSMITTER, 2 WIRE
LOOP POWERED

INTRINSICALLY SAFE BARRIERS
(NOT TO SCALE)

4CHANNEL DISCRETE

2 CHANNEL ANALOG

NETWORK SWITCH -ETHERNET
(NOT REPRESENTATIVE OF ALL TYPES)
(NOT TO SCALE)

PANEL METER
AM=AMMETER
VM=VOLT METER

ETM
ELAPSED TIME METER

CURRENT TRANSFORMER

GROUND

INSTRUMENTATION
GROUND

SOLENOID

CURRENT SWITCH

FUSED DISCONNECT
X=AMP RATING

FUSE, X=AMP RATING

CIRCUIT BREAKER
X=AMP RATING

COMBINATION STARTER
X - X AMP=CURRENT RANGE

CONTACTOR

DISTRIBUTION BLOCK

X HP
X FLA
X AWG
3 PHASE MOTOR

X kW
X AMP
X AWG
3 PHASE HEATER

RECEPTACLE, SINGLE OUTLET

RECEPTACLE, DUPLEX

TRANSFORMER
CONTROL POWER
(NOT REPRESENTATIVE OF ALL TYPES)

TRANSFORMER
DISTRIBUTION/LIGHTING
(NOT REPRESENTATIVE OF ALL TYPES)

120VAC
24VDC
72Wat
DC POWER SUPPLY
(NOT REPRESENTATIVE OF ALL TYPES)

REACTOR

COIL: *LOCATION*
4 POLE RELAY
CROSS REFERENCES

LOCATION
COMBINATION STARTER
CROSS REFERENCES

VARIABLE FREQUENCY DRIVE
(NOT REPRESENTATIVE OF ALL TYPES)
(NOT TO SCALE)

GENERAL PURPOSE WIRING
EXTERNAL TO PANEL

CL1Div2 WIRING
EXTERNAL TO PANEL

WIRING BY OTHERS
EXTERNAL TO PANEL

USA 3 PHASE
POWER WIRING COLOR CODE

480V	208/230V(HIGH LEG)
PHASE A - BROWN	PHASE A - BLACK
PHASE B - ORANGE	PHASE B - RED(ORG)
PHASE C - YELLOW	PHASE C - BLUE

CANADIAN 3 PHASE
POWER WIRING COLOR CODE

PHASE A - RED
PHASE B - BLACK
PHASE C - BLUE

WIRE LEGEND

BLACK:	POWER
RED:	120VAC CONTROL
WHITE:	NEUTRAL
BLUE:	+24VDC & IS WIRING
BLU/WHT:	0VDC
YELLOW:	INTERLOCKS

NOTES:

1.

newterra

1325 CALIFORNIA AVE.
BROCKVILLE, ONTARIO
CANADA K6V 5Y6
PHONE: (613)498-1876
www.newterra.com

LEVEL	REVISION	DATE (dd/mm/yy)	BY
C	AS BUILT	14/08/17	DMB
B	FOR PRODUCTION	31/05/17	DMB
A1	FOR REVIEW	23/05/17	DMB
A	FOR SUBMITTAL	12/05/17	DMB

PROJ. NO: 1704432

TITLE AND LOCATION: LEGEND ELECTRICAL

CUSTOMER: AGNICO EAGLE 600 MAN AMARUQ MINE

DRAWN BY:	DATE:	SHEET:	SHEETS:
DMB	08/05/17	3	71

1704432 - AGNICO EAGLE MINE - C

THIS INFORMATION IS THE PROPERTY OF newterra ltd.. AND CANNOT BE REUSED OR REPRODUCED WITHOUT THE WRITTEN CONSENT OF newterra ltd.

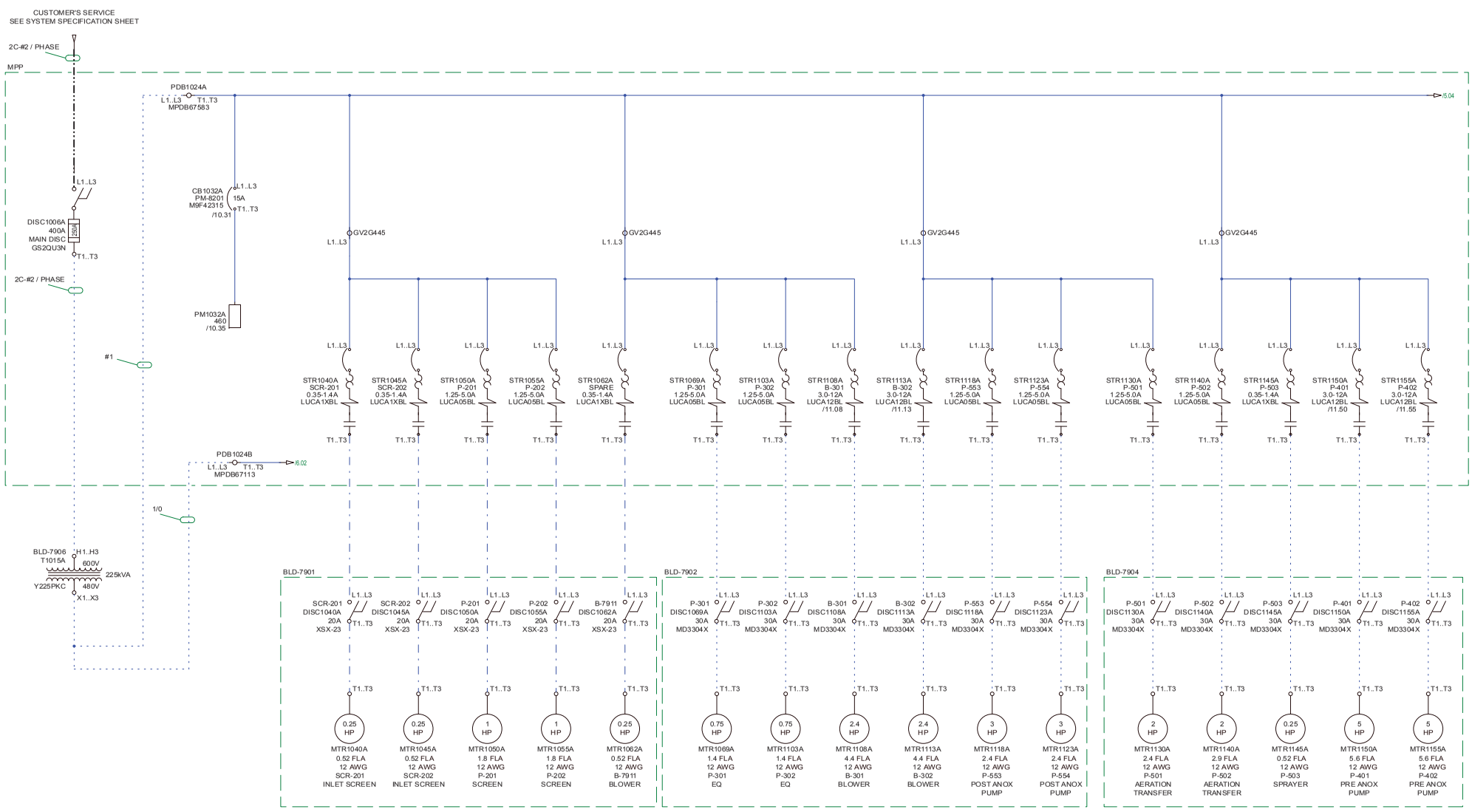

WIRE LEGEND

BLACK:	POWER
RED:	120VAC CONTROL
WHITE:	NEUTRAL
BLUE:	+24VDC & IS WIRING
BLU/WHT:	0VDC
YELLOW:	INTERLOCKS

NOTES:

1.

newterra

1325 CALIFORNIA AVE.
BROCKVILLE, ONTARIO
CANADA K6V 5Y6
PHONE: (613)498-1876
www.newterra.com

LEVEL	REVISION	DATE (dd/mm/yy)	BY
C	AS BUILT	14/08/17	DMB
B	FOR PRODUCTION	31/05/17	DMB
A1	FOR REVIEW	23/05/17	DMB
A	FOR SUBMITTAL	12/05/17	DMB

PROJ. NO: 1704432

TITLE AND LOCATION: SINGLE LINE DIAGRAM SHEET 1 OF 3

CUSTOMER: AGNICO EAGLE 600 MAN AMARUQ MINE

DRAWN BY:	DATE:	SHEET:	SHEETS:
DMB	08/05/17	4	71

1704432 - AGNICO EAGLE MINE - C

THIS INFORMATION IS THE PROPERTY OF newterra AND CANNOT BE REUSED OR REPRODUCED WITHOUT THE WRITTEN CONSENT OF newterra

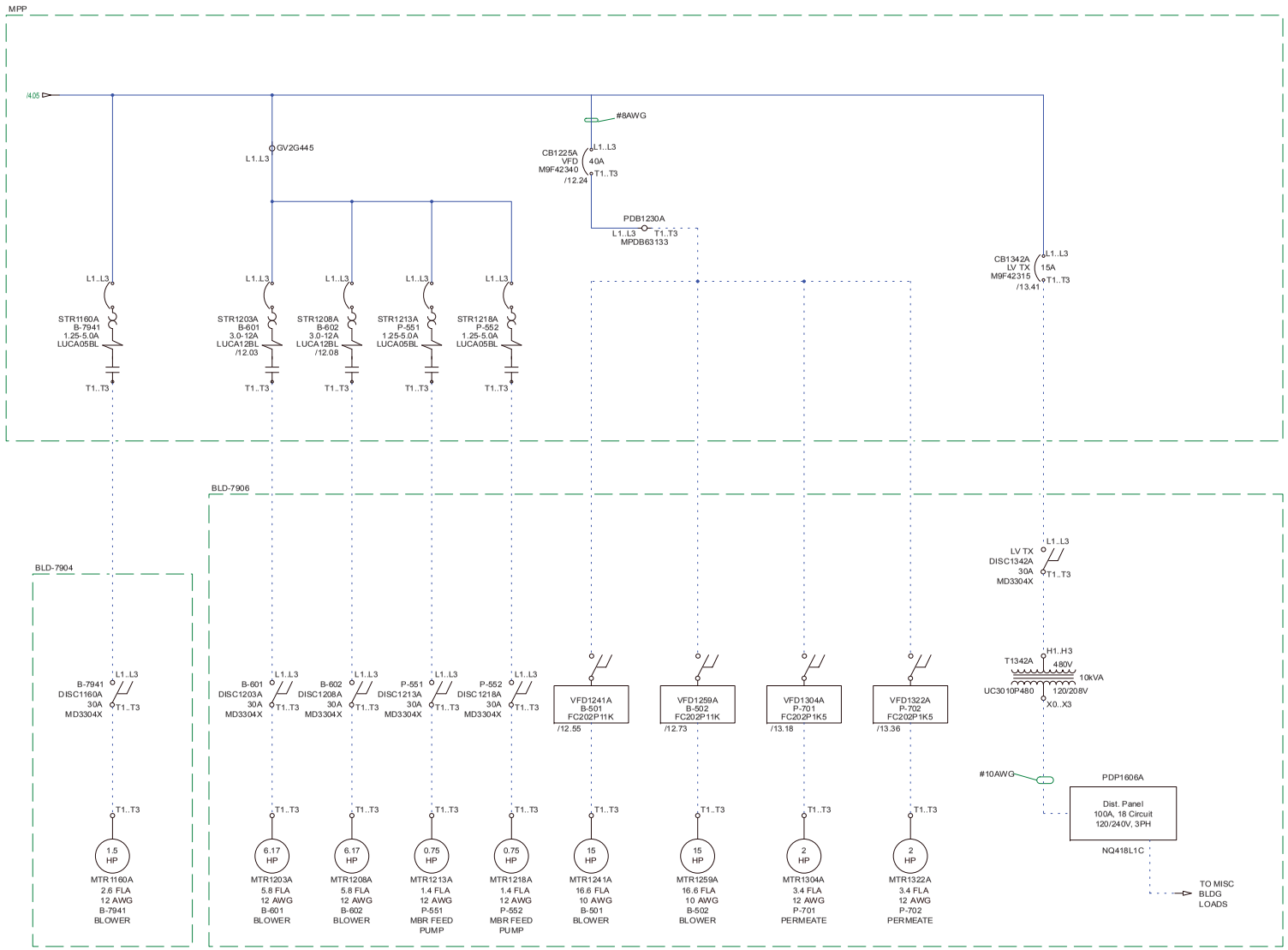

WIRE LEGEND

BLACK:	POWER
RED:	120VAC CONTROL
WHITE:	NEUTRAL
BLUE:	+24VDC & IS WIRING
BLU/WHT:	0VDC
YELLOW:	INTERLOCKS

NOTES:

1.

1325 CALIFORNIA AVE.
BROCKVILLE, ONTARIO
CANADA K6V 5Y6
PHONE: (613)498-1876
www.newterra.com

LEVEL	REVISION	DATE (dd/mm/yy)	BY
C	AS BUILT	14/08/17	DMB
B	FOR PRODUCTION	31/05/17	DMB
A1	FOR REVIEW	23/05/17	DMB
A	FOR SUBMITTAL	12/05/17	DMB

PROJ. NO: 1704432

TITLE AND LOCATION: SINGLE LINE DIAGRAM SHEET 2 OF 3

CUSTOMER: AGNICO EAGLE 600 MAN AMARUQ MINE

DRAWN BY:	DATE:	SHEET:	SHEETS:
DMB	08/05/17	5	71

1704432 - AGNICO EAGLE MINE - C

THIS INFORMATION IS THE PROPERTY OF newterra AND CANNOT BE REUSED OR REPRODUCED WITHOUT THE WRITTEN CONSENT OF newterra

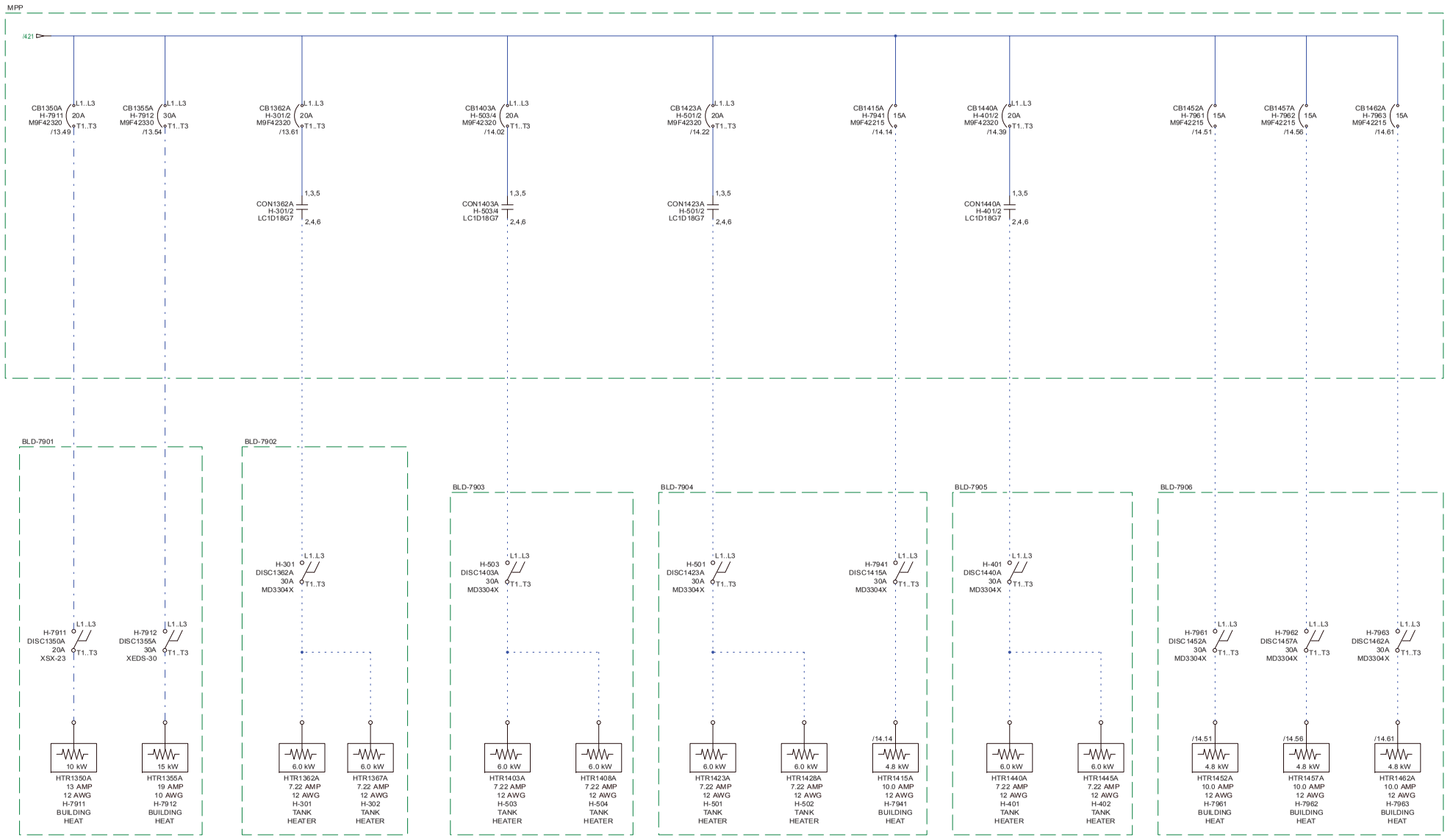

WIRE LEGEND

BLACK:	POWER
RED:	120VAC CONTROL
WHITE:	NEUTRAL
BLUE:	+24VDC & IS WIRING
BLU/WHT:	0VDC
YELLOW:	INTERLOCKS

NOTES:

1.

newterra

1325 CALIFORNIA AVE.
BROCKVILLE, ONTARIO
CANADA K6V 5Y6
PHONE: (613)498-1876
www.newterra.com

LEVEL	REVISION	DATE (dd/mm/yy)	BY
C	AS BUILT	14/08/17	DMB
B	FOR PRODUCTION	31/05/17	DMB
A1	FOR REVIEW	23/05/17	DMB
A	FOR SUBMITTAL	12/05/17	DMB

PROJ. NO: 1704432

TITLE AND LOCATION: SINGLE LINE DIAGRAM SHEET 3 OF 3

CUSTOMER: AGNICO EAGLE 600 MAN AMARUQ MINE

DRAWN BY:	DATE:	SHEET:	SHEETS:
DMB	10/05/17	6	71

1704432 - AGNICO EAGLE MINE - C

THIS INFORMATION IS THE PROPERTY OF newterra AND CANNOT BE REUSED OR REPRODUCED WITHOUT THE WRITTEN CONSENT OF newterra

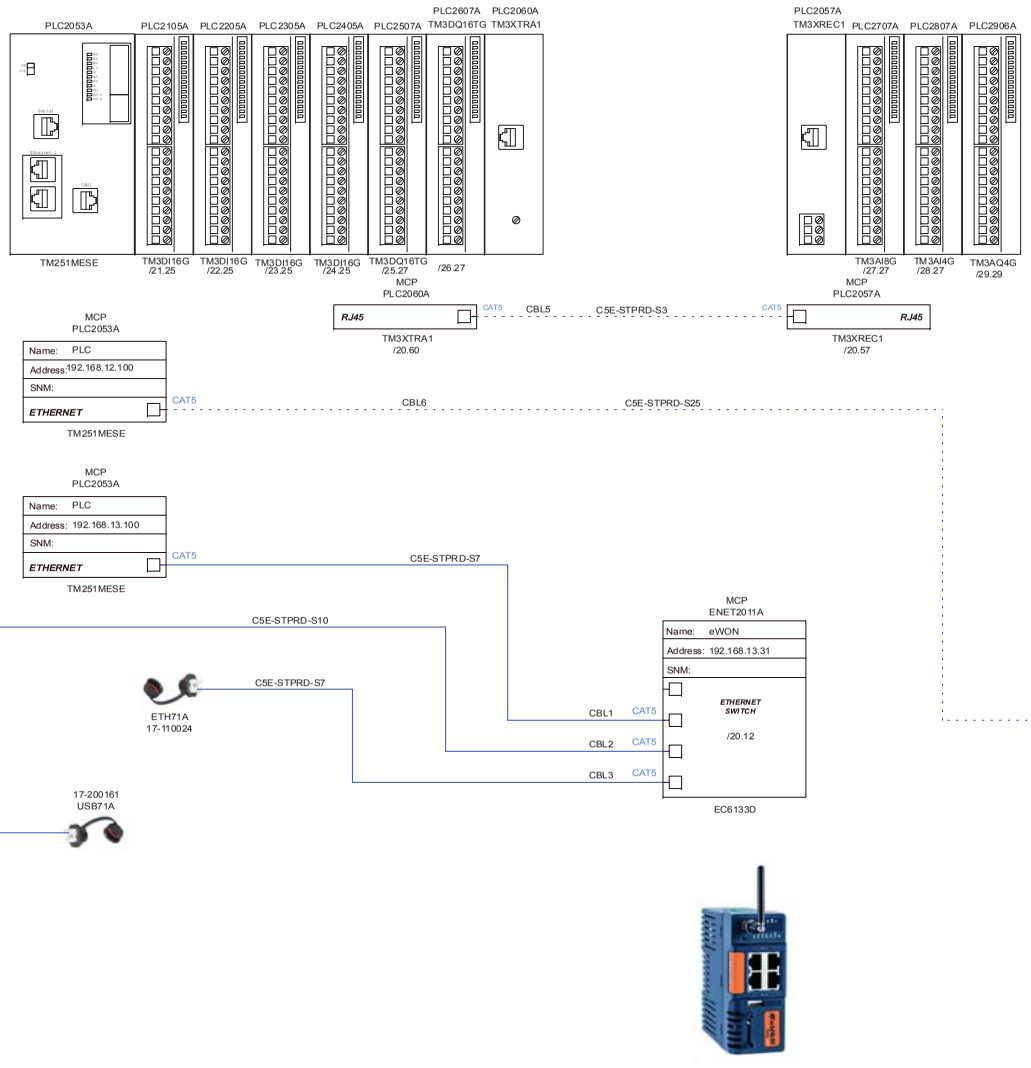

WIRE LEGEND

BLACK:	POWER
RED:	120VAC CONTROL
WHITE:	NEUTRAL
BLUE:	+24VDC & IS WIRING
BLU/WHT:	0VDC
YELLOW:	INTERLOCKS

NOTES:

1.

newterra

1325 CALIFORNIA AVE.
BROCKVILLE, ONTARIO
CANADA K6V 5Y6
PHONE: (613)498-1876
www.newterra.com

LEVEL	REVISION	DATE (dd/mm/yy)	BY
C	AS BUILT	14/08/17	DMB
B	FOR PRODUCTION	31/05/17	DMB
A1	FOR REVIEW	23/05/17	DMB
A	FOR SUBMITTAL	12/05/17	DMB

PROJ. NO: 1704432

TITLE AND LOCATION: PLC/COMMUNICATION LAYOUT

CUSTOMER: AGNICO EAGLE 600 MAN AMARUQ MINE

DRAWN BY:	DATE:	SHEET:	SHEETS:
DMB	08/05/17	7	71

1704432 - AGNICO EAGLE MINE - C

THIS INFORMATION IS THE PROPERTY OF newterra ltd.. AND CANNOT BE REUSED OR REPRODUCED WITHOUT THE WRITTEN CONSENT OF newterra ltd.

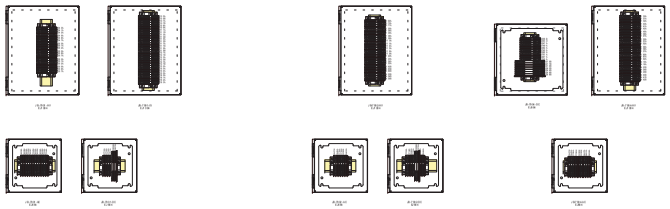

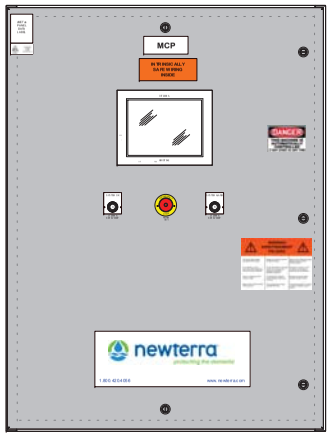

PANEL OUTER DOOR

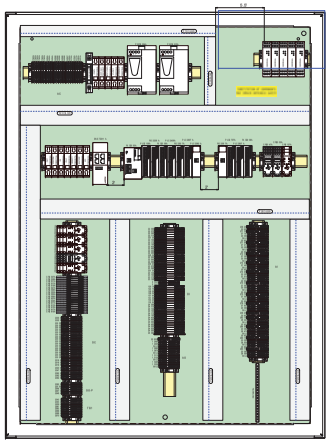

MCP
ENABLEMENT 20Y
PANEL INTERIOR



PANEL OUTER DOOR

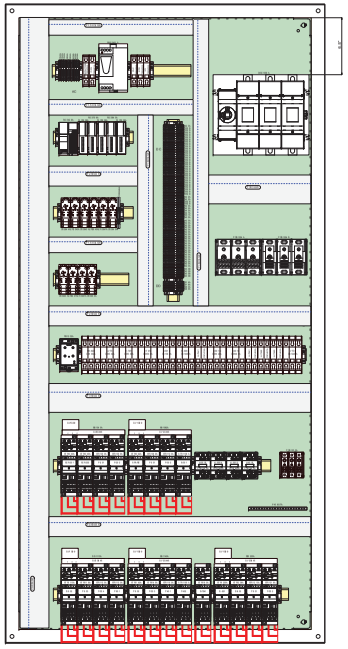

MPP
ENABLEMENT 20Y
PANEL INTERIOR

WIRE LEGEND

BLACK:	POWER
RED:	120VAC CONTROL
WHITE:	NEUTRAL
BLUE:	+24VDC & IS WIRING
BLU/WHT:	0VDC
YELLOW:	INTERLOCKS

NOTES:

1.

newterra

1325 CALIFORNIA AVE.
BROCKVILLE, ONTARIO
CANADA K6V 5Y6
PHONE: (613)498-1876
www.newterra.com

LEVEL	REVISION	DATE (dd/mm/yy)	BY
C	AS BUILT	14/08/17	DMB
B	FOR PRODUCTION	31/05/17	DMB
A1	FOR REVIEW	23/05/17	DMB
A	FOR SUBMITTAL	12/05/17	DMB

PROJ. NO: 1704432

TITLE AND LOCATION: PANEL LAYOUTS

CUSTOMER: AGNICO EAGLE 600 MAN AMARUQ MINE

DRAWN BY:	DATE:	SHEET:	SHEETS:
DMB	08/05/17	8	71

1704432 - AGNICO EAGLE MINE - C

THIS INFORMATION IS THE PROPERTY OF newterra ltd.. AND CANNOT BE REUSED OR REPRODUCED WITHOUT THE WRITTEN CONSENT OF newterra ltd.

9 01
9 02
9 03
9 04
9 05
9 06
9 07
9 08
9 09
9 10
9 11
9 12
9 13
9 14
9 15
9 16
9 17
9 18
9 19
9 20
9 21
9 22
9 23
9 24
9 25
9 26
9 27
9 28
9 29
9 30
9 31
9 32
9 33
9 34
9 35
9 36
9 37

INTENTIONALLY BLANK

WIRE LEGEND

BLACK:	POWER
RED:	120VAC CONTROL
WHITE:	NEUTRAL
BLUE:	+24VDC & IS WIRING
BLU/WHT:	0VDC
YELLOW:	INTERLOCKS

NOTES:

1.

1325 CALIFORNIA AVE.
BROCKVILLE, ONTARIO
CANADA K6V 5Y6
PHONE: (613)498-1876
www.newterra.com

LEVEL	REVISION	DATE (dd/m/m/yy)	BY
C	AS BUILT	14/08/17	DMB
B	FOR PRODUCTION	31/05/17	DMB
A1	FOR REVIEW	23/05/17	DMB
A	FOR SUBMITTAL	12/05/17	DMB

PROJ. NO: 1704432

TITLE AND LOCATION: SPARE SHEET

CUSTOMER: AGNICO EAGLE 600 MAN AMARUQ MINE

DRAWN BY:	DATE:	SHEET:	SHEETS:
DMB	08/05/17	9	71

1704432 - AGNICO EAGLE MINE - C

THIS INFORMATION IS THE PROPERTY OF newterra AND CANNOT BE REUSED OR REPRODUCED WITHOUT THE WRITTEN CONSENT OF newterra

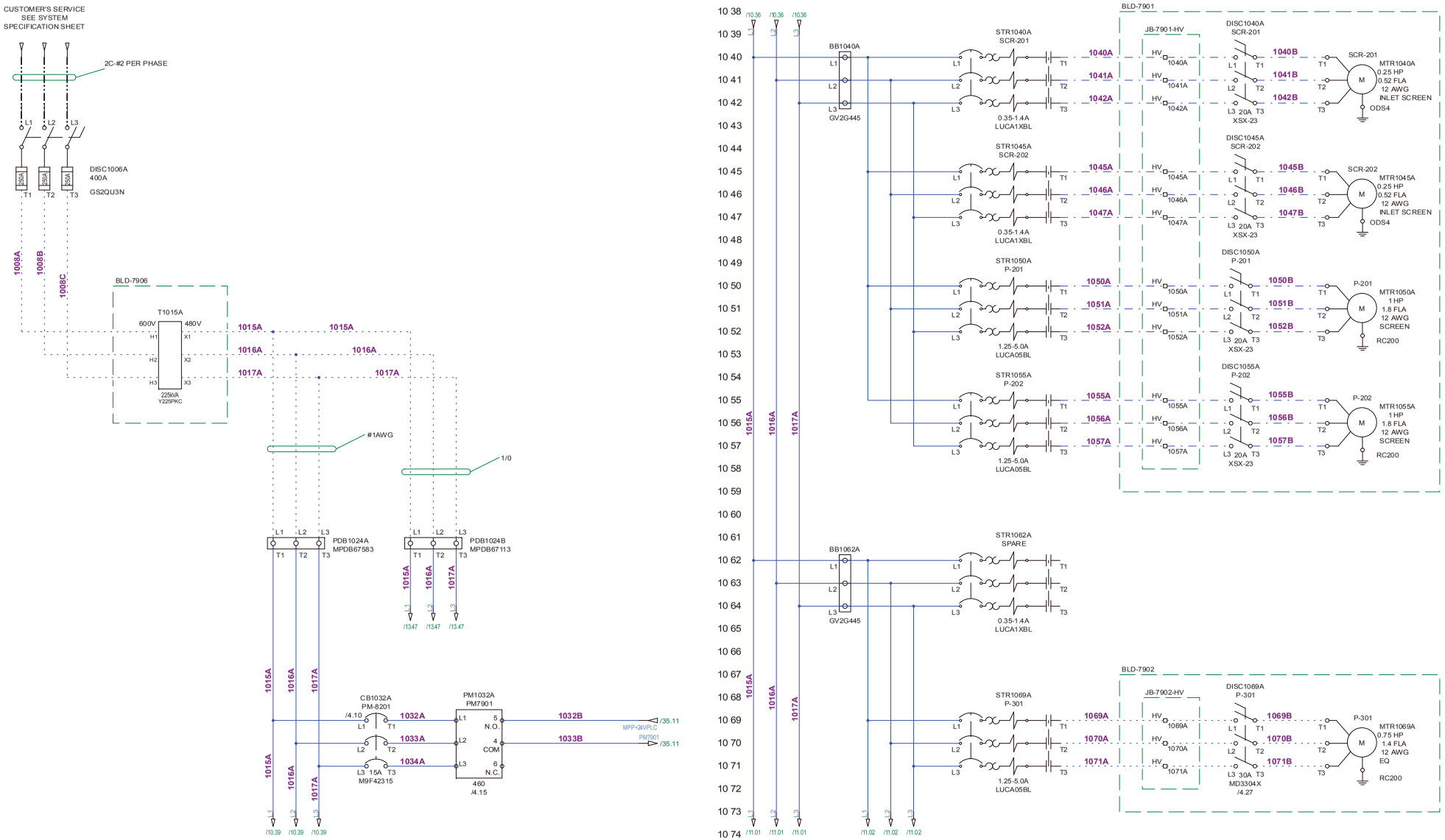

WIRE LEGEND

BLACK:	POWER
RED:	120VAC CONTROL
WHITE:	NEUTRAL
BLUE:	+24VDC & IS WIRING
BLU/WHT:	0VDC
YELLOW:	INTERLOCKS

NOTES:

1. USE CANADIAN WIRING CODE

newterra

1325 CALIFORNIA AVE.
BROCKVILLE, ONTARIO
CANADA K6V 5Y6
PHONE: (613)498-1876
www.newterra.com

LEVEL	REVISION	DATE (dd/mm/yy)	BY
C	AS BUILT	14/08/17	DMB
B	FOR PRODUCTION	31/05/17	DMB
A1	FOR REVIEW	23/05/17	DMB
A	FOR SUBMITTAL	12/05/17	DMB

PROJ. NO: 1704432

TITLE AND LOCATION: 600V/480V POWER DISTRIBUTION MPP

CUSTOMER: AGNICO EAGLE 600 MAN AMARUQ MINE

DRAWN BY:	DATE:	SHEET:	SHEETS:
DMB	08/05/17	10	71

1704432 - AGNICO EAGLE MINE - C

THIS INFORMATION IS THE PROPERTY OF newterra ltd.. AND CANNOT BE REUSED OR REPRODUCED WITHOUT THE WRITTEN CONSENT OF newterra ltd.

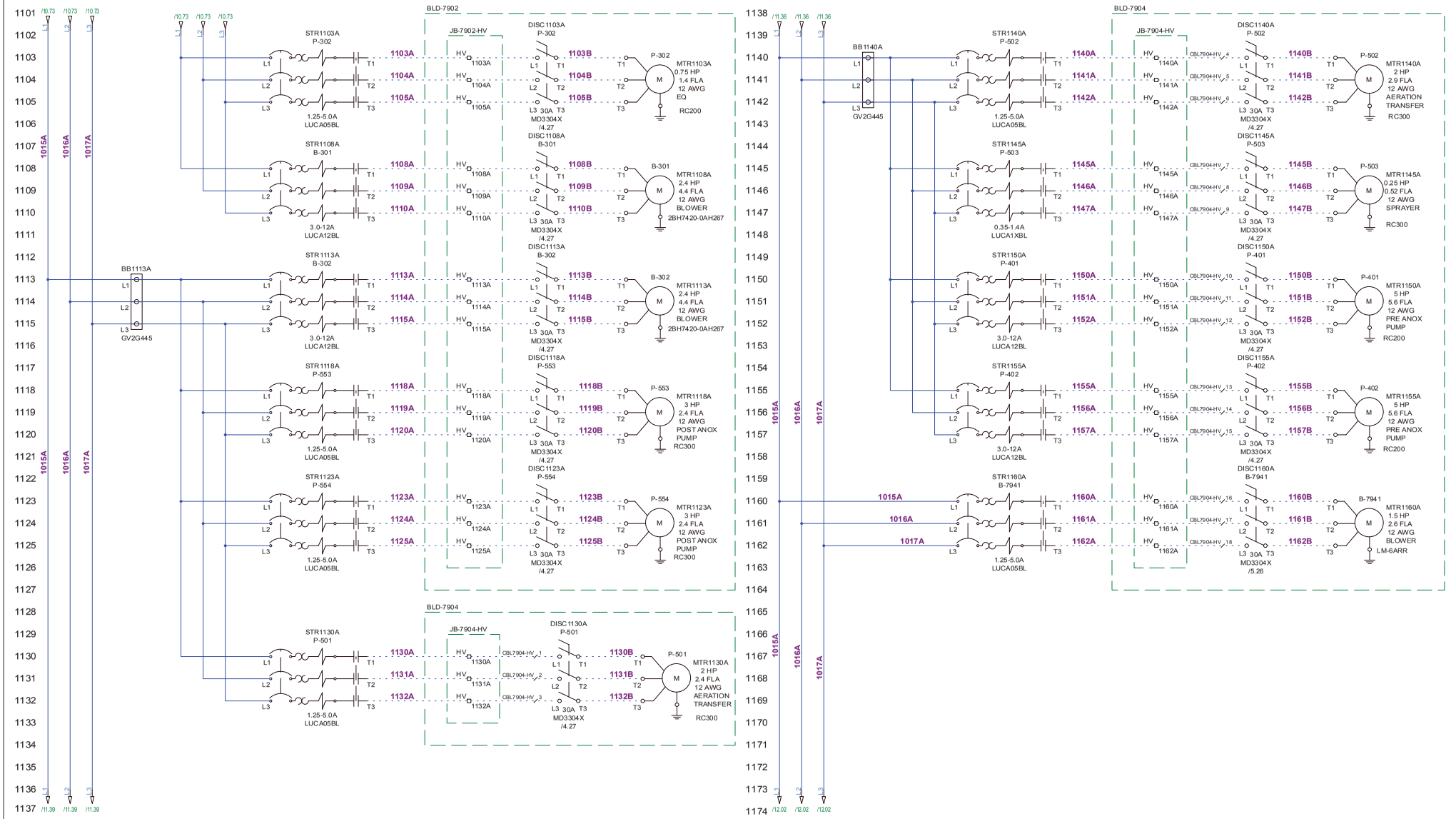

WIRE LEGEND

BLACK:	POWER
RED:	120VAC CONTROL
WHITE:	NEUTRAL
BLUE:	+24VDC & IS WIRING
BLU/WHT:	0VDC
YELLOW:	INTERLOCKS

NOTES:

1. USE CANADIAN WIRING CODE

newterra

1325 CALIFORNIA AVE.
BROCKVILLE, ONTARIO
CANADA K6V 5Y6
PHONE: (613)498-1876
www.newterra.com

LEVEL	REVISION	DATE (dd/mm/yy)	BY
C	AS BUILT	14/08/17	DMB
B	FOR PRODUCTION	31/05/17	DMB
A1	FOR REVIEW	23/05/17	DMB
A	FOR SUBMITTAL	12/05/17	DMB

PROJ. NO: 1704432

TITLE AND LOCATION: 480V POWER DISTRIBUTION SHEET 1 OF 4 MPP

CUSTOMER: AGNICO EAGLE 600 MAN AMARUQ MINE

DRAWN BY:	DATE:	SHEET:	SHEETS:
DMB	08/05/17	11	71

1704432 - AGNICO EAGLE MINE - C

THIS INFORMATION IS THE PROPERTY OF newterra ltd.. AND CANNOT BE REUSED OR REPRODUCED WITHOUT THE WRITTEN CONSENT OF newterra ltd.

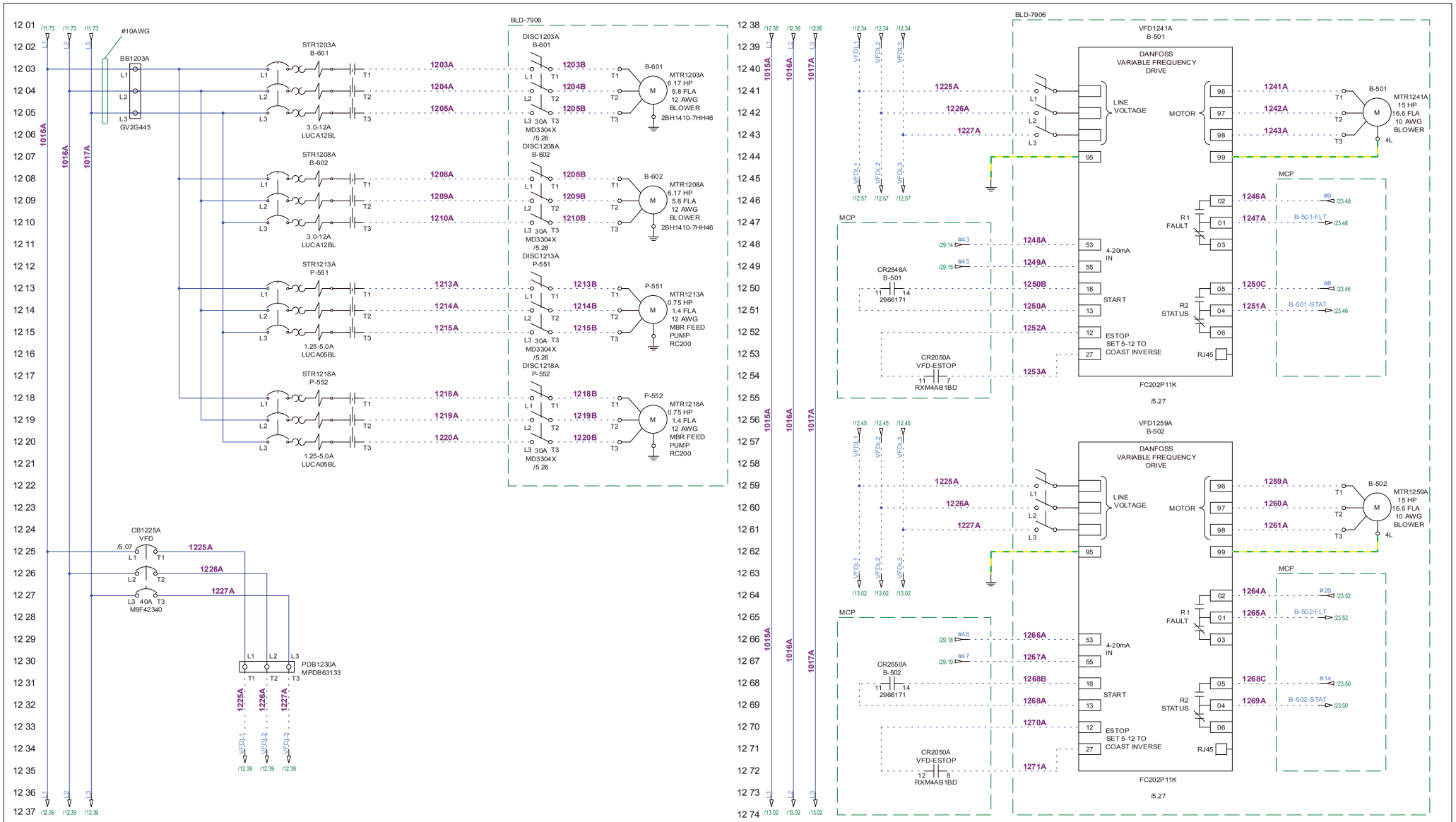

WIRE LEGEND

BLACK:	POWER
RED:	120VAC CONTROL
WHITE:	NEUTRAL
BLUE:	+24VDC & IS WIRING
BLU/WHT:	0VDC
YELLOW:	INTERLOCKS

NOTES:

1. USE CANADIAN WIRING CODE

1325 CALIFORNIA AVE.
BROCKVILLE, ONTARIO
CANADA K6V 5Y6
PHONE: (613)498-1876
www.newterra.com

LEVEL	REVISION	DATE (dd/mm/yy)	BY
C	AS BUILT	14/08/17	DMB
B	FOR PRODUCTION	31/05/17	DMB
A1	FOR REVIEW	23/05/17	DMB
A	FOR SUBMITTAL	12/05/17	DMB

PROJ. NO: 1704432

TITLE AND LOCATION: 480V POWER DISTRIBUTION SHEET 2 OF 4 MPP

CUSTOMER: AGNICO EAGLE 600 MAN AMARUQ MINE

DRAWN BY:	DATE:	SHEET:	SHEETS:
DMB	08/05/17	12	71

1704432 - AGNICO EAGLE MINE - C

THIS INFORMATION IS THE PROPERTY OF newterra ltd.. AND CANNOT BE REUSED OR REPRODUCED WITHOUT THE WRITTEN CONSENT OF newterra ltd.

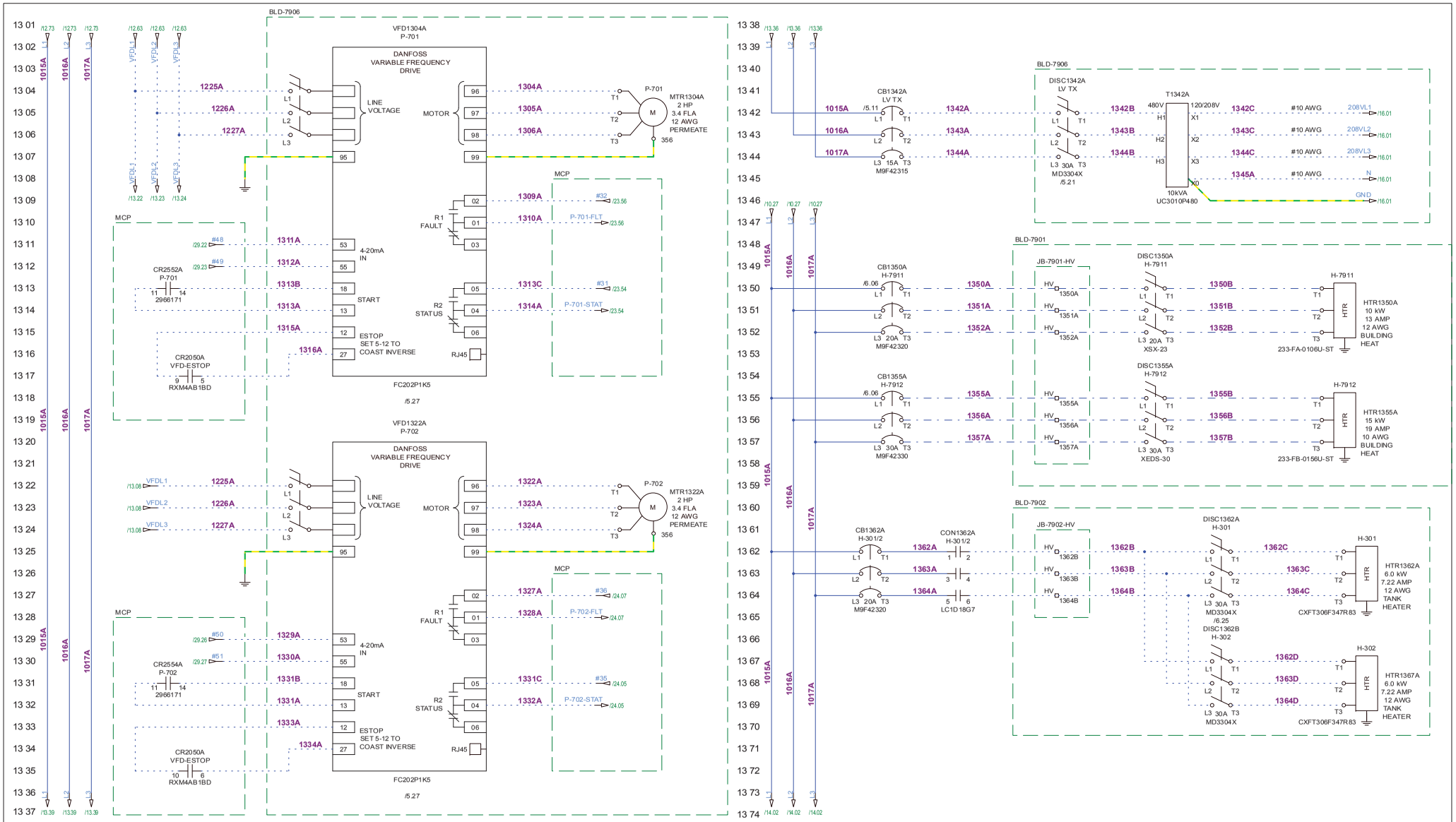

WIRE LEGEND

BLACK:	POWER
RED:	120VAC CONTROL
WHITE:	NEUTRAL
BLUE:	+24VDC & IS WIRING
BLU/WHT:	0VDC
YELLOW:	INTERLOCKS

NOTES:

1. USE CANADIAN WIRING CODE

newterra

1325 CALIFORNIA AVE.
BROCKVILLE, ONTARIO
CANADA K6V 5Y6
PHONE: (613)498-1876
www.newterra.com

LEVEL	REVISION	DATE (dd/mm/yy)	BY
C	AS BUILT	14/08/17	DMB
B	FOR PRODUCTION	31/05/17	DMB
A1	FOR REVIEW	23/05/17	DMB
A	FOR SUBMITTAL	12/05/17	DMB

PROJ. NO: 1704432

TITLE AND LOCATION: 480V POWER DISTRIBUTION SHEET 3 OF 4 MPP

CUSTOMER: AGNICO EAGLE 600 MAN AMARUQ MINE

DRAWN BY:	DATE:	SHEET:	SHEETS:
DMB	10/05/17	13	71

1704432 - AGNICO EAGLE MINE - C

THIS INFORMATION IS THE PROPERTY OF newterra ltd.. AND CANNOT BE REUSED OR REPRODUCED WITHOUT THE WRITTEN CONSENT OF newterra ltd.

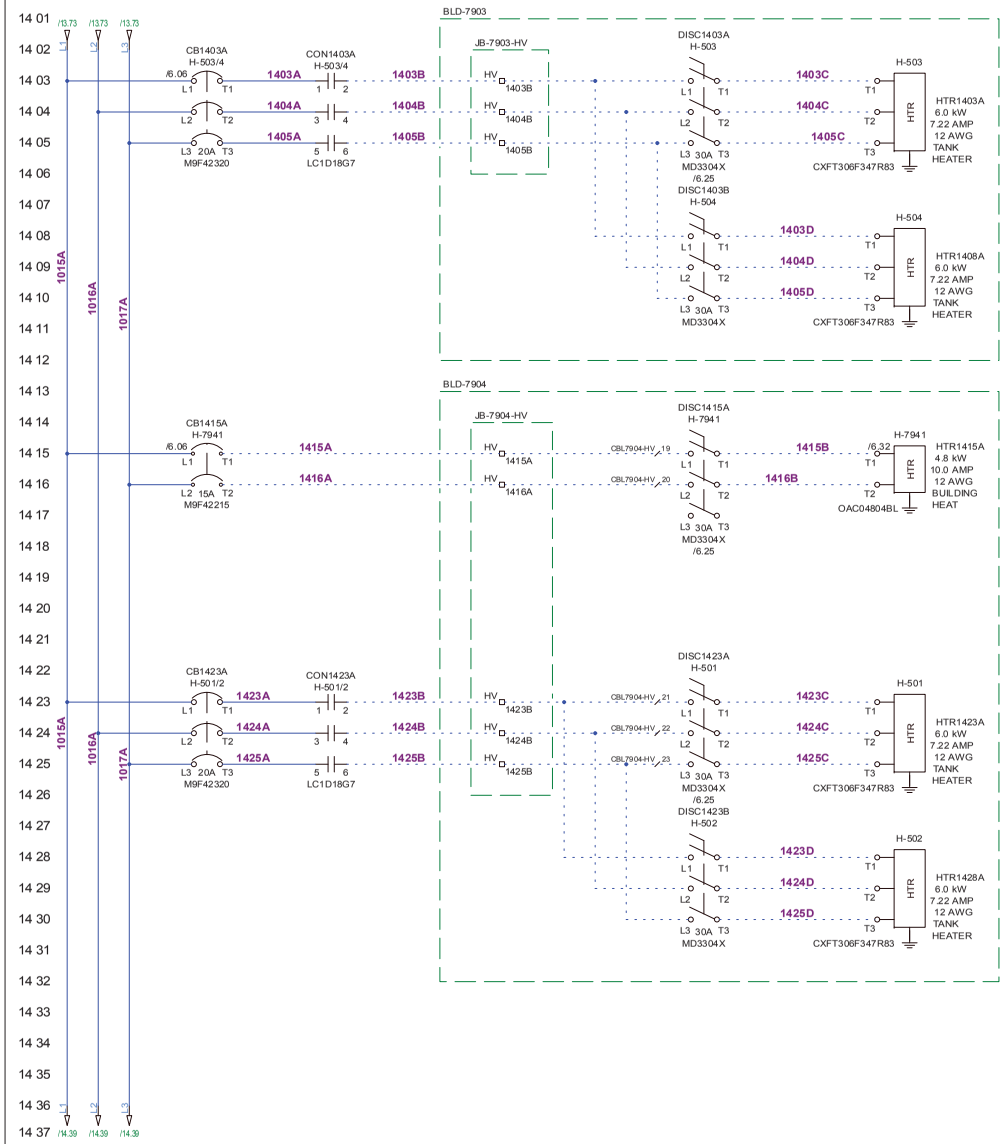

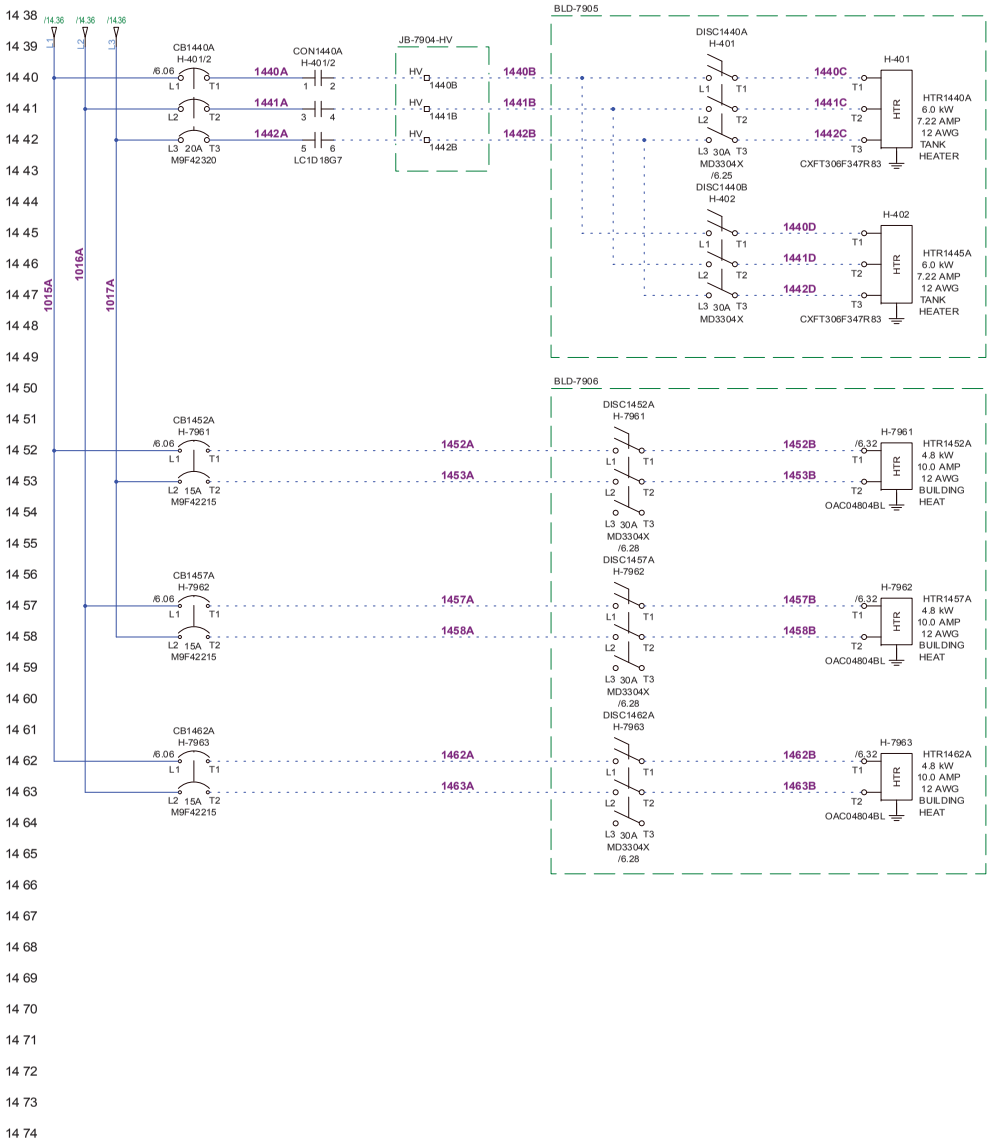

WIRE LEGEND

BLACK:	POWER
RED:	120VAC CONTROL
WHITE:	NEUTRAL
BLUE:	+24VDC & IS WIRING
BLU/WHT:	0VDC
YELLOW:	INTERLOCKS

NOTES:

1. USE CANADIAN WIRING CODE

3. DEVICES IN BLD-7903 ARE ONLY REQUIRED FOR THE 400 MAN OPTION. IF THE 400 MAN IS NOT REQUIRED, STOP WIRING AT BASE OF P2019A CONNECTOR.
4. USE TANDEM FERRULES FOR CONNECTING WIRES TO DISTRIBUTION LUG

1325 CALIFORNIA AVE.
BROCKVILLE, ONTARIO
CANADA K6V 5Y6
PHONE: (613)498-1876
www.newterra.com

LEVEL	REVISION	DATE (dd/mm/yy)	BY
C	AS BUILT	14/08/17	DMB
B	FOR PRODUCTION	31/05/17	DMB
A1	FOR REVIEW	23/05/17	DMB
A	FOR SUBMITTAL	12/05/17	DMB

PROJ. NO: 1704432

TITLE AND LOCATION: 480V POWER DISTRIBUTION SHEET 4 OF 4 MPP

CUSTOMER: AGNICO EAGLE 600 MAN AMARUQ MINE

DRAWN BY:	DATE:	SHEET:	SHEETS:
DMB	08/05/17	14	71

1704432 - AGNICO EAGLE MINE - C

THIS INFORMATION IS THE PROPERTY OF newterra ltd.. AND CANNOT BE REUSED OR REPRODUCED WITHOUT THE WRITTEN CONSENT OF newterra ltd.

15 01
15 02
15 03
15 04
15 05
15 06
15 07
15 08
15 09
15 10
15 11
15 12
15 13
15 14
15 15
15 16
15 17
15 18
15 19
15 20
15 21
15 22
15 23
15 24
15 25
15 26
15 27
15 28
15 29
15 30
15 31
15 32
15 33
15 34
15 35
15 36
15 37

INTENTIONALLY BLANK

WIRE LEGEND

BLACK:	POWER
RED:	120VAC CONTROL
WHITE:	NEUTRAL
BLUE:	+24VDC & IS WIRING
BLU/WHT:	0VDC
YELLOW:	INTERLOCKS

NOTES:

1. USE CANADIAN WIRING CODE

1325 CALIFORNIA AVE.
BROCKVILLE, ONTARIO
CANADA K6V 5Y6
PHONE: (613)498-1876
www.newterra.com

LEVEL	REVISION	DATE (dd/m/m/yy)	BY
C	AS BUILT	14/08/17	DMB
B	FOR PRODUCTION	31/05/17	DMB
A1	FOR REVIEW	23/05/17	DMB
A	FOR SUBMITTAL	12/05/17	DMB

PROJ. NO: 1704432

TITLE AND LOCATION: SPARE SHEET

MPP

CUSTOMER: AGNICO EAGLE 600 MAN AMARUQ MINE

DRAWN BY:	DATE:	SHEET:	SHEETS:
DMB	23/05/17	15	71

1704432 - AGNICO EAGLE MINE - C

THIS INFORMATION IS THE PROPERTY OF newterra AND CANNOT BE REUSED OR REPRODUCED WITHOUT THE WRITTEN CONSENT OF newterra

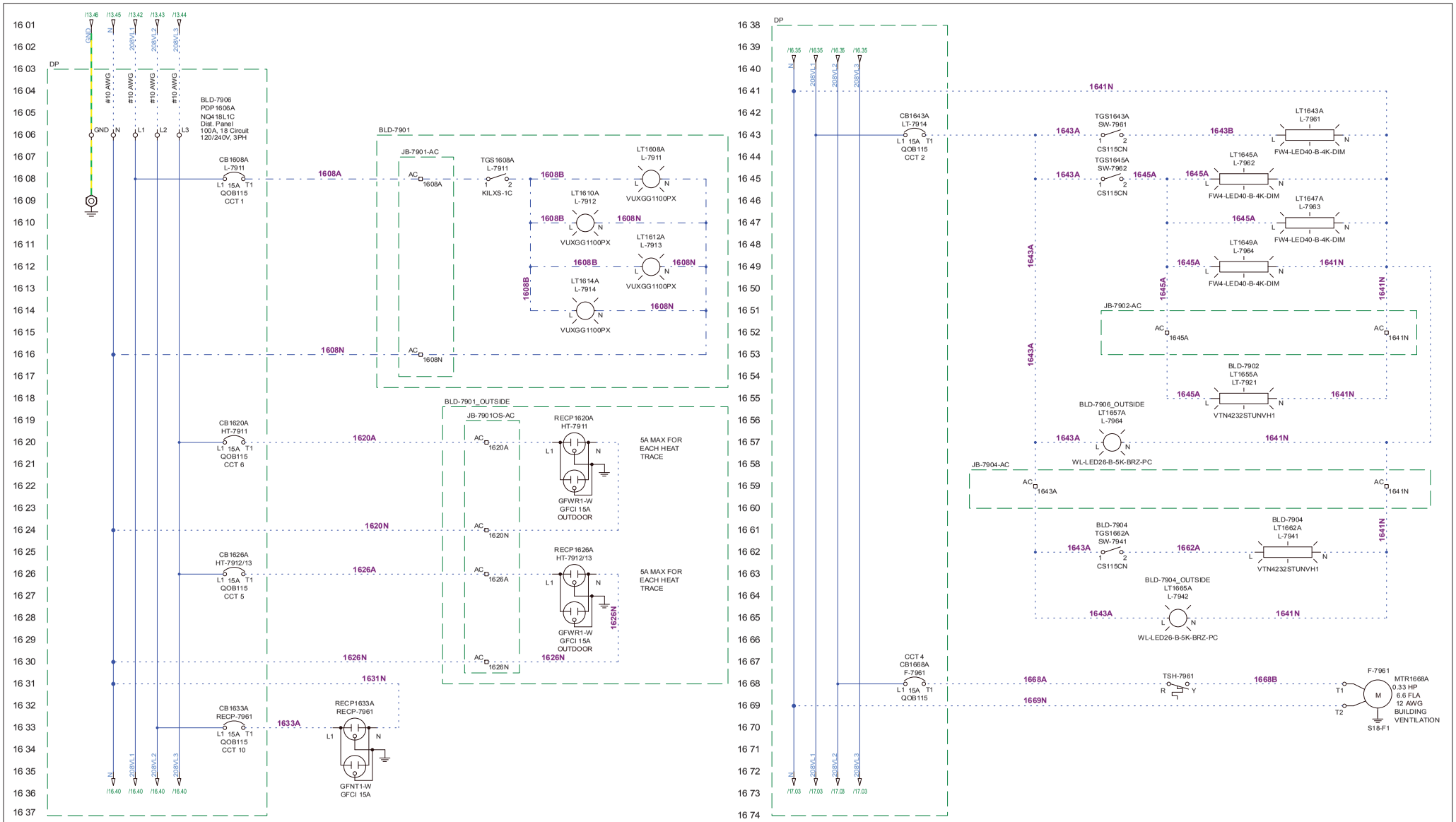

WIRE LEGEND

BLACK:	POWER
RED:	120VAC CONTROL
WHITE:	NEUTRAL
BLUE:	+24VDC & IS WIRING
BLU/WHT:	0VDC
YELLOW:	INTERLOCKS

NOTES:

1. FOLLOW CANADIAN COLOUR CODE FOR POWER WIRING (SEE SHEET 3 - LEGEND)
2. WIRE SIZE IS #12 AWG FOR POWER UNLESS OTHERWISE SPECIFIED

newterra

1325 CALIFORNIA AVE.
BROCKVILLE, ONTARIO
CANADA K6V 5Y6
PHONE: (613)498-1876
www.newterra.com

LEVEL	REVISION	DATE (dd/mm/yy)	BY
C	AS BUILT	14/08/17	DMB
B	FOR PRODUCTION	31/05/17	DMB
A1	FOR REVIEW	23/05/17	DMB
A	FOR SUBMITTAL	12/05/17	DMB

PROJ. NO: 1704432

TITLE AND LOCATION:
LV DISTRIBUTION PANEL
SHEET 1 OF 2
BLD-7906

CUSTOMER:
AGNICO EAGLE
600 MAN AMARUQ MINE

DRAWN BY:	DATE:	SHEET:	SHEETS:
DMB	08/05/17	16	71

1704432 - AGNICO EAGLE MINE - C

THIS INFORMATION IS THE PROPERTY OF newterra ltd.. AND CANNOT BE REUSED OR REPRODUCED WITHOUT THE WRITTEN CONSENT OF newterra ltd.

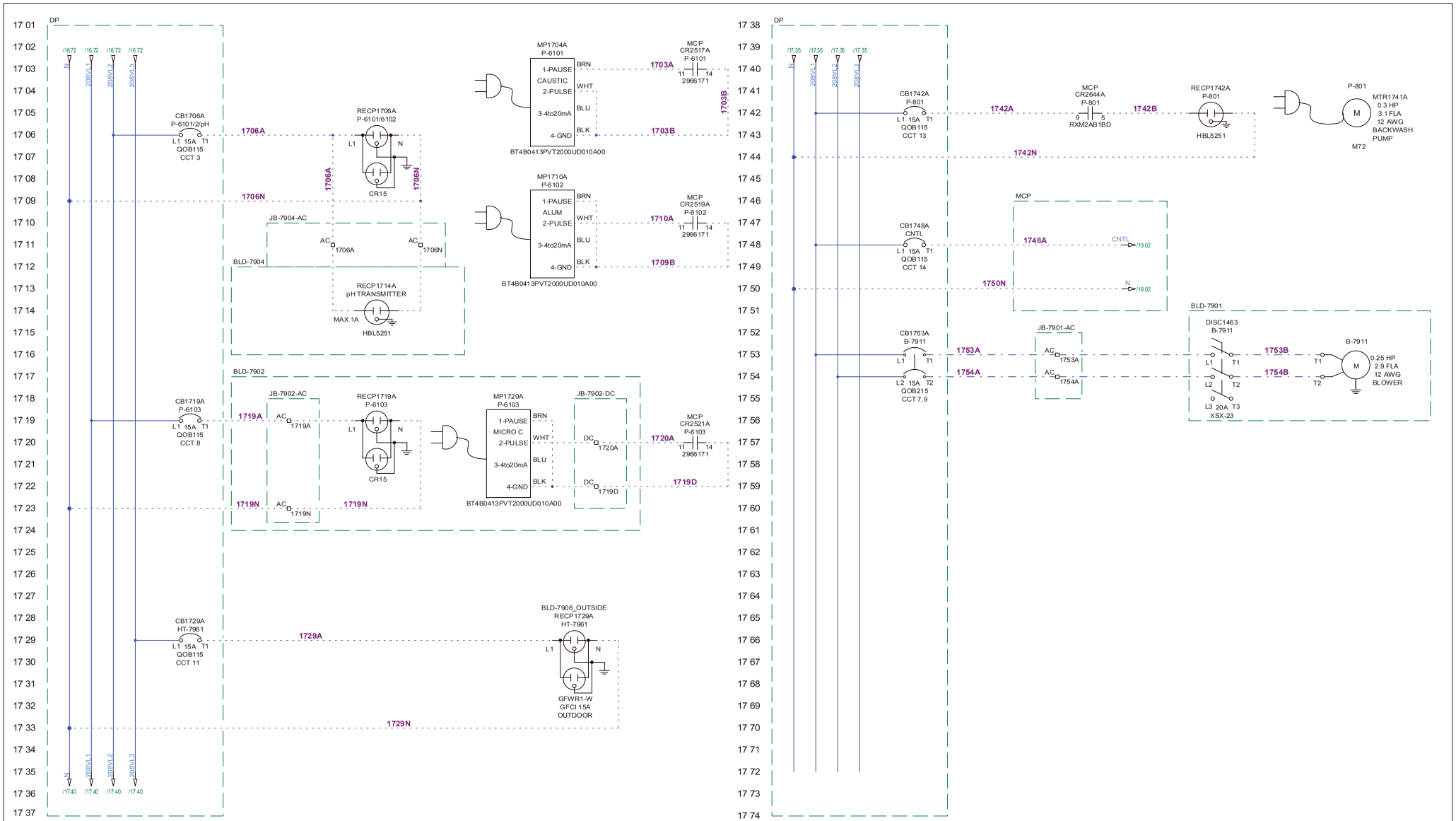

WIRE LEGEND

BLACK:	POWER
RED:	120VAC CONTROL
WHITE:	NEUTRAL
BLUE:	+24VDC & IS WIRING
BLU/WHT:	0VDC
YELLOW:	INTERLOCKS

NOTES:

1. FOLLOW CANADIAN COLOUR CODE FOR POWER WIRING (SEE SHEET 3 - LEGEND)
2. WIRE SIZE IS #12 AWG FOR POWER UNLESS OTHERWISE SPECIFIED

newterra

1325 CALIFORNIA AVE.
BROCKVILLE, ONTARIO
CANADA K6V 5Y6
PHONE: (613)498-1876
www.newterra.com

LEVEL	REVISION	DATE (dd/mm/yy)	BY
C	AS BUILT	14/08/17	DMB
B	FOR PRODUCTION	31/05/17	DMB
A1	FOR REVIEW	23/05/17	DMB
A	FOR SUBMITTAL	12/05/17	DMB

PROJ. NO: 1704432

TITLE AND LOCATION:
LV DISTRIBUTION PANEL
SHEET 2 OF 2
BLD-7906

CUSTOMER:
AGNICO EAGLE
600 MAN AMARUQ MINE

DRAWN BY:	DATE:	SHEET:	SHEETS:
DMB	08/05/17	17	71

1704432 - AGNICO EAGLE MINE - C

THIS INFORMATION IS THE PROPERTY OF newterra ltd.. AND CANNOT BE REUSED OR REPRODUCED WITHOUT THE WRITTEN CONSENT OF newterra ltd.

18 01
18 02
18 03
18 04
18 05
18 06
18 07
18 08
18 09
18 10
18 11
18 12
18 13
18 14
18 15
18 16
18 17
18 18
18 19
18 20
18 21
18 22
18 23
18 24
18 25
18 26
18 27
18 28
18 29
18 30
18 31
18 32
18 33
18 34
18 35
18 36
18 37

INTENTIONALLY BLANK

18 38
18 39
18 40
18 41
18 42
18 43
18 44
18 45
18 46
18 47
18 48
18 49
18 50
18 51
18 52
18 53
18 54
18 55
18 56
18 57
18 58
18 59
18 60
18 61
18 62
18 63
18 64
18 65
18 66
18 67
18 68
18 69
18 70
18 71
18 72
18 73
18 74

INTENTIONALLY BLANK

WIRE LEGEND

BLACK:	POWER
RED:	120VAC CONTROL
WHITE:	NEUTRAL
BLUE:	+24VDC & IS WIRING
BLU/WHT:	0VDC
YELLOW:	INTERLOCKS

NOTES:

1.

1325 CALIFORNIA AVE.
BROCKVILLE, ONTARIO
CANADA K6V 5Y6
PHONE: (613)498-1876
www.newterra.com

LEVEL	REVISION	DATE (dd/mm/yy)	BY
C	AS BUILT	14/08/17	DMB
B	FOR PRODUCTION	31/05/17	DMB
A1	FOR REVIEW	23/05/17	DMB
A	FOR SUBMITTAL	12/05/17	DMB

PROJ. NO: 1704432

TITLE AND LOCATION: SPARE SHEET

BLD-7906

CUSTOMER: AGNICO EAGLE 600 MAN AMARUQ MINE

DRAWN BY:	DATE:	SHEET:	SHEETS:
DMB	29/05/17	18	71

1704432 - AGNICO EAGLE MINE - C

THIS INFORMATION IS THE PROPERTY OF newterra ltd.. AND CANNOT BE REUSED OR REPRODUCED WITHOUT THE WRITTEN CONSENT OF newterra ltd.

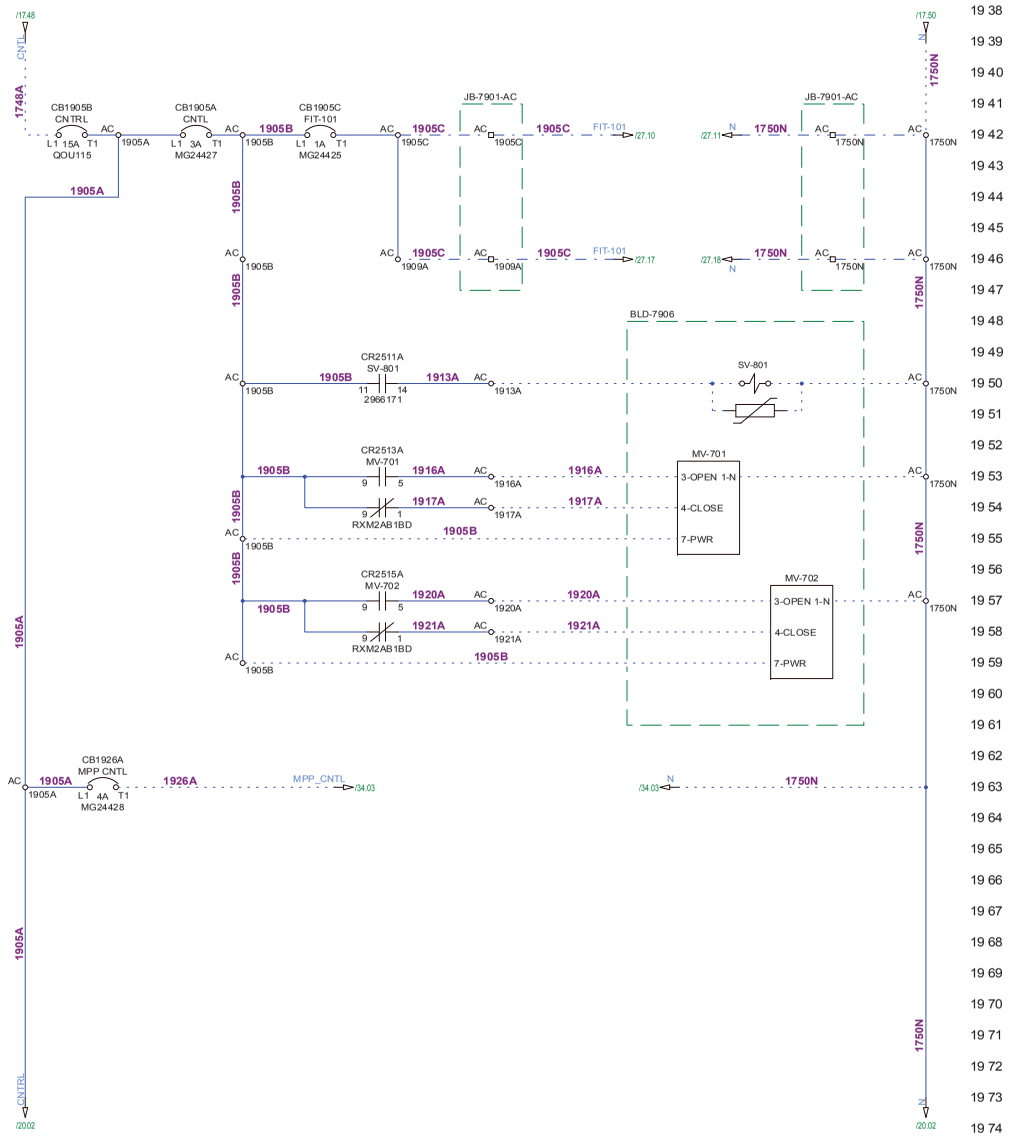

INTENTIONALLY BLANK

WIRE LEGEND

BLACK:	POWER
RED:	120VAC CONTROL
WHITE:	NEUTRAL
BLUE:	+24VDC & IS WIRING
BLU/WHT:	0VDC
YELLOW:	INTERLOCKS

NOTES:

1. FOLLOW CANADIAN COLOUR CODE FOR POWER WIRING (SEE SHEET 3 - LEGEND)
2. WIRE SIZE IS #12 AWG FOR POWER UNLESS OTHERWISE SPECIFIED

newterra

1325 CALIFORNIA AVE.
BROCKVILLE, ONTARIO
CANADA K6V 5Y6
PHONE: (613)498-1876
www.newterra.com

LEVEL	REVISION	DATE (dd/mm/yy)	BY
C	AS BUILT	14/08/17	DMB
B	FOR PRODUCTION	31/05/17	DMB
A1	FOR REVIEW	23/05/17	DMB
A	FOR SUBMITTAL	12/05/17	DMB

PROJ. NO: 1704432

TITLE AND LOCATION: MCP - 120VAC CONTROL POWER
MCP

CUSTOMER: AGNICO EAGLE 600 MAN AMARUQ MINE

DRAWN BY:	DATE:	SHEET:	SHEETS:
DMB	08/05/17	19	71

1704432 - AGNICO EAGLE MINE - C

THIS INFORMATION IS THE PROPERTY OF newterra ltd.. AND CANNOT BE REUSED OR REPRODUCED WITHOUT THE WRITTEN CONSENT OF newterra ltd.

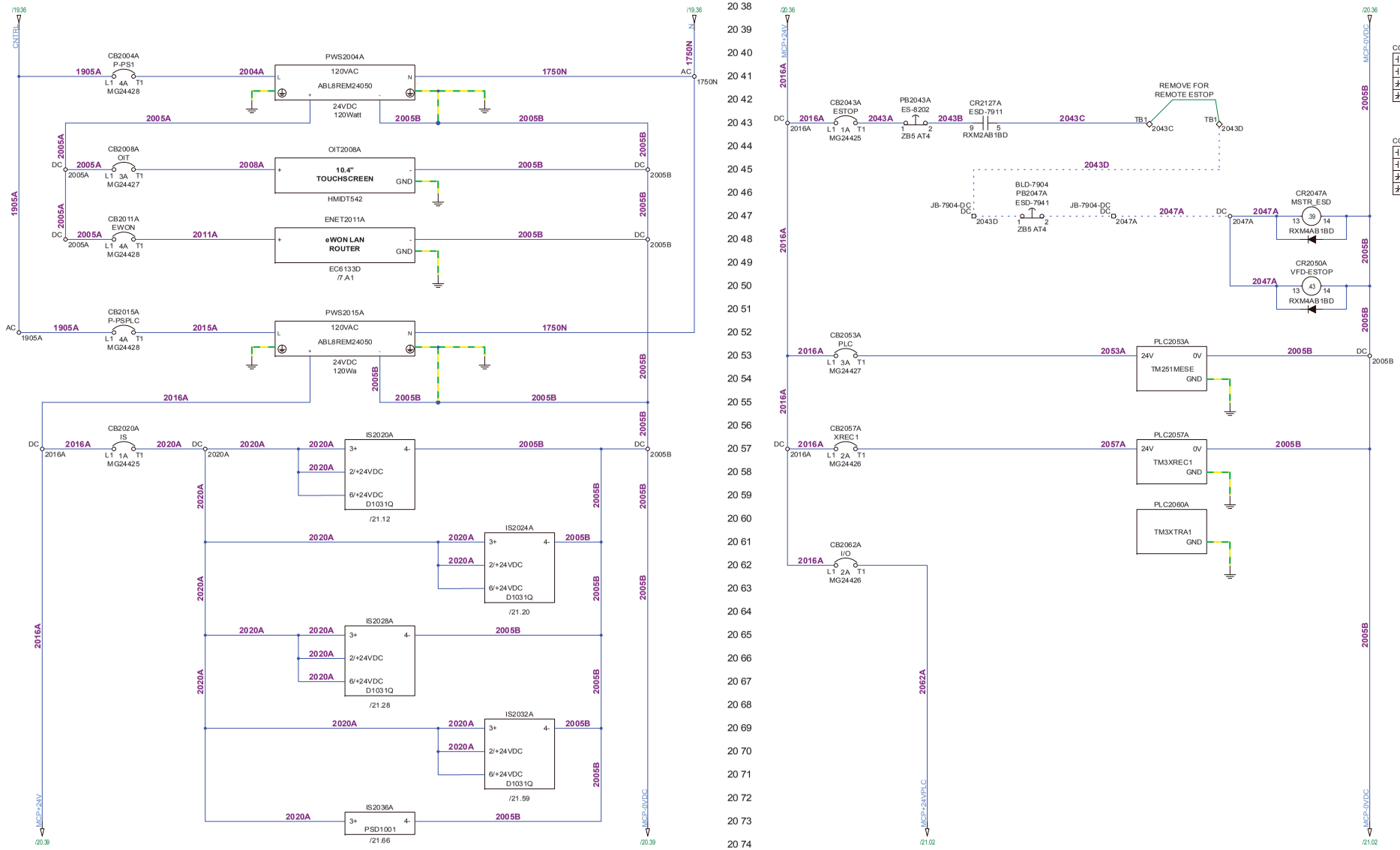

WIRE LEGEND

BLACK:	POWER
RED:	120VAC CONTROL
WHITE:	NEUTRAL
BLUE:	+24VDC & IS WIRING
BLU/WHT:	0VDC
YELLOW:	INTERLOCKS

NOTES:

1. FOLLOW CANADIAN COLOUR CODE FOR POWER WIRING (SEE SHEET 3 - LEGEND)
2. WIRE SIZE IS #12 AWG FOR POWER UNLESS OTHERWISE SPECIFIED

newterra

1325 CALIFORNIA AVE.
BROCKVILLE, ONTARIO
CANADA K6V 5Y6
PHONE: (613)498-1876
www.newterra.com

LEVEL	REVISION	DATE (dd/mm/yy)	BY
C	AS BUILT	14/08/17	DMB
B	FOR PRODUCTION	31/05/17	DMB
A1	FOR REVIEW	23/05/17	DMB
A	FOR SUBMITTAL	12/05/17	DMB

PROJ. NO: 1704432

TITLE AND LOCATION: MCP - 24VDC CONTROL POWER MCP

CUSTOMER: AGNICO EAGLE 600 MAN AMARUQ MINE

DRAWN BY:	DATE:	SHEET:	SHEETS:
DMB	08/05/17	20	71

1704432 - AGNICO EAGLE MINE - C

THIS INFORMATION IS THE PROPERTY OF newterra ltd.. AND CANNOT BE REUSED OR REPRODUCED WITHOUT THE WRITTEN CONSENT OF newterra ltd.

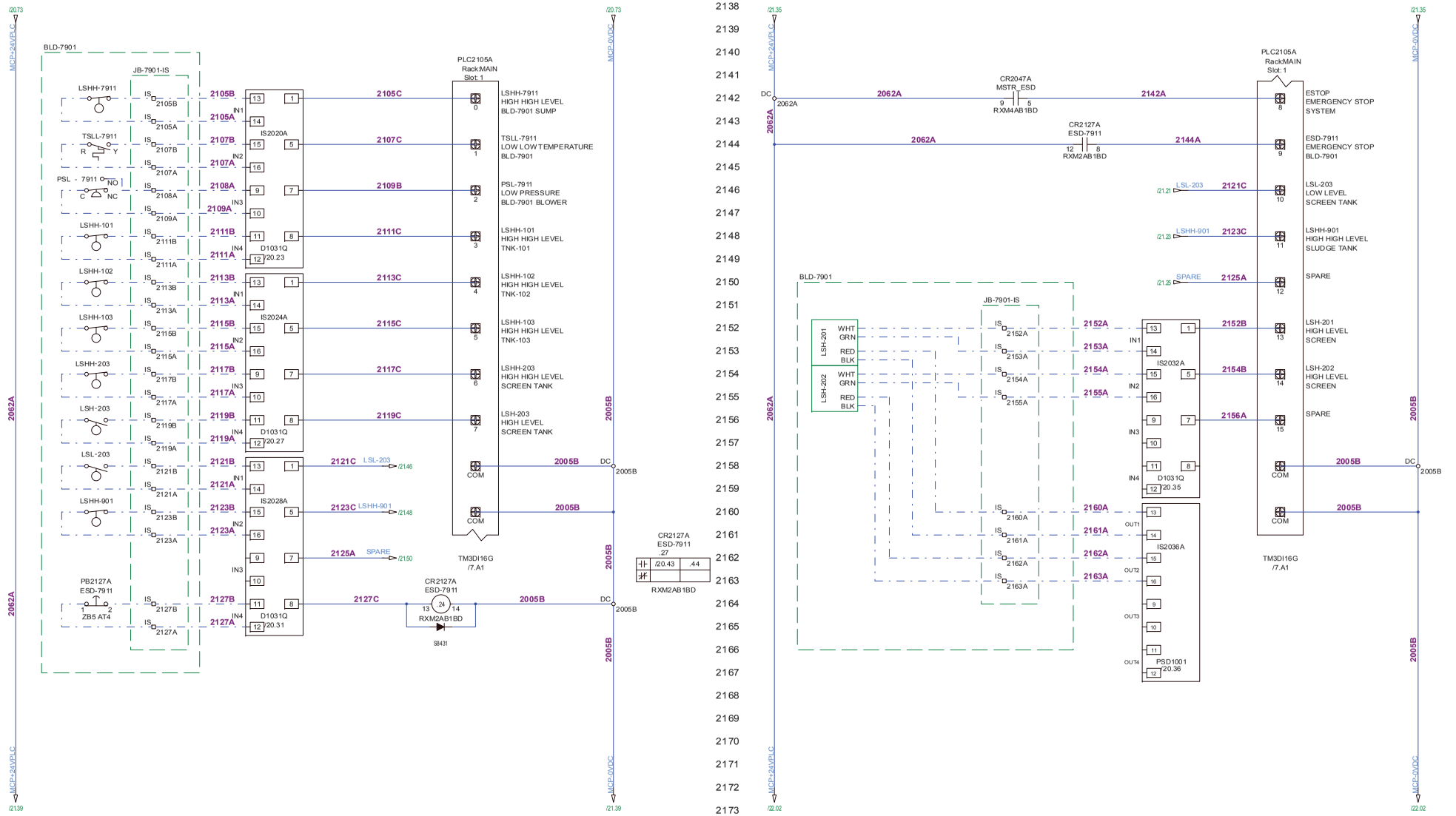

WIRE LEGEND

BLACK:	POWER
RED:	120VAC CONTROL
WHITE:	NEUTRAL
BLUE:	+24VDC & IS WIRING
BLU/WHT:	0VDC
YELLOW:	INTERLOCKS

NOTES:

1.

newterra

1325 CALIFORNIA AVE.
BROCKVILLE, ONTARIO
CANADA K6V 5Y6
PHONE: (613)498-1876
www.newterra.com

LEVEL	REVISION	DATE (dd/mm/yy)	BY
C	AS BUILT	14/08/17	DMB
B	FOR PRODUCTION	31/05/17	DMB
A1	FOR REVIEW	23/05/17	DMB
A	FOR SUBMITTAL	12/05/17	DMB

PROJ. NO: 1704432

TITLE AND LOCATION: MCP DISCRETE INPUTS SHEET 1 OF 4 MCP

CUSTOMER: AGNICO EAGLE 600 MAN AMARUQ MINE

DRAWN BY:	DATE:	SHEET:	SHEETS:
DMB	08/05/17	21	71

1704432 - AGNICO EAGLE MINE - C

THIS INFORMATION IS THE PROPERTY OF newterra ltd.. AND CANNOT BE REUSED OR REPRODUCED WITHOUT THE WRITTEN CONSENT OF newterra ltd.

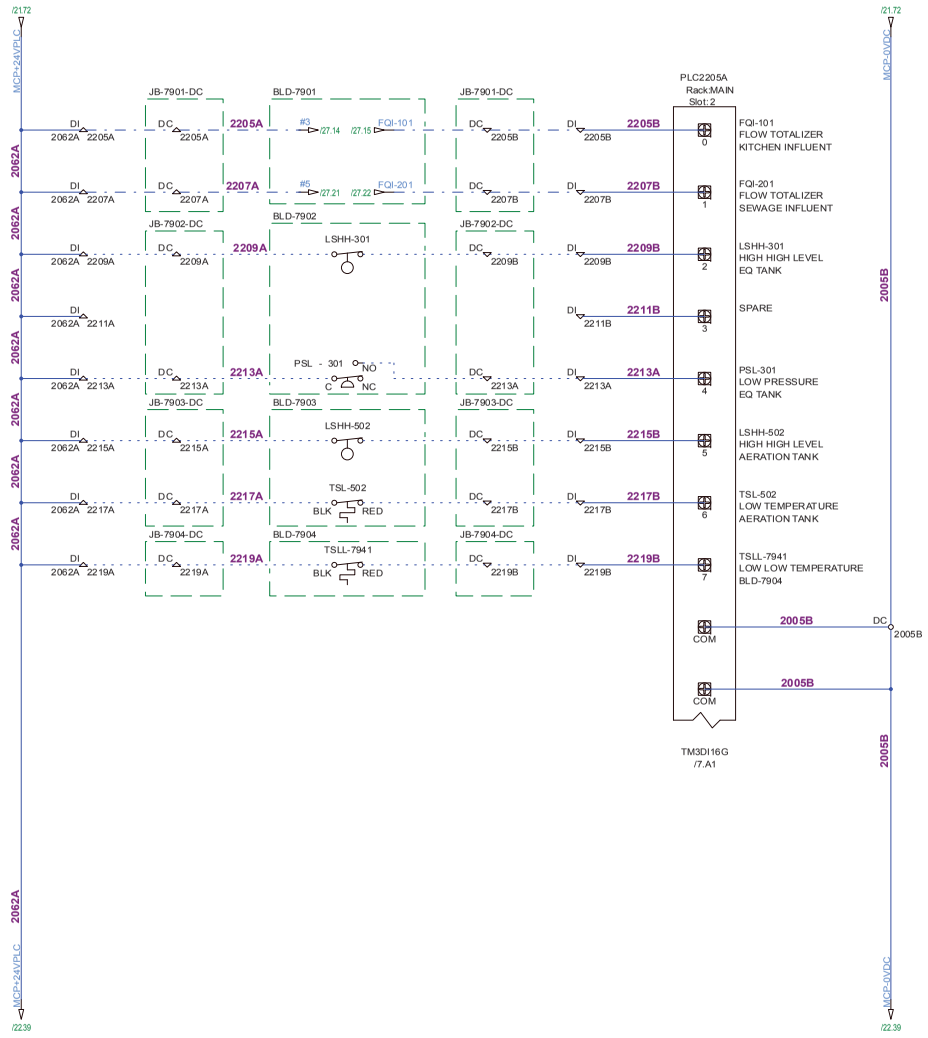

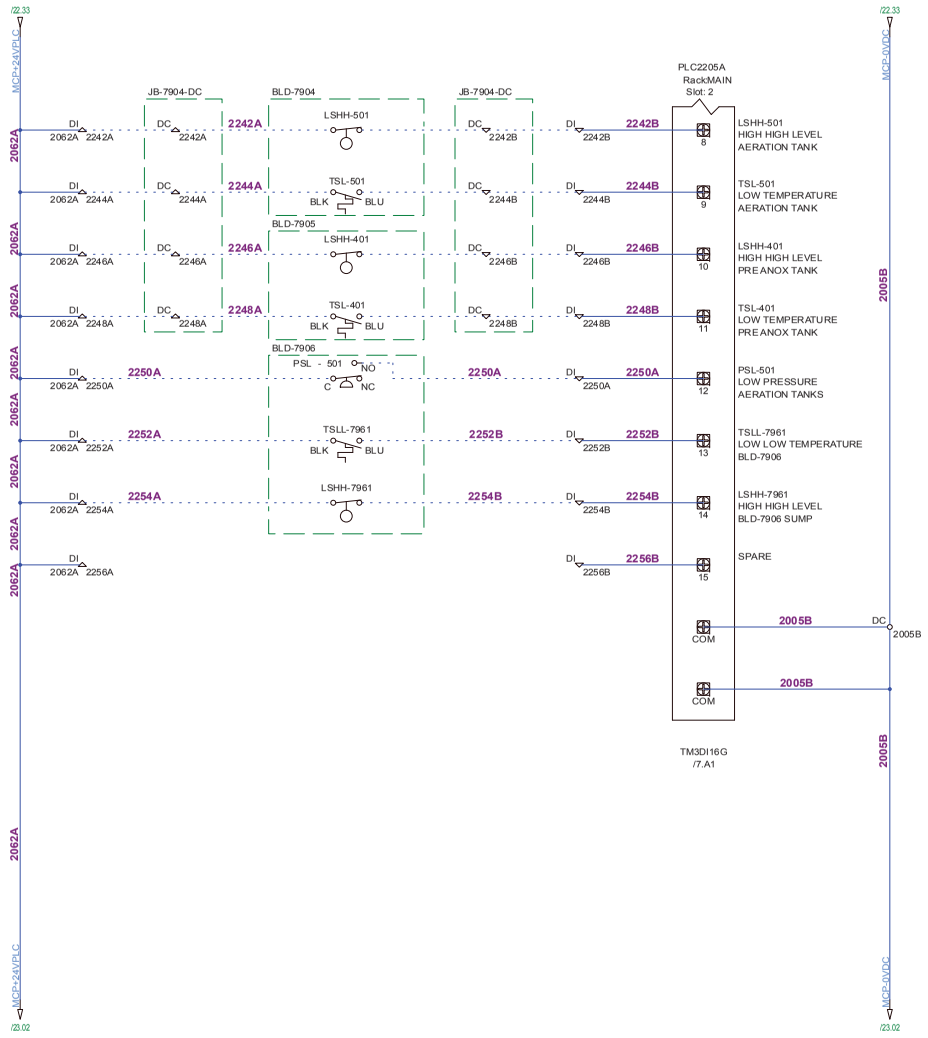

WIRE LEGEND

BLACK:	POWER
RED:	120VAC CONTROL
WHITE:	NEUTRAL
BLUE:	+24VDC & IS WIRING
BLU/WHT:	0VDC
YELLOW:	INTERLOCKS

NOTES:

1. FOLLOW CANADIAN COLOUR CODE FOR POWER WIRING (SEE SHEET 3 - LEGEND)
2. WIRE SIZE IS #12 AWG FOR POWER UNLESS OTHERWISE SPECIFIED

1325 CALIFORNIA AVE.
BROCKVILLE, ONTARIO
CANADA K6V 5Y6
PHONE: (613)498-1876
www.newterra.com

LEVEL	REVISION	DATE (dd/mm/yy)	BY
C	AS BUILT	14/08/17	DMB
B	FOR PRODUCTION	31/05/17	DMB
A1	FOR REVIEW	23/05/17	DMB
A	FOR SUBMITTAL	12/05/17	DMB

PROJ. NO: 1704432

TITLE AND LOCATION:
MCP DISCRETE INPUTS
SHEET 2 OF 4
MCP

CUSTOMER:
AGNICO EAGLE
600 MAN AMARUQ MINE

DRAWN BY:	DATE:	SHEET:	SHEETS:
DMB	08/05/17	22	71

1704432 - AGNICO EAGLE MINE - C

THIS INFORMATION IS THE PROPERTY OF newterra ltd.. AND CANNOT BE REUSED OR REPRODUCED WITHOUT THE WRITTEN CONSENT OF newterra ltd.

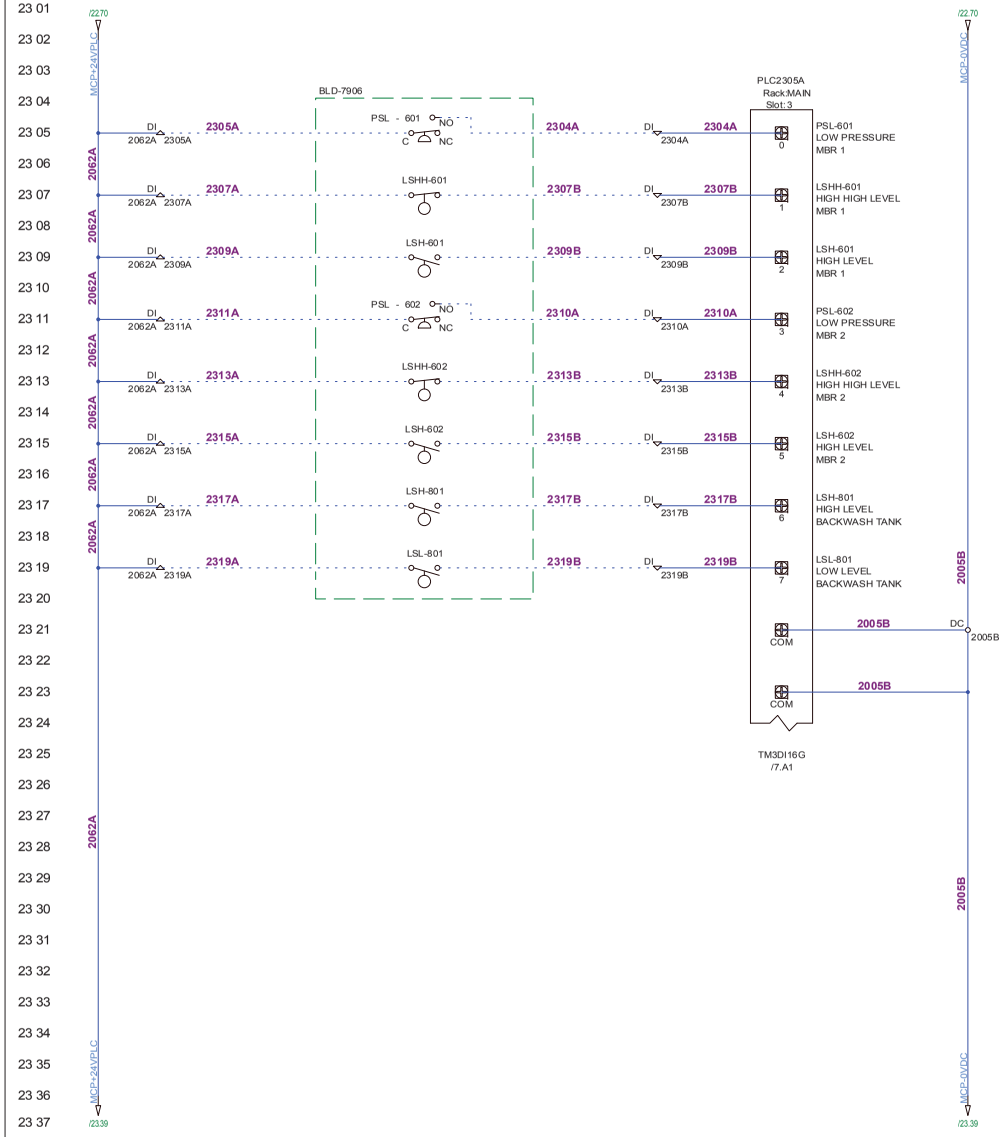

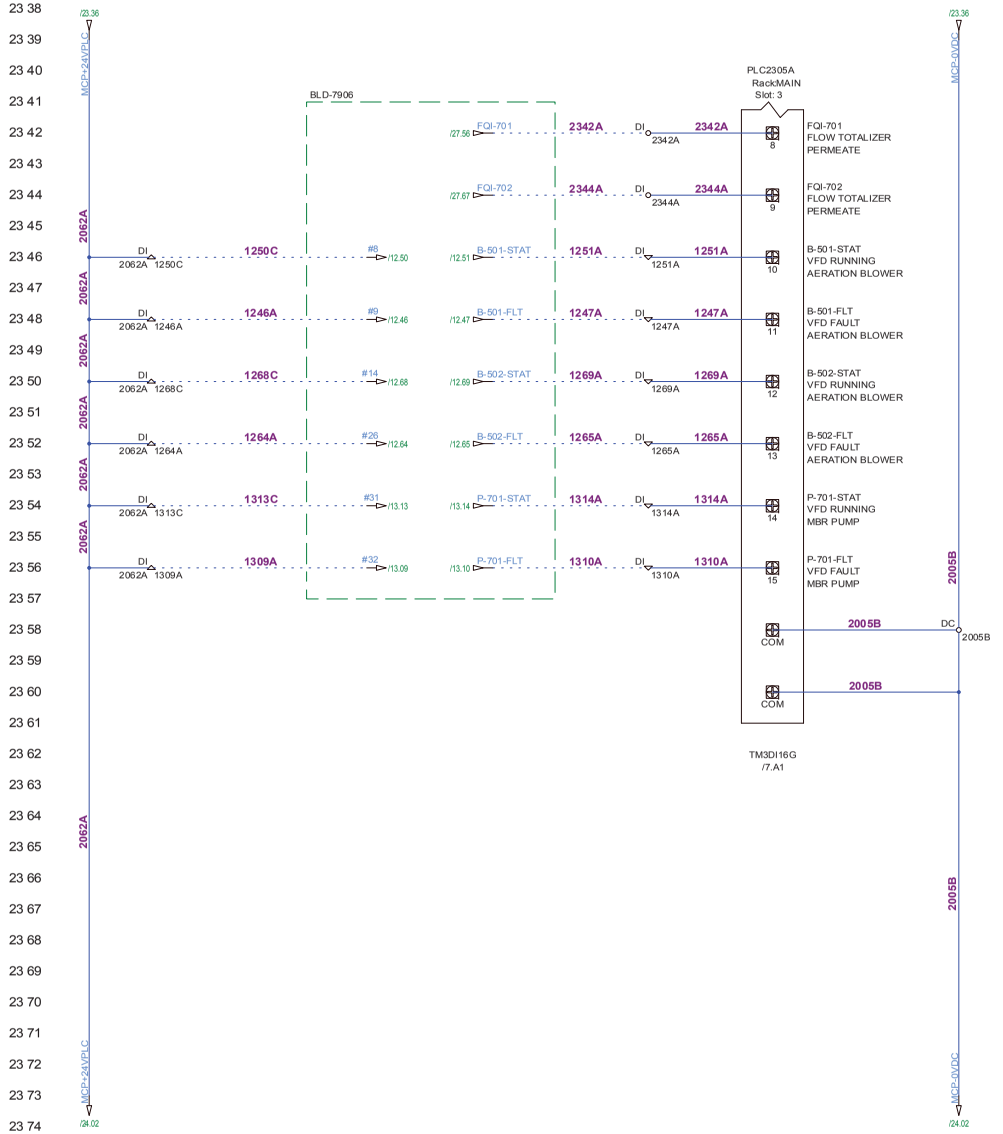

WIRE LEGEND

BLACK:	POWER
RED:	120VAC CONTROL
WHITE:	NEUTRAL
BLUE:	+24VDC & IS WIRING
BLU/WHT:	0VDC
YELLOW:	INTERLOCKS

NOTES:

1.

1325 CALIFORNIA AVE.
BROCKVILLE, ONTARIO
CANADA K6V 5Y6
PHONE: (613)498-1876
www.newterra.com

LEVEL	REVISION	DATE (dd/mm/yy)	BY
C	AS BUILT	14/08/17	DMB
B	FOR PRODUCTION	31/05/17	DMB
A1	FOR REVIEW	23/05/17	DMB
A	FOR SUBMITTAL	12/05/17	DMB

PROJ. NO: 1704432

TITLE AND LOCATION: MCP DISCRETE INPUTS SHEET 3 OF 4 MCP

CUSTOMER: AGNICO EAGLE 600 MAN AMARUQ MINE

DRAWN BY:	DATE:	SHEET:	SHEETS:
DMB	08/05/17	23	71

1704432 - AGNICO EAGLE MINE - C

THIS INFORMATION IS THE PROPERTY OF newterra ltd.. AND CANNOT BE REUSED OR REPRODUCED WITHOUT THE WRITTEN CONSENT OF newterra ltd.

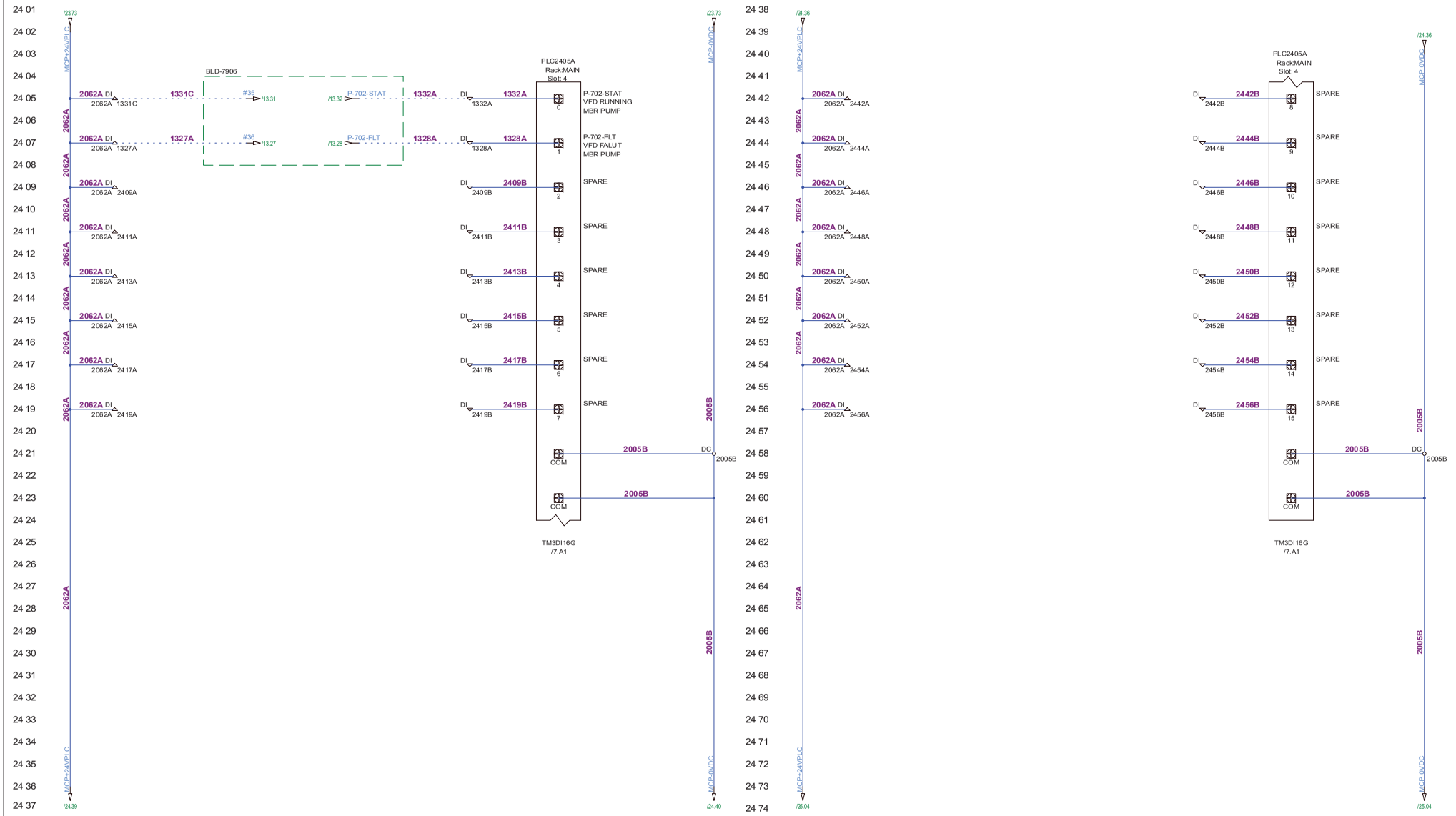

WIRE LEGEND

BLACK:	POWER
RED:	120VAC CONTROL
WHITE:	NEUTRAL
BLUE:	+24VDC & IS WIRING
BLU/WHT:	0VDC
YELLOW:	INTERLOCKS

NOTES:

1.

newterra

1325 CALIFORNIA AVE.
BROCKVILLE, ONTARIO
CANADA K6V 5Y6
PHONE: (613)498-1876
www.newterra.com

LEVEL	REVISION	DATE (dd/mm/yy)	BY
C	AS BUILT	14/08/17	DMB
B	FOR PRODUCTION	31/05/17	DMB
A1	FOR REVIEW	23/05/17	DMB
A	FOR SUBMITTAL	12/05/17	DMB

PROJ. NO: 1704432

TITLE AND LOCATION:
MCP DISCRETE INPUTS
SHEET 4 OF 4
MCP

CUSTOMER:
AGNICO EAGLE
600 MAN AMARUQ MINE

DRAWN BY:	DATE:	SHEET:	SHEETS:
DMB	25/05/17	24	71

1704432 - AGNICO EAGLE MINE - C

THIS INFORMATION IS THE PROPERTY OF newterra ltd.. AND CANNOT BE REUSED OR REPRODUCED WITHOUT THE WRITTEN CONSENT OF newterra ltd.

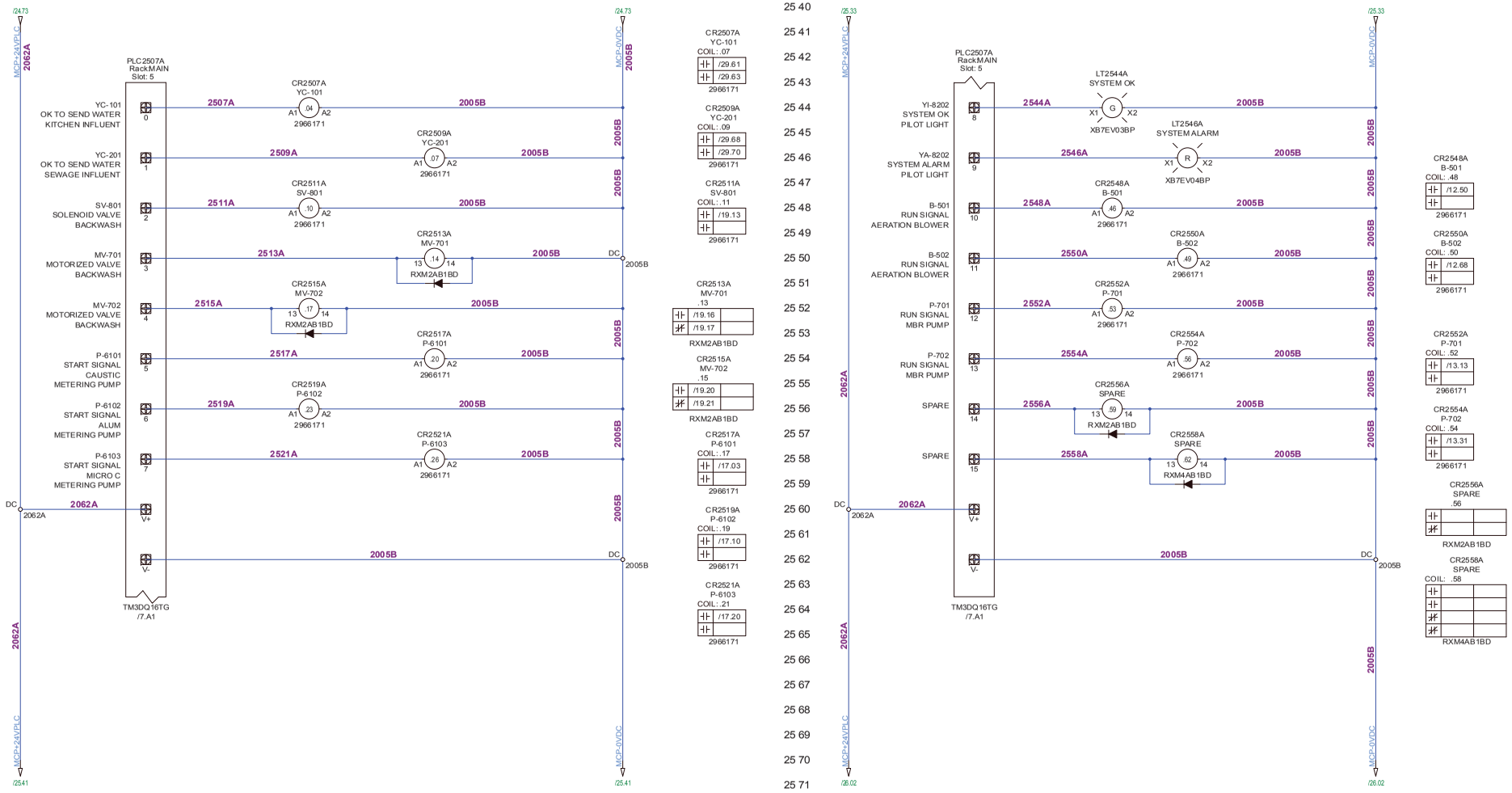

WIRE LEGEND

BLACK:	POWER
RED:	120VAC CONTROL
WHITE:	NEUTRAL
BLUE:	+24VDC & IS WIRING
BLU/WHT:	0VDC
YELLOW:	INTERLOCKS

NOTES:

1. FOLLOW CANADIAN COLOUR CODE FOR POWER WIRING (SEE SHEET 3 - LEGEND)
2. WIRE SIZE IS #12 AWG FOR POWER UNLESS OTHERWISE SPECIFIED

newterra

1325 CALIFORNIA AVE.
BROCKVILLE, ONTARIO
CANADA K6V 5Y6
PHONE: (613)498-1876
www.newterra.com

LEVEL	REVISION	DATE (dd/mm/yy)	BY
C	AS BUILT	14/08/17	DMB
B	FOR PRODUCTION	31/05/17	DMB
A1	FOR REVIEW	23/05/17	DMB
A	FOR SUBMITTAL	12/05/17	DMB

PROJ. NO: 1704432

TITLE AND LOCATION:
MCP DISCRETE OUTPUTS
SHEET 1 OF 2
MCP

CUSTOMER:
AGNICO EAGLE
600 MAN AMARUQ MINE

DRAWN BY:	DATE:	SHEET:	SHEETS:
DMB	08/05/17	25	71

1704432 - AGNICO EAGLE MINE - C

THIS INFORMATION IS THE PROPERTY OF newterra ltd.. AND CANNOT BE REUSED OR REPRODUCED WITHOUT THE WRITTEN CONSENT OF newterra ltd.

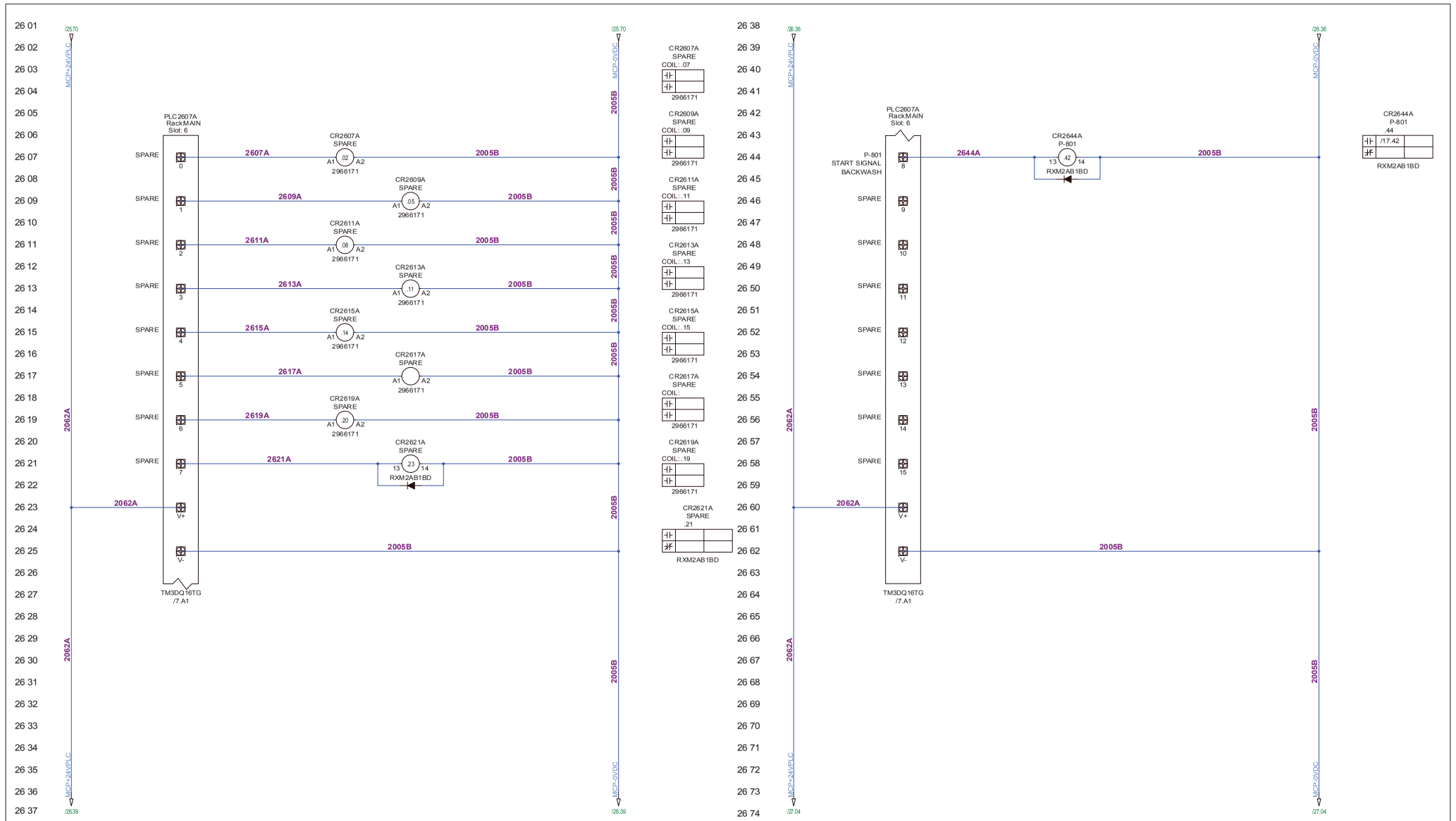

WIRE LEGEND

BLACK:	POWER
RED:	120VAC CONTROL
WHITE:	NEUTRAL
BLUE:	+24VDC & IS WIRING
BLU/WHT:	0VDC
YELLOW:	INTERLOCKS

NOTES:

1.

newterra

1325 CALIFORNIA AVE.
BROCKVILLE, ONTARIO
CANADA K6V 5Y6
PHONE: (613)498-1876
www.newterra.com

LEVEL	REVISION	DATE (dd/mm/yy)	BY
C	AS BUILT	14/08/17	DMB
B	FOR PRODUCTION	31/05/17	DMB
A1	FOR REVIEW	23/05/17	DMB
A	FOR SUBMITTAL	12/05/17	DMB

PROJ. NO: 1704432

TITLE AND LOCATION: MCP DISCRETE OUTPUTS SHEET 2 OF 2 MCP

CUSTOMER: AGNICO EAGLE 600 MAN AMARUQ MINE

DRAWN BY:	DATE:	SHEET:	SHEETS:
DMB	25/05/17	26	71

1704432 - AGNICO EAGLE MINE - C

THIS INFORMATION IS THE PROPERTY OF newterra ltd.. AND CANNOT BE REUSED OR REPRODUCED WITHOUT THE WRITTEN CONSENT OF newterra ltd.

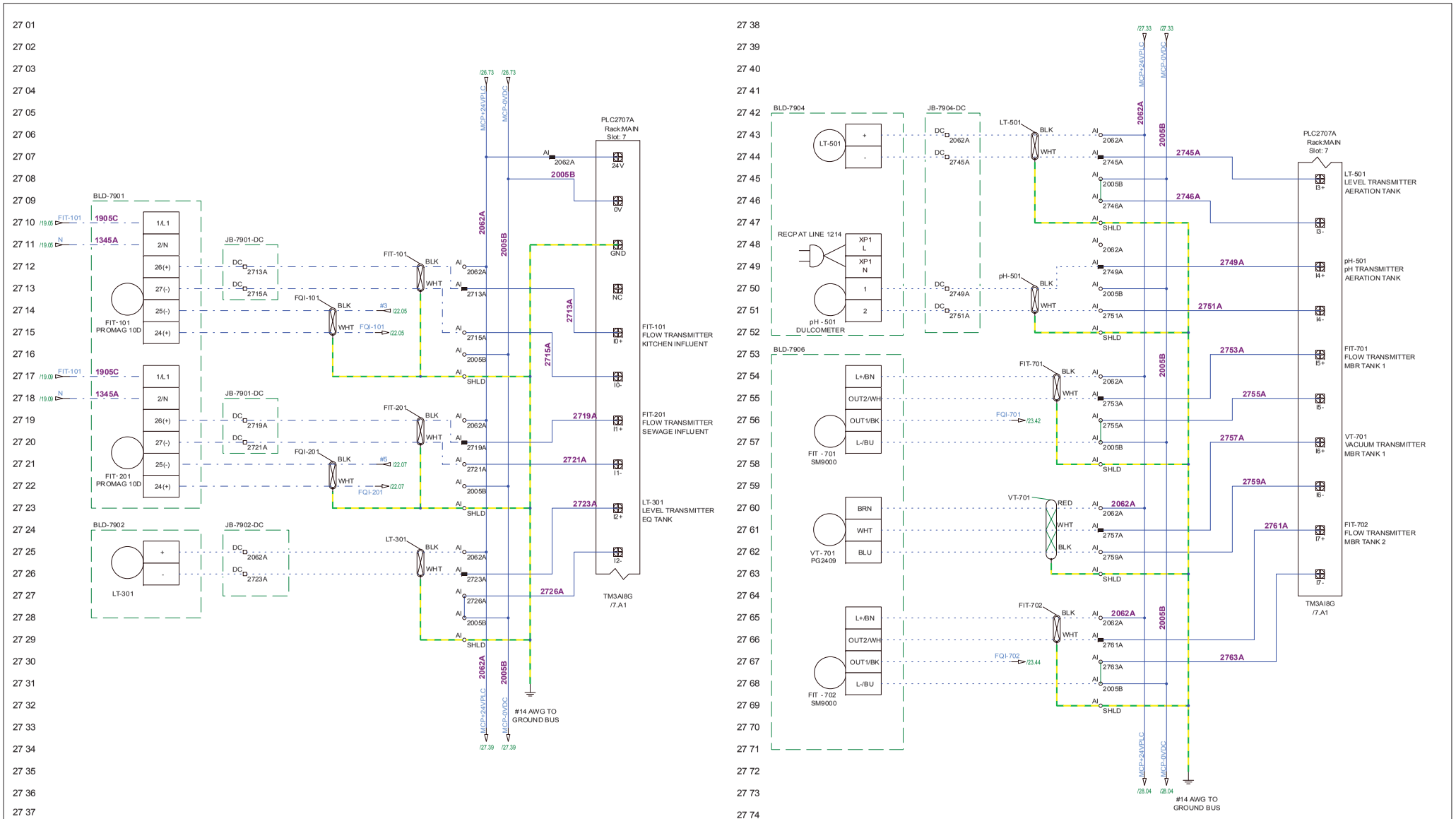

WIRE LEGEND

BLACK:	POWER
RED:	120VAC CONTROL
WHITE:	NEUTRAL
BLUE:	+24VDC & IS WIRING
BLU/WHT:	0VDC
YELLOW:	INTERLOCKS

NOTES:

1. FOLLOW CANADIAN COLOUR CODE FOR POWER WIRING (SEE SHEET 3 - LEGEND)
2. WIRE SIZE IS #12 AWG FOR POWER UNLESS OTHERWISE SPECIFIED

newterra

1325 CALIFORNIA AVE.
BROCKVILLE, ONTARIO
CANADA K6V 5Y6
PHONE: (613)498-1876
www.newterra.com

LEVEL	REVISION	DATE (dd/mm/yy)	BY
C	AS BUILT	14/08/17	DMB
B	FOR PRODUCTION	31/05/17	DMB
A1	FOR REVIEW	23/05/17	DMB
A	FOR SUBMITTAL	12/05/17	DMB

PROJ. NO: 1704432

TITLE AND LOCATION: MCP ANALOG INPUTS SHEET 1 OF 2 MCP

CUSTOMER: AGNICO EAGLE 600 MAN AMARUQ MINE

DRAWN BY:	DATE:	SHEET:	SHEETS:
DMB	08/05/17	27	71

1704432 - AGNICO EAGLE MINE - C

THIS INFORMATION IS THE PROPERTY OF newterra ltd.. AND CANNOT BE REUSED OR REPRODUCED WITHOUT THE WRITTEN CONSENT OF newterra ltd.

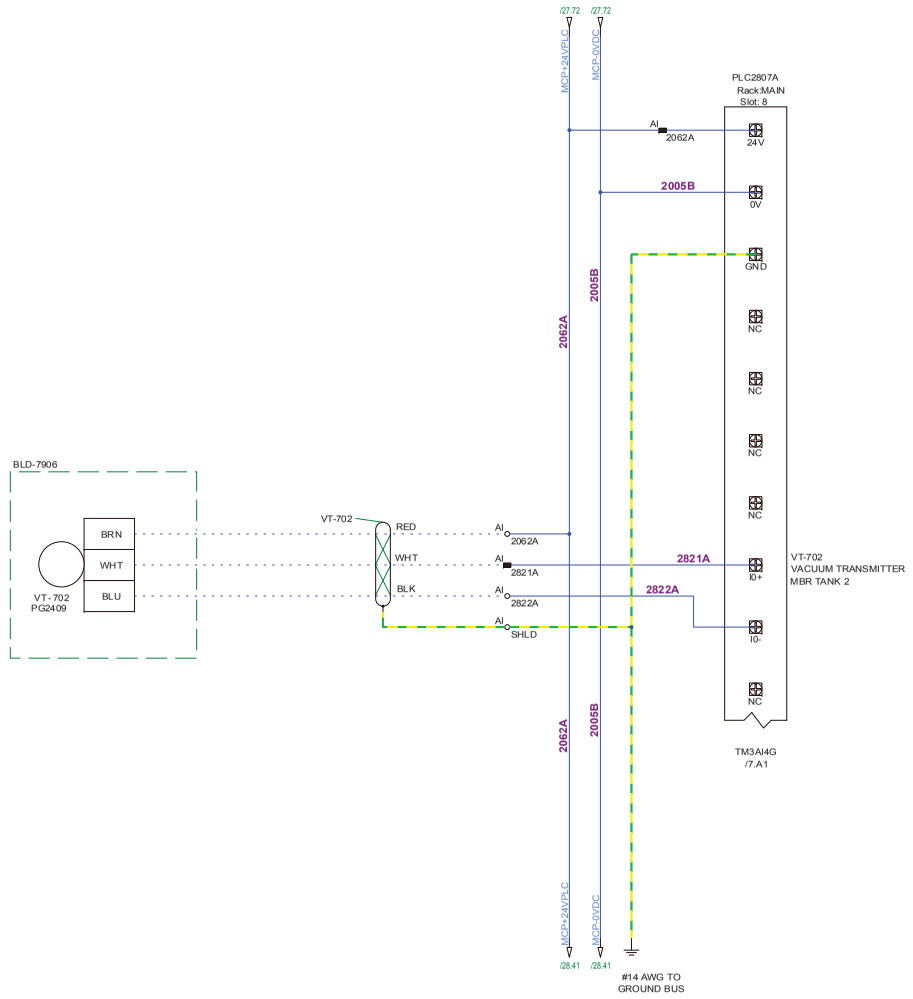

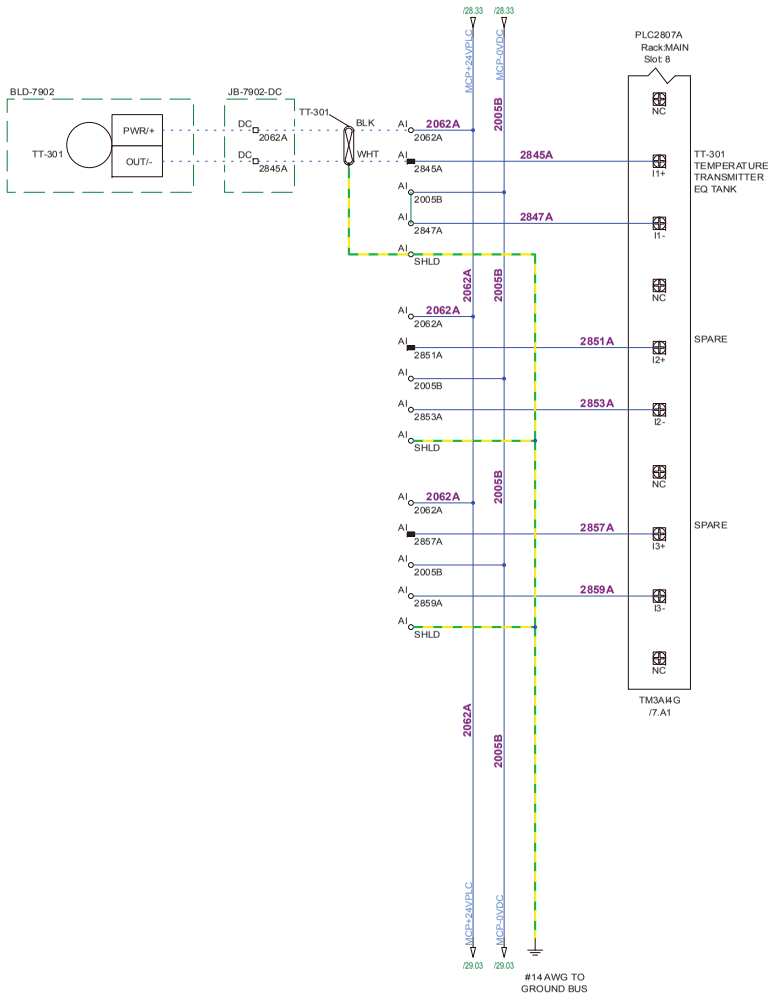

WIRE LEGEND

BLACK:	POWER
RED:	120VAC CONTROL
WHITE:	NEUTRAL
BLUE:	+24VDC & IS WIRING
BLU/WHT:	0VDC
YELLOW:	INTERLOCKS

NOTES:

1.

newterra

1325 CALIFORNIA AVE.
BROCKVILLE, ONTARIO
CANADA K6V 5Y6
PHONE: (613)498-1876
www.newterra.com

LEVEL	REVISION	DATE (dd/mm/yy)	BY
C	AS BUILT	14/08/17	DMB
B	FOR PRODUCTION	31/05/17	DMB
A1	FOR REVIEW	23/05/17	DMB
A	FOR SUBMITTAL	12/05/17	DMB

PROJ. NO: 1704432

TITLE AND LOCATION:
MCP ANALOG INPUTS
SHEET 2 OF 2
MCP

CUSTOMER:
AGNICO EAGLE
600 MAN AMARUQ MINE

DRAWN BY:	DATE:	SHEET:	SHEETS:
DMB	29/05/17	28	71

1704432 - AGNICO EAGLE MINE - C

THIS INFORMATION IS THE PROPERTY OF newterra ltd.. AND CANNOT BE REUSED OR REPRODUCED WITHOUT THE WRITTEN CONSENT OF newterra ltd.

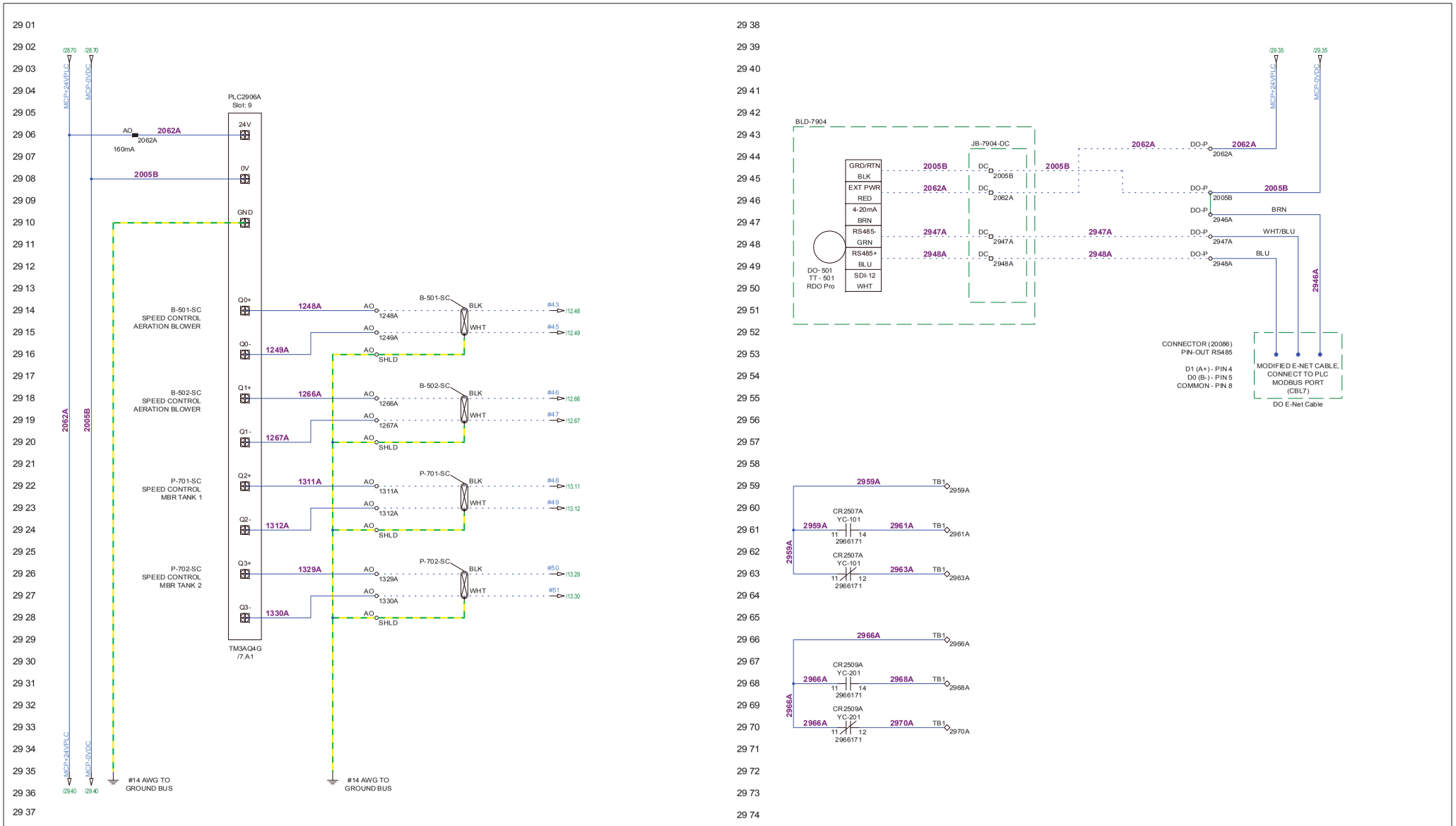

WIRE LEGEND

BLACK:	POWER
RED:	120VAC CONTROL
WHITE:	NEUTRAL
BLUE:	+24VDC & IS WIRING
BLU/WHT:	0VDC
YELLOW:	INTERLOCKS

NOTES:

1.

newterra

1325 CALIFORNIA AVE.
BROCKVILLE, ONTARIO
CANADA K6V 5Y6
PHONE: (613)498-1876
www.newterra.com

LEVEL	REVISION	DATE (dd/mm/yy)	BY
C	AS BUILT	14/08/17	DMB
B	FOR PRODUCTION	31/05/17	DMB
A1	FOR REVIEW	23/05/17	DMB
A	FOR SUBMITTAL	12/05/17	DMB

PROJ. NO: 1704432

TITLE AND LOCATION:
MCP ANALOG OUTPUTS, DO/TT
PROBE & CUSTOMER CONNECTIONS
MCP

CUSTOMER:
AGNICO EAGLE
600 MAN AMARUQ MINE

DRAWN BY:	DATE:	SHEET:	SHEETS:
DMB	29/05/17	29	71

1704432 - AGNICO EAGLE MINE - C

THIS INFORMATION IS THE PROPERTY OF newterra ltd.. AND CANNOT BE REUSED OR REPRODUCED WITHOUT THE WRITTEN CONSENT OF newterra ltd.

30 01
30 02
30 03
30 04
30 05
30 06
30 07
30 08
30 09
30 10
30 11
30 12
30 13
30 14
30 15
30 16
30 17
30 18
30 19
30 20
30 21
30 22
30 23
30 24
30 25
30 26
30 27
30 28
30 29
30 30
30 31
30 32
30 33
30 34
30 35
30 36
30 37

INTENTIONALLY BLANK

30 38
30 39
30 40
30 41
30 42
30 43
30 44
30 45
30 46
30 47
30 48
30 49
30 50
30 51
30 52
30 53
30 54
30 55
30 56
30 57
30 58
30 59
30 60
30 61
30 62
30 63
30 64
30 65
30 66
30 67
30 68
30 69
30 70
30 71
30 72
30 73
30 74

INTENTIONALLY BLANK

WIRE LEGEND

BLACK:	POWER
RED:	120VAC CONTROL
WHITE:	NEUTRAL
BLUE:	+24VDC & IS WIRING
BLU/WHT:	0VDC
YELLOW:	INTERLOCKS

NOTES:

1.

newterra

1325 CALIFORNIA AVE.
BROCKVILLE, ONTARIO
CANADA K6V 5Y6
PHONE: (613)498-1876
www.newterra.com

LEVEL	REVISION	DATE (dd/mm/yy)	BY
C	AS BUILT	14/08/17	DMB
B	FOR PRODUCTION	31/05/17	DMB
A1	FOR REVIEW	23/05/17	DMB
A	FOR SUBMITTAL	12/05/17	DMB

PROJ. NO: 1704432

TITLE AND LOCATION: SPARE SHEET

MCP

CUSTOMER: AGNICO EAGLE 600 MAN AMARUQ MINE

DRAWN BY:	DATE:	SHEET:	SHEETS:
DMB	29/05/17	30	71

1704432 - AGNICO EAGLE MINE - C

THIS INFORMATION IS THE PROPERTY OF newterra ltd.. AND CANNOT BE REUSED OR REPRODUCED WITHOUT THE WRITTEN CONSENT OF newterra ltd.

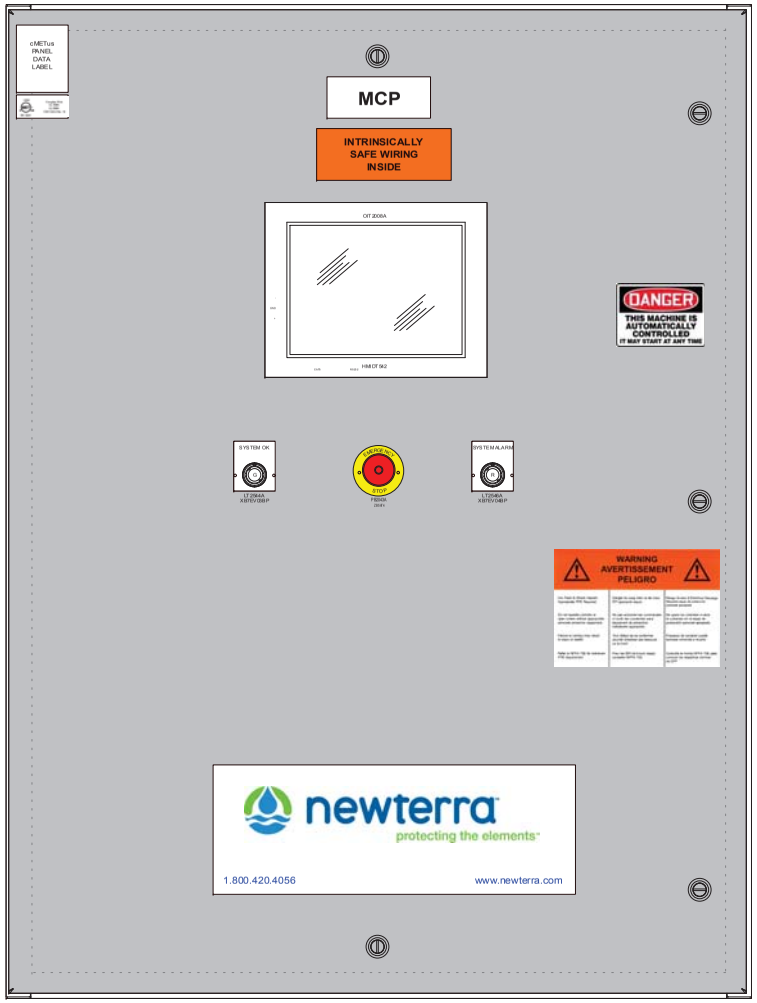

PANEL OUTER DOOR

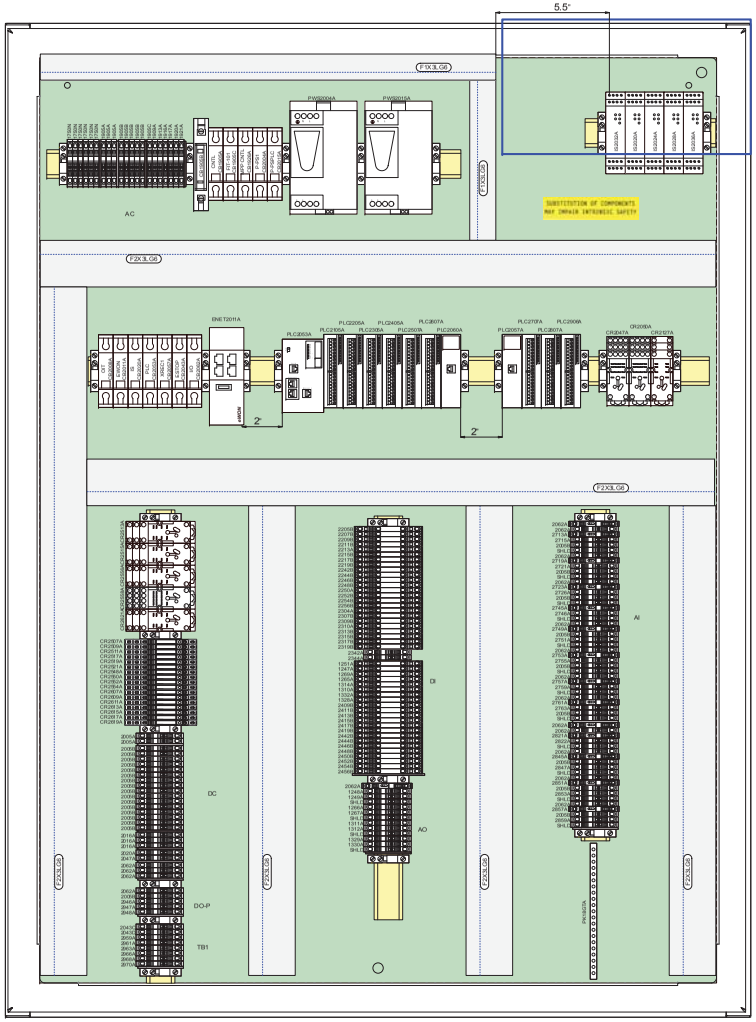

MCP
EN4SD483612GY
PANEL INTERIOR

WIRE LEGEND

BLACK:	POWER
RED:	120VAC CONTROL
WHITE:	NEUTRAL
BLUE:	+24VDC & IS WIRING
BLU/WHT:	0VDC
YELLOW:	INTERLOCKS

NOTES:

1325 CALIFORNIA AVE.
BROCKVILLE, ONTARIO
CANADA K6V 5Y6
PHONE: (613)498-1876
www.newterra.com

LEVEL	REVISION	DATE (dd/mm/yy)	BY
C	AS BUILT	14/08/17	DMB
B	FOR PRODUCTION	31/05/17	DMB
A1	FOR REVIEW	23/05/17	DMB
A	FOR SUBMITTAL	12/05/17	DMB

PROJ. NO: 1704432

TITLE AND LOCATION: MCP PANEL LAYOUT

MCP

CUSTOMER: AGNICO EAGLE 600 MAN AMARUQ MINE

DRAWN BY:	DATE:	SHEET:	SHEETS:
DMB	08/05/17	31	71

1704432 - AGNICO EAGLE MINE - C

THIS INFORMATION IS THE PROPERTY OF newterra ltd.. AND CANNOT BE REUSED OR REPRODUCED WITHOUT THE WRITTEN CONSENT OF newterra ltd.

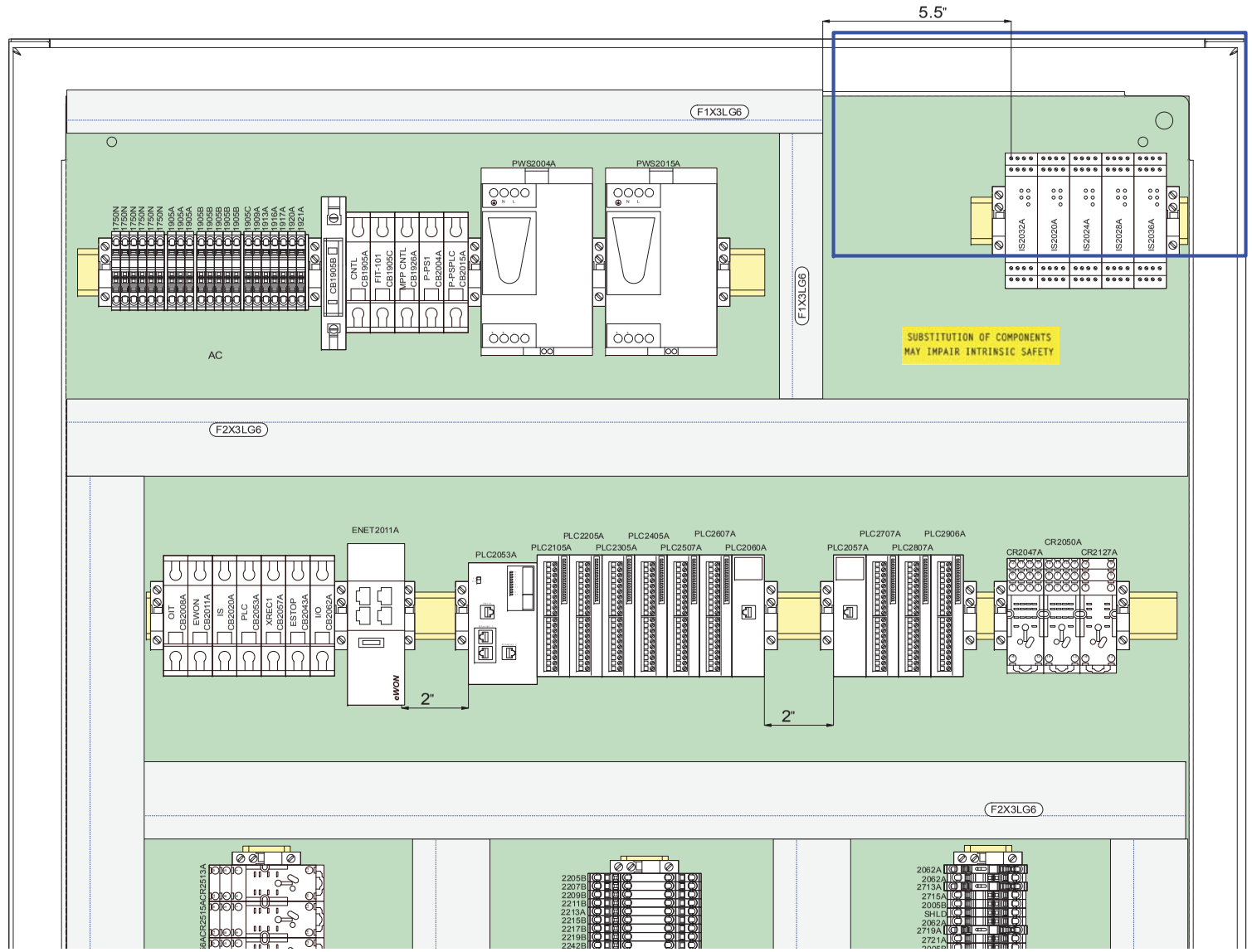

WIRE LEGEND

BLACK:	POWER
RED:	120VAC CONTROL
WHITE:	NEUTRAL
BLUE:	+24VDC & IS WIRING
BLU/WHT:	0VDC
YELLOW:	INTERLOCKS

NOTES:

newterra

1325 CALIFORNIA AVE.
BROCKVILLE, ONTARIO
CANADA K6V 5Y6
PHONE: (613)498-1876
www.newterra.com

LEVEL	REVISION	DATE (dd/mm/yy)	BY
C	AS BUILT	14/08/17	DMB
B	FOR PRODUCTION	31/05/17	DMB
A1	FOR REVIEW	23/05/17	DMB
A	FOR SUBMITTAL	12/05/17	DMB

PROJ. NO: 1704432

TITLE AND LOCATION: MCP PANEL LAYOUT TOP MCP

CUSTOMER: AGNICO EAGLE 600 MAN AMARUQ MINE

DRAWN BY:	DATE:	SHEET:	SHEETS:
DMB	08/05/17	32	71

1704432 - AGNICO EAGLE MINE - C

THIS INFORMATION IS THE PROPERTY OF newterra ltd.. AND CANNOT BE REUSED OR REPRODUCED WITHOUT THE WRITTEN CONSENT OF newterra ltd.

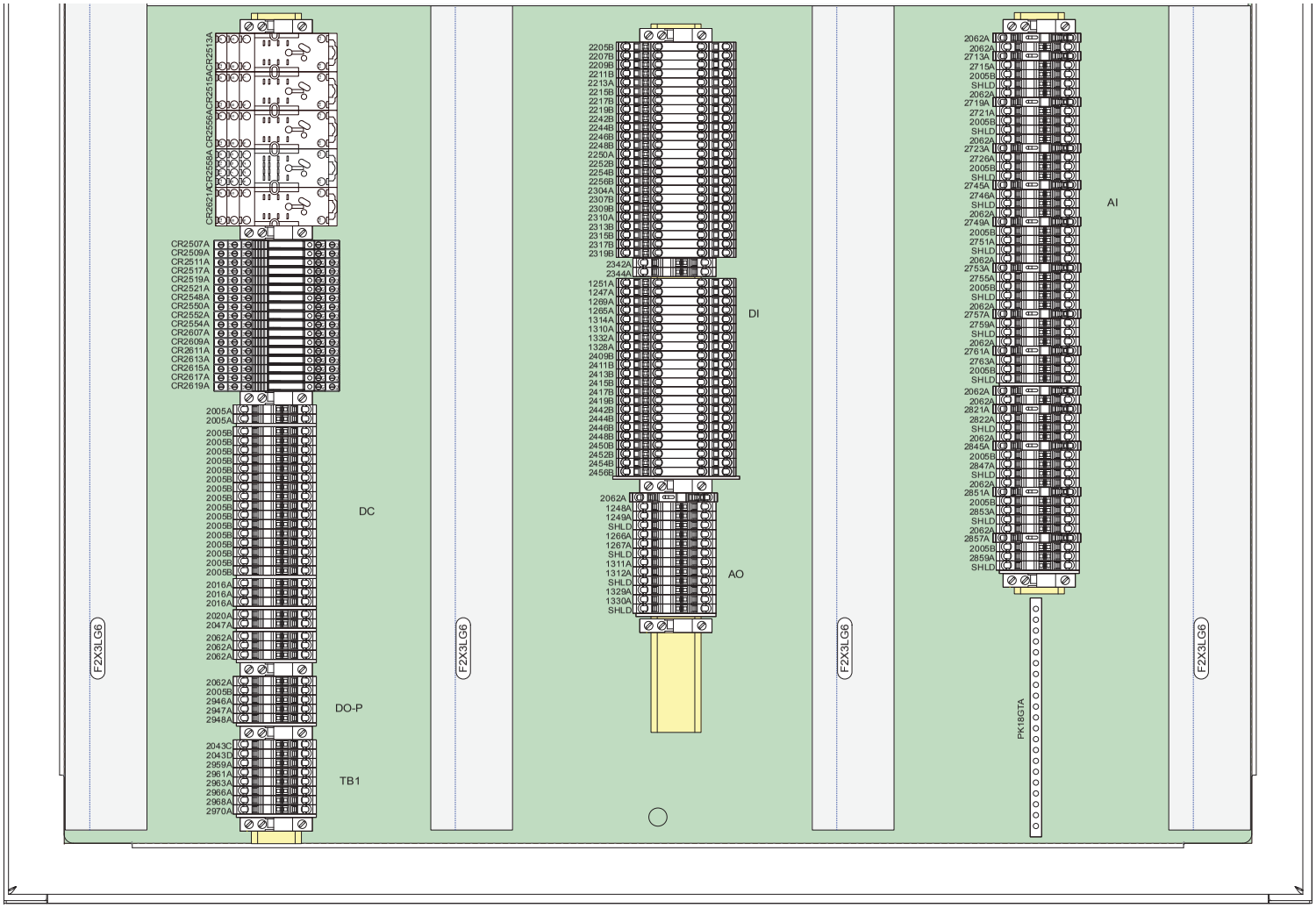

MCP

EN4SD483612GY

WIRE LEGEND

BLACK:	POWER
RED:	120VAC CONTROL
WHITE:	NEUTRAL
BLUE:	+24VDC & IS WIRING
BLU/WHT:	0VDC
YELLOW:	INTERLOCKS

NOTES:

newterra

1325 CALIFORNIA AVE.
BROCKVILLE, ONTARIO
CANADA K6V 5Y6
PHONE: (613)498-1876
www.newterra.com

LEVEL	REVISION	DATE (dd/mm/yy)	BY
C	AS BUILT	14/08/17	DMB
B	FOR PRODUCTION	31/05/17	DMB
A1	FOR REVIEW	23/05/17	DMB
A	FOR SUBMITTAL	12/05/17	DMB

PROJ. NO: 1704432

TITLE AND LOCATION: MCP PANEL LAYOUT BOTTOM MCP

CUSTOMER: AGNICO EAGLE 600 MAN AMARUQ MINE

DRAWN BY:	DATE:	SHEET:	SHEETS:
DMB	08/05/17	33	71

1704432 - AGNICO EAGLE MINE - C

THIS INFORMATION IS THE PROPERTY OF newterra ltd.. AND CANNOT BE REUSED OR REPRODUCED WITHOUT THE WRITTEN CONSENT OF newterra ltd.

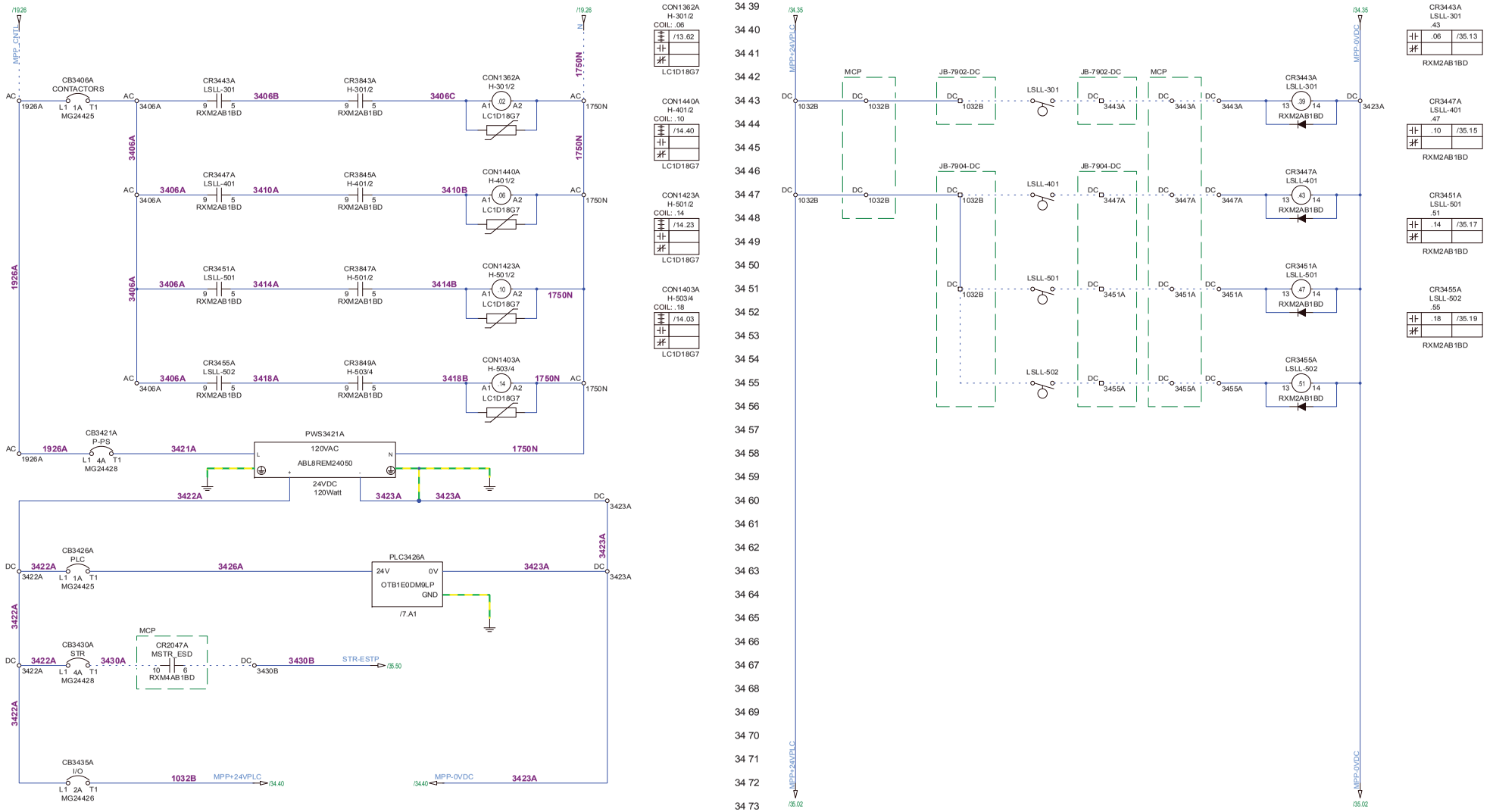

WIRE LEGEND

BLACK:	POWER
RED:	120VAC CONTROL
WHITE:	NEUTRAL
BLUE:	+24VDC & IS WIRING
BLU/WHT:	0VDC
YELLOW:	INTERLOCKS

NOTES:

1. FOLLOW CANADIAN COLOUR CODE FOR POWER WIRING (SEE SHEET 3 - LEGEND)
2. WIRE SIZE IS #12 AWG FOR POWER UNLESS OTHERWISE SPECIFIED

1325 CALIFORNIA AVE.
BROCKVILLE, ONTARIO
CANADA K6V 5Y6
PHONE: (613)498-1876
www.newterra.com

LEVEL	REVISION	DATE (dd/mm/yy)	BY
C	AS BUILT	14/08/17	DMB
B	FOR PRODUCTION	31/05/17	DMB
A1	FOR REVIEW	23/05/17	DMB
A	FOR SUBMITTAL	12/05/17	DMB

PROJ. NO: 1704432

TITLE AND LOCATION: MPP 120VAC & 24VDC CONTROL POWER MPP

CUSTOMER: AGNICO EAGLE 600 MAN AMARUQ MINE

DRAWN BY:	DATE:	SHEET:	SHEETS:
DMB	08/05/17	34	71

1704432 - AGNICO EAGLE MINE - C

THIS INFORMATION IS THE PROPERTY OF newterra ltd.. AND CANNOT BE REUSED OR REPRODUCED WITHOUT THE WRITTEN CONSENT OF newterra ltd.

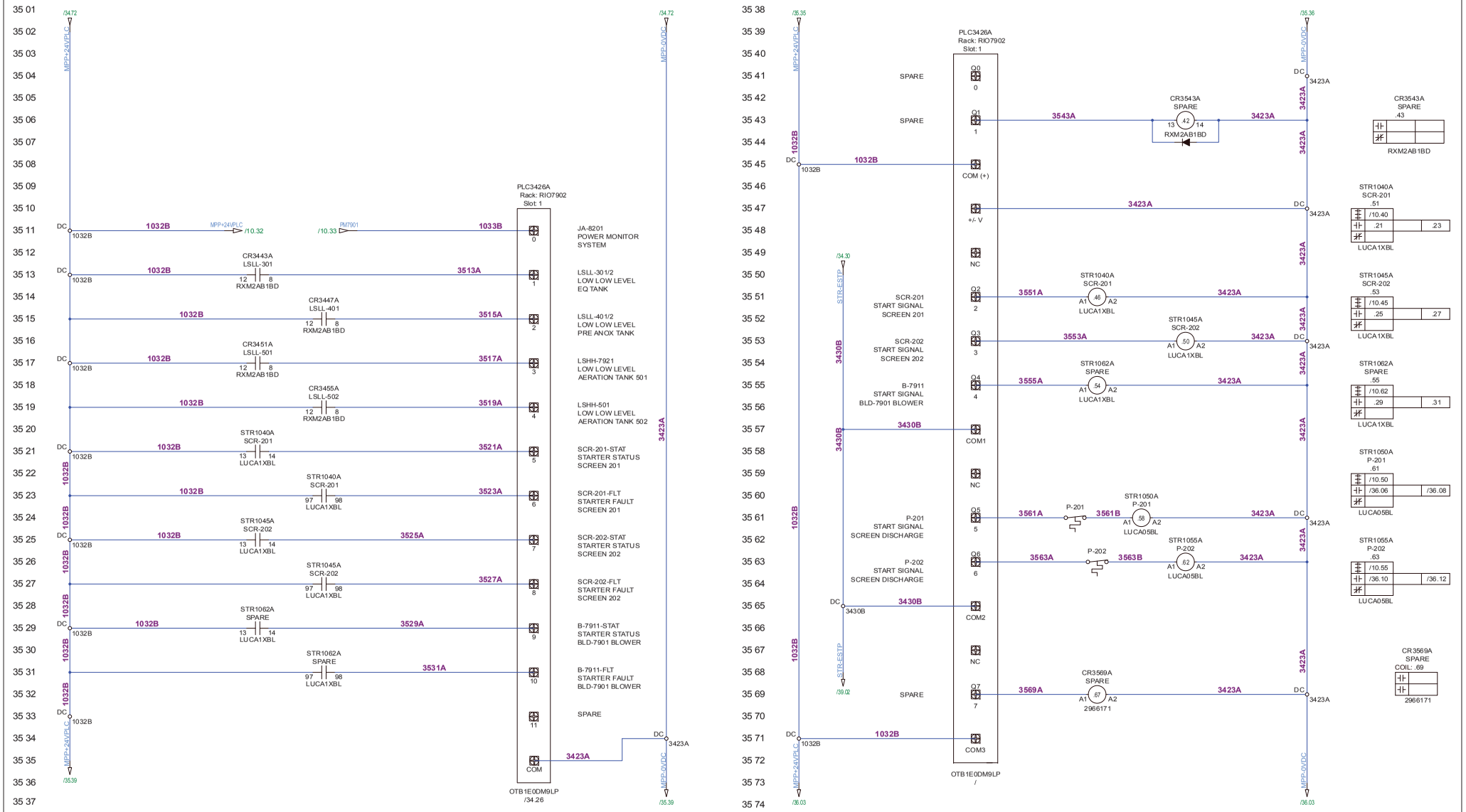

WIRE LEGEND

BLACK:	POWER
RED:	120VAC CONTROL
WHITE:	NEUTRAL
BLUE:	+24VDC & IS WIRING
BLU/WHT:	0VDC
YELLOW:	INTERLOCKS

NOTES:

1. FOLLOW CANADIAN COLOUR CODE FOR POWER WIRING (SEE SHEET 3 - LEGEND)
2. WIRE SIZE IS #12 AWG FOR POWER UNLESS OTHERWISE SPECIFIED

newterra

1325 CALIFORNIA AVE.
BROCKVILLE, ONTARIO
CANADA K6V 5Y6
PHONE: (613)498-1876
www.newterra.com

LEVEL	REVISION	DATE (dd/mm/yy)	BY
C	AS BUILT	14/08/17	DMB
B	FOR PRODUCTION	31/05/17	DMB
A1	FOR REVIEW	23/05/17	DMB
A	FOR SUBMITTAL	12/05/17	DMB

PROJ. NO: 1704432

TITLE AND LOCATION:
MPP OTB I/O
DISCRETE INPUTS/OUTPUTS
MPP

CUSTOMER:
AGNICO EAGLE
600 MAN AMARUQ MINE

DRAWN BY:	DATE:	SHEET:	SHEETS:
DMB	08/05/17	35	71

1704432 - AGNICO EAGLE MINE - C

THIS INFORMATION IS THE PROPERTY OF newterra ltd.. AND CANNOT BE REUSED OR REPRODUCED WITHOUT THE WRITTEN CONSENT OF newterra ltd.

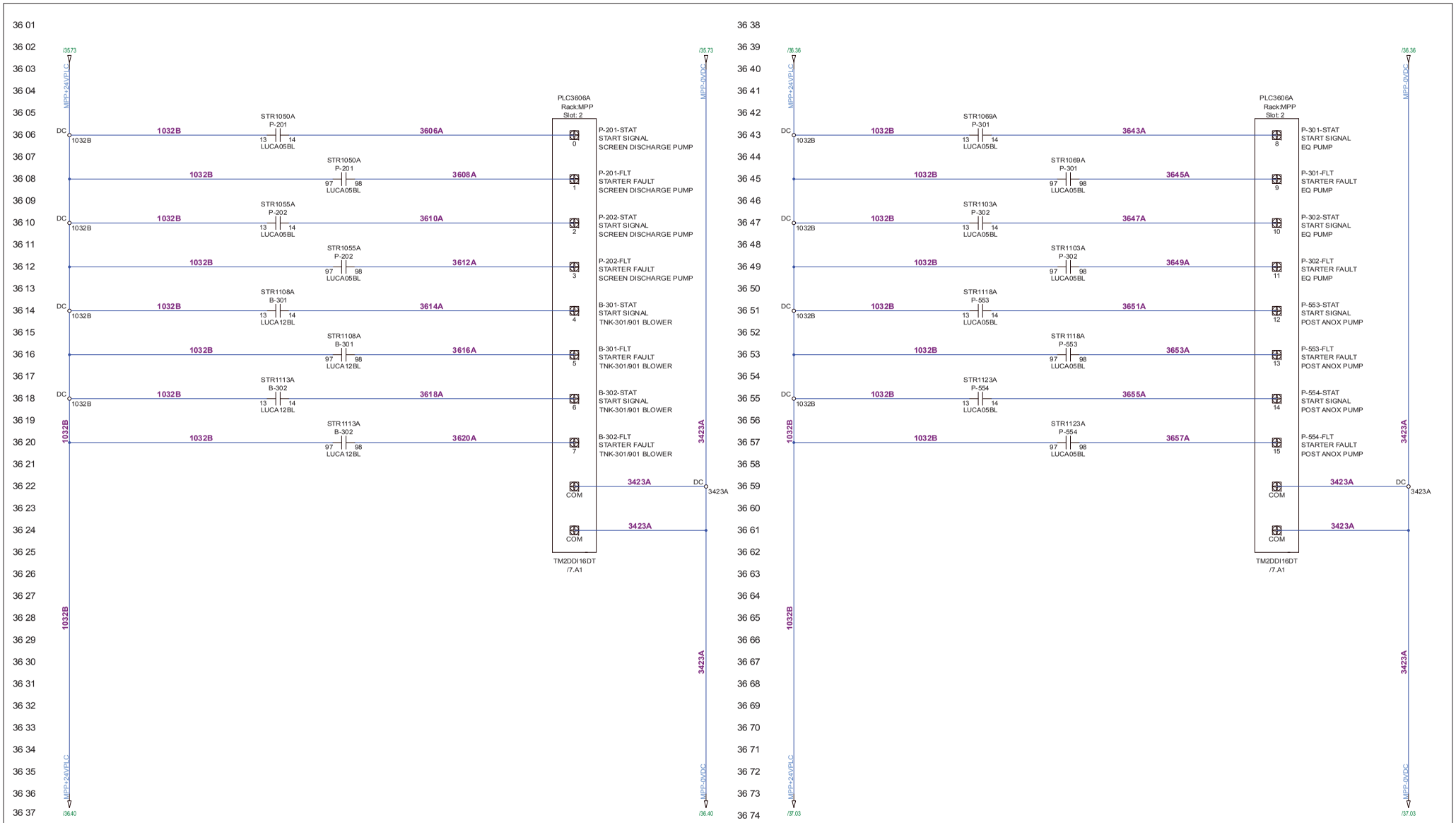
/3573
MPP+24VPLC
DC
1032B
STR1050A
P-201
13 14
LUCA05BL
3606A
PLC3606A
Rack:MPP
Slot: 2
0
P-201-STAT
START SIGNAL
SCREEN DISCHARGE PUMP
97 98
3608A
1
P-201-FLT
STARTER FAULT
SCREEN DISCHARGE PUMP
STR1055A
P-202
3610A
2
P-202-STAT
START SIGNAL
SCREEN DISCHARGE PUMP
3612A
3
P-202-FLT
STARTER FAULT
SCREEN DISCHARGE PUMP
STR1108A
B-301
LUCA12BL
3614A
4
B-301-STAT
START SIGNAL
TNK-301/901 BLOWER
3616A
5
B-301-FLT
STARTER FAULT
TNK-301/901 BLOWER
STR1113A
B-302
3618A
6
B-302-STAT
START SIGNAL
TNK-301/901 BLOWER
3620A
7
B-302-FLT
STARTER FAULT
TNK-301/901 BLOWER
3423A
COM
TM2DDI16DT
/7.A1
/3640
/3573
MPP-0VDC
/3640
/3573
/3640
/3573
/3640
/3573

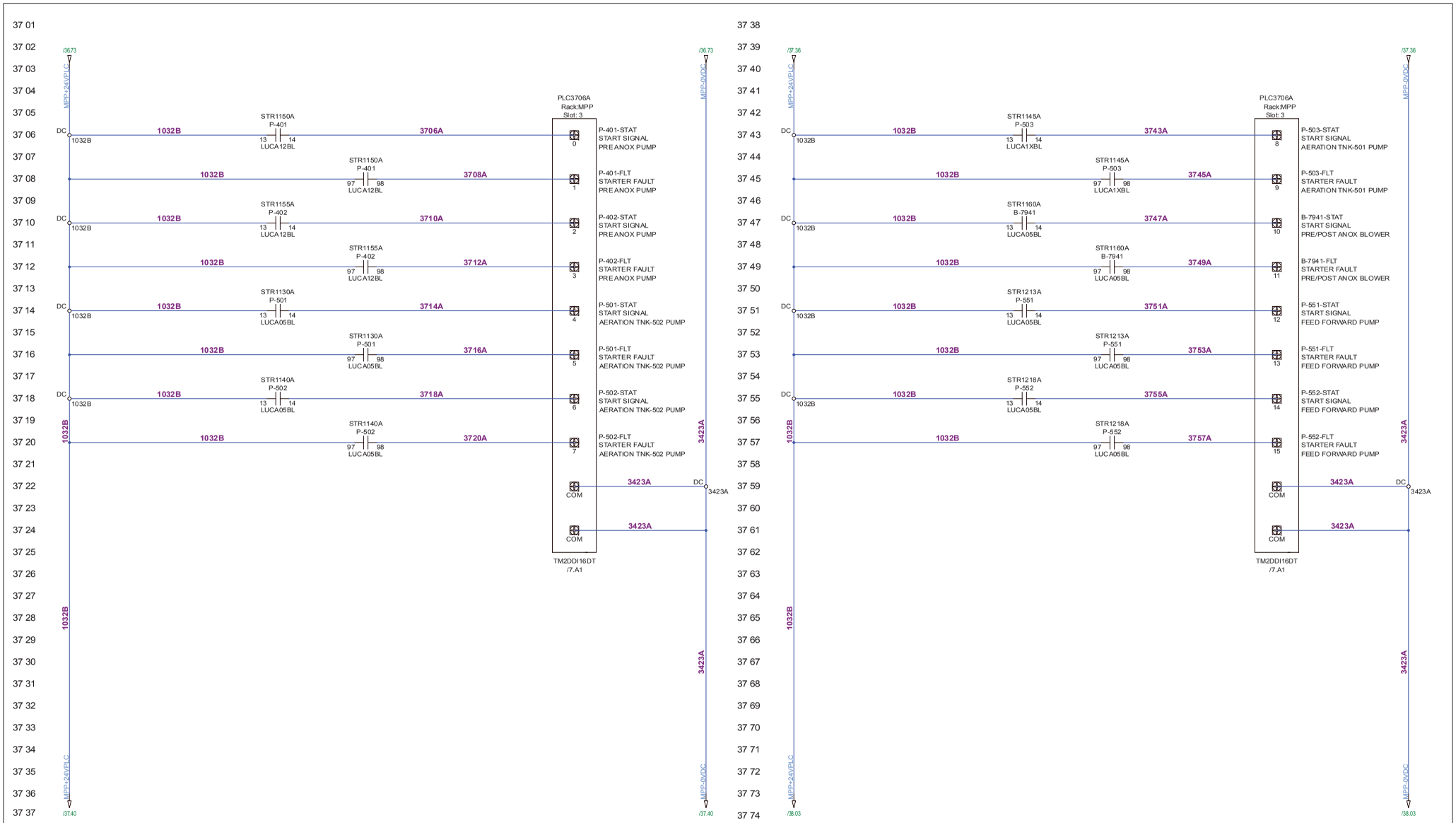

WIRE LEGEND

BLACK:	POWER
RED:	120VAC CONTROL
WHITE:	NEUTRAL
BLUE:	+24VDC & IS WIRING
BLU/WHT:	0VDC
YELLOW:	INTERLOCKS

NOTES:

1.

newterra

1325 CALIFORNIA AVE.
BROCKVILLE, ONTARIO
CANADA K6V 5Y6
PHONE: (613)498-1876
www.newterra.com

LEVEL	REVISION	DATE (dd/mm/yy)	BY
C	AS BUILT	14/08/17	DMB
B	FOR PRODUCTION	31/05/17	DMB
A1	FOR REVIEW	23/05/17	DMB
A	FOR SUBMITTAL	12/05/17	DMB

PROJ. NO: 1704432

TITLE AND LOCATION:
MPP DISCRETE INPUTS
SHEET 2 OF 2
MPP

CUSTOMER:
AGNICO EAGLE
600 MAN AMARUQ MINE

DRAWN BY:	DATE:	SHEET:	SHEETS:
DMB	29/05/17	37	71

1704432 - AGNICO EAGLE MINE - C

THIS INFORMATION IS THE PROPERTY OF newterra ltd.. AND CANNOT BE REUSED OR REPRODUCED WITHOUT THE WRITTEN CONSENT OF newterra ltd.

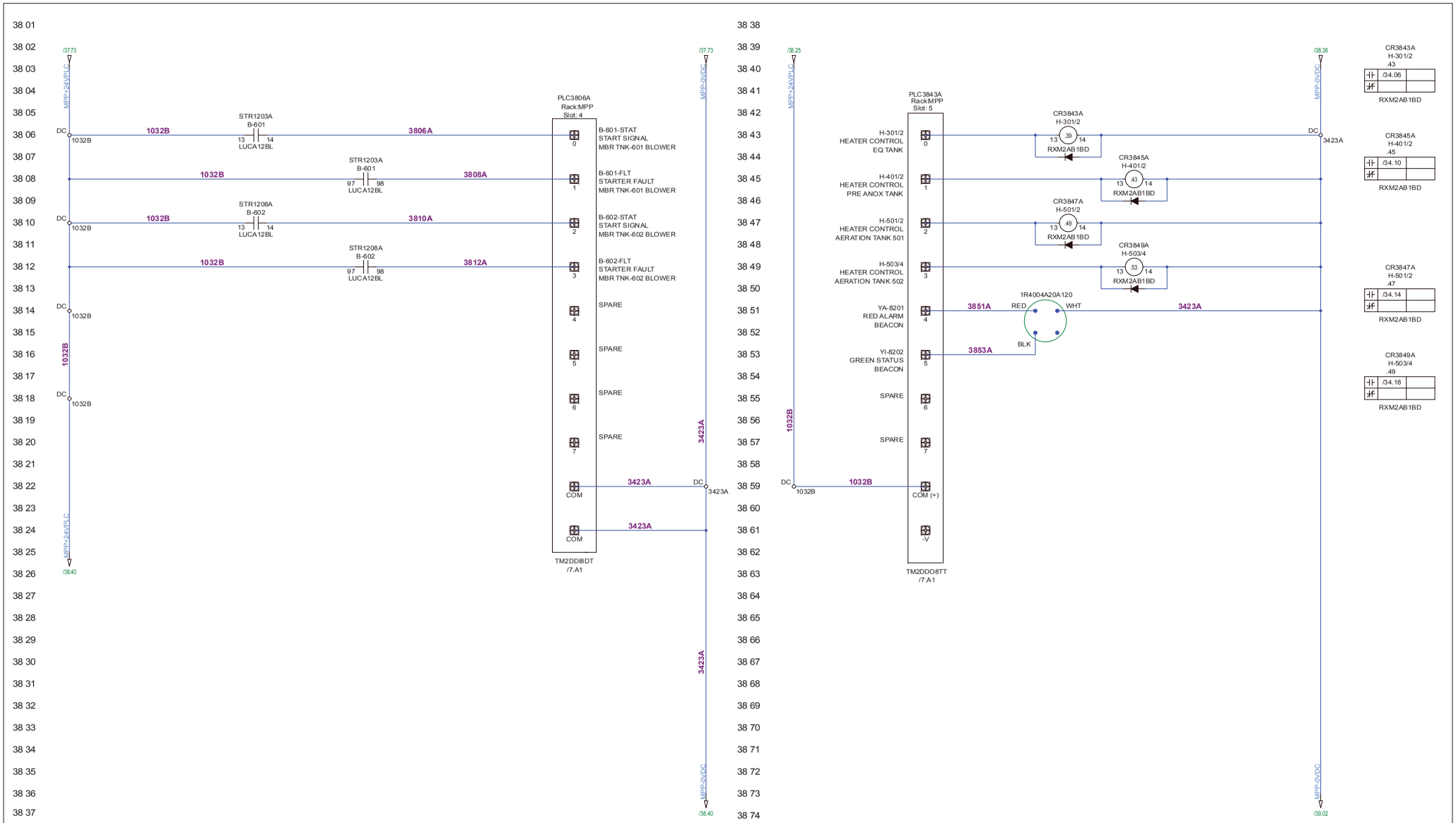

WIRE LEGEND

BLACK:	POWER
RED:	120VAC CONTROL
WHITE:	NEUTRAL
BLUE:	+24VDC & IS WIRING
BLU/WHT:	0VDC
YELLOW:	INTERLOCKS

NOTES:

1.

1325 CALIFORNIA AVE.
BROCKVILLE, ONTARIO
CANADA K6V 5Y6
PHONE: (613)498-1876
www.newterra.com

LEVEL	REVISION	DATE (dd/mm/yy)	BY
C	AS BUILT	14/08/17	DMB
B	FOR PRODUCTION	31/05/17	DMB
A1	FOR REVIEW	23/05/17	DMB
A	FOR SUBMITTAL	12/05/17	DMB

PROJ. NO: 1704432

TITLE AND LOCATION: MPP DISCRETE INPUTS & OUTPUTS MPP

CUSTOMER: AGNICO EAGLE 600 MAN AMARUQ MINE

DRAWN BY:	DATE:	SHEET:	SHEETS:
DMB	29/05/17	38	71

1704432 - AGNICO EAGLE MINE - C

THIS INFORMATION IS THE PROPERTY OF newterra ltd.. AND CANNOT BE REUSED OR REPRODUCED WITHOUT THE WRITTEN CONSENT OF newterra ltd.

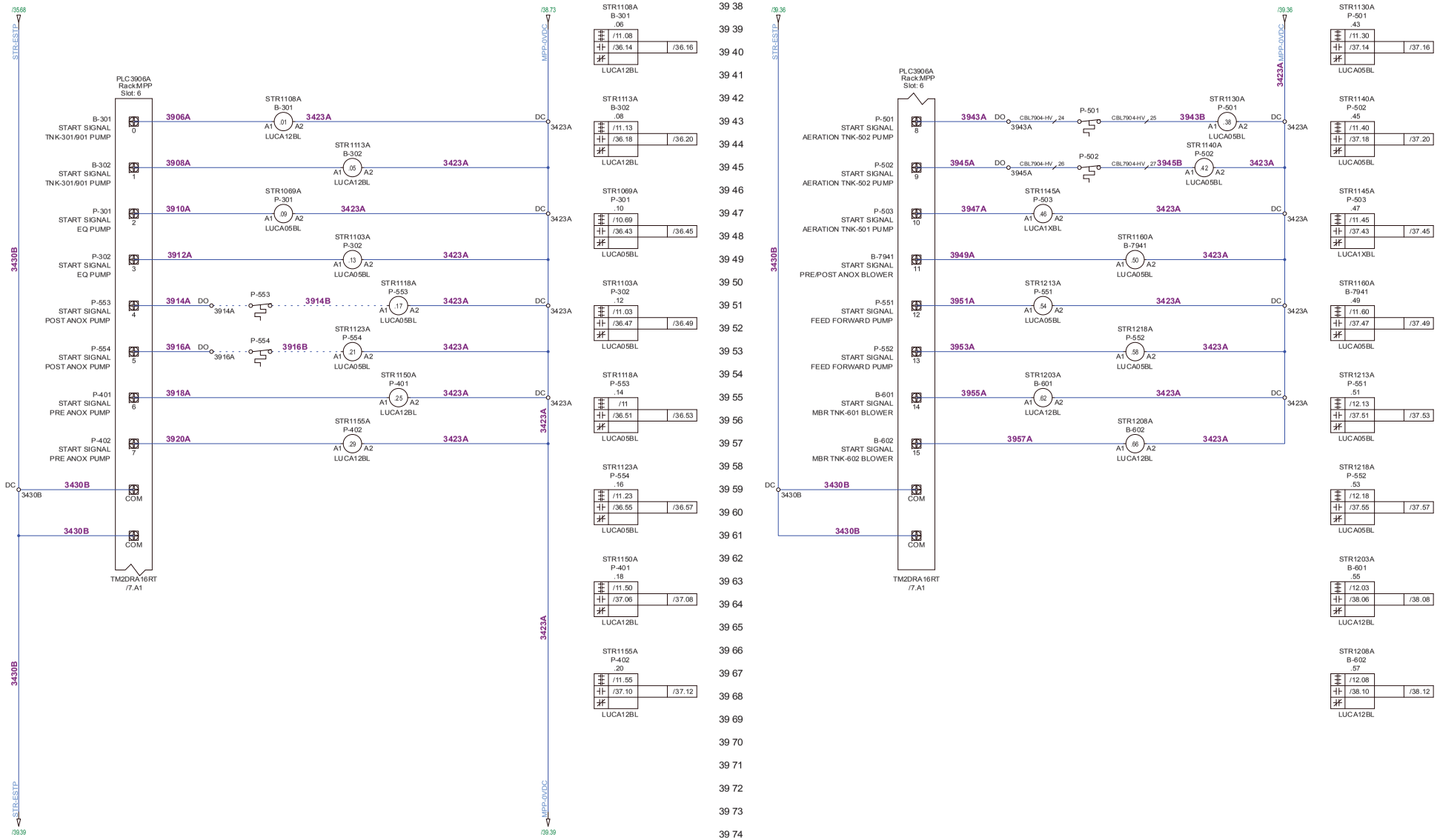

WIRE LEGEND

BLACK:	POWER
RED:	120VAC CONTROL
WHITE:	NEUTRAL
BLUE:	+24VDC & IS WIRING
BLU/WHT:	0VDC
YELLOW:	INTERLOCKS

NOTES:

1.

1325 CALIFORNIA AVE.
BROCKVILLE, ONTARIO
CANADA K6V 5Y6
PHONE: (613)498-1876
www.newterra.com

LEVEL	REVISION	DATE (dd/mm/yy)	BY
C	AS BUILT	14/08/17	DMB
B	FOR PRODUCTION	31/05/17	DMB
A1	FOR REVIEW	23/05/17	DMB
A	FOR SUBMITTAL	12/05/17	DMB

PROJ. NO: 1704432

TITLE AND LOCATION: MPP RELAY OUTPUTS

MPP

CUSTOMER: AGNICO EAGLE 600 MAN AMARUQ MINE

DRAWN BY:	DATE:	SHEET:	SHEETS:
DMB	08/05/17	39	71

1704432 - AGNICO EAGLE MINE - C

THIS INFORMATION IS THE PROPERTY OF newterra ltd.. AND CANNOT BE REUSED OR REPRODUCED WITHOUT THE WRITTEN CONSENT OF newterra ltd.

40 01
40 02
40 03
40 04
40 05
40 06
40 07
40 08
40 09
40 10
40 11
40 12
40 13
40 14
40 15
40 16
40 17
40 18
40 19
40 20
40 21
40 22
40 23
40 24
40 25
40 26
40 27
40 28
40 29
40 30
40 31
40 32
40 33
40 34
40 35
40 36
40 37

INTENTIONALLY BLANK

40 38
40 39
40 40
40 41
40 42
40 43
40 44
40 45
40 46
40 47
40 48
40 49
40 50
40 51
40 52
40 53
40 54
40 55
40 56
40 57
40 58
40 59
40 60
40 61
40 62
40 63
40 64
40 65
40 66
40 67
40 68
40 69
40 70
40 71
40 72
40 73
40 74

INTENTIONALLY BLANK

WIRE LEGEND

BLACK:	POWER
RED:	120VAC CONTROL
WHITE:	NEUTRAL
BLUE:	+24VDC & IS WIRING
BLU/WHT:	0VDC
YELLOW:	INTERLOCKS

NOTES:

1. FOLLOW CANADIAN COLOUR CODE FOR POWER WIRING (SEE SHEET 3 - LEGEND)
2. WIRE SIZE IS #12 AWG FOR POWER UNLESS OTHERWISE SPECIFIED

newterra

1325 CALIFORNIA AVE.
BROCKVILLE, ONTARIO
CANADA K6V 5Y6
PHONE: (613)498-1876
www.newterra.com

LEVEL	REVISION	DATE (dd/mm/yy)	BY
C	AS BUILT	14/08/17	DMB
B	FOR PRODUCTION	31/05/17	DMB
A1	FOR REVIEW	23/05/17	DMB
A	FOR SUBMITTAL	12/05/17	DMB

PROJ. NO: 1704432

TITLE AND LOCATION: MPP SPARE SHEET

MPP

CUSTOMER: AGNICO EAGLE 600 MAN AMARUQ MINE

DRAWN BY:	DATE:	SHEET:	SHEETS:
DMB	08/05/17	40	71

1704432 - AGNICO EAGLE MINE - C

THIS INFORMATION IS THE PROPERTY OF newterra ltd.. AND CANNOT BE REUSED OR REPRODUCED WITHOUT THE WRITTEN CONSENT OF newterra ltd.



PANEL OUTER DOOR

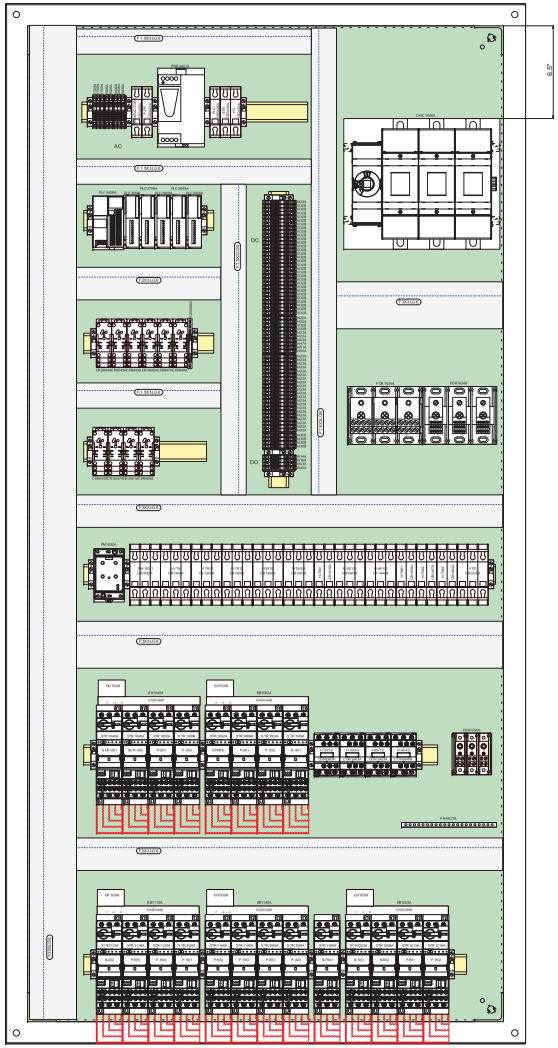

MPP
EN4SD723612GY
PANEL INTERIOR

WIRE LEGEND

BLACK:	POWER
RED:	120VAC CONTROL
WHITE:	NEUTRAL
BLUE:	+24VDC & IS WIRING
BLU/WHT:	0VDC
YELLOW:	INTERLOCKS

NOTES:

newterra

1325 CALIFORNIA AVE.
BROCKVILLE, ONTARIO
CANADA K6V 5Y6
PHONE: (613)498-1876

www.newterra.com

LEVEL	REVISION	DATE (dd/mm/yy)	BY
C	AS BUILT	14/08/17	DMB
B	FOR PRODUCTION	31/05/17	DMB
A1	FOR REVIEW	23/05/17	DMB
A	FOR SUBMITTAL	12/05/17	DMB

PROJ. NO: 1704432

TITLE AND LOCATION: MPP PANEL LAYOUT

MPP

CUSTOMER: AGNICO EAGLE 600 MAN AMARUQ MINE

DRAWN BY:	DATE:	SHEET:	SHEETS:
DMB	08/05/17	41	71

1704432 - AGNICO EAGLE MINE - C

THIS INFORMATION IS THE PROPERTY OF newterra ltd.. AND CANNOT BE REUSED OR REPRODUCED WITHOUT THE WRITTEN CONSENT OF newterra ltd.

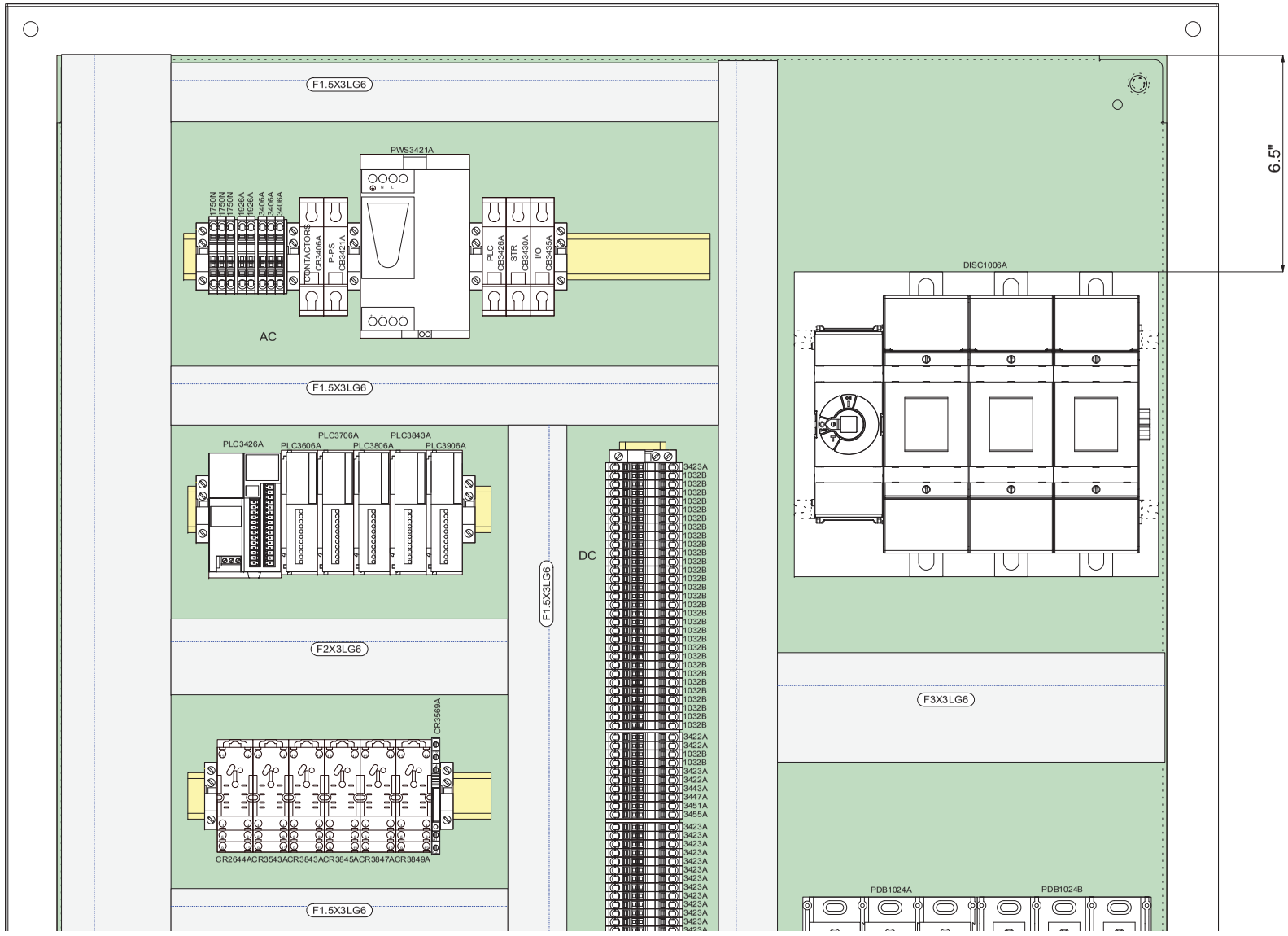

WIRE LEGEND

BLACK:	POWER
RED:	120VAC CONTROL
WHITE:	NEUTRAL
BLUE:	+24VDC & IS WIRING
BLU/WHT:	0VDC
YELLOW:	INTERLOCKS

NOTES:

1.

newterra

1325 CALIFORNIA AVE.
BROCKVILLE, ONTARIO
CANADA K6V 5Y6
PHONE: (613)498-1876
www.newterra.com

LEVEL	REVISION	DATE (dd/mm/yy)	BY
C	AS BUILT	14/08/17	DMB
B	FOR PRODUCTION	31/05/17	DMB
A1	FOR REVIEW	23/05/17	DMB
A	FOR SUBMITTAL	12/05/17	DMB

PROJ. NO: 1704432

TITLE AND LOCATION:
MPP PANEL LAYOUT
TOP
MPP

CUSTOMER:
AGNICO EAGLE
600 MAN AMARUQ MINE

DRAWN BY:	DATE:	SHEET:	SHEETS:
DMB	08/05/17	42	71

1704432 - AGNICO EAGLE MINE - C

THIS INFORMATION IS THE PROPERTY OF newterra ltd.. AND CANNOT BE REUSED OR REPRODUCED WITHOUT THE WRITTEN CONSENT OF newterra ltd.

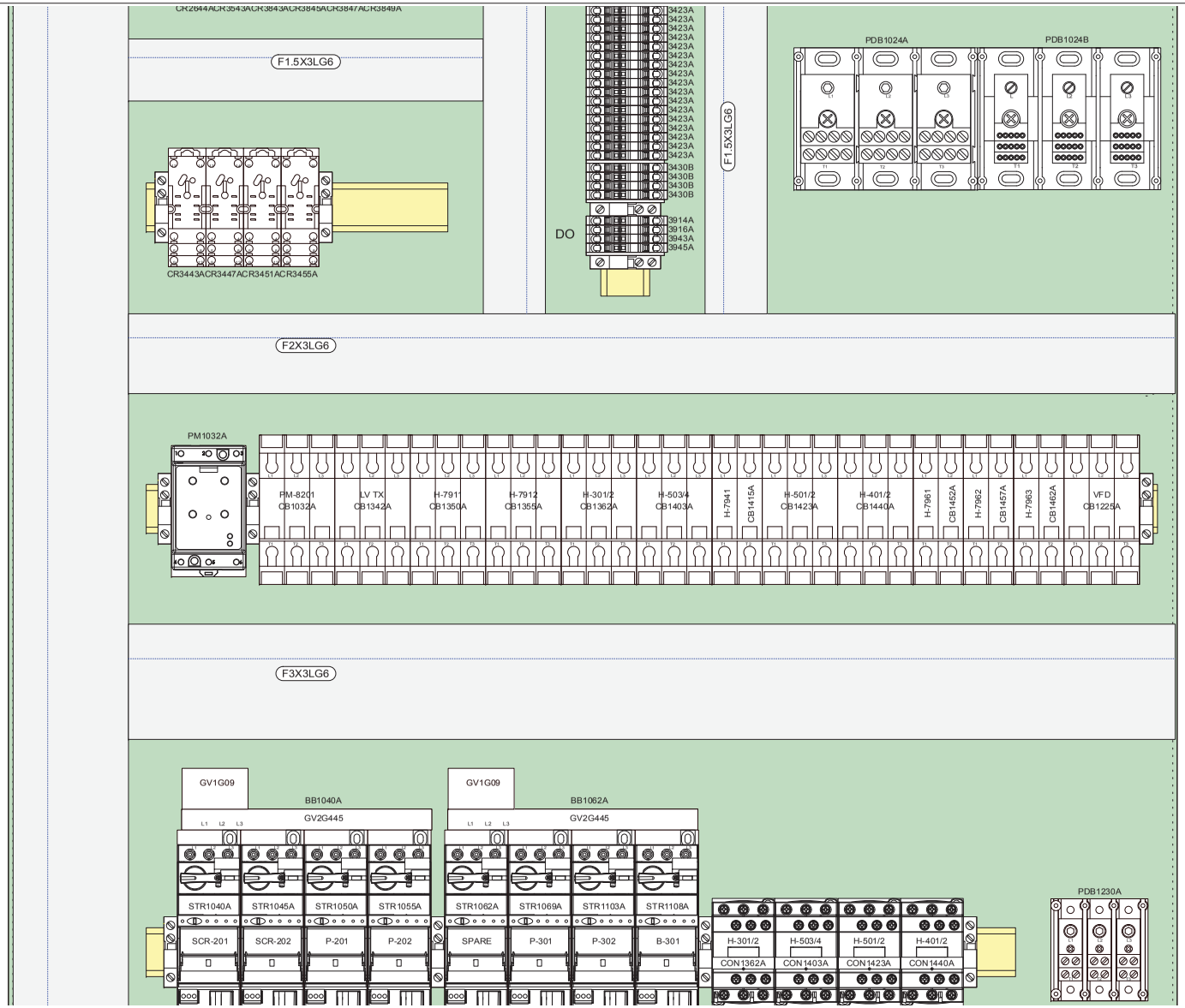

WIRE LEGEND

BLACK:	POWER
RED:	120VAC CONTROL
WHITE:	NEUTRAL
BLUE:	+24VDC & IS WIRING
BLU/WHT:	0VDC
YELLOW:	INTERLOCKS

NOTES:

1.

newterra

1325 CALIFORNIA AVE.
BROCKVILLE, ONTARIO
CANADA K6V 5Y6
PHONE: (613)498-1876
www.newterra.com

LEVEL	REVISION	DATE (dd/mm/yy)	BY
C	AS BUILT	14/08/17	DMB
B	FOR PRODUCTION	31/05/17	DMB
A1	FOR REVIEW	23/05/17	DMB
A	FOR SUBMITTAL	12/05/17	DMB

PROJ. NO: 1704432

TITLE AND LOCATION: MPP PANEL LAYOUT MIDDLE MPP

CUSTOMER: AGNICO EAGLE 600 MAN AMARUQ MINE

DRAWN BY:	DATE:	SHEET:	SHEETS:
DMB	08/05/17	43	71

1704432 - AGNICO EAGLE MINE - C

THIS INFORMATION IS THE PROPERTY OF newterra ltd.. AND CANNOT BE REUSED OR REPRODUCED WITHOUT THE WRITTEN CONSENT OF newterra ltd.



MPP
EN4SD723612GY
PANEL INTERIOR

WIRE LEGEND

BLACK:	POWER
RED:	120VAC CONTROL
WHITE:	NEUTRAL
BLUE:	+24VDC & IS WIRING
BLU/WHT:	0VDC
YELLOW:	INTERLOCKS

NOTES:

1325 CALIFORNIA AVE.
BROCKVILLE, ONTARIO
CANADA K6V 5Y6
PHONE: (613)498-1876
www.newterra.com

LEVEL	REVISION	DATE (dd/mm/yy)	BY
C	AS BUILT	14/08/17	DMB
B	FOR PRODUCTION	31/05/17	DMB
A1	FOR REVIEW	23/05/17	DMB
A	FOR SUBMITTAL	12/05/17	DMB

PROJ. NO: 1704432

TITLE AND LOCATION: MPP PANEL LAYOUT BOTTOM MPP

CUSTOMER: AGNICO EAGLE 600 MAN AMARUQ MINE

DRAWN BY:	DATE:	SHEET:	SHEETS:
DMB	08/05/17	44	71

1704432 - AGNICO EAGLE MINE - C

THIS INFORMATION IS THE PROPERTY OF newterra ltd.. AND CANNOT BE REUSED OR REPRODUCED WITHOUT THE WRITTEN CONSENT OF newterra ltd.

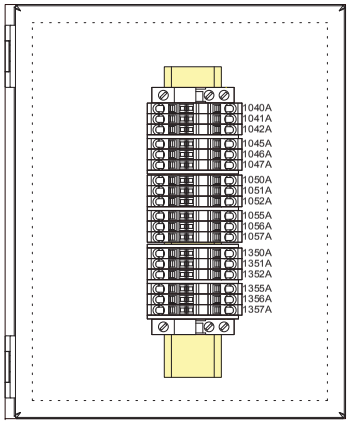

JB-7901-HV
EJ1084

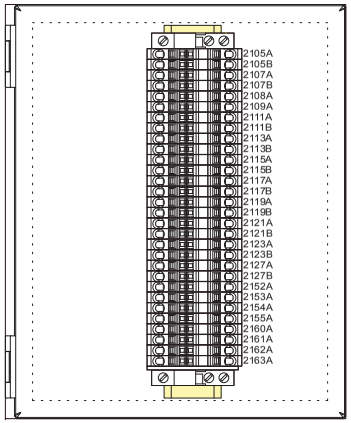

JB-7901-IS
EJ1084

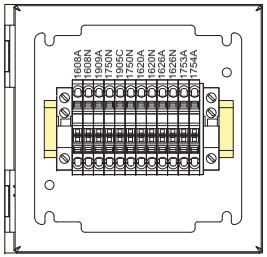

JB-7901-AC
EJ664

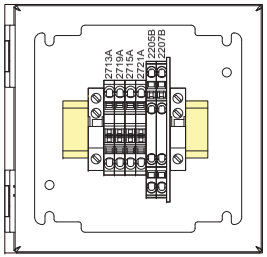

JB-7901-DC
EJ664

WIRE LEGEND

BLACK:	POWER
RED:	120VAC CONTROL
WHITE:	NEUTRAL
BLUE:	+24VDC & IS WIRING
BLU/WHT:	0VDC
YELLOW:	INTERLOCKS

NOTES:

1.

1325 CALIFORNIA AVE.
BROCKVILLE, ONTARIO
CANADA K6V 5Y6
PHONE: (613)498-1876
www.newterra.com

LEVEL	REVISION	DATE (dd/mm/yy)	BY
C	AS BUILT	14/08/17	DMB
B	FOR PRODUCTION	31/05/17	DMB
A1	FOR REVIEW	23/05/17	DMB
A	FOR SUBMITTAL	12/05/17	DMB

PROJ. NO: 1704432

TITLE AND LOCATION: JUNCTION BOX LAYOUTS JB-7901'S

CUSTOMER: AGNICO EAGLE 600 MAN AMARUQ MINE

DRAWN BY:	DATE:	SHEET:	SHEETS:
DMB	30/05/17	45	71

1704432 - AGNICO EAGLE MINE - C

THIS INFORMATION IS THE PROPERTY OF newterra ltd.. AND CANNOT BE REUSED OR REPRODUCED WITHOUT THE WRITTEN CONSENT OF newterra ltd.

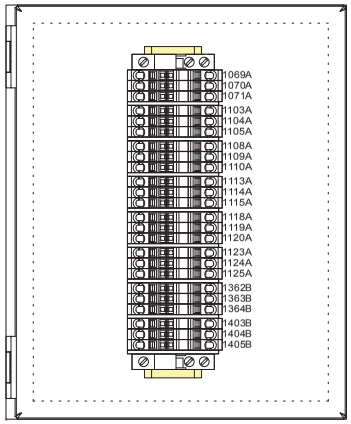

JB-7902-HV
EJ1084

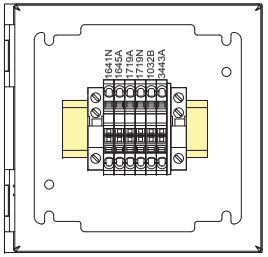

JB-7902-AC
EJ664

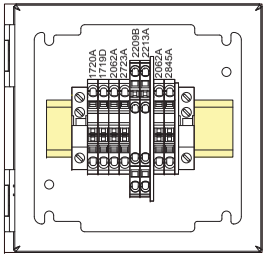

JB-7902-DC
EJ664

WIRE LEGEND

BLACK:	POWER
RED:	120VAC CONTROL
WHITE:	NEUTRAL
BLUE:	+24VDC & IS WIRING
BLU/WHT:	0VDC
YELLOW:	INTERLOCKS

NOTES:

1.

1325 CALIFORNIA AVE.
BROCKVILLE, ONTARIO
CANADA K6V 5Y6
PHONE: (613)498-1876
www.newterra.com

LEVEL	REVISION	DATE (dd/mm/yy)	BY
C	AS BUILT	14/08/17	DMB
B	FOR PRODUCTION	31/05/17	DMB
A1	FOR REVIEW	23/05/17	DMB
A	FOR SUBMITTAL	12/05/17	DMB

PROJ. NO: 1704432

TITLE AND LOCATION: JUNCTION BOX LAYOUTS JB-7902'S

CUSTOMER: AGNICO EAGLE 600 MAN AMARUQ MINE

DRAWN BY:	DATE:	SHEET:	SHEETS:
DMB	30/05/17	46	71

1704432 - AGNICO EAGLE MINE - C

THIS INFORMATION IS THE PROPERTY OF newterra ltd.. AND CANNOT BE REUSED OR REPRODUCED WITHOUT THE WRITTEN CONSENT OF newterra ltd.

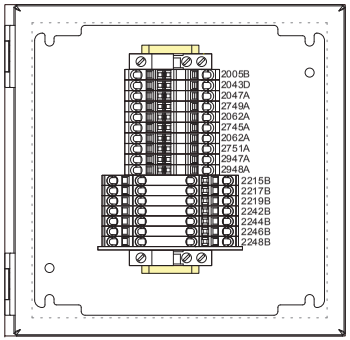

JB-7904-DC
EJ884

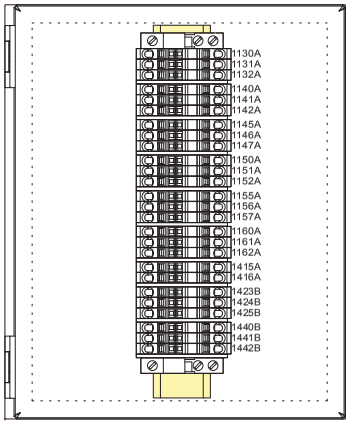

JB-7904-HV
EJ1084

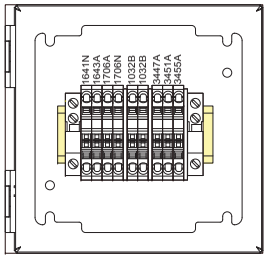

JB-7904-AC
EJ664

WIRE LEGEND

BLACK:	POWER
RED:	120VAC CONTROL
WHITE:	NEUTRAL
BLUE:	+24VDC & IS WIRING
BLU/WHT:	0VDC
YELLOW:	INTERLOCKS

NOTES:

1.

1325 CALIFORNIA AVE.
BROCKVILLE, ONTARIO
CANADA K6V 5Y6
PHONE: (613)498-1876
www.newterra.com

LEVEL	REVISION	DATE (dd/mm/yy)	BY
C	AS BUILT	14/08/17	DMB
B	FOR PRODUCTION	31/05/17	DMB
A1	FOR REVIEW	23/05/17	DMB
A	FOR SUBMITTAL	12/05/17	DMB

PROJ. NO: 1704432

TITLE AND LOCATION: JUNCTION BOX LAYOUTS JB-7904'S

CUSTOMER: AGNICO EAGLE 600 MAN AMARUQ MINE

DRAWN BY:	DATE:	SHEET:	SHEETS:
DMB	30/05/17	47	71

1704432 - AGNICO EAGLE MINE - C

THIS INFORMATION IS THE PROPERTY OF newterra ltd.. AND CANNOT BE REUSED OR REPRODUCED WITHOUT THE WRITTEN CONSENT OF newterra ltd.

MPP - Bill of Materials

Qty	APES#	Part Number	Description	Manufacturer	Device Designation(s)
1	37557	2QPL	Pad Lockable Qurater Turn Latch	Hammond	MPP
1	18396	460	190-480V, 3PH Power/Phase Monitor	Symcom	PM1032A
25	23745	800886	End Bracket - DIN Rail	Phoenix Contact	TB1, TB5, TB13, TB14, TB15, TB17, TB19, TB20, TB21, TB22, TB23, TB24,
					TB25, TB26, TB27, TB28, TB31, TB34, TB38, TB39, TB40, TB41, TB42, TB43,
					TB44
8	19168	0801733	Steel mounting rail; 35x7,5 mm, 1 mm thick; perforated	Phoenix Contact	TS1, TS5, TS6, TS7, TS8, TS9, TS10, TS11
1	23751	2966171	Relay, SPDT, 24VDC Coil	Phoenix Contact	CR3569A
7	23742	3030420	End Plate - 30A Feed Thru	Phoenix Contact	TB16, TB30, TB32, TB33, TB35, TB36, TB37
69	23738	3031377	Terminal, Blue, 28-12AWG, 30A, 600V	Phoenix Contact	AC(3), DC(66)
5	23740	3037151	Terminal, Red, 28-12AWG, 30A, 600V	Phoenix Contact	AC(5)
1	35707	ABL8REM24050	24VDC Power Supply, 120W, 5A	Schneider Electric	PWS3421A
3	12404	AJT250	Fuse,GLD AJT250250A 600V Time Delay, Class J	Ferraz Shawmut	DISC1006A(3)
1	24694	Arc Flash	Panel Label - Arc Flash Tri-lingual	Panel	8.11D
5	27397	C1.5LG6	Wire Duct Cover, 1.5", Grey	Panduit	WD8, WD9, WD10, WD12, WD16
3	27399	C2LG6	Wire Duct Cover, 2", Grey	Panduit	WD7, WD13, WD15
3	27405	C3LG6	Wire Duct Cover, 3", Grey	Panduit	WD1, WD4, WD11
1	38090	EN4SD723612GY	72" x 36" x 12" NEMA4 Steel Enclosure	Hammond	MPP
1	38041	EP7236	72" x 36" Backplate	Hammond	MPP
1	37558	EZPMFHD	Mounting Feet, Zinc, Set of 4	Hammond	MPP
5	27396	F1.5X3LG6	Wire Duct, 1.5"x3", Grey, Narrow Finger	Panduit	WD8, WD9, WD10, WD12, WD16
3	27398	F2X3LG6	Wire Duct, 2"x3", Grey, Narrow Finger	Panduit	WD7, WD13, WD15
3	27404	F3X3LG6	Wire Duct, 3"x3", Grey, Narrow Finger	Panduit	WD1, WD4, WD11
1	27929	GS1AW503	Terminal Lug, 2@#2AWG-600MCM, for use in 400A,600A,800A	Schneider Electric	DISC1006A
1	27712	GS2AE2	Shaft for Rotary Thru Door Handle	Schneider Electric	DISC1905
1	27713	GS2AH140	Through Door Rotary Handle	Schneider Electric	DISC1905
1	27928	GS2AP53	Terminal Shroud Kit 400A	Schneider Electric	DISC1006A
1	27927	GS2QU3N	Internal Fusible switch, 400A, Class J	Schneider Electric	DISC1006A
6	17158	GV1G09	Combination Starter, Busbar Top Mount	Schneider Electric	BB1040A, BB1062A, BB1113A, BB1140A, BB1203A, STR1160A
5	22546	GV2G445	Busbar 4 TeSysU Starters, #6AWG 63A MAX	Schneider Electric	BB1040A, BB1062A, BB1113A, BB1140A, BB1203A
4	10254	LC1D18G7	Contactor (TeSys D) Non-Reversing, 18A(AC3) 125A(AC1), 3-Pole (3 NO)	Schneider Electric	CON1362A, CON1403A, CON1423A, CON1440A
15	37367	LU9BN11C	TeSysU Prewired Coil Connection, Front Connection	Schneider Electric	STR1040A, STR1045A, STR1050A, STR1055A, STR1069A, STR1103A, STR1108A,
					STR1113A, STR1118A, STR1123A, STR1130A, STR1140A, STR1145A, STR1203A,
					STR1208A

NOTES:

1325 CALIFORNIA AVE.
BROCKVILLE, ONTARIO
CANADA K6V 5Y6
PHONE: (613)498-1876
www.newterra.com

LEVEL	REVISION	DATE (dd/mm/yy)	BY
C	AS BUILT	14/08/17	DMB
B	FOR PRODUCTION	31/05/17	DMB
A1	FOR REVIEW	23/05/17	DMB
A	FOR SUBMITTAL	12/05/17	DMB

PROJ. NO: 1704432

TITLE AND LOCATION:
MPP BILL OF MATERIAL
MODULE 8201 - SHEET 1 OF 2

CUSTOMER:
AGNICO EAGLE
600 MAN AMARUQ MINE

DRAWN BY:	DATE:	SHEET:	SHEETS:
DMB	31/05/17	48	71

1704432 - AGNICO EAGLE MINE - C

THIS INFORMATION IS THE PROPERTY OF newterra ltd.. AND CANNOT BE REUSED OR REPRODUCED WITHOUT THE WRITTEN CONSENT OF newterra ltd.

MPP - Bill of Materials

Qty	APES#	Part Number	Description	Manufacturer	Device Designation(s)
21	19269	LUA1C20	Combination Starter, 1NO Ready, 1NO Fault Aux. Contact Module	Schneider Electric	STR1040A, STR1045A, STR1050A, STR1055A, STR1062A, STR1069A, STR1103A,
					STR1108A, STR1113A, STR1118A, STR1123A, STR1130A, STR1140A, STR1145A,
					STR1150A, STR1155A, STR1160A, STR1203A, STR1208A, STR1213A, STR1218A
21	19264	LUB12	Combination Starter, 12A Power Base, 3/7.5/10HP	Schneider Electric	STR1040A, STR1045A, STR1050A, STR1055A, STR1062A, STR1069A, STR1103A,
					STR1108A, STR1113A, STR1118A, STR1123A, STR1130A, STR1140A, STR1145A,
					STR1150A, STR1155A, STR1160A, STR1203A, STR1208A, STR1213A, STR1218A
4	19503	LUCA1XBL	Combination Starter, TeSysU Standard Control Unit 0.35-1.4A, 24VDC coil	Schneider Electric	STR1040A, STR1045A, STR1062A, STR1145A
11	21191	LUCA05BL	Combination Starter, TeSysU Standard Control Unit 1.25-5.0A, 24V/60mA DC coil	Schneider Electric	STR1050A, STR1055A, STR1069A, STR1103A, STR1108A, STR1113A, STR1130A,
					STR1140A, STR1160A, STR1213A, STR1218A
6	22706	LUCA12BL	Combination Starter, TeSysU Standard Control Unit 3-12A, 24V/60mA DC coil	Schneider Electric	STR1118A, STR1123A, STR1150A, STR1155A, STR1203A, STR1208A
4	38092	M9F42215	Breaker, Multi9, 480/277V 15 AMP 2P C Trip Curve, 10k SCCR	Schneider Electric	CB1415A, CB1452A, CB1457A, CB1462A
2	38069	M9F42315	Breaker, Multi9 480/277V 15 AMP 3P C Trip Curve, 10k SCCR	Schneider Electric	CB1032A, CB1342A
5	38070	M9F42320	Breaker, Multi9 480/277V 20 AMP 3P C Trip Curve, 10k SCCR	Schneider Electric	CB1350A, CB1362A, CB1403A, CB1423A, CB1440A
1	38071	M9F42330	Breaker, Multi9 480/277V 30 AMP 3P C Trip Curve, 10k SCCR	Schneider Electric	CB1355A
2	38136	MG24425	Breaker, 240V 1 AMP 1P C	Schneider Electric	CB3406A, CB3426A
1	38137	MG24426	Breaker, 240V 2 AMP 1P C	Schneider Electric	CB3435A
1	38138	MG24427	Breaker, 240V 3 AMP 1P C	Schneider Electric	CB3421A
1	38139	MG24428	Breaker, 240V 4 AMP 1P C	Schneider Electric	CB3430A
2	26722	MPDB67113	Power Block, 175A 1Pri 12Sec Aluminum, 2/0-#14Pri #10-14Sec	MERSEN	PDB1024A, PDB1024B
6	26741	MPDBC6667	Power Block, MPDBC6667 safety cover,	MERSEN	PDB1024A(3), PDB1024B(3)
1	36638	NT-CV-12	Panel Label - newterra Decal	Panel	8.11E
1	36639	NT-PS	Panel Label - newterra Sticker	Panel	8.11F
1	36316	OTB1E0DM9LP	OTB RIO Adapter, Ethernet	Schneider Electric	PLC3426A
1	10586	PK18GTA	NQ Panelboard Ground Bus	Schneider Electric	GB1
10	22324	RXM2AB1BD	Relay, SQT RXM2AB1BD, Miniature Relay 2PDT 24 VDC	Schneider Electric	CR3443A, CR3447A, CR3451A, CR3455A, CR3541A, CR3543A, CR3843A, CR3845A,
					CR3847A, CR3849A
10	22326	RXZE2S108M	Relay, SQT RXZE2S108M, Base/Socket for RXM2 2P Relays	Schneider Electric	CR3443A, CR3447A, CR3451A, CR3455A, CR3541A, CR3543A, CR3843A, CR3845A,
					CR3847A, CR3849A
1	36317	TM2DDI8DT	TM2 8 point DI Expansion Module	Schneider Electric	PLC3806A
2	37596	TM2DDI16DT	TM2 16 point DI Expansion Module	Schneider Electric	PLC3606A, PLC3706A
1	38119	TM2DDO8TT	TM2 8 point DO Expansion Module, Removable Terminal Blocks	Schneider Electric	PLC3843A
1	38209	TM2DRA16RT	TM2 16RO Expansion Module	Schneider Electric	PLC3906A

NOTES:

1325 CALIFORNIA AVE.
BROCKVILLE, ONTARIO
CANADA K6V 5Y6
PHONE: (613)498-1876
www.newterra.com

LEVEL	REVISION	DATE (dd/mm/yy)	BY
C	AS BUILT	14/08/17	DMB
B	FOR PRODUCTION	31/05/17	DMB
A1	FOR REVIEW	23/05/17	DMB
A	FOR SUBMITTAL	12/05/17	DMB

PROJ. NO: 1704432

TITLE AND LOCATION: MPP BILL OF MATERIAL MODULE 8201 - SHEET 2 OF 2

CUSTOMER: AGNICO EAGLE 600 MAN AMARUQ MINE

DRAWN BY:	DATE:	SHEET:	SHEETS:
DMB	31/05/17	49	71

1704432 - AGNICO EAGLE MINE - C

THIS INFORMATION IS THE PROPERTY OF newterra ltd.. AND CANNOT BE REUSED OR REPRODUCED WITHOUT THE WRITTEN CONSENT OF newterra ltd.

MCP - Bill of Materials

Qty	APES#	Part Number	Description	Manufacturer	Device Designation(s)
1	37557	2QPL	Pad Lockable Qurater Turn Latch	Hammond	MCP
1	26829	8GB_Micro	8GB Micro USB Key	Generic	OIT2008A
1	26511	17-200161	USB TypeA F-F Bulkhead Connector	Conec	USB71A
1	20698	20698	Mounting Bracket, Antenna & Surge Protector		ENET2011A
27	23745	800886	End Bracket - DIN Rail	Phoenix Contact	TB2, TB3, TB4, TB5, TB6, TB10, TB11, TB12, TB13, TB14, TB15, TB16, TB37,
					TB38, TB39, TB42, TB43, TB44, TB45, TB46, TB47, TB52, TB54, TB57, TB58,
					TB59, TB65
6	19168	0801733	Steel mounting rail; 35x7,5 mm, 1 mm thick; perforated	Phoenix Contact	TS1, TS2, TS3, TS8, TS9, TS10
17	23751	2966171	Relay, SPDT, 24VDC Coil	Phoenix Contact	CR2507A, CR2509A, CR2511A, CR2517A, CR2519A, CR2521A, CR2548A, CR2550A,
					CR2552A, CR2554A, CR2607A, CR2609A, CR2611A, CR2613A, CR2615A, CR2617A,
					CR2619A
14	23742	3030420	End Plate - 30A Feed Thru	Phoenix Contact	TB29, TB31, TB33, TB34, TB49, TB50, TB55, TB56, TB60, TB61, TB62, TB63,
					TB64, TB66
1	23748	3030747	End Plate - Double Feed Thru	Phoenix Contact	TB48
10	23737	3031364	Terminal, Grey, 28-12AWG, 30A, 600V	Phoenix Contact	AC(6), AO(4)
83	23738	3031377	Terminal, Blue, 28-12AWG, 30A, 600V	Phoenix Contact	AI(44), AO(8), DC(26), DO-P(5)
48	35073	3031432	Terminal, Double, 28-10AWG, 30A, 600V, Blue	Phoenix Contact	DI(48)
15	29545	3036369	Fused Terminal, 28-10AWG, 6.3A, 500V	Phoenix Contact	AI(14), AO
8	23741	3037148	Terminal, Yellow, 28-12AWG, 30A, 600V	Phoenix Contact	TB1(8)
15	23740	3037151	Terminal, Red, 28-12AWG, 30A, 600V	Phoenix Contact	AC(15)
2	35707	ABL8REM24050	24VDC Power Supply, 120W, 5A	Schneider Electric	PWS2004A, PWS2015A
1	24694	Arc Flash	Panel Label - Arc Flash Tri-lingual	Panel	8.11C
2	27402	C1LG6	Wire Duct Cover, 1", Grey	Panduit	WD2, WD11
6	27399	C2LG6	Wire Duct Cover, 2", Grey	Panduit	WD1, WD3, WD8, WD9, WD10, WD12
1	27949	C5E-STPRD-S3	Red Industrial Ethernet Cable, RJ45, 3ft, STP	Canada Computer	CBL5
2	27950	C5E-STPRD-S7	Industrial Ethernet Cable, RJ45, 7ft, STP	Canada Computer	CBL1, CBL3
1	27951	C5E-STPRD-S10	Industrial Ethernet Cable, RJ45, 10ft, STP	Canada Computer	CBL2
1	27953	C5E-STPRD-S25	Industrial Ethernet Cable, RJ45, 25ft, STP	Canada Computer	CBL6
4	12475	D1031Q	4Ch Discrete, Transistor Output, Intrinsically Safe Barrier	GM International	IS2020A, IS2024A, IS2028A, IS2032A
1	24602	E100502	Industrial RJ45 Jack	Belden	ETH71A
1	29140	EC6133D	eWON Cosy 131 LAN/Cell Router, 24VDC Power	eWON	ENET2011A
1	37906	EN4SD483612GY	48" x 36" x 12" NEMA4 Steel Enclosure	Hammond	MCP
1	37907	EP4836	48" x 36" Backplate	Hammond	MCP

NOTES:

newterra

1325 CALIFORNIA AVE.
BROCKVILLE, ONTARIO
CANADA K6V 5Y6
PHONE: (613)498-1876
www.newterra.com

LEVEL	REVISION	DATE (dd/mm/yy)	BY
C	AS BUILT	14/08/17	DMB
B	FOR PRODUCTION	31/05/17	DMB
A1	FOR REVIEW	23/05/17	DMB
A	FOR SUBMITTAL	12/05/17	DMB

PROJ. NO: 1704432

TITLE AND LOCATION: MCP BILL OF MATERIAL
MODULE 8202 - SHEET 1 OF 3

CUSTOMER: AGNICO EAGLE
600 MAN AMARUQ MINE

DRAWN BY:	DATE:	SHEET:	SHEETS:
DMB	30/05/17	50	71

1704432 - AGNICO EAGLE MINE - C

THIS INFORMATION IS THE PROPERTY OF newterra ltd.. AND CANNOT BE REUSED OR REPRODUCED WITHOUT THE WRITTEN CONSENT OF newterra ltd.

MCP - Bill of Materials

Qty	APES#	Part Number	Description	Manufacturer	Device Designation(s)
1	37558	EZPMFHD	Mounting Feet, Zinc, Set of 4	Hammond	MCP
2	27400	F1X3LG6	Wire Duct, 1"x3", Grey, Narrow Finger	Panduit	WD2, WD11
6	27398	F2X3LG6	Wire Duct, 2"x3", Grey, Narrow Finger	Panduit	WD1, WD3, WD8, WD9, WD10, WD12
14	20369	GSB1/10	Fuse,GLD GSB1/10100mA 250V Fast Acting, Miniature 5x20mm	Ferraz Shawmut	AI(14)
1	36555	GSB16/100	Fuse, 160mA 250V Fast Acting, Miniature 5x20mm	Ferraz Shawmut	AO
1	20569	GW195-180-SM-NM	Cellular Modem Antenna Cable - 15Ft. N-Male to SMA-Male	Airlink_Communications	ENET2011A
1	36126	HMIDT542	Touchscreen, 10.4" TOUCH SMART DISPLAY	Schneider Electric	OIT2008A
1	36124	HMIG3U	HMI Linux Processor, for use with HMIDT smart displays	Schneider Electric	OIT2008A
1	26892	IS Wiring Inside	Panel Label - IS Wiring Inside	Panel	8.11A
4	38136	MG24425	Breaker, 240V 1 AMP 1P C	Schneider Electric	CB1905C, CB1909A, CB2020A, CB2043A
2	38137	MG24426	Breaker, 240V 2 AMP 1P C	Schneider Electric	CB2057A, CB2062A
5	38138	MG24427	Breaker, 240V 3 AMP 1P C	Schneider Electric	CB1905A, CB2004A, CB2008A, CB2015A, CB2053A
2	38139	MG24428	Breaker, 240V 4 AMP 1P C	Schneider Electric	CB1926A, CB2011A
1	36639	NT-PS	Panel Label - newterra Sticker	Panel	8.11D
1	10586	PK18GTA	NQ Panelboard Ground Bus	Schneider Electric	GB1
1	23504	PSD1001	4Ch Power Supply, 15V - 20mA	GM International	IS2036A
1	11482	QOU1PA	Breaker Lock for 1 pole QOU breakers	Schneider Electric	CB1905B
1	10270	QOU115	Breaker, SQD QOU115 1240V 15A 1P DIN Mount, 10k SCCR	Schneider Electric	CB1905B
5	22324	RXM2AB1BD	Relay, SQT RXM2AB1BD, Miniature Relay 2PDT 24 VDC	Schneider Electric	CR2127A, CR2513A, CR2515A, CR2556A, CR2621A
2	21888	RXM4AB1BD	Relay, SQT RXM4AB1BD, Miniature Relay, 4PDT, 24 VDC, 6A contacts	Schneider Electric	CR2050A, CR2558A
1	21887	RXM4AB1F7	Relay, SQT RXM4AB1F7, Miniature Relay, 4PDT, 120VAC, 6A contacts	Schneider Electric	CR2047A
5	22326	RXZE2S108M	Relay, SQT RXZE2S108M, Base/Socket for RXM2 2P Relays	Schneider Electric	CR2127A, CR2513A, CR2515A, CR2556A, CR2621A
3	21889	RXZE2S114M	Relay, SQT RXZE2S114M, Base/Socket for RXM4 4P Relays	Schneider Electric	CR2047A, CR2050A, CR2558A
1	26891	Substitution of IS	Panel Label - Substitution of IS Components	Panel	8.11B
1	36089	TM3AI4G	TM3 4-channel AI Expansion Module	Schneider Electric	PLC2807A
1	36090	TM3AI8G	TM3 8-channel AI Expansion Module	Schneider Electric	PLC2707A
1	36543	TM3AQ4G	TM3 4-channel AO Expansion Module	Schneider Electric	PLC2906A
4	36087	TM3DI16G	TM3 16DI Expansion Module	Schneider Electric	PLC2105A, PLC2205A, PLC2305A, PLC2405A
2	36088	TM3DQ16TG	TM3 16DO Expansion Module	Schneider Electric	PLC2507A, PLC2607A
1	36558	TM3XREC1	TME Bus Receiver Module	Schneider Electric	PLC2057A
1	36557	TM3XTRA1	TME Bus Transmitter Module	Schneider Electric	PLC2060A
1	28484	TM251MESE	M251 Controller, Dual Ethernet	Schneider Electric	PLC2053A
1	24550	USB_A-A	6ft, USB MaleA/MaleA	Generic	CBL4

NOTES:

1325 CALIFORNIA AVE.
BROCKVILLE, ONTARIO
CANADA K6V 5Y6
PHONE: (613)498-1876
www.newterra.com

LEVEL	REVISION	DATE (dd/mm/yy)	BY
C	AS BUILT	14/08/17	DMB
B	FOR PRODUCTION	31/05/17	DMB
A1	FOR REVIEW	23/05/17	DMB
A	FOR SUBMITTAL	12/05/17	DMB

PROJ. NO: 1704432

TITLE AND LOCATION: MCP BILL OF MATERIAL
MODULE 8202 - SHEET 2 OF 3

CUSTOMER: AGNICO EAGLE
600 MAN AMARUQ MINE

DRAWN BY:	DATE:	SHEET:	SHEETS:
DMB	30/05/17	51	71

1704432 - AGNICO EAGLE MINE - C

THIS INFORMATION IS THE PROPERTY OF newterra ltd.. AND CANNOT BE REUSED OR REPRODUCED WITHOUT THE WRITTEN CONSENT OF newterra ltd.

MCP - Bill of Materials

Qty	APES#	Part Number	Description	Manufacturer	Device Designation(s)
1	25880	WMLPVDB800	Cellular Modem Antenna, N-Female, White	Airlink_Communications	ENET2011A
1	21650	XB7EV03BP	Button, XB7EV03GP, GREEN LED PILOT LIGHT 24VDC	Schneider Electric	LT2544A
1	21649	XB7EV04BP	Button, XB7EV03GP, RED LED PILOT LIGHT 24VDC	Schneider Electric	LT2546A
1	14607	ZB5 AT4	Button, ZB5 AT4, E-Stop Button	Schneider Electric	PB2043A
1	14611	ZB5 AZ102	Button, ZB5 AZ102, Collar with 1 NC Contact Block	Schneider Electric	PB2043A
1	23054	ZBY9330	ESTOP Label	Schneider Electric	PB2043A

NOTES:

newterra

1325 CALIFORNIA AVE.
BROCKVILLE, ONTARIO
CANADA K6V 5Y6
PHONE: (613)498-1876
www.newterra.com

LEVEL	REVISION	DATE (dd/mm/yy)	BY
C	AS BUILT	14/08/17	DMB
B	FOR PRODUCTION	31/05/17	DMB
A1	FOR REVIEW	23/05/17	DMB
A	FOR SUBMITTAL	12/05/17	DMB

PROJ. NO: 1704432

TITLE AND LOCATION: MCP BILL OF MATERIAL
MODULE 8202 - SHEET 3 OF 3

CUSTOMER: AGNICO EAGLE
600 MAN AMARUQ MINE

DRAWN BY:	DATE:	SHEET:	SHEETS:
DMB	30/05/17	52	71

1704432 - AGNICO EAGLE MINE - C

THIS INFORMATION IS THE PROPERTY OF newterra ltd.. AND CANNOT BE REUSED OR REPRODUCED WITHOUT THE WRITTEN CONSENT OF newterra ltd.

JB-7901-AC - Bill of Materials

Qty	APES#	Part Number	Description	Manufacturer	Device Designation(s)
2	23745	800886	End Bracket - DIN Rail	Phoenix Contact	TB1, TB3
1	19168	0801733	Steel mounting rail; 35x7,5 mm, 1 mm thick; perforated	Phoenix Contact	TS1
1	23742	3030420	End Plate - 30A Feed Thru	Phoenix Contact	TB2
3	23737	3031364	Terminal, Grey, 28-12AWG, 30A, 600V	Phoenix Contact	AC(3)
3	23740	3037151	Terminal, Red, 28-12AWG, 30A, 600V	Phoenix Contact	AC(3)
1	37975	EJ664	6" x 6" x 4" NEMA4 Steel Enclosure, Hinged Cover	Hammond	JB-7901-AC

NOTES:

newterra

1325 CALIFORNIA AVE.
BROCKVILLE, ONTARIO
CANADA K6V 5Y6
PHONE: (613)498-1876
www.newterra.com

LEVEL	REVISION	DATE (dd/mm/yy)	BY
C	AS BUILT	14/08/17	DMB
B	FOR PRODUCTION	31/05/17	DMB
A1	FOR REVIEW	23/05/17	DMB
A	FOR SUBMITTAL	12/05/17	DMB

PROJ. NO: 1704432

TITLE AND LOCATION: JB-7901-AC BILL OF MATERIAL MODULE 8203 - SHEET 1 OF 11

CUSTOMER: AGNICO EAGLE 600 MAN AMARUQ MINE

DRAWN BY:	DATE:	SHEET:	SHEETS:
DMB	30/05/17	53	71

1704432 - AGNICO EAGLE MINE - C

THIS INFORMATION IS THE PROPERTY OF newterra ltd.. AND CANNOT BE REUSED OR REPRODUCED WITHOUT THE WRITTEN CONSENT OF newterra ltd.

JB-7901-DC - Bill of Materials

Qty	APES#	Part Number	Description	Manufacturer	Device Designation(s)
2	23745	800886	End Bracket - DIN Rail	Phoenix Contact	TB4, TB5
1	19168	0801733	Steel mounting rail; 35x7,5 mm, 1 mm thick; perforated	Phoenix Contact	TS2
1	23748	3030747	End Plate - Double Feed Thru	Phoenix Contact	TB1
4	23738	3031377	Terminal, Blue, 28-12AWG, 30A, 600V	Phoenix Contact	DC(4)
2	35073	3031432	Terminal, Double, 28-10AWG, 30A, 600V, Blue	Phoenix Contact	DC(2)
1	37975	EJ664	6" x 6" x 4" NEMA4 Steel Enclosure, Hinged Cover	Hammond	JB-7901-DC

NOTES:

newterra

1325 CALIFORNIA AVE.
BROCKVILLE, ONTARIO
CANADA K6V 5Y6
PHONE: (613)498-1876
www.newterra.com

LEVEL	REVISION	DATE (dd/mm/yy)	BY
C	AS BUILT	14/08/17	DMB
B	FOR PRODUCTION	31/05/17	DMB
A1	FOR REVIEW	23/05/17	DMB
A	FOR SUBMITTAL	12/05/17	DMB

PROJ. NO: 1704432

TITLE AND LOCATION: JB-7901-DC BILL OF MATERIAL MODULE 8203 - SHEET 2 OF 11

CUSTOMER: AGNICO EAGLE 600 MAN AMARUQ MINE

DRAWN BY:	DATE:	SHEET:	SHEETS:
DMB	30/05/17	54	71

1704432 - AGNICO EAGLE MINE - C

THIS INFORMATION IS THE PROPERTY OF newterra ltd.. AND CANNOT BE REUSED OR REPRODUCED WITHOUT THE WRITTEN CONSENT OF newterra ltd.

JB-7901-HV - Bill of Materials

Qty	APES#	Part Number	Description	Manufacturer	Device Designation(s)
2	23745	800886	End Bracket - DIN Rail	Phoenix Contact	TB4, TB11
1	19168	0801733	Steel mounting rail; 35x7,5 mm, 1 mm thick; perforated	Phoenix Contact	TS2
7	23742	3030420	End Plate - 30A Feed Thru	Phoenix Contact	TB1, TB5, TB6, TB7, TB8, TB9, TB10
21	23740	3037151	Terminal, Red, 28-12AWG, 30A, 600V	Phoenix Contact	HV(21)
1	38220	EJ1084	10" x 8" x 4" NEMA4 Steel Enclosure, Hinged Cover	Hammond	JB-7901-HV

NOTES:

newterra

1325 CALIFORNIA AVE.
BROCKVILLE, ONTARIO
CANADA K6V 5Y6
PHONE: (613)498-1876
www.newterra.com

LEVEL	REVISION	DATE (dd/mm/yy)	BY
C	AS BUILT	14/08/17	DMB
B	FOR PRODUCTION	31/05/17	DMB
A1	FOR REVIEW	23/05/17	DMB
A	FOR SUBMITTAL	12/05/17	DMB

PROJ. NO: 1704432

TITLE AND LOCATION: JB-7901-HV BILL OF MATERIAL MODULE 8203 - SHEET 3 OF 11

CUSTOMER: AGNICO EAGLE 600 MAN AMARUQ MINE

DRAWN BY:	DATE:	SHEET:	SHEETS:
DMB	30/05/17	55	71

1704432 - AGNICO EAGLE MINE - C

THIS INFORMATION IS THE PROPERTY OF newterra ltd.. AND CANNOT BE REUSED OR REPRODUCED WITHOUT THE WRITTEN CONSENT OF newterra ltd.

JB-7901-IS - Bill of Materials

Qty	APES#	Part Number	Description	Manufacturer	Device Designation(s)
2	23745	800886	End Bracket - DIN Rail	Phoenix Contact	TB12, TB14
1	19168	0801733	Steel mounting rail; 35x7,5 mm, 1 mm thick; perforated	Phoenix Contact	TS3
1	23742	3030420	End Plate - 30A Feed Thru	Phoenix Contact	TB13
30	23738	3031377	Terminal, Blue, 28-12AWG, 30A, 600V	Phoenix Contact	IS(30)
1	38220	EJ1084	10" x 8" x 4" NEMA4 Steel Enclosure, Hinged Cover	Hammond	JB-7901-IS

NOTES:

1325 CALIFORNIA AVE.
BROCKVILLE, ONTARIO
CANADA K6V 5Y6
PHONE: (613)498-1876
www.newterra.com

LEVEL	REVISION	DATE (dd/mm/yy)	BY
C	AS BUILT	14/08/17	DMB
B	FOR PRODUCTION	31/05/17	DMB
A1	FOR REVIEW	23/05/17	DMB
A	FOR SUBMITTAL	12/05/17	DMB

PROJ. NO: 1704432

TITLE AND LOCATION: JB-7901-IS BILL OF MATERIAL
MODULE 8203 - SHEET 4 OF 11

CUSTOMER: AGNICO EAGLE
600 MAN AMARUQ MINE

DRAWN BY:	DATE:	SHEET:	SHEETS:
DMB	30/05/17	56	71

1704432 - AGNICO EAGLE MINE - C

THIS INFORMATION IS THE PROPERTY OF newterra ltd.. AND CANNOT BE REUSED OR REPRODUCED WITHOUT THE WRITTEN CONSENT OF newterra ltd.

JB-7901OS-AC - Bill of Materials

Qty	APES#	Part Number	Description	Manufacturer	Device Designation(s)
2	23745	800886	End Bracket - DIN Rail	Phoenix Contact	TB5, TB8
1	19168	0801733	Steel mounting rail; 35x7,5 mm, 1 mm thick; perforated	Phoenix Contact	TS3
1	23742	3030420	End Plate - 30A Feed Thru	Phoenix Contact	TB7
2	23737	3031364	Terminal, Grey, 28-12AWG, 30A, 600V	Phoenix Contact	AC(2)
2	23740	3037151	Terminal, Red, 28-12AWG, 30A, 600V	Phoenix Contact	AC(2)
1	37975	EJ664	6" x 6" x 4" NEMA4 Steel Enclosure, Hinged Cover	Hammond	JB-7901OS-AC

NOTES:

1325 CALIFORNIA AVE.
BROCKVILLE, ONTARIO
CANADA K6V 5Y6
PHONE: (613)498-1876
www.newterra.com

LEVEL	REVISION	DATE (dd/mm/yy)	BY
C	AS BUILT	14/08/17	DMB
B	FOR PRODUCTION	31/05/17	DMB
A1	FOR REVIEW	23/05/17	DMB
A	FOR SUBMITTAL	12/05/17	DMB

PROJ. NO: 1704432

TITLE AND LOCATION: JB-7901OS-AC BILL OF MATERIAL
MODULE 8203 - SHEET 5 OF 11

CUSTOMER: AGNICO EAGLE
600 MAN AMARUQ MINE

DRAWN BY:	DATE:	SHEET:	SHEETS:
DMB	30/05/17	57	71

1704432 - AGNICO EAGLE MINE - C

THIS INFORMATION IS THE PROPERTY OF newterra ltd.. AND CANNOT BE REUSED OR REPRODUCED WITHOUT THE WRITTEN CONSENT OF newterra ltd.

JB-7902-AC - Bill of Materials

Qty	APES#	Part Number	Description	Manufacturer	Device Designation(s)
2	23745	800886	End Bracket - DIN Rail	Phoenix Contact	TB6, TB10
1	19168	0801733	Steel mounting rail; 35x7,5 mm, 1 mm thick; perforated	Phoenix Contact	TS4
1	23742	3030420	End Plate - 30A Feed Thru	Phoenix Contact	TB9
4	23737	3031364	Terminal, Grey, 28-12AWG, 30A, 600V	Phoenix Contact	AC(4)
2	23740	3037151	Terminal, Red, 28-12AWG, 30A, 600V	Phoenix Contact	AC(2)
1	37975	EJ664	6" x 6" x 4" NEMA4 Steel Enclosure, Hinged Cover	Hammond	JB-7902-AC

NOTES:

1325 CALIFORNIA AVE.
BROCKVILLE, ONTARIO
CANADA K6V 5Y6
PHONE: (613)498-1876
www.newterra.com

LEVEL	REVISION	DATE (dd/mm/yy)	BY
C	AS BUILT	14/08/17	DMB
B	FOR PRODUCTION	31/05/17	DMB
A1	FOR REVIEW	23/05/17	DMB
A	FOR SUBMITTAL	12/05/17	DMB

PROJ. NO: 1704432

TITLE AND LOCATION: JB-7902-AC BILL OF MATERIAL
MODULE 8203 - SHEET 6 OF 11

CUSTOMER: AGNICO EAGLE
600 MAN AMARUQ MINE

DRAWN BY:	DATE:	SHEET:	SHEETS:
DMB	30/05/17	58	71

1704432 - AGNICO EAGLE MINE - C

THIS INFORMATION IS THE PROPERTY OF newterra ltd.. AND CANNOT BE REUSED OR REPRODUCED WITHOUT THE WRITTEN CONSENT OF newterra ltd.

JB-7902-DC - Bill of Materials

Qty	APES#	Part Number	Description	Manufacturer	Device Designation(s)
2	23745	800886	End Bracket - DIN Rail	Phoenix Contact	TB11, TB13
1	19168	0801733	Steel mounting rail; 35x7,5 mm, 1 mm thick; perforated	Phoenix Contact	TS5
1	23748	3030747	End Plate - Double Feed Thru	Phoenix Contact	TB12
4	23738	3031377	Terminal, Blue, 28-12AWG, 30A, 600V	Phoenix Contact	DC(4)
3	35073	3031432	Terminal, Double, 28-10AWG, 30A, 600V, Blue	Phoenix Contact	DC(3)
1	37975	EJ664	6" x 6" x 4" NEMA4 Steel Enclosure, Hinged Cover	Hammond	JB-7902-DC

NOTES:

1325 CALIFORNIA AVE.
BROCKVILLE, ONTARIO
CANADA K6V 5Y6
PHONE: (613)498-1876
www.newterra.com

LEVEL	REVISION	DATE (dd/mm/yy)	BY
C	AS BUILT	14/08/17	DMB
B	FOR PRODUCTION	31/05/17	DMB
A1	FOR REVIEW	23/05/17	DMB
A	FOR SUBMITTAL	12/05/17	DMB

PROJ. NO: 1704432

TITLE AND LOCATION: JB-7902-DC BILL OF MATERIAL
MODULE 8203 - SHEET 7 OF 11

CUSTOMER: AGNICO EAGLE
600 MAN AMARUQ MINE

DRAWN BY:	DATE:	SHEET:	SHEETS:
DMB	30/05/17	59	71

1704432 - AGNICO EAGLE MINE - C

THIS INFORMATION IS THE PROPERTY OF newterra ltd.. AND CANNOT BE REUSED OR REPRODUCED WITHOUT THE WRITTEN CONSENT OF newterra ltd.

JB-7902-HV - Bill of Materials

Qty	APES#	Part Number	Description	Manufacturer	Device Designation(s)
2	23745	800886	End Bracket - DIN Rail	Phoenix Contact	TB15, TB17
1	19168	0801733	Steel mounting rail; 35x7,5 mm, 1 mm thick; perforated	Phoenix Contact	TS4
8	23742	3030420	End Plate - 30A Feed Thru	Phoenix Contact	TB16, TB18, TB19, TB20, TB21, TB22, TB23, TB24
24	23740	3037151	Terminal, Red, 28-12AWG, 30A, 600V	Phoenix Contact	HV(24)
1	38220	EJ1084	10" x 8" x 4" NEMA4 Steel Enclosure, Hinged Cover	Hammond	JB-7902-HV

NOTES:

newterra

1325 CALIFORNIA AVE.
BROCKVILLE, ONTARIO
CANADA K6V 5Y6
PHONE: (613)498-1876
www.newterra.com

LEVEL	REVISION	DATE (dd/mm/yy)	BY
C	AS BUILT	14/08/17	DMB
B	FOR PRODUCTION	31/05/17	DMB
A1	FOR REVIEW	23/05/17	DMB
A	FOR SUBMITTAL	12/05/17	DMB

PROJ. NO: 1704432

TITLE AND LOCATION: JB-7902-HV BILL OF MATERIAL MODULE 8203 - SHEET 8 OF 11

CUSTOMER: AGNICO EAGLE 600 MAN AMARUQ MINE

DRAWN BY:	DATE:	SHEET:	SHEETS:
DMB	30/05/17	60	71

1704432 - AGNICO EAGLE MINE - C

THIS INFORMATION IS THE PROPERTY OF newterra ltd.. AND CANNOT BE REUSED OR REPRODUCED WITHOUT THE WRITTEN CONSENT OF newterra ltd.

JB-7904-AC - Bill of Materials

Qty	APES#	Part Number	Description	Manufacturer	Device Designation(s)
2	23745	800886	End Bracket - DIN Rail	Phoenix Contact	TB14, TB15
1	19168	0801733	Steel mounting rail; 35x7,5 mm, 1 mm thick; perforated	Phoenix Contact	TS6
3	23742	3030420	End Plate - 30A Feed Thru	Phoenix Contact	TB11, TB16, TB17
2	23737	3031364	Terminal, Grey, 28-12AWG, 30A, 600V	Phoenix Contact	AC(2)
7	23740	3037151	Terminal, Red, 28-12AWG, 30A, 600V	Phoenix Contact	AC(7)
1	37975	EJ664	6" x 6" x 4" NEMA4 Steel Enclosure, Hinged Cover	Hammond	JB-7904-AC

NOTES:

1325 CALIFORNIA AVE.
BROCKVILLE, ONTARIO
CANADA K6V 5Y6
PHONE: (613)498-1876
www.newterra.com

LEVEL	REVISION	DATE (dd/mm/yy)	BY
C	AS BUILT	14/08/17	DMB
B	FOR PRODUCTION	31/05/17	DMB
A1	FOR REVIEW	23/05/17	DMB
A	FOR SUBMITTAL	12/05/17	DMB

PROJ. NO: 1704432

TITLE AND LOCATION: JB-7904-AC BILL OF MATERIAL MODULE 8203 - SHEET 9 OF 11

CUSTOMER: AGNICO EAGLE 600 MAN AMARUQ MINE

DRAWN BY:	DATE:	SHEET:	SHEETS:
DMB	30/05/17	61	71

1704432 - AGNICO EAGLE MINE - C

THIS INFORMATION IS THE PROPERTY OF newterra ltd.. AND CANNOT BE REUSED OR REPRODUCED WITHOUT THE WRITTEN CONSENT OF newterra ltd.

JB-7904-DC - Bill of Materials

Qty	APES#	Part Number	Description	Manufacturer	Device Designation(s)
2	23745	800886	End Bracket - DIN Rail	Phoenix Contact	TB18, TB20
1	19168	0801733	Steel mounting rail; 35x7,5 mm, 1 mm thick; perforated	Phoenix Contact	TS5
1	23748	3030747	End Plate - Double Feed Thru	Phoenix Contact	TB19
14	23738	3031377	Terminal, Blue, 28-12AWG, 30A, 600V	Phoenix Contact	DC(14)
7	35073	3031432	Terminal, Double, 28-10AWG, 30A, 600V, Blue	Phoenix Contact	DC(7)
1	38221	EJ884	8" x 8" x 4" NEMA4 Steel Enclosure, Hinged Cover	Hammond	JB-7904-DC

NOTES:

newterra

1325 CALIFORNIA AVE.
BROCKVILLE, ONTARIO
CANADA K6V 5Y6
PHONE: (613)498-1876
www.newterra.com

LEVEL	REVISION	DATE (dd/mm/yy)	BY
C	AS BUILT	14/08/17	DMB
B	FOR PRODUCTION	31/05/17	DMB
A1	FOR REVIEW	23/05/17	DMB
A	FOR SUBMITTAL	12/05/17	DMB

PROJ. NO: 1704432

TITLE AND LOCATION: JB-7904-DC BILL OF MATERIAL
MODULE 8203 - SHEET 10 OF 11

CUSTOMER: AGNICO EAGLE
600 MAN AMARUQ MINE

DRAWN BY:	DATE:	SHEET:	SHEETS:
DMB	30/05/17	62	71

1704432 - AGNICO EAGLE MINE - C

THIS INFORMATION IS THE PROPERTY OF newterra ltd.. AND CANNOT BE REUSED OR REPRODUCED WITHOUT THE WRITTEN CONSENT OF newterra ltd.

JB-7904-HV - Bill of Materials

Qty	APES#	Part Number	Description	Manufacturer	Device Designation(s)
2	23745	800886	End Bracket - DIN Rail	Phoenix Contact	TB21, TB23
1	19168	0801733	Steel mounting rail; 35x7,5 mm, 1 mm thick; perforated	Phoenix Contact	TS6
9	23742	3030420	End Plate - 30A Feed Thru	Phoenix Contact	TB22, TB24, TB25, TB26, TB27, TB28, TB29, TB30, TB31
26	23740	3037151	Terminal, Red, 28-12AWG, 30A, 600V	Phoenix Contact	HV(26)
1	38220	EJ1084	10" x 8" x 4" NEMA4 Steel Enclosure, Hinged Cover	Hammond	JB-7904-HV

NOTES:

newterra

1325 CALIFORNIA AVE.
BROCKVILLE, ONTARIO
CANADA K6V 5Y6
PHONE: (613)498-1876
www.newterra.com

LEVEL	REVISION	DATE (dd/mm/yy)	BY
C	AS BUILT	14/08/17	DMB
B	FOR PRODUCTION	31/05/17	DMB
A1	FOR REVIEW	23/05/17	DMB
A	FOR SUBMITTAL	12/05/17	DMB

PROJ. NO: 1704432

TITLE AND LOCATION: JB-7904-HV BILL OF MATERIAL MODULE 8203 - SHEET 11 OF 11

CUSTOMER: AGNICO EAGLE 600 MAN AMARUQ MINE

DRAWN BY:	DATE:	SHEET:	SHEETS:
DMB	30/05/17	63	71

1704432 - AGNICO EAGLE MINE - C

THIS INFORMATION IS THE PROPERTY OF newterra ltd.. AND CANNOT BE REUSED OR REPRODUCED WITHOUT THE WRITTEN CONSENT OF newterra ltd.

BLD-7901 - Bill of Materials

Qty	APES#	Part Number	Description	Manufacturer	Device Designation(s)
1	19534	KIL SWB1	1/2" Dead End Box	Killark	TGS1608A
1	19533	KILXS-1C	NEMA7, 1P, 20A Switch	Killark	TGS1608A
4	18642	VUXGG1100PX	100W Incandescent, Medium Base, CL1Div2	Killark	LT1608A, LT1610A, LT1612A, LT1614A
1	22112	XEDS-30	Unfused Disconnect, CL1Div1&2, 30A, 20HP@480V	Killark	DISC1355A
6	26831	XSX-23	Unfused Disconnect, CL1Div1&2, 20A, 10HP@600V	Killark	DISC1040A, DISC1045A, DISC1050A, DISC1055A, DISC1062A, DISC1350A
1	14607	ZB5 AT4	Button, ZB5 AT4, E-Stop Button	Schneider Electric	PB2127A
1	14611	ZB5 AZ102	Button, ZB5 AZ102, Collar with 1 NC Contact Block	Schneider Electric	PB2127A
1	23054	ZBY9330	ESTOP Label	Schneider Electric	PB2127A

NOTES:

1325 CALIFORNIA AVE.
BROCKVILLE, ONTARIO
CANADA K6V 5Y6
PHONE: (613)498-1876
www.newterra.com

LEVEL	REVISION	DATE (dd/mm/yy)	BY
C	AS BUILT	14/08/17	DMB
B	FOR PRODUCTION	31/05/17	DMB
A1	FOR REVIEW	23/05/17	DMB
A	FOR SUBMITTAL	12/05/17	DMB

PROJ. NO: 1704432

TITLE AND LOCATION: BLD-7901 BILL OF MATERIAL
MODULE 8901 - SHEET 1 OF 2

CUSTOMER: AGNICO EAGLE
600 MAN AMARUQ MINE

DRAWN BY:	DATE:	SHEET:	SHEETS:
DMB	30/05/17	64	71

1704432 - AGNICO EAGLE MINE - C

THIS INFORMATION IS THE PROPERTY OF newterra ltd.. AND CANNOT BE REUSED OR REPRODUCED WITHOUT THE WRITTEN CONSENT OF newterra ltd.

BLD-7901_OUTSIDE - Bill of Materials

Qty	APES#	Part Number	Description	Manufacturer	Device Designation(s)
2	36085	GFWR1-W	GFCI 15A, 125V Duplex Receptacle, Weather Resistant, White	Leviton	RECP1620A, RECP1626A

NOTES:

1325 CALIFORNIA AVE.
BROCKVILLE, ONTARIO
CANADA K6V 5Y6
PHONE: (613)498-1876
www.newterra.com

LEVEL	REVISION	DATE (dd/mm/yy)	BY
C	AS BUILT	14/08/17	DMB
B	FOR PRODUCTION	31/05/17	DMB
A1	FOR REVIEW	23/05/17	DMB
A	FOR SUBMITTAL	12/05/17	DMB

PROJ. NO: 1704432

TITLE AND LOCATION: BLD-7901 BILL OF MATERIAL
MODULE 8901 - SHEET 2 OF 2

CUSTOMER: AGNICO EAGLE
600 MAN AMARUQ MINE

DRAWN BY:	DATE:	SHEET:	SHEETS:
DMB	30/05/17	65	71

1704432 - AGNICO EAGLE MINE - C

THIS INFORMATION IS THE PROPERTY OF newterra ltd.. AND CANNOT BE REUSED OR REPRODUCED WITHOUT THE WRITTEN CONSENT OF newterra ltd.

BLD-7902 - Bill of Materials

Qty	APES#	Part Number	Description	Manufacturer	Device Designation(s)
8	26830	MD3304X	Unfused Disconnect, 30A, 25HP@600V	Schneider Electric	DISC1069A, DISC1103A, DISC1108A, DISC1113A, DISC1118A, DISC1123A,
					DISC1362A, DISC1403A

NOTES:

1325 CALIFORNIA AVE.
BROCKVILLE, ONTARIO
CANADA K6V 5Y6
PHONE: (613)498-1876
www.newterra.com

LEVEL	REVISION	DATE (dd/mm/yy)	BY
C	AS BUILT	14/08/17	DMB
B	FOR PRODUCTION	31/05/17	DMB
A1	FOR REVIEW	23/05/17	DMB
A	FOR SUBMITTAL	12/05/17	DMB

PROJ. NO: 1704432

TITLE AND LOCATION: BLD-7902 BILL OF MATERIAL MODULE 8902

CUSTOMER: AGNICO EAGLE 600 MAN AMARUQ MINE

DRAWN BY:	DATE:	SHEET:	SHEETS:
DMB	30/05/17	66	71

1704432 - AGNICO EAGLE MINE - C

THIS INFORMATION IS THE PROPERTY OF newterra ltd.. AND CANNOT BE REUSED OR REPRODUCED WITHOUT THE WRITTEN CONSENT OF newterra ltd.

BLD-7904 - Bill of Materials

Qty	APES#	Part Number	Description	Manufacturer	Device Designation(s)
1	23293	20RC15/10	Receptacle Cover, PVC Single Cover		RECP1714A
1	23789	CR15	15A, 125V Duplex Receptacle, Commercial Grade	Hubbell	RECP1706A
1	12567	CS115CN	1P Switch, 15A, 120V, Commercial	Leviton	TGS1662A
1	22672	FSC10	PVC FSC Box, 1 Gang	Royal Pipe Systems	TGS1662A
1	23791	HBL5251	15A, 125V, Single Receptacle, Heavy Duty	Hubbell	RECP1714A
8	26830	MD3304X	Unfused Disconnect, 30A, 25HP@600V	Schneider Electric	DISC1130A, DISC1140A, DISC1145A, DISC1150A, DISC1155A, DISC1160A,
					DISC1415A, DISC1423A
1	26171	RTSC15/10	PVC Switch Cover, 1 Gang	Royal Pipe Systems	TGS1662A
1	14607	ZB5 AT4	Button, ZB5 AT4, E-Stop Button	Schneider Electric	PB2047A
1	14611	ZB5 AZ102	Button, ZB5 AZ102, Collar with 1 NC Contact Block	Schneider Electric	PB2047A
1	23054	ZBY9330	ESTOP Label	Schneider Electric	PB2047A

NOTES:

newterra

1325 CALIFORNIA AVE.
BROCKVILLE, ONTARIO
CANADA K6V 5Y6
PHONE: (613)498-1876
www.newterra.com

LEVEL	REVISION	DATE (dd/mm/yy)	BY
C	AS BUILT	14/08/17	DMB
B	FOR PRODUCTION	31/05/17	DMB
A1	FOR REVIEW	23/05/17	DMB
A	FOR SUBMITTAL	12/05/17	DMB

PROJ. NO: 1704432

TITLE AND LOCATION: BLD-7904 BILL OF MATERIAL MODULE 8904 - SHEET 1 OF 2

CUSTOMER: AGNICO EAGLE 600 MAN AMARUQ MINE

DRAWN BY:	DATE:	SHEET:	SHEETS:
DMB	30/05/17	67	71

1704432 - AGNICO EAGLE MINE - C

THIS INFORMATION IS THE PROPERTY OF newterra ltd.. AND CANNOT BE REUSED OR REPRODUCED WITHOUT THE WRITTEN CONSENT OF newterra ltd.

BLD-7904_OUTSIDE - Bill of Materials

Qty	APES#	Part Number	Description	Manufacturer	Device Designation(s)
1	38204	WL-LED26-B-5K-BRZ-PC	Wall Pack, 24W LED c/w PhotoEye	RAB Design	LT1665A

NOTES:

1325 CALIFORNIA AVE.
BROCKVILLE, ONTARIO
CANADA K6V 5Y6
PHONE: (613)498-1876
www.newterra.com

LEVEL	REVISION	DATE (dd/mm/yy)	BY
C	AS BUILT	14/08/17	DMB
B	FOR PRODUCTION	31/05/17	DMB
A1	FOR REVIEW	23/05/17	DMB
A	FOR SUBMITTAL	12/05/17	DMB

PROJ. NO: 1704432

TITLE AND LOCATION: BLD-7904 BILL OF MATERIAL
MODULE 8904 - SHEET 2 OF 2

CUSTOMER: AGNICO EAGLE
600 MAN AMARUQ MINE

DRAWN BY:	DATE:	SHEET:	SHEETS:
DMB	30/05/17	68	71

1704432 - AGNICO EAGLE MINE - C

THIS INFORMATION IS THE PROPERTY OF newterra ltd.. AND CANNOT BE REUSED OR REPRODUCED WITHOUT THE WRITTEN CONSENT OF newterra ltd.

BLD-7905 - Bill of Materials

Qty	APES#	Part Number	Description	Manufacturer	Device Designation(s)
1	26830	MD3304X	Unfused Disconnect, 30A, 25HP@600V	Schneider Electric	DISC1440A

BLD-7906 - Bill of Materials

Qty	APES#	Part Number	Description	Manufacturer	Device Designation(s)
1	23293	20RC15/10	Receptacle Cover, PVC Single Cover		RECP1742A
2	12567	CS115CN	1P Switch, 15A, 120V, Commercial	Leviton	TGS1643A, TGS1649A
2	38093	FC202P1K5	Variable Frequency Drive, Danfoss FC202 P1K5, VFD 480V 2HP, 3.4A 3PH, IP55, w/ L	Danfoss	VFD1304A, VFD1322A
2	38094	FC202P11K	Variable Frequency Drive, Danfoss FC202 P11K, VFD 480V 15HP, 21A 3PH, IP55, w/ L	Danfoss	VFD1241A, VFD1259A
2	22672	FSC10	PVC FSC Box, 1 Gang	Royal Pipe Systems	TGS1643A, TGS1649A
4	38205	FW4-LED40-B-4K-DIM	Flourescent Light, Vaportight 4Ft, LED 40W, 120-277V	RAB Design	LT1643A, LT1645A, LT1647A, LT1649A
1	10185	GFNT1-W	GFCI 15A, 125V Duplex Receptacle, White	Leviton	RECP1633A
1	23791	HBL5251	15A, 125V, Single Receptacle, Heavy Duty	Hubbell	RECP1742A
8	26830	MD3304X	Unfused Disconnect, 30A, 25HP@600V	Schneider Electric	DISC1203A, DISC1208A, DISC1213A, DISC1218A, DISC1342A, DISC1452A,
					DISC1457A, DISC1462A
1	20775	MH32	18 Circuit NQ Tub, NEMA1	Schneider Electric	PDP1606A
1	20814	NC26S	18 Circuit NQ/NF Trim	Schneider Electric	PDP1606A
1	20896	NQ418L1C	Distribution Panel, 120/240V, 3Ph, 100A Cu Bus, 18 Circuit	Schneider Electric	PDP1606A
11	19029	QOB115	Breaker, SQD QOB115 120V 15A Bolt On, 10k SCCR	Schneider Electric	CB1608A, CB1620A, CB1626A, CB1633A, CB1643A, CB1668A, CB1706A, CB1719A,
					CB1729A, CB1742A, CB1748A
1	19340	PK12GTA	NQ Panelboard Ground Bus	Schneider Electric	PDP1606A
2	26171	RTSC15/10	PVC Switch Cover, 1 Gang	Royal Pipe Systems	TGS1643A, TGS1645A
1	25526	UC3010P480	Dist. Transformer, 10kVA, 480V:120/208V	BeMag	T1342A
1	38182	Y225PKC	Autotransformer, 225kVA, 600V:480, 480:380V, 50/60Hz	Hammond	T1015A

NOTES:

newterra

1325 CALIFORNIA AVE.
BROCKVILLE, ONTARIO
CANADA K6V 5Y6
PHONE: (613)498-1876
www.newterra.com

LEVEL	REVISION	DATE (dd/mm/yy)	BY
C	AS BUILT	14/08/17	DMB
B	FOR PRODUCTION	31/05/17	DMB
A1	FOR REVIEW	23/05/17	DMB
A	FOR SUBMITTAL	12/05/17	DMB

PROJ. NO: 1704432

TITLE AND LOCATION: BLD-7906 BILL OF MATERIAL
MODULE 8906 - SHEET 1 OF 2

CUSTOMER: AGNICO EAGLE
600 MAN AMARUQ MINE

DRAWN BY:	DATE:	SHEET:	SHEETS:
DMB	30/05/17	70	71

1704432 - AGNICO EAGLE MINE - C

THIS INFORMATION IS THE PROPERTY OF newterra ltd.. AND CANNOT BE REUSED OR REPRODUCED WITHOUT THE WRITTEN CONSENT OF newterra ltd.

BLD-7906_OUTSIDE - Bill of Materials

Qty	APES#	Part Number	Description	Manufacturer	Device Designation(s)
1	36085	GFWR1-W	GFCI 15A, 125V Duplex Receptacle, Weather Resistant, White	Leviton	RECP1729A
1	38204	WL-LED26-B-5K-BRZ-PC	Wall Pack, 24W LED c/w PhotoEye	RAB Design	LT1657A

NOTES:

1325 CALIFORNIA AVE.
BROCKVILLE, ONTARIO
CANADA K6V 5Y6
PHONE: (613)498-1876
www.newterra.com

LEVEL	REVISION	DATE (dd/mm/yy)	BY
C	AS BUILT	14/08/17	DMB
B	FOR PRODUCTION	31/05/17	DMB
A1	FOR REVIEW	23/05/17	DMB
A	FOR SUBMITTAL	12/05/17	DMB

PROJ. NO: 1704432

TITLE AND LOCATION: BLD-7906 BILL OF MATERIAL
MODULE 8906 - SHEET 2 OF 2

CUSTOMER: AGNICO EAGLE
600 MAN AMARUQ MINE

DRAWN BY:	DATE:	SHEET:	SHEETS:
DMB	30/05/17	71	71

1704432 - AGNICO EAGLE MINE - C

THIS INFORMATION IS THE PROPERTY OF newterra ltd.. AND CANNOT BE REUSED OR REPRODUCED WITHOUT THE WRITTEN CONSENT OF newterra ltd.

newterra ltd.
1291 California Avenue, Brockville, ON K6V 5W3
(800) 420-4056 / www.newterra.com

APPENDIX B

Packing Slip

© 2017 by **newterra**, ltd.
All rights reserved. No part of this document may be reproduced or transmitted in any form or by any means, electronic, mechanical, photocopying, recording, or otherwise, without prior written permission of **newterra** ltd.

Project Packing List

PMProjNum **1704432**

Agnico Eagle - Amaruq Mine WWTP

Shipping Notes:

Tag	Part Number	Part Description	Req Rec PO #	EngMemo Line
0	24612	Container, 40' x 8' x 9'6", Once Use, High Cu	1	---
7901	ea	30,480kg rated, Forklift Pockets, CSC Plate,	1	
	Type: I	ABS/BV/LR Certs. Steel Checkerplate ---	1704432-0001	1
10	10959	Junction Box, PVC, 6" x 6" x 4"	5	Added by production team
	ea		5	
	Type: I	Junction Box, PVC, 6" x 6" x 4"	1704432-9999	###
10	37975	Junction Box, 6" x 6" x 4", Hammond EJ664	1	Added by production team
	ea	with Back Panel and Hinged Lid, NEMA 4	1	
	Type: I	Junction Box, 6" x 6" x 4", Hammond EJ664	1704432-9999	###
10	P1128	Elbow, 45deg, PVC 40, 4", SxS, 417-040G	1	Added by production team
	ea		1	
	Type: I	Elbow, 45deg, PVC 40, 4", SxS, 417-040G	1704432-9999	####
10	37795	Sealant, MetalSafe, Liquid Rubber, Black 3.7	6	---
-	ea		6	
	Type: P	---	1704432-0134	1
10	37796	Sealant, Polyurethane, Self Leveling, Grey 8	8	---
-	ea		8	
	Type: P	---	1704432-0131	1
10	29551	Insulation, Backer Rod, 7/8" x 15'	10	---
-	ea		10	
	Type: P	---	1704432-0131	2
10	37794	Insulation, Backer Rod, 3/8" x 30'	10	---
-	ea		10	
	Type: P	---	1704432-0131	3
10	22772	Foam, Spray, Tiger Foam, 200BF, Fast Rise	2	---
-	ea		2	
	Type: P	---	1704432-0131	4
10	21768	Chemical, Bacteria, Dry for Start Up, 25lbs p	5	---
-	pail	25 lb per pail (Buy in Pail Quantities)	5	
	Type: I	BI-CHEM CWT Blend CAN product BioRem ---	1704432-0143	1
10	37797	Tape, Seam, 4" x 50', Paintable	1	---
4	ea		1	
	Type: P	---	1704432-0134	2

Tag	Part Number	Part Description	Req Rec PO #	EngMemo Line
15	27536	Weather Barrier, Blueskin, 9" x 50' Roll	4	---
-	ea		0	
	Type: P	---		0
15	38671	3/4" copper pipe insulation foam 6' long	20	---
-	ea		0	
	Type: P	---		0
15	38672	Insulation, rigid foam sheet, 3", R10, codebo	10	---
-	ea	Blue Styrefoam	0	
	Type: P	---		0
15	10088	Elbow, 90deg, PVC 40, 6", SxS, 406-060G	2	---
-	ea		0	
	Type: I	---	1704432-0170	1
15	16240	Pipe, PVC 40 (Clear), 6"	4	---
-	ft	10ft Length, 40-060CL	0	
	Type: X	---		0
15	P1188	Flexible Coupling, 6" x 6"	4	---
-	ea		0	
	Type: I	---	1704432-0170	2
15	9998	Misc Part, Parts not included in purchasing	6	---
-	ea		0	
	Type: P	Aeration connection pipes 3 - Pre to Air 3 - Air to air		0
15	9998	Misc Part, Parts not included in purchasing	4	---
-	ea		0	
	Type: P	vent stack		0
15	9998	Misc Part, Parts not included in purchasing	2	---
-	ea		0	
	Type: P	MBR Overflow Pipes		0
15	9998	Misc Part, Parts not included in purchasing	1	---
7902	ea		0	
	Type: P	container 7902		0
15	9998	Misc Part, Parts not included in purchasing	1	---
7903	ea		0	
	Type: P	Container 7903		0
15	9998	Misc Part, Parts not included in purchasing	1	---
7904	ea		0	
	Type: P	Container 7904		0

Tag	Part Number	Part Description	Req Rec PO #	EngMemo Line
15	9998	Misc Part, Parts not included in purchasing	1	---
7905	ea		0	
	Type: P	Container 7905		0
100	P1128	Elbow, 45deg, PVC 40, 4", SxS, 417-040G	1	Added by production team
	ea		1	
	Type: I	Elbow, 45deg, PVC 40, 4", SxS, 417-040G	1704432-9999	###
500	10951	Elbow, 45deg, PVC 40, 6", SxS, 417-060G	1	---
-	ea		1	
	Type: I	---	1704432-0089	22
500	M1489	Filter, Silencer, Solberg, FS-230P-300	2	---
B501/2	ea	3"	2	
	Type: P	---	1704432-0091	1
500	36870	Transmitter, pH, Prominent pH Sensor PHER	1	MBR
PH-501	ea	requires probe holder p/n 36871	1	
	Type: P	-	1704432-0071	4
6100	15871	Spill Containment, Single Drum, Eagle 1633	3	---
-	ea		3	
	Type: P	---	1704432-0161	1
6100	19891	Pump, Metering, Misc	1	---
P-610X	ea	See Description for part details	1	
	Type: P	- BT4B0708PVT2000UD010A01 Flow: 1.88GPH / 7.10L/H Pressure: 102PSI / 07BAR Options Included: - dosing head material PV PVDF - sealmaterial T st.diaphragm w. PTFE seal - execution of dosing head 2 w. Bleed.v. , w/o. valvespr. - hydraulic-connection 0 standard-connection - execution 0 Hous.RAL5003/hoodRAL2003 - Logo 0 w. PM-Logo - type of voltage U universal 100-240 V - cable and plug D 2m USA 115 V - relay function 0 without relay - supplies 1 STDR. FV,IV,TB for PP, PV, NP - control system type 0 without lock - control version A external analog 0-20mA/4-20mA - Remote stop 0 Pause break con., Niv. break - auxiliar frequency 1 external callable frequency	1704432-0162	1
6100	25823	Pump, Metering, Parts, Multi-function Valve	3	---
p-610x	ea	PVDF, 87PSIG Size 2	3	
	Type: P	740427 ---	1704432-0162	2

Tag	Part Number	Part Description	Req Rec PO #	EngMemo Line
7906	20890	Container, Misc	1	---
7906	ea	See description	1	
	Type: P	53 foot Hi Cube Strong Industrial Steel Used Shipping Container As-is Where-is	1704432-0027	1
7906	24305	Hood, Louver, 21"	1	---
7906	ea	Fits 18" Louver	1	
	Type: I	---	1704432-0049	84
7906	24547	Hood, Fan, 15"	1	---
f7961	ea	Fits 12" Fan	1	
	Type: I	---	1704432-0049	83

newterra ltd.
1291 California Avenue, Brockville, ON K6V 5W3
(800) 420-4056 / www.newterra.com

APPENDIX C

Testing Checklists/Pre-Commissioning Test Checklist

© 2017 by **newterra**, ltd.
All rights reserved. No part of this document may be reproduced or transmitted in any form or by any means, electronic, mechanical, photocopying, recording, or otherwise, without prior written permission of **newterra** ltd.

1291 California Avenue, P.O. Box 1517
Brockville, ON, K6V 5Y6
T: 800.420.4056 F: 289.203.1319

Pre-Commissioning Checklist – 1704432

Please note that **newterra** has a limited number of Technicians. In order to successfully support your startup, **newterra** requires that the Pre-Commissioning Checklist be returned at least 10 business days prior to mobilizing a Technician to site (subject to Technician availability). **newterra** will not mobilize to site until the Pre-Commissioning Checklist has been executed and returned to service@newterra.com. Or by Fax to: 289.203.1319.

If newterra startup activities are delayed due to lack of site readiness then there may be additional charges associated with overtime and/ or additional days on site.

newterra highly recommends that the system is started by a factory trained startup technician to ensure the long term success of your project. We understand that this may not always be feasible in which case we would require a highly skilled technician capable of troubleshooting both mechanical and electrical aspects of a process treatment system and be familiar with our manual, equipment and capable of training the operator on operating and maintenance requirements of the treatment system.

The purpose of this report is to ensure that the customer is prepared for startup.

Checklist	Customer Initial	newterra Initial
Complete a visual inspection of all units when placed on the pad. **Record any damage to the systems that may have occurred during shipping and provide photos to newterra.		
Verify that system has been installed on a solid, level area		
Verify that system has been installed in accordance with the system layout drawing.		
Verify that the required approvals are in place to allow the system to discharge air and water.		
Verify site power is installed to the control panel and necessary electrical approvals have been completed.		
Verify that all high voltage wiring is completed and wired according to the Field Aid/ project O&M manual.		
Verify that all low voltage wiring is completed and wired according to the Field Aid/ project O&M manual.		
Verify that all process piping has been installed and terminated.		
Verify that all field piping is completed and wells are connected to the operating system.		
Verify that a phone line is installed and activated for alarm autodialer, if required.		
Please read through the packing list (located in the manual) and ensure the correct equipment was delivered.		
There are some items that have shipped loose with your system that will need to be installed prior to start up, these may include exterior components such as stacks, filters and hoods. Sufficient hardware should have been supplied to facilitate installation.		
Some unions in the system may have been loosened for shipment. This is done to prevent damaging susceptible equipment, especially flow meters. All unions in the systems should be checked and tightened.		

1291 California Avenue, P.O. Box 1517
Brockville, ON, K6V 5Y6
T: 800.420.4056 F: 289.203.1319

Any external equipment such as tanks, well pumps, oxidizers, etc. need to be installed, plumbed and wired prior to start up.		
Some items may have been secured with brackets or tie downs for shipment – ensured these have been removed (eg. reciprocating compressors/ stacked blowers).		
In colder climates, if you do not plan on starting up the system before the winter months, please refer to your O&M manual for instructions on extended shutdowns. It is imperative that the correct measures be taken to prevent freezing water from damaging your system.		
If the system has been winterized, ensure all anti-freeze has been drained and disposed of in accordance with local regulations.		
Email pictures of power connection, site piping connections and installed equipment to service@newterra.com.		

MBR Specific Checks	**Customer Initial**	**newterra Initial**
Verify that Ethernet network is installed and activated if required.		
If Ethernet is to be used on site please provide 2 Static IP Addresses ____.____.____.____ ____.____.____.____		
Verify fresh water is available for Wet Test.		
Is waste activated sludge from an operating WWTP available for start-up (Seed Sludge)		
Verify Sufficient amount of sewage is available to start system (Check with newterra to determine actual amounts required).		

RO Specific Checks	**Customer Initial**	**newterra Initial**
Ensure all tanks are clean and free of dirt and debris		
Verify that a Fresh Water supply is installed to system.		
Ensure that the necessary chemicals for system operation and cleaning are available for use for starting the installation and commissioning phase.		
Verify the feed water quality		
Verify building process flow and instrumentation matches P&ID drawing. Check off drawing components against actual		
DO NOT LOAD THE MEMBRANES UNTIL DIRECTED as all system inlet piping must be flushed thoroughly before it is connected to the RO system.		

newterra
clean water. modular solutions. simple.
1291 California Avenue, P.O. Box 1517
Brockville, ON, K6V 5Y6
T: 800.420.4056 F: 289.203.1319

DA Specific Checks	Customer Initial	newterra Initial
GENERAL INSTALLATION		
Stainless Steel nameplate present, visible and contains make and model information in agreement with vendor drawings		
Vessel Saddles Bolted To Structural Steel		
Vessel Properly Insulated for Personnel Protection at a minimum		
Access Platform Properly installed for full access to heater section		
Vessel Manway Gaskets appear to be undamaged		
VESSEL INTERNALS		
Heater Section Tray Assemblies Properly fastened and have been installed per the O & M manual.		
Equalizer connection to storage tank is unobstructed by any shipping materials		
Spray Nozzles appear unobstructed and undamaged by shipping		
PIPING		
Pipes properly insulated for Personnel protection at a minimum		
Relief valve installed and discharge piping run to roof		
Piping systems properly flushed		
Vent Valve is installed and fully open for initial vessel fill		
Steam Control Valve and Muffling plate installed as per drawings		
Low pressure steam trap isolated and discharge piped to flash separator		
Low pressure flash steam lines installed and isolated for initial testing		
Vacuum breaker installed per manufacturer's instructions		
Overflow trap installed with discharge piped to Blowdown Tank		
Condensate control valve installed and isolated for initial testing		
Strainer within condensate control valve station installed and cleaned		
Makeup control valve installed and isolated for initial testing		
Strainer within makeup control valve station installed and cleaned		
Level bridle and gauge glass column installed as per manufacturer's drawings. Vessel isolation valves closed for initial fill.		
Sight glass sections installed with proper washers and do not have any apparent cracks or defects.		
Level switches installed at proper heights relative to the vessel according to the manufacturer's drawings		
Level transmitter properly installed as per instrument installation detail IS-8308		
Pressure transmitter is properly installed as per instrument installation detail IS-8127		
Pressure and temperature Gauges installed with isolation valves as needed.		
Deaerator Steam flow transmitter properly installed as per instrumentation installation detail IS-8308		
Vessel Drain valve installed and fully closed for initial fill		

1291 California Avenue, P.O. Box 1517
Brockville, ON, K6V 5Y6
T: 800.420.4056 F: 289.203.1319

Chemical feed connection valved and capped. Proper chemical feed is not required at this stage of commissioning		
All remaining spare connections on the storage tank and heater section should be tightly secured with a blind flange.		
CONTROL AND POWER WIRING		
120 volt power is run to Deaerator control panel		
Three Level switches are wired back to Deaerator Control Panel		
Pressure Transmitter is wired back to Deaerator Control Panel		
Level Transmitter is wired back to Deaerator Control Panel		
Steam Pressure Control Valve is wired back to Deaerator Control Panel		
Makeup Water Control Valve is wired back to Deaerator Control Panel		
Deaerator Steam flow transmitter is wired back to existing panel.		

Comments:
Note any deficiencies or damage to the system on arrival.

1291 California Avenue, P.O. Box 1517
Brockville, ON, K6V 5Y6
T: 800.420.4056 F: 289.203.1319

In the event additional parts are required to be sent for commissioning, please provide a shipping address, contact name and cell number

_____

_____

_____

Provide a list of PPE required or any additional Health and Safety or training requirements that will be required for site access.

_____

_____

_____

_____

Site Address: _____

Onsite Contact Name & Cell Number: _____

Customer Sign-off: _____Date: _____

newterra clean water. modular solutions. simple.	Installation Checklist		
	Has Acceptance Criteria Been Met (Yes/No)	*Details*	*Initial/Date*
Misc			
Confirm that all items have been received in accordance witht the packing list			
All items are undamaged. Any damages are to be reported to newterra as soon as possible.			
Inspect all exterior of containers and note any damages, Take pictures of any damages and report to the newterra project manager as sooon as possible.			
Inspect WWTP placement location and confirm that it is firm and level. It not report to the newterra project manager as soon as possible. WWTP needs to be firm and level otherwise the operation of the WWTP can be compromised.			
Containers may be placed in a on-site storage location until ready for placement. Containers should be placed and installed before freezing temperatures			
Civil			
Placement of container on site. 6 containers. After container placement, inspct for any damages and take pictures. Report damages to newterra project manager.		Lifting - crane equiv required to move container. Fine placement via forklifts or equiv. Firm/Level base for containers See Appendix A of this manual for container layout	
Install Liquid Rubber Container Seal as per attached drawing.			
Electrical			

newterra clean water. modular solutions. simple.	Installation Checklist		
	Has Acceptance Criteria Been Met (Yes/No)	*Details*	*Initial/Date*
Site power has been connected and verified as per system design criteria			
All internal electrical connections have been terminated			
Confirm Phase Monitor is not in alarm			
Site voltage measured:		L1/L2:	
		L2/L3:	
		L3/L1:	
		L1/GRD:	
		L2/GRD:	
		L3/GRD:	
Check field wiring and piping as per drawings at Appendix A of the O&M Manual			
Check panel for loose wiring, Correct as required			
Check voltage on AC transformer			
Check voltage on DC transformer			
Check I.S. barrier is grounded as per input drawing			
All customer wiring has been completed in accordance with the electrical drawing in Appendix A.			
Mechanical			
Connect all internal piping and hose connections between the containers and external piping hook ups as per P&ID at Appendix A.			

newterra clean water. modular solutions. simple.	Installation Checklist		
	Has Acceptance Criteria Been Met (Yes/No)	*Details*	*Initial/Date*
Inspect the EQ, Pre-Anox, Aeration and Post-Anox Tanks and install anodes. Confirm that the tanks are clean and diffusers & hose connecting are secure.			
Inspect MBR tanks and removing transportation securing straps. Ensuring all hoses and fittings are tight and connected.			
MBR tank - Ensure that the membranes have not moved or shifted in the cassette. Re-secure as necessary. Ensure that the diffusers have not shitfted and are secure. Re-secure as necessary.			
Inspect the screens (SCR-201/202) and ensure that the rotating brushes are still aligned. Adjust as necessary.			
Inspect TNK-101/102/103, TNK-201 & TNK-6101/6102 and ensure that they are clean and free of any debris.			
Ensure all unions and fittings are tight, as some are loosened to prevent stress in shipping			
Check alignment of motors, Correct as required			
Check all motor belt tensions, Correct as required			
Check alignment of pulleys for all belt driven blowers			
Install the permeate header to the membrane tank and connect all piping/hoses.			

newterra clean water. modular solutions. simple.	Installation Checklist		
	Has Acceptance Criteria Been Met (Yes/No)	*Details*	*Initial/Date*
Ensure that the backwash tank (TNK-801) and sludge tank (TNK-901) are clean and free of debris. Clean as necessary.			

Installation Acceptance Sign-Off Form

1704432 - Amaruq Mine WWTP

newterra is pleased to announce that the Installation phase of 1704432, has successfully been completed. In order to move to the Commissioning phase, a visual inspection and walkthrough of the plant will be required, followed by signoff of this document. Installation signoff will be conditional on the completion of items listed in a Punchlist created during this walkthrough.

	Installation Signoff		Customer Acceptance
Name:	_____	**Name:**	_____
Company:	_____	**Company:**	_____
Date:	_____	**Date:**	_____
Signature:	_____	**Signature:**	_____

newterra clean water. modular solutions. simple.	Commissioning Checklist		
	Has Acceptance Criteria Been Met (Yes/No)	*Details*	*Initial/Date*
Ensure availability of on-site emergency eyewash station and personal protection equipment.			
Ensure that all tanks are clean and free of any dirt or debris (this is to prevent obstruction or damage to the piping, pumps, and membranes).			
Ensure that all connections have been provided and joints have been tightened.			
Check the placement of the air diffusers in the equalization tank(s) and aeration tank(s) if incorrectly positioned, proper adjustment has to be performed.			
Verify membrane modules are secure within the membrane tanks and that there is no lateral movement (less than an inch) of the membrane modules			
Verify building process flow and instrumentation matches P&ID drawing. Check off drawing components against actual (preferably with the customer present). Ensure this document is placed in the commissioning binder			

Commissioning Checklist

	Has Acceptance Criteria Been Met (Yes/No)	*Details*	*Initial/Date*
Measure and Verify influent characterisitics and record.			
Confirm that the custoomers piping and lectrical connections to the WWTP are complete			
Confirm if any grinder pumps are upstream of the WWTP. Advise the newterra project manager as soon as possible.			
Have all rotating equipment oiled and greased as per manufactured recommendations			
Fill system with water and check for leaks (liquid and vapor) by filling the EQ tank first and then process the water thru the system by tank			
Check rotation of all motors that were field wired			
Ensure that proper electrical grounding and lightning protection installed by customer			

Parameters	Unit	Influent*	Effluent
pH	s.u.	6 - 9	6.5 – 8.5
Fat, Oil, Grease (FOG)	mg/L	< 30	< 5
Biological Oxygen Demand (BOD)	mg/L	907.5	< 25
Total Suspended Solids (TSS)	mg/L	262.5	< 25
Total Kjeldahl Nitrogen (TKN)	mgN/L	130	-
Unionized Ammonia Nitrogen (NH_3-N)	mgN/L	-	< 1.25
Nitrate Nitrogen (NO_3-N)	mgN/L	-	< 5
Total Phosphorus (TP)	mgP/L	12	< 0.5
Fecal Coliform	CFU/100mL	-	< 200**
Total Residual Chlorine	mg/L	-	< 0.02
Alkalinity (assumed)	mg/L as $CaCO_3$	471	-
Total Dissolved Solids(TDS)	mg/L	< 1,200	-

newterra clean water. modular solutions. simple.	Commissioning Checklist		
	Has Acceptance Criteria Been Met (Yes/No)	*Details*	*Initial/Date*
Check voltage + amperage + name plate info against mechanical test record on all motors **NOT** recorded in FAT. Please include this in the commissioning binder			
Fill out mechanical test record on each motor and check amperage and voltage. Document amperage on the System test records in the operating manual in the Field test load section			
Check overload settings for all motors			
Test position of ball float switches for proper start/stop level as per the P&ID and control narrative in this manual and observed on the HMI.			
Check that PLC Run light is on and no alarm lights are present on the PLC			
Wet test all control inputs and outputs (See Device Verification section in this checklist)			
Test analogue inputs (See Device Verification section in this checklist)			
Wet test all shut down alarms (See Control Narrative at Appendix K in this manual)			
Manually test all permeate stopping alarms(See Control Narrative at Appendix K in this manual)			
Test vacuum and pressure relief valve			
Check the setting of level switches/transmitters			
Check the hydraulic flow through the plant			
Check if all the ancillary equipment and controls of the plant function as per design			
Fill the system with potable water using the inlet and confirm piping & repair any leaks.			

newterra clean water. modular solutions. simple.	Commissioning Checklist		
	Has Acceptance Criteria Been Met (Yes/No)	*Details*	*Initial/Date*
Confirm heater and fan operation in the screen container.			
Fill TNK-101/102/103 and check for leaks. FIT-101 operations. Confirm operation of all level switches			
Confirm operation of SCR-201/202 and pump P-201/202. Check for leaks and repair as necessary. Confirm operation of FIT-201. Confirm operation of all level switches			
Fill EQ Tank (TNK-501), check for leaks. Confirm tank heater operation. Confirm LT-301 operation via the HMI display for values. Confirm operation of P-301/302 Confirm B-301/302 operation and Check for o Buoyancy of air diffusers and if this occurs, empty the tank and fix; o Air leakages: if this occurs, tighten up the fittings;			
Confirm operation of H-301/302, TSLL-301 and all level switches			
Fill Pre-Anox tank with water (TNK-401) and confirm operation of educators and P-401/402			
Confirm operation of H-401/402, TSL-401 and all level switches			

newterra clean water. modular solutions. simple.	Commissioning Checklist		
	Has Acceptance Criteria Been Met (Yes/No)	*Details*	*Initial/Date*
Fill Aeration Tanks (TNK-501/502), check for leaks. Confirm tank heater operation. Confirm LT-501/DO-501/PH-501 operation via the HMI display for values. Confirm operation of P-501/502/503. Confirm operation of the sprayer. Confirm operation of B-501/502 and Check for o Buoyancy of air diffusers and if this occurs, empty the tank and fix; o Air leakages: if this occurs, tighten up the fittings;			
Confirm operation of H-501/502/503/504, TSL-501/502 and all level switches			
Fill Post Post-Anox Tank (TNK-551) with water and check for leaks. Conform operation of P-554/555. Confirm operation of educators. Confirm operation of P-551/552			
Fill MBR tanks with water (TNK-601/602) and check for leaks. Confirm level switch operation. Confirm operation of B-601/602, confirm all level switch operation, and Check for o Buoyancy of air diffusers and if this occurs, empty the tank and fix; o Air leakages: if this occurs, tighten up the fittings;			
Perform electrical and instrumentation (E&I) functional checks and adjustment of level switches.			

newterra clean water. modular solutions. simple.	Commissioning Checklist		
	Has Acceptance Criteria Been Met (Yes/No)	*Details*	*Initial/Date*
Turn on the air blower(s) for the equalization tank(s) and blower(s) for aeration tank(s), and check for: o Buoyancy of air diffusers and if this occurs, empty the tank and fix; o Air leakages: if this occurs, tighten up the fittings;			
Manually check water temperature and DO (dissolved oxygen): with a hand-held DO meter and adjust air flow to keep it up to 0.5 – 1 mg/L for equalization tank(s) and 2 - 3 mg/L for aeration tank(s); check the DO readings on the touch screen.			
DO Control System: check automatic ON/OFF of Aeration Tank air blowers at low and high settings of DO without the return of aerated water from the membrane tanks to aeration tanks (i.e. turn off transfer pump(s) from aeration tank(s) to membrane tank(s) and turn of recirculation pump(s) from membrane tank(s) to aeration tank(s), if included), and record blower ON/OFF duration.			
Fill membrane Tank, check for leaks. Confirm operation of P-601/701/702/801/6101/6102. Perform manual backwash to confirm operation. Check for o Buoyancy of air diffusers and if this occurs, empty the tank and fix; o Air leakages: if this occurs, tighten up the fittings;			

newterra clean water. modular solutions. simple.	Commissioning Checklist		
	Has Acceptance Criteria Been Met (Yes/No)	*Details*	*Initial/Date*
Confirm operation of all container fan and heaters.			
Fill sludge holding tank with water. Confirm diffuser operation and level switch operation. Confirm P-901 operation.			
Introduce seed sludge from cusomer thru the influent and process. See Section 6 of the manual for the procedure. If seed sludge is unavailable, then use dry bacteria.			

newterra clean water. modular solutions. simple.	Membrane Inspection (Clean Water)		
	Has Acceptance Criteria Been Met (Yes/No)	*Details*	*Initial/Date*
Inspect membrane module that all bolts are secure			
Ensure all hose clamps are secure			
Fill tank until membranes are completely submerged, re-check bubble pattern			
Enable membrane operation from the PLC screen			
Start the transfer pump(s) from the Post Anox tank(s) to the membrane tank(s) and fill the membrane tank(s) with potable water.			
Start the air blowers for the membrane tank(s) and check for an even distribution of air across the membrane filter area and air bubble uniformity above the membrane module/cassette.			
Check hydraulic flow pattern through the membranes and between membrane module/ cassette and tank wall.			
Make a clean copy of the Clean Water Testing Sheet presented in Appendix K of this O&M Manual.			
Record all checked parameters in the Clean Water Testing Sheet:			
Pre-prime the permeate pumps according to manufacturer'smfg instructions			
Start the permeate (vacuum) pumps.			

newterra clean water. modular solutions. simple.	Membrane Inspection (Clean Water)		
	Has Acceptance Criteria Been Met (Yes/No)	*Details*	*Initial/Date*
Record and set the initial vacuum settings on the system to determine correct TMP of the membranes. This step is required based on the Vacuum transmitter located higher than the water level.			
Record the vacuum (TMP) on the gauge(s) on the permeate line [for clean water could be 0.05 to 0.07 bar (20" to 29" WC)].			
Record water temperature and DO with a hand-held DO meter.			
Gradually increase the permeate flow while recording the vacuum (TMP) on the gauges up to the anticipated peak wastewater flow.			
Ensure membrane module is securely fastened to membrane tank and no movement is detected. Ensure wheels are chocked to prevent membrane module movement during operation			

newterra clean water. modular solutions. simple.	Full Automatic System Test		
	Has Acceptance Criteria Been Met (Yes/No)	*Details*	*Initial/*
Record Membrane Performance after 3 min at the design flow for each membrane cassette with clean water record findings in 'MBR Test Preformance' data sheet			
Introduce Waste Activated Sludge (inject slowly through normal waste water inlet, always pre-screen)		Sludge Obtained From: MLSS:	
Record Membrane Performance after 3 min at the design flow for each membrane cassette in 'MBR Preformance' data sheet			

newterra
clean water. modular solutions. simple.

Membrane Performance (test)

MBR Number	Flow	Flux	Permeability	Date	Operator Initials

Influent-Effluent

1 Confirm Influent/Effluent parameters - below are the design parameters.

Parameters	Unit	Influent*	Effluent
pH	s.u.	6 - 9	6.5 – 8.5
Fat, Oil, Grease (FOG)	mg/L	< 30	< 5
Biological Oxygen Demand (BOD)	mg/L	907.5	< 25
Total Suspended Solids (TSS)	mg/L	262.5	< 25
Total Kjeldahl Nitrogen (TKN)	mgN/L	130	-
Unionized Ammonia Nitrogen (NH_3-N)	mgN/L	-	< 1.25
Nitrate Nitrogen (NO_3-N)	mgN/L	-	< 5
Total Phosphorus (TP)	mgP/L	12	< 0.5
Fecal Coliform	CFU/100mL	-	< 200**
Total Residual Chlorine	mg/L	-	< 0.02
Alkalinity (assumed)	mg/L as $CaCO_3$	471	-
Total Dissolved Solids(TDS)	mg/L	< 1,200	-

	newterra clean water. modular solutions. simple.	**Influent-Effluent**	
2	Record here the actual influent and effluent valves from lab testing		

newterra
clean water. modular solutions. simple.

Device Verification Checklist

Device Tag	Device Type	Operation Verified	Notes	Train 1	Train 2
FIT-201	Flow Transmitter				
FIT-202	Flow Transmitter				
SCR-201	rotary brush screen				
SCR-202	rotary brush screen				
LSHH-201	Level Switch				
LSHH-202	Level Switch				
LSHH-101	Level Switch				
LSHH-102	Level Switch				
LSHH-103	Level Switch				
LSHH-203	Level Switch				
LSH-203	Level Switch				
LSL-203	Level Switch				
P-201	Pump				
P-202	Pump				
H-7911	Container heaters				
H-7912	Container heaters				
TSL-7911	Temperature low level				
LSHH-7911	Level Switch				
B-7911 and PDS-7911	Blower				
EQ Tank diffuser Grid	diffusers				
B-302/301 and PSL-301	Blower				
LSHH-301	Level Switch				
LSLL-301	Level Switch				
LT-301	Level Transmitter				
TSLL-301	Temperature sensor				
H-301 and H-302	Tank heater				
P-301/302	Pump				
Pre-Anox Educator					
H-7941 and TSLL-7901	Container heater				
P-401 and P-402					
H-401 and H-402	Tank heaters				
LSHH-401	Level Switch				
LSLL-401	Level Switch				
TSL-401	Temperature Sensor				
B-7941	Blower				
Aeration Tank diffuser grid	diffusers - TNK-501				
H-501/502	Tank heater				
LSLL-501	level switch				
TSL-501	temperature sensor				
LSHH-501	level switch				
LT-501	level transmitter				
DO-501	DO sensor				
PH-501	PH sensor				
P-501	pump				
P-502	pump				
P-503	pump				

Device Tag	Device Type	Operation Verified	Notes	Train 1	Train 2
B-501/502 and PSL-501	blower				
P-6101	Soda Ash/Caustic dosing pump				
P-6102	Alum dosing pump				
Aeration Tank diffuser grid	diffusers - TNK-502				
H-503/504	Tank heater				
LSLL-502	level switch				
TSL-501	temperature sensor				
LSHH-502	level switch				
Educators	Post-Anox Educators TNK-551				
P-553/554	Pumps				
P-551/552	Pumps				
P-6103	MicroC dosing				
B-601 and PSL-601	MBR Blower				
LSHH-601	Level Switch				
LSH-601	Level Switch				
MBR tank diffuser grid	diffusers - TNK-601				
P-701	permeate pump				
VT-701	Vacuum transmitter				
MV-701	Soleniod valve				
FIT-701	flow transmitter				
B-602 and PSL-602	MBR Blower				
LSHH-602	Level Switch				
LSH-602	Level Switch				
MBR tank diffuser grid	diffusers - TNK-602				
P-702	permeate pump				
VT-702	Vacuum transmitter				
MV-702	Motorized valve				
FIT-702	flow transmitter				
SV-801	Backwash valve				
P-801	backwash pump				
LSH-801	Level Switch				
LSL-801	Level Switch				
SV-801	Soleniod valve				
H-7961	container heaters				
H-7962	container heaters				
H-7963	container heaters				
TSL-7961	Temperature sensor				
F-7961	Container fan				
LSHH-7961	Level Switch				
LSHH-7962	Level Switch				
LSHH-901	level switch				
sludge inlet tank diffuser grid	diffusers - TNK-901				

Commissioning Acceptance Sign-Off Form

1704432 - Amaruq Mine WWTP

Newterra is pleased to announce that the Commissioning phase of 1704432 - Amaruq Mine WWTP, has successfully been completed. In order to move to the Training phase, a visual inspection and walkthrough of the plant will be required, followed by signoff of this document. Commissioning signoff will be conditional on the completion of items listed in the Punchlist created during this walkthrough.

	Installation Signoff		Customer Acceptance
Name:	_____	**Name:**	_____
Company:	_____	**Company:**	_____
Date:	_____	**Date:**	_____
Signature:	_____	**Signature:**	_____

newterra smart technology. sustainable solutions.™	Customer Training Checklist		
	Has Acceptance Criteria Been Met (Yes/No)	*Details*	*Initial/Date*
Review the operating manual with the customer explaining the various components of the manual and sources of information.			
Review the startup and shutdown procedure with operator.			
Review operation of treatment system and describe the maintenance required for each piece of equipment.			
Describe operation of panel and panel components.			
Run through complete logic and alarm sequence with customer			
Train customer to troubleshoot alarms based on input conditions to the PLC or relays in the panel.			
Discuss the operating logic with the customer so they understand how the system is configured to work.			
Have customer/operator sign training sheet			
Note name of individual and company with whom logic was reviewed:			

Training Completion Sign-Off Form

1704432 - Amaruq Mine WWTP

Newterra is pleased to announce that the training of the following operator(s) has been sucessfully completed:

	Installation Signoff		Customer Acceptance
Name:		**Name:**	
Company:		**Company:**	
Date:		**Date:**	
Signature:		**Signature:**	

COMPONENT	LONG SIDE (40') QTY.	SHORT SIDE (8') QTY.	VERTICAL (9' 6") QTY.
LIQUID RUBBER (37795)	2 (7.0L)	1 (1.40L)	1 (1.70L)
TAPE (37797)	1 (40')	1 (8')	1 (9' 6")
POLYURETHANE SEALANT (37796)	2 (1.0L)	1 (0.40L)	-
7/8" BACKER ROD (29551)	-	1 (8')	-
3/8" BACKER ROD (37794)	2 (40')	-	1 (9' 6")
SPRAY FOAM (22772)	-	1 (1.33 ft^3)	-

NOTE:

QUANTITIES OF COMPONENTS LISTED ARE FOR A SINGLE SEAL IN THE DIRECTION SPECIFIED.

A COMPLETE SEAL OF A MULTI-CONTAINER SYSTEM MAY REQUIRE THE SUMMATION OF MULTIPLE SEALS IN MULTIPLE DIRECTIONS.

THIS TABLE IS TO GIVE ROUGH ESTIMATES ON THE QUANTITIES REQUIRED.

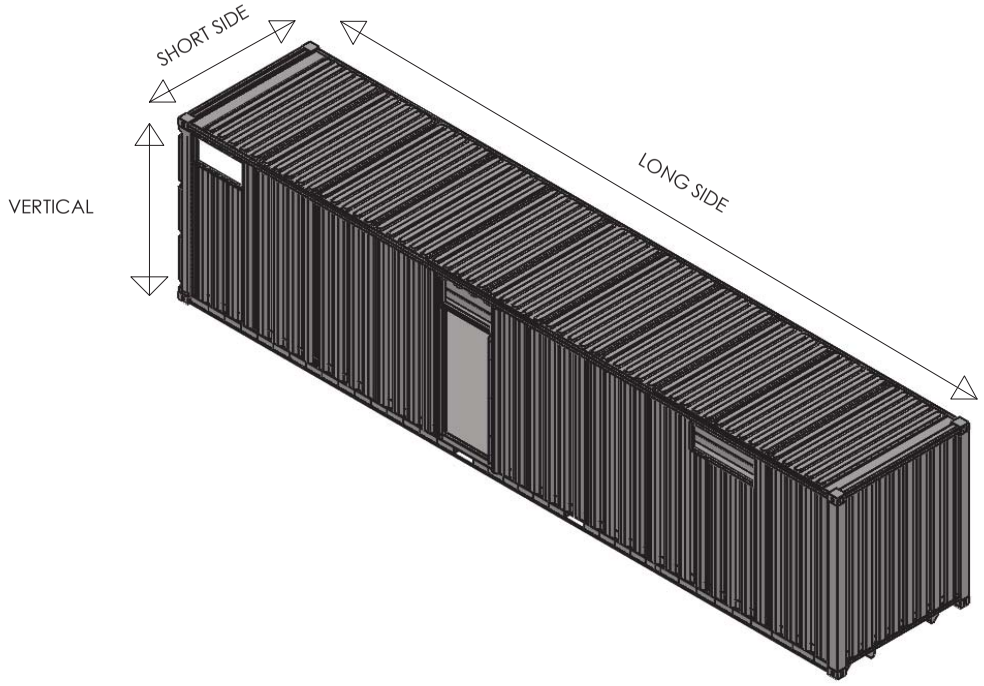

GENERAL TOLERANCES
.XX ± 1/8"
.XXX ± 1/16"
UNLESS OTHERWISE SPECIFIED DIMENSIONS ARE IN INCHES

THIS INFORMATION IS THE PROPERTY OF newterra AND CANNOT BE REUSED OR REPRODUCED WITHOUT WRITTEN CONSENT.

LEVEL	DATE	BY	REVISION
B1	27/02/17	GH	FOR PRODUCTION - REVISED SEALING METHOD
B	11 Nov 2015	OM	FOR PRODUCTION
A1	26 Aug 2015	OM	FOR REVIEW
A	22 July 2015	OM	FOR REVIEW

DWG. NO:
PROJECT NUMBER:
TITLE: LIQUID RUBBER CONTAINER SEAL
CUSTOMER: newterra
DRAWN BY: OM
DATE: 22 July 2015
SHEET 1 OF 7

CONTAINERS JOINED AT LONG SIDE

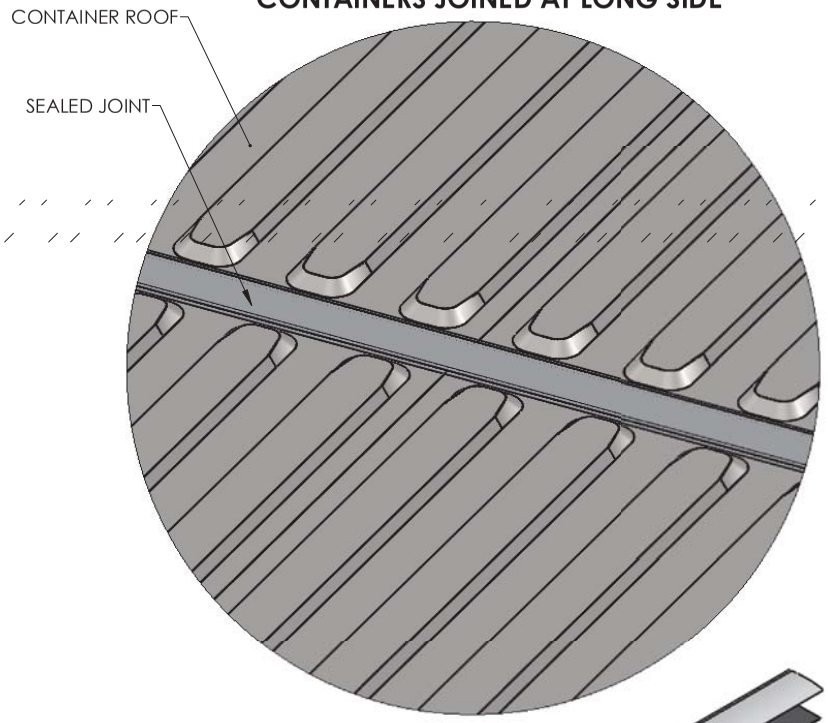

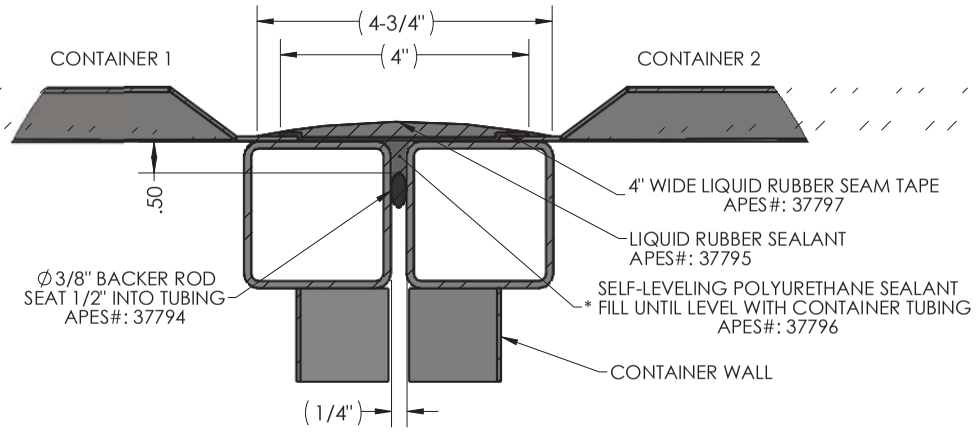

SECTION A-A
CONTAINERS JOINED ALONG LONG SIDE
SCALE 1 : 2

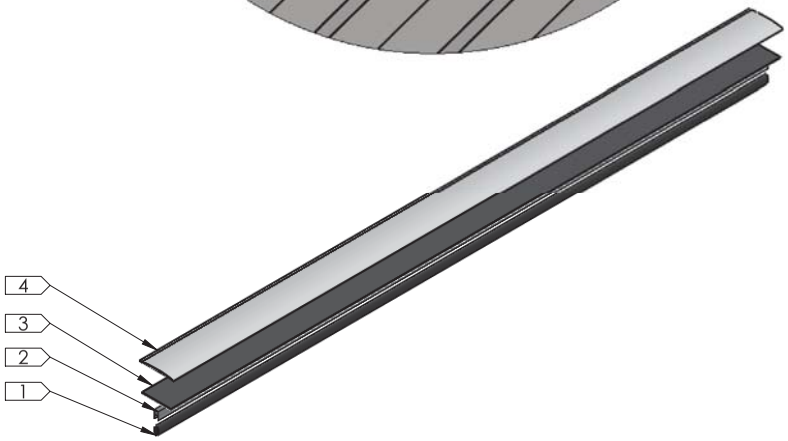

TYPICAL STEPS FOR SEALING LONG SIDE OF CONTAINER JOINTS

1. PUSH BACKER ROD INTO GAP BETWEEN CONTAINER TUBING; 1/2" DOWN.
2. APPLY SELF LEVELING POLYURETHANE SEALANT ON TOP OF BACKER ROD UNTIL LEVEL WITH TUBING.
3. APPLY LIQUID RUBBER TAPE CENTERED OVER GAP, 4" WIDE. ENSURE SMOOTH TIGHT TO SURFACE SEAL.
4. APPLY LIQUID RUBBER SEALANT WITH A MINIMUM CENTERED WIDTH OVER THE GAP OF 4 3/4". ENSURE NONE OF THE TAPE IS VISIBLE AFTER THIS APPLICATION.

GENERAL TOLERANCES
.XX ± 1/8"
.XXX ± 1/16"
UNLESS OTHERWISE SPECIFIED DIMENSIONS ARE IN INCHES

THIS INFORMATION IS THE PROPERTY OF newterra AND CANNOT BE REUSED OR REPRODUCED WITHOUT WRITTEN CONSENT.

LEVEL	DATE	BY	REVISION
B1	27/02/17	GH	FOR PRODUCTION - REVISED SEALING METHOD
B	11 Nov 2015	OM	FOR PRODUCTION
A1	26 Aug 2015	OM	FOR REVIEW
A	22 July 2015	OM	FOR REVIEW

DWG. NO:
PROJECT NUMBER:
TITLE: LIQUID RUBBER CONTAINER SEAL
CUSTOMER: newterra
DRAWN BY: OM
DATE: 22 July 2015
SHEET 2 OF 7

CONTAINERS JOINED ALONG SHORT SIDE - BARN DOOR END TO BARN DOOR END

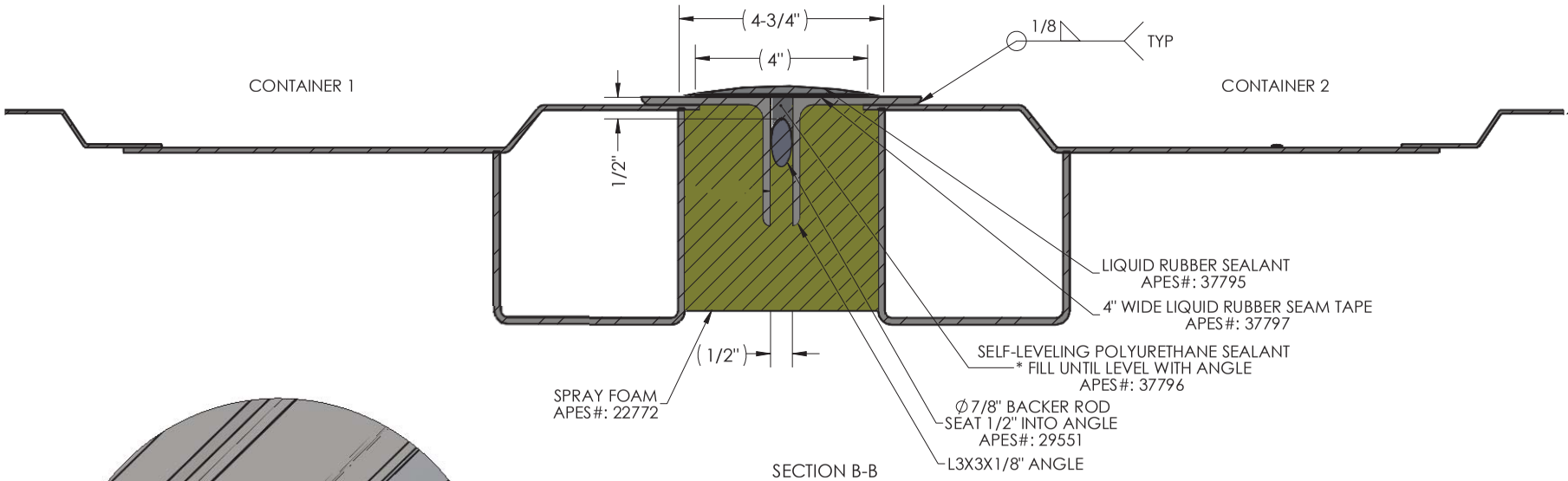

SECTION B-B
CONTAINERS JOINED ALONG SHORT SIDE - BARN DOOR END TO BARN DOOR END
SCALE 1 : 2.5

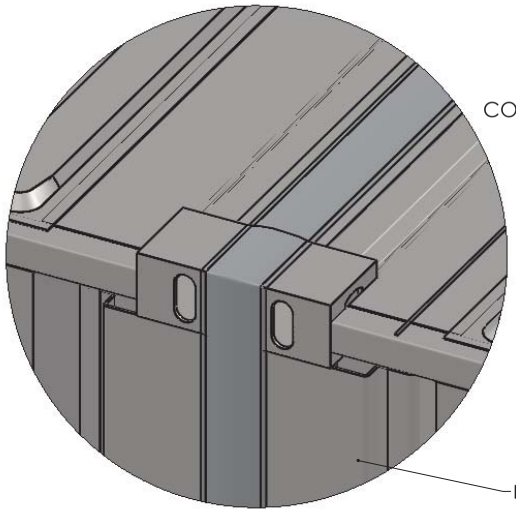

STEPS FOR SEALING SHORT SIDE OF CONTAINERS:

1. PERFORM STEPS 1-4 OF TYPICAL SEALING OUTLINED ON PAGE 1 ON TOP OF CONTAINERS.
2. FILL UNDERSIDE AS SHOWN WITH SPRAY FOAM WHEN POLYURETHANE LEVELING SEALANT HAS SET.
3. FOLLOW STEPS 3 & 4 AND ADD SPRAY FOAM TO BARN DOOR END VERTICAL SEALS.

GENERAL TOLERANCES
.XX ± 1/8 "
.XXX ± 1/16 "
UNLESS OTHERWISE SPECIFIED DIMENSIONS ARE IN INCHES

THIS INFORMATION IS THE PROPERTY OF newterra AND CANNOT BE REUSED OR REPRODUCED WITHOUT WRITTEN CONSENT.

LEVEL	DATE	BY	REVISION
B1	27/02/17	GH	FOR PRODUCTION - REVISED SEALING METHOD
B	11 Nov 2015	OM	FOR PRODUCTION
A1	26 Aug 2015	OM	FOR REVIEW
A	22 July 2015	OM	FOR REVIEW

DWG. NO:
PROJECT NUMBER:
TITLE: LIQUID RUBBER CONTAINER SEAL
CUSTOMER: newterra
DRAWN BY: OM
DATE: 22 July 2015
SHEET 3 OF 7

CONTAINERS JOINED ON BOTH LONG AND SHORT SIDES

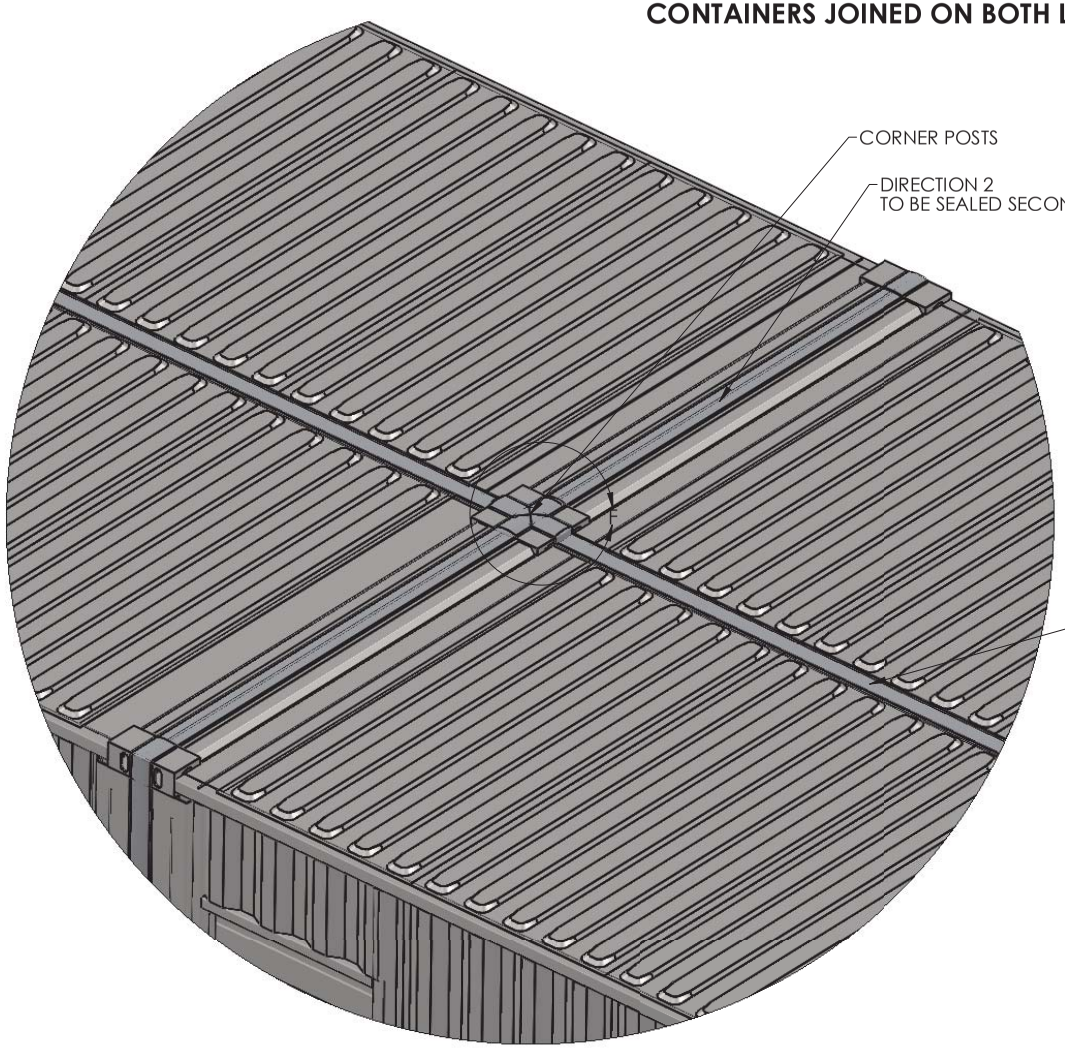

STEPS FOR SEALING ABOVE CONTAINERS JOINED IN BOTH DIRECTIONS:

1. CLEAN AND PRIME AREA
2. PERFORM STEPS 1 TO 4 OF TYPICAL SEALING ORDER OUTLINED ON PAGE 1 IN DIRECTION 1 - ALONG LONG SIDE FIRST WITH ∅3/8" BACKER ROD.
3. PERFORM STEPS 1 TO 4 OF TYPICAL SEALING ORDER OUTLINED ON PAGE 1 IN DIRECTION 2 - ALONG THE SHORT SIDE WITH ∅7/8" BACKER ROD.
4. PERFORM STEPS 3 & 4 WHEN SEALING CORNER POST JOINTS. (TAPE AND LIQUID RUBBER).

NOTE: WHEN SEALING DIRECTION 1 & 2 CONTINUE WRAP OF TAPE AND RUBBER ACROSS THE CORNER POSTS.

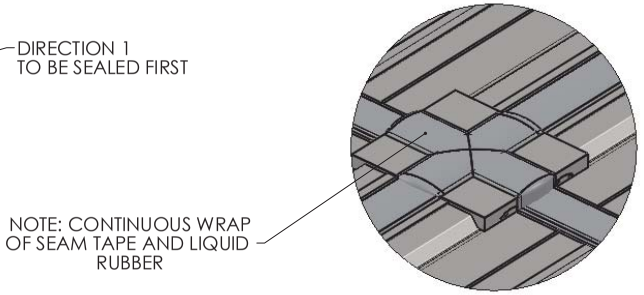

DETAIL F
CORNER POST JOINTS
SCALE 1 : 10

GENERAL TOLERANCES
.XX ± 1/8 "
.XXX ± 1/16 "
UNLESS OTHERWISE SPECIFIED DIMENSIONS ARE IN INCHES

THIS INFORMATION IS THE PROPERTY OF newterra AND CANNOT BE REUSED OR REPRODUCED WITHOUT WRITTEN CONSENT.

LEVEL	DATE	BY	REVISION
B1	27/02/17	GH	FOR PRODUCTION - REVISED SEALING METHOD
B	11 Nov 2015	OM	FOR PRODUCTION
A1	26 Aug 2015	OM	FOR REVIEW
A	22 July 2015	OM	FOR REVIEW

DWG. NO:
PROJECT NUMBER:
TITLE: LIQUID RUBBER CONTAINER SEAL
CUSTOMER: newterra
DRAWN BY: OM
DATE: 22 July 2015
SHEET 4 OF 7

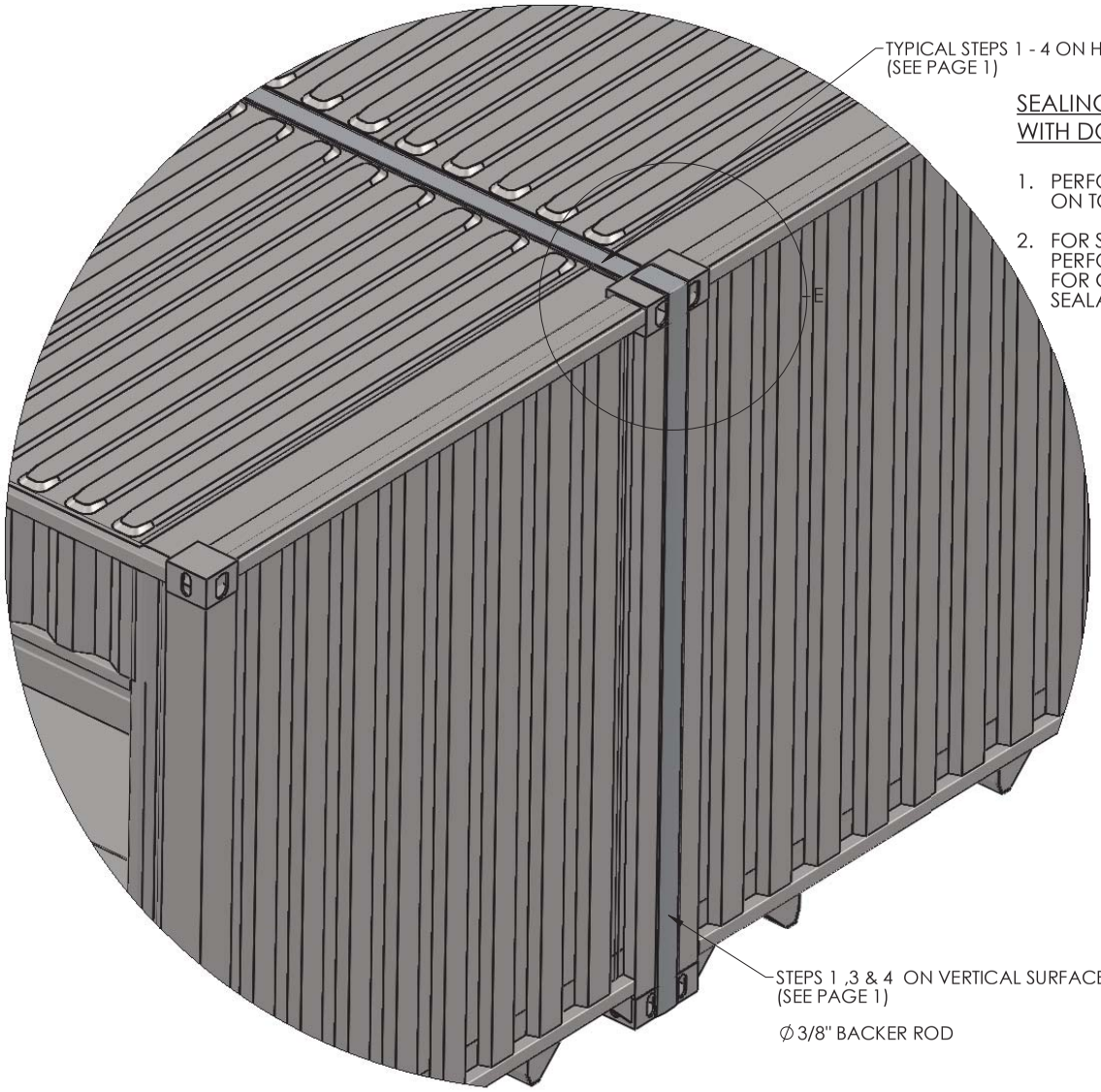

SEALING ABOVE CONTAINERS JOINED ON LONG SIDE WITH DOORWAY / PATH THROUGH CLOSE TO CONTAINERS END

1. PERFORM STEPS 1-4 OF TYPICAL SEALING ORDER OUTLINED ON PAGE 1 ON TOP OF CONTAINERS.
2. FOR SEALING VERTICAL AREA:
   PERFORM STEPS 3 & 4 ON CORNER POSTS.
   FOR GAP USE STEPS 1, 3 & 4 WITH ∅3/8" BACKER ROD. IGNORE USE OF POLYURETHANE SEALANT.

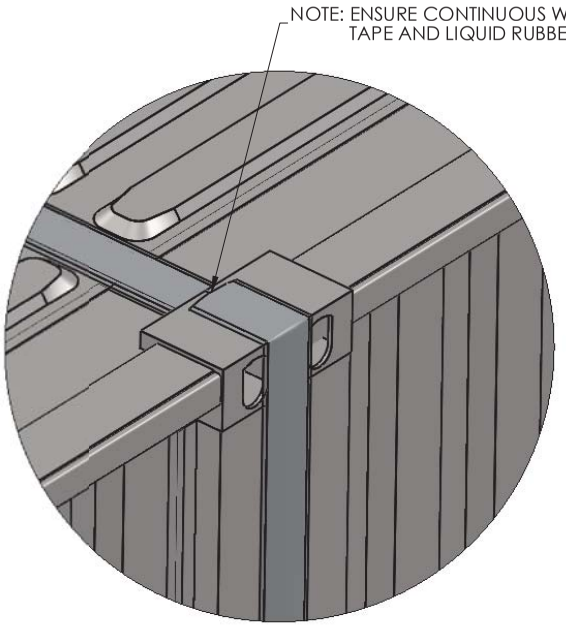

DETAIL E
SCALE 1 : 8

GENERAL TOLERANCES
.XX ± 1/8 "
.XXX ± 1/16 "
UNLESS OTHERWISE SPECIFIED DIMENSIONS ARE IN INCHES

THIS INFORMATION IS THE PROPERTY OF newterra AND CANNOT BE REUSED OR REPRODUCED WITHOUT WRITTEN CONSENT.

LEVEL	DATE	BY	REVISION
B1	27/02/17	GH	FOR PRODUCTION - REVISED SEALING METHOD
B	11 Nov 2015	OM	FOR PRODUCTION
A1	26 Aug 2015	OM	FOR REVIEW
A	22 July 2015	OM	FOR REVIEW

DWG. NO:
PROJECT NUMBER:
TITLE: LIQUID RUBBER CONTAINER SEAL
CUSTOMER: newterra
DRAWN BY: OM
DATE: 22 July 2015
SHEET 5 OF 7

INSIDE SEALING OF WALKWAYS

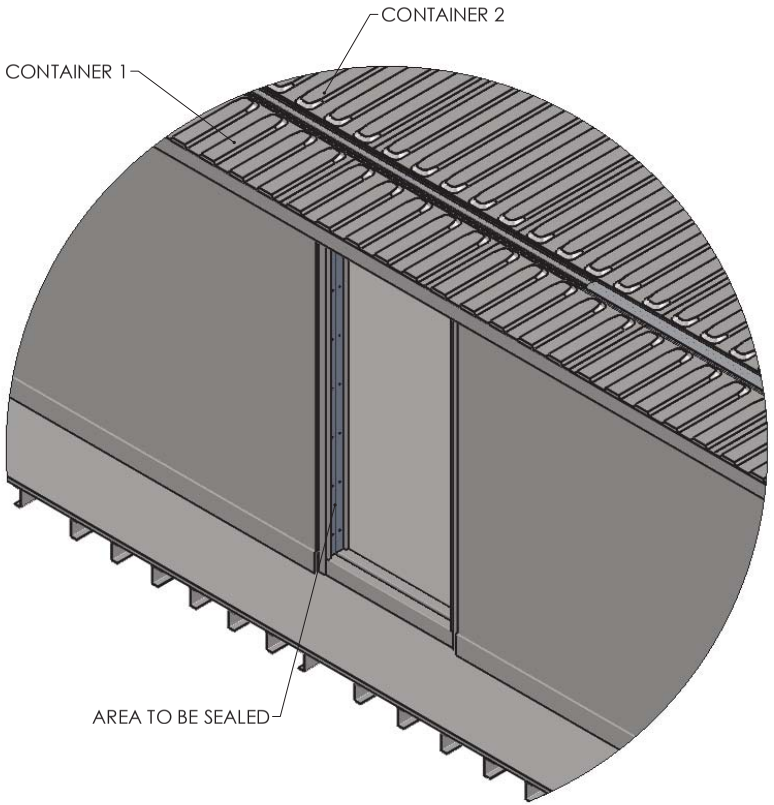

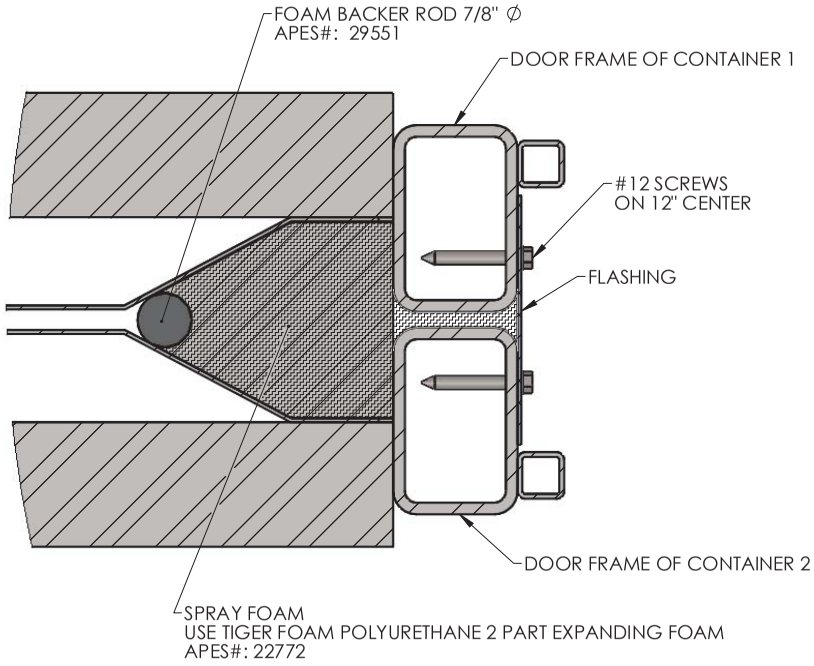

DETAIL D
DOORWAYS SEALING
SCALE 1 : 2

GENERAL TOLERANCES
.XX ± 1/8 "
.XXX ± 1/16 "
UNLESS OTHERWISE SPECIFIED DIMENSIONS ARE IN INCHES

THIS INFORMATION IS THE PROPERTY OF newterra AND CANNOT BE REUSED OR REPRODUCED WITHOUT WRITTEN CONSENT.

LEVEL	DATE	BY	REVISION
B1	27/02/17	GH	FOR PRODUCTION - REVISED SEALING METHOD
B	11 Nov 2015	OM	FOR PRODUCTION
A1	26 Aug 2015	OM	FOR REVIEW
A	22 July 2015	OM	FOR REVIEW

DWG. NO:
PROJECT NUMBER:
TITLE: LIQUID RUBBER CONTAINER SEAL
CUSTOMER: newterra
DRAWN BY: OM
DATE: 22 July 15
SHEET 6 OF 7

newterra ltd.
1291 California Avenue, Brockville, ON K6V 5W3
(800) 420-4056 / www.newterra.com

APPENDIX D

Recommended Spare parts List

© 2017 by **newterra**, ltd.
All rights reserved. No part of this document may be reproduced or transmitted in any form or by any means, electronic, mechanical, photocopying, recording, or otherwise, without prior written permission of **newterra** ltd.

1704432 - AGNICO EAGLE MINE - A1

Qty	Category	Spare/ Maintenance	newterra#	Description
1	**Electrical**	**Spare**	10270	Breaker, SQD QOU115 1240V 15A 1P DIN Mount, 10k SCCR
1	**Electrical**	**Spare**	11482	Breaker Lock for 1 pole QOU breakers
3	**Electrical**	**Spare**	12404	Fuse,GLD AJT250250A 600V Time Delay, Class J
1	**Electrical**	**Spare**	12475	4Ch Discrete, Transistor Output, Intrinsically Safe Barrier
1	**Electrical**	**Spare**	12547	Contactor (TeSys D) Non-Reversing, 9A(AC3) 125A(AC1), 3-Pole (3 NO)
1	**Electrical**	**Spare**	17158	Combination Starter, Busbar Top Mount
1	**Electrical**	**Spare**	18396	190-480V, 3PH Power/Phase Monitor
4	**Electrical**	**Spare**	18642	100W Incandescent, Medium Base, CL1Div2
5	**Electrical**	**Spare**	19029	Breaker, SQD QOB115 120V 15A Bolt On, 10k SCCR
1	**Electrical**	**Spare**	19264	Combination Starter, 12A Power Base, 3/7.5/10HP
1	**Electrical**	**Spare**	19269	Combination Starter, 1NO Ready, 1NO Fault Aux. Contact Module
1	**Electrical**	**Spare**	19503	Combination Starter, TeSysU Standard Control Unit 0.35-1.4A, 24VDC coil
5	**Electrical**	**Spare**	20369	Fuse,GLD GSB1/10100mA 250V Fast Acting, Miniature 5x20mm
1	**Electrical**	**Spare**	21191	Combination Starter, TeSysU Standard Control Unit 1.25-5.0A, 24V/60mA DC coil
1	**Electrical**	**Spare**	21887	Relay, SQT RXM4AB1F7, Miniature Relay, 4PDT, 120VAC, 6A contacts
1	**Electrical**	**Spare**	21888	Relay, SQT RXM4AB1BD, Miniature Relay, 4PDT, 24 VDC, 6A contacts
1	**Electrical**	**Spare**	21889	Relay, SQT RXZE2S114M, Base/Socket for RXM4 4P Relays
2	**Electrical**	**Spare**	22324	Relay, SQT RXM2AB1BD, Miniature Relay 2PDT 24 VDC
2	**Electrical**	**Spare**	22326	Relay, SQT RXZE2S108M, Base/Socket for RXM2 2P Relays
1	**Electrical**	**Spare**	22546	Busbar 4 TeSysU Starters, #6AWG 63A MAX
1	**Electrical**	**Spare**	22706	Combination Starter, TeSysU Standard Control Unit 3-12A, 24V/60mA DC coil
1	**Electrical**	**Spare**	23504	4Ch Power Supply, 15V - 20mA
4	**Electrical**	**Spare**	23751	Relay, SPDT, 24VDC Coil
1	**Electrical**	**Spare**	26829	8GB Micro USB Key
1	**Electrical**	**Spare**	28484	M251 Controller, Dual Ethernet
1	**Electrical**	**Spare**	29140	eWON Cosy 131 LAN/Cell Router, 24VDC Power
2	**Electrical**	**Spare**	35707	24VDC Power Supply, 120W, 5A
1	**Electrical**	**Spare**	36087	TM3 16DI Expansion Module
1	**Electrical**	**Spare**	36088	TM3 16DO Expansion Module
1	**Electrical**	**Spare**	36089	TM3 4-channel AI Expansion Module
1	**Electrical**	**Spare**	36090	TM3 8-channel AI Expansion Module
1	**Electrical**	**Spare**	36126	Touchscreen, 10.4" TOUCH SMART DISPLAY
1	**Electrical**	**Spare**	36316	OTB RIO Adapter, Ethernet
1	**Electrical**	**Spare**	36317	TM2 8 point DI Expansion Module

Qty	Category	Spare/ Maintenance	newterra#	Description
1	**Electrical**	**Spare**	36543	TM3 4-channel AO Expansion Module
1	**Electrical**	**Spare**	36555	Fuse, 160mA 250V Fast Acting, Miniature 5x20mm
1	**Electrical**	**Spare**	36557	TME Bus Transmitter Module
1	**Electrical**	**Spare**	36558	TME Bus Receiver Module
1	**Electrical**	**Spare**	37596	TM2 16 point DI Expansion Module
1	**Electrical**	**Spare**	37906	48" x 36" x 12" NEMA4 Steel Enclosure
1	**Electrical**	**Spare**	38069	Breaker, Multi9 480/277V 15 AMP 3P C Trip Curve, 10k SCCR
1	**Electrical**	**Spare**	38070	Breaker, Multi9 480/277V 20 AMP 3P C Trip Curve, 10k SCCR
1	**Electrical**	**Spare**	38071	Breaker, Multi9 480/277V 30 AMP 3P C Trip Curve, 10k SCCR
1	**Electrical**	**Spare**	38092	Breaker, Multi9, 480/277V 15 AMP 2P C Trip Curve, 10k SCCR
1	**Electrical**	**Spare**	38093	Variable Frequency Drive, Danfoss FC202 P1K5, VFD 480V 2HP, 3.4A 3PH, IP55, w/ Line Side Fusible Disc
1	**Electrical**	**Spare**	38094	Variable Frequency Drive, Danfoss FC202 P11K, VFD 480V 15HP, 21A 3PH, IP55, w/ Line Side Fusible Disc
2	**Electrical**	**Spare**	38136	Breaker, 240V 1 AMP 1P C
2	**Electrical**	**Spare**	38137	Breaker, 240V 2 AMP 1P C
2	**Electrical**	**Spare**	38138	Breaker, 240V 3 AMP 1P C
2	**Electrical**	**Spare**	38139	Breaker, 240V 4 AMP 1P C
2	**Electrical**	**Spare**	38204	Wall Pack, 24W LED c/w PhotoEye
1	**Electrical**	**Spare**	38209	TM2 16RO Expansion Module
1	**Mechanical**	**Spare**	9999	Pump, Metering, Prominent, Rebuild Kit, BT4B0708PVT2000UD010A01, Flow: 1.88GPH / 7.10L/H, Pressure: 102PSI / 07BAR
1	**Mechanical**	**Spare**	11518	Blower, Sutorbilt, Model 4L-RHC
1	**Mechanical**	**Maintenance**	11529	Filter, Element, Solberg, 30P, Paper element, for newterra PN M1096
1	**Mechanical**	**Spare**	11772	Blower, Part, Belt drive, 15hp
1	**Mechanical**	**Maintenance**	11792	Filter, Element, Solberg, 230P, Paper element for newterra PN M1489
1	**Mechanical**	**Maintenance**	12014	Filter, Element, Solberg, 18P, Paper element, for newterra PN M1406
1	**Mechanical**	**Spare**	12026	Motor, Teco, 1hp, 1800rpm, 143T
1	**Mechanical**	**Maintenance**	12930	Oil, Blower, Aeon PD blower oil
1	**Mechanical**	**Spare**	15185	Motor, Teco, 15hp, 3600rpm, 254T
1	**Mechanical**	**Spare**	16196	Gauge, Pressure, 0-15psi, Indumart, P16T2-FG-15
5	**Mechanical**	**Spare**	16202	Gauge, Pressure, 0-30psi, Indumart, P16T2-FG-30
4	**Mechanical**	**Spare**	19279	Switch, Level, Mech Float, Narrow Angle, N.C., YEL
2	**Mechanical**	**Spare**	21552	Switch, Level, Tether Weight
10	**Mechanical**	**Spare**	21828	Anode, Magnesium, mounted on wire with washer
1	**Mechanical**	**Spare**	23439	Transmitter, Pressure, KPSI 750 series 0-10ft H20
1	**Mechanical**	**Spare**	24163	Heater, Immersion, Caloritech 6KW 460V 3ph
1	**Mechanical**	**Spare**	25747	Blower, Cincinnati LM-4, 4.3" X 2.9" Width Alum wheel
1	**Mechanical**	**Spare**	27810	Transmitter, Pressure/ Vacuum, IFM efector
1	**Mechanical**	**Spare**	28469	Pump, Centrifugal, Price Pumps Type 26 EPR Seal 0542
1	**Mechanical**	**Spare**	28617	Pump, Centrifugal, Price Pump 1/4hp 460V 3ph 1800RPM

Qty	Category	Spare/ Maintenance	newterra#	Description
1	**Mechanical**	**Spare**	28620	Pump, Centrifugal, Price Pump 2hp 460V 3ph 3600RPM
1	**Mechanical**	**Spare**	28712	Flow meter, IFM efector, SM9000, Magnetic flow meter
1	**Mechanical**	**Spare**	29263	Pump, Centrifugal, Price Pump 3/4hp 460V 3ph 3600RPM
1	**Mechanical**	**Spare**	33737	Switch, Level, Ultrasonic, Flowline, LU10-1405
8	**Mechanical**	**Spare**	35983	#10 Stainless Back 3" Trim, 16" Length, 0.5 Black Poly Brush
1	**Mechanical**	**Spare**	36395	Pump, Sump, Zoeller N72 Non-Automatic Operation
1	**Mechanical**	**Spare**	36870	Transmitter, pH, Prominent pH Sensor PHER 112SE
1	**Mechanical**	**Spare**	36973	Pump, Centrifugal, Price, Misc
2	**Mechanical**	**Spare**	37662	Valve, Ball, PVC, 2", True-Union, FPM O-rings
1	**Mechanical**	**Spare**	38186	Pump, Centrifugal, Price Pump 1hp 460V 3ph 3600RPM
1	**Mechanical**	**Spare**	38219	Gear Motor, 230/460V 50/60 3P, 60/50hz 1/4hp
1	**Mechanical**	**Spare**	38596	Transmitter, Dissolved Oxygen, Optical, RDO PRO-X, Sensor Cap Replacement Kit, 0088720
1	**Mechanical**	**Spare**	M1254	Pump, Progressive Cavity, Moyno, 35601
4	**Mechanical**	**Spare**	M1343	Switch, Level, Mech Float, Narrow Angle, N.O., Blue

newterra ltd.
1291 California Avenue, Brockville, ON K6V 5W3
(800) 420-4056 / www.newterra.com

APPENDIX E

Technical Specs and Brochures for Parts and Equipment

© 2017 by **newterra**, ltd.
All rights reserved. No part of this document may be reproduced or transmitted in any form or by any means, electronic, mechanical, photocopying, recording, or otherwise, without prior written permission of **newterra** ltd.

TAG	newterra Part Number	Part Description	Extended Part Description	Page
-	21299	Valve, Relief, Back Pressure, Kunkle, 1", Liquid Service	Set @ 50 PSI, 0019-E01-MG0050	E-8
-	M1096	Filter, Silencer, Solberg, FS-30P-200		E-40
-	M1406	Filter, Silencer, Solberg, FS-18P-150	1	E-40
B-301/2	25404	Blower, Elmo, 2BH7420-0AH267 2.4HP	230/460V 3ph	E-45
B-501/2	11518	Blower, Sutorbilt, Model 4L-RHC	Orientation: Horizontal (Flow Down) Driven Shaft Position: RHC (Right Hand Central) Flow Requirement: 487 scfm Altitude: 100' Inlet Pressure: Outlet Pressure:4.4 Inlet Air Temp: 68 Discharge Air Temp: 126 Noise: RPM: 3352 Horsepower Consumed:13.2 Motor Included with Package Blower calculation sheet and blower curve supplied by Engineering	E-73
B-501/2	15185	Motor, Teco, 15hp, 3600rpm, 254T	208-230/460, 3ph, CSA/UR	E-73
B-501/2	38094	VFD, Danfoss 15HP, 380-480Vac, IP55	p/n: FC202P11KT4E55H2XGX3SXSXXXXAXBXCXXXXDX	E-159
B-501/2	M1489	Filter, Silencer, Solberg, FS-230P-300	3"	E-249
B601/2	21232	Blower, Elmo G200 2BH-1510-7HH56-Z	230/460V 3P 6.2 HP	E-251
B-7911	25747	Blower, Cincinnati LM-4, 4.3" X 2.9" Width Alum wheel	Arrangement #4, Direct Drive, bottom discharge c/w	E-283
B7914	22618	Blower, Cincinnati, LM-6, Direct drive	- Cast Aluminum Housing -6.3 x 2.5 STEELWheel - Slip fit inlet - Slip fit discharge - Motor base - 1.5hp, 460V, 3ph, 60Hz, 3600 rpm, TEFC, CCW/TH 769CFM @ 2.25	E-283
DO-501	27325	Transmitter, Dissolved Oxygen, Optical	RDO Pro-x (10m cable)	E-298
F-7961	M1072	Fan, Building, 12", 1/4hp, 1750rpm, 120V, 1ph, TEAO	CSA Approved, S12-E1	E-328

TAG	newterra Part Number	Part Description	Extended Part Description	Page
FM 701 702	28712	Flow meter, IFM efector, SM9000, Magnetic flow meter	G2 connection 0 -300 L/min	E-336
FT-102/2	27200	Flow meter, Endress, Promag 10D50 2"	10D50-4LGA1RA0B4AAM1 Compact head	E-381
H	24384	Heater, Forced Air, Ouellet, 4.8kW, OAC04804BL	460V 1ph	E-521
H-301/302 H-401/402 H-501/502 H-503/504	24163	Heater, Immersion, Caloritech 6KW 460V 3ph	3" Flanged Heater with Moisture Resistant Term Box	E-525
H-7911	38187	Heater, Forced Air, Indeeco, 15KW, 233 Series	480V/3ph. EXP, 1/4HP Fan, w thermostat SIZE 2	E-526
H-7912	38188	Heater, Forced Air, Indeeco, 10KW, 233 Series	480V/3ph. EXP, 1/4HP Fan, w thermostat	E-526
HMI	26421	HMI, HMIGTO5310	10.4" TFT Color Touchscreen, Ethernet, USB, Serial	E-534
LS	19279	Switch, Level, Mech Float, Narrow Angle, N.C., YEL	N/C, Yellow float	E-684
LS	M1343	Switch, Level, Mech Float, Narrow Angle, N.O., Blue	Tilt Float Level Switch w 40' cable	E-684
LS-101/2/3	19279	Switch, Level, Mech Float, Narrow Angle, N.C., YEL	N/C, Yellow float	E-684
LSHH	12351	Switch, Level, Almeg, Vertical, ATB3-48B	1/4NPT	E-687
LSHH- 101.102/103 LSHH-301 LSHH-401 LSHH-501 LSHH-502 LSHH-601/602	19279	Switch, Level, Mech Float, Narrow Angle, N.C., YEL	N/C, Yellow float	E-684
LSHH-7901	12351	Switch, Level, Almeg, Vertical, ATB3-48B	1/4NPT	E-687
LSLL-301/401/ 501/502	M1108	Switch, Level, Mech Float, Wide Angle, N.O., Red	13A, SPST, N/O, Red	E-684
LT-301/501	23439	Transmitter, Pressure, KPSI 750 series 0-10ft H20	Part Number 750S14D4A004.334000.000B10015B	E-688
M-701/702	24353	Valve, Actuated Ball Valve 1.5" Brass 2 way	w/ limit switches PMP electric Actuator 120V OM-1	E-722
MCP	28484	PLC, TM251MESE	M251 Controller 2 Ethernet port	E-739
MCP	29140	Modem/Router, EC6133D	eWON Cosy 131 Ethernet plus with GSM 3G+	E-851

TAG	newterra Part Number	Part Description	Extended Part Description	Page
Membranes	28424	Membrane, Microclear Cassette, MCXL2 - Type M	surface area is 8 m2	E-881
Membranes	36037	MBR, Air Diffuser, FLEXAIR 91 1105 T SERIES		E-900
MPP	18396	Motor Saver, 460 w/Diagnostic 3ph	Finger Safe, DIN Rail Mountable	E-920
P-201/2	38186	Pump, Centrifugal, Price Pump 1hp 460V 3ph 3600RPM	PN: RC200AI-300-26566-100-36-3X6	E-928
P-301/2	29263	Pump, Centrifugal, Price Pump 3/4hp 460V 3ph 3600RPM	PN: RC200AI-250-26566-75-36-3T7	E-928
P-401/2	36973	Pump, Centrifugal, Price, Misc	RC300AI-4.33-26566-500-36-3T7 200GPM @ 60 FEET PRESSURE 3600RPM 5HP TEFC 460v3P	E-928
P-501/2	28620	Pump, Centrifugal, Price Pump 2hp 460V 3ph 3600RPM	PN: RC200AI-388-26566-200-36-3T6	E-928
P503	28617	Pump, Centrifugal, Price Pump 1/4hp 460V 3ph 1800RPM	PN: RC200AI-388-26566-25-18-3T6	E-928
P-551/2	29263	Pump, Centrifugal, Price Pump 3/4hp 460V 3ph 3600RPM	PN: RC200AI-250-26566-75-36-3T7	E-928
P-553/4	28620	Pump, Centrifugal, Price Pump 2hp 460V 3ph 3600RPM	PN: RC200AI-388-26566-200-36-3T6	E-928
P-6101,2,3	21192	Pump, Metering, Prominent, Misc	BT4B0708PVT2000UD010A01 Flow: 1.88GPH / 7.10L/H Pressure: 102PSI / 07BAR	E-947
P-610x	25823	Pump, Metering, Parts, Multi-function Valve	PVDF, 87PSIG Size 2	E-1063
P-701/2	38093	VFD, Danfoss 2HP, 380-480Vac, IP55	p/n: FC202P1K5T4E55H2XGX3SXSXXXXAXBXCXXXXDX	E-159
P-701/702	12026	Motor, Teco, 1hp, 1800rpm, 143T	208-230/460V, 3ph, CSA/UR	E-1091
P-701/702	M1254	Pump, Progressive Cavity, Moyno, 35601	15gpm@25psi, 1200rpm, NPSH: 2 feet	E-1125
P-801	36395	Pump, Sump, Zoeller N72 Non-Automatic Operation	All Plastic Construction	E-1129
PH-501	27936	Transmitter, pH, Prominent Dulcometer pH or ORP	4-20mA output, 7781499	E-1145
PI-201/2	16202	Gauge, Pressure, 0-30psi, Indumart, P16T2-FG-30	SS, brass internals, Glyc. Filled, bottom mount	E-1249

TAG	newterra Part Number	Part Description	Extended Part Description	Page
PI-301	16196	Gauge, Pressure, 0-15psi, Indumart, P16T2-FG-15	SS, brass internals, Glyc. Filled, bottom mount	E-1249
PI-301/2	16202	Gauge, Pressure, 0-30psi, Indumart, P16T2-FG-30	SS, brass internals, Glyc. Filled, bottom mount	E-1249
PI-401/2	16202	Gauge, Pressure, 0-30psi, Indumart, P16T2-FG-30	SS, brass internals, Glyc. Filled, bottom mount	E-1249
PI-501/2	16202	Gauge, Pressure, 0-30psi, Indumart, P16T2-FG-30	SS, brass internals, Glyc. Filled, bottom mount	E-1249
PI-551/2	16202	Gauge, Pressure, 0-30psi, Indumart, P16T2-FG-30	SS, brass internals, Glyc. Filled, bottom mount	E-1249
PI-553/554 PI-703/704	16203	Gauge, Pressure, 0-60psi, Indumart, P16T2-FG-60	SS, brass internals, Glyc. Filled, bottom mount	E-1249
PI-601/602	30098	Gauge, Pressure, 0-15psi, Indumart, P16K2-FG-15		E-1249
PSL-301	10218	Switch, Pressure, 1823-2	0.5-2" wc, Dwyer, Nema 1	E-1250
PSL501	10547	Switch, Pressure, 1823-40	5-44" wc, Dwyer, Nema 1	E-1250
PSL-601/2	10547	Switch, Pressure, 1823-40	5-44" wc, Dwyer, Nema 1	E-1250
PSL-7911	10218	Switch, Pressure, 1823-2	0.5-2" wc, Dwyer, Nema 1	E-1250
PSL-7911	12877	Meter, Flow, Pitot Tube, 4"	Multi-Point Averaging	E-1254
SCR-201/2	33737	Switch, Level, Ultrasonic, Flowline, LU10-1405	Long Style	E-1257
SCR-201/2	35907	Filter, Rotary screen, Newterra 17" wide SCR-50	0.5mm Wedge Wire	E-1277
SCR-201/2	38219	Gear Motor, 230/460V 50/60 3P, 60/50hz 1/4hp	SK1SI63/H10-56C-63L/4 FRD DIV2 NSD+ 400:1 Nord Gear, 4.3 RPM, CSA CL1 DIV2	E-1278
TNK-101/2	26009	Tank, Closed Top, Cylindrical, 2100 gal, Norwesco - no drain	87dia 89 tall, 1.9sg, Heavy Walled, blue	E-1348
TNK-103	23980	Tank, closed top, cylindrical, ACO CT-450-DT	450 Imp. Gal., 16" lid with locking strap	E-1364
TNK-201	38224	Tank, Open Top, Rectangular, 192 gal	540 US Gal 72x36x48	E-1365
TNK-401/502	38229	Eductor Mixing, Elmridge ME20P	Poly Pro 3/4" inlet	E-1366

TAG	newterra Part Number	Part Description	Extended Part Description	Page
TNK-801	21203	Tank, Open Top, Cylindrical, 60 Imp gal, OT-60	Aco Tanks With Lid, 22x44 270Liter	E-1368
TNK-901	26009	Tank, Closed Top, Cylindrical, 2100 gal, Norwesco - no drain	87dia 89 tall, 1.9sg, Heavy Walled, blue	E-1348
TSL-301/401/ 501/502	15653	Switch, Temperature, Probe, A19AAF-12C	25-225 deg F, 10 foot Capillary Tube	E-1369
TSLL/TSH	10515	Switch, Temperature Thermostat, CN TF115-001	40F to 100F / 5C to 40C dial	E-1371
TSLL7911	10515	Switch, Temperature Thermostat, CN TF115-001	40F to 100F / 5C to 40C dial	E-1371
TSLL-7941	10515	Switch, Temperature Thermostat, CN TF115-001	40F to 100F / 5C to 40C dial	E-1371
VT-701 702	27810	Transmitter, Pressure/ Vacuum, IFM efector	PG2409 Scale -14.5- 14.5 PSI 4-20mA	E-1375

Valve, Relief, Back Pressure, Kunkle, 1", Liquid Service
Set @ 50 PSI, 0019-E01-MG0050

KUNKLE ...ty and Relief Products



tyco Flow Control

Kunkle is either a trademark or registered trademark of Tyco International Services AG or its affiliates in the United States and/or other countries. All other brand names, product names, or trademarks belong to their respective holders.

Copyright © 2011 Tyco Flow Control. All rights reserved.

Contents

Definitions and Commonly Used Terms 3
ASME Codes 4
ASME Code Requirements 5
General Safety and Relief Valve Information 6
Safety and Relief Valve Pointers 7
Safety and Relief Valve Principles of Operation 8-9
Ordering Information 9
Valve Selection 10
Valve Selection Guide 11-13
Valve Sizing Overview and Coefficient Method 14
Sizing Formulas 15
Sizing Coefficient Method 16
Sizing Table A 17
Sizing Table B 18-19
Sizing Table C and D 20
Physical Properties 21-25
Conversion Factors 26-27
Installation 28-29
Maintenance 30
Guarantee 30
Terms and Conditions of Sale 31-32

Copyright © 2011 Tyco Flow Control. All rights reserved.

Definitions and Commonly Used Terms

A.S.M.E.
American Society of Mechanical Engineers.

A.P.I.
American Petroleum Institute

PRV
Relief Valve, Safety Valve, Safety Relief Valve.

Back Pressure
The pressure that exists at the outlet of a pressure relief device as a result of the pressure in the discharge system. It is the sum of the superimposed and built-up back pressures.

Built-up Back Pressure
The increase in pressure in the discharge header that develops as a result of flow after the pressure relief device opens.

Blowdown
The difference in pressure between the opening pressure and reclose pressure. May be expressed in percent of set pressure or "psig."

Body/Nozzle/Seat
The stationary seating surface, the inlet.

Cap
The pressure screw cover and/or lever housing. May be screwed, bolted, packed, or plain lever.

Chatter
Abnormal, rapid reciprocating movement of the disc on the seat of a pressure relief valve.

Coefficient of Discharge
The ratio of the measured relieving capacity to the theoretical relieving capacity.

Disc
The moveable seating surface.

Gag
A device attached to a safety or safety relief valve that prevents it from opening at the set pressure.

Guide
That portion of the valve used to guide the disc.

Lift
The distance between the seat and disc seating surfaces when the valve is in the full open position.

MAWP
Maximum allowable working pressure. This data is found on the pressure vessel nameplate and is the maximum pressure at which the lowest set safety valve must be set (stamped).

N.B.
National Board of Boiler and Pressure Vessel Inspectors.

Operating Pressure
The gauge pressure at which a pressure vessel is maintained in normal operation. The operating pressure should not be in excess of 90 percent of the PRV set pressure.

Accumulation
The permitted increase in pressure developed after the valve has opened. Usually expressed in percentage, maximum allowable accumulations are established by applicable codes for operating and fire contingencies.

Pre-open/Warn
An audible or visual discharge at a pressure slightly lower than the set pressure. Warns the operator that the valve is about to operate.

Pressure Relief Device
A device actuated by inlet static pressure and designed to open during an emergency or abnormal condition to prevent a rise of internal fluid pressure in excess of a specified value. The device may also be designed to prevent excessive internal vacuum. The device may be a pressure relief valve, a non-reclosing pressure relief device, or a vacuum relief valve.

psia
Pounds per square inch absolute or absolute pressure. Absolute pressure is equal to gauge pressure plus atmospheric pressure (14.7 psi [1.01 barg] at sea level).

psig
Pounds per square inch gauge or gauge pressure. Differential pressure across the valve, equal to absolute pressure inside the pressure vessel minus atmospheric pressure (14.7 psi [1.01 barg] at sea level).

Relief Valve
A spring-loaded pressure relief valve actuated by the static pressure upstream of the valve. The valve opens normally in proportion to the pressure increase over the opening pressure. A relief valve is used primarily with incompressible fluids (liquids).

Safety Relief Valve
A spring-loaded pressure relief valve that may be used as either a safety or relief valve depending on the application.

Safety Valve
A spring-loaded pressure relief valve actuated by the static pressure upstream of the valve and characterized by rapid opening or pop action. A safety valve is normally used with compressible fluids.

Set Pressure
The gauge pressure at which a safety valve visibly and audibly opens or at which a relief valve discharges a 1" long unbroken stream of liquid.

Spindle/Stem
The rod connecting to the disc.

Stamped Capacity
The rated relieving capacity that appears on the device nameplate. The stamped capacity is based on the set pressure or burst pressure plus the allowable overpressure for compressible fluids and the differential pressure for incompressible fluids.

Superimposed Back Pressure
The static pressure that exists at the outlet of a pressure relief device at the time the device is required to operate. It is the result of pressure in the discharge system coming from other sources and may be constant or variable.

Warn Ring or Regulator Ring
The control ring which surrounds the seat, used to control preopen and blowdown.

Yoke/Bonnet
The portion of a safety/relief valve that surrounds the spring; the spring housing.

Copyright © 2011 Tyco Flow Control. All rights reserved.

ASME Codes

The ASME (American Society of Mechanical Engineers) boiler and pressure vessels code requirements for overpressure protection as they relate to Kunkle products is as follows:

ASME Section I

This code applies to boilers where steam or other vapor is generated at a pressure of 15 psig [1.03 barg] or greater and high temperature water boilers intended for operation at pressures exceeding 160 psig [11.03 barg] and/or temperatures exceeding 250°F [121°C].

Boiler Pressure Accumulation

No more than 6 percent above the highest pressure at which any valve is set, or no more than 6 percent above MAWP.

Set Pressure

The set pressure of a one valve installation cannot be higher than the MAWP. The set pressure of the second or other valves in a multiple valve installation can be up to 3 percent above the MAWP. The complete range of valve settings for multiple valve installations cannot be greater than 10 percent of the highest set pressure. For high temperature water boilers, this 10 percent range may be exceeded.

ASME Section IV

This code applies to steam boilers operating at pressures not greater than 15 psig [1.03 barg] and hot water heating boilers operating at pressures not greater than 160 psig [11.03 barg] and/or temperatures not exceeding 250°F [121°C].

Steam Boilers

Valve capacity must be selected to prevent the boiler pressure from rising more than 5 psig [0.35 barg] above the MAWP.

Hot Water Boilers

Safety valve must be set to relieve at a pressure not greater than the MAWP of the boiler. If more than one safety valve is used, the secondary valve(s) may be set up to 6 psig [0.41 barg] above the MAWP for boilers with MAWPs up to and including 60 psig [4.13 barg], and 5 percent for boilers with MAWPs greater than 60 psig [4.13 barg]. Capacity must be selected to prevent the pressure from rising more than 10 percent above the set pressure of the highest set valve if more than one valve is used.

Tanks/Heat Exchangers High Temperature Water-to-Water Heat Exchangers

Valve(s) must be set at a pressure not greater than the MAWP and with sufficient capacity to prevent the pressure from increasing more than 10 percent above the MAWP.

Steam to Hot Water Supply

Valve(s) must be a least 1" [25 mm] diameter with set pressure not greater than MAWP of the tank.

High Temperature Water to Steam Heat Exchanger

Valve(s) must be set at a pressure not greater than 15 psig [1.03 barg] and with sufficient capacity to prevent the pressure from rising more than 5 psig [0.35 barg] above the MAWP.

ASME Section VIII

This code applies to unfired pressure vessels with an inside diameter larger than 6" [130 mm] and designed for use at or above 15 psig [1.03 barg]. Valve(s) must prevent the pressure from rising more than 10 percent or 3 psig [0.21 barg], whichever is greater, above the MAWP. For a single valve installation, the set pressure may not be greater than the MAWP. For multiple valve installations, the first valve cannot be set higher than the MAWP, but the other valves can be set up to 5 percent above the MAWP. The pressure rise for multiple valve installations can be 16 percent or 4 psig [0.27 barg], whichever is greater. When the vessel is exposed to an external heat source, such as fire, the pressure rise can be 21 percent above the MAWP.

Notes

1. MAWP - Maximum allowable working pressure.
2. Information stated above is based on latest code at time of publication.

Copyright © 2011 Tyco Flow Control. All rights reserved.

ASME Codes – Requirements

National Board

Kunkle valves are manufactured at facilities that meet the manufacturing requirements of the ASME Sections I, IV, and VIII codes for pressure relief valves. Valves that have the relief capacity certified by the National Board of Boiler and Pressure Vessel Inspectors bear the following code symbol stamp on the nameplate and the letters NB. Most Kunkle Valves have NB certified capacities.

Code Stamps

"V"  - applies to all ASME Section I valves

"HV"  - applies to all ASME Section IV valves

"UV"  - applies to all ASME Section VIII valves

Notes

1. Information stated above is based on latest code at time of publication.
2. Non-code liquid valves are capacity rated at 25 percent overpressure.
3. Non-code air/gas/vapor and steam valves are capacity rated at 10 percent overpressure.

Power Boiler - Section I - Code "V"

Set Pressure psig	[barg]	Set Pressure Tolerance	Blowdown
15 – 66	[1.03 – 4.55]		2 – 4 psig [0.14 – 0.28 barg]
67 – 100	[4.62 – 6.90]		2 psi [0.14 barg] - 6%
101 - 250	[6.96 - 17.24]		2% - 6%
251 – 374	[17.31 – 25.79]		2% - 15 psig [1.03 barg]
375 – 1000	[25.86 – 68.96]		2% - 4%
15 – 69	[1.03 – 4.75]	±2 psig [±0.14 barg]	
70 – 300	[4.83 – 20.69]	±3%	
301 – 1000	[20.95 – 68.96]	±10% psig [±0.69 barg]	
1001 and up	[69.03 and up]	±1%	

1. Overpressure would be 2 psig [0.14 barg] for pressures between 15 psig [1.03 barg] and 70 psig [4.83 barg]. Pressures above 70 psig [4.83 barg] would have an overpressure of 3%.
2. Maximum blowdown for "Special Use" Section I is 10%.

Heating Boiler - Section IV - Code "HV"

	Set Pressure psig	[barg]	Set Pressure Tolerance	Blowdown	Overpressure
15 psig Steam	15	[1.03]	±2 psig [±0.14 barg]	2 – 4 psig [0.14 – 0.28 barg]	5 psig [0.34 barg]
Hot Water	15 – 60	[1.03 – 4.14]	±3 psig [±0.21 barg]	N/A	10%
Hot Water	61 – 160	[4.20 – 11.0]	±5%	N/A	10%

Unfired Pressure Vessel - Section VIII - Code "UV"

Set Pressure psig	[barg]	Set Pressure Tolerance	Blowdown	Overpressure
15 – 30	[1.03 – 2.07 barg]	±2 psig [±0.14 barg]	N/A	3 psig [0.21 barg]
31 – 70	[2.14 – 4.83 barg]	±2 psig [±0.14 barg]	N/A	10%
71 and up	[4.90 barg and up]	±3%	N/A	10%

Non-code Set Pressure Tolerance

Set Pressure, psig [barg]	Set Pressure Tolerance, psig [barg]
Below 15 psig [1.03 barg] to 10 psig [0.69 barg]	+/- 2.0 psig [±0.14 barg]
Below 10 psig [0.69 barg] to 5.0 psig [0.34 barg]	+/- 1.0 psig [±0.07 barg]
Below 5.0 psig [0.34 barg] to 0.0 psig [0.0 barg]	+/- 0.5 psig [±0.003 barg]
Below 0.0-inch Hg [0.0 mb] to 10-inch Hg [337 mb]	+/- 1.0-inch Hg [±33.7 mb]
Below 10-inch Hg [337 mb] to 20-inch Hg [674 mb]	+/- 2.0-inch Hg [±67.4 mb]
Below 20-inch Hg [674 mb]	+/- 4.0-inch Hg [±134.8 mb]

Copyright © 2011 Tyco Flow Control. All rights reserved.

General Safety and Relief Valve Information

Kunkle Factory Standard Seat Tightness

Code Section	Service	Performance Standard
I and VIII	Steam	No visible leakage for 15 seconds at 20% below nameplate set pressure or at 5 psig [0.35 barg] below nameplate set pressure, whichever is greater.
VIII	Air/Gas	No audible leakage for 15 seconds at 20% below nameplate set pressure or at 5 psig [0.35 barg] below nameplate set pressure, whichever is greater.
IV and VIII	Liquid	No visible leakage for 30 seconds at 20% below nameplate set pressure or at 5 psig [0.35 barg] below nameplate set pressure, whichever is greater.
IV	Steam	No visible leakage for 30 seconds at 12 psig [0.83 barg].

API - 527 Seat Tightness

Model	Code Section	Service	Performance Standard
300/600 6000 900	I and VIII	Steam	API 527 - No visible leakage for 1 minute at 10% below nameplate set pressure or 5 psig [0.35 barg] below nameplate set pressure, whichever is greater.
6010 (O-ring seat) 916/917 (soft seat) 918/919 (soft seat)	VIII	Air/Gas	API 527 - Bubble-tight for 1 minute at 10% below nameplate set pressure or 5 psig [0.35 barg] below nameplate set pressure, whichever is greater.
910/912 911/913	VIII	Air/Gas	API 527 - D and E orifice: 40 bubbles/min, F thru J orifice: 20 bubbles/min at 10% below nameplate set pressure or 5 psig [0.35 barg] below nameplate set pressure, whichever is greater.
916/917 (soft seat) 918/919 (soft seat)	VIII	Liquid	API 527 - No leakage for 1 minute at 10% below nameplate set pressure, or 5 psig [0.35 barg] below nameplate set pressure, whichever is greater.
910/912 911/913	VIII	Liquid	API 527 - 10 cc/h for inlet sizes less than 1" or 10 cc/h/in of inlet valve size for inlet sizes 1" and larger at 10% below nameplate set pressure or 5 psig [0.35 barg] below nameplate set pressure, whichever is greater.

Note

API 527 is not available on air service for:

a. Plain lever "J" orifice Models 900 and 6000.
b. Plain lever Model 900 above 444 psig [30.6 barg] set pressure.

The terms "safety valve" and "relief valve" are frequently used interchangeably. This is satisfactory to the extent that both safety and relief valves of the spring-loaded type are similar in external appearance and both serve the broad general purpose of limiting media (liquid or gaseous) pressures by discharging some of the pressurized liquid or gas. Some authorities restrict "safety valves" to those installed on boilers, superheaters, and fired vessels - all others being classified as relief valves. We prefer, however, to define them briefly as follows:

Safety valves are used on gaseous service (which include air and steam). Their design always includes a huddling chamber which utilizes the expansion forces of these gases to effect quick opening (popping) and closing actions. The difference between the opening and closing pressures is termed "blowdown," and for Section I and IV steam safety valves blowdown limitations are carefully stated in the ASME Power Boiler Code. Relief valves are normally used for liquid service although safety valves may be so used. Ordinarily, relief valves do not have an accentuated huddling chamber nor a regulator ring for varying or adjusting blowdown. They therefore operate with a semi-modulating action in proportion to the system pressure. Such relieving action is desirable to protect piping systems from water hammer.

Copyright © 2011 Tyco Flow Control. All rights reserved.

Safety and Relief Valve Pointers

1. ASME Codes require that steam and air safety valves have test levers, although levers may be omitted on valves used in hazardous or toxic gas service.
2. Steam safety valves may be used for air service but not vice versa. Liquid valves should be used on liquid only.
3. Safety/relief valves should be installed vertically with the drain holes open or piped to a convenient location.
4. The inlet to and outlet from a safety/relief valve must be at least as large as the valve connections.
5. Every safety/relief valve is individually tested and set by Kunkle.
6. In the event you have safety/relief valve problems, first check the accuracy and cleanliness of pressure gauges and then refer to "Recommended Installation" for help in determining the cause of your problem. Feel free to consult your sales representative.
7. When ordering, we need to know size, type of connections, model number, pressure setting, required relieving capacity, and service media, or advise your complete requirements so that we can make a selection for you.
8. Following are procedures on the operation and testing of safety/relief valves:
   A. Avoid excessive operation of the safety/relief valve as even one opening can provide a means for leakage. Safety/relief valves should be operated only often enough to assure that they are in good working order.
   B. Test the valve by raising the operating pressure to the set pressure of the safety/relief valve, allowing it to open and reset as it would in normal service.
   C. Do not hand operate the valve with less than 75 percent of the stamped set pressure exerted on the underside of the disc. When hand operating, be sure to hold the valve in an open position long enough to purge accumulated foreign material from the seat area and then allow the valve to snap shut.

Copyright © 2011 Tyco Flow Control. All rights reserved.

Safety and Relief Valve Principles of Operation

Kunkle direct spring operated pressure relief valves consist of a nozzle threaded into a cast body housing which is flanged to a pressurized system. A disc is held against the nozzle by a spring, which is contained in a bonnet. The spring is adjusted by a compression screw to permit the calibration of opening or set pressure.

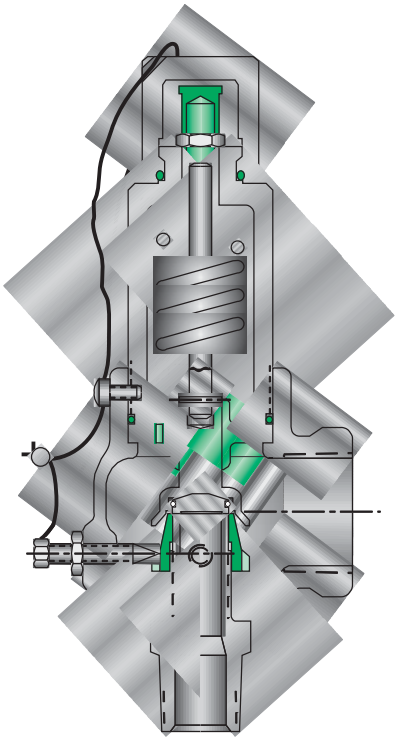

An adjustable nozzle ring, threaded onto the nozzle, controls the geometry of the fluid exit control chamber (huddling chamber). The huddling chamber geometry is very important in controlling valve opening and closing pressures, and stability of operation. The nozzle ring is locked into position by a ring pin assembly. A cap attached to the top of the bonnet seals the internal calibration adjustments. Refer to the illustration above for the location of these important components.

Under normal system operation the valve remains in the closed position because the spring force (Fs) is greater than the system pressure acting on the internal nozzle seating area (PA). If system pressure increases to a point when these forces are equal, the valve begins to simmer. The disc lifts and fluid flows through the valve. When pressure in the system returns to a safe level, the valve closes.

Just prior to reaching set point, the pressure relief valve leaks system fluid into the huddling chamber. The fluid now acts on a larger area of the disc inside the huddling chamber (PAh), causing the valve to experience an instantaneous increase in the opening force. Refer to the Figure on page 7 to see relationship between Nozzle Area (A) and the Huddling Chamber Area (Ah). System pressure acting on the larger area will suddenly open the pressure relief valve at a rapid rate.

Although the opening is rapid and dramatic, the valve does not open fully at set point. The system pressure must increase above the set point to open the valve to its full lift and full capacity position. Maximum lift and certified flow rates will be achieved within the allowable limits (overpressure) established by various codes and standards. All pressure relief valves are allowed an overpressure allowance to reach full rated flow.

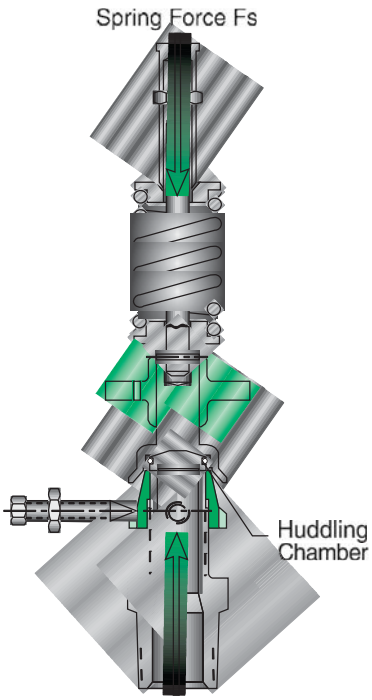

Copyright © 2011 Tyco Flow Control. All rights reserved.

Safety and Relief Valve Principles of Operation

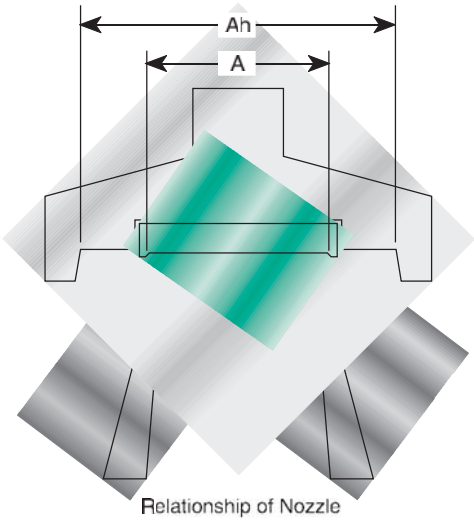

Relationship of Nozzle Area to Huddling Chamber Area

Once the valve has controlled the pressure excursion, system pressure will start to reduce. Since the huddling chamber area is now controlling the exit fluid flow, system pressure must reduce below the set point before the spring force is able to close the valve. The difference between the set pressure and the closing pressure is called blowdown, and is usually expressed as a percentage of set pressure. Refer to code for appropriate blowdown.

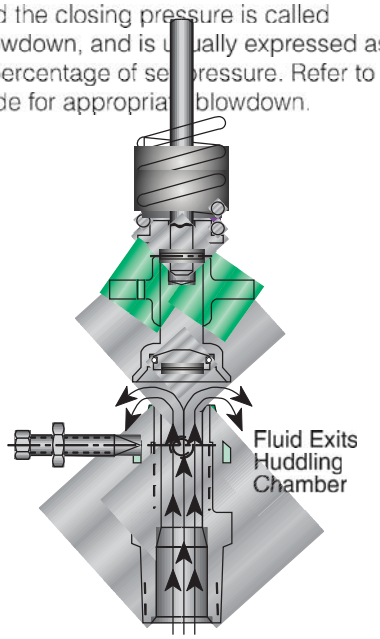

Valve Opens, Force P_{Ah} Acting on Disc

The nozzle ring adjustment changes the shape and volume of the huddling chamber, and its position will affect both the opening and closing characteristics of the valve. When the nozzle ring is adjusted to its top position, the huddling chamber is restricted to its maximum. This ring position will usually make the valve pop very distinctly with a minimum simmer (leakage before opening), but the blowdown will increase. When the nozzle ring is lowered to its lowest position, minimal restriction to the huddling chamber occurs. At this position, simmer increases and the blowdown decreases. The final ring position is somewhere between these two extremes to provide acceptable performance.

Liquid Service Operation

On liquid service, a different dynamic situation exists. Liquids do not expand when flowing across orifices, and a small amount of fluid flow across the nozzle will produce a large local pressure drop at the nozzle orifice. This local pressure drop causes the spring to reclose the valve if the fluid flow is minimal. Liquids leaking into the huddling chamber can quickly drain out by gravity and prevent fluid pressure from building up on the secondary area of the huddling chamber. Liquid relief valves are thus susceptible to a phenomenon called chatter, especially at low fluid flow rates. Chatter is the rapid opening and closing of the pressure relief valve and is often destructive in nature.

Since no visible or audible pop is heard at set point, liquid set pressure is defined as the pressure when the first heavy flow occurs (first steady vertical flow).

Ordering Information

Purchase orders must show the Size, Model Number, Set Pressure, and Service. (Include flange rating with size when applicable.)

1. To make a proper catalog selection, the following information will be needed:
   - A. Connection sizes (in and out), and types (male, female, flanged; 125#, 150#, 250#, 300#, etc.)
   - B. Material of construction
     - a. Bronze
     - b. Iron
     - c. Steel
     - d. Stainless Steel or other
   - C. Pressure setting
   - D. Service (steam, air, gas, etc., including any applicable codes or standards)
   - E. Capacity required, if available
   - F. Unusual conditions (temperature, location, etc.)

     Be sure to use the capacity correction factors for superheated steam, liquid overpressure (10 percent), air-gas temperature and density correction.
   - G. If valve is to be "equal to" another brand, provide nameplate information or specification data from brand being replaced.
2. Ordering data for replacement valves may be obtained from the valve nameplate or stamping.

Copyright © 2011 Tyco Flow Control. All rights reserved.

Valve Selection

The most critical consideration when selecting a pressure relief valve is that the valve will be capable of passing the maximum expected flow capacity. To properly select a relief valve the user must first determine the following:

1. The set pressure at which the valve is to operate. This pressure is based on the pressure limits of the system and the applicable codes. The set pressure of the primary pressure relief valve must not exceed the maximum allowable pressure of the system, but should be at least 10 percent above the maximum operating pressure.
2. The physical properties of the fluid media to be relieved. Capacity values are given in the Kunkle catalogs based on air, saturated steam, and water. Kunkle valves will relieve many other fluids, but information such as molecular weight, specific gravity, viscosity, ratio of specific heats, compressibility factor, and process temperature may be necessary to insure accurate valve selection.
3. The required relieving capacity. The ASME Boiler and Pressure Vessel Code, American Petroleum Institute Recommended Practices, and other applicable standards have many rules for obtaining the required relieving capacity and should be referenced when making this determination. The user must consider all sources of pressure generation in the system that will be protected by the pressure relief valve. Examples of pressure generation sources are pumps, heat input that may cause the system fluid to boil or expand, etc. The pressure relief valve(s) selected must exceed the worst case source of flow generation to prevent the system pressure from exceeding acceptable limits.

Once the previous information has been collected, the pressure relief valve may be sized by using the capacity charts (included in each model's catalog sheet) or by performing sizing calculations (see Valve Sizing, pages 14-25). The user will also want to consider other important factors such as:

- Connection size and type. This information is given in the Valve Selection Guide and in each of the Model Catalog sheets. Please note that the inlet to and outlet from a pressure relief valve must be at least as large as the valve connections to prevent valve malfunction.
- Pipe Size. Connection pipe sizes should not be determined by equipment connections, but rather by the relieving capacity of the PRV.
- Applicable code compliance. The ASME Code Summary section gives important information about pressure relief valves from the code. Pressure relief valve users are strongly encouraged to reference the full version of the code for important rules that may not be included in this manual.
- Maximum allowable seat leakage. The General Safety and Relief Valve Information (page 6) section of this manual shows the leakage acceptance criteria applied to each Kunkle valve. Pressure relief valve users should keep in mind that if "zero leakage" is a requirement, a soft seated valve must be selected.
- Environmental conditions. Environmental conditions play a significant role in how pressure relief valves operate. Extremely high ambient temperatures may affect the set pressure of the valve, extremely low temperatures combined with moisture can cause valves to "freeze up" and prevent proper operation, and vibration may severely shorten the service life of the valve. The Valve Selection Guide (pages 11-13) in this manual has general information on the pressure and temperature limits for each valve series. For specific model limitations refer to the individual model catalog. For vibration service, please contact your local Kunkle representative for assistance.
- Valve options. Each Kunkle model is offered with useful options such as pressure tight caps, lift lever options, or vibration dampening preparation. When selecting valve options, keep in mind that there are code requirements that may dictate what options may be used. For instance the ASME code dictates that all air, steam and hot water (140°F+[60°C+]) pressure relief valves must be equipped with a lift lever. Refer to the individual model catalogs for listings of available options.
- Installation space. The individual model catalogs show envelope dimensions for each configuration and size.

For assistance on valve sizing and selection, please contact your local sales representative.

Copyright © 2011 Tyco Flow Control. All rights reserved.

Valve Selection Guide

(For specific minimum/maximum temperature/pressure ranges refer to individual product sections.)

Steam (ASME Section I - Power Boilers)

Model(s)	Material		Connections		Inlet Size Range		Min/Max[1] Press.		Min/Max Temp.	
	Body	Trim	NPT	FLGD	in	[mm]	psig	[barg]	°F	[°C]
300, 600	CS	SS		X	1¼ - 6"	[31.75 - 152.4]	15/1000	[1.0/69]	-20/800	[-29/427]
920, 921, 927 (special use – 10% blowdown)	CS	SS	X		½ - 2"	[12.7 - 50.8]	15/1400	[1.0/96.5]	-20/800	[-29/427]
6010, 6021, 6121, 6182 6186, 6221, 6283	Bronze	Brass	X		½ - 2½"	[12.7 - 63.5]	3/250	[0.69/17.2]	-60/406	[-51/208]
6030, 6130, 6230	Bronze	SS	X		½ - 2½"	[12.7 - 63.5]	3/300	[0.69/20.7]	-60/425	[-51/219]
6252	Iron	SS	X	X	1½ - 6"	[38.1 - 152.4]	10/250	[0.69/17.2]	-20/406	[-29/208]

Steam (ASME Section VIII - Unfired Steam Equipment)

1 and 2	Bronze	Brass	X		½ - 1"	[12.7 - 25.4]	5/250	[0.34/17.2]	-60/406	[-51/208]
264, 265	CS	SS	X		½ - 1"	[12.7 - 25.4]	4/3300	[0.28/227.6]	-20/750	[-29/399]
266, 267	SS	SS	X		½ - 1"	[12.7 - 25.4]	4/3300	[0.28/227.6]	-20/750	[-29/399]
300, 600	CS	SS		X	1¼ - 6"	[31.75 - 152.4]	15/1000	[1.0/69]	-20/750	[-29/399]
910	CS	SS	X	O	½ - 2"	[12.7 - 50.8]	3/1400	[0.21/96.5]	-20/800	[-29/427]
911	SS	SS	X	O	½ - 2"	[12.7 - 50.8]	3/1400	[0.21/96.5]	-320/800	[-195/427]
912	Bronze	Brass	X		½ - 2"	[12.7 - 50.8]	3/250	[0.21/17.2]	-320/406	[-195/208]
913	Bronze	SS	X		½ - 2"	[12.7 - 50.8]	3/300	[0.21/20.7]	-320/425	[-195/219]
6010, 6021, 6121, 6182, 6186, 6221, 6283	Bronze	Brass	X		½ - 2½"	[12.7 - 63.5]	3/250	[0.21/17.2]	-60/406	[-51/208]
6030, 6130, 6230	Bronze	SS	X		½ - 2½"	[12.7 - 63.5]	3/300	[0.21/20.7]	-60/425	[-51/219]
6252	Iron	SS	X	X	1½ - 6"	[38.1 - 152.4]	10/250	[0.69/17.2]	-20/406	[-29/208]

Steam (ASME Section IV - Low Pressure Steam Heating Boilers)

930	Iron	Bronze	X		2 - 3"	[50.8 - 76.2]	15 only	[1.0]	250 only	[122]
6933, 6934	Bronze	Brass	X		½ - 2"	[12.7 - 50.8]	15 only	[1.0]	250 only	[122]
6935	Bronze	SS	X		½ - 2"	[12.7 - 50.8]	15 only	[1.0]	250 only	[122]
6254	Iron	SS	X	X	1½ - 6"	[38.1 - 152.4]	15 only	[1.0]	250 only	[122]

Steam (Non-code)[2]

40R, 40RL	SS	SS	X		½ - ¾"	[12.7 - 19.05]	1/400	[0.07/27.6]	-60/850	[-51/454]

X = Standard O = Optional

Notes

1. Set pressures less than 15 psig [1.0 barg] are non-code only.
2. See also ASME Section VIII steam valves for non-code steam applications.

Copyright © 2011 Tyco Flow Control. All rights reserved.

Valve Selection Guide

(For specific minimum/maximum temperature/pressure ranges refer to individual product sections.)

Air/Gas (ASME Section VIII)

Model(s)	Material		Connections		Inlet Size Range		Min/Max[3] Press.		Min/Max[4] Temp.	
	Body	Trim	NPT	FLGD	in	[mm]	psig	[barg]	°F	[°C]
1 and 2	Brass	Brass	X		1/2 - 1"	[12.7 - 25.4]	5/250	[0.34/17.2]	-60/406	[-51/208]
30	Brass	Brass	X		1/4"	[6.35]	60/4000	[4.1/275.8]	20/300	[-6.6/150]
189	Bronze	SS	X		1/2 - 3/4"	[12.7 - 19.05]	1000/2500	[69/344.8]	-320/350	[-195/177]
264, 265	CS	SS	X		1/2 - 1"	[12.7 - 25.4]	4/3300	[0.28/227.6]	-20/750	[-29/399]
266, 267	SS	SS	X		1/2 - 1"	[12.7 - 25.4]	4/3300	[0.28/227.6]	-20/750	[-29/399]
300, 600	CS	SS		X	1 1/4 - 6"	[31.75 - 152.4]	15/1000	[1.0/69]	-20/800	[-195/427]
330[5]	Aluminum	SS	X		1/4"	[6.35]	1000/5500	[69/379.3]	-20/185	[-29/85]
330S, 333S[5]	Aluminum	SS			1/4"	[6.35]	2000/6500	[138/448.3]	-20/185	[-29/85]
337	Iron	Bronze	X		2 - 3"	[50.8 - 76.2]	1/60	[0.07/4.14]	-20/406	[-29/208]
338	Aluminum	Brass	X		2"	[50.8]	5/30	[0.3/2.07]	-30/400	[-34/204]
363	Bronze	SS	X		1/2 - 3/4"	[12.7 - 19.05]	50/1000	[3.4/69]	-320/350	[-195/177]
389	SS	SS	X		1/2 - 3/4"	[12.7 - 19.05]	50/2500	[3.4/172.4]	-320/350	[-195/177]
541 (Buna disc), 542 (Viton® disc), 548 (SS disc)	Brass	Brass	X		1/4 - 1/2"	[6.35 - 12.7]	3/400	[0.21/27.6]	-20/400	[-29/204]
910, 916 (soft seat)[4]	CS	SS	X	O	1/2 - 2"	[12.7 - 50.8]	3/1400	[0.21/96.5]	-20/800	[-29/427]
911, 917 (soft seat)[4]	SS	SS	X	O	1/2 - 2"	[12.7 - 50.8]	3/1400	[0.21/96.5]	-320/800	[-195/427]
912, 918 (soft seat)[4]	Bronze	Brass	X		1/2 - 2"	[12.7 - 50.8]	3/300	[0.21/20.7]	-320/406	[-195/208]
913, 919 (soft seat)[4]	Bronze	SS	X		1/2 - 2"	[12.7 - 50.8]	3/1400	[0.21/96.5]	-320/425	[-195/219]
6010, 6121, 6182 6186, 6221, 6283[1]	Bronze	Brass	X		1/2 - 2 1/2"	[12.7 - 63.5]	3/250	[0.21/17.2]	-60/406	[-51/208]
6030, 6130, 6320	Bronze	SS	X		1/2 - 2 1/2"	[12.7 - 63.5]	3/300	[0.21/20.7]	-60/425	[-51/219]
6252	Iron	SS	X	X	1 1/2 - 6"	[38.1 - 152.4]	10/250	[0.69/17.2]	-20/406	[-29/208]

Air/Gas[2] (Non-code)

230 (Kynar® seat)	Aluminum	SS	X		1/4"	[6.35]	300/1500	[20.7/103.4]	-20/185	[-29/85]
803 (Kynar® seat)	Aluminum	SS	X		1/4"	[6.35]	1000/6000	[69/413.8]	-20/185	[-29/85]
818 (Teflon® seat)	CS	SS/Brass	X		2"	[50.8]	120/150	[8.3/10.3]	-20/300	[-29/150]

Air/Gas (Vacuum) in Hg [mm Hg]

215V	Iron	Bronze	X		2 - 3"	[50.8 - 76.2]	2/29	[50/736]	-20/406	[-29/208]
910, 916 (soft seat)[4]	CS	SS	X	O	1/2 - 2"	[12.7 - 50.8]	6/29	[152/736]	-20/800	[-29/427]
911, 917 (soft seat)[4]	SS	SS	X	O	1/2 - 2"	[12.7 - 50.8]	6/29	[152/736]	-320/800	[-195/427]
912, 918 (soft seat)[4]	Bronze	Brass	X		1/2 - 2"	[12.7 - 50.8]	6/29	[152/736]	-320/406	[-195/208]
913, 919 (soft seat)[4]	Bronze	SS	X		1/2 - 2"	[12.7 - 50.8]	6/29	[152/736]	-320/425	[-195/219]

X = Standard O = Optional

Notes

1. Soft seat available on some models.
2. See also Section VIII air valves for non-code air/gas applications.
3. Set pressures less than 15 psig [1.0 barg] are non-code only.
4. Temperature limits of soft seats determine operating limits of valve.
5. Kynar® or Urethane Seat.

Copyright © 2011 Tyco Flow Control. All rights reserved.

Valve Selection Guide

(For specific minimum/maximum temperature/pressure ranges refer to individual product sections.)

Model(s)	Material Body	Material Trim	Connections NPT	Connections FLGD	Inlet Size Range in	Inlet Size Range [mm]	Min/Max[1] Press. psig	Min/Max[1] Press. [barg]	Min/Max[2] Temp. °F	Min/Max[2] Temp. [°C]
Liquid (ASME Section IV - Hot Water Boilers)										
537 (soft seat)	Iron/Bronze		Brass	X	3/4 - 2"	[19.05 - 50.8]	15/160	[1.0/11]	-20/250	[-29/121]
Liquid (ASME Section VIII)										
910, 916 (soft seat)[2]	CS	SS	X	O	1/2 - 2"	[12.7 - 50.8]	3/1400	[0.21/96.5]	-20/800	[-29/427]
911, 917 (soft seat)[2]	SS	SS	X	O	1/2 - 2"	[12.7 - 50.8]	3/1400	[0.21/96.5]	-320/800	[-195/427]
912, 918 (soft seat)[2]	Bronze	Brass	X		1/2 - 2"	[12.7 - 50.8]	3/300	[0.21/20.7]	-320/406	[-195/208]
913, 919 (soft seat)[2]	Bronze	SS	X		1/2 - 2"	[12.7 - 50.8]	3/1400	[0.21/96.5]	-320/425	[-195/219]
Liquid (Non-code)										
19, 20	Bronze	Bronze	X	O	1/2 - 3"	[12.7 - 76.2]	1/300	[0.07/20.7]	-60/406	[-51/208]
19M, 20M	Bronze	SS	X	O	2 1/2 - 3"	[63.5 - 76.2]	1/500	[0.07/34.5]	-60/406	[-51/208]
71S	Iron	SS	X		1/2 - 2"	[12.7 - 50.8]	1/250	[0.07/17.2]	-20/406	[-29/208]
171, 171P	CS	SS	X		1/2 - 2"	[12.7 - 50.8]	1/400	[0.07/27.6]	-20/550	[-29/288]
171S	SS	SS	X		1/2 - 2"	[12.7 - 50.8]	1/400	[0.07/27.6]	-20/550	[-29/288]
91	Iron	Bronze	X	X	1 1/2 - 6"	[38.1 - 152.4]	5/400	[0.34/27.6]	-20/406	[-29/208]
218,228	Iron	Bronze	X		3, 4, and 6"	[76.2 - 152.4]	60/200	[4.1/13.8]	-20/406	[-29/208]
140	SS	SS	X		3/8 - 1/2"	[9.5 - 12.7]	10/300	[0.69/20.7]	-60/406	[-51/208]
264, 265	CS	SS	X		1/2 - 1"	[12.7 - 25.4]	4/3300	[0.28/227.6]	-20/750	[-29/399]
266, 267	SS	SS	X		1/2 - 1"	[12.7 - 25.4]	4/3300	[0.28/227.6]	-20/750	[-29/399]
910, 916 (soft seat)[2]	CS	SS	X	O	1/2 - 2"	[12.7 - 50.8]	3/1400	[0.21/96.5]	-20/800	[-29/427]
911, 917 (soft seat)[2]	SS	SS	X	O	1/2 - 2"	[12.7 - 50.8]	3/1400	[0.21/96.5]	-320/800	[-195/427]
912, 918 (soft seat)[2]	Bronze	Brass	X		1/2 - 2"	[12.7 - 50.8]	3/300	[0.21/20.7]	-320/406	[-195/208]
913, 919 (soft seat)[2]	Bronze	SS	X		1/2 - 2"	[12.7 - 50.8]	3/1400	[0.21/96.5]	-320/425	[-195/219]
Liquid - Underwriters Laboratories (UL) For Oil Services										
200A	Bronze	Brass	X		3/4 - 1 1/2"	[19.05 - 38.1]	1/200	[0.07/13.8]	-60/406	[-51/208]
200H	Bronze	SS	X	O	3/4 - 2"	[19.05 - 50.8]	1/200	[0.07/13.8]	-60/406	[-51/208]
Liquid - Underwriters Laboratories (UL) and Factory Mutual Research (FM) For Fire Pump Water Relief										
218, 228	Iron	Bronze	X	X	3, 4 and 6"	[76.2 - 152.4]	60/200	[4.1/13.8]	-20/406	[-29/208]
918 (soft seat)[2, 3]	Bronze	Brass	X		3/4 - 1"	[19.05 - 25.4]	60/250	[4.1/17.2]	-20/406	[-29/208]
Other - Drip Pan Elbow										
299	Iron	N/A	X	X	2 - 8"	[50.80 - 203.2]	N/A	N/A	-20/406	[-29/208]

X = Standard O = Optional

Notes

1. Set pressures below 15 psig [1.0 barg] are non-code only.
2. Temperature limits of soft seats determine operating limits of valve.
3. FM Approved only.

Copyright © 2011 Tyco Flow Control. All rights reserved.

Valve Sizing

After the required relieving capacity has been determined, the pressure relief valve may be sized by using the capacity charts that are included in each model's catalog sheet. The capacities given in those charts may be adjusted for special conditions such as fluid density and temperature by using the correction factors given in Tables B through D (pages 18-20). Valves may also be sized by performing sizing calculations per the formulas (pages 15 and 16) in this section.

Most Kunkle valves may be sized by using the "Coefficient Method" (listed below). These valves typically are high lift valves where the nozzle bore is the flow controlling orifice. This calculation method involves selecting the valve model and corresponding flow coefficient and orifice area from Table A (page 16) and then using the capacity formula (page 14) for the service in which the valve will function.

Kunkle Models 30, 541, 542, and 548 use the "Slope Method" for sizing calculations. These valves are typically low lift valves, where the annular orifice between the disc and the nozzle seat is the flow controlling orifice. These models are characterized by having a linear increase in capacity with respect to inlet pressure. The "slope" defines this direct relationship of inlet pressure to capacity. Consult your sales representative for sizing assistance.

Kunkle Models 1, 2, 19, 20, 200, 71S, 171, 171S, 91, 218, 228, and 140 use the "KA Method" for sizing calculations. This method is similar to the slope method, in that it is used for low lift valves and is empirically derived. The major difference is that the relationship between inlet pressure and capacity is not linear. These valves are characterized by having low lift that varies with inlet pressure, which makes the flow controlling orifice area indeterminate. Consult your sales representative for sizing assistance.

IV-A Coefficient Method

Follow these steps for calculating what orifice size is necessary to flow the required capacity:

1. Select the Model Family that you are interested in from the Valve Selection Guide (pages 10-13).
2. From Table A (page 17), record the Flow Coefficient (K_d) corresponding to the service in which the valve will operate.
3. Select the proper formula(s) for the service in which the valve will operate. Calculate the minimum required orifice area.
4. Select the Orifice/Size Designation from Table A (page 17) that has a Flow Area closest to, but not less than the minimum required orifice area calculated in step 3.

Copyright © 2011 Tyco Flow Control. All rights reserved.

Valve Sizing

U.S. Units | **Metric Units**

Steam - Sections I, IV and VIII (15 psig and above)

$$A = \frac{W}{51.5\ K_d\ P_1\ K_{sh}}$$

$$A = \frac{W}{52.5\ K_d\ P_1\ K_{sh}}$$

Steam - Non Code (less than 15 psig)

$$A = \frac{W}{735\ F_2\ K_d}\sqrt{\frac{TZ}{M\ P_1\ (P_1 - P_2)}}$$

$$A = \frac{W}{558\ F_2\ K_d}\sqrt{\frac{TZ}{M\ P_1\ (P_1 - P_2)}}$$

Air - Section VIII (15 psig and above)

$$A = \frac{V\sqrt{MTZ}}{6.32\ C\ K_d\ P_1}$$

Volumetric Flow

$$A = \frac{V\sqrt{MTZ}}{17.02\ C\ K_d\ P_1}$$

Volumetric Flow

$$A = \frac{W}{C\ K_d\ P_1}\sqrt{\frac{TZ}{M}}$$

Mass Flow

$$A = \frac{1.316W}{C\ K_d\ P_1}\sqrt{\frac{TZ}{M}}$$

Mass Flow

Air - Non-Code (less than 15 psig)

$$A = \frac{V}{4645.2\ F_2\ K_d}\sqrt{\frac{MTZ}{P_1\ (P_1 - P_2)}}$$

$$A = \frac{V}{12503\ F_2\ K_d}\sqrt{\frac{MTZ}{P_1\ (P_1 - P_2)}}$$

Liquid - Section VIII (15 psig and above)

$$A = \frac{Q}{38\ K_d}\sqrt{\frac{G}{(1.1\ p_1 - p_2)}}$$

$$A = \frac{Q}{5.094\ K_d}\sqrt{\frac{G}{(1.1\ p_1 - p_2)}}$$

Liquid - Non-Code

$$A = \frac{Q}{38\ K_d}\sqrt{\frac{G}{(1.25\ p_1 - p_2)}}$$

$$A = \frac{Q}{5.094\ K_d}\sqrt{\frac{G}{(1.25\ p_1 - p_2)}}$$

F_2 - Coefficient of Subcritical Flow

$$F_2 = \sqrt{\left(\frac{k}{k-1}\right)\left(r\right)^{2/k}\left[\frac{1 - r^{(k-1)/k}}{1 - r}\right]}$$

Note

1. Consult your sales representative for sizing assistance for product groups: Fig. 1 and 2; Fig. 19, 20, 200; Fig. 30; Fig. 71S, 171, 171S; Fig. 91, 218, 228; Fig. 140; and Fig. 541, 542 and 548.

Copyright © 2011 Tyco Flow Control. All rights reserved.

Valve Sizing

Sizing Coefficient Method

A = Required effective discharge area of the valve, in^2 [cm^2]

W = Mass Flow Rate, lb/hr [kg/hr]

V = Volumetric Flow Rate (gases, vapors) in SCFM [Nm^3/hr] at standard atmospheric conditions of 14.7 psia and 60°F [1.013 bara/0°C]

Q = Volumetric Flow Rate (liquids) in GPM [m^3/hr] at standard atmospheric conditions of 14.7 psia and 70°F [1.013 bara/21°C]

K_d = ASME Flow Coefficient of Discharge

P_1 = See chart below

P_2 = Atmospheric Pressure = 14.7 psia

p_1 = Set Pressure (psig)

p_2 = Back Pressure (psig)

F_2 = Coefficient of Subcritical Flow

k = Ratio of Specific Heat - 1.31 for Steam, 1.4 for Air

r = Ratio of Back Pressure to Upstream Relieving Pressure = P_2/P_1

M = Molecular Weight of Process Medium

T = Relieving Temperature, °R = °F + 460 [°K = °C + 273]

Z = Compressibility Factor (assume Z = 1 if unknown)

C = Gas Constant based on k (if unknown, use C = 315)

G = Specific Gravity of process fluid at 70°F [21°C]

K_{sh} = Superheat Steam Correction Factor

Allowable Overpressure

Designation	Section	Definition
P_1	Section I Steam (15 psig and above)	Set pressure + 3% or 2 psi overpressure (whichever is greater) + 14.7 psia
P_1	Section IV Steam (15 psig and above)	Set pressure + 5 psi overpressure + 14.7 psia for Low Pressure Steam Boilers
P_1	Section IV Hot Water (15 psig and above)	Set pressure + 10% overpressure + 14.7 psia for Hot Water Boilers
P_1	Non-Code Steam (below 15 psig)	Set pressure + 10% overpressure + 14.7 psia
P_1	Section VIII Steam (15 psig and above)	Set pressure + 10% or 3 psi overpressure (whichever is greater) + 14.7 psia
P_1	Non-Code Air (below 15 psig)	Set pressure + 10% overpressure + 14.7 psia
P_1	Section VIII Air (15 psig and above)	Set pressure + 10% or 3 psi overpressure (whichever is greater) + 14.7 psia
P_1	Non-Code Liquid (below 15 psig)	Set pressure (psig)
P_1	Section VIII Liquid (15 psig and above)	Set pressure (psig)

Copyright © 2011 Tyco Flow Control. All rights reserved.

Valve Sizing

Table A

Model Family	Orifice/Size Designation	Flow Area in²	Flow Area [cm²]	Flow Coefficient (K_d) Non-Code and ASME Section VIII Air/Gas and Steam	ASME Section I Steam	ASME Section IV Steam	Non-Code and ASME Section VIII Liquid
189	C	0.034	[0.219]	0.874			
	D	0.034	[0.219]	0.874			
264	C	0.110	[0.710]	0.766			0.408
	D	0.110	[0.710]	0.766			0.408
	E	0.110	[0.710]	0.766			0.408
337	H	1.838	[11.858]	0.860			
	J	2.786	[17.974]	0.860			
	K	4.037	[26.045]	0.860			
537	D	0.533	[3.439]			0.806	
	E	0.833	[5.374]			0.806	
	G	1.767	[11.400]			0.806	
	H	3.142	[20.271]			0.806	
910	D	0.121	[0.781]	0.878	0.878		0.710
	E	0.216	[1.394]	0.878	0.878		0.710
	F	0.337	[2.174]	0.878	0.878		0.710
	G	0.553	[3.568]	0.878	0.878		0.710
	H	0.864	[5.574]	0.878	0.878		0.710
	J	1.415	[9.129]	0.878	0.878		0.710
930	H	5.080	[32.774]			0.818	
	J	6.350	[40.968]			0.818	
	K	7.620	[49.161]			0.818	
6010	D	0.121	[0.781]	0.878	0.878	0.878	
	E	0.216	[1.394]	0.878	0.878	0.878	
	F	0.337	[2.174]	0.878	0.878	0.878	
	G	0.553	[3.568]	0.878	0.878	0.878	
	H	0.864	[5.574]	0.878	0.878	0.878	
	J	1.415	[9.129]	0.878	0.878	0.878	
6252	J	1.414	[9.123]	0.878	0.878	0.878	
	K	2.022	[13.045]	0.878	0.878	0.878	
	L	3.138	[20.245]	0.878	0.878	0.878	
	M	3.960	[25.548]	0.878	0.878	0.878	
	N	4.774	[30.800]	0.878	0.878	0.878	
	P	7.018	[45.277]	0.878	0.878	0.878	
	Q	12.155	[78.419]	0.878	0.878	0.878	
	R	17.600	[113.548]	0.878	0.878	0.878	

Copyright © 2011 Tyco Flow Control. All rights reserved.

Valve Sizing

Table B - Steam Super Heat Correction Factor, K_{sh}

Set Pressure psig	[barg]	Saturated Steam Temp. °F	[°C]	Total Steam Temperature °F [°C] 280 [138]	300 [149]	320 [160]	340 [171]	360 [182]	380 [193]	400 [205]	420 [216]	440 [227]	460 [238]	480 [249]	500 [260]	520 [271]	540 [282]	560 [293]
15	[1.03]	250	[121]	1.00	1.00	1.00	.99	.99	.98	.98	.97	.96	.95	.94	.93	.92	.91	.90
20	[1.38]	259	[126]	1.00	1.00	1.00	.99	.99	.98	.98	.97	.96	.95	.94	.93	.92	.91	.90
40	[2.76]	287	[142]		1.00	1.00	1.00	.99	.99	.98	.97	.96	.95	.94	.93	.92	.91	.90
60	[4.14]	308	[153]			1.00	1.00	.99	.99	.98	.97	.96	.95	.94	.93	.92	.91	.90
80	[5.52]	324	[162]				1.00	1.00	.99	.99	.98	.97	.96	.94	.93	.92	.91	.90
100	[6.90]	338	[170]					1.00	1.00	.99	.98	.97	.96	.95	.94	.93	.92	.91
120	[8.27]	350	[177]					1.00	1.00	.99	.98	.97	.96	.95	.94	.93	.92	.91
140	[9.65]	361	[183]						1.00	1.00	.99	.98	.96	.95	.94	.93	.92	.91
160	[11.0]	371	[188]						1.00	1.00	.99	.98	.97	.95	.94	.93	.92	.91
180	[12.4]	380	[193]							1.00	.99	.98	.97	.96	.95	.93	.92	.91
200	[13.8]	388	[198]							1.00	.99	.99	.97	.96	.95	.93	.92	.91
220	[15.2]	395	[202]							1.00	1.00	.9	.98	.96	.95	.94	.93	.92
240	[16.6]	403	[206]								1.00	.99	.98	.97	.95	.94	.93	.92
260	[17.9]	409	[210]								1.00	.99	.98	.97	.96	.94	.93	.92
280	[19.3]	416	[213]								1.00	1.00	.98	.97	.96	.95	.93	.92
300	[20.7]	422	[217]									1.00	.99	.98	.96	.95	.93	.92
350	[24.1]	436	[225]									1.00	1.00	.99	.96	.96	.94	.93
400	[27.6]	448	[231]										1.00	.99	.96	.96	.95	.93
450	[31.0]	460	[238]											1.00	.96	.96	.96	.94
500	[34.5]	470	[243]											1.00	.96	.96	.96	.94
550	[37.9]	480	[249]												.97	.97	.97	.95
600	[41.4]	489	[254]												.97	.97	.97	.97
650	[44.8]	497	[258]													1.00	.99	.97
700	[48.3]	506	[263]													1.00	.99	.97
750	[51.7]	513	[267]													1.00	1.00	.98
800	[55.2]	520	[271]														1.00	.99
850	[58.6]	527	[275]														1.00	.99
900	[62.1]	533	[278]														1.00	1.00
950	[65.5]	540	[282]															1.00
1000	[69.0]	546	[286]															1.00
1050	[72.4]	552	[289]															1.00
1100	[75.9]	558	[292]															
1150	[79.3]	563	[295]															
1200	[82.7]	569	[298]															

Note

Revised capacity for "Super Heat Steam:" multiply capacity of Valve x Factor noted above.

Copyright © 2011 Tyco Flow Control. All rights reserved.

Valve Sizing

Table B - Steam Super Heat Correction Factor, K_{sh}

Set Pressure psig	[barg]	Saturated Steam Temp. °F	[°C]	Total Steam Temperature °F [°C] 580 [305]	600 [316]	620 [326]	640 [338]	660 [349]	680 [360]	700 [371]	720 [382]	740 [393]	760 [405]	780 [416]	800 [427]	900 [482]	1000 [537]	1100 [593]
15	[1.03]	250	[121]	.89	.88	.87	.86	.86	.85	.84	.83	.83	.82	.81	.81	.78	.75	.72
20	[1.38]	259	[126]	.89	.88	.87	.86	.86	.85	.84	.83	.83	.82	.81	.81	.78	.75	.72
40	[2.40]	287	[142]	.89	.88	.87	.87	.86	.85	.84	.84	.83	.82	.82	.81	.78	.75	.72
60	[4.14]	308	[153]	.89	.88	.87	.87	.86	.85	.84	.84	.83	.82	.82	.81	.78	.75	.72
80	[5.52]	324	[162]	.89	.89	.88	.87	.86	.85	.84	.84	.83	.82	.82	.81	.78	.75	.72
100	[6.90]	338	[170]	.90	.89	.88	.87	.86	.85	.85	.84	.83	.82	.82	.81	.78	.75	.72
120	[8.27]	350	[177]	.90	.89	.88	.87	.86	.85	.85	.84	.83	.82	.82	.81	.78	.75	.72
140	[9.65]	361	[183]	.90	.89	.88	.87	.86	.85	.85	.84	.83	.82	.82	.81	.78	.75	.72
160	[11.0]	371	[188]	.90	.89	.88	.87	.86	.86	.85	.84	.83	.82	.82	.81	.78	.75	.72
180	[12.4]	380	[193]	.90	.89	.88	.87	.86	.86	.85	.84	.83	.82	.82	.81	.78	.75	.72
200	[13.8]	388	[198]	.90	.89	.88	.87	.86	.86	.85	.84	.83	.83	.82	.81	.78	.75	.72
220	[15.2]	395	[201]	.91	.90	.89	.88	.87	.86	.85	.84	.8	.83	.82	.81	.78	.75	.72
240	[16.6]	403	[206]	.91	.90	.89	.88	.87	.86	.85	.84	.84	.83	.82	.81	.78	.75	.72
260	[17.9]	409	[209]	.91	.90	.89	.88	.87	.86	.85	.85	.84	.83	.82	.81	.78	.75	.72
280	[19.3]	416	[213]	.91	.90	.91	.88	.87	.86	.85	.85	.84	.83	.82	.82	.78	.75	.72
300	[20.7]	422	[217]	.91	.90	.89	.88	.87	.86	.86	.85	.84	.83	.82	.82	.78	.75	.72
350	[24.1]	436	[224]	.92	.91	.90	.89	.88	.87	.86	.85	.84	.83	.83	.82	.78	.76	.72
400	[27.6]	448	[231]	.92	.91	.90	.89	.88	.87	.86	.85	.84	.84	.83	.82	.79	.76	.72
450	[31.0]	460	[238]	.93	.92	.91	.89	.88	.87	.86	.86	.85	.84	.83	.82	.79	.76	.72
500	[34.5]	470	[243]	.93	.92	.91	.90	.89	.88	.87	.86	.85	.84	.83	.82	.79	.76	.73
550	[37.9]	480	[249]	.94	.92	.91	.90	.89	.88	.87	.86	.85	.84	.83	.82	.79	.76	.73
600	[41.4]	489	[254]	.94	.93	.92	.90	.89	.88	.87	.86	.85	.84	.84	.83	.79	.76	.73
650	[44.8]	497	[258]	.95	.94	.92	.91	.90	.89	.87	.86	.86	.85	.84	.83	.79	.76	.73
700	[48.3]	506	[263]	.96	.94	.93	.91	.90	.89	.88	.87	.86	.85	.84	.83	.79	.76	.73
750	[51.7]	513	[267]	.96	.95	.93	.92	.90	.89	.88	.87	.86	.85	.84	.83	.79	.76	.73
800	[55.2]	520	[271]	.97	.95	.94	.92	.91	.90	.88	.87	.86	.85	.84	.84	.80	.76	.73
850	[58.6]	527	[275]	.98	.96	.94	.93	.92	.90	.89	.88	.87	.86	.85	.84	.80	.76	.73
900	[62.1]	533	[278]	.99	.97	.95	.93	.92	.90	.89	.88	.87	.86	.85	.84	.80	.77	.73
950	[65.5]	540	[282]	.99	.97	.95	.94	.92	.91	.89	.88	.87	.86	.85	.84	.80	.77	.73
1000	[69.0]	546	[286]	.99	.98	.96	.94	.93	.91	.90	.89	.87	.86	.85	.84	.80	.77	.73
1050	[72.4]	552	[289]	1.00	.99	.97	.95	.93	.92	.90	.89	.88	.87	.86	.85	.80	.77	.73
1100	[75.9]	558	[292]	1.00	.99	.98	.95	.94	.92	.91	.89	.88	.87	.86	.85	.81	.77	.73
1150	[79.3]	563	[295]	1.00	.99	.98	.96	.94	.92	.91	.90	.88	.87	.86	.85	.81	.77	.73
1200	[82.7]	569	[298]	1.00	.99	.98	.97	.95	.93	.91	.90	.89	.87	.86	.85	.81	.77	.73

Note

Revised capacity for "Super Heat Steam:" multiply capacity of Valve x Factor noted above.

Copyright © 2011 Tyco Flow Control. All rights reserved.

Valve Sizing

Table C - Air and Gas Temperature Correction Factors

Temperature °F	Tc	Temperature °F	Tc	Temperature °F	Tc	Temperature °F	Tc
0	1.062	90	0.972	260	0.849	440	0.760
10	1.051	100	0.964	280	0.838	460	0.752
20	1.041	120	0.947	300	0.828	480	0.744
30	1.030	140	0.931	320	0.817	500	0.737
40	1.020	160	0.916	340	0.806	550	0.718
50	1.009	180	0.902	360	0.796	600	0.701
60	1.000	200	0.888	380	0.787	650	0.685
70	0.991	220	0.874	400	0.778	700	0.669
80	0.981	240	0.862	420	0.769	750	0.656

For temperatures other than 60°F at valve inlet, multiply standard SCFM by Tc.

Table D - Gas and Liquid Relative Density Correction Factors

Specific Gravity	Dc	Specific Gravity	Dc	Specific Gravity	Dc	Specific Gravity	Dc
0.07	3.770	0.60	1.290	1.05	0.975	1.70	0.768
0.08	3.530	0.65	1.240	1.10	0.955	1.80	0.745
0.09	3.333	0.70	1.195	1.15	0.933	1.90	0.725
0.10	3.160	0.75	1.155	1.20	0.913	2.00	0.707
0.20	2.240	0.80	1.117	1.25	0.895	2.50	0.633
0.30	1.825	0.85	1.085	1.30	0.877	3.00	0.577
0.40	1.580	0.90	1.055	1.40	0.845	3.50	0.535
0.50	1.414	0.95	1.025	1.50	0.817	4.00	0.500
0.55	1.350	1.00	1.000	1.60	0.791	4.50	0.471

For a specific gravity other than air or water (=1.0), multiply CFM or GPM by Dc.

Copyright © 2011 Tyco Flow Control. All rights reserved.

Valve Sizing

Physical Properties

Gas or Vapor	M Molecular Weight	k Specific Heat Ratio	C Gas Constant
Acetone	58.08	1.12	329
Acetylene (Ethyne)	26.04	1.26	343
Air	28.97	1.40	356
Ammonia, Anhydrous	17.03	1.31	348
Argon	39.95	1.67	378
Benzene (Benzol or Benzole)	78.11	1.12	329
Boron Trifluoride	67.82	1.20	337
Butadiene-1,3 (Divinyl)	54.09	1.12	329
Butane-n (Normal Butane)	58.12	1.09	326
Butylene (1-Butene)	56.11	1.11	328
Carbon Dioxide	44.01	1.29	346
Carbon Disulfide (C. Bisulfide)	76.13	1.21	33
Carbon Monoxide	28.01	1.40	356
Carbon Tetrachloride	153.82	1.11	328
Chlorine	70.91	1.36	353
Chloromethane (Methyl Chloride)	50.49	1.28	345
Cyclohexane	84.16	1.09	326
Cyclopropane (Trimethylene)	42.08	1.11	328
Decane-n	142.29	1.04	320
Diethylene Glycol (DEG)	106.17	1.07	323
Dimethyl Ether (Methyl Ether)	46.07	1.11	328
Dowtherm A	165.00	1.05	321
Dowtherm E	147.00	1.00	315
Ethane	30.07	1.19	336
Ethyl Alcohol (Ethanol)	46.07	1.13	330
Ethylene (Ethene)	28.05	1.24	341
Ethylene Glycol	62.07	1.09	326
Ethylene Oxide	44.05	1.21	338
Fluorocarbons:			
12, Dichlorodifluoromethane	120.93	1.14	331
13, Chlorotrifluoromethane	104.47	1.17	334
13B1, Bromotrifluoromethane	148.93	1.14	331
22, Chlorodifluoromethane	86.48	1.18	335
115, Chloropentafluoroethane	154.48	1.08	324
Glycerine (Glycerin or Glycerol)	92.10	1.06	322
Helium	4.00	1.67	378
Heptane	100.21	1.05	321

Copyright © 2011 Tyco Flow Control. All rights reserved.

Valve Sizing

Physical Properties

Gas or Vapor	M Molecular Weight	k Specific Heat Ratio	C Gas Constant
Hexane	86.18	1.06	322
Hydrogen	2.02	1.41	357
Hydrogen Chloride, Anhydrous	36.46	1.41	357
Hydrogen Sulfide	34.08	1.32	349
Isobutane (2-Methylpropane)	58.12	1.10	327
Isoprene (2-Methyl-1, 3 Butadiene)	68.12	1.09	326
Isopropyl Alcohol (Isopropanol)	60.10	1.09	326
Krypton	83.80	1.71	380
Methane	16.04	1.31	348
Methyl Alcohol (Methanol)	32.04	1.20	337
Methylamines, Anhydrous			
Monomethylamine (Methylamine)	31.06	1.02	317
Dimethylamine	45.08	1.15	332
Trimethylamine	59.11	1.18	335
Methyl Mercapton (Methanethiol)	48.11	1.20	337
Naphthalene (Napthaline)	128.17	1.07	323
Natural Gas (specific gravity = 0.60)	17.40	1.27	344
Neon	20.18	1.64	375
Nitrogen	28.01	1.40	356
Nitrous Oxide	44.01	1.30	347
Octane	114.23	1.05	321
Oxygen	32.00	1.40	356
Pentane	72.15	1.07	323
Propadiene (Allene)	40.07	1.69	379
Propane	44.10	1.13	330
Propylene (Propene)	42.08	1.15	332
Propylene Oxide	58.08	1.13	330
Styrene	104.15	1.07	323
Sulfur Dioxide	64.06	1.28	345
Sulfur Hexafluoride	146.05	1.09	326
Steam	18.02	1.31	348
Toluene (Toluol or Methylbenzene)	92.14	1.09	326
Triethylene Glycol (TEG)	150.18	1.04	320
Vinyl Chloride Monomer (VCM)	62.50	1.19	336
Xenon	131.30	1.65	376
Xylene (p-Xylene)	106.17	1.07	323

Copyright © 2011 Tyco Flow Control. All rights reserved.

Valve Sizing

Physical Properties

Liquid	G Specific Gravity Water = 1	°F	°C
Acetaldehyde	0.779	68	20
Acetic Acid	1.051	68	20
Acetone	0.792	68	20
Ammonia, Anhydrous	0.666	68	20
Automotive Crankcase and Gear Oils:			
SAE-5W Through SAE 150	0.88-0.94	60	15.6
Beer	1.01	60	15.6
Benzene (Benzol)	0.880	68	20
Boron Trifluoride	1.57	-148	-100
Butadiene - 1, 3	0.622	68	20
Butane-n (Normal Butane)	0.579	68	20
Butylene (1-Butene)	0.600	68	20
Carbon Dioxide	1.03	-4	-20
Carbon Disulfide (C. Bisulfide)	1.27	68	20
Carbon Tetrachloride	1.60	68	20
Chlorine	1.42	68	20
Chloromethane (Methyl Chloride)	0.921	68	20
Crude Oils:			
32.6 Deg API	0.862	60	15.6
35.6 Deg API	0.847	60	15.6
40 Deg API	0.825	60	15.6
48 Deg API	0.79	60	15.6
Cyclohexane	0.780	68	20
Cyclopropane (Trimethylene)	0.621	68	20
Decane-n	0.731	68	20
Diesel Fuel Oils	0.82-0.95	60	15.6
Diethylene Glycol (DEG)	1.12	68	20
Dimethyl Ether (Methyl Ether)	0.663	68	20
Dowtherm A	0.998	68	20
Dowtherm E	1.087	68	20
Ethane	0.336	68	20
Ethyl Alcohol (Ethanol)	0.79	68	20
Ethylene (Ethene)	0.569	-155	-104
Ethylene Glycol	1.115	68	20
Ethylene Oxide	0.901	68	20

Copyright © 2011 Tyco Flow Control. All rights reserved.

Valve Sizing

Physical Properties

Liquid	G Specific Gravity Water = 1	°F	°C
Fluorocarbons:			
R12, Dichlorodifluoromethane	1.34	68	20
R13, Chlorotrifluoromethane	0.916	68	20
R13B1, Bromotrifluoromethane	1.58	68	20
R22, Chlorodifluoromethane	1.21	68	20
R115, Chloropentafluoromethane	1.31	68	20
Fuel Oils, Nos. 1, 2, 3, 5 and 6	0.82-0.95	60	15.6
Gasolines	0.68-0.74	60	15.6
Glycerine (Glycerin or Glycerol)	1.26	68	20
Heptane	0.685	68	20
Hexane	0.660	68	20
Hydrochloric Acid	1.64	60	15.6
Hydrogen Sulfide	0.78	68	20
Isobutane (2-Methylpropane)	0.558	68	20
Isoprene (2-Methyl - 1, 3-Butadiene)	0.682	68	20
Isopropyl Alcohol (Isopropanol)	0.786	68	20
Jet Fuel (average)	0.82	60	15.6
Kerosene	0.78-0.82	60	15.6
Methyl Alcohol (Methanol)	0.792	68	20
Methylamines, Anhydrous:			
Monomethylamine (Methylamine)	0.663	68	20
Dimethylamine	0.656	68	20
Trimethylamine	0.634	68	20
Methyl Mercapton (Methanethiol)	0.870	68	20
Nitric Acid	1.50	60	15.6
Nitrous Oxide	1.23	-127	-88.5
Octane	0.703	68	20
Pentane	0.627	68	20
Propadiene (Allene)	0.659	-30	-34.4
Propane	0.501	68	20
Propylene (Propene)	0.514	68	20
Propylene Oxide	0.830	68	20
Styrene	0.908	68	20
Sulfur Dioxide	1.43	68	20

Copyright © 2011 Tyco Flow Control. All rights reserved.

Valve Sizing

Physical Properties

Liquid	G Specific Gravity Water = 1	°F	°C
Sulfur Hexafluoride	1.37	68	20
Sulfuric Acid:			
95–100%	1.839	68	20
60%	1.50	68	20
20%	1.14	68	20
Toluene (Toluol or Methylbenzene)	0.868	68	20
Triethylene Glycol (TEG)	1.126	68	20
Vinyl Chloride Monomer (VCM)	0.985	-4	-20
Water, fresh	1.00	68	20
Water, sea	1.03	68	20
Xylene (p-Xylene)	0.862	68	20

Sizing - Determining K_v and K_w

U.S. Units

$$R = \frac{V_L\,(2{,}800\ G)}{\mu\sqrt{A}}$$

or

$$R = \frac{12{,}700\ V_L}{U\sqrt{A}}$$

Metric Units

$$R = \frac{31{,}313\ V_L\ G}{\mu\sqrt{A}}$$

Determining K_v

V_L = Flow rate at the flowing temperature, in U.S. gpm [m³/hr]

V_L = Flow rate at the flowing temperature, in U.S. gpm [m³/hr]

G = Specific gravity of liquid at flowing temperature referred to water = 1.00 at 70°F [21°C]

μ = Absolute viscosity at the flowing temperature, in centipoises

A = Effective discharge area, in square inches [cm²] (from manufacturer's standard orifice areas)

U = Viscosity at the flowing temperature, in Saybolt Universal seconds

After the value of R is determined, the factor K_V is obtained from the graph. Factor K_V is applied to correct the "preliminary required discharge area." If the corrected area exceeds the "chosen standard orifice area," the calculations should be repeated using the next larger standard orifice size.

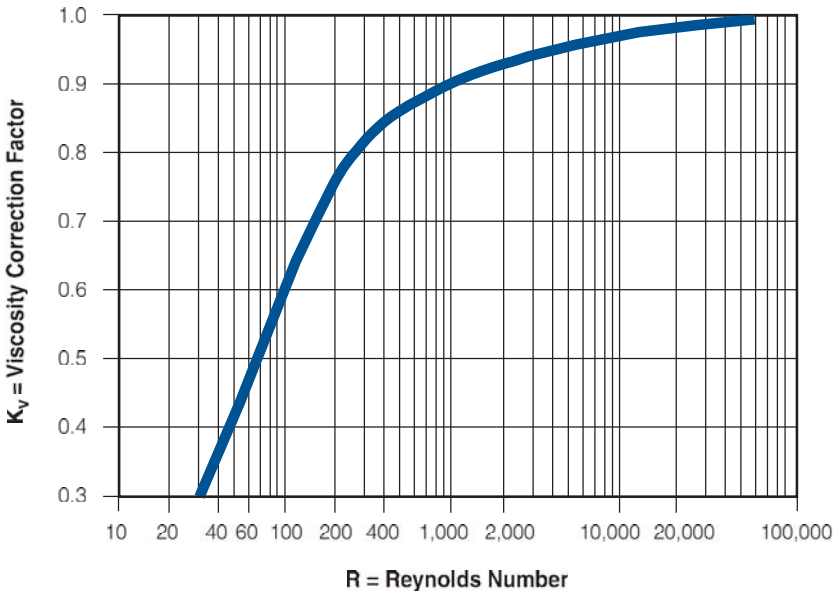

Copyright © 2011 Tyco Flow Control. All rights reserved.

Conversion Factors

Absolute Viscosity

Given	To find desired value, multiply "Given" value by factor below			
	poise	Centipoise	$\frac{gm}{cm-sec}$	$\frac{lb}{ft-sec}$
poise	—	100	1	0.0672
centipoise	0.01	—	0.01	0.000672
$\frac{gm}{cm-sec}$	1	100	—	0.0672
$\frac{lb}{ft-sec}$	14.88	1488	14.88	—

Notes

1. Kinematic viscosity x specific gravity = absolute viscosity.
2. Centistokes x specific gravity = centipoise.
3. Saybolt Second Universal (SSU) x 0.216 x specific gravity = centipoise.

Kinematic Viscosity

Given	To find desired value, multiply "Given" value by factor below			
	stoke	Centistoke	$\frac{cm^2}{sec}$	$\frac{ft^2}{sec}$
stoke	—	100	1	0.001076
centistoke	0.01	—	0.01	1.076 x 10-5
$\frac{cm2}{sec}$	1	100	—	0.001076
$\frac{ft2}{sec}$	929.0	92900	929.0	—

Liquid Flow Conversions

Given	To find desired value, multiply "Given" value by factor below				
	l/hr	gpm - US	gpm - Imp	barrels/day	m^3/hr
l/hr (litres/hour)	—	0.00440	0.003666	0.1510	0.0010
gpm (US gallons per minute)	227.1	—	0.8327	34.29	0.2271
gpm (Imperial gallons per minute)	272.8	1.201	—	41.18	0.2728
barrels/day (petroleum - 42 US gallons)	6.624	0.02917	0.02429	—	0.006624
$m^3$3/hr (cubic meters per hour)	1000	4.403	3.666	151.0	—
m^3/s (cubic meters per second)	3.6×10^6	0.02917	0.02429	—	0.006624
kg/hr (kilograms per hour)	$\frac{1}{G}$	$\frac{1}{227.1G}$	$\frac{1}{272.8G}$	$\frac{0.151}{G}$	$\frac{1}{1000G}$
lb/hr (pounds per hour)	$\frac{1}{2.205G}$	$\frac{1}{500.8G}$	$\frac{1}{601.5G}$	$\frac{1}{14.61G}$	$\frac{1}{2205G}$

Note

1. G = Specific gravity of liquid at its relieving temperature compared to that of water at 68°F [20°C], where $G_{water} = 1.00$.

Copyright © 2011 Tyco Flow Control. All rights reserved.

Conversion Factors

Notes

1. M = Molecular weight of vapor or gas.
2. Volumetric flow (per time unit of hour or minute as shown) in standard cubic feet per minute at 14.7 psia [1.013 bara], 60°F [16°C].
3. Weight flow in pounds per hour.
4. Weight flow in kilograms per hour.
5. Volumetric flow (per time unit of hour or minute as shown) at 1.013 bara 32°F [0°C]. This represents the commercial standard, known as the Normal Temperature and Pressure (NTP).

   Conversions from one volumetric flow rate to another or to weight flow (and vice versa) may only be done when the volumetric flow is expressed in the standard conditions shown above. If flows are expressed at temperature or pressure bases that differ from those listed above, they must first be converted to the standard base.

Gas Flow Conversions

Given	To find desired value, multiply "Given" value by factor below					
	SCFM	SCFH	lb/hr	[kg/hr]	[Nm³/hr]	[Nm³/min]
scfm[2]	—	60	$\frac{M}{6.32}$	$\frac{M}{13.93}$	1.608	0.0268
scfh[2]	0.01677	—	$\frac{M}{379.2}$	$\frac{M}{836.1}$	0.0268	0.000447
lb/hr[3] or #/hr[3]	$\frac{6.32}{M}$	$\frac{379.2}{M}$	—	0.4536	$\frac{10.17}{M}$	$\frac{0.1695}{M}$
kg/hr[4]	$\frac{13.93}{M}$	$\frac{836.1}{M}$	2.205	—	$\frac{22.40}{M}$	$\frac{0.3733}{M}$
Nm³/hr[5]	0.6216	37.30	$\frac{M}{10.17}$	$\frac{M}{22.40}$	—	0.01667
Nm³/min[5]	37.30	2238	5.901 M	2.676 M	60	—

If flow is expressed in actual volume, such as cfm (cubic feet per minute) or acfm (actual cfm) as is often done for compressors, where the flow is described as displacement or swept volume, the flow may be converted to scfm as follows (or from flow expressed in m³/hr to Nm³/hr).

Inch-Pound Units

$$SCFM = \left(\begin{matrix}cfm \\ or \\ acfm\end{matrix}\right) x \frac{14.7 + p}{14.7} \times \frac{520}{460 + t}$$

Where:

p = gauge pressure of gas or vapor in psig

t = temperature of gas or vapor in °F

Metric Units

$$Nm^3/hr = m^3hr = x \frac{1.013 + p}{1.013} \times \frac{273}{273 + t}$$

Where:

p = gauge pressure of gas or vapor in barg

t = temperature of gas or vapor in °C

Notes

1. Also expressed as kp/cm² and kgf/cm².
2. Normal Temperature and Pressure (NTP) Conditions are, at sea level, equal to 1.013 bara or 1.033 kg/cm² (kilograms force per square centimeter absolute) at a base temperature of 32°F [0°C]. This differs slightly from Metric Standard Conditions (MSC), which uses 1.013 bara 60°F [15°C] for the base temperature.
3. Inch-Pound Standard Conditions are, at sea level, equal to 14.7 psia (pounds force per square inch absolute), rounded up from 14.696 psia, and at a base temperature of 60°F [16°C].

Pressure Conversion

Given	To find desired value, multiply "Given" value by factor below			
	kPa	psig	kg/cm²	barg
kPa (kilopascal)	—	0.1450	0.0102	0.0100
psig (pounds/in²)[3]	6.895	—	0.0703	0.06895
kg/cm²[1][1](kilograms/cm²)	98.07	14.22	—	0.9807
barg	100.00	14.50	1.020	—

Area Conversion

Given	To find desired value, multiply "Given" value by factor below			
	in²	ft²	mm²	cm²
in²	—	0.006944	645.16	6.4516
cm²	0.155	1.076×10^{-3}	100	—
ft²	144	—	92900	929
mm²	0.00155	1.076×10^{-5}	—	0.01

Temperature Conversion

Degrees Celsius (°C)	Degrees Fahrenheit (°F)
C + 273.15 = K (Kelvin)	F + 459.67 = R (Rankine)
(C x 1.8) + 32 = F (Fahrenheit)	(F - 32) x 0.556 = C (Celsius)

Copyright © 2011 Tyco Flow Control. All rights reserved.

Installation

1. Before installing a new safety/relief valve, we recommend that a pipe tap be used to assure clean-cut and uniform threads in the vessel opening and to allow for normal hand engagement followed by a half to one turn by wrench.
2. Install the valve in a vertical position so that discharge piping and code required drains can be properly piped to prevent build-up of back pressure and accumulation of foreign material around the valve seat area.
3. Avoid over-tightening as this can distort safety/relief valve seats. One need only remember that as the vessel and valve are heated, the expansion involved will grasp the valve more firmly.
4. When installing flange connected valves, use new gaskets and draw the mounting bolts down evenly.
5. Do not use the valve outlet or cap as a lever for installation. Use only flat jawed wrenches on the flats provided.
6. Avoid excessive "popping" of the safety/relief valve as even one opening can provide a means for leakage. Safety/relief valves should be operated only often enough to assure that they are in good working order.
7. Avoid wire, cable, or chain pulls for attachment to levers that do not allow a vertical pull. The weight of these devices should not be directed to the safety/relief valve.
8. Avoid having the operating pressure too near the safety/relief valve set pressure. A very minimum differential of 5 psig or 10 percent (whichever is greater) is recommended. An even greater differential is desirable, when possible, to assure better seat tightness and valve longevity. Safety/relief valves in high-temperature hot water and organic fluid service are more susceptible to damage and leakage than safety valves for steam. It is recommended that the maximum allowable working pressure of the boiler and the safety/relief valve setting be selected substantially higher than the operating pressure. A differential of 30-40 percent is recommended.
9. Avoid discharge piping where its weight is carried by the safety/relief valve. Even though supported separately, changes in temperature alone can cause piping strain. We recommend that drip pan elbows or flexible connections be used wherever possible (see Type A, B, C Installation, page 29).
10. Apply a moderate amount of pipe compound to male threads only, leaving the first thread clean. Compound applied to female threads or used to excess can find its way into the valve, causing leakage.

Copyright © 2011 Tyco Flow Control. All rights reserved.

Installation

Recommended Discharge Installation

Type "A" Installation

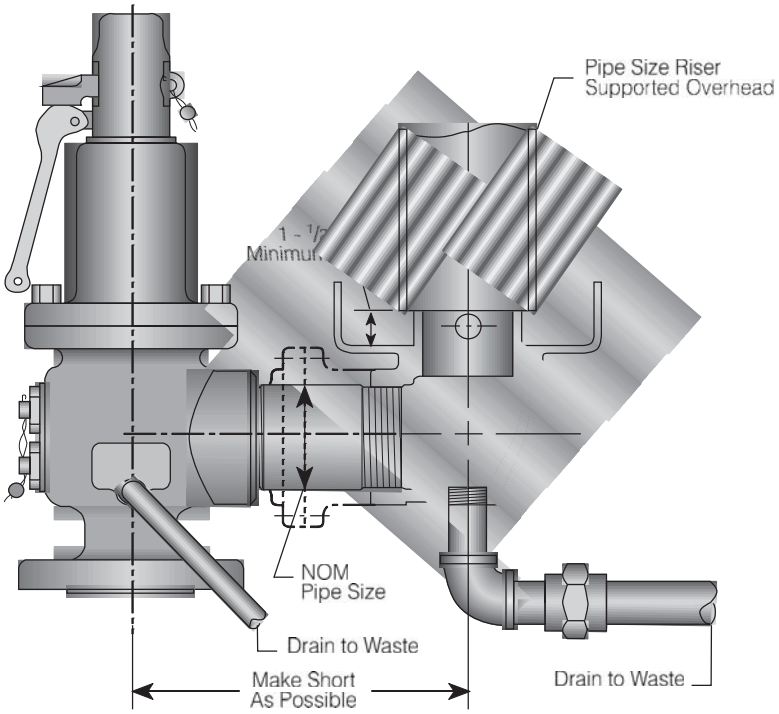

Type "B" Installation

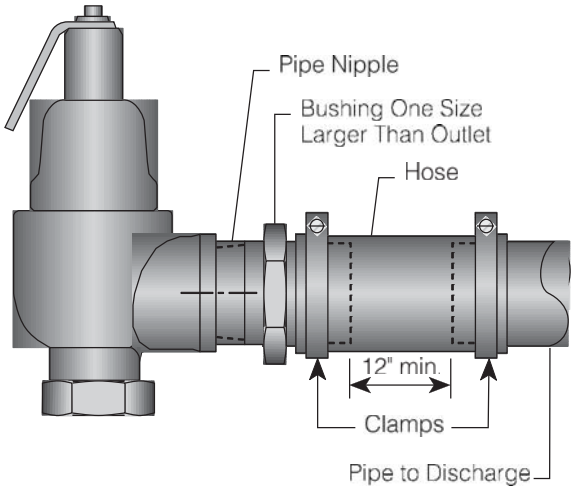

Type "C" Installation

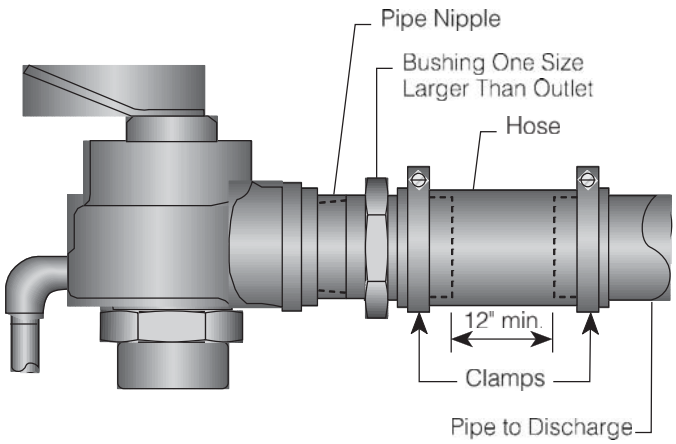

Copyright © 2011 Tyco Flow Control. All rights reserved.

Maintenance

1. Develop a regular program of visual inspection, looking for clogged drains and discharge pipe, dirt build-up in and around the valve seat and broken or missing parts.
2. Test the valve every two to six months (depending on valves' age and condition) preferably by raising the system pressure to the valves set pressure or operating the hand lever (see #3 in Operation).
3. Do not paint, oil, or otherwise cover any interior or working parts of any safety valve. They do not require any lubrication or protective coating to work properly.

When safety/relief valves require repair, service adjustments, or set pressure changes, work shall be accomplished by the manufacturer, or holders of "V," "UV," and/or "VR" stamps.

Guarantee

Tyco Valves & Controls LP, Black Mountain (Kunkle) warrants only that the goods delivered hereunder when paid for and properly installed, operated, and maintained shall be free from defects in material and workmanship under normal use and service for a period of twelve (12) months from the date of installation by the first user of such goods or eighteen (18) months from date of shipment from the factory, whichever period shall be first completed. The warranty hereunder granted does not apply to products or components (such as electric or pneumatic mechanisms) manufactured by other companies or to any goods manufactured by Tyco Valves & Controls LP, Black Mountain (Kunkle) that have been subjected to misuse, improper installation, improper storage or protection prior to installation or use, negligence by buyer or user, accident, corrosion, chemical attack, or misapplication, or that have been modified or repaired by unauthorized persons. Tyco Valves & Controls LP, Black Mountain's (Kunkle) obligation and buyer's remedy under this warranty are limited to: (a) correction, repair, or replacement, at Tyco Valves & Controls LP, Black Mountain's (Kunkle) option, of any defective unit of goods or (b) refund to buyer of the purchase price allocable to the defective unit of goods if Tyco Valves & Controls LP, Black Mountain (Kunkle) is unable to repair, replace or correct such defect in a reasonable time. Tyco Valves & Controls LP, Black Mountain's (Kunkle) liability under this warranty is conditioned upon buyer giving Tyco Valves & Controls LP, Black Mountain (Kunkle) immediate (but in any event within five (5) working days) written notice of any such defect. Any goods repaired or replaced hereunder shall continue to be warranted for the remainder of the unexpired warranty period, if any. Any repair or replacement of defective goods or parts shall, at Tyco Valves & Controls LP, Black Mountain's (Kunkle) option, occur at its plant in Black Mountain, North Carolina and Tyco Valves & Controls LP, Black Mountain (Kunkle) shall reimburse buyer all reasonable freight costs incurred in transporting defective goods or parts to and from Tyco Valves & Controls LP, Black Mountain's (Kunkle) plant in the event of a valid warranty claim. In the event Tyco Valves & Controls LP, Black Mountain (Kunkle) elects to provide replacement goods or parts to buyer to repair defective goods, buyer agrees to install sold replacement parts or goods at its cost and, further, Tyco Valves & Controls LP, Black Mountain (Kunkle) shall in no event be liable for any labor or material costs of buyer with respect to de-installing or repairing defective goods or installing replacement parts or goods. Tyco Valves & Controls LP, Black Mountain (Kunkle) shall have the option of requiring the return of the defective goods or parts thereof, transportation prepaid, to establish the claim. Tyco Valves & Controls LP, Black Mountain (Kunkle) shall not be held liable for damages caused by delays in repair or replacement of any defective items. Certification by a separate writing as to compliance with specifications, blueprints, part numbers, quality tests or otherwise will not create any warranty by or obligation of Tyco Valves & Controls LP, Black Mountain (Kunkle) The provisions in Tyco Valves & Controls LP, Black Mountain's (Kunkle) literature and specifications are descriptive only, unless expressly stated as warranties. Except for the limited express warranty set forth in this section, Tyco Valves & Controls LP, Black Mountain (Kunkle) expressly disclaims all warranties, express and implied, oral and written, including, without limitation, any warranties regarding services rendered ancillary hereto, and the implied warranties of merchantability and fitness for a particular purpose, whether arising from statute, common law, civil code, custom or otherwise. Tyco Valves & Controls LP, Black Mountain's (Kunkle) warranty obligations and buyer's remedies for breach of warranty, except as to title, are solely and exclusively as stated in this section. No modification or addition to this document with respect to the foregoing warranty by Tyco Valves & Controls LP, Black Mountain (Kunkle), either before or after execution of this document, shall be made except in writing by the President, Vice President, or Director, Sales and Marketing of Tyco Valves & Controls LP, Black Mountain (Kunkle).

Copyright © 2011 Tyco Flow Control. All rights reserved.

Terms and Conditions of Sales

1. Offer or Acceptance. If this document constitutes an offer to sell by Seller (sometimes referred to as 'Tyco Valves & Controls LP, Black Mountain (Kunkle)'), Seller's offer is expressly subject to Buyer's acceptance of all the terms and conditions contained herein and no other, unless otherwise mutually agreed to by both Seller and Buyer in a writing signed by both parties, and any response by Buyer which constitutes additional or different terms shall not operate as an acceptance if such acceptance would vary, delete or add to the terms and conditions contained herein. If this document constitutes an acceptance by Seller of Buyer's offer to buy the goods or services specified on the face hereof, such acceptance is expressly subject to all the terms and conditions contained herein and no others, unless otherwise mutually agreed to by both Seller and Buyer in a writing signed by both parties. Any of Buyer's proposed terms and conditions which are in addition to or different from those contained herein are hereby objected to and shall be of no effect. Buyer will in any event be deemed to have assented to all terms and conditions contained herein if any part of the goods sold hereunder are accepted.
2. Shipping Dates. The shipping dates, if any, set forth herein are approximate and are not guaranteed. Seller shall not be liable for any loss or damage for delay, non-delivery or other impairment of performance due to the actions or inactions of government, military authority, or Buyer, or by any reason of "force major," which shall be deemed to mean all other causes whatsoever not reasonably within the control of Seller, including, but not limited to, acts of God, war, riot, sabotage, fires, floods, strikes, lockouts or other industrial disturbances, delays of carriers, and inability to secure materials, fuel labor, transportation or manufacturing facilities at Seller's expected prices. Any delay resulting from any such cause shall extend shipping dates correspondingly. Seller shall in no event be liable for any special, incidental or consequential damages arising from delay irrespective of the reason thereof, and receipt by Buyer shall constitute acceptance of delivery and waiver of any claims due to delay. Should delivery be delayed due to Buyer's actions or inactions, or should delivery be delayed at the request of Buyer, the selling price of the goods shall automatically escalate at the rate of two percent [2%] per month for the duration of the delay or in an amount equal to Seller's increased cost, whichever is greater.
3. Drawings. If drawings are submitted herewith they are submitted only to show the general style, arrangement and approximate dimensions of the goods offered. No work is to be based on drawings unless the drawings are certified. Dimensional drawings certified by Seller will be furnished if agreed. In no event will manufacturing or proprietary drawings be supplied.
4. Risk of Loss. Buyer bears the risk of loss for damage to or destruction of the goods from and after the time same said goods are delivered either to the carrier for shipment to Buyer or to the Buyer, whichever occurs first, and regardless of whether or not Buyer may have the right to reject or revoke acceptance of said goods.
5. Shipment. If delivery specified is F.O.B. Seller's plant with freight allowed, Buyer shall pay to Seller, in addition to the purchase price, any and all transportation charges (including insurance).
6. Taxes. In addition to any prices specified herein, Buyer shall pay the gross amount of any present or future sales, use, excise, value-added, or other tax (whether federal, state, local or foreign) applicable to the price, sale, possession, or delivery of any goods or services furnished hereunder or to the use thereof by Buyer, or Buyer shall furnish Seller with a tax-exemption certificate acceptable to the levying taxing authority.
7. Payments. Buyer shall make payment in full for all goods ordered hereunder prior to shipment to Buyer, unless Buyer has entered into and agreed to Seller's Standard Credit Application and Agreement, in which event such Agreement is incorporated herein by reference and made a part hereof, unless and until such Agreement is terminated. The prices specified are in USA currency.
8. Warranties; Remedies. Tyco Valves & Controls LP, Black Mountain (Kunkle) warrants only that the goods delivered hereunder when paid for and properly installed, operated, and maintained shall be free from defects in material and workmanship under normal use and service for a period of twelve (12) months from the date of installation by the first user of such goods or eighteen (18) months from date of shipment from the factory, whichever period shall be first completed. The warranty hereunder granted does not apply to products or components (such as electric or pneumatic mechanisms) manufactured by other companies or to any goods manufactured by Tyco Valves & Controls LP, Black Mountain (Kunkle) that have been subjected to misuse, improper installation, improper storage or protection prior to installation or use, negligence by Buyer or user, accident, corrosion, chemical attack or misapplication, or that have been modified or repaired by unauthorized persons. Tyco Valves & Controls LP, Black Mountain's (Kunkle) obligation and Buyer's remedy under this warranty are limited to: (a) correction, repair, or replacement, at Tyco Valves & Controls LP, Black Mountain's (Kunkle) option, of any defective unit of goods or (b) refund to Buyer of the purchase price allocable to the defective unit of goods if Tyco Valves & Controls LP, Black Mountain (Kunkle) is unable to repair, replace or correct such defect in a reasonable time. Tyco Valves & Controls LP, Black Mountain's (Kunkle) liability under this warranty is conditioned upon Buyer giving Tyco Valves & Controls LP, Black Mountain (Kunkle), immediate (but in any event within five (5) working days) written notice of any such defect. Any goods repaired or replaced of defective goods or parts shall, at Tyco Valves & Controls LP, Black Mountain's (Kunkle) option, occur at its plant in Houston, Texas and Tyco Valves & Controls LP, Black Mountain (Kunkle) shall reimburse Buyer all reasonable freight costs incurred in transporting defective goods or parts to and from Tyco Valves & Controls LP, Black Mountain's (Kunkle) plant in the event of a valid warranty claim. In the event Tyco Valves & Controls LP, Black Mountain (Kunkle) elects to provide replacement good or parts to buyer to repair defective goods, Buyer agrees to install said replacement parts or goods at its cost and, further, Tyco Valves & Controls LP, Black Mountain (Kunkle), shall in no event be liable for any labor or material costs of Buyer with respect to de-installing or repairing defective goods or installing replacement parts or goods. Tyco Valves & Controls LP, Black Mountain (Kunkle) shall have the option of requiring the return of the defective goods or parts thereof, transportation prepaid, to establish the claim. Tyco Valves & Controls LP, Black Mountain (Kunkle) shall not be held liable for damages caused by delays in repair or replacement of any defective items. Certification by a separate writing as to compliance with specifications, blueprints, part numbers, quality test or otherwise will not create any warranty by or obligation of Tyco Valves & Controls LP, Black Mountain (Kunkle). The provisions in Tyco Valves & Controls LP, Black Mountain's (Kunkle) literature and specifications are descriptive only unless expressly stated as warranties. EXCEPT FOR THE LIMITED EXPRESS WARRANTY SET FORTH IN THIS SECTION, KUNKLE EXPRESSLY DISCLAIMS ALL WARRANTIES, EXPRESS AND IMPLIED, ORAL AND WRITTEN, INCLUDING, WITHOUT LIMITATION, AND FITNESS FOR A PARTICULAR PURPOSE, WHETHER ARISING FROM STATUTE, COMMON LAW, CIVIL CODE, CUSTOM OR OTHERWISE. KUNKLE'S WARRANTY OBLIGATIONS AND BUYER'S REMEDIES FOR BREACH OF WARRANTY, EXCEPT AS TO TITLE, ARE SOLELY AND EXCLUSIVELY AS STATED IN THIS SECTION. No modification or addition to this document with respect to the foregoing warranty by Tyco Valves & Controls LP, Black Mountain (Kunkle) either before or after execution of this document, shall be made except in writing by the President or a Vice President of Tyco Valves & Controls LP, Black Mountain (Kunkle).
9. Limitation of Liability. In any event, the total liability of Tyco Valves & Controls LP, Black Mountain (Kunkle) arising from any cause of action or claim whatsoever, whether (a) in contract, (b) in tort, (including negligence, whether sole, joint, contributory, concurrent or antipollution law or regulation), (c) connected with any toxic or hazardous substance or constituent, (d) arising out of any representation or instruction, or under any warranty, (e) or otherwise, arising out of, connected with, or resulting from the design, manufacture, sale, resale, delivery, repair, replacement or use of any goods or the furnishing of any service shall in no event exceed the price allocable to and paid to Tyco Valves & Controls LP, Black Mountain (Kunkle) for the individual unit of goods or services or part thereof which gives rise to the cause of action or claim. In no event shall Tyco Valves & Controls LP, Black Mountain (Kunkle) or its affiliates be liable for any special, indirect, incidental or consequential damages whenever occurring including, but not limited to, damages for loss of use of plant or property, damage to or destruction of equipment, downtime cost, cost of capital, economic loss, loss of good will, labor cost, loss of profits or revenues, or claims resulting from

Copyright © 2011 Tyco Flow Control. All rights reserved.

Terms and Conditions of Sales

contracts between Buyer, its customers and/or suppliers, regardless of whether any of the foregoing arises from this document or Tyco Valves & Controls LP, Black Mountain (Kunkle) by any human being for personal injury or wrongful death. Tyco Valves & Controls LP, Black Mountain (Kunkle) and Buyer acknowledge and agree that the exclusions of remedies and limitations of liability and damages herein reflect a bargained-for allocation and limitation of risk, liability and damages. Tyco Valves & Controls LP, Black Mountain (Kunkle) will not defend, indemnify or hold harmless Buyer or others for any claim, expense or liability. This Section shall apply notwithstanding any other provision of this document.

10. Limitation of Liability to Third-Party Purchases. Prior to Buyer's transfer or sale of any goods sold pursuant hereto, or the transfer or sale of any interest in such goods, Buyer shall notify the Transferee of the full text of Sections 8 and 9 hereof in writing and shall provide Seller with written acknowledgment and acceptance by the transferee of the terms of Sections 8 and 9 hereof. Further, Buyer shall incorporate verbatim Sections 8 and 9 hereof in any contract between Buyer and any Transferee concerning any such transfer or sale. Buyer shall also include a written copy of Section 8 and 9 hereof with any goods covered hereby that are transferred or sold to a transferee. IF TRANSFER IS MADE CONTRARY TO THE PROVISIONS OF THIS SECTION 10, BUYER SHALL, IN ADDITION TO ANY OTHER LEGAL OR EQUITABLE RIGHTS OF SELLER, INDEMNIFY SELLER AGAINST ANY LIABILITIES, CLAIMS, COSTS, DAMAGES AND ATTORNEY'S FEES INCURRED BY SELLER IN EXCESS OF THOSE SET FORTH IN SECTIONS 8 AND 9 HEREOF. This Section 10 shall apply notwithstanding any other provisions of this document.
11. Returns; Cancellations. No goods may be returned except on prior written approval of Seller. Orders placed with and accepted by Seller may not be canceled except with the written consent of Seller prior to shipment and Buyer's acceptance of Seller's cancellation charges which shall protect Seller against all costs and losses. Seller shall have the right to cancel the sale of any or all of the goods sold hereunder, without liability to Buyer except for the refund of monies already paid hereunder, the event manufacture or sale of the goods is or becomes technically or economically impractical.
12. Product Modification. Seller reserves the right to discontinue the manufacture of, or charge or modify the design and/or construction of goods sold pursuant to this document for the purpose of product improvement, without incurring any obligation to Buyer with respect thereto.
13. Patents. Seller agrees as its option, to defend at its safe cost and expense, and to pay any damages and cost awarded against Buyer, from any claim, suit or proceeding against Buyer to the extent such claim, suit or proceeding is based on an allegation that goods manufactured by Seller and delivered to Buyer hereunder infringe any United Sates letter patent, provided: (1) Seller is notified promptly in writing by Buyer of any such claim, suit or proceeding; (2) Seller is given information and assistance by Buyer as may be requested by Seller; and (3) Seller is given full authority (including authority to settle) by Buyer to conduct such defense as Seller deems appropriate. Seller's obligation under this Section does not apply to any goods the designs, instructions and/or specifications for which are partially or completely supplied by Buyer or to any claim, suit or proceeding in which the allegec infringement results from alteration of goods, use of goods for purposes other than those for which the goods were intended, or use of the goods in combination with products not manufactured by Seller. If in any suit covered by this Section, the use of goods is enjoined, Seller shall at its option and sole cost and expense either: (a) procure for Buyer the right to continue using the goods; (b) replace the goods with non-infringing goods; (c) modify the goods to be non-infringing; or (d) refund to Buyer the purchase price of the goods and transportation costs related thereto. Seller shall have no liability with respect to patent or trademark rights of countries foreign to the USA. The foregoing shall be Seller's sole and entire liability for patent infringement by the goods furnished pursuant hereto.
14. Data. Buyer agrees that all drawings, prints and other technical material (collectively 'Materials') which Seller provides to Buyer, whether prepared by Seller or by third parties under contract to Seller, contain data which embody trade secrets and confidential know-how of commercial value to Seller or to third parties under contract to Seller. Buyer agrees that Buyer and its agents and employees; (a) will keep confidential all such Materials; (b) will not disclose such Materials to any other person, corporate division or entity, except to employees of Buyer who need such Materials in order to perform Buyer's obligations hereunder; (c) will not use such Materials, except in connection with goods supplied hereunder; and (d) will not sell, lease, loan or permit any other person, corporate division or entity to use such Materials for any purpose, without Seller's prior written consent. Nothing herein shall restrict use of data or information available to the general public.
15. Applicable Law; Section Headlines. This document shall be deemed to have been executed and entered into the State of Texas, USA, and this document, and its formation, operation and performance, shall be governed, construed, performed and enforced in accordance with the substantive laws of the State of Texas, USA. The parties hereto agree that any civil action or lawsuit arising out of this document or the subject matter hereof shall be brought and maintained solely in state or federal courts located in Harris County, Texas, USA, and Buyer and Seller each hereby consents and submits to the personal jurisdiction of said courts. Any action or claim in any part arising out of or related to this document or the subject matter hereof, may be commenced or brought within one (1) year from the date the claim or action shall first arise or accrue, or be barred forever. The Section headings herein contained are for ease of reference only and shall not be construed to be part of this document.
16. Merger. Seller and Buyer agree that there are no understandings, agreements, representations or warranties between or by either of them, either oral or written, relative to the goods or services sold, pursuant hereto, including any made in or implied from past dealings, relative to the goods or services sold pursuant hereto, except those that are fully expressed herein. The provisions of this document supercede and control any previous understanding or agreement between the parties with respect to the subject matter hereof and this document is an expression of the complete and final understanding of the parties. Any representation, promise, course of dealing or trade usage not contained or referenced herein will not be binding on the parties hereto. Seller's branch managers or sales representatives, distributors, and dealers appointed by Seller are not authorized to make modifications, waivers or changes in or to these terms and conditions of sale. Buyer represents and agrees that it is Buyer's sole obligation and responsibility to determine the suitability of the goods for Buyer's use and application and any statements made by Seller's salespersons are opinion only and not representations or warranties of Seller and will not be relied on by the Buyer.

KUNKLE
953 Old U.S. Highway 70
Black Mountain, North Carolina 28711-2549
Customer Service Phone: 1-828-669-3700
www.kunklevalve.com

Tyco Flow Control (TFC) provides the information herein in good faith but makes no representation as to its comprehensiveness or accuracy. This data sheet is intended only as a guide to TFC products and services. Individuals using this data sheet must exercise their independent judgment in evaluating product selection and determining product appropriateness for their particular purpose and system requirements. TFC MAKES NO REPRESENTATIONS OR WARRANTIES, EITHER EXPRESS OR IMPLIED, INCLUDING WITHOUT LIMITATION ANY WARRANTIES OF MERCHANTABILITY OR FITNESS FOR A PARTICULAR PURPOSE WITH RESPECT TO THE INFORMATION SET FORTH HEREIN OR THE PRODUCT(S) TO WHICH THE INFORMATION REFERS. ACCORDINGLY, TFC WILL NOT BE RESPONSIBLE FOR DAMAGES (OF ANY KIND OR NATURE, INCLUDING INCIDENTAL, DIRECT, INDIRECT, OR CONSEQUENTIAL DAMAGES) RESULTING FROM THE USE OF OR RELIANCE UPON THIS INFORMATION. Patents and Patents Pending in the U.S.and foreign countries. Tyco reserves the right to change product designs and specifications without notice. All registered trademarks are the property of their respective owners. Printed in the USA.

Copyright © 2011 Tyco Flow Control. All rights reserved.

SMALL COMPACT FILTER SILENCERS
w/ "Hockey Puck" *Patented* Element
"FS" Series 1/4" - 1" BSPT

APPLICATIONS & EQUIPMENT

- Industrial & Severe Duty
- Piston Compressors
- Screw Compressors
- Blowers - Side Channel & Roots
- Hydraulic Breathers – fine filtration
- Engines
- Construction\Contractor Industry
- Workshop
- Medical\Dental Industry
- Hobby
- Pneumatic Conveying
- Waste Water Aeration
- Nailers and Staplers

FEATURES & SPECIFICATIONS

- Patented high grade element w/**Built-in** Butterfly gasket seal
  Creates positive seal between housing hemispheres
  New seal with each element, Minimizes parts
- Fully drawn weatherhood - no welds to rust or vibrate apart
- Tubular silencing design - tube is positioned to maximize attenuation and air flow while minimizing pressure drop
- Durable **Compact** carbon steel construction with black powder coated finish
- Ability to mount vertically, horizontally
- Polyester: 99%+ removal efficiency standard to 5 micron
- Paper: 99%+ removal efficiency standard to 2 micron
- Interchangeable media: Polyester, Paper, HEPA
- Temp (continuous): min -26°C (-15°F) max 104°C (220°F)
- Filter change out differential: 255-380 mm H_2O over initial delta P
- A single noise attenuation graph is insufficient; please inquire for your specific requirement

OPTIONS (Inquiries Encouraged)

- Various media available
- Epoxy coated housings
- Straight Through Design (Vertical)
- Custom connections

CONFIGURATION



DRAWING

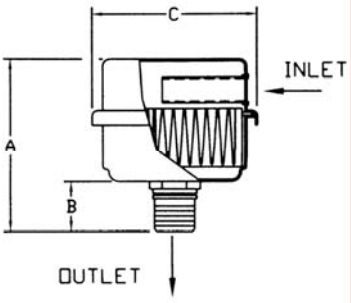

Dimension tolerance ± 6 mm

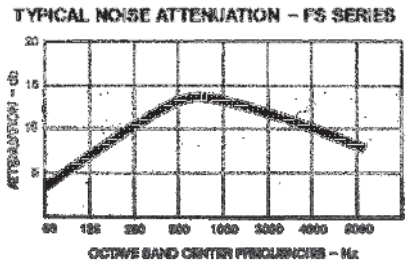

- Noise attenuation may vary due to the wide range of applications and machines

I = Industrial Duty S = Severe Duty

	with Polyester Element	with Paper Element	BSPT Outlet	DIMENSIONS - mm A	B	C	Rated Flow m^3/h Piston	Screw, Blower, Fan	Element Rating	No. of Silencing Tubes	Approx. Wt. Kg
I	FS-05-025	FS-04-025	1/4"	70	16	64	7	7	14	1	0.11
I	FS-05-038	FS-04-038	3/8"	70	16	64	10	14	14	1	0.11
S	FS-07-038	FS-06-038	3/8"	90	16	83	14	14	20	1	0.23
I	FS-05-050	FS-04-050	1/2"	76	22	64	10	14	14	1	0.11
I	FS-07-050	FS-06-050	1/2"	97	22	83	17	20	20	1	0.23
S	FS-11-050	FS-10-050	1/2"	105	22	105	20	20	60	1	0.45
I	FS-07-075	FS-06-075	3/4"	106	32	83	20	20	20	1	0.23
I	FS-11-075	FS-10-075	3/4"	114	32	105	34	43	60	1	0.45
I	FS-11-100	FS-10-100	1"	114	32	105	43	60	60	1	0.45

Note: Model offerings and design parameters may change without notice.

1151 Ardmore Ave. ♦ Itasca, IL 60143 USA
Tel: +1 630 616 4900 ♦ Fax: +1 630 773 2643
E-mail: sales@solbergmfg.com ♦ Web Site: www.solbergmfg.com

SMALL COMPACT FILTER SILENCERS
w/ Standard Filter Design
"FS" Series 1/2" - 3" BSPT

APPLICATIONS & EQUIPMENT

- Industrial & Severe Duty
- Piston Compressors
- Screw Compressors
- Blowers - Side Channel & Roots
- Hydraulic Breathers – fine filtration
- Engines
- Construction\Contractor Industry
- Workshop
- Medical\Dental Industry
- Pneumatic Conveying
- Waste Water Aeration
- Nailers and Staplers
- Vacuum Vent Breathers

FEATURES & SPECIFICATIONS

- Fully drawn weatherhood - no welds to rust or vibrate apart
- Tubular silencing design - tube is positioned to maximize attenuation and air flow while minimizing pressure drop
- Durable carbon steel construction with baked enamel finish and powder coated weatherhood
- Polyester: 99%+ removal efficiency standard to 5 micron
- Paper: 99%+ removal efficiency standard to 2 micron
- Interchangeable media: Polyester, Paper, HEPA
- Several element sizes available per given connection (safety factor)
- Temp (continuous): min -26°C (-15°F) max 104°C (220°F)
- Filter change out differential: 255-380 mm H_2O over initial delta P
- Pressure drop graphs available upon request

OPTIONS (Inquiries Encouraged)

- 1/8" tap holes
- Pressure Drop Indicator
- Available in ***Stainless Steel***
- Epoxy coated housings
- Various media available
- Custom connections, MPT

CONFIGURATION



DRAWING

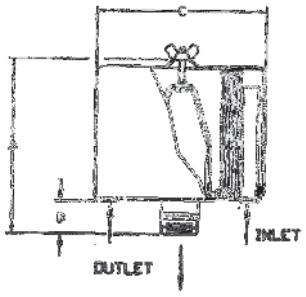

Dimension tolerance ± 6 mm

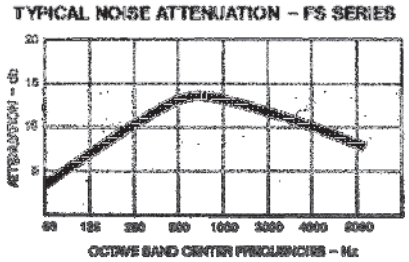

- Noise attenuation may vary due to the wide range of applications and machines

I = Industrial Duty S = Severe Duty

	with Polyester Element	with Paper Element	BSPT Outlet	DIMENSIONS - mm A	B	C	Rated Flow m^3/h Piston	Screw, Blower, Fan	Element Rating	No. of Silencing Tubes	Approx. Wt. Kg
I	FS-15-050	FS-14-050	1/2"	102	38	152	17	17	60	1	0.8
I	FS-15-075	FS-14-075	3/4"	102	38	152	34	43	60	2	0.9
I	FS-15-100	FS-14-100	1"	102	38	152	43	60	60	3	0.9
S	FS-19P-100	FS-18P-100	1"	168	41	152	60	94	170	3	1.4
I	FS-19P-126	FS-18P-126	1 1/4"	168	41	152	94	119	170	5	1.5
I	FS-19P-151	FS-18P-151	1 1/2"	168	41	152	119	145	170	5	2
I	FS-31P-201	FS-30P-201	2"	184	57	254	145	230	332	5	4
S	FS-231P-201	FS-230P-201	2"	311	57	254	230	230	510	5	6
I	FS-31P-251	FS-30P-251	2 1/2"	191	64	254	170	332	332	5	4
S	FS-231P-251	FS-230P-251	2 1/2"	318	64	254	332	332	510	9	7
I	FS-231P-301	FS-230P-301	3"	330	76	254	340	510	510	9	7

Note: Model offerings and design parameters may change without notice.

1151 Ardmore Ave. ♦ Itasca, IL 60143 USA
Tel: +1 630 616 4900 ♦ Fax: +1 630 773 2643
E-mail: sales@solbergmfg.com ♦ Web Site: www.solbergmfg.com

COMPACT FILTER SILENCERS

"FS" Series 3" - 6" BSPT

APPLICATIONS & EQUIPMENT

- Industrial & Severe Duty
- Blowers - Side Channel & Roots
- Piston Compressors
- Screw Compressors
- Hydraulic Breathers – fine filtration
- Engines
- Fans
- Construction\Contractor Industry
- Medical
- Pneumatic Conveying
- Waste Water Aeration
- Sparging
- Factory Air
- Vacuum Vent Breathers

FEATURES & SPECIFICATIONS

- Fully drawn weatherhood - no welds to rust or vibrate apart
- Tubular silencing design - tube is positioned to maximize attenuation and air flow while minimizing pressure drop
- Durable carbon steel construction with gray baked enamel finish and powder coated weatherhood
- Low pressure drop center bracket and outlet pipe design
- 1/8" tap hole
- Polyester: 99%+ removal efficiency standard to 5 micron
- Paper: 99%+ removal efficiency standard to 2 micron
- Interchangeable media: Polyester, Paper, HEPA
- Several element sizes available per given connection (safety factor)
- Temp (continuous): min -26°C (-15°F) max 104°C (220°F)
- Filter change out differential: 255-380mm H_2O over initial delta P
- Pressure drop graphs available upon request

OPTIONS (Inquiries Encouraged)

- Various media available
- Pressure Drop Indicator
- Epoxy coated housings
- Available in ***Stainless Steel***
- Custom connections, NPT
- Side Access QB Series Filters for space restricted enclosures (Selected models)

CONFIGURATION



DRAWING

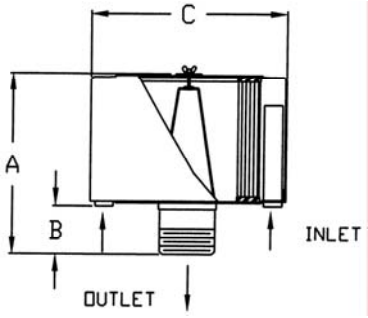

Dimension tolerance ± 6 mm

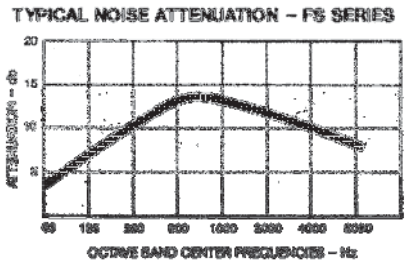

- Noise attenuation may vary due to the wide range of applications and machines

I = Industrial Duty S = Severe Duty E = Extreme Duty

	with Polyester Element	with Paper Element	BSPT Outlet	DIMENSIONS - mm A	B	C	Rated Flow m^3/h Piston	Screw, Blower, Fan	Element Rating	No. of Silencing Tubes	Approx. Wt. Kg
S	FS-235P-301	FS-234P-301	3"	330	76	406	340	510	970	9	13
S	FS-245P-301	FS-244P-301	3"	330	76	406	340	510	1500	9	14
E	FS-275P-301	FS-274P-301	3"	330	76	406	340	510	1870	9	15
I	FS-235P-401	FS-234P-401	4"	356	102	406	510	885	970	9	14
S	FS-245P-401	FS-244P-401	4"	356	102	406	765	885	1500	9	14
E	FS-275P-401	FS-274P-401	4"	356	102	406	765	885	1870	9	15
I	FS-245P-501	FS-244P-501	5"	356	102	406	850	1360	1500	14	15
S	FS-275P-501	FS-274P-501	5"	356	102	406	1105	1360	1870	14	16
I	FS-275P-601	FS-274P-601	6"	394	133	406	1105	1870	1870	18	17

Note: Model offerings and design parameters may change without notice.

1151 Ardmore Ave. • Itasca, IL 60143 USA
Tel: +1 630 616 4900 • Fax: +1 630 773 2643
E-mail: sales@solbergmfg.com • Web Site: www.solbergmfg.com

COMPACT FILTER SILENCERS

"FS" Series DN80 - DN150 PN10 Pattern Flange

APPLICATIONS & EQUIPMENT

- Industrial & Severe Duty
- Blowers - Side Channel & Roots
- Piston Compressors
- Screw Compressors
- Hydraulic Breathers – fine filtration
- Engines
- Fans
- Construction\Contractor Industry
- Medical
- Pneumatic Conveying
- Waste Water Aeration
- Sparging
- Factory Air
- Vacuum Vent Breathers

FEATURES & SPECIFICATIONS

- Fully drawn weatherhood - no welds to rust or vibrate apart
- Tubular silencing design - tube is positioned to maximize attenuation and air flow while minimizing pressure drop
- Durable carbon steel construction with gray baked enamel finish and powder coated weatherhood
- Low pressure drop center bracket and outlet pipe design
- 1/8" tap hole
- Polyester: 99%+ removal efficiency standard to 5 micron
- Paper: 99%+ removal efficiency standard to 2 micron
- Interchangeable media: Polyester, Paper, HEPA
- Several element sizes available per given connection (safety factor)
- Temp (continuous): min -26°C (-15°F) max 104°C (220°F)
- Filter change out differential: 255-380 mm H_2O over initial delta P
- Pressure drop graphs available upon request

OPTIONS (Inquiries Encouraged)

- Various media available
- Pressure Drop Indicator
- Epoxy coated housings
- Available in ***Stainless Steel***
- Custom connections, NPT
- Side Access QB Series Filters for space restricted enclosures (Selected models)

CONFIGURATION



DRAWING

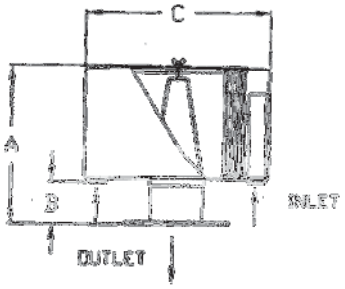

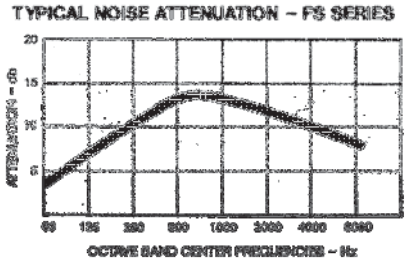

- Noise attenuation may vary due to the wide range of applications and machines

I = Industrial Duty S = Severe Duty E = Extreme Duty

Dimension tolerance ± 6 mm

	with Polyester Element	with Paper Element	Flange Outlet	DIMENSIONS - mm A	B	C	Rated Flow m^3/h Piston	Screw, Blower, Fan	Element Rating	No. of Silencing Tubes	Approx. Wt. Kg
S	FS-235P-DN80	FS-234P-DN80	DN80	330	76	406	340	510	970	9	13
S	FS-245P-DN80	FS-244P-DN80	DN80	330	76	406	340	510	1500	9	14
E	FS-275P-DN80	FS-274P-DN80	DN80	330	76	406	340	510	1870	9	15
I	FS-235P-DN100	FS-234P-DN100	DN100	356	102	406	510	885	970	9	15
S	FS-245P-DN100	FS-244P-DN100	DN100	356	102	406	765	885	1500	9	16
E	FS-275P-DN100	FS-274P-DN100	DN100	356	102	406	765	885	1870	9	18
I	FS-245P-DN125	FS-244P-DN125	DN125	356	102	406	850	1360	1500	14	17
S	FS-275P-DN125	FS-274P-DN125	DN125	356	102	406	1105	1360	1870	14	18
I	FS-275P-DN150	FS-274P-DN150	DN150	394	133	406	1105	1870	1870	18	19

PN10 Pattern Flg	DIMENSIONS - mm O.D.	B.C.	B.H.	No. of Holes	Thickness Flg - mm
DN80	200	160	18	8	10
DN100	220	180	18	8	10
DN125	250	210	18	8	10
DN150	285	240	22	8	10

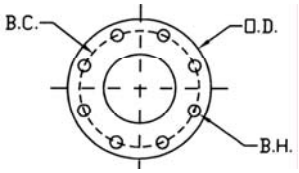

Note: Model offerings and design parameters may change without notice.

1151 Ardmore Ave. ♦ Itasca, IL 60143 USA
Tel: +1 630 616 4900 ♦ Fax: +1 630 773 2643
E-mail: sales@solbergmfg.com ♦ Web Site: www.solbergmfg.com

“BIG BOY” FILTER SILENCERS

"FS" Series DN200-DN300 PN10 Pattern Flange

APPLICATIONS & EQUIPMENT

- Industrial & Severe Duty
- Blowers - Side Channel & Roots
- Piston Compressors
- Screw Compressors
- Hydraulic Breathers – fine filtration
- Engines
- Fans
- Construction Industry
- Medical
- Pneumatic Conveying
- Waste Water Aeration
- Sparging
- Cement
- Power Plants
- Vacuum Vent Breathers

FEATURES & SPECIFICATIONS

- Tubular silencing design - tube is positioned to maximize attenuation and air flow while minimizing pressure drop
- Durable carbon steel construction with gray baked enamel finish
- Low pressure drop center bracket and outlet pipe design
- 1/8” tap hole
- Polyester: 99%+ removal efficiency standard to 5 micron
- Paper: 99%+ removal efficiency standard to 2 micron
- Several element sizes available per given connection (safety factor)
- Interchangeable media: Polyester, Paper, HEPA
- Temp (continuous): min -26°C (-15°F) max 104°C (220°F)
- Filter change out differential: 255-380 mm H_2O over initial delta P
- Pressure drop graphs available upon request

OPTIONS (Inquiries Encouraged)

- Various media available
- Pressure Drop Indicator
- Epoxy coated housings
- Available in ***Stainless Steel***
- Custom connections, NPT
- Side Access QB Series Filters for space restricted enclosures (Selected models)

CONFIGURATION



DRAWING

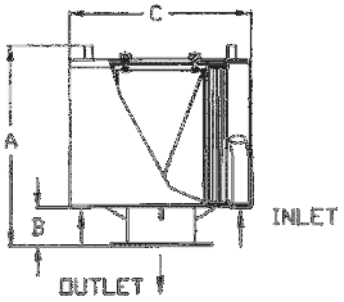

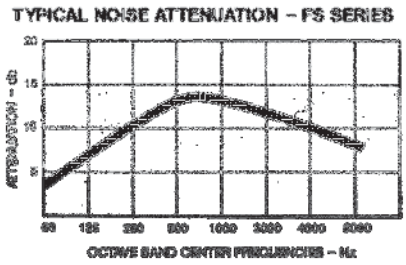

- Noise attenuation may vary due to the wide range of applications and machines

I = Industrial Duty S = Severe Duty E = Extreme Duty

Dimension tolerance ± 6 mm

	with Polyester Element	with Paper Element	Flange Outlet	DIMENSIONS - mm A	B	C	Rated Flow m^3/h Piston	Screw, Blower, Fan	Element Rating	No. of Silencing Tubes	Approx. Wt. Kg
I	FS-377P-DN200	FS-376P-DN200	DN200	584	152	572	2450	3060	3105	12	54
S	FS-385P-DN200	FS-384P-DN200	DN200	584	152	724	2450	3060	5605	12	56
E	FS-485P-DN200	FS-484P-DN200	DN200	787	152	724	3060	3060	8000	12	62
I	FS-385P-DN250	FS-384P-DN250	DN250	584	152	724	3060	5610	5610	16	59
S	FS-485P-DN250	FS-484P-DN250	DN250	787	152	724	4420	5610	8000	16	64
E	FS-685P-DN250	FS-384P(2)-DN250	DN250	965	152	724	4900	5610	11220	16	74
I	FS-385P-DN300	FS-384P-DN300	DN300	584	152	724	4420	5610	5610	24	61
S	FS-485P-DN300	FS-484P-DN300	DN300	787	152	724	4420	7990	8000	24	70
E	FS-685P-DN300	FS-384P(2)-DN300	DN300	965	152	724	5950	7990	11220	24	79
E	FS-485P(2)-DN300	FS-484P(2)-DN300	DN300	1346	152	724	7345	7990	16000	24	88

PN10 Pattern Flg	DIMENSIONS - mm O.D.	B.C.	B.H.	No. of Holes	Thickness Flg - mm
DN200	340	295	22	8	14
DN250	395	350	22	12	14
DN300	445	400	22	12	14

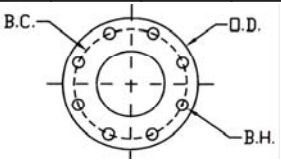

Note: Model offerings and design parameters may change without notice.

1151 Ardmore Ave. ♦ Itasca, IL 60143 USA
Tel: +1 630 616 4900 ♦ Fax: +1 630 773 2643
E-mail: sales@solbergmfg.com ♦ Web Site: www.solbergmfg.com

B-301/2 - Blower, Elmo, 2BH7420-0AH267 2.4HP

Contents

1 Safety 3
1.1 Definitions 3
1.1.1 Safety alert symbol 3
1.1.2 Signal words 3
1.2 General safety precautions 3
1.3 Residual risks 6
2 Intended Use 7
3 Technical Data 8
3.1 Mechanical data 8
3.2 Electrical data 11
3.3 Operating conditions 11
4 Transport and Handling 12
5 Installation 13
5.1 Installation 14
5.2 Electrical connection (motor) 16
5.3 Connecting pipes/hoses (vacuum pump/compressor) 18
5.3.1 Inlet connection 19
5.3.2 Discharge connection 19
5.3.3 Procedure when connecting pipes/hoses 19
6 Commissioning 20
6.1 Preparation 20
6.2 Start-up and shut-down 22
7 Operation 22
8 Shut-Down and Longer Standstills 22
8.1 Preparing for shut-down or longer standstill 22
8.2 Storage conditions 23
9 Servicing 23
9.1 Repairs/troubleshooting 24
9.2 Service/After-sales service 25
9.3 Decontamination and Declaration of Clearance 25
10 Disposal 25
11 Explosion-Protected Design 25
EU declaration of conformity 26
Form for statement on safety 27

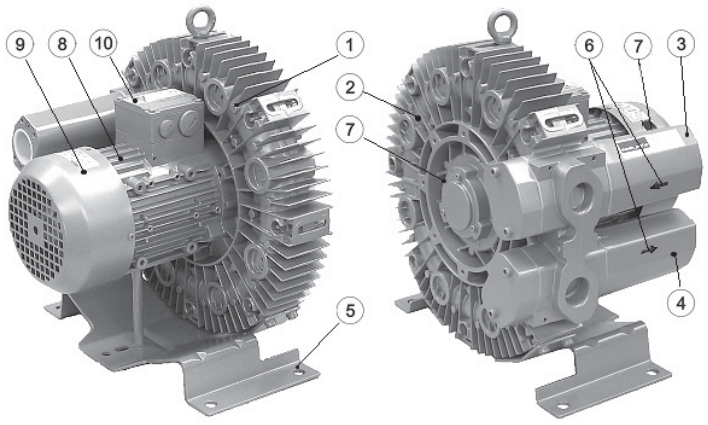

Fig. 1: Design of gas-ring vacuum pump/compressor

1 Vacuum pump/compressor housing
2 Vacuum pump/compressor cover
3 Inlet connection with muffler
4 Discharge connection with muffler
5 Base
6 Flow direction arrow
7 Rotating direction arrow
8 Drive motor
9 Fan guard (over external fan)
10 Terminal box

© 2009 Gardner Denver Deutschland GmbH · Industriestraße 26 · 97616 Bad Neustadt · Germany

Replication, distribution and / or editing of this document and the use and distribution of its content is prohibited unless explicitly permitted. Violation obligates compensation for damages.
All rights reserved in case of the issue of a patent, utility patent or design patent.

1 Safety

1.1 Definitions

To point out dangers and important information, the following signal words and symbols are used in these operating instructions:

1.1.1 Safety alert symbol

The **safety alert symbol** ⚠ is located in the safety precautions in the highlighted heading field on the left next to the signal word (DANGER, WARNING, CAUTION).

Safety precautions **with** a safety alert symbol indicate a danger of **injuries**.

Be sure to follow these safety precautions to protect against **injuries or death**!

Safety precautions **without** a safety alert symbol indicate a danger of **damage**.

1.1.2 Signal words

DANGER
WARNING
CAUTION
NOTICE
NOTE

The **signal words** are located in the safety precautions in the highlighted heading field.

They follow a certain hierarchy and indicate (in conjunction with the safety alert symbol, see Chapter 1.1.1) the **seriousness of the danger** and the **type of warning.**

See the following explanations:

 © Gardner Denver Deutschland GmbH

1.3 Residual risks

 © Gardner Denver Deutschland GmbH

2 Intended Use

These operating instructions

- apply to gas-ring vacuum pumps/compressors of the G-BH7 series, models 2BH72, 2BH73, 2BH74, 2BH75 and 2BH76,
- contains instructions concerning transport and handling, installation, commissioning, operation, shut-down, storage, servicing and disposal of the G-BH7,
- must be completely read and understood by all operating and servicing personnel before beginning to work with or on the G-BH7,
- must be strictly observed,
- must be available at the site of operation of the G-BH7.

About the operating and servicing personnel of the G-BH7

- These persons must be trained and authorized for the work to be carried out.
- Work on electrical installations may be carried out by trained and authorized electricians only.

The G-BH7s

- are pump-motor units for generating vacuum or gauge pressure;
- are used to **extract, pump and compress the following gases**:
  - Air,
  - Non-flammable, non-aggressive, non-toxic and non-explosive gases or gas-air mixtures.
  - For differing gases/gas-air mixtures, inquire with the Service Department.
- are equipped with one of the following kind of drive motors:
  - 3-phase AC drive motor with a standard or explosion-protected design
  - Single-phase AC drive motor

  These operating instructions apply **only to** pump-motor units with a **standard design**.

  For the explosion-protected design

3 Technical Data

3.1 Mechanical data

Weight

Single-impeller design		
Model	**Weight**	
	[kg] approx.	**[lbs] approx.**
2BH7210-0..1.-.	**16**	35
2BH7310-0..1.-.	**16**	35
2BH7310-0..2.-.	**17**	38
2BH7410-0..1.-.	**23**	51
2BH7510-0..1.-.	**26**	57
2BH7510-0..2.-.	**29**	64
2BH7610-0..1.-.	**32**	71
2BH7610-0..3.-.	**35**	77

Two-impeller design		
Model	**Weight**	
	[kg] approx.	**[lbs] approx.**
2BH7220-0..2.-.	**24**	53
2BH7220-0..5.-.	**28**	62
2BH7320-0..5.-.	**30**	66
2BH7420-0..2.-.	**33**	73
2BH7420-0..5.-.	**39**	86
2BH7520-0..2.-.	**40**	88
2BH7520-0..7.-.	**51**	112
2BH7620-0..3.-.	**48**	106
2BH7620-0..5.-.	**65**	143

Three-impeller design		
Model	**Weight**	
	[kg] approx.	**[lbs] approx.**
2BH7530-0..8.-.	**68**	150
2BH7630-0..6.-.	**94**	207

Minimum distances

Minimum distance to fan guard (for sucking in cooling air):

Model	[mm] approx.	[inches] approx.
2BH72	**34**	1.34
2BH73	**34**	1.34
2BH74	**52**	2.05
2BH75	**52**	2.05
2BH76	**53**	2.09

Minimum distance to face of vacuum pump/compressor cover:

Model	[mm] approx.	[inches] approx.
2BH7…	**30**	1.18

Vibrations

The following table provides information on the maximum permissible loading due to vibrations.

Model	Vibration velocity V_{eff}	
	[mm/s] ≤	**[ft/s] ≤**
2BH72.. - 2BH75..	**3.0**	0.010
2BH76..	**3.5**	0.011

© Gardner Denver Deutschland GmbH

Noise level

Measuring-surface sound-pressure level as per EN ISO 3744, measured at a distance of **1 m** [3.28 ft] at an operating point of approximately 2/3 of the permissible total pressure difference with the lines connected without a vacuum or pressure relief valve, tolerance ±3 dB (A).

Single-impeller design

Model	1-m measuring-surface sound pressure level L [dB (A)]	
	50 Hz	60 Hz
2BH7210-0..1.-.	70	70
2BH7310-0..1.-.		70
2BH7310-0..2.-.		70
2BH7410-0..1.-.		70
2BH7510-0..1.-.		70
2BH7510-0..2.-.		70
2BH7610-0..1.-.		71
2BH7610-0..3.-.		71

Two-impeller design

Model	1-m measuring-surface sound pressure level L [dB (A)]	
	50 Hz	60 Hz
2BH7220-0..2.-.	70	70
2BH7220-0..5.-.		70
2BH7320-0..5.-.		70
2BH7420-0..2.-.		70
2BH7420-0..5.-.		70
2BH7520-0..2.-.		70
2BH7520-0..7.-.		71
2BH7620-0..3.-.		71
2BH7620-0..5.-.		72

Three-impeller design

Model	1-m measuring-surface sound pressure level L [dB (A)]	
	50 Hz	60 Hz
2BH7530-0..8.-.	67	73
2BH7630-0..6.-.	77	80

Temperature increase

The information listed in the following tables corresponds to the heating of vacuum pump/compressor housings and the air exiting compared to the ambient temperature during operation with a permissible total pressure difference and an air pressure of **1,013 mbar** [14.7 psi]. At lower air pressures these values increase.

Single-impeller design

Model	Temperature increase			
	ΔT [K] approx.		Δϑ [F] approx.	
	50 Hz	60 Hz	50 Hz	60 Hz
2BH7210-0..1.-.	**52**	**61**	94	110
2BH7310-0..1.-.	**61**	**61**	110	110
2BH7310-0..2.-.	**81**	**86**	146	155
2BH7410-0..1.-.	**90**	**101**	162	182
2BH7510-0..1.-.	**93**	**111**	167	200
2BH7510-0..2.-.	**120**	**112**	216	202
2BH7610-0..1.-.	**118**	**124**	212	223
2BH7610-0..3.-.	**118**	**124**	212	223

Two-impeller design

Model	Temperature increase			
	ΔT [K] approx.		Δϑ [F] approx.	
	50 Hz	60 Hz	50 Hz	60 Hz
2BH7220-0..2.-.	**55**	**77**	99	139
2BH7220-0..5.-.	**74**	**110**	133	198
2BH7320-0..5.-.	**81**	**124**	146	223
2BH7420-0..2.-.	**89**	**80**	160	144
2BH7420-0..5.-.	**121**	**117**	218	211
2BH7520-0..2.-.	**89**	**102**	160	184
2BH7520-0..7.-.	**125**	**110**	225	198
2BH7620-0..3.-.	**124**	**126**	223	227
2BH7620-0..5.-.	**124**	**128**	223	230

Three-impeller design

Model	Temperature increase			
	ΔT [K] approx.		Δϑ [F] approx.	
	50 Hz	60 Hz	50 Hz	60 Hz
2BH7530-0..8.-.	**120**	**120**	216	216
2BH7630-0..6.-.	**120**	**120**	216	216

Tightening torques for screw connections

The following values apply if no other information is available.

With non-electrical connections, property classes of 8.8 and 8 or higher as per ISO 898-1 are assumed.

 © Gardner Denver Deutschland GmbH

3.2 Electrical data

See rating plate.

3.3 Operating conditions

Temperatures

Temperature of pumped gases:	max. permissible temperature: **+40°C** [+104°F] Nominal value: **+15°C** [+59°F] Pump-motor units for higher fluid temperatures on request.
Ambient temperature (standard design)[1]:	max. permissible temperature: **+40°C** [+104°F] min. permissible temperature: **-15°C** [+5°F] Nominal value: **+25°C** [+77°F] Ambient temperatures between **25°C** [+77°F] and **40°C** [+104°F] affect the permissible total pressure difference (see Section "Permissible total pressure difference"). At higher temperatures the winding may be damaged and the grease change interval may be shortened.

Pressures

Min. inlet pressure:	See rating plate.
Max. discharge pressure during compressor operation:	See rating plate.
Max. permissible pressure in pump-motor unit:	**2.5 bar abs.** [36.2 psia] At this pressure the operation of the pump-motor unit may be considerably impaired. Provide a corresponding protective device (e.g. pressure relief valve) if necessary.
Permissible total pressure difference:	The total pressure difference specified on the rating plate only applies under the following conditions: • Ambient temperature: **25°C** [77°F]. • Inlet temperature (temperature of pumped gases at inlet connection): **15°C** [59°F]. • Pressure: during vacuum-pump operation: **1,013 mbar** [14.7 psia] at discharge connection; during compressor operation: **1,013 mbar** [14.7 psia] at inlet connection; At an ambient temperature of **40°C** [104°F] the total pressure difference specified on the rating plate must be reduced by 10%. If the ambient temperature is between **25°C** [77°F] and **40°C** [104°F], then the total pressure difference specified on the rating plate must be reduced linearly to the temperature by between 0 and 10 %.

Installation altitude

Max. of **1,000 m** [3,280 ft] above sea level.

When installing the pump-motor unit at an altitude of more than **1,000 m** [3,280 ft] above sea level, first inquire with the Service department.

[1] For design with frequency converter, see separate operating instructions.

4 Transport and Handling

 © Gardner Denver Deutschland GmbH

5 Installation

The pump-motor unit is ready to connect on delivery.

However, if the time from delivery to commissioning of the pump-motor unit exceeds a certain period, the lubrication of the rolling bearings must be renewed.
See Chapter 8.2, "Storage conditions", Section "Lubrication of rolling bearings after longer storage", Pg. 23 for information on this topic.

Carry out the following work to install the pump-motor unit:

- Installation and securing,
- Attachment of the included loose muffler if necessary,
- Attachment of threaded flange or hose flange (available as accessories) for the connection of inlet or discharge pipe to the muffler,
- Electrical connection,
- Connection of inlet and discharge connection to the system.

5.1 Installation

 © Gardner Denver Deutschland GmbH

Components for reducing noise on the pump-motor unit:

- **Mufflers** (included as standard equipment): On delivery the pump-motor units are equipped with attached mufflers as standard. The noise radiation is considerably reduced by the mufflers. See Fig. 2 to Fig. 4, Pg. 18 ff.
- **Additional mufflers** (available as an option): The additional mufflers enable a further noise reduction. They may only be used with free entry and exit of gases, i.e. with direct intake out of or direct feeding into the atmosphere **without piping**.
- **Noise protection hoods** (available as an option): Noise protection hoods are suitable for installation in rooms and in the open. They reduce both the total sound pressure level and tonal components that are perceived as particularly annoying.

Installation variants/axis position:

Basically, when installing the pump-motor unit, the following variants are possible with a different axis position (horizontal or vertical):

- Horizontal installation
- Vertical installation on the vacuum pump/compressor cover ("cover installation")
- Vertical mounting on the wall.

Basically, all variants are possible with all models.

However, a distinction must be made between a design with and a design without a **condensed water opening** for the axis position:

- The pump-motor units without a condensed water opening can be installed and secured in any axis position.
- The pump-motor unit with a condensed water opening may only be installed and secured horizontally with the base at the bottom.

Horizontal installation

Screw the base of the pump-motor unit to the surface with suitable mounting elements.

Proceed as follows:

- Provide the base of the pump-motor unit with mounting holes.
- Select the suitable screw type.
- Screw the base of the pump-motor unit to the surface with the screws.
  When doing so, be sure to provide **all** mounting holes with screws!

Vertical installation on the vacuum pump/compressor cover ("cover installation")

With vertical installation of the pump-motor unit with the vacuum pump/compressor cover facing downward, rubber feet must be used.

Proceed as follows:

- The rubber feet are available as accessories. They are delivered in a set of 3.
  On the upper section they are provided with stud bolts and on the lower section with a threaded hole.
- Mount the rubber feet on the pump-motor unit: Screw the stud bolts of the rubber feed into the holes on the face of the vacuum pump/compressor cover and tighten them.
- Mount the pump-motor unit together with the rubber feet on the installation surface:
  Select suitable mounting elements for the threaded hole.
  Screw the rubber feet to the surface or foundation via the threaded hole.

Vertical mounting on the wall

With vertical mounting of the pump-motor unit on the wall, the pump-motor unit is mounted via the holes in the base.

Proceed as follows:

- Position the pump-motor unit as close to the wall as possible on a stable supporting plate with sufficient load-bearing capacity.
  The pump-motor unit must be positioned with the base toward the wall.
- Provide the base of the pump-motor unit with mounting holes.
- Select the suitable screw type.
- Screw the base of the pump-motor unit to the wall with the screws.
  When doing so, be sure to provide **all** mounting holes with screws!
- Remove the supporting plate.

Eye bolt:

Following installation, the eye bolt must be either firmly tightened or removed.

5.2 Electrical connection (motor)

 © Gardner Denver Deutschland GmbH

- For the tightening torques for terminal board connections (except terminal strips), see Chapter 3.1, "Mechanical data", Section "Tightening torques for screw connections", Pg. 10.
- For terminals with clamping straps (e.g. as per DIN 46282), the conductors must be inserted so that approximately the same clamping height results on both sides of the bar. Individual conductors must therefore be bent into a U-shape or connected with a cable lug (DIN 46234).

This also applies to:

- the protective conductor,
- the outer ground conductor.

Both conductors can be recognized from their color (green/yellow).

5.3 Connecting pipes/hoses (vacuum pump/compressor)

Mufflers:

The pump-motor units are delivered with mufflers (indicated with arrows in the following illustrations) for the inlet and discharge connections as standard equipment.

With **single-impeller pump-motor units**, the mufflers are already mounted on delivery.

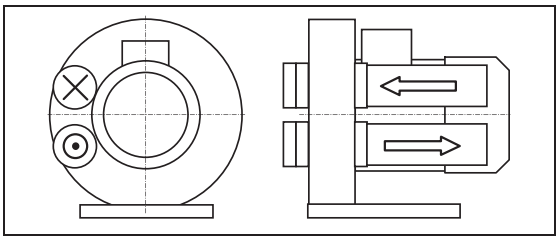

Fig. 2: 2BH721 ... 2BH761 (single-impeller pump-motor units)

With **two-impeller and three-impeller pump-motor units**, the inlet-side muffler is included loose for packaging-related reasons and must be mounted by the operator.

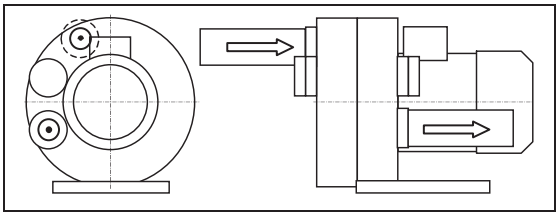

Fig. 3: 2BH722 ... 2BH762 (two-impeller pump-motor units with two-stage design)

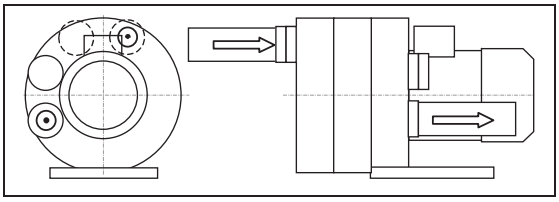

Fig. 4: 2BH723 ... 2BH763 (three-impeller pump-motor units with three-stage design)

 © Gardner Denver Deutschland GmbH

6 Commissioning

 © Gardner Denver Deutschland GmbH

6.2 Start-up and shut-down

Start-up

- Open shut-off device in intake/discharge pipe.
- Switch on power supply for drive motor.

Shut-down:

- Switch off power supply for drive motor.
- Close shut-off device in intake/discharge pipe.

7 Operation

 © Gardner Denver Deutschland GmbH

- Provide mufflers on inlet and discharge side with sealing plugs.

8.2 Storage conditions

To prevent standstill damage during storage, the environment must provide the following conditions:

- dry,
- dust-free,
- low-vibration (effective value of vibration speed $v_{eff} \leq 2.8$ mm/s).
- Ambient temperature: max. **+40°C** [+104°F].

9.1 Repairs/troubleshooting

Fault	Cause	Remedy	Carried out by
Motor does not start; no motor noise.	At least two power supply leads interrupted.	Eliminate interruption by fuses, terminals or power supply cables.	Electrician
Motor does not start; humming noise.	One power supply lead interrupted.	Eliminate interruption by fuses, terminals or power supply cables.	Electrician
	Impeller is jammed.	Open vacuum pump/compressor cover, remove foreign body, clean.	Service*)
		Check or correct impeller gap setting if necessary.	Service
	Impeller defective.	Replace impeller.	Service*)
	Rolling bearing on drive motor side or vacuum pump/compressor side defective.	Replace motor bearing or vacuum pump/compressor bearing.	Service*)
Protective motor switch trips when motor is switched on. Power consumption too high.	Winding short-circuit.	Have winding checked.	Electrician
	Motor overloaded. Throttling does not match specification on rating plate.	Reduce throttling.	Service*)
		Clean filters, mufflers and connection pipes if necessary.	Service*)
	Compressor is jammed.	See fault: "Motor does not start; humming noise" with cause: "Impeller is jammed.".	Service*)
Pump-motor unit does not generate any or generates insufficient pressure difference.	Leak in system.	Seal leak in the system.	Operator
	Wrong direction of rotation.	Reverse direction of rotation by interchanging two connecting leads.	Electrician
	Incorrect frequency (on pump-motor units with frequency converter).	Correct frequency.	Electrician
	Shaft seal defective.	Replace shaft seal.	Service*)
	Different density of pumped gas.	Take conversion of pressure values into account. Inquire with Service Department.	Service
	Change in blade profile due to soiling.	Clean impeller, check for wear and replace if necessary.	Service*)
Abnormal flow noises.	Flow speed too high.	Clean pipes. Use pipe with larger cross-section if necessary.	Operator
	Muffler soiled.	Clean muffler inserts, check condition and replace if necessary.	Service*)
Abnormal running noise.	Ball bearing lacking grease or defective.	Regrease or replace ball bearing.	Service*)
Compressor leaky.	Seals on muffler defective.	Check muffler seals and replace if necessary.	Service*)
	Seals in motor area defective.	Check motor seals and replace if necessary.	Service

*) Only when the maintenance manual is at hand: rectification by the operator.

 © Gardner Denver Deutschland GmbH

9.2 Service/After-sales service

Our Service is available for work (in particular the installation of spare parts, as well as maintenance and repair work), not described in these operating instruction.

A list of spare parts with an exploded drawing is available on the Internet at www.gd-elmorietschle.com.

Observe the following when **returning** pump-motor unit:

- The pump-motor unit must be delivered complete, i.e. not dismantled.
- The pump-motor unit may not present a danger to the workshop personnel.
  If the pump-motor unit has come into contact with dangerous substances, then the procedure described in Chapter 9.3, "Decontamination and Declaration of Clearance", Pg. 25, must be used.
- The original rating plate of the pump-motor unit must be properly mounted, intact and legible.
  All warranty claims are voided for pump-motor units delivered for a damage expertise without the original rating plate or with a destroyed original rating plate.
- In case of warranty claims, the manufacturer must be informed of the operating conditions, operating duration etc. and additional detailed information provided on request if necessary.

9.3 Decontamination and Declaration of Clearance

EU declaration of conformity

Manufacturer:	Gardner Denver Deutschland GmbH Industriestraße 26 97616 Bad Neustadt • Germany
Representative for the compilation of technical documents:	Holger Krause Industriestraße 26 97616 Bad Neustadt • Germany
Description and identification of the machine:	Vacuum pumps/Compressors (Side channel blower) Series G-BH7 Types 2BH72..-.....-. 2BH73..-.....-. 2BH74..-.....-. 2BH75..-.....-. 2BH76..-.....-.

The machine described above meets the following applicable Community harmonisation legislation:

2006/42/EC	European Parliament and Council Directive 2006/42/EC from 17th May 2006 on machinery and amending Directive 95/16/EC.
2004/108/EC*)	Directive 2004/108/EC of the European Parliament and Council from 15th December 2004 for the application of the legal regulations of the EU member states concerning electrical devices and repealing Directive 89/336/EEC

Harmonised standards applied:

EN 1012-1:2010	Compressors and vacuum pumps - Safety requirements - Part 1: Compressors
EN 1012-2:1996 +A1:2009	Compressors and vacuum pumps - Safety requirements - Part 2: Vacuum pumps
EN ISO 12100:2010	Safety of machinery - General principles for design - Risk assessment and risk reduction (ISO 12100:2010)
EN 60204-1:2006	Safety of machinery - Electrical equipment of machines Part 1: General requirements IEC 60204-1:2005 (amended)
EN 60034-1:2010/ AC:2010	Rotating electrical machines - Part 1: Rating and performance IEC 60034-1:2010 (amended)

Bad Neustadt, 18.04.2012
(Place and date of issue)

Andreas Bernklau, product management/attorney
(Name and function)

Dr. Rudi Dittmar, development
(Name and function)

*) Only applicable for version with frequency converter 2FC

664.44436.40.000

© Gardner Denver Deutschland GmbH

Statement on health safety and on the protection of the environment

- For the safety of our employees and to comply with statutory requirements on handling substances harmful to the health and the environment, this statement must be enclosed, fully completed, with **each** unit/system sent.
- **Without the fully completed statement, repair/disposal is not possible and delays are unavoidable!**
- The statement is to be completed and signed by suitably qualified, authorised personnel at the operating organisation.
- In the case of shipment to Germany, the statement is to be completed in German or English.
- The statement is to be attached to the outside of the packing on shipment.
- If necessary, the carrier is to be informed.

1. **Product designation (type):** .....
2. **Serial number (no. BN):** .....
3. **Reason for sending:** .....
4. **The unit/system**
   has **not** come into contact with hazardous substances. There will be **no** hazards for personnel or the environment during repair/disposal. Continue with "6. Legally binding statement“
   has come into contact with hazardous substances. Continue with "5. Information on the contamination“
5. **Information on the contamination** (if necessary provide more information on an additional sheet)
   The unit/system was used in the following application:

   .....
   and has come into contact with the following classifiable substances or substances presenting a hazard to health/environment:

Trade name:	Chemical designation:	Hazardous substance class:	Properties (e.g. toxic, inflammable, caustic, radioactive):

   The unit/system has been emptied in accordance with the operating instructions, flushed and cleaned externally.

   Safety data sheets in accordance with the applicable regulations are enclosed (sheet).

   The following safety precautions are necessary for handling (e.g. personal protective equipment):

   .....

   .....
6. **Legally binding statement**
   I herewith guarantee that the details specified are true and complete and that I, as signatory, am in a position to judge that this is so.
   We are aware that we are liable to the contractor for any damages arising from incomplete or incorrect specifications. We are obliged to indemnify the contractor against claims for damages by third parties arising from incomplete or incorrect specifications. We are aware that, irrespective of this statement, we are directly liable to third parties - in particular including the contractor's employees tasked with repair/disposal.

Company/institute: .....

Name, position: ..... Phone: .....

Street: ..... Fax: .....

Post code, city: .....

Country: ..... Stamp:

Date, signature: .....

© Gardner Denver Deutschland GmbH
P.O. box 1510
97605 Bad Neustadt
Phone: +49 7622 392 0
Fax: +49 7622 392 300
E-mail: er.de@gardnerdenver.com
Internet: www.gd-elmorietschle.com
610.44436.40.000
Edition: 04.2012
English

AIRCOM TECHNOLOGIES inc.

16781, Hymus, Kirkland (Québec) H9H 3L4
T.: 514 695-4740 F.: 514 695-0581
www.aircom.ca info@aircom.ca

Pression & Vide • Pressure & Vacuum

B-501/2 - Blower, Sutorbilt, Model 4L-RHC, Orientation: Horizontal (Flow Down) Driven Shaft Position: RHC (Right Hand Central) Flow Requirement: 487 scfm

OPERATION & MAINTENANCE MANUAL

AIRCOM PACKAGE

WITH

SUTORBILT

POSITIVE DISPLACEMENT BLOWER

YOUR REFERENCE: PO # 1704432-0008 (Blower) & 1704432-0009 (Package)

OUR REFERENCE: 222850 & 222851

TABLE OF CONTENTS

	ITEM
Package drawing(s) including scope of supply …….…… ……..…	1
Drive (belt or coupling) data sheet(s)…….……	2
Blower performance data sheet(s)……..	3
Motor manual(s) / data sheet(s)…..…..… ……..…….……..….	4
Gardner Denver blower parts list, operating and service manual …….…...	5
Maintenance data sheet – Spare parts list ……..…	6

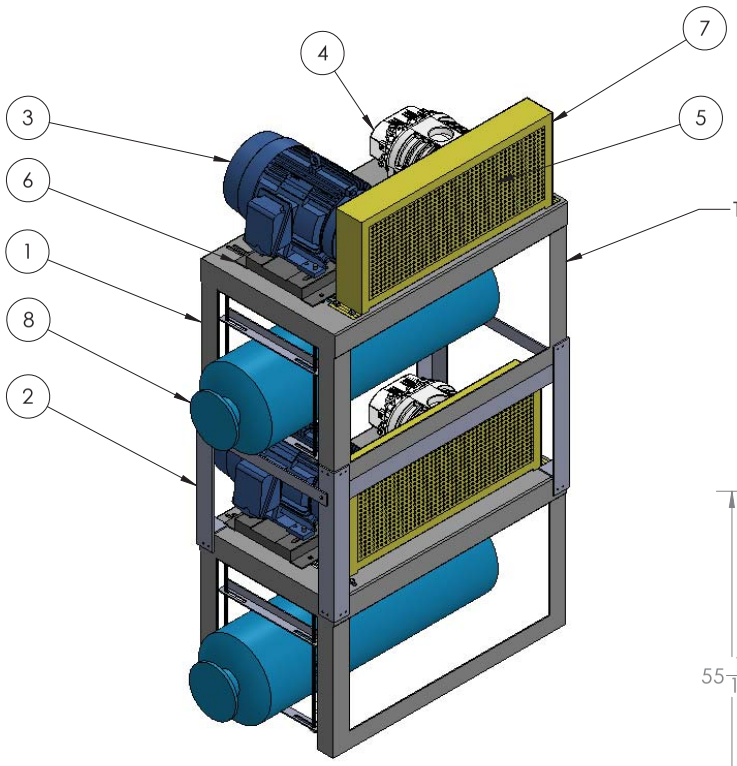

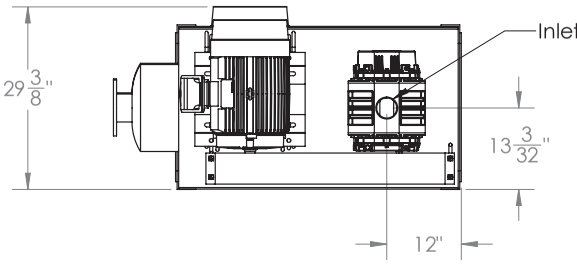

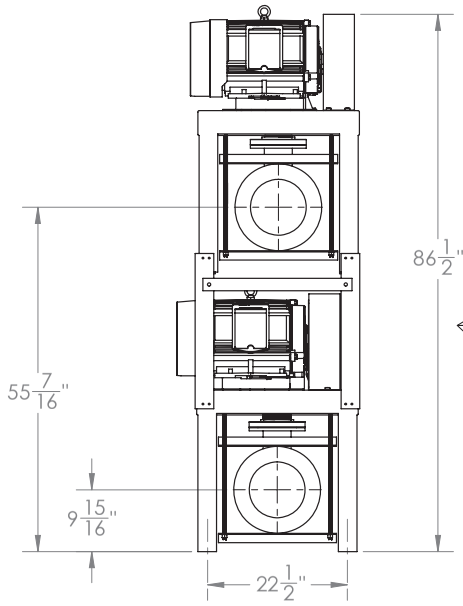

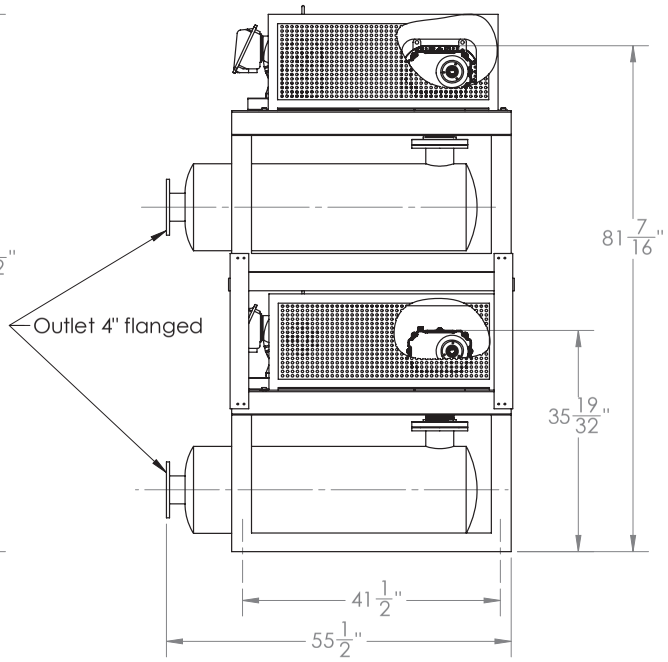

ITEM NO.	DESCRIPTION	QTY.
1	Elevated base, Steel	2
2	Extension base, Steel	1
3	Motor,15HP (supplied by Newterra)	2
4	Blower, Sutorbilt, Model 4L	2
5	Belt Drive 15HP	2
6	Motor slide base	2
7	Guard for belt drive, Steel	2
8	Silencer, URBY4 4in flanged	2

UNLESS OTHERWISE SPECIFIED:
DIMENSIONS ARE IN INCHES
TOLERANCES:
FRACTIONAL ±
ANGULAR: MACH ± BEND ±
TWO PLACE DECIMAL ±
THREE PLACE DECIMAL ±
INTERPRET GEOMETRIC TOLERANCING PER:
MATERIAL
FINISH
NEXT ASSY | USED ON
APPLICATION | DO NOT SCALE DRAWING

	NAME	DATE
DRAWN	Alex C.	01/06/2017
CHECKED		
ENG APPR.		
MFG APPR.		
Q.A.		

COMMENTS:

AIRCOM TECHNOLOGIES

TITLE:
Blower Package
Sutorbilt 4L Stacked

SIZE	DWG. NO.	REV
B	0960	1

SCALE: 1:20 | WEIGHT: | SHEET 1 OF 1

E-75

Maska Pulleys Inc.
180, Boul. Gagnon, Ste-Claire
Qc, Canada G0R 2V0
Tel:(418)883-4322 Fax:(418)883-5015
www.maskapulleys.com

Selection Parameters

Family: Classic & Narrow belts drives

Shaft diameter Driver: 1-5/8 Inch
Shaft diameter Driven: 7/8 Inch
Service Factor: 1.4
Driver power: 13.3 hp
Rpm Driver: 3525
Rpm Driven: 3364 **Tolerance:** -0% +3%
Center distance : Minimum: 23.5 Inch
Maximum: 24.5 Inch
Belts: A,AX,B,BX,C,CX,3V,3VX,5V,5VX,8V

Max. Hub Load: 9999
Rim Speed min.: 900 FPM
Rim Speed max.: 6500 FPM
Nbr of Grooves min.: 1
Nbr of Grooves max.: 15

Pitch Diameter (Inch)

	Min.	Max.
Driver	0.50	71.00
Driven	0.50	71.00

Actual Drive Values

Maximum number of results: 20

Rpm: 3417
Service Factor: 1.55
BeltSpeed (fpm): 5859
List Price: 194.90
Center distance (Inch): 23.6
Power/Belt (hp): 10.3
Deflection (inch): 0.37
Deflection Force (lbs): 3.1
Hub Loads (lbs): 130

Driver Sheave: 2B64

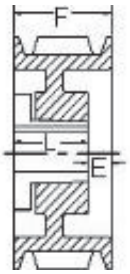

List Price: 68.00
Weight: 7.35 lbs

D.D. A or 4L Belt: 6.00"
D.D. B or 5L Belt: 6.40"
E: 7/16"
F: 1 3/4"
L: 1 5/16"
O.D.: 6.75"

Constuction type: Web

Driver Bushing: SDSX1-5/8

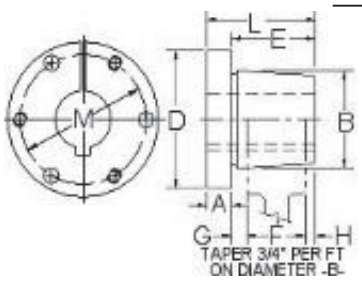

List Price: 17.30
Weight: 1.10 lbs

A: 7/16"
B: 2 3/16"
D: 3 3/16"
E: 7/8"
F: 3/4"
G: 1/4"
H: -1/8"
Keyseat: 3/8 x 3/16"
L: 1 5/16"
M: 2 11/16"

Set screw - Dimensions: 1/4-20 UNC x 1/4
Product specifications: Standard with set screw over keyway.
Hex bolt: 3=1/4-20 UNC x 1-3/8

Driven Sheave: 2MBL69

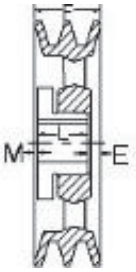

List Price: 64.60
Weight: 6.55 lbs

D.D. A or 4L Belt: 6.2"
D.D. B or 5L Belt: 6.6"
E: 1/16"
F: 1 3/4"
L: 1 11/32"
M: 11/32"
O.D.: 6.95"

Constuction type: Arms

Recommended Drive Selections are designed for use with Maska components (sheaves, bushings and V-belts) which meet or exceed MPTA & RMA standards. The use of lesser quality products could affect life expectancy of drive.Selections and Pricing are as accurate as possible. Maska is not responsible for ANY pricing or design errors.Price shown are for standard products only. For non-standard products or products that need dynamic balancing, contact Maska for pricing.

Driven Bushing: LX7/8

List Price: 9.00
Weight: 0.90 lbs

Set screw - Dimensions: 1-8UNCx1-1/2
Hex bolt: 2 = 1/4-20UNC X 7/8

A: 11/32"
B: 1 5/8"
D: 2 1/2"
E: 1"
F: 29/32"
G: 3/16"
H: -3/32"
Keyseat: 3/16 x 3/32"
L: 1 11/32"
M: 2"

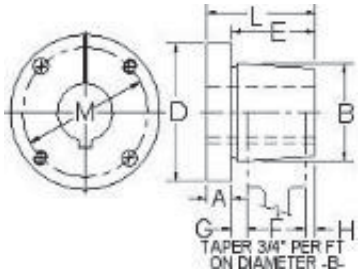

Belts: VBA65 (Qty:2)

List Price: 18.00
Weight: 0.30 lbs

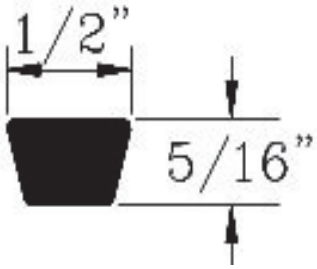

Recommended Drive Selections are designed for use with Maska components (sheaves, bushings and V-belts) which meet or exceed MPTA & RMA standards. The use of lesser quality products could affect life expectancy of drive.Selections and Pricing are as accurate as possible. Maska is not responsible for ANY pricing or design errors.Price shown are for standard products only. For non-standard products or products that need dynamic balancing, contact Maska for pricing.

QuickPik™

Sutorbilt Legend - 4L

Product Information

CORRECTED VALUES	ORIGINAL UNITS	ENGLISH UNITS	METRIC UNITS
Ambient Pressure	100 ALTI-FT	14.642 PSIA	1.01 bar a
Elevation	100 ALTI-FT	100 ALTI-FT	30 alti-m
Inlet Pressure	14.642 PSIA	0.000 PSIG	0 bar g
Inlet Pressure Loss	0.3 PSIG	0.300 PSIG	0.021 bar g
Inlet Temp	68 F	68 °F	20 °C
Inlet Flow	487 SCFM	499 ICFM	848 m³/h
Discharge Pressure	4.4 PSIG	4.400 PSIG	0.303 bar g
Discharge Pressure Loss	0.2 PSIG	0.200 PSIG	0.014 bar g
MEASURED VALUES	**ORIGINAL UNITS**	**ENGLISH UNITS**	**METRIC UNITS**
Speed	3364 RPM	3364 RPM	3364 RPM
RPM % Of Max	93	93	93
Power	13.3 HP	13.3 HP	9.9 kW
Discharge Temp	126 °F	126 °F	52 °C
Temp % of Max	48	48	48
Noise	88 dBa	88 dBa	88 dBa
Pressure % of Max	70	70	70



PHYSICAL	
Weight	155 lbs.
Gear Diameter / Center Distance	4 in.
Connection Size	3i/3d in.
Case Length	8 in.
WR^2	0.924 lb-ft^2
Orientation	horizontal
PERFORMANCE	
Max Delta P	7 PSI
Max Temp	260 °F
Max Speed	3600 RPM
Min Speed	955 RPM
Max Case Pressure	25 PSIG
Max Delta T	160 °F

QuickPik™

AMBIENT GAS PARAMETERS	ENGLISH UNITS	METRIC UNITS
Molecular Weight	28.866 lbm/lbmol	28.866 kg/kgmol
R Value	53.523 ft.lbf/lbm.R	0.288 kJ/kg.K
Density	0.075 lbm/ft ^{3}	1.196 kg/m^3

GAS MIX:	VOL
Air	100%

Performance Curves

Temperature Rise

DEFINED CONDITIONS
58 F

RPM
3364

Published Data
Defined Conditions

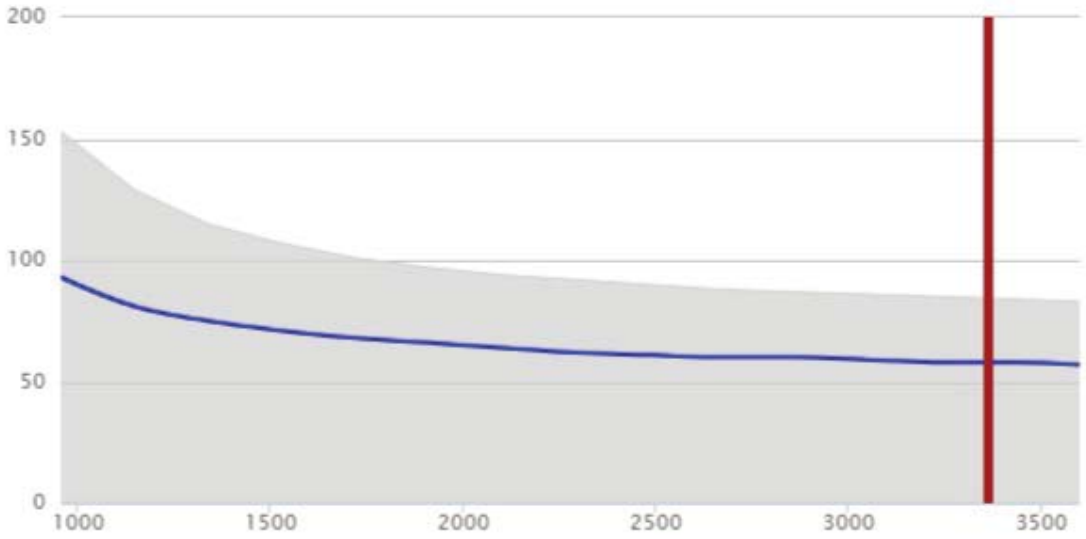

Flow

DEFINED CONDITIONS
487 SCFM

RPM
3364

Published Data
Defined Conditions

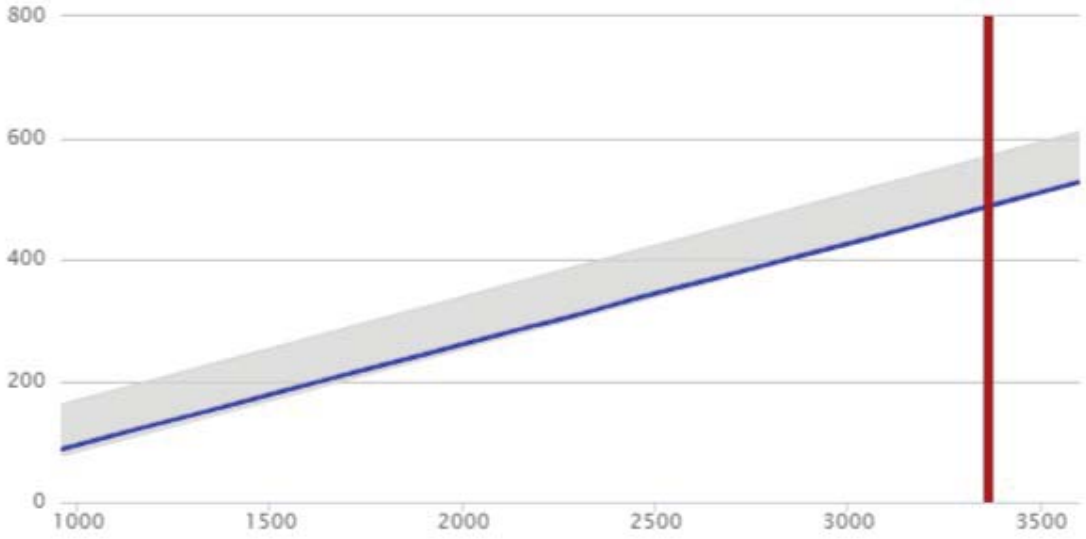

QuickPik™

Performance Curves

Power

DEFINED CONDITIONS
13.3 HP

RPM
3364

Published Data
Defined Conditions

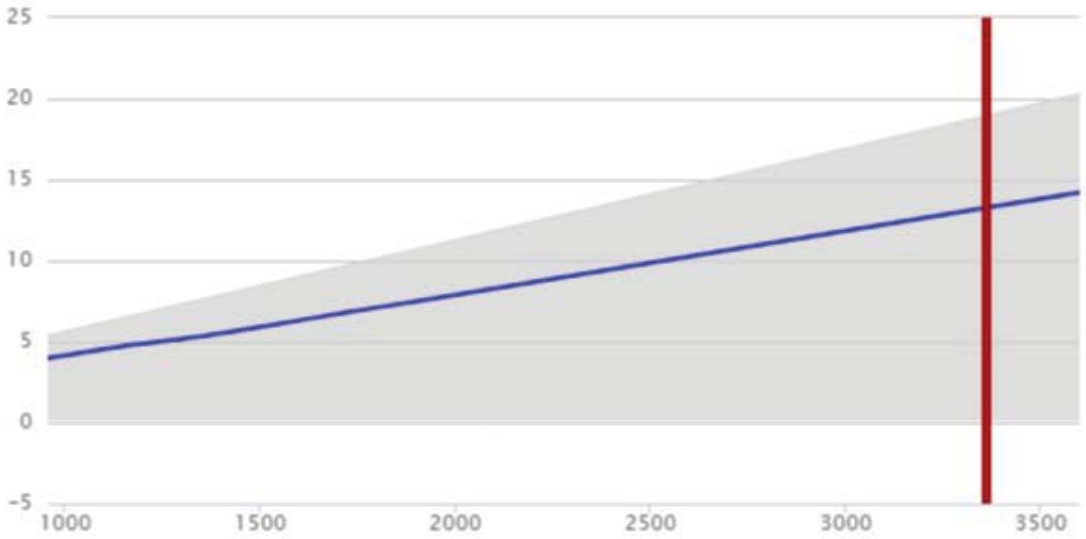

Torque

DEFINED CONDITIONS
20.8 ft-lb

RPM
3364

Published Data
Defined Conditions

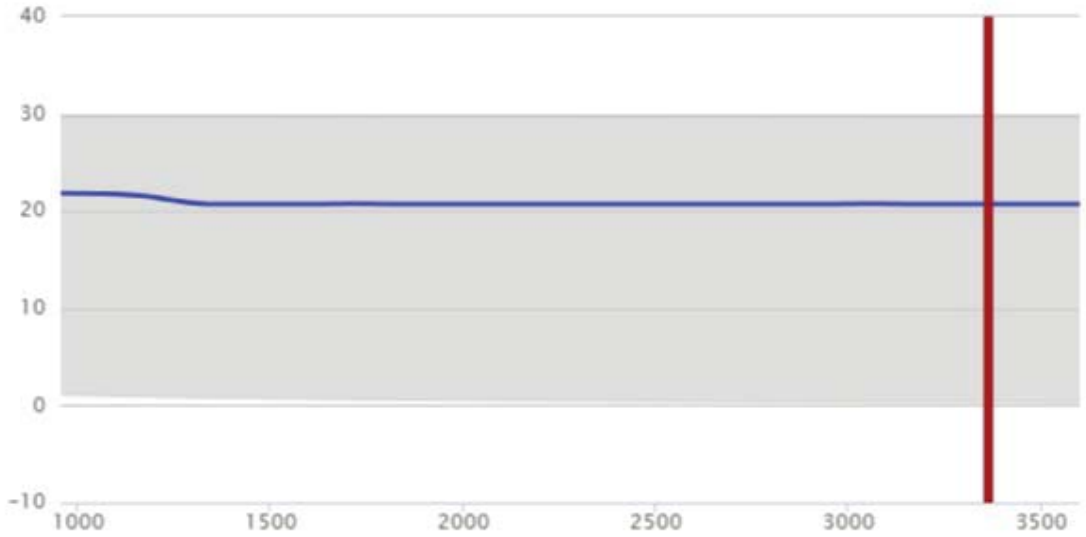

Gardner Denver

PARTS LIST OPERATING AND SERVICE MANUAL

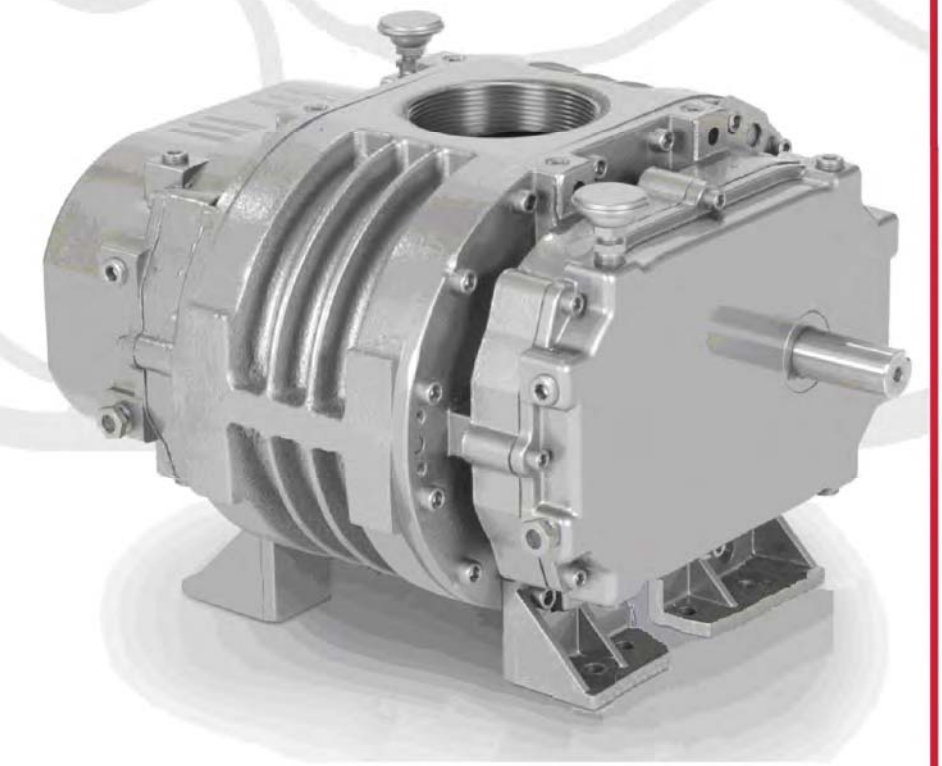

LEGEND
"R" SERIES BLOWERS

3" – 5" GEAR DIAMETER

Models
GAB_ _ R _
GAC_ _ R _
GAE_ _ R _

ENERGY STAR PARTNER

SB-7-632
Version 05
July 8, 2015

MAINTAIN BLOWER RELIABILITY AND PERFORMANCE
WITH GENUINE GARDNER DENVER
PARTS AND SUPPORT SERVICES

Factory genuine parts, manufactured to design tolerances, are developed for optimum dependability - - - specifically for your blower. Design and material innovations are born from years of experience with hundreds of different blower applications. When you specify factory genuine parts you are assured of receiving parts that incorporate the most current design advancements manufactured in our state-of-the-art blower factory under exacting quality standards.

Your AUTHORIZED DISTRIBUTOR offers all the backup you require. A worldwide network of authorized distributors provides the finest product support in the blower industry.

1. Trained technical representatives to assist you in selecting the correct replacement parts.

2. Complete inventory of new machines and new, genuine factory parts.

3. A full line of factory tested AEON® PD blower lubricants, specifically formulated for optimum performance in all blowers.

4. Authorized distributor service technicians are factory-trained and skilled in blower maintenance and repair. They are ready to respond and assist you by providing fast, expert maintenance and repair service.

INSTRUCTIONS FOR DETERMINING BLOWER CONFIGURATION

1. Face the blower drive shaft.
2. In a **VERTICAL** configuration, air flow is horizontal.
3. In a **HORIZONTAL** configuration, air flow is vertical.
4. In a vertical configuration, a **BOTTOM HAND** exists when the drive shaft is below the horizontal center line of the blower. A **TOP HAND** exits when the drive shaft is above the horizontal center line of the blower.
5. In a horizontal configuration, a **RIGHT HAND** exists when the drive shaft is to the right of the vertical center line of the blower. A **LEFT HAND** exists when the drive shaft is to the left of the vertical center line of the blower.

INSTRUCTIONS FOR ORDERING REPAIR PARTS

For pricing, and ordering information contact your nearest AUTHORIZED FACTORY DISTRIBUTOR. When ordering parts, specify Blower **MODEL** and **SERIAL NUMBER** (see nameplate on unit).

Rely upon the knowledge and experience of your AUTHORIZED DISTRIBUTOR and let them assist you in making the proper parts selection for your blower.

To Contact Gardner Denver or locate your local distributor:
Visit: www.contactgd.com/mobile

Or

Call: (217)222-5400

GARDNER DENVER LUBRICANT ORDER INFORMATION

Re-order Part Numbers for Factory Recommended Lubricants.

Gear and Drive End

AEON PD Synthetic Lubricant, AEON PD-XP—Extreme Duty Synthetic Lubricant or AEON PD-FG—Food Grade Synthetic Lubricant

AEON PD Synthetic Lubricant

Description	Part Number
1 Quart	28G23
Case/12Quarts	28G24
1 Gallon Container	28G40
Case/6 Gallons	28G41
5 Gallon Pail	28G25
55 Gallon Drum	28G28

AEON PD-XD – Extreme Duty Synthetic Lubricant

Description	Part Number
1 Quart	28G46
Case/12Quarts	28G47
1 Gallon Container	28G42
Case/6 Gallons	28G43
5 Gallon Pail	28G44
55 Gallon Drum	28G45

AEON PD-FG – Food Grade Synthetic Lubricant

Description	Part Number
1 Quart	28H97
Case/12Quarts	28H98
1 Gallon Container	28H333
Case/6 Gallons	28H334
5 Gallon Pail	28H99
55 Gallon Drum	28H100

Drive End

AEON PD Grease

Description	Part Number
Case/10 Tubes (14oz/Tube	28H283

Call your local Gardner Denver Distributor to place your order for Gardner Denver lubricants. Your Authorized Gardner Denver Distributor is:

FOREWORD

Sutorbilt® blowers are the result of advanced engineering and skilled manufacturing. To be assured of receiving maximum service from this machine, the owner must exercise care in its operation and maintenance. This manual is written to give the operator and maintenance department essential information for day-to-day operation, maintenance and adjustment. Careful adherence to these instructions will result in economical operation and minimum downtime.

⚠ DANGER
Danger is used to indicate the presence of a hazard which will cause severe personal injury, death, or substantial property damage if the warning is ignored.

⚠ WARNING
Warning is used to indicate the presence of a hazard which can cause severe personal injury, death, or substantial property damage if the warning is ignored.

⚠ CAUTION
Caution is used to indicate the presence of a hazard which will or can cause minor personal injury or property damage if the warning is ignored.

NOTICE
Notice is used to notify people of installation, operation or maintenance information which is important but not hazard-related.

SAFETY PRECAUTIONS

Safety is everybody's business and is based on your use of good common sense. All situations or circumstances cannot always be predicted and covered by established rules. Therefore, use your past experience, watch out for safety hazards and be cautious. Some general safety precautions are given below:

⚠ DANGER

Failure to observe these notices could result in injury to or death of personnel.

- **Keep fingers and clothing away from revolving fan, drive coupling, etc.**
- **Do not use the air discharge from this unit for breathing – not suitable for human consumption.**
- **Do not loosen or remove the oil filler plug, drain plugs, covers or break any connections, etc., in the blower air or oil system until the unit is shut down and the air pressure has been relieved.**
- **Electrical shock can and may be fatal.**
- **Blower unit must be grounded in accordance with the National Electrical Code. A ground jumper equal to the size of the equipment ground conductor must be used to connect the blower motor base to the unit base.**
- **Open main disconnect switch, tag and lockout before working on the control.**
- **Disconnect the blower from its power source, tag and lockout before working on the unit – this machine may be automatically controlled and may start at any time.**

⚠ WARNING

Failure to observe these notices could result in damage to equipment.

- **Stop the unit if any repairs or adjustments on or around the blower are required.**
- **Disconnect the blower from its power source, tag and lockout before working on the unit – this machine maybe automatically controlled and may start at any time.**
- **Do not exceed the rated maximum speed shown on the nameplate.**
- **Do not operate unit if safety devices are not operating properly. Check periodically. Never bypass safety devices.**

TABLE OF CONTENTS

Maintain Blower Reliability And Performance 2

Foreword 4

Safety Precautions..... 5

Sutorbilt Legend Series Blowers Matrix/Menu 8

Introduction..... 9

Section 1, Equipment Check..... 10

Section 2, Installation..... 12

Section 3, Lubrication 17

Section 4, Operation 22

Section 5, Special Tools Required 25

Section 6, Disassembly Instructions..... 27

Section 7, Assembly Instructions..... 31

Section 8, Parts List..... 39 thru 62

INDEX

Aeon PD Extreme Duty Lubricant....20
Aeon PD Food Grade Lubricant....20
Aeon PD Synthetic Lubricant....20
Air Filters And Filter Silencers....16
Assembly Instructions, Section 7....31

Blower Startup Checklist....23

Disassembly Instructions, Section 6....27
Drive End Lubrication....17, 18
Drive Installation....13

Equipment Check, Section 1....10

Foundations....12

Gear End Lubrication....18

Installation, Section 2....12
Installing The Timing Gears....36
Introduction....9

Limitations....22
Location....12

Lubrication, Section 3....17

Mechanical Seals Only....31, 32
Mounting Configurations....12

Operation, Section 4....22

Parts List, Section 8....39
Piping....14

Recommended Lubricant....20
Removing Protective Materials....10
Repositioning The Mounting Feet....12

Safety Precautions....5
Safety Precautions....24

Section 7
Assembly Instructions....31
Setting Impeller End Clearance With Mechanical Seals....35
Setting Impeller End Clearances....34

Special Tools Required Section 5....25
Storage....10

Trouble Shooting....24

Warranty....63

LIST OF ILLUSTRATIONS

FIGURE 2-1 – BLOWER MOUNTING CONFIGURATION....13
FIGURE 2-2 – BELT DRIVE OVERHUNG LOAD CALCULATIONS....15

FIGURE 3-1 - LUBRICATION....17
FIGURE 3-2 – APPROXIMATE OIL CAPACITIES....18
FIGURE 3-3 – AEON PD SYNTHETIC LUBRICANT....20
FIGURE 3-4 – SYNTHETIC LUBRICANT CHART....20
FIGURE 3-5 – LUBRICATION RECOMMENDATION....21

FIGURE 4-1 – MAXIMUM / MINIMUM OPERATING LIMITATIONS....22

FIGURE 5-1 – PULLER PLATE....25
FIGURE 5-2 – SEAL DRIVE....25
FIGURE 5-3 – MECHANICAL SEAL INSTALLATION TOOL....26
FIGURE 5-4 – BEARING PRESS TOOL – MECHANICAL SEAL UNITS....26

FIGURE 6-1 – DISASSEMBLY ILLUSTRATIONS....27
FIGURE 6-2 – DISASSEMBLY ILLUSTRATIONS....27
FIGURE 6-3 – DISASSEMBLY ILLUSTRATIONS....28
FIGURE 6-4 – DISASSEMBLY ILLUSTRATIONS....28
FIGURE 6-5 – DISASSEMBLY ILLUSTRATIONS....28
FIGURE 6-6 – DISASSEMBLY ILLUSTRATIONS....29

FIGURE 7-1 – ASSEMBLY ILLUSTRATIONS....31
FIGURE 7-2 – ASSEMBLY ILLUSTRATIONS....32
FIGURE 7-3 – ASSEMBLY ILLUSTRATIONS....32
FIGURE 7-4 – ASSEMBLY ILLUSTRATIONS....33
FIGURE 7-5 – ASSEMBLY ILLUSTRATIONS....34
FIGURE 7-6 – ASSEMBLY ILLUSTRATIONS....34
FIGURE 7-7 – ASSEMBLY ILLUSTRATIONS....34
FIGURE 7-8 – ASSEMBLY ILLUSTRATIONS....37
FIGURE 7-9 – TORQUE FT LBS....38

SUTORBILT LEGEND SERIES BLOWERS
MATRIX/MENU

NOTICE TO CUSTOMER – To find the construction options for Your blower unit, FILL IN THE BALANCE OF LETTERS OR NUMBERS FROM YOUR UNIT NAMEPLATE

	G	A				R	
COLUMN NUMBER:	1	2	3	4	5	6	7

FOLLOW THE LINE DOWN AND OVER FROM EACH SPACE THUS FILLED IN TO FIND THE APPROPRICATE CONSTRUCTION OPTION WITH WHICH YOUR MACHINE IS EQUIPPED.

COLUMN 1 – BASIC DESIGNATOR

COLUMN 2 – PRODUCT FAMILY

COLUMN 3 – GEAR DIAMETER

B	3”	E	5”
C	4”		

COLUMN 4 – CASE LENGTH

- L - Low Pressure
- M - Medium Pressure
- H - High Pressure

COLUMN 5 – CONFIGURATION

- A Vertical-Top Hand -Central Timed
- B Vertical-Bottom Hand – Central Timed
- C Horizontal – Left Hand – Central Timed
- D Horizontal – Right Hand – Central Timed

COLUMN 6 – DESIGN VERSION

COLUMN 7 – ADDITIONAL DESCRIPTION

	SEALS	CLEARANCES	LUBRICATION
A.	Lip	Standard	Grease-Splash
B.	Mechanical	Standard	Grease-Splash
C.	Lip	High Temperature	Grease-Splash
D.	Lip	Standard	Dual-Splash
E.	Mechanical	Standard	Dual-Splash
F.	Lip	High Temperature	Dual-Splash
G.	Mechanical	High Temperature	Dual-Splash

INTRODUCTION
YOUR KEY TO TROUBLE FREE SERVICE

Thank you for investing in Gardner Denver quality. The Gardner Denver reputation for rugged dependability has been earned by over 50 years of service in demanding, industrial operations where downtime cannot be tolerated and efficient blower performance is expected.

Your Gardner Denver Sutorbilt blower is a precision engineered blower that has been carefully manufactured and thoroughly tested at the state-of the art Gardner Denver Blower Factory in Sedalia, Missouri.

As with other precision machinery, there are several relatively simple installation, operation and maintenance procedures that you must observe to assure optimum blower performance. There is no guesswork in the manufacture of your highly advanced Sutorbilt blower and there must be none in preparing the blower to get the job done in the field.

The purpose of this manual is to help you properly install, operate and maintain your Sutorbilt blower. It is essential that you review all sections of this manual in preparation for installing your blower. Follow the instructions for installing your blower. Follow the instructions carefully and you will be rewarded with trouble-free Gardner Denver Sutorbilt service year in and year out.

SECTION 1
EQUIPMENT CHECK

Before uncrating, check the packing slip carefully to be sure all the parts have been received. All accessories are listed as separate items on the packing slip, and small important accessories such as relief valves can be overlooked or lost. After every item on the packing slip has been checked off, uncrate carefully.

NOTICE
Register a claim with the carrier for lost or damaged equipment.

⚠WARNING
Customers are cautioned to provide adequate protection, warning and safety equipment necessary to protect personnel against hazards involved in installation and operation of this equipment in the system or facility.

STORAGE

Your Gardner Denver Blower was packaged at the factory with adequate protection to permit normal storage for up to six (6) months.

If the unit is to be stored under adverse conditions or for extended periods of time, the following additional measures should be taken to prevent damage.

1. Store the blower in a clean, dry, heated (if possible) area.
2. Make certain inlet and discharge air ports are tightly covered to prevent foreign material from entering the air box.
3. All exposed, non-painted surfaces should be protected against rust and corrosion.
4. Provide adequate protection to avoid accidental mechanical damage.
5. In high humidity or corrosive environments, additional measures may be required to prevent rusting of the blower internal surfaces.
6. To prevent rusting of gears, bearings, etc., the oil reservoirs may be filled with normal operating oil.

⚠CAUTION
Before running the blower, drain the oil and replace to the proper operating level with clean, fresh lubricant.

7. Rotate the blower shaft (10 to 25 turns) weekly during storage. Inspect the blower shaft (near the shaft seal area) monthly and spray with rust inhibitor if needed.
8. For long term storage (over six (6) months), contact Gardner Denver Compressor Division Customer Service for recommendations.

REMOVING PROTECTIVE MATERIALS

The shaft extension is protected with rust inhibitor which can be removed with any standard solvent.

⚠CAUTION
Follow the safety directions of the solvent manufacturer.

Blower inlet and outlet are temporarily capped to keep out dirt and other contaminants during shipment. These covers must be removed before start-up.

The internal surfaces of all Sutorbilt units are mist sprayed with a rust preventative to protect the machine during shipment. Remove this film upon initial startup, using any commercial safety solvent. Position the blower so that the inlet and discharge connections are in the vertical position (vertical airflow). On vertically mounted units, it will be necessary to lay the unit on its side supporting the ends of the unit so as not to restrict the port on the bottom side. Place a shallow pan on the under side of the unit. With the blower disconnected from power, spray the solvent in the top port, rotating the impellers by spinning the shaft manually. Continue this procedure until the unit is visibly clean.

⚠WARNING
Rotating components will cause severe injury in case of personal contact. Keep hands and loose clothing away from blower inlet and discharge ports.

SECTION 2
INSTALLATION

LOCATION

Install the blower in a well lit, clean dry place with plenty of room for inspection and maintenance.

FOUNDATIONS

For permanent installation we recommend concrete foundations be provided, and the equipment should be grouted to the concrete. It is necessary that a suitable base be used, such as a steel combination base under blower and motor, or a separate sole plate under each. Before grouting, equipment must be leveled, free of all strains, and anchored so no movement will occur during setting of grout. After grout has completely hardened, a recheck is necessary to compensate for shrinkage, etc. If required, add shims under blower feet after final tightening of foundation anchor bolts to remove strain from the blower housing.

Where jack screws or wedges are used during grouting, they must be backed off and wedges removed before final tightening of anchor bolts. Refer to grouting instructions.

Where a concrete foundation is not feasible, care must be taken to insure that equipment is firmly anchored to adequate structural members, restricting movement and vibration.

MOUNTING CONFIGURATIONS

The blower flex-mount design enables horizontal and vertical mounting configurations with top or bottom hand, right or left hand shaft positioning. The units are center timed allowing rotation in either direction (refer to Figure 2-1).

REPOSITIONING THE MOUNTING FEET.

1. Position the mounting feet to the desired location and snug the capscrew.
2. Place the blower on its feet on a flat surface.
3. Loosen mounting feet capscrews and level unit up. The bench or blower base flatness should be within .002 of an inch.

NOTICE
If the unit is not flat within .002 of an inch, it will be necessary to shim the blower feet at installation.

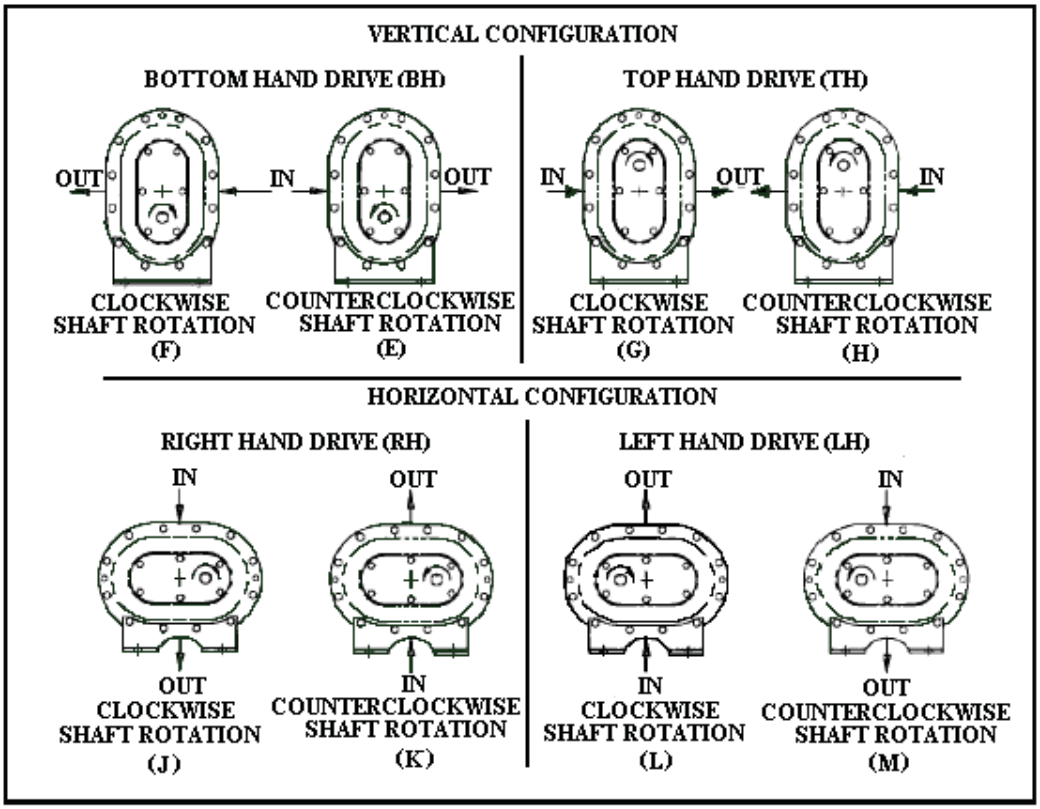

FIGURE 2-1 – BLOWER MOUNTING CONFIGURATIONS

4. Secure the mounting feet capscrews to the torque value in Figure 7-9, page 38.

NOTICE
When changing mounting configuration, it may be necessary to reposition breather/oil fill (B), oil level gauge (H) and drain plug (A). Refer to Figure 3-1, page 17, for correct location.

DRIVE INSTALLATION

When selecting a V-belt drive, check to be sure the shaft overhung load limitation is not exceeded. Refer to FIGURE 2-2, page 15, for overhung load calculations and limitations.

Belt drives must be carefully aligned. Motor and blower pulleys must be parallel to each other and in the same plane within 1/32 inch. Belt tension should be carefully adjusted to the belt manufacturer's recommendation using a belt tension gauge. Check tension frequently during the first day of operation.

⚠WARNING
Over tightening belts leads to heavy bearing loads and premature failure.

On the direct connected units, alignment and lubrication of couplings to specifications of the coupling manufacturer is very important. When mounted drives are supplied from the factory proper alignment has been established before shipment. However, during shipping, handling and installation, it is likely that the alignment has been disturbed and final adjustment must be made before startup.

⚠WARNING

Exceeding overhung load limitations leads to unwarrantable premature bearing failure and shaft breakage.

The location of the sheave on the blower shaft greatly affects the stress in the shaft. The optimum blower sheave positioning is as close as possible to the blower drive cover, not to exceed dimension "C" in Drive Shaft Illustration, FIGURE 2-2, page 15

The calculated shaft moment must not exceed the maximum allowable moment listed in Maximum Allowable Moment Chart, FIGURE 2-2 page 15. If the calculated shaft moment exceed the maximum allowable moment:

- Increase Sheave Diameters to Reduce Belt Pull
- Use Jackshaft Drive
- Use Direct Coupled or Gearbox Drive

To calculate shaft moment for a given V-Belt Drive Arrangement:

1. Use the formula for Calculation of Belt Pull, FIGURE 2-2, page 15, to calculate belt pull. Refer to Arc of Contact Factor Chart, Figure 2-2, page 15.
2. Insert the calculated belt pull into the formula for Calculation of Shaft Moment, FIGURE 2-2, page 15 to arrive at the calculated shaft moment.

PIPING

Inlet and discharge connections on all blowers are large enough to handle maximum volume with minimum friction loss. Reducing the pipe diameter on either inlet or discharge will only create additional line loss and increase the overall pressure differential. Excessive weight of piping and fittings will cause internal misalignment and premature wear. Never allow the blower to carry the weight of the pipe. If possible, a spool or sleeve-type expansion joint should be installed between the unit and the piping. Where a flexible connection is not practical, the weight of the rigid connection must be separately supported.

All system piping must be cleaned internally before connecting to the blower.

⚠WARNING

Sutorbilt blowers are shipped dry from the factory. Do not attempt to operate the blower before following proper lubrication instructions. Permanent damage to the gears, bearings and seals will occur.

Gear Diameter (Inches)	GREASE SPLASH Dimensions (Inches)			Maximum Allowable Moment (LB-IN)
	A	B	C (Max)	
3	2.88	.85	.38	385
4	3.49	1.10	.38	490
5	3.90	1.40	.38	1245

MAXIMUM ALLOWABLE MOMENT

Gear Diameter (Inches)	DUAL SPLASH LUBE Dimensions (Inches)			Maximum Allowable Moment (LB-IN)
	A	B	C (Max)	
3	3.07	1.18	.25	385
4	3.62	1.27	.25	650
5	3.85	1.39	.25	1370

MAXIMUM ALLOWABLE MOMENT

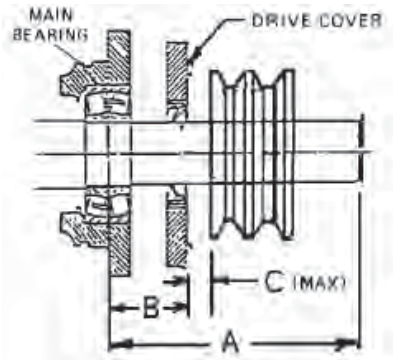

Z	Ac	Z	Ac	Z	Ac	Z	Ac	Z	Ac	Z	Ac
0.000	1.000	0.250	0.966	0.500	0.926	0.750	0.879	1.000	0.823	1.250	0.751
0.025	0.997	0.275	0.962	0.525	0.922	0.775	0.874	1.025	0.816	1.275	0.742
0.050	0.994	0.300	0.958	0.550	0.917	0.800	0.869	1.050	0.810	1.300	0.734
0.075	0.990	0.325	0.954	0.575	0.913	0.825	0.864	1.075	0.803	1.325	0.725
0.100	0.987	0.350	0.951	0.600	0.908	0.850	0.858	1.100	0.796	1.350	0.716
0.125	0.983	0.375	0.947	0.625	0.904	0.875	0.852	1.125	0.789	1.375	0.706
0.150	0.980	0.400	0.943	0.650	0.899	0.900	0.847	1.150	0.782	1.400	0.697
0.175	0.977	0.425	0.939	0.675	0.894	0.925	0.841	1.175	0.774	1.425	0.687
0.200	0.973	0.450	0.935	0.700	0.889	0.950	0.835	1.200	0.767		
0.225	0.969	0.475	0.930	0.725	0.884	0.975	0.829	1.225	0.759		

ARC OF CONTACT FACTORS

$$\text{Belt Pull} = \left[\frac{2.5 - Ac}{Ac}\right] \times \left[\frac{125954 \times Hp \times S.F.}{D \times RPM}\right]$$

Key:
- Ac = Arc of Contact Factor (Refer to Arc of Contact Factor Chart above)
- Hp = Blower Horsepower for Operating Conditions
- S.F. = Actual Drive Service Factor
- D = Blower Sheave Pitch Diameter in Inches
- RPM = Blower Sheave Speed
- Z = $\left[\frac{\text{Large Sheave Pitch Diameter (in)} - \text{Small Sheave Pitch Diameter (in)}}{\text{Sheave Center Distance (in)}}\right]$

CALCULATION OF BELT PULL

$$\text{Shaft Moment (LB-IN)} = \text{Belt Pull} \times \left[B + C + \left(\frac{\text{Sheave Width}}{2}\right)\right]$$

CALCULATION OF SHAFT MOMENT

FIGURE 2-2 – BELT DRIVE OVERHUNG LOAD CALCULATIONS

AIR FILTERS AND FILTER SILENCERS

⚠WARNING

Servicing the air filters is one of the most important maintenance operations to be performed to insure long blower life.

Servicing frequency of filter elements is not time predictable. A differential pressure indicator, with a continuous gauge reading, should be installed across the inlet filter. It will tell how much of the service life of the filter element has been used. It will also eliminate both premature filter servicing and premature blower failure due to a plugged filter when the filter pressure drop is used to establish maintenance points. In all cases refer to the filter manufacturer's service instructions. Due to the many types of filters, it is not practical to give specific instructions covering all models.

NOTICE

No matter what type of filter is used, always make sure all seats, gaskets, clamps and hose connections on the filter and inlet line are absolutely air tight. Each time the filter is serviced, inspect interior of the blower for dirt.

SECTION 3
LUBRICATION

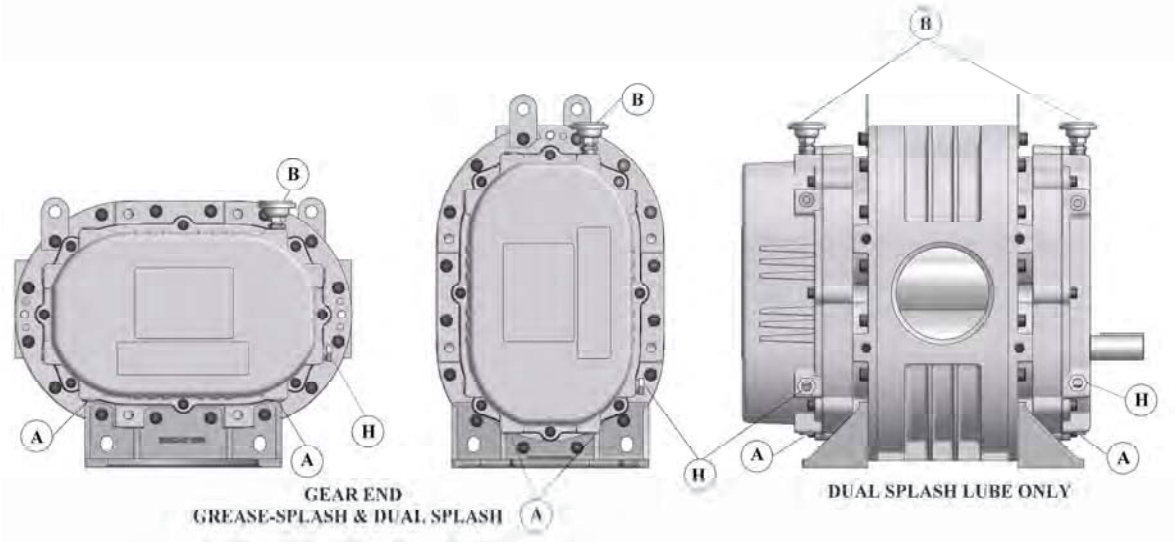

A. OIL DRAIN PLUG
B. BREATHER/OIL FILL
C. GREASE FITTING
E. GREASE VENTS
H. OIL LEVEL GAUGE

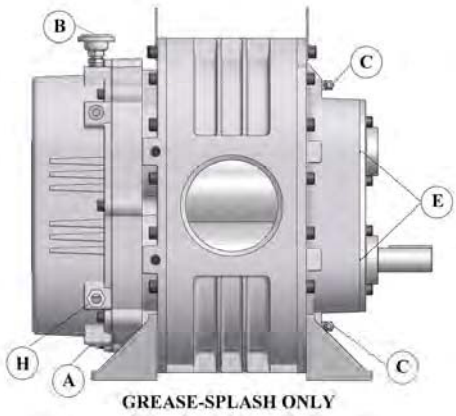

FIGURE 3-1 - LUBRICATION

DRIVE END LUBRICATION (For Grease – Splash Lube Blowers)

Drive end bearings are grease lubricated at the factory with Lithium Complex based grease. **For relubrication, use Gardner Denver AEON PD Grease, Part Number 28H283.** AEON PD Grease is a high temperature, high performance grease that is formulated with antiwear additives to provide superior service under the severe operating conditions of positive displacement blowers. It contains rust inhibitors which provide excellent protection against rust and corrosion.
If you choose not to use AEON PD Grease, select compatible base grease. The grease should be NLGI Grade 2 EP, contain rust inhibitors, and be suitable for blower discharge temperatures up to 350° F (177° C). Completely clean or purge the factory--filled grease from the blower. **Do not mix different types of grease as they may not be compatible. Substitutions may cause early bearing failure.**

Re-grease bearings every 500 hours of operation. Lubricate each bearing through the grease fittings located at C in FIGURE 3-1 (2 places). When re-greasing, the old grease will be forced out of the vents (E in FIGURE 3-1). To prevent damage to seals, these vents must be open at all times.

⚠ WARNING
Do not over--grease bearings as this could cause premature bearing failure.

DRIVE END LUBRICATION (For Dual Splash Lube Blowers)

At the drive end, the bearings are lubricated by the slinger, which must be on the lowest rotor when in a vertical configuration.

Approximate oil sump capacities are listed in Figure 3-2.

NOTICE
Machines are shipped without oil in the sump. Do not operate before adding lubricant.

Lubrication Instructions

Filling procedure
Refer to Figure 3-1, page 17. Remove the breather (B) from the drive cover. Add oil to the drive sump until oil reaches the center of the oil level gauge (H). Secure breather (B) in the drive cover.

Add fresh oil as required to maintain proper level. The oil level should be at the middle of the sight glass when the machine is not operating. Refer to Figure 3-2, for approximate oil capacities.

Legend "R" Series, Grease-Splash Lube Blower Oil Capacities

		Approximate Sump capacity in pints or ounces					
		Vertical Configuration			Horizontal Configuration		
Series	**Gear Diameter (in)**	**Gear End**	**Drive End**	**Total**	**Gear End**	**Drive End**	**Total**
3	3.5	0.6 PT (9 oz.)	grease	0.6 PT (9 oz.)	1.1 PT (18 oz.)	grease	1.1 PT (18 oz.)
4	4	0.9 PT (14 oz.)	grease	0.9 PT (14 oz.)	1.5 PT (24 oz.)	grease	1.5 PT (24 oz.)
5	5	1.1 PT (18 oz.)	grease	1.1 PT (18 oz.)	2.5 PT (40 oz.)	grease	2.5 PT (40 oz.)

Note: Quantities are for purchase estimates only.

Legend "R" Series, Dual Splash Lube Blower Oil Capacities

		Approximate Sump capacity in pints or ounces					
		Vertical Configuration			Horizontal Configuration		
Series	**Gear Diameter (in)**	**Gear End**	**Drive End**	**Total**	**Gear End**	**Drive End**	**Total**
3	3.5	0.6 PT (9 oz.)	0.3 PT (5 oz.)	0.9 PT (14 oz.)	1.1 PT (18 oz.)	0.6 PT (9 oz.)	1.7 PT (27 oz.)
4	4	0.9 PT (14 oz.)	0.4 PT (6 oz.)	1.3 PT (20 oz.)	1.5 PT (24 oz.)	0.7 PT (11 oz.)	2.2 PT (35 oz.)
5	5	1.1 PT (18 oz.)	0.6 PT (9 oz.)	1.7 PT (27 oz.)	2.5 PT (40 oz.)	1.2 PT (19.1 oz)	3.7 PT (59.1 oz.)

Note: Quantities are for purchase estimates only.

FIGURE 3-2 – APPROXIMATE OIL CAPACITIES

GEAR END LUBRICATION (For Grease – Splash Lube and Dual Splash Lube Blowers)
At the gear end, the timing gear teeth are lubricated by being partially submerged in oil. The gear teeth serve as oil slingers for gear end bearings.

Approximate oil sump capacities are listed in Figure 3-2.

⚠WARNING

Do not overfill as this will tend to cause excessive heating of the gears and may damage the unit.

NOTICE

Machines are shipped without oil in the sump. Do not operate before adding lubricant.

LUBRICATION INSTRUCTIONS

Filling procedure Refer to FIGURE 3-1, page 17. Remove the breather (B) from the gear cover. Add oil to the gear case until oil reaches the center of the oil level gauge (H). Secure breather (B) in the gear cover.

Add fresh oil as required to maintain proper level. The oil level should be at the middle of the sight glass when the machine is not operating. Refer to Figure 3-2, page 18, for approximate oil capacities.

RECOMMENDED LUBRICANT

AEON PD Synthetic Blower Lubricant is recommended. Refer to FIGURE 3-3, for AEON PD, AEON PD-FG (Food Grade) and AEON PD-XD (Extreme Duty) part numbers. Order AEON PD from your Gardner Denver Distributor or call Gardner Denver directly.

Convenient Package Sizes	AEON PD Part No.	AEON PD-FG Part No.	AEON PD-XD Part No.
1 quart	28G23	28H97	28G46
Case 12 quarts	28G24	28H98	28G47
1 gallon	28G40	28H333	28G42
Case 6 gallons	28G41	28H334	28G43
5 gallon pail	28G25	28H99	28G44
55 gallon drum	28G28	28H100	28G45

FIGURE 3-3 – AEON PD SYNTHETIC LUBRICANT

AEON PD is formulated especially for positive displacement blower service to provide maximum blower protection at any temperature. One fill of AEON PD will last a minimum of 4 times longer than a premium mineral oil. Refer to FIGURE 3-4.

		Ambient Temperatures			
		Less than 10° F	10°F to 32°F	32°F to 90°F	Greater than 90°F
Blower Discharge Temperature	Less than 32°F	AEON PD AEON PD-FG	AEON PD AEON PD-FG		
	32° F to 100° F	AEON PD AEON PD-FG	AEON PD AEON PD-FG	AEON PD AEON PD-FG	
	100° F to 225°F	AEON PD AEON PD-FG	AEON PD AEON PD-FG	AEON PD AEON PD-FG	AEON PD AEON PD-FG
	225° F to 300° F	AEON PD AEON PD-FG	AEON PD AEON PD-FG	AEON PD AEON PD-FG	AEON PD XD
	Greater than 300°F			AEON PD XD	AEON PD XD

FIGURE 3-4 – SYNTHETIC LUBRICANT CHART

AEON PD Synthetic Lubricant should be drained after 6000 hours of operation. Re-fill with fresh AEON PD oil. If mineral oil is used, perform the above oil change maintenance every 1500 hours. Recommended service intervals are for normal blower operating conditions. Severe operating conditions may warrant more frequent oil changes. Laboratory analysis of lubricant should be used to help determine the optimum oil change interval.

For best performance and equipment protection, use AEON PD Synthetic Lubricant, which has been specifically formulated for positive displacement blowers. If you choose not to use AEON PD Synthetic Blower Lubricant, select an oil with rust and oxidation inhibitors, anti-foam additives, and the viscosities listed in FIGURE 3-5. Do not use an oil that contains EP additives.

NOTICE
Flush the oil whenever a change is made from one type of oil to another.

Drain the current lubricant as thoroughly as possible. Refill with the new lubricant. Fill to normal level of the blower, which is at the middle of the sight glass when the machine is not operating. Run the blower for one hour. Shut off the blower and drain the lubricant completely. Refill the blower again with the new lubricant.

Blower Discharge Temperature	Ambient Temperature			
	Less than 10° F*	10° F to 32° F**	32° F to 90° F	Greater than 90° F
Less than 32° F (0° C)	ISO 100	ISO 100		
32° F to 100° F (0° C to 38° C)	ISO 100	ISO 100	ISO 150	
100° F to 225° F (38° C to 105° C)	ISO 100	ISO 100	ISO 150	ISO 220
225° F to 300° F (105° C to 149° C)	ISO 150	ISO 150	ISO 220	ISO 220
Greater than 300° F (149° C)			***	***

* For ambient temperatures less than 10° F, but not less than –20° F, the use of oil sump heaters, heated enclosures or synthetic lubricant is required.

** For ambient temperatures 10° F to 32° F, the use of oil sump heaters, heated enclosures or synthetic lubricant is recommended.

*** The lubricant viscosity must be 70 SUS minimum at the lubricant operating temperature.

The pour point of the lubricant should be at least 5° to 10° F below the minimum expected ambient temperature.

For continuous operation, where the lubricant temperature exceeds 200° F, synthetic lubricant is recommended.

FIGURE 3-5 – LUBRICATION RECOMMENDATION

SECTION 4
OPERATION

Future operating problems can be avoided if proper precautions are observed when the equipment is first put into service.

Before starting under power, the blower should be turned over by hand to make certain there is no binding or internal contact.

Each size blower has limits on pressure differential, running speed and discharge temperature which must not be exceeded. These limits are shown in "Maximum Operating Limitations", FIGURE 4-1, below.

⚠WARNING

Operating beyond the specified operating limitations will result in damage to the unit.

It is important that the pressures and temperatures are measured directly at the ports of the blower to avoid error that may be caused by intervening pipe runs, fittings, etc.

Relief valves must be used to protect against excessive pressure or vacuum conditions. These valves should be tested at initial startup to be sure they are adjusted to relieve at or below the maximum pressure differential rating of the blower.

NOTICE

Relief valves should be placed as close as possible to the blower inlet or discharge.

In some instances, pressure may be relieved at a lower point than the blower maximum in order to protect the motor or the equipment served by the blower.

Discharge temperature switches are recommended to protect against excessive inlet restriction or inlet temperatures. Check valves in the discharge line on pressure blowers and in the inlet line on vacuum blowers are recommended to protect the blower from motoring backwards when shut down under load.

LIMITATIONS

For information regarding limitations, refer to FIGURE 4-1, below.

MAXIMUM / MINIMUM OPERATING LIMITATIONS

SIZE	MAX. RPM	MIN. RPM VERT.	MIN RPM HORIZ.	MAX. PRESSURE PSI	MAX VAC IN HG	MAX. TEMPERATURE RISE ° F	MAX. DISCHARGE TEMPERATURE ° F
3LR	3600	1528	1091	7	14	160	260
3MR	3600	1528	1091	12	15	180	280
3HR	3600	1528	1091	15	16	220	320
4LR	3600	1337	955	7	14	160	260
4MR	3600	1337	955	10	16	185	285
4HR	3600	1337	955	15	16	210	310
5LR	2850	1070	764	7	14	160	260
5MR	2850	1070	764	13	16	180	280
5HR	2850	1070	764	15	16	200	300

DO NOT EXCEED THESE LIMITS

NOTICE

Blower speed, line losses, elevation, and increased inlet temperatures will affect the maximum operating limitations. The minimum RPM for the blowers is based on lubrication only. The blowers may only be operated down to the minimum RPM, when the temperature rise and discharge temperature are below the maximum limitations as shown.

FIGURE 4-1 – MAXIMUM / MINIMUM OPERATING LIMITATIONS

BLOWER STARTUP CHECKLIST

This startup procedure should be followed during the initial installation and after any shutdown periods or after the blower has been worked on or moved to new location. It is suggested that the steps be followed in sequence and checked off (√) in the boxes provided.

- ☐ 1. Check the unit and all piping for foreign material and clean if required.
- ☐ 2. Check the flatness of the feet and the alignment of the drive. Feet that are bolted down in a bind can cause housing distortion and internal rubbing. Misaligned V-drives can cause the rotors to rub against the headplates and cause a reduction in the volumetric efficiency of the unit. Misaligned couplings can ruin bearings.
- ☐ 3. If the blower is V-belt driven, check the belt tension and alignment. Over-tensioned belts create heavy bearing/shaft loads which lead to premature failure.
- ☐ 4. Be sure adequate drive guards are in place to protect the operator from severe personal injury and incidental contact.
- ☐ 5. Check the unit for proper lubrication. Proper oil level cannot be over-emphasized. Too little oil will ruin bearings and gears. Too much oil will cause overheating and can ruin gears and cause other damage. Insure that grease lubricated bearings are properly lubricated.
- ☐ 6. With motor electrical power locked out and disconnected, turn the drive shaft by hand to be certain the impellers do not bind.
- ☐ 7. “Jog” the unit with the motor a few times to check that rotation is in the proper direction, and to be certain it turns freely and smoothly.
- ☐ 8. The internal surfaces of all Sutorbilt units are mist sprayed with a rust preventive to protect the machine during the shipping and installation period. This film should be removed upon initial startup.
- ☐ 9. Start the unit and operate 15 minutes at no load. During this time, check for hot spots and other indications of interference.
- ☐ 10. Apply the load and observe the operation of the unit for one hour. Check frequently during the first day of operation.
- ☐ 11. If malfunctions occur, do not continue to operate. Problems such as knocking rotors can cause serious damage if the unit is operated without correction.

SAFETY PRECAUTIONS

1. Do not operate blower with open inlet or outlet port.
2. Do not exceed specified vacuum or pressure limitations.
3. Do not operate above or below recommended blower speed range.
4. Blower is not to be used where non-sparking equipment is specified.
5. Do not operate without belt guard or coupling shield.



Do not exceed sheave or coupling manufacturer's rim speed limit.

6. The blower and blower discharge piping may be extremely hot and cause skin burns on contact.

TROUBLE SHOOTING

No matter how well the equipment is designed and manufactured, there may be times when servicing will be required due to normal wear, the need for adjustment, or various external causes. Whenever equipment needs attention, the operator or repairman should be able to locate the cause and correct the trouble quickly. The Trouble Shooting Chart below is provided to assist the mechanic in those respects.

PROBLEM	POSSIBLE CAUSES	SOLUTION
Knocking	1. Unit out of time. 2. Distortion due to improper mounting or pipe strains. 3. Excessive pressure differential. 4. Worn gears. 5. Worn bearings.	1. Re-time impellers 2. Check mounting alignment and relieve pipe strains. 3. Reduce to manufacturer's recommended pressure. Examine relief valve, re-set if necessary. 4. Replace timing gears. 5. Replace bearings..
Excessive blower temperature.	1. Too much oil in gear case. 2. Too low operating speed. 3. Dirty air Filter. 4. Clogged filter or muffler. 5. Excessive pressure differential. 6. Worn impeller clearances. 7. Internal contact.	1. Reduce oil level. 2. Increase blower speed. 3. Clean or replace air filter 4. Remove cause of obstruction. 5. Reduce pressure differential across the blower. 6. Replace impeller. 7. Correct clearances.
Impeller end or tip drag.	1. Insufficient assembled clearances. 2. Case or frame distortion. 3. Excessive operating pressure. 4. Excessive operating temperature.	1. Correct clearances. 2. Check mounting and pipe strain. 3. Remove cause. 4. Remove cause
Lack of volume.	1. Slipping belts. 2. Worn clearances. 3. Dirty air filter	1. Tighten belts. 2. Re-establish proper clearances. 3. Clean or replace air filter.
Excessive bearing or gear wear.	1. Improper lubrication.	1. Correct lubrication level. Replace dirty oil.
Loss of oil.	1. Headplate, gear case or drive cover vents plugged. 2. Worn Seal.	1. Clean vents. 2. Replace seals.

ORDER SPECIAL TOOLS BY PART NUMBER. SEE PAGE 2 FOR ORDERING INSTRUCTIONS.

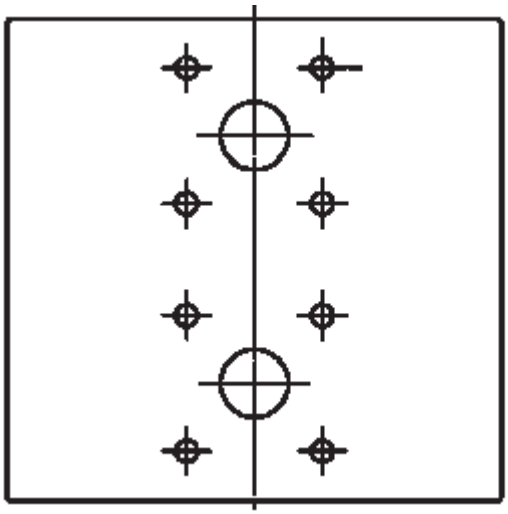

Unit Size	Part Number
3”	201GAA340
4”	202GAA340
5”	203GAA340

FIGURE 5-1 – PULLER PLATE

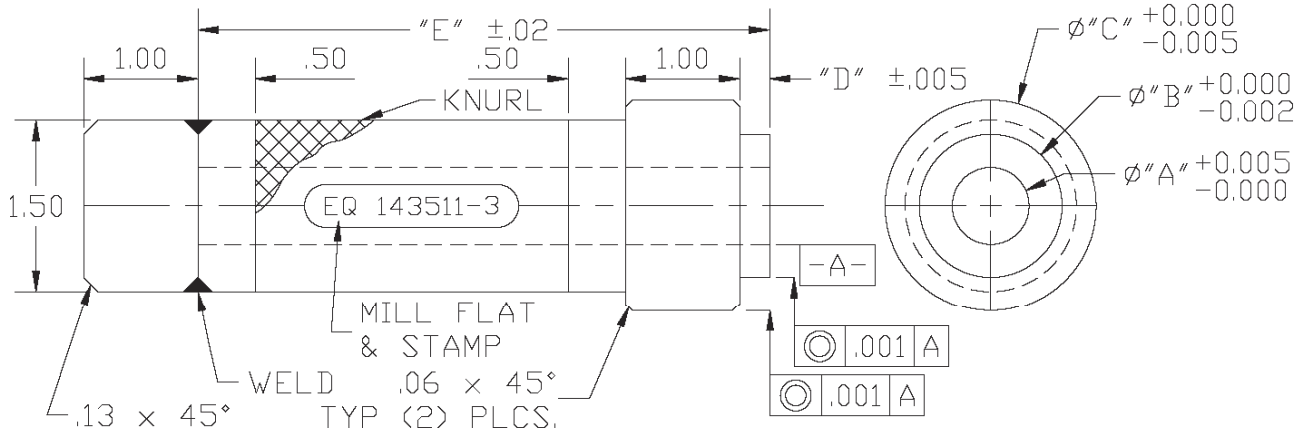

PART NO.	SIZE	"A"	"B"	"C"	"D"	"E"
EQ 143511-3	3"	.790	1.435	2.044	.335	5.50
EQ 143511-4	4"	1.000	1.624	2.436	.395	6.25
EQ 143511-5	5"	1.184	2.247	2.829	.695	7.00

FIGURE 5-2 – SEAL DRIVE

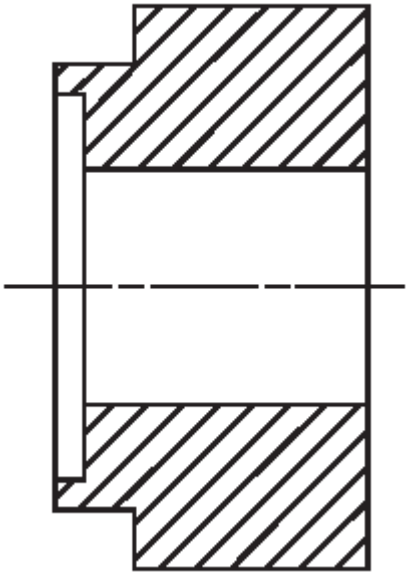

Unit Size	Part Number
3”	205GAA074
4”	206GAA074
5”	207GAA074

FIGURE 5-3 – MECHANICAL SEAL INSTALLATION TOOL

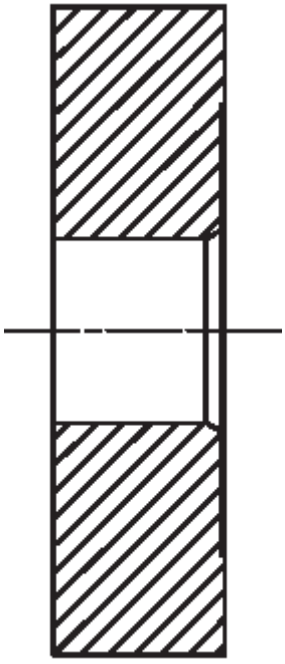

Unit Size	Part Number
3”	201GAA074
4”	202GAA074
5”	203GAA074

FIGURE 5-4 – BEARING PRESS TOOL – MECHANICAL SEAL UNITS

SECTION 6
DISASSEMBLY INSTRUCTIONS

NOTICE
Numbers in parentheses ( ) refer to key numbers in assembly drawings on pages 39 and 43.

1. Drain oil from gear case by removing drain plug (2).
2. Remove the socket head bolts (5) from the gear cover (3).
3. Remove the gear cover from the gear headplate.

NOTICE
The cover and gear headplate gasket tends to bond tightly to both surfaces. After socket head bolt removal, it is sometimes necessary to take a ball peen hammer and a blunt chisel and drive off the cover.

IMPORTANT:

MARK ALL PARTS WITH A CENTER PUNCH SO THEY CAN BE REASSEMBLED IN THE SAME POSITION (IMPELLERS, HEADPLATES, AND GEARS).

4. If the timing gears appear undamaged, the gear backlash must be checked to see if the gears can be salvaged.
   - A. Mount a magnetic base dial indicator on the gear headplate (see FIGURE 6-1).
   - B. Lock one impeller stationary by wedging a feeler gauge between the impeller and the headplate.
   - C. The tip of the indicator should be placed at the center of the contact surface on a tooth of the gear on the free shaft.
   - D. Rock the impeller back and forth by hand and read the total rotational movement to the nearest .0005 inches. Do this at four gear mesh positions 90 degrees apart.
   - E. Permissible gear backlash is shown below.

GEAR DIA.	GEAR BACKLASH
3”	.0015 - .0025
4”	.0015 - .0025
5”	.002 - .003

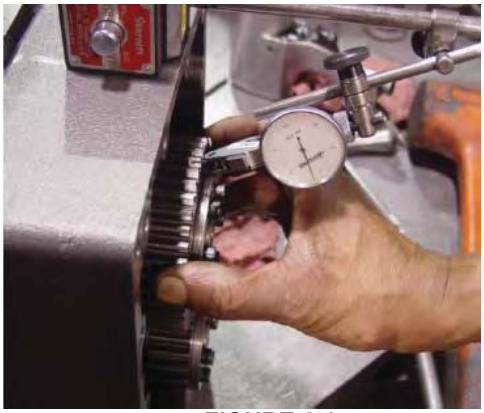

FIGURE 6-1



FIGURE 6-2



FIGURE 6-3

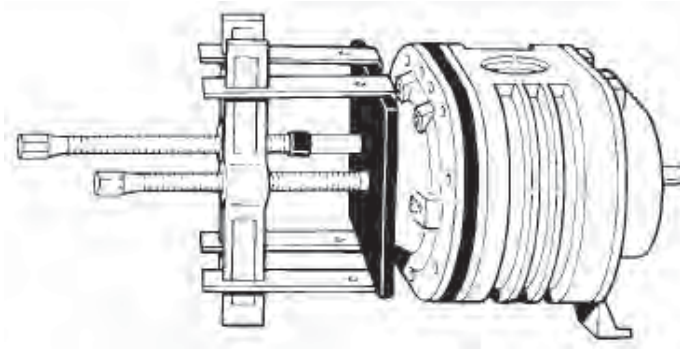

FIGURE 6-4

NOTICE
If backlash is above the specified limit, the gears are not necessarily unusable. Excessive play could be caused by worn bearings.

5. If timing gears appear to be reusable, match marktiming gear toothmesh by making small punch marks on the ends of meshing gear teeth with a pin punch and hammer (see FIGURE 6-2, page 27). The impeller tip to valley (throat) and the case to headplates should also be matchmarked to facilitate blower reassembly.
6. Remove all cap screws from both gear locking assemblies (see FIGURE 6-3). Thread 3 of these cap screws into the threaded holes in the outer ring of each locking assembly. Tighten the screws evenly to remove the locking assembly from each gear. Remove the gears (9) from both rotor shafts.

NOTICE
Blowers with mechanical seals have two wavy washers (28) located between the bearings and the cover on the drive end.

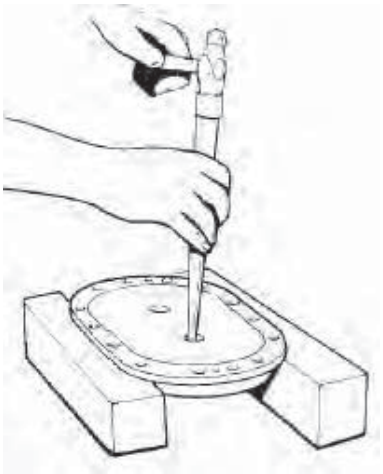

FIGURE 6-5

7. Remove the socket head cap screws (30) from the drive end bearing cover (29) and remove the cover. Support the external surface of the drive end cover near the oil seal with blocks of wood. Drive the oil seal from the cover using a hammer and punch. Discard the seal as it will not be reused. Replace oil seals each time the drive end cover is removed.

   For Dual Splash Version
   Remove the socket cap screws (84) from each slinger and remove slingers.

   For Dual Splash Version with Mechanical Seal
   Remove the socked cap screws (84) from each slinger and remover slingers. Remove flat head cap screws (86) from wavy spring retainer plates and remove retainer plate and wavy spring.

8. Remove mounting foot (17) from the drive headplate (24) by removing the capscrews (16).
9. Remove the capscrews (21) which secure the drive headplate (24) to the impeller case (22).
10. Using the puller plate shown on page 25, bolt to the drive headplate using the tapped holes on used to secure the drive cover.
11. Install a gear puller to each shaft and attach puller arms to the plate. Turn each puller only half a revolution at a time keeping the advance of the shafts as uniform as possible (see Figure 6-4). After the headplate has been removed, detach the puller plate.
12. Remove the two drive end bearings (35 and 80 for dual splash lube) or (14 and 35 for grease) from the drive headplate (24) using a ball peen hammer and punch (see Figure 6-5, page 28).

⚠ CAUTION
Exercise care not to damage the headplate bearing bores when removing bearings.

13. The oil seals can now be driven out of the drive headplate with hammer and punch (see Figure 6-5, page 28). Discard the seals as they will not be reused. Replace oil seals each time the headplate is removed.

   For Mechanical Seal Version
   Remove mechanical seal from the drive headplate.

NOTICE
Seals and bearings should be replaced during overhaul as a matter of service policy.

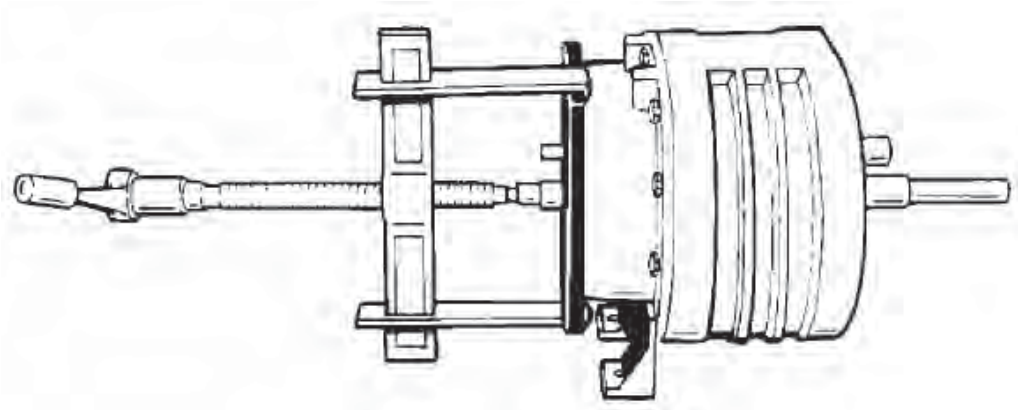

FIGURE 6-6

14. Remove the four bearing retaining screws (10), and washers (12) from the gear headplate.

    For Mechanical Seal Version
    Remove bearing retainer plate by removing 8 screws.

15. Attach puller plate to the gear headplate using the tapped holes on the bearing housing.

16. Install a gear puller to one of the shafts and attach puller arms to the plate (see Figure 6-6).

17. Remove mounting foot (17) from the gear headplate by removing 4 capscrews (16).

18. Push the impeller shaft through the gear headplate and remove the impeller assembly(23) (see Figure 6-6). Remove the other impeller assembly following the same procedure.

19. Remove the cap screws (21) securing the gear headplate to the impeller case. Located near each dowel pin on the headplate is a threaded hole. Insert a 5/16-18 UNC capscrew into each of the threaded holes. Tighten the screws evenly until the headplate separates from the impeller case.

20. Remove the two gear and bearings (14) from the gear headplate (18) as done in step 12.

21. Remove the oil seals (15) from gear headplate (19) as done in step 13.

SECTION 7
ASSEMBLY INSTRUCTIONS

NOTICE
Numbers in parentheses ( ) refer to key numbers in assembly drawings on pages 39 and 43.

1. Make sure all metallic parts are clean and free of any nicks or burrs.
2. Lubricate the outside diameter of the lip seal (15) with a light oil or grease. Install seals in both the drive headplate (24) and gear headplate (18). Use the seal driver (Figure 5-2). The seal lip should always face towards the bearing or lubricant. New seals should be installed each time the headplate is removed.

NOTICE
Make sure seals are fully seated. Use extreme care when installing.

MECHANICAL SEALS ONLY

A. Lightly coat the headplate bores with assembly lubricant.

B. Refer to Figure 7-1. Install mechanical seal (A) into the headplate bore (C) using a press and the correct driver shown on page 26. Drive the seal securely on to its seat.

⚠ CAUTION
Use extreme care when installing seals in the headplate bores. Do not attempt to install the mechanical seals without the use of a press. Blows from a hammer or mallet can damage the fragile seal surface. Too much force can crush the seal casing. Make certain the seal is properly seated and undamaged before proceeding.

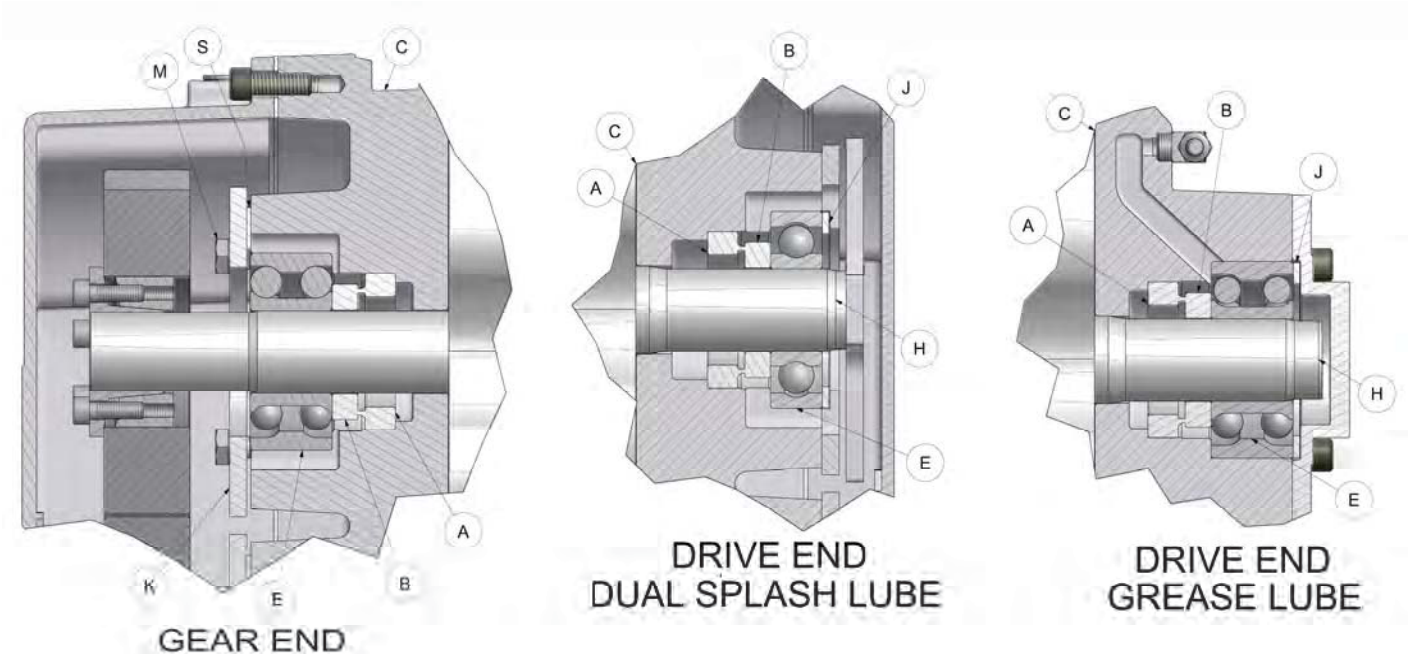

FIGURE 7-1



FIGURE 7-2

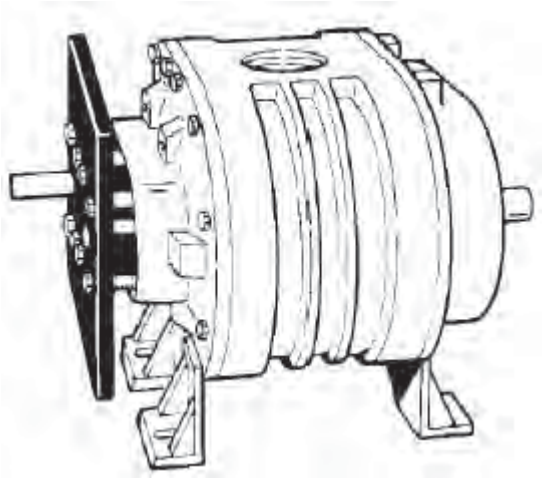

FIGURE 7-3

3. Assemble gear headplate (18) and mounting foot (17) to the impeller case with cap screws (21) and where the mounting foot is secured to the headplate use capscrews (16). The two positioning dowel pins (19) will ensure proper alignment of the headplate and impeller case. Also secure lifting lugs using capscrews (21) (see exploded assembly drawing on page 39. Refer to Figure 7-9, page 38, for torque specifications.

⚠ CAUTION
Seals are delicate; use extreme care when installing impeller shafts in the headplate bores. A piece of light shim stock wrapped around the shaft keyway will prevent cutting the seal lip.

4. Apply a light oil or grease on the shaft seal areas and the bearing areas. Insert impellers into the gear headplate using the same headplate bores as used in the original assembly.
5. Position blower so that impellers are vertical, with the drive end on top. It will be necessary to use blocks in order for the unit to set level. Measure the total end clearance using a depth micrometer (see Figure 7-2).

NOTICE
If more than .007" shim is required, put .007" on the drive end and the remaining on the gear end.

If total clearance is not within the limits specified in Figure 7-4, page 33, it may be necessary to shim the case to obtain the proper total end clearance. The shim should be placed between the drive headplate and impeller case.

6. Assemble drive headplate (24) to impeller case as in step 3 with the gear headplate. If shims were required, place shims between drive headplate and impeller case.

MECHANICAL SEALS ONLY

A. Refer to Figure 7-1, page 31. Lightly coat the impeller shaft (H) and the inside diameter of the mating ring (B) with assembly lubricant.

B. Install the mating ring (B) on the shaft only far enough to get the bearing (E) started on the shaft.

⚠ CAUTION
Do not drive the mating ring down to the mechanical seal, as this can damage the seal.

C. Lightly lubricate the bearing inner race (E) with a light oil or grease.

D. Using a press, install the bearing on the shaft with the bearing driver shown on page 24.

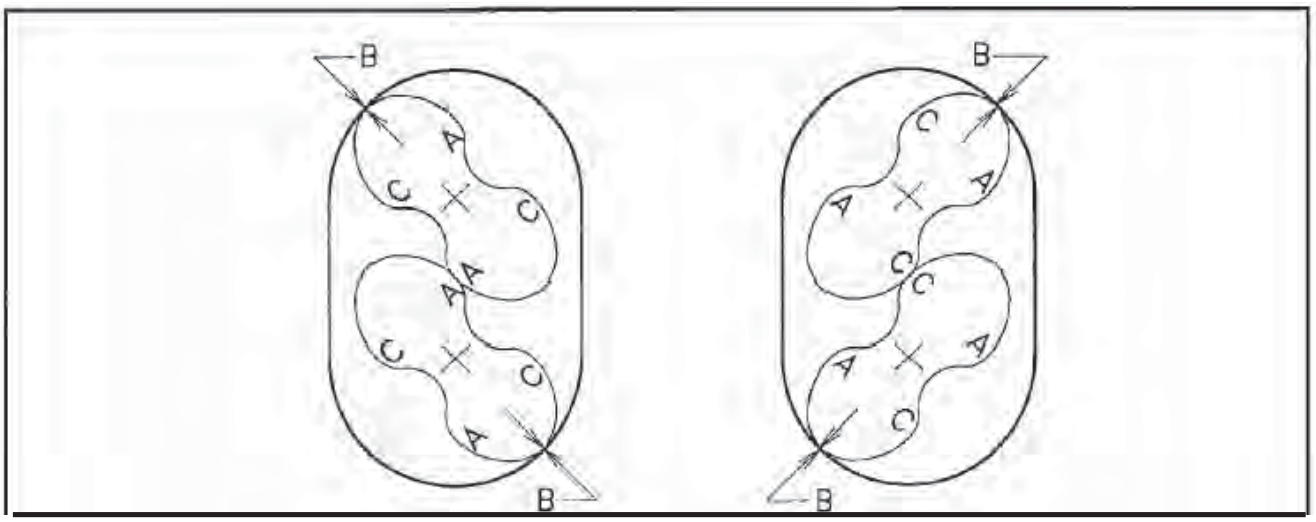

INTERNAL CLEARANCES FOR STANDARD UNITS ONLY

	3H	3M	3L	4H	4M	4L	5H	5M	5L
TOTAL END CLEARANCE	0.007-0.011			0.007-0.011			0.007-0.011		
IMPELLER TO GEAR HEADPLATE	0.003-0.005			0.003-0.005			0.003-0.005		
IMPELLER TIMING (A-A) (C-C)	0.005-0.007	.006-.008		0.006-0.008	.007-.010		.007-.010	.008-.010	
TIP TO CASE CLEARANCE (B-B)	0.002 min.			0.002 min.			0.002 min.		

FIGURE 7-4

The bearing driver will position the mating ring (B) to the correct depth with respect to the mechanical seal (A).

7. Apply a light oil to the drive headplate bearing bore, bearing inside diameter, and shaft seat. Install the drive end bearings (14and 35 for grease) or (80 and 35 for dual splash lube) as far as possible without force.
8. Attach the puller plate shown on page 25, to the drive headplate using the tapped holes used on the drive headplate (see FIGURE 7-3, page 32). Tighten the bolts so that the advance of the bearings stay as uniform as possible. Bearings should be pressed until flush with the drive headplate.
9. Lubricate the gear end bearing fits with a light oil as described previously. Install gear end bearings (14) as far as possible without force. Use the plate, used to install the drive end bearings, to press the bearings on the shafts as described in Step 8. Press bearings into the gear headplate until completely seated in the bearing bore.

NOTICE
Bearings will not be flush with gear headplate bores when completely seated.

10. Impellers should now be checked for free axial movement by hitting the ends of the impeller shafts with the palm of your hand.
11. Push the impellers against the gear headplate and recheck the total end clearance between the drive headplate and the impellers (see FIGURE 7-4).
    A. If total end clearance is insufficient, loosen impeller case to headplate bolts on either headplate, and move the headplate away from the case far enough to insert a paper shim in the amount equal to the insufficient clearance. Retighten case bolts and again check the total end clearance. Refer to FIGURE 7-4 for correct clearance.
    B. Excessive end clearances normally will require new impeller assemblies, but in some circumstances the impeller case can be removed and reduced in width by machining off the amount of excess clearance.
    C. Apply Loctite 246 on the 4 bearing retaining screws. Install 4 bearing screws and washers into the gear end headplate. Tighten screws evenly to the torque value given in FIGURE 7-9.

For Mechanical Seal Version

Install 8 bearing retaining screws and washers into the gear bearing retainer plates. Tighten screws evenly.

12.

A. Dual Splash Version

Install slingers on both shafts. Hold .31" +/_.01" gap between face of the bearing and back of the slingers. Rotate slingers approximately 90 degree apart, apply Loctite 246 on the socket cup screw and tight. Recommended torque is 3-3.5 FT-LBS. (See FIGURE 7-5).

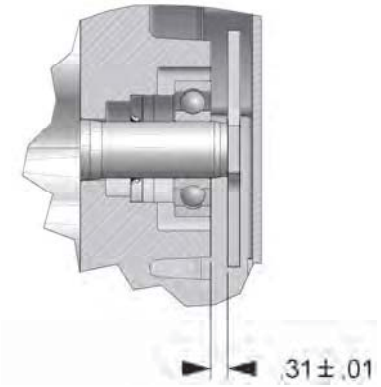

Figure 7-5

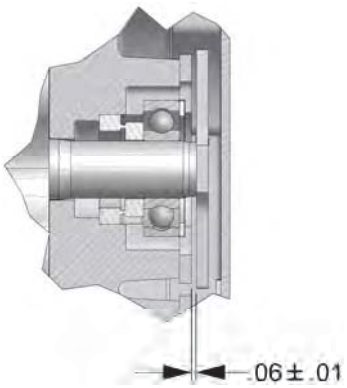

Figure 7-6

B. For Dual Splash Version with Mechanical Seal

Install slingers on both shafts. Hold .06"+_.01" gap between wavy spring retainer plates and back of the slingers. Rotate slingers approximately 90 degree apart, apply Loctite 246 on the socket cup screw and tight. Recommended torque is 3-3.5 FT-LBS. (See FIGURE 7-6).

13. **SETTING IMPELLER END CLEARANCES**

Refer to FIGURE 7-7, page 34. The outer races of the gear end bearings are clamped against the headplate (F) by the bearing retaining screws or by bearing retainer plate (mechanical seal version) (B).

This is referred to as the "fixed end". The interference fit between the shaft and the bearing inner race (H) keeps the shaft from moving axially. Adjustment is by movement of the shaft through the gear end bearing inner race (H).

A. Check the total end clearance by adding the clearance between the impellers and the drive headplate to the clearance between the impellers and the gear headplate.

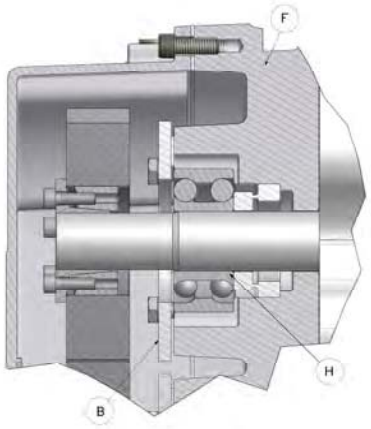

Figure 7-7

NOTICE
Check the clearance over the entire width of the impeller and consider the tightest spot.

B. Divide the end clearance by 3 and distribute approximately 1/3 on the gear end and the remaining 2/3 on the drive end.
C. To move the impeller assembly toward the drive end, lightly tap the shaft at the gear end with a soft face mallet.

D. To move the impeller assembly toward the gear end, lightly tap the shaft at the drive end with a soft face mallet.

E. To set the fixed end, insert the feeler gauge in the amount specified in FIGURE 7-4, page 33, between the headplate and the impeller at the gear end.

F. Tap lightly until the feeler gauge is snug. Adjust both impellers using the same procedure. Rotate the impellers checking for clearance through a complete revolution.

SETTING IMPELLER END CLEARANCE WITH MECHANICAL SEALS

Refer to FIGURE 7-1, page 31. The gear end bearings are held in position by the force created by the wavy spring (J) on the drive end and the bearing retainer (K) on the gear end. This is referred to as the fixed end. The interference fit between the shaft (H) and the bearing inner race (E) keeps the shaft from moving axially.

End clearance adjustment is by movement of the bearing retainer (K). Tightening the bearing retainer screws (M) moves the bearing to load the wavy spring (J), and the impeller is forced toward the drive end. Relaxing the screws allows the wavy spring to return the impeller toward the gear end.

A. Assemble drive cover to drive headplate. Refer to Step 15 with the exception of the use of wavy springs (J) installed between the drive end bearings and the wavy spring retainer plates.

B. Back out retainer screws (M) until both impellers are tight against the gear headplate.

C. With feeler gauge, measure the clearance between each impeller and the drive headplate. This value is the total end clearance.

D. Measure the clearance between the gear headplate and bearing retainer (K) at point (S).

E. Subtract 1/3 of the total end clearance from the clearance measured at point (S). This value is the amount of shim (13) that should be placed between the retainer and the headplate at point (S).

F. Tighten the bearing retainer screws (M) to the torque value given in FIGURE 7-9, page 38. With the retainer screws secure, approximately 1/3 of the total end clearance should be on the gear end and the remaining 2/3 on the drive end.

1. INSTALLING THE TIMING GEARS

If reusing the timing gears, the gears should be returned to their original positions.

A. Obtain 2 gear locking assemblies. Clean the inside and outside diameters of both locking assemblies. Clean the inside diameter of 2 gears. Clean the outside diameter of the both rotor shafts. Lightly oil the surfaces that have been cleaned. Note: DO NOT USE MOLYBDENUM DISULFIDE, MOLYKOTOE, OR ANY OTHER SIMILAR LUBRICANTS.

B. Slide a locking assembly into a gear. Install the gear and locking ring assembly onto the idler rotor shaft. Push the locking assembly firmly until flush with the end of the idler rotor shaft and hand tighten the 7 cap screws. Align and adjust the connections.

C. Use a torque wrench to tighten the screws to 75 in. lbs. in a diametrically opposite sequence. Ensure that none of the screws will turn when 75 in. lbs. is applied to them a second time.

D. Tighten the screws further to 150 in. lbs. in a diametrically opposite sequence. Ensure that none of the screws will turn when 150 in. lbs. is applied to them a second time.

E. Slide the second locking assembly into a gear. Install the gear and locking ring assembly onto the drive rotor shaft. Note the circular mark on each gear indicates the position of the largest runout. These marks must be 180 degrees apart when the gears are installed.

F. Push the locking assembly firmly until flush with the end of drive rotor shaft and hand tighten all cap screws but leave them loose enough that the gear can be rotated on the shaft.

G. The first step in setting the interlobe clearance is to measure the total clearance between two meshing lobes. This is accomplished by determining the maximum feeler gauge thickness that will fit between the rotor lobes near the pitch diameter. The clearance should be measured along the entire length of the meshing lobes. This measurement should be taken for each of the 2 interlobe meshes. The location of the smallest total interlobe clearance should be marked on the rotor lobes. Refer to diagram in FIGURE 7-4, page 33. Use feeler gauges to check clearances between impeller lobes at positions A—A and C—C. Add the clearances, and divide the total clearance evenly between A—A and C—C.

H. Rotate the rotors until the two lobes that have the smallest total interlobe clearance (as determined in step G) are visible through the discharge port. Lock the idler rotor from turning by wedging a shop rag between the tip of a lobe and the air cylinder. Insert feeler gauges with a thickness equal to the half clearance (determined in step G) between the drive rotor and the idler rotor lobe. Pull the drive rotor tight against the feeler gauges (drive rotor, feeler gauges, and idler rotor must be tight against each other). While holding the drive rotor tight against the feeler gages rotate (in the direction that the rotor turns) the gear on the drive rotor until a tooth on it contacts a tooth on the gear on the idler rotor. Hand tighten the 7 capscrews in the drive gear locking assembly. Align and adjust the connection.

I. Use a torque wrench to tighten the screws to 75 in. lbs in a diametrically opposite sequence. Ensure that none of the screws will turn when 75 in. lbs is applied to them a second time.

J. Tighten the screws further to 150 in. lbs in a diametrically opposite sequence. Ensure that none of the screws will turn when 150 in. lbs is applied to them a second time.

K. Check gear backlash four places at 90 degree intervals as described in the disassembly procedure (Item 4).

⚠ CAUTION

These impeller-to-impeller and impeller-to-case clearances are extremely critical. Even though the blower may turn freely by hand when cold, under operating conditions, the parts expand, and the rotors are subject to slight defection.

If the clearances are not sufficient, the impellers may contact each other or the housing with destructive results. If the clearances are too great, the blower may not develop the pressure or airflow that is required to perform its function.

14. Impeller tip to case clearance should be checked at this time by inserting the correct thickness feeler gauge between the tip and the case and rotating the impeller (see FIGURE 7-4, page 34). Repeat the procedure on both impellers.

NOTICE

When checking the tip to case clearance, move the feeler gauge over the entire length of the impeller to ensure that the tips do not bind along their length.



FIGURE 7-8

NOTICE

Replacement gears have minimum backlash marks on the outside diameter of the gear face. These marks should be located 180 degrees from each other (see FIGURE 7-8).

NOTICE

The gear used for adjustment should be flush with its mate on completion of the timing.

NOTICE

If any of the four gear backlash readings are not within the specified limits, the gears must be replaced.

15. Replace drive shaft oil seal (31) in the drive end cover (29). The seal lip should always face towards the bearing or lubricant.

Grease Units

Pack bearing cavities with recommended grease and secure drive cover with socket head cap screws (30) to drive headplate.

Dual Splash Units

Install drive end gasket (7). Gently slide the drive end cover (29) over the drive shaft and tap cover down over dowel pins until flush. Install and tighten drive cover bolts (30).

Refer to FIGURE 7-9, for torque specifications.

⚠ CAUTION
Exercise care not to damage the seal lip as it passes over the shaft keyway.

16. Assemble the gear cover (3) and gasket (7) to the gear headplate (18) using socket head screw (5). Tighten the capscrews alternately and evenly. Refer to FIGURE 7-9 for torque specifications.

17. Place the blower on its feet on a flat surface. Loosen cap screws (16) and level the unit up. The bench or blower base flatness should be within .002 of an inch. Re-tighten cap screws (16) to the specification in FIGURE 7-9.

NOTICE
If the unit is not flat within .002 of an inch, it will be necessary to shim the blower feet at installation.

	GEAR DIAMETER		
FASTENERS	**3**	**4**	**5**
CAPSCREW (21)	23 – 30	42 – 45	42 – 45
CAPSCREW (16)	23 – 30	42 – 45	42 – 45
SOCKET HD CAPSCREW (5)	6 – 8	16 – 18	11 – 13
SOCKET HD CAPSCREW (30)	6 – 8	16 – 18	11 – 13
CAPSCREW (10)	6 – 8	38 – 42	38 – 42

NOTE: ( ) DENOTES ITEMS IN EXPLODED VIEW DRAWINGS ON PAGES 39 AND 43.

FIGURE 7-9 – TORQUE (FT-LBS)

SECTION 8
PARTS LIST

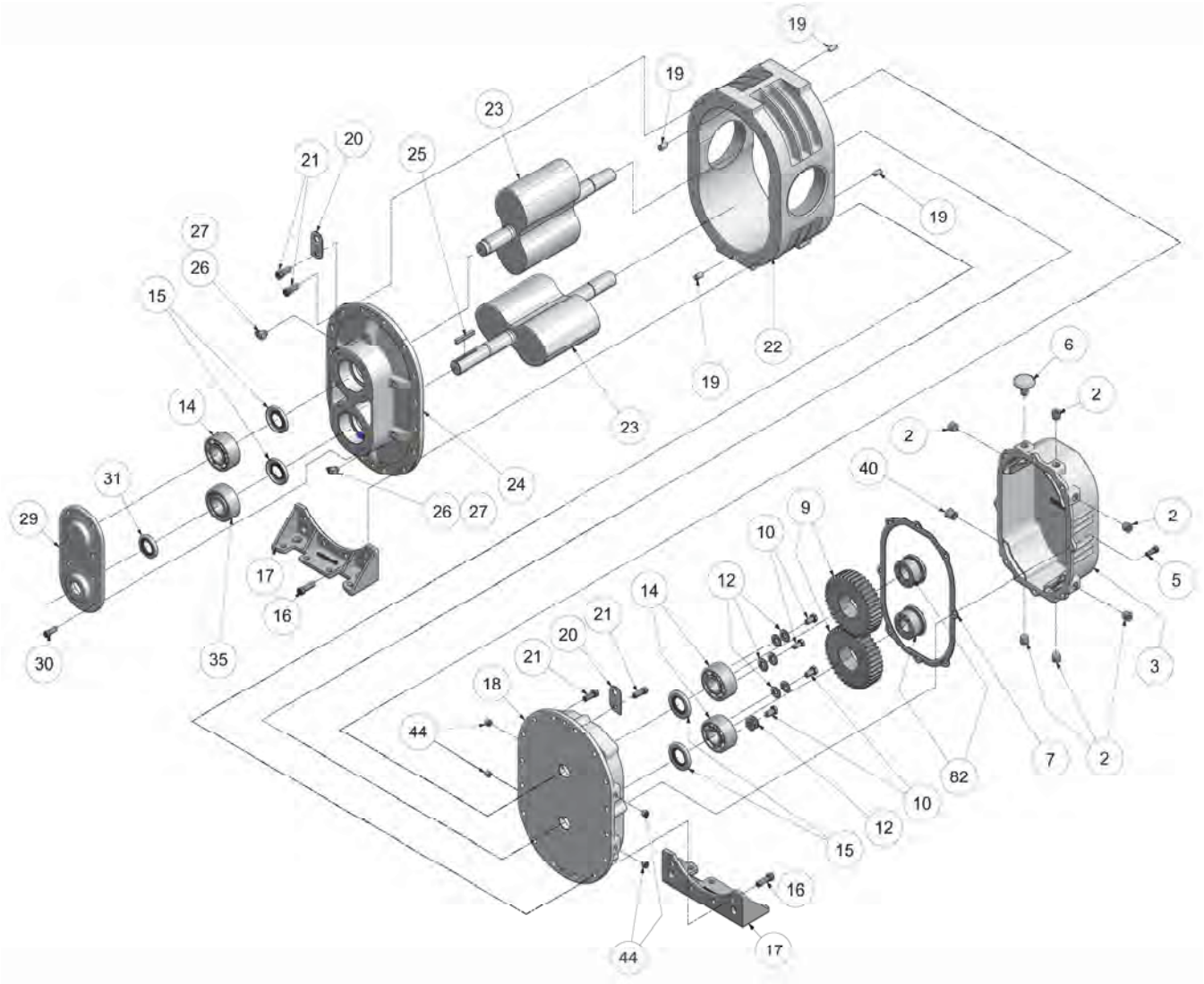

Order by Part Number and Description. Reference Numbers are for your convenience only.

Model GAB Lip Seal — Grease Splash Lube

Ref. No.	Description	No. Req'd	Size – 3H GABH_R Δ Δ= (A or C)	Size – 3M GABM_R Δ Δ= (A or C)	Size -- 3L GABL_R Δ Δ= (A or C)
2	Plug	6	64AC2	64AC2	64AC2
3	Gear Case	1	303GAB602	303GAB602	303GAB602
5	Screw	8	75P7	75P7	75P7
6	Breather	1	5L358	5L358	5L358
* 7	Gasket	1	300GAB715	300GAB715	300GAB715
9	Gear Kit	1	300GAB6008	300GAB6008	300GAB6008
* 10	Screws	4	75A33P	75A33P	75A33P
12	Washer	4	95A2	95A2	95A2
* 14	Ball Bearing	3	12BA143	12BA143	12BA143
* 15	Oil Seal	4	900891030601	900891030601	900891030601
16	Screw	4	75P56	75P56	75P56
17	Foot – Vert. & Horiz.	2	303GAB166	303GAB166	303GAB166
18	Bearing Housing Gear End	1	302GAB006	302GAB006	302GAB006
19	Dowel Pin	4	62M48	62M48	62M48
20	Lifting Lug	2	200GAA451	200GAA451	200GAA451
21	Screw	20	75P55	75P55	75P55
22	Impeller Case	1	900873034301	900873033801	900873034201
23	Rotor Group				
	3" Standard Clearances	1	307GAB4028	309GAB4028	308GAB4028
	3" High Temperature Clearances	1	To be assigned	To be assigned	To be assigned
24	Bearing Housing Drive End	1	900873033501	900873033501	900873033501
25	Key-Square	1	900639910304	900639910304	900639910304
26	Pipe Fitting	2	40E9	40E9	40E9
27	Cap	2	40P58	40P58	40P58
29	Drive Cover	1	900873033701	900873033701	900873033701
30	Screw	6	75P22	75P22	75P22
* 31	Oil Seal	1	60DD725	60DD725	60DD725
* 35	Bearing – Roller	1	12BA153	12BA153	12BA153
40	Oil Level Gauge	1	40P82	40P82	40P82
44	Screw	4	76F1	76F1	76F1
** 45	Paint, Bulk, GDP188, Aluminum	0.125	28H284	28H284	28H284
** 54	Shim Case .0025/.0035"	1	200GAB732	200GAB732	200GAB732
** 55	Shim Case .010"	1	201GAB732	201GAB732	201GAB732
** 56	Shim Case .0015/.002"	1	202GAB732	202GAB732	202GAB732
82	Locking Assembly	2	22G45	22G45	22G45
** 105	Overhaul Kit 3" R VERS Lip Seal, Grease Splash Lube	1	302GAB6010	302GAB6010	302GAB6010
** 900	Group-Indent & Instruction Legend Series 3" R VERS	1	303GAB4011	303GAB4011	303GAB4011

* INCLUDED IN OVERHAUL KIT.
** NOT SHOWN ON ILLUSTRATION.

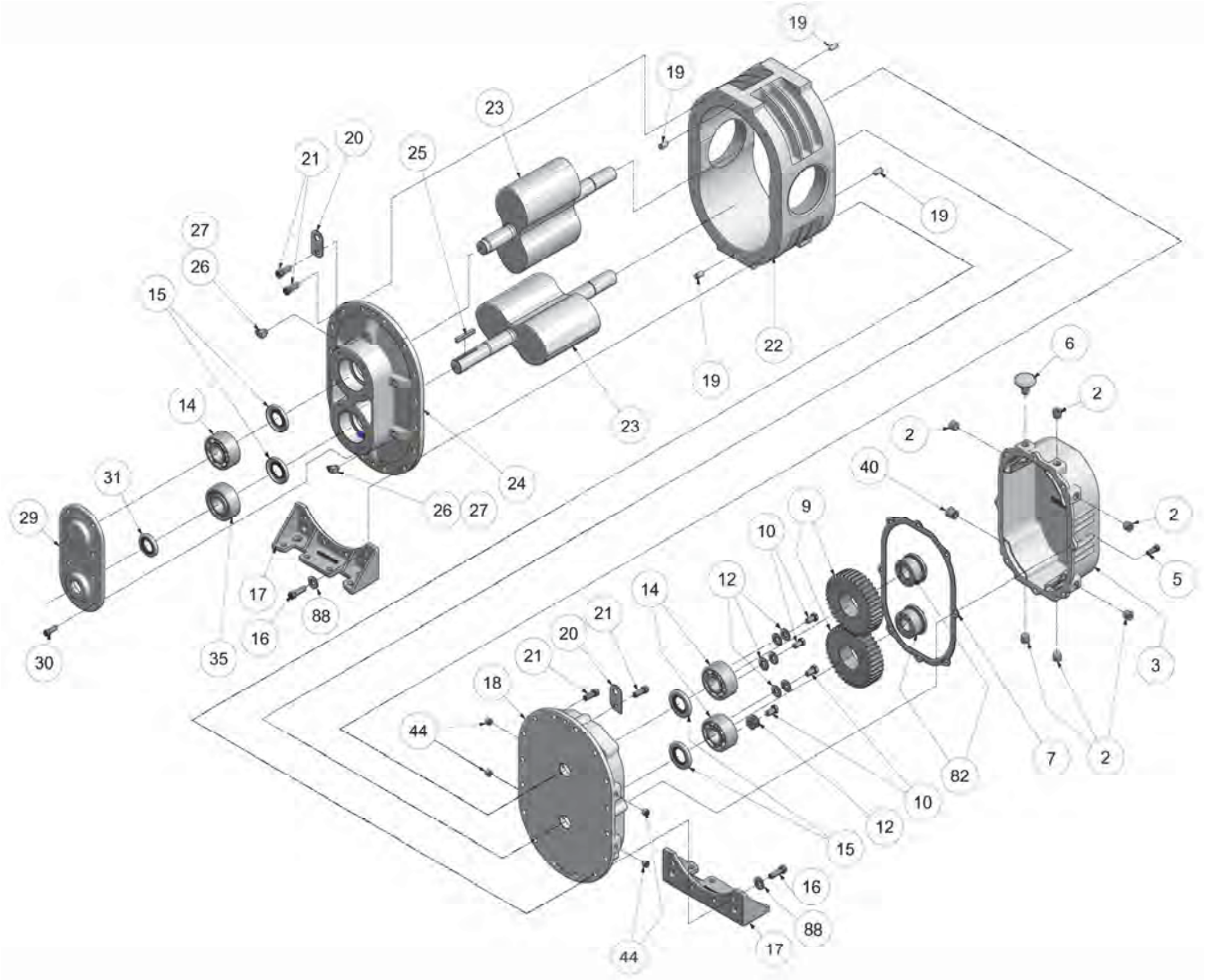
19
19
23
20
21
25
19
27
26
15
22
19
6
2
14
23
2
40
31
24
26
27
2
29
9
10
5
17
88
14
12
21
16
20
3
30
35
21
18
44
7
2
82
10
12
15
16
88
17
44

Order by Part Number and Description. Reference Numbers are for your convenience only.

Model GAC Lip Seal — Grease Splash Lube

Ref. No.	Description	No. Req'd	Size – 4H GACH_R Δ Δ= (A or C)	Size – 4M GACM_R Δ Δ= (A or C)	Size -- 4L GACL_R Δ Δ= (A or C)
2	Plug	6	64AC3	64AC3	64AC3
3	Gear Case	1	304GAC602	304GAC602	304GAC602
5	Screw	8	75P40	75P40	75P40
6	Breather	1	5L359	5L359	5L359
* 7	Gasket	1	301GAC715	301GAC715	301GAC715
9	Gear Kit	1	300GAC6008	300GAC6008	300GAC6008
* 10	Screws	4	655ED03P	655ED03P	655ED03P
12	Washer	8	95A3	95A3	95A3
* 14	Ball Bearing	3	12BA144	12BA144	12BA144
* 15	Oil Seal	4	60DD630	60DD630	60DD630
16	Screw	8	75P56	75P56	75P56
17	Foot – Vert. & Horiz.	2	300GAC166	300GAC166	300GAC166
18	Bearing Housing Gear End	1	302GAC006	302GAC006	302GAC006
19	Dowel Pin	4	62M48	62M48	62M48
20	Lifting Lug	2	200GAA451	200GAA451	200GAA451
21	Screw	16	75P55	75P55	75P55
22	Impeller Case	1	900883042201	900883041801	900883042001
23	Rotor Group				
	4" Standard Clearances	1	307GAC4028	306GAC4028	305GAC4028
	4" High Temperature Clearances	1	To be assigned	To be assigned	To be assigned
24	Bearing Housing Drive End	1	300GAC006	300GAC006	300GAC006
25	Key-Square	1	900639910304	900639910304	900639910304
26	Pipe Fitting	2	40E9	40E9	40E9
27	Cap	2	40P58	40P58	40P58
29	Drive Cover	1	900883040301	900883040301	900883040301
30	Screw	8	75P189	75P189	75P189
* 31	Oil Seal	1	60DD716	60DD716	60DD716
* 35	Bearing – Roller	1	12BA154	12BA154	12BA154
40	Oil Level Gauge	1	40P34	40P34	40P34
44	Screw	4	76F1	76F1	76F1
** 45	Paint, Bulk, GDP188, Aluminum	0.125	28H284	28H284	28H284
** 54	Shim Case .0025/.0035"	1	200GAC732	200GAC732	200GAC732
** 55	Shim Case .010"	1	201GAC732	201GAC732	201GAC732
** 56	Shim Case .0015/.002"	1	202GAC732	202GAC732	202GAC732
82	Locking Assembly	2	22G44	22G44	22G44
88	Washer	4	95A3	95A3	95A3
** 105	Overhaul Kit 4" R VERS Lip Seal, Grease Splash Lube	1	300GAC6010	300GAC6010	300GAC6010
** 900	Group-Indent & Instruction Legend Series 4" R VERS	1	201GAC4011	201GAC4011	201GAC4011

* INCLUDED IN OVERHAUL KIT.
** NOT SHOWN ON ILLUSTRATION.

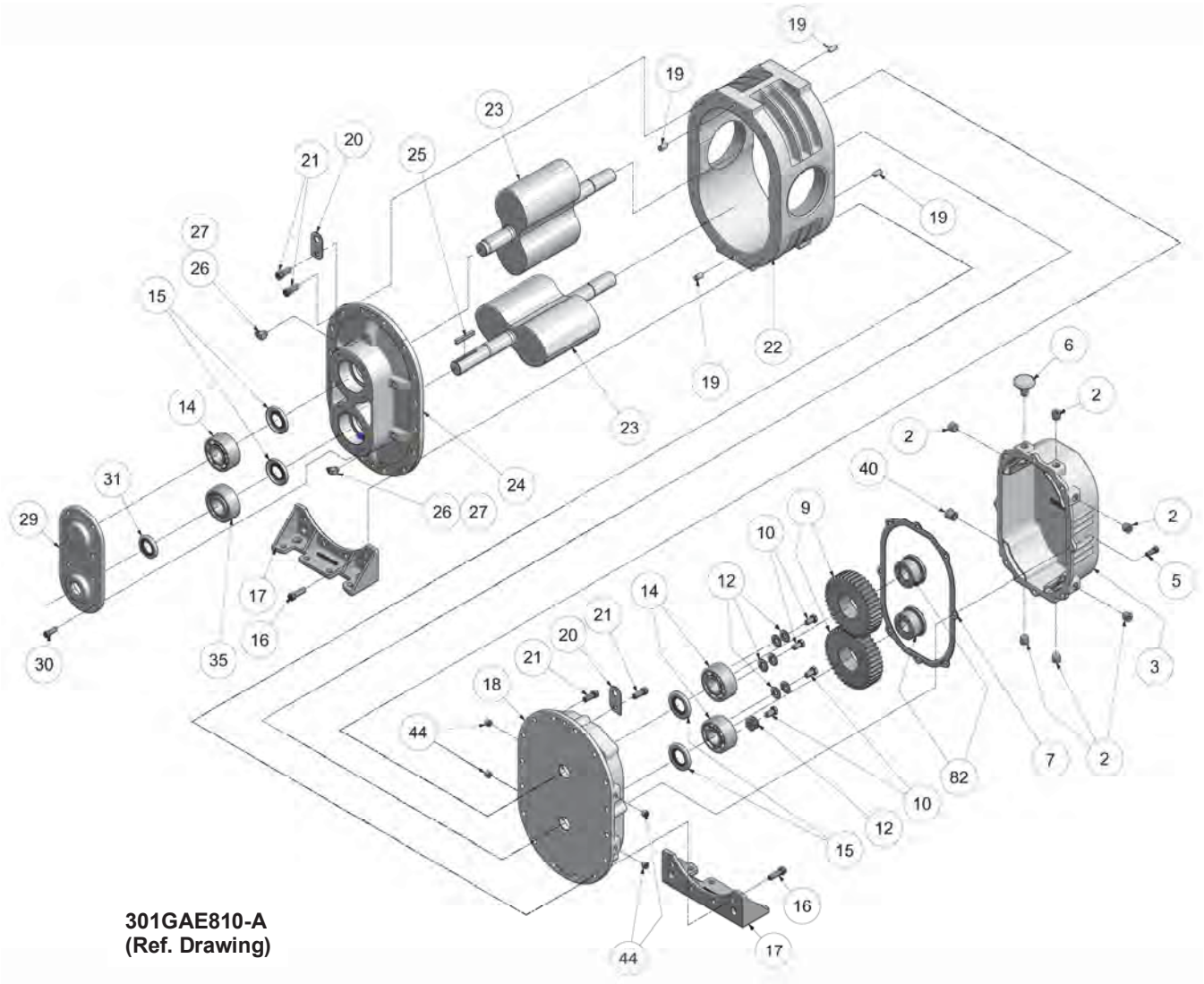

301GAE810-A
(Ref. Drawing)

Order by Part Number and Description. Reference Numbers are for your convenience only.

Model GAE Lip Seal Grease Splash Lube

Ref. No.	Description	No. Req'd	Size – 5H GAEH_R Δ Δ= (A or C)	Size – 5M GAEM_R Δ Δ= (A or C)	Size -- 5L GAEL_R Δ Δ= (A or C)
2	Plug	6	64AC3	64AC3	64AC3
3	Gear Case	1	304GAE602	304GAE602	304GAE602
5	Screw	8	75P40	75P40	75P40
6	Breather	1	5L359	5L359	5L359
* 7	Gasket	1	300GAE715	300GAE715	300GAE715
9	Gear Kit	1	300GAE6008	300GAE6008	300GAE6008
* 10	Screws	4	655ED03P	655ED03P	655ED03P
12	Washer	8	95A3	95A3	95A3
* 14	Ball Bearing	3	8500397	8500397	8500397
* 15	Oil Seal	4	60DD714	60DD714	60DD714
16	Screw	8	75P56	75P56	75P56
17	Foot – Vert. & Horiz.	2	300GAE166	300GAE166	300GAE166
18	Bearing Housing Gear End	1	301GAE006	301GAE006	301GAE006
19	Dowel Pin	4	62M48	62M48	62M48
20	Lifting Lug	2	200GAA451	200GAA451	200GAA451
21	Screw	24	75P55	75P55	75P55
22	Impeller Case	1	900883051701	900883051801	900883051901
23	Rotor Group				
	5" Standard Clearances	1	327GAE4028	326GAE4028	325GAE4028
	5" High Temperature Clearances	1	To be assigned	To be assigned	To be assigned
24	Bearing Housing Drive End	1	206GAE006	206GAE006	206GAE006
25	Key-Square	1	900639910305	900639910305	900639910305
26	Pipe Fitting	2	40E9	40E9	40E9
27	Cap	2	40P58	40P58	40P58
29	Drive Cover	1	900883050401	900883050401	900883050401
30	Screw	8	75P189	75P189	75P189
* 31	Oil Seal	1	60DD726	60DD726	60DD726
* 35	Bearing – Roller	1	12BA155	12BA155	12BA155
40	Oil Level Gauge	1	40P34	40P34	40P34
44	Screw	4	76F92	76F92	76F92
** 45	Paint, Bulk, GDP188, Aluminum	0.125	28H284	28H284	28H284
** 54	Shim Case .0025/.0035"	1	200GAE732	200GAE732	200GAE732
** 55	Shim Case .010"	1	201GAE732	201GAE732	201GAE732
** 56	Shim Case .0015/.002"	1	202GAE732	202GAE732	202GAE732
82	Locking Assembly	2	22G43	22G43	22G43
** 105	Overhaul Kit 5" R VERS Lip Seal, Grease Splash Lube	1	300GAE6010	300GAE6010	300GAE6010
** 900	Group-Indent & Instruction Legend Series 5" R VERS	1	205GAE4011	205GAE4011	205GAE4011

* INCLUDED IN OVERHAUL KIT.
** NOT SHOWN ON ILLUSTRATION.

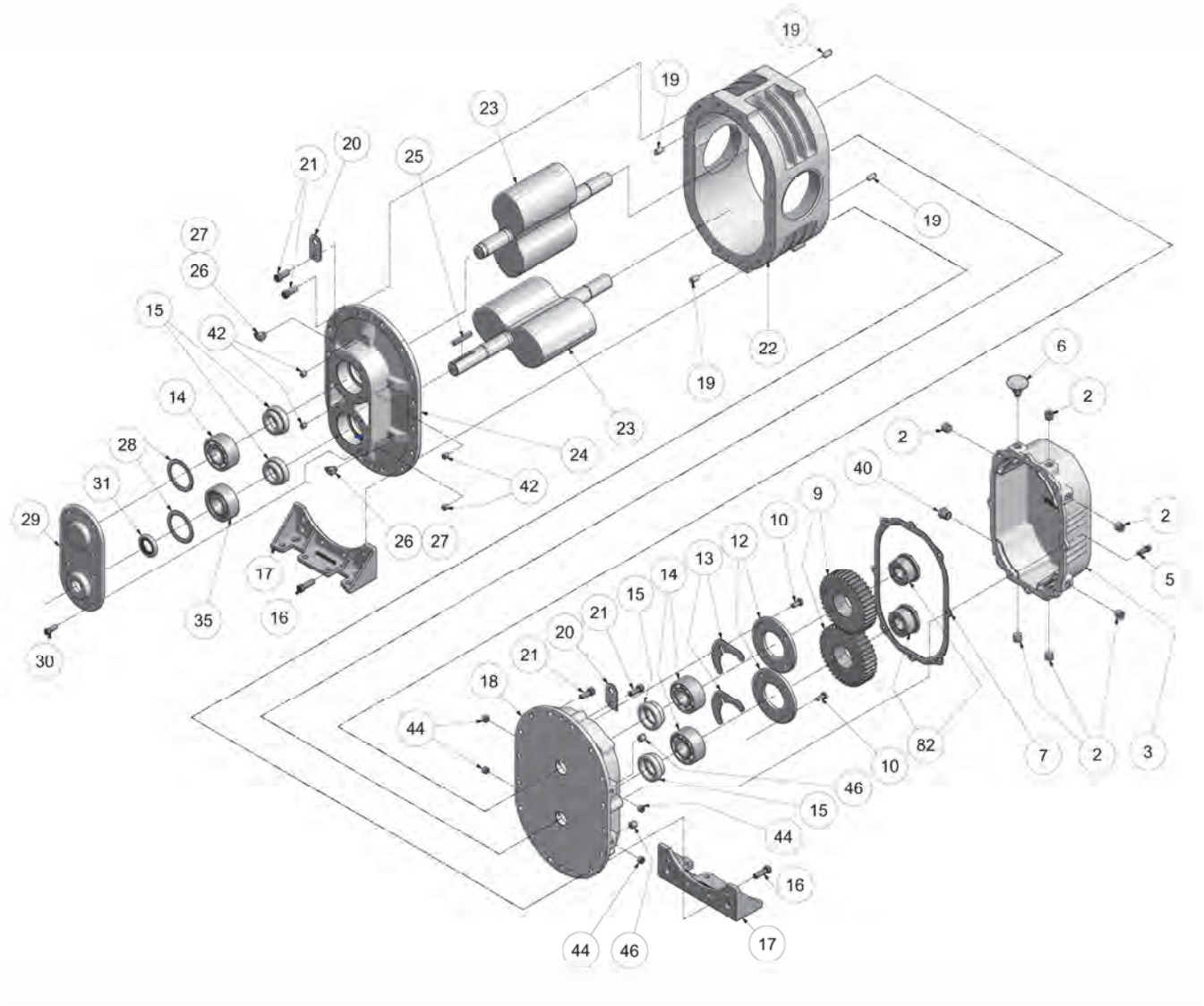
19
19
23
20
21
25
19
27
26
15
42
22
19
6
14
2
23
28
24
2
31
42
40
9
29
26
27
10
2
12
13
17
14
5
15
35
16
21
20
21
30
18
44
82
10
7
2
3
46
15
44
16
44
46
17

Order by Part Number and Description. Reference Numbers are for your convenience only.

Model GAB Mechanical Seal Grease Splash Lube

Ref. No.	Description	No. Req'd	Size – 3H GABH_RB	Size – 3M GABM_RB	Size -- 3L GABL_RB
2	Plug	6	64AC2	64AC2	64AC2
3	Gear Case	1	303GAB602	303GAB602	303GAB602
5	Screw	8	75P7	75P7	75P7
6	Breather	1	5L358	5L358	5L358
* 7	Gasket	1	300GAB715	300GAB715	300GAB715
9	Gear Kit	1	300GAB6008	300GAB6008	300GAB6008
* 10	Screws	4	75A33P	75A33P	75A33P
12	Bearing Retainer	2	300GAB205	300GAB205	300GAB205
* 13	Shim Set	1	900881032200	900881032200	900881032200
* 14	Ball Bearing	3	12BA143	12BA143	12BA143
* 15	Mechanical Seal	4	900871020003	900871020003	900871020003
16	Screw	4	75P56	75P56	75P56
17	Foot – Vert. & Horiz.	2	303GAB166	303GAB166	303GAB166
18	Bearing Housing Gear End	1	304GAB006	304GAB006	304GAB006
19	Dowel Pin	4	62M48	62M48	62M48
20	Lifting Lug	2	200GAA451	200GAA451	200GAA451
21	Screw	20	75P55	75P55	75P55
22	Impeller Case	1	900873034301	900873033801	900873034201
23	Rotor Group				
	3" Standard Clearances	1	307GAB4028	309GAB4028	308GAB4028
	3" High Temperature Clearances	1	To be assigned	To be assigned	To be assigned
24	Bearing Housing Drive End	1	900883030301	900883030301	900883030301
25	Key-Square	1	900639910304	900639910304	900639910304
26	Pipe Fitting	2	40E9	40E9	40E9
27	Cap	2	40P58	40P58	40P58
* 28	Wavy Spring	2	900669170203	900669170203	900669170203
29	Drive Cover	1	900873033701	900873033701	900873033701
30	Screw	6	75P22	75P22	75P22
* 31	Oil Seal	1	60DD725	60DD725	60DD725
* 35	Bearing – Roller	1	12BA153	12BA153	12BA153
40	Oil Level Gauge	1	40P82	40P82	40P82
42	Plug	4	64AC1	64AC1	64AC1
44	Screw	4	76F1	76F1	76F1
** 45	Paint, Bulk, GDP188, Aluminum	0.125	28H284	28H284	28H284
46	Plug	4	64AC1	64AC1	64AC1
** 54	Shim Case .0025/.0035"	1	200GAB732	200GAB732	200GAB732
** 55	Shim Case .010"	1	201GAB732	201GAB732	201GAB732
** 56	Shim Case .0015/.002"	1	202GAB732	202GAB732	202GAB732
82	Locking Assembly	2	22G45	22G45	22G45
** 105	Overhaul Kit 3" R VERS Mechanical Seal, Grease Splash Lube	1	303GAB6010	303GAB6010	303GAB6010
** 900	Group-Indent & Instruction Legend Series 3" R VERS	1	303GAB4011	303GAB4011	303GAB4011

* INCLUDED IN OVERHAUL KIT.
** NOT SHOWN ON ILLUSTRATION

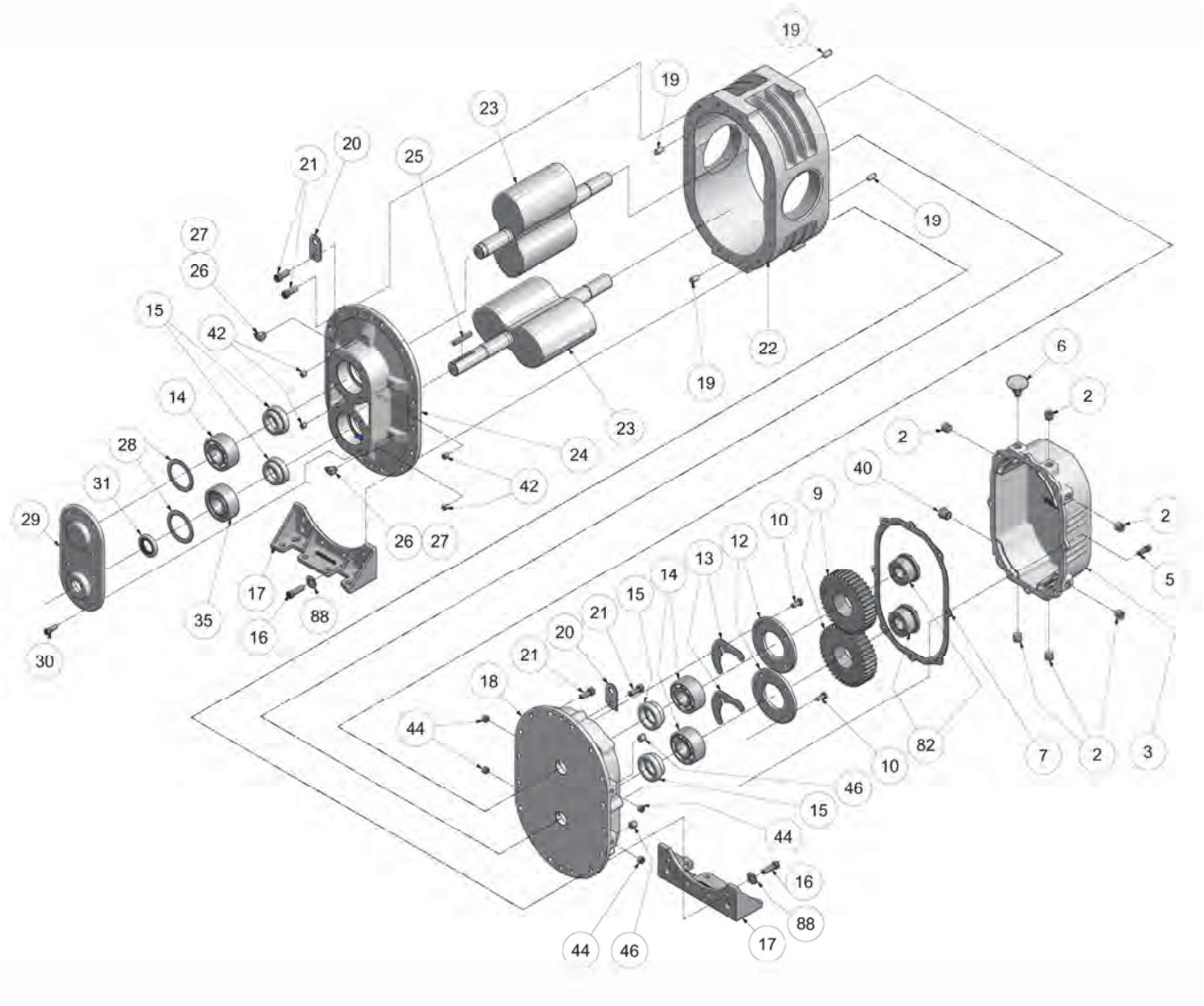
19
19
23
20
21
25
19
27
26
15
42
22
19
6
14
23
2
28
24
2
31
42
40
29
26
27
9
10
2
12
13
5
17
14
15
88
35
21
16
20
21
30
18
44
82
10
7
2
3
46
15
44
16
88
44
46
17

Order by Part Number and Description. Reference Numbers are for your convenience only.

Model GAC Mechanical Seal Grease Splash Lube

Ref. No.	Description	No. Req'd	Size – 4H GACH_RB	Size – 4M GACM_RB	Size -- 4L GACL_RB
2	Plug	6	64AC3	64AC3	64AC3
3	Gear Case	1	304GAC602	304GAC602	304GAC602
5	Screw	8	75P40	75P40	75P40
6	Breather	1	5L359	5L359	5L359
* 7	Gasket	1	301GAC715	301GAC715	301GAC715
9	Gear Kit	1	300GAC6008	300GAC6008	300GAC6008
* 10	Screws	8	75A33P	75A33P	75A33P
12	Bearing Retainer	2	900883040201	900883040201	900883040201
* 13	Shim Set	1	900881042900	900881042900	900881042900
* 14	Ball Bearing	3	12BA144	12BA144	12BA144
* 15	Mechanical Seal	4	900871020004	900871020004	900871020004
16	Screw	8	75P56	75P56	75P56
17	Foot – Vert. & Horiz.	2	300GAC166	300GAC166	300GAC166
18	Bearing Housing Gear End	1	304GAC006	304GAC006	304GAC006
19	Dowel Pin	4	62M48	62M48	62M48
20	Lifting Lug	2	200GAA451	200GAA451	200GAA451
21	Screw	16	75P55	75P55	75P55
22	Impeller Case	1	900883042201	900883041801	900883042001
23	Rotor Group				
	4" Standard Clearances	1	307GAC4028	306GAC4028	305GAC4028
	4" High Temperature Clearances	1	To be assigned	To be assigned	To be assigned
24	Bearing Housing Drive End	1	900883041201	900883041201	900883041201
25	Key-Square	1	900639910304	900639910304	900639910304
26	Pipe Fitting	2	40E9	40E9	40E9
27	Cap	2	40P58	40P58	40P58
* 28	Wavy Spring	2	900669170304	900669170304	900669170304
29	Drive Cover	1	900883040301	900883040301	900883040301
30	Screw	8	75P189	75P189	75P189
* 31	Oil Seal	1	60DD716	60DD716	60DD716
* 35	Bearing – Roller	1	12BA154	12BA154	12BA154
40	Oil Level Gauge	1	40P34	40P34	40P34
42	Plug	4	64AC1	64AC1	64AC1
44	Screw	4	76F1	76F1	76F1
** 45	Paint, Bulk, GDP188, Aluminum	0.125	28H284	28H284	28H284
46	Plug	4	64AC1	64AC1	64AC1
** 54	Shim Case .0025/.0035"	1	200GAC732	200GAC732	200GAC732
** 55	Shim Case .010"	1	201GAC732	201GAC732	201GAC732
** 56	Shim Case .0015/.002"	1	202GAC732	202GAC732	202GAC732
82	Locking Assembly	2	22G44	22G44	22G44
88	Washer	4	95A3	95A3	95A3
** 105	Overhaul Kit 4" R VERS Mechanical Seal, Grease Splash Lube	1	302GAC6010	302GAC6010	302GAC6010
** 900	Group-Indent & Instruction Legend Series 4" R VERS	1	201GAC4011	201GAC4011	201GAC4011

* INCLUDED IN OVERHAUL KIT.
** NOT SHOWN ON ILLUSTRATION

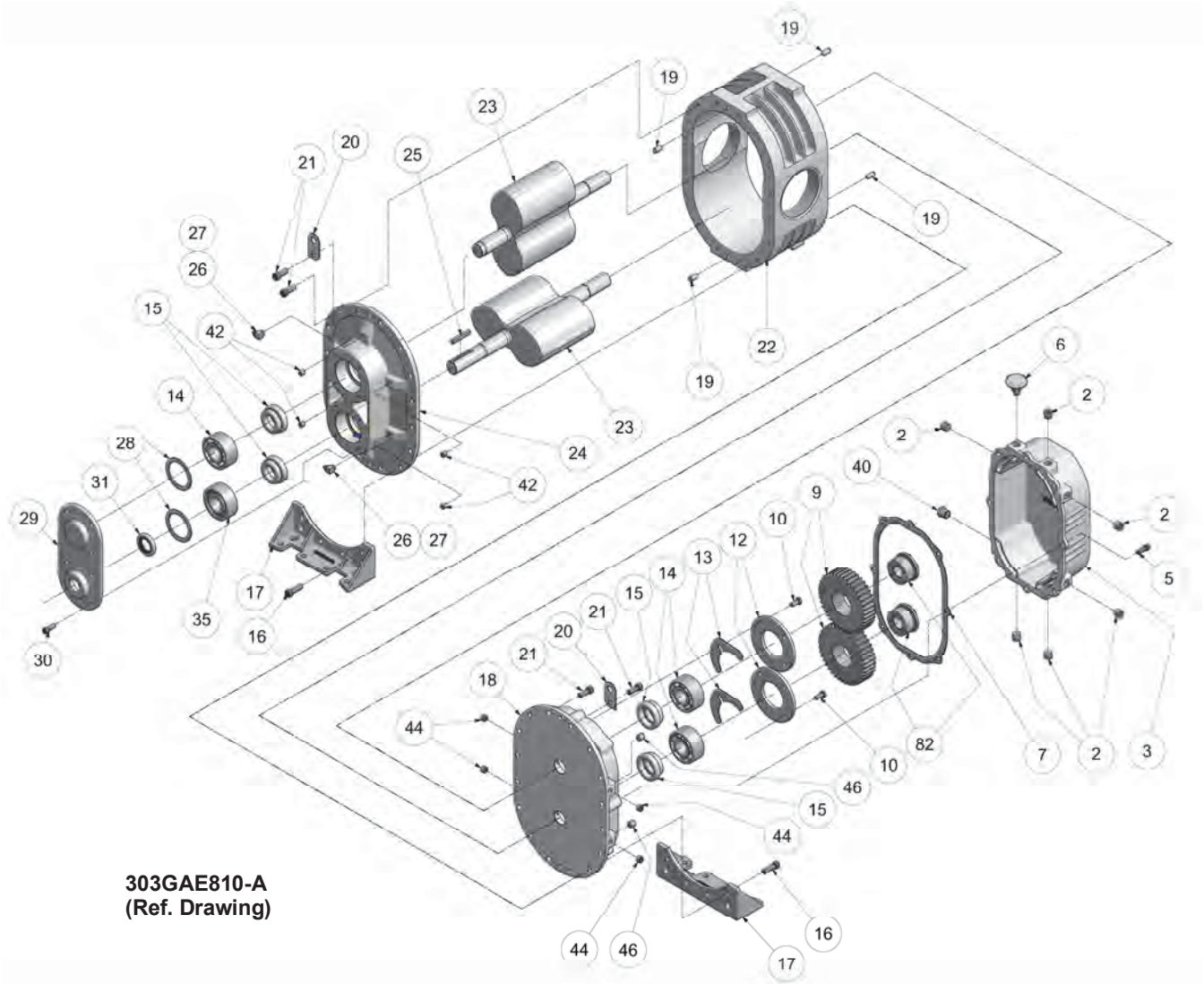

303GAE810-A
(Ref. Drawing)

Order by Part Number and Description. Reference Numbers are for your convenience only.

Model GAE Mechanical Seal Grease Splash Lube

	Ref. No.	Description	No. Req'd	Size – 5H GAEH_RB	Size – 5M GAEM_RB	Size -- 5L GAEL_RB
	2	Plug	6	64AC3	64AC3	64AC3
	3	Gear Case	1	304GAE602	304GAE602	304GAE602
	5	Screw	8	75P40	75P40	75P40
	6	Breather	1	5L359	5L359	5L359
*	7	Gasket	1	300GAE715	300GAE715	300GAE715
	9	Gear Kit	1	300GAE6008	300GAE6008	300GAE6008
*	10	Screws	8	75A33P	75A33P	75A33P
	12	Bearing Retainer	2	900883050501	900883050501	900883050501
*	13	Shim Set	1	900881052900	900881052900	900881052900
*	14	Ball Bearing	3	8500397	8500397	8500397
*	15	Mechanical Seal	4	900871020005	900871020005	900871020005
	16	Screw	8	75P56	75P56	75P56
	17	Foot – Vert. & Horiz.	2	300GAE166	300GAE166	300GAE166
	18	Bearing Housing Gear End	1	303GAE006	303GAE006	303GAE006
	19	Dowel Pin	4	62M48	62M48	62M48
	20	Lifting Lug	2	200GAA451	200GAA451	200GAA451
	21	Screw	24	75P55	75P55	75P55
	22	Impeller Case	1	900883051701	900883051801	900883051901
	23	Rotor Group				
		5" Standard Clearances	1	327GAE4028	326GAE4028	325GAE4028
		5" High Temperature Clearances	1	To be assigned	To be assigned	To be assigned
	24	Bearing Housing Drive End	1	207GAE006	207GAE006	207GAE006
	25	Key-Square	1	900639910305	900639910305	900639910305
	26	Pipe Fitting	2	40E9	40E9	40E9
	27	Cap	2	40P58	40P58	40P58
*	28	Wavy Spring	2	900669170405	900669170405	900669170405
	29	Drive Cover	1	900883050401	900883050401	900883050401
	30	Screw	8	75P189	75P189	75P189
*	31	Oil Seal	1	60DD726	60DD726	60DD726
*	35	Bearing – Roller	1	12BA155	12BA155	12BA155
	40	Oil Level Gauge	1	40P34	40P34	40P34
	42	Plug	4	64AC1	64AC1	64AC1
	44	Screw	4	76F92	76F92	76F92
**	45	Paint, Bulk, GDP188, Aluminum	0.125	28H284	28H284	28H284
	46	Plug	4	64AC2	64AC2	64AC2
**	54	Shim Case .0025/.0035"	1	200GAE732	200GAE732	200GAE732
**	55	Shim Case .010"	1	201GAE732	201GAE732	201GAE732
**	56	Shim Case .0015/.002"	1	202GAE732	202GAE732	202GAE732
	82	Locking Assembly	2	22G43	22G43	22G43
**	105	Overhaul Kit 5" R VERS Mechanical Seal, Grease Splash	1	302GAE6010	302GAE6010	302GAE6010
**	900	Group-Indent & Instruction Legend Series 5" R VERS	1	205GAE4011	205GAE4011	205GAE4011

* INCLUDED IN OVERHAUL KIT.
** NOT SHOWN ON ILLUSTRATION

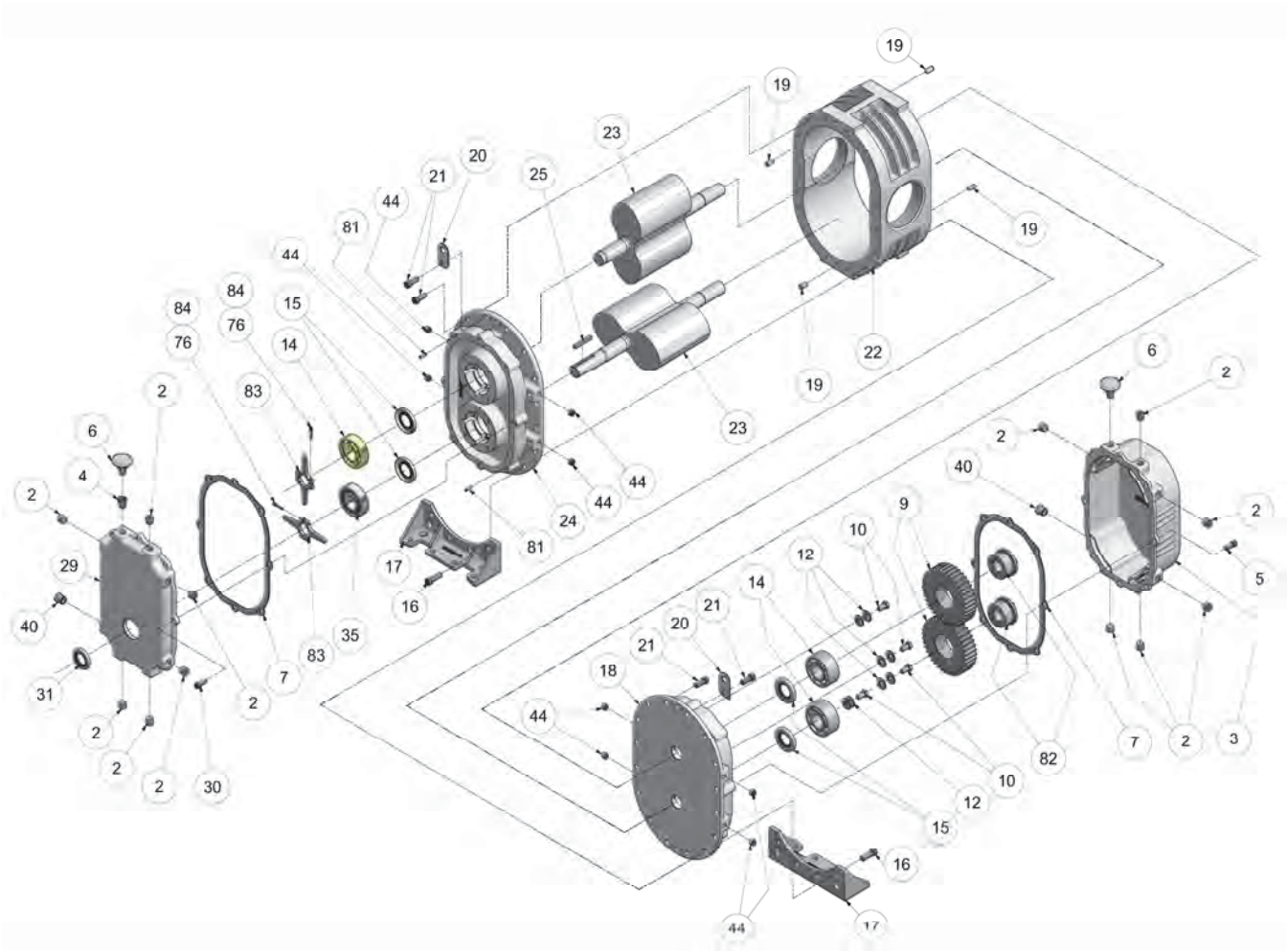
19
19
23
20
21
25
44
81
44
84
84
76
76
15
14
83
2
6
4
2
29
40
31
2
2
2
2
30
7
83
35
17
16
81
24
44
44
23
19
22
19
19
6
2
2
40
2
5
9
10
12
14
21
20
21
18
44
10
12
15
16
44
17
82
7
2
3

Order by Part Number and Description. Reference Numbers are for your convenience only.

Model GAB Lip Seal Dual Splash Lube

	Ref. No.	Description	No. Req'd	Size – 3H GABH_R △ △= (D or F)	Size – 3M GABM_R △ △= (D or F)	Size -- 3L GABL_R △ △= (D or F)
	2	Plug	12	64AC2	64AC2	64AC2
	3	Gear Case	1	303GAB602	303GAB602	303GAB602
	5	Screw	8	75P7	75P7	75P7
	6	Breather	2	5L358	5L358	5L358
*	7	Gasket	2	300GAB715	300GAB715	300GAB715
	9	Gear Kit	1	300GAB6008	300GAB6008	300GAB6008
*	10	Screws	4	75A33P	75A33P	75A33P
	12	Washer	8	95A2	95A2	95A2
*	14	Ball Bearing	3	12BA143	12BA143	12BA143
*	15	Oil Seal	4	900891030601	900891030601	900891030601
	16	Screw	4	75P56	75P56	75P56
	17	Foot – Vert. & Horiz.	2	303GAB166	303GAB166	303GAB166
	18	Bearing Housing Gear End	1	302GAB006	302GAB006	302GAB006
	19	Dowel Pin	4	62M48	62M48	62M48
	20	Lifting Lug	2	200GAA451	200GAA451	200GAA451
	21	Screw	20	75P55	75P55	75P55
	22	Impeller Case	1	900873034301	900873033801	900873034201
	23	Rotor Group				
		3" Standard Clearances	1	307GAB4028	309GAB4028	308GAB4028
		3" High Temperature Clearances	1	To be assigned	To be assigned	To be assigned
	24	Bearing Housing Drive End	1	303GAB006	303GAB006	303GAB006
	25	Key-Square	1	900639910304	900639910304	900639910304
	29	Drive Cover	1	302GAB477	302GAB477	302GAB477
	30	Screw	8	75P7	75P7	75P7
*	31	Oil Seal	1	60DD725	60DD725	60DD725
*	35	Bearing – Spherical	1	12BA153	12BA153	12BA153
	40	Oil Level Gauge	2	40P82	40P82	40P82
	44	Screw	8	76F1	76F1	76F1
**	45	Paint, Bulk, GDP188, Aluminum	0.125	28H284	28H284	28H284
**	54	Shim Case .0025/.0035"	1	200GAB732	200GAB732	200GAB732
**	55	Shim Case .0010"	1	201GAB732	201GAB732	201GAB732
**	56	Shim Case .0015/.002"	1	202GAB732	202GAB732	202GAB732
	76	Compound, Loctite	50	25BC877	25BC877	25BC877
	81	Dowel Pin	2	62M13	62M13	62M13
	82	Locking Assembly	2	22G45	22G45	22G45
	83	Slinger	2	300GAB173	300GAB173	300GAB173
	84	Screw	2	75LM13	75LM13	75LM13
**	105	Overhaul Kit 3" R VERS Lip Seal, Dual Splash Lube	1	301GAB6010	301GAB6010	301GAB6010
**	900	Group-Indent & Instruction Legend Series 3" R VERS	1	303GAB4011	303GAB4011	303GAB4011

* INCLUDED IN OVERHAUL KIT.
** NOT SHOWN ON ILLUSTRATION

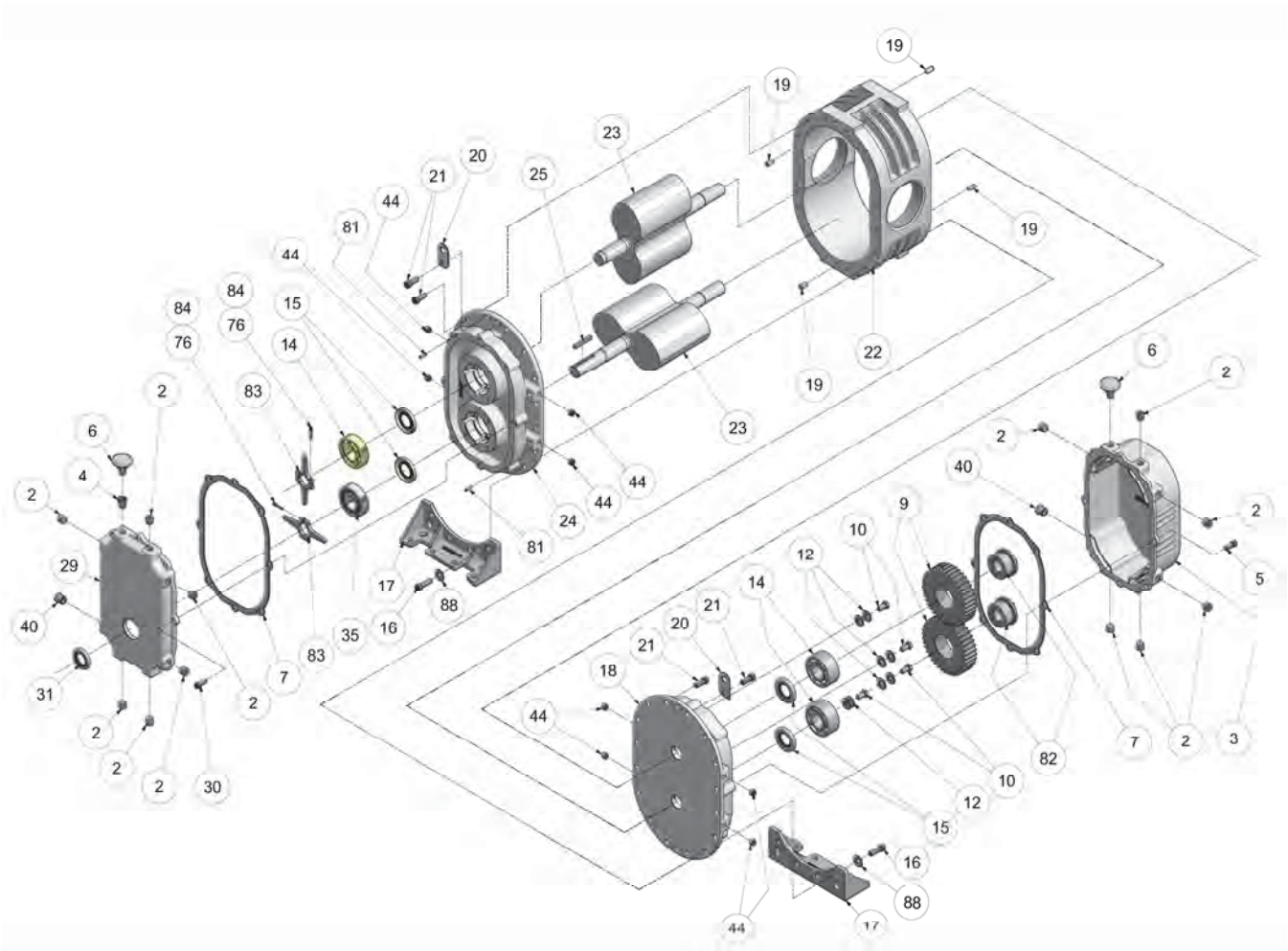
19
19
23
20
21
25
44
81
44
84
84
76
76
15
14
83
2
6
4
2
29
40
31
2
2
2
2
30
7
83
35
16
17
88
81
24
44
44
23
19
22
19
19
6
2
2
40
2
5
9
10
12
14
21
20
21
18
44
10
12
15
16
88
44
82
7
2
3

Order by Part Number and Description. Reference Numbers are for your convenience only.

Model GAC Lip Seal Dual Splash Lube

Ref. No.	Description	No. Req'd	Size – 4H GACH_R Δ Δ= (D or F)	Size – 4M GACM_R Δ Δ= (D or F)	Size -- 4L GACL_R Δ Δ= (D or F)
2	Plug	12	64AC3	64AC3	64AC3
3	Gear Case	1	304GAC602	304GAC602	304GAC602
5	Screw	8	75P40	75P40	75P40
6	Breather	2	5L359	5L359	5L359
* 7	Gasket	2	301GAC715	301GAC715	301GAC715
9	Gear Kit	1	300GAC6008	300GAC6008	300GAC6008
* 10	Screws	4	655ED03P	655ED03P	655ED03P
12	Washer	8	95A3	95A3	95A3
* 14	Ball Bearing	3	12BA144	12BA144	12BA144
* 15	Oil Seal	4	60DD630	60DD630	60DD630
16	Screw	8	75P56	75P56	75P56
17	Foot – Vert. & Horiz.	2	300GAC166	300GAC166	300GAC166
18	Bearing Housing Gear End	1	302GAC006	302GAC006	302GAC006
19	Dowel Pin	4	62M48	62M48	62M48
20	Lifting Lug	2	200GAA451	200GAA451	200GAA451
21	Screw	16	75P55	75P55	75P55
22	Impeller Case	1	900883042201	900883041801	900883042001
23	Rotor Group				
	4" Standard Clearances	1	307GAC4028	306GAC4028	305GAC4028
	4" High Temperature Clearances	1	To be assigned	To be assigned	To be assigned
24	Bearing Housing Drive End	1	303GAC006	303GAC006	303GAC006
25	Key-Square	1	900639910304	900639910304	900639910304
29	Drive Cover	1	302GAC477	302GAC477	302GAC477
30	Screw	8	75P40	75P40	75P40
* 31	Oil Seal	1	60DD716	60DD716	60DD716
* 35	Bearing – Spherical	1	12BA255	12BA255	12BA255
40	Oil Level Gauge	2	40P34	40P34	40P34
44	Screw	8	76F1	76F1	76F1
** 45	Paint, Bulk, GDP188, Aluminum	0.125	28H284	28H284	28H284
** 54	Shim Case .0025/.0035"	1	200GAC732	200GAC732	200GAC732
** 56	Shim Case .0015/.002"	1	202GAC732	202GAC732	202GAC732
76	Compound, Loctite	50	25BC877	25BC877	25BC877
81	Dowel Pin	2	62M13	62M13	62M13
82	Locking Assembly	2	22G44	22G44	22G44
83	Slinger	2	300GAC173	300GAC173	300GAC173
84	Screw	2	75LM14	75LM14	75LM14
88	Washer	4	95A3	95A3	95A3
** 105	Overhaul Kit 4" R VERS Lip Seal, Dual Splash Lube	1	301GAC6010	301GAC6010	301GAC6010
** 900	Group-Indent & Instruction Legend Series 4" R VERS	1	201GAC4011	201GAC4011	201GAC4011

* INCLUDED IN OVERHAUL KIT.
** NOT SHOWN ON ILLUSTRATION

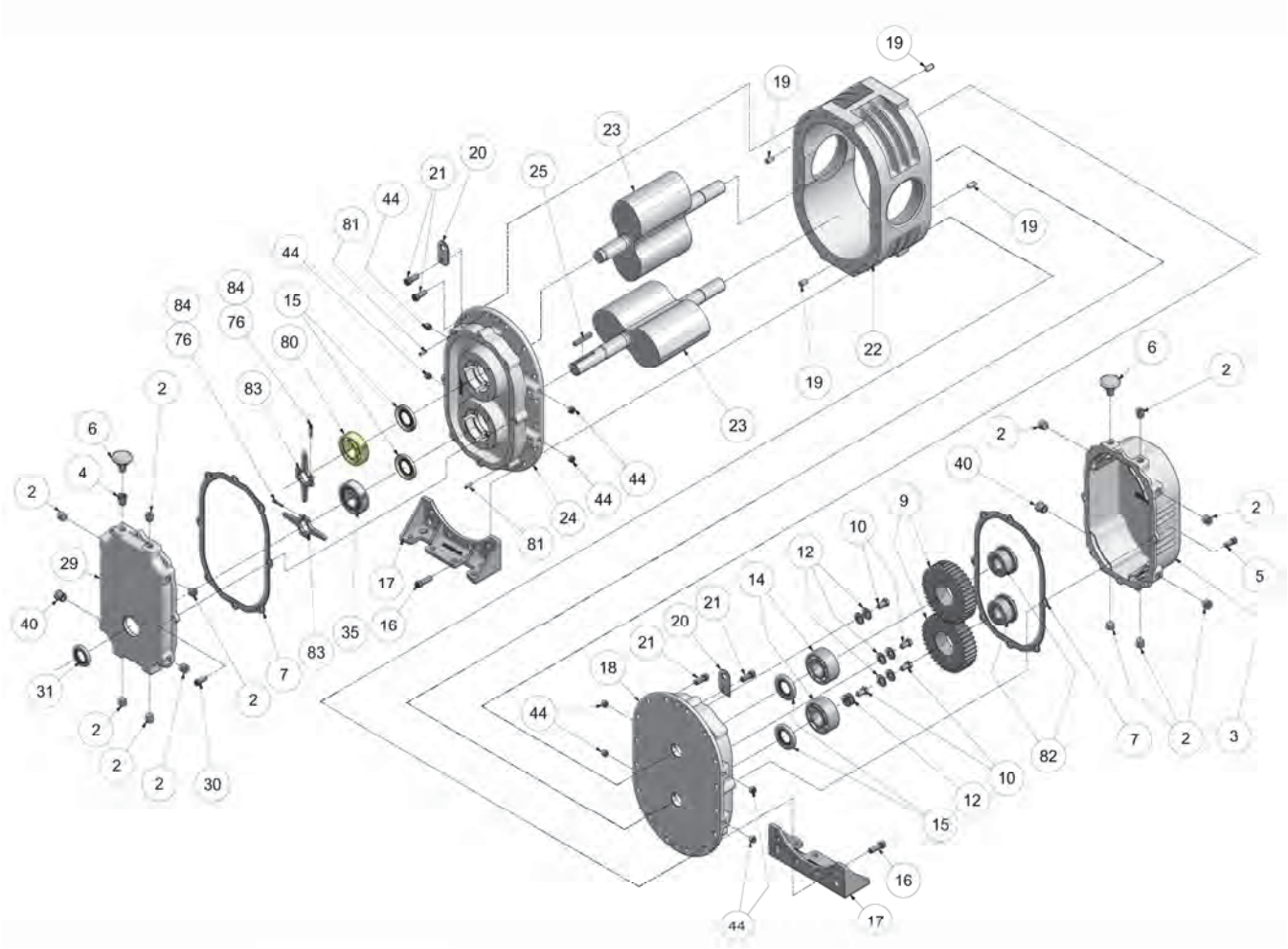

300GAE810-A
(Ref. Drawing)

Order by Part Number and Description. Reference Numbers are for your convenience only.

Model GAE Lip Seal — Dual Splash Lube

Ref. No.	Description	No. Req'd	Size – 5H GAEH_R Δ Δ= (D or F)	Size – 5M GAEM_R Δ Δ= (D or F)	Size -- 5L GAEL_R Δ Δ= (D or F)
2	Plug	12	64AC3	64AC3	64AC3
3	Gear Case	1	304GAE602	304GAE602	304GAE602
5	Screw	8	75P40	75P40	75P40
6	Breather	2	5L359	5L359	5L359
* 7	Gasket	2	300GAE715	300GAE715	300GAE715
9	Gear Kit	1	300GAE6008	300GAE6008	300GAE6008
* 10	Screws	4	655ED03P	655ED03P	655ED03P
12	Washer	8	95A3	95A3	95A3
* 14	Ball Bearing	2	8500397	8500397	8500397
* 15	Oil Seal	4	60DD714	60DD714	60DD714
16	Screw	8	75P56	75P56	75P56
17	Foot – Vert. & Horiz.	2	300GAE166	300GAE166	300GAE166
18	Bearing Housing Gear End	1	301GAE006	301GAE006	301GAE006
19	Dowel Pin	4	62M48	62M48	62M48
20	Lifting Lug	2	200GAA451	200GAA451	200GAA451
21	Screw	24	75P55	75P55	75P55
22	Impeller Case	1	900883051701	900883051801	900883051901
23	Rotor Group				
	5" Standard Clearances	1	327GAE4028	326GAE4028	325GAE4028
	5" High Temperature Clearances	1	To be assigned	To be assigned	To be assigned
25	Key-Square	1	900639910305	900639910305	900639910305
29	Drive Cover	1	300GAE477	300GAE477	300GAE477
30	Screw	8	75P40	75P40	75P40
* 31	Oil Seal	1	60DD726	60DD726	60DD726
* 35	Bearing – Spherical	1	12BA253	12BA253	12BA253
40	Oil Level Gauge	2	40P34	40P34	40P34
44	Screw	8	76F92	76F92	76F92
** 45	Paint, Bulk, GDP188, Aluminum	0.125	28H284	28H284	28H284
** 54	Shim Case .0025/.0035"	1	200GAE732	200GAE732	200GAE732
** 55	Shim Case .010"	1	201GAE732	201GAE732	201GAE732
** 56	Shim Case .0015/.002"	1	202GAE732	202GAE732	202GAE732
76	Compound, Loctite	5	25BC877	25BC877	25BC877
* 80	Bearing – Conrad	1	12BA254	12BA254	12BA254
81	Dowel Pin	2	62M13	62M13	62M13
82	Locking Assembly	2	22G43	22G43	22G43
83	Slinger	2	300GAE173	300GAE173	300GAE173
84	Screw	2	75LM14	75LM14	75LM14
** 105	Overhaul Kit 5" R VERS Lip Seal, Dual Splash Lube	1	301GAE6010	301GAE6010	301GAE6010
** 900	Group-Indent & Instruction Legend Series 5" R VERS	1	205GAE4011	205GAE4011	205GAE4011

* INCLUDED IN OVERHAUL KIT.
** NOT SHOWN ON ILLUSTRATION

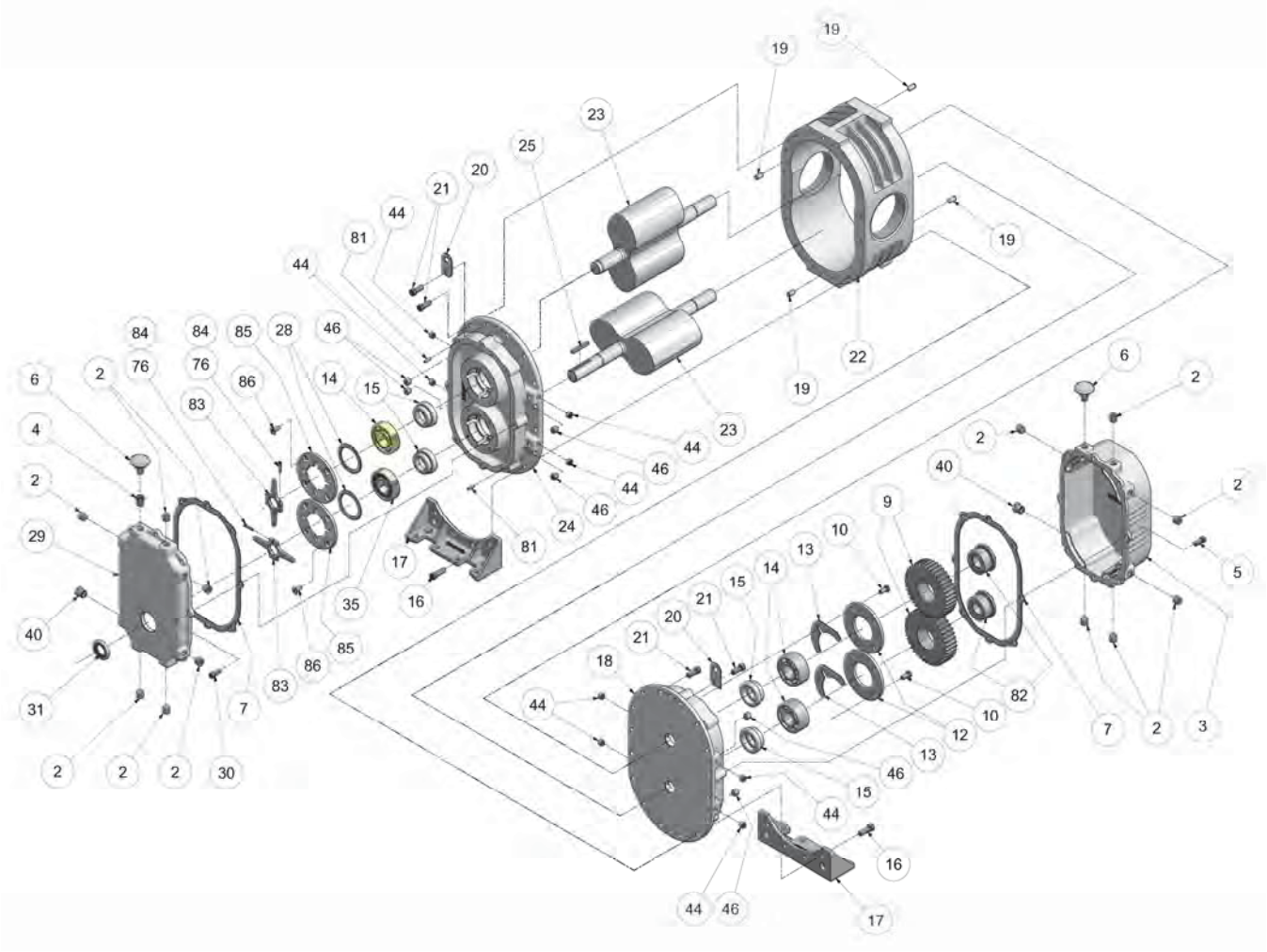
19
19
23
25
20
21
44
81
44
84
84
85
28
46
76
76
86
14
15
6
2
83
4
2
29
40
31
2
2
2
30
7
83
86
85
35
17
16
81
24
46
44
46
44
23
19
22
19
19
6
2
2
40
2
2
5
9
10
13
14
15
21
20
21
18
44
82
10
12
13
46
15
44
16
44
46
17
7
2
3

Order by Part Number and Description. Reference Numbers are for your convenience only.

Model GAB Mechanical Seal Dual Splash Lube

Ref. No.	Description	No. Req'd	Size – 3H GABH_R △ △= (E or G)	Size – 3M GABM_R △ △= (E or G)	Size -- 3L GABL_R △ △= (E or G)
2	Plug	12	64AC2	64AC2	64AC2
3	Gear Case	1	303GAB602	303GAB602	303GAB602
5	Screw	8	75P7	75P7	75P7
6	Breather	2	5L358	5L358	5L358
* 7	Gasket	2	300GAB715	300GAB715	300GAB715
9	Gear Kit	1	300GAB6008	300GAB6008	300GAB6008
* 10	Screws	4	75A33P	75A33P	75A33P
12	Bearing Retainer	2	300GAB205	300GAB205	300GAB205
* 13	Shim Set	1	900881032200	900881032200	900881032200
* 14	Ball Bearing	3	12BA143	12BA143	12BA143
* 15	Mechanical Seal	4	900871020003	900871020003	900871020003
16	Screw	4	75P56	75P56	75P56
17	Foot – Vert. & Horiz.	2	303GAB166	303GAB166	303GAB166
18	Bearing Housing Gear End	1	304GAB006	304GAB006	304GAB006
19	Dowel Pin	4	62M48	62M48	62M48
20	Lifting Lug	2	200GAA451	200GAA451	200GAA451
21	Screw	20	75P55	75P55	75P55
22	Impeller Case	1	900873034301	900873033801	900873034201
23	Rotor Group				
	3" Standard Clearances	1	307GAB4028	309GAB4028	308GAB4028
	3" High Temperature Clearances	1	To be assigned	To be assigned	To be assigned
24	Bearing Housing Drive End	1	305GAB006	305GAB006	305GAB006
25	Key-Square	1	900639910304	900639910304	900639910304
* 28	Wavy Spring	2	900669170203	900669170203	900669170203
29	Drive Cover	1	302GAB477	302GAB477	302GAB477
30	Screw	6	75P7	75P7	75P7
* 31	Oil Seal	1	60DD725	60DD725	60DD725
* 35	Bearing – Spherical	1	12BA153	12BA153	12BA153
40	Oil Level Gauge	2	40P82	40P82	40P82
44	Screw	8	76F1	76F1	76F1
** 45	Paint, Bulk, GDP188, Aluminum	0.125	28H284	28H284	28H284
46	Plug	8	64AC1	64AC1	64AC1
** 54	Shim Case .0025/.0035"	1	200GAB732	200GAB732	200GAB732
** 55	Shim Case .010"	1	201GAB732	201GAB732	201GAB732
** 56	Shim Case .0015/.002"	1	202GAB732	202GAB732	202GAB732
76	Compound, Loctite	50	25BC877	25BC877	25BC877
81	Dowel Pin	2	62M13	62M13	62M13
82	Locking Assembly	2	22G45	22G45	22G45
83	Slinger	2	300GAB173	300GAB173	300GAB173
84	Screw	2	75LM13	75LM13	75LM13
85	Bearing Retainer	2	300GAB205	300GAB205	300GAB205
86	Screw	8	75LM214	75LM214	75LM214
** 105	Overhaul Kit 3" R VERS Mechanical Seal Dual, Splash	1	304GAB6010	304GAB6010	304GAB6010
** 900	Group-Indent & Instruction Legend Series 3" R VERS	1	303GAB4011	303GAB4011	303GAB4011

* INCLUDED IN OVERHAUL KIT.
** NOT SHOWN ON ILLUSTRATION

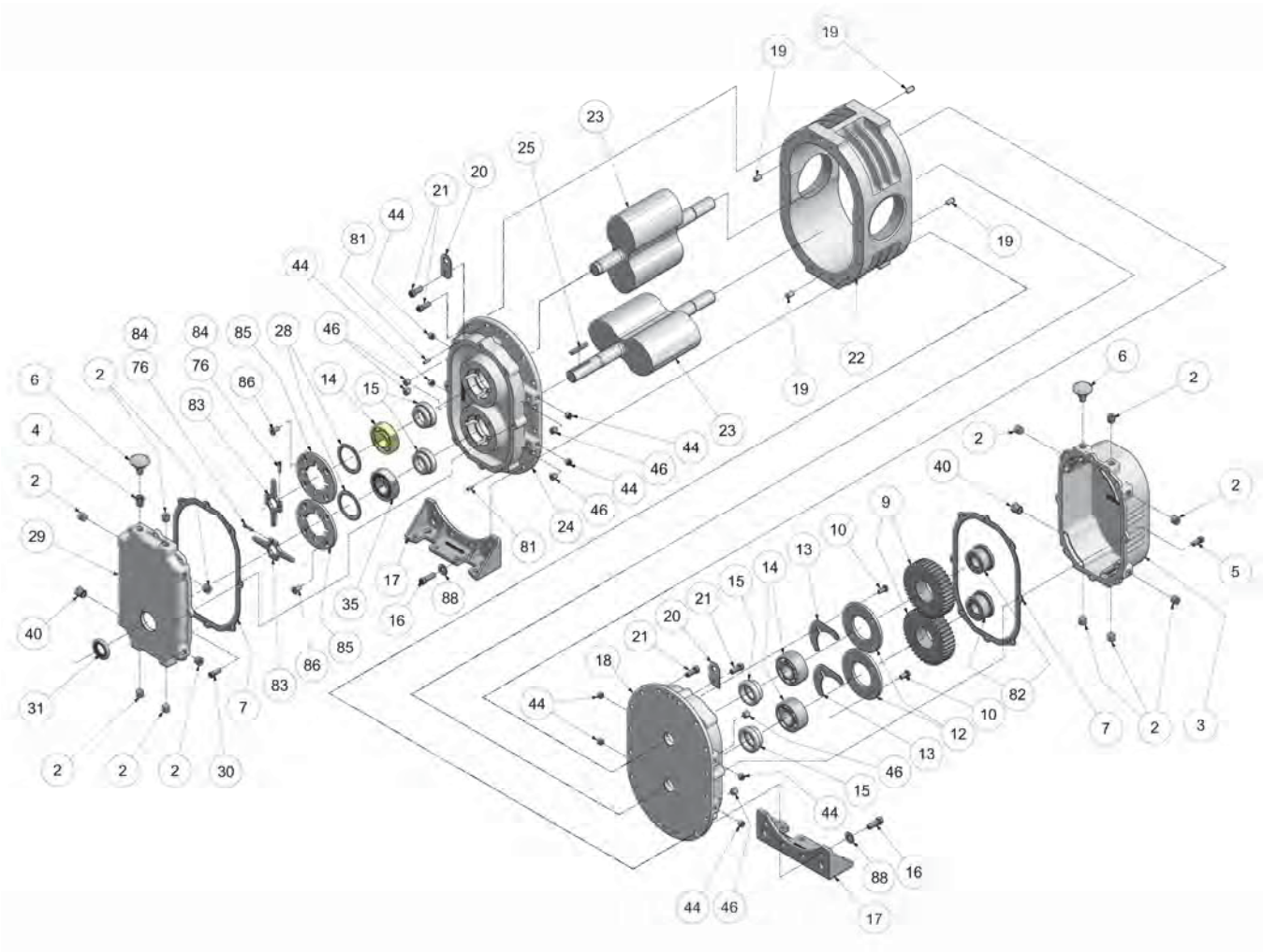
19
19
23
25
20
21
44
81
44
19
84
84
85
28
46
76
76
6
2
86
14
15
83
22
19
6
2
4
23
44
2
46
40
2
44
2
46
9
29
24
81
10
13
5
17
88
14
15
35
16
21
20
40
21
85
18
86
83
82
31
7
44
10
12
7
2
3
13
2
2
2
30
46
15
44
88
16
44
46
17

Order by Part Number and Description. Reference Numbers are for your convenience only.

Model GAC Mechanical Seal Dual Splash Lube

Ref. No.	Description	No. Req'd	Size – 4H GACH_R △ △= (E or G)	Size – 4M GACM_R △ △= (E or G)	Size -- 4L GACL_R △ △= (E or G)
2	Plug	12	64AC3	64AC3	64AC3
3	Gear Case	1	304GAC602	304GAC602	304GAC602
5	Screw	8	75P40	75P40	75P40
6	Breather	2	5L359	5L359	5L359
* 7	Gasket	2	301GAC715	301GAC715	301GAC715
9	Gear Kit	1	300GAC6008	300GAC6008	300GAC6008
* 10	Screws	8	75A33P	75A33P	75A33P
12	Bearing Retainer	2	900883040201	900883040201	900883040201
* 13	Shim Set	1	900881052900	900881052900	900881052900
* 14	Ball Bearing	3	12BA144	12BA144	12BA144
* 15	Mechanical Seal	4	900871020004	900871020004	900871020004
16	Screw	8	75P56	75P56	75P56
17	Foot – Vert. & Horiz.	2	300GAC166	300GAC166	300GAC166
18	Bearing Housing Gear End	1	304GAC006	304GAC006	304GAC006
19	Dowel Pin	4	62M48	62M48	62M48
20	Lifting Lug	2	200GAA451	200GAA451	200GAA451
21	Screw	16	75P55	75P55	75P55
22	Impeller Case	1	900883042201	900883041801	900883042001
23	Rotor Group				
	4" Standard Clearances	1	307GAC4028	306GAC4028	305GAC4028
	4" High Temperature Clearances	1	To be assigned	To be assigned	To be assigned
24	Bearing Housing Drive End	1	305GAC006	305GAC006	305GAC006
25	Key-Square	1	900639910304	900639910304	900639910304
* 28	Wavy Spring	2	900669170304	900669170304	900669170304
29	Drive Cover	1	302GAC477	302GAC477	302GAC477
30	Screw	8	75P40	75P40	75P40
* 31	Oil Seal	1	60DD716	60DD716	60DD716
* 35	Bearing – Spherical	1	12BA255	12BA255	12BA255
40	Oil Level Gauge	2	40P34	40P34	40P34
44	Screw	8	76F1	76F1	76F1
** 45	Paint, Bulk, GDP188, Aluminum	0.125	28H284	28H284	28H284
46	Plug	8	64AC1	64AC1	64AC1
** 54	Shim Case .0025/.0035"	1	200GAC732	200GAC732	200GAC732
** 56	Shim Case .0015/.002"	1	202GAC732	202GAC732	202GAC732
76	Compound, Loctite	50	25BC877	25BC877	25BC877
81	Dowel Pin	2	62M13	62M13	62M13
82	Locking Assembly	2	22G44	22G44	22G44
83	Slinger	2	300GAC173	300GAC173	300GAC173
84	Screw	2	75LM14	75LM14	75LM14
85	Bearing Retainer	2	300GAC205	300GAC205	300GAC205
86	Screw	8	75LM214	75LM214	75LM214
88	Washer	4	95A3	95A3	95A3
** 105	Overhaul Kit 4" R VERS Mechanical Seal, Dual Splash	1	303GAC6010	303GAC6010	303GAC6010
** 900	Group-Indent & Instruction Legend Series 4" R VERS	1	201GAC4011	201GAC4011	201GAC4011

* INCLUDED IN OVERHAUL KIT.
** NOT SHOWN ON ILLUSTRATION

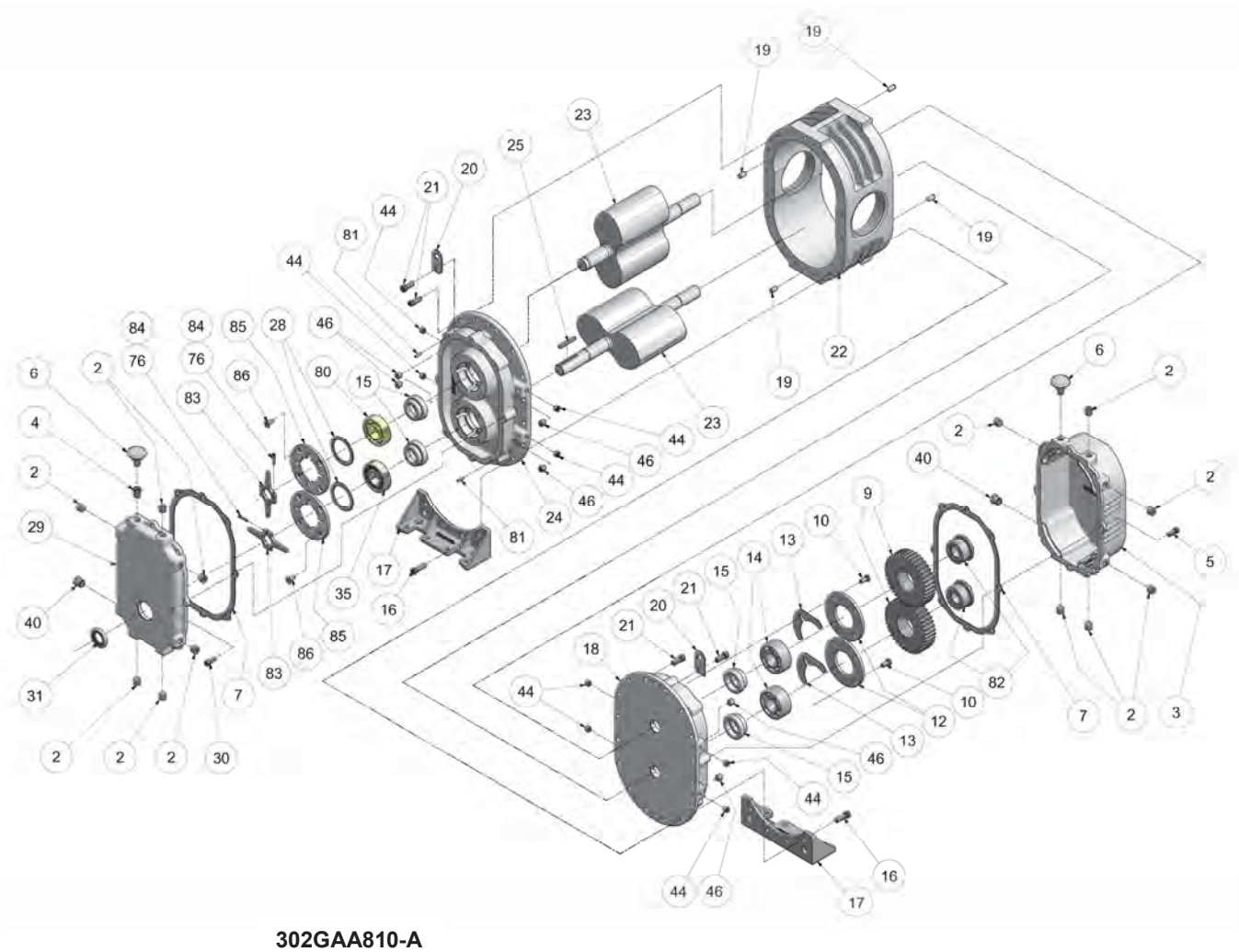

302GAA810-A
(Ref. Drawing)

Order by Part Number and Description. Reference Numbers are for your convenience only.

Model GAE Mechanical Seal Dual Splash Lube

Ref. No.	Description	No. Req'd	Size – 5H GAEH_R Δ Δ= (E or G)	Size – 5M GAEM_R Δ Δ= (E or G)	Size -- 5L GAEL_R Δ Δ= (E or G)
2	Plug	12	64AC3	64AC3	64AC3
3	Gear Case	1	304GAE602	304GAE602	304GAE602
5	Screw	8	75P40	75P40	75P40
6	Breather	2	5L359	5L359	5L359
* 7	Gasket	2	300GAE715	300GAE715	300GAE715
9	Gear Kit	1	300GAE6008	300GAE6008	300GAE6008
* 10	Screws	8	75A33P	75A33P	75A33P
12	Bearing Retainer	2	900883050501	900883050501	900883050501
* 13	Shim Set	1	900881052900	900881052900	900881052900
* 14	Ball Bearing	2	8500397	8500397	8500397
* 15	Mechanical Seal	4	900871020005	900871020005	900871020005
16	Screw	8	75P56	75P56	75P56
17	Foot – Vert. & Horiz.	2	300GAE166	300GAE166	300GAE166
18	Bearing Housing Gear End	1	303GAE006	303GAE006	303GAE006
19	Dowel Pin	4	62M48	62M48	62M48
20	Lifting Lug	2	200GAA451	200GAA451	200GAA451
21	Screw	24	75P55	75P55	75P55
22	Impeller Case	1	900883051701	900883051801	900883051901
23	Rotor Group				
	5" Standard Clearances	1	327GAE4028	326GAE4028	325GAE4028
	5" High Temperature Clearances	1	To be assigned	To be assigned	To be assigned
24	Bearing Housing Drive End	1	304GAE006	304GAE006	304GAE006
25	Key-Square	1	900639910305	900639910305	900639910305
* 28	Wavy Spring	2	900669170405	900669170405	900669170405
29	Drive Cover	1	300GAE477	300GAE477	300GAE477
30	Screw	8	75P40	75P40	75P40
* 31	Oil Seal	1	60DD726	60DD726	60DD726
* 35	Bearing – Spherical	1	12BA253	12BA253	12BA253
40	Oil Level Gauge	2	40P34	40P34	40P34
44	Screw	8	76F92	76F92	76F92
** 45	Paint, Bulk, GDP188, Aluminum	0.125	28H284	28H284	28H284
46	Plug	8	64AC2	64AC2	64AC2
** 54	Shim Case .0025/.0035"	1	200GAE732	200GAE732	200GAE732
** 55	Shim Case .010"	1	201GAE732	201GAE732	201GAE732
** 56	Shim Case .0015/.002"	1	202GAE732	202GAE732	202GAE732
76	Compound, Loctite	5	25BC877	25BC877	25BC877
* 80	Bearing – Conrad	1	12BA254	12BA254	12BA254
81	Dowel Pin	2	62M13	62M13	62M13
82	Locking Assembly	2	22G43	22G43	22G43
83	Slinger	2	300GAE173	300GAE173	300GAE173
84	Screw	2	75LM14	75LM14	75LM14
85	Bearing Retainer	2	300GAE205	300GAE205	300GAE205
86	Screw	8	75LM214	75LM214	75LM214
** 105	Overhaul Kit 5" R VERS Mechanical Seal, Dual	1	303GAE6010	303GAE6010	303GAE6010
** 900	Group-Indent & Instruction Legend Series 5" R	1	205GAE4011	205GAE4011	205GAE4011

* INCLUDED IN OVERHAUL KIT.
** NOT SHOWN ON ILLUSTRATION

Gardner Denver

WARRANTY
SUTORBILT BLOWERS
Legend SERIES

GENERAL PROVISIONS AND LIMITATIONS

Gardner Denver (the "Com pany") warrants to each original retail purchaser ("Purchaser") of its products from the Company or its authorized distributor that such products are, at the time of delivery to the Purchaser, made with good material and workmanship. No warranty is made with respect to:

1. Any product which has been repaired or altered in such a way, in the Company's judgment, as to affect the product adversely.
2. Any product which has, in the Company's judgment, been subject to negligence, accident, improper storage, or improper installation or application.
3. Any product which has not been operated or maintained in accordance with the recommendations of the Company.
4. Components or accessories manufactured, warranted and serviced by others.
5. Any reconditioned or prior owned product.

Claims for items described in (4) above should be submitted directly to the manufacturer.

WARRANTY PERIOD

The Company's obligation under this warranty is limited to repairing or, at its option, replacing, during normal business hours at an authorized service facility of the Company, any part which in its judgment proved not to be as warranted within the applicable Warranty Period as follows.

BARE BLOWERS

Basic grease lubricated bare blowers, consisting of all parts within, are warranted for 18 months from date of initial use or 24 months from date of shipment to the first purchaser, whichever occurs first. Basic dual splash lubricated bare blowers, consisting of all parts within, are warranted for 24 months from date of initial use or 30 months from date of shipment to the first purchaser, whichever occurs first. Any disassembly or partial disassembly of the blower, or failure to return the "unopened" blower per Company instructions, will be cause for denial of warranty.

OTHER COMPONENTS

All other components are warranted for 12 months from date of initial use or 18 months from date of shipment to first purchaser, whichever comes first. The Company reserves the right to withdraw the Warranty where evidence indicates application outside the stated performance area, or where there is evidence of abuse.

LABOR TRANSPORTATION AND INSPECTION

The Company will provide labor, by Company representative or authorized service personnel, for repair or replacement of any product or part thereof which in the Company's judgment is proved not to be as warranted. Labor shall be limited to the amount specified in the Company's labor rate schedule.

Labor costs in excess of the Company rate schedules caused by, but not limited to, location or inaccessibility of equipment, or labor provided by unauthorized service personnel is not provided by this warranty.

All costs of transportation of product, labor or parts claimed not to be as warranted and, of repaired or replacement parts to or from such service facilities shall be borne by the Purchaser. The Company may require the return of any part claimed not to be as warranted to one of its facilities as designated by the Company, transportation prepaid by Purchaser, to establish a claim under this warranty. Replacement parts provided under the terms of the warranty are warranted for the remainder of the Warranty Period of the product upon which installed to the same extent as if such parts were original components.

DISCLAIMER

THE FOREGOING WARRANTY IS EXCLUSIVE AND IT IS EXPRESSLY AGREED THAT, EXCEPT AS TO TITLE, THE COMPANY MAKES NO OTHER WARRANTIES, EXPRESSED, IMPLIED OR STATUTORY, INCLUDING ANY IMPLIED WARRANTY OF MERCHANTABILITY.

THE REMEDY PROVIDED UNDER THIS WARRANTY SHALL BE THE SOLE, EXCLUSIVE AND ONLY REMEDY AVAILABLE TO THE PURCHASER AND IN NO CASE SHALL THE COMPANY BE SUBJECT TO ANY OTHER OBLIGATIONS OR LIABILITIES. UNDER NO CIRCUMSTANCES SHALL THE COMPANY BE LIABLE FOR ANY SPECIAL, INDIRECT, INCIDENTAL OR CONSEQUENTIAL DAMAGES, EXPENSES, LOSSES OR DELAYS HOWSOEVER CAUSED.

No statement, representation, agreement, or understanding, oral or written, made by any agent, distributor, representative, or employee of the Company which is not contained in this Warranty will be binding upon the Company unless made in writing and executed by an officer of the Company.

This warranty shall not be effective as to any claim which is not presented within 30 days after the date upon which the product is claimed not to have been as warranted. Any action for breach of this warranty must be commenced within one year after the date upon which the cause of action occurred.

Any adjustment made pursuant to this warranty shall not be construed as an admission by the Company that any product was not as warranted.

COPYRIGHT© 2008 Gardner Denver, Inc.

NOTES

NOTES

Gardner Denver®

For additional information, contact your local representative or visit:
www.contactgd.com/mobile

©2015 Gardner Denver, Inc. Printed in U.S.A.

ENERGY STAR PARTNER

Member

NTTC

Please recycle after use.

NOTES

MAINTENANCE DATA SHEET

FOR POSITIVE DISPLACEMENT BLOWER

-

SPARE PARTS

MODEL: Sutorbilt 4L, GACLBRA (modified to horizontal)
SERIAL NUMBER: S520806 & S520818

MAINTENANCE FOR ONE UNIT

Item	**Type / Part number**	**Qty.**	**Maintenance /Replacement**	**Unit price**
Oil / Blower gear side *	AEON PD*	1.5 pt.	6000 hours	34$ for 1 L, 365 $ for 12x1L
Grease / Blower drive side	28H282	**	500 hours	34$ for 14 oz.
Overhaul Kit***	300GAC6010	1	When needed	428$
Belts	VBA65	2	When needed	24$

* AEON PD is synthetic oil with superior properties than mineral oil. If mineral oil is used instead of AEON PD oil, replacement must be done after 500 hours.

** Fill with new grease until old grease is flushed.

*** Overhaul kit consist of bearings, seals, gaskets, shims, taper pins and bearing retainer screws.

Conditions : CAD Dollar, net 30, taxes extra, price valid for 2017, minimum order of 75 $, FOB Montreal, PQ.

B-501/2	38094	VFD, Danfoss 15HP, 380-480Vac, IP55	p/n: FC202P11KT4E55H2XGX3SXSXXXXAXBXCXXXXDX
P-701/2	38093	VFD, Danfoss 2HP, 380-480Vac, IP55	p/n: FC202P1K5T4E55H2XGX3SXSXXXXAXBXCXXXXDX

Operating Guide

VLT® AQUA Drive FC 202

0.25–90 kW





Contents

1 Introduction 4
- 1.1 Purpose of the Operating Guide 4
- 1.2 Additional Resources 4
- 1.3 Manual and Software Version 4
- 1.4 Product Overview 4
- 1.5 Approvals and Certifications 8
- 1.6 Disposal 8

2 Safety 9
- 2.1 Safety Symbols 9
- 2.2 Qualified Personnel 9
- 2.3 Safety Precautions 9

3 Mechanical Installation 11
- 3.1 Unpacking 11
- 3.2 Installation Environments 11
- 3.3 Mounting 12

4 Electrical Installation 14
- 4.1 Safety Instructions 14
- 4.2 EMC-compliant Installation 14
- 4.3 Grounding 14
- 4.4 Wiring Schematic 16
- 4.5 Access 18
- 4.6 Motor Connection 18
- 4.7 AC Mains Connection 19
- 4.8 Control Wiring 19
  - 4.8.1 Control Terminal Types 19
  - 4.8.2 Wiring to Control Terminals 21
  - 4.8.3 Enabling Motor Operation (Terminal 27) 21
  - 4.8.4 Voltage/Current Input Selection (Switches) 22
  - 4.8.5 RS485 Serial Communication 22
- 4.9 Installation Check List 23

5 Commissioning 24
- 5.1 Safety Instructions 24
- 5.2 Applying Power 24
- 5.3 Local Control Panel Operation 24
  - 5.3.1 Graphic Local Control Panel Layout 24
  - 5.3.2 Parameter Settings 26

Danfoss A/S © 10/2016 All rights reserved.

5.3.3 Uploading/Downloading Data to/from the LCP 26
5.3.4 Changing Parameter Settings 26
5.3.5 Restoring Default Settings 26
5.4 Basic Programming 27
5.4.1 Commissioning with SmartStart 27
5.4.2 Commissioning via [Main Menu] 27
5.4.3 Asynchronous Motor Set-up 28
5.4.4 PM Motor Setup in VVC+ 28
5.4.5 SynRM Motor Set-up with VVC+ 29
5.4.6 Automatic Energy Optimization (AEO) 30
5.4.7 Automatic Motor Adaptation (AMA) 30
5.5 Checking Motor Rotation 31
5.6 Local-control Test 31
5.7 System Start-up 31
6 Application Set-up Examples 32
7 Maintenance, Diagnostics, and Troubleshooting 36
7.1 Maintenance and Service 36
7.2 Status Messages 36
7.3 Warning and Alarm Types 38
7.4 List of Warnings and Alarms 39
7.5 Troubleshooting 46
8 Specifications 49
8.1 Electrical Data 49
8.1.1 Mains Supply 1x200–240 V AC 49
8.1.2 Mains Supply 3x200–240 V AC 50
8.1.3 Mains Supply 1x380–480 V AC 52
8.1.4 Mains Supply 3x380–480 V AC 53
8.1.5 Mains Supply 3x525–600 V AC 57
8.1.6 Mains Supply 3x525–690 V AC 61
8.2 Mains Supply 64
8.3 Motor Output and Motor Data 64
8.4 Ambient Conditions 65
8.5 Cable Specifications 65
8.6 Control Input/Output and Control Data 65
8.7 Connection Tightening Torques 68
8.8 Fuses and Circuit Breakers 69
8.9 Power Ratings, Weight, and Dimensions 76
9 Appendix 78

 Danfoss A/S © 10/2016 All rights reserved.

9.1 Symbols, Abbreviations, and Conventions 78
9.2 Parameter Menu Structure 78

Index 84

Danfoss A/S © 10/2016 All rights reserved.

1

1 Introduction

1.1 Purpose of the Operating Guide

This operating guide provides information for safe installation and commissioning of the frequency converter.

The operating guide is intended for use by qualified personnel.
Read and follow the instructions to use the frequency converter safely and professionally, and pay particular attention to the safety instructions and general warnings. Always keep this operating guide available with the frequency converter.

VLT® is a registered trademark.

1.2 Additional Resources

Other resources are available to understand advanced frequency converter functions and programming.

- The *VLT® AQUA Drive FC 202 Programming Guide* provides greater detail on working with parameters and many application examples.
- The *VLT® AQUA Drive FC 202 Design Guide* provides detailed information about capabilities and functionality to design motor control systems.
- Instructions for operation with optional equipment.

Supplementary publications and manuals are available from Danfoss. See *www.vlt-drives.danfoss.com/Support/Technical-Documentation/* for listings.

1.3 Manual and Software Version

This manual is regularly reviewed and updated. All suggestions for improvement are welcome.

Table 1.1 shows the manual version and the corresponding software version.

Edition	Remarks	Software version
MG20MDxx	The parameter list is updated to reflect software version 2.6x. Editorial update.	2.6x

Table 1.1 Manual and Software Version

1.4 Product Overview

1.4.1 Intended Use

The frequency converter is an electronic motor controller intended for:

- Regulation of motor speed in response to system feedback or to remote commands from external controllers. A power drive system consists of the frequency converter, the motor, and equipment driven by the motor.
- System and motor status surveillance.

Depending on configuration, the frequency converter can be used in standalone applications or form part of a larger appliance or installation.

The frequency converter is allowed for use in residential, industrial, and commercial environments in accordance with local laws, standards, and emission limits as described in the design guide.

Single-phase frequency converters (S2 and S4) installed in the EU
The following limitations apply:

- Units with an input current below 16 A and an input power above 1 kW (1.5 hp) are only intended for professional use in trades, professions, or industries and not for sale to the general public.
- Designated application areas are public pools, public water supplies, agriculture, commercial buildings, and industries. All other single-phase units are only intended for use in private low-voltage systems interfacing with public supply only at a medium or high-voltage level.
- Operators of private systems must ensure that the EMC environment complies with IEC 610000-3-6 and/or the contractual agreements.

NOTICE

In a residential environment, this product can cause radio interference, in which case supplementary mitigation measures may be required.

Foreseeable misuse
Do not use the frequency converter in applications, which are non-compliant with specified operating conditions and environments. Ensure compliance with the conditions specified in *chapter 8 Specifications*.

Danfoss A/S © 10/2016 All rights reserved.

1.4.2 Features

The VLT® AQUA Drive FC 202 is designed for water and wastewater applications. The range of standard and optional features includes:

- Cascade control.
- Dry run detection.
- End-of-curve detection.
- SmartStart.
- Motor alternation.
- Deragging.
- 2-step ramps.
- Flow confirmation.
- Check valve protection.
- Safe Torque Off.
- Low flow detection.
- Pre/post lubrication.
- Pipe fill mode.
- Sleep mode.
- Real-time clock.
- User-configurable info texts.
- Warnings and alarms.
- Password protection.
- Overload protection.
- Smart logic control.
- Dual power rating (high/normal overload).

Danfoss A/S © 10/2016 All rights reserved.

1

1.4.3 Exploded Views

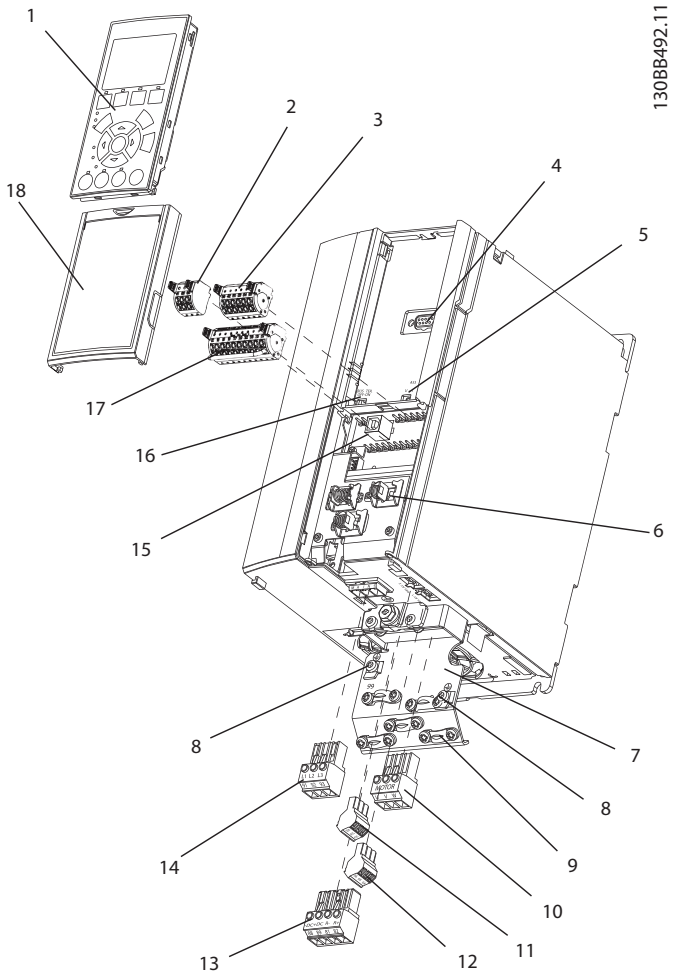

1	Local control panel (LCP)	10	Motor output terminals 96 (U), 97 (V), 98 (W)
2	RS485 fieldbus connector (+68, -69)	11	Relay 2 (01, 02, 03)
3	Analog I/O connector	12	Relay 1 (04, 05, 06)
4	LCP input plug	13	Brake (-81, +82) and load sharing (-88, +89) terminals
5	Analog switches (A53), (A54)	14	Mains input terminals 91 (L1), 92 (L2), 93 (L3)
6	Cable shield connector	15	USB connector
7	Ground termination plate	16	Fieldbus terminal switch
8	Grounding clamp (PE)	17	Digital I/O and 24 V supply
9	Shielded cable grounding clamp and strain relief	18	Cover

Illustration 1.1 Exploded View Enclosure Size A, IP20

Danfoss A/S © 10/2016 All rights reserved.

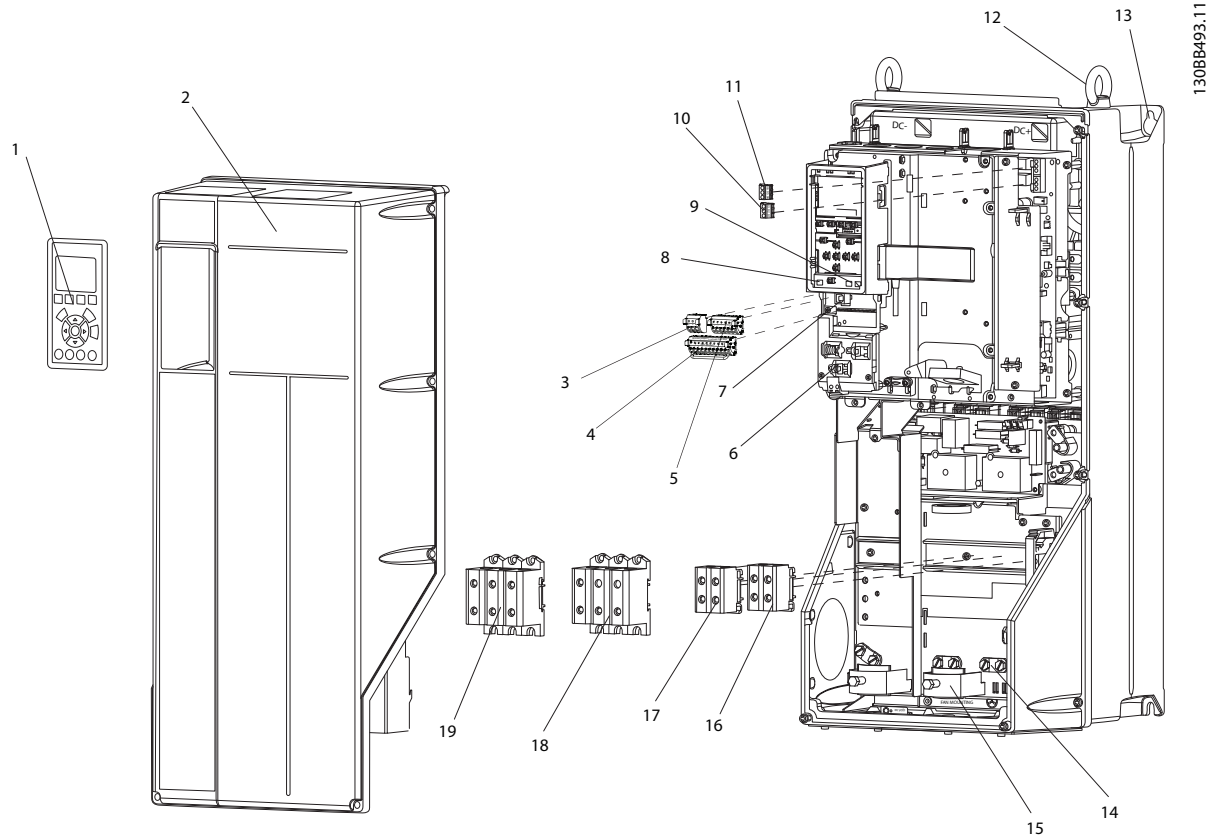

1	Local control panel (LCP)	11	Relay 2 (04, 05, 06)
2	Cover	12	Lifting ring
3	RS485 fieldbus connector	13	Mounting slot
4	Digital I/O and 24 V supply	14	Grounding clamp (PE)
5	Analog I/O connector	15	Cable shield connector
6	Cable shield connector	16	Brake terminal (-81, +82)
7	USB connector	17	Load sharing terminal (DC bus) (-88, +89)
8	Fieldbus terminal switch	18	Motor output terminals 96 (U), 97 (V), 98 (W)
9	Analog switches (A53), (A54)	19	Mains input terminals 91 (L1), 92 (L2), 93 (L3)
10	Relay 1 (01, 02, 03)	–	–

Illustration 1.2 Exploded View Enclosure Sizes B and C, IP55 and IP66

Danfoss A/S © 10/2016 All rights reserved.

1

Illustration 1.3 is a block diagram of the internal components of the frequency converter.

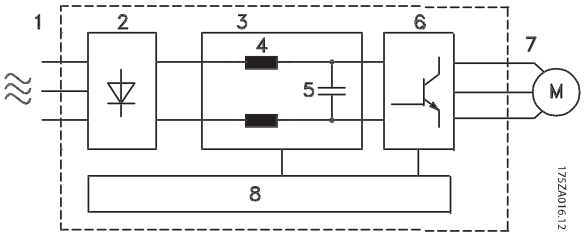

Area	Title	Functions
1	Mains input	• 3-phase AC mains supply to the frequency converter.
2	Rectifier	• The rectifier bridge converts the AC input to DC current to supply inverter power.
3	DC bus	• The intermediate DC bus circuit handles the DC current.
4	DC reactors	• Filter the intermediate DC circuit voltage. • Prove mains transient protection. • Reduce RMS current. • Raise the power factor reflected back to the line. • Reduce harmonics on the AC input.
5	Capacitor bank	• Stores the DC power. • Provides ride-through protection for short power losses.
6	Inverter	• Converts the DC into a controlled PWM AC waveform for a controlled variable output to the motor.
7	Output to motor	• Regulated 3-phase output power to the motor.
8	Control circuitry	• Input power, internal processing, output, and motor current are monitored to provide efficient operation and control. • User interface and external commands are monitored and performed. • Status output and control can be provided.

Illustration 1.3 Frequency Converter Block Diagram

1.4.4 Enclosure Sizes and Power Ratings

For enclosure sizes and power ratings of the frequency converters, refer to *chapter 8.9 Power Ratings, Weight, and Dimensions*.

1.5 Approvals and Certifications

Table 1.2 Approvals and Certifications

More approvals and certifications are available. Contact the local Danfoss partner. Frequency converters of enclosure size T7 (525–690 V) are UL certified for only 525–600 V.

The frequency converter complies with UL 508C thermal memory retention requirements. For more information, refer to the section *Motor Thermal Protection* in the product-specific *design guide*.

For compliance with the European Agreement concerning International Carriage of Dangerous Goods by Inland Waterways (ADN), refer to *ADN-compliant Installation* in the product-specific design guide.

1.6 Disposal

Do not dispose of equipment containing electrical components together with domestic waste.
Collect it separately in accordance with local and currently valid legislation.

Danfoss A/S © 10/2016 All rights reserved.

2 Safety

2.1 Safety Symbols

The following symbols are used in this guide:

⚠WARNING

Indicates a potentially hazardous situation that could result in death or serious injury.

⚠CAUTION

Indicates a potentially hazardous situation that could result in minor or moderate injury. It can also be used to alert against unsafe practices.

NOTICE

Indicates important information, including situations that can result in damage to equipment or property.

2.2 Qualified Personnel

Correct and reliable transport, storage, installation, operation, and maintenance are required for the trouble-free and safe operation of the frequency converter. Only qualified personnel are allowed to install and operate this equipment.

Qualified personnel are defined as trained staff, who are authorized to install, commission, and maintain equipment, systems, and circuits in accordance with pertinent laws and regulations. Also, the qualified personnel must be familiar with the instructions and safety measures described in this manual.

2.3 Safety Precautions

⚠WARNING

HIGH VOLTAGE

Frequency converters contain high voltage when connected to AC mains input, DC supply, or load sharing. Failure to perform installation, start-up, and maintenance by qualified personnel can result in death or serious injury.

- **Only qualified personnel must perform installation, start-up, and maintenance.**

⚠WARNING

UNINTENDED START

When the frequency converter is connected to AC mains, DC supply, or load sharing, the motor may start at any time. Unintended start during programming, service, or repair work can result in death, serious injury, or property damage. The motor can start via an external switch, a fieldbus command, an input reference signal from the LCP, or after a cleared fault condition.

To prevent unintended motor start:

- **Disconnect the frequency converter from the mains.**
- **Press [Off/Reset] on the LCP before programming parameters.**
- **Completely wire and assemble the frequency converter, motor, and any driven equipment before connecting the frequency converter to AC mains, DC supply, or load sharing.**

⚠WARNING

DISCHARGE TIME

The frequency converter contains DC-link capacitors, which can remain charged even when the frequency converter is not powered. High voltage can be present even when the warning LED indicator lights are off. Failure to wait the specified time after power has been removed before performing service or repair work can result in death or serious injury.

- **Stop the motor.**
- **Disconnect AC mains and remote DC-link power supplies, including battery back-ups, UPS, and DC-link connections to other frequency converters.**
- **Disconnect or lock PM motor.**
- **Wait for the capacitors to discharge fully. The minimum duration of waiting time is specified in *Table 2.1*.**
- **Before performing any service or repair work, use an appropriate voltage measuring device to make sure that the capacitors are fully discharged.**

Danfoss A/S © 10/2016 All rights reserved.

2

Voltage [V]	Minimum waiting time (minutes)		
	4	7	15
200–240	0.25–3.7 kW (0.34–5 hp)	–	5.5–45 kW (7.5–60 hp)
380–480	0.37–7.5 kW (0.5–10 hp)	–	11–90 kW (15–121 hp)
525–600	0.75–7.5 kW (1–10 hp)	–	11–90 kW (15–121 hp)
525–690	–	1.1–7.5 kW (1.5–10 hp)	11–90 kW (15–121 hp)

Table 2.1 Discharge Time

⚠WARNING

LEAKAGE CURRENT HAZARD

Leakage currents exceed 3.5 mA. Failure to ground the frequency converter properly can result in death or serious injury.

- **Ensure the correct grounding of the equipment by a certified electrical installer.**

⚠WARNING

EQUIPMENT HAZARD

Contact with rotating shafts and electrical equipment can result in death or serious injury.

- **Ensure that only trained and qualified personnel perform installation, start-up, and maintenance.**
- **Ensure that electrical work conforms to national and local electrical codes.**
- **Follow the procedures in this guide.**

⚠WARNING

UNINTENDED MOTOR ROTATION WINDMILLING

Unintended rotation of permanent magnet motors creates voltage and can charge the unit, resulting in death, serious injury, or equipment damage.

- **Ensure that permanent magnet motors are blocked to prevent unintended rotation.**

⚠CAUTION

INTERNAL FAILURE HAZARD

An internal failure in the frequency converter can result in serious injury when the frequency converter is not properly closed.

- **Ensure that all safety covers are in place and securely fastened before applying power.**

Danfoss A/S © 10/2016 All rights reserved.

3 Mechanical Installation

3.1 Unpacking

3.1.1 Items Supplied

Items supplied may vary according to product configuration.

- Make sure the items supplied and the information on the nameplate correspond to the order confirmation.
- Check the packaging and the frequency converter visually for damage caused by inappropriate handling during shipment. File any claim for damage with the carrier. Retain damaged parts for clarification.

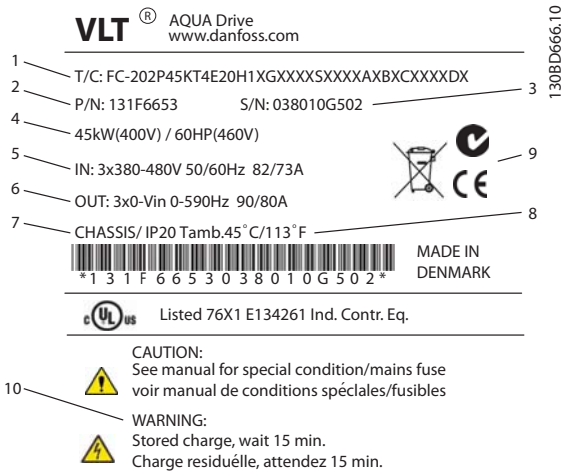

1	Type code
2	Ordering number
3	Serial number
4	Power rating
5	Input voltage, frequency, and current (at low/high voltages)
6	Output voltage, frequency, and current (at low/high voltages)
7	Enclosure type and IP rating
8	Maximum ambient temperature
9	Certifications
10	Discharge time (Warning)

Illustration 3.1 Product Nameplate (Example)

NOTICE

Do not remove the nameplate from the frequency converter. Removing the nameplate voids the warranty.

3.1.2 Storage

Ensure that the requirements for storage are fulfilled. Refer to *chapter 8.4 Ambient Conditions* for further details.

3.2 Installation Environments

NOTICE

In environments with airborne liquids, particles, or corrosive gases, ensure that the IP/type rating of the equipment matches the installation environment. Failure to meet requirements for ambient conditions can reduce the lifetime of the frequency converter. Ensure that requirements for air humidity, temperature, and altitude are met.

Vibration and shock

The frequency converter complies with requirements for units mounted on the walls and floors of production premises, and in panels bolted to walls or floors.

For detailed ambient conditions specifications, refer to *chapter 8.4 Ambient Conditions*.

Danfoss A/S © 10/2016 All rights reserved.

3

3.3 Mounting

NOTICE

Improper mounting can result in overheating and reduced performance.

Cooling

- Ensure that top and bottom clearance for air cooling is provided. See *Illustration 3.2* for clearance requirements.

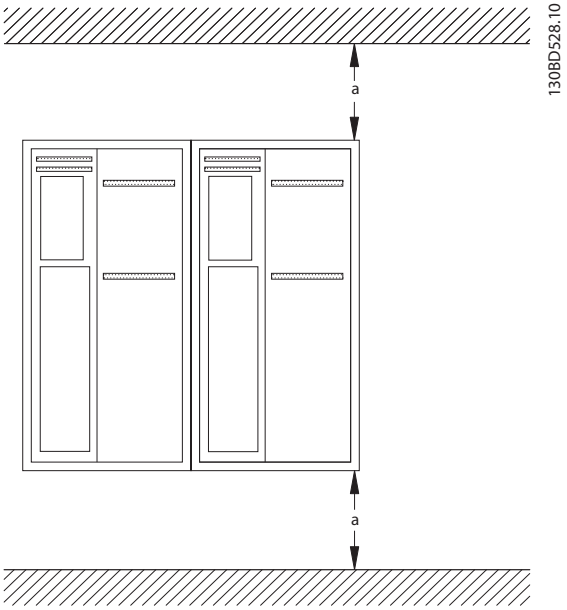

Enclosure	A2–A5	B1–B4	C1, C3	C2, C4
a [mm (in)]	100 (3.9)	200 (7.9)	200 (7.9)	225 (8.9)

Illustration 3.2 Top and Bottom Cooling Clearance

Lifting

- To determine a safe lifting method, check the weight of the unit, see *chapter 8.9 Power Ratings, Weight, and Dimensions*.
- Ensure that the lifting device is suitable for the task.
- If necessary, plan for a hoist, crane, or forklift with the appropriate rating to move the unit.
- For lifting, use the hoist rings on the unit, when provided.

Mounting

1. Ensure that the strength of the mounting location supports the unit weight. The frequency converter allows side-by-side installation.
2. Locate the unit as near to the motor as possible. Keep the motor cables as short as possible.
3. Mount the unit vertically to a solid flat surface or to the optional backplate to provide cooling airflow.
4. Use the slotted mounting holes on the unit for wall mounting, when provided.

Mounting with backplate and railings

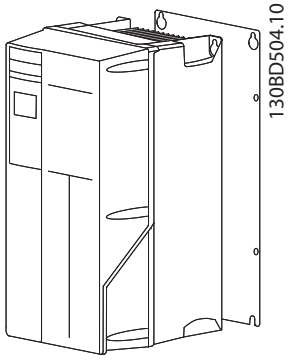

Illustration 3.3 Proper Mounting with Backplate

NOTICE

A backplate is required when mounted on railings.

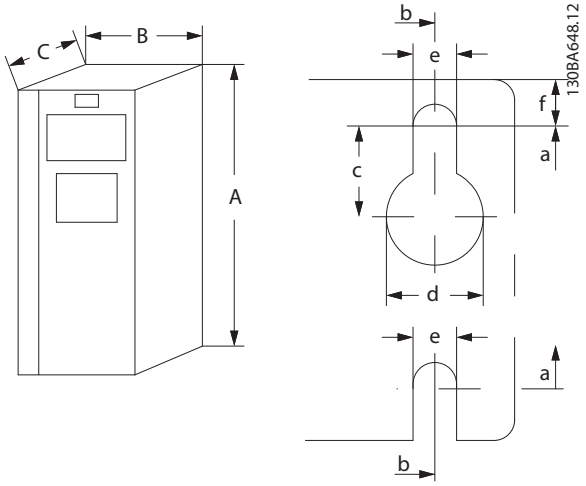

Illustration 3.4 Top and Bottom Mounting Holes (See *chapter 8.9 Power Ratings, Weight, and Dimensions*)

Danfoss A/S © 10/2016 All rights reserved.

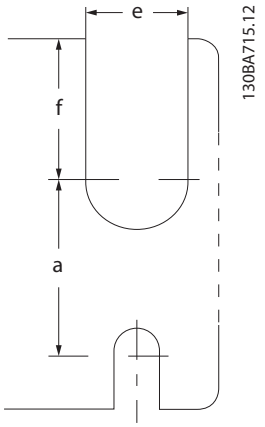

Illustration 3.5 Top and Bottom Mounting Holes (B4, C3, and C4)

Danfoss A/S © 10/2016 All rights reserved.

4 Electrical Installation

4.1 Safety Instructions

See *chapter 2 Safety* for general safety instructions.

4

⚠WARNING

INDUCED VOLTAGE

Induced voltage from output motor cables that run together can charge equipment capacitors, even with the equipment turned off and locked out. Failure to run output motor cables separately or to use shielded cables could result in death or serious injury.

- **Run output motor cables separately, or**
- **Use shielded cables.**

⚠CAUTION

SHOCK HAZARD

The frequency converter can cause a DC current in the PE conductor. Failure to follow the recommendation may lead to the RCD not providing the intended protection.

- **When a residual current-operated protective device (RCD) is used for protection against electrical shock, only an RCD of Type B is allowed on the supply side.**

Overcurrent protection

- Extra protective equipment, such as short-circuit protection or motor thermal protection between frequency converter and motor, is required for applications with multiple motors.
- Input fusing is required to provide short circuit and overcurrent protection. If not factory-supplied, the installer must provide fuses. See maximum fuse ratings in *chapter 8.8 Fuses and Circuit Breakers*.

Wire type and ratings

- All wiring must comply with local and national regulations regarding cross-section and ambient temperature requirements.
- Power connection wire recommendation: Minimum 75 °C (167 °F) rated copper wire.

See *chapter 8.1 Electrical Data* and *chapter 8.5 Cable Specifications* for recommended wire sizes and types.

4.2 EMC-compliant Installation

To obtain an EMC-compliant installation, follow the instructions provided in *chapter 4.3 Grounding*, *chapter 4.4 Wiring Schematic*, *chapter 4.6 Motor Connection*, and *chapter 4.8 Control Wiring*.

4.3 Grounding

⚠WARNING

LEAKAGE CURRENT HAZARD

Leakage currents exceed 3.5 mA. Failure to ground the frequency converter properly could result in death or serious injury.

- **Ensure the correct grounding of the equipment by a certified electrical installer.**

For electrical safety

- Ground the frequency converter in accordance with applicable standards and directives.
- Use a dedicated ground wire for input power, motor power, and control wiring.
- Do not ground 1 frequency converter to another in a daisy-chain fashion (see *Illustration 4.1*).
- Keep the ground wire connections as short as possible.
- Follow motor manufacturer wiring requirements.
- Minimum cable cross-section: 10 mm^2 (7 AWG). Separately terminate 2 ground wires, both complying with the dimension requirements.

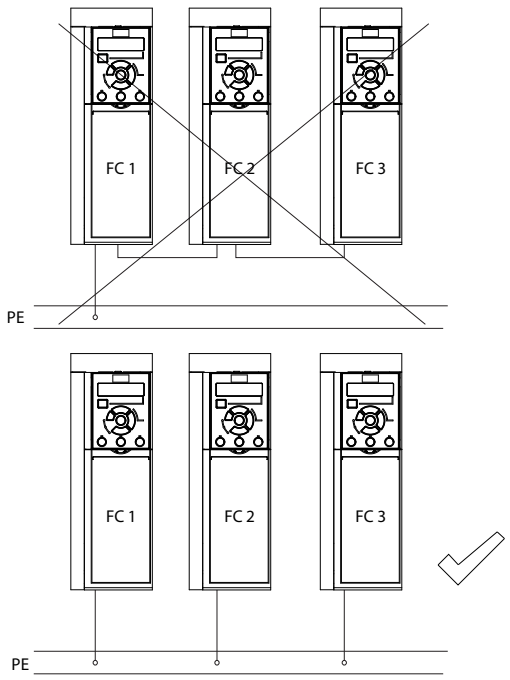

Illustration 4.1 Grounding Principle

Danfoss A/S © 10/2016 All rights reserved.

For EMC-compliant installation

- Establish electrical contact between the cable shield and the frequency converter enclosure by using metal cable glands or by using the clamps provided on the equipment (see *chapter 4.6 Motor Connection*).
- Use high-strand wire to reduce burst transient.
- Do not use pigtails.

NOTICE

POTENTIAL EQUALIZATION

Risk of burst transient when the ground potential between the frequency converter and the control system is different. Install equalizing cables between the system components. Recommended cable cross-section: 16 mm^2 (6 AWG).

Danfoss A/S © 10/2016 All rights reserved.

4

4.4 Wiring Schematic

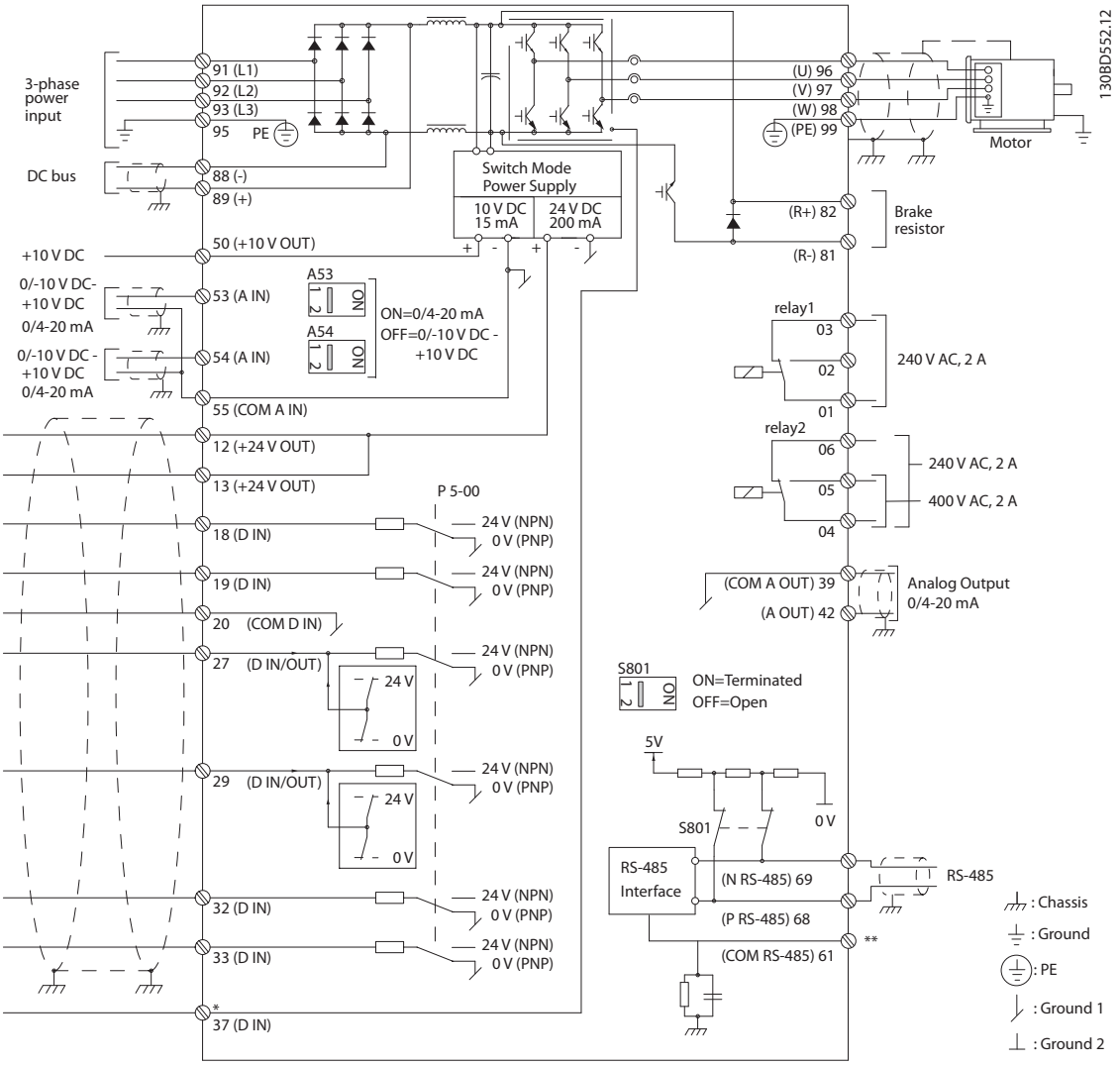

Illustration 4.2 Basic Wiring Schematic

A=Analog, D=Digital

*Terminal 37 (optional) is used for Safe Torque Off. For Safe Torque Off installation instructions, refer to the *VLT® Frequency Converters - Safe Torque Off Operating Guide*.

**Do not connect cable shield.

NOTICE

Actual configurations vary with unit types and optional equipment.

Danfoss A/S © 10/2016 All rights reserved.

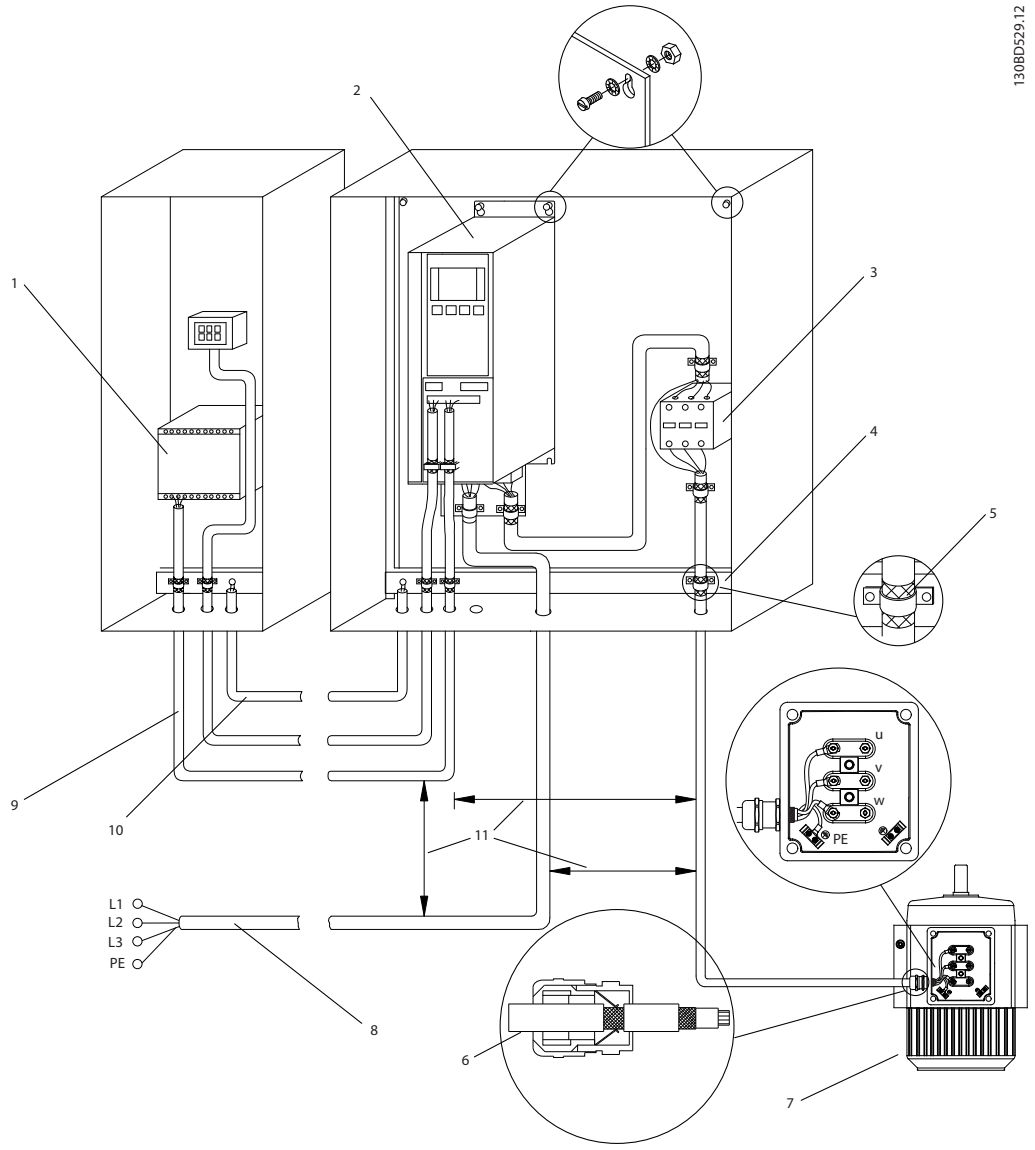

1	PLC	6	Cable gland
2	Frequency converter	7	Motor, 3-phase, and PE
3	Output contactor	8	Mains, 3-phase, and reinforced PE
4	Grounding rail (PE)	9	Control wiring
5	Cable insulation (stripped)	10	Equalizing minimum 16 mm^2 (5 AWG)

Illustration 4.3 EMC-compliant Connection of Mains

NOTICE

EMC INTERFERENCE

Use shielded cables for motor and control wiring and separate cables for input power, motor wiring, and control wiring. Failure to isolate power, motor, and control cables can result in unintended behavior or reduced performance. Minimum clearance requirement between power, motor, and control cables is 200 mm (7.9 in).

Danfoss A/S © 10/2016 All rights reserved.

4

4.5 Access

1. Remove the cover with a screwdriver (See *Illustration 4.4*) or by loosening the attaching screws (See *Illustration 4.5*).

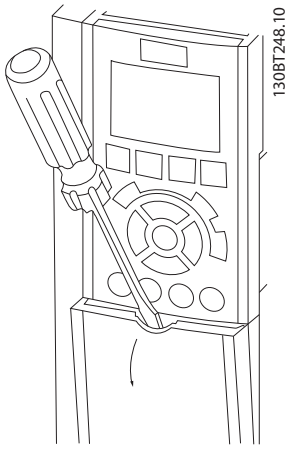

Illustration 4.4 Access to Wiring for IP20 and IP21 Enclosures

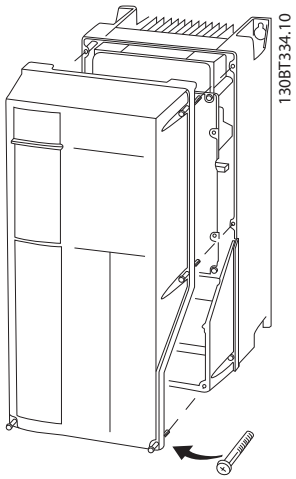

Illustration 4.5 Access to Wiring for IP55 and IP66 Enclosures

Tighten the cover screws using the tightening torques specified in *Table 4.1*.

Enclosure	IP55	IP66
A4/A5	2 (18)	2 (18)
B1/B2	2.2 (19)	2.2 (19)
C1/C2	2.2 (19)	2.2 (19)
No screws to tighten for A2/A3/B3/B4/C3/C4.		

Table 4.1 Tightening Torques for Covers [N•m (in-lb)]

4.6 Motor Connection

⚠WARNING

INDUCED VOLTAGE

Induced voltage from output motor cables that run together can charge equipment capacitors, even with the equipment turned off and locked out. Failure to run output motor cables separately or use shielded cables could result in death or serious injury.

- Run output motor cables separately, or
- Use shielded cables.
- Comply with local and national electrical codes for cable sizes. For maximum wire sizes, see *chapter 8.1 Electrical Data*.
- Follow motor manufacturer wiring requirements.
- Motor wiring knockouts or access panels are provided at the base of IP21 (NEMA1/12) and higher units.
- Do not wire a starting or pole-changing device (for example Dahlander motor or slip ring asynchronous motor) between the frequency converter and the motor.

Procedure

1. Strip a section of the outer cable insulation.
2. Position the stripped wire under the cable clamp to establish mechanical fixation and electrical contact between the cable shield and ground.
3. Connect the ground wire to the nearest grounding terminal in accordance with the grounding instructions provided in *chapter 4.3 Grounding*, see *Illustration 4.6*.
4. Connect the 3-phase motor wiring to terminals 96 (U), 97 (V), and 98 (W), see *Illustration 4.6*.
5. Tighten the terminals in accordance with the information provided in *chapter 8.7 Connection Tightening Torques*.

Danfoss A/S © 10/2016 All rights reserved.

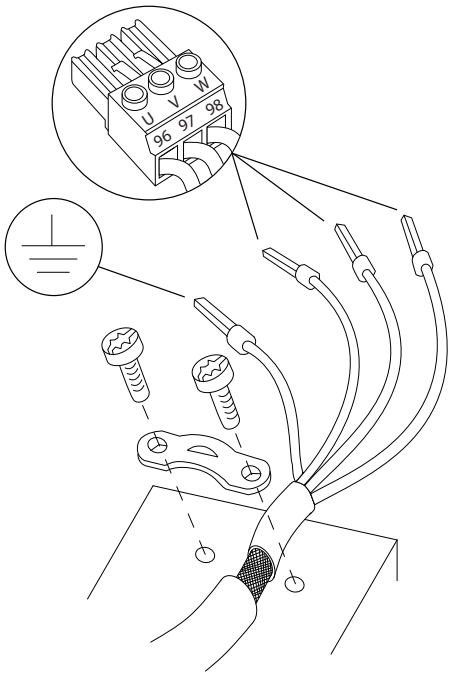

130BD531.10

Illustration 4.6 Motor Connection

Illustration 4.7 shows mains input, motor, and grounding for basic frequency converters. Actual configurations vary with unit types and optional equipment.

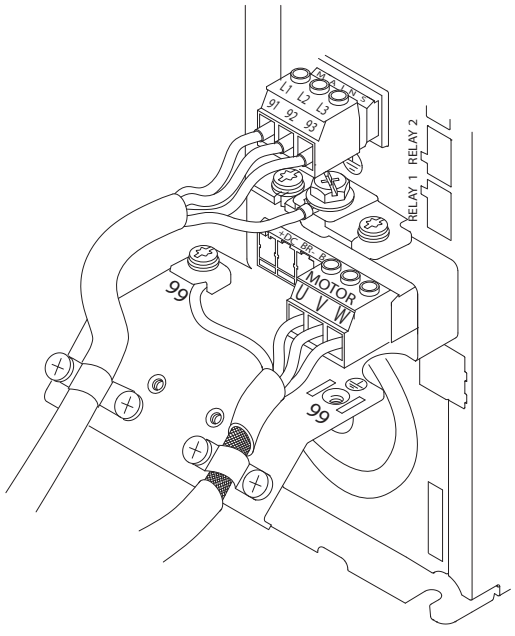

130BF948.10

Illustration 4.7 Example of Motor, Mains, and Ground Wiring

4.7 AC Mains Connection

- Size the wiring based on the input current of the frequency converter. For maximum wire sizes, see *chapter 8.1 Electrical Data*.
- Comply with local and national electrical codes for cable sizes.

Procedure

1. Connect the 3-phase AC input power wiring to terminals L1, L2, and L3 (see *Illustration 4.7*).
2. Depending on the configuration of the equipment, connect the input power to the mains input terminals or the input disconnect.
3. Ground the cable in accordance with the grounding instructions provided in *chapter 4.3 Grounding*.
4. When supplied from an isolated mains source (IT mains or floating delta) or TT/TN-S mains with a grounded leg (grounded delta), ensure that *parameter 14-50 RFI Filter* is set to *[0] Off* to avoid damage to the DC link and to reduce ground capacity currents in accordance with IEC 61800-3.

4.8 Control Wiring

- Isolate the control wiring from the high-power components in the frequency converter.
- When the frequency converter is connected to a thermistor, ensure that the thermistor control wiring is shielded and reinforced/double insulated. A 24 V DC supply voltage is recommended. See *Illustration 4.8*.

4.8.1 Control Terminal Types

Illustration 4.8 and *Illustration 4.9* show the removable frequency converter connectors. Terminal functions and default settings are summarized in *Table 4.2*.

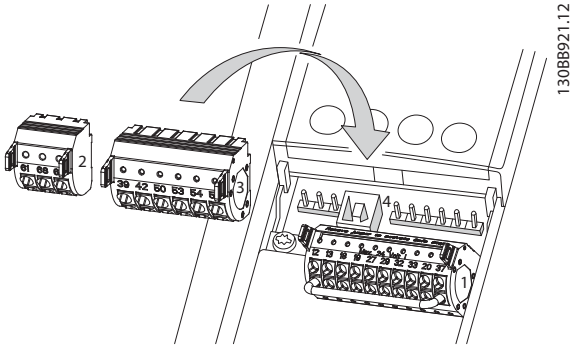

130BB921.12

Illustration 4.8 Control Terminal Locations

Danfoss A/S © 10/2016 All rights reserved.

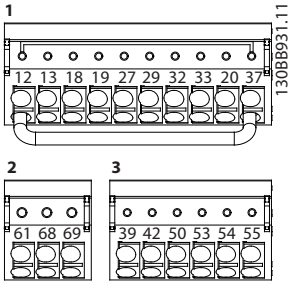

Illustration 4.9 Terminal Numbers

- **Connector 1** provides:
  - 4 programmable digital inputs terminals.
  - 2 extra digital terminals programmable as either input or output.
  - 24 V DC terminal supply voltage.
  - Optional customer supplied 24 V DC voltage.
- **Connector 2** terminals (+)68 and (-)69 are for an RS485 serial communication connection.
- **Connector 3** provides:
  - 2 analog inputs.
  - 1 analog output.
  - 10 V DC supply voltage.
  - Commons for the inputs and output.
- **Connector 4** is a USB port available for use with the MCT 10 Set-up Software.

Terminal description			
Terminal	**Parameter**	**Default setting**	**Description**
Digital Inputs/Outputs			
12, 13	–	+24 V DC	24 V DC supply voltage for digital inputs and external transducers. Maximum output current 200 mA for all 24 V loads.

Terminal description			
Terminal	**Parameter**	**Default setting**	**Description**
18	*Parameter 5 -10 Termina l 18 Digital Input*	*[8] Start*	Digital inputs.
19	*Parameter 5 -11 Termina l 19 Digital Input*	*[0] No operation*	
32	*Parameter 5 -14 Termina l 32 Digital Input*	*[0] No operation*	
33	*Parameter 5 -15 Termina l 33 Digital Input*	*[0] No operation*	
27	*Parameter 5 -12 Termina l 27 Digital Input*	*[2] Coast inverse*	For digital input or output. Default setting is input.
29	*Parameter 5 -13 Termina l 29 Digital Input*	*[14] Jog*	
20	–	–	Common for digital inputs and 0 V potential for 24 V supply.
37	–	Safe Torque Off (STO)	Safe input (optional). Used for STO.
Analog Inputs/Outputs			
39	–	–	Common for analog output
42	*Parameter 6 -50 Termina l 42 Output*	Speed 0 – High Limit	Programmable analog output. 0–20 mA or 4–20 mA at a maximum of 500 Ω
50	–	+10 V DC	10 V DC analog supply voltage for potenti-ometer or thermistor. 15 mA maximum
53	*Parameter group 6-1* Analog Input 53*	Reference	Analog input. For voltage or current. Switches A53 and A54 select mA or V.
54	*Parameter group 6-2* Analog Input 54*	Feedback	
55	–	–	Common for analog input
Serial Communication			

Danfoss A/S © 10/2016 All rights reserved.

Terminal description			
Terminal	Parameter	Default setting	Description
61	–	–	Integrated RC-Filter for cable shield. ONLY for connecting the shield if EMC problems occur.
68 (+)	*Parameter group 8-3* FC Port Settings*	–	RS485 Interface. A control card switch is provided for termination resistance.
69 (-)	*Parameter group 8-3* FC Port Settings*	–	
Relays			
01, 02, 03	*Parameter 5 -40 Function Relay* [0]	*[9] Alarm*	Form C relay output. For AC or DC voltage and resistive or inductive loads.
04, 05, 06	*Parameter 5 -40 Function Relay* [1]	*[5] Running*	

Table 4.2 Terminal Description

Extra terminals

- 2 form C relay outputs. Location of the outputs depends on frequency converter configuration.
- Terminals on built-in optional equipment. See the manual provided with the equipment option.

4.8.2 Wiring to Control Terminals

Control terminal connectors can be unplugged from the frequency converter for ease of installation, as shown in *Illustration 4.10*.

NOTICE

Keep control wires as short as possible and separate from high-power cables to minimize interference.

1. Open the contact by inserting a small screwdriver into the slot above the contact and push the screwdriver slightly upwards.

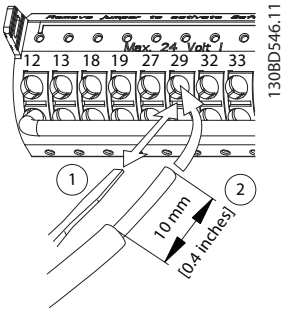

Illustration 4.10 Connecting Control Wires

2. Insert the bare control wire into the contact.
3. Remove the screwdriver to fasten the control wire into the contact.
4. Ensure that the contact is firmly established and not loose. Loose control wiring can be the source of equipment faults or less than optimal operation.

See *chapter 8.5 Cable Specifications* for control terminal wiring sizes and *chapter 6 Application Set-up Examples* for typical control wiring connections.

4.8.3 Enabling Motor Operation (Terminal 27)

A jumper wire is required between terminal 12 (or 13) and terminal 27 for the frequency converter to operate when using factory default programming values.

- Digital input terminal 27 is designed to receive 24 V DC external interlock command.
- When no interlock device is used, wire a jumper between control terminal 12 (recommended) or 13 to terminal 27. The jumper provides an internal 24 V signal on terminal 27.
- When the status line at the bottom of the LCP reads *AUTO REMOTE COAST*, it indicates that the unit is ready to operate but is missing an input signal on terminal 27.
- When factory installed optional equipment is wired to terminal 27, do not remove that wiring.

Danfoss A/S © 10/2016 All rights reserved.

4

4.8.4 Voltage/Current Input Selection (Switches)

The analog input terminals 53 and 54 allow setting of input signal to voltage (0–10 V) or current (0/4–20 mA).

Default parameter setting

- Terminal 53: Speed reference signal in open loop (see *parameter 16-61 Terminal 53 Switch Setting*).
- Terminal 54: Feedback signal in closed loop (see *parameter 16-63 Terminal 54 Switch Setting*).

NOTICE

Disconnect power to the frequency converter before changing switch positions.

1. Remove the LCP (see *Illustration 4.11*).
2. Remove any optional equipment covering the switches.
3. Set switches A53 and A54 to select the signal type. U selects voltage, I selects current.

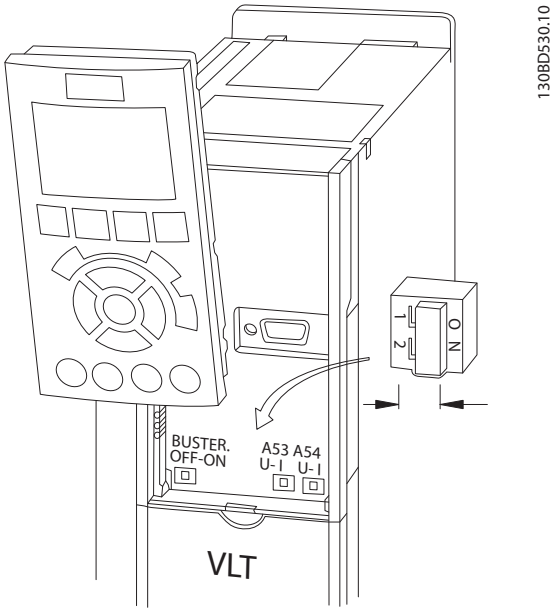

Illustration 4.11 Location of Terminal 53 and 54 Switches

To run STO, more wiring for the frequency converter is required. Refer to *VLT® Frequency Converters Safe Torque Off Operating Guide* for further information.

4.8.5 RS485 Serial Communication

Connect RS485 serial communication wiring to terminals (+)68 and (-)69.

- Use shielded serial communication cable (recommended).
- See *chapter 4.3 Grounding* for proper grounding.

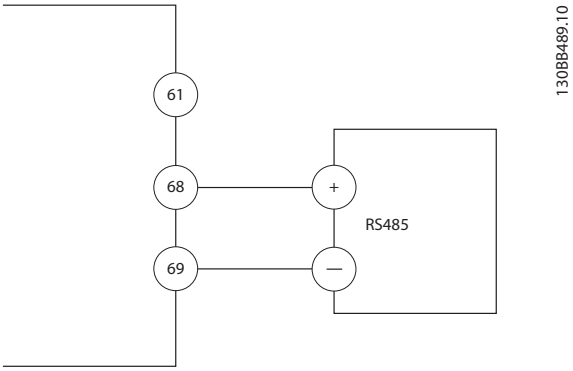

Illustration 4.12 Serial Communication Wiring Diagram

For basic serial communication set-up, select the following:

1. Protocol type in *parameter 8-30 Protocol*.
2. Frequency converter address in *parameter 8-31 Address*.
3. Baud rate in *parameter 8-32 Baud Rate*.

- 2 communication protocols are internal to the frequency converter:
  - Danfoss FC.
  - Modbus RTU.
- Functions can be programmed remotely using the protocol software and RS485 connection or in *parameter group 8-** Communications and Options*.
- Selecting a specific communication protocol changes various default parameter settings to match that protocol's specifications and makes more protocol-specific parameters available.
- Option cards for the frequency converter are available to provide extra communication protocols. See the option card documentation for installation and operation instructions.

Danfoss A/S © 10/2016 All rights reserved.

4.9 Installation Check List

Before completing installation of the unit, inspect the entire installation as detailed in *Table 4.3*. Check and mark the items when completed.

Inspect for	Description	☑
Auxiliary equipment	• Look for auxiliary equipment, switches, disconnects, or input fuses/circuit breakers, residing on the input power side of the frequency converter, or output side to the motor. Ensure that they are ready for full-speed operation. • Check the function and installation of any sensors used for feedback to the frequency converter. • Remove any power factor correction caps on the motor. • Adjust any power factor correction caps on the mains side and ensure that they are dampened.	
Cable routing	• Ensure that the motor wiring and control wiring are separated, shielded, or in 3 separate metallic conduits for high frequency interference isolation.	
Control wiring	• Check for broken or damaged wires and loose connections. • Check that the control wiring is isolated from power and motor wiring for noise immunity. • Check the voltage source of the signals, if necessary. The use of shielded cable or twisted pair is recommended. Ensure that the shield is terminated correctly.	
Cooling clearance	• Ensure that the top and bottom clearance is adequate to ensure proper airflow for cooling, see *chapter 3.3 Mounting*.	
Ambient conditions	• Check that requirements for ambient conditions are met.	
Fusing and circuit breakers	• Check for proper fusing or circuit breakers. • Check that all fuses are inserted firmly and are in operational condition, and that all circuit breakers are in the open position.	
Grounding	• Check for sufficient ground connections and ensure that those connections are tight and free of oxidation. • Grounding to conduit, or mounting the back panel to a metal surface, is not a suitable grounding.	
Input and output power wiring	• Check for loose connections. • Check that the motor and mains cables are in separate conduit or separated shielded cables.	
Panel interior	• Inspect that the unit interior is free of dirt, metal chips, moisture, and corrosion. • Check that the unit is mounted on an unpainted metal surface.	
Switches	• Ensure that all switch and disconnect settings are in the proper positions.	
Vibration	• Check that the unit is mounted solidly, or that shock mounts are used, as necessary. • Check for an unusual amount of vibration.	

Table 4.3 Installation Check List

⚠CAUTION

POTENTIAL HAZARD IN THE EVENT OF INTERNAL FAILURE

Risk of personal injury if the frequency converter is not properly closed.

- **Before applying power, ensure that all safety covers are in place and securely fastened.**

Danfoss A/S © 10/2016 All rights reserved.

5 Commissioning

5.1 Safety Instructions

See *chapter 2 Safety* for general safety instructions.

⚠WARNING

HIGH VOLTAGE

Frequency converters contain high voltage when connected to AC mains input power. Failure to perform installation, start-up, and maintenance by qualified personnel could result in death or serious injury.

- **Installation, start-up, and maintenance must be performed by qualified personnel only.**

Before applying power:

1. Close the cover properly.
2. Check that all cable glands are firmly tightened.
3. Ensure that input power to the unit is off and locked out. Do not rely on the frequency converter disconnect switches for input power isolation.
4. Verify that there is no voltage on input terminals L1 (91), L2 (92), and L3 (93), phase-to-phase, and phase-to-ground.
5. Verify that there is no voltage on output terminals 96 (U), 97 (V), and 98 (W), phase-to-phase, and phase-to-ground.
6. Confirm continuity of the motor by measuring Ω values on U–V (96–97), V–W (97–98), and W–U (98–96).
7. Check for proper grounding of the frequency converter and the motor.
8. Inspect the frequency converter for loose connections on the terminals.
9. Confirm that the supply voltage matches the voltage of the frequency converter and the motor.

5.2 Applying Power

Apply power to the frequency converter using the following steps:

1. Confirm that the input voltage is balanced within 3%. If not, correct the input voltage imbalance before proceeding. Repeat this procedure after the voltage correction.
2. Ensure that any optional equipment wiring matches the installation application.
3. Ensure that all operator devices are in the OFF position. Panel doors must be closed and covers securely fastened.
4. Apply power to the unit. Do not start the frequency converter now. For units with a disconnect switch, turn it to the ON position to apply power to the frequency converter.

5.3 Local Control Panel Operation

The local control panel (LCP) is the combined display and keypad on the front of the unit.

The LCP has several user functions:

- Start, stop, and control speed when in local control.
- Show operational data, status, warnings, and cautions.
- Program frequency converter functions.
- Manually reset the frequency converter after a fault when auto reset is inactive.

An optional numeric LCP (NLCP) is also available. The NLCP operates in a manner similar to the LCP. See the product relevant *programming guide* for details on use of the NLCP.

NOTICE

For commissioning via PC, install the MCT 10 Set-up Software. The software is available for download (basic version) or for ordering (advanced version, code number 130B1000). For more information and downloads, see *www.danfoss.com/BusinessAreas/DrivesSolutions/Software+MCT10/MCT10+Downloads.htm*.

5.3.1 Graphic Local Control Panel Layout

The graphic local control panel (GLCP) is divided into 4 functional groups (see *Illustration 5.1*).

A. Display area.

B. Display menu keys.

C. Navigation keys and indicator lights.

D. Operation keys and reset.

Danfoss A/S © 10/2016 All rights reserved.

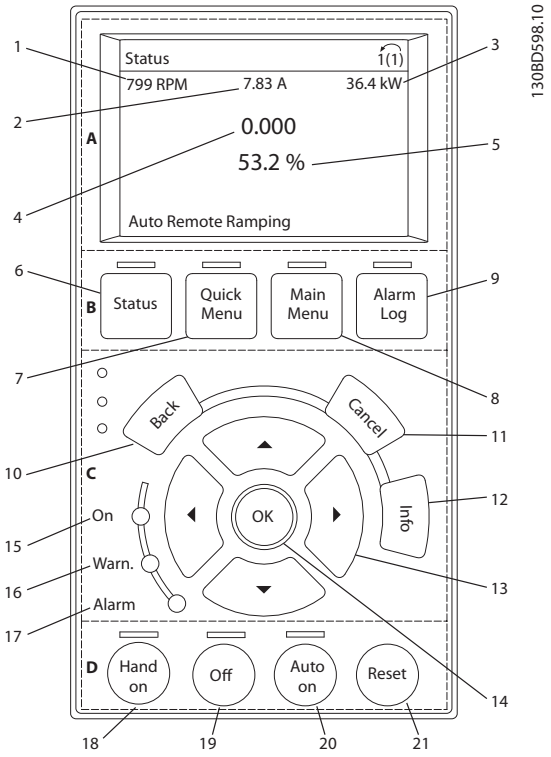

Illustration 5.1 GLCP

A. Display area

The display area is activated when the frequency converter receives power from the mains voltage, a DC bus terminal, or a 24 V DC external supply.

The information shown on the LCP can be customized for user applications. Select options in the *Quick Menu Q3-13 Display Settings*.

Display	Parameter	Default setting
1	*Parameter 0-20 Display Line 1.1 Small*	*[1617] Speed [RPM]*
2	*Parameter 0-21 Display Line 1.2 Small*	*[1614] Motor Current*
3	*Parameter 0-22 Display Line 1.3 Small*	*[1610] Power [kW]*
4	*Parameter 0-23 Display Line 2 Large*	*[1613] Frequency*
5	*Parameter 0-24 Display Line 3 Large*	*[1602] Reference %*

Table 5.1 Legend to *Illustration 5.1*, Display Area

B. Display menu keys

Menu keys are used for menu access for parameter set-up, toggling through status display modes during normal operation, and viewing fault log data.

	Key	Function
6	Status	Shows operational information.
7	Quick Menu	Allows access to programming parameters for initial set-up instructions and many detailed application instructions.
8	Main Menu	Allows access to all programming parameters.
9	Alarm Log	Shows a list of current warnings, the last 10 alarms, and the maintenance log.

Table 5.2 Legend to *Illustration 5.1*, Display Menu Keys

C. Navigation keys and indicator lights (LEDs)

Navigation keys are used for programming functions and moving the display cursor. The navigation keys also provide speed control in local operation. There are also 3 frequency converter status indicator lights in this area.

	Key	Function
10	Back	Reverts to the previous step or list in the menu structure.
11	Cancel	Cancels the last change or command as long as the display mode is not changed.
12	Info	Press for a definition of the function being showed.
13	Navigation Keys	Press the navigation keys to move between items in the menu.
14	OK	Press to access parameter groups or to enable a selection.

Table 5.3 Legend to *Illustration 5.1*, Navigation Keys

	Indicator	Color	Function
15	On	Green	The ON indicator light activates when the frequency converter receives power from the mains voltage, a DC bus terminal, or a 24 V external supply.
16	Warn	Yellow	When warning conditions are met, the yellow WARN indicator light comes on and text appears in the display area identifying the problem.
17	Alarm	Red	A fault condition causes the red alarm LED to flash and an alarm text is shown.

Table 5.4 Legend to *Illustration 5.1*, Indicator Lights (LEDs)

5

Danfoss A/S © 10/2016 All rights reserved.

D. Operation keys and reset
Operation keys are at the bottom of the LCP.

	Key	Function
18	[Hand On]	Starts the frequency converter in local control. • An external stop signal by control input or serial communication overrides the local hand on.
19	Off	Stops the motor but does not remove power to the frequency converter.
20	[Auto On]	Puts the system in remote operational mode. • Responds to an external start command by control terminals or serial communication.
21	Reset	Resets the frequency converter manually after a fault has been cleared.

Table 5.5 Legend to *Illustration 5.1*, Operation Keys and Reset

NOTICE

The display contrast can be adjusted by pressing [Status] and the [▲]/[▼] keys.

5.3.2 Parameter Settings

Establishing the correct programming for applications often requires setting functions in several related parameters. Details for parameters are provided in *chapter 9.2 Parameter Menu Structure*.

Programming data is stored internally in the frequency converter.

- For back-up, upload data into the LCP memory.
- To download data to another frequency converter, connect the LCP to that unit and download the stored settings.
- Restoring factory default settings does not change data stored in the LCP memory.

5.3.3 Uploading/Downloading Data to/from the LCP

1. Press [Off] to stop the motor before uploading or downloading data.
2. Press [Main Menu], select *parameter 0-50 LCP Copy* and press [OK].
3. Select *[1] All to LCP* to upload data to the LCP or select *[2] All from LCP* to download data from the LCP.
4. Press [OK]. A progress bar shows the uploading or downloading progress.
5. Press [Hand On] or [Auto On] to return to normal operation.

5.3.4 Changing Parameter Settings

Access and change parameter settings from the *Quick Menu* or from the *Main Menu*. The *Quick Menu* only gives access to a limited number of parameters.

1. Press [Quick Menu] or [Main Menu] on the LCP.
2. Press [▲] [▼] to browse through the parameter groups, press [OK] to select a parameter group.
3. Press [▲] [▼] to browse through the parameters, press [OK] to select a parameter.
4. Press [▲] [▼] to change the value of a parameter setting.
5. Press [◄] [►] to shift digit when a decimal parameter is in the editing state.
6. Press [OK] to accept the change.
7. Press either [Back] twice to enter *Status*, or press [Main Menu] once to enter the *Main Menu*.

View changes
Quick Menu Q5 - Changes Made lists all parameters changed from default settings.

- The list only shows parameters, which are changed in the current edit set-up.
- Parameters, which were reset to default values, are not listed.
- The message *Empty* indicates that no parameters are changed.

5.3.5 Restoring Default Settings

NOTICE

Risk of losing programming, motor data, localization, and monitoring records by restoration of default settings. To provide a back-up, upload data to the LCP before initialization.

Restoring the default parameter settings is done by initialization of the frequency converter. Initialization is carried out through *parameter 14-22 Operation Mode* (recommended) or manually.

- Initialization using *parameter 14-22 Operation Mode* does not reset frequency converter settings such as hours run, serial communication selections, personal menu settings, fault log, alarm log, and other monitoring functions.
- Manual initialization erases all motor, programming, localization, and monitoring data and restores factory default settings.

Danfoss A/S © 10/2016 All rights reserved.

Recommended initialization procedure via *parameter 14-22 Operation Mode*

1. Press [Main Menu] twice to access parameters.
2. Scroll to *parameter 14-22 Operation Mode* and press [OK].
3. Scroll to *[2] initialization* and press [OK].
4. Remove power to the unit and wait for the display to turn off.
5. Apply power to the unit.

Default parameter settings are restored during start-up. The start-up may take slightly longer than normal.

6. *Alarm 80, Drive initialized to default value* is shown.
7. Press [Reset] to return to operating mode.

Manual initialization procedure

1. Remove power to the unit and wait for the display to turn off.
2. Press and hold [Status], [Main Menu], and [OK] at the same time while applying power to the unit (approximately 5 s or until audible click and fan starts).

Factory default parameter settings are restored during start-up. The start-up may take slightly longer than usual.

Manual initialization does not reset the following frequency converter information:

- *Parameter 15-00 Operating hours*.
- *Parameter 15-03 Power Up's*.
- *Parameter 15-04 Over Temp's*.
- *Parameter 15-05 Over Volt's*.

5.4 Basic Programming

5.4.1 Commissioning with SmartStart

The SmartStart wizard enables fast configuration of basic motor and application parameters.

- SmartStart starts automatically at first power-up or after initialization of the frequency converter.
- Follow the on-screen instructions to complete the commissioning of the frequency converter. Always reactivate SmartStart by selecting *Quick Menu Q4 - SmartStart*.
- For commissioning without use of the SmartStart wizard, refer to *chapter 5.4.2 Commissioning via [Main Menu]* or the programming guide.

NOTICE

Motor data is required for the SmartStart set-up. The required data is normally available on the motor nameplate.

The SmartStart configures the frequency converter in 3 phases, each consisting of several steps, see *Table 5.6*.

Phase		Action
1	Basic Programming	Perform the programming
2	Application Section	Select and program appropriate application: • Single pump/motor. • Motor alternation. • Basic cascade control. • Master/slave.
3	Water and Pump Features	Go to water and pump dedicated parameters.

Table 5.6 SmartStart, Setup in 3 Phases

5.4.2 Commissioning via [Main Menu]

Recommended parameter settings are intended for start-up and check-out purposes. Application settings may vary.

Enter data with power ON, but before operating the frequency converter.

1. Press [Main Menu] on the LCP.
2. Press the navigation keys to scroll to *parameter group 0-** Operation/Display* and press [OK].

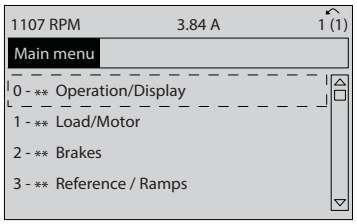

Illustration 5.2 Main Menu

3. Press the navigation keys to scroll to *parameter group 0-0* Basic Settings* and press [OK].

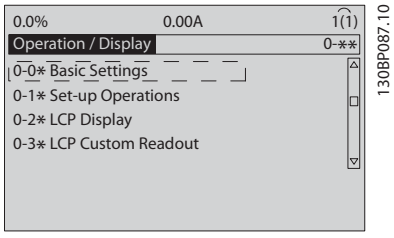

Illustration 5.3 Operation/Display

5

Danfoss A/S © 10/2016 All rights reserved.

4. Press the navigation keys to scroll to *parameter 0-03 Regional Settings* and press [OK].

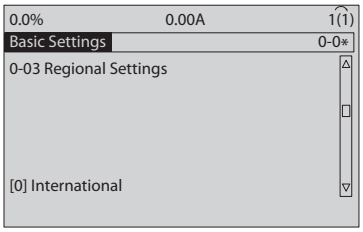

Illustration 5.4 Basic Settings

5. Press the navigation keys to select *[0] International* or *[1] North America* as appropriate and press [OK]. (This changes the default settings for several basic parameters).
6. Press [Main Menu] on the LCP.
7. Press the navigation keys to scroll to *parameter 0-01 Language*.
8. Select the language and press [OK].
9. If a jumper wire is in place between control terminals 12 and 27, leave *parameter 5-12 Terminal 27 Digital Input* at factory default. Otherwise, select *[0] No operation* in *parameter 5-12 Terminal 27 Digital Input*.
10. Make the application-specific settings in the following parameters:
    - 10a *Parameter 3-02 Minimum Reference*.
    - 10b *Parameter 3-03 Maximum Reference*.
    - 10c *Parameter 3-41 Ramp 1 Ramp Up Time*.
    - 10d *Parameter 3-42 Ramp 1 Ramp Down Time*.
    - 10e *Parameter 3-13 Reference Site*. Linked to Hand/Auto Local Remote.

5.4.3 Asynchronous Motor Set-up

Enter the following motor data. Find the information on the motor nameplate.

1. *Parameter 1-20 Motor Power [kW]* or *parameter 1-21 Motor Power [HP]*.
2. *Parameter 1-22 Motor Voltage*.
3. *Parameter 1-23 Motor Frequency*.
4. *Parameter 1-24 Motor Current*.
5. *Parameter 1-25 Motor Nominal Speed*.

For optimum performance in VVC+ mode, extra motor data is required to set up the following parameters. Find the data in the motor datasheet (this data is typically not available on the motor nameplate). Run a complete automatic motor adaptation (AMA) using *parameter 1-29 Automatic Motor Adaptation (AMA) [1] Enable Complete AMA* or enter the parameters manually. *Parameter 1-36 Iron Loss Resistance (Rfe)* is always entered manually.

6. *Parameter 1-30 Stator Resistance (Rs)*.
7. *Parameter 1-31 Rotor Resistance (Rr)*.
8. *Parameter 1-33 Stator Leakage Reactance (X1)*.
9. *Parameter 1-34 Rotor Leakage Reactance (X2)*.
10. *Parameter 1-35 Main Reactance (Xh)*.
11. *Parameter 1-36 Iron Loss Resistance (Rfe)*.

Application-specific adjustment when running VVC+
VVC+ is the most robust control mode. In most situations, it provides optimum performance without further adjustments. Run a complete AMA for best performance.

5.4.4 PM Motor Setup in VVC+

NOTICE

Only use permanent magnet (PM) motor with fans and pumps.

Initial programming steps

1. Activate PM motor operation
   Parameter 1-10 Motor Construction, select *[1] PM, non salient SPM.*
2. Set *parameter 0-02 Motor Speed Unit* to *[0] RPM*.

Programming motor data
After selecting PM motor in *parameter 1-10 Motor Construction*, the PM motor-related parameters in parameter groups *1-2* Motor Data*, *1-3* Adv. Motor Data* and *1-4** are active.
The necessary data can be found on the motor nameplate and in the motor datasheet.

Program the following parameters in the listed order:

1. *Parameter 1-24 Motor Current*.
2. *Parameter 1-26 Motor Cont. Rated Torque*.
3. *Parameter 1-25 Motor Nominal Speed*.
4. *Parameter 1-39 Motor Poles*.
5. *Parameter 1-30 Stator Resistance (Rs)*.
   Enter line to common stator winding resistance (Rs). If only line-line data is available, divide the line-line value with 2 to achieve the line to common (startpoint) value.
6. *Parameter 1-37 d-axis Inductance (Ld)*.
   Enter line to common direct axis inductance of the PM motor.

Danfoss A/S © 10/2016 All rights reserved.

If only line-line data is available, divide the line-line value by 2 to achieve the line-common (startpoint) value.

7. *Parameter 1-40 Back EMF at 1000 RPM*.
   Enter line-to-line back EMF of the PM motor at 1000 RPM mechanical speed (RMS value). Back EMF is the voltage generated by a PM motor when no frequency converter is connected and the shaft is turned externally. Back EMF is normally specified for nominal motor speed or for 1000 RPM measured between 2 lines. If the value is not available for a motor speed of 1000 RPM, calculate the correct value as follows: If back EMF is for example 320 V at 1800 RPM, it can be calculated at 1000 RPM as follows: Back EMF = (Voltage / RPM)*1000 = (320/1800)*1000 = 178. This is the value that must be programmed for *parameter 1-40 Back EMF at 1000 RPM*.

Test motor operation

1. Start the motor at low speed (100–200 RPM). If the motor does not turn, check installation, general programming, and motor data.
2. Check if the start function in *parameter 1-70 PM Start Mode* fits the application requirements.

Rotor detection
This function is the recommended choice for applications where the motor starts from standstill, for example pumps or conveyors. On some motors, a sound is heard when the impulse is sent out. This does not harm the motor.

Parking
This function is the recommended choice for applications where the motor is rotating at slow speed, for example windmilling in fan applications. *Parameter 2-06 Parking Current* and *parameter 2-07 Parking Time* can be adjusted. Increase the factory setting of these parameters for applications with high inertia.

Start the motor at nominal speed. If the application does not run well, check the VVC+ PM settings. Recommended settings in different applications can be found in *Table 5.7*.

Application	Settings
Low inertia applications I_{Load}/I_{Motor} <5	*Parameter 1-17 Voltage filter time const.* to be increased by factor 5–10. *Parameter 1-14 Damping Gain* should be reduced. *Parameter 1-66 Min. Current at Low Speed* should be reduced (<100%).
Low inertia applications 50>I_{Load}/I_{Motor} >5	Keep calculated values.
High inertia applications I_{Load}/I_{Motor} > 50	*Parameter 1-14 Damping Gain*, *parameter 1-15 Low Speed Filter Time Const.*, and *parameter 1-16 High Speed Filter Time Const.* should be increased.
High load at low speed <30% (rated speed)	*Parameter 1-17 Voltage filter time const.* should be increased. *Parameter 1-66 Min. Current at Low Speed* should be increased (>100% for a prolonged time can overheat the motor).

Table 5.7 Recommended Settings in Different Applications

If the motor starts oscillating at a certain speed, increase *parameter 1-14 Damping Gain*. Increase the value in small steps. Depending on the motor, a good value for this parameter can be 10% or 100% higher than the default value.

The starting torque can be adjusted in *parameter 1-66 Min. Current at Low Speed*. 100% provides nominal torque as starting torque.

5.4.5 SynRM Motor Set-up with VVC+

This section describes how to set up a SynRM motor with VVC+.

NOTICE

The SmartStart wizard covers the basic configuration of SynRM motors.

Initial programming steps
To activate SynRM motor operation, select *[5] Sync. Reluctance* in *parameter 1-10 Motor Construction*.

Programming motor data
After performing the initial programming steps, the SynRM motor-related parameters in *parameter groups 1-2* Motor Data*, *1-3* Adv. Motor Data*, and *1-4* Adv. Motor Data II* are active.

Use the motor nameplate data and the motor datasheet to program the following parameters in the order listed:

Danfoss A/S © 10/2016 All rights reserved.

1. *Parameter 1-23 Motor Frequency*.
2. *Parameter 1-24 Motor Current*.
3. *Parameter 1-25 Motor Nominal Speed*.
4. *Parameter 1-26 Motor Cont. Rated Torque*.

Run a complete AMA using *parameter 1-29 Automatic Motor Adaptation (AMA) [1] Enable Complete AMA* or enter the following parameters manually:

1. *Parameter 1-30 Stator Resistance (Rs)*.
2. *Parameter 1-37 d-axis Inductance (Ld)*.
3. *Parameter 1-44 d-axis Inductance Sat. (LdSat)*.
4. *Parameter 1-45 q-axis Inductance Sat. (LqSat)*.
5. *Parameter 1-48 Inductance Sat. Point*.

Application-specific adjustments

Start the motor at nominal speed. If the application does not run well, check the VVC+ SynRM settings. *Table 5.8* provides application-specific recommendations:

Application	Settings
Low-inertia applications I_{Load}/I_{Motor}<5	Increase *parameter 1-17 Voltage filter time const.* by factor 5–10. Reduce *parameter 1-14 Damping Gain*. Reduce *parameter 1-66 Min. Current at Low Speed* (<100%).
Low-inertia applications 50>I_{Load}/I_{Motor}>5	Keep the default values.
High-inertia applications I_{Load}/I_{Motor}>50	Increase *parameter 1-14 Damping Gain*, *parameter 1-15 Low Speed Filter Time Const.*, and *parameter 1-16 High Speed Filter Time Const.*
High-load at low speed <30% (rated speed)	Increase *parameter 1-17 Voltage filter time const.* Increase *parameter 1-66 Min. Current at Low Speed* to adjust the starting torque. 100% current provides nominal torque as starting torque. Working at a current level higher than 100% for a prolonged time can cause the motor to overheat.
Dynamic applications	Increase *parameter 14-41 AEO Minimum Magnetisation* for highly dynamic applications. Adjusting *parameter 14-41 AEO Minimum Magnetisation* ensures a good balance between energy efficiency and dynamics. Adjust *parameter 14-42 Minimum AEO Frequency* to specify the minimum frequency at which the frequency converter should use minimum magnetization.
Motor sizes less than 18 kW (24 hp)	Avoid short ramp-down times.

Table 5.8 Recommendations for Various Applications

If the motor starts oscillating at a certain speed, increase *parameter 1-14 Damping Gain*. Increase the damping gain value in small steps. Depending on the motor, this parameter can be set to 10–100% higher than the default value.

5.4.6 Automatic Energy Optimization (AEO)

NOTICE

AEO is not relevant for permanent magnet motors.

AEO is a procedure which minimizes voltage to the motor, as a result of that reducing energy consumption, heat, and noise.

To activate AEO, set *parameter 1-03 Torque Characteristics* to *[2] Auto Energy Optim. CT* or *[3] Auto Energy Optim. VT*.

5.4.7 Automatic Motor Adaptation (AMA)

AMA is a procedure which optimizes compatibility between the frequency converter and the motor.

- The frequency converter builds a mathematical model of the motor for regulating output motor current. The procedure also tests the input phase balance of electrical power. It compares the motor characteristics with the entered nameplate data.
- The motor shaft does not turn and no harm is done to the motor while running the AMA.
- Some motors may be unable to run the complete version of the test. In that case, select *[2] Enable reduced AMA*.
- If an output filter is connected to the motor, select *[2] Enable reduced AMA*.

Danfoss A/S © 10/2016 All rights reserved.

- If warnings or alarms occur, see *chapter 7.4 List of Warnings and Alarms*.
- Run this procedure on a cold motor for best results.

To run AMA

1. Press [Main Menu] to access parameters.
2. Scroll to *parameter group 1-** Load and Motor* and press [OK].
3. Scroll to *parameter group 1-2* Motor Data* and press [OK].
4. Scroll to *parameter 1-29 Automatic Motor Adaptation (AMA)* and press [OK].
5. Select *[1] Enable complete AMA* and press [OK].
6. Follow the on-screen instructions.
7. The test runs automatically and indicates when it is complete.
8. The advanced motor data is entered in *parameter group 1-3* Adv. Motor Data*.

5.5 Checking Motor Rotation

NOTICE

Risk of damage to pumps/compressors caused by motor running in wrong direction. Before running the frequency converter, check the motor rotation.

The motor runs briefly at 5 Hz or the minimum frequency set in *parameter 4-12 Motor Speed Low Limit [Hz]*.

1. Press [Main Menu].
2. Scroll to *parameter 1-28 Motor Rotation Check* and press [OK].
3. Scroll to *[1] Enable*.

The following text appears: *Note! Motor may run in wrong direction*.

4. Press [OK].
5. Follow the on-screen instructions.

NOTICE

To change the direction of rotation, remove power to the frequency converter and wait for power to discharge. Reverse the connection of any 2 of the 3 motor wires on the motor or frequency converter side of the connection.

5.6 Local-control Test

1. Press [Hand On] to provide a local start command to the frequency converter.
2. Accelerate the frequency converter by pressing [▲] to full speed. Moving the cursor left of the decimal point provides quicker input changes.
3. Note any acceleration problems.
4. Press [Off]. Note any deceleration problems.

If acceleration or deceleration problems occur, see *chapter 7.5 Troubleshooting*. See *chapter 7.4 List of Warnings and Alarms* for resetting the frequency converter after a trip.

5.7 System Start-up

The procedure in this section requires wiring and application programming to be completed. The following procedure is recommended after application set-up is completed.

1. Press [Auto On].
2. Apply an external run command.
3. Adjust the speed reference throughout the speed range.
4. Remove the external run command.
5. Check the sound and vibration levels of the motor to ensure that the system is working as intended.

If warnings or alarms occur, see *chapter 7.3 Warning and Alarm Types* or *chapter 7.4 List of Warnings and Alarms*.

Danfoss A/S © 10/2016 All rights reserved.

6 Application Set-up Examples

The examples in this section are intended as a quick reference for common applications.

- Parameter settings are the regional default values unless otherwise indicated (selected in *parameter 0-03 Regional Settings*).
- Parameters associated with the terminals and their settings are shown next to the drawings.
- Required switch settings for analog terminals A53 or A54 are also shown.

NOTICE

When using the optional STO feature, a jumper wire may be required between terminal 12 (or 13) and terminal 37 for the frequency converter to operate with factory default programming values.

6

6.1 Application Examples

6.1.1 Feedback

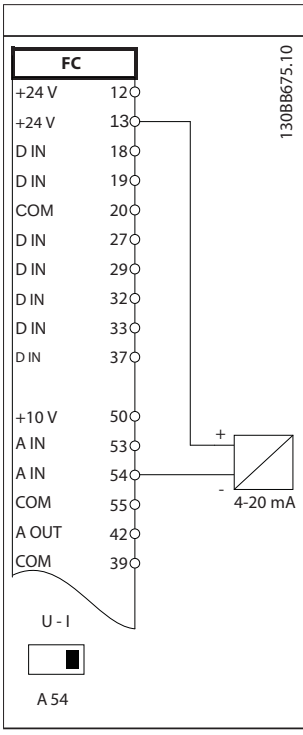

	Parameters	
	Function	**Setting**
	Parameter 6-22 Terminal 54 Low Current	4 mA*
	Parameter 6-23 Terminal 54 High Current	20 mA*
	Parameter 6-24 Terminal 54 Low Ref./Feedb. Value	0*
	Parameter 6-25 Terminal 54 High Ref./Feedb. Value	50*
* = Default value		
Notes/comments: D IN 37 is an option.		

Table 6.1 Analog Current Feedback Transducer

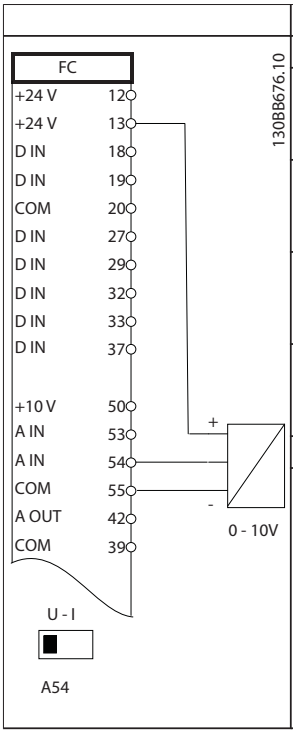

	Parameters	
	Function	**Setting**
	Parameter 6-20 Terminal 54 Low Voltage	0.07 V*
	Parameter 6-21 Terminal 54 High Voltage	10 V*
	Parameter 6-24 Terminal 54 Low Ref./Feedb. Value	0*
	Parameter 6-25 Terminal 54 High Ref./Feedb. Value	50*
* = Default value		
Notes/comments: D IN 37 is an option.		

Table 6.2 Analog Voltage Feedback Transducer (3-wire)

Danfoss A/S © 10/2016 All rights reserved.

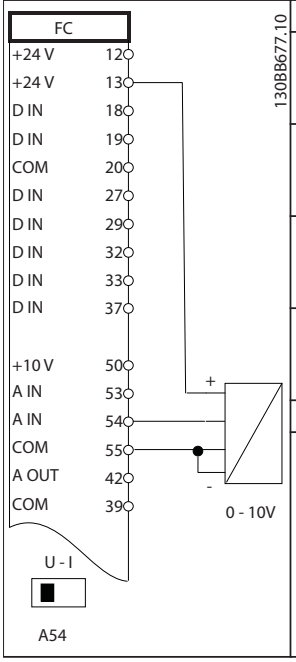

Parameters	
Function	**Setting**
Parameter 6-20 Terminal 54 Low Voltage	0.07 V*
Parameter 6-21 Terminal 54 High Voltage	10 V*
Parameter 6-24 Terminal 54 Low Ref./Feedb. Value	0*
Parameter 6-25 Terminal 54 High Ref./Feedb. Value	50*
* = Default value	
Notes/comments: D IN 37 is an option.	

Table 6.3 Analog Voltage Feedback Transducer (4-wire)

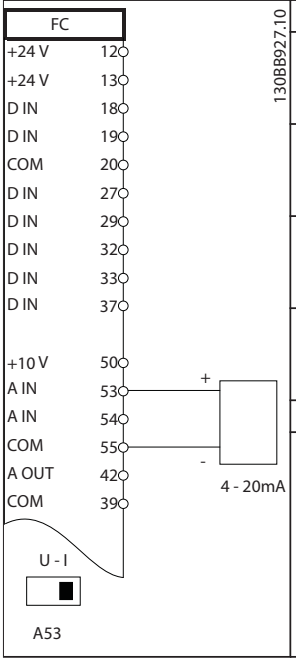

Parameters	
Function	**Setting**
Parameter 6-12 Terminal 53 Low Current	4 mA*
Parameter 6-13 Terminal 53 High Current	20 mA*
Parameter 6-14 Terminal 53 Low Ref./Feedb. Value	0 Hz
Parameter 6-15 Terminal 53 High Ref./Feedb. Value	50 Hz
* = Default value	
Notes/comments: D IN 37 is an option.	

Table 6.5 Analog Speed Reference (Current)

6.1.2 Speed

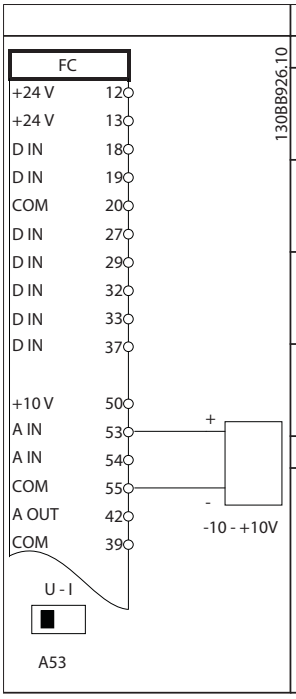

Parameters	
Function	**Setting**
Parameter 6-10 Terminal 53 Low Voltage	0.07 V*
Parameter 6-11 Terminal 53 High Voltage	10 V*
Parameter 6-14 Terminal 53 Low Ref./Feedb. Value	0 Hz
Parameter 6-15 Terminal 53 High Ref./Feedb. Value	50 Hz
* = Default value	
Notes/comments: D IN 37 is an option.	

Table 6.4 Analog Speed Reference (Voltage)

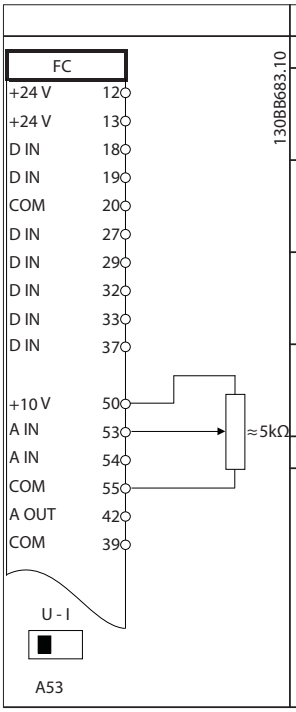

Parameters	
Function	**Setting**
Parameter 6-10 Terminal 53 Low Voltage	0.07 V*
Parameter 6-11 Terminal 53 High Voltage	10 V*
Parameter 6-14 Terminal 53 Low Ref./Feedb. Value	0 Hz
Parameter 6-15 Terminal 53 High Ref./Feedb. Value	50 Hz
* = Default value	
Notes/comments: D IN 37 is an option.	

Table 6.6 Speed Reference (Using a Manual Potentiometer)

6

Danfoss A/S © 10/2016 All rights reserved.

6.1.3 Run/Stop

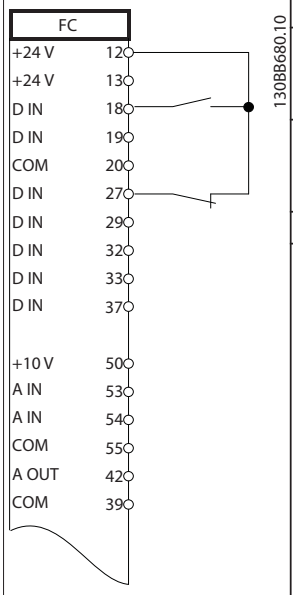

Parameters	
Function	**Setting**
Parameter 5-10 Terminal 18 Digital Input	*[8] Start**
Parameter 5-12 Terminal 27 Digital Input	*[7] External interlock*
* = Default value	
Notes/comments: D IN 37 is an option.	

Table 6.7 Run/Stop Command with External Interlock

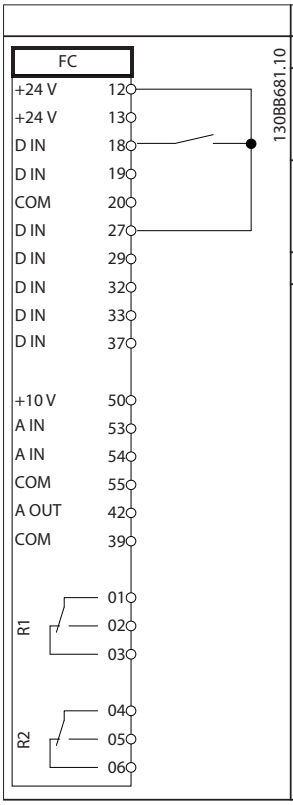

Parameters	
Function	**Setting**
Parameter 5-10 Terminal 18 Digital Input	*[8] Start**
Parameter 5-12 Terminal 27 Digital Input	*[7] External interlock*
* = Default value	
Notes/comments: If *parameter 5-12 Terminal 27 Digital Input* is set to *[0] No operation*, a jumper wire to terminal 27 is not needed. D IN 37 is an option.	

Table 6.8 Run/Stop Command without External Interlock

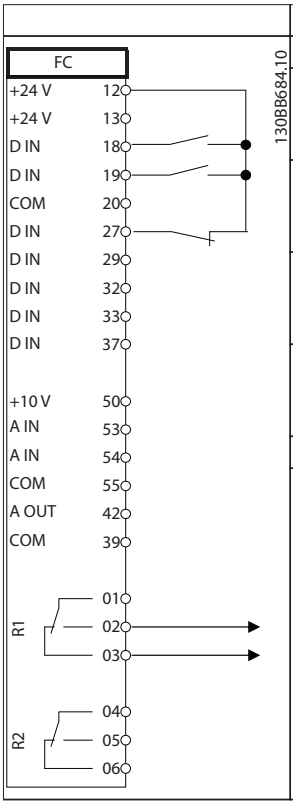

Parameters	
Function	**Setting**
Parameter 5-10 Terminal 18 Digital Input	*[8] Start**
Parameter 5-11 Terminal 19 Digital Input	*[52] Run Permissive*
Parameter 5-12 Terminal 27 Digital Input	*[7] External interlock*
Parameter 5-40 Function Relay	*[167] Start command act.*
* = Default value	
Notes/comments: D IN 37 is an option.	

Table 6.9 Run Permissive

6.1.4 External Alarm Reset

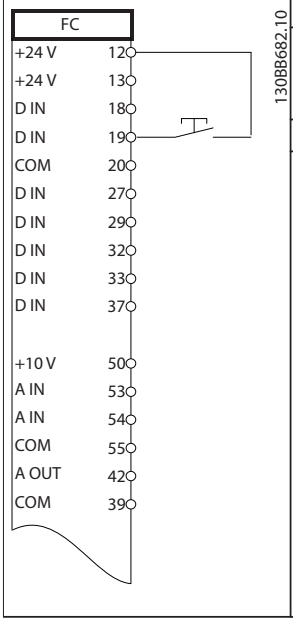

Parameters	
Function	**Setting**
Parameter 5-11 Terminal 19 Digital Input	*[1] Reset*
* = Default value	
Notes/comments: D IN 37 is an option.	

Table 6.10 External Alarm Reset

Danfoss A/S © 10/2016 All rights reserved.

6.1.5 RS485

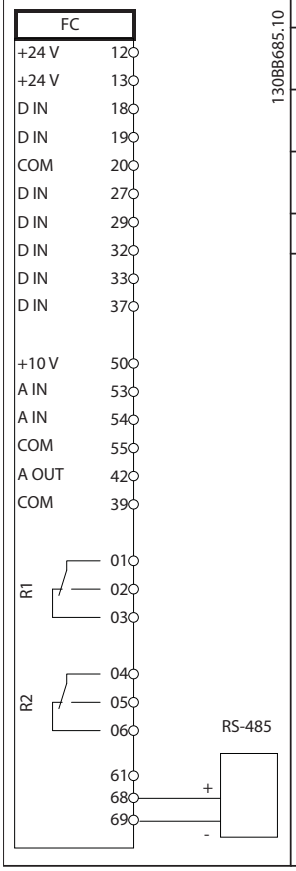

Parameters	
Function	**Setting**
Parameter 8-30 Protocol	FC*
Parameter 8-31 Address	1*
Parameter 8-32 Baud Rate	9600*
* = Default value	
Notes/comments: Select protocol, address, and baud rate in the above-mentioned parameters. D IN 37 is an option.	

Table 6.11 RS485 Network Connection

6.1.6 Motor Thermistor

⚠CAUTION

THERMISTOR INSULATION

Risk of personal injury or equipment damage.

- **Use only thermistors with reinforced or double insulation to meet PELV insulation requirements.**

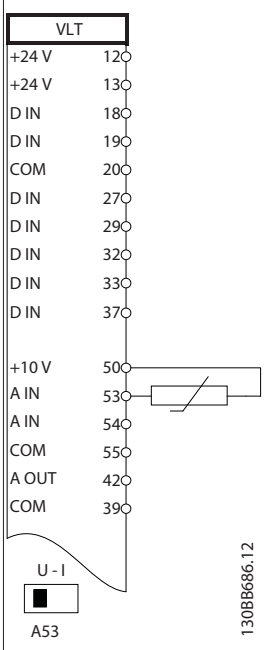

Parameters	
Function	**Setting**
Parameter 1-90 Motor Thermal Protection	*[2] Thermistor trip*
Parameter 1-93 Thermistor Source	*[1] Analog input 53*
* = Default value	
Notes/comments: If only a warning is required, set *parameter 1-90 Motor Thermal Protection* to *[1] Thermistor warning*. D IN 37 is an option.	

Table 6.12 Motor Thermistor

6

Danfoss A/S © 10/2016 All rights reserved.

7 Maintenance, Diagnostics, and Troubleshooting

This chapter includes:

- Maintenance and service guidelines.
- Status messages.
- Warnings and alarms.
- Basic troubleshooting.

7.1 Maintenance and Service

Under normal operating conditions and load profiles, the frequency converter is maintenance-free throughout its designed lifetime. To prevent breakdown, danger, and damage, examine the frequency converter at regular intervals depending on the operating conditions. Replace worn or damaged parts with original spare parts or standard parts. For service and support, contact the local Danfoss supplier.

7

⚠WARNING

UNINTENDED START

When the frequency converter is connected to AC mains, DC supply, or load sharing, the motor may start at any time. Unintended start during programming, service, or repair work can result in death, serious injury, or property damage. The motor can start via an external switch, a fieldbus command, an input reference signal from the LCP or LOP, via remote operation using MCT 10 Set-up Software, or after a cleared fault condition.

7.2 Status Messages

When the frequency converter is in *Status* mode, status messages are generated automatically and appear in the bottom line of the display (see *Illustration 7.1*).

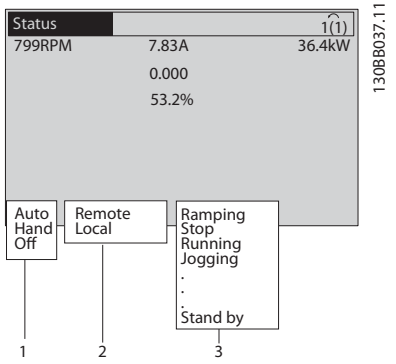

1	Operating mode (see *Table 7.1*)
2	Reference site (see *Table 7.2*)
3	Operation status (see *Table 7.3*)

Illustration 7.1 Status Display

Table 7.1 to *Table 7.3* describe the status messages shown.

Off	The frequency converter does not react to any control signal until [Auto On] or [Hand On] is pressed.
Auto On	The frequency converter is controlled from the control terminals and/or the serial communication.
Hand On	Control the frequency converter via the navigation keys on the LCP. Stop commands, reset, reversing, DC brake, and other signals applied to the control terminals override local control.

Table 7.1 Operating Mode

Remote	The speed reference is given from external signals, serial communication, or internal preset references.
Local	The frequency converter uses [Hand On] control or reference values from the LCP.

Table 7.2 Reference Site

AC Brake	*[2] AC brake* is selected in *parameter 2-10 Brake Function*. The AC brake overmagnetizes the motor to achieve a controlled slow down.
AMA finish OK	AMA was carried out successfully.
AMA ready	AMA is ready to start. Press [Hand On] to start.
AMA running	AMA process is in progress.
Braking	The brake chopper is in operation. Generative energy is absorbed by the brake resistor.

Danfoss A/S © 10/2016 All rights reserved.

Braking max.	The brake chopper is in operation. The power limit for the brake resistor defined in *parameter 2-12 Brake Power Limit (kW)* has been reached.
Coast	• *[2] Coast inverse* was selected as a function for a digital input (*parameter group 5-1* Digital Inputs*). The corresponding terminal is not connected. • Coast activated by serial communication.
Ctrl. ramp-down	*[1] Control Ramp-down* was selected in *parameter 14-10 Mains Failure*. • The mains voltage is below the value set in *parameter 14-11 Mains Voltage at Mains Fault* at mains fault. • The frequency converter ramps down the motor using a controlled ramp down.
Current High	The frequency converter output current is above the limit set in *parameter 4-51 Warning Current High*.
Current Low	The frequency converter output current is below the limit set in *parameter 4-52 Warning Speed Low*.
DC Hold	*[1] DC hold* is selected in *parameter 1-80 Function at Stop* and a stop command is active. The motor is held by a DC current set in *parameter 2-00 DC Hold/Preheat Current*.
DC Stop	The motor is held with a DC current (*parameter 2-01 DC Brake Current*) for a specified time (*parameter 2-02 DC Braking Time*). • The DC brake cut-in speed is reached in *parameter 2-03 DC Brake Cut In Speed [RPM]* and a stop command is active. • *[5] DC-brake inverse* is selected as a function for a digital input (*parameter group 5-1* Digital Inputs*). The corresponding terminal is not active. • The DC brake is activated via serial communication.
Feedback high	The sum of all active feedbacks is above the feedback limit set in *parameter 4-57 Warning Feedback High*.
Feedback low	The sum of all active feedbacks is below the feedback limit set in *parameter 4-56 Warning Feedback Low*.
Freeze output	The remote reference is active, which holds the present speed. • *[20] Freeze output* is selected as a function for a digital input (*parameter group 5-1* Digital Inputs*). The corresponding terminal is active. Speed control is only possible via the terminal options *[21] Speed up* and *[22] Speed down*. • Hold ramp is activated via serial communication.
Freeze output request	A freeze output command was given, but the motor remains stopped until a run permissive signal is received.
Freeze ref.	*[19] Freeze reference* is selected as a function for a digital input (*parameter group 5-1* Digital Inputs*). The corresponding terminal is active. The frequency converter saves the actual reference. Changing the reference is now only possible via terminal options *[21] Speed up* and *[22] Speed down*.
Jog request	A jog command was given, but the motor remains stopped until a run permissive signal is received via a digital input.
Jogging	The motor is running as programmed in *parameter 3-19 Jog Speed [RPM]*. • *[14] Jog* was selected as a function for a digital input (*parameter group 5-1* Digital Inputs*). The corresponding terminal (for example, terminal 29) is active. • The jog function is activated via the serial communication. • The jog function is selected as a reaction for a monitoring function (for example, for the no signal function). The monitoring function is active.
Motor check	In *parameter 1-80 Function at Stop*, *[2] Motor Check* is selected. A stop command is active. To ensure that a motor is connected to the frequency converter, a permanent test current is applied to the motor.
OVC control	Overvoltage control is activated via *parameter 2-17 Over-voltage Control*, *[2] Enabled*. The connected motor supplies the frequency converter with generative energy. The overvoltage control adjusts the V/Hz ratio to run the motor in controlled mode and to prevent the frequency converter from tripping.
PowerUnit Off	(Only frequency converters with a 24 V external supply installed). Mains supply to the frequency converter was removed, and the control card is supplied by the external 24 V.

7

Danfoss A/S © 10/2016 All rights reserved.

Protection md	Protection mode is active. The unit detected a critical status (overcurrent or overvoltage). • To avoid tripping, switching frequency is reduced to 4 kHz. • If possible, protection mode ends after approximately 10 s. • Protection mode can be restricted in *parameter 14-26 Trip Delay at Inverter Fault*.
Qstop	The motor is decelerating using *parameter 3-81 Quick Stop Ramp Time*. • *[4] Quick stop inverse* is selected as a function for a digital input (*parameter group 5-1* Digital Inputs*). The corresponding terminal is not active. • The quick stop function is activated via serial communication.
Ramping	The motor is accelerating/decelerating using the active ramp up/down. The reference, a limit value, or a standstill is not yet reached.
Ref. high	The sum of all active references is above the reference limit set in *parameter 4-55 Warning Reference High*.
Ref. low	The sum of all active references is below the reference limit set in *parameter 4-54 Warning Reference Low*.
Run on ref.	The frequency converter is running in the reference range. The feedback value matches the setpoint value.
Run request	A start command was given, but the motor remains stopped until a run permissive signal is received via digital input.
Running	The frequency converter drives the motor.
Sleep Mode	The energy-saving function is enabled. The motor has stopped, but restarts automatically when required.
Speed high	Motor speed is above the value set in *parameter 4-53 Warning Speed High*.
Speed low	Motor speed is below the value set in *parameter 4-52 Warning Speed Low*.
Standby	In auto-on mode, the frequency converter starts the motor with a start signal from a digital input or serial communication.
Start delay	In *parameter 1-71 Start Delay*, a delay starting time was set. A start command is activated, and the motor starts after the start delay time expires.
Start fwd/rev	*[12] Enable start forward* and *[13] Enable start reverse* are selected as options for 2 different digital inputs (*parameter group 5-1* Digital Inputs*). The motor starts in forward or reverse direction depending on which terminal is activated.
Stop	The frequency converter received a stop command from the LCP, digital input, or serial communication.
Trip	An alarm occurred and the motor is stopped. Once the cause of the alarm is cleared, the frequency converter can be reset manually by pressing [Reset] or remotely by control terminals or serial communication.
Trip lock	An alarm occurred, and the motor is stopped. When the cause of the alarm is cleared, cycle power to the frequency converter. The frequency converter can then be reset manually by pressing [Reset], or remotely by control terminals or serial communication.

Table 7.3 Operation Status

7

NOTICE

In auto/remote mode, the frequency converter requires external commands to execute functions.

7.3 Warning and Alarm Types

Warnings
A warning is issued when an alarm condition is impending, or when an abnormal operating condition is present and may result in the frequency converter issuing an alarm. A warning clears by itself when the abnormal condition ceases.

Alarms
An alarm indicates a fault that requires immediate attention. The fault always triggers a trip or a trip lock. Reset the system after an alarm.

Trip
An alarm is issued when the frequency converter is tripped, meaning that the frequency converter suspends operation to prevent frequency converter or system damage. The motor coasts to a stop. The frequency converter logic continues to operate and monitor the frequency converter status. After the fault condition is remedied, the frequency converter can be reset. It is then ready to start operation again.

Resetting the frequency converter after trip/trip lock
A trip can be reset in any of 4 ways:

- Press [Reset] on the LCP.
- Digital reset input command.
- Serial communication reset input command.
- Auto reset.

Trip lock
Input power is cycled. The motor coasts to a stop. The frequency converter continues to monitor the frequency converter status. Remove input power to the frequency converter, correct the cause of the fault, and reset the frequency converter.

Danfoss A/S © 10/2016 All rights reserved.

Warning and alarm displays

- A warning is shown in the LCP along with the warning number.
- An alarm flashes along with the alarm number.

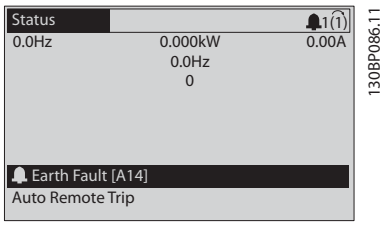

Illustration 7.2 Alarm Example

In addition to the text and alarm code in the LCP, there are 3 status indicator lights.

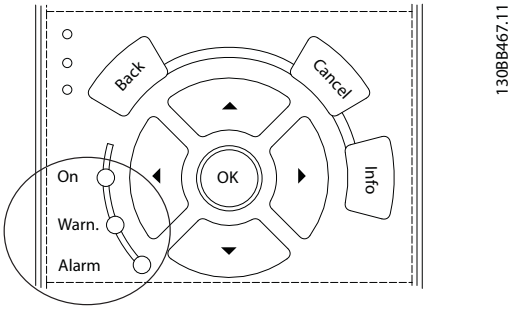

	Warning indicator light	Alarm indicator light
Warning	On	Off
Alarm	Off	On (flashing)
Trip lock	On	On (flashing)

Illustration 7.3 Status Indicator Lights

7.4 List of Warnings and Alarms

The warning/alarm information in this chapter defines each warning/alarm condition, provides the probable cause for the condition, and details a remedy or troubleshooting procedure.

WARNING 1, 10 Volts low
The control card voltage from terminal 50 is <10 V. Remove some of the load from terminal 50, as the 10 V supply is overloaded. Maximum 15 mA or minimum 590 Ω.

A short circuit in a connected potentiometer or improper wiring of the potentiometer can cause this condition.

Troubleshooting

- Remove the wiring from terminal 50.
- If the warning clears, the problem is with the customer wiring.
- If the warning does not clear, replace the control card.

WARNING/ALARM 2, Live zero error
This warning or alarm only appears if programmed in *parameter 6-01 Live Zero Timeout Function*. The signal on 1 of the analog inputs is less than 50% of the minimum value programmed for that input. Broken wiring or signals from a faulty device cause this condition.

Troubleshooting

- Check connections on all the analog input terminals. Control card terminals 53 and 54 for signals, terminal 55 common. VLT® General Purpose I/O MCB 101 terminals 11 and 12 for signals, terminal 10 common. VLT® Analog I/O Option MCB 109 terminals 1, 3, 5 for signals, terminals 2, 4, 6 common).
- Check that the frequency converter programming and switch settings match the analog signal type.
- Perform an input terminal signal test.

WARNING/ALARM 3, No motor
No motor has been connected to the output of the frequency converter.

WARNING/ALARM 4, Mains phase loss
A phase is missing on the supply side, or the mains voltage imbalance is too high. This message also appears in case of a fault in the input rectifier on the frequency converter. Options are programmed in *parameter 14-12 Function at Mains Imbalance*.

Troubleshooting

- Check the supply voltage and supply currents to the frequency converter.

WARNING 5, DC link voltage high
The DC-link voltage is higher than the high-voltage warning limit. The limit depends on the frequency converter voltage rating. The unit is still active.

WARNING 6, DC link voltage low
The DC-link voltage is lower than the low-voltage warning limit. The limit depends on the frequency converter voltage rating. The unit is still active.

WARNING/ALARM 7, DC overvoltage
If the DC-link voltage exceeds the limit, the frequency converter trips after some time.

Troubleshooting

- Connect a brake resistor.
- Extend the ramp time.
- Change the ramp type.
- Activate the functions in *parameter 2-10 Brake Function*.
- Increase *parameter 14-26 Trip Delay at Inverter Fault*.

WARNING/ALARM 8, DC under voltage
If the DC-link voltage drops below the undervoltage limit, the frequency converter checks if a 24 V DC back-up supply is connected. If no 24 V DC back-up supply is

 Danfoss A/S © 10/2016 All rights reserved.

connected, the frequency converter trips after a fixed time delay. The time delay varies with unit size.

Troubleshooting

- Check that the supply voltage matches the frequency converter voltage.
- Perform an input voltage test.
- Perform a soft charge circuit test.

WARNING/ALARM 9, Inverter overload

The frequency converter is about to cut out because of an overload (too high current for too long). The counter for electronic thermal inverter protection issues a warning at 98% and trips at 100%, while issuing an alarm. The frequency converter *cannot* be reset until the counter is below 90%.

Troubleshooting

- Compare the output current shown on the LCP with the frequency converter rated current.
- Compare the output current shown on the LCP with measured motor current.
- Show the thermal load on the LCP and monitor the value. When running above the frequency converter continuous current rating, the counter should increase. When running below the frequency converter continuous current rating, the counter should decrease.

WARNING/ALARM 10, Motor overload temperature

According to the electronic thermal protection (ETR), the motor is too hot. Select whether the frequency converter issues a warning or an alarm when the counter reaches 100% in *parameter 1-90 Motor Thermal Protection*. The fault occurs when the motor overload exceeds 100% for too long.

Troubleshooting

- Check for motor overheating.
- Check if the motor is mechanically overloaded.
- Check that the motor current set in *parameter 1-24 Motor Current* is correct.
- Ensure the motor data in parameters *1-20* through *1-25* is set correctly.
- If an external fan is used, check that it is selected in *parameter 1-91 Motor External Fan*.
- Running AMA in *parameter 1-29 Automatic Motor Adaptation (AMA)* tunes the frequency converter to the motor more accurately and reduces thermal loading.

WARNING/ALARM 11, Motor thermistor overtemp

The thermistor may be disconnected. Select whether the frequency converter issues a warning or an alarm in *parameter 1-90 Motor Thermal Protection*.

Troubleshooting

- Check for motor overheating.
- Check if the motor is mechanically overloaded.
- Check that the thermistor is connected correctly between either terminal 53 or 54 (analog voltage input) and terminal 50 (+10 V supply) and that the terminal switch for 53 or 54 is set for voltage. Check *parameter 1-93 Thermistor Source* selects terminal 53 or 54.
- When using digital inputs 18 or 19, check that the thermistor is connected correctly between either terminal 18 or 19 (digital input PNP only) and terminal 50.
- If a KTY sensor is used, check for correct connection between terminals 54 and 55.
- If using a thermal switch or thermistor, check that the programming if *parameter 1-93 Thermistor Source* matches sensor wiring.

WARNING/ALARM 12, Torque limit

The torque has exceeded the value in *parameter 4-16 Torque Limit Motor Mode* or the value in *parameter 4-17 Torque Limit Generator Mode*. *Parameter 14-25 Trip Delay at Torque Limit* can change this from a warning-only condition to a warning followed by an alarm.

Troubleshooting

- If the motor torque limit is exceeded during ramp-up, extend the ramp-up time.
- If the generator torque limit is exceeded during ramp down, extend the ramp-down time.
- If torque limit occurs while running, possibly increase the torque limit. Be sure that the system can operate safely at a higher torque.
- Check the application for excessive current draw on the motor.

WARNING/ALARM 13, Over current

The inverter peak current limit (approximately 200% of the rated current) is exceeded. The warning lasts about 1.5 s, then the frequency converter trips and issues an alarm. Shock loading or fast acceleration with high-inertia loads can cause this fault. If extended mechanical brake control is selected, the trip can be reset externally.

Troubleshooting

- Remove power and check if the motor shaft can be turned.
- Check that the motor size matches the frequency converter.
- Check *parameters 1-20* to *1-25* for correct motor data.

 Danfoss A/S © 10/2016 All rights reserved.

ALARM 14, Earth (ground) fault
There is current from the output phases to ground, either in the cable between the frequency converter and the motor, or in the motor itself.

Troubleshooting

- Remove power from the frequency converter and repair the ground fault.
- Check for ground faults in the motor by measuring the resistance to ground of the motor cables and the motor with a megohmmeter.
- Perform current sensor test.

ALARM 15, Hardware mismatch
A fitted option is not operational with the present control board hardware or software.

Record the value of the following parameters and contact the local Danfoss supplier:

- *Parameter 15-40 FC Type*.
- *Parameter 15-41 Power Section*.
- *Parameter 15-42 Voltage*.
- *Parameter 15-43 Software Version*.
- *Parameter 15-45 Actual Typecode String*.
- *Parameter 15-49 SW ID Control Card*.
- *Parameter 15-50 SW ID Power Card*.
- *Parameter 15-60 Option Mounted*.
- *Parameter 15-61 Option SW Version* (for each option slot).

ALARM 16, Short circuit
There is short-circuiting in the motor or motor wiring.

Troubleshooting

- Remove power from the frequency converter and repair the short circuit.

WARNING/ALARM 17, Control word timeout
There is no communication to the frequency converter. The warning is only active when *parameter 8-04 Control Timeout Function* is NOT set to *[0] Off*.
If *parameter 8-04 Control Timeout Function* is set to *[5] Stop and trip*, a warning appears and the frequency converter ramps down until it trips, then it shows an alarm.

Troubleshooting

- Check the connections on the serial communication cable.
- Increase *parameter 8-03 Control Timeout Time*.
- Check the operation of the communication equipment.
- Verify a proper installation based on EMC requirements.

WARNING/ALARM 22, Hoist mechanical brake
When this warning is active, the LCP shows the type of issue.
0 = The torque ref. was not reached before timeout.
1 = There was no brake feedback before timeout.

WARNING 23, Internal fan fault
The fan warning function is an extra protective function that checks if the fan is running/mounted. The fan warning can be disabled in *parameter 14-53 Fan Monitor* (*[0] Disabled*).

Troubleshooting

- Check the fan resistance.
- Check the soft charge fuses.

WARNING 24, External fan fault
The fan warning function is an extra protective function that checks if the fan is running/mounted. The fan warning can be disabled in *parameter 14-53 Fan Monitor* (*[0] Disabled*).

Troubleshooting

- Check the fan resistance.
- Check the soft charge fuses.

WARNING 25, Brake resistor short circuit
The brake resistor is monitored during operation. If a short circuit occurs, the brake function is disabled and the warning appears. The frequency converter is still operational but without the brake function. Remove power from the frequency converter and replace the brake resistor (see *parameter 2-15 Brake Check*).

WARNING/ALARM 26, Brake resistor power limit
The power transmitted to the brake resistor is calculated as a mean value over the last 120 s of run time. The calculation is based on the DC-link voltage and the brake resistance value set in *parameter 2-16 AC brake Max. Current*. The warning is active when the dissipated braking is higher than 90% of the brake resistance power. If *[2] Trip* is selected in *parameter 2-13 Brake Power Monitoring*, the frequency converter trips when the dissipated braking power reaches 100%.

WARNING/ALARM 27, Brake chopper fault
The brake transistor is monitored during operation. If a short circuit occurs, the brake function is disabled and a warning is issued. The frequency converter is still operational, but since the brake transistor has short-circuited, substantial power is transmitted to the brake resistor, even if it is inactive.
Remove power from the frequency converter and remove the brake resistor.

This alarm/warning could also occur if the brake resistor overheats. Terminals 104 and 106 are available as brake resistor Klixon inputs, see *Brake Resistor Temperature Switch* in the *design guide*.

WARNING/ALARM 28, Brake check failed
The brake resistor is not connected or not working. Check *parameter 2-15 Brake Check*.

Danfoss A/S © 10/2016 All rights reserved.

ALARM 29, Heat Sink temp
The maximum temperature of the heat sink has been exceeded. The temperature fault does not reset until the temperature drops below a defined heatsink temperature. The trip and reset points vary based on the frequency converter power size.

Troubleshooting
Check for the following conditions:

- Ambient temperature too high.
- Motor cable too long.
- Incorrect airflow clearance above and below the frequency converter.
- Blocked airflow around the frequency converter.
- Damaged heat sink fan.
- Dirty heat sink.

This alarm is based on the temperature measured by the heat sink sensor mounted inside the IGBT modules.

Troubleshooting

- Check the fan resistance.
- Check the soft charge fuses.
- Check the IGBT thermal sensor.

ALARM 30, Motor phase U missing
Motor phase U between the frequency converter and the motor is missing.

Troubleshooting

- Remove power from the frequency converter and check motor phase U.

ALARM 31, Motor phase V missing
Motor phase V between the frequency converter and the motor is missing.

Troubleshooting

- Remove power from the frequency converter and check motor phase V.

ALARM 32, Motor phase W missing
Motor phase W between the frequency converter and the motor is missing.

Troubleshooting

- Remove power from the frequency converter and check motor phase W.

ALARM 33, Inrush fault
Too many power-ups have occurred within a short time period. Let the unit cool to operating temperature.

WARNING/ALARM 34, Fieldbus communication fault
The fieldbus on the communication option card is not working.

WARNING/ALARM 36, Mains failure
This warning/alarm is only active if the supply voltage to the frequency converter is lost and *parameter 14-10 Mains Failure* is NOT set to *[0] No Function*.

Troubleshooting

- Check the fuses to the frequency converter and mains power supply to the unit.

ALARM 38, Internal fault
When an internal fault occurs, a code number defined in *Table 7.4* is shown.

Troubleshooting

- Cycle power.
- Check that the option is properly installed.
- Check for loose or missing wiring.

Contact the Danfoss supplier or Danfoss service if necessary. Note the code number for further trouble-shooting directions.

Number	Text
0	The serial port cannot be initialized. Contact the Danfoss supplier or Danfoss Service.
256–258	Power EEPROM data is defective or too old.
512	The control board EEPROM data is defective or too old.
513	Communication timeout reading EEPROM data.
514	Communication timeout reading EEPROM data.
515	Application-oriented control cannot recognize the EEPROM data.
516	Cannot write to the EEPROM because a write command is in progress.
517	Write command is under timeout.
518	Failure in the EEPROM.
519	Missing or invalid barcode data in EEPROM.
783	Parameter value outside of minimum/maximum limits.
1024–1279	Sending a CAN telegram failed.
1281	Digital signal processor flash timeout.
1282	Power micro software version mismatch.
1283	Power EEPROM data version mismatch.
1284	Cannot read digital signal processor software version.
1299	The option SW in slot A is too old.
1300	The option SW in slot B is too old.
1301	The option SW in slot C0 is too old.
1302	The option SW in slot C1 is too old.
1315	The option SW in slot A is not supported (not allowed).
1316	The option SW in slot B is not supported (not allowed).
1317	The option SW in slot C0 is not supported (not allowed).
1318	The option SW in slot C1 is not supported (not allowed).
1379	The option A did not respond when calculating the platform version.
1380	The option B did not respond when calculating the platform version.

Danfoss A/S © 10/2016 All rights reserved.

Number	Text
1381	The option C0 did not respond when calculating the platform version.
1382	The option C1 did not respond when calculating the platform version.
1536	An exception in the application-oriented control is registered. Debug information written in LCP.
1792	The DSP watchdog is active. Debugging of power part data, motor-oriented control data not transferred correctly.
2049	Power data restarted.
2064–2072	H081x: Option in slot x restarted.
2080–2088	H082x: Option in slot x issued a power-up wait.
2096–2104	H983x: Option in slot x issued a legal power-up wait.
2304	Could not read any data from power EEPROM.
2305	Missing SW version from power unit.
2314	Missing power unit data from power unit.
2315	Missing SW version from power unit.
2316	Missing lo_statepage from power unit.
2324	The power card configuration is determined to be incorrect at power-up.
2325	A power card has stopped communicating while main power is applied.
2326	The power card configuration is determined to be incorrect after the delay for power cards to register.
2327	Too many power card locations are registered as present.
2330	Power size information between the power cards does not match.
2561	No communication from DSP to ATACD.
2562	No communication from ATACD to DSP (state running).
2816	Stack overflow control board module.
2817	Scheduler slow tasks.
2818	Fast tasks.
2819	Parameter thread.
2820	LCP stack overflow.
2821	Serial port overflow.
2822	USB port overflow.
2836	cfListMempool too small.
3072–5122	Parameter value is outside its limits.
5123	Option in slot A: Hardware incompatible with control board hardware.
5124	Option in slot B: Hardware incompatible with control board hardware.
5125	Option in slot C0: Hardware incompatible with control board hardware.
5126	Option in slot C1: Hardware incompatible with control board hardware.
5376–6231	Out of memory.

Table 7.4 Code Numbers for Internal Faults

ALARM 39, Heat sink sensor
No feedback from the heat sink temperature sensor.

The signal from the IGBT thermal sensor is not available on the power card. The problem could be in the power card, in the gatedrive card, or the ribbon cable between the power card and the gatedrive card.

WARNING 40, Overload of digital output terminal 27
Check the load connected to terminal 27 or remove the short circuit connection. Check *parameter 5-00 Digital I/O Mode* and *parameter 5-01 Terminal 27 Mode*.

WARNING 41, Overload of digital output terminal 29
Check the load connected to terminal 29 or remove the short circuit connection. Check *parameter 5-00 Digital I/O Mode* and *parameter 5-02 Terminal 29 Mode*.

WARNING 42, Overload of digital output on X30/6 or overload of digital output on X30/7
For X30/6, check the load connected to X30/6 or remove the short circuit connection. Check *parameter 5-32 Term X30/6 Digi Out (MCB 101)*.

For X30/7, check the load connected to X30/7 or remove the short circuit connection. Check *parameter 5-33 Term X30/7 Digi Out (MCB 101)*.

ALARM 46, Power card supply
The supply on the power card is out of range.

There are 3 supplies powered by the switch mode power supply (SMPS) on the power card: 24 V, 5 V, ±18 V. When powered with 24 V DC with the VLT® 24V DC Supply MCB 107 option, only the 24 V and 5 V supplies are monitored. When powered with 3-phase mains voltage, all 3 supplies are monitored.

WARNING 47, 24 V supply low
The 24 V DC supply is measured on the control card. The external 24 V DC back-up supply may be overloaded, otherwise contact the Danfoss supplier.

WARNING 48, 1.8 V supply low
The 1.8 V DC supply used on the control card is outside of the allowable limits. The supply is measured on the control card. Check for a defective control card. If an option card is present, check for an overvoltage condition.

WARNING 49, Speed limit
When the speed is not within the specified range in *parameter 4-11 Motor Speed Low Limit [RPM]* and *parameter 4-13 Motor Speed High Limit [RPM]*, the frequency converter shows a warning. When the speed is below the specified limit in *parameter 1-86 Trip Speed Low [RPM]* (except when starting or stopping) the frequency converter trips.

ALARM 50, AMA calibration failed
Contact the Danfoss supplier or Danfoss Service.

ALARM 51, AMA check U_{nom} and I_{nom}
The settings for motor voltage, motor current, and motor power are wrong. Check the settings in *parameters 1-20* to *1-25*.

Danfoss A/S © 10/2016 All rights reserved.

ALARM 52, AMA low I_{nom}
The motor current is too low. Check the settings.

ALARM 53, AMA motor too big
The motor is too big for the AMA to operate.

ALARM 54, AMA motor too small
The motor is too small for the AMA to operate.

ALARM 55, AMA parameter out of range
The parameter values of the motor are outside of the acceptable range. AMA does not run.

ALARM 56, AMA interrupted by user
The user has interrupted the AMA.

ALARM 57, AMA internal fault
Try to restart AMA several times, until the AMA is carried out. Repeated runs may heat the motor to a level where the resistance R_s and R_r are increased. Usually this is not critical.

7

ALARM 58, AMA Internal fault
Contact the Danfoss supplier.

WARNING 59, Current limit
The current is higher than the value in *parameter 4-18 Current Limit*. Ensure that motor data in parameters *1-20* to *1-25* are set correctly. Possibly increase the current limit. Be sure that the system can operate safely at a higher limit.

WARNING 60, External interlock
External interlock has been activated. To resume normal operation:

1. Apply 24 V DC to the terminal programmed for external interlock.
2. Reset the frequency converter via
   - 2a Serial communication.
   - 2b Digital I/O.
   - 2c The [Reset] key.

WARNING 62, Output frequency at maximum limit
The output frequency is higher than the value set in *parameter 4-19 Max Output Frequency*.

WARNING 64, Voltage Limit
The load and speed combination demands a motor voltage higher than the actual DC-link voltage.

WARNING/ALARM 65, Control card over temperature
The control card has reached its trip temperature of 75 °C (167 °F).

WARNING 66, Heat sink temperature low
The frequency converter is too cold to operate. This warning is based on the temperature sensor in the IGBT module. Also, a trickle amount of current can be supplied to the frequency converter whenever the motor is stopped by setting *parameter 2-00 DC Hold/Preheat Current* at 5% and *parameter 1-80 Function at Stop*.

Troubleshooting
- Check the temperature sensor.
- Check the sensor wire between the IGBT and the gatedrive card.

ALARM 67, Option module configuration has changed
One or more options have either been added or removed since the last power-down. Check that the configuration change is intentional and reset the unit.

ALARM 68, Safe Stop activated
STO is activated.

Troubleshooting
- To resume normal operation, apply 24 V DC to terminal 37, then send a reset signal (via bus, digital I/O, or by pressing [Reset]).

ALARM 69, Power card temperature
The temperature sensor on the power card is either too hot or too cold.

Troubleshooting
- Check the operation of the door fans.
- Check that the filters for the door fans are not blocked.
- Check that the gland plate is properly installed on IP21/IP54 (NEMA 1/12) frequency converters.

ALARM 70, Illegal FC configuration
The control card and power card are incompatible.

Troubleshooting
- Contact the supplier with the type code of the unit from the nameplate and the part numbers of the cards to check compatibility.

ALARM 71, PTC 1 safe stop
Safe Torque Off is activated from the VLT® PTC Thermistor Card MCB 112 (motor too warm). Normal operation can be resumed when the MCB 112 applies 24 V DC to T37 again (when the motor temperature reaches an acceptable level) and when the digital input from the MCB 112 is deactivated. When that happens, a reset signal must be is be sent (via bus, digital I/O, or by pressing [Reset]).

NOTICE

If automatic restart is enabled, the motor may start when the fault is cleared.

ALARM 72, Dangerous failure
Safe Torque Off (STO) with trip lock. Unexpected signal levels on Safe Torque Off (STO) and digital input from the VLT® PTC Thermistor Card MCB 112.

WARNING 73, Safe Stop auto restart
Safe Torque Off (STO). With automatic restart enabled, the motor can start when the fault is cleared.

Danfoss A/S © 10/2016 All rights reserved.

WARNING 76, Power unit setup
The required number of power units does not match the detected number of active power units. When replacing an enclosure size F module, this warning occurs if the power-specific data in the module power card does not match the rest of the frequency converter. If the power card connection is lost, the unit also triggers this warning.

Troubleshooting
- Confirm that the spare part and its power card are the correct part number.
- Ensure that the 44-pin cables between the MDCIC and power cards are mounted properly.

WARNING 77, Reduced power mode
This warning indicates that the frequency converter is operating in reduced power mode (that is, less than the allowed number of inverter sections). This warning is generated on power cycle when the frequency converter is set to run with fewer inverters and remains on.

ALARM 79, Illegal power section configuration
The scaling card is the incorrect part number or not installed. Also, the MK102 connector on the power card could not be installed.

ALARM 80, Drive initialised to default value
Parameter settings are initialized to default settings after a manual reset.

Troubleshooting
- Reset the unit to clear the alarm.

ALARM 81, CSIV corrupt
CSIV (Customer-specific initialization values) file has syntax errors.

ALARM 82, CSIV parameter error
CSIV (Customer-specific initialization values) failed to initialize a parameter.

ALARM 85, Dang fail PB
PROFIBUS/PROFIsafe error.

ALARM 92, No flow
A no-flow condition is detected in the system. *Parameter 22-23 No-Flow Function* is set for alarm.

Troubleshooting
- Troubleshoot the system and reset the frequency converter after clearing the fault.

ALARM 93, Dry pump
A no-flow condition in the system with the frequency converter operating at high speed can indicate a dry pump. *Parameter 22-26 Dry Pump Function* is set for alarm.

Troubleshooting
- Troubleshoot the system and reset the frequency converter after clearing the fault.

ALARM 94, End of curve
The feedback is lower than the setpoint. This condition can indicate leakage in the system. *Parameter 22-50 End of Curve Function* is set for alarm.

Troubleshooting
- Troubleshoot the system and reset the frequency converter after clearing the fault.

ALARM 95, Broken belt
Torque is below the torque level set for no load, indicating a broken belt. *Parameter 22-60 Broken Belt Function* is set for alarm.

Troubleshooting
- Troubleshoot the system and reset the frequency converter after clearing the fault.

ALARM 100, Derag limit fault
The *Deragging* feature failed during execution. Check the pump impeller for blockage.

WARNING/ALARM 104, Mixing fan fault
The fan monitor checks that the fan is spinning at frequency converter power-up or whenever the mixing fan is turned on. If the fan is not operating, the fault is issued. The mixing-fan fault can be configured as a warning or an alarm trip by *parameter 14-53 Fan Monitor*.

Troubleshooting
- Cycle power to the frequency converter to determine if the warning/alarm returns.

WARNING 250, New spare part
A component in the frequency converter has been replaced. To resume normal operation, reset the frequency converter.

WARNING 251, New typecode
The power card or other components have been replaced and the type code changed.

Troubleshooting
- Reset to remove the warning and resume normal operation.

Danfoss A/S © 10/2016 All rights reserved.

7.5 Troubleshooting

Symptom	Possible cause	Test	Solution
Display dark/No function	Missing input power.	See *Table 4.3*.	Check the input power source.
	Missing or open fuses, or circuit breaker tripped.	See *Open fuses and tripped circuit breaker* in this table for possible causes.	Follow the recommendations provided.
	No power to the LCP.	Check the LCP cable for proper connection or damage.	Replace the faulty LCP or connection cable.
	Shortcut on control voltage (terminal 12 or 50) or at control terminals.	Check the 24 V control voltage supply for terminals 12/13 to 20-39 or 10 V supply for terminals 50–55.	Wire the terminals properly.
	Incompatible LCP (LCP from VLT® 2800 or 5000/6000/8000/ FCD or FCM).	–	Use only LCP 101 (P/N 130B1124) or LCP 102 (P/N 130B1107).
	Wrong contrast setting.	–	Press [Status] + [▲]/[▼] to adjust the contrast.
	Display (LCP) is defective.	Test using a different LCP.	Replace the faulty LCP or connection cable.
	Internal voltage supply fault or SMPS is defective.	–	Contact supplier.
Intermittent display	Overloaded supply (SMPS) due to improper control wiring or a fault within the frequency converter.	To rule out a problem in the control wiring, disconnect all control wiring by removing the terminal blocks.	If the display stays lit, the problem is in the control wiring. Check the wiring for short circuits or incorrect connections. If the display continues to cut out, follow the procedure for display dark.
Motor not running	Service switch is open or missing motor connection.	Check if the motor is connected and the connection is not interrupted (by a service switch or other device).	Connect the motor and check the service switch.
	No mains power with 24 V DC option card.	If the display is functioning but no output, check that mains power is applied to the frequency converter.	Apply mains power to run the unit.
	LCP stop.	Check if [Off] has been pressed.	Press [Auto On] or [Hand On] (depending on operating mode) to run the motor.
	Missing start signal (Standby).	Check *parameter 5-10 Terminal 18 Digital Input* for correct setting for terminal 18 (use default setting).	Apply a valid start signal to start the motor.
	Motor coast signal active (Coasting).	Check *parameter 5-12 Terminal 27 Digital Input* for correct setting for terminal 27 (use default setting).	Apply 24 V on terminal 27 or program this terminal to *No operation*.
	Wrong reference signal source.	Check the following: • Reference signal: Local, remote, or bus reference. • Preset reference. • Terminal connection. • Scaling of terminals. • Reference signal availability.	Program the correct settings. Check *parameter 3-13 Reference Site*. Set preset reference active in *parameter group 3-1* References*.
Motor running in wrong direction	Motor rotation limit.	Check that *parameter 4-10 Motor Speed Direction* is programmed correctly.	Program the correct settings.
	Active reversing signal.	Check if a reversing command is programmed for the terminal in *parameter group 5-1* Digital inputs*.	Deactivate reversing signal.
	Wrong motor phase connection.	–	See *chapter 5.5 Checking Motor Rotation*.

Danfoss A/S © 10/2016 All rights reserved.

Symptom	Possible cause	Test	Solution
Motor is not reaching maximum speed	Frequency limits are set incorrectly.	Check the output limits in *parameter 4-13 Motor Speed High Limit [RPM]*, *parameter 4-14 Motor Speed High Limit [Hz]* and *parameter 4-19 Max Output Frequency*.	Program the correct limits.
	Reference input signal is not scaled correctly.	Check the reference input signal scaling in *parameter group 6-0* Analog I/O Mode* and *parameter group 3-1* References*. Check the reference limits in *parameter group 3-0* Reference Limit*.	Program the correct settings.
Motor speed unstable	Possible incorrect parameter settings.	Check the settings of all motor parameters, including all motor compensation settings. For closed-loop operation, check the PID settings.	Check the settings in *parameter group 1-6* Load Depen. Setting*. For closed-loop operation, check the settings in *parameter group 20-0* Feedback*.
Motor runs rough	Possible overmagnetization.	Check for incorrect motor settings in all motor parameters.	Check the motor settings in *parameter groups 1-2* Motor Data, 1-3* Adv Motor Data*, and *1-5* Load Indep. Setting*.
Motor does not brake	Possible incorrect settings in the brake parameters. Possible too short ramp-down times.	Check the brake parameters. Check the ramp time settings.	Check *parameter groups 2-0* DC Brake* and *3-0* Reference Limits*.
Open power fuses or circuit breaker trip	Phase-to-phase short circuit.	The motor or panel has a short phase-to-phase. Check the motor and panel phase for short circuits.	Eliminate any short circuits detected.
	Motor overload.	Motor is overloaded for the application.	Perform a start-up test and verify that the motor current is within the specifications. If the motor current exceeds the nameplate full load current, the motor may run only with reduced load. Review the specifications for the application.
	Loose connections.	Perform a pre-startup check for loose connections.	Tighten any loose connections.
Mains current imbalance >3%	Problem with the mains power (See *alarm 4, Mains phase loss* description).	Rotate input power leads into the frequency converter 1 position: A to B, B to C, C to A.	If imbalanced leg follows the wire, it is a power problem. Check the mains supply.
	Problem with the frequency converter.	Rotate input power leads into the frequency converter 1 position: A to B, B to C, C to A.	If imbalance leg stays on the same input terminal, it is a problem with the unit. Contact the supplier.
Motor current imbalance >3%	Problem with the motor or motor wiring.	Rotate output motor cables 1 position: U to V, V to W, W to U.	If imbalanced leg follows the wire, the problem is in the motor or motor wiring. Check the motor and motor wiring.
	Problem with the frequency converter.	Rotate output motor cables 1 position: U to V, V to W, W to U.	If imbalance leg stays on same output terminal, it is a problem with the frequency converter. Contact the Danfoss supplier.
Frequency converter acceleration problems	Motor data was entered incorrectly.	If warnings or alarms occur, see *chapter 7.4 List of Warnings and Alarms*. Check that motor data is entered correctly.	Increase the ramp-up time in *parameter 3-41 Ramp 1 Ramp Up Time*. Increase the current limit in *parameter 4-18 Current Limit*. Increase the torque limit in *parameter 4-16 Torque Limit Motor Mode*.
Frequency converter deceleration problems	Motor data was entered incorrectly.	If warnings or alarms occur, see *chapter 7.4 List of Warnings and Alarms*. Check that motor data is entered correctly.	Increase the ramp-down time in *parameter 3-42 Ramp 1 Ramp Down Time*. Enable overvoltage control in *parameter 2-17 Over-voltage Control*.

Danfoss A/S © 10/2016 All rights reserved.

Symptom	Possible cause	Test	Solution
Acoustic noise or vibration	Resonances.	Bypass critical frequencies by using parameters in *parameter group 4-6* Speed Bypass*.	Check if noise and/or vibration have been reduced to an acceptable limit.
		Turn off overmodulation in *parameter 14-03 Overmodulation*.	
		Change the switching pattern and frequency in *parameter group 14-0* Inverter Switching*.	
		Increase resonance dampening in *parameter 1-64 Resonance Damping*.	

Table 7.5 Troubleshooting

7

Danfoss A/S © 10/2016 All rights reserved.

8 Specifications

8.1 Electrical Data

8.1.1 Mains Supply 1x200–240 V AC

Type designation	P1K1	P1K5	P2K2	P3K0	P3K7	P5K5	P7K5	P15K	P22K
Typical shaft output [kW]	1.1	1.5	2.2	3.0	3.7	5.5	7.5	15	22
Typical shaft output at 240 V [hp]	1.5	2.0	2.9	4.0	4.9	7.5	10	20	30
Protection rating IP20/Chassis	A3	–	–	–	–	–	–	–	–
Protection rating IP21/Type 1	–	B1	B1	B1	B1	B1	B2	C1	C2
Protection rating IP55/Type 12	A5	B1	B1	B1	B1	B1	B2	C1	C2
Protection rating IP66/NEMA 4X	A5	B1	B1	B1	B1	B1	B2	C1	C2
Output current									
Continuous (3x200–240 V) [A]	6.6	7.5	10.6	12.5	16.7	24.2	30.8	59.4	88
Intermittent (3x200–240 V) [A]	7.3	8.3	11.7	13.8	18.4	26.6	33.4	65.3	96.8
Continuous kVA at 208 V [kVA]	2.4	2.7	3.8	4.5	6.0	8.7	11.1	21.4	31.7
Maximum input current									
Continuous (1x200–240 V) [A]	12.5	15	20.5	24	32	46	59	111	172
Intermittent (1x200–240 V) [A]	13.8	16.5	22.6	26.4	35.2	50.6	64.9	122.1	189.2
Maximum pre-fuses [A]	20	30	40	40	60	80	100	150	200
Additional specifications									
Maximum cable cross-section (mains, motor, brake) [mm^2 (AWG)]	0.2–4 (4–10)					10 (7)	35 (2)	50 (1/0)	95 (4/0)
Maximum cable cross-section for mains with disconnect switch [mm2 (AWG)]	5.26 (10)	16 (6)	16 (6)	16 (6)	16 (6)	16 (6)	25 (3)	50 (1/0)	2 x 50 (2 x 1/0)[9) 10)]
Maximum cable cross-section for mains without disconnect switch [mm2 (AWG)]	5.26 (10)	16 (6)	16 (6)	16 (6)	16 (6)	16 (6)	25 (3)	50 (1/0)	95 (4/0)
Cable insulation temperature rating [°C (°F)]	75 (167)	75 (167)	75 (167)	75 (167)	75 (167)	75 (167)	75 (167)	75 (167)	75 (167)
Estimated power loss[3)] at rated maximum load [W][4)]	44	30	44	60	74	110	150	300	440
Efficiency[5)]	0.98	0.98	0.98	0.98	0.98	0.98	0.98	0.98	0.98

Table 8.1 Mains Supply 1x200–240 V AC, Normal Overload 110% for 1 Minute, P1K1–P22K

8

Danfoss A/S © 10/2016 All rights reserved.

8.1.2 Mains Supply 3x200–240 V AC

Type designation	PK25		PK37		PK55		PK75	
High/normal overload[1]	HO	NO	HO	NO	HO	NO	HO	NO
Typical shaft output [kW]	0.25		0.37		0.55		0.75	
Typical shaft output at 208 V [hp]	0.34		0.5		0.75		1	
Protection rating IP20/Chassis[6] Protection rating IP21/Type 1	A2		A2		A2		A2	
Protection rating IP55/Type 12 Protection rating IP66/NEMA 4X	A4/A5		A4/A5		A4/A5		A4/A5	
Output current								
Continuous (3x200–240 V) [A]	1.8		2.4		3.5		4.6	
Intermittent (3x200–240 V) [A]	2.7	2.0	3.6	2.6	5.3	3.9	6.9	5.1
Continuous kVA at 208 V [kVA]	0.65		0.86		1.26		1.66	
Maximum input current								
Continuous (3x200–240 V) [A]	1.6		2.2		3.2		4.1	
Intermittent (3x200–240 V) [A]	2.4	1.8	3.3	2.4	4.8	3.5	6.2	4.5
Maximum pre-fuses [A]	10		10		10		10	
Additional specifications								
Maximum cable cross-section[2] for mains, motor, brake, and load sharing [mm² (AWG)]	4, 4, 4 (12, 12, 12) (minimum 0.2 (24))							
Maximum cable cross-section[2] for mains disconnect [mm² (AWG)]	6, 4, 4 (10, 12, 12)							
Estimated power loss[3] at rated maximum load [W (hp)][4]	21 (0.03)		29 (0.04)		42 (0.06)		54 (0.07)	
Efficiency[5]	0.94		0.94		0.95		0.95	

Table 8.2 Mains Supply 3x200–240 V AC, PK25–PK75

Type designation	P1K1		P1K5		P2K2		P3K0		P3K7	
High/normal overload[1]	HO	NO	HO	NO	HO	NO	HO	NO	HO	NO
Typical shaft output [kW]	1.1		1.5		2.2		3.0		3.7	
Typical shaft output at 208 V [hp]	1.5		2		3		4		5	
Protection rating IP20/Chassis[6] Protection rating IP21/Type 1	A2		A2		A2		A3		A3	
Protection rating IP55/Type 12 Protection rating IP66/NEMA 4X	A4/A5		A4/A5		A4/A5		A5		A5	
Output current										
Continuous (3x200–240 V) [A]	6.6		7.5		10.6		12.5		16.7	
Intermittent (3x200–240 V) [A]	9.9	7.3	11.3	8.3	15.9	11.7	18.8	13.8	25	18.4
Continuous kVA at 208 V [kVA]	2.38		2.70		3.82		4.50		6.00	
Maximum input current										
Continuous (3x200–240 V) [A]	5.9		6.8		9.5		11.3		15.0	
Intermittent (3x200–240 V) [A]	8.9	6.5	10.2	7.5	14.3	10.5	17.0	12.4	22.5	16.5
Maximum pre-fuses [A]	20		20		20		32		32	
Additional specifications										
Maximum cable cross-section[2] for mains, motor, brake, and load sharing [mm² (AWG)]	4, 4, 4 (12, 12, 12) (minimum 0.2 (24))									
Maximum cable cross-section[2] for mains disconnect [mm²] [(AWG)]	6, 4, 4 (10, 12, 12)									
Estimated power loss[3] at rated maximum load [W (hp)][4]	63 (0.09)		82 (0.11)		116 (0.16)		155 (0.21)		185 (0.25)	
Efficiency[5]	0.96		0.96		0.96		0.96		0.96	

Table 8.3 Mains Supply 3x200–240 V AC, P1K1–P3K7

Danfoss A/S © 10/2016 All rights reserved.

Type designation	P5K5		P7K5		P11K		P15K	
High/normal overload[1]	HO	NO	HO	NO	HO	NO	HO	NO
Typical shaft output [kW]	3.7	5.5	5.5	7.5	7.5	11	11	15
Typical shaft output at 208 V [hp]	5.0	7.5	7.5	10	10	15	15	20
IP20/Chassis[7]	B3		B3		B3		B4	
Protection rating IP21/Type 1 Protection rating IP55/Type 12 Protection rating IP66/NEMA 4X	B1		B1		B1		B2	
Output current								
Continuous (3x200–240 V) [A]	16.7	24.2	24.2	30.8	30.8	46.2	46.2	59.4
Intermittent (3x200–240 V) [A]	26.7	26.6	38.7	33.9	49.3	50.8	73.9	65.3
Continuous kVA at 208 V [kVA]	6.0	8.7	8.7	11.1	11.1	16.6	16.6	21.4
Maximum input current								
Continuous (3x200–240 V) [A]	15.0	22.0	22.0	28.0	28.0	42.0	42.0	54.0
Intermittent (3x200–240 V) [A]	24.0	24.2	35.2	30.8	44.8	46.2	67.2	59.4
Maximum pre-fuses [A]	63		63		63		80	
Additional specifications								
IP20 maximum cable cross-section[2] for mains, brake, motor, and load sharing [mm² (AWG)]	10, 10, – (8, 8, –)		10, 10, – (8, 8, –)		10, 10, – (8, 8, –)		35, –, – (2, –, –)	
Protection rating IP21 maximum cable cross-section[2] for mains, brake, and load sharing [mm² (AWG)]	16, 10, 16 (6, 8, 6)		16, 10, 16 (6, 8, 6)		16, 10, 16 (6, 8, 6)		35, –, – (2, –, –)	
Protection rating IP21 maximum cable cross-section[2] for motor [mm² (AWG)]	10, 10, – (8, 8, –)		10, 10, – (8, 8, –)		10, 10, – (8, 8, –)		35, 25, 25 (2, 4, 4)	
Maximum cable cross-section[2] for mains disconnect [mm² (AWG)]	16, 10, 10 (6, 8, 8)						35 (2)	
Estimated power loss[3] at rated maximum load [W (hp)][4]	239 (0.33)	310 (0.42)	239 (0.33)	310 (0.42)	371 (0.51)	514 (0.7)	463 (0.63)	602 (0.82)
Efficiency[5]	0.96		0.96		0.96		0.96	

Table 8.4 Mains Supply 3x200–240 V AC, P5K5–P15K

8

Danfoss A/S © 10/2016 All rights reserved.

Type designation	P18K		P22K		P30K		P37K		P45K	
High/normal overload[1]	HO	NO	HO	NO	HO	NO	HO	NO	HO	NO
Typical shaft output [kW]	15	18.5	18.5	22	22	30	30	37	37	45
Typical shaft output at 208 V [hp]	20	25	25	30	30	40	40	50	50	60
Protection rating IP20/Chassis[7]	B4		C3		C3		C4		C4	
Protection rating IP21/Type 1 Protection rating IP55/Type 12 Protection rating IP66/NEMA 4X	C1		C1		C1		C2		C2	
Output current										
Continuous (3x200–240 V) [A]	59.4	74.8	74.8	88.0	88.0	115	115	143	143	170
Intermittent (3x200–240 V) [A]	89.1	82.3	112	96.8	132	127	173	157	215	187
Continuous kVA at 208 V [kVA]	21.4	26.9	26.9	31.7	31.7	41.4	41.4	51.5	51.5	61.2
Maximum input current										
Continuous (3x200–240 V) [A]	54.0	68.0	68.0	80.0	80.0	104	104	130	130	154.0
Intermittent (3x200–240 V) [A]	81.0	74.8	102	88.0	120	114	156	143	195	169.0
Maximum pre-fuses [A]	125		125		160		200		250	
Additional specifications										
Protection rating IP20 maximum cable cross-section for mains, brake, motor, and load sharing [mm² (AWG)]	35 (2)		50 (1)		50 (1)		150 (300 MCM)		150 (300 MCM)	
Protection ratings IP21, IP55, IP66 maximum cable cross-section for mains and motor [mm² (AWG)]	50 (1)		50 (1)		50 (1)		150 (300 MCM)		150 (300 MCM)	
Protection ratings IP21, IP55, IP66 maximum cable cross-section for brake, and load sharing [mm² (AWG)]	50 (1)		50 (1)		50 (1)		95 (3/0)		95 (3/0)	
Maximum cable cross-section[2] for disconnect [mm² (AWG)]	50, 35, 35 (1, 2, 2)						95, 70, 70 (3/0, 2/0, 2/0)		185, 150, 120 (350 MCM, 300 MCM, 4/0)	
Estimated power loss[3] at rated maximum load [W (hp)][4]	624 (0.85)	737 (1)	740 (1)	845 (1.2)	874 (1.2)	1140 (1.6)	1143 (1.6)	1353 (1.8)	1400 (1.9)	1636 (2.2)
Efficiency[5]	0.96		0.97		0.97		0.97		0.97	

Table 8.5 Mains Supply 3x200–240 V AC, P18K–P45K

8.1.3 Mains Supply 1x380–480 V AC

Type designation	P7K5	P11K	P18K	P37K
Typical shaft output [kW]	7.5	11	18.5	37
Typical shaft output at 240 V [hp]	10	15	25	50
Protection rating IP21/Type 1	B1	B2	C1	C2
Protection rating IP55/Type 12	B1	B2	C1	C2
Protection rating IP66/NEMA 4X	B1	B2	C1	C2
Output current				
Continuous (3x380–440 V) [A]	16	24	37.5	73
Intermittent (3x380–440 V) [A]	17.6	26.4	41.2	80.3
Continuous (3x441–480 V) [A]	14.5	21	34	65
Intermittent (3x441–480 V) [A]	15.4	23.1	37.4	71.5
Continuous kVA at 400 V [kVA]	11.0	16.6	26	50.6
Continuous kVA at 460 V [kVA]	11.6	16.7	27.1	51.8
Maximum input current				
Continuous (1x380–440 V) [A]	33	48	78	151
Intermittent (1x380–440 V) [A]	36	53	85.5	166

Danfoss A/S © 10/2016 All rights reserved.

Type designation	P7K5	P11K	P18K	P37K
Continuous (1x441–480 V) [A]	30	41	72	135
Intermittent (1x441–480 V) [A]	33	46	79.2	148
Maximum pre-fuses [A]	63	80	160	250
Additional specifications				
Maximum cable cross-section for mains, motor, and brake [mm^2] (AWG)]	10 (7)	35 (2)	50 (1/0)	120 (4/0)
Estimated power loss[3] at rated maximum load [W (hp)][4]	300 (0.41)	440 (0.6)	740 (1)	1480 (2)
Efficiency[5]	0.96	0.96	0.96	0.96

Table 8.6 Mains Supply 1x380–480 V AC, Normal Overload 110% for 1 Minute, P7K5–P37K

8.1.4 Mains Supply 3x380–480 V AC

Type designation	PK37		PK55		PK75		P1K1		P1K5	
High/normal overload[1]	HO	NO	HO	NO	HO	NO	HO	NO	HO	NO
Typical shaft output [kW]	0.37		0.55		0.75		1.1		1.5	
Typical shaft output at 460 V [hp]	0.5		0.75		1.0		1.5		2.0	
Protection rating IP20/Chassis[6]	A2		A2		A2		A2		A2	
Protection rating IP55/Type 12 Protection rating IP66/NEMA 4X	A4/A5		A4/A5		A4/A5		A4/A5		A4/A5	
Output current										
Continuous (3x380–440 V) [A]	1.3		1.8		2.4		3.0		4.1	
Intermittent (3x380–440 V) [A]	2.0	1.4	2.7	2.0	3.6	2.6	4.5	3.3	6.2	4.5
Continuous (3x441–480 V) [A]	1.2		1.6		2.1		2.7		3.4	
Intermittent (3x441–480 V) [A]	1.8	1.3	2.4	1.8	3.2	2.3	4.1	3.0	5.1	3.7
Continuous kVA at 400 V [kVA]	0.9		1.3		1.7		2.1		2.8	
Continuous kVA at 460 V [kVA]	0.9		1.3		1.7		2.4		2.7	
Maximum input current										
Continuous (3x380–440 V) [A]	1.2		1.6		2.2		2.7		3.7	
Intermittent (3x380–440 V) [A]	1.8	1.3	2.4	1.8	3.3	2.4	4.1	3.0	5.6	4.1
Continuous (3x441–480 V) [A]	1.0		1.4		1.9		2.7		3.1	
Intermittent (3x441–480 V) [A]	1.5	1.1	2.1	1.5	2.9	2.1	4.1	3.0	4.7	3.4
Maximum pre-fuses [A]	10		10		10		10		10	
Additional specifications										
Protection ratings IP20, IP21 maximum cable cross-section[2] for mains, motor, brake, and load sharing [mm^2 (AWG)]	4, 4, 4 (12, 12, 12) (minimum 0.2 (24))									
Protection ratings IP55, IP66 maximum cable cross-section[2] for mains, motor, brake, and load sharing [mm^2 (AWG)]	4, 4, 4 (12, 12, 12)									
Maximum cable cross-section[2] for disconnect [mm^2 (AWG)]	6, 4, 4 (10, 12, 12)									
Estimated power loss[3] at rated maximum load [W (hp)][4]	35 (0.05)		42 (0.06)		46 (0.06)		58 (0.08)		62 (0.08)	
Efficiency[5]	0.93		0.95		0.96		0.96		0.97	

Table 8.7 Mains Supply 3x380–480 V AC, PK37–P1K5

8

Danfoss A/S © 10/2016 All rights reserved.

Type designation	P2K2		P3K0		P4K0		P5K5		P7K5	
High/normal overload[1)]	HO	NO	HO	NO	HO	NO	HO	NO	HO	NO
Typical shaft output [kW]	2.2		3.0		4.0		5.5		7.5	
Typical shaft output at 460 V [hp]	2.9		4.0		5.3		7.5		10	
Protection rating IP20/Chassis[6)]	A2		A2		A2		A3		A3	
Protection rating IP55/Type 12 Protection rating IP66/NEMA 4X	A4/A5		A4/A5		A4/A5		A5		A5	
Output current										
Continuous (3x380–440 V) [A]	5.6		7.2		10		13		16	
Intermittent (3x380–440 V) [A]	8.4	6.2	10.8	7.9	15.0	11.0	19.5	14.3	24.0	17.6
Continuous (3x441–480 V) [A]	4.8		6.3		8.2		11		14.5	
Intermittent (3x441–480 V) [A]	7.2	5.3	9.5	6.9	12.3	9.0	16.5	12.1	21.8	16.0
Continuous kVA at 400 V [kVA]	3.9		5.0		6.9		9.0		11.0	
Continuous kVA at 460 V [kVA]	3.8		5.0		6.5		8.8		11.6	
Maximum input current										
Continuous (3x380–440 V) [A]	5.0		6.5		9.0		11.7		14.4	
Intermittent (3x380–440 V) [A]	7.5	5.5	9.8	7.2	13.5	9.9	17.6	12.9	21.6	15.8
Continuous(3x441–480 V) [A]	4.3		5.7		7.4		9.9		13.0	
Intermittent (3x441–480 V) [A]	6.5	4.7	8.6	6.3	11.1	8.1	14.9	10.9	19.5	14.3
Maximum pre-fuses [A]	20		20		20		30		30	
Additional specifications										
Protection ratings IP20, IP21 maximum cable cross-section[2)] for mains, motor, brake, and load sharing [mm^2 (AWG)]	4, 4, 4 (12, 12, 12) (minimum 0.2 (24))									
Protection ratings IP55, IP66 maximum cable cross-section[2)] for mains, motor, brake, and load sharing [mm^2 (AWG)]	4, 4, 4 (12, 12, 12)									
Maximum cable cross-section[2)] for disconnect [mm^2 (AWG)]	6, 4, 4 (10, 12, 12)									
Estimated power loss[3)] at rated maximum load [W (hp)][4)]	88 (0.12)		116 (0.16)		124 (0.17)		187 (0.25)		225 (0.31)	
Efficiency[5)]	0.97		0.97		0.97		0.97		0.97	

Table 8.8 Mains Supply 3x380–480 V AC, P2K2–P7K5

8

Danfoss A/S © 10/2016 All rights reserved.

Type designation	P11K		P15K		P18K		P22K		P30K	
High/normal overload[1]	HO	NO	HO	NO	HO	NO	HO	NO	HO	NO
Typical shaft output [kW]	7.5	11	11	15	15	18.5	22.0	22.0	22.0	30
Typical shaft output at 460 V [hp]	10	15	15	20	20	25	30	30	30	40
Protection rating IP20/Chassis[7]	B3		B3		B3		B4			B4
Protection rating IP21/Type 1	B1		B1		B1		B2		B2	
Protection rating IP55/Type 12 Protection rating IP66/NEMA 4X	B1		B1		B1		B2		B2	
Output current										
Continuous (3x380–440 V) [A]	–	24	24	32	32	37.5	37.5	44	44	61
Intermittent (60 s overload) (3x380–440 V) [A]	–	26.4	38.4	35.2	51.2	41.3	60	48.4	70.4	67.1
Continuous (3x441–480 V) [A]	–	21	21	27	27	34	34	40	40	52
Intermittent (60 s overload) (3x441–480 V) [A]	–	23.1	33.6	29.7	43.2	37.4	54.4	44	64	61.6
Continuous kVA at 400 V [kVA]	–	16.6	16.6	22.2	22.2	26	26	30.5	30.5	42.3
Continuous kVA at 460 V [kVA]	–	16.7	16.7	21.5	21.5	27.1	27.1	31.9	31.9	41.4
Maximum input current										
Continuous (3x380–440 V) [A]	–	22	22	29	29	34	34	40	40	55
Intermittent (60 s overload) (3x380–440 V) [A]	–	24.2	35.2	31.9	46.4	37.4	54.4	44	64	60.5
Continuous (3x441–480 V) [A]	–	19	19	25	25	31	31	36	36	47
Intermittent (60 s overload) (3x441–480 V) [A]	–	20.9	30.4	27.5	40	34.1	49.6	39.6	57.6	51.7
Maximum pre-fuses [A]	–	63		63		63		63		80
Additional specifications										
Protection ratings IP21, IP55, IP66 maximum cable cross-section[2] for mains, brake, and load sharing [mm^2 (AWG)]	16, 10, 16 (6, 8, 6)						35, –, – (2, –, –)			
Protection ratings IP21, IP55, IP66 maximum cable cross-section[2] for motor [mm^2 (AWG)]	10, 10,– (8, 8,–)						35, 25, 25 (2, 4, 4)			
Protection rating IP20 maximum cable cross-section[2] for mains, brake, motor, and load sharing [mm^2 (AWG)]	10, 10,– (8, 8,–)						35, –, – (2, –, –)			
Maximum cable cross-section[2] for disconnect [mm^2 (AWG)]	16, 10, 10 (6, 8, 8)									
Estimated power loss[3] at rated maximum load [W (hp)][4]	291 (0.4)	392 (0.53)	291 (0.4)	392 (0.53)	379 (0.52)	465 (0.63)	444 (0.61)	525 (0.72)	547 (0.75)	739 (1)
Efficiency[5]	0.98		0.98		0.98		0.98		0.98	

Table 8.9 Mains Supply 3x380–480 V AC, P11K–P30K

Danfoss A/S © 10/2016 All rights reserved.

Type designation	P37K		P45K		P55K		P75K		P90K	
High/normal overload[1]	HO	NO	HO	NO	HO	NO	HO	NO	HO	NO
Typical shaft output [kW]	30	37	37	45	45	55	55	75	75	90
Typical shaft output at 460 V [hp]	40	50	50	60	60	75	75	100	100	125
Protection rating IP20/Chassis[6]	B4		C3		C3		C4		C4	
Protection rating IP21/Type 1	C1		C1		C1		C2		C2	
Protection rating IP55/Type 12 Protection rating IP66/NEMA 4X	C1		C1		C1		C2		C2	
Output current										
Continuous (3x380–440 V) [A]	61	73	73	90	90	106	106	147	147	177
Intermittent (60 s overload) (3x380–440 V) [A]	91.5	80.3	110	99	135	117	159	162	221	195
Continuous (3x441–480 V) [A]	52	65	65	80	80	105	105	130	130	160
Intermittent (60 s overload) (3x441–480 V) [A]	78	71.5	97.5	88	120	116	158	143	195	176
Continuous kVA at 400 V [kVA]	42.3	50.6	50.6	62.4	62.4	73.4	73.4	102	102	123
Continuous kVA at 460 V [kVA]	41.4	51.8	51.8	63.7	63.7	83.7	83.7	104	103.6	128
Maximum input current										
Continuous (3x380–440 V) [A]	55	66	66	82	82	96	96	133	133	161
Intermittent (60 s overload) (3x380–440 V) [A]	82.5	72.6	99	90.2	123	106	144	146	200	177
Continuous (3x441–480 V) [A]	47	59	59	73	73	95	95	118	118	145
Intermittent (60 s overload) (3x441–480 V) [A]	70.5	64.9	88.5	80.3	110	105	143	130	177	160
Maximum pre-fuses [A]	100		125		160		250		250	
Additional specifications										
Protection rating IP20 maximum cable cross-section for mains and motor [mm² (AWG)]	35 (2)		50 (1)		50 (1)		150 (300 MCM)		150 (300 MCM)	
Protection rating IP20 maximum cable cross-section for brake and load sharing [mm² (AWG)]	35 (2)		50 (1)		50 (1)		95 (4/0)		95 (4/0)	
Protection ratings IP21, IP55, IP66 maximum cable cross-section for mains and motor [mm² (AWG)]	50 (1)		50 (1)		50 (1)		150 (300 MCM)		150 (300 MCM)	
Protection ratings IP21, IP55, IP66 maximum cable cross-section for brake and load sharing [mm² (AWG)]	50 (1)		50 (1)		50 (1)		95 (3/0)		95 (3/0)	
Maximum cable cross-section[2] for mains disconnect [mm² (AWG)]	50, 35, 35 (1, 2, 2)						95, 70, 70 (3/0, 2/0, 2/0)		185, 150, 120 (350 MCM, 300 MCM, 4/0)	
Estimated power loss[3] at rated maximum load [W (hp)][4]	570 (0.78)	698 (0.95)	697 (0.95)	843 (1.1)	891 (1.2)	1083 (1.5)	1022 (1.4)	1384 (1.9)	1232 (1.7)	1474 (2)
Efficiency[5]	0.98		0.98		0.98		0.98		0.99	

Table 8.10 Mains Supply 3x380–480 V AC, P37K–P90K

Danfoss A/S © 10/2016 All rights reserved.

8.1.5 Mains Supply 3x525–600 V AC

Type designation	PK75		P1K1		P1K5		P2K2	
High/normal overload[1)]	HO	NO	HO	NO	HO	NO	HO	NO
Typical shaft output [kW]	0.75		1.1		1.5		2.2	
Typical shaft output [hp]	1		1.5		2		3	
Protection rating IP20/Chassis Protection rating IP21/Type 1	A3		A3		A3		A3	
Protection rating IP55/Type 12	A5		A5		A5		A5	
Output current								
Continuous (3x525–550 V) [A]	1.8		2.6		2.9		4.1	
Intermittent (3x525–550 V) [A]	2.7	2.0	3.9	2.9	4.4	3.2	6.2	4.5
Continuous (3x551–600 V) [A]	1.7		2.4		2.7		3.9	
Intermittent (3x551–600 V) [A]	2.6	1.9	3.6	2.6	4.1	3.0	5.9	4.3
Continuous kVA at 550 V [kVA]	1.7		2.5		2.8		3.9	
Continuous kVA at 550 V [kVA]	1.7		2.4		2.7		3.9	
Maximum input current								
Continuous (3x525–600 V) [A]	1.7		2.4		2.7		4.1	
Intermittent (3x525–600 V) [A]	2.6	1.9	3.6	2.6	4.1	3.0	6.2	4.5
Maximum pre-fuses [A]	10		10		10		20	
Additional specifications								
Maximum cable cross-section[2)] for mains, motor, brake, and load sharing [mm^2 (AWG)]	4,4,4 (12,12,12) (minimum 0.2 (24))							
Maximum cable cross-section[2)] for mains disconnect [mm^2 (AWG)]	6,4,4 (10,12,12)							
Estimated power loss[3)] at rated maximum load [W (hp)][4)]	35 (0.05)		50 (0.07)		65 (0.09)		92 (0.13)	
Efficiency[5)]	0.97		0.97		0.97		0.97	

Table 8.11 Mains Supply 3x525–600 V AC, PK75–P2K2

8

Danfoss A/S © 10/2016 All rights reserved.

Type designation	P3K0		P4K0		P5K5		P7K5	
High/normal overload[1)]	HO	NO	HO	NO	HO	NO	HO	NO
Typical shaft output [kW]	3.0		4.0		5.5		7.5	
Typical shaft output [hp]	4		5		7.5		10	
Protection rating IP20/Chassis Protection rating IP21/Type 1	A2		A2		A3		A3	
IP55/Type 12	A5		A5		A5		A5	
Output current								
Continuous (3x525–550 V) [A]	5.2		6.4		9.5		11.5	
Intermittent (3x525–550 V) [A]	7.8	5.7	9.6	7.0	14.3	10.5	17.3	12.7
Continuous (3x551–600 V) [A]	4.9		6.1		9.0		11.0	
Intermittent (3x551–600 V) [A]	7.4	5.4	9.2	6.7	13.5	9.9	16.5	12.1
Continuous kVA at 550 V [kVA]	5.0		6.1		9.0		11.0	
Continuous kVA at 550 V [kVA]	4.9		6.1		9.0		11.0	
Maximum input current								
Continuous (3x525–600 V) [A]	5.2		5.8		8.6		10.4	
Intermittent (3x525–600 V) [A]	7.8	5.7	8.7	6.4	12.9	9.5	15.6	11.4
Maximum pre-fuses [A]	20		20		32		32	
Additional specifications								
Maximum cable cross-section[2)] for mains, motor, brake, and load sharing [mm^2 (AWG)]	4,4,4 (12,12,12) (minimum 0.2 (24))							
Maximum cable cross-section[2)] for mains disconnect [mm^2 (AWG)]	6,4,4 (10,12,12)							
Estimated power loss[3)] at rated maximum load [W (hp)][4)]	122 (0.17)		145 (0.2)		195 (0.27)		261 (0.36)	
Efficiency[5)]	0.97		0.97		0.97		0.97	

Table 8.12 Mains Supply 3x525–600 V AC, P3K0–P7K5

Danfoss A/S © 10/2016 All rights reserved.

Type designation	P11K		P15K		P18K		P22K		P30K		P37K	
High/normal overload[1]	HO	NO	HO	NO	HO	NO	HO	NO	HO	NO	HO	NO
Typical shaft output [kW]	7.5	11	11	15	15	18.5	18.5	22	22	30	30	37
Typical shaft output [hp]	10	15	15	20	20	25	25	30	30	40	40	50
Protection rating IP20/ Chassis	B3		B3		B3		B4		B4		B4	
Protection rating IP21/ Type 1 Protection rating IP55/ Type 12 Protection rating IP66/ NEMA 4X	B1		B1		B1		B2		B2		C1	
Output current												
Continuous (3x525–550 V) [A]	11.5	19	19	23	23	28	28	36	36	43	43	54
Intermittent (3x525–550 V) [A]	18.4	21	30	25	37	31	45	40	58	47	65	59
Continuous (3x551–600 V) [A]	11	18	18	22	22	27	27	34	34	41	41	52
Intermittent (3x551–600 V) [A]	17.6	20	29	24	35	30	43	37	54	45	62	57
Continuous kVA at 550 V [kVA]	11	18.1	18.1	21.9	21.9	26.7	26.7	34.3	34.3	41.0	41.0	51.4
Continuous kVA at 575 V [kVA]	11	17.9	17.9	21.9	21.9	26.9	26.9	33.9	33.9	40.8	40.8	51.8
Maximum input current												
Continuous at 550 V [A]	10.4	17.2	17.2	20.9	20.9	25.4	25.4	32.7	32.7	39	39	49
Intermittent at 550 V [A]	16.6	19	28	23	33	28	41	36	52	43	59	54
Continuous at 575 V [A]	9.8	16	16	20	20	24	24	31	31	37	37	47
Intermittent at 575 V [A]	15.5	17.6	26	22	32	27	39	34	50	41	56	52
Maximum pre-fuses [A]	40		40		50		60		80		100	
Additional specifications												
Protection rating IP20, maximum cable cross-section[2] for mains, brake, motor, and load sharing [mm² (AWG)]	10, 10,– (8, 8,–)						35,–,– (2,–,–)					
Protection ratings IP21, IP55, IP66 maximum cable cross-section[2] for mains, brake, and load sharing [mm² (AWG)]	16, 10, 10 (6, 8, 8)						35,–,– (2,–,–)					
Protection ratings IP21, IP55, IP66 maximum cable cross-section[2] for motor [mm² (AWG)]	10, 10,– (8, 8,–)						35, 25, 25 (2, 4, 4)					
Maximum cable cross-section[2] for mains disconnect [mm² (AWG)]	16, 10, 10 (6, 8, 8)										50, 35, 35 (1, 2, 2)	
Estimated power loss[3] at rated maximum load [W (hp)][4]	220 (0.3)	300 (0.41)	220 (0.3)	300 (0.41)	300 (0.41)	370 (0.5)	370 (0.5)	440 (0.6)	440 (0.6)	600 (0.82)	600 (0.82)	740 (1)
Efficiency[5]	0.98		0.98		0.98		0.98		0.98		0.98	

Table 8.13 Mains supply 3x525–600 V AC, P11K–P37K

Danfoss A/S © 10/2016 All rights reserved.

Type designation	P45K		P55K		P75K		P90K	
High/normal overload[1]	HO	NO	HO	NO	HO	NO	HO	NO
Typical shaft output [kW]	37	45	45	55	55	75	75	90
Typical shaft output [hp]	50	60	60	75	75	100	100	125
Protection rating IP20/Chassis	C3		C3		C4		C4	
Protection rating IP21/Type 1 Protection rating IP55/Type 12 Protection rating IP66/NEMA 4X	C1		C1		C2		C2	
Output current								
Continuous (3x525–550 V) [A]	54	65	65	87	87	105	105	137
Intermittent (3x525–550 V) [A]	81	72	98	96	131	116	158	151
Continuous (3x525–600 V) [A]	52	62	62	83	83	100	100	131
Intermittent (3x525–600 V) [A]	78	68	93	91	125	110	150	144
Continuous kVA at 525 V [kVA]	51.4	61.9	61.9	82.9	82.9	100	100.0	130.5
Continuous kVA at 575 V [kVA]	51.8	61.7	61.7	82.7	82.7	99.6	99.6	130.5
Maximum input current								
Continuous at 550 V [A]	49	59	59	78.9	78.9	95.3	95.3	124.3
Intermittent at 550 V [A]	74	65	89	87	118	105	143	137
Continuous at 575 V [A]	47	56	56	75	75	91	91	119
Intermittent at 575 V [A]	70	62	85	83	113	100	137	131
Maximum pre-fuses [A]	150		160		225		250	
Additional specifications								
Protection rating IP20 maximum cable cross-section for mains and motor [mm² (AWG)]	50 (1)				150 (300 MCM)			
Protection rating IP20 maximum cable cross-section for brake and load sharing [mm² (AWG)]	50 (1)				95 (4/0)			
Protection ratings IP21, IP55, IP66 maximum cable cross-section for mains and motor [mm² (AWG)]	50 (1)				150 (300 MCM)			
Protection ratings IP21, IP55, IP66 maximum cable cross-section for brake and load sharing [mm² (AWG)]	50 (1)				95 (4/0)			
Maximum cable cross-section[2] for mains disconnect [mm² (AWG)]	50, 35, 35 (1, 2, 2)				95, 70, 70 (3/0, 2/0, 2/0)		185, 150, 120 (350 MCM, 300 MCM, 4/0)	
Estimated power loss[3] at rated maximum load [W (hp)][4]	740 (1)	900 (1.2)	900 (1.2)	1100 (1.5)	1100 (1.5)	1500 (2)	1500 (2)	1800 (2.5)
Efficiency[5]	0.98		0.98		0.98		0.98	

Table 8.14 Mains supply 3x525–600 V AC, P45K–P90K

Danfoss A/S © 10/2016 All rights reserved.

8.1.6 Mains Supply 3x525–690 V AC

Type designation	P1K1		P1K5		P2K2		P3K0		P4K0		P5K5		P7K5	
High/normal overload[1]	HO	NO	HO	NO	HO	NO	HO	NO	HO	NO	HO	NO	HO	NO
Typical shaft output [kW]	1.1		1.5		2.2		3.0		4.0		5.5		7.5	
Typical shaft output [hp]	1.5		2		3		4		5		7.5		10	
IP20/Chassis	A3		A3		A3		A3		A3		A3		A3	
Output current														
Continuous (3x525–550 V) [A]	2.1		2.7		3.9		4.9		6.1		9.0		11.0	
Intermittent (3x525–550 V) [A]	3.2	2.3	4.1	3.0	5.9	4.3	7.4	5.4	9.2	6.7	13.5	9.9	16.5	12.1
Continuous (3x551–690 V) [A]	1.6		2.2		3.2		4.5		5.5		7.5		10.0	
Intermittent (3x551–690 V) [A]	2.4	1.8	3.3	2.4	4.8	3.5	6.8	5.0	8.3	6.1	11.3	8.3	15.0	11.0
Continuous kVA at 525 V [kVA]	1.9		2.5		3.5		4.5		5.5		8.2		10.0	
Continuous kVA at 690 V [kVA]	1.9		2.6		3.8		5.4		6.6		9.0		12.0	
Maximum input current														
Continuous (3x525–550 V) [A]	1.9		2.4		3.5		4.4		5.5		8.1		9.9	
Intermittent (3x525–550 V) [A]	2.9	2.1	3.6	2.6	5.3	3.9	6.6	4.8	8.3	6.1	12.2	8.9	14.9	10.9
Continuous (3x551–690 V) [A]	1.4		2.0		2.9		4.0		4.9		6.7		9.0	
Intermittent (3x551–690 V) [A]	2.1	1.5	3.0	2.2	4.4	3.2	6.0	4.4	7.4	5.4	10.1	7.4	13.5	9.9
Additional specifications														
Maximum cable cross–section[2] for mains, motor, brake, and load sharing [mm^2 (AWG)]	4, 4, 4 (12, 12, 12) (minimum (24)													
Maximum cable cross–section[2] for mains disconnect [mm^2 (AWG)]	6, 4, 4 (10, 12, 12)													
Estimated power loss[3] at rated maximum load [W (hp)][4]	44 (0.06)		60 (0.08)		88 (0.12)		120 (0.16)		160 (0.22)		220 (0.3)		300 (0.41)	
Efficiency[5]	0.96		0.96		0.96		0.96		0.96		0.96		0.96	

Table 8.15 A3 Enclosure, Mains Supply 3x525–690 V AC IP20/Protected Chassis, P1K1–P7K5

8

Danfoss A/S © 10/2016 All rights reserved.

Type designation	P11K		P15K		P18K		P22K		P30K	
High/normal overload[1]	HO	NO	HO	NO	HO	NO	HO	NO	HO	NO
Typical shaft output at 550 V [kW]	5.9	7.5	7.5	11	11	15	15	18.5	18.5	22
Typical shaft output at 550 V [hp]	7.5	10	10	15	15	20	20	25	25	30
Typical shaft output at 690 V [kW]	7.5	11	11	15	15	18.5	18.5	22	22	30
Typical shaft output at 690 V [hp]	10	15	15	20	20	25	25	30	30	40
IP20/Chassis	B4		B4		B4		B4		B4	
IP21/Type 1 IP55/Type 12	B2		B2		B2		B2		B2	
Output current										
Continuous (3x525–550 V) [A]	11	14	14.0	19.0	19.0	23.0	23.0	28.0	28.0	36.0
Intermittent (60 s overload) (3x525–550 V) [A]	17.6	15.4	22.4	20.9	30.4	25.3	36.8	30.8	44.8	39.6
Continuous (3x551–690 V) [A]	10	13	13.0	18.0	18.0	22.0	22.0	27.0	27.0	34.0
Intermittent (60 s overload) (3x551–690 V) [A]	16	14.3	20.8	19.8	28.8	24.2	35.2	29.7	43.2	37.4
Continuous kVA at 550 V [kVA]	10	13.3	13.3	18.1	18.1	21.9	21.9	26.7	26.7	34.3
Continuous kVA at 690 V kVA]	12	15.5	15.5	21.5	21.5	26.3	26.3	32.3	32.3	40.6
Maximum input current										
Continuous at 550 V [A]	9.9	15	15.0	19.5	19.5	24.0	24.0	29.0	29.0	36.0
Intermittent (60 s overload) at 550 V [A]	15.8	16.5	23.2	21.5	31.2	26.4	38.4	31.9	46.4	39.6
Continuous (at 690 V) [A]	9	14.5	14.5	19.5	19.5	24.0	24.0	29.0	29.0	36.0
Intermittent (60 s overload) at 690 V [A]	14.4	16	23.2	21.5	31.2	26.4	38.4	31.9	46.4	39.6
Additional specifications										
Maximum cable cross–section[2] for mains, motor, brake, and load sharing [mm² (AWG)]	35, 25, 25 (2, 4, 4)									
Maximum cable cross–section[2)] for mains disconnect [mm² (AWG)]	16,10,10 (6, 8, 8)									
Estimated power loss[3)] at rated maximum load [W (hp)][4)]	150 (0.2)	220 (0.3)	150 (0.2)	220 (0.3)	220 (0.3)	300 (0.41)	300 (0.41)	370 (0.5)	370 (0.5)	440 (0.6)
Efficiency[5)]	0.98		0.98		0.98		0.98		0.98	

Table 8.16 B2/B4 Enclosure, Mains Supply 3x525–690 V AC IP20/IP21/IP55 – Chassis/NEMA 1/NEMA 12, P11K–P22K

Danfoss A/S © 10/2016 All rights reserved.

Type designation	P37K		P45K		P55K		P75K/N75K[8]		P90K/N90K[8]	
High/normal overload[1]	HO	NO	HO	NO	HO	NO	HO	NO	HO	NO
Typical shaft output at 550 V [kW]	22	30	30	37	37	45	45	55	55	75
Typical shaft output at 550 V [hp]	30	40	40	50	50	60	60	75	75	100
Typical shaft output at 690 V [kW]	30	37	37	45	45	55	55	75	75	90
Typical shaft output at 690 V [hp]	40	50	50	60	60	75	75	100	199	125
IP20/Chassis	B4		C3		C3		D3h		D3h	
IP21/Type 1 IP55/Type 12	C2		C2		C2		C2		C2	
Output current										
Continuous (3x525–550 V) [A]	36.0	43.0	43.0	54.0	54.0	65.0	65.0	87.0	87.0	105
Intermittent (60 s overload) (3x525–550 V) [A]	54.0	47.3	64.5	59.4	81.0	71.5	97.5	95.7	130.5	115.5
Continuous (3x551–690 V) [A]	34.0	41.0	41.0	52.0	52.0	62.0	62.0	83.0	83.0	100
Intermittent (60 s overload) (3x551–690 V) [A]	51.0	45.1	61.5	57.2	78.0	68.2	93.0	91.3	124.5	110
Continuous kVA at 550 V [kVA]	34.3	41.0	41.0	51.4	51.4	61.9	61.9	82.9	82.9	100
Continuous kVA at 690 V [kVA]	40.6	49.0	49.0	62.1	62.1	74.1	74.1	99.2	99.2	119.5
Maximum input current										
Continuous at 550 V [A]	36.0	49.0	49.0	59.0	59.0	71.0	71.0	87.0	87.0	99.0
Intermittent (60 s overload) at 550 V [A]	54.0	53.9	72.0	64.9	87.0	78.1	105.0	95.7	129	108.9
Continuous at 690 V [A]	36.0	48.0	48.0	58.0	58.0	70.0	70.0	86.0	–	–
Intermittent (60 s overload) at 690 V [A]	54.0	52.8	72.0	63.8	87.0	77.0	105	94.6	–	–
Additional specifications										
Maximum cable cross-section for mains and motor [mm² (AWG)]	150 (300 MCM)									
Maximum cable cross-section for brake and load sharing [mm² (AWG)]	95 (3/0)									
Maximum cable cross-section[2] for mains disconnect [mm² (AWG)]	95 (3/0)						185, 150, 120 (350 MCM, 300 MCM, 4/0)		–	
Estimated power loss[3] at rated maximum load [W (hp)][4]	600 (0.82)	740 (1)	740 (1)	900 (1.2)	900 (1.2)	1100 (1.5)	1100 (1.5)	1500 (2)	1500 (2)	1800 (2.5)
Efficiency[5]	0.98		0.98		0.98		0.98		0.98	

Table 8.17 B4, C2, C3 Enclosure, Mains Supply 3x525–690 V AC IP20/IP21/IP55 – Chassis/NEMA1/NEMA 12, P30K–P75K

For fuse ratings see chapter 8.8 Fuses and Circuit Breakers.

1) High overload=150% or 160% torque for a duration of 60 s. Normal overload=110% torque for a duration of 60 s.

2) The 3 values for the maximum cable cross-section are for single core, flexible wire, and flexible wire with sleeve, respectively.

3) Applies for dimensioning of frequency converter cooling. If the switching frequency is higher than the default setting, the power losses may increase. LCP and typical control card power consumptions are included. For power loss data according to EN 50598–2, refer to www.danfoss.com/vltenergyefficiency.

4) Efficiency measured at nominal current. For energy efficiency class see chapter 8.4.1 Ambient Conditions. For part load losses see www.danfoss.com/vltenergyefficiency.

5) Measured using 5 m (16 ft) shielded motor cables at rated load and rated frequency.

6) Enclosure sizes A2+A3 can be converted to IP21 using a conversion kit. See also chapters Mechanical mounting and IP21/Type 1 Enclosure kit in the design guide.

7) Enclosure sizes B3+B4 and C3+C4 can be converted to IP21 using a conversion kit. See also chapters Mechanical mounting and IP21/Type 1 Enclosure kit in the design guide.

8) Enclosure sizes for N75K, N90K are D3h for IP20/Chassis, and D5h for IP54/Type 12.

9) Two wires are required.

10) Variant not available in IP21.

Danfoss A/S © 10/2016 All rights reserved.

8.2 Mains Supply

Mains supply (L1, L2, L3)	
Supply voltage	200–240 V ±10%
Supply voltage	380–480 V ±10%
Supply voltage	525–600 V ±10%
Supply voltage	525–690 V ±10%

Mains voltage low/mains drop-out:
During low mains voltage or a mains drop-out, the frequency converter continues until the DC-link voltage drops below the minimum stop level. Typically, this corresponds to 15% below the lowest rated supply voltage of the frequency converter. Power-up and full torque cannot be expected at mains voltage <10% below the lowest rated supply voltage of the frequency converter.

Supply frequency	50/60 Hz +4/-6%

The frequency converter power supply is tested in accordance with IEC61000-4-28, 50 Hz +4/-6%.

Maximum imbalance temporary between mains phases	3.0% of rated supply voltage
True power factor (λ)	≥0.9 nominal at rated load
Displacement power factor (cosφ) near unity	(>0.98)
Switching on input supply L1, L2, L3 (power-ups) ≤7.5 kW (10 hp)	Maximum 2 times/minute
Switching on input supply L1, L2, L3 (power-ups) 11–90 kW (15–125 hp)	Maximum 1 time/minute
Environment according to EN 60664-1	Overvoltage category III/pollution degree 2

The unit is suitable for use on a circuit capable of delivering not more than 100000 RMS symmetrical Amperes, 240/480/600/690 V maximum.

8

8.3 Motor Output and Motor Data

Motor output (U, V, W)	
Output voltage	0–100% of supply voltage
Output frequency	0–590 Hz[1)]
Switching on output	Unlimited
Ramp times	1–3600 s

1) Dependent on power size.

Torque characteristics, normal overload	
Starting torque (constant torque)	Maximum 110% for 1 minute, once in 10 minutes[2)]
Overload torque (constant torque)	Maximum 110% for 1 minute, once in 10 minutes[2)]

Torque characteristics, high overload	
Starting torque (constant torque)	Maximum 150/160% for 1 minute, once in 10 minutes[2)]
Overload torque (constant torque)	Maximum 150/160% for 1 minute, once in 10 minutes[2)]

2) Percentage relates to the nominal torque of the frequency converter, dependent on power size.

Danfoss A/S © 10/2016 All rights reserved.

8.4 Ambient Conditions

Environment	
Enclosure size A	IP20/Chassis, IP21/Type 1, IP55/Type 12, IP66/Type 4X
Enclosure size B1/B2	IP21/Type 1, IP55/Type 12, IP66/Type 4X
Enclosure size B3/B4	IP20/Chassis
Enclosure size C1/C2	IP21/Type 1, IP55/Type 12, IP66/Type 4X
Enclosure size C3/C4	IP20/Chassis
Enclosure kit available ≤ enclosure size A	IP21/TYPE 1/IP4X top
Vibration test enclosure A/B/C	1.0 g
Maximum relative humidity	5–95% (IEC 721-3-3; Class 3K3 (non-condensing) during operation
Aggressive environment (IEC 721-3-3), uncoated	Class 3C2
Aggressive environment (IEC 721-3-3), coated	Class 3C3
Test method according to IEC 60068-2-43 H2S (10 days)	
Ambient temperature	Maximum 50 °C (122 °F)

Derating for high ambient temperature, see chapter Special Conditions in the design guide.

Minimum ambient temperature during full-scale operation	0 °C (32 °F)
Minimum ambient temperature at reduced performance	-10 °C (14 °F)
Temperature during storage/transport	-25 to +65/70 °C (-13 to 149/158 °F)
Maximum altitude above sea level without derating	1000 m (3281 ft)
Maximum altitude above sea level with derating	3000 m (9843 ft)

Derating for high altitude, see chapter Special Conditions in the design guide.

EMC standards, Emission	EN 61800-3
EMC standards, Immunity	EN 61800-3
Energy efficiency class[1)]	IE2

1) Determined according to EN50598-2 at:

- *Rated load.*
- *90% rated frequency.*
- *Switching frequency factory setting.*
- *Switching pattern factory setting.*

8.5 Cable Specifications

Maximum motor cable length, shielded/armored	150 m (492 ft)
Maximum motor cable length, unshielded/unarmored	300 m (984 ft)
Maximum cross-section to motor, mains, load sharing, and brake[1)]	
Maximum cross-section to control terminals, rigid wire	1.5 mm^2 or 2 x 0.75 mm^2 (16 AWG)
Maximum cross-section to control terminals, flexible cable	1 mm^2 (18 AWG)
Maximum cross-section to control terminals, cable with enclosed core	0.5 mm^2 (20 AWG)
Minimum cross-section to control terminals	0.25 mm^2 (24 AWG)

1) See electrical data tables in chapter 8.1 Electrical Data for more information.

It is mandatory to ground the mains connection properly using T95 (PE) of the frequency converter. The ground connection cable cross-section must be at least 10 mm^2 (8 AWG) or 2 rated mains wires terminated separately according to EN 50178. See also*chapter 4.3.1 Grounding* . Use unshielded cable.

8.6 Control Input/Output and Control Data

Control card, RS485 serial communication	
Terminal number	68 (P,TX+, RX+), 69 (N,TX-, RX-)
Terminal number 61	Common for terminals 68 and 69

The RS485 serial communication circuit is functionally separated from other central circuits and galvanically isolated from the supply voltage (PELV).

Danfoss A/S © 10/2016 All rights reserved.

Analog inputs	
Number of analog inputs	2
Terminal number	53, 54
Modes	Voltage or current
Mode select	Switches S201 and S202
Voltage mode	Switch S201/S202 = OFF (U)
Voltage level	0–10 V (scaleable)
Input resistance, R_i	Approximately 10 kΩ
Maximum voltage	±20 V
Current mode	Switch S201/S202=On (I)
Current level	0/4-20 mA (scaleable)
Input resistance, R_i	Approximately 200 Ω
Maximum current	30 mA
Resolution for analog inputs	10 bit (+ sign)
Accuracy of analog inputs	Maximum error 0.5% of full scale
Bandwidth	200 Hz

The analog inputs are galvanically isolated from the supply voltage (PELV) and other high-voltage terminals.

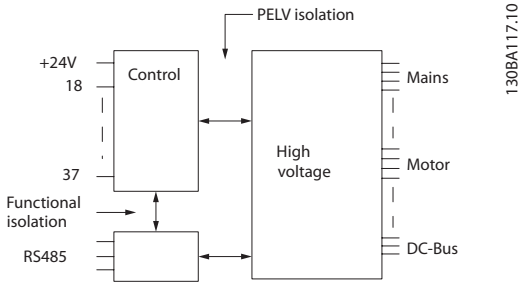

Illustration 8.1 PELV Isolation of Analog Inputs

Analog output	
Number of programmable analog outputs	1
Terminal number	42
Current range at analog output	0/4–20 mA
Maximum resistor load to common at analog output	500 Ω
Accuracy on analog output	Maximum error 0.8% of full scale
Resolution on analog output	8 bit

The analog output is galvanically isolated from the supply voltage (PELV) and other high-voltage terminals.

Digital inputs	
Programmable digital inputs	4 (6)
Terminal number	18, 19, 27[1)], 29[1)], 32, 33,
Logic	PNP or NPN
Voltage level	0–24 V DC
Voltage level, logic 0 PNP	<5 V DC
Voltage level, logic 1 PNP	>10 V DC
Voltage level, logic 0 NPN	>19 V DC
Voltage level, logic 1 NPN	<14 V DC
Maximum voltage on input	28 V DC
Input resistance, R_i	Approximately 4 kΩ

All digital inputs are galvanically isolated from the supply voltage (PELV) and other high-voltage terminals.

1) Terminals 27 and 29 can also be programmed as output.

Danfoss A/S © 10/2016 All rights reserved.

Digital output	
Programmable digital/pulse outputs	2
Terminal number	27, 29[1)]
Voltage level at digital/frequency output	0–24 V
Maximum output current (sink or source)	40 mA
Maximum load at frequency output	1 kΩ
Maximum capacitive load at frequency output	10 nF
Minimum output frequency at frequency output	0 Hz
Maximum output frequency at frequency output	32 kHz
Accuracy of frequency output	Maximum error 0.1% of full scale
Resolution of frequency outputs	12 bit

1) Terminal 27 and 29 can also be programmed as input.

The digital output is galvanically isolated from the supply voltage (PELV) and other high-voltage terminals.

Pulse inputs	
Programmable pulse inputs	2
Terminal number pulse	29, 33
Maximum frequency at terminal 29, 33	110 kHz (push-pull driven)
Maximum frequency at terminal 29, 33	5 kHz (open collector)
Minimum frequency at terminal 29, 33	4 Hz
Voltage level	See *Digital inputs*
Maximum voltage on input	28 V DC
Input resistance, R_i	Approximately 4 kΩ
Pulse input accuracy (0.1–1 kHz)	Maximum error 0.1% of full scale

Control card, 24 V DC output	
Terminal number	12, 13
Maximum load	200 mA

The 24 V DC supply is galvanically isolated from the supply voltage (PELV), but has the same potential as the analog and digital inputs and outputs.

Relay outputs	
Programmable relay outputs	2
Relay 01 terminal number	1-3 (break), 1-2 (make)
Maximum terminal load (AC-1)[1)] on 1-3 (NC), 1-2 (NO) (resistive load)	240 V AC, 2 A
Maximum terminal load (AC-15)[1)] (inductive load @ cosφ 0.4)	240 V AC, 0.2 A
Maximum terminal load (DC-1)[1)] on 1-2 (NO), 1-3 (NC) (resistive load)	60 V DC, 1 A
Maximum terminal load (DC-13)[1)] (inductive load)	24 V DC, 0.1 A
Relay 02 terminal number	4-6 (break), 4-5 (make)
Maximum terminal load (AC-1)[1)] on 4-5 (NO) (resistive load)[2) 3)]	400 V AC, 2 A
Maximum terminal load (AC-15)[1)] on 4-5 (NO) (inductive load @ cosφ 0.4)	240 V AC, 0.2 A
Maximum terminal load (DC-1)[1)] on 4-5 (NO) (resistive load)	80 V DC, 2 A
Maximum terminal load (DC-13)[1)] on 4-5 (NO) (inductive load)	24 V DC, 0.1 A
Maximum terminal load (AC-1)[1)] on 4-6 (NC) (resistive load)	240 V AC, 2 A
Maximum terminal load (AC-15)[1)] on 4-6 (NC) (inductive load @ cosφ 0.4)	240 V AC, 0.2 A
Maximum terminal load (DC-1)[1)] on 4-6 (NC) (resistive load)	50 V DC, 2 A
Maximum terminal load (DC-13)[1)] on 4-6 (NC) (inductive load)	24 V DC, 0.1 A
Minimum terminal load on 1-3 (NC), 1-2 (NO), 4-6 (NC), 4-5 (NO)	24 V DC, 10 mA, 24 V AC, 20 mA
Environment according to EN 60664-1	Overvoltage category III/pollution degree 2

1) IEC 60947 parts 4 and 5.

The relay contacts are galvanically isolated from the rest of the circuit by reinforced isolation (PELV).

2) Overvoltage category II.

3) UL applications 300 V AC 2 A.

 Danfoss A/S © 10/2016 All rights reserved.

Control card, 10 V DC output	
Terminal number	50
Output voltage	10.5 V ±0.5 V
Maximum load	25 mA

The 10 V DC supply is galvanically isolated from the supply voltage (PELV) and other high-voltage terminals.

Control characteristics	
Resolution of output frequency at 0–590 Hz	±0.003 Hz
System response time (terminals 18, 19, 27, 29, 32, 33)	≤2 ms
Speed control range (open loop)	1:100 of synchronous speed
Speed accuracy (open loop)	30–4000 RPM: Maximum error of ±8 RPM

All control characteristics are based on a 4-pole asynchronous motor.

Control card performance	
Scan interval	5 ms

Control card, USB serial communication	
USB standard	1.1 (full speed)
USB plug	USB type B "device" plug

8

NOTICE

Connection to a PC is carried out via a standard host/device USB cable.
The USB connection is galvanically isolated from the supply voltage (PELV) and other high-voltage terminals.
The USB connection is not galvanically isolated from protective earth. Use only an isolated laptop/PC as a connection to the USB connector on the frequency converter, or an isolated USB cable/converter.

8.7 Connection Tightening Torques

	Torque [N•m (in-lb)]					
Enclosure	**Mains**	**Motor**	**DC connection**	**Brake**	**Ground**	**Ground**
A2	1.8 (16)	1.8 (16)	1.8 (16)	1.8 (16)	3 (27)	0.6 (5)
A3	1.8 (16)	1.8 (16)	1.8 (16)	1.8 (16)	3 (27)	0.6 (5)
A4	1.8 (16)	1.8 (16)	1.8 (16)	1.8 (16)	3 (27)	0.6 (5)
A5	1.8 (16)	1.8 (16)	1.8 (16)	1.8 (16)	3 (27)	0.6 (5)
B1	1.8 (16)	1.8 (16)	1.5 (13)	1.5 (13.3)	3 (27)	0.6 (5)
B2	4.5 (40)	4.5 (40)	3.7 (33)	3.7 (33)	3 (27)	0.6 (5)
B3	1.8 (16)	1.8 (16)	1.8 (16)	1.8 (16)	3 (27)	0.6 (5)
B4	4.5 (40)	4.5 (40)	4.5 (40)	4.5 (40)	3 (27)	0.6 (5)
C1	10 (89)	10 (89)	10 (89)	10 (89)	3 (27)	0.6 (5)
C2	14/24 (124/221)[1)]	14/24 (124/221)[1)]	14 (124)	14 (124)	3 (27)	0.6 (5)
C3	10 (89)	10 (89)	10 (89)	10 (89)	3 (27)	0.6 (5)
C4	14/24 (124/221)[1)]	14/24 (124/221)[1)]	14 (124)	14 (124)	3 (27)	0.6 (5)

Table 8.18 Terminal Tightening Torques

1) For different cable dimensions x/y, where x≤95 mm^2 (3 AWG) and y≥95 mm^2 (3 AWG).

Danfoss A/S © 10/2016 All rights reserved.

8.8 Fuses and Circuit Breakers

Use recommended fuses and/or circuit breakers on the supply side as protection if there is component break-down inside the frequency converter (first fault).

NOTICE

Use of fuses on the supply side is mandatory for IEC 60364 (CE) and NEC 2009 (UL) compliant installations.

Recommendations

- gG type fuses.
- Moeller type circuit breakers. For other circuit breaker types, ensure that the energy into the frequency converter is equal to or lower than the energy provided by Moeller types.

Use of recommended fuses and circuit breakers ensures that possible damage to the frequency converter is limited to damage inside the unit. For further information, see *Application Note Fuses and Circuit Breakers*.

The fuses in *chapter 8.8.1 CE Compliance* to *chapter 8.8.2 UL Compliance* are suitable for use on a circuit capable of delivering 100000 A_{rms} (symmetrical), depending on the frequency converter voltage rating. With the proper fusing, the frequency converter short circuit current rating (SCCR) is 100000 A_{rms}.

8

8.8.1 CE Compliance

Enclosure	Power [kW (hp)]	Recommended fuse size	Recommended maximum fuse	Recommended circuit breaker Moeller	Maximum trip level [A]
A2	0.25–2.2 (0.34–3)	gG-10 (0.25–1.5) gG-16 (2.2)	gG-25	PKZM0-25	25
A3	3.0–3.7 (4–5)	gG-16 (3) gG-20 (3.7)	gG-32	PKZM0-25	25
A4	0.25–2.2 (0.34–3)	gG-10 (0.25–1.5) gG-16 (2.2)	gG-32	PKZM0-25	25
A5	0.25–3.7 (0.34–5)	gG-10 (0.25–1.5) gG-16 (2.2–3) gG-20 (3.7)	gG-32	PKZM0-25	25
B1	5.5–11 (7.5–15)	gG-25 (5.5) gG-32 (7.5)	gG-80	PKZM4-63	63
B2	15 (20)	gG-50	gG-100	NZMB1-A100	100
B3	5.5–11 (7.5–15)	gG-25	gG-63	PKZM4-50	50
B4	15–18 (20–24)	gG-32 (7.5) gG-50 (11) gG-63 (15)	gG-125	NZMB1-A100	100
C1	18.5–30 (25–40)	gG-63 (15) gG-80 (18.5) gG-100 (22)	gG-160 (15–18.5) aR-160 (22)	NZMB2-A200	160
C2	37–45 (50–60)	aR-160 (30) aR-200 (37)	aR-200 (30) aR-250 (37)	NZMB2-A250	250
C3	22–30 (30–40)	gG-80 (18.5) aR-125 (22)	gG-150 (18.5) aR-160 (22)	NZMB2-A200	150
C4	37–45 (50–60)	aR-160 (30) aR-200 (37)	aR-200 (30) aR-250 (37)	NZMB2-A250	250

Table 8.19 200–240 V, Enclosure Sizes A, B, and C

Danfoss A/S © 10/2016 All rights reserved.

Enclosure	Power [kW (hp)]	Recommended fuse size	Recommended maximum fuse	Recommended circuit breaker Moeller	Maximum trip level [A]
A2	1.1–4.0 (1.5–5)	gG-10 (0.37-3) gG-16 (4)	gG-25	PKZM0-25	25
A3	5.5–7.5 (7.5–10)	gG-16	gG-32	PKZM0-25	25
A4	1.1–4.0 (1.5–5)	gG-10 (0.37-3) gG-16 (4)	gG-32	PKZM0-25	25
A5	1.1–7.5 (1.5–10)	gG-10 (0.37-3) gG-16 (4-7.5)	gG-32	PKZM0-25	25
B1	11–18.5 (15–25)	gG-40	gG-80	PKZM4-63	63
B2	22–30 (30–40)	gG-50 (18.5) gG-63 (22)	gG-100	NZMB1-A100	100
B3	11–18 (15–24)	gG-40	gG-63	PKZM4-50	50
B4	22–37 (30–50)	gG-50 (18.5) gG-63 (22) gG-80 (30)	gG-125	NZMB1-A100	100
C1	37–55 (50–75)	gG-80 (30) gG-100 (37) gG-160 (45)	gG-160	NZMB2-A200	160
C2	75–90 (100–125)	aR-200 (55) aR-250 (75)	aR-250	NZMB2-A250	250
C3	45–55 (60–75)	gG-100 (37) gG-160 (45)	gG-150 (37) gG-160 (45)	NZMB2-A200	150
C4	75–90 (100–125)	aR-200 (55) aR-250 (75)	aR-250	NZMB2-A250	250

Table 8.20 380–480 V, Enclosure Sizes A, B, and C

8

Danfoss A/S © 10/2016 All rights reserved.

Enclosure	Power [kW (hp)]	Recommended fuse size	Recommended maximum fuse	Recommended circuit breaker Moeller	Maximum trip level [A]
A2	1.1–4.0 (1.5–5)	gG-10	gG-25	PKZM0-25	25
A3	5.5–7.5 (7.5–10)	gG-10 (5.5) gG-16 (7.5)	gG-32	PKZM0-25	25
A5	1.1–7.5 (1.5–10)	gG-10 (0.75-5.5) gG-16 (7.5)	gG-32	PKZM0-25	25
B1	11–18 (15–24)	gG-25 (11) gG-32 (15) gG-40 (18.5)	gG-80	PKZM4-63	63
B2	22–30 (30–40)	gG-50 (22) gG-63 (30)	gG-100	NZMB1-A100	100
B3	11–18.5 (15–25)	gG-25 (11) gG-32 (15)	gG-63	PKZM4-50	50
B4	22–37 (30–50)	gG-40 (18.5) gG-50 (22) gG-63 (30)	gG-125	NZMB1-A100	100
C1	37–55 (50–75)	gG-63 (37) gG-100 (45) aR-160 (55)	gG-160 (37-45) aR-250 (55)	NZMB2-A200	160
C2	75–90 (100–125)	aR-200 (75)	aR-250	NZMB2-A250	250
C3	45–55 (60–75)	gG-63 (37) gG-100 (45)	gG-150	NZMB2-A200	150
C4	75–90 (100–125)	aR-160 (55) aR-200 (75)	aR-250	NZMB2-A250	250

Table 8.21 525–600 V, Enclosure Sizes A, B, and C

Enclosure	Power [kW (hp)]	Recommended fuse size	Recommended maximum fuse	Recommended circuit breaker Danfoss	Maximum trip level [A]
A3	1.1 (1.5)	gG-6	gG-25	CTI25M 10-16	16
	1.5 (2)	gG-6	gG-25	CTI25M 10-16	16
	2.2 (3)	gG-6	gG-25	CTI25M 10-16	16
	3 (4)	gG-10	gG-25	CTI25M 10-16	16
	4 (5)	gG-10	gG-25	CTI25M 10-16	16
	5.5 (7.5)	gG-16	gG-25	CTI25M 10-16	16
	7.5 (10)	gG-16	gG-25	CTI25M 10-16	16
B2	11 (15)	gG-25	gG-63	–	–
	15 (20)	gG-25	gG-63	–	–
	18 (24)	gG-32	–	–	–
	22 (30)	gG-32	–	–	–
C2	30 (40)	gG-40	–	–	–
	37 (50)	gG-63	gG-80	–	–
	45 (60)	gG-63	gG-100	–	–
	55 (75)	gG-80	gG-125	–	–
	75 (100)	gG-100	gG-160	–	–
C3	37 (50)	gG-100	gG-125	–	–
	45 (60)	gG-125	gG-160	–	–

Table 8.22 525–690 V, Enclosure Sizes A, B, and C

Danfoss A/S © 10/2016 All rights reserved.

8.8.2 UL Compliance

Recommended maximum fuse													
Power [kW (hp)]	Maximum prefuse size [A]	Bussmann JFHR2	Bussmann RK1	Bussmann J	Bussmann T	Bussmann CC	Bussmann CC	Bussmann CC	SIBA RK1	Littelfuse RK1	Ferraz-Shawmut CC	Ferraz-Shawmut RK1	Ferraz-Shawmut J
1.1 (1.5)	15	FWX-15	KTN-R15	JKS-15	JJN-15	FNQ-R-15	KTK-R-15	LP-CC-15	5017906-016	KLN-R15	ATM-R15	A2K-15R	HSJ15
1.5 (2)	20	FWX-20	KTN-R20	JKS-20	JJN-20	FNQ-R-20	KTK-R-20	LP-CC-20	5017906-020	KLN-R20	ATM-R20	A2K-20R	HSJ20
2.2 (3)	30[1)]	FWX-30	KTN-R30	JKS-30	JJN-30	FNQ-R-30	KTK-R-30	LP-CC-30	5012406-032	KLN-R30	ATM-R30	A2K-30R	HSJ30
3.0 (4)	35	FWX-35	KTN-R35	JKS-35	JJN-35	–	–	–	–	KLN-R35	–	A2K-35R	HSJ35
3.7 (5)	50	FWX-50	KTN-R50	JKS-50	JJN-50	–	–	–	5014006-050	KLN-R50	–	A2K-50R	HSJ50
5.5 (7.5)	60[2)]	FWX-60	KTN-R60	JKS-60	JJN-60	–	–	–	5014006-063	KLN-R60	–	A2K-60R	HSJ60
7.5 (10)	80	FWX-80	KTN-R80	JKS-80	JJN-80	–	–	–	5014006-080	KLN-R80	–	A2K-80R	HSJ80
15 (20)	150	FWX-150	KTN-R150	JKS-150	JJN-150	–	–	–	2028220-150	KLN-R150	–	A2K-150R	HSJ150
22 (30)	200	FWX-200	KTN-R200	JKS-200	JJN-200	–	–	–	2028220-200	KLN-R200	–	A2K-200R	HSJ200

Table 8.23 1x200–240 V, Enclosure Sizes A, B, and C

1) Siba allowed up to 32 A.

2) Siba allowed up to 63 A.

Recommended maximum fuse													
Power [kW (hp)]	Maximum prefuse size [A]	Bussmann JFHR2	Bussmann RK1	Bussmann J	Bussmann T	Bussmann CC	Bussmann CC	Bussmann CC	SIBA RK1	Littelfuse RK1	Ferraz-Shawmut CC	Ferraz-Shawmut RK1	Ferraz-Shawmut J
7.5 (10)	60	FWH-60	KTS-R60	JKS-60	JJS-60	–	–	–	5014006-063	KLS-R60	–	A6K-60R	HSJ60
11 (15)	80	FWH-80	KTS-R80	JKS-80	JJS-80	–	–	–	2028220-100	KLS-R80	–	A6K-80R	HSJ80
22 (30)	150	FWH-150	KTS-R150	JKS-150	JJS-150	–	–	–	2028220-160	KLS-R150	–	A6K-150R	HSJ150
37 (50)	200	FWH-200	KTS-R200	JKS-200	JJS-200	–	–	–	2028220-200	KLS-200	–	A6K-200R	HSJ200

Table 8.24 1x380–500 V, Enclosure Sizes B and C

- *KTS-fuses from Bussmann may substitute KTN for 240 V frequency converters.*
- *FWH-fuses from Bussmann may substitute FWX for 240 V frequency converters.*
- *JJS-fuses from Bussmann may substitute JJN for 240 V frequency converters.*
- *KLSR fuses from Littelfuse may substitute KLNR fuses for 240 V frequency converters.*
- *A6KR fuses from Ferraz-Shawmut may substitute A2KR for 240 V frequency converters.*

Danfoss A/S © 10/2016 All rights reserved.

	Recommended maximum fuse					
Power [kW (hp)]	Bussmann Type RK1 [1]	Bussmann Type J	Bussmann Type T	Bussmann Type CC	Bussmann	Bussmann Type CC
0.25–0.37 (0.34–0.5)	KTN-R-05	JKS-05	JJN-05	FNQ-R-5	KTK-R-5	LP-CC-5
0.55–1.1 (0.75–1.5)	KTN-R-10	JKS-10	JJN-10	FNQ-R-10	KTK-R-10	LP-CC-10
1.5 (2)	KTN-R-15	JKS-15	JJN-15	FNQ-R-15	KTK-R-15	LP-CC-15
2.2 (3)	KTN-R-20	JKS-20	JJN-20	FNQ-R-20	KTK-R-20	LP-CC-20
3.0 (4)	KTN-R-25	JKS-25	JJN-25	FNQ-R-25	KTK-R-25	LP-CC-25
3.7 (5)	KTN-R-30	JKS-30	JJN-30	FNQ-R-30	KTK-R-30	LP-CC-30
5.5–7.5 (7.5–10)	KTN-R-50	JKS-50	JJN-50	–	–	–
11 (15)	KTN-R-60	JKS-60	JJN-60	–	–	–
15 (20)	KTN-R-80	JKS-80	JJN-80	–	–	–
18.5–22 (25–30)	KTN-R-125	JKS-125	JJN-125	–	–	–
30 (40)	KTN-R-150	JKS-150	JJN-150	–	–	–
37 (50)	KTN-R-200	JKS-200	JJN-200	–	–	–
45 (60)	KTN-R-250	JKS-250	JJN-250	–	–	–

Table 8.25 3x200–240 V, Enclosure Sizes A, B, and C

	Recommended maximum fuse							
Power [kW (hp)]	SIBA Type RK1	Littelfuse Type RK1	Ferraz-Shawmut Type CC	Ferraz-Shawmut Type RK1[2]	Bussmann Type JFHR2[3]	Littelfuse JFHR2	Ferraz-Shawmut JFHR2[4]	Ferraz-Shawmut J
0.25–0.37 (0.34–0.5)	5017906-005	KLN-R-05	ATM-R-05	A2K-05-R	FWX-5	–	–	HSJ-6
0.55–1.1 (0.75–1.5)	5017906-010	KLN-R-10	ATM-R-10	A2K-10-R	FWX-10	–	–	HSJ-10
1.5 (2)	5017906-016	KLN-R-15	ATM-R-15	A2K-15-R	FWX-15	–	–	HSJ-15
2.2 (3)	5017906-020	KLN-R-20	ATM-R-20	A2K-20-R	FWX-20	–	–	HSJ-20
3.0 (4)	5017906-025	KLN-R-25	ATM-R-25	A2K-25-R	FWX-25	–	–	HSJ-25
3.7 (5)	5012406-032	KLN-R-30	ATM-R-30	A2K-30-R	FWX-30	–	–	HSJ-30
5.5–7.5 (7.5–10)	5014006-050	KLN-R-50	–	A2K-50-R	FWX-50	–	–	HSJ-50
11 (15)	5014006-063	KLN-R-60	–	A2K-60-R	FWX-60	–	–	HSJ-60
15 (20)	5014006-080	KLN-R-80	–	A2K-80-R	FWX-80	–	–	HSJ-80
18.5–22 (25–30)	2028220-125	KLN-R-125	–	A2K-125-R	FWX-125	–	–	HSJ-125
30 (40)	2028220-150	KLN-R-150	–	A2K-150-R	FWX-150	L25S-150	A25X-150	HSJ-150
37 (50)	2028220-200	KLN-R-200	–	A2K-200-R	FWX-200	L25S-200	A25X-200	HSJ-200
45 (60)	2028220-250	KLN-R-250	–	A2K-250-R	FWX-250	L25S-250	A25X-250	HSJ-250

Table 8.26 3x200–240 V, Enclosure Sizes A, B, and C

1) KTS-fuses from Bussmann may substitute KTN for 240 V frequency converters.

2) A6KR fuses from Ferraz-Shawmut may substitute A2KR for 240 V frequency converters.

3) FWH-fuses from Bussmann may substitute FWX for 240 V frequency converters.

4) A50X fuses from Ferraz-Shawmut may substitute A25X for 240 V frequency converters.

Danfoss A/S © 10/2016 All rights reserved.

	Recommended maximum fuse					
Power [kW (hp)]	Bussmann Type RK1	Bussmann Type J	Bussmann Type T	Bussmann Type CC	Bussmann Type CC	Bussmann Type CC
–	KTS-R-6	JKS-6	JJS-6	FNQ-R-6	KTK-R-6	LP-CC-6
1.1–2.2 (1.5–3)	KTS-R-10	JKS-10	JJS-10	FNQ-R-10	KTK-R-10	LP-CC-10
3 (4)	KTS-R-15	JKS-15	JJS-15	FNQ-R-15	KTK-R-15	LP-CC-15
4 (5)	KTS-R-20	JKS-20	JJS-20	FNQ-R-20	KTK-R-20	LP-CC-20
5.5 (7.5)	KTS-R-25	JKS-25	JJS-25	FNQ-R-25	KTK-R-25	LP-CC-25
7.5 (10)	KTS-R-30	JKS-30	JJS-30	FNQ-R-30	KTK-R-30	LP-CC-30
11 (15)	KTS-R-40	JKS-40	JJS-40	–	–	–
15 (20)	KTS-R-50	JKS-50	JJS-50	–	–	–
22 (30)	KTS-R-60	JKS-60	JJS-60	–	–	–
30 (40)	KTS-R-80	JKS-80	JJS-80	–	–	–
37 (50)	KTS-R-100	JKS-100	JJS-100	–	–	–
45 (60)	KTS-R-125	JKS-125	JJS-125	–	–	–
55 (75)	KTS-R-150	JKS-150	JJS-150	–	–	–
75 (100)	KTS-R-200	JKS-200	JJS-200	–	–	–
90 (125)	KTS-R-250	JKS-250	JJS-250	–	–	–

Table 8.27 3x380–480 V, Enclosure Sizes A, B, and C

	Recommended maximum fuse							
Power [kW (hp)]	SIBA Type RK1	Littelfuse Type RK1	Ferraz-Shawmut Type CC	Ferraz-Shawmut Type RK1	Bussmann JFHR2	Ferraz-Shawmut J	Ferraz-Shawmut JFHR2[1)]	Littelfuse JFHR2
–	5017906-006	KLS-R-6	ATM-R-6	A6K-6-R	FWH-6	HSJ-6	–	–
1.1–2.2 (1.5–3)	5017906-010	KLS-R-10	ATM-R-10	A6K-10-R	FWH-10	HSJ-10	–	–
3 (4)	5017906-016	KLS-R-15	ATM-R-15	A6K-15-R	FWH-15	HSJ-15	–	–
4 (5)	5017906-020	KLS-R-20	ATM-R-20	A6K-20-R	FWH-20	HSJ-20	–	–
5.5 (7.5)	5017906-025	KLS-R-25	ATM-R-25	A6K-25-R	FWH-25	HSJ-25	–	–
7.5 (10)	5012406-032	KLS-R-30	ATM-R-30	A6K-30-R	FWH-30	HSJ-30	–	–
11 (15)	5014006-040	KLS-R-40	–	A6K-40-R	FWH-40	HSJ-40	–	–
15 (20)	5014006-050	KLS-R-50	–	A6K-50-R	FWH-50	HSJ-50	–	–
22 (30)	5014006-063	KLS-R-60	–	A6K-60-R	FWH-60	HSJ-60	–	–
30 (40)	2028220-100	KLS-R-80	–	A6K-80-R	FWH-80	HSJ-80	–	–
37 (50)	2028220-125	KLS-R-100	–	A6K-100-R	FWH-100	HSJ-100	–	–
45 (60)	2028220-125	KLS-R-125	–	A6K-125-R	FWH-125	HSJ-125	–	–
55 (75)	2028220-160	KLS-R-150	–	A6K-150-R	FWH-150	HSJ-150	–	–
75 (100)	2028220-200	KLS-R-200	–	A6K-200-R	FWH-200	HSJ-200	A50-P-225	L50-S-225
90 (125)	2028220-250	KLS-R-250	–	A6K-250-R	FWH-250	HSJ-250	A50-P-250	L50-S-250

Table 8.28 3x380–480 V, Enclosure Sizes A, B, and C

1) Ferraz-Shawmut A50QS fuses may substitute A50P fuses.

Danfoss A/S © 10/2016 All rights reserved.

	Recommended maximum fuse									
Power [kW (hp)]	Bussmann Type RK1	Bussmann Type J	Bussmann Type T	Bussmann Type CC	Bussmann Type CC	Bussmann Type CC	SIBA Type RK1	Littelfuse Type RK1	Ferraz-Shawmut Type RK1	Ferraz-Shawmut J
0.75–1.1 (1–1.5)	KTS-R-5	JKS-5	JJS-6	FNQ-R-5	KTK-R-5	LP-CC-5	5017906-005	KLS-R-005	A6K-5-R	HSJ-6
1.5–2.2 (2–3)	KTS-R-10	JKS-10	JJS-10	FNQ-R-10	KTK-R-10	LP-CC-10	5017906-010	KLS-R-010	A6K-10-R	HSJ-10
3 (4)	KTS-R15	JKS-15	JJS-15	FNQ-R-15	KTK-R-15	LP-CC-15	5017906-016	KLS-R-015	A6K-15-R	HSJ-15
4 (5)	KTS-R20	JKS-20	JJS-20	FNQ-R-20	KTK-R-20	LP-CC-20	5017906-020	KLS-R-020	A6K-20-R	HSJ-20
5.5 (7.5)	KTS-R-25	JKS-25	JJS-25	FNQ-R-25	KTK-R-25	LP-CC-25	5017906-025	KLS-R-025	A6K-25-R	HSJ-25
7.5 (10)	KTS-R-30	JKS-30	JJS-30	FNQ-R-30	KTK-R-30	LP-CC-30	5017906-030	KLS-R-030	A6K-30-R	HSJ-30
11–15 (15–20)	KTS-R-35	JKS-35	JJS-35	–	–	–	5014006-040	KLS-R-035	A6K-35-R	HSJ-35
18 (24)	KTS-R-45	JKS-45	JJS-45	–	–	–	5014006-050	KLS-R-045	A6K-45-R	HSJ-45
22 (30)	KTS-R-50	JKS-50	JJS-50	–	–	–	5014006-050	KLS-R-050	A6K-50-R	HSJ-50
30 (40)	KTS-R-60	JKS-60	JJS-60	–	–	–	5014006-063	KLS-R-060	A6K-60-R	HSJ-60
37 (50)	KTS-R-80	JKS-80	JJS-80	–	–	–	5014006-080	KLS-R-075	A6K-80-R	HSJ-80
45 (60)	KTS-R-100	JKS-100	JJS-100	–	–	–	5014006-100	KLS-R-100	A6K-100-R	HSJ-100
55 (75)	KTS-R-125	JKS-125	JJS-125	–	–	–	2028220-125	KLS-R-125	A6K-125-R	HSJ-125
75 (100)	KTS-R-150	JKS-150	JJS-150	–	–	–	2028220-150	KLS-R-150	A6K-150-R	HSJ-150
90 (125)	KTS-R-175	JKS-175	JJS-175	–	–	–	2028220-200	KLS-R-175	A6K-175-R	HSJ-175

Table 8.29 3x525–600 V, Enclosure Sizes A, B, and C

	Recommended maximum fuse							
Power [kW (hp)]	Maximum pre-fuse [A]	Bussmann E52273 RK1/JDDZ	Bussmann E4273 J/JDDZ	Bussmann E4273 T/JDDZ	SIBA E180276 RK1/JDDZ	Littelfuse E81895 RK1/JDDZ	Ferraz-Shawmut E163267/E2137 RK1/JDDZ	Ferraz-Shawmut E2137 J/HSJ
11–15 (15–20)	30	KTS-R-30	JKS-30	JJS-30	5017906-030	KLS-R-030	A6K-30-R	HST-30
22 (30)	45	KTS-R-45	JKS-45	JJS-45	5014006-050	KLS-R-045	A6K-45-R	HST-45
30 (40)	60	KTS-R-60	JKS-60	JJS-60	5014006-063	KLS-R-060	A6K-60-R	HST-60
37 (50)	80	KTS-R-80	JKS-80	JJS-80	5014006-080	KLS-R-075	A6K-80-R	HST-80
45 (60)	90	KTS-R-90	JKS-90	JJS-90	5014006-100	KLS-R-090	A6K-90-R	HST-90
55 (75)	100	KTS-R-100	JKS-100	JJS-100	5014006-100	KLS-R-100	A6K-100-R	HST-100
75 (100)	125	KTS-R-125	JKS-125	JJS-125	2028220-125	KLS-150	A6K-125-R	HST-125
90 (125)	150	KTS-R-150	JKS-150	JJS-150	2028220-150	KLS-175	A6K-150-R	HST-150

Table 8.30 3x525–690 V, Enclosure Sizes B and C

Danfoss A/S © 10/2016 All rights reserved.

8.9 Power Ratings, Weight, and Dimensions

Enclosure size [kW (hp)]		A2		A3		A4	A5
3x525–690 V	T7	–		–		–	–
3x525–600 V	T6	–		0.75–7.5 (1–10)		–	0.75–7.5 (1–10)
3x380–480 V	T4	0.37–4.0 (0.5–5)		5.5–7.5 (7.5–10)		0.37–4.0 (0.5–5)	0.37–7.5 (0.5–10)
1x380–480 V	S4	–		–		1.1–4.0 (1.5–5)	–
3x200–240 V	T2	0.25–3.0 (0.34–4)		3.7 (0.5)		0.25–2.2 (0.34–3)	0.25–3.7 (0.34–5)
1x200–240 V	S2	–		1.1 (1.5)		1.1–2.2 (1.5–3)	1.1 (1.5)
IP NEMA		20 Chassis	21 Type 1	20 Chassis	21 Type 1	55/66 Type 12/4X	55/66 Type 12/4X
Height [mm (in)]							
Height of backplate	A[1)]	268 (10.6)	375 (14.8)	268 (10.6)	375 (14.8)	390 (15.4)	420 (16.5)
Height with de-coupling plate for fieldbus cables	A	374 (14.7)	–	374 (14.7)	–	–	–
Distance between mounting holes	a	257 (10.1)	350 (13.8)	257 (10.1)	350 (13.8)	401 (15.8)	402 (15.8)
Width [mm (in)]							
Width of backplate	B	90 (3.5)	90 (3.5)	130 (5.1)	130 (5.1)	200 (7.9)	242 (9.5)
Width of backplate with 1 C option	B	130 (5.1)	130 (5.1)	170 (6.7)	170 (6.7)	–	242 (9.5)
Width of backplate with 2 C options	B	90 (3.5)	90 (3.5)	130 (5.1)	130 (5.1)	–	242 (9.5)
Distance between mounting holes	b	70 (2.8)	70 (2.8)	110 (4.3)	110 (4.3)	171 (6.7)	215 (8.5)
Depth[2)] [mm (in)]							
Without option A/B	C	205 (8.1)	205 (8.1)	205 (8.1)	205 (8.1)	175 (6.9)	200 (7.9)
With option A/B	C	220 (8.7)	220 (8.7)	220 (8.7)	220 (8.7)	175 (6.9)	200 (7.9)
Screw holes [mm (in)]							
	c	8.0 (0.31)	8.0 (0.31)	8.0 (0.31)	8.0 (0.31)	8.25 (0.32)	8.2 (0.32)
	d	ø11 (0.43)	ø11 (0.43)	ø11 (0.43)	ø11 (0.43)	ø12 (0.47)	ø12 (0.47)
	e	ø5.5 (0.22)	ø5.5 (0.22)	ø5.5 (0.22)	ø5.5 (0.22)	ø6.5 (0.26)	ø6.5 (0.26)
	f	9 (0.35)	9 (0.35)	9 (0.35)	9 (0.35)	6 (0.24)	9 (0.35)
Maximum weight [kg (lb)]		4.9 (10.8)	5.3 (11.7)	6.6 (14.6)	7 (15.4)	9.7 (21.4)	14 (31)

1) See *Illustration 3.4* and *Illustration 3.5* for top and bottom mounting holes.
2) Depth of enclosure varies with different options installed.

Table 8.31 Power Ratings, Weight, and Dimensions, Enclosure Sizes A2-A5

8

Danfoss A/S © 10/2016 All rights reserved.

Enclosure size [kW (hp)]		B1	B2	B3	B4	C1	C2	C3	C4
3x525–690 V	T7	–	11–30 (15–40)	–	–	–	37–90 (50–125)	–	–
3x525–600 V	T6	11–18.5 (15–25)	22–30 (30–40)	11–18.5 (15–25)	22–37 (30–50)	37–55 (50–75)	75–90 (100–125)	45–55 (60–75)	75–90 (100–125)
3x380–480 V	T4	11–18.5 (15–25)	22–30 (30–40)	11–18.5 (15–25)	22–37 (30–50)	37–55 (50–75)	75–90 (100–125)	45–55 (60–75)	75–90 (100–125)
1x380–480 V	S4	7.5 (10)	11 (15)	–	–	18 (24)	37 (50)	–	–
3x200–240 V	T2	5.5–11 (7.5–15)	15 (20)	5.5–11 (7.5–15)	15–18.5 (20–25)	18.5–30 (25–40)	37–45 (50–60)	22–30 (30–40)	37–45 (50–60)
1x200–240 V	S2	1.5–3.7 (2–5)	7.5 (10)	–	–	15 (20)	22 (30)	–	–
IP NEMA		21/55/66 Type 1/12/4X	21/55/66 Type 1/12/4X	20 Chassis	20 Chassis	21/55/66 Type 1/12/4X	21/55/66 Type 1/12/4X	20 Chassis	20 Chassis
Height [mm (in)]									
Height of backplate	A[1)]	480 (18.9)	650 (25.6)	399 (15.7)	520 (20.5)	680 (26.8)	770 (30.3)	550 (21.7)	660 (26)
Height with de-coupling plate for fieldbus cables	A	–	–	419 (16.5)	595 (23.4)	–	–	630 (24.8)	800 (31.5)
Distance between mounting holes	a	454 (17.9)	624 (24.6)	380 (15)	495 (19.5)	648 (25.5)	739 (29.1)	521 (20.5)	631 (24.8)
Width [mm (in)]									
Width of backplate	B	242 (9.5)	242 (9.5)	165 (6.5)	231 (9.1)	308 (12.1)	370 (14.6)	308 (12.1)	370 (14.6)
Width of backplate with 1 C option	B	242 (9.5)	242 (9.5)	205 (8.1)	231 (9.1)	308 (12.1)	370 (14.6)	308 (12.1)	370 (14.6)
Width of backplate with 2 C options	B	242 (9.5)	242 (9.5)	165 (6.5)	231 (9.1)	308 (12.1)	370 (14.6)	308 (12.1)	370 (14.6)
Distance between mounting holes	b	210 (8.3)	210 (8.3)	140 (5.5)	200 (7.9)	272 (10.7)	334 (13.1)	270 (10.6)	330 (13)
Depth[2)][mm (in)]									
Without option A/B	C	260 (10.2)	260 (10.2)	248 (9.8)	242 (9.5)	310 (12.2)	335 (13.2)	333 (13.1)	333 (13.1)
With option A/B	C	260 (10.2)	260 (10.2)	262 (10.3)	242 (9.5)	310 (12.2)	335 (13.2)	333 (13.1)	333 (13.1)
Screw holes [mm (in)]									
	c	12 (0.47)	12 (0.47)	8 (0.32)	–	12 (0.47)	12 (0.47)	–	–
	d	ø19 (0.75)	ø19 (0.75)	12 (0.47)	–	ø19 (0.75)	ø19 (0.75)	–	–
	e	ø9 (0.35)	ø9 (0.35)	6.8 (0.27)	8.5 (0.33)	ø9 (0.35)	ø9 (0.35)	8.5 (0.33)	8.5 (0.33)
	f	9 (0.35)	9 (0.35)	7.9 (0.31)	15 (0.59)	9.8 (0.39)	9.8 (0.39)	17 (0.67)	17 (0.67)
Maximum weight [kg (lb)]		23 (51)	27 (60)	12 (26.5)	23.5 (52)	45 (99)	65 (143)	35 (77)	50 (110)

1) See *Illustration 3.4* and *Illustration 3.5* for top and bottom mounting holes.
2) Depth of enclosure varies with different options installed.

Table 8.32 Power Ratings, Weight, and Dimensions, Enclosure Sizes B1–B4, C1–C4

8

Danfoss A/S © 10/2016 All rights reserved.

9 Appendix

9.1 Symbols, Abbreviations, and Conventions

°C	Degrees Celsius
°F	Degrees Fahrenheit
AC	Alternating current
AEO	Automatic energy optimization
AWG	American wire gauge
AMA	Automatic motor adaptation
DC	Direct current
EMC	Electro-magnetic compatibility
ETR	Electronic thermal relay
$f_{M,N}$	Nominal motor frequency
FC	Frequency converter
I_{INV}	Rated inverter output current
I_{LIM}	Current limit
$I_{M,N}$	Nominal motor current
$I_{VLT,MAX}$	Maximum output current
$I_{VLT,N}$	Rated output current supplied by the frequency converter
IP	Ingress protection
LCP	Local control panel
MCT	Motion control tool
n_s	Synchronous motor speed
$P_{M,N}$	Nominal motor power
PELV	Protective extra low voltage
PCB	Printed circuit board
PM Motor	Permanent magnet motor
PWM	Pulse width modulation
RPM	Revolutions per minute
Regen	Regenerative terminals
T_{LIM}	Torque limit
$U_{M,N}$	Nominal motor voltage

Table 9.1 Symbols and Abbreviations

Conventions

Numbered lists indicate procedures. Bullet lists indicate other information.

Italicized text indicates:

- Cross-reference.
- Link.
- Parameter name.
- Parameter group name.
- Parameter option.
- Footnote.

All dimensions in drawings are in [mm] (in).

9.2 Parameter Menu Structure

NOTICE

The availability of some parameters depends on the hardware configuration (installed options and power rating).

Danfoss A/S © 10/2016 All rights reserved.

0-	**Operation / Display**
0-0*	**Basic Settings**
0-01	Language
0-02	Motor Speed Unit
0-03	Regional Settings
0-04	Operating State at Power-up
0-05	Local Mode Unit
0-1*	**Set-up Operations**
0-10	Active Set-up
0-11	Programming Set-up
0-12	This Set-up Linked to
0-13	Readout: Linked Set-ups
0-14	Readout: Prog. Set-ups / Channel
0-2*	**LCP Display**
0-20	Display Line 1.1 Small
0-21	Display Line 1.2 Small
0-22	Display Line 1.3 Small
0-23	Display Line 2 Large
0-24	Display Line 3 Large
0-25	My Personal Menu
0-3*	**LCP Custom Readout**
0-30	Custom Readout Unit
0-31	Custom Readout Min Value
0-32	Custom Readout Max Value
0-37	Display Text 1
0-38	Display Text 2
0-39	Display Text 3
0-4*	**LCP Keypad**
0-40	[Hand on] Key on LCP
0-41	[Off] Key on LCP
0-42	[Auto on] Key on LCP
0-43	[Reset] Key on LCP
0-44	[Off/Reset] Key on LCP
0-45	[Drive Bypass] Key on LCP
0-5*	**Copy/Save**
0-50	LCP Copy
0-51	Set-up Copy
0-6*	**Password**
0-60	Main Menu Password
0-61	Access to Main Menu w/o Password
0-65	Personal Menu Password
0-66	Access to Personal Menu w/o Password
0-67	Bus Password Access
0-7*	**Clock Settings**
0-70	Date and Time
0-71	Date Format
0-72	Time Format
0-74	DST/Summertime
0-76	DST/Summertime Start
0-77	DST/Summertime End
0-79	Clock Fault
0-81	Working Days
0-82	Additional Working Days
0-83	Additional Non-Working Days
0-89	Date and Time Readout
1-	**Load and Motor**
1-0*	**General Settings**
1-00	Configuration Mode
1-01	Motor Control Principle
1-03	Torque Characteristics
1-04	Overload Mode
1-06	Clockwise Direction
1-1*	**Motor Selection**
1-10	Motor Construction
1-1*	**VVC+ PM/SYN RM**
1-14	Damping Gain
1-15	Low Speed Filter Time Const.
1-16	High Speed Filter Time Const.
1-17	Voltage filter time const.
1-2*	**Motor Data**
1-20	Motor Power [kW]
1-21	Motor Power [HP]
1-22	Motor Voltage
1-23	Motor Frequency
1-24	Motor Current
1-25	Motor Nominal Speed
1-26	Motor Cont. Rated Torque
1-28	Motor Rotation Check
1-29	Automatic Motor Adaptation (AMA)
1-3*	**Adv. Motor Data**
1-30	Stator Resistance (Rs)
1-31	Rotor Resistance (Rr)
1-33	Stator Leakage Reactance (X1)
1-34	Rotor Leakage Reactance (X2)
1-35	Main Reactance (Xh)
1-36	Iron Loss Resistance (Rfe)
1-37	d-axis Inductance (Ld)
1-38	q-axis Inductance (Lq)
1-39	Motor Poles
1-40	Back EMF at 1000 RPM
1-44	d-axis Inductance Sat. (LdSat)
1-45	q-axis Inductance Sat. (LqSat)
1-46	Position Detection Gain
1-47	Torque Calibration
1-48	Inductance Sat. Point
1-5*	**Load Indep. Setting**
1-50	Motor Magnetisation at Zero Speed
1-51	Min Speed Normal Magnetising [RPM]
1-52	Min Speed Normal Magnetising [Hz]
1-55	V/f Characteristic - V
1-56	V/f Characteristic - f
1-58	Flying Start Test Pulses Current
1-59	Flying Start Test Pulses Frequency
1-6*	**Load Depen. Setting**
1-60	Low Speed Load Compensation
1-61	High Speed Load Compensation
1-62	Slip Compensation
1-63	Slip Compensation Time Constant
1-64	Resonance Damping
1-65	Resonance Damping Time Constant
1-66	Min. Current at Low Speed
1-7*	**Start Adjustments**
1-70	PM Start Mode
1-71	Start Delay
1-72	Start Function
1-73	Flying Start
1-77	Compressor Start Max Speed [RPM]
1-78	Compressor Start Max Speed [Hz]
1-79	Pump Start Max Time to Trip
1-8*	**Stop Adjustments**
1-80	Function at Stop
1-81	Min Speed for Function at Stop [RPM]
1-82	Min Speed for Function at Stop [Hz]
1-86	Trip Speed Low [RPM]
1-87	Trip Speed Low [Hz]
1-9*	**Motor Temperature**
1-90	Motor Thermal Protection
1-91	Motor External Fan
1-93	Thermistor Source
1-94	ATEX ETR cur.lim. speed reduction
1-98	ATEX ETR interpol. points freq.
1-99	ATEX ETR interpol points current
2-	**Brakes**
2-0*	**DC-Brake**
2-00	DC Hold/Preheat Current
2-01	DC Brake Current
2-02	DC Braking Time
2-03	DC Brake Cut In Speed [RPM]
2-04	DC Brake Cut In Speed [Hz]
2-06	Parking Current
2-07	Parking Time
2-1*	**Brake Energy Funct.**
2-10	Brake Function
2-11	Brake Resistor (ohm)
2-12	Brake Power Limit (kW)
2-13	Brake Power Monitoring
2-15	Brake Check
2-16	AC brake Max. Current
2-17	Over-voltage Control
3-	**Reference / Ramps**
3-0*	**Reference Limits**
3-02	Minimum Reference
3-03	Maximum Reference
3-04	Reference Function
3-1*	**References**
3-10	Preset Reference
3-11	Jog Speed [Hz]
3-13	Reference Site
3-14	Preset Relative Reference
3-15	Reference 1 Source
3-16	Reference 2 Source
3-17	Reference 3 Source
3-19	Jog Speed [RPM]
3-4*	**Ramp 1**
3-41	Ramp 1 Ramp Up Time
3-42	Ramp 1 Ramp Down Time
3-5*	**Ramp 2**
3-51	Ramp 2 Ramp Up Time
3-52	Ramp 2 Ramp Down Time
3-8*	**Other Ramps**
3-80	Jog Ramp Time
3-81	Quick Stop Ramp Time
3-84	Initial Ramp Time
3-85	Check Valve Ramp Time
3-86	Check Valve Ramp End Speed [RPM]
3-87	Check Valve Ramp End Speed [HZ]
3-88	Final Ramp Time
3-9*	**Digital Pot.Meter**
3-90	Step Size
3-91	Ramp Time
3-92	Power Restore
3-93	Maximum Limit
3-94	Minimum Limit
3-95	Ramp Delay
4-	**Limits / Warnings**
4-1*	**Motor Limits**
4-10	Motor Speed Direction
4-11	Motor Speed Low Limit [RPM]
4-12	Motor Speed Low Limit [Hz]
4-13	Motor Speed High Limit [RPM]
4-14	Motor Speed High Limit [Hz]
4-16	Torque Limit Motor Mode
4-17	Torque Limit Generator Mode
4-18	Current Limit
4-19	Max Output Frequency
4-5*	**Adj. Warnings**
4-50	Warning Current Low
4-51	Warning Current High
4-52	Warning Speed Low
4-53	Warning Speed High
4-54	Warning Reference Low
4-55	Warning Reference High
4-56	Warning Feedback Low
4-57	Warning Feedback High
4-58	Missing Motor Phase Function
4-6*	**Speed Bypass**
4-60	Bypass Speed From [RPM]
4-61	Bypass Speed From [Hz]
4-62	Bypass Speed To [RPM]
4-63	Bypass Speed To [Hz]
4-64	Semi-Auto Bypass Set-up
5-	**Digital In/Out**
5-0*	**Digital I/O mode**
5-00	Digital I/O Mode
5-01	Terminal 27 Mode
5-02	Terminal 29 Mode
5-1*	**Digital Inputs**
5-10	Terminal 18 Digital Input
5-11	Terminal 19 Digital Input
5-12	Terminal 27 Digital Input
5-13	Terminal 29 Digital Input
5-14	Terminal 32 Digital Input
5-15	Terminal 33 Digital Input
5-16	Terminal X30/2 Digital Input
5-17	Terminal X30/3 Digital Input
5-18	Terminal X30/4 Digital Input
5-19	Terminal 37 Digital Input
5-20	Terminal X46/1 Digital Input
5-21	Terminal X46/3 Digital Input
5-22	Terminal X46/5 Digital Input
5-23	Terminal X46/7 Digital Input
5-24	Terminal X46/9 Digital Input
5-25	Terminal X46/11 Digital Input
5-26	Terminal X46/13 Digital Input
5-3*	**Digital Outputs**
5-30	Terminal 27 Digital Output
5-31	Terminal 29 Digital Output
5-32	Term X30/6 Digi Out (MCB 101)
5-33	Term X30/7 Digi Out (MCB 101)
5-4*	**Relays**
5-40	Function Relay
5-41	On Delay, Relay
5-42	Off Delay, Relay
5-5*	**Pulse Input**
5-50	Term. 29 Low Frequency
5-51	Term. 29 High Frequency
5-52	Term. 29 Low Ref./Feedb. Value
5-53	Term. 29 High Ref./Feedb. Value
5-54	Pulse Filter Time Constant #29
5-55	Term. 33 Low Frequency
5-56	Term. 33 High Frequency
5-57	Term. 33 Low Ref./Feedb. Value
5-58	Term. 33 High Ref./Feedb. Value
5-59	Pulse Filter Time Constant #33
5-6*	**Pulse Output**
5-60	Terminal 27 Pulse Output Variable
5-62	Pulse Output Max Freq #27
5-63	Terminal 29 Pulse Output Variable
5-65	Pulse Output Max Freq #29
5-66	Terminal X30/6 Pulse Output Variable
5-68	Pulse Output Max Freq #X30/6
5-8*	**I/O Options**
5-80	AHF Cap Reconnect Delay
5-9*	**Bus Controlled**
5-90	Digital & Relay Bus Control
5-93	Pulse Out #27 Bus Control
5-94	Pulse Out #27 Timeout Preset
5-95	Pulse Out #29 Bus Control
5-96	Pulse Out #29 Timeout Preset
5-97	Pulse Out #X30/6 Bus Control
5-98	Pulse Out #X30/6 Timeout Preset
6-	**Analog In/Out**
6-0*	**Analog I/O Mode**
6-00	Live Zero Timeout Time
6-01	Live Zero Timeout Function
6-1*	**Analog Input 53**
6-10	Terminal 53 Low Voltage
6-11	Terminal 53 High Voltage
6-12	Terminal 53 Low Current
6-13	Terminal 53 High Current
6-14	Terminal 53 Low Ref./Feedb. Value
6-15	Terminal 53 High Ref./Feedb. Value
6-16	Terminal 53 Filter Time Constant
6-17	Terminal 53 Live Zero
6-2*	**Analog Input 54**
6-20	Terminal 54 Low Voltage
6-21	Terminal 54 High Voltage
6-22	Terminal 54 Low Current
6-23	Terminal 54 High Current
6-24	Terminal 54 Low Ref./Feedb. Value
6-25	Terminal 54 High Ref./Feedb. Value
6-26	Terminal 54 Filter Time Constant
6-27	Terminal 54 Live Zero
6-3*	**Analog Input X30/11**
6-30	Terminal X30/11 Low Voltage

6-31 Terminal X30/11 High Voltage
6-34 Term. X30/11 Low Ref./Feedb. Value
6-35 Term. X30/11 High Ref./Feedb. Value
6-36 Term. X30/11 Filter Time Constant
6-37 Term. X30/11 Live Zero
6-4* Analog Input X30/12
6-40 Terminal X30/12 Low Voltage
6-41 Terminal X30/12 High Voltage
6-44 Term. X30/12 Low Ref./Feedb. Value
6-45 Term. X30/12 High Ref./Feedb. Value
6-46 Term. X30/12 Filter Time Constant
6-47 Term. X30/12 Live Zero
6-5* Analog Output 42
6-50 Terminal 42 Output
6-51 Terminal 42 Output Min Scale
6-52 Terminal 42 Output Max Scale
6-53 Terminal 42 Output Bus Control
6-54 Terminal 42 Output Timeout Preset
6-55 Terminal 42 Output Filter
6-6* Analog Output X30/8
6-60 Terminal X30/8 Output
6-61 Terminal X30/8 Min. Scale
6-62 Terminal X30/8 Max. Scale
6-63 Terminal X30/8 Output Bus Control
6-64 Terminal X30/8 Output Timeout Preset
6-7* Analog Output X45/1
6-70 Terminal X45/1 Output
6-71 Terminal X45/1 Min. Scale
6-72 Terminal X45/1 Max. Scale
6-73 Terminal X45/1 Bus Control
6-74 Terminal X45/1 Output Timeout Preset
6-8* Analog Output X45/3
6-80 Terminal X45/3 Output
6-81 Terminal X45/3 Min. Scale
6-82 Terminal X45/3 Max. Scale
6-83 Terminal X45/3 Bus Control
6-84 Terminal X45/3 Output Timeout Preset
8- Comm. and Options**
8-0* General Settings
8-01 Control Site
8-02 Control Source
8-03 Control Timeout Time
8-04 Control Timeout Function
8-05 End-of-Timeout Function
8-06 Reset Control Timeout
8-07 Diagnosis Trigger
8-08 Readout Filtering
8-1* Control Settings
8-10 Control Profile
8-13 Configurable Status Word STW
8-14 Configurable Control Word CTW
8-17 Configurable Alarm and Warningword
8-3* FC Port Settings
8-30 Protocol
8-31 Address
8-32 Baud Rate
8-33 Parity / Stop Bits
8-35 Minimum Response Delay
8-36 Max Response Delay
8-37 Maximum Inter-Char Delay
8-4* FC MC protocol set
8-40 Telegram Selection
8-42 PCD Write Configuration
8-43 PCD Read Configuration
8-5* Digital/Bus
8-50 Coasting Select
8-51 Quick Stop Select
8-52 DC Brake Select
8-53 Start Select
8-54 Reversing Select
8-55 Set-up Select
8-56 Preset Reference Select
8-8* FC Port Diagnostics
8-80 Bus Message Count
8-81 Bus Error Count
8-82 Slave Message Rcvd
8-83 Slave Error Count
8-9* Bus Jog / Feedback
8-94 Bus Feedback 1
8-95 Bus Feedback 2
8-96 Bus Feedback 3
9- PROFIdrive**
9-00 Setpoint
9-07 Actual Value
9-15 PCD Write Configuration
9-16 PCD Read Configuration
9-18 Node Address
9-22 Telegram Selection
9-23 Parameters for Signals
9-27 Parameter Edit
9-28 Process Control
9-31 Safe Address
9-44 Fault Message Counter
9-45 Fault Code
9-47 Fault Number
9-52 Fault Situation Counter
9-53 Profibus Warning Word
9-63 Actual Baud Rate
9-64 Device Identification
9-65 Profile Number
9-67 Control Word 1
9-68 Status Word 1
9-70 Programming Set-up
9-71 Profibus Save Data Values
9-72 ProfibusDriveReset
9-75 DO Identification
9-80 Defined Parameters (1)
9-81 Defined Parameters (2)
9-82 Defined Parameters (3)
9-83 Defined Parameters (4)
9-84 Defined Parameters (5)
9-85 Defined Parameters (6)
9-90 Changed Parameters (1)
9-91 Changed Parameters (2)
9-92 Changed Parameters (3)
9-93 Changed Parameters (4)
9-94 Changed Parameters (5)
9-99 Profibus Revision Counter
10- CAN Fieldbus**
10-0* Common Settings
10-00 CAN Protocol
10-01 Baud Rate Select
10-02 MAC ID
10-05 Readout Transmit Error Counter
10-06 Readout Receive Error Counter
10-07 Readout Bus Off Counter
10-1* DeviceNet
10-10 Process Data Type Selection
10-11 Process Data Config Write
10-12 Process Data Config Read
10-13 Warning Parameter
10-14 Net Reference
10-15 Net Control
10-2* COS Filters
10-20 COS Filter 1
10-21 COS Filter 2
10-22 COS Filter 3
10-23 COS Filter 4
10-3* Parameter Access
10-30 Array Index
10-31 Store Data Values
10-32 Devicenet Revision
10-33 Store Always
10-34 DeviceNet Product Code
10-39 Devicenet F Parameters
12- Ethernet**
12-0* IP Settings
12-00 IP Address Assignment
12-01 IP Address
12-02 Subnet Mask
12-03 Default Gateway
12-04 DHCP Server
12-05 Lease Expires
12-06 Name Servers
12-07 Domain Name
12-08 Host Name
12-09 Physical Address
12-1* Ethernet Link Parameters
12-10 Link Status
12-11 Link Duration
12-12 Auto Negotiation
12-13 Link Speed
12-14 Link Duplex
12-18 Supervisor MAC
12-19 Supervisor IP Addr.
12-2* Process Data
12-20 Control Instance
12-21 Process Data Config Write
12-22 Process Data Config Read
12-27 Primary Master
12-28 Store Data Values
12-29 Store Always
12-3* EtherNet/IP
12-30 Warning Parameter
12-31 Net Reference
12-32 Net Control
12-33 CIP Revision
12-34 CIP Product Code
12-35 EDS Parameter
12-37 COS Inhibit Timer
12-38 COS Filter
12-4* Modbus TCP
12-40 Status Parameter
12-41 Slave Message Count
12-42 Slave Exception Message Count
12-8* Other Ethernet Services
12-80 FTP Server
12-81 HTTP Server
12-82 SMTP Service
12-83 SNMP Agent
12-84 Address Conflict Detection
12-85 ACD Last Conflict
12-89 Transparent Socket Channel Port
12-9* Advanced Ethernet Services
12-90 Cable Diagnostic
12-91 MDI-X
12-92 IGMP Snooping
12-93 Cable Error Length
12-94 Broadcast Storm Protection
12-95 Inactivity timeout
12-96 Port Config
12-97 QoS Priority
12-98 Interface Counters
12-99 Media Counters
13- Smart Logic**
13-0* SLC Settings
13-00 SL Controller Mode
13-01 Start Event
13-02 Stop Event
13-03 Reset SLC
13-1* Comparators
13-10 Comparator Operand
13-11 Comparator Operator
13-12 Comparator Value
13-1* RS Flip Flops
13-15 RS-FF Operand S
13-16 RS-FF Operand R
13-2* Timers
13-20 SL Controller Timer
13-4* Logic Rules
13-40 Logic Rule Boolean 1
13-41 Logic Rule Operator 1
13-42 Logic Rule Boolean 2
13-43 Logic Rule Operator 2
13-44 Logic Rule Boolean 3
13-5* States
13-51 SL Controller Event
13-52 SL Controller Action
13-9* User Defined Alerts
13-90 Alert Trigger
13-91 Alert Action
13-92 Alert Text
13-9* User Defined Readouts
13-97 Alert Alarm Word
13-98 Alert Warning Word
13-99 Alert Status Word
14- Special Functions**
14-0* Inverter Switching
14-00 Switching Pattern
14-01 Switching Frequency
14-03 Overmodulation
14-04 PWM Random
14-1* Mains On/Off
14-10 Mains Failure
14-11 Mains Voltage at Mains Fault
14-12 Function at Mains Imbalance
14-16 Kin. Backup Gain
14-2* Reset Functions
14-20 Reset Mode
14-21 Automatic Restart Time
14-22 Operation Mode
14-25 Trip Delay at Torque Limit
14-26 Trip Delay at Inverter Fault
14-28 Production Settings
14-29 Service Code
14-3* Current Limit Ctrl.
14-30 Current Lim Ctrl, Proportional Gain
14-31 Current Lim Ctrl, Integration Time
14-32 Current Lim Ctrl, Filter Time
14-4* Energy Optimising
14-40 VT Level
14-41 AEO Minimum Magnetisation
14-42 Minimum AEO Frequency
14-43 Motor Cosphi
14-5* Environment
14-50 RFI Filter
14-51 DC Link Compensation
14-52 Fan Control
14-53 Fan Monitor
14-55 Output Filter
14-56 Capacitance Output Filter
14-57 Inductance Output Filter
14-58 Voltage Gain Filter
14-59 Actual Number of Inverter Units
14-6* Auto Derate
14-60 Function at Over Temperature
14-61 Function at Inverter Overload
14-62 Inv. Overload Derate Current
14-8* Options
14-80 Option Supplied by External 24VDC
14-9* Fault Settings
14-90 Fault Level
15- Drive Information**
15-0* Operating Data
15-00 Operating hours
15-01 Running Hours
15-02 kWh Counter
15-03 Power Up's
15-04 Over Temp's
15-05 Over Volt's
15-06 Reset kWh Counter
15-07 Reset Running Hours Counter
15-08 Number of Starts
15-1* Data Log Settings
15-10 Logging Source

Danfoss A/S © 10/2016 All rights reserved.

15-11 Logging Interval
15-12 Trigger Event
15-13 Logging Mode
15-14 Samples Before Trigger
15-2* Historic Log
15-20 Historic Log: Event
15-21 Historic Log: Value
15-22 Historic Log: Time
15-23 Historic log: Date and Time
15-3* Alarm Log
15-30 Alarm Log: Error Code
15-31 Alarm Log: Value
15-32 Alarm Log: Time
15-33 Alarm Log: Date and Time
15-34 Alarm Log: Setpoint
15-35 Alarm Log: Feedback
15-36 Alarm Log: Current Demand
15-37 Alarm Log: Process Ctrl Unit
15-4* Drive Identification
15-40 FC Type
15-41 Power Section
15-42 Voltage
15-43 Software Version
15-44 Ordered Typecode String
15-45 Actual Typecode String
15-46 Frequency Converter Ordering No
15-47 Power Card Ordering No
15-48 LCP Id No
15-49 SW ID Control Card
15-50 SW ID Power Card
15-51 Frequency Converter Serial Number
15-53 Power Card Serial Number
15-54 Config File Name
15-58 SmartStart Filename
15-59 Filename
15-6* Option Ident
15-60 Option Mounted
15-61 Option SW Version
15-62 Option Ordering No
15-63 Option Serial No
15-70 Option in Slot A
15-71 Slot A Option SW Version
15-72 Option in Slot B
15-73 Slot B Option SW Version
15-74 Option in Slot C0/E0
15-75 Slot C0/E0 Option SW Version
15-76 Option in Slot C1/E1
15-77 Slot C1/E1 Option SW Version
15-8* Operating Data II
15-80 Fan Running Hours
15-81 Preset Fan Running Hours
15-9* Parameter Info
15-92 Defined Parameters
15-93 Modified Parameters
15-98 Drive Identification
15-99 Parameter Metadata
16- Data Readouts**
16-0* General Status
16-00 Control Word
16-01 Reference [Unit]
16-02 Reference [%]
16-03 Status Word
16-05 Main Actual Value [%]
16-09 Custom Readout
16-1* Motor Status
16-10 Power [kW]
16-11 Power [hp]
16-12 Motor Voltage
16-13 Frequency
16-14 Motor current
16-15 Frequency [%]
16-16 Torque [Nm]
16-17 Speed [RPM]
16-18 Motor Thermal
16-20 Motor Angle
16-22 Torque [%]
16-23 Motor Shaft Power [kW]
16-24 Calibrated Stator Resistance
16-26 Power Filtered [kW]
16-27 Power Filtered [hp]
16-3* Drive Status
16-30 DC Link Voltage
16-31 System Temp.
16-32 Brake Energy /s
16-33 Brake Energy Average
16-34 Heatsink Temp.
16-35 Inverter Thermal
16-36 Inv. Nom. Current
16-37 Inv. Max. Current
16-38 SL Controller State
16-39 Control Card Temp.
16-40 Logging Buffer Full
16-49 Current Fault Source
16-5* Ref. & Feedb.
16-50 External Reference
16-52 Feedback[Unit]
16-53 Digi Pot Reference
16-54 Feedback 1 [Unit]
16-55 Feedback 2 [Unit]
16-56 Feedback 3 [Unit]
16-58 PID Output [%]
16-59 Adjusted Setpoint
16-6* Inputs & Outputs
16-60 Digital Input
16-61 Terminal 53 Switch Setting
16-62 Analog Input 53
16-63 Terminal 54 Switch Setting
16-64 Analog Input 54
16-65 Analog Output 42 [mA]
16-66 Digital Output [bin]
16-67 Pulse Input #29 [Hz]
16-68 Pulse Input #33 [Hz]
16-69 Pulse Output #27 [Hz]
16-70 Pulse Output #29 [Hz]
16-71 Relay Output [bin]
16-72 Counter A
16-73 Counter B
16-75 Analog In X30/11
16-76 Analog In X30/12
16-77 Analog Out X30/8 [mA]
16-78 Analog Out X45/1 [mA]
16-79 Analog Out X45/3 [mA]
16-8* Fieldbus & FC Port
16-80 Fieldbus CTW 1
16-82 Fieldbus REF 1
16-84 Comm. Option STW
16-85 FC Port CTW 1
16-86 FC Port REF 1
16-89 Configurable Alarm/Warning Word
16-9* Diagnosis Readouts
16-90 Alarm Word
16-91 Alarm Word 2
16-92 Warning Word
16-93 Warning Word 2
16-94 Ext. Status Word
16-95 Ext. Status Word 2
16-96 Maintenance Word
18- Info & Readouts**
18-0* Maintenance Log
18-00 Maintenance Log: Item
18-01 Maintenance Log: Action
18-02 Maintenance Log: Time
18-03 Maintenance Log: Date and Time
18-3* Analog Readouts
18-30 Analog Input X42/1
18-31 Analog Input X42/3
18-32 Analog Input X42/5
18-33 Analog Out X42/7 [V]
18-34 Analog Out X42/9 [V]
18-35 Analog Out X42/11 [V]
18-36 Analog Input X48/2 [mA]
18-37 Temp. Input X48/4
18-38 Temp. Input X48/7
18-39 Temp. Input X48/10
18-5* Ref. & Feedb.
18-50 Sensorless Readout [unit]
18-6* Inputs & Outputs 2
18-60 Digital Input 2
18-7* Rectifier Status
18-70 Mains Voltage
18-71 Mains Frequency
18-72 Mains Imbalance
18-75 Rectifier DC Volt.
20- Drive Closed Loop**
20-0* Feedback
20-00 Feedback 1 Source
20-01 Feedback 1 Conversion
20-02 Feedback 1 Source Unit
20-03 Feedback 2 Source
20-04 Feedback 2 Conversion
20-05 Feedback 2 Source Unit
20-06 Feedback 3 Source
20-07 Feedback 3 Conversion
20-08 Feedback 3 Source Unit
20-12 Reference/Feedback Unit
20-2* Feedback/Setpoint
20-20 Feedback Function
20-21 Setpoint 1
20-22 Setpoint 2
20-23 Setpoint 3
20-6* Sensorless
20-60 Sensorless Unit
20-69 Sensorless Information
20-7* PID Autotuning
20-70 Closed Loop Type
20-71 PID Performance
20-72 PID Output Change
20-73 Minimum Feedback Level
20-74 Maximum Feedback Level
20-79 PID Autotuning
20-8* PID Basic Settings
20-81 PID Normal/ Inverse Control
20-82 PID Start Speed [RPM]
20-83 PID Start Speed [Hz]
20-84 On Reference Bandwidth
20-9* PID Controller
20-91 PID Anti Windup
20-93 PID Proportional Gain
20-94 PID Integral Time
20-95 PID Differentiation Time
20-96 PID Diff. Gain Limit
21- Ext. Closed Loop**
21-0* Ext. CL Autotuning
21-00 Closed Loop Type
21-01 PID Performance
21-02 PID Output Change
21-03 Minimum Feedback Level
21-04 Maximum Feedback Level
21-09 PID Auto Tuning
21-1* Ext. CL 1 Ref./Fb.
21-10 Ext. 1 Ref./Feedback Unit
21-11 Ext. 1 Minimum Reference
21-12 Ext. 1 Maximum Reference
21-13 Ext. 1 Reference Source
21-14 Ext. 1 Feedback Source
21-15 Ext. 1 Setpoint
21-17 Ext. 1 Reference [Unit]
21-18 Ext. 1 Feedback [Unit]
21-19 Ext. 1 Output [%]
21-2* Ext. CL 1 PID
21-20 Ext. 1 Normal/Inverse Control
21-21 Ext. 1 Proportional Gain
21-22 Ext. 1 Integral Time
21-23 Ext. 1 Differentation Time
21-24 Ext. 1 Dif. Gain Limit
21-3* Ext. CL 2 Ref./Fb.
21-30 Ext. 2 Ref./Feedback Unit
21-31 Ext. 2 Minimum Reference
21-32 Ext. 2 Maximum Reference
21-33 Ext. 2 Reference Source
21-34 Ext. 2 Feedback Source
21-35 Ext. 2 Setpoint
21-37 Ext. 2 Reference [Unit]
21-38 Ext. 2 Feedback [Unit]
21-39 Ext. 2 Output [%]
21-4* Ext. CL 2 PID
21-40 Ext. 2 Normal/Inverse Control
21-41 Ext. 2 Proportional Gain
21-42 Ext. 2 Integral Time
21-43 Ext. 2 Differentation Time
21-44 Ext. 2 Dif. Gain Limit
21-5* Ext. CL 3 Ref./Fb.
21-50 Ext. 3 Ref./Feedback Unit
21-51 Ext. 3 Minimum Reference
21-52 Ext. 3 Maximum Reference
21-53 Ext. 3 Reference Source
21-54 Ext. 3 Feedback Source
21-55 Ext. 3 Setpoint
21-57 Ext. 3 Reference [Unit]
21-58 Ext. 3 Feedback [Unit]
21-59 Ext. 3 Output [%]
21-6* Ext. CL 3 PID
21-60 Ext. 3 Normal/Inverse Control
21-61 Ext. 3 Proportional Gain
21-62 Ext. 3 Integral Time
21-63 Ext. 3 Differentation Time
21-64 Ext. 3 Dif. Gain Limit
22- Appl. Functions**
22-0* Miscellaneous
22-00 External Interlock Delay
22-01 Power Filter Time
22-2* No-Flow Detection
22-20 Low Power Auto Set-up
22-21 Low Power Detection
22-22 Low Speed Detection
22-23 No-Flow Function
22-24 No-Flow Delay
22-26 Dry Pump Function
22-27 Dry Pump Delay
22-28 No-Flow Low Speed [RPM]
22-29 No-Flow Low Speed [Hz]
22-3* No-Flow Power Tuning
22-30 No-Flow Power
22-31 Power Correction Factor
22-32 Low Speed [RPM]
22-33 Low Speed [Hz]
22-34 Low Speed Power [kW]
22-35 Low Speed Power [HP]
22-36 High Speed [RPM]
22-37 High Speed [Hz]
22-38 High Speed Power [kW]
22-39 High Speed Power [HP]
22-4* Sleep Mode
22-40 Minimum Run Time
22-41 Minimum Sleep Time
22-42 Wake-up Speed [RPM]
22-43 Wake-up Speed [Hz]
22-44 Wake-up Ref./FB Difference
22-45 Setpoint Boost
22-46 Maximum Boost Time
22-5* End of Curve
22-50 End of Curve Function
22-51 End of Curve Delay
22-6* Broken Belt Detection
22-60 Broken Belt Function

22-61 Broken Belt Torque
22-62 Broken Belt Delay
22-7* Short Cycle Protection
22-75 Short Cycle Protection
22-76 Interval between Starts
22-77 Minimum Run Time
22-78 Minimum Run Time Override
22-79 Minimum Run Time Override Value
22-8* Flow Compensation
22-80 Flow Compensation
22-81 Square-linear Curve Approximation
22-82 Work Point Calculation
22-83 Speed at No-Flow [RPM]
22-84 Speed at No-Flow [Hz]
22-85 Speed at Design Point [RPM]
22-86 Speed at Design Point [Hz]
22-87 Pressure at No-Flow Speed
22-88 Pressure at Rated Speed
22-89 Flow at Design Point
22-90 Flow at Rated Speed
23- Time-based Functions**
23-0* Timed Actions
23-00 ON Time
23-01 ON Action
23-02 OFF Time
23-03 OFF Action
23-04 Occurrence
23-1* Maintenance
23-10 Maintenance Item
23-11 Maintenance Action
23-12 Maintenance Time Base
23-13 Maintenance Time Interval
23-14 Maintenance Date and Time
23-1* Maintenance Reset
23-15 Reset Maintenance Word
23-16 Maintenance Text
23-5* Energy Log
23-50 Energy Log Resolution
23-51 Period Start
23-53 Energy Log
23-54 Reset Energy Log
23-6* Trending
23-60 Trend Variable
23-61 Continuous Bin Data
23-62 Timed Bin Data
23-63 Timed Period Start
23-64 Timed Period Stop
23-65 Minimum Bin Value
23-66 Reset Continuous Bin Data
23-67 Reset Timed Bin Data
23-8* Payback Counter
23-80 Power Reference Factor
23-81 Energy Cost
23-82 Investment
23-83 Energy Savings
23-84 Cost Savings
24- Appl. Functions 2**
24-1* Drive Bypass
24-10 Drive Bypass Function
24-11 Drive Bypass Delay Time
25- Cascade Controller**
25-0* System Settings
25-00 Cascade Controller
25-02 Motor Start
25-04 Pump Cycling
25-05 Fixed Lead Pump
25-06 Number of Pumps
25-2* Bandwidth Settings
25-20 Staging Bandwidth
25-21 Override Bandwidth
25-22 Fixed Speed Bandwidth
25-23 SBW Staging Delay
25-24 SBW Destaging Delay
25-25 OBW Time
25-26 Destage At No-Flow
25-27 Stage Function
25-28 Stage Function Time
25-29 Destage Function
25-30 Destage Function Time
25-4* Staging Settings
25-40 Ramp Down Delay
25-41 Ramp Up Delay
25-42 Staging Threshold
25-43 Destaging Threshold
25-44 Staging Speed [RPM]
25-45 Staging Speed [Hz]
25-46 Destaging Speed [RPM]
25-47 Destaging Speed [Hz]
25-49 Staging Principle
25-5* Alternation Settings
25-50 Lead Pump Alternation
25-51 Alternation Event
25-52 Alternation Time Interval
25-53 Alternation Timer Value
25-54 Alternation Predefined Time
25-55 Alternate if Load < 50%
25-56 Staging Mode at Alternation
25-58 Run Next Pump Delay
25-59 Run on Mains Delay
25-8* Status
25-80 Cascade Status
25-81 Pump Status
25-82 Lead Pump
25-83 Relay Status
25-84 Pump ON Time
25-85 Relay ON Time
25-86 Reset Relay Counters
25-9* Service
25-90 Pump Interlock
25-91 Manual Alternation
26- Analog I/O Option**
26-0* Analog I/O Mode
26-00 Terminal X42/1 Mode
26-01 Terminal X42/3 Mode
26-02 Terminal X42/5 Mode
26-1* Analog Input X42/1
26-10 Terminal X42/1 Low Voltage
26-11 Terminal X42/1 High Voltage
26-14 Term. X42/1 Low Ref./Feedb. Value
26-15 Term. X42/1 High Ref./Feedb. Value
26-16 Term. X42/1 Filter Time Constant
26-17 Term. X42/1 Live Zero
26-2* Analog Input X42/3
26-20 Terminal X42/3 Low Voltage
26-21 Terminal X42/3 High Voltage
26-24 Term. X42/3 Low Ref./Feedb. Value
26-25 Term. X42/3 High Ref./Feedb. Value
26-26 Term. X42/3 Filter Time Constant
26-27 Term. X42/3 Live Zero
26-3* Analog Input X42/5
26-30 Terminal X42/5 Low Voltage
26-31 Terminal X42/5 High Voltage
26-34 Term. X42/5 Low Ref./Feedb. Value
26-35 Term. X42/5 High Ref./Feedb. Value
26-36 Term. X42/5 Filter Time Constant
26-37 Term. X42/5 Live Zero
26-4* Analog Out X42/7
26-40 Terminal X42/7 Output
26-41 Terminal X42/7 Min. Scale
26-42 Terminal X42/7 Max. Scale
26-43 Terminal X42/7 Bus Control
26-44 Terminal X42/7 Timeout Preset
26-5* Analog Out X42/9
26-50 Terminal X42/9 Output
26-51 Terminal X42/9 Min. Scale
26-52 Terminal X42/9 Max. Scale
26-53 Terminal X42/9 Bus Control
26-54 Terminal X42/9 Timeout Preset
26-6* Analog Out X42/11
26-60 Terminal X42/11 Output
26-61 Terminal X42/11 Min. Scale
26-62 Terminal X42/11 Max. Scale
26-63 Terminal X42/11 Bus Control
26-64 Terminal X42/11 Timeout Preset
27- Cascade CTL Option**
27-0* Control & Status
27-01 Pump Status
27-02 Manual Pump Control
27-03 Current Runtime Hours
27-04 Pump Total Lifetime Hours
27-1* Configuration
27-10 Cascade Controller
27-11 Number Of Drives
27-12 Number Of Pumps
27-14 Pump Capacity
27-16 Runtime Balancing
27-17 Motor Starters
27-18 Spin Time for Unused Pumps
27-19 Reset Current Runtime Hours
27-2* Bandwidth Settings
27-20 Normal Operating Range
27-21 Override Limit
27-22 Fixed Speed Only Operating Range
27-23 Staging Delay
27-24 Destaging Delay
27-25 Override Hold Time
27-27 Min Speed Destage Delay
27-3* Staging Speed
27-30 Auto Tune Staging Speeds
27-31 Stage On Speed [RPM]
27-32 Stage On Speed [Hz]
27-33 Stage Off Speed [RPM]
27-34 Stage Off Speed [Hz]
27-4* Staging Settings
27-40 Auto Tune Staging Settings
27-41 Ramp Down Delay
27-42 Ramp Up Delay
27-43 Staging Threshold
27-44 Destaging Threshold
27-45 Staging Speed [RPM]
27-46 Staging Speed [Hz]
27-47 Destaging Speed [RPM]
27-48 Destaging Speed [Hz]
27-49 Staging Principle
27-5* Alternate Settings
27-50 Automatic Alternation
27-51 Alternation Event
27-52 Alternation Time Interval
27-53 Alternation Timer Value
27-54 Alternation At Time of Day
27-55 Alternation Predefined Time
27-56 Alternate Capacity is <
27-58 Run Next Pump Delay
27-6* Digital Inputs
27-60 Terminal X66/1 Digital Input
27-61 Terminal X66/3 Digital Input
27-62 Terminal X66/5 Digital Input
27-63 Terminal X66/7 Digital Input
27-64 Terminal X66/9 Digital Input
27-65 Terminal X66/11 Digital Input
27-66 Terminal X66/13 Digital Input
27-7* Connections
27-70 Relay
27-9* Readouts
27-91 Cascade Reference
27-92 % Of Total Capacity
27-93 Cascade Option Status
27-94 Cascade System Status
27-95 Advanced Cascade Relay Output [bin]
27-96 Extended Cascade Relay Output [bin]
29- Water Application Functions**
29-0* Pipe Fill
29-00 Pipe Fill Enable
29-01 Pipe Fill Speed [RPM]
29-02 Pipe Fill Speed [Hz]
29-03 Pipe Fill Time
29-04 Pipe Fill Rate
29-05 Filled Setpoint
29-06 No-Flow Disable Timer
29-07 Filled setpoint delay
29-1* Deragging Function
29-10 Derag Cycles
29-11 Derag at Start/Stop
29-12 Deragging Run Time
29-13 Derag Speed [RPM]
29-14 Derag Speed [Hz]
29-15 Derag Off Delay
29-2* Derag Power Tuning
29-20 Derag Power[kW]
29-21 Derag Power[HP]
29-22 Derag Power Factor
29-23 Derag Power Delay
29-24 Low Speed [RPM]
29-25 Low Speed [Hz]
29-26 Low Speed Power [kW]
29-27 Low Speed Power [HP]
29-28 High Speed [RPM]
29-29 High Speed [Hz]
29-30 High Speed Power [kW]
29-31 High Speed Power [HP]
29-32 Derag On Ref Bandwidth
29-33 Power Derag Limit
29-34 Consecutive Derag Interval
29-35 Derag at Locked Rotor
29-4* Pre/Post Lube
29-40 Pre/Post Lube Function
29-41 Pre Lube Time
29-42 Post Lube Time
29-5* Flow Confirmation
29-50 Validation Time
29-51 Verification Time
29-52 Signal Lost Verification Time
29-53 Flow Confirmation Mode
29-6* Flow Meter
29-60 Flow Meter Monitor
29-61 Flow Meter Source
29-62 Flow Meter Unit
29-63 Totalized Volume Unit
29-64 Actual Volume Unit
29-65 Totalized Volume
29-66 Actual Volume
29-67 Reset Totalized Volume
29-68 Reset Actual Volume
29-69 Flow
30- Special Features**
30-2* Adv. Start Adjust
30-22 Locked Rotor Detection
30-23 Locked Rotor Detection Time [s]
30-5* Unit Configuration
30-50 Heat Sink Fan Mode
30-8* Compatibility (I)
30-81 Brake Resistor (ohm)
31- Bypass Option**
31-00 Bypass Mode
31-01 Bypass Start Time Delay
31-02 Bypass Trip Time Delay
31-03 Test Mode Activation
31-10 Bypass Status Word
31-11 Bypass Running Hours
31-19 Remote Bypass Activation
35- Sensor Input Option**
35-0* Temp. Input Mode
35-00 Term. X48/4 Temperature Unit
35-01 Term. X48/4 Input Type
35-02 Term. X48/7 Temperature Unit

Danfoss A/S © 10/2016 All rights reserved.

35-03 Term. X48/7 Input Type
35-04 Term. X48/10 Temperature Unit
35-05 Term. X48/10 Input Type
35-06 Temperature Sensor Alarm Function
35-1* Temp. Input X48/4
35-14 Term. X48/4 Filter Time Constant
35-15 Term. X48/4 Temp. Monitor
35-16 Term. X48/4 Low Temp. Limit
35-17 Term. X48/4 High Temp. Limit
35-2* Temp. Input X48/7
35-24 Term. X48/7 Filter Time Constant
35-25 Term. X48/7 Temp. Monitor
35-26 Term. X48/7 Low Temp. Limit
35-27 Term. X48/7 High Temp. Limit
35-3* Temp. Input X48/10
35-34 Term. X48/10 Filter Time Constant
35-35 Term. X48/10 Temp. Monitor
35-36 Term. X48/10 Low Temp. Limit
35-37 Term. X48/10 High Temp. Limit
35-4* Analog Input X48/2
35-42 Term. X48/2 Low Current
35-43 Term. X48/2 High Current
35-44 Term. X48/2 Low Ref./Feedb. Value
35-45 Term. X48/2 High Ref./Feedb. Value
35-46 Term. X48/2 Filter Time Constant
35-47 Term. X48/2 Live Zero
43- Unit Readouts**
43-0* Component Status
43-00 Component Temp.
43-01 Auxiliary Temp.
43-1* Power Card Status
43-10 HS Temp. ph.U
43-11 HS Temp. ph.V
43-12 HS Temp. ph.W
43-13 PC Fan A Speed
43-14 PC Fan B Speed
43-15 PC Fan C Speed
43-2* Fan Pow.Card Status
43-20 FPC Fan A Speed
43-21 FPC Fan B Speed
43-22 FPC Fan C Speed
43-23 FPC Fan D Speed
43-24 FPC Fan E Speed
43-25 FPC Fan F Speed

Danfoss A/S © 10/2016 All rights reserved.

Index

A

Abbreviation ... 78

AC
- input ... 8, 19
- mains ... 8, 19
- waveform ... 8

Additional resources ... 4

Alarm log ... 25

Alarms ... 38

AMA
- AMA ... 36, 40, 43
- Automatic motor adaptation ... 30

Ambient conditions ... 65

Analog output ... 20, 66

Analog signal ... 39

Analog speed reference ... 33

Approval ... 8

ASM ... 28

Auto on ... 26, 31, 36, 38

Automatic energy optimization ... 30

Auto-reset ... 24

Auxiliary equipment ... 23

B

Backplate ... 12

Braking ... 36, 41

Burst transient ... 15

C

Cable
- routing ... 23
- Motor cable ... 14, 18, 63
- Motor cable length ... 65
- Specifications ... 65

Certification ... 8

Circuit breaker ... 23, 69, 70, 71

Clearance requirements ... 12

Closed loop ... 22

Communication option ... 42

Conduct ... 23

Control
- characteristic ... 68
- signal ... 36
- terminal ... 26, 28, 36, 38
- wiring ... 17, 21, 23
- Local control ... 24, 26, 36
- Wiring ... 14

Control card
- Control card ... 39
- Control card performance ... 68
- Control card, 10 V DC output ... 68
- Control card, 24 V DC output ... 67
- Control card, RS485 serial communication ... 65
- USB serial communication ... 68

Convention ... 78

Cooling ... 12, 63

Cooling clearance ... 23

Cos φ ... 64, 67

Current
- level ... 66
- limit ... 47
- mode ... 66
- range ... 66
- rating ... 40
- DC current ... 8, 14, 37
- Input current ... 19
- Output current ... 37

D

Danfoss FC ... 22

DC link ... 39

Default settings ... 26

Derating ... 65

Digital output ... 67

Dimensions ... 76, 77

Discharge time ... 9

Disconnect switch ... 24

Displacement power factor ... 64

E

Efficiency ... 63, 65

EMC interference ... 17

EMC-compliant installation ... 14

Environment ... 65

Exploded view ... 6, 7

External alarm reset ... 34

External command ... 8, 38

External controllers ... 4

External interlock ... 34

F

Fault log ... 25

Feedback ... 22, 23, 32, 37, 43, 45

Floating delta ... 19

Fue ... 69

Fuse ... 14, 23, 42, 46, 69, 70, 71, 72, 73, 74, 75

Danfoss A/S © 10/2016 All rights reserved.

G

Ground connection ... 23
Ground wire ... 14
Grounded delta ... 19
Grounding ... 18, 19, 23, 24

H

Hand on ... 26, 36
Harmonics
  Harmonics ... 8
High altitude ... 65
High voltage ... 9, 24
Humidity ... 65

I

IEC 61800-3 ... 19
Initialization ... 27
Input
  Analog input ... 20, 39, 66
  Digital input ... 20, 21, 38, 40, 66
  disconnect ... 19
  power ... 8, 14, 17, 19, 23, 38
  power wiring ... 23
  signal ... 22
  terminal ... 19, 22, 24, 39
  voltage ... 24
  Pulse input ... 67
Installation
  Check list ... 23
  Installation ... 21, 22
  environment ... 11
Intended use ... 4
Interference isolation ... 23
Interlock ... 34
Items supplied ... 11

J

Jumper ... 21

L

LCP ... 24
Leakage current ... 10, 14
Lifting ... 12
Load sharing ... 9, 50, 51, 52, 53, 54, 55, 56, 57, 58, 59, 60, 61, 62, 63
Local control panel ... 24

M

Main menu ... 25
Mains
  voltage ... 25, 37
  Transient ... 8
Maintenance ... 36
Manual initialization ... 27
MCT 10 ... 20, 24
Menu key ... 24, 25
Menu structure ... 25
Modbus RTU ... 22
Motor
  cable ... 14, 18
  current ... 8, 25, 30, 43
  data ... 28, 31, 40, 44, 47
  output ... 64
  power ... 14, 25, 43
  rotation ... 31
  speed ... 27
  status ... 4
  thermal protection ... 35
  thermistor ... 35
  wiring ... 17, 23
  Output current ... 40
  Output performance (U, V, W) ... 64
  Thermistor ... 35
  Unintended motor rotation ... 10
Mounting ... 12, 23

N

Nameplate ... 11
Navigation key ... 24, 25, 27, 36

O

Open loop ... 22
Operation key ... 24
Optional equipment ... 19, 21, 24
Output power wiring ... 23
Overcurrent protection ... 14
Overload
  High overload ... 63, 64
  Normal overload ... 49, 53, 64
  torque ... 64
Overvoltage ... 37, 47, 64, 67

P

Parameter menu structure ... 79
PELV ... 35, 65, 66, 67, 68
Phase loss ... 39
PM Motor ... 28
Potential equalization ... 15
Potentiometer ... 33

Danfoss A/S © 10/2016 All rights reserved.

Power
Input power ... 24, 46
connection ... 14
factor ... 8, 23
Power factor ... 64
Programming ... 21, 24, 25, 26, 39

Q

Qualified personnel ... 9
Quick menu ... 25

R

Ramp-down time ... 47
Ramp-up time ... 47
Reference
Reference ... 25, 32, 36, 37, 38
Remote reference ... 37
Speed reference ... 22, 31, 33, 36
Relay
Relay ... 21
1 ... 67
2 ... 67
output ... 67
Remote commands ... 4
Reset ... 24, 26, 27, 38, 40, 45
RFI filter ... 19
RMS current ... 8
RS485 ... 35
Run command ... 31
Run permissive ... 34, 37
Run/stop command ... 34

S

Safe Torque Off ... 22
Safety ... 10
Serial communication
RS485 ... 22
Serial communication ... 20, 22, 26, 36, 37, 38
Service ... 36
Setpoint ... 38
Set-up ... 31
Shielded cable ... 17, 23
Shock ... 11
Short circuit ... 41
Sleep mode ... 38
SmartStart ... 27
Specifications ... 22
Start-up ... 27
Status display ... 36
Status mode ... 36
STO ... 22
see also *Safe Torque Off*
Storage ... 11, 65
Supply voltage ... 19, 20, 24, 42
Switch ... 22
Switching frequency ... 38
Symbol ... 78
SynRM ... 29
System feedback ... 4

T

Terminal
Output terminal ... 24
53 ... 22
54 ... 22
tightening torques ... 68
Thermal protection ... 8
Thermistor ... 19, 40
Torque
Starting torque ... 64
characteristic ... 64
limit ... 47
Transient protection ... 8
Trip
Trip ... 35, 38
level ... 69, 70, 71
lock ... 38
Troubleshooting ... 48
True power factor ... 64

U

UL compliance ... 72
Unintended start ... 9, 36

V

Vibration ... 11
Voltage imbalance ... 39
Voltage level ... 66
VVC+ ... 28

W

Warnings ... 38
Weight ... 76, 77
Windmilling ... 10
Wire size ... 14, 18
Wiring
Control wiring ... 21
Thermistor control wiring ... 19
schematic ... 16

 Danfoss A/S © 10/2016 All rights reserved.

Danfoss A/S © 10/2016 All rights reserved.

Danfoss can accept no responsibility for possible errors in catalogues, brochures and other printed material. Danfoss reserves the right to alter its products without notice. This also applies to products already on order provided that such alterations can be made without subsequential changes being necessary in specifications already agreed. All trademarks in this material are property of the respective companies. Danfoss and the Danfoss logotype are trademarks of Danfoss A/S. All rights reserved.

Danfoss A/S
Ulsnaes 1
DK-6300 Graasten
vlt-drives.danfoss.com

130R0336 MG20MD02 10/2016

B-501/2 - Filter, Silencer, Solberg, FS-230P-300

SMALL COMPACT FILTER SILENCERS WITH STANDARD FILTER DESIGN
"FS" Series 1/2" - 3" MPT

APPLICATIONS

- Blowers-PD Type
- Blowers-Side Channel
- Compressor-Piston
- Compressor-Screw
- Construction\Contractor Industry
- Dental
- Engines
- Hydraulic Breathers - fine filtration
- Industrial & Severe Duty
- Medical
- Pneumatic Conveying Systems
- Sparging
- Waste Water Aeration
- Workshop

FEATURES & SPECIFICATIONS

- ;99%+ removal efficiency std: Paper=2 micron, Polyester=5 micron
- Durable carbon steel construction with powder coated finish or galvanized steel
- Filter change out differential: 10"-15" in. H_2O above initial delta P
- Fully drawn weatherhood - no welds to rust or vibrate apart
- Interchangeable elements: Polyester, Paper, HEPA
- Low pressure drop center bracket and outlet pipe design
- Pressure drop graphs available upon request
- Temp (continuous): min -15° F (-26° C) max 220° F (104° C)
- Tubular silencing design - tube is positioned to maximize attenuation and air flow while minimizing pressure drop
- Typical noise attenuation up to 15 dB's (due to the wide range of applications and machines these units are used on, a single graph is insufficient. Please inquire for your specific requirement)

OPTIONS

- 1/8" tap holes for differential pressure gauges
- Available in *Stainless Steel*
- Epoxy coated housings
- Hot dipped galvanized housings
- Special connections, BSPT/Metric
- Various elements available

Line Drawing



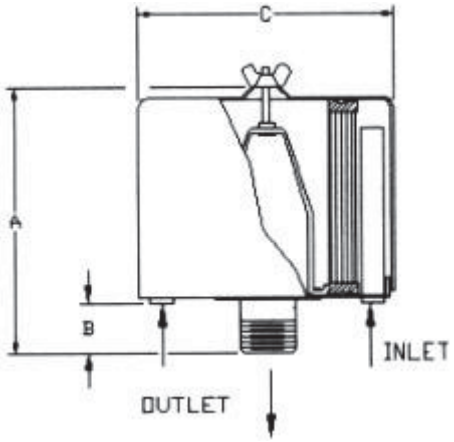

***All measurements are shown in standards.**

Typical Lead Times:
- Normally in stock
- 1 - 2 weeks
- 5 - 7 weeks
- 3 - 4 weeks
- 8 + weeks

Add To Order	Model Number	Element Type	Outlet in. NPT or FLG	Connection Style	Dim A in.	Dim B in.	Dim C in.	Rated Flow Piston SCFM	Rated Flow Screw Blower Fan SCFM	Element Parent Flow SCFM	Tube Count	Approx. Weight lbs.	CAD
■	FS-15-050	Polyester	0.5	MPT	4	1.5	6	10	10	35	1	1.8	CAD
■	FS-15-075	Polyester	0.75	MPT	4	1.5	6	20	25	35	2	2	CAD
■	FS-15-100	Polyester	1	MPT	4	1.5	6	25	35	35	3	2.1	CAD
■	FS-19P-100	Polyester	1	MPT	6.63	1.5	6	35	55	100	3	3	CAD
■	FS-19P-125	Polyester	1.25	MPT	6.63	1.63	6.1	55	70	100	5	3.3	CAD
■	FS-19P-150	Polyester	1.5	MPT	6.63	1.5	6	70	85	100	5	3.5	CAD

	FS-231P-200	Polyester	2	MPT	12.25	2.25	10	135	135	300	5	14	CAD
	FS-31P-200	Polyester	2	MPT	7.25	2.25	10	85	135	195	5	7.8	CAD
	FS-231P-250	Polyester	2.5	MPT	12.5	2.5	10	195	195	300	9	14.5	CAD
	FS-31P-250	Polyester	2.5	MPT	7.5	2.5	10	100	195	195	5	8.2	CAD
	FS-231P-300	Polyester	3	MPT	13	3	10	200	300	300	9	15	CAD
	FS-14-050	Paper	0.5	MPT	4	1.5	6	10	10	35	1	1.8	CAD
	FS-14-075	Paper	0.75	MPT	4	1.5	6	20	25	35	2	2	CAD
	FS-14-100	Paper	1	MPT	4	1.5	6	25	35	35	3	2.1	CAD
	FS-18P-100	Paper	1	MPT	6.63	1.5	6	35	55	100	3	3	CAD
	FS-18P-125	Paper	1.25	MPT	6.63	1.63	6.1	55	70	100	5	3.3	CAD
	FS-18P-150	Paper	1.5	MPT	6.63	1.5	6	70	85	100	5	3.5	CAD
	FS-230P-200	Paper	2	MPT	12.25	2.25	10	135	135	300	5	14	CAD
	FS-30P-200	Paper	2	MPT	7.25	2.25	10	85	135	195	5	8.2	CAD
	FS-230P-250	Paper	2.5	MPT	12.5	2.5	10	195	195	300	9	14.5	CAD
	FS-30P-250	Paper	2.5	MPT	7.5	2.5	10	100	195	195	5	8.2	CAD
	FS-230P-300	Paper	3	MPT	13	3	10	200	300	300	9	15	CAD

Solberg Mfg.
1151 W. Ardmore Ave.·Itasca, IL 60143·(630)773-1363· Fax: (630)773-0727

SFS_2-2

Edition: 09.2011 · 610.44434.40.000

Original operating instructions · English

B601/2 - Blower, Elmo G200 2BH-1510-7HH56-Z

Operating instructions G-BH1, G-BH9

Elmo Rietschle
A Gardner Denver Product

CE

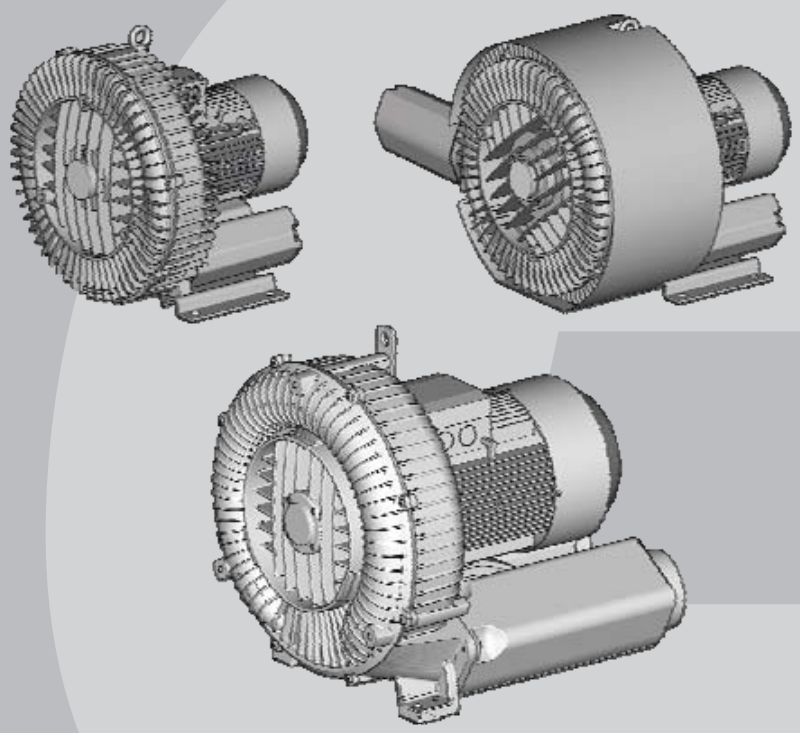

2BH1 1
2BH1 2
2BH1 3
2BH1 4
2BH1 5
2BH1 6
2BH1 8
2BH1 9
2BH9 23

G-Serie
G-Series
Seitenkanal
Side Channel

E-251

Contents

1 Safety 3
1.1 Definitions 3
1.1.1 Safety alert symbol 3
1.1.2 Signal words 3
1.2 General safety precautions 3
1.3 Residual risks 5
2 Intended Use 6
3 Technical Data 7
3.1 Mechanical data 7
3.2 Electrical data 11
3.3 Operating conditions 11
4 Transport and Handling 12
5 Installation 13
5.1 Installation 14
5.2 Electrical connection (motor) 15
5.3 Connecting pipes/hoses (vacuum pump/compressor) 18
5.3.1 Inlet connection 19
5.3.2 Discharge connection 19
5.3.3 Procedure when connecting pipes/hoses 20
6 Commissioning 21
6.1 Preparation 21
6.2 Start-up and shut-down 22
7 Operation 23
8 Shut-Down and Longer Standstills 24
8.1 Preparing for shut-down or longer standstill 24
8.2 Storage conditions 24
9 Servicing 25
9.1 Emptying/Rinsing/Cleaning 25
9.2 Repairs/troubleshooting 25
9.3 Service/After-sales service 27
10 Disposal 27
11 Explosion-Protected Design 27
EU declaration of conformity 28
Statement on health safety and on the protection of the environment 29

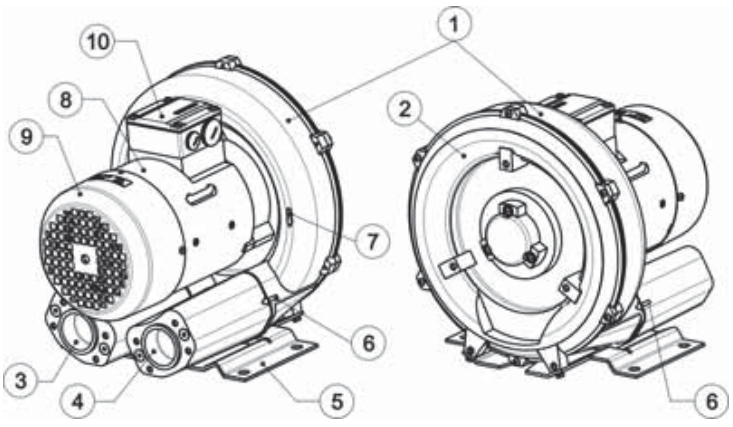

Fig. 1: Design of gas-ring vacuum pump/compressor

1 Vacuum pump/compressor housing
2 Vacuum pump/compressor cover
3 Inlet connection with muffler
4 Discharge connection with muffler
5 Base
6 Arrow indicating delivery direction
7 Arrow indicating direction of rotation
8 Drive motor
9 Fan guard (over external fan)
10 Terminal box

© 2011 Gardner Denver Deutschland GmbH · Industriestraße 26 · 97616 Bad Neustadt · Germany

Replication, distribution and / or editing of this document and the use and distribution of its content is prohibited unless explicitly permitted. Violation obligates compensation for damages.
All rights reserved in case of the issue of a patent, utility patent or design patent.

1 Safety

1.1 Definitions

To point out dangers and important information, the following signal words and symbols are used in these operating instructions:

1.1.1 Safety alert symbol

The **safety alert symbol** ⚠ is located in the safety precautions in the highlighted heading field on the left next to the signal word (DANGER, WARNING, CAUTION).

Safety precautions **with** a safety alert symbol indicate a danger of **injuries**.

Be sure to follow these safety precautions to protect against **injuries or death**!

Safety precautions **without** a safety alert symbol indicate a danger of **damage**.

1.1.2 Signal words

DANGER **WARNING** **CAUTION** **NOTICE** **NOTE**	The **signal words** are located in the safety precautions in the highlighted heading field. They follow a certain hierarchy and indicate (in conjunction with the safety alert symbol, see Chapter 1.1.1) the **seriousness of the danger** and the **type of warning.** See the following explanations:

⚠ DANGER

Danger of injuries.
Indicates an imminently hazardous situation, that **will** result in **death or serious injury** if the corresponding measures are not taken.

⚠ WARNING

Danger of injuries.
Indicates a potentially hazardous situation, that **could** result in **death or serious injury** if the corresponding measures are not taken.

⚠ CAUTION

Danger of injuries.
Indicates a potentially hazardous situation, that may result in **minor or moderate injury** if the corresponding measures are not taken.

CAUTION

Danger of damage.
Indicates a potentially hazardous situation that may result in **property damage** if the corresponding measures are not taken.

NOTICE

Indicates a possible **disadvantage**, i.e. undesirable conditions or consequences can occur if the corresponding measures are not taken.

NOTE

Indicates a possible **advantage** if the corresponding measures are taken; tip.

1.2 General safety precautions

⚠ WARNING

Improper use of the unit can result in serious or even fatal injuries!
These operating instructions

- must have been read completely and understood before beginning any work with or at the pump-motor unit,
- must be strictly observed,
- must be available at the operating location of the pump-motor unit.

⚠ WARNING

Improper use of the unit can result in serious or even fatal injuries!
Only operate the pump-motor unit

- for the purposes indicated under "Intended Use"!
- with the fluids indicated under 'Intended Use'!
- with the values indicated under 'Technical Data'!

⚠ WARNING

Improper use of the unit can result in serious or even fatal injuries!
All work on and with the pump-motor unit (transport, installation, operation, shut-down, maintenance, disposal) may only be carried out by **trained, reliable expert personnel**!

⚠ WARNING

When working on the unit, there is a danger of injury, e.g. in the form of cuts/cutting off, crushing and burns!
During all work on and with the pump-motor unit (transport, installation, operation, shut-down, maintenance, disposal) wear **personal safety equipment (safety helmet, protective gloves, safety shoes)**!

⚠ WARNING

Hair and clothing can be pulled into the unit or caught and wound up moving parts!
Do not wear long, loose hair or wide, loose clothes! Use a hair net!

⚠ DANGER

Electrical danger!
Work on electrical installations may be carried out by trained and authorized electricians only!

⚠ DANGER

Electrical danger!
Before beginning work on the unit or system, the following measures must be carried out:

- Deenergize.
- Secure against being switched on again.
- Determine whether deenergized.
- Ground and short-circuit.
- Cover or block off adjacent energized parts.

⚠ DANGER

Electrical danger!
Do not open the motor terminal box until absence of electricity has been ensured!

⚠ WARNING

Danger due to vacuum and gauge pressure: sudden escape of fluids (skin and eye injuries),
sudden drawing in of hair and clothing!

Danger due to escaping fluid: Burns!
Use mounting elements, connections, lines, fittings and containers with sufficient freedom from leaks and strength for the pressures which occur.

Check the mounting elements, connections, lines, fittings and containers for strength, leaks and firm seating at regular intervals!

⚠ WARNING

Danger from rotating parts (external fan, impeller, shaft):
Cutting/cutting off of extremities, Grasping/winding up of hair and clothing!

Danger due to vacuum and gauge pressure: sudden escape of fluids (skin and eye injuries), sudden drawing in of hair and clothing!

Danger due to escaping fluid: Burns!
Start-up and operation only under the following conditions:

- The pump-motor unit must be completely assembled. When doing so, pay particular attention to the following components:
  - the vacuum pump/compressor cover,
  - the muffler on inlet and discharge connections,
  - the fan guard.
- The pipes/hoses must be connected to inlet and discharge connections.
- Inlet and discharge connections and the connected pipes/hoses may not be closed, clogged or soiled.
- Check the mounting elements, connections of the pipe/hose connections, lines, fittings and containers for strength, leaks and firm seating at regular intervals.

⚠ WARNING

Danger from rotating parts (external fan, impeller, shaft):
Cutting/cutting off of extremities, Grasping/winding up of hair and clothing!

Danger due to vacuum and gauge pressure: sudden escape of fluids (skin and eye injuries), sudden drawing in of hair and clothing!

Danger due to escaping fluid: Burns!
Before beginning work on the pump-motor unit, take the following measures:

- Shut down pump-motor unit and secure against being switched on again.
- Attach a sign on the system controller and on the control elements for the pump-motor unit: "DANGER! Maintenance work on vacuum pump/compressor! Do not switch on!"
- Wait for pump-motor unit to come to a complete stop. Observe run-on time!
- Allow pump-motor unit to cool!
- Shut-off lines. Release pressure.
- Make sure that no vacuum or gauge pressure is present in the lines/tanks to be opened.
- Make sure that no fluids can escape.

© Gardner Denver Deutschland GmbH

⚠ WARNING

Danger from rotating impeller:
Cutting/cutting of off extremities!
The rotating impeller is accessible with the inlet and discharge connections open!

Do not reach into the unit through open connections!

Do not insert objects into the unit through the openings!

⚠ WARNING

Danger from rotating impeller:
Cutting/cutting of off extremities!
The rotating impeller is accessible with the inlet and discharge connections open!

With free entry and exit of gases, i.e. with direct intake out of or direct feeding into the atmosphere without piping, the following therefore applies:

Provide the inlet and discharge connections of the pump-motor unit either with additional mufflers or with additional piping of a sufficient length to prevent access to the impeller!

⚠ WARNING

Danger of burns from hot surfaces of the pump-motor unit and from hot fluids!
High temperatures of up to approx. 160°C [320°F] can occur on the surface of the pump-motor unit.

Cover the pump-motor unit with a suitable touch protection (e.g. perforated plate cover or wire cover). Do not touch during operation!
Allow to cool after shut-down!

1.3 Residual risks

⚠ WARNING

Danger zone:
Hot surface up to approx. 160°C [320°F].

Hazard:
Possible burns.

Protective measures:
Cover the pump-motor unit with a suitable touch protection (e.g. perforated plate cover or wire cover).

⚠ WARNING

Danger zone:
Fan guard

Hazard:
Long, loose hair can be drawn into external fan through fan guard grate, even with fan guard mounted!

Protective measures:
Wear hair net!

⚠ WARNING

Danger zone:
Missing or defective muffler inlet or discharge connection.

Hazard:
Possible serious hearing damage due to emitted noise.

Protective measures:
Have missing or defective mufflers replaced. Conduct a noise measurement in the system after installing the pump-motor unit. The following measures can be taken from 85 dB(A) and must be taken from 90 dB(A):

- Mark noise area with a warning sign.
- Wear hearing protection.

⚠ WARNING

Danger zone:
Environment of pump-motor unit.

Hazard:
Possible serious hearing damage due to emitted noise.

Protective measures:
Conduct a noise measurement in the system during operation after installing the pump-motor unit.

The following measures can be taken from 85 dB(A) and must be taken from 90 dB(A):

- Mark noise area with a warning sign.
- Wear hearing protection.
- With free entry and exit of gases, i.e. with direct intake out of or direct feeding into the atmosphere without piping, attach an additional muffler.

2 Intended Use

This operating manual

- is intended for side channel compressors of the
  G-BH1 and G-BH9 series, types 2BH1 1 2BH1 2 2BH1 3 2BH1 4 2BH1 5 2BH1 6 2BH1 8 2BH1 9 2BH9 23,
- contains instructions bearing on transport and handling, installation, commissioning, operation, shut-down, storage, servicing and disposal of the G-BH1,G-BH9,
- must be completely read and understood by all operating and servicing personnel before beginning to work with or on the G-BH1, G-BH9,
- must be strictly observed,
- must be available at the site of operation of the G-BH1, G-BH9.

About the operating and servicing personnel of the G-BH1, G-BH9

- These persons must be trained and authorized for the work to be carried out.
- Work on electrical installations may be carried out by trained and authorized electricians only.

The G-BH1,G-BH9

- are pump-motor units for generating vacuum or gauge pressure;
- are used to **extract**, **pump** and **compress the following gases**:
  - Air,
  - Non-flammable, non-aggressive, non-toxic and non-explosive gases or gas-air mixtures.
  - With differing gases/gas-air mixtures, inquire with the Service Department.
- are equipped with one of the following kind of drive motors:
  - 3-phase AC drive motor with a standard or explosion-protected design
  - Single-phase AC drive motor

  These operating instructions apply **only to** pump-motor units with a **standard design**. For an explosion-protected design (EEx e II), see the separate operating instructions.
- are intended for industrial applications,
- are designed for continuous operation. With increased switch-on frequency (6x per hour with equal pauses and operating times) or with increased gas inflow and ambient temperature, the excess temperature limit of the coil and the bearing can be exceeded. Consult the manufacturer when using under such conditions.

When operating the G-BH1, G-BH9 the limits listed in Chapter 3, "Technical Data", Pg. 7 ff. must always be complied with.

Foreseeable Misuse

It is prohibited

- to use the G-BH1, G-BH9 in applications other than industrial applications unless the necessary protection is provided on the system, e.g. guards suitable for children's fingers;
- to use the device in rooms in which explosive gases can occur if the G-BH1, G-BH9 is not expressly intended for this purpose;
- to extract, to deliver and to compress explosive, flammable, corrosive or toxic fluids, unless the G-BH1, G-BH9 is specifically designed for this purpose;
- to operate the G-BH1 with values other than those specified in Chapter 3, "Technical Data", Pg. 7 ff.

Any unauthorized modifications of the G-BH1, G-BH9 are prohibited for safety reasons.

The operator is only permitted to perform the maintenance and service work described in these operating instructions.

Maintenance and servicing work which goes beyond this may only be carried out by companies which have been authorised by the manufacturer (ask the service department for details).

© Gardner Denver Deutschland GmbH

3 Technical Data

3.1 Mechanical data

Weight

Single-impeller design		
	Weight	
Type	[kg] approx.	[lbs] approx.
2BH1100-7..0.	9	20
2BH1200-7..0.	9	20
2BH1300-7..0.	9	20
2BH1300-7..1.	10	22
2BH1300-7..2.	11	24
2BH1330-7..0.	10	22
2BH1330-7..1.	11	24
2BH1330-7..2.	12	26
2BH1400-7..0.	13	29
2BH1400-7..1.	16	35
2BH1400-7..2.	17	37
2BH1430-7..0.	14	31
2BH1430-7..1.	17	37
2BH1430-7..2.	18	40
2BH1500-7..0.	20	44
2BH1500-7..1.	22	49
2BH1500-7..2.	23	51
2BH1500-7..3.	25	55
2BH1530-7..0.	21	46
2BH1530-7..1.	23	51
2BH1530-7..2.	24	53
2BH1530-7..3.	26	57
2BH1600-7..0.	27	60
2BH1600-7..1.	30	66
2BH1600-7..2.	36	79
2BH1600-7..3.	40	88
2BH1600-7..6.	32	71
2BH1600-7..7.	39	86
2BH1630-7..0.	29	64
2BH1630-7..1.	32	71
2BH1630-7..2.	37	82
2BH1630-7..3.	43	95
2BH1630-7..6.	34	75
2BH1630-7..7.	40	88

Single-impeller design		
	Weight	
Type	[kg] approx.	[lbs] approx.
2BH180.-7..0.	117	258
2BH180.-7..1.	126	278
2BH180.-7..2.	132	291
2BH183.-7..0.	120	265
2BH183.-7..1.	129	284
2BH183.-7..2.	135	298
2BH190.-7..0.	179	395
2BH190.-7..1.	198	437
2BH190.-7..3.	210	463
2BH193.-7..0.	179	395
2BH193.-7..1.	198	437
2BH193.-7..3.	209	463
2BH923..-…P	167	368
2BH923..-…Q	145	320
2BH923..-…H	151	333

Two-impeller design		
	Weight	
Type	[kg] approx.	[lbs] approx.
2BH1310-7..2.	15	33
2BH1410-7..3.	25	55
2BH1410-7..4.	27	60
2BH1510-7..4.	40	88
2BH1510-7..5.	44	97
2BH1610-7..1.	43	95
2BH1610-7..2.	48	106
2BH1610-7..3.	54	119
2BH1610-7..4.	66	146
2BH1610-7..5.	73	161
2BH1610-7..7.	50	110
2BH1610-7..8.	62	137
2BH1640-7..3.	54	119
2BH1640-7..4.	69	152
2BH1640-7..5.	75	165
2BH1640-7..8.	62	137
2BH181.-7..1.	171	377
2BH181.-7..2.	177	390

Two-impeller design		
Type	Weight [kg] approx.	Weight [lbs] approx.
2BH181.-7..3.	203	448
2BH181.-7..4.	215	474
2BH184.-7..2.	177	390
2BH184.-7..3.	203	448
2BH191.-7..1.	274	604
2BH191.-7..2.	288	635
2BH191.-7..3.	299	659
2BH191.-7..4.	309	681
2BH1940-7B.2.	275	606
2BH1940-7B.3.	314	692
2BH1940-7B.4.	324	714
2BH1943-7..2.	330	728
2BH1943-7..3.	339	747
2BH1943-7..4.	349	769

Minimum distances

Minimum distance to fan guard (for sucking in cooling air):

Type	[mm]	[inches]
2BH1 1.. - 2BH1 4	34	1.34
2BH1 5.. - 2BH1 9	53	2.09
2BH923…	52	2.05

Minimum distance to face of vacuum pump/compressor cover:

Type	[mm]	[inches]
2BH1 1.. - 2BH1 5	20	0.79
2BH1 6..	30	1.18
2BH1 8.. - 2BH1 9	40	1.57
2BH923..	52	2.05

Noise level

Measuring-surface sound-pressure level as per EN ISO 3744, measured at a distance of 1 m [3.28 ft] at an operating point of approximately 2/3 of the permissible total pressure difference with the lines connected without a vacuum or pressure relief valve, tolerance ±3 dB (A).

Single-impeller design		
Type	1-m measuring-surface sound pressure level L [dB (A)]	
	50 Hz approx.	60 Hz approx.
2BH1100-7..0.	52	55
2BH1200-7..0.	57	61
2BH1300-7..0.	53	56
2BH1300-7..1.	53	56
2BH1300-7..2.	53	56
2BH1330-7..0.	53	56
2BH1330-7..1.	53	56
2BH1330-7..2.	53	56
2BH1400-7..0.	63	64
2BH1400-7..1.	63	64
2BH1400-7..2.	63	64
2BH1430-7..0.	63	64
2BH1430-7..1.	63	64
2BH1430-7..2.	63	64
2BH1500-7..0.	64	70
2BH1500-7..1.	64	70
2BH1500-7..2.	64	70
2BH1500-7..3.	64	70
2BH1530-7..0.	64	70
2BH1530-7..1.	64	70
2BH1530-7..2.	64	70
2BH1530-7..3.	64	70
2BH1600-7..0.	69	72
2BH1600-7..1.	69	72
2BH1600-7..2.	69	72
2BH1600-7..3.	69	72
2BH1600-7..6.	69	72
2BH1600-7..7.	69	72
2BH1630-7..0.	69	72

© Gardner Denver Deutschland GmbH

Single-impeller design		
Type	**1-m measuring-surface sound pressure level L [dB (A)]**	
	50 Hz approx.	**60 Hz approx.**
2BH1630-7..1.	69	72
2BH1630-7..2.	69	72
2BH1630-7..3.	69	72
2BH1630-7..6.	69	72
2BH1630-7..7.	69	72
2BH180.-7..0.	70	74
2BH180.-7..1.	70	74
2BH180.-7..2.	70	74
2BH183.-7..0.	70	74
2BH183.-7..1.	70	74
2BH183.-7..2.	70	74
2BH190.-7..0.	74	79
2BH190.-7..1.	74	79
2BH190.-7..3.	74	79
2BH193.-7..0.	75	80
2BH193.-7..1.	75	80
2BH193.-7..3.	75	80
2BH923..	79	81

Two-impeller design		
Type	**1-m measuring-surface sound pressure level L [dB (A)]**	
	50 Hz approx.	**60 Hz approx.**
2BH1310-7..2.	55	61
2BH1410-7..3.	66	69
2BH1410-7..4.	66	69
2BH1510-7..4.	72	74
2BH1510-7..5.	72	74
2BH1610-7..1.	73	76
2BH1610-7..2.	73	76
2BH1610-7..3.	73	76
2BH1610-7..4.	73	76
2BH1610-7..5.	73	76
2BH1610-7..7.	73	76
2BH1610-7..8.	73	76
2BH1640-7..3.	74	78
2BH1640-7..4.	74	78
2BH1640-7..5.	74	78
2BH1640-7..8.	74	---
2BH181.-7..1.	74	---
2BH181.-7..2.	74	78
2BH181.-7..3.	74	78
2BH181.-7..4.	74	78
2BH184.-7..2.	74	78
2BH184.-7..3.	74	78
2BH191.-7..1.	74	84
2BH191.-7..2.	74	84
2BH191.-7..3.	74	84
2BH1940-7B.2.	75	84
2BH1940-7B.3.	75	84
2BH1940-7B.4.	75	84
2BH1943-7..2.	75	84
2BH1943-7..3.	75	84
2BH1943-7..4.	75	84

Sound power level

Sound power level L_W as per EN ISO 3744, tolerance ±3 dB (A).

Two-impeller design		
	Sound power level L_W [dB (A)]	
Type	50 Hz	60 Hz
2BH191.	-	98
2BH1940	-	98
2BH1943	-	99
2BH923..	-	93

Tightening torques for screw connections

The following values apply if no other information is available.

With non-electrical connections, property classes of 8.8 and 8 or higher as per ISO 898-1 are assumed.

	Tightening torques for non-electrical connections	
Thread	[Nm]	[ft lbs]
M4	2.7 - 3.3	1.99 - 4.44
M5	3.6 - 4.4	2.65 - 3.25
M6	7.2 - 8.8	5.31 - 6.5
M8	21.6 - 26.4	15.9 - 19.5
M10	37.8 - 46.2	27.9 - 34.1
M12	63.0 - 77.0	46.5 - 56.8

The following information for electrical connection applies to all terminal board connections with the exception of terminal strips.

	Tightening torques for electrical connections	
Thread	[Nm]	[ft lbs]
M4	0.8 - 1.2	0.59 - 0.89
M5	1.8 - 2.5	1.33 - 1.84

Especially for metal and plastic threaded cable glands and pipe unions, the following values apply:

	Tightening torques for metal threaded glands/unions	
Thread	[Nm]	[ft lbs]
M12x1,5	4 - 6	2.95 - 4.43
M16x1,5	5 - 7.5	3.69 - 5.53
M25x1,5	6 - 9	4.43 - 6.64
M32x1,5	8 - 12	5.9 - 8.85
M40x1,5		

	Tightening torques for plastic threaded glands/unions	
Thread	[Nm]	[ft lbs]
M12x1,5	2 - 3.5	1.48 - 2.58
M16x1,5	3 - 4	2.21 - 2.95
M25x1,5	4 - 5	2.95 - 3.69
M32x1,5	5 - 7	3.69 - 5.16
M40x1,5		

© Gardner Denver Deutschland GmbH

3.2 Electrical data

See rating plate.

3.3 Operating conditions

Temperatures

Temperature of pumped gases:	max. permissible temperature: +40°C [+104°F] Nominal value: +15°C [+59°F] Pump-motor units for higher fluid temperatures on request.
Ambient temperature:	max. permissible temperature: +40°C [+104°F] min. permissible temperature: -15°C [+5°F] Nominal value: +25°C [+77°F] Ambient temperatures between 25°C [+77°F] and 40°C [+104°F] affect the permissible total pressure difference. At higher temperatures the winding may be damaged and the grease change interval may be shortened.

Pressures

Min. suction pressure:	See rating plate
Max. discharge pressure in compressor mode:	See rating plate

* The total pressure difference, shown on the rating plate, applies only for the following conditions:

- Ambient temperature: 25°C
- Pressure for vacuum operation: 1013 mbar at pressure connection;
- Pressure for compressor operation: 1013 mbar at suction connection;
- Intake temperature (temperature of conveyed gases at suction connection): 15°C
  For ambient temperatures between 25°C and 40°C, the total pressure difference specified on the rating plate must be reduced (at 40°C by 10%).

Consultation with the manufacturer is essential for such operational conditions.

Installation altitude

Max. of 1,000 m [3,280 ft] above sea level.

When installing the pump-motor unit at an altitude of more than 1,000 m [3,280 ft] above sea level, first inquire with the Service department.

4 Transport and Handling

⚠ WARNING

Tipping or falling can lead to crushing, broken bones etc.! Sharp edges can cause cuts!
Wear personal safety equipment (gloves, safety shoes and protective helmet) during transport!

⚠ WARNING

Danger from tipping or falling loads!
Prior to transport and handling make sure that all components are securely assembled and secure or remove all components the fasteners of which have been loosened!

Manual handling:

⚠ WARNING

Danger from lifting heavy loads!
Manual handling of the unit is only permitted within the following limits:

- max. 30 kg [max. 66 lbs] for men
- max. 10 kg [max. 22 lbs] for women
- max. 5 kg [max. 11 lbs] for pregnant women

For the weight of the pump-motor unit, see Chapter 3.1, "Mechanical data", Section "Weight", Pg. 7. For weights above the given values use suitable lifting appliances and handling equipment!

Handling by means of lifting equipment:

⚠ WARNING

Danger from tipping or falling loads!
When transporting with lifting equipment, observe the following basic rules:

- Before each transport, check the tight fit of the eye bolt/lifting attachment, see "Tightening torques for screw connections", p. 10.
- The lifting capacity of lifting equipment and lifting gear must be at least equal to the unit's weight. For the weight of the pump-motor unit, see Chapter 3.1, "Mechanical data", Section "Weight", Pg. 7.
- The pump-motor unit must be secured so that it cannot tip or fall.
- Do not stand or walk under suspended loads!

The transport must be carried out in different ways depending on the type:

- 2BH11., 2BH12., 2BH13., 2BH14., 2BH15. (single-impeller): Manual handling
- 2BH15. (two-impeller), 2BH16., 2BH18., 2BH19., 2BH923…
  Transport with crane, hooked onto eye bolt/lifting attachment (1 attachment point)
- 2BH1943:
  Transport with crane, hooked with lifting belts onto eye bolt and onto the holes in the two feet of the vacuum pump/compressor housing (3 attachment points).

For **transport with a crane**, the pump-motor unit can be hooked into the crane hook as follows:

- directly on the eye bolt/lifting attachment (With 2BH194 the eye bolt and the two foot holes should be used)

or possibly

- with lifting belts.

Eye bolt/lifting attachment:

Types with a weight of up to 30 kg [66 lbs] are **not** equipped with an eye bolt/lifting attachment (2BH11., 2BH12., 2BH13., 2BH14., 2BH15 [single-impeller]).

Types with a weight of more than 30 kg [66 lbs] are equipped with an eye bolt/lifting attachment as **standard** (2BH15. [two-impeller], 2BH16., 2BH18., 2BH19., 2BH9…).

The eye bolt/lifting attachment is mounted on the vacuum pump/compressor housing.

In case of possible removal and remounting of the eye bolt, it must be ensured that the eye level is positioned exactly in the axis direction of the pump-motor unit. Lay shims under the eye bolt if necessary.

The eye bolt/lifting attachment must be firmly tightened.

Loads laterally to the ring level are not permissible. Heavy impact loads during transport must be avoided.

© Gardner Denver Deutschland GmbH

5 Installation

⚠ WARNING

Improper use of the unit can result in serious or even fatal injuries!
Have you read the safety precautions in Chapter 1, "Safety", Pg. 3 f.?

Otherwise you many not carry out any work with or on the pump-motor unit!

⚠ DANGER

Danger from missing view into area of pump-motor unit!
When operating the control elements without a view into the area of the pump-motor unit, there is a danger that the pump-motor unit will be switched on while other persons are still performing work on it. Extreme injuries are possible!

Provide control elements at a location with a view of the pump-motor unit.

⚠ DANGER

Electrical danger!
The pump-motor unit must be installed so that the electrical device cannot be damaged by external influences!

In particular, the feed pipes must be securely routed, e.g. in cable ducts, in the floor etc.

⚠ WARNING

Danger from balance damage caused by vibration!
Vibrating environments can cause balance damage!

Install the pump-motor unit on a solid foundation or on a solid mounting surface.

Check screw glands/unions for mounting the pump-motor unit on the mounting surface regularly for strength and firm seating.

⚠ WARNING

Danger from crushing due to pump-motor unit tipping over!
Wear personal safety equipment (protective gloves and safety shoes). Handle the unit with the appropriate care. Install the pump-motor unit on a solid foundation or on a solid mounting surface! Check screw glands/unions for mounting the pump-motor unit on the mounting surface regularly for strength.

⚠ WARNING

Danger of fire from flammable substances!
The pump-motor unit must never come into contact with flammable substances.

⚠ WARNING

Danger of burns from hot surfaces of the pump-motor unit and from hot fluids!
High temperatures of up to approx. 160°C [320°F] can occur on the surface of the pump-motor unit.

The pump-motor unit must be installed so that accidental touch of its surface is not possible. Cover the pump-motor unit with a suitable touch protection (e.g. perforated plate cover or wire cover).

⚠ WARNING

Danger of injuries from flying parts!
Select installation so that parts that are thrown out through the grate if the external fan breaks cannot hit persons!

⚠ CAUTION

Danger of tripping and falling!
Make sure the unit does not present a danger of tripping. Lay cables and pipes so that they cannot be reached during operation(recessed in floor, in ducts on the wall etc.).

CAUTION

Danger of overheating due to hot surface of pump-motor unit!
High temperatures can occur on the surface of the pump-motor unit.

Temperature sensitive parts, such as lines or electronic components, may not come into contact with the surface of the pump-motor unit.

The pump-motor unit is ready to connect on delivery. However, if the time from delivery to commissioning of the pump-motor unit exceeds a certain period, the lubrication of the rolling bearings must be renewed.
See Chapter 8.2, "Storage conditions", Section "Lubrication of rolling bearings after longer storage", Pg. 24 for information on this topic.

Carry out the following work to install the pump-motor unit:

- Installation and securing,
- Attachment of the included loose muffler if necessary,
- Attachment of threaded flange or hose flange (available as accessories)
  for the connection of inlet or discharge pipe to the muffler,
- Electrical connection,
- Connection of inlet and discharge connection to the system.

5.1 Installation

⚠ WARNING

For an installation that differs from the following specifications, it is necessary to inquire with the Service Department!

Ambient conditions:

The pump-motor unit is suitable for installation in the following environments:

- In a dusty or damp environment,
- in buildings,
- in the open.
  When properly installed in the open, the pump-motor unit must be protected from exposure to intensive sunlight, e.g. by attaching a protective roof. Otherwise, no special protective devices against the effects of weathering are required.

The drive motors of the pump-motor units have the following design:

- with degree of protection IP55 (see rating plate),
- with tropicalized insulation.

Installation conditions:

The pump-motor unit must be installed as follows:

- on level surfaces,
- at a maximum height of 1000 m [3280 ft] above sea level.
  When installing at an altitude of more than 1,000 m [3,280 ft] above sea level, first inquire with the Service Department.

Minimum distances:

To ensure sufficient cooling of the pump-motor unit, it is absolutely necessary that the required minimum distances to the **fan guard** and to the **face of the vacuum pump/compressor cover** be maintained. see Chapter 3.1, "Mechanical data", Section "Minimum distances", Pg. 8.

The minimum distances to the face of the vacuum pump/compressor cover are especially important when installing on the vacuum pump/compressor cover or near a wall.

CAUTION

To ensure sufficient cooling of the pump-motor unit, also observe the following:

- Ventilation screens and openings must remain clear.
- Discharge air of other units may not be directly sucked in again!

Noise radiation:

To reduce the noise radiation, the following must be observed:

- Do not mount pump-motor unit on noise-conducting or noise-radiating parts (e.g. thin walls or sheet-metal plates).
- Provide pump-motor unit with sound-insulating intermediate layers (e.g. rubber buffers under the base of the pump-motor unit) if necessary.
- Install the pump-motor unit on a stable foundation or on a rigid mounting surface. This provides for smooth, low-vibration running of the pump-motor unit.

Components for reducing noise on the pump-motor unit:

- **Mufflers** (included as standard equipment):
  On delivery the pump-motor units are equipped with attached mufflers as standard. The noise radiation is considerably reduced by the mufflers. See Fig. 2 to Fig. 9, Pg. 18 ff.
- **Additional silencer** (available as an accessory for the 2BH1):
  The additional mufflers enable a further noise reduction. They may only be used with free entry and exit of gases, i.e. with direct intake out of or direct feeding into the atmosphere **without piping**.

 © Gardner Denver Deutschland GmbH

- **Sound protection hood** (available as an accessory for the 2BH1):
  Noise protection hoods are suitable for installation in rooms and in the open. They reduce both the total sound pressure level and tonal components that are perceived as particularly annoying.

Installation variants/axis position:

Basically, when installing the pump-motor unit, the following variants are possible with a different axis position (horizontal or vertical):

- Horizontal installation
- Vertical installation on the vacuum pump/compressor cover ("cover installation")
- Vertical mounting on the wall

Basically, all variants are possible with all type.

Exceptions

- For the 2BH1943, vertical axis mounting on the compressor cover ("cover position") is necessary.
- For the 2BH923, only horizontal axis mounting and vertical axis mounting on the compressor cover are possible.
- For units with condensate water opening, horizontal axis mounting with a foot below is necessary.

Horizontal axis mounting

The foot of the unit has fastening holes.

- Screw the foot of the unit to the base using suitable screws.
  All fastening holes must have screws!

Vertical axis mounting on the compressor cover ("cover position")

For vertical axis mounting on the compressor cover, use spring elements.

Spring elements are available as accessories and come in a set of 3. The upper part has a threaded stud and the lower part a threaded hole.

- fFastening spring elements to the unit:
  Screw threaded studs of the spring elements into the holes on the front side of the compressor cover and tighten.
- Fastening the unit with spring elements to the foundation:
  Select suitable fastening elements for the threaded hole.
  Screw spring elements over the threaded hole into the base or foundation.

Vertical axis mounting on the wall with the compressor cover pointing downward

For vertical axis mounting of the unit on the wall, the unit is fastened using the holes in the foot. The foot of the unit has fastening holes.

- Place the unit with the foot to the wall on a base plate with sufficient load-bearing capability in the mounting position.
- Screw the foot of the unit to the wall using suitable screws.
  All fastening holes must have screws!
- Remove the base plate.

Eye bolt/lifting attachment:

After set-up, the eye bolt/lifting attachment can be removed.

5.2 Electrical connection (motor)

⚠ DANGER

Electrical danger!
Malpractice can result in severe injuries and material damage!

⚠ DANGER

Electrical danger!
The electrical connection may be carried out by trained and authorized electricians only!

⚠ DANGER

Electrical danger!
Before beginning work on the unit or system, the following measures must be carried out:

- Deenergize.
- Secure against being switched on again.
- Determine whether deenergized.
- Ground and short-circuit.
- Cover or block off adjacent energized parts.

CAUTION

Incorrect connection of the motor can lead to serious damage to the unit!

Regulations:

The electrical connection must be carried out as follows:

- according to the applicable national and local laws and regulations,
- according to the applicable system-dependent prescriptions and requirements,
- according to the applicable regulations of the utility company.

Electrical power supply:

Observe the **rating plate**.
It is imperative that the operating conditions correspond to the data given on the rating plate!

Deviations permissible without reduction in performance:

- ±5 % voltage deviation
- ±2 % frequency deviation

Connection to drive-motor terminal box:

Open the required cable entry openings on the terminal box. Here the following two cases are differentiated:

- The cable entry opening is prefabricated and provided with a sealing plug.
- Screw out sealing plug.

OR

- The cable entry opening is closed off with a casting skin (only on pump-motor units with drive-motor axis heights of 100 to 160 in standard design).
- Break out casting skin using a suitable tool. For example, use a metal pin with a corresponding diameter or a chisel and hammer.

CAUTION

When pounding out the casting skin on the cable entry openings in the terminal box, the terminal box or its parts can be damaged (e.g. terminal board, cable connections).

Proceed with suitable caution and precision when doing so! Prevent flash formation!

Mount cable glands on the terminal box. Proceed as follows:

- Select one cable gland in each case which is suitable for the cable diameter.
- Insert this cable gland in the opening of the terminal box.
  Use a reducer if necessary.
- Screw on the cable gland so that no moisture, dirt etc. can penetrate into the terminal box.

Carry out the connection and the arrangement of the jumpers in accordance with the **circuit diagram in the terminal box**.

Connect the protective conductor to the terminal with the following symbol:
 .

The electrical connection must be carried out as follows:

- The electrical connection must be permanently safe.
- There may be no protruding wire ends.
- Clearance between bare live parts and between bare live parts and ground: ≥ 5.5 mm [0.217"] (at a nominal voltage of $U_N \leq 690V$).
- For the tightening torques for terminal board connections (except terminal strips), see Chapter 3.1, "Mechanical data", Section "Tightening torques for screw connections", Pg. 10.
- For terminals with clamping straps (e.g. as per DIN 46282), the conductors must be inserted so that approximately the same clamping height results on both sides of the bar. Individual conductors must therefore be bent into a U-shape or connected with a cable lug (DIN 46234).

This also applies to:

- the protective conductor,
- the outer ground conductor.

Both conductors can be recognized from their color (green/yellow).

⚠ DANGER

Electrical danger!
The terminal box must be free from

- foreign bodies,
- dirt,
- humidity.

Terminal box cover and cable entries must be tightly closed so as to make them dustproof and waterproof. Check for tightness at regular intervals.

⚠ DANGER

Electrical danger!
Clearance between bare live parts and between bare live parts and ground:

at least **5.5 mm [0.217"]** (at a nominal voltage of $U_N \leq 690V$).

There may be no protruding wire ends!

© Gardner Denver Deutschland GmbH

For **motor overload protection**:

- Use motor circuit breakers.
- This must be adjusted to the specified nominal current (see rating plate).

⚠ DANGER

Electrical danger!
There is danger of an electrical shock when a defective pump-motor unit is touched!

Mount motor circuit breaker.
Have electrical equipment checked regularly by an electrician.

Interference immunity of drive motor:

For drive motors with integrated sensors, the operator must provide for a sufficient interference immunity itself. Select a suitable sensor signal cable (e.g. with screening, connection as for a motor power-supply cable) and analyzing unit.

Operation with frequency converter:

⚠ WARNING

Pump-motor units with a UL approbation may not be operated on frequency converters in the US without testing by a suitable test agency!

With a power supply by a frequency converter, the following must be observed:

- High-frequency current and voltage harmonics in the motor supply cables can lead to emitted electromagnetic interference. This is dependent on the converter design (type, manufacturer, interference suppression measures).
- Be sure to observe the EMC notes of the converter manufacturer!
- Use screened power supply cables if necessary. For optimal screening, the screen must be conductively connected over a large area to the metal terminal box of the drive motor with a screwed metal gland.
- In the case of drive motors with integrated sensors (e.g. PTC thermistors) interference voltage can occur on the sensor cable depending on the converter type.
- Limit speed:
  see specifications on the rating plate.

5.3 Connecting pipes/hoses (vacuum pump/compressor)

Mufflers:

The pump-motor units are delivered with mufflers (indicated with arrows in the following illustrations) for the inlet and discharge connections as standard equipment.

On delivery the mufflers are already mounted on the following pump-motor units.

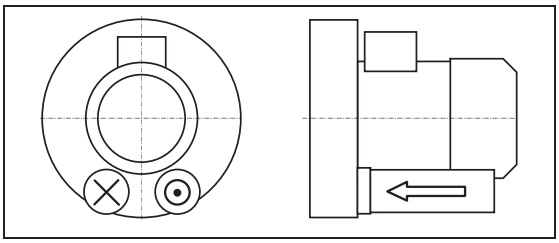

Fig. 2: 2BH1… (single-impeller pump-motor units), 2BH9 23

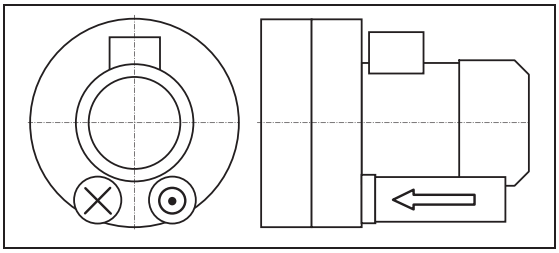

Fig. 3: 2BH1640 (two-impeller pump-motor unit with double-flow design)

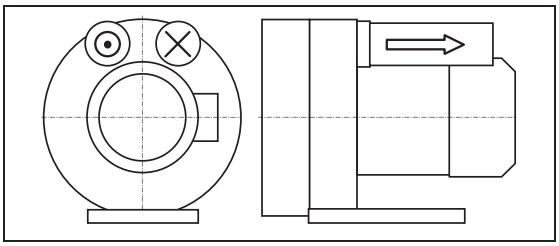

Fig. 4: 2BH1840-7G... (two-impeller pump-motor unit with double-flow design)

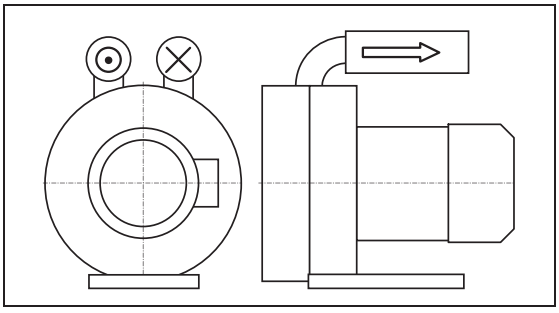

Fig. 5: 2BH1840-7J... (two-impeller pump-motor unit with double-flow design)

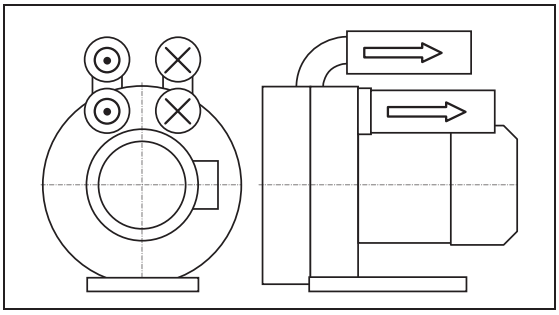

Fig. 6: 2BH1840-7L... (two-impeller pump-motor unit with double-flow design)

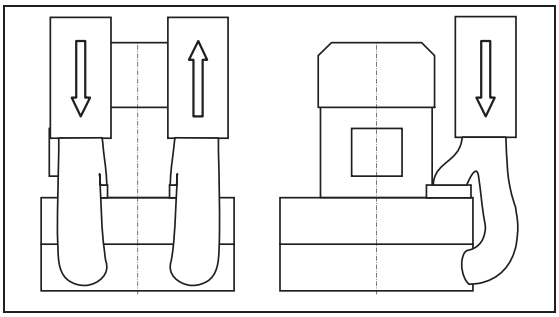

Fig. 7: 2BH1943 (two-impeller pump-motor unit with double-flow design)

On **two-impeller pump-motor units with a two-stage design of the types 2BH1310 to 2BH1910** the discharge-side muffler is included loose for packing-related reasons and must be mounted by the customer.

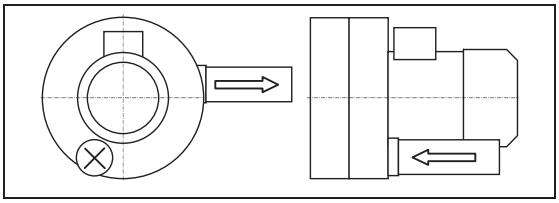

Fig. 8: 2BH1310 ... 2BH1610, 2BH1910 (two-impeller pump-motor units with a two-stage design)

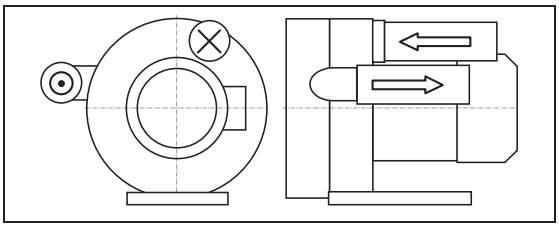

Fig. 9: 2BH1810 (two-impeller pump-motor unit with a two-stage design)

 © Gardner Denver Deutschland GmbH

⚠ WARNING

Danger from rotating impeller:
Cutting/cutting of off extremities!

The rotating impeller is accessible with the inlet and discharge connections open!

With free entry and exit of gases, i.e. with direct intake out of or direct feeding into the atmosphere without piping, the following therefore applies:

Provide the inlet and discharge connections of the pump-motor unit either with additional mufflers or with additional piping of a sufficient length to prevent access to the impeller!

Connections:

To prevent foreign bodies from entering the unit, all connections are sealed off when delivered. Do not remove the sealing plugs until immediately before connecting the pipes/hoses.

The following applies for the arrangement of the pipe/hose connections:

The **pumped gases** are sucked in via the inlet connection (see Chapter 5.3.1, Pg. 19) and discharged via the discharge connection (see Chapter 5.3.2, Pg. 19).

The **shaft rotating direction** is marked with an arrow on the back of the vacuum pump/compressor housing (Fig. 1, Pg. 2, Item 7).

The **delivery direction of the gases** is marked with arrows on both connections (Fig. 1, Pg. 2, Item 6).

⚠ WARNING

Danger from interchanging inlet and pressure line!

Interchanged inlet and pressure lines can lead to damage to the pump-motor unit and the system, and as a result of this to serious injuries!

Make sure that the inlet and pressure line cannot be confused when connecting.

Look for the clear marking with the arrow indicating the delivery direction on the inlet and discharge connections.

⚠ WARNING

Danger due to vacuum and gauge pressure!

Danger due to escaping fluid!

During operation, connected pipes and vessels are vacuumized or pressurized!

Use only mounting elements, connections, lines, fittings and containers with sufficient freedom from leaks and strength for the pressures which occur.

Make sure that the mounting elements and connections are mounted sufficiently firmly and leak-free!

CAUTION

If the pumped gases are passed on on the discharge side in a closed pipe system, then it must be ensured that the pipe system is adapted to the maximum discharge pressure. See Chapter 3.3: "Operating conditions", Section "Pressures", Pg. 11. Connect a pressure relief valve upstream if necessary.

NOTICE

Attach pipes/hoses free of mechanical tensions. Support the weight of the pipes/hoses.

5.3.1 Inlet connection

The inlet connection with the related muffler (Fig. 1, Pg. 2, Item 3) is marked with an arrow pointing into the vacuum pump/compressor. Connect the inlet pipe here. The pumped gases are sucked in via this.
Procedure: see Chapter 5.3.3.

⚠ WARNING

Danger from solid bodies and impurities in the pump-motor unit!

If solid bodies penetrate into the pump-motor unit, blades of the impellers can break and broken pieces can be thrown out.

Install a filter in the inlet pipe.
Replace filter regularly!

5.3.2 Discharge connection

The discharge connection with the related muffler (Fig. 1, Pg. 2, Item 4) is marked with an arrow pointing out of the vacuum pump/compressor. Connect the discharge pipe here. The pumped gases are discharged via this. Procedure: see Chapter 5.3.3.

5.3.3 Procedure when connecting pipes/hoses

Attach the pipes/hoses to the unit as described in the following. The pipes/hoses are connected differently to inlet and discharge connections depending on the muffler design and the type of line (pipe or hose):

- Muffler with inside threads:
  The pipe is screwed directly into the muffler.
- Muffler without inside thread:
  - Screw threaded flange (available as an accessory) onto the muffler.
  - Screw the pipe into the threaded flange.
- Hose connection:
  - for 2BH1 Screw the hose flange (available as an accessory) onto the silencer.
  - Push the hose onto the hose flange and secure it with a hose clamp. See Chapter 3.1, "Mechanical data", Section "Tightening torques for screw connections", Pg. 10 for information on this topic.

© Gardner Denver Deutschland GmbH

6 Commissioning

⚠ WARNING

Improper use of the unit can result in serious or even fatal injuries!

Have you read the safety precautions in Chapter 1, "Safety", Pg. 3 f.? Otherwise you many not carry out any work with or on the pump-motor unit!

⚠ WARNING

Danger from rotating parts (external fan, impeller, shaft): Cutting/cutting off of extremities, Grasping/winding up of hair and clothing!

Danger due to vacuum and gauge pressure: sudden escape of fluids (skin and eye injuries), sudden drawing in of hair and clothing!

Danger due to escaping fluid: Burns!

Start-up and operation only under the following conditions:

- The pump-motor unit must be completely assembled. When doing so, pay particular attention to the following components:
  - the vacuum pump/compressor cover,
  - the muffler on inlet and discharge connections,
  - the fan guard.
- The pipes/hoses must be connected to inlet and discharge connections.
- Inlet and discharge connections and the connected pipes/hoses may not be closed, clogged or soiled.
- Check the mounting elements, connections of the pipe/hose connections, lines, fittings and containers for strength, leaks and firm seating at regular intervals.

6.1 Preparation

⚠ WARNING

Danger from closed connections!

With closed/soiled intake or discharge connections vacuum or gauge pressure results in the pump-motor unit.

This can overheat and damage the drive motor winding.

Before start-up, make sure that the inlet and discharge connections are not closed, clogged or soiled!

CAUTION

Before starting up again after a longer standstill: Measure the insulation resistance of the motor. With values ≤ 1 kΩ per volt of nominal voltage, the winding is too dry.

Measures before start-up:

- If a shut-off device is installed in the discharge pipe:
  Make sure that the unit is NOT operated with the shut-off device closed.
- Before starting up the pump-motor unit, observe the values specified on the rating plate. Specifications on the drive-motor nominal current apply at a gas entry and ambient temperature of +40° C [104°F].
- Adjust the motor circuit breaker to the drive-motor nominal current.

Check direction of rotation:

- The intended rotating direction of the shaft is marked with arrows on the vacuum pump/compressor housing (Fig. 1, Pg. 2, Item. 7).
- The gas delivery direction is marked with arrows on the inlet and discharge connections (Fig. 1, Pg. 2, Item 6).
- Make sure the pipes/hoses on the inlet and discharge connections are properly connected.
- Switch the pump-motor unit on briefly and then off again.
- Compare the actual rotating direction of the external fan with the intended shaft rotating direction indicated with the arrows shortly before the pump-motor unit comes to a standstill.
- If necessary, reverse the direction of rotation of the motor.

⚠ WARNING

Danger due to rotating parts! Danger due to vacuum and gauge pressure! Danger due to escaping fluid!
Test runs may also only be conducted with the pump-motor unit completely mounted.

⚠ DANGER

Electrical danger!
The electrical connection may be carried out by trained and authorized electricians only!

⚠ DANGER

Electrical danger!
Before beginning work on the unit or system, the following measures must be carried out:

- Deenergize.
- Secure against being switched on again.
- Determine whether deenergized.
- Ground and short-circuit.
- Cover or block off adjacent energized parts.

Check operating speeds:

Observe the operating speed specified on the rating plate. This may not be exceeded, as otherwise the noise radiation, vibration behavior, grease consumption duration and bearing change interval worsen. To prevent damage as a result of higher speeds, it may be necessary to inquire with the Service Department as to the maximum speed.

⚠ WARNING

Danger of hearing damage due to noise radiation!
For the noise emission of the pump-motor unit measured by the manufacturer, see Chapter 3.1, "Mechanical data", Section "Noise level", Pg. 8. However, the actual noise emission during operation is highly dependent on the installation and system conditions. Conduct a noise measurement in the system during operation after installing the pump-motor unit. The following measures can be taken from 85 dB(A) and must be taken from 90 dB(A):

- Mark noise area with a warning sign.
- Wear hearing protection.
- With free entry and exit of gases, i.e. with direct intake out of or direct feeding into the atmosphere without piping, attach an additional muffler.

6.2 Start-up and shut-down

Start-up

- Open shut-off device in intake/discharge pipe.
- Switch on power supply for drive motor.

Shut-down:

- Switch off power supply for drive motor.
- Close shut-off device in intake/discharge pipe.

© Gardner Denver Deutschland GmbH

7 Operation

⚠ WARNING

Improper use of the unit can result in serious or even fatal injuries!
Have you read the safety precautions in Chapter 1, "Safety", Pg. 3 f.?
Otherwise you many not carry out any work with or on the pump-motor unit!

Also **be sure** to read the safety precautions in Chapter 6, "Commissioning", Pg. 21!

Starting up and shutting down

See Chapter 6, "Commissioning", Sub-Chapter 6.2, "Start-up and shut-down", Pg. 22.

Also be sure to observe the following important notes especially for operation:

⚠ WARNING

Danger of burns from hot surfaces of the pump-motor unit and from hot fluids!
High temperatures of up to approx. 160°C [320°F] can occur on the surface of the pump-motor unit.

Do not touch during operation!
Allow to cool after shut-down!

CAUTION

Danger of overheating due to hot surface of pump-motor unit!
High temperatures of up to approx. 160°C [320°F] can occur on the surface of the pump-motor unit.

Temperature sensitive parts, such as lines or electronic components, may not come into contact with the surface of the pump-motor unit.

CAUTION

Danger of overheating!
During operation the standstill heating may, if installed, **not** be switched on!

CAUTION

Danger of rusting due to collection of condensed water in drive motor area!
On drive motors with closed condensed water openings:
Remove closures occasionally to allow any water which has collected to drain off.

CAUTION

Danger of bearing damage!
Heavy mechanical impacts must be avoided during operating and while at a standstill.

8 Shut-Down and Longer Standstills

8.1 Preparing for shut-down or longer standstill

⚠ WARNING

Improper use of the unit can result in serious or even fatal injuries!
Have you read the safety precautions in Chapter 1, "Safety", Pg. 3 f.?
Otherwise you many not carry out any work with or on the pump-motor unit!

CAUTION

Danger of rusting due to collection of condensed water in drive motor area!
On drive motors with closed condensed water openings:
Remove closures occasionally to allow any water which has collected to drain off.

CAUTION

Danger of bearing damage!
Avoid mechanical shocks during operation and shut-down.

Prior to shut-down or longer standstill, proceed as follows:

- Switch off the pump-motor unit.
- Close shut-off device in inlet and pressure line if installed.
- Disconnect pump-motor unit from power supply.
- Release pressure.
  When doing so, open pipes/hoses slowly and carefully so that the vacuum or gauge pressure in the pump-motor unit can be released.
- Remove pipes/hoses.
- Provide mufflers on inlet and discharge side with sealing plugs.

8.2 Storage conditions

To prevent standstill damage during storage, the environment must provide the following conditions:

- dry,
- dust-free,
- low-vibration (V_{eff} ≤ 2.8 mm/s [0.11"/sec]).
- Ambient temperature:
  min. -30°C [-22°F]
  max. 40°C [+104°F].

CAUTION

Danger of overheating due to high temperature!
When storing in an environment with a temperature of over 40°C [104°F], the winding may be damaged and the grease change interval may be shortened.

Lubrication of rolling bearings after longer storage:

The new pump-motor unit may at first be stored following delivery. If the time from deliver to commissioning exceeds the following periods, the lubrication of the rolling bearings must be renewed:

- Under advantageous storage conditions (as specified above): 4 years.
- Under disadvantageous storage conditions (e.g. high humidity, salty air, sandy or dusty air): 2 years.

In these cases open rolling bearings must be relubricated and closed rolling bearings must be completely replaced. In this case be sure to inquire with the Service Department. In particular, exact information with regard to the procedure and grease type are required.

⚠ WARNING

Improper use of the unit can result in serious or even fatal injuries!
All maintenance work on the pump-motor unit must always be performed by the Service Department!

Maintenance work on the pump-motor unit may only be conducted by the operator itself when the related **maintenance manual** on hand!

Inquire with the Service Department!

Commissioning after longer standstill:

Before recommissioning after a longer standstill, measure the insulation resistance of the drive motor. With values ≤ 1 kΩ per volt of nominal voltage, the winding is too dry.

© Gardner Denver Deutschland GmbH

9 Servicing

⚠ WARNING

Improper use of the unit can result in serious or even fatal injuries!
Have you read the safety precautions in Chapter 1, "Safety", Pg. 3 f.?

Otherwise you many not carry out any work with or on the pump-motor unit!

⚠ WARNING

Improper use of the unit can result in serious or even fatal injuries!
All maintenance work on the pump-motor unit must always be performed by the Service Department!

Maintenance work on the pump-motor unit may only be conducted by the operator itself when the related **maintenance manual** on hand!

Inquire with the Service Department!

9.1 Emptying/Rinsing/Cleaning

Before any maintenance/servicing work, empty, rinse and clean the outside of the unit.

- Empty unit with air and rinse until all residues have been removed.
- Clean the outside of the unit with compressed air.
  - Wear gloves and protective safety glasses.
  - Secure the surrounding area.
  - Clean the entire surface of the unit and exterior fan with compressed air.

9.2 Repairs/troubleshooting

Fault	Cause	Remedy	Carried out by
Motor does not start; no motor noise.	At least two power supply leads interrupted.	Eliminate interruption by fuses, terminals or power supply cables.	Electrician
Motor does not start; humming noise..	One power supply lead interrupted.	Eliminate interruption by fuses, terminals or power supply cables.	Electrician
	Impeller is jammed.	Open vacuum pump/compressor cover, remove foreign body, clean.	Service*)
		Check or correct impeller gap setting if necessary.	Service
	Impeller defective.	Replace impeller.	Service*)
	Rolling bearing on drive motor side or vacuum pump/compressor side defective.	Replace motor bearing or vacuum pump/compressor bearing.	Service*)
Protective motor switch trips when motor is switched on. Power consumption too high.	Winding short-circuit.	Have winding checked.	Electrician
	Motor overloaded. Throttling does not match specification on rating plate.	Reduce throttling.	Service*)
		Clean filters, mufflers and connection pipes if necessary.	Service*)
	Compressor is jammed.	See fault: "Motor does not start; humming noise." with cause: "Impeller is jammed.".	Service*)

Fault	Cause	Remedy	Carried out by
Pump-motor unit does not generate any or generates insufficient pressure difference.	Leak in system.	Seal leak in the system.	Operator
	Wrong direction of rotation.	Reverse direction of rotation by interchanging two connecting leads.	Electrician
	Incorrect frequency (on pump-motor units with frequency converter).	Correct frequency.	Electrician
	Shaft seal defective.	Replace shaft seal.	Service*)
	Different density of pumped gas.	Take conversion of pressure values into account. Inquire with Service Department.	Service
	Change in blade profile due to soiling.	Clean impeller, check for wear and replace if necessary.	Service*)
Abnormal flow noises.	Flow speed too high.	Clean pipes. Use pipe with larger cross-section if necessary.	Operator
	Muffler soiled.	Clean muffler inserts, check condition and replace if necessary.	Service*)
Abnormal running noise.	Ball bearing lacking grease or defective.	Regrease or replace ball bearing.	Service*)
Compressor leaky.	Seals on muffler defective.	Check muffler seals and replace if necessary.	Service*)
	Seals in motor area defective.	Check motor seals and replace if necessary.	Service

*) Only when the maintenance manual is at hand: rectification by the operator.

© Gardner Denver Deutschland GmbH

9.3 Service/After-sales service

Our Service is available for work (in particular the installation of spare parts, as well as maintenance and repair work), not described in these operating instruction.

A list of spare parts with an exploded drawing is available on the Internet at www.gd-elmorietschle.com.

Observe the following when **returning** pump-motor unit:

- The pump-motor unit must be delivered complete, i.e. not dismantled.
- The pump-motor unit may not present a danger to the workshop personnel.
  Each pump motor unit on delivery to the workshop must be accompanied with a fully completed "Statement on health safety and on the protection of the environment", Pg. 29.
- The original rating plate of the pump-motor unit must be properly mounted, intact and legible.
  All warranty claims are voided for pump-motor units delivered for a damage expertise without the original rating plate or with a destroyed original rating plate.
- In case of warranty claims, the manufacturer must be informed of the operating conditions, operating duration etc. and additional detailed information provided on request if necessary.

10 Disposal

Have the entire pump-motor unit scrapped by a suitable disposal company. No special measures are required when doing so.
For additional information on disposing of the unit, ask the Service Department.

11 Explosion-Protected Design

An additional set of operating instructions with supplementary or specific information is provided with these pump-motor units.

EU declaration of conformity

Manufacturer:	Gardner Denver Deutschland GmbH Industriestraße 26 97616 Bad Neustadt Germany
Responsible for documentation:	Holger Krause Industriestraße 26 97616 Bad Neustadt Germany
Designation:	G series Side channel blower G-BH1, G-BH9 Types 2BH1 1 2BH1 2 2BH1 3 2BH1 4 2BH1 5 2BH1 6 2BH1 8 2BH1 9 2BH9 23

The side channel blower described above meets the following applicable Community harmonisation legislation:

2004/108/EC[*)]	Directive 2004/108/EC of the European Parliament and of the Council of 15 December 2004 on the approximation of the laws of the Member States relating to electromagnetic compatibility and repealing Directive 89/336/EEC
2006/42/EC	Directive 2006/42/EC of the European Parliament and of the Council of 17 May 2006 on machinery, and amending Directive 95/16/EC The protection targets of the directive 2006/95/EC have been met

Harmonised standards applied:

EN 1012-1:2010	Compressors and vacuum pumps - Safety requirements - Part 1: Air compressors
EN 1012-2:1996 +A1:2009	Compressors and vacuum pumps - Safety requirements - Part 2: Vacuum pumps
EN ISO 12100:2010	Safety of machinery - General principles for design - Risk assessment and risk reduction
EN 60204-1:2006	Safety of machinery - Electrical equipment of machines Part 1: General requirements

Bad Neustadt, 26.09.2011
(Place and date of issue)
Thomas Kurth, Managing Director
(Name and function)



(Signature)

[*)] Only applicable for version with frequency converter 2FC

664.44434.40.000

© Gardner Denver Deutschland GmbH

Gardner Denver

Statement on health safety and on the protection of the environment

- For the safety of our employees and to comply with statutory requirements on handling substances harmful to the health and the environment, this statement must be enclosed, fully completed, with **each** unit/system sent.
- **Without the fully completed statement, repair/disposal is not possible and delays are unavoidable!**
- The statement is to be completed and signed by suitably qualified, authorised personnel at the operating organisation.
- In the case of shipment to Germany, the statement is to be completed in German or English.
- The statement is to be attached to the outside of the packing on shipment.
- If necessary, the carrier is to be informed.

1. **Product designation (type):** .....
2. **Serial number (no. BN):** .....
3. **Reason for sending:** .....
4. **The unit/system**
   - ☐ has **not** come into contact with hazardous substances. There will be **no** hazards for personnel or the environment during repair/disposal. Continue with "6. Legally binding statement“
   - ☐ has come into contact with hazardous substances. Continue with "5. Information on the contamination“
5. **Information on the contamination** (if necessary provide more information on an additional sheet)
   The unit/system was used in the following application:

   .....

   and has come into contact with the following classifiable substances or substances presenting a hazard to health/environment:

Trade name:	Chemical designation:	Hazardous substance class:	Properties (e.g. toxic, inflammable, caustic, radioactive):

   - ☐ The unit/system has been emptied in accordance with the operating instructions, flushed and cleaned externally.
   - ☐ Safety data sheets in accordance with the applicable regulations are enclosed (..... sheet).
   - ☐ The following safety precautions are necessary for handling (e.g. personal protective equipment):

     .....

     .....
6. **Legally binding statement**
   I herewith guarantee that the details specified are true and complete and that I, as signatory, am in a position to judge that this is so.
   We are aware that we are liable to the contractor for any damages arising from incomplete or incorrect specifications. We are obliged to indemnify the contractor against claims for damages by third parties arising from incomplete or incorrect specifications. We are aware that, irrespective of this statement, we are directly liable to third parties - in particular including the contractor's employees tasked with repair/disposal.

Company/institute:	.....		
Name, position:	.....	Phone:	.....
Street:	.....	Fax:	.....
Post code, city:	.....		
Country:	.....	Stamp:	
Date, signature:	.....		

© Gardner Denver Deutschland GmbH
P.O. box 1510
97605 Bad Neustadt
Phone: +49 7622 392 0
Fax: +49 7622 392 300
E-mail: er.de@gardnerdenver.com
Internet: www.gd-elmorietschle.com
610.00250.40.905
10.2009
English

© Gardner Denver Deutschland GmbH

Elmo Rietschle
A Gardner Denver Product

www.gd-elmorietschle.de
er.de@gardnerdenver.com

Gardner Denver
Schopfheim GmbH
Roggenbachstraße 58
79650 Schopfheim · Deutschland
Tel. +49 7622 392-0
Fax +49 7622 392-300

Gardner Denver
Deutschland GmbH
Industriestraße 26
97616 Bad Neustadt · Deutschland
Tel. +49 9771 6888-0
Fax +49 9771 6888-4000

Gardner Denver

Elmo Rietschle is a brand of Gardner Denver's Industrial Products Group and part of Blower Operations.

B-7911 - Blower, Cincinnati LM-4, 4.3" X 2.9" Width Alum wheel
B7914 - Blower, Cincinnati, LM-6, Direct drive

cincinnati fan

Form: OMM-01-0509
Effective: 5/4/09
Supersedes OMM-01-0207
Part No.: 01218

Installation, Safety, Operation & Maintenance Instructions And Parts List

For Models PB, PBS, SPB, LM and LMF.

Arrangement 4 Blowers

NOTE

READ ENTIRE MANUAL, INCLUDING "SECTION IV. INITIAL UNIT STARTUP" BEFORE ATTEMPTING TO INSTALL AND OPERATE THIS EQUIPMENT.

BLOWER SPECIFICATIONS

BLOWER SERIAL NUMBER: _____ **MFG. DATE:** _____

NOTE: The serial number above is a required reference for any assistance. It is stamped on the blower nameplate.

BLOWER SPECIFICATIONS:

Model: _____ **Arrangement:** _____ **Rotation:** _____ **Discharge:** _____

Nominal Inlet Size: _____ (in Inches) **Wheel Size and Type:** _____

BLOWER PERFORMANCE DATA: (If entered on order)

CFM: _____ **SP:** _____ (Inches of Water Gauge) **Motor BHP:** _____

Density: _____ **Altitude:** _____ (Ft. above S.L.) **Airstream Temperature:** _____**°F.**

Fan RPM: _____ **Maximum Safe Fan RPM:** _____ **DO NOT EXCEED THIS RPM**

MOTOR DATA: (This section is completed only if the motor was supplied by Cincinnati Fan)

HP: _____ **RPM:** _____ **Voltage:** _____ **Phase:**_____

Hz: _____ **Frame Size:** _____ **Enclosure:** _____ **Efficiency:** _____

IF Motor is EXP, Class(es) & Group(s) are:_____

Manufacturers Model Number: _____ **CFV Part Number:** _____

ATTENTION: RECEIVING DEPARTMENT

All Cincinnati Fan products are packaged to minimize any damage during shipment. The freight carrier is responsible for delivering all items in their original condition as received from Cincinnati Fan. The individual receiving this equipment is responsible for inspecting this unit for any obvious or concealed damage. If any damage is found, it should be noted on the bill of lading before the freight is accepted and the receiver must file a claim with the freight carrier.

LONG TERM STORAGE NOTICE

If this blower will NOT be installed and put into operation within 30 days, refer to the "Long Term Storage Instructions" on pages 12 and 13. Failure to follow all applicable long term storage instructions, will void your warranty. This blower should be stored indoors in a clean, dry location.

⚠ DANGER				
				
Hazardous voltage can cause electrical shock and death.	High speed rotating equipment can cause severe personal injury.	Lock out/Tag out to prevent personal injury BEFORE starting ANY service or inspection.	Avoid injury. NEVER operate without ALL required safety guards in place.	Avoid injury. You MUST read and understand all instructions in this manual BEFORE installing.

TABLE OF CONTENTS

I. GENERAL
- A. Unpacking and Handling 2
- B. Safety Accessories & Instructions.....2-3

II. INSTALLATION
- A. Vibration.....3
- B. Mounting Methods.....3-4
- C. Duct Work Connections.....4
- D. Safety Guards.....4
- E. Dampers and Valves.....4
- F. Set Screw & Taper-lock Bushing Torque Values 5

III. ELECTRICAL
- A. Disconnect Switches 5
- B. Motors.....5-6
- C. Maximum Blower Speed.....6

IV. INITIAL UNIT STARTUP
- A. Pre-Startup & Post-Startup Checks.....7
- B. Vibration.....8-9

V. ROUTINE INSPECTION & MAINTENANCE.....9
- A. Hardware 10
- B. Motor Bearing Lubrication 10
- C. Wheel Balance 10
- D. Vibration.....10
- E. Dampers and Valves.....10
- F. Safety Equipment or Accessories 10-11

VI. ORDERING PARTS.....11

VII. TROUBLESHOOTING.....11-12

VIII. LONG TERM STORAGE.....12-13

IX. WARRANTY, LIABILITY & RETURNS.....14

X. PARTS DRAWING.....15

I. GENERAL

A. Unpacking:

Be careful not to damage or deform any parts of the blower when removing it from the packaging container. **All the packaging material should be kept in the event the blower needs to be returned.**

Handling:

Handling of the blower should be performed by trained personnel and be consistent with all safe handling practices. Verify that all lifting equipment is in good operating condition and has the proper lifting capacity. The blower should be lifted using well-padded chains, cables or lifting straps with spreader bars. Some blower models have lifting eye locations provided in the blower base. **NEVER lift the blower by an inlet or discharge flange, motor shaft, motor eye bolt, or any other part of the blower assembly that could cause distortion of the blower assembly.**

B. Safety Instructions & Accessories:

1. **Safety Instructions:**
   All installers, operators and maintenance personnel should read AMCA Publication 410-96, **"Recommended Safety Practices for Users and Installers of Industrial and Commercial Fans".** This manual is included with the blower. Additional copies can be requested by writing us at Cincinnati Fan, 7697 Snider Rd., Mason, OH 45040-9135
2. **Sound:**
   Some blowers can generate sound that could be hazardous to personnel. It is the responsibility of the user to measure the sound levels of the blower and/or system, determine the degree of personnel exposure, and comply with all applicable safety laws and requirements to protect personnel from excessive noise.

3. Air Pressure and Suction:

In addition to the normal dangers of rotating machinery, the blower can present additional hazards from the suction or pressure created at the blower inlet or discharge. Suction at the blower inlet can draw materials into the blower where they become high velocity projectiles at the discharge and cause severe personal injury or death. It can also be extremely dangerous to persons in close proximity to the inlet or discharge as the forces involved can overcome the strength of most individuals.

⚠ WARNING

NEVER OPERATE A BLOWER WITH A NON-DUCTED INLET AND/OR DISCHARGE. IF THE BLOWER INLET AND/OR DISCHARGE IS NON-DUCTED, IT IS THE USERS RESPONSIBILITY TO INSTALL AN INLET AND/OR DISCHARGE GUARD.

4. Temperature:

Many blowers, blower components and all motors operate at temperatures that could burn someone if they come in contact with them. If this potential hazard could exist in your installation, steps must be taken by the user to protect anyone from coming in contact with this equipment.

5. Spark Resistance; (Per AMCA Standard 99-0401-86 and ISO 13499)

⚠ DANGER

NO GUARANTEE OF ANY LEVEL OF SPARK RESISTANCE IS IMPLIED BY SPARK RESISTANT CONSTRUCTION. IT HAS BEEN DEMONSTRATED THAT ALUMINUM IMPELLERS RUBBING ON RUSTY STEEL CAN CAUSE HIGH INTENSITY SPARKS. AIR STREAM MATERIAL AND DEBRIS OR OTHER SYSTEM FACTORS CAN ALSO CAUSE SPARKS.

6. Safety Accessories;

Guards:

All moving parts must be guarded to protect personnel. Safety requirements can vary, so the number and types of guards required to meet company, local, state and OSHA regulations must be determined and specified by the actual user or operator of the equipment.

NEVER start any blower without having all required safety guards properly installed. All blowers should be checked on a regular schedule, for missing or damaged guards. If any required guards are found to be missing or defective, the power to the blower should be immediately turned off and locked out in accordance with OSHA regulations. Power to the blower should NOT be tuned back on until the required guards have been repaired or replaced.

This blower can become dangerous due to a potential “windmill” effect, even though all electrical power has been turned off or disconnected. The blower wheel should be **carefully** secured to prevent any rotational turning ***BEFORE*** working on any parts of the blower/motor assembly that could move.

7. Access or Inspection Doors:

⚠ DANGER

NEVER OPEN ANY ACCESS OR INSPECTION DOORS WHILE THE BLOWER IS OPERATING. SERIOUS INJURY OR DEATH COULD RESULT FROM THE AFFECTS OF AIR PRESSURE, AIR SUCTION OR MATERIAL THAT IS BEING CONVEYED. DISCONNECT OR LOCK OUT POWER TO THE BLOWER AND LET THE BLOWER WHEEL COME TO A COMPLETE STOP *BEFORE* OPENING ANY TYPE OF ACCESS OR INSPECTION DOOR.

II. INSTALLATION

A. Vibration:

Before any mounting method is selected, the user should be aware of the effects vibration will have on the blower, motor and other parts. Improper blower installation can cause excessive vibration causing premature wheel and/or motor bearing failure, that is not covered under warranty. Vibration eliminator pads, springs or bases should be properly installed to prevent any blower vibration from transmitting to the foundation, support structure or ducting.

⚠ WARNING

SHUT THE BLOWER DOWN IMMEDIATELY IF THERE IS ANY SUDDEN INCREASE IN VIBRATION.

B. Mounting Methods:

1. Floor Mounted Units;

Centrifugal blowers should be mounted on a flat, level, concrete foundation weighing 2-3 times the weight of the complete blower/motor assembly. It is recommended that the foundation be at least 6 inches larger than the base of the blower. The foundation should include anchor bolts such as shown in **Fig. 1** on page 4. Place the blower over the anchor bolts and shim under each bolt until the blower is level. After shimming, flat washers, lock washers and lock nuts should be tightened at each anchor bolt. Any gaps between the blower base and the foundation should be grouted. If the blower will be sitting on some type of vibration pads or mounts, follow the recommended mounting procedures supplied with the vibration elimination equipment.

Fig. 1

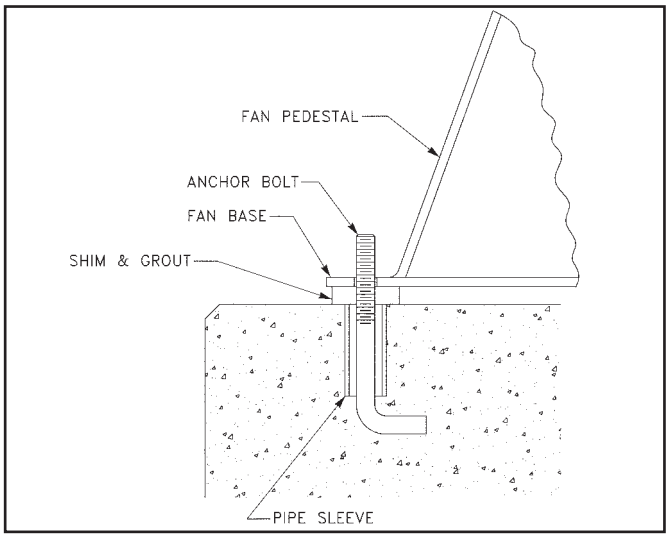

2. Elevated Units;

Improper mounting of elevated blowers can cause vibration problems. The structure that the blower/motor assembly will be mounted on must be strong enough to support at least 3 times the weight of the entire blower/motor assembly. **An insufficient support will cause excessive vibration and lead to premature wheel and/or motor bearing failure**. Bracing of the support structure must be sufficient enough to prevent any side sway. The entire structure should be welded at all connection joints to maintain constant alignment of the platform.

⚠ DANGER

THE IMPROPER DESIGN OF AN ELEVATED PLATFORM STRUCTURE COULD RESULT IN A RESONANT CONDITION, AND CONSEQUENTLY, CAUSE A LIFE THREATENING, CATASTROPHIC, STRUCTURAL FAILURE.

C. Duct Work Connections:

All duct connections to the blower should include flexible connectors between the ducting and the blower inlet and/or discharge. This will eliminate distortion, noise and vibration from transmitting to the duct and building. The connectors should be selected to handle the operating conditions for air volume and pressure that the blower will produce. **All ducting or accessories, added by the user, should be independently supported. DO NOT use the blower/motor assembly to support any additional weight.** Inlet and/or discharge duct elbows should be located a minimum of 2 blower wheel diameters from the blower. Any duct elbows located closer than 2 wheel diameters to the blower inlet or discharge **WILL** reduce the air performance and blower efficiency. Any duct elbows near the blower discharge should be in the **same rotational direction** as the **blower rotation**.

Non-Ducted Blower Inlet:

Any blower with no ducting on the inlet **must** have an inlet guard. The blower should be located so the blower inlet is, at least, 1 wheel diameter away from any wall or bulkhead to eliminate a reduction in air flow.

Non-Ducted Blower Discharge:

Any blower with no ducting on the discharge **must** have a discharge guard.

D. Safety Guards:

Cincinnati Fan offers guards, as optional, to keep your blower in compliance with OSHA safety regulations. These include inlet or discharge guards. Any blowers built with high temperature construction, a “heat slinger guard” is standard. It is the responsibility of the user to make sure this blower meets all local, state and OSHA safety regulations. If you have a specific guard requirement not covered by OSHA, please contact the local Cincinnati Fan sales office for assistance.

E. Dampers and Valves: (Airflow control devices)

If the blower is supplied with any type of air flow control device, it should be closed before initial start-up of the blower to minimize overloading of the motor. Any airflow control device, with bearings, should be maintained in accordance with the manufacturers instructions. Any air flow control device, with an automatic control mechanism, should be adjusted per the manufacturers recommendations.

F. Set Screw and Taper-lock Bushing Torque Values:

All blower wheel set screws are tightened to the proper torque prior to shipment. Some wheels may have taper-lock hubs and split, taper-lock bushings to secure the wheel to the motor shaft.

NOTE: Check all set screw or taper-lock bushing torques. Forces encountered during shipment, handling, rigging and temperature can affect factory settings. For correct torque values, see **Tables 1** and **2** below.

Table 1

SET SCREW TORQUE VALUES		
Diameter & Number of Treads/Inch	**Hex Wrence Size (Across Flats)**	**Required Torque (Inch Pounds)**
1/4-20	1/8"	65
5/16-18	5/32"	165
3/8-16	3/16"	228
7/16-14	7/32"	348
1/2-13	1/4"	504
5/8-11	5/16"	1104

Table 2

TORQUE VALUES FOR TAPER-LOCK BUSHINGS	
Taper-lock Bushing Size	**Required Torque (Inch Pounds)**
H	95
B	192
P	192
Q	350
R	350

⚠ CAUTION

Set screws should NEVER be used more than once. If the set screws are loosened, they MUST be replaced. Use only knurled, cup-point, set screws with a nylon locking patch.

III. ELECTRICAL

A. Disconnect Switches:

All blower motors should have an independent disconnect switch located in close visual proximity to turn off the electrical service to the blower motor. **Disconnects must be locked out in accordance with OSHA "lock out-tag out" procedures any time inspection or maintenance is being performed on the blower and/or motor assembly. The "lock out-tag out" procedure should be performed by a licensed electrician or authorized personnel.** All disconnects should be sized in accordance with the latest NEC codes (National Electric Codes) and any local codes and should be installed only by a licensed electrician. "Slow blow" or "time delay" fuses or breakers should be used since the initial start-up time for the blower motor, although rare, can be up to 10 seconds.

B. Motors:

⚠ DANGER

ALL WIRING CONNECTIONS, INSPECTION AND MAINTENANCE OF ANY MOTOR MUST BE PERFORMED BY A LICENSED ELECTRICIAN IN ACCORDANCE WITH THE MOTOR MANUFACTURERS RECOMMENDATIONS, ALL ELECTRICAL CODES AND OSHA REGULATIONS. FAILURE TO PROPERLY INSTALL, MAKE WIRING CONNECTIONS, INSPECT OR PERFORM ANY MAINTENANCE TO A MOTOR CAN RESULT IN MOTOR FAILURE, PROPERTY DAMAGE, EXPLOSION, ELECTRICAL SHOCK AND DEATH.

1. **DO NOT connect or operate a motor without reading the motor manufacturers instructions supplied with the blower.** The basic principle of motor maintenance is: **KEEP THE MOTOR CLEAN AND DRY.** This requires periodic inspections of the motor. The frequency of the inspections depends on the type of motor, the service and environment it will be subjected to and the motor manufacturers instructions.
2. **Cleaning:** Cleaning should be limited to exterior surfaces only. **Follow motor manufacturers cleaning instructions.**
3. **Lubrication:** Most small motors have sealed bearings that are permanently lubricated for the life of the motor. Some larger motors have grease plugs that should be replaced with grease fittings to perform re-lubrication. These motors, or any motor with grease fittings, should be lubricated in accordance with the motor manufacturers recommendations. Lubrication frequency depends on the motor horsepower, speed and service. **BE SURE** you use compatible grease and **DO NOT** over grease.
4. **Location:** If the motor will be outside and subjected to the weather, it is recommended that a weather cover be installed to keep rain and snow off of the motor. No motors are guaranteed to be "watertight". Be careful to allow enough openings between the motor and the motor cover to let the motor "breath". If the back end of the motor is covered, the cover should be no closer than 3" to the back of the motor for proper ventilation.

5. **Wiring Connections:** All wiring connections should be made for the proper voltage and phase as shown on the motor nameplate. Connections should follow the motor manufacturers recommendations as shown on the wiring schematic. This wiring diagram will be located on the outside of the motor, inside of the motor conduit box or on the motor nameplate. **Reversing some wires might be necessary to get the correct blower rotation.**
6. **Motors with Thermal Overload Protection:** If a motor is equipped with thermal overloads, the thermal overload must be wired per the wiring schematic to be operable. ***There are 3 types of thermal overloads:***
   a. **Automatic:** These will automatically shut the motor down if the internal temperature exceeds the design limits.

⚠ DANGER

MAKE SURE YOU LOCK OUT THE POWER TO THE MOTOR BEFORE INSPECTING ANY MOTOR WITH AUTOMATIC THERMALS. WHEN THE THERMALS COOL DOWN, THEY WILL ALLOW THE MOTOR TO AUTOMATICALLY START UP AGAIN, UNLESS YOU HAVE LOCKED OUT THE POWER TO THE MOTOR.

   b. **Manual:** These motors will have a button on them. If the motor overheats, it will shut down. After you have inspected the motor and eliminated the over heating problem, you will need to "reset" it by pushing the button. **You should still lock out the power BEFORE inspecting the motor.**
   c. **Thermostats:** This type of thermal is a temperature sensing device **ONLY**. If the motor overheats, the thermostats will open or close (depending on the type) and send a **"signal"** to the electrical box. ***THEY WILL NOT TURN THE MOTOR OFF.*** **These are pilot circuit devices that must be connected to the magnetic starter circuit.**

7. **EXPLOSION PROOF Motors:** No motor is explosion proof. Explosion proof (EXP) motors are designed so if there is an explosion **WITHIN** the motor, the explosion will be **CONTAINED INSIDE** the motor and not allowed to get out to the atmosphere. All explosion proof motors must be selected based on the atmosphere and/or the environment the motor will be operating in. Explosion proof motors are designed, rated, and labeled for their operating conditions based on Classes, Groups and "T" Codes. **The Class, Group and "T" Code of an EXP motor MUST be selected based on the atmosphere and/or environmental conditions the motor will be operating in. Consult the NEC (National Electric Code) and the NFPA (National Fire Protection Association) for the proper EXP motor Class, Group and "T" Code required for your specific application and location.**

⚠ DANGER

IF AN EXPLOSION PROOF MOTOR IS USED IN AN AREA CONTAINING VOLITILE LIQUIDS, GASES, FUMES OR DUST FOR WHICH THE MOTOR WAS NOT DESIGNED TO OPERATE IN, AN EXPLOSION AND/OR FIRE CAN OCCUR.

NOTICE:

   a. **All EXP motors have some type of thermal overload as required by UL (Underwriters Laboratories). Refer to all of Section 6 above.**
   b. **All EXP motors are required to have the UL (Underwriters Laboratories) and CSA (Canadian Standards Association) listing numbers on the motor name plate or on a separate plate attached to the motor. The Class, Group and "T" Code the motor is designed for must also be listed.**

8. **Normal Motor Operating Temperatures:**
   Using your hand to test the normal running temperature of a motor can be a very painful experience;
   The normal operating temperature of a fully loaded, open type, electric motor operating in a 70°F. (21° C.) ambient temperature is 174°F. (79° C.)

C. Maximum Blower Speed and Motor Speed Controllers:

If you will be using any type of motor speed controller with this blower, **DO NOT** exceed the **maximum safe blower speed**. Installing and using a speed control device requires special training and certification as required by the speed control manufacturer. See the manufacturers instructions for proper use, installation and wiring connections for the maximum speed settings. It may also be necessary to "block out" some speeds to eliminate a resonant vibration problem. The maximum safe blower speed is shown on the data sheet shipped with the blower. If you have lost the data sheet, contact Cincinnati Fan or our sales office for your area. You must have the serial number from the **blower** name plate for us to determine the maximum safe blower speed. Cincinnati Fan will only extend the motor manufacturers warranty, when used with a speed controlling device, if the motor has the words **"Inverter Duty"** marked on the motor name plate. If the motor does not have **"Inverter Duty"** marked on the motor name plate, and you have a motor failure, you will be required to contact the motor manufacturer for any service or warranty claims.

IV. INITIAL UNIT STARTUP

NOTICE: Failure to complete and document all the following pre-startup and both post-startup checks, listed in sections A (below) and B on page 8, could void all warranties.

A. Pre-Startup & Post-Startup Checks: (Check blocks as each step is completed. Retain this for your records.)

A1. Pre-Startup Checks Completed By: _____ DATE: _____

A2. 8 Hour, Post-Startup Checks Completed By: _____ DATE: _____

A3. 3 Day, Post-Startup Checks Completed By: _____ DATE: _____

MAKE SURE POWER TO THE MOTOR IS LOCKED OUT BEFORE STARTING PRE-STARTUP OR POST-STARTUP CHECKS.

1. ☐☐☐ If possible, *CAREFULLY* spin the blower wheel by hand to ensure it rotates freely and no rubbing or clicking noise is heard.
2. ☐☐☐ Check all blower, foundation and duct work hardware to make sure it is tight.
3. ☐☐☐ Check all blower wheel set screws to make sure they are tight per **Table 1** on page 5.
4. ☐☐☐ If the wheel has a taper-lock bushing, make sure the bolts are tightened per **Table 2** on page 5.
5. ☐☐☐ Make certain there is no foreign material in the blower or duct work that can become a projectile.
6. ☐☐☐ Make sure any inspection doors in the duct work are securely bolted or locked.
7. ☐☐☐ Ensure all electrical power components are properly sized and matched for your electrical system.
8. ☐☐☐ Check that all required guards are properly secured.
9. ☐☐☐ Any dampers should be fully opened and closed to make sure there is no binding or interference.
10. ☐☐☐ If your blower is mounted on an elevated support structure, make sure the structure is welded at all the joint connections and the structure is properly braced to prevent “side sway”.
11. ☐☐☐ Close any dampers to minimize load on motor. Especially on blowers with high temperature construction. **Never** subject a “cold” blower to a “hot” gas stream. If the blower will be handling “hot gases” greater than 150°F (65°C) it is imperative that the blower be subjected to a gradual rate of temperature increase, not to exceed 15°F/minute (8°C/minute). The same temperature limits are also important when the blower is experiencing a drop in temperature until the temperature drops down to 150°F (65°C). Only, when the entire blower has reached an equilibrium temperature of 150°F (65°C), or less, should the power be turned off.
12. ☐☐☐ Make sure the power source connections to the blower motor are per the motor manufacturers instructions.
13. ☐☐☐ Make sure the blower wheel is stationary prior to startup. **Starting a blower with a wheel that is rotating backwards can cause wheel damage.**
14. ☐☐☐ Apply power to the blower motor momentarily (i.e. “bump start”) to check for proper blower wheel rotation. If the blower is rotating in the wrong direction, reconnect the motor leads per the motor manufacturers wiring schematic. **Blower rotation is determined by viewing the blower from the motor side of the blower, NOT from the inlet side**. After reconnecting the leads, repeat this step. **See Fig. 2 below.**

Fig. 2

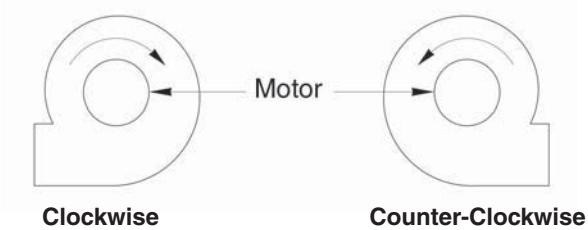

Clockwise (CW) Rotation **Counter-Clockwise (CCW) Rotation**

15. ☐☐☐ Apply power to the blower motor and let it come up to full speed. **Turn off the power.** Look and listen for any unusual noise or mechanical abnormality while the blower wheel is still spinning. If any are noticed, lock out the power, wait for the blower wheel to come to a complete stop, locate the cause and correct it.
16. ☐☐☐ Unlock power and start the blower.
17. ☐☐☐ Measure, record and keep the following motor data for future reference and comparison:
(Single phase motors will only have L1 and L2 leads)

Amperage draw on each motor lead: L1 _____ L2 _____ L3 _____
(Running amps **SHOULD NOT** exceed the motor nameplate amps for the voltage being operated on)

Voltage coming to motor leads: L1_____ L2_____ L3_____
(Should be about the same input voltage on all leads)

B. Vibration:

The blower was balanced at the factory to comply with ANSI/AMCA Standard 204-05, Category BV-2. However, rough handling in shipment and/or erection, weak and/or non-rigid foundations, and misalignment may cause a vibration problem after installation. After installation, the vibration levels should be checked by personnel experienced with vibration analysis and vibration analysis equipment.

NOTE:

The blower SHOULD NOT be operated if the vibration velocity of the fan exceeds 0.50 inches per second, filter out, if the blower is rigidly mounted. If the blower is mounted on isolators or on an isolator base, it SHOULD NOT be operated if the vibration velocity of the blower exceeds 0.75 inches per second, filter out.

Vibration readings for direct driven blowers should be taken on the motor at the top, sides and end as per **Fig. 3** below. After you have taken your vibration readings, write them down in the spaces below and keep for future comparison.

⚠ DANGER

If the blower is going to be conveying material, it is the users responsibility to periodically turn the blower off and lock out the power. The blower wheel should then be checked for material build-up and/or erosion. If material has built up on any parts of the wheel, it MUST be removed and cleaned before it is put back into service. If any parts of the wheel have been eroded, the wheel MUST be replaced. Failure to perform this inspection can cause excessive vibration that will damage the blower and/or motor bearings. When vibration becomes excessive, it will lead to complete blower failure that could cause property damage, severe personal injury and death. The user must determine the frequency of this inspection based on the actual circumstances of their operation, BUT checking the vibration readings should NEVER exceed a 12 month period. For the AMCA/ANSI standard for vibration limits, see Fig. 4 on page 9.

Fig. 3

VIBRATION METER PROBE POSITIONS

For Arrangement 4 Blowers

	1	2	3	4	5
A					
B					
C					

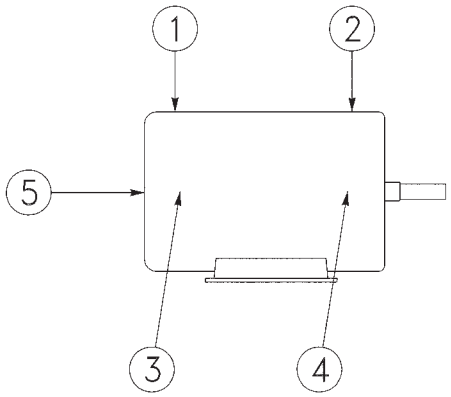

A Pre-Startup ..... Readings taken by: _____ **Date:** _____

B 8 Hour Post-Startup ..... Readings taken by: _____ **Date:** _____

C 3 Day Post-Startup ..... Readings taken by: _____ **Date:** _____

Fig. 4 Vibration Severity Chart

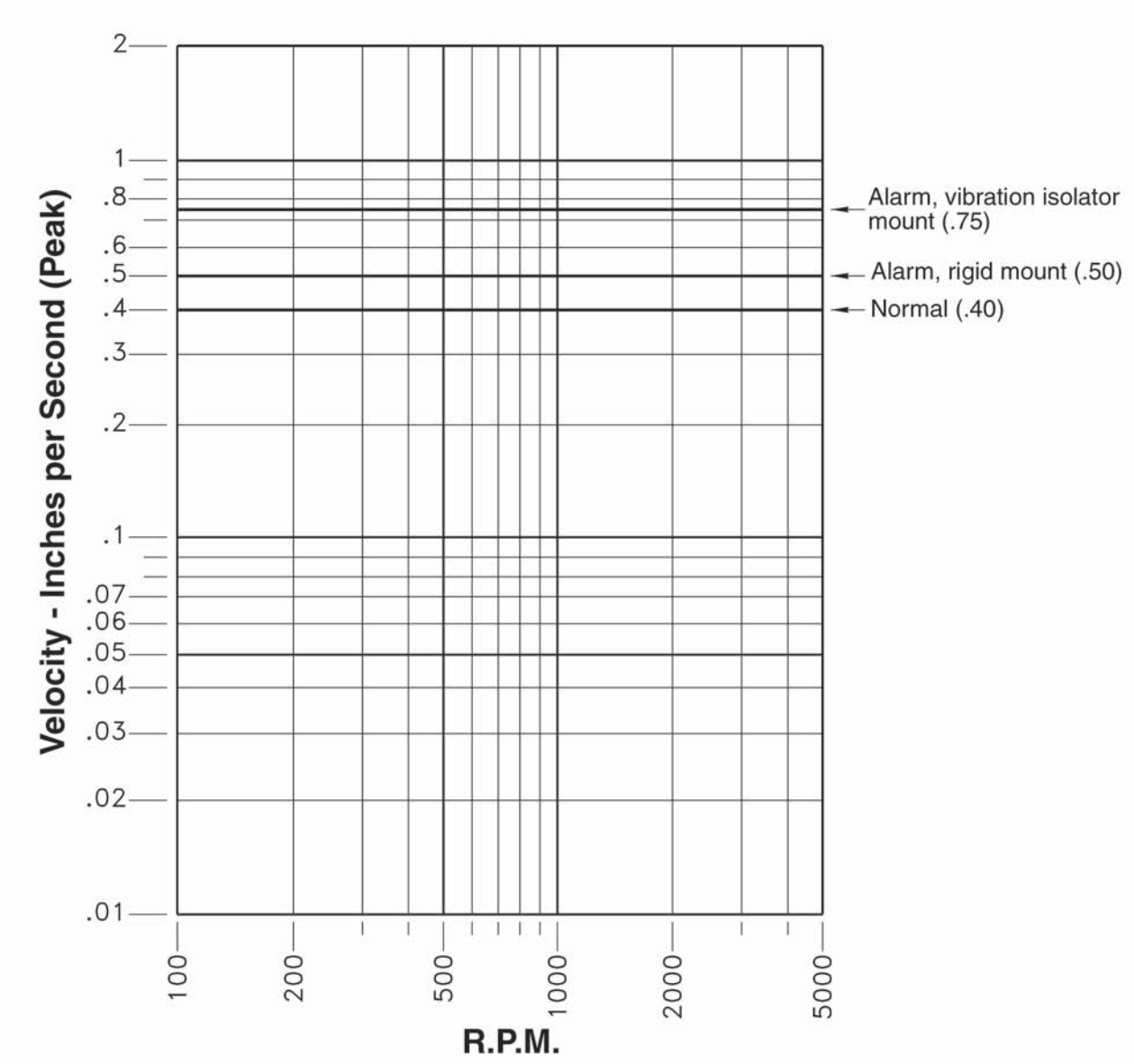

V. ROUTINE INSPECTION & MAINTENANCE

Periodic inspection of all the blower parts is the key to good maintenance and trouble-free operation. The frequency of inspections must be determined by the user and is dependent upon the severity of the application. **BUT,** it should **NEVER** exceed a 12 month period. The user should prepare an inspection and maintenance schedule and make sure it is adhered to.

⚠ WARNING

BEFORE STARTING ANY INSPECTION OR MAINTENANCE, BE SURE BLOWER IS TURNED OFF, POWER IS LOCKED OUT AND THE BLOWER WHEEL HAS BEEN CAREFULLY SECURED TO PREVENT WIND MILLING. IF THE OPERATING CONDITIONS OF THE BLOWER ARE TO BE CHANGED (SPEED, PRESSURE, TEMPERATURE, ETC.) CONSULT CINCINNATI FAN, OR OUR SALES OFFICE FOR YOUR TERRITORY, TO DETERMINE IF THE UNIT WILL OPERATE SAFELY AT THE NEW CONDITIONS.

A. Hardware:

All blower and foundation hardware should be checked to make sure it is tight. Wheel set screws or taper-lock bushings should be tightened to the torque values shown in **Tables 1 and 2** on page 5.

NOTE: If any set screws have come loose, they must be thrown away and replaced. **NEVER** use set screws more than once. **Replace with knurled, cup-point set screws with a nylon locking patch.**

B. Motor Bearing Lubrication:

1. Motor Bearings:

Most smaller motors have sealed bearings that never require re-lubrication for the life of the motor. For any motors with grease fittings, consult the motor manufacturers recommendations with reference to the lubrication frequency and the type of grease that should be used.

DO NOT over grease the motor bearings. Generally, 1-2 shots should be enough. Use a hand operated grease gun at no more than 40 PSI. ***IF POSSIBLE, CAREFULLY*** **lubricate the motor bearings while the motor is running.**

C. Wheel Balance:

All blower wheels are balanced at the factory. It is not uncommon that additional "trim balancing" is required after the blower is assembled. Trim balancing of the blower assembly, in the field, is typically always necessary for all replacement wheels. **After any wheel is installed, the final balance of the entire blower assembly should be checked.** Refer to Section B on page 8 and Fig. 4 on page 9. Air stream material or chemicals can cause abrasion or corrosion of the blower parts. This wear is generally uneven and, over time, will lead to the wheel becoming unbalanced, causing excessive vibration. When that happens, the wheel must be rebalanced or replaced. The other air stream components should also be inspected for wear or structural damage and cleaned or replaced if necessary. **After cleaning any blower wheel, it should be balanced and then "trim balanced" on the motor shaft.**

There are three ways to balance a blower wheel:

1. **Add balancing weights for fabricated aluminum, steel or stainless steel wheels:**
   Balance weights should be rigidly attached to the wheel at a location that will not interfere with the blower housing nor disrupt air flow. They should (if at all possible) be welded to the wheel. When trim balancing the wheel, **on the blower,** be sure to ground the welder **directly** to the blower wheel. Otherwise, the welding current will likely pass through the motor and damage the motor bearings.
2. **Grinding off material for cast aluminum wheels:**
   If you are grinding on the wheel to remove material, be very careful not to grind too much in one area. That could affect the structural integrity of the wheel.
3. **Forward curved wheels, Model LM only (also known as squirrel cage or multivane wheels).**
   These wheels have balancing clips attached to individual blades around the wheel. That is the only proper way to balance this type of wheel.
   NOTE:
   Removing any forward curve wheel from the blower to clean it, requires special attention when reinstalling the wheel back into the blower housing. Make sure you reinstall the wheel so the proper wheel-to-inlet clearance is maintained. Failure to do this will affect the blowers airflow (CFM), static pressure (SP) capabilities and efficiency. Consult Cincinnati Fan or our local sales office for your area for assistance if necessary.

D. Vibration:

As mentioned previously in this manual, excessive vibration can cause premature motor bearing failure that could lead to catastrophic failure of the blower. After performing any routine maintenance, the vibration readings should be taken again. New readings should be taken (maximum every 12 months) and compared to the readings you recorded in **Figure 3**, on page 8, during the initial startup. **If any major differences are present, the cause should be determined and corrected before the blower is put back into operation.**

The most common causes of vibration problems are:

1. Wheel unbalance.
2. Mechanical looseness.
3. Poor blower inlet and/or discharge conditions.
4. Foundation stiffness.

E. Dampers and Valves: (Airflow control devices)

Turn off and lock out power to the blower motor. Any dampers or valves should be periodically inspected to make sure all parts are still operable within their full range and there is no interference with any other damper or blower components. Any bearings or seals should be checked for their proper function. The manufacturers maintenance instructions should be followed.

F. Safety Equipment & Accessories:

It is the users responsibility to make sure that all safety guards required by the company, local, state and OSHA regulations are properly attached and fully functional at all times. If any guards become defective or non-functional at any time, **the power to the blower MUST be turned off and locked out** until complete repairs and/or replacements have been made, installed and inspected by authorized personnel.

Any accessories used in conjunction with the blower should also be inspected to make sure they are functioning within their intended limits and design specifications. The manufacturers maintenance manuals should be referred to for correct maintenance procedures. These accessories include, but are not limited to, the following:

Shaft seals, inspection doors, vibration isolators or vibration bases, air flow or pressure measuring equipment, hoods, controls, special coatings, silencers, expansion joints, valves, flexible connectors and filters.

VI. ORDERING REPLACEMENT PARTS:

Under normal conditions, you should not need any spare or replacement parts for at least 24 months after shipment from Cincinnati Fan. That does not include any wear due to abrasion, corrosion, excessive temperatures, abuse, misuse, accident or any severe conditions the fan was not designed for.

NOTICE:

1. **If this blower is vital to any process that could cost you lost revenue, we strongly recommend that you keep a replacement blower wheel and motor at your location.**

2. **If this blower is vital for the safety of any people and/or animals, we strongly recommend that you keep a complete blower/motor assembly, as originally ordered, at your location.**

To order any parts or complete units, contact us for the name of our sales office for your area. Or you can find them on our website at: **www.cincinnatifan.com**

WE MUST HAVE THE BLOWER SERIAL NUMBER FROM THE BLOWER NAME PLATE TO IDENTIFY PARTS CORRECTLY.

VII. TROUBLESHOOTING

⚠ DANGER

Troubleshooting should only be performed by trained personnel. Any potential electrical problems should only be checked by a licensed electrician. All safety rules, regulations and procedures MUST be followed. Failure to follow proper procedures can cause property damage, severe bodily injury and death.

Potential problems and causes listed below are in no order of importance or priority. The causes are only a list of the most common items to check to correct a problem. If you find the cause of a problem, **DO NOT** assume it is the **ONLY** cause of that problem. Different problems can have the same causes.

PROBLEM	CAUSE
Excessive Vibration	1. Loose mounting bolts, wheel set screws, taper-lock hubs. 2. Worn or corroded blower wheel. 3. Accumulation of foreign material on blower wheel. 4. Bent motor shaft. 5. Worn motor bearings. 6. Motor out of balance. 7. Inadequate structural support. 8. Support structure not sufficiently cross braced. 9. Weak or resonant foundation. 10. Foundation not flat and level.
Airflow (CFM) Too Low	1. Blower wheel turning in wrong direction (**rotation**). 2. Actual system static pressure (**SP**) is higher than expected. 3. Motor speed (**RPM**) too low. 4. Dampers or valves not adjusted properly. 5. Leaks or obstructions in duct work. 6. Filters dirty. 7. Inlet and/or discharge guards are clogged. 8. Duct elbow too close to blower inlet and/or discharge. 9. Improperly designed duct work 10. Blower wheel not properly located relative to the inlet bell (**LM** Model only).
Airflow (CFM) Too High	1. Actual system static pressure (**SP**) is lower than expected. 2. Motor speed (**RPM**) too high. 3. Filter not in place. 4. Dampers or valves not adjusted properly.

PROBLEM	CAUSE
Motor Overheating	**NOTE: A normal motor will operate at 174°F. See B-8 on page 6.** 1. Actual system static pressure **(SP)** is lower than expected. 2. Voltage supplied to motor is too high or too low. 3. Motor speed (**RPM**) too high or defective motor. 4. Air density higher than expected. 5. Motor wired incorrectly or loose wiring connections. 6. Cooling fan cover on back of motor is clogged. (Fan cooled motors only.)
Excessive Noise	1. Wheel rubbing inside of housing. 2. Worn or corroded blower wheel. 3. Accumulation of foreign material on blower wheel. 4. Loose mounting bolts, wheel set screws, or taper-lock hubs. 5. Bent motor shaft. 6. Worn motor bearings. 7. Motor out of balance. 8. Motor bearings need lubrication. 9. Vibration originating elsewhere in system. 10. System resonance or pulsation. 11. Inadequate or faulty design of blower support structure. 12. Blower operating near "stall" condition due to incorrect system design or installation.
Fan Doesn't Operate	1. Motor wired incorrectly. 2. Incorrect voltage supply. 3. Defective fuses or circuit breakers. 4. Power turned off elsewhere. 5. Motor wired incorrectly or loose wiring connections. 6. Defective motor.

VIII. LONG TERM STORAGE INSTRUCTIONS: (Storage exceeding 30 days after receipt of equipment)

NOTE: Failure to adhere to these instructions voids all warranties in their entirety.

1. Storage site selection:
   a. Level, well-drained, firm surface, in clean, dry and warm location. Minimum temperature of 50°F (10°C).
   b. Isolated from possibility of physical damage from construction vehicles, erection equipment, etc.
   c. Accessible for periodical inspection and maintenance.
2. The blower should be supported under each corner of its base to allow it to "breath". Supports (2 x 4's, timbers, or railroad ties) should be placed diagonally under each corner.
3. If the equipment is to be stored for more than three (3) months, the entire blower assembly must be loosely covered with plastic, **but not tightly wrapped**.
4. Storage Maintenance:

   A periodic inspection and maintenance log, by date and action taken, must be developed and maintained for each blower. See example below. Each item must be checked monthly.

EXAMPLE:

Storage / Maintenance Schedule Log

ITEM	ACTION	DATES CHECKED
1	Re-inspect units to insure any protective devices used are functioning properly. Check for scratches in the finish which will allow corrosion or rust to form.	
2	Rotate wheel a minimum of 10 full revolutions to keep the motor bearing grease from separating and drying out. ***This is a critical step.***	

Long Term Storage instructions continued on page 13.

5. General Motor Procedure:

   If the motor is not put into service immediately, the motor must be stored in a clean, dry, warm location. Minimum temperature of 50°F. (10°C,). Several precautionary steps must be performed to avoid motor damage during storage.

   a. Use a “Megger” each month to ensure that integrity of the winding insulation has been maintained. Record the Megger readings. Immediately investigate any significant drop in insulation resistance.
   b. **DO NOT** lubricate the motor bearings during storage. Motor bearings are packed with grease at the factory.
   c. If the storage location is damp or humid, the motor windings **must** be protected from moisture. This can be done by applying power to the motor’s space heaters, (IF AVAILABLE) while the motor is in storage. If the motor does not have space heaters, storing it in a damp or humid location will, very quickly, cause internal corrosion and motor failure which is not warranted.

   ***NOTE*:**
   For specific storage instructions, for the <u>actual</u> motor and any accessory parts that were supplied, refer to the manufacturer’s instructions.

IX. LIMITED WARRANTY:

Cincinnati Fan & Ventilator Company (Seller) warrants products of its own manufacture, against defects of material and workmanship under normal use and service for a period of eighteen (18) months from date of shipment or twelve (12) months from date of installation, whichever occurs first. This warranty does not apply to any of Seller's products or any part thereof which has been subject to extraordinary wear and tear, improper installation, accident, abuse, misuse, overloading, negligence or alteration. This warranty does not cover systems or materials not of Seller's manufacture. On products furnished by Seller, but manufactured by others, such as motors, Seller extends the same warranty as Seller received from the manufacturer thereof. Expenses incurred by Purchaser's in repairing or replacing any defective product will not be allowed except where authorized in writing and signed by an officer of the Seller.

The obligation of the Seller under this warranty shall be limited to repairing or replacing F.O.B. the Seller's plant, or allowing credit at Seller's option. **THIS WARRANTY IS EXPRESSLY IN LIEU OF ALL OTHER WARRANTIES EITHER EXPRESSED OR IMPLIED INCLUDING THE WARRANTIES OF MERCHANTABILITY AND FITNESS FOR A PARTICULAR PURPOSE AND OF ALL OTHER OBLIGATIONS AND LIABILITIES OF THE SELLER. THE PURCHASER ACKNOWLEDGES THAT NO OTHER REPRESENTATIONS WERE MADE TO PURCHASER OR RELIED UPON BY PURCHASER WITH RESPECT TO THE QUALITY OR FUNCTION OF THE PRODUCTS HEREIN SOLD.**

Removal of the Sellers nameplate or any generic fan nameplate containing the fan serial number voids all warranties, either written or implied. Failure to complete and document all the pre-startup and post startup checks and perform the suggested routine maintenance checks voids all warranties, either written or implied.

LIMITATION OF LIABILITY:

Notice of any claim, including a claim for defect in material or workmanship, must be given to Seller in writing within 30 days after receipt of the equipment or other products. Seller reserves the right to inspect any alleged defect at Purchaser's facility before any claim can be allowed and before adjustment, credit, allowance replacement or return will be authorized. See **RETURNS** below. Seller's liability with respect to such defects will be limited to the replacement, free of charge, of parts returned at Purchaser's expense F.O.B. Seller's plant and found to be defective by the Seller.

IN NO EVENT WILL SELLER BE LIABLE FOR SPECIAL, INDIRECT, INCIDENTAL OR CONSEQUENTIAL DAMAGES, WHETHER IN CONTACT, TORT, NEGLIGENCE, STRICT LIABILITY OR OTHERWISE, INCLUDING WITHOUT LIMITATION DAMAGES FOR INJURY TO PERSONS OR PROPERTY, LOST PROFITS OR REVENUE, LOST SALES OR LOSS OF USE OF ANY PRODUCT SOLD HEREUNDER. PURCHASER'S SOLE AND EXCLUSIVE REMEDY AGAINST SELLER WILL BE THE REPLACEMENT OF DEFECTIVE PARTS AS PROVIDED HEREIN OR REFUND OF THE PURCHASE PRICE FOR DEFECTIVE PRODUCTS, AT SELLER'S SOLE OPTION. SELLER'S LIABILITY ON ANY CLAIM, WHETHER IN CONTRACT, TORT, NEGLIGENCE, STRICT LIABILITY OR OTHERWISE, FOR ANY LOSS OR DAMAGE ARISING OUT OF OR IN CONNECTION WITH PURCHASER'S ORDER OR THE PRODUCTS OR EQUIPMENT PURCHASED HEREUNDER, SHALL IN NO CASE EXCEED THE PURCHASE PRICE OF THE EQUIPMENT GIVING RISE TO THE CLAIM.

RESPONSIBILITY:

It is the understanding of the Seller that Purchaser and/or User will use this equipment in conjunction with additional equipment or accessories to comply with all Federal, State and local regulations. The Seller assumes no responsibility for the Purchaser's or Users compliance with any Federal, State and local regulations.

RETURNS:

Cincinnati Fan & Ventilator Company assumes no responsibility for any material returned to our plant without our permission. An **RMA** (Return Material Authorization) number must be obtained and clearly shown on the outside of the carton or crate and on a packing slip. Any items returned must be shipped freight prepaid. Failure to comply will result in refusal of the shipment at our receiving department.

DISCLAIMER

This manual, and all its content herein, is based on all applicable known material at the time this manual was created. **Any parts of this manual are subject to change at any time and without notice.**

If any statements, diagrams and/or instructions contained herein, **for components not manufactured by the Seller,** conflict with instructions in the manufacturer's manual (i.e.: motors, dampers, etc.), the instructions in the manufacturer's manual, for that component take precedent.

Should you want the latest version of this manual, please contact us or our sales office for your area. Or, you can print a current version by going to our website at: **www.cincinnatifan.com**

cincinnati fan

7697 Snider Road, Mason, OH 45040-9135
Phone: (513) 573-0600 Fax: (513) 573-0640
E-Mail: sales@cincinnatifan.com

X. PARTS DRAWING:

PLEASE NOTE

Cincinnati Fan manufactures many models and arrangements with special variations. For that reason, the maintenance manuals contained on our website do not include a parts drawing nor the completed blower or fan specifications on page 1. For the parts drawing of all the standard components and specifications for the specific blower or fan that you have, please contact our local Cincinnati Fan sales office for your area.

You will need to give them the serial number shown on the blower or fan nameplate so they can supply you the correct information.

Click on ***"Contact a Sales Rep"*** on our website for the name and contact information for our local sales office for your area. **www.cincinnatifan.com**

Innovations in Water Monitoring

Operator's Manual

RDO® PRO-X Process Optical Dissolved Oxygen Probe

DO-501 - Transmitter, Dissolved Oxygen, OpticalRDO Pro-x (10m cable)



Information subject to change without notice. In-Situ, In-Situ logo, Baro Merge, BaroTROLL, HERMIT, HydroVu™, iSitu, Pocket-Situ, RDO, RuggedCable, RuggedReader, SmarTROLL™, TROLL, and Win-Situ are trademarks or registered trademarks of In-Situ Inc.© 2015. All rights reserved.

0088692 Rev 04 | 07/2015

Copyright © 2008-2015 by In-Situ All rights reserved.

This document contains proprietary information which is protected by copyright. No part of this document may be photocopied, reproduced, or translated to another language without the prior written consent of In-Situ

In-Situ makes no warranty of any kind with regard to this material, including, but not limited to, its fitness for a particular application. In-Situ will not be liable for errors contained herein or for incidental or consequential damages in connection with the furnishing, performance, or use of this material.

In no event shall In-Situ Inc. be liable for any claim for direct, incidental, or consequential damages arising out of, or in connection with, the sale, manufacture, delivery, or use of any product.

In-Situ and the In-Situ logo, Win-Situ, TROLL, Baro Merge, BaroTROLL, HERMIT, iSitu, Pocket-Situ, RDO, RuggedCable, RuggedReader, TROLL, and Win-Situ are trademarks or registered trademarks of In-Situ Inc. Microsoft and Windows are registered trademarks of Microsoft Corporation. Pentium is a registered trademark of Intel. Tefzel and Delrin are registered trademarks of E. I. DuPont de Nemours and Company. Viton is a registered trademark of DuPont Dow Elastomers. Kellems is a registered trademark of Hubbell Inc. Alconox is a registered trademark of Alconox Company. Lime-A-Way is a registered trademark of Reckitt Benckiser. iPod and iPhone are trademarks of of Apple Inc., registered in the U.S. and other countries. The Bluetooth word mark and logos are registered trademarks owned by the Bluetooth SIG, Inc. and any use of such marks by In-Situ Inc. is under license. NIST is a registered trademark of the National Institute of Standards and Technology, U.S.A. Other brand names and trademarks are property of their respective owners.





The presence of the Waste Electrical and Electronic Equipment (WEEE) marking on the product indicates that the device is not to be disposed via the municipal waste collection system of any member state of the European Union.

For products under the requirement of WEEE directive, please contact your distributor for the proper decontamination information and take back program, which will facilitate the proper collection, treatment, recovery, recycling, and safe disposal of the device.

Table of Contents

1 Optical RDO PRO-X Dissolved Oxygen Probe Specifications 5
2 Introduction 6
System Description 6
Serial Numbers 7
Unpack the Probe 7
3 Calibrate the RDO PRO-X Probe 9
1-Point Calibration 9
Water-Saturated Air 9
2-Point Calibration 10
100% and 0% Saturation 10
4 Probe Deployment 11
5 Care and Maintenance 12
Clean the RDO-X Sensor Cap 12
Clean the Optical Window 12
Clean the Probe 12
RDO-X Sensor Cap Storage 12
Replace the RDO-X Sensor Cap 12
Maintain Desiccant 13
6 Controller Requirements and Connections 14
Wiring Overview 14
Analog (4-20 mA) 3-wire 15
SDI-12 (3-wire) 16
Modbus Master with Built-in RS485 17
Modbus Master with Built-in RS232 (Converter Required) 18
Converter 19
Power Connections 19
Communications 19
7 Modbus Registers 20
Common Registers 20
Sensor Status Registers 20
Device Specific Register 0042 Data Quality ID 20
Device Specific Registers 21
8 Dissolved Oxygen Equations 22
Dissolved Oxygen Concentration 22
Dissolved Oxygen, % Saturation 23
9 Calibration Registers 24

Live Salinity Value 24
Default Salinity Value 24
Live Barometric Pressure 24
Default Barometric Pressure 24
100% Saturation Calibration Values 24
0% Saturation Calibration Values 25
Calibration Slope and Offset 25
Entering Calibration Registers 25
Calibration Calculations 26
10 Service 27
Sensor Health Table 27
11 Appendix A - Communication Device 29
Install and Open the Software 29
Connect the Probe to the Communication Device 29
12 Declaration of Similarity 30

Optical RDO PRO-X Dissolved Oxygen Probe Specifications

Optical RDO PRO-X Dissolved Oxygen Probe	
Sensor Type	Optical (luminescent) dissolved oxygen sensor
RDO PRO-X Probe	Range: 0 to 50 mg/L concentration
	Accuracy: ±0.1 mg/L, 0 to 8 mg/L ±0.2 mg/L, 8 to 20 mg/L ±10% of reading, 20 to 50 mg/L
	Resolution: 0.01 mg/L
	Response time: T90 < 45 sec; T95 < 60 sec @ 25°C
	Storage conditions: -5° to 60° C (23° to 140° F)
RDO-X Sensor Cap	Usage life: 2 years typical
	Storage conditions: 1° to 60° C (33° to 140° F), in factory container
Temperature sensor	Range: 0° to 50° C (32° to 122° F)
	Accuracy: ±0.1° C typical
	Resolution: 0.01° C
Transmitter/local display	Optional, or use with Con TROLL PRO System
Communications options	Modbus/RS485, 4-20 mA, SDI-12
Max. power consumption	50 mA at 12 VDC
Measure current	6 mA typical at 24 VDC
Idle current (no measurement or communication)	160 µA typical at 24 VDC
Maximum cable length	Up to 1,219 m (4,000 ft) (for Modbus and 4-20 mA) or up to 60.96 (200 ft) for SDI-12
Cable options	10 m fixed stripped-and-tinned; Twist-lock connector with user-selectable cable length
Internal mounting thread	1¼ - 11 ½ NPT
IP rating	IP-67 with cap off, IP-68 with cap installed
Compliance	Heavy industrial, IEC 61000-6-2:2005
Salinity compensation	Fixed or real-time capable (using controller)
Barometric pressure	Fixed or real-time capable (using controller)
Maximum pressure	150 psi from 0 to 50° C; 300 psi @ 25° C
Warranty	Probe: 3 years from date of shipment RDO-X Sensor Cap: 2 years in typical applications
Methods	Standard Methods 4500-O; In-Situ Methods 1002-8-2009,1003-8-2009, 1004-8-2009 (EPA approved)

Introduction

The RDO PRO-X Probe is a rugged, reliable instrument designed to deliver accurate dissolved oxygen (DO) data across a wide measurement range and to reduce maintenance costs. The probe features the latest optical technology for DO measurement.

System Description

The RDO PRO-X system consists of the following items.

- Black probe body with removable nose cone
- Optical RDO-X Sensor Cap
- Titanium thermistor

RuggedCable System

- 10-m standard length with stripped-and-tinned ends
- Customized lengths with titanium twist-lock connectors



1	Cable end, stripped-and-tinned
2	Nose cone
3	RDO-X Sensor Cap
4	Thermistor



1	Probe
2	Cable end, twist-lock connector and RuggedCable System

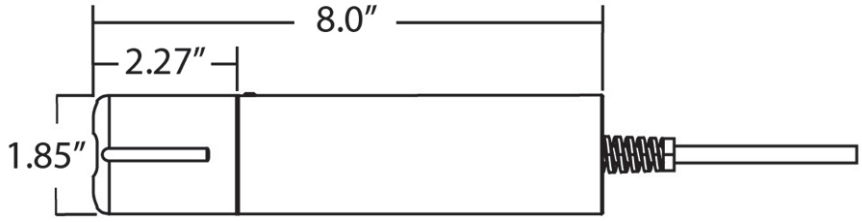

Serial Numbers

The probe serial number is engraved on the side of the unit. The cap serial number is programmed on the memory chip inside the cap.

Unpack the Probe

1. Remove the probe from the box and other packaging materials.
2. Unscrew the nose cone from the probe and remove the red protective dust cap from the sensor. Save the dust cap for later use.



1	Dust cap
2	Nose cone

3. Remove the RDO cap from the storage sleeve.



4. Align the arrow on the cap with the index mark on the probe and firmly press the cap onto the probe, without twisting, until it seals over the probe body.



1	Alignment arrow on cap
2	Cap installed over lens
3	Nose cone

✔ Do not allow moisture or atmospheric humidity inside the cap. Keep the cap in its sealed package until you are ready to install it. Install promptly. Ensure that O-ring grooves are dry and that the O-ring is not rolled or pinched inside the cap.
The typical cap lifetime is two years after the first reading has been taken.

5. Reattach the nose cone.

Calibrate the RDO PRO-X Probe

Calibrate the sensor with the Comm Kit Software and the RDO PRO Communication Device, or calibrate the sensor directly with your controller.

1-Point Calibration

The optical Rugged Dissolved Oxygen sensor is very stable. The factory calibration should produce readings within 3% accuracy. If you require readings with greater accuracy we recommend that you perform a 1-point, 100% water-saturated air calibration as described below.

Water-Saturated Air

1. Remove the storage cap from the top of the calibration chamber and replace it with the vented calibration cap.



1	Storage cap
2	Vented calibration cap

Figure 6.1 Storage cap and vented calibration cap shown together

2. Place the sponge wafer in the bottom of the calibration chamber and saturate with approximately 10 mL water.
3. Gently dry the instrument and sensing material with a paper towel, making sure there is no water or debris on the instrument or on the sensing surface.
4. Place the instrument into the calibration chamber about 2.5 cm (1 in.) above the water-saturated sponge.



Figure 6.2 Calibration chamber with water-saturated sponge

5. Allow 5 to 10 minutes for temperature stabilization prior to starting the calibration procedure. Do not leave the instrument in the calibration chamber for more than 30

minutes. This can allow condensation to form on the sensing material, which will produce false low readings after calibration. If condensation does occur, remove the instrument, dry the sensing material, place the instrument in the chamber, and calibrate.

2-Point Calibration

100% and 0% Saturation

We recommend that you perform the 0 % oxygen calibration only if you intend to measure dissolved oxygen at a concentration of less than 4 mg/L.

1. Set up the calibration procedure as previously described, and perform a water-saturated air calibration.
2. Remove the water-saturated sponge from the calibration chamber and fill the chamber to the fill line with approximately 60 mL of fresh sodium sulfite solution.



1	Fill line
2	Temperature sensor

2. Place the instrument into the solution. Leave at least 13 mm (0.5 in.) between the surface of the sensing material and the bottom of the chamber.
3. Ensure that the temperature sensor is completely submerged in the solution.
4. Allow at least 5 minutes for the temperature to stabilize prior to performing the calibration procedure.
5. Once calibration is complete, remove the sensor, and thoroughly rinse to remove all of the sodium sulfite.

Probe Deployment

The cable end of the RDO PRO-X Probe is internally threaded (1¼ - 11½ NPT) and can be attached to a male threaded pipe. When deployed, make sure that the nose cone and thermistor are completely submerged.

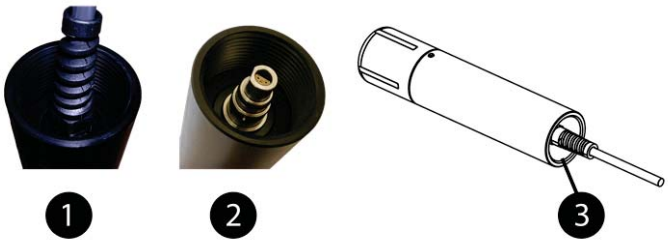

1	10 m cable attached
2	Twist-lock connector
3	1 1/4 NPT threading

Care and Maintenance

Clean the RDO-X Sensor Cap

1. The cap and nose cone must remain on the probe.
2. Rinse the sensor with clean water from a squirt bottle or spray bottle.
3. Gently wipe with a soft-bristled brush or soft cloth if biofouling is present. Use Alconox to remove grease.
4. If extensive fouling or mineral build-up is present, soak the cap end in vinegar for 15 minutes, then soak in deionized (DI) water for 15 minutes.

> ⚠ Do not use organic solvents—they will damage the sensing element. Do not remove the cap from the sensor prior to cleaning.

5. After cleaning, perform a 1- or 2-point user calibration or calibration check.

Clean the Optical Window

1. Clean the optical window only when you change the cap. See full instructions in the sensor cap replacement kit.
2. Remove the cap and gently wipe the lens with the supplied lens cloth.

> ⚠ Do not wet the lens area with water or any solution. Use only the supplied lens cloth for cleaning. Do not use any other cloth or material.

Clean the Probe

With the RDO cap installed on probe, gently scrub the probe with a soft-bristled brush or nylon dish scrubber. Use Alconox to remove grease or other matter. Soak in vinegar and DI water to remove mineral deposits or extensive fouling.

RDO-X Sensor Cap Storage

Prior to installation–Store in factory supplied container.

Installed–Store in the calibration chamber with the storage cap attached and a few drops of clean water.

Replace the RDO-X Sensor Cap

The RDO cap has a 2-year typical life after the sensor takes its first reading. Replacement caps are available from In-Situ Inc. or your authorized In-Situ distributor.

1. Remove the probe nose cone.
2. Use a lint-free cloth to remove any moisture from the probe.

3. Pull the used RDO cap off of the sensor, without twisting.
4. Remove the existing O-rings from the sensor.

> ⚠ Ensure that there is no moisture in the O-ring grooves. Do not touch or clean the lens with anything other than the supplied lens wipe.

5. Use your finger to apply a very light layer of silicone-based lubricant around the O-ring grooves.
6. Place the O-rings on the sensor. Apply another thin layer of lubricant to the O-rings and grooves.

> ✔ Note: Do not transfer grease to the lens or sensor pins.

7. Clean the sensor lens with the wipe provided in the kit and allow it to thoroughly dry. Inspect for scratches or dirt.
8. Remove the new cap from its sealed packaging and attach it to the sensor, being careful to press firmly, without twisting, until it seals over the lens. Make sure that the O-rings are not pinched or rolled between the cap and sensor.
9. Replace the nose cone.
10. Perform a 1- or 2-point calibration.

Maintain Desiccant

Desiccant installed in a controller or transceiver protects probe electronics from condensation. A desiccant pack changes color from blue to pink as it becomes saturated with moisture.

> ⚠ It is extremely important to use the proper size desiccant for your deployment and to change desiccant often. Desiccant should be changed before the entire pack has turned pink, and you should use enough to effectively keep cables and probes dry until your next scheduled maintenance. Desiccant lifespan is dependent on site conditions.

Controller Requirements and Connections

The RDO PRO-X Probe may be connected to a controller or logger for communication via the following options.

- Analog (4-20 mA) provides a configurable 4-20 mA current loop output
- SDI-12
- RS485 Modbus
- RS232 to Modbus

Wiring Overview

Refer to diagrams on the following pages. Trim and insulate unused wires. The shielded wire should be connected to a chassis ground or earth ground.

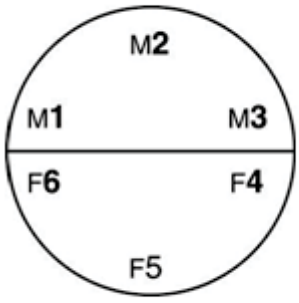

Signal	Color
Ground/Return	Black
External Power	Red
4-20 mA	Brown
RS485 (-)	Green
RS485 (+)	Blue
SDI-12	White

⚠ The inside of the controller must be kept free of moisture and humidity. Condensed moisture can migrate through the wiring and cause the probe to fail. Therefore, desiccant should be installed in the controller and be replaced on a regular basis.

Analog (4-20 mA) 3-wire

Signal	Color
Ground/Return	Black
External Power (12-36 VDC)	Red
4-20 mA	Brown

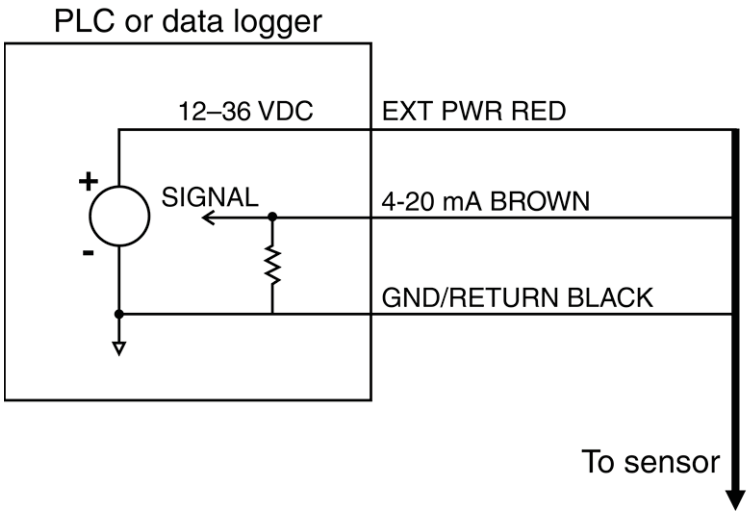

✔ Cable length must not exceed 1219 m (4000 ft.)
Analog signal must be enabled in Win-Situ 5 Software or the Comm Kit Software prior to use.

SDI-12 (3-wire)

Signal	Color
Ground/Return	Black
External Power (9.6-16 VDC)	Red
RS485 (-)	Green
RS485 (+)	Blue
SDI-12	White

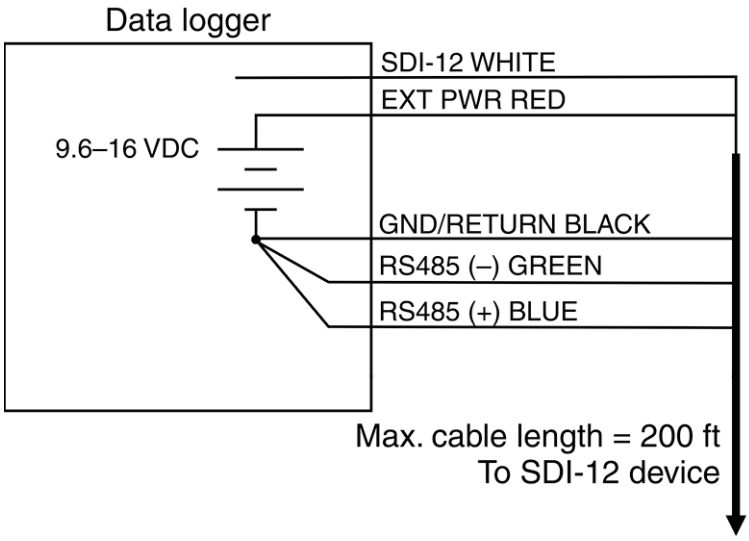

✔ Cable length must not exceed 60.96 m (200 ft.)

Modbus Master with Built-in RS485

Signal	Color
Ground/Return	Black
External Power (12-36 VDC)	Red
RS485 (-)	Green
RS485 (+)	Blue

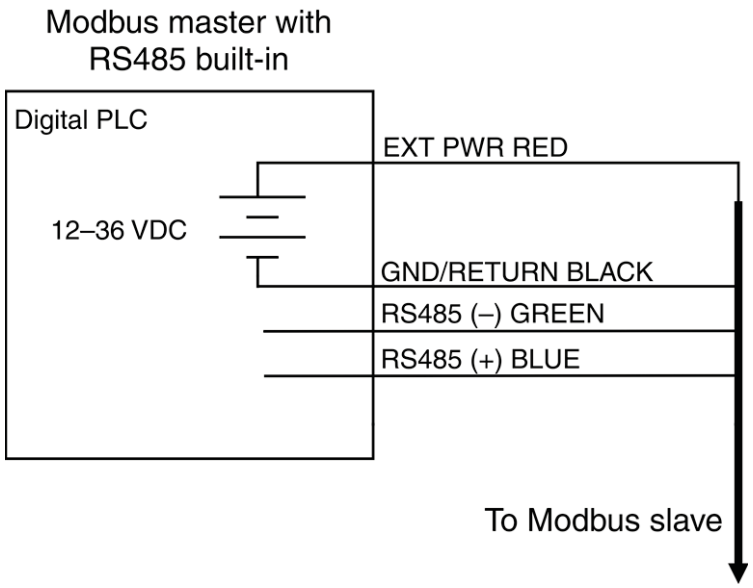

✔ Cable length must not exceed 1219 m (4000 ft.)

Modbus Master with Built-in RS232 (Converter Required)

Signal	Color
Ground/Return	Black
External Power (12 VDC, voltage limited by converter)	Red
RS485 (-)	Green
RS485 (+)	Blue

Modbus master with
RS232 built-in
(converter required)

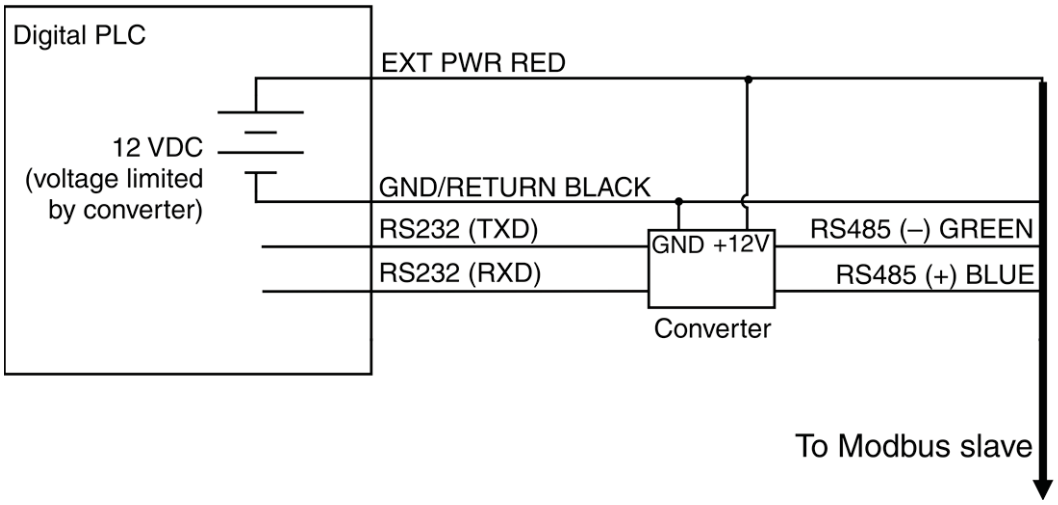

✔ Cable between converter and master must not exceed 60.96 m (20 ft.)
Cable between master and slave must not exceed 1219 m (4000 ft.)

Converter

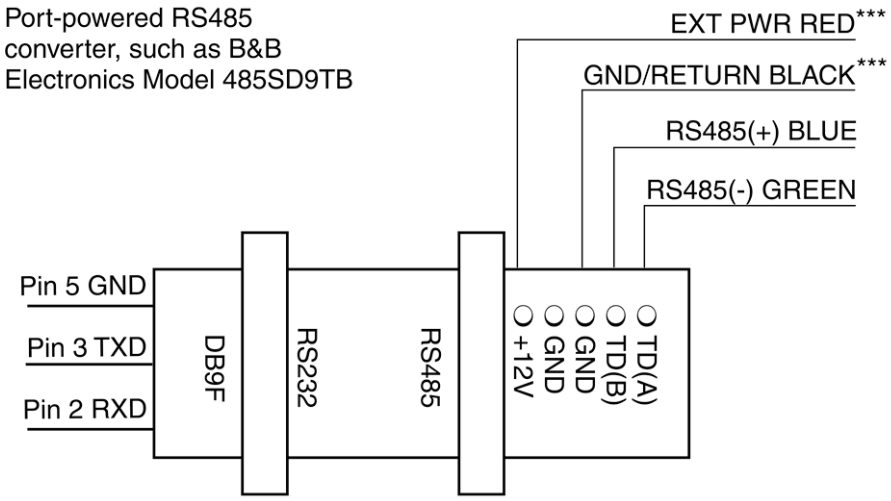

*** Required if port power is not available

Power Connections

The red wire provides power for all system modes. Analog output is disabled by default. However, the 4-20 mA current loop output can be continuous in Modbus or SDI-12 mode as long as Modbus device register 9507 is set to 1.

Communications

The device automatically switches between Modbus and SDI-12 modes depending on which of the two interfaces has activity. Modbus and SDI-12 cannot be used at the same time–whichever one is currently in use will block communication on the other.

Modbus Registers

Common Registers

Register	Size	Mode & Access Level (R/W)	Data Type	Description
9001	1	R/W	ushort	Device ID = 31 for RDO PRO-X
9002	2	R/W	ulong	Device serial number
9004	3	R/W	time	Manufacture date

Sensor Status Registers

Register	Size	Mode & Access Level (R/W)	Data Type	Description
0005	3	R1	time	Cap start date/time 0 = no cap
0008	3	R1	time	Cap end of usable life date/time 0 = no cap

Device Specific Register 0042 Data Quality ID

Register 0042 is responsible for returning the various data quality IDs for the RDO sensor. For a list of the Data Quality IDs and definitions, see the Sensor Health Table in the Service and Troubleshooting section of this manual.

Device Specific Registers

Register	Size	Mode & Access Level (R/W)	Data Type	Description
Dissolved Oxygen Concentration				
0038	2	R1	float	Measured value, C_o
0040	1	R1	ushort	Parameter ID = 20
0041	1	R1/W2	ushort	Units ID 117 = mg/L (default) 118 = ug/L
0042	1	R1	ushort	Data quality ID (See the Sensor Health Table)
0043	2	R1/W3	float	Offline sentinel value (default = 0.0)
0045	1	R1	16 bits	Available units = 0x0030 (48)
Temperature				
0046	2	R1	float	Measured value
0048	1	R1	ushort	Parameter ID = 1
0049	1	R1/W2	ushort	Units ID 1= °C (default) 2= °F
0050	1	R1	ushort	Data quality ID
0051	2	R1/W3	float	Offline sentinel value (default = 0.0)
0053	1	R1	16 bits	Available units = 0x00030 (3)
Dissolved Oxygen % Saturation				
0054	2	R1	float	Measured value
0056	1	R1/W2	ushort	Parameter ID = 21
0057	1	R1/W2	ushort	Units ID 177 = percent saturation (default)
0058	1	R1	ushort	Data quality ID
0059	2	R1/W3	float	Offline sentinel value (default = 0.0)
0061	1	R1	16 bits	Available units = 0x0001 (1)
Oxygen Partial Pressure				
0062	2	R1	float	Measured value
0064	1	R1	ushort	Parameter ID = 2 (pressure)
0065	1	R1/W2	ushort	Units ID 26 = torr (default)
0066	1	R1	ushort	Data quality ID
0067	2	R1/W3	float	Offline sentinel value (default = 0.0)
0069	1	R1	16 bits	Available Units = 0x0200 (512)

Dissolved Oxygen Equations

Dissolved Oxygen Concentration

DO concentration is internally calculated in mg/L. Conversion to other units is as follows:

$\mu g/L = 1000 * mg/L$

Oxygen concentration C_o (mg/L) is calculated as:

$$C_o = 31.9988 \times 1E6 \times (\rho P_o / k_o M)\,(1 - \Theta_o) \times S_c$$

Where:

P_o is the partial pressure of O_2 in atmospheres.

$$P_{torr} = 759.999876 \times P_{atm}$$

S_c is the salinity correction:

$$\ln S_c = S(B_0 + B_1 T_s + B_2 T_s^2 + B_3 T_s^3) + C_0 S^2$$

$B_0 = -6.246090 \times 10^{-3}$

$B_1 = -7.423444 \times 10^{-3}$

$B_2 = -1.048635 \times 10^{-2}$

$B_3 = -7.987907 \times 10^{-3}$

$C_0 = -4.679983 \times 10^{-7}$

T_s is the scaled temperature:

$$T_s = \ln[(298.15 - t) / (273.15 + t)]$$

t is temperature in degrees C.

S is the salinity in PSU.

k_o is Henry's constant:

$$\ln k_o = 3.71814 + (5596.17/T) - (1{,}049{,}668/T^2)$$

T is temperature in Kelvin.

Θ_o is the negative of the second pressure coefficient:

$$\Theta_o = 0.000975 - (1.426 \times 10^{-5} t) + (6.436 \times 10^{-8} t^2)$$

t is temperature in degrees C.

ρ is the density of water in g/cm^3:

$$\ln \rho = -0.589581 + (326.785/T) - (45{,}284.1/T^2)$$

T is the temperature in Kelvin.

Molar mass of water: M = 18.0152 g/mole

References:

Benson and Krause. Jr.. 1980. The concentration and isotopic fractionation of gases dissolved in freshwater in equilibrium with the atmosphere. *Limnol, Oceanogr*, 25(4), 662-671.

Gordon and Garcia. 1992. Oxygen Solubility in Seawater: Better Fitting Equations. *Limnol, Oceaongr*, 37(6), 1307-1312.

Dissolved Oxygen, % Saturation

$O_2\%Sat = O_2Reading / O_2100\%Sat$

Where:

O_2 reading is the mg/L reading from the RDO Sensor.

O_2 100% Sat is the theoretical saturation value in mg/L and is derived as:

$$O_2100\%Sat = 31.9988 \times 10^6 \times \frac{\rho\,[0.20946 \times (P - P_{wv})] \times (1 - \Theta_o P) \times S_c}{k_o M}$$

Where:

ρ is the density of water in g/cm^3:

$$\ln \rho = -0.589581 + (326.785/T) - (45{,}284.1/T^2)$$

T is the temperature in Kelvin.

P is the atmospheric pressure in atm.

P_{wv} is the partial pressure of water vapor at saturation in atm:

$$\ln P_{wv} = 11.8571 - (3{,}840.70/T) - (216{,}961/T^2)$$

k_o is Henry's constant:

$$\ln k_o = 3.71814 + (5596.17/T) - (1{,}049{,}668/T^2)$$

T is the temperature in Kelvin.

Molar mass of water: M = 18.0152 g/mole

Θ_o is the negative of the second pressure coefficient:

$$\Theta_o = 0.000975 - (1.426 \times 10^{-5} t) + (6.436 \times 10^{-8} t^2)$$

t is temperature in degrees C.

S_c is the salinity correction:

$$\ln S_c = S(B_0 + B_1 T_s + B_2 T_s^2 + B_3 T_s^3) + C_0 S^2$$

$$B_0 = -6.246090 \times 10^{-3}$$

$$B_1 = -7.423444 \times 10^{-3}$$

$$B_2 = -1.048635 \times 10^{-2}$$

$$B_3 = -7.987907 \times 10^{-3}$$

$$C_0 = -4.679983 \times 10^{-7}$$

T_s is the scaled temperature:

$$T_s = \ln [(298.15 - t) / (273.15 + t)]$$

Where t is temperature in °C

S is the salinity in PSU

References:

Benson and Krause. Jr.. 1980. The concentration and isotopic fractionation of gases dissolved in freshwater in equilibrium with the atmosphere. *Limnol, Oceanogr*, 25(4), 662-671.

Calibration Registers

Register	Size	Mode & Access Level (R/W)	Data Type	Description
0118	2	R1/W3	float	Live salinity value (PSU)
0120	2	R1/W3	float	Default salinity value (PSU, default = 0.0)
0122	2	R1/W3	float	Live barometric pressure (mbar)
0124	2	R1/W3	float	Default barometric pressure (mbar, default = 1013.25)
0126	2	R1/W3	float	100% saturation calibration reading (mg/L)
0128	2	R1/W3	float	100% saturation temperature reading (°C)
0130	2	R1/W3	float	100% saturation salinity value (PSU)
0132	2	R1/W3	float	100% saturation barometric pressure (mbar)
0134	2	R1/W3	float	0% saturation calibration reading (mg/L)
0136	2	R1/W3	float	0% saturation temperature reading (°C)
0138	2	R1/W3	float	Calibration slope (default = 1.0)
0140	2	R1/W3	float	Calibration offset (default = 0.0)

Live Salinity Value

The live salinity value is used to correct the oxygen concentration value for salinity. Values must be written in Practical Salinity Units (PSU) in the range 0 to 42 PSU. This is not a measured parameter.

Default Salinity Value

The default salinity value is loaded into the live salinity value register when power is first applied to the probe. The default salinity value is used in calculations until a live salinity value is written. This is not a measured parameter.

Live Barometric Pressure

The live barometric pressure is used in the calculation of percent saturation and to determine the theoretical saturation point during calibration. Values must be written in millibars in the range 506.625 to 1114.675 mbar. This is not a measured parameter.

Default Barometric Pressure

The default barometric pressure is loaded into the live barometric pressure register when power is applied to the probe. The default barometric pressure is used in calculations until a live barometric pressure is written. This is not a measured parameter.

100% Saturation Calibration Values

These values represent the sensor conditions while the probe is in a 100% saturation calibration environment. These are not measured values, they are written by the controller during the calibration process.

Writes to these registers are only accepted if the probe is in the calibration mode. The probe will return exception 0x85 (invalid device command sequence) if an attempt is made to write these registers when the calibration mode is off.

0% Saturation Calibration Values

These values represent the sensor conditions while the probe is in a 0% saturation calibration environment. These are not measured values, they are written by the controller during the calibration process.

Writes to these registers are only accepted if the probe is in the calibration mode. The probe will return exception 0x85 (invalid device command sequence) if an attempt is made to write these registers when the calibration mode is off.

Calibration Slope and Offset

These values represent the slope and offset that will be applied to the raw concentration reading from the sensor to generate the final values reported by the sensor parameters. These registers may be written independently of the normal internal calibration procedure.

Entering Calibration Registers

The sensor is calibrated using the following procedure.

1. Optional: Read the Sensor Data Cache Timeout register 9463 and store the value.
2. Write the Sensor Data Cache Timeout register 9463 to a value less than your intended sample rate and greater than 1000 milliseconds. This will ensure that you get new sensor readings during the stabilization process.
3. Optional: Read the temperature units register 0049 and saturation units register 0041 and store their values.
4. Write the temperature units register 0049 to its default value (1) and write the saturation units register 0041 to its default value (117).
5. Write the Calibration Mode On command (0xE000) to the sensor command register 9305.
6. Update the live salinity and barometric pressure registers if necessary.
7. Prompt the user to place the probe in a 100% saturation environment.
8. Read the oxygen concentration and temperature parameters. When these values have reached equilibrium, record them in their respective 100% saturation calibration registers. Write the current live salinity and barometric pressure readings to their respective calibration registers.
9. Place the sensor in a 0% saturation environment. When these registers have reached equilibrium, record them in their respective 0% saturation calibration registers. If a zero calibration is not to be performed, these registers can be set to zero or left at their previous values.

10. Write the Calibration Update command (0xE001) to the sensor command register. The sensor will calculate a new slope and offset, write the current time to the last user calibration time register, and set the next user calibration time register to zero (disabled). If the concentrations at 100% and 0% saturation are equal, the probe will return an exception response with code 0x97 (invalid calibration) and not attempt to compute a new slope and offset due to possible division by zero. If the slope does not calculate between 0.85 and 1.20 inclusive, or if the offset does not calculate between -0.2 and +0.2 inclusive, then the probe will return an exception response with code 0x97 (invalid calibration).The slope and offset will be available for read but will not be committed to flash.
11. Optional: Read the last user calibration time register, add the next calibration interval, and write the result to the next user calibration time register.
12. Write the Calibration Mode Off command (0xE002) to the sensor command register to place the sensor in normal operation. If the calibration mode is turned off without a calibration update command, or the calibration command returned an exception, the previous calibration shall be restored.
13. Optional: If you saved the temperature and saturation parameter units at the start of the process, write the original values back.
14. Optional: If you saved the Sensor Data Cache Timeout register 9463 at the start of the process, write the original value back.

Calibration Calculations

Calibrated oxygen reading:

$$O_{2RC} = c_o + c_1 \times O_{2RU}$$

Where:

$$c1 = (O_2100\%Sat)/(O_{2RUS} - O_{2RUZ})$$

$$c_o = -c_1 \times O_{2RUZ}$$

Where:

$O_2100\%Sat$ is the theoretical 100% saturation point

O_{2RUS} is the un-calibrated reading at 100% saturation

O_{2RUZ} is the un-calibrated reading at 0% saturation

References:

Standard Methods for the Examination of Water and Wastewater. 20th Ed. 2008. 4500-0 C. Azide Modification. American Public Health Association, USA.

Service

The RDO PRO-X Probe contains no user-serviceable parts. Do not attempt to open the probe case or service the unit yourself.

RDO-X Software Troubleshooting

✔ Sensor health diagnostics indicate when the RDO sensor has been damaged in the field. If the sensor has sustained moderate damage, the probe provides a DO value that includes a (DIS or Data Quality ID 5) warning. The same warning is included with readings taken after the sensor has reached its 24-month recommended lifespan.

However, if the sensor has been severely damaged, an error message is shown (ERR or Data Quality ID 3), a DO value is not provided and the sentinel value is shown. This prevents you from receiving an erroneous reading.

Sensor Health Table

The following error messages appear in the software and the data file when a sensor issue has been detected.

Abbreviation	Data Quality ID	Text	Description
None	0	None	Normal Data Quality
UC	1	User Cal Expired	Parameter measured without errors using an expired user calibration.
FC	2	Factory Cal Expired	Parameter measured without errors using an expired factory calibration.
ERR	3	Unknown Error	Parameter measured with error, sentinel value supplied.
WU	4	Sensor Warm-up	Sensor is warming up, sentinel value supplied.
DIS	5	Sensor Warning	Parameter measured but does not meet normal quality criteria. The sensor has sustained moderate damage, or the recommended lifespan has been reached.

Abbreviation	Data Quality ID	Text	Description
CAL	6	Sensor Calibrating	Sensor is calibrating, calibration value supplied.
OL	7	Sensor Missing	Sensor communication failed, sentinel value supplied. Make sure the sensor cap is installed and properly seated.

Appendix A - Communication Device

The Communication Device is an accessory product that can be used to calibrate and set up RDO probes.

Install and Open the Software

The Comm Kit Software must be installed on a computer before you connect to the probe.

Connect the Probe to the Communication Device

The Communication Device connects a stripped-and-tinned probe to a computer via USB connection.

1. Disconnect the instrument from the PLC.
2. The communication device includes an electrical connection diagram label. To attach the instrument to the communication device, depress a lever and insert the appropriate wire in the location specified by the diagram.
3. Attach the USB connector to a USB port on the computer. Follow the directions provided in the Communication Device Kit to set up the probe.

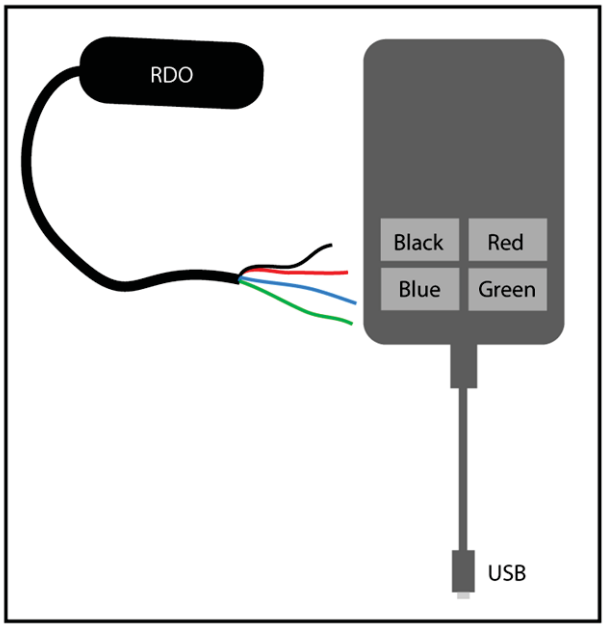

Declaration of Similarity

Equipment

Type of equipment: Measurement instrumentation
Product name: RDO PRO-X Optical Dissolved Oxygen Probe
Model: RDO PRO-X Dissolved Oxygen Probe

Manufacturer: In-Situ, Inc.
221 East Lincoln Avenue
Fort Collins, CO 80524
USA

Category Standards

- **Immunity**
  EN 61000-6-2, Electromagnetic Compatibility (EMC) – part 6-2: Generic standards – Immunity for industrial environments
- **Emissions**
  Class A requirements of CISPR 11: 2004, Specification for limits and methods of measurement of radio disturbance characteristics of industrial, scientific and medical (ISM) radio-frequency equipment

Supplementary Information:
The device complies with the requirements of the EU Directive 73/23/EEC, and the CE mark is affixed accordingly.

Summary

We confirm that the equipment referenced above, without reasonable doubt, will fulfill the requirements concerning electromagnetic compatibility according to the above mentioned standards harmonized with the 2004/108/EC for Electromagnetic Compatibility (EMC) Directive—part 6-2. The RDO PRO Optical Dissolved Oxygen Sensor was tested and found to be in compliance in the month of October 2008.

Date of Issue: October 7, 2013

Signature: 

Name: Ben Kimbell
Title: Vice President of Research and Development

Test Report reference: 3161946DEN-003

F-7961 - Fan, Building, 12", 1/4hp, 1750rpm, 120V, 1ph, TEAOCSA Approved, S12-E1

CANARM®

Standard Exhaust Fans

Instruction Manual

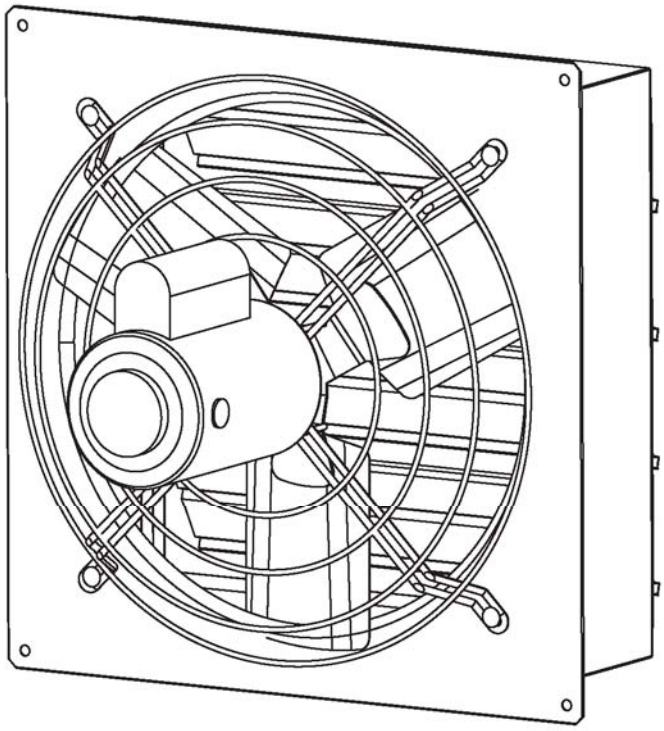

WARRANTY

CANARM Ltd. warrants every new fan to be free of defects in material and workmanship, to the extent that, within a period of one year from the date of purchase CANARM Ltd. shall either repair or replace at CANARM's option, any unit or part thereof, returned freight prepaid, and found to be defective.
This warranty does not include any labour or transportation costs incidental to the removal and reinstallation of the unit at the user's premises.
Components repaired or replaced are warranted through the remainder of the original warranty period only.
This warranty applies to the original purchaser-user only; it is null and void in case of alteration, accident, abuse, neglect, and operation not in accordance with instructions.

NOTICE: No warranty claims will be honored by CANARM Ltd. unless prior authorization is obtained.

Installation or Product problems? Do not return to store of purchase.
Contact Canarm Service at 1-800-265-1833 (CANADA) 1-800-267-4427 (U.S.A.)
1-800-567-2513 (EN FRANCAIS) Monday to Friday 8:00 - 5:00pm e.s.t.

CANARM®

Instruction Manual for Standard Exhaust Fans

Read Instructions Completely Before Installation & Save For Reference

Congratulations on the purchase of your quality built direct drive, wall exhaust ventilation fan. All of these models use totally enclosed ball bearing motors with thermal over load protection. Variable speed motors are high efficiency motors which save on electrical costs and can be run as a single speed motor. The motors are mounted on heavy gauge welded steel rod motor mounts that have a powder coated finish. Fans come fully assembled and 100% of fans are tested for proper operation before shipping.

Standard Fans:

These models have a rugged, welded steel box housing with a powder coated finish and aluminum or plastic exhaust louvers that are supported by long life nylon bushings. The louvers open automatically when the fan starts up and close when the fan stops.

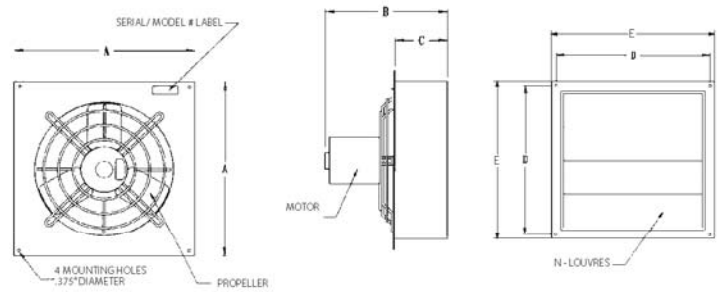

Fan Dimensions							
Fan Size	A	B	C	D	E	N	Framing
8"	13-1/4"	10"	4"	12"	10-3/4"	2	11x11
10"	15-1/4"	10"	4"	14"	12-3/4"	2	13x13
12"	17-1/4"	14"	6"	16"	14-3/4"	3	15x15
14"	19-1/4"	14"	6"	18"	16-3/4"	3	17x17
16"	21-1/4"	14"	6"	20"	18-3/4"	4	19x19
18"	23-1/4"	15"	6"	22"	20-3/4"	4	21x21
20"	25-1/4"	16"	6"	24"	22-3/4"	5	23x23
24"	29-1/4"	16"	6"	28"	26-3/4"	5	27x27
30"	35-1/4"	19"	6"	34"	32-3/4"	8	33x33
36"	41-1/4"	16"	6"	40"	38-3/4"	10	39x39

Explosion Proof Fans:

Explosion proof fans are equipped with explosion proof motors and aluminum blades so sparks cannot occur if a metal object obstructs the blade path. Explosion proof fans have the same quality welded steel box housing and heavy gauge welded guard as the standard fans. These fans should be used to ventilate hazardous areas. Locations are considered hazardous if the atmosphere contains or may contain gas, vapor, or dust in explosive quantities.

The motor ambient temperature is not to exceed +40ºC or -25ºC unless the motor nameplate specifically permits another value. Canarm explosion proof fans are approved for the hazardous classifications below only.

Class 1, Division 1 (Gases, Vapors)

~~Group A~~	Acetylene
~~Group B~~	Butadiene, ethylene oxide, hydrogen, Propylene oxide
Group C	Acetaldehyde, cyclopropane, diethlether, Ethylene, isoprene
Group D	Acetone, acrylonitrile, ammonia, benzene, Butane, ethylene dichloride, gasoline, hexane, methane, methanol, naphtha, propane, propylene styrene, toluene, vinyl, acetate, vinyl chloride, xylene

Class 2, Division 1 (Combustible Dusts)

~~Group E~~	Aluminum, magnesium and other metal dusts with similar characteristics
Group F	Carbon black, coke or coal dust
Group G	Flour, starch or graindust

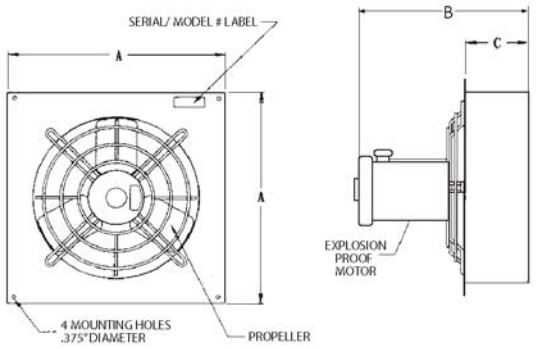

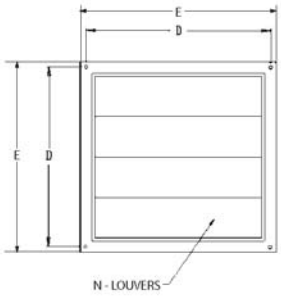

Fan Dimensions							
Fan Size	A	B	C	D	E	N	Framing
12"	17-1/4"	20-1/2"	6"	16"	14-3/4"	3	15x15
18"	23-1/4"	20-1/2"	6"	22"	20-3/4"	4	21x21
24"	29-1/4"	20-1/2"	6"	28"	26-3/4"	5	27x27

INSTALLATION

Installation is fast and simple. A sturdy framed wall opening should be prepared in advance to the size indicated for your fan in the charts above. With lag bolts for wooden frames or nut, bolt and lock washers for steel frames, secure the fan using the four mounting holes provided, one in each corner of the fan.

ELECTRICAL CONNECTIONS



WARNING: BE SURE POWER IS OFF AT THE ELECTRICAL PANEL BEFORE WIRING.

WARNING: ALL ELECTRICAL WORK SHOULD BE PERFORMED BY A QUALIFIED ELECTRICIAN.

These fans are supplied with single, two or variable speed motors. Single and two speed motors are 120V only. Variable speed motors are dual voltage. All dual voltage motors are pre-wired at 240V in our factory. Rewire motor as per motor nameplate if running fan at 120V. Please see the motor nameplate for wiring diagram. Make electrical connections in motor connection box as per the motor nameplate. Follow ***Chart #1*** for wire sizes. Two speed fans require a two speed control or 3 position toggle switch to change from high/ low/off. See wiring diagram with control for 2 speed wiring instructions.

CHART# 1

Table A Minimum Wire Sizes for Three-Phase Motors

Motor	25 to 50 Feet			100 Feet			150 to 200 Feet		
HP	200V	230V	460V	200V	230V	460V	200V	230V	460V
1/8	14(18)*	14(18)*	14(18)*	14(18)*	14(18)*	14(18)*	14(16)*	14(16)*	14(18)*
1/6	14(18)*	14(18)*	14(18)*	14(18)*	14(18)*	14(18)*	14	14(16)*	14(18)*
1/4	14(18)*	14(18)*	14(18)*	14(16)*	14(18)*	14(18)*	14	14	14(18)*
1/3	14(18)*	14(18)*	14(18)*	14(16)*	14(16)*	14(18)*	12	14	14(18)*
1/2	14(16)*	14(18)*	14(18)*	12	14(16)*	14(18)*	10	12	14(18)*
3/4	14(16)*	14(16)*	14(18)*	12	14	14(18)*	10	10	14(16)*
1	14	14(16)*	14(18)*	12	12	14(18)*	8	10	14(16)*
1-1/2	12	14	14(18)*	10	10	14(16)*	6	8	14
2	12	12	14(18)*	8	10	14(16)*	6	6	12
3	10	12	14(18)*	6	8	14	4	6	12

Table B Minimum Wire Sizes for Single-Phase Motors

Motor	25 Feet			100 Feet			150 to 200 Feet		
HP	200V	230V	460V	200V	230V	460V	200V	230V	460V
1/8	14(18)*	14(18)*	14	14(18)*	12	14(18)*	10	8	14
1/6	14(16)*	14(18)*	12	14(18)*	10	14(16)*	6	6	12
1/4	14	14(18)*	10	14(16)*	8	14	6	4	10
1/3	14	14(18)*	10	14(16)*	8	14	6	4	10
1/2	12	14(18)*	8	14	6	12	4	3	8
3/4	10	14(16)*	6	12	4	10	2	1	6
1	10	14(16)*	6	12	4	10	2	1	6
1-1/2	8	14	6	12	3	8	1	1/0	6
2	8	14	4	10	2	8	1/0	2/0	4
3	6	12	3	8	1/0	6	2/0	4/0	3

NOTE:
- NEC Article 310-5 - * Minimum conductor size for general wiring at 115-440VAC is number 14AWG.
- Above wire sizes based on approximate 5% voltage drop during starting; copper conductors; and 75ºC type THHW, THW, THWN, RH, RHW insulation etc. For aluminum wire, increase two wire size steps minimum. See NEC Article 310 for ampacities af aluminum conductors.
- Type S, SO, SJ, SJO, etc flexible cable wire sizes. See NEC Article 400 for ampacity.

OPERATION

WARNING: VARIABLE SPEED FANS SHOULD HAVE THE MINIMUM SPEED SET TO OPEN LOUVERS AT LEAST ONE INCH FOR PROPER MOTOR COOLING AND TO PREVENT MOTOR FAILURE.
All fans are direct drive. Fans with variable speed motors can be operated as an energy efficient single speed fan or in variable operation with the proper controller. As mentioned above two speed fans require a two speed control or 3 position toggle switch to change from high speed to low and off.



WARNING: GUARDING SHOULD BE USED IF FANS ARE MOUNTED LOWER THAN SEVEN FEET (2 METRES) OFF FLOOR OR GROUND LEVEL.

ACCESSORIES
Canarm provides a complete line of manual and thermostatic controls. Canarm also offers wall mount exhaust shutter kits, replacement shutter sets, and weather protection hoods.

MAINTENANCE
Motors are equipped with automatic overload protection and may restart without warning. Always disconnect from power before attempting service. Motor, blade and louvers should be kept clean of any buildup to prevent premature motor failure and to achieve proper performance. Automatic louvers should be kept operating freely. As with all mechanical equipment scheduled inspections should include checking that all hardware is secure and blade set screws are tight.

WARRANTY

CANARM Ltd. warrants every new fan to be free of defects in material and workmanship, to the extent that, within a period of one year from the date of purchase CANARM Ltd. shall either repair or replace at CANARM's option, any unit or part thereof, returned freight prepaid, and found to be defective.
This warranty does not include any labour or transportation costs incidental to the removal and reinstallation of the unit at the user's premises.
Components repaired or replaced are warranted through the remainder of the original warranty period only.
This warranty applies to the original purchaser-user only; it is null and void in case of alteration, accident, abuse, neglect, and operation not in accordance with instructions.

NOTICE: No warranty claims will be honored by CANARM Ltd. unless prior authorization is obtained.

CANARM®

CANARM LTD.
2157 PARKEDALE AVENUE
BROCKVILLE, ONTARIO K6V 5V6
TELEPHONE: (613) 342-5424
FAX: 1-800-263-4598
E-MAIL: agsales@canarm.ca

CANARM LTEE.
8500 RUE GRENACHE
ANJOU, QUEBEC H1J 2B1
TELEPHONE: (514) 353-2255
FAX: (514) 353-2522
E-MAIL: agsales@canarm.ca

CANARM®

Ventilateurs d'évacuation Standard

Manuel de l'usager

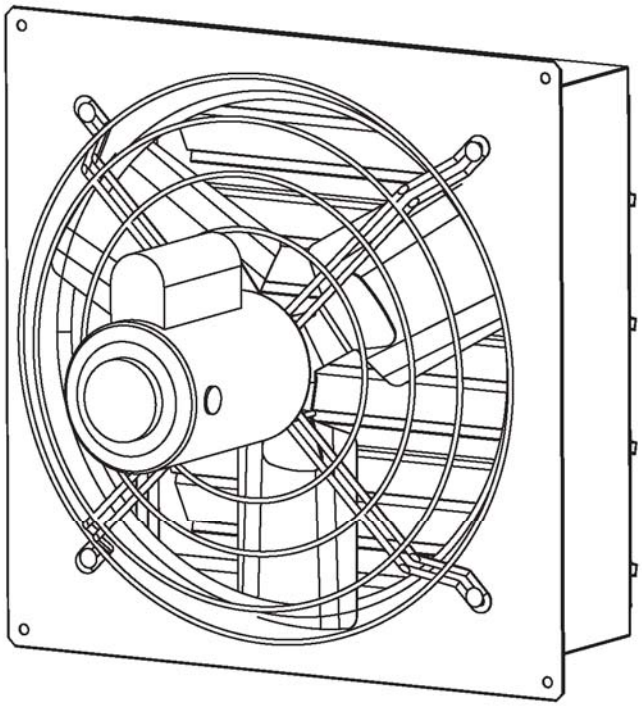

GARANTIE

Canarm Ltée. garantie que chaque nouveau ventilateur ne comporte aucune défectuosité dans le matèriel et la main-d'oeuvre, et de ce fait, Canarm Ltée. remplacera ou réparera à son choix, tout unité ou partie de cette unité qui comporte une defectuosité, pour une période de un an suivant la date d'achat. L'unité doit être retournée frais de port payé et une défectuosité doit être décelée. Cette garantie ne couvre pas les frais de démontage et de réinstallation de l'unité sur les lieux de l'usager.
Les éléments réparés ou remplacés sont garanties pour la durée de la garantie originale seulement. Cette garantie s'applique à l'acheteur-usage initial seulement, elle est nulle dans le cas d'altérations, d'accident, d'abus, de négligence ou si l'opération n'est pas conforme aux instructions.

N.B.: Aucune réclamation ne sera honorée par Canarm Ltée. à moins d'autorisation obtenue au préalable.

Problèmes d'installation ou d'utilisation? Ne retournez pas au magasin. Communiquez avec le service à la clientèle chez Canarm au 1-800-265-1833 (Canada) 1-800-267-4427 (USA) 1-800-567-2513 (en français) du lundi au vendredi entre 8:00h et 17:00h HNE

Mode d'emploi du Ventilateur d'évacuation Standard

Veuillez lire les instructions suivantes avant de procéder à l'installation et gardez ce manuel comme référence

Félicitations sur l'achat de votre ventilateur d'évacuation mural à entraînement direct de qualité. Tous ces modéles comportent un moteur fermé à roulements sur bille avec une protection thermique contre la surcharge. Les moteurs à vitesse variable sont hautement efficaces et consomment peu d'énergie et de plus, ils peuvent être opérés comme un moteur à vitesse simple.
Les moteurs sont soutenus par une monture de moteur trés robuste en tiges d'acier soudées de haut calibreet sont revĺtues d'un fini poudré. Les ventilateurs vous sont livrés tout assemblé et 100% de nos ventilateurs sont testés avant la livraison.

VENTILATEUR STANDARD:

Ces modéles portent un boîtier robuste en acier soudé avec un fini poudré ainsi que des volets en aluminium ou en plastique qui sont retenus par des douilles en nylon de longue durée. Les volets s'ouvrent automatiquement lorsque le ventilateur démarre et se ferment lorsqu'il s'arrête.

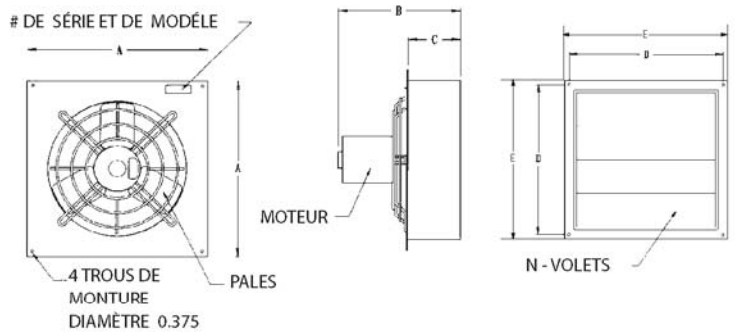

Dimensions du Ventilateur							
Ventilateur	A	B	C	D	E	N	Encadrement
8"	13-1/4"	10"	4"	12"	10-3/4"	2	11x11
10"	15-1/4"	10"	4"	14"	12-3/4"	2	13x13
12"	17-1/4"	14"	6"	16"	14-3/4"	3	15x15
14"	19-1/4"	14"	6"	18"	16-3/4"	3	17x17
16"	21-1/4"	14"	6"	20"	18-3/4"	4	19x19
18"	23-1/4"	15"	6"	22"	20-3/4"	4	21x21
20"	25-1/4"	16"	6"	24"	22-3/4"	5	23x23
24"	29-1/4"	16"	6"	28"	26-3/4"	5	27x27
30"	35-1/4"	19"	6"	34"	32-3/4"	8	33x33
36"	41-1/4"	16"	6"	40"	38-3/4"	10	39x39

VENTILATEUR ANTI-EXPLOSIF:

Les ventilateurs anti-explosifs sont munis de moteurs et de pales qui sont contre les explosions afin qu'une étincelle ne puisse pas se produire si un objet en métal obstruerait le mouvement de la pale. Les ventilateurs anti-explosifs sont fabriqués du même boîtier en acier robuste et de qualité et du même grillage à haut calibre que les ventilateurs Standard. Ces ventilateurs devront être utilisés pour ventilé les endroits hasardeux. L'endroit est considéré hasardeux si l'atmosphére contient ou peut contenir un gaz, une vapeur, ou de la poussiére en quantité explosive.

La température ambiante du moteur ne devrait pas excéder +40ºC ou -25ºC à moins que la plaque sur le moteur indique spécifiquement une autre valeur. Les ventilateurs anti-explosifs Canarm sont approuvés pour les classes hasardeuse ci-dessou seulement.

Classe 1, Division 1 (Gas et vapeurs)

~~Groupe~~ A	Aceetylène
~~Groupe~~ B	Butadiène, oxyde d'éthylène, hydrogène, oxyde de propylène
Groupe C	Acétaldéhyde, cyclopropane, diéthléther, éthylène, isoprène
Groupe D	Acétone, acrylonitrile, ammoniac, benzène, butane, éthylène dichloride, gazoline, hexane, méthane, méthanol, naphtha,propane, propylène styrène, toluène, vinyle, acétate, vinyle chloride, xylène

Classe 2, Division 1 (Poussières Combustibles)

~~Groupe~~ E	Aluminium, magnésium, et autres poussières de métal avec des caracteristiques similaires.
Groupe F	Carbon noir, coke ou poussière de charbon
Groupe G	Farine, amidon ou poussière de grain

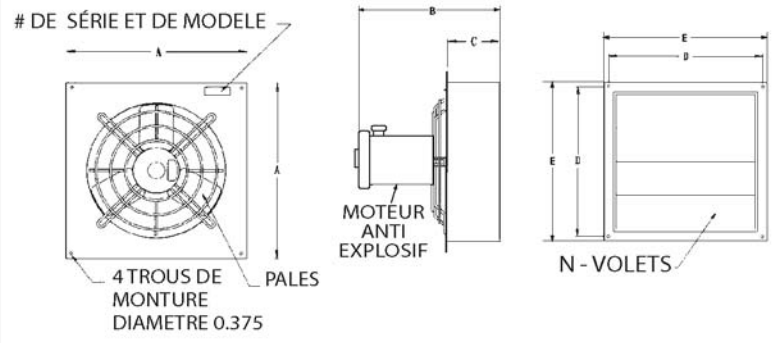

Dimensions du Ventilateur							
Ventilateur	A	B	C	D	E	N	Encadrement
12"	17-1/4"	20-1/2"	6"	16"	14-3/4"	3	15x15
18"	23-1/4"	20-1/2"	6"	22"	20-3/4"	4	21x21
24"	29-1/4"	20-1/2"	6"	28"	26-3/4"	5	27x27

INSTALLATION

L'installation est simple et rapide. Un encadrement robuste dans l'ouverture du mur devrait être préparé à l'avance aux grandeurs mentionnes pour votre ventilateur dans le tableau ci-dessus. A l'aide de boulons pour cadrage de bois ou d'écrous, boulons et rondelles de blocage pour cadrage de métal, posez le ventilateur à l'aide des quatres trous de montage fournies, un dans chacun des coins.

CONNEXIONS ÉLECTRIQUES



MISE EN GARDE: FERMEZ LE COURANT AU DISJONCTEUR AVANT PROCÉDER AUX RACCORDEMENTS.

MISE EN GARDE: TOUS LES TRAVAUX ÉLECTRIQUES DEVRONT ÊTRE EXÉCUTÉS PAR UN ÉLECTRICIEN QUALIFIÉ.
Ces ventilateurs portent un moteur à une, deux ou vitesse variable. Les moteurs à une ou deux vitesses peuvent recevoir du 120V seulement. Les moteurs à vitesse variable sont à voltage double. Tous les moteurs à voltage double sont préparés en usine pour recevoir du 240V. Suivez les indications sur la plaque du moteur pour rebrancher le moteur sur le 120V. Faîtes les connexions dans la boîte de connexion du moteur selon les indications sur la plaque du moteur. Consultez le ***Tableau #1*** pour la grandeur de fil à être utilisé. Les ventilateurs à deux vitesses demandent un contrôle à 2 vitesses ou un interrupteur à levier 3 postions pour changer la vitesse de grande/petite/fermé. Consultez le diagramme fournie avec le contrôle pour l'installation à 2 vitesses.

TABLEAU #1

Tableau A Grosseur minium de fil pour moteur à trois phases

Moteur	25 à 50 Pieds			100 Pieds			150 à 200 Pieds		
HP	200V	230V	460V	200V	230V	460V	200V	230V	460V
1/8	14(18)*	14(18)*	14(18)*	14(18)*	14(18)*	14(18)*	14(16)*	14(16)*	14(18)*
1/6	14(18)*	14(18)*	14(18)*	14(18)*	14(18)*	14(18)*	14	14(16)*	14(18)*
1/4	14(18)*	14(18)*	14(18)*	14(16)*	14(18)*	14(18)*	14	14	14(18)*
1/3	14(18)*	14(18)*	14(18)*	14(16)*	14(16)*	14(18)*	12	14	14(18)*
1/2	14(16)*	14(18)*	14(18)*	12	14(16)*	14(18)*	10	12	14(18)*
3/4	14(16)*	14(16)*	14(18)*	12	14	14(18)*	10	10	14(16)*
1	14	14(16)*	14(18)*	12	12	14(18)*	8	10	14(16)*
1-1/2	12	14	14(18)*	10	10	14(16)*	6	8	14
2	12	12	14(18)*	8	10	14(16)*	6	6	12
3	10	12	14(18)*	6	8	14	4	6	12

Tableau B Grosseur minium de fil pour moteur à phase simple

Moteur	25 à 50 Pieds			100 Pieds			150 à 200 Pieds		
HP	200V	230V	460V	200V	230V	460V	200V	230V	460V
1/8	14(18)*	14(18)*	14	14(18)*	12	14(18)*	10	8	14
1/6	14(16)*	14(18)*	12	14(18)*	10	14(16)*	6	6	12
1/4	14	14(18)*	10	14(16)*	8	14	6	4	10
1/3	14	14(18)*	10	14(16)*	8	14	6	4	10
1/2	12	14(18)*	8	14	6	12	4	3	8
3/4	10	14(16)*	6	12	4	10	2	1	6
1	10	14(16)*	6	12	4	10	2	1	6
1-1/2	8	14	6	12	3	8	1	1/0	6
2	8	14	4	10	2	8	1/0	2/0	4
3	6	12	3	8	1/0	6	2/0	4/0	3

N.B.:
- Article 310-5 NEC grosseur minium de conducteur pour filage général à 115- 440VAC est le numéro 14AWG
- Les grandeurs de fils ci-dessus sont basés sur une baisse approximative de 5% lors du départ; conducteurs en cuivre; et isolation type 75C THHW, THW, RH, RHW etc. Pour un fil en aluminium, augmentez le fil d'un minimum de deux grandeurs. Voir Article 310 NEC pour ampacités des conducteurs en aluminium.
- Type S, SO, SJ, SJO, ETC.. grandeur de fil de cable flexible. Voir article 400 NEC pour ampérage relatif.

OPÉRATION:

MISE EN GARDE: LES VENTILATEURS À VITESSE VARIABLE DEVRAIENT ÊTRE AJUSTÉS AFIN QUE LA VITESSE MINIUM OUVRE LES VOLETS D'AU MOINS 1" AFIN DE PERMETTRE UN AÉRATION ADÉQUATE DU MOTEUR. Tous les ventilateurs sont à entraînement direct. Les ventilateurs avec moteur à vitesse variable peuvent étre opérés comme moteur à une vitesse économe d'énergie ou comme moteur variable avec un contrôle adéquat. Tel que mentionné, les ventilateurs à 2 vitesses requiËrent un contrôle à 2 vitesses ou un interrupteur à levier à 3 positions pour pouvoir changer la vitesse du moteur de grande à petite.



MISE EN GARDE: UNE GRILLE INTÉRIEUR DEVRAIT ÊTRE UTILSÉ SI LE VENTILATEUR EST INSTALLÉ À MOINS DE 7 PEIDS (2 METRE) DU SOL.

ACCESSOIRES:

Canarm vous offre une gamme complète de contrôle manuel et thermostatique. Canarm vous offre également des ensembles de volets muraux d'évacuation, les volets de remplacement ainsi que des capots de protection contre les intempéries.

ENTRETIEN:

Les moteurs comportent une protection automatique contre la surcharge et pourraient démarrer sans avertissement. Débrancher toujours l'unité avant de procéder à l'entretien. Le moteur, les pales et les volets devraient être nettoyés régulièrement pour éviter une accumulation de saleté qui pourrait endommager le moteur et nuire au bon fonctionnement de votre ventilateur. Les volets automatiques devraient pouvoir opérer librement. Comme pour tout les appareils mécaniques, des inspections régulières devront être entreprises afin de s'assurer que toute la quincaillerie et les vis à pales soient bien serrées.

GARANTIE

Canarm Ltée. garantie que chaque nouveau ventilateur ne comporte aucune défectuosité dans le matériel et la main-d'oeuvre, et de ce fait, Canarm Ltée. remplacera ou réparera à son choix, tout unité ou partie de cette unité qui comporte une defectuosité, pour une période d'un an suivant la date d'achat. L'unité doit être retournée frais de port payé et une défectuosité doit être décelée. Cette garantie ne couvre pas les frais de démontage et de réinstallation de l'unité sur les lieux de l'usager. Les éléments réparés ou remplacés sont garanties pour la durée de la garantie originale seulement. Cette garantie s'applique à l'acheteur-usager initial seulement; elle est nulle dans le cas d'altérations, d'accident, d'abus, de négligence ou si l'opération n'est pas conforme aux instructions.

N.B.: Aucune réclamation ne sera honorée par Canarm Ltée. à moins d'autorisation obtenue au préalable.

CANARM®

CANARM LTD.
2157 PARKEDALE AVENUE
BROCKVILLE, ONTARIO K6V 5V6
TELEPHONE: (613) 342-5424
FAX: 1-800-263-4598
E-MAIL: agsales@canarm.ca

CANARM LTEE.
8500 RUE GRENACHE
ANJOU, QUEBEC H1J 2B1
TELEPHONE: (514) 353-2255
FAX: (514) 353-2522
E-MAIL: agsales@canarm.ca

FM 701/702 - Flow meter, IFM efector, SM9000, Magnetic flow meter

ifm electronic

CE

Operating instructions
Magnetic-inductive flow meter

UK

efector300®

SM9000
SM9100
SM2000
SM2100

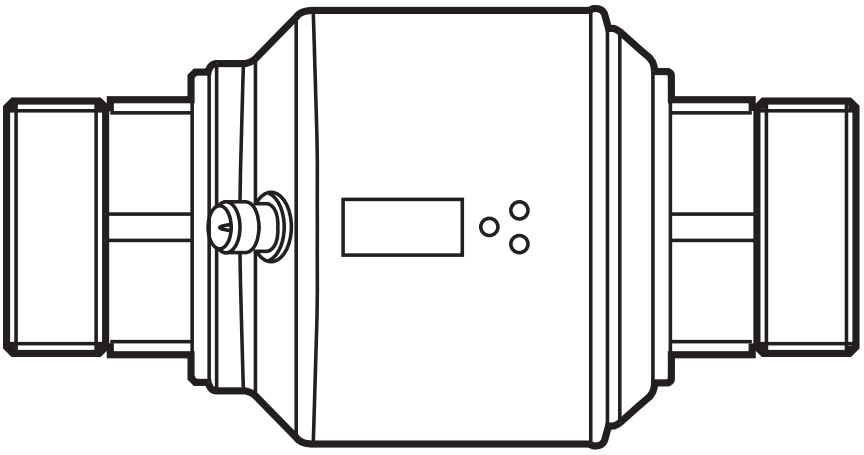

706222B2 / 00 05 / 2014

Contents

1 Preliminary note 4
1.1 Symbols used 4
1.2 Warning signs used 5

2 Safety instructions 5

3 Functions and features 6

4 Function 6
4.1 Measuring principle for volumetric flow monitoring 6
4.2 Processing of the measured signals 7
4.3 Volumetric flow monitoring 8
4.3.1 Volumetric flow quantity 8
4.3.2 Direction of flow 8
4.4 Consumed quantity monitoring (totaliser function) 8
4.4.1 Consumed quantity monitoring with pulse output 9
4.4.2 Consumed quantity monitoring with preset counter 9
4.5 Temperature monitoring 10
4.6 Empty pipe detection 10
4.7 Volumetric flow or temperature monitoring / switching function 11
4.7.1 Hysteresis function 11
4.7.2 Window function 11
4.8 Volumetric flow or temperature monitoring / analogue function 12
4.8.1 Current output 12
4.8.2 Voltage output 13
4.9 Volumetric flow monitoring / frequency output 14
4.10 Start-up delay 14
4.11 Low flow cut-off (LFC) 16
4.12 Simulation 16

5 Installation 17
5.1 Recommended installation position 17
5.2 Not recommended installation position 19
5.3 Grounding 20
5.4 Installation in pipes 20

6 Electrical connection 21

7 Operating and display elements 22

8 Menu 23
8.1 Process value display 23
8.2 Main menu 24
8.2.1 Explanation main menu 25
8.3 Extended functions – Basic settings 26
8.3.1 Explanation extended functions (EF) 27
8.3.2 Submenu basic settings (CFG) 27
8.4 Extended functions – Min/max memory – Emtpy pipe – Simulation 28
8.4.1 Explanation extended functions (EF) 29
8.4.2 Submenu min/max memory (MEM) 29
8.4.3 Submenu empty pipe (EPD) 29
8.4.4 Submenu simulation (SIM) 29

9 Set-up 30

10 Parameter setting 30
10.1 IO-Link 31
10.1.1 General information 31
10.1.2 Device-specific information 31
10.1.3 Parameter setting tools 31
10.2 Parameter setting in general 32
10.2.1 Switching between the menu levels 33
10.2.2 Locking / unlocking 33
10.2.3 Timeout 33
10.3 Settings for consumed quantity monitoring 33
10.3.1 Settings for limit value monitoring with OUT1 33
10.3.2 Settings for limit value monitoring with OUT2 34
10.3.3 Setting the analogue value for volumetric flow 34
10.3.4 Setting the frequency value for volumetric flow 34
10.4 Settings for consumed quantity monitoring 34
10.4.1 Settings for quantity monitoring via pulse output 34
10.4.2 Settings for quantity monitoring via the preset counter 35
10.4.3 Setting the pulse value 35
10.4.4 Manual counter reset 35
10.4.5 Time-controlled counter-reset 36
10.4.6 Deactivation of the counter reset 36
10.4.7 Configure counter reset using an external signal 36
10.5 Settings for temperature monitoring 36

10.5.1 Settings for limit value monitoring with OUT2 36
10.5.2 Setting the analogue value for temperature 36
10.6 User settings (optional) 37
10.6.1 Setting of the standard unit of measurement for volumetric flow 37
10.6.2 Configuration of the standard display 37
10.6.3 Changing the direction of the flow rate measurement 37
10.6.4 Setting the output logic 37
10.6.5 Setting the start-up delay 37
10.6.6 Setting the measured value damping 37
10.6.7 Setting the error behaviour of the outputs 38
10.6.8 Configuring the empty pipe detection as diagnostic output 38
10.6.9 Activating / deactivating empty pipe detection 38
10.6.10 Time-delay empty pipe detection 38
10.6.11 Setting of the empty pipe detection 39
10.6.12 Setting the counting method of the totaliser 39
10.6.13 Setting the low flow cut-off 39
10.7 Service functions 39
10.7.1 Reading the min/max values for the volumetric flow 39
10.7.2 Reading the min/max values for the temperature 39
10.7.3 Simulation menu 40
10.7.4 Resetting all parameters to factory setting 40

11 Operation 41
11.1 Reading the process value 41
11.2 Reading the parameter value 42
11.3 Error indications 43

12 Technical data 43

13 Factory setting 44

1 Preliminary note

1.1 Symbols used

▶ Instructions

> Reaction, result

[…] Designation of pushbuttons, buttons or indications

→ Cross-reference

Important note
Non-compliance can result in malfunction or interference.

Information
Supplementary note.

1.2 Warning signs used

⚠ CAUTION

Warning of personal injury.
Slight reversible injuries may result.

2 Safety instructions

- Please read this document prior to set-up of the unit. Ensure that the product is suitable for your application without any restrictions.
- If the operating instructions or the technical data are not adhered to, personal injury and/or damage to property can occur.
- Improper or non-intended use may lead to malfunctions of the unit or to unwanted effects in your application. That is why installation, electrical connection, set-up, operation and maintenance of the unit must only be carried out by qualified personnel authorised by the machine operator.
- In order to guarantee the correct condition of the device for the operating time it is necessary to use the device only for media to which the wetted materials are sufficiently resistant (→ Technical data).
- The responsibility whether the measurement devices are suitable for the respective application lies with the operator. The manufacturer assumes no liability for consequences of misuse by the operator. Improper installation and use of the devices result in a loss of the warranty claims.
- For medium temperatures above 50 °C some parts of the housing can heat up to over 65 °C. Moreover, during installation or in case of a fault (e.g. housing damage) media under high pressure or hot media can leak from the system. To avoid personal injury, take the following measures:
  ▶ Install the unit according to the applicable rules and regulations.
  ▶ Ensure that the system is free of pressure during installation.

- ▶ Protect the housing against contact with flammable substances and unintentional contact. To do so, equip the unit with suitable protection (e.g. protective cover).
- ▶ Do not press the pushbuttons manually; instead use another object (e.g. ballpoint pen).

3 Functions and features

Pressure Equipment Directive (PED): The units comply with section 3, article 3 of the Directive 97/23/EC and must be designed and manufactured for non-super-heated liquids of group 2 fluids in accordance with the sound engineering practice.

The unit monitors liquid media.

The unit detects the 3 process categories volumetric flow quantity, consumed quantity and medium temperature.

Application area

Conductive liquids with the following properties:

- Conductivity: ≥ 20 µS/cm
- Viscosity: < 70 mm^2/s at 40 °C

4 Function

4.1 Measuring principle for volumetric flow monitoring

The magnetic-inductive measuring principle means that a magnetic field is generated in the measuring pipe via current-carrying coils. When a conductive medium flows through the measuring pipe, the ions therein are diverted perpendicularly to the magnetic field. Positive and negative charge carriers flow in opposite directions. The voltage induced is measured by two electrodes that are in contact with the medium. This signal voltage is directly proportional to the average flow velocity. The volumetric flow quantity is derived from the inside pipe diameter.

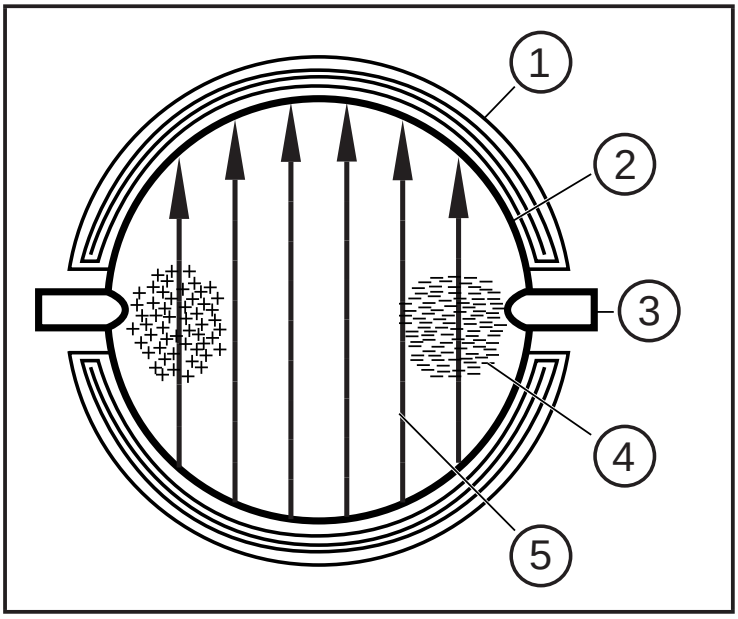

1: Field coil
2: Measuring pipe
3: Electrode
4: Charge carrier in the medium
5: Magnetic field

UK

Both electrodes must be wetted by the medium. Otherwise the signal [SEnS] for empty pipe is provided, if empty pipe detection is enabled.

4.2 Processing of the measured signals

The unit displays the current process values.

It generates 2 output signals according to the parameter setting.

OUT1/IO-Link: 5 selection options	Parameter setting
- Switching signal for volumetric flow limit values	(→ 10.3.1)
- or frequency signal for volumetric flow quantity	(→ 10.3.4)
- or pulse signal for quantity meter	(→ 10.4.1)
- or switching signal for preset counter	(→ 10.4.2)
- or switching signal for empty pipe detection	(→ 10.6.9)

OUT2: 6 selection options	Parameter setting
- Switching signal for volumetric flow limit values	(→ 10.3.2)
- or switching signal for temperature limit value	(→ 10.5.1)
- or analogue signal for volumetric flow quantity	(→ 10.3.3)
- or analogue signal for temperature	(→ 10.5.2)
- or input for external reset signal (InD)	(→ 10.4.7)
- or switching signal for empty pipe detection	(→ 10.6.9)

4.3 Volumetric flow monitoring

4.3.1 Volumetric flow quantity

The signals for measuring the volumetric flow quantity can be provided as follows:

1. Two switching signals for volumetric flow quantity limit values on output 1 and output 2. On the switching functions → 4.7.
2. A frequency signal (10 Hz...10 kHz) on output 1.
   On the frequency functions → 4.9.
3. An analogue signal proportional to the volumetric flow (4...20 mA or 0...10 V) on output 2. On the analogue functions → 4.8.

4.3.2 Direction of flow

In addition to the flow velocity, the unit also detects the flow direction. An arrow on the unit indicates the positive flow direction.

The flow direction can be inversed (→ 10.6.3).

▶ Use the supplied label to mark the changed flow direction.

Direction of flow in accordance with "flow direction" > process value and display positive. Direction of flow against the "flow direction" > process value and display negative.

Only positive process values are processed for the signal output (limit values and analogue values for volumetric flow).

4.4 Consumed quantity monitoring (totaliser function)

The unit has an internal mass flow meter which continuously totals the volumetric flow. The sum corresponds to the current consumed quantity since the last reset.

- The quantity meter takes account of the flow direction for totalisation.
  - Flow according to the marked flow direction (arrow "flow direction"): meter adds.
  - Flow against the marked flow direction: meter subtracts (→ 10.6.12).
  - Meter pulses are only provided as the sum increases. After subtraction (consumed quantity decreases), the pulses are only provided again when the consumed quantity has exceeded the previous maximum value.

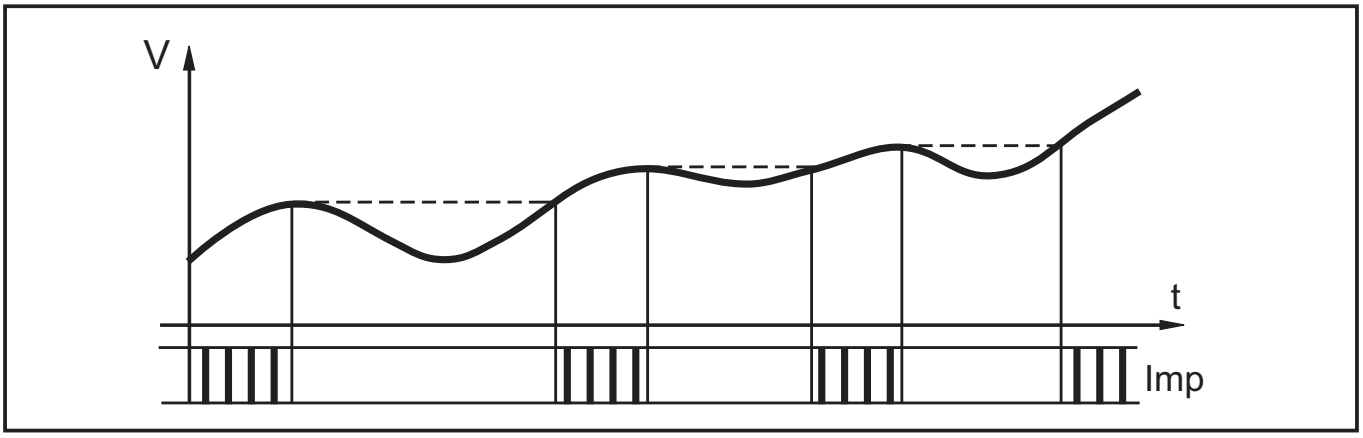

V = volumetric flow quantity, Imp = output pulses

- The current meter reading can be displayed (→ 11.1 Reading the process value).
- In addition the value before the last reset is stored. This value can also be displayed (→ 11.1 Reading the process value).

The meter saves the totalled consumed quantity every 10 minutes. In the event of a power failure this value is retained as the current meter reading. If a time-controlled reset is set, the elapsed time of the set reset interval is also stored. So the possible data loss can be maximum 10 minutes.

There are different ways to reset the meter

→ 10.4.4 Manual counter reset
→ 10.4.5 Time-controlled counter-reset
→ 10.4.7 Configure counter reset using an external signal

4.4.1 Consumed quantity monitoring with pulse output

Output 1 indicates a counting pulse when the set volumetric flow quantity has been reached (→ 10.4.1).

4.4.2 Consumed quantity monitoring with preset counter

Output 1 switches when the set volumetric flow quantity has been reached (→ 10.4.2).
2 types of monitoring are possible:

1. Time-dependent quantity monitoring (→ 10.4.5 Time-controlled counter-reset).
   - If the quantity x is reached during t, output 1 switches and remains switched until the meter is reset.

- If the quantity x is not reached during the time t, the meter is automatically reset and counting starts again; output 1 does not switch.

2. Quantity monitoring not time-dependent (→ 10.4.6 Deactivation of the counter reset).
   - If the quantity x is reached, output 1 switches and remains switched until the meter is reset.

4.5 Temperature monitoring

The following signals are provided for temperature monitoring:

- A switching signal for temperature limit values on output 2. On the switching functions → 4.7.
- An analogue signal proportional to the temperature (4...20 mA or 0...10 V) on output 2. On the analogue functions → 4.8.

4.6 Empty pipe detection

The unit detects when the two electrodes are not wetted by the medium (→ 4.1 Measuring principle for volumetric flow monitoring). The empty pipe detection can be activated or deactivated (→ 10.6.9). If it is active and the pipe is empty, the unit reacts as follows:

> [SEnS] is indicated in the display.

> The flow is set to zero.

The empty pipe detection can be set as time-depending or not time depending (→ 10.6.10).

4.7 Volumetric flow or temperature monitoring / switching function

OUTx changes its switching state if it is above or below the set switching limits (SPx, rPx). The following switching functions can be selected:

4.7.1 Hysteresis function

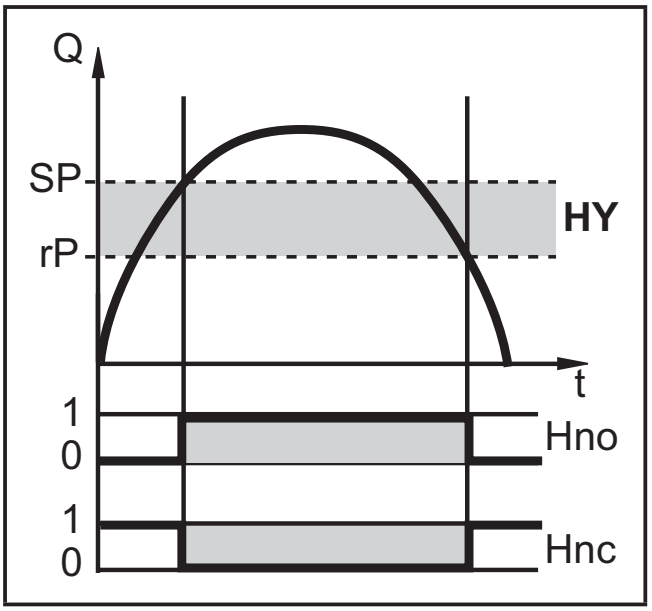

Example of volumetric flow monitoring
HY = hysteresis

Normally open: [OUx] = [Hno]

Normally closed: [OUx] = [Hnc]

First the set point (SPx) is set, then the reset point (rPx) with the requested difference.

When SPx is adjusted rPx is changed automatically; the difference remains constant.

UK

4.7.2 Window function

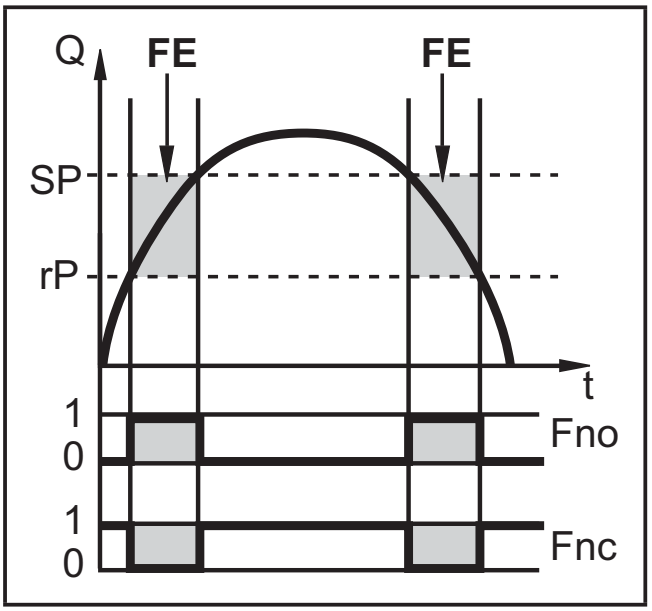

Example of volumetric flow monitoring
FE = window

Normally open: [OUx] = [Fno]

Normally closed: [OUx] = [Fnc]

The width of the window can be set by means of the difference between SPx and rPx.
SPx = upper value
rPx = lower value.

When set to the window function the set and reset points have a fixed hysteresis of 0.25 % of the final value of the measuring range. This keeps the switching state of the output stable if the volumetric flow varies slightly.

4.8 Volumetric flow or temperature monitoring / analogue function

4.8.1 Current output

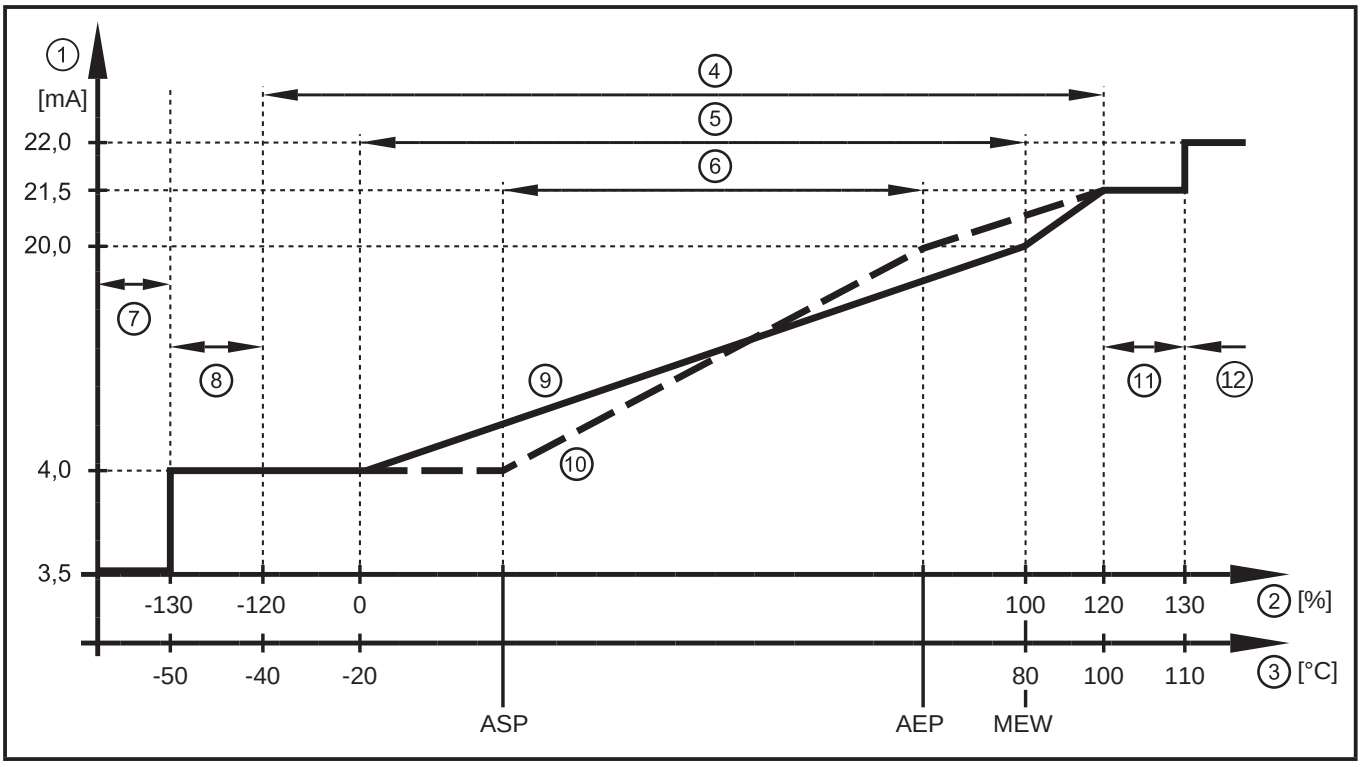

Characteristics of the analogue output according to the standard IEC 60947-5-7

1: Output current
2: Volumetric flow quantity
3: Temperature
4: Display range
5: Measuring range
6: Range between analogue start point and analogue end point
7: The unit is in the error state (FOU = OFF).
8: The process value transmitted in an analogue way is therefore below the display range.
9: Curve of the analogue signal at factory setting
10: Curve of the analogue signal with shifted ASP and AEP
11: The process value transmitted in an analogue way is therefore above the display range.
12: The unit is in the error state (FOU = ON).

ASP = analogue start point: determines at which measured value the output signal is 4 mA
AEP = analogue end point: determines at which measured value the output signal is 20 mA
VMR = final value of the measuring range = 100 %

Minimum distance between ASP and AEP = 20 % of the measuring range

In the set scaling range the output signal is between 4 and 20 mA.

4.8.2 Voltage output

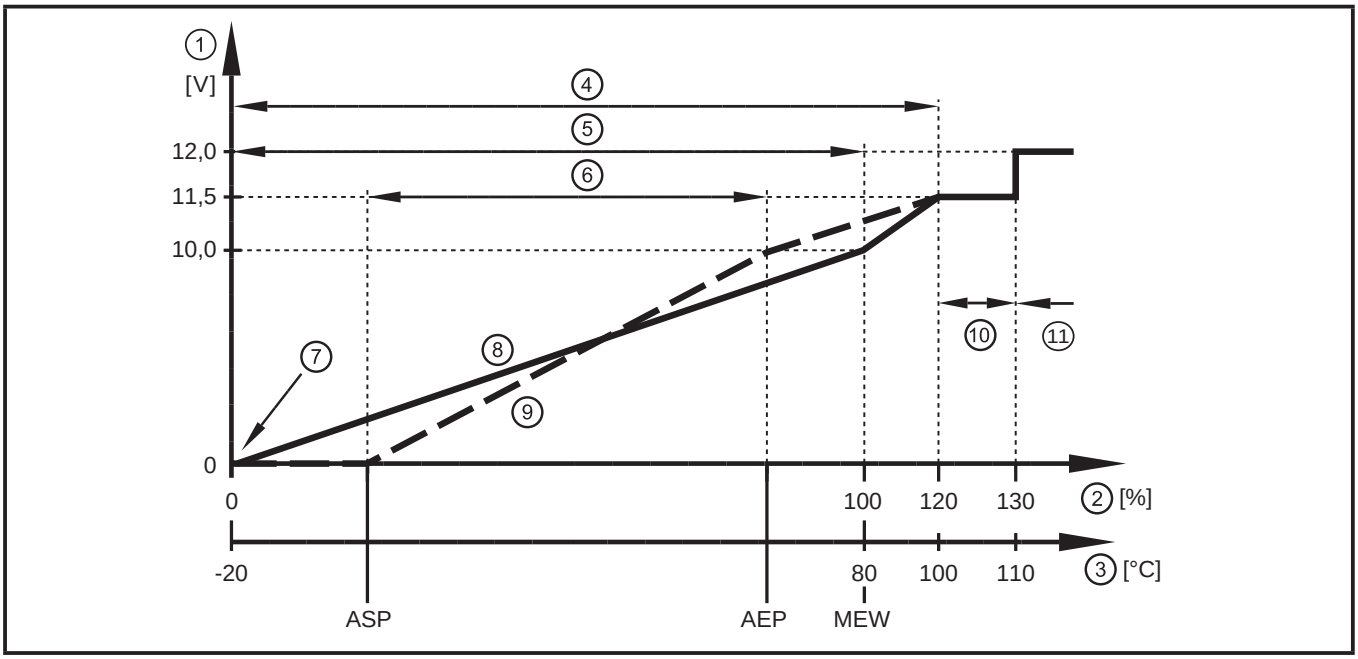

Characteristics of the analogue output according to the standard IEC 60947-5-7

1: Output voltage
2: Volumetric flow quantity
3: Temperature
4: Display range
5: Measuring range
6: Range between analogue start point and analogue end point
7: The unit is in the error state (FOU = OFF) or the process value transmitted in an analogue way is below the display range.
8: Curve of the analogue signal at factory setting
9: Curve of the analogue signal with shifted ASP and AEP
10: The process value transmitted in an analogue way is therefore above the display range.
11: The unit is in the error state (FOU = ON).

ASP = analogue start point: determines at which measured value the output signal is 0 V
AEP = analogue end point: determines at which measured value the output signal is 10 V
VMR = final value of the measuring range = 100 %

Minimum distance between ASP and AEP = 20 % of the measuring range

In the set scaling range the output signal is between 0 and 10 V.

UK

4.9 Volumetric flow monitoring / frequency output

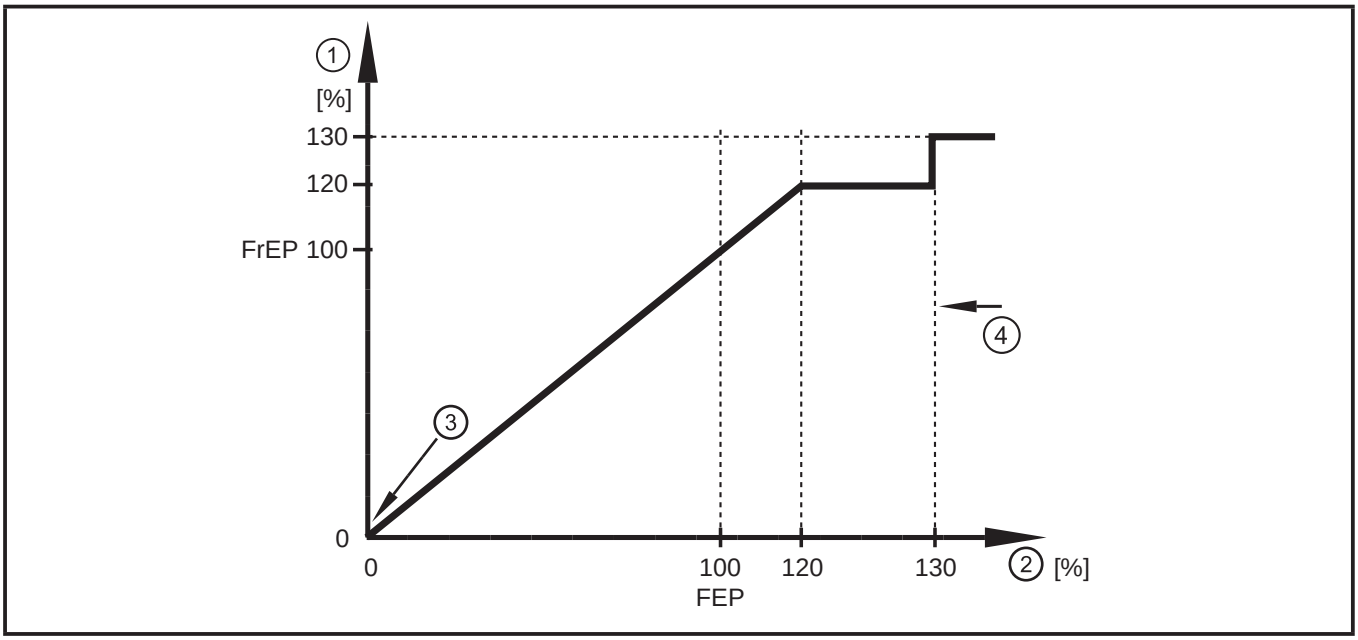

Output curve frequency output
1: Frequency output
2: Volumetric flow quantity Q
3: The unit is in the error state (FOU = OFF) or the process value transmitted in an analogue way is below the display range.
4: The unit is in the error state (FOU = ON).

FrEP = configured frequency at FEP (→ 10.3.4 Setting the frequency value for volumetric flow)

4.10 Start-up delay

The start-up delay dST influences the switching outputs of the volumetric flow monitoring.

If the start-up delay is active (dST > 0), note: As soon as the volumetric flow quantity exceeds the LFC (LFC = low flow cut-off → 4.11), the following processes are carried out:

> The start-up delay is activated.

> The outputs switch as programmed:
ON for NO function, OFF for NC function.

After the start of the start-up delay there are 3 options:

1. The volumetric flow quantity increases quickly and reaches the set point / good range within dST.
> Outputs remain active.

2. The volumetric flow increases slowly and does not reach the set point /good range within dST.
   > Outputs are reset.
3. Volumetric flow quantity falls below LFC within dST.
   > Outputs are reset at once; dST is stopped.

Example: dST for hysteresis function

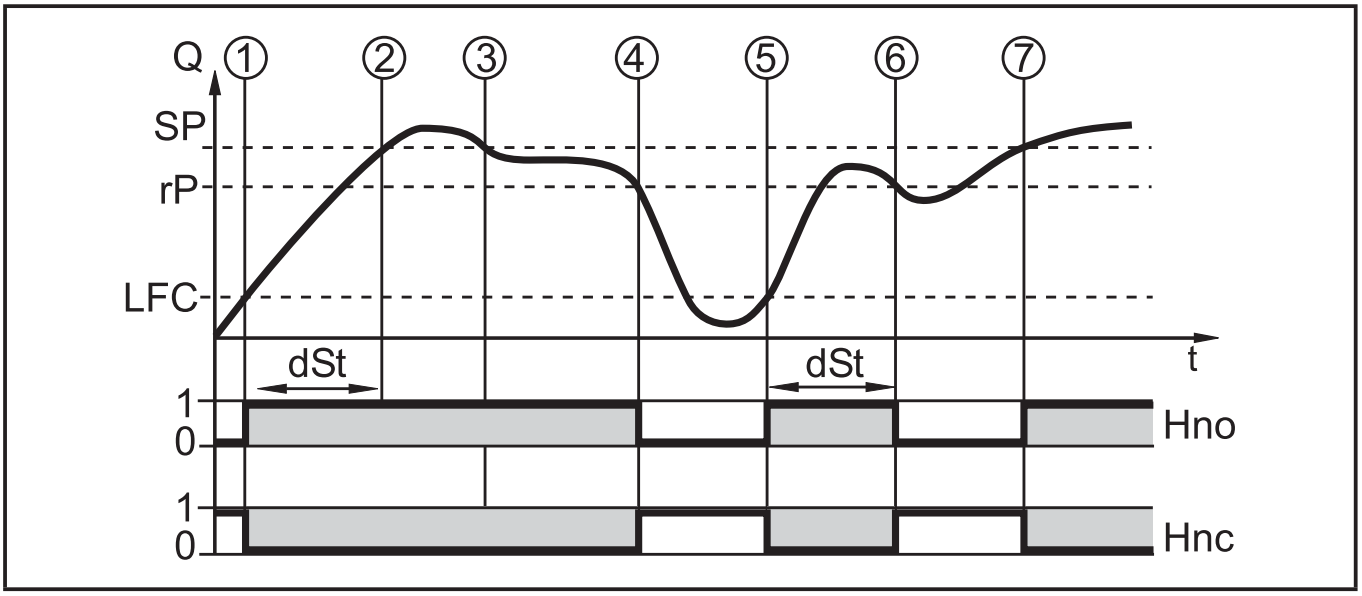

	Condition	Reaction
1	Volumetric flow quantity Q reaches LFC	dST starts, output becomes active
2	dST elapsed, Q reached SP	output remains active
3	Q below SP but above rP	output remains active
4	Q below rP	output is reset
5	Q reaches again LFC	dST starts, output becomes active
6	dST elapsed, Q has not reached SP	output is reset
7	Q reaches SP	output becomes active

Example: dST for window function

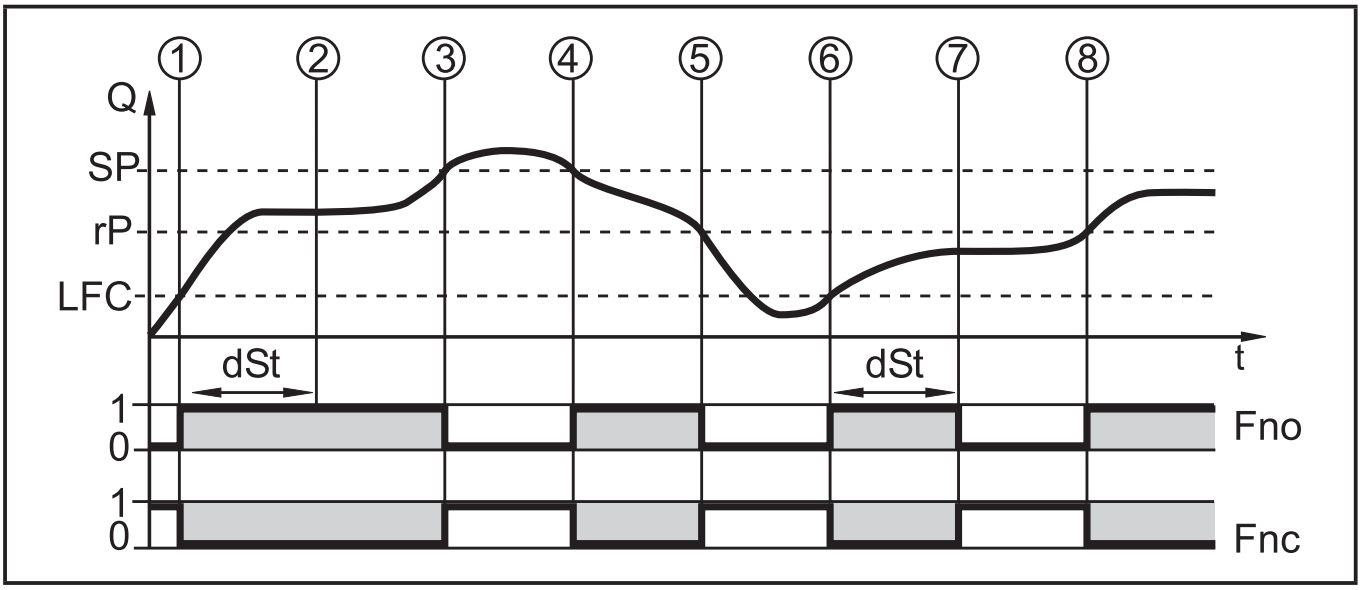

	Condition	Reaction
1	Volumetric flow quantity Q reaches LFC	dST starts, output becomes active.
2	dST elapsed, Q reached good range	output remains active
3	Q above SP (leaves good range)	output is reset
4	Q again below SP	output becomes active again
5	Q below rP (leaves good range)	output is reset again
6	Q reaches again LFC	dST starts, output becomes active
7	dST elapsed, Q has not reached good range	output is reset
8	Q reaches good range	output becomes active

4.11 Low flow cut-off (LFC)

With this function small volumetric flow quantities can be ignored (→ 10.6.13). Flows below the LFC value are evaluated by the sensor as standstill (Q = 0).

4.12 Simulation

With this function small volumetric flow quantities can be suppressed (→ 10.7.3). The simulation does not have any effect on the totaliser or the current flow. The outputs operate as previously set.
When the simulation starts, the value of the totaliser is saved and then the simulated totaliser is set to 0. The simulated flow value then has an effect on the simulated totaliser. When the simulation is finished, the original totaliser value is restored.

During the simulation the original totaliser value remains saved without any changes even if there is a real flow.

5 Installation

▶ Avoid deposits, accumulated gas and air in the pipe system.

5.1 Recommended installation position

Example of an optimised installation:

UK

1

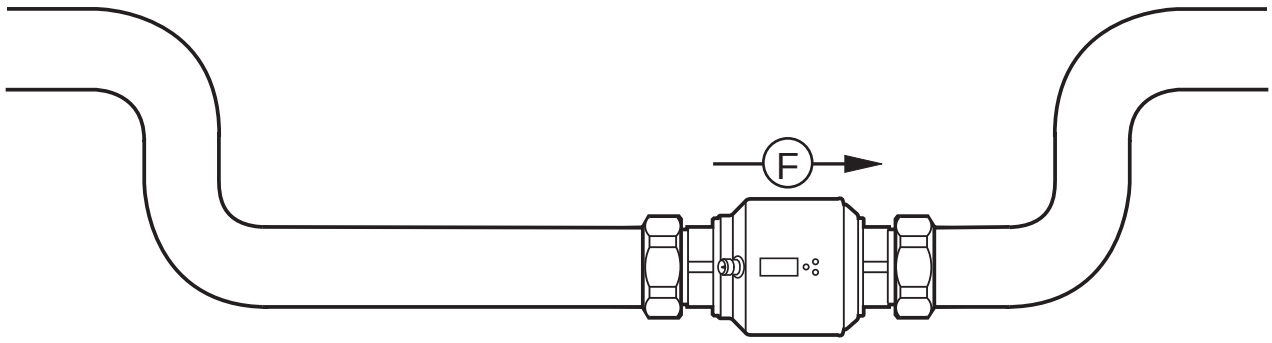

▶ Install the unit so that the measuring pipe is completely filled.

▶ Arrange for inlet and outlet pipe lengths. Disturbances caused by bends, valves, reductions, etc. are compensated for. It applies in particular: No shut-off and control devices are allowed directly in front of the unit.

2

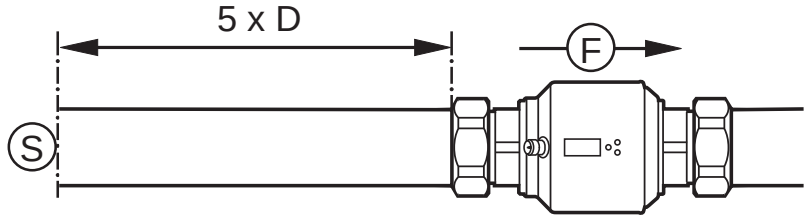

3

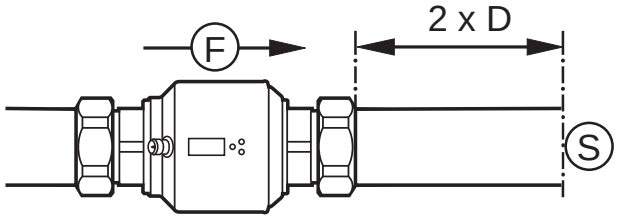

S = disturbance; D = pipe diameter; F = flow direction

▶ Install in front of or in a rising pipe:

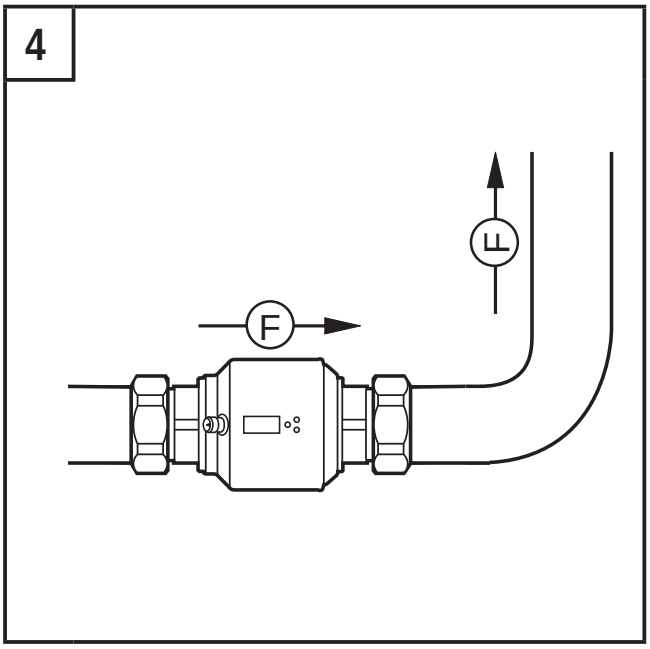

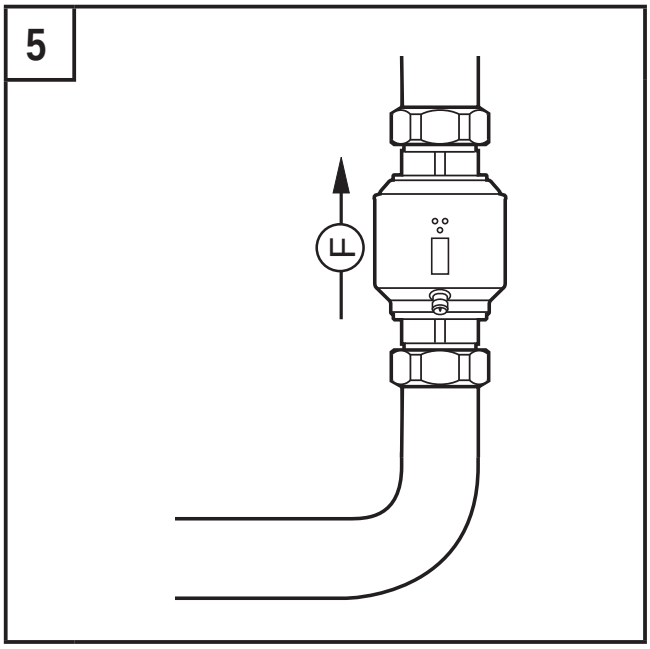

F = flow direction

With empty pipe detection:
▶ Install the unit according to figure 1, 4 or 5.

5.2 Not recommended installation position

▶ Avoid the following installation positions:

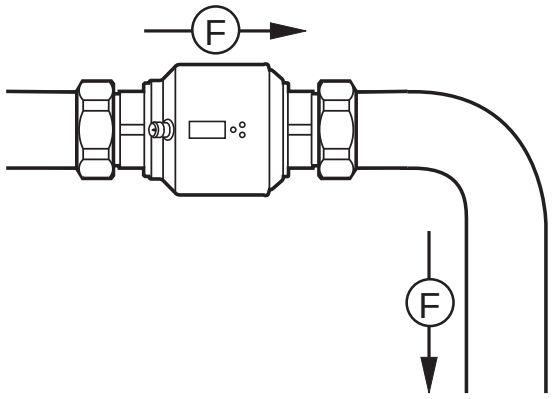

Directly in front of a falling pipe.

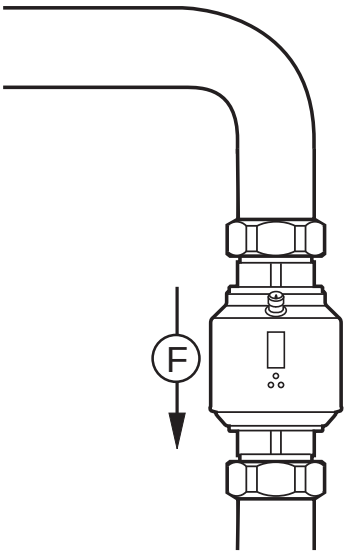

In a falling pipe.

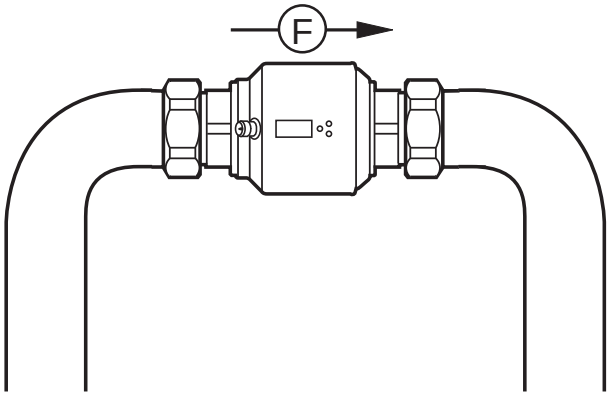

At the highest point of the pipe system.

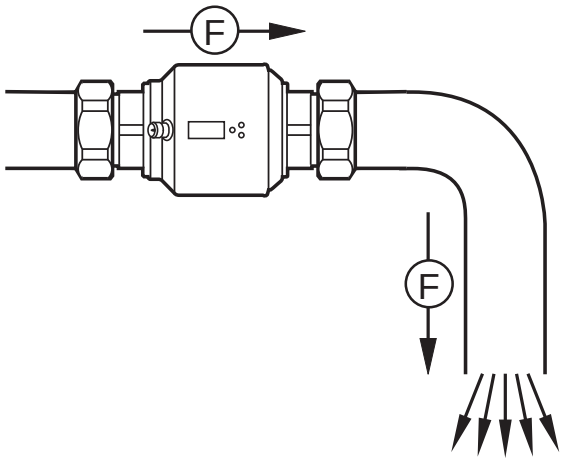

Directly in front of the spout of the pipe.

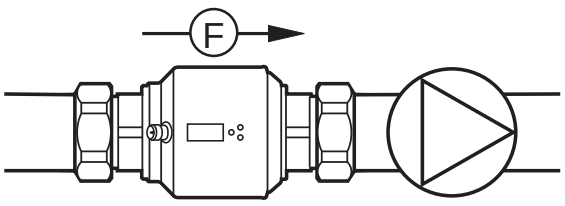

On the suction side of a pump.

F = flow direction

The unit can be installed independently of the orientation if the following is ensured:

- No air bubbles can form in the pipe system.
- The pipes are always completely filled.

5.3 Grounding

If installed in an ungrounded pipe system (e.g. plastic pipes), the unit must be grounded (functional earth).

Ground brackets for the M12 connector are available as accessories (→ www.ifm.com).

5.4 Installation in pipes

The unit can be installed in pipes using adapters. The adapters have to be ordered separately as accessories (→ www.ifm.com).

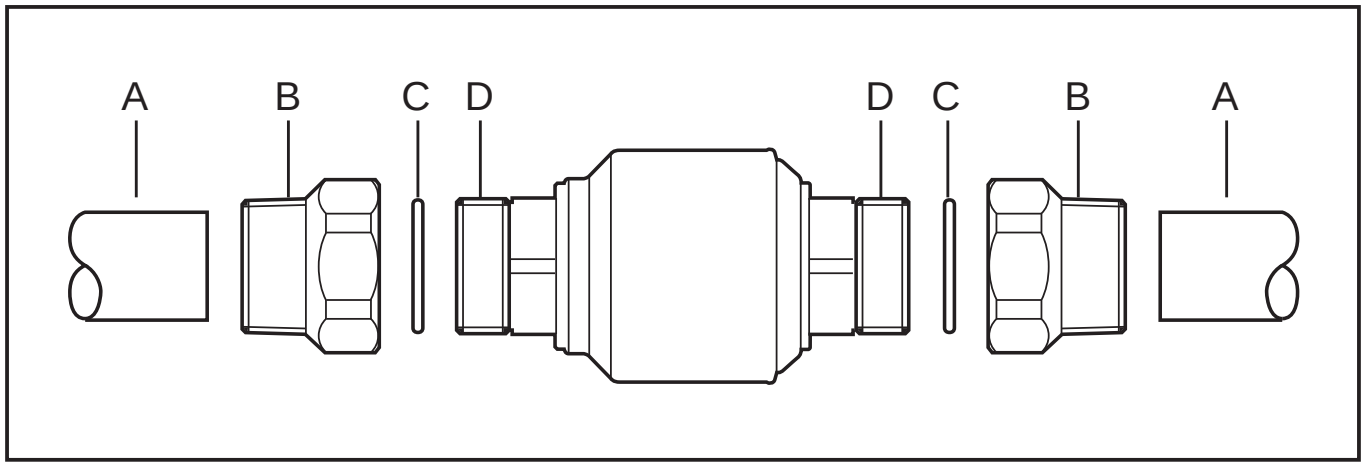

1. Screw the adapter (B) into the pipe (A).
2. Place the seals (C) and install the unit according to the marked flow direction.

   ▶ To mount the adapters on the process connection of the sensor use suitable lubricants.
3. Screw the adapter (B) with the threads (D) until it is hand-tight.
4. Tighten the two adapters in opposite direction (tightening torque: 30 Nm).

After installation air bubbles in the system can affect the measurement.
Corrective measures:

▶ Rinse the system after installation for ventilation (rinsing quantity > 15 l/min.).

In case of horizontal installation: As a result of design requirements a small quantity of the medium always remains in the measuring channel after switching off the pump.

6 Electrical connection

The unit must be connected by a qualified electrician.
The national and international regulations for the installation of electrical equipment must be adhered to.
Voltage supply according to EN 50178, SELV, PELV.

▶ Disconnect power.

▶ Connect the unit as follows:

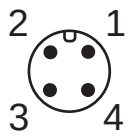

BK: black
BN: brown
BU: blue
WH: white

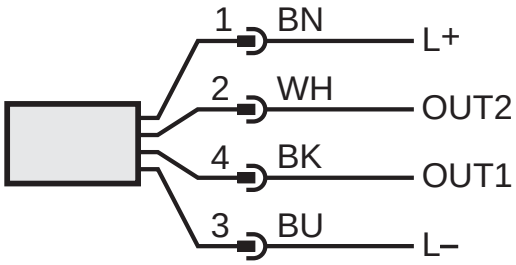

Colours to DIN EN 60947-5-6

Sample circuits:

2 x positive switching

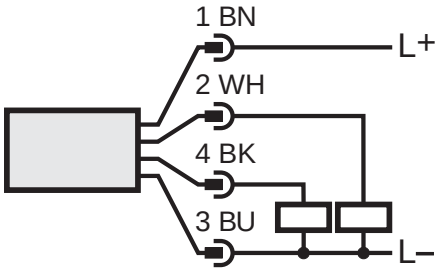

2 x negative switching

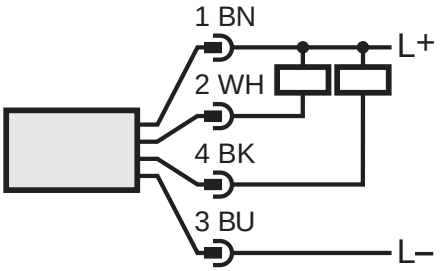

1 x positive switching / 1 x analogue

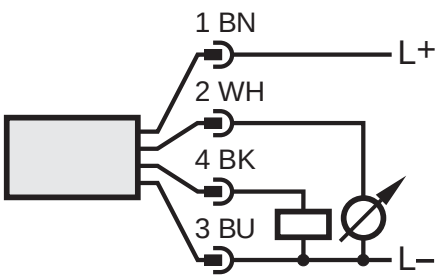

1 x negative switching / 1 x analogue

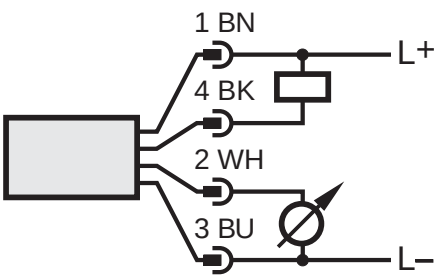

E-356

Pin 1	L+
Pin 3	L-
Pin 4 (OUT1)	• Switching signal: limit values for volumetric flow • Pulse signal: 1 pulse every time the defined volumetric flow quantity is reached. • Switching signal: quantity meter reached preset value • Frequency signal for volumetric flow quantity • Switching signal: empty pipe detection • IO-Link
Pin 2 (OUT2/ InD)	• Switching signal: limit values for volumetric flow • Switching signal: limit values for temperature • Analogue signal for volumetric flow quantity • Analogue signal for temperature • Switching signal: empty pipe detection • Input for external reset signal (InD)

7 Operating and display elements

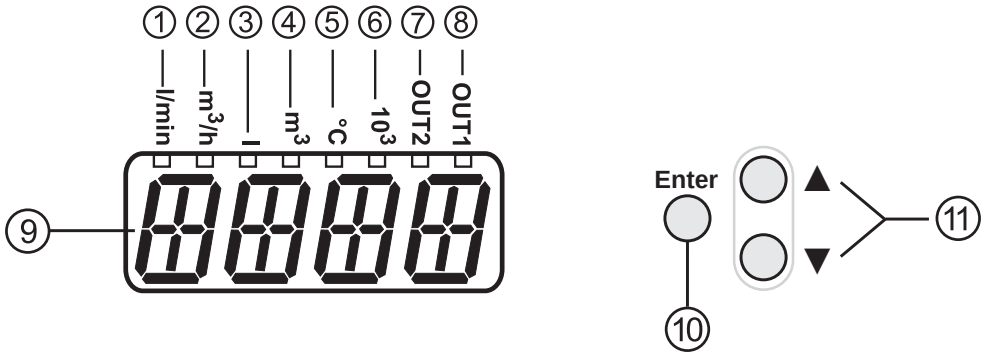

1 to 8: Indicator LEDs
• LEDs 1-6 = Unit of the currently represented numerical value → 11.1 Reading the process value • LED 7 = switching state of output OUT2 / of input InD • LED 8 = switching status of output OUT1
9: Alphanumeric display, 4 digits
• Current volumetric flow quantity (with setting [SELd] = [FLOW]) • Meter reading of the totaliser (with setting [SELd] = [TOTL]) • Current medium temperature (with setting [SELd] = [TEMP]) • Parameters and parameter values

10: [Enter] button
• Selecting the parameters • Reading the set values • Confirming the parameter values Representation in → 8 Menu: ○
11: Buttons up [▲] and down [▼]
• Selection of the parameters • Activation of the setting functions • Changing the parameter values • Change of the display unit in the normal operating mode (Run mode) • Locking / unlocking Representation in → 8 Menu: ▲ and ▼

8 Menu

8.1 Process value display

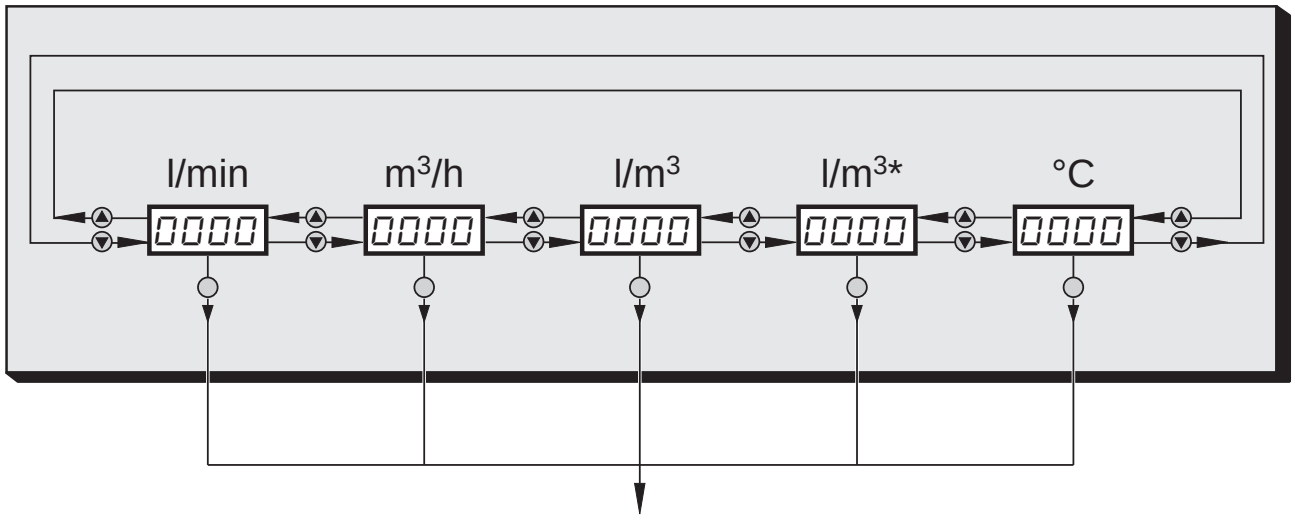

* Stored totaliser value

↓ Main menu

8.2 Main menu

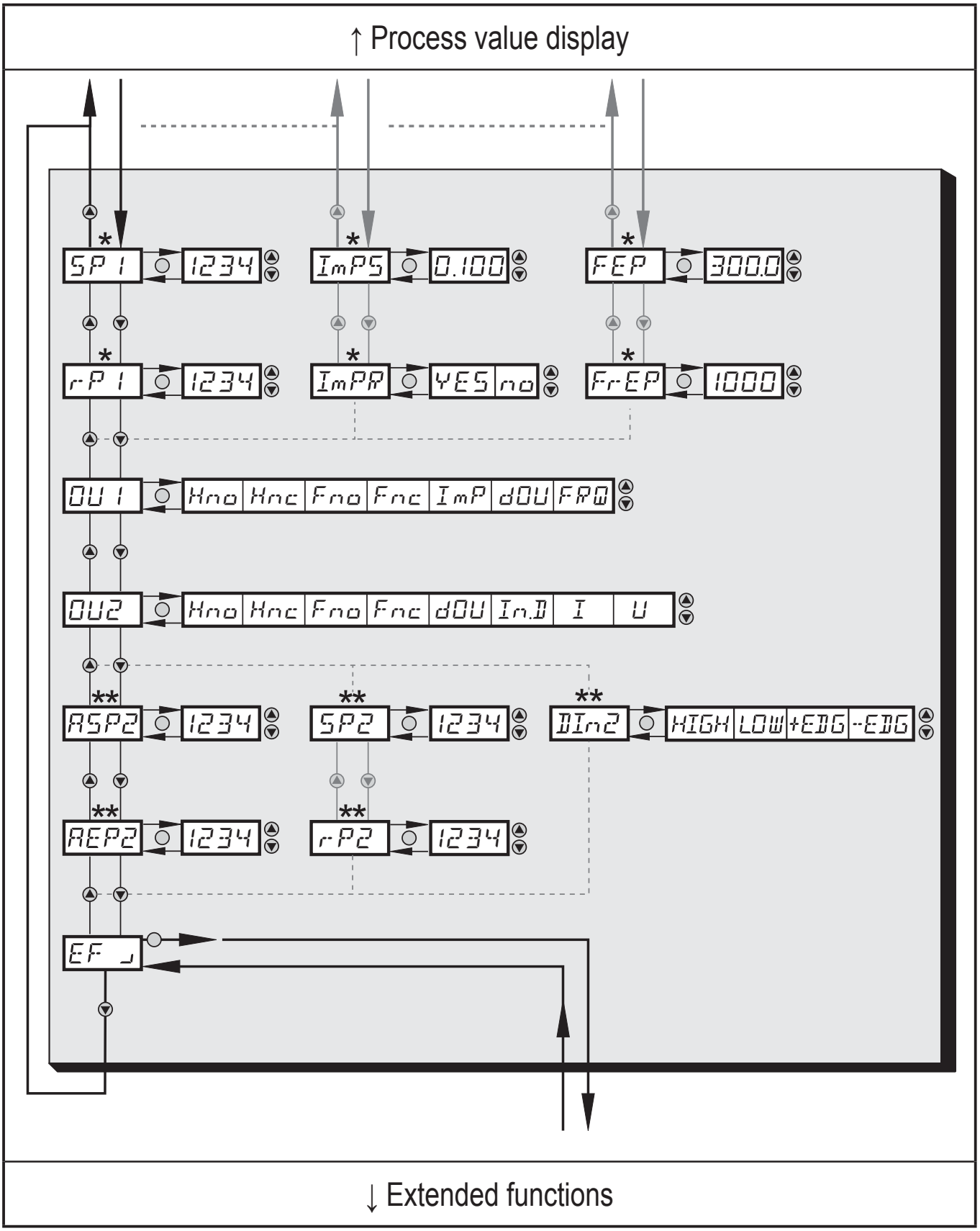

* The parameters are only displayed when selected at OU1.
** The parameters are only displayed when selected at OU2.

8.2.1 Explanation main menu

SP1	Maximum limit value for the set process value
rP1	Minimum limit value for the set process value
ImPS	Pulse value
ImPR	Pulse reset
FEP	Frequency output of the end point of the flow value
FrEP	Frequency output of the end point of the frequency
OU1	Output function for OUT1 (volumetric flow or consumed quantity)
OU2	Output function for OUT2 (volumetric flow or temperature)
	As an alternative: configure OUT2 (Pin2) as input for external reset signal: Setting: [OU2] = [In.D]
Hno	Hysteresis normally open
Hnc	Hysteresis normally closed
Fno	Window normally open
Fnc	Window normally closed
ImP	Pulse output
FRQ	Frequency output
dOU	Diagnostic output
I	Current output
U	Voltage output
In.D	External input
ASP2	Analogue start value for the set process value
AEP2	Analogue end value for the set process value
SP2	Maximum limit value for the set process value
rP2	Minimum limit value for the set process value
DIn2	Configuration of the input (Pin2) for counter reset
EF	Extended functions / opening of menu level 2

8.3 Extended functions – Basic settings

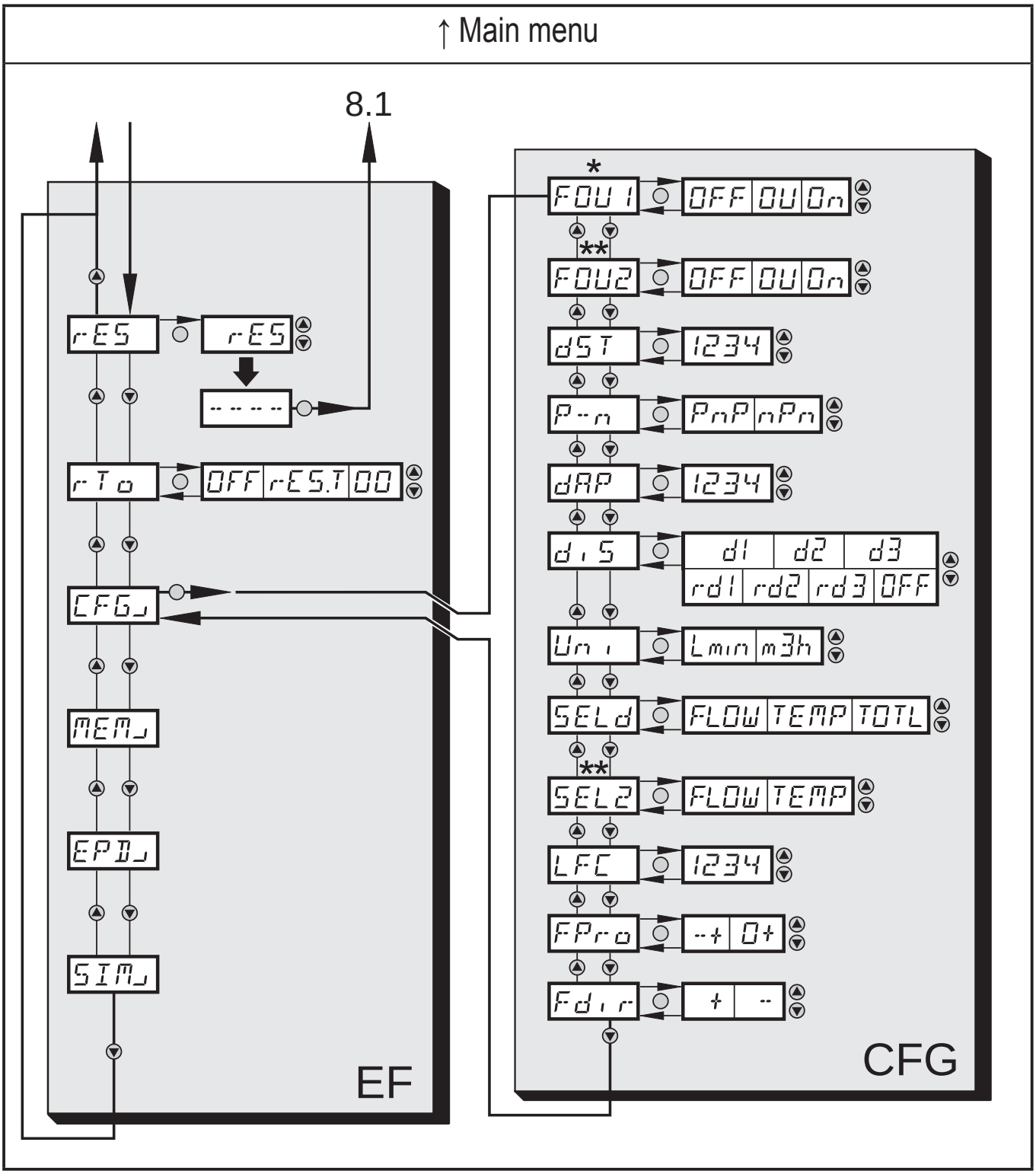

* The parameters are only displayed when selected at OU1.
** The parameters are only displayed when selected at OU2.

8.3.1 Explanation extended functions (EF)

rES	Restore the factory setting
rTo	Counter reset: manual reset / time-controlled reset
CFG	Submenu basic settings
MEM	Submenu min/max memory
EPD	Submenu empty pipe
SIM	Submenu simulation

8.3.2 Submenu basic settings (CFG)

FOU1	Behaviour of output 1 in case of an error
FOU2	Behaviour of output 2 in case of an error
dST	Start-up delay of volumetric flow monitoring
P-n	Output logic: pnp / npn
dAP	Measured value damping / damping constant in seconds
diS	Update rate and orientation of the display
Uni	Standard unit of measurement for volumetric flow: litres/minute or cubic metres/hour
SELd	Standard measuring unit of the display: volumetric flow value / medium temperature / meter reading
SEL2	Standard unit of measurement for evaluation via OUT2
LFC	Low flow cut-off
FPro	Totaliser: behaviour with negative flow
Fdir	Direction of flow

8.4 Extended functions – Min/max memory – Emtpy pipe – Simulation

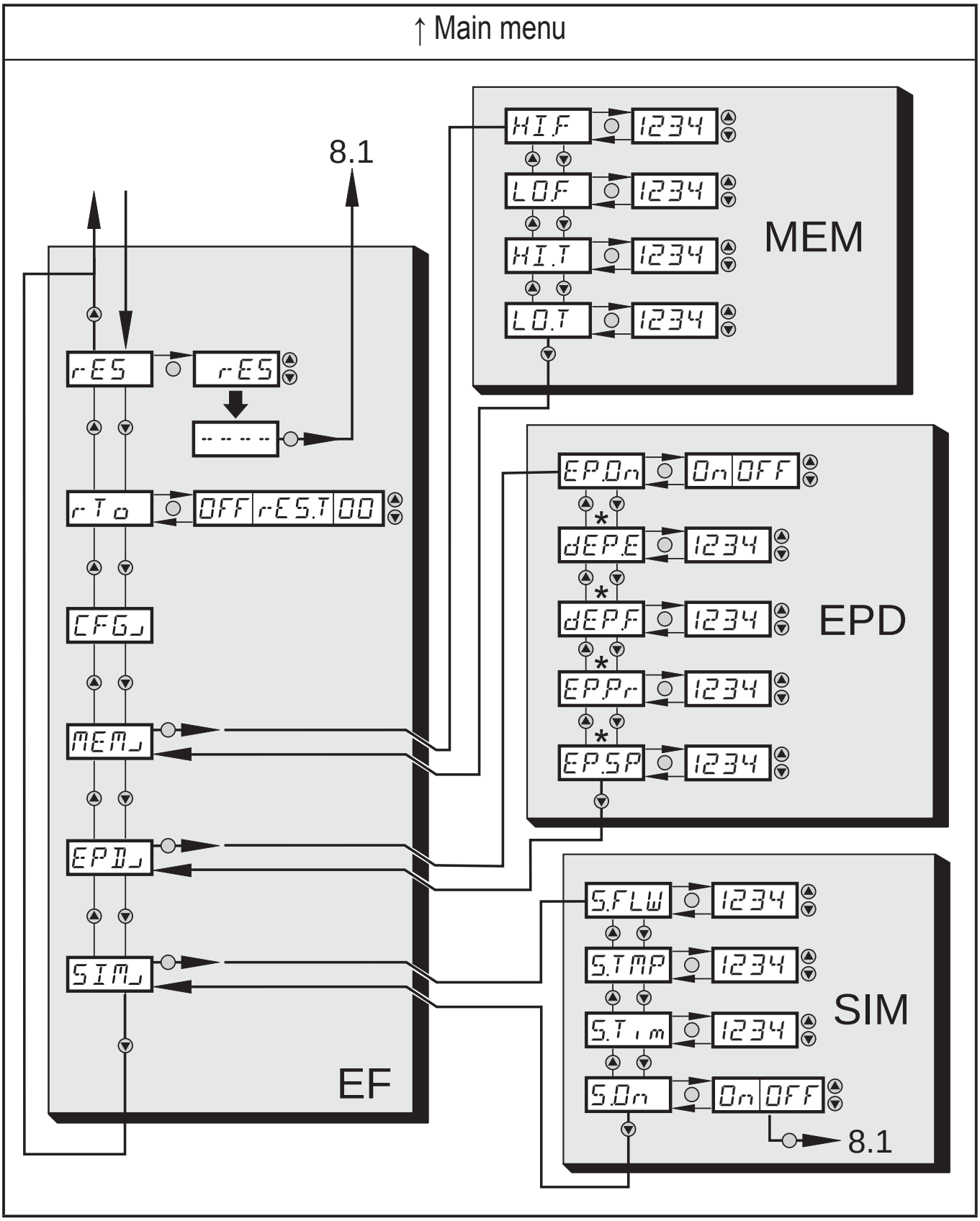

* Parameters are only displayed for the selection EP.On = On.

8.4.1 Explanation extended functions (EF)

rES	Restore the factory setting
rTo	Counter reset: manual reset / time-controlled reset
CFG	Submenu basic settings
MEM	Submenu min/max memory
EPD	Submenu empty pipe
SIM	Submenu simulation

8.4.2 Submenu min/max memory (MEM)

HI.F	Max. value flow
LO.F	Min. value flow
HI.T	Max. value temperature
LO.T	Min. value temperature

8.4.3 Submenu empty pipe (EPD)

EP.On	Empty pipe detection on / off
dEP.E.	Delay time empty signal
dEP.F	Delay time full signal
EP.Pr	Current measured value of empty pipe detection
EP.SP	Switch point of empty pipe detection

8.4.4 Submenu simulation (SIM)

S.FLW	Simulation flow value
S.TMP	Simulation temperature value
S.TIM	Simulation time
S.ON	Simulation start

9 Set-up

After power on and expiry of the power-on delay time (approx. 5 seconds) the unit is in the normal operating mode. It carries out its measurement and evaluation functions and generates output signals according to the set parameters.

- During the power-on delay time the outputs are switched as programmed:
  - ON with normally open function (Hno / Fno)
  - OFF with normally closed function (Hnc / Fnc).
- If output 2 is configured as analogue output, the output signal is at 20 mA (current output) or 10 V (voltage output).

10 Parameter setting

Parameters can be set before installation and set-up of the unit or during operation.

If you change parameters during operation, this will influence the function.

▶ Ensure that there will be no malfunctions in your plant.

During parameter setting the unit remains in the operating mode. It continues to monitor with the existing parameter until the parameter setting has been completed.

⚠ CAUTION

For medium temperatures above 50 °C some parts of the housing can heat up to over 65 °C.

▶ Do not press the pushbuttons manually; instead use another object (e.g. ballpoint pen).

10.1 IO-Link

10.1.1 General information

This unit has an IO-Link communication interface which requires an IO-Link-capable module (IO-Link master) for operation.

The IO-Link interface enables direct access to the process and diagnostic data and provides the possibility to set the parameters of the unit during operation.

In addition communication is possible via a point-to-point connection with a USB adapter cable.

You will find more detailed information about IO-Link at www.ifm.com/gb/io-link.

10.1.2 Device-specific information

You will find the IODDs necessary for the configuration of the IO-Link unit and detailed information about process data structure, diagnostic information and parameter addresses at www.ifm.com/gb/io-link.

10.1.3 Parameter setting tools

You will find all necessary information about the required IO-Link hardware and software at www.ifm.com/gb/io-link.

10.2 Parameter setting in general

Select the parameter

1. Press [Enter] briefly.
2. Press [▲] or [▼] until the requested parameter is displayed**.**

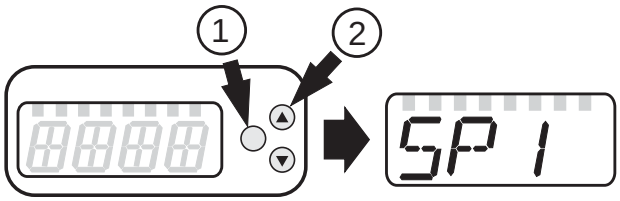

Changing the parameter value

3. Press [Enter] briefly.
   > The currently set value is displayed.
4. Keep [▲] or [▼] pressed for 1 s
   > Display flashes first, then permanent.
5. Change value by pressing [▲] or [▼].

[▲] or [▼] pressed.
> Faster cycle of the numerical values.

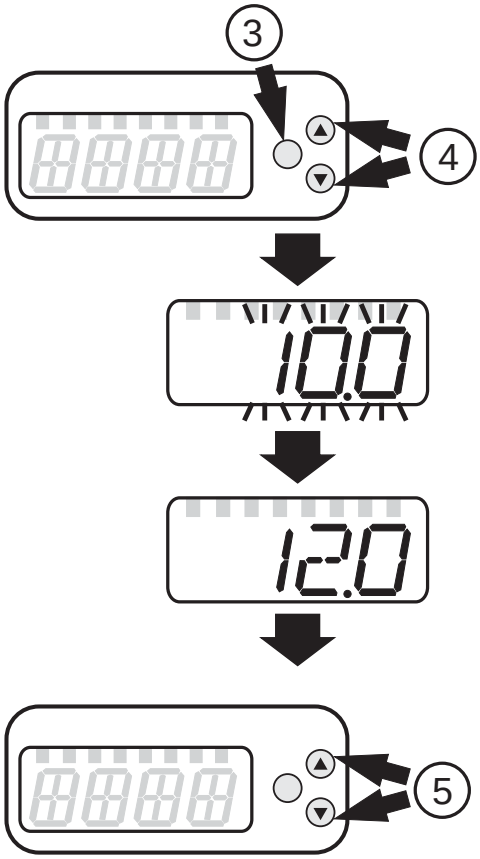

Confirm the parameter value

6. Press [Enter] briefly.

> The parameter is displayed again. The new setting value is saved.

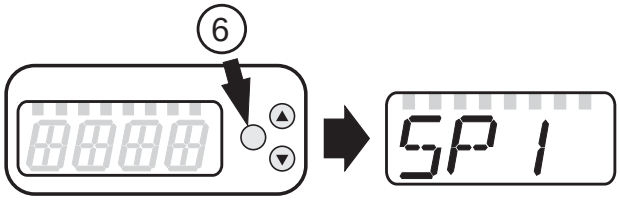

Finish parameter setting and change to the process value display:

▶ Wait for 30 seconds

or

▶ Change from the submenu to the main menu, from the main menu to the process value display with [▲] or [▼].

If [C.Loc] is displayed when an attempt is made to modify a parameter value, an IO-Link communication is active (temporary locking). If [S.Loc] is displayed, the sensor is permanently locked via software. This locking can only be removed using a parameter setting software.

10.2.1 Switching between the menu levels

Change to the submenu	Switching to the next submenu via the parameters [EF], [CFG], [MEM], [EPD] or [SIM]. ▶ Select a submenu with [▲] or [▼] and switch to the submenu by pressing [Enter].
Back to the process value display	▶ Wait for 30 seconds or ▶ Change from the submenu to the main menu, from the main menu to the process value display with [▲] or [▼].

10.2.2 Locking / unlocking

The unit can be locked electronically to prevent unintentional settings. Setting at the factory: not locked.

Locking is also possible via an IO-Link capable parameter setting tool.

Locking	▶ Make sure that the unit is in the normal operating mode. ▶ Press [▲] and [▼] simultaneously for 10 s. > [Loc] is displayed. During operation: [LOC] is briefly displayed if you try to change parameter values.
Unlocking	▶ Press [▲] and [▼] simultaneously for 10 s. > [uLoc] is displayed.

10.2.3 Timeout

If no button is pressed for 30 s during parameter setting, the unit returns to the operating mode with unchanged parameter.

10.3 Settings for consumed quantity monitoring

10.3.1 Settings for limit value monitoring with OUT1

▶ Select [OU1] and set the switching function:
- [Hno] = hysteresis function/NO,
- [Hnc] = hysteresis function/NC,
- [Fno] = window function/NO,
- [Fnc] = window function/NC.

▶ Select [SP1] and set the value at which the output switches.
▶ Select [rP1] and set the value at which the output switches off.

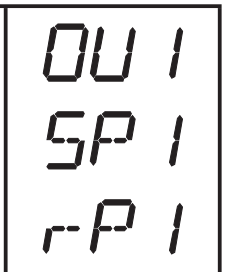

10.3.2 Settings for limit value monitoring with OUT2

- ▶ Select [SEL2] and set [FLOW].
- ▶ Select [OU2] and set the switching function.
  - [Hno] = hysteresis function/NO,
  - [Hnc] = hysteresis function/NC,
  - [Fno] = window function/NO,
  - [Fnc] = window function/NC.
- ▶ Select [SP2] and set the value at which the output switches.
- ▶ Select [rP2] and set the value at which the output switches off.

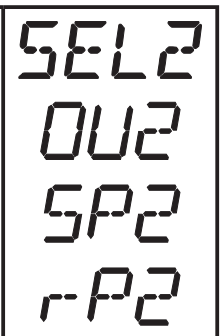

10.3.3 Setting the analogue value for volumetric flow

- ▶ Select [SEL2] and set [FLOW].
- ▶ Select [OU2] and set the function:
  - [I] = current signal proportional to volumetric flow (4…20 mA);
  - [U] = voltage signal proportional to volumetric flow (0…10 V).
- ▶ Select [ASP2] and set the value at which the minimum value is provided.
- ▶ Select [AEP2] and set the value at which the maximum value is provided.

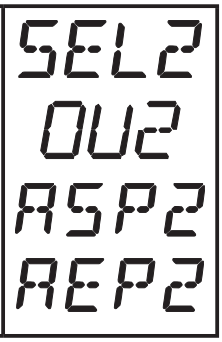

10.3.4 Setting the frequency value for volumetric flow

- ▶ Select [OU1] and set [FRQ].
- ▶ Select [FEP] and set the flow value at which the frequency set in FrEP is provided.
- ▶ Select [FrEP] and set the frequency.

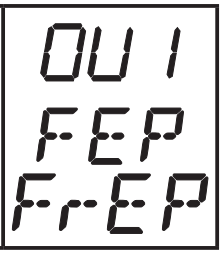

10.4 Settings for consumed quantity monitoring

10.4.1 Settings for quantity monitoring via pulse output

- ▶ Select [OU1] and set [ImP].
- ▶ Select [ImPS] and set the volumetric flow quantity at which 1 pulse is provided (→ 10.4.3).
- ▶ Select [ImPR] and set [YES].
- > Pulse repetition is active. Output 1 provides a counting pulse each time the value set in [ImPS] is reached.

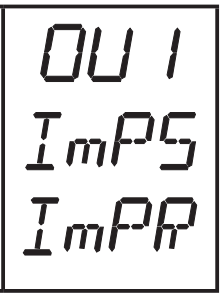

10.4.2 Settings for quantity monitoring via the preset counter

- ▶ Select [OU1] and set [ImP].
- ▶ Select [ImPS] and set the volumetric flow quantity at which output 1 switches (→ 10.4.3).
- ▶ Select [ImPR] and set [no].
- > Pulse repetition is not active. The output switches ON if the value set in [ImPS] is reached. It remains set until the counter is reset.



10.4.3 Setting the pulse value



UK

- ▶ Select [ImPS].
- ▶ Press [Enter] briefly.
- > The currently set value is displayed.
- ▶ Keep [▲] or [▼] pressed until "cccc" is displayed.
- ▶ Press [▲] or [▼] to select the setting range.
- > With each press of the pushbutton the display changes to the next setting range (decimal point shifts and / or LED changes).
- ▶ Press [Enter] to confirm the setting range.
- ▶ Press [▲] or [▼] until the requested numerical value is displayed.
- ▶ Press [Enter] briefly.

Setting ranges:

LED*	Unit	Display	Value	Step increment
3	l	000.1...999.9	0.1...999.9 l	0.1 l
4	m³	0.001...9.999	0.001...9.999 m³	0.001 m³
4	m³	00.01...99.99	0.01...99.99 m³	0.01 990 m³
4	m³	000.1...999.9	0,1...999,9 990 m³	0.1 990 m³
4 + 6	m³ x 10³	0.001...9.999	1...9999 m³	1 m³
4 + 6	m³ x 10³	00.01...99.99	10...99 990 m³	10 m³
4 + 6	m³ x 10³	000.1...999.9	100...999 900 m³	100 m³

* indicator LED → 7 Operating and display elements

10.4.4 Manual counter reset

- ▶ Select [rTo] and set [rES.T].
- > The counter is reset to zero.



10.4.5 Time-controlled counter-reset

▶ Select [rTo] and set the requested value (intervals of hours, days or weeks). > The counter is reset automatically with the value now set.	

10.4.6 Deactivation of the counter reset

▶ Select [rTo] and set [OFF]. > The meter is only reset after overflow (= factory setting).	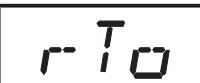

10.4.7 Configure counter reset using an external signal

▶ Select [OU2] and set [InD]. ▶ Select [DIn2] and set the reset signal: - [HIGH] = reset for high signal, - [LOW] = reset for low signal, - [+EDG] = reset for rising edge, - [-EDG] = reset for falling edge.	

10.5 Settings for temperature monitoring

10.5.1 Settings for limit value monitoring with OUT2

▶ Select [SEL2] and set [TEMP]. ▶ Select [OU2] and set the switching function. - [Hno] = hysteresis function/NO, - [Hnc] = hysteresis function/NC, - [Fno] = window function/NO, - [Fnc] = window function/NC. ▶ Select [SP2] and set the value at which the output switches. ▶ Select [rP2] and set the value at which the output switches off.	

10.5.2 Setting the analogue value for temperature

▶ Select [SEL2] and set [TEMP]. ▶ Select [OU2] and set the function: - [I] = temperature-proportional current signal (4…20 mA); - [U] = temperature-proportional voltage signal (0…10 V). ▶ Select [ASP2] and set the value at which the minimum value is provided. ▶ Select [AEP2] and set the value at which the maximum value is provided.	

10.6 User settings (optional)

10.6.1 Setting of the standard unit of measurement for volumetric flow

▶ Select [Uni] and set the unit of measurement: [Lmin] or [m3h]. The setting only has an effect on the volumetric flow value. The counter values (consumed quantity) are automatically displayed in the unit of measurement providing the highest accuracy.	

10.6.2 Configuration of the standard display

▶ Select [SELd] and determine the standard measuring unit: - [FLOW] = the current volumetric flow value in the standard unit of measurement is displayed. - [TOTL] = display indicates the current meter count in l, m^3 or 1000 m^3. - [TEMP] = the current medium temperature in °C is displayed. ▶ Select [diS] and set the update rate and orientation of the display: - [d1] = update of the measured values every 50 ms. - [d2] = update of the measured values every 200 ms. - [d3] = update of the measured values every 600 ms. - [rd1], [rd2], [rd3] = display as for d1, d2, d3; rotated by 180°. - [OFF] = the display is switched off in the operating mode.	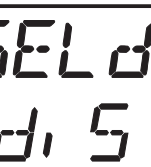

10.6.3 Changing the direction of the flow rate measurement

▶ Select [Fdir] and set the direction of flow: [+] = flow in the direction of the flow arrow (= factory setting) [-] = flow against the flow arrow ▶ label over the arrow	

10.6.4 Setting the output logic

▶ Select [P-n] and set [PnP] or [nPn].	

10.6.5 Setting the start-up delay

▶ Select [dST] and set the numerical value in seconds.	

10.6.6 Setting the measured value damping

▶ Select [dAP] and set the damping constant in seconds (τ value 63 %).	

10.6.7 Setting the error behaviour of the outputs

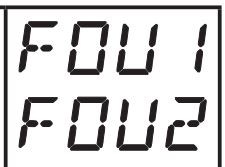

▶ Select [FOU1] and set the value:

1. Switching output:
   - [On] = output 1 switches ON in case of an error.
   - [OFF] = output 1 switches OFF in case of an error.
   - [OU1] = output 1 switches irrespective of the error as defined with the parameters.
2. Frequency output:
   - [On] = 130% of FrEP
   - [OFF] = 0 Hz
   - [OU1] = continues running

▶ Select [FOU2] and set the value:
- [On] = output 2 switches ON in case of an error, the analogue signal goes to the upper error value.
- [OFF] = output 2 switches OFF in case of an error, the analogue signal goes to the lower error value.
- [OU2] = output 2 switches irrespective of the error as defined with the parameters. The analogue signal corresponds to the measured value.

10.6.8 Configuring the empty pipe detection as diagnostic output

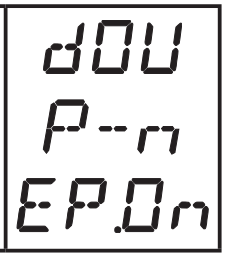

▶ Select [OU1] or [OU2] and set [dOU].
▶ Select [P-n] and set [PnP] or [nPn].

The empty pipe detection is only effective if it is activated at [EP. On] → 10.6.9. When the empty pipe state is detected, the diagnostic output is inactive.

10.6.9 Activating / deactivating empty pipe detection



▶ Select [EP.On] and set the function:
- [OFF] = empty pipe detection deactivated.
- [On] = empty pipe detection activated.

10.6.10 Time-delay empty pipe detection



▶ Select [dEP.E] and set the delay time from 0…30 s, at which the signal should be provided when the pipe is empty.
▶ Select [dEP.F] and set the delay time from 0…30 s, at which the signal should be provided when the pipe is full.

10.6.11 Setting of the empty pipe detection

▶ Select [EP.Pr] to display the current value of the empty pipe detection in percent. ▶ Select [EP.SP] and set the switch point of empty pipe detection.	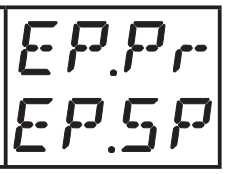

10.6.12 Setting the counting method of the totaliser

▶ Select [FPro] and set the value: [-+] = totalling the volumetric flow values with the correct sign. [0+] = totalling only positive volumetric flow values.	

10.6.13 Setting the low flow cut-off

▶ Select [LFC] and set the limit value.	

10.7 Service functions

10.7.1 Reading the min/max values for the volumetric flow

▶ Select [HI.F] or [LO.F] [HI.F] = max. value, [LO.F] = min. value. Delete memory: ▶ Select [HI.F] or [LO.F]. ▶ Press [Enter] briefly. ▶ Keep [▲] or [▼] pressed. > [----] is displayed. ▶ Press [Enter] briefly. It makes sense to delete the memories as soon as the unit operates under normal operating conditions for the first time.	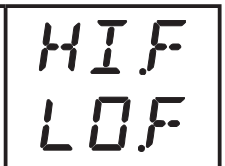

10.7.2 Reading the min/max values for the temperature

▶ Select [HI.T] or [LO.T] [HI.T] = max. value, [LO.T] = min. value. Delete memory: ▶ Select [HI.T] or [LO.T]. ▶ Press [Enter] briefly. ▶ Keep [▲] or [▼] pressed. > [----] is displayed. ▶ Press [Enter] briefly. It makes sense to delete the memories as soon as the unit operates under normal operating conditions for the first time.	

10.7.3 Simulation menu

▶ Select [S.FLW] and set the flow value to be simulated. ▶ Select [S.TMP] and set the temperature value to be simulated. ▶ Select [S.Tim] and set the time of the simulation in minutes. ▶ Select [S.On] and set the function: - [On]: The simulation starts. The values are simulated for the time set at [S.Tim]. [SIM] is displayed simultaneously with the process values. Cancel with [Enter]. - [OFF]: The simulation is not active.	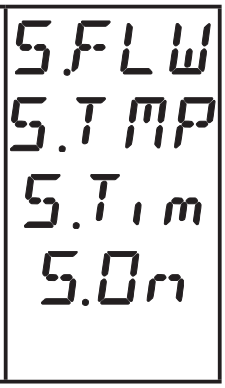

10.7.4 Resetting all parameters to factory setting

▶ Select [rES]. ▶ Press [Enter] briefly. ▶ Keep [▲] or [▼] pressed. > [----] is displayed. ▶ Press [Enter] briefly. For the factory settings please refer to the end of these instructions → 13. We recommend taking down your own settings in that table before carrying out a reset.	

11 Operation

11.1 Reading the process value

The LEDs 1-6 signal which process value is currently displayed.The process value to be displayed as standard (temperature, flow velocity or meter reading of the totaliser) can be preset → 10.6.2 Configuration of the standard display. A standard unit of measurement can be defined for the flow velocity (l/min or m^3/h → 10.6.1).

Further process values can be read in addition to the preset standard display:

▶ Press the buttons [▲] or [▼].

> The LED of the selected process value display is lit and the current process value is displayed.

> After 30 seconds the display changes to the standard display.

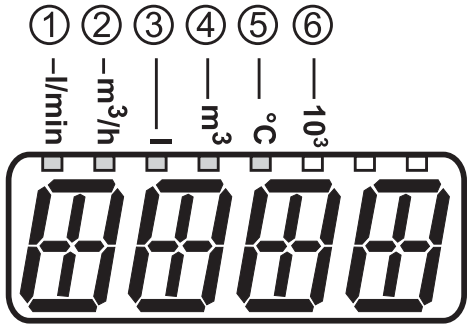

LED			Process value display	Unit
1	□		Current flow volume per minute	l/min
2	□		Current flow volume per hour	m^3 / h
3	□	Totaliser *	Current consumed quantity since the last reset	l
3	⌸		Consumed quantity before the last reset	L
4	□		Current consumed quantity since the last reset	m^3
4	⌸		Consumed quantity before the last reset	m^3
4 + 6	□		Current consumed quantity since the last reset	m^3 x 10^3
4 + 6	⌸		Consumed quantity before the last reset	m^3 x 10^3
5	□		Current medium temperature	°C

□ LED is lit; ⌸ LED flashes

* The consumed quantity is automatically displayed in the unit of measurement providing the highest accuracy.

11.2 Reading the parameter value

To display the currently set parameter value, take the following steps:

Select the parameter

1. Press [Enter] briefly.
2. Press [▲] or [▼] until the requested parameter is displayed**.**

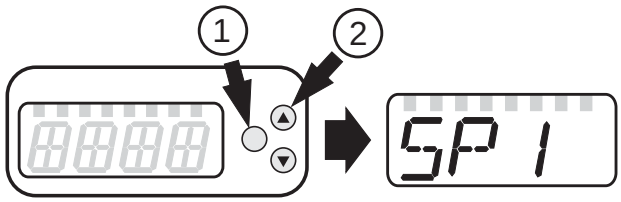

Display the parameter value

3. Press [Enter] briefly.

> The currently set value is displayed for 30 s.

By pressing [Enter] briefly several times, the display switches between parameter and parameter value.

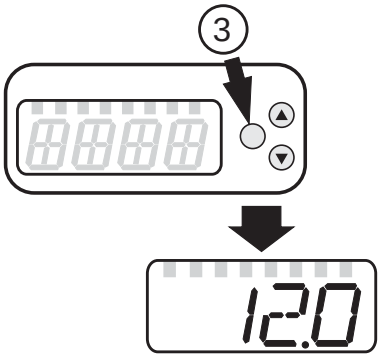

Switching to the process value display

▶ Wait for 30 seconds

or

▶ Change from the submenu to the main menu, from the main menu to the process value display with [▲] or [▼].

11.3 Error indications

	Warning message
[SC1]	Short circuit in OUT1. LED8 for OUT1 flashes (→ 7 Operating and display elements).
[SC2]	Short circuit in OUT2. LED7 for OUT2 flashes (→ 7 Operating and display elements).
[SC]	Short circuit in both outputs. LED7 and LED8 flash (→ 7 Operating and display elements).
[OL]	Detection zone of volumetric flow or temperature exceeded. Measured value between 120 % and 130 % of the final value of the measuring range.
[UL]	Below the detection zone of volumetric flow or temperature. Measured value between -120 % and -130 % of the final value of the measuring range.
[Err]	• Unit faulty / malfunction. • Measured value greater than 130 % of the final value of the measuring range. • Measured value lower than -130 % of the final value of the measuring range.
[C.Loc]	Setting pushbuttons locked, parameter change rejected. Active IO-Link communication.
[S.Loc]	Setting pushbuttons locked, parameter change rejected. Unlock using parameter setting software.
[SEnS]	• Sensor signal invalid. • Measuring pipe not sufficiently filled. • Medium with too low a conductivity.
[IOE.n]	Malfunctioning. The unit is faulty and must be replaced.

12 Technical data

Technical data and scale drawing at www.ifm.com.

13 Factory setting

	Factory setting	User setting
SP1	20 % *	
rP1	19.5 % *	
ImPS	0.1	
ImPR	YES	
OU1	Hno	
OU2	I	
SP2 (FLOW)	40 % *	
rP2 (FLOW)	39.5 % *	
SP2 (TEMP)	20 °C	
rP2 (TEMP)	-19.6 °C	
ASP2 (FLOW)	0 % *	
AEP2 (FLOW)	100 % *	
ASP2 (TEMP)	-20 °C	
AEP2 (TEMP)	80 °C	
FEP	100 % *	
FrEP	1 kHz	
FDir	+	
FPro	- +	
LFC	5 l/min	
DIn2	+EDG	
FOU1	OFF	
FOU2	OFF	
dST	0	
P-n	PnP	
dAP	0.6 s	
rTo	OFF	
diS	d2	

Uni	**Lmin**	
SELd	**FLOW**	
SEL2	**FLOW**	
EP.On	**OFF**	
dEP.E	**0 s**	
dEP.F	**2 s**	
EP.SP	**75 %**	
S.FLW	**20 %**	
S.TMP	**20 °C**	
S.Tim	**3 min**	

* of the final value of the measuring range

BA00082D/06/EN/16.15
71280120

Valid as of software version
V 1.04.00 (device software)

FT-102/2 - Flow meter, Endress, Promag 10D50 2"10D50-4LGA1RA0B4AAM1 Compact head

Operating Instructions
Proline Promag 10
HART

Electromagnetic flowmeter

HART®
FIELD COMMUNICATION PROTOCOL

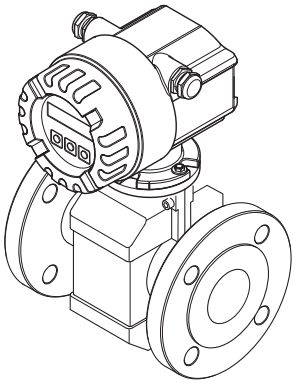
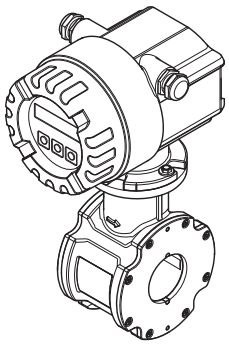
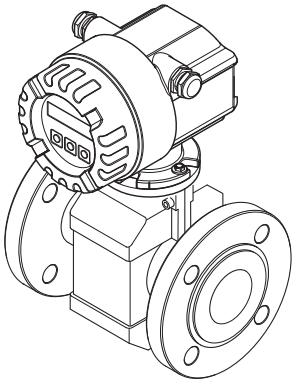
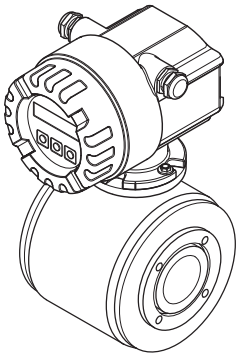

Endress+Hauser
People for Process Automation

E-381

Table of contents

1 Safety instructions 4

1.1 Designated use 4
1.2 Installation, commissioning and operation 4
1.3 Operational safety 4
1.4 Return 5
1.5 Notes on safety conventions and icons 5

2 Identification 6

2.1 Device designation 6
2.2 Certificates and approvals 8
2.3 Registered trademarks 8

3 Installation 9

3.1 Incoming acceptance, transport and storage 9
3.2 Installation conditions 11
3.3 Installation instructions 19
3.4 Post-installation check 41

4 Wiring 42

4.1 Connecting the remote version 42
4.2 Connecting the measuring unit 48
4.3 Potential equalization 50
4.4 Degree of protection 53
4.5 Post-connection check 54

5 Operation 55

5.1 Display and operating elements 55
5.2 Brief operating instructions on the function matrix 56
5.3 Displaying error messages 58
5.4 Communication 59

6 Commissioning 66

6.1 Function check 66
6.2 Switching on the measuring device 66
6.3 Brief commissioning guide 66
6.4 Commissioning after installing a new electronics board 67
6.5 Empty-pipe/full-pipe adjustment 68

7 Maintenance 69

7.1 Exterior cleaning 69
7.2 Seals 69

8 Accessories 70

8.1 Device-specific accessories 70
8.2 Measuring principle-specific accessories 70
8.3 Communication-specific accessories 71
8.4 Service-specific accessories 72

9 Troubleshooting 73

9.1 Troubleshooting instructions 73
9.2 System error messages 74
9.3 Process error messages 76
9.4 Process errors without messages 76
9.5 Response of outputs to errors 77
9.6 Spare parts 78
9.7 Return 82
9.8 Disposal 82
9.9 Software history 82

10 Technical data 83

10.1 Technical data at a glance 83

11 Appendix 108

11.1 Illustration of the function matrix 108
11.2 Group SYSTEM UNITS 109
11.3 Group OPERATION 111
11.4 USER INTERFACE 112
11.5 Group TOTALIZER 113
11.6 Group CURRENT OUTPUT 114
11.7 Group PULSE/STATUS OUTPUT 116
11.8 Group COMMUNICATION 121
11.9 Group PROCESS PARAMETER 122
11.10 Group SYSTEM PARAMETER 124
11.11 Group SENSOR DATA 127
11.12 Group SUPERVISION 129
11.13 Group SIMULATION SYSTEM 131
11.14 Group SENSOR VERSION 131
11.15 Group AMPLIFIER VERSION 131
11.16 Factory settings 132

Index 135

1 Safety instructions

1.1 Designated use

The measuring device described in this Operating Manual is to be used only for measuring the flow rate of conductive fluids in closed pipes.

Most liquids can be measured as of a minimum conductivity of 50 µS/cm.

Examples:
- Acids, alkalis
- Drinking water, wastewater, sewage sludge
- Milk, beer, wine, mineral water, etc.

Resulting from incorrect use or from use other than that designated the operational safety of the measuring devices can be suspended. The manufacturer accepts no liability for damages being produced from this.

1.2 Installation, commissioning and operation

Please note the following:
- Installation, connection to the electricity supply, commissioning and maintenance of the device must be carried out by trained, qualified specialists authorized to perform such work by the facility's owner-operator. The specialist must have read and understood this Operating Manual and must follow the instructions it contains.
- The device must be operated by persons authorized and trained by the facility's owner-operator. Strict compliance with the instructions in the Operating Manual is mandatory.
- With regard to special fluids, including fluids used for cleaning, Endress+Hauser will be happy to assist in clarifying the corrosion-resistant properties of wetted materials. However, minor changes in temperature, concentration or in the degree of contamination in the process may result in variations in corrosion resistance. For this reason, Endress+Hauser does not accept any responsibility with regard to the corrosion resistance of wetted materials in a specific application.
  The user is responsible for the choice of suitable wetted materials in the process.
- If welding work is performed on the piping system, do not ground the welding appliance through the Promag flowmeter.
- The installer must ensure that the measuring system is correctly wired in accordance with the wiring diagrams. The transmitter must be grounded apart from when special protective measures are taken (e.g. galvanically isolated SELV or PELV power supply)
- Invariably, local regulations governing the opening and repair of electrical devices apply.

1.3 Operational safety

Please note the following:
- Measuring systems for use in hazardous environments are accompanied by separate Ex documentation, which is an integral part of this Operating Manual. Strict compliance with the installation instructions and ratings as stated in this supplementary documentation is mandatory. The symbol on the front of this Ex documentation indicates the approval and the certification body (e.g. Ex Europe, FM USA, CSA Canada).
- The measuring device complies with the general safety requirements in accordance with EN 61010-1, the EMC requirements of IEC/EN 61326 and NAMUR Recommendations NE 21 and NE 43.
- Depending on the application, the seals of the process connections of the Promag H sensor require periodic replacement.
- When hot fluid passes through the measuring tube, the surface temperature of the housing increases. In the case of the sensor, in particular, users should expect temperatures that can be close to the fluid temperature. If the temperature of the fluid is high, implement sufficient measures to prevent burning or scalding.

- The manufacturer reserves the right to modify technical data without prior notice. Your Endress+Hauser distributor will supply you with current information and updates to these Operating Instructions.

1.4 Return

The measuring device must be returned if repairs or a factory calibration are required, or if the wrong measuring device has been ordered or delivered. According to legal regulations, Endress+Hauser, as an ISO-certified company, is required to follow certain procedures when handling returned products that are in contact with medium.

To ensure swift, safe and professional device returns, please read the return procedures and conditions on the Endress+Hauser website at www.services.endress.com/return-material

1.5 Notes on safety conventions and icons

The devices are designed to meet state-of-the-art safety requirements, have been tested, and left the factory in a condition in which they are safe to operate. The devices comply with the applicable standards and regulations in accordance with EN 61010-1 "Safety requirements for electrical equipment for measurement, control and laboratory use".
The devices can, however, be a source of danger if used incorrectly or for anything other than the designated use. Consequently, always pay particular attention to the safety instructions indicated in this Operating Manual by the following icons:



Warning!
"Warning" indicates an action or procedure which, if not performed correctly, can result in injury or a safety hazard. Comply strictly with the instructions and proceed with care.



Caution!
"Caution" indicates an action or procedure which, if not performed correctly, can result in incorrect operation or destruction of the device. Comply strictly with the instructions.



Note!
"Note" indicates an action or procedure which, if not performed correctly, can have an indirect effect on operation or trigger an unexpected response on the part of the device.

2 Identification

2.1 Device designation

The flow measuring system consists of the following components:

- Promag 10 transmitter
- Promag D/E/H/L/P/W sensor

In the *compact version*, the transmitter and sensor form a single mechanical unit; in the *remote version* they are installed separately.

2.1.1 Nameplate of the transmitter

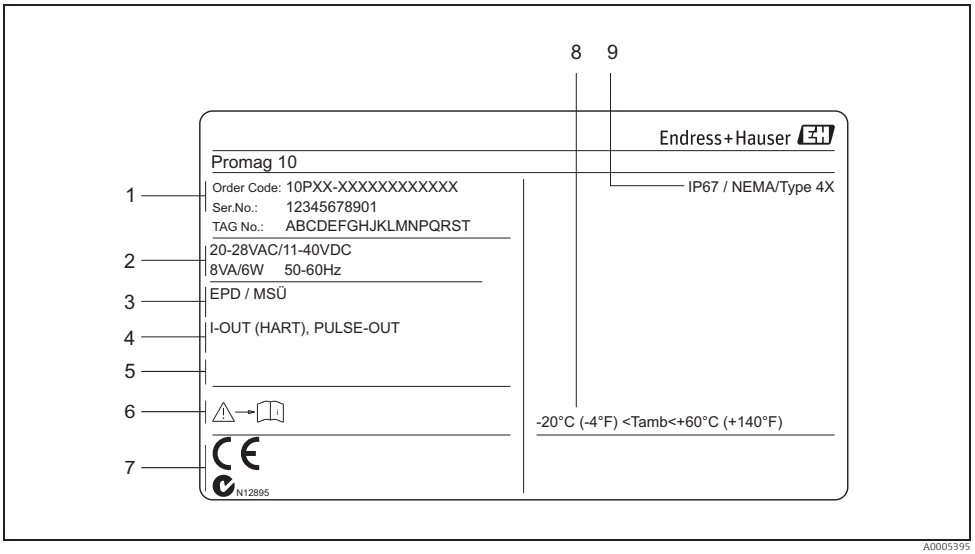

Fig. 1: Nameplate specifications for the "Promag 10" transmitter (example)

1 Ordering code/serial number: See the specifications on the order confirmation for the meanings of the individual letters and digits.
2 Power supply, frequency, power consumption
3 Additional information:
EPD/MSÜ: with Empty Pipe Detection
4 Outputs available:
I-OUT (HART): with current output (HART)
PULSE-OUT: with pulse/status output
5 Reserved for information on special products
6 Observe device documentation
7 Reserved for additional information on device version (approvals, certificates)
8 Permitted ambient temperature range
9 Degree of protection

2.1.2 Nameplate of the sensor

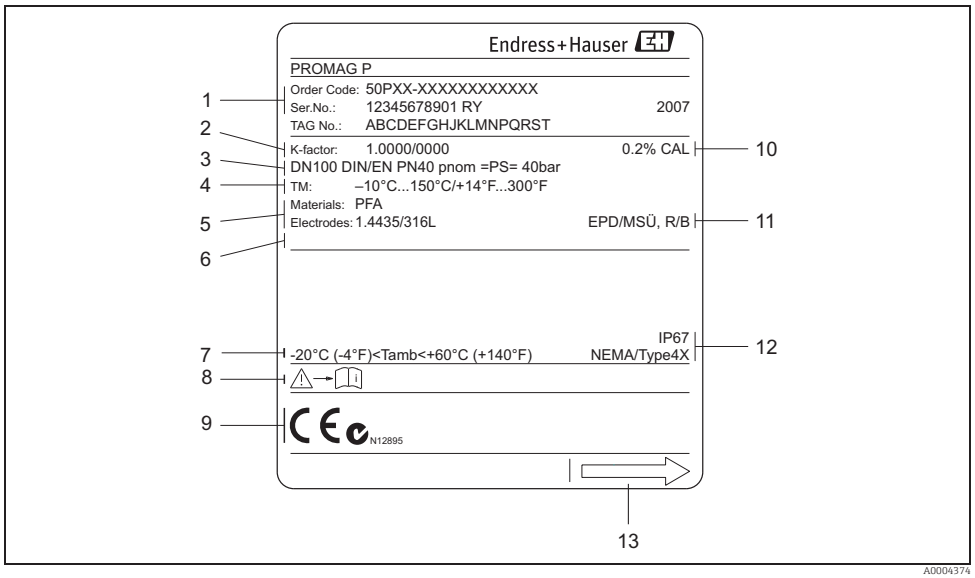

Fig. 2: Nameplate specifications for the "Promag" sensor (example)

1 *Ordering code/serial number: See the specifications on the order confirmation for the meanings of the individual letters and digits.*
2 *Calibration factor with zero point*
3 *Nominal diameter/Pressure rating*
4 *Fluid temperature range*
5 *Materials: lining/measuring electrodes*
6 *Reserved for information on special products*
7 *Permitted ambient temperature range*
8 *Observe device documentation*
9 *Reserved for additional information on device version (approvals, certificates)*
10 *Calibration tolerance*
11 *Additional information (examples):*
- *EPD/MSÜ: with Empty Pipe Detection electrode*
- *R/B: with reference electrode*

12 *Degree of protection*
13 *Flow direction*

2.1.3 Nameplate, connections

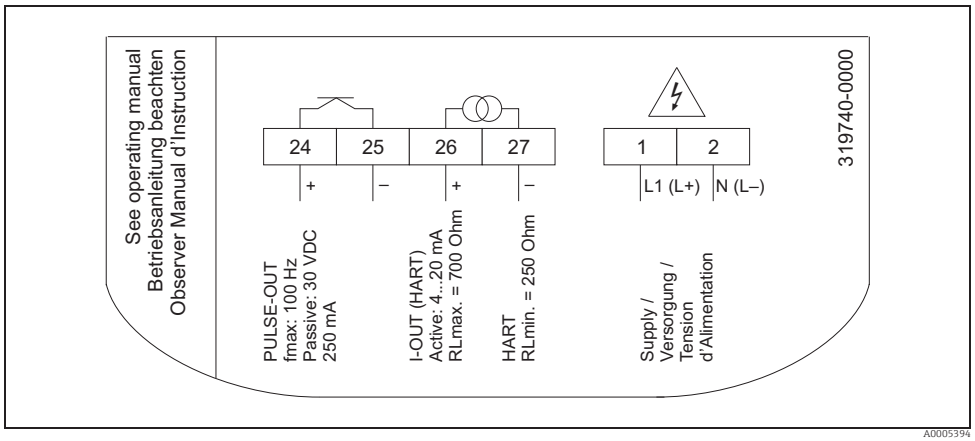

Fig. 3: Nameplate specifications for transmitter (example)

2.2 Certificates and approvals

The devices are designed to meet state-of-the-art safety requirements in accordance with sound engineering practice. They have been tested and left the factory in a condition in which they are safe to operate.

The devices comply with the applicable standards and regulations in accordance with EN 61010-1 "Safety requirements for electrical equipment for measurement, control and laboratory use" and with the EMC requirements of IEC/EN 61326.

The measuring system described in this Operating Manual is therefore in conformity with the statutory requirements of the EC Directives. Endress+Hauser confirms successful testing of the device by affixing to it the CE mark.

The measuring system meets the EMC requirements of the "Australian Communications and Media Authority (ACMA)".

2.3 Registered trademarks

KALREZ® and VITON®
Registered trademarks of E.I. Du Pont de Nemours & Co., Wilmington, USA

TRI-CLAMP®
Registered trademark of Ladish & Co., Inc., Kenosha, USA

HART®
Registered trademark of the HART Communication Foundation, Austin, USA

FieldCare®, Fieldcheck®, Applicator®
Registered or registration-pending trademarks of Endress+Hauser Flowtec AG, Reinach, CH

3 Installation

3.1 Incoming acceptance, transport and storage

3.1.1 Incoming acceptance

On receipt of the goods, check the following:
- Check the packaging and the contents for damage.
- Check the shipment, make sure nothing is missing and that the scope of supply matches your order.

3.1.2 Transport

The following instructions apply to unpacking and to transporting the device to its final location:
- Transport the devices in the containers in which they are delivered.
- Do not remove the protective plates or caps on the process connections until you are ready to install the device. This is particularly important in the case of sensors with PTFE linings.

Special notes on flanged devices

Caution!
- The wooden covers mounted on the flanges from the factory protect the linings on the flanges during storage and transportation. In case of Promag L they are additionally used to hold the lap joint flanges in place. Do not remove these covers until immediately before the device in the pipe.
- Do not lift flanged devices by the transmitter housing, or the connection housing in the case of the remote version.

Transporting flanged devices DN ≤ 300 (12")

Use webbing slings slung round the two process connections.
Do not use chains, as they could damage the housing.

Warning!
Risk of injury if the measuring device slips. The center of gravity of the assembled measuring device might be higher than the points around which the slings are slung.
At all times, therefore, make sure that the device does not unexpectedly turn around its axis or slip.

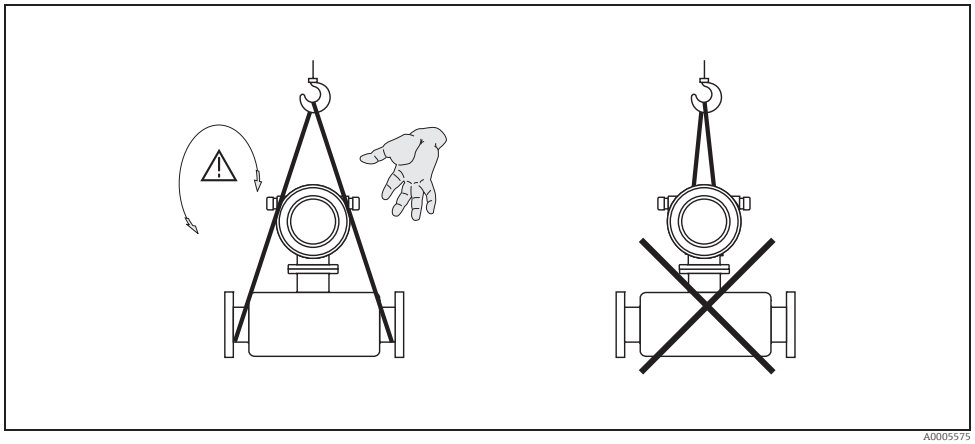

Fig. 4: Transporting sensors with DN ≤ 300 (12")

Transporting flanged devices DN ≥ 350 (14")

Use only the metal eyes on the flanges for transporting the device, lifting it and positioning the sensor in the piping.

Caution!
Do not attempt to lift the sensor with the tines of a fork-lift truck beneath the metal casing. This would buckle the casing and damage the internal magnetic coils.

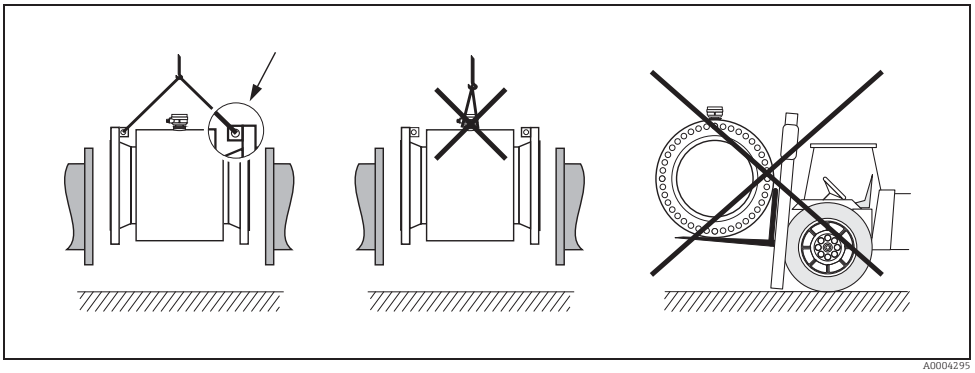

Fig. 5: Transporting sensors with DN ≥ 350 (14")

3.1.3 Storage

Please note the following:
- Pack the measuring device in such a way as to protect it reliably against impact for storage (and transportation). The original packaging provides optimum protection.
- The storage temperature corresponds to the operating temperature range of the measuring transmitter and the appropriate measuring sensors → 86.
- Do not remove the protective plates or caps on the process connections until you are ready to install the device. This is particularly important in the case of sensors with PTFE linings.
- The measuring device must be protected against direct sunlight during storage in order to avoid unacceptably high surface temperatures.
- Choose a storage location where moisture does not collect in the measuring device. This will help prevent fungus and bacteria infestation which can damage the liner.

3.2 Installation conditions

3.2.1 Dimensions

The dimensions and installation lengths of the sensor and transmitter can be found in the "Technical Information" for the device in question. This document can be downloaded as a PDF file from www.endress.com. A list of the "Technical Information" documents available is provided in the "Documentation" section on → 🖹 107.

3.2.2 Mounting location

Entrained air or gas bubble formation in the measuring tube can result in an increase in measuring errors.
Avoid the following locations:
- Highest point of a pipeline. Risk of air accumulating!
- Directly upstream from a free pipe outlet in a vertical pipeline.

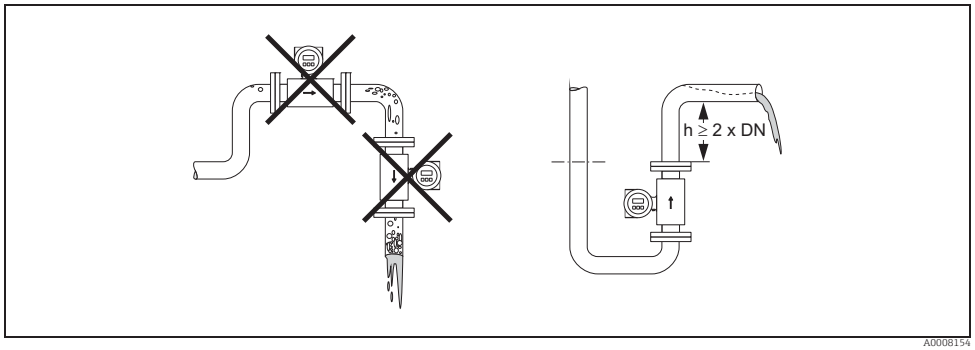

Fig. 6: Mounting location

Installation of pumps

Do not install the sensor on the intake side of a pump. This precaution is to avoid low pressure and the consequent risk of damage to the lining of the measuring tube. Information on the lining's resistance to partial vacuum can be found on → 🖹 90.

It might be necessary to install pulse dampers in systems incorporating reciprocating, diaphragm or peristaltic pumps. Information on the measuring system's resistance to vibration and shock can be found on → 🖹 87.

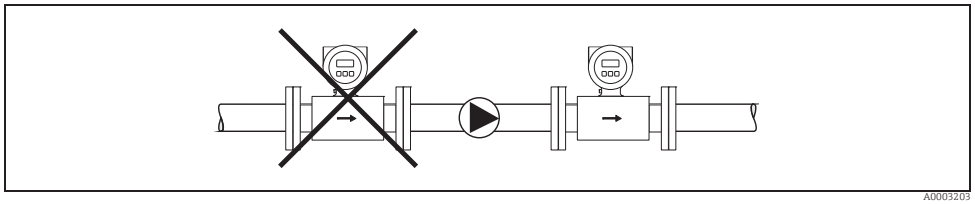

Fig. 7: Installation of pumps

Partially filled pipes

Partially filled pipes with gradients necessitate a drain-type configuration.
The Empty Pipe Detection function (EPD → 📄 68) offers additional protection by detecting empty or partially filled pipes.

Caution!
Risk of solids accumulating. Do not install the sensor at the lowest point in the drain. It is advisable to install a cleaning valve.

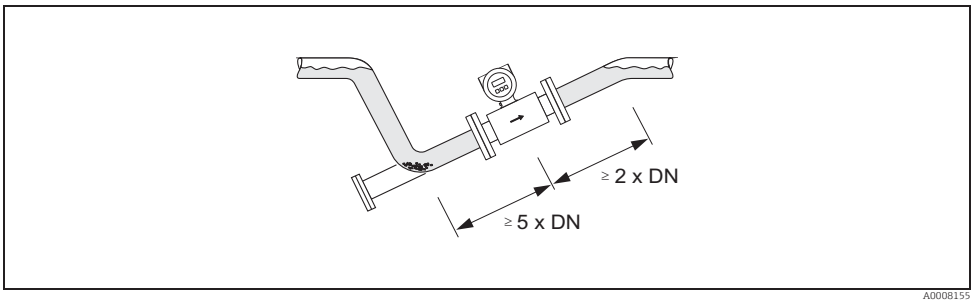

Fig. 8: Installation in a partially filled pipe

Down pipes

Install a siphon or a vent valve downstream of the sensor in down pipes whose length h ≥ 5 m (16.4 ft). This precaution is to avoid low pressure and the consequent risk of damage to the lining of the measuring tube.
This measure also prevents the system losing prime, which could cause air pockets.
Information on the lining's resistance to partial vacuum can be found on → 📄 90.

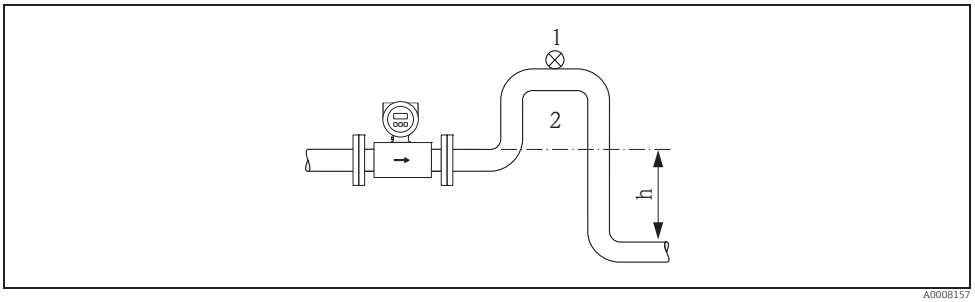

Fig. 9: Measures for installation in a down pipe

1 Vent valve
2 Pipe siphon
h Length of down pipe

3.2.3 Orientation

An optimum orientation position helps avoid gas and air accumulations and deposits in the measuring tube. However, Promag offers the additional Empty Pipe Detection (EPD) function to ensure the detection of partially filled measuring tubes, e.g. in the case of degassing fluids or varying process pressure.

Vertical orientation

This is the ideal orientation for self-emptying piping systems and for use in conjunction with Empty Pipe Detection.

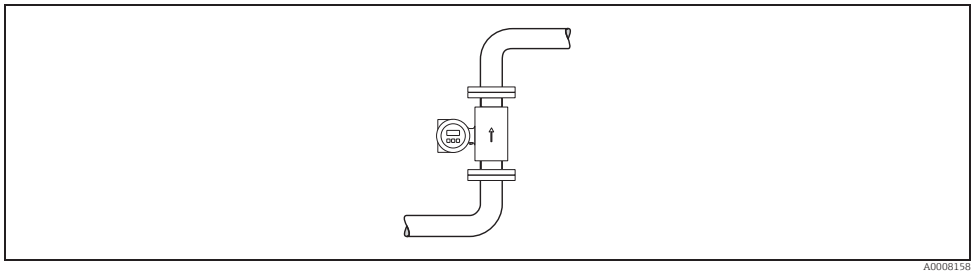

Fig. 10: Vertical orientation

Horizontal orientation

The measuring electrode plane should be horizontal. This prevents brief insulation of the two measuring electrodes by entrained air bubbles.

Caution!
Empty Pipe Detection functions correctly only when the measuring device is installed horizontally and the transmitter housing is facing upward (→ 10). Otherwise there is no guarantee that Empty Pipe Detection will respond if the measuring tube is only partially filled or empty.

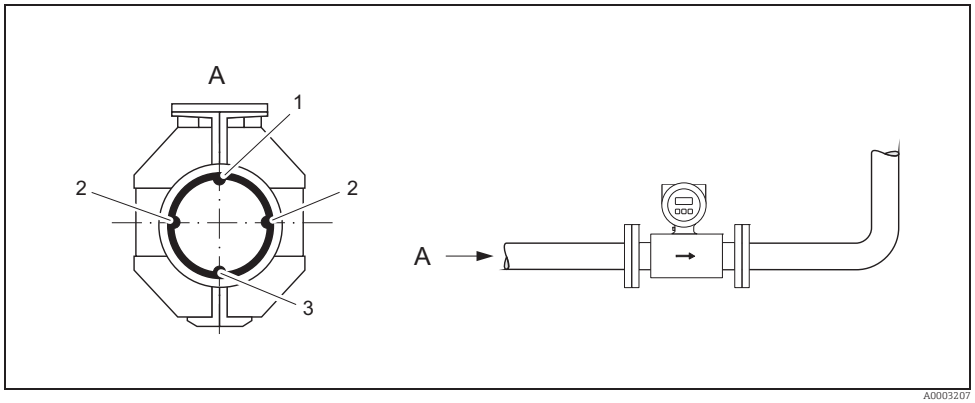

Fig. 11: Horizontal orientation

1 EPD electrode for the detection of empty pipes (not with Promag D and Promag H (DN 2 to 15 / 1/12 to ½"))
2 Measuring electrodes for signal detection
3 Reference electrode for the potential equalization (not with Promag D and H)

Inlet and outlet run

If possible, install the sensor upstream from fittings such as valves, T-pieces, elbows, etc.

The following inlet and outlet runs must be observed in order to meet accuracy specifications:
- Inlet run: ≥ 5 × DN
- Outlet run: ≥ 2 × DN

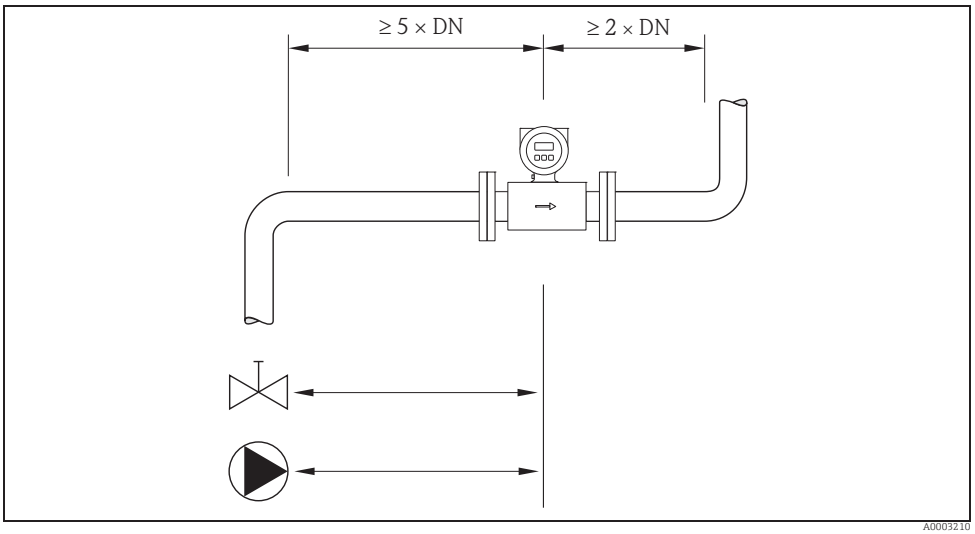

Fig. 12: Inlet and outlet runs

3.2.4 Vibrations

Secure the piping and the sensor if vibration is severe.

Caution!
If vibrations are too severe, we recommend the sensor and transmitter be mounted separately. Information on resistance to vibration and shock can be found on → 87.

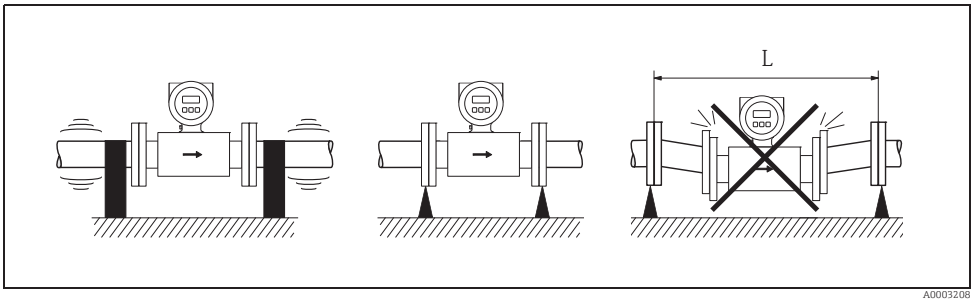

Fig. 13: Measures to prevent vibration of the device (L > 10 m (32.8 ft))

3.2.5 Foundations, supports

If the nominal diameter is DN ≥ 350 (14"), mount the sensor on a foundation of adequate load-bearing strength.

Caution!
Risk of damage.
Do not support the weight of the sensor on the metal casing: the casing would buckle and damage the internal magnetic coils.

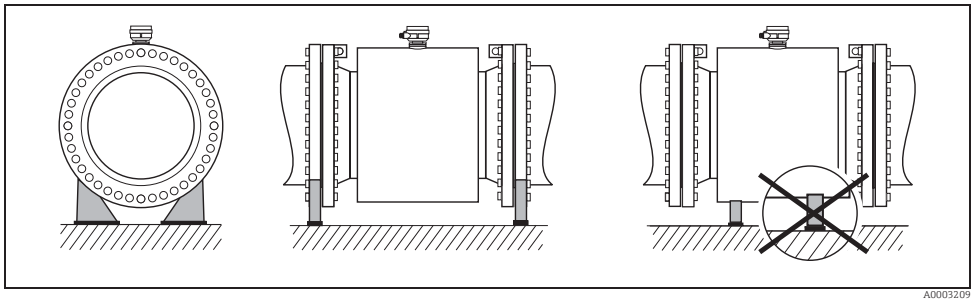

Fig. 14: Correct support for large nominal diameters (DN ≥ 350 / 14")

3.2.6 Adapters

Suitable adapters to DIN EN 545 (double-flange reducers) can be used to install the sensor in larger-diameter pipes.
The resultant increase in the rate of flow improves measuring accuracy with very slow-moving fluids. The nomogram shown here can be used to calculate the pressure loss caused by reducers and expanders.

Note!
The nomogram only applies to liquids of viscosity similar to water.

1. Calculate the ratio of the diameters d/D.
2. From the nomogram read off the pressure loss as a function of flow velocity (*downstream* from the reduction) and the d/D ratio.

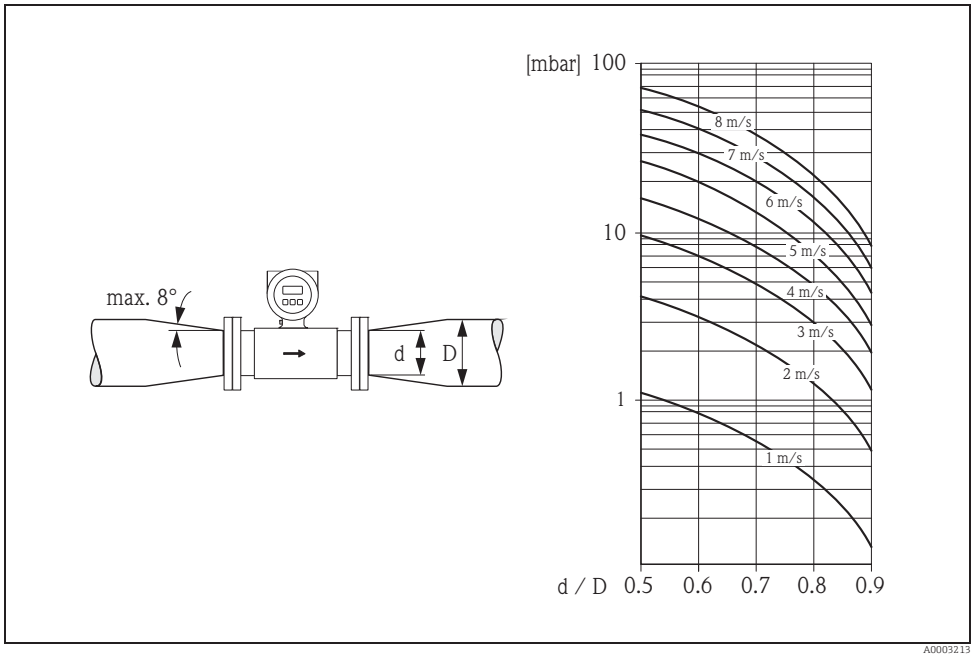

Fig. 15: Pressure loss due to adapters

3.2.7 Nominal diameter and flow rate

The diameter of the pipe and the flow rate determine the nominal diameter of the sensor. The optimum velocity of flow is between 2 and 3 m/s (6.5 to 9.8 ft/s)

The velocity of flow (v), moreover, has to be matched to the physical properties of the fluid:
- v < 2 m/s (6.5 ft/s): for abrasive fluids
- v > 2 m/s (6.5 ft/s): for fluids producing buildup



Note!
Flow velocity can be increased, if necessary, by reducing the nominal diameter of the sensor (→ 15).

Recommended flow (SI units)

Nominal diameter	Promag D	Promag E/P	Promag H	Promag L	Promag W
[mm]	Min./max. full scale value (v ≈ 0.3 or 10 m/s) in [dm³/min]				
2	–	–	0.06 to 1.8	–	–
4	–	–	0.25 to 7	–	–
8	–	–	1 to 30	–	–
15	–	4 to 100	4 to 100	–	–
25	9 to 300	9 to 300	9 to 300	9 to 300	9 to 300
32	–	15 to 500	–	15 to 500	15 to 500
40	25 to 700	25 to 700	25 to 700	25 to 700	25 to 700
50	35 to 1100	35 to 1100	35 to 1100	35 to 1100	35 to 1100
65	60 to 2000	60 to 2000	60 to 2000	60 to 2000	60 to 2000
80	90 to 3000	90 to 3000	90 to 3000	90 to 3000	90 to 3000
100	145 to 4700	145 to 4700	145 to 4700	145 to 4700	145 to 4700
125	–	220 to 7500	–	220 to 7500	220 to 7500
[mm]	Min./max. full scale value (v ≈ 0.3 or 10 m/s) in [m³/h]				
150	–	20 to 600	–	20 to 600	20 to 600
200	–	35 to 1100	–	35 to 1100	35 to 1100
250	–	55 to 1700	–	55 to 1700	55 to 1700
300	–	80 to 2400	–	80 to 2400	80 to 2400
350	–	110 to 3300	–	110 to 3300	110 to 3300
375	–	–	–	140 to 4200	140 to 4200
400	–	140 to 4200	–	140 to 4200	140 to 4200
450	–	180 to 5400	–	180 to 5400	180 to 5400
500	–	220 to 6600	–	220 to 6600	220 to 6600
600	–	310 to 9600	–	310 to 9600	310 to 9600
700	–	–	–	420 to 13500	420 to 13500
750	–	–	–	480 to 15200	480 to 15200
800	–	–	–	550 to 18000	550 to 18000
900	–	–	–	690 to 22500	690 to 22500
1000	–	–	–	850 to 28000	850 to 28000
1050	–	–	–	950 to 40000	950 to 40000
1200	–	–	–	1250 to 40000	1250 to 40000
1400	–	–	–	–	1700 to 55000
1600	–	–	–	–	2200 to 70000
1800	–	–	–	–	2800 to 90000
2000	–	–	–	–	3400 to 110000

Recommended flow (US units)

Nominal diameter	Promag D	Promag E/P	Promag H	Promag L	Promag W
[inch]	Min./max. full scale value (v ≈ 0.3 or 10 m/s) in [gal/min]				
1/12"	–	–	0.015 to 0.5	–	–
1/8"	–	–	0.07 to 2	–	–
8"	–	–	0.25 to 8	–	–
½"	–	1.0 to 27	1.0 to 27	–	–
1"	2.5 to 80	2.5 to 80	2.5 to 80	2.5 to 80	2.5 to 80
1 ¼"	–	4 to 130	–	–	4 to 130
1 ½"	7 to 190	7 to 190	7 to 190	7 to 190	7 to 190
2"	10 to 300	10 to 300	10 to 300	10 to 300	10 to 300
2 ½"	16 to 500	16 to 500	16 to 500	16 to 500	16 to 500
3"	24 to 800	24 to 800	24 to 800	24 to 800	24 to 800
4"	40 to 1250	40 to 1250	40 to 1250	40 to 1250	40 to 1250
5"	–	60 to 1950	–	60 to 1950	60 to 1950
6"	–	90 to 2650	–	90 to 2650	90 to 2650
8"	–	155 to 4850	–	155 to 4850	155 to 4850
10"	–	250 to 7500	–	250 to 7500	250 to 7500
12"	–	350 to 10600	–	350 to 10600	350 to 10600
14"	–	500 to 15000	–	500 to 15000	500 to 15000
15"	–	–	–	600 to 19000	600 to 19000
16"	–	600 to 19000	–	600 to 19000	600 to 19000
18"	–	800 to 24000	–	800 to 24000	800 to 24000
20"	–	1000 to 30000	–	1000 to 30000	1000 to 30000
24"	–	1400 to 44000	–	1400 to 44000	1400 to 44000
28"	–	–	–	1900 to 60000	1900 to 60000
30"	–	–	–	2150 to 67000	2150 to 67000
32"	–	–	–	2450 to 80000	2450 to 80000
36"	–	–	–	3100 to 100000	3100 to 100000
40"	–	–	–	3800 to 125000	3800 to 125000
42"	–	–	–	4200 to 135000	4200 to 135000
48"	–	–	–	5500 to 175000	5500 to 175000
[inch]	Min./max. full scale value (v ≈ 0.3 or 10 m/s) in [Mgal/d]				
54"	–	–	–	–	9 to 300
60"	–	–	–	–	12 to 380
66"	–	–	–	–	14 to 500
72"	–	–	–	–	16 to 570
78"	–	–	–	–	18 to 650

3.2.8 Length of connecting cable

In order to ensure measuring accuracy, comply with the following instructions when installing the remote version:

- Fix cable run or lay in armored conduit. Cable movements can falsify the measuring signal especially in the case of low fluid conductivities.
- Route the cable well clear of electrical machines and switching elements.
- Ensure potential equalization between sensor and transmitter, if necessary.
- The permitted connecting cable length L_{max} is determined by the fluid conductivity (→ 16). A minimum conductivity of 50 µS/cm is needed for all fluids.
- The maximum connecting cable length is 10 m (33 ft) when empty pipe detection (EPD → 68) is switched on.

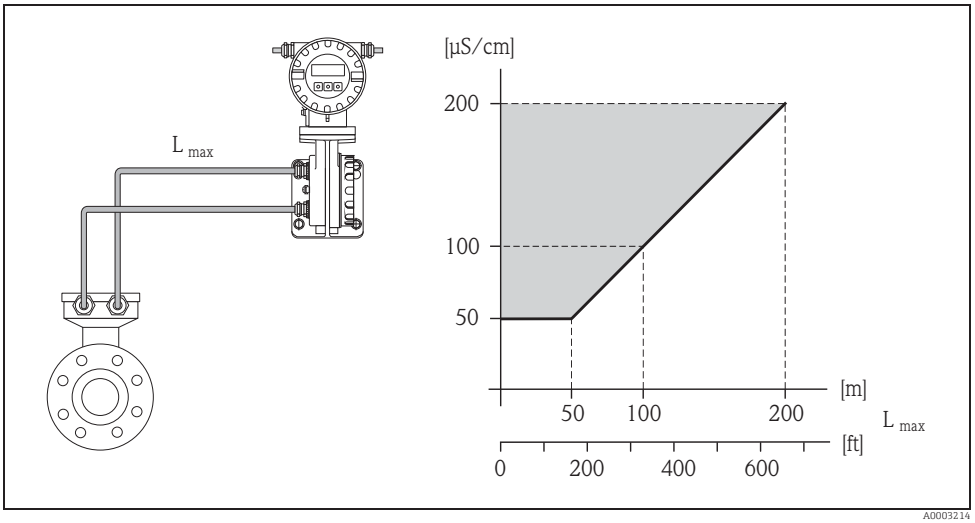

Fig. 16: Permissible cable length for the remote version

Area shaded gray = permitted range
Lmax = connecting cable length in [m]
Fluid conductivity in [µS/cm]

3.3 Installation instructions

3.3.1 Installing the Promag D sensor

The sensor is installed between the pipe flanges with a mounting kit. The device is centered using recesses on the sensor (→ 20).

Note!
A mounting kit consisting of mounting bolts, seals, nuts and washers can be ordered separately (→ 70). Centering sleeves are provided with the device if they are required for the installation.

Caution!
When installing the transmitter in the pipe, observe the necessary torques (→ 21).

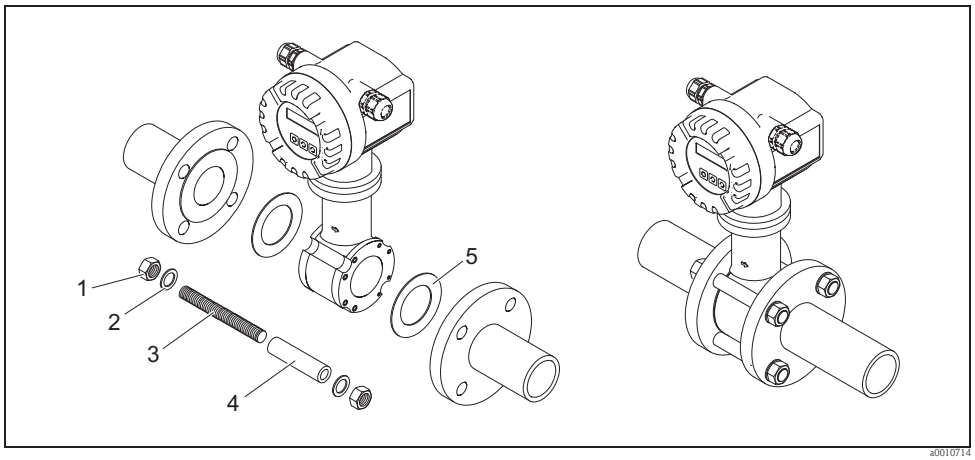

Fig. 17: Mounting the sensor

1 Nut
2 Washer
3 Mounting bolt
4 Centering sleeve
5 Seal

Seals

When installing the sensor, make sure that the seals used do not project into the pipe cross-section.

Caution!
Risk of short circuit! Do not use electrically conductive sealing compounds such as graphite! An electrically conductive layer could form on the inside of the measuring tube and short-circuit the measuring signal.

Note!
Use seals with a hardness rating of 70° Shore A.

Arrangement of the mounting bolts and centering sleeves

The device is centered using recesses on the sensor. The arrangement of the mounting bolts and the use of the centering sleeves supplied depend on the nominal diameter, the flange standard und the pitch circle diameter.

	Process connection		
	EN (DIN)	ASME	JIS
DN 25 to 40 (1 to 1 ½")	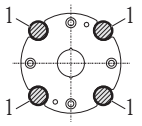 A0010896	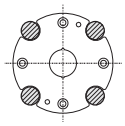 A0010824	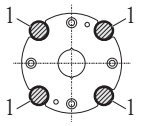 A0010896
DN 50 (2")	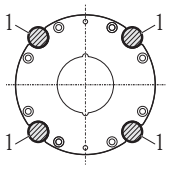 A0010897	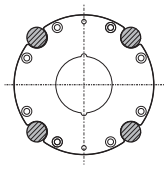 A0010825	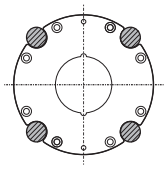 A0010825
DN 65 (–)	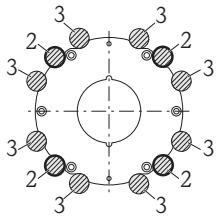 A0012170	–	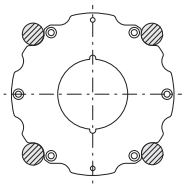 A0012171
DN 80 (3")	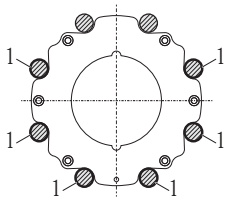 A0010898	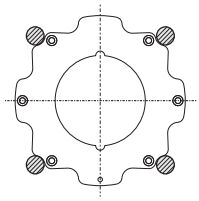 A0010827	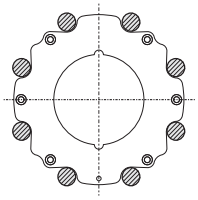 A0010826
DN 100 (4")	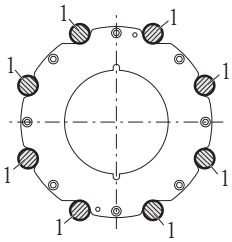 A0012168	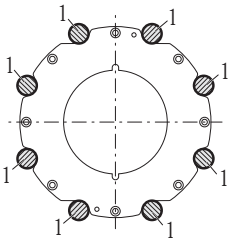 A0012168	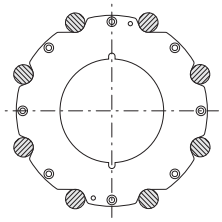 A0012169

1 = Mounting bolts with centering sleeves
2 = EN (DIN) flanges: 4-hole → with centering sleeves
3 = EN (DIN) flanges: 8-hole → without centering sleeves

Screw tightening torques (Promag D)

Please note the following:
- The tightening torques listed below are for lubricated threads only.
- Always tighten the screws uniformly and in diagonally opposite sequence.
- Overtightening the screws will deform the sealing faces or damage the seals.
- The tightening torques listed below apply only to pipes not subjected to tensile stress.

The tightening torques apply to situations where an EPDM soft material flat seal (e.g. 70° Shore A) is used.

Tightening torques, mounting bolts and centering sleeves for EN (DIN) PN 16

Nominal diameter [mm]	Mounting bolts [mm]	Centering sleeve length [mm]	Tightening torque [Nm] with a process flange with a	
			smooth seal face	raised face
25	4 × M12 × 145	54	19	19
40	4 × M16 × 170	68	33	33
50	4 × M16 × 185	82	41	41
65[1)]	4 × M16 × 200	92	44	44
65[2)]	8 × M16 × 200	– [3)]	29	29
80	8 × M16 × 225	116	36	36
100	8 × M16 × 260	147	40	40

[1)] EN (DIN) flanges: 4-hole → with centering sleeves
[2)] EN (DIN) flanges: 8-hole → without centering sleeves
[3)] A centering sleeve is not required. The device is centered directly via the sensor housing.

Tightening torques, mounting bolts and centering sleeves for JIS 10 K

Nominal diameter [mm]	Mounting bolts [mm]	Centering sleeve length [mm]	Tightening torque [Nm] with a process flange with a	
			smooth seal face	raised face
25	4 × M16 × 170	54	24	24
40	4 × M16 × 170	68	32	25
50	4 × M16 × 185	– *	38	30
65	4 × M16 × 200	– *	42	42
80	8 × M16 × 225	– *	36	28
100	8 × M16 × 260	– *	39	37

* A centering sleeve is not required. The device is centered directly via the sensor housing.

Tightening torques, mounting bolts and centering sleeves for ASME Class 150

Nominal diameter [inch]	Mounting bolts [inch]	Centering sleeve length [inch]	Tightening torque [lbf · ft] with a process flange with a	
			smooth seal face	raised face
1"	4 × UNC 1/2" × 5.70"	– *	14	7
1 ½"	4 × UNC 1/2" × 6.50"	– *	21	14
2"	4 × UNC 5/8" × 7.50"	– *	30	27
3"	4 × UNC 5/8" × 9.25"	– *	31	31
4"	8 × UNC 5/8" × 10.4"	5.79	28	28

* A centering sleeve is not required. The device is centered directly via the sensor housing.

3.3.2 Installing the Promag E sensor

Caution!
- The protective covers mounted on the two sensor flanges guard the PTFE, which is turned over the flanges. Consequently, do not remove these covers until immediately before the sensor is installed in the pipe.
- The covers must remain in place while the device is in storage.
- Make sure that the lining is not damaged or removed from the flanges.

Note!
Bolts, nuts, seals, etc. are not included in the scope of supply and must be supplied by the customer.

The sensor is designed for installation between the two piping flanges.
- Observe in any case the necessary screw tightening torques on → 📄 23
- If grounding disks are used, follow the mounting instructions which will be enclosed with the shipment

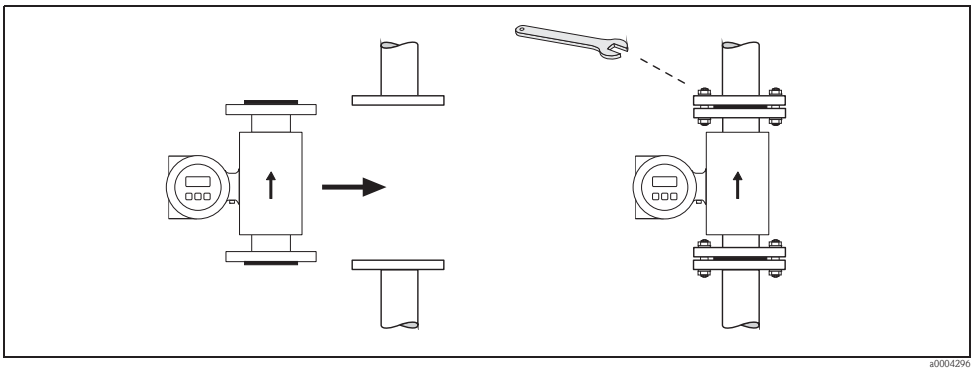

Fig. 18: Installing the Promag E sensor

Seals

Comply with the following instructions when installing seals:
- PTFE lining → No seals are required!
- For DIN flanges, use only seals according to EN 1514-1.
- Make sure that the seals do not protrude into the piping cross-section.

Caution!
Risk of short circuit! Do not use electrically conductive sealing compounds such as graphite! An electrically conductive layer could form on the inside of the measuring tube and short-circuit the measuring signal.

Ground cable

- If necessary, special ground cables for potential equalization can be ordered as an accessory (→ 📄 70).
- Information on potential equalization and detailed mounting instructions for the use of ground cables can be found on → 📄 50

Tightening torques for threaded fasteners (Promag E)

Please note the following:
- The tightening torques listed below are for lubricated threads only.
- Always tighten the screws uniformly and in diagonally opposite sequence.
- Overtightening the screws will deform the sealing faces or damage the seals.
- The tightening torques listed below apply only to pipes not subjected to tensile stress.

Tightening torques for:
- EN (DIN) → 🖹 23
- ASME → 🖹 24
- JIS → 🖹 24

Promag E tightening torques for EN (DIN)

Nominal diameter [mm]	EN (DIN) Pressure rating [bar]	Threaded fasteners	Max. tightening torque [Nm]
15	PN 40	4 × M 12	11
25	PN 40	4 × M 12	26
32	PN 40	4 × M 16	41
40	PN 40	4 × M 16	52
50	PN 40	4 × M 16	65
65 *	PN 16	8 × M 16	43
80	PN 16	8 × M 16	53
100	PN 16	8 × M 16	57
125	PN 16	8 × M 16	75
150	PN 16	8 × M 20	99
200	PN 10	8 × M 20	141
200	PN 16	12 × M 20	94
250	PN 10	12 × M 20	110
250	PN 16	12 × M 24	131
300	PN 10	12 × M 20	125
300	PN 16	12 × M 24	179
350	PN 6	12 × M 20	200
350	PN 10	16 × M 20	188
350	PN 16	16 × M 24	254
400	PN 6	16 × M 20	166
400	PN 10	16 × M 24	260
400	PN 16	16 × M 27	330
450	PN 6	16 × M 20	202
450	PN 10	20 × M 24	235
450	PN 16	20 × M 27	300
500	PN 6	20 × M 20	176
500	PN 10	20 × M 24	265
500	PN 16	20 × M 30	448
600	PN 6	20 × M 24	242
600	PN 10	20 × M 27	345
600 *	PN 16	20 × M 33	658
* Designed acc. to EN 1092-1 (not to DIN 2501)			

Promag E tightening torques for ASME

Nominal diameter		ASME		Max. tightening torque PTFE	
[mm]	[inch]	Pressure rating [lbs]	Threaded fasteners	[Nm]	[lbf · ft]
15	½"	Class 150	4 × ½"	6	4
25	1"	Class 150	4 × ½"	11	8
40	1 ½"	Class 150	4 × ½"	24	18
50	2"	Class 150	4 × 5/8"	47	35
80	3"	Class 150	4 × 5/8"	79	58
100	4"	Class 150	8 × 5/8"	56	41
150	6"	Class 150	8 × ¾"	106	78
200	8"	Class 150	8 × ¾"	143	105
250	10"	Class 150	12 × 7/8"	135	100
300	12"	Class 150	12 × 7/8"	178	131
350	14"	Class 150	12 × 1"	260	192
400	16"	Class 150	16 × 1"	246	181
450	18"	Class 150	16 × 1 1/8"	371	274
500	20"	Class 150	20 × 1 1/8"	341	252
600	24"	Class 150	20 × 1 ¼"	477	352

Promag E tightening torques for JIS

Nominal diameter [mm]	JIS Pressure rating	Threaded fasteners	Max. tightening torque [Nm] PTFE
15	20K	4 × M 12	16
25	20K	4 × M 16	32
32	20K	4 × M 16	38
40	20K	4 × M 16	41
50	10K	4 × M 16	54
65	10K	4 × M 16	74
80	10K	8 × M 16	38
100	10K	8 × M 16	47
125	10K	8 × M 20	80
150	10K	8 × M 20	99
200	10K	12 × M 20	82
250	10K	12 × M 22	133
300	10K	16 × M 22	99

3.3.3 Installing the Promag H sensor

The sensor is supplied to order, with or without pre-installed process connections. Pre-installed process connections are secured to the sensor with 4 or 6 hex-head threaded fasteners.

Caution!
The sensor might require support or additional attachments, depending on the application and the length of the piping run. When plastic process connections are used, the sensor must be additionally supported mechanically. A wall-mounting kit can be ordered separately from Endress+Hauser as an accessory (→ 📄 70).

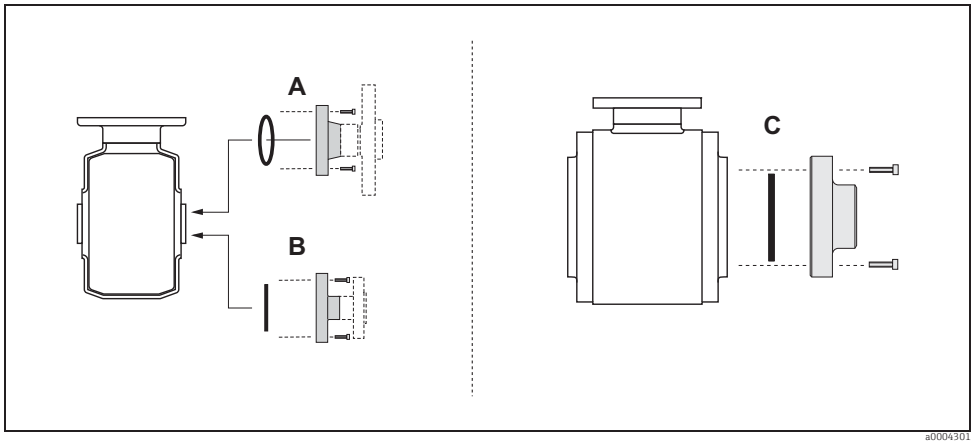

Fig. 19: Promag H process connections (DN 2 to 25 / 1/12 to 1", DN 40 to 100 / 1½ to 4")

A = DN 2 to 25 / process connections with O-ring
– Flanges (EN (DIN), ASME, JIS),
– External thread

B = DN 2 to 25 / process connections with aseptic gasket seal
– Weld nipples (DIN 11850, ODT/SMS)
– Tri-Clamp L14AM7
– Coupling (DIN 11851, DIN 11864-1, SMS 1145 (only DN 25)
– Flange DIN 11864-2

C = DN 40 to 100 / process connections with aseptic gasket seal
– Weld nipples (DIN 11850, ODT/SMS)
– Tri-Clamp L14AM7
– Coupling (DIN 11851, DIN 11864-1, SMS 1145)
– Flange DIN 11864-2

Seals

When installing the process connections, make sure that the seals are clean and correctly centered.

Caution!
- With metal process connections, you must fully tighten the screws. The process connection forms a metallic connection with the sensor, which ensures a defined compression of the seal.
- With plastic process connections, note the max. torques for lubricated threads (7 Nm / 5.2 lbf ft). With plastic flanges, always use seals between connection and counter flange.
- The seals must be replaced periodically, depending on the application, particularly in the case of gasket seals (aseptic version)!
  The period between changes depends on the frequency of cleaning cycles, the cleaning temperature and the fluid temperature. Replacement seals can be ordered as accessories → 📄 70.

Welding the transmitter into the piping (weld nipples)



Caution!
Risk of destroying the measuring electronics. Make sure that the welding machine is *not* grounded via the sensor or the transmitter.

1. Tack-weld the sensor into the pipe. A suitable welding jig can be ordered separately as an accessory (→ 🖹 70).
2. Loosen the screws on the process connection flange and remove the sensor, complete with the seal, from the pipe.
3. Weld the process connection to the pipe.
4. Reinstall the sensor in the pipe. Make sure that everything is clean and that the seal is correctly seated.



Note!
- If thin-walled foodstuffs pipes are not welded correctly, the heat could damage the installed seal. It is therefore advisable to remove the sensor and the seal prior to welding.
- The pipe has to be spread approximately 8 mm to permit disassembly.

Cleaning with pigs

If pigs are used for cleaning, it is essential to take the inside diameters of the measuring tube and process connection into account. All the dimensions and lengths of the sensor and transmitter are provided in the separate documentation "Technical Documentation".

3.3.4 Installing the Promag L sensor

Caution!
- The protective covers mounted on the two sensor flanges (DN 25 to 300 / 1 to 12") are used to hold the lap joint flanges in place and to protect the PTFE liner during transportation. Consequently, do not remove these covers until immediately before the sensor is installed in the pipe.
- The covers must remain in place while the device is in storage.
- Make sure that the lining is not damaged or removed from the flanges.

Note!
Bolts, nuts, seals, etc. are not included in the scope of supply and must be supplied by the customer.

The sensor is designed for installation between the two piping flanges.
- Observe in any case the necessary screw tightening torques on → 28
- If grounding disks are used, follow the mounting instructions which will be enclosed with the shipment
- To comply with the device specification, a concentrical installation in the measuring section is required

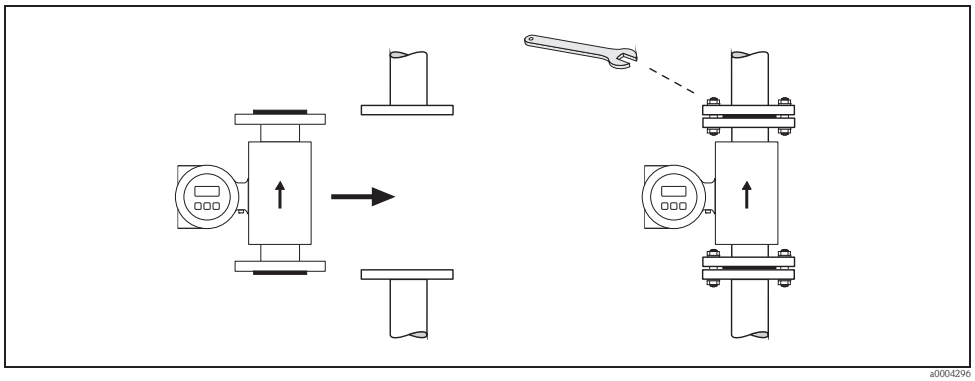

Fig. 20: Installing the Promag L sensor

Seals

Comply with the following instructions when installing seals:
- Hard rubber lining → additional seals are always necessary.
- Polyurethane lining → no seals are required.
- PTFE lining → no seals are required.
- For DIN flanges, use only seals according to EN 1514-1.
- Make sure that the seals do not protrude into the piping cross-section.

Caution!
Risk of short circuit!
Do not use electrically conductive sealing compounds such as graphite! An electrically conductive layer could form on the inside of the measuring tube and short-circuit the measuring signal.

Ground cable

- If necessary, special ground cables for potential equalization can be ordered as an accessory (→ 70).
- Information on potential equalization and detailed mounting instructions for the use of ground cables can be found on → 50.

Screw tightening torques (Promag L)

Please note the following:
- The tightening torques listed below are for lubricated threads only.
- Always tighten the screws uniformly and in diagonally opposite sequence.
- Overtightening the screws will deform the sealing faces or damage the seals.
- The tightening torques listed below apply only to pipes not subjected to tensile stress.

Promag L tightening torques for EN (DIN)

Nominal diameter [mm]	EN (DIN) Pressure rating [bar]	Threaded fasteners	Max. tightening torque Hard rubber [Nm]	Polyurethane [Nm]	PTFE [Nm]
25	PN 10/16	4 × M 12	-	6	11
32	PN 10/16	4 × M 16	-	16	27
40	PN 10/16	4 × M 16	-	16	29
50	PN 10/16	4 × M 16	-	15	40
65*	PN 10/16	8 × M 16	-	10	22
80	PN 10/16	8 × M 16	-	15	30
100	PN 10/16	8 × M 16	-	20	42
125	PN 10/16	8 × M 16	-	30	55
150	PN 10/16	8 × M 20	-	50	90
200	PN 16	12 × M 20	-	65	87
250	PN 16	12 × M 24	-	126	151
300	PN 16	12 × M 24	-	139	177
350	PN 6	12 × M 20	111	120	-
350	PN 10	16 × M 20	112	118	-
400	PN 6	16 × M 20	90	98	-
400	PN 10	16 × M 24	151	167	-
450	PN 6	16 × M 20	112	126	-
450	PN 10	20 × M 24	153	133	-
500	PN 6	20 × M 20	119	123	-
500	PN 10	20 × M 24	155	171	-
600	PN 6	20 × M 24	139	147	-
600	PN 10	20 × M 27	206	219	-
700	PN 6	24 × M 24	148	139	-
700	PN 10	24 × M 27	246	246	-
800	PN 6	24 × M 27	206	182	-
800	PN 10	24 × M 30	331	316	-
900	PN 6	24 × M 27	230	637	-
900	PN 10	28 × M 30	316	307	-
1000	PN 6	28 × M 27	218	208	-
1000	PN 10	28 × M 33	402	405	-
1200	PN 6	32 × M 30	319	299	-
1200	PN 10	32 × M 36	564	568	-

* Designed acc. to EN 1092-1 (not to DIN 2501)

Promag L tightening torques for ASME

Nominal diameter		ASME	Threaded fasteners	Max. tightening torque					
		Pressure rating		Hard rubber		Polyurethane		PTFE	
[mm]	[inch]	[lbs]		[Nm]	[lbf · ft]	[Nm]	[lbf · ft]	[Nm]	[lbf · ft]
25	1"	Class 150	4 × 5/8"	-	-	5	4	14	13
40	1 ½"	Class 150	8 × 5/8"	-	-	10	17	21	15
50	2"	Class 150	4 × 5/8"	-	-	15	11	40	29
80	3"	Class 150	4 × 5/8"	-	-	25	18	65	48
100	4"	Class 150	8 × 5/8"	-	-	20	15	44	32
150	6"	Class 150	8 × ¾"	-	-	45	33	90	66
200	8"	Class 150	8 × ¾"	-	-	65	48	87	64
250	10"	Class 150	12 × 7/8"	-	-	126	93	151	112
300	12"	Class 150	12 × 7/8"	-	-	146	108	177	131
350	14"	Class 150	12 × 1"	135	100	158	117	-	-
400	16"	Class 150	16 × 1"	128	94	150	111	-	-
450	18"	Class 150	16 × 1 1/8"	204	150	234	173	-	-
500	20"	Class 150	20 × 1 1/8"	183	135	217	160	-	-
600	24"	Class 150	20 × 1 ¼"	268	198	307	226	-	-

Promag L tightening torques for AWWA

Nominal diameter		AWWA	Threaded fasteners	Max. tightening torque					
		Pressure rating		Hartgummi		Polyurethane		PTFE	
[mm]	[inch]			[Nm]	[lbf · ft]	[Nm]	[lbf · ft]	[Nm]	[lbf · ft]
700	28"	Class D	28 × 1 ¼"	247	182	292	215	-	-
750	30"	Class D	28 × 1 ¼"	287	212	302	223	-	-
800	32"	Class D	28 × 1 ½"	394	291	422	311	-	-
900	36"	Class D	32 × 1 ½"	419	309	430	317	-	-
1000	40"	Class D	36 × 1 ½"	420	310	477	352	-	-
1050	42"	Class D	36 × 1 ½"	528	389	518	382	-	-
1200	48"	Class D	44 × 1 ½"	552	407	531	392	-	-

Promag L tightening torques for AS 2129

Nominal diameter	AS 2129	Threaded fasteners	Max. tightening torque		
	Pressure rating		Hard rubber	Polyurethane	PTFE
[mm]			[Nm]	[Nm]	[Nm]
350	Table E	12 × M 24	203	-	-
400	Table E	12 × M 24	226	-	-
450	Table E	16 × M 24	226	-	-
500	Table E	16 × M 24	271	-	-
600	Table E	16 × M 30	439	-	-
700	Table E	20 × M 30	355	-	-
750	Table E	20 × M 30	559	-	-
800	Table E	20 × M 30	631	-	-
900	Table E	24 × M 30	627	-	-
1000	Table E	24 × M 30	634	-	-
1200	Table E	32 × M 30	727	-	-

Promag L tightening torques for AS 4087

Nominal diameter [mm]	AS 4087 Pressure rating	Threaded fasteners	Max. tightening torque		
			Hard rubber [Nm]	Polyurethane [Nm]	PTFE [Nm]
350	PN 16	12 × M 24	203	-	-
375	PN 16	12 × M 24	137	-	-
400	PN 16	12 × M 24	226	-	-
450	PN 16	12 × M 24	301	-	-
500	PN 16	16 × M 24	271	-	-
600	PN 16	16 × M 27	393	-	-
700	PN 16	20 × M 27	330	-	-
750	PN 16	20 × M 30	529	-	-
800	PN 16	20 × M 33	631	-	-
900	PN 16	24 × M 33	627	-	-
1000	PN 16	24 × M 33	595	-	-
1200	PN 16	32 × M 33	703	-	-

3.3.5 Installing the Promag P sensor

Caution!
- The protective covers mounted on the two sensor flanges guard the PTFE, which is turned over the flanges. Consequently, do not remove these covers until immediately before the sensor is installed in the pipe.
- The covers must remain in place while the device is in storage.
- Make sure that the lining is not damaged or removed from the flanges.

Note!
Bolts, nuts, seals, etc. are not included in the scope of supply and must be supplied by the customer.

The sensor is designed for installation between the two piping flanges.
- Observe in any case the necessary screw tightening torques on → 31
- If grounding disks are used, follow the mounting instructions which will be enclosed with the shipment

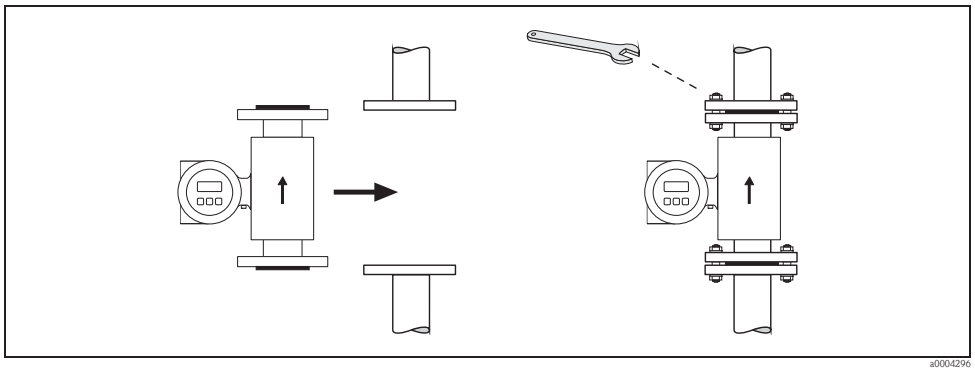

Fig. 21: Installing the Promag P sensor

Seals

Comply with the following instructions when installing seals:
- PTFE lining → No seals are required!
- For DIN flanges, use only seals according to EN 1514-1.
- Make sure that the seals do not protrude into the piping cross-section.

Caution!
Risk of short circuit! Do not use electrically conductive sealing compounds such as graphite! An electrically conductive layer could form on the inside of the measuring tube and short-circuit the measuring signal.

Ground cable

- If necessary, special ground cables for potential equalization can be ordered as an accessory (→ 70).
- Information on potential equalization and detailed mounting instructions for the use of ground cables can be found on → 50

Tightening torques for threaded fasteners (Promag P)

Please note the following:
- The tightening torques listed below are for lubricated threads only.
- Always tighten the screws uniformly and in diagonally opposite sequence.
- Overtightening the screws will deform the sealing faces or damage the seals.
- The tightening torques listed below apply only to pipes not subjected to tensile stress.

Tightening torques for:
- EN (DIN) → 32
- ASME → 32
- JIS → 33
- AS 2129 → 33
- AS 4087 → 33

Promag P tightening torques for EN (DIN)

Nominal diameter [mm]	EN (DIN) Pressure rating [bar]	Threaded fasteners	Max. tightening torque [Nm]
25	PN 40	4 × M 12	26
32	PN 40	4 × M 16	41
40	PN 40	4 × M 16	52
50	PN 40	4 × M 16	65
65 *	PN 16	8 × M 16	43
65	PN 40	8 × M 16	43
80	PN 16	8 × M 16	53
80	PN 40	8 × M 16	53
100	PN 16	8 × M 16	57
100	PN 40	8 × M 20	78
125	PN 16	8 × M 16	75
125	PN 40	8 × M 24	111
150	PN 16	8 × M 20	99
150	PN 40	8 × M 24	136
200	PN 10	8 × M 20	141
200	PN 16	12 × M 20	94
200	PN 25	12 × M 24	138
250	PN 10	12 × M 20	110
250	PN 16	12 × M 24	131
250	PN 25	12 × M 27	200
300	PN 10	12 × M 20	125
300	PN 16	12 × M 24	179
300	PN 25	16 × M 27	204
350	PN 10	16 × M 20	188
350	PN 16	16 × M 24	254
350	PN 25	16 × M 30	380
400	PN 10	16 × M 24	260
400	PN 16	16 × M 27	330
400	PN 25	16 × M 33	488
450	PN 10	20 × M 24	235
450	PN 16	20 × M 27	300
450	PN 25	20 × M 33	385
500	PN 10	20 × M 24	265
500	PN 16	20 × M 30	448
500	PN 25	20 × M 33	533
600	PN 10	20 × M 27	345
600 *	PN 16	20 × M 33	658
600	PN 25	20 × M 36	731
* Designed acc. to EN 1092-1 (not to DIN 2501)			

Promag P tightening torques for ASME

Nominal diameter		ASME Pressure rating		Max. tightening torque PTFE	
[mm]	[inch]	[lbs]	Threaded fasteners	[Nm]	[lbf · ft]
25	1"	Class 150	4 × ½"	11	8
25	1"	Class 300	4 × 5/8"	14	10
40	1 ½"	Class 150	4 × ½"	24	18
40	1 ½"	Class 300	4 × ¾"	34	25
50	2"	Class 150	4 × 5/8"	47	35

Nominal diameter		ASME Pressure rating		Max. tightening torque PTFE	
[mm]	[inch]	[lbs]	Threaded fasteners	[Nm]	[lbf · ft]
50	2"	Class 300	8 × 5/8"	23	17
80	3"	Class 150	4 × 5/8"	79	58
80	3"	Class 300	8 × ¾"	47	35
100	4"	Class 150	8 × 5/8"	56	41
100	4"	Class 300	8 × ¾"	67	49
150	6"	Class 150	8 × ¾"	106	78
150	6"	Class 300	12 × ¾"	73	54
200	8"	Class 150	8 × ¾"	143	105
250	10"	Class 150	12 × 7/8"	135	100
300	12"	Class 150	12 × 7/8"	178	131
350	14"	Class 150	12 × 1"	260	192
400	16"	Class 150	16 × 1"	246	181
450	18"	Class 150	16 × 1 1/8"	371	274
500	20"	Class 150	20 × 1 1/8"	341	252
600	24"	Class 150	20 × 1 ¼"	477	352

Promag P tightening torques for JIS

Nominal diameter [mm]	JIS Pressure rating	Threaded fasteners	Max. tightening torque [Nm] PTFE
25	10K	4 × M 16	32
25	20K	4 × M 16	32
32	10K	4 × M 16	38
32	20K	4 × M 16	38
40	10K	4 × M 16	41
40	20K	4 × M 16	41
50	10K	4 × M 16	54
50	20K	8 × M 16	27
65	10K	4 × M 16	74
65	20K	8 × M 16	37
80	10K	8 × M 16	38
80	20K	8 × M 20	57
100	10K	8 × M 16	47
100	20K	8 × M 20	75
125	10K	8 × M 20	80
125	20K	8 × M 22	121
150	10K	8 × M 20	99
150	20K	12 × M 22	108
200	10K	12 × M 20	82
200	20K	12 × M 22	121
250	10K	12 × M 22	133
250	20K	12 × M 24	212
300	10K	16 × M 22	99
300	20K	16 × M 24	183

Promag P tightening torques for AS 2129

Nominal diameter [mm]	AS 2129 Pressure rating	Threaded fasteners	Max. tightening torque [Nm] PTFE
25	Table E	4 × M 12	21
50	Table E	4 × M 16	42

Promag P tightening torques for AS 4087

Nominal diameter [mm]	AS 4087 Pressure rating	Threaded fasteners	Max. tightening torque [Nm] PTFE
50	PN 16	4 × M 16	42

3.3.6 Installing the Promag W sensor

Note!
Bolts, nuts, seals, etc. are not included in the scope of supply and must be supplied by the customer.

The sensor is designed for installation between the two piping flanges.
- Observe in any case the necessary screw tightening torques on → 📄 34
- If grounding disks are used, follow the mounting instructions which will be enclosed with the shipment

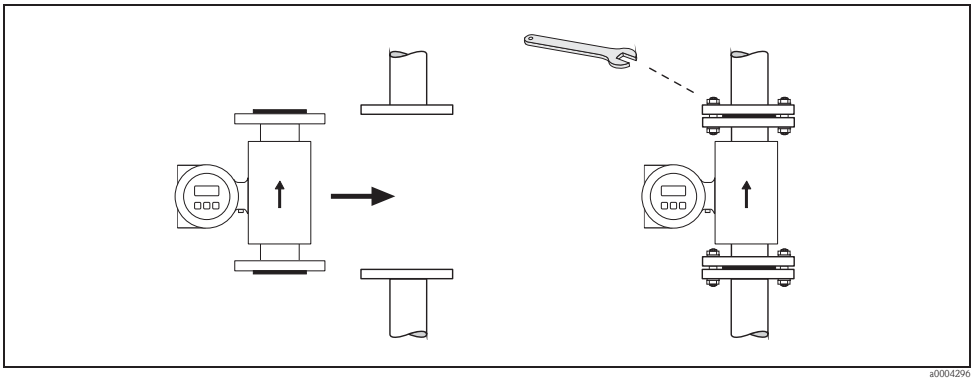

Fig. 22: Installing the Promag W sensor

Seals

Comply with the following instructions when installing seals:
- Hard rubber lining → additional seals are always necessary.
- Polyurethane lining → no seals are required.
- For DIN flanges, use only seals according to EN 1514-1.
- Make sure that the seals do not protrude into the piping cross-section.

Caution!
Risk of short circuit!
Do not use electrically conductive sealing compounds such as graphite! An electrically conductive layer could form on the inside of the measuring tube and short-circuit the measuring signal.

Ground cable

- If necessary, special ground cables for potential equalization can be ordered as an accessory (→ 📄 70).
- Information on potential equalization and detailed mounting instructions for the use of ground cables can be found on → 📄 50

Screw tightening torques (Promag W)

Please note the following:
- The tightening torques listed below are for lubricated threads only.
- Always tighten the screws uniformly and in diagonally opposite sequence.
- Overtightening the screws will deform the sealing faces or damage the seals.
- The tightening torques listed below apply only to pipes not subjected to tensile stress.

Tightening torques for:
- EN (DIN)→ 🖹 35
- JIS→ 🖹 37
- ASME→ 🖹 36
- AWWA → 🖹 37
- AS 2129 → 🖹 38
- AS 4087 → 🖹 38

Promag W tightening torques for EN (DIN)

Nominal diameter [mm]	EN (DIN) Pressure rating [bar]	Threaded fasteners	Max. tightening torque [Nm] Hard rubber	Polyurethane
25	PN 40	4 × M 12	-	15
32	PN 40	4 × M 16	-	24
40	PN 40	4 × M 16	-	31
50	PN 40	4 × M 16	48	40
65*	PN 16	8 × M 16	32	27
65	PN 40	8 × M 16	32	27
80	PN 16	8 × M 16	40	34
80	PN 40	8 × M 16	40	34
100	PN 16	8 × M 16	43	36
100	PN 40	8 × M 20	59	50
125	PN 16	8 × M 16	56	48
125	PN 40	8 × M 24	83	71
150	PN 16	8 × M 20	74	63
150	PN 40	8 × M 24	104	88
200	PN 10	8 × M 20	106	91
200	PN 16	12 × M 20	70	61
200	PN 25	12 × M 24	104	92
250	PN 10	12 × M 20	82	71
250	PN 16	12 × M 24	98	85
250	PN 25	12 × M 27	150	134
300	PN 10	12 × M 20	94	81
300	PN 16	12 × M 24	134	118
300	PN 25	16 × M 27	153	138
350	PN 6	12 × M 20	111	120
350	PN 10	16 × M 20	112	118
350	PN 16	16 × M 24	152	165
350	PN 25	16 × M 30	227	252
400	PN 6	16 × M 20	90	98
400	PN 10	16 × M 24	151	167
400	PN 16	16 × M 27	193	215
400	PN 25	16 × M 33	289	326
450	PN 6	16 × M 20	112	126
450	PN 10	20 × M 24	153	133
450	PN 16	20 × M 27	198	196
450	PN 25	20 × M 33	256	253
500	PN 6	20 × M 20	119	123
500	PN 10	20 × M 24	155	171
500	PN 16	20 × M 30	275	300
500	PN 25	20 × M 33	317	360
600	PN 6	20 × M 24	139	147
600	PN 10	20 × M 27	206	219
600 *	PN 16	20 × M 33	415	443
600	PN 25	20 × M 36	431	516
700	PN 6	24 × M 24	148	139
700	PN 10	24 × M 27	246	246
700	PN 16	24 × M 33	278	318

Nominal diameter [mm]	EN (DIN) Pressure rating [bar]	Threaded fasteners	Max. tightening torque [Nm] Hard rubber	Polyurethane
700	PN 25	24 × M 39	449	507
800	PN 6	24 × M 27	206	182
800	PN 10	24 × M 30	331	316
800	PN 16	24 × M 36	369	385
800	PN 25	24 × M 45	664	721
900	PN 6	24 × M 27	230	637
900	PN 10	28 × M 30	316	307
900	PN 16	28 × M 36	353	398
900	PN 25	28 × M 45	690	716
1000	PN 6	28 × M 27	218	208
1000	PN 10	28 × M 33	402	405
1000	PN 16	28 × M 39	502	518
1000	PN 25	28 × M 52	970	971
1200	PN 6	32 × M 30	319	299
1200	PN 10	32 × M 36	564	568
1200	PN 16	32 × M 45	701	753
1400	PN 6	36 × M 33	430	398
1400	PN 10	36 × M 39	654	618
1400	PN 16	36 × M 45	729	762
1600	PN 6	40 × M 33	440	417
1600	PN 10	40 × M 45	946	893
1600	PN 16	40 × M 52	1007	1100
1800	PN 6	44 × M 36	547	521
1800	PN 10	44 × M 45	961	895
1800	PN 16	44 × M 52	1108	1003
2000	PN 6	48 × M 39	629	605
2000	PN 10	48 × M 45	1047	1092
2000	PN 16	48 × M 56	1324	1261
* Designed acc. to EN 1092-1 (not to DIN 2501)				

Promag W tightening torques for ASME

Nominal diameter [mm]	[inch]	ASME Pressure rating [lbs]	Threaded fasteners	Max. tightening torque Hard rubber [Nm]	[lbf · ft]	Polyurethane [Nm]	[lbf · ft]
25	1"	Class 150	4 × ½"	-	-	7	5
25	1"	Class 300	4 × 5/8"	-	-	8	6
40	1 ½"	Class 150	4 × ½"	-	-	10	7
40	1 ½"	Class 300	4 × ¾"	-	-	15	11
50	2"	Class 150	4 × 5/8"	35	26	22	16
50	2"	Class 300	8 × 5/8"	18	13	11	8
80	3"	Class 150	4 × 5/8"	60	44	43	32
80	3"	Class 300	8 × ¾"	38	28	26	19
100	4"	Class 150	8 × 5/8"	42	31	31	23
100	4"	Class 300	8 × ¾"	58	43	40	30
150	6"	Class 150	8 × ¾"	79	58	59	44
150	6"	Class 300	12 × ¾"	70	52	51	38
200	8"	Class 150	8 × ¾"	107	79	80	59
250	10"	Class 150	12 × 7/8"	101	74	75	55
300	12"	Class 150	12 × 7/8"	133	98	103	76
350	14"	Class 150	12 × 1"	135	100	158	117
400	16"	Class 150	16 × 1"	128	94	150	111
450	18"	Class 150	16 × 1 1/8"	204	150	234	173
500	20"	Class 150	20 × 1 1/8"	183	135	217	160
600	24"	Class 150	20 × 1 ¼"	268	198	307	226

Promag W tightening torques for JIS

Nominal diameter [mm]	JIS Pressure rating	Threaded fasteners	Max. tightening torque [Nm]	
			Hard rubber	Polyurethane
25	10K	4 × M 16	-	19
25	20K	4 × M 16	-	19
32	10K	4 × M 16	-	22
32	20K	4 × M 16	-	22
40	10K	4 × M 16	-	24
40	20K	4 × M 16	-	24
50	10K	4 × M 16	40	33
50	20K	8 × M 16	20	17
65	10K	4 × M 16	55	45
65	20K	8 × M 16	28	23
80	10K	8 × M 16	29	23
80	20K	8 × M 20	42	35
100	10K	8 × M 16	35	29
100	20K	8 × M 20	56	48
125	10K	8 × M 20	60	51
125	20K	8 × M 22	91	79
150	10K	8 × M 20	75	63
150	20K	12 × M 22	81	72
200	10K	12 × M 20	61	52
200	20K	12 × M 22	91	80
250	10K	12 × M 22	100	87
250	20K	12 × M 24	159	144
300	10K	16 × M 22	74	63
300	20K	16 × M 24	138	124

Promag W tightening torques for AWWA

Nominal diameter		AWWA Pressure rating	Threaded fasteners	Max. tightening torque			
				Hard rubber		Polyurethane	
[mm]	[inch]			[Nm]	[lbf · ft]	[Nm]	[lbf · ft]
700	28"	Class D	28 × 1 ¼"	247	182	292	215
750	30"	Class D	28 × 1 ¼"	287	212	302	223
800	32"	Class D	28 × 1 ½"	394	291	422	311
900	36"	Class D	32 × 1 ½"	419	309	430	317
1000	40"	Class D	36 × 1 ½"	420	310	477	352
1050	42"	Class D	36 × 1 ½"	528	389	518	382
1200	48"	Class D	44 × 1 ½"	552	407	531	392
1350	54"	Class D	44 × 1 ¾"	730	538	633	467
1500	60"	Class D	52 × 1 ¾"	758	559	832	614
1650	66"	Class D	52 × 1 ¾"	946	698	955	704
1800	72"	Class D	60 × 1 ¾"	975	719	1087	802
2000	78"	Class D	64 × 2"	853	629	786	580

Promag W tightening torques for AS 2129

Nominal diameter [mm]	AS 2129 Pressure rating	Threaded fasteners	Max. tightening torque [Nm] Hard rubber
50	Table E	4 × M 16	32
80	Table E	4 × M 16	49
100	Table E	8 × M 16	38
150	Table E	8 × M 20	64
200	Table E	8 × M 20	96
250	Table E	12 × M 20	98
300	Table E	12 × M 24	123
350	Table E	12 × M 24	203
400	Table E	12 × M 24	226
450	Table E	16 × M 24	226
500	Table E	16 × M 24	271
600	Table E	16 × M 30	439
700	Table E	20 × M 30	355
750	Table E	20 × M 30	559
800	Table E	20 × M 30	631
900	Table E	24 × M 30	627
1000	Table E	24 × M 30	634
1200	Table E	32 × M 30	727

Promag W tightening torques for AS 4087

Nominal diameter [mm]	AS 4087 Pressure rating	Threaded fasteners	Max. tightening torque [Nm] Hard rubber
50	Table E	4 × M 16	32
80	PN 16	4 × M 16	49
100	PN 16	4 × M 16	76
150	PN 16	8 × M 20	52
200	PN 16	8 × M 20	77
250	PN 16	8 × M 20	147
300	PN 16	12 × M 24	103
350	PN 16	12 × M 24	203
375	PN 16	12 × M 24	137
400	PN 16	12 × M 24	226
450	PN 16	12 × M 24	301
500	PN 16	16 × M 24	271
600	PN 16	16 × M 27	393
700	PN 16	20 × M 27	330
750	PN 16	20 × M 30	529
800	PN 16	20 × M 33	631
900	PN 16	24 × M 33	627
1000	PN 16	24 × M 33	595
1200	PN 16	32 × M 33	703

3.3.7 Turning the transmitter housing

1. Loosen the two securing screws.
2. Turn the bayonet lock as far as it will go.
3. Carefully lift the transmitter housing:
   – Promag D: approx. 10 mm (0.39 in) above the securing screws
   – Promag E/H/L/P/W: to the stop
4. Turn the transmitter housing to the desired position:
   – Promag D: max. 180° clockwise or max. 180° counterclockwise
   – Promag E/H/L/P/W: max. 280° clockwise or max. 20° counterclockwise
5. Lower the housing into position and re-engage the bayonet catch.
6. Retighten the two securing screws.

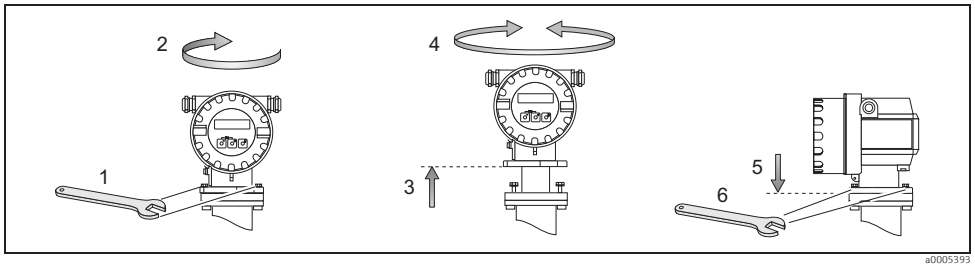

Fig. 23: Turning the transmitter housing

3.3.8 Turning the onsite display

1. Unscrew cover of the electronics compartment from the transmitter housing.
2. Remove the display module from the transmitter retaining rails.
3. Turn the display to the desired position (max. 4 × 45° in each direction).
4. Fit the display back onto the retaining rails.
5. Screw the cover of the electronics compartment firmly back onto the transmitter housing.

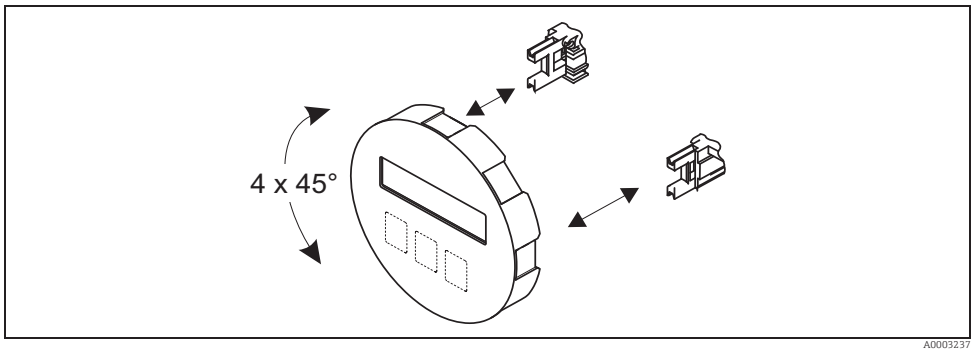

Fig. 24: Turning the local display

3.3.9 Mounting the transmitter (remote version)

The transmitter can be mounted in the following ways:
- Wall mounting
- Pipe mounting (with separate mounting kit, accessories → 📄 70)

The transmitter and the sensor must be mounted separate in the following circumstances:
- Poor accessibility
- Lack of space
- Extreme fluid/ambient temperatures (temperature ranges → 📄 86)
- Severe vibration (> 2 g/2 h per day; 10 to 100 Hz)

Caution!
- The ambient temperature range -20 to +60 °C (–4 to +140 °F) may not be exceeded at the mounting location. Avoid direct sunlight.
- If the device is mounted to a warm pipe, make sure that the housing temperature does not exceed +60 °C (+140 °F), which is the maximum permissible temperature.

Mount the transmitter as illustrated in → 🖼 25.

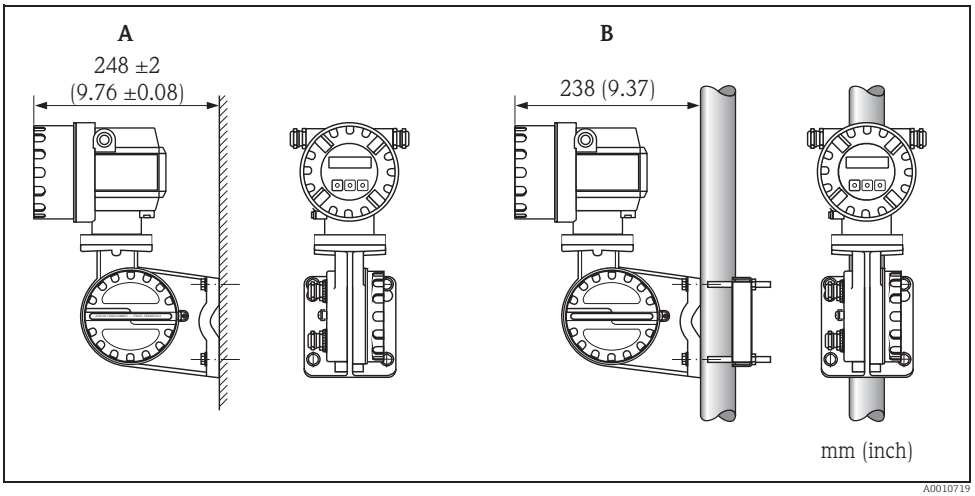

Fig. 25: Mounting the transmitter (remote version)

A Direct wall mounting
B Pipe mounting

3.4 Post-installation check

Perform the following checks after installing the measuring device in the pipe:

Device condition and specifications	Notes
Is the device damaged (visual inspection)?	–
Does the device correspond to specifications at the measuring point, including process temperature and pressure, ambient temperature, minimum fluid conductivity, measuring range, etc.?	→ 🖹 87
Installation	**Notes**
Does the arrow on the sensor nameplate match the actual direction of flow through the pipe?	–
Is the position of the measuring electrode plane correct?	→ 🖹 13
Is the position of the empty pipe detection electrode correct?	→ 🖹 13
Were all screws tightened to the specified torques when the sensor was installed?	Promag D → 🖹 21 Promag E → 🖹 23 Promag L → 🖹 28 Promag P → 🖹 31 Promag W → 🖹 34
Were the correct seals used (type, material, installation)?	Promag D → 🖹 19 Promag E → 🖹 22 Promag H → 🖹 25 Promag L→ 🖹 27 Promag P → 🖹 31 Promag W → 🖹 34
Are the measuring point number and labeling correct (visual inspection)?	–
Process environment / process conditions	**Notes**
Were the inlet and outlet runs respected?	Inlet run ≥ 5 × DN Outlet run ≥ 2 × DN
Is the measuring device protected against moisture and direct sunlight?	–
Is the sensor adequately protected against vibration (attachment, support)?	Acceleration up to 2 g by analogy with IEC 600 68-2-8

4 Wiring

Warning!
When using remote versions, only sensors and transmitters with the same serial number can be connected up. Measuring errors can occur if the devices are not connected in this way.

Note!
The device does not have an internal circuit breaker. For this reason, assign the device a switch or power-breaker switch capable of disconnecting the power supply line from the mains.

4.1 Connecting the remote version

4.1.1 Connecting Promag D/E/H/L/P/W

Warning!
- Risk of electric shock! Switch off the power supply before opening the device. Do not install or wire the device while it is connected to the power supply. Failure to comply with this precaution can result in irreparable damage to the electronics.
- Risk of electric shock! Connect the protective conductor to the ground terminal on the housing before the power supply is applied.

Caution!
- Only sensors and transmitters with the same serial number can be connected to one another. Communication problems can occur if the devices are not connected in this way.
- Risk of damaging the coil driver. Always switch off the power supply before connecting or disconnecting the coil cable.

Procedure

1. Transmitter: Loosen the securing clamp and remove the cover from the connection compartment (a).
2. Sensor: Remove the cover from the connection housing (b).
3. Feed the signal cable (c) and the coil cable (d) through the appropriate cable entries.

   Caution!
   Route the connecting cables securely (see "Length of connecting cable" → 18).
4. Terminate the signal and coil current cable as indicated in the table:
   Promag D/E/L/P/W → Refer to the table → 45
   Promag H → Refer to the "Cable termination" table → 46
5. Establish the wiring between the sensor and the transmitter.
   The electrical wiring diagram that applies to your device can be found:
   - In the corresponding graphic:
     → 26 (Promag D); → 27 (Promag E/L/P/W); → 28 (Promag H)
   - In the cover of the sensor and transmitter

   Note!
   The cable shields of the Promag H sensor are grounded by means of the strain relief terminals (see also the "Cable termination" table → 46)

   Caution!
   Insulate the shields of cables that are not connected to eliminate the risk of short-circuits with neighboring cable shields inside the connection housing.
6. Transmitter: Secure the cover to the connection compartment (a) and tighten the socket head cap screw of the securing clamp.
7. Sensor: Secure the cover on the connection housing (b).

Promag D

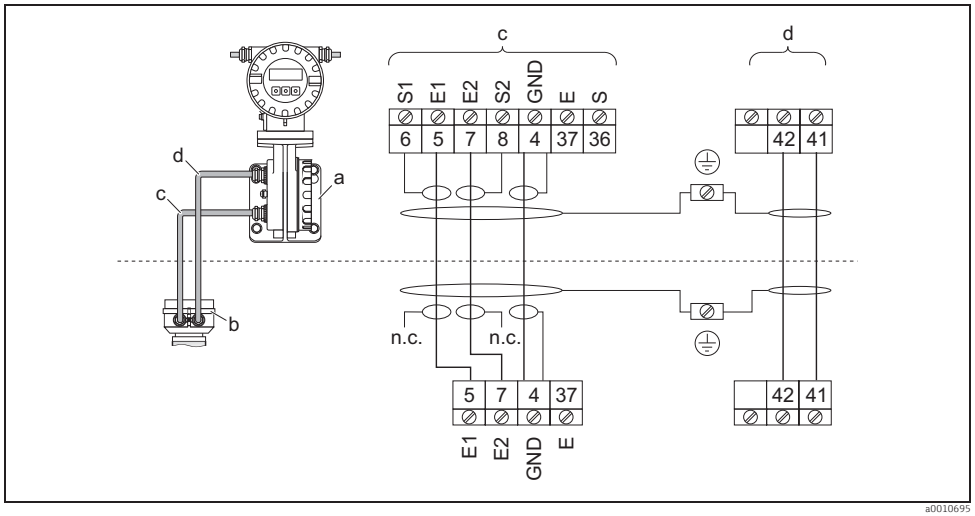

Fig. 26: Connecting the remote version of Promag D

a Wall-mount housing connection compartment
b Cover of the sensor connection housing
c Signal cable
d Coil current cable
n.c. Not connected, insulated cable shields

Wire colors/Terminal No.:
5/6 = braun, 7/8 = white, 4 = green, 37/36 = yellow

Promag E/L/P/W

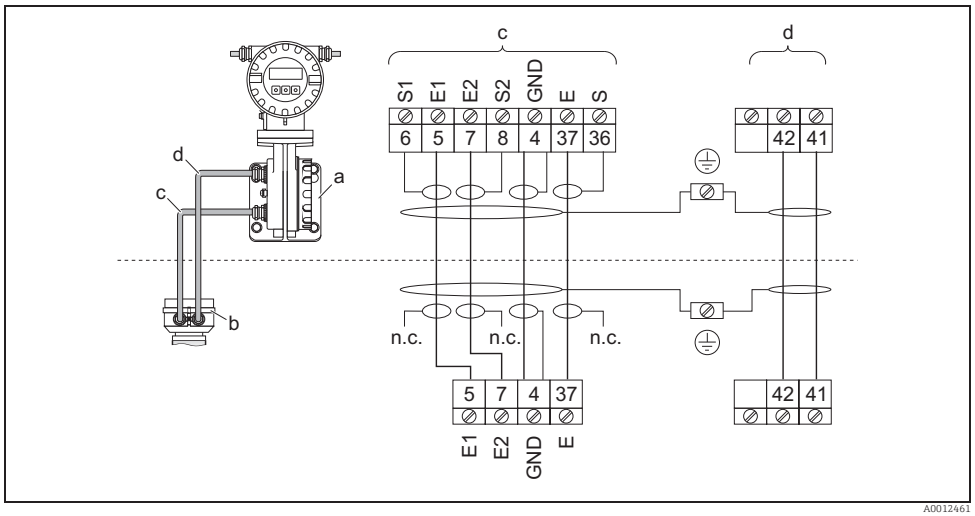

Fig. 27: Connecting the remote version of Promag E/L/P/W

a Wall-mount housing connection compartment
b Cover of the sensor connection housing
c Signal cable
d Coil current cable
n.c. Not connected, insulated cable shields

Wire colors/Terminal No.:
5/6 = braun, 7/8 = white, 4 = green, 37/36 = yellow

Promag H

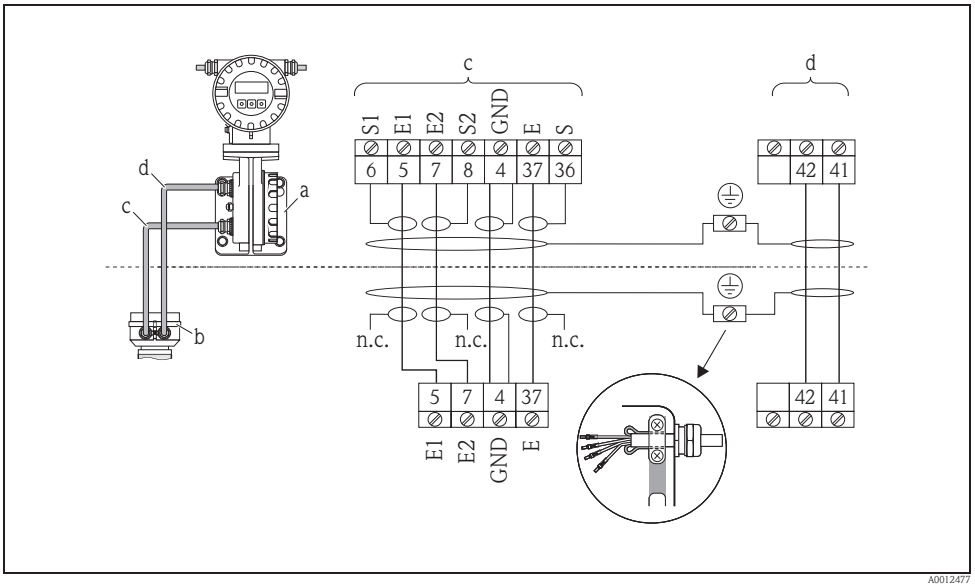

Fig. 28: Connecting the remote version of Promag H

a Wall-mount housing connection compartment
b Cover of the sensor connection housing
c Signal cable
d Coil current cable
n.c. Not connected, insulated cable shields

Wire colors/Terminal No.:
5/6 = braun, 7/8 = white, 4 = green, 37/36 = yellow

Cable termination for the remote version
Promag D/E/L/P/W

Terminate the signal and coil current cables as shown in the figure below (Detail A).
Ferrules must be provided on the fine-wire cores (Detail B: ① = red ferrules, ∅ 1.0 mm; ② = white ferrules, ∅ 0.5 mm).

Caution!
When fitting the connectors, pay attention to the following points:
- *Signal cable* → Make sure that the ferrules do not touch the wire shield on the sensor side. Minimum distance = 1 mm (exception "GND" = green cable)
- *Coil current cable* → Insulate one core of the three-core wire at the level of the core reinforcement; you only require two cores for the connection.

TRANSMITTER

Signal cable

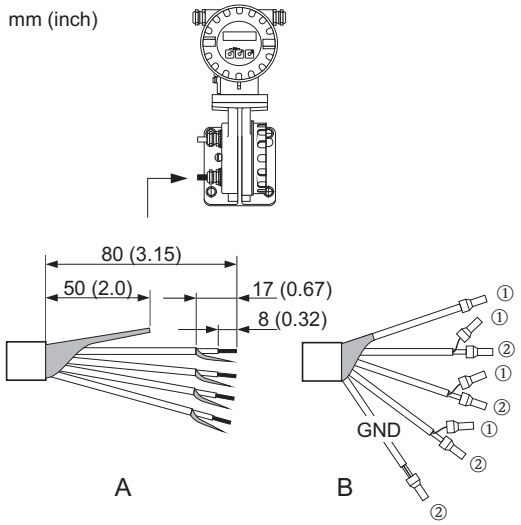

Coil current cable

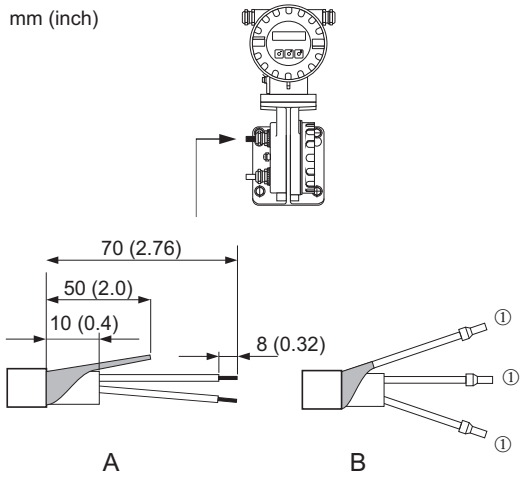

SENSOR

Signal cable

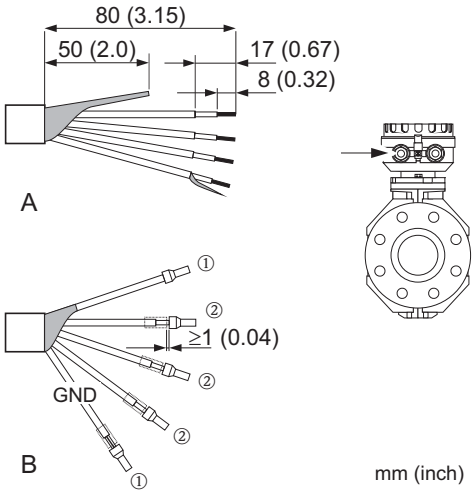

Coil current cable

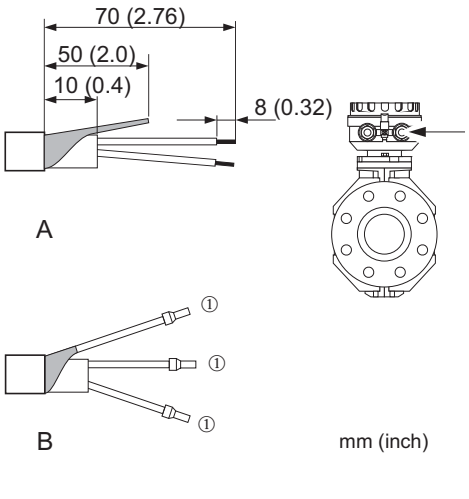

Cable termination for the remote version
Promag H

Terminate the signal and coil current cables as shown in the figure below (Detail A).
Ferrules must be provided on the fine-wire cores (Detail B: ① = red ferrules, ∅ 1.0 mm; ② = white ferrules, ∅ 0.5 mm).

Caution!
When fitting the connectors, pay attention to the following points:
- *Signal cable* → Make sure that the ferrules do not touch the wire shield on the sensor side. Minimum distance = 1 mm (exception "GND" = green cable).
- *Coil current cable* → Insulate one core of the three-core wire at the level of the core reinforcement; you only require two cores for the connection.
- On the sensor side, reverse both cable shields approx. 15 mm over the outer jacket. The strain relief ensures an electrical connection with the connection housing.

TRANSMITTER

Signal cable

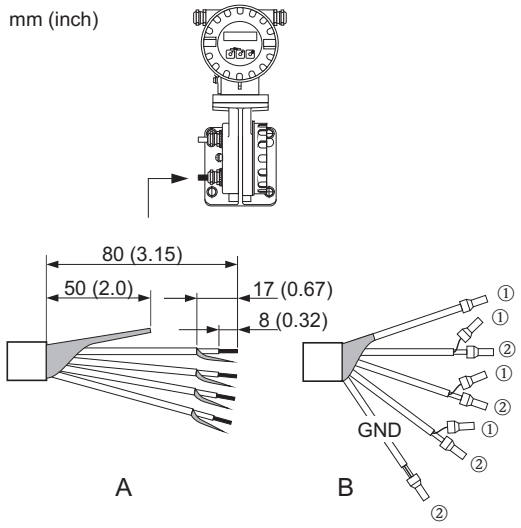

Coil current cable

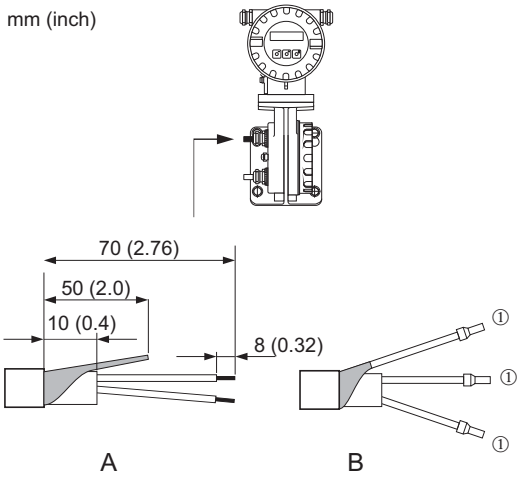

SENSOR

Signal cable

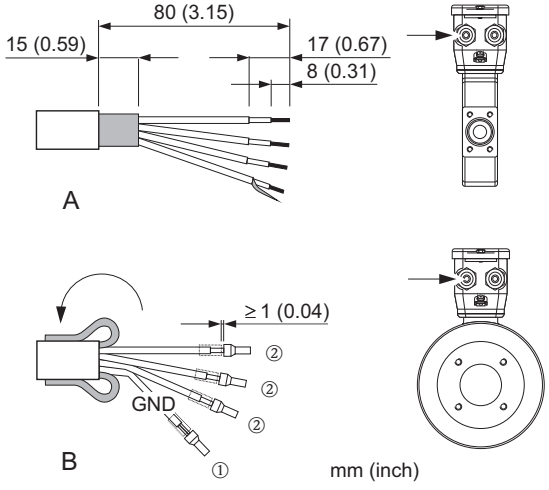

Coil current cable

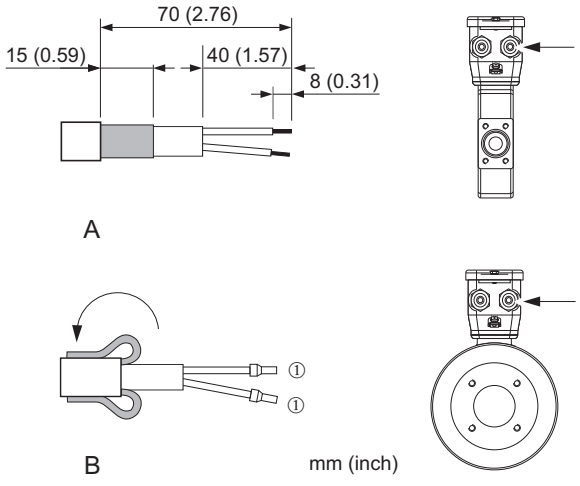

4.1.2 Cable specifications

Signal cable

- 3 × 0.38 mm² PVC cable with common, braided copper shield (∅ ~7 mm) and individually shielded cores
- With Empty Pipe Detection (EPD): 4 × 0.38 mm² PVC cable with common, braided copper shield (∅ ~ 7 mm) and individually shielded cores
- Conductor resistance: ≤ 50 Ω/km
- Capacitance: core/shield: ≤ 420 pF/m
- Permanent operating temperature: –20 to +80 °C
- Cable cross-section: max. 2.5 mm²

Coil cable

- 2 × 0.75 mm² PVC cable with common, braided copper shield (∅ ~ 7 mm)
- Conductor resistance: ≤ 37 Ω/km
- Capacitance: core/core, shield grounded: ≤ 120 pF/m
- Operating temperature: –20 to +80 °C
- Cable cross-section: max. 2.5 mm²
- Test voltage for cable insulation: ≥ 1433 V AC r.m.s. 50/60 Hz or ≥ 2026 V DC

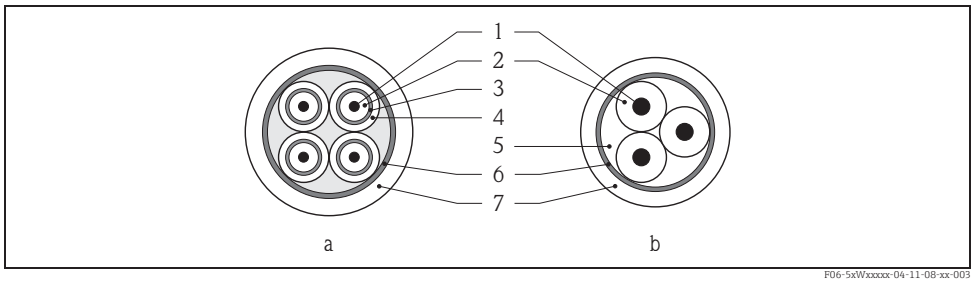

Fig. 29: Cable cross-section

a Signal cable
b Coil current cable

1 Core
2 Core insulation
3 Core shield
4 Core jacket
5 Core reinforcement
6 Cable shield
7 Outer jacket

Operation in zones of severe electrical interference:

The measuring device complies with the general safety requirements in accordance with EN 61010 and the EMC requirements of IEC/EN 61326.

Caution!
Grounding is by means of the ground terminals provided for the purpose inside the connection housing. Ensure that the stripped and twisted lengths of cable shield to the ground terminal are as short as possible.

4.2 Connecting the measuring unit

4.2.1 Transmitter

Warning!
- Risk of electric shock!
  Switch off the power supply before opening the device. Do not install or wire the device while it is connected to the power supply. Failure to comply with this precaution can result in irreparable damage to the electronics.
- Risk of electric shock!
  Connect the protective conductor to the ground terminal on the housing before the power supply is applied.
- Compare the specifications on the nameplate with the local supply voltage and frequency. The national regulations governing the installation of electrical equipment also apply.
- The transmitter must be included in the building fuse system.

1. Unscrew cover of the electronics compartment from the transmitter housing.
2. Press the side latches and flip down the cover of the connection compartment.
3. Feed the cable for the power supply and the signal cable through the appropriate cable entries.
4. Remove the terminal connectors from the transmitter housing and connect the cable for the power supply and the signal cable:
   – Wiring diagram → 30
   – Terminal assignment → 49
5. Plug the terminal connectors back into the transmitter housing.

   Note!
   The connectors are coded so you cannot mix them up.
6. Secure the ground cable to the ground terminal.
7. Flip up the cover of the connection compartment.
8. Screw the cover of the electronics compartment firmly onto the transmitter housing.

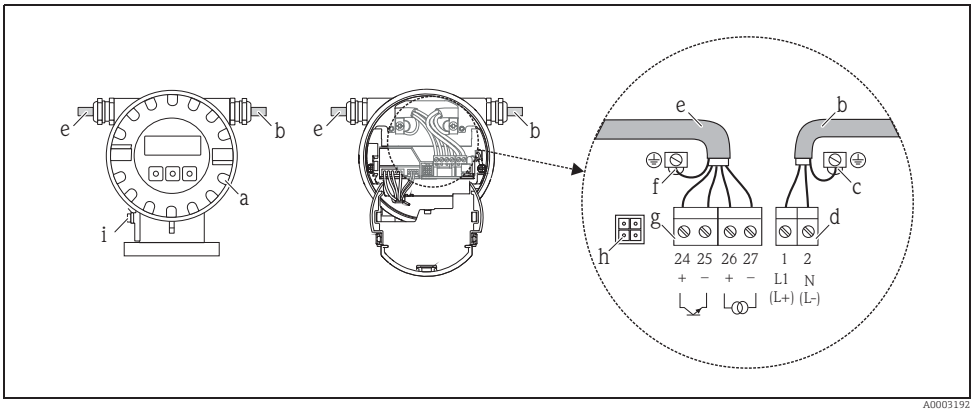

Fig. 30: Connecting the transmitter (aluminum field housing). Cable cross-section: max. 2.5 mm²

a Electronics compartment cover
b Cable for power supply: 85 to 250 V AC, 11 to 40 V DC, 20 to 28 V AC
c Ground terminal for power supply cable
*d Terminal connector for power supply: No. 1–2 → **49** (terminal assignment)*
e Signal cable
f Ground terminal for signal cable
*g Terminal connector for signal cable: No. 24–27 → **49** (terminal assignment)*
h Service connector
i Ground terminal for potential equalization

4.2.2 Terminal assignment

Order version	Terminal No. (outputs/power supply)		
	24 (+) / 25 (–)	26 (+) / 27 (–)	1 (L1/L+) / 2 (N/L–)
10***-**********A	Pulse output	Current output HART	Power supply

Note!
Functional values of the outputs and power supply → 83

4.2.3 HART connection

Users have the following connection options at their disposal:
- Direct connection to transmitter by means of terminals 26(+) and 27 (–)
- Connection by means of the 4 to 20 mA circuit.
- The measuring loop's minimum load must be at least 250 Ω.
- After commissioning, make the following settings:
  – CURRENT SPAN function → "4–20 mA HART"
  – Switch HART write protection on or off → 60

Connection of the HART handheld communicator

See also the documentation issued by the HART Communication Foundation, and in particular HCF LIT 20: "HART, a technical summary".

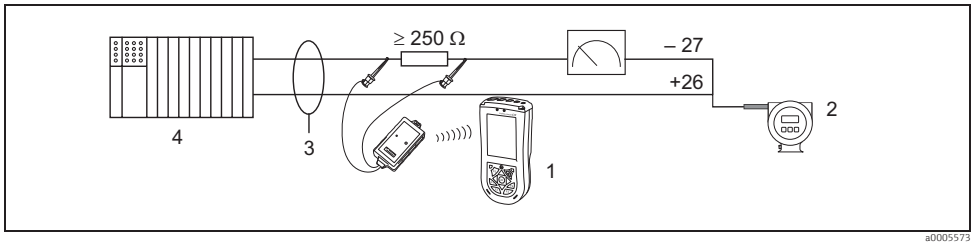

Fig. 31: Electrical connection of HART handheld Field Xpert SFX100

1 HART handheld Field Xpert SFX100
2 Auxiliary energy
3 Shielding
4 Other devices or PLC with passive input

Connection of a PC with an operating software

In order to connect a PC with an operating software (e.g. "FieldCare), a HART modem (e.g. Commubox FXA 195) is needed.

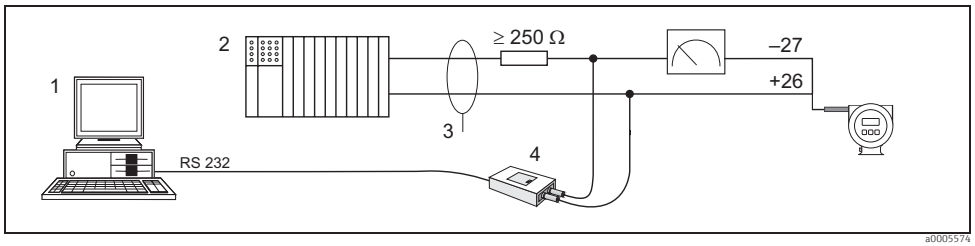

Fig. 32: Electrical connection of a PC with an operating software

1 PC with an operating software
2 Other evaluation devices or PLC with passive input
3 Shield
4 HART modem, e.g. Commubox FXA 195

4.3 Potential equalization

Warning!
The measuring system must be included in the potential equalization.

Perfect measurement is only ensured when the fluid and the sensor have the same electrical potential. This is ensured by the reference electrode integrated in the sensor as standard.

The following should also be taken into consideration for potential equalization:
- Internal grounding concepts in the company
- Operating conditions, such as the material/grounding of the pipes (see Table)

4.3.1 Potential equalization for Promag D

- No reference electrode is integrated!
  For the two ground disks of the sensor an electrical connection to the fluid is always ensured.
- Exampels for connections → 50

4.3.2 Potential equalization for Promag E/L/P/W

- Reference electrode integrated in the sensor as standard
- Exampels for connections → 51

4.3.3 Potential equalization for Promag H

No reference electrode is integrated!
For the metal process connections of the sensor an electrical connection to the fluid is always ensured.

Caution!
If using process connections made of a synthetic material, ground rings have to be used to ensure that potential is equalized (→ 25). The necessary ground rings can be ordered separately from Endress+Hauser as accessories (→ 70).

4.3.4 Exampels for potential equalization connections for Promag D

Standard case

Operating conditions	Potential equalization
When using the measuring device in a: ▪ Metal, grounded pipe ▪ Plastic pipe ▪ Pipe with insulating lining Potential equalization takes place via the ground terminal of the transmitter (standard situation). Note! When installing in metal pipes, we recommend you connect the ground terminal of the transmitter housing with the piping.	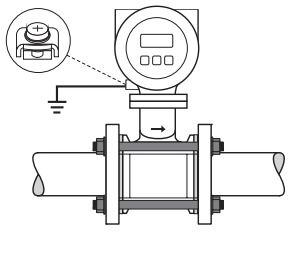 a0010702 *Fig. 33: Via the ground terminal of the transmitter*

Special cases

Operating conditions	Potential equalization
When using the measuring device in a: ▪ Metal pipe that is not grounded This connection method also applies in situations where: ▪ Customary potential equalization cannot be ensured ▪ Excessively high equalizing currents can be expected Potential equalization takes place via the ground terminal of the transmitter and the two pipe flanges. Here, the ground cable (copper wire, 6 mm² / 0.0093 in²) is mounted directly on the conductive flange coating with flange screws.	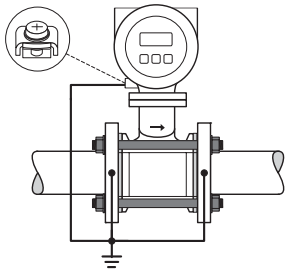 a0010703 *Fig. 34: Via the ground terminal of the transmitter and the flanges of the pipe*
When using the measuring device in a: ▪ Pipe with a cathodic protection unit The device is installed potential-free in the pipe. Only the two flanges of the pipe are connected with a ground cable (copper wire, 6 mm² / 0.0093 in²). Here, the ground cable is mounted directly on the conductive flange coating with flange screws. Note the following when installing: ▪ The applicable regulations regarding potential-free installation must be observed. ▪ There should be no electrically conductive connection between the pipe and the device. ▪ The mounting material must withstand the applicable torques.	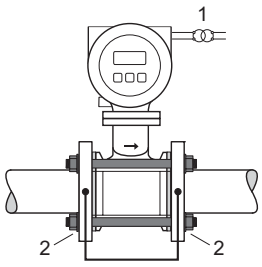 a0010704 *Fig. 35: Potential equalization and cathodic protection* *1 Power supply isolation transformer* *2 Electrically isolated*

4.3.5 Exampels for potential equalization connections for Promag E/L/P/W

Standard case

Operating conditions	Potential equalization
When using the measuring device in a: ▪ Metal, grounded pipe Potential equalization takes place via the ground terminal of the transmitter (standard situation). Note! When installing in metal pipes, we recommend you connect the ground terminal of the transmitter housing with the piping.	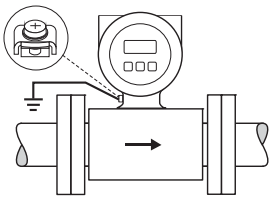 a0010702 *Fig. 36: Via the ground terminal of the transmitter*

Special cases

Operating conditions	Potential equalization
When using the measuring device in a: ■ Metal pipe that is not grounded This connection method also applies in situations where: ■ Customary potential equalization cannot be ensured ■ Excessively high equalizing currents can be expected Both sensor flanges are connected to the pipe flange by means of a ground cable (copper wire, 6 mm² / 0.0093 in²) and grounded. Connect the transmitter or sensor connection housing, as applicable, to ground potential by means of the ground terminal provided for the purpose. Ground cable installation depends on the nominal diameter: ■ DN ≤ 300: The ground cable is mounted directly on the conductive flange coating with the flange screws. ■ DN ≥ 350: The ground cable is mounted directly on the metal transport bracket. Note! The ground cable for flange-to-flange connections can be ordered separately as an accessory from Endress+Hauser.	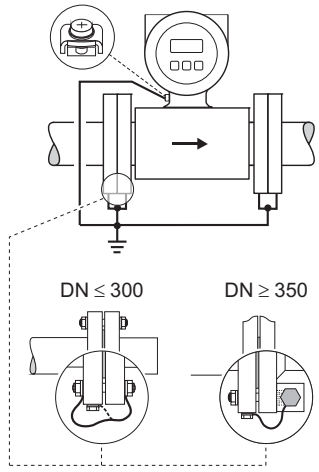 a0010703 *Fig. 37: Via the ground terminal of the transmitter and the flanges of the pipe*
When using the measuring device in a: ■ Plastic pipe ■ Pipe with insulating lining This connection method also applies in situations where: ■ Customary potential equalization cannot be ensured ■ Excessively high equalizing currents can be expected Potential equalization takes place using additional ground disks, which are connected to the ground terminal via a ground cable (copper wire, min. 6 mm² / 0.0093 in²). When installing the ground disks, please comply with the enclosed Installation Instructions.	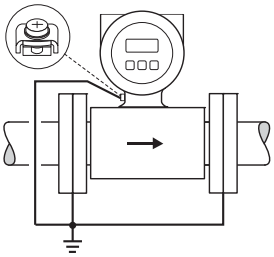 a0010702 *Fig. 38: Via the ground terminal of the transmitter*
When using the measuring device in a: ■ Pipe with a cathodic protection unit The device is installed potential-free in the pipe. Only the two flanges of the pipe are connected with a ground cable (copper wire, 6 mm² / 0.0093 in²). Here, the ground cable is mounted directly on the conductive flange coating with flange screws. Note the following when installing: ■ The applicable regulations regarding potential-free installation must be observed. ■ There should be no electrically conductive connection between the pipe and the device. ■ The mounting material must withstand the applicable torques.	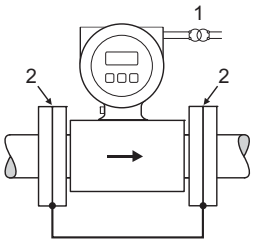 a0010704 *Fig. 39: Potential equalization and cathodic protection* *1 Power supply isolation transformer* *2 Electrically isolated*

4.4 Degree of protection

The devices meet all the requirements of IP 67 degree of protection.

Compliance with the following points is mandatory following installation in the field or servicing in order to ensure that IP 67 protection is maintained:
- The housing seals must be clean and undamaged when inserted into their grooves. The seals must be dried, cleaned or replaced if necessary.
- All threaded fasteners and screw covers must be firmly tightened.
- The cables used for connection must be of the specified outside diameter → 47.
- Firmly tighten the cable entries.
- The cables must loop down before they enter the cable entries ("water trap"). This arrangement prevents moisture penetrating the entry. Always install the measuring device in such a way that the cable entries do not point up.
- Remove all unused cable entries and insert plugs instead.
- Do not remove the grommet from the cable entry.

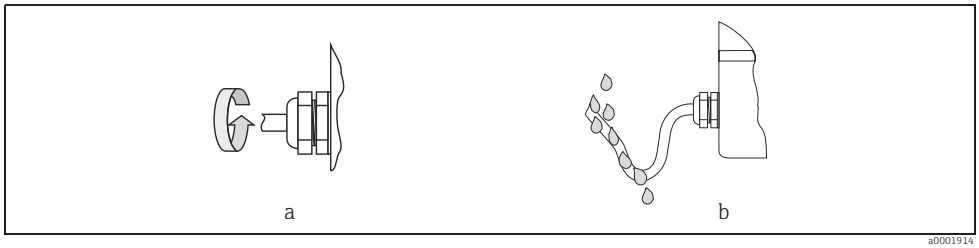

Fig. 40: Installation instructions, cable entries

Caution!
Do not loosen the threaded fasteners of the sensor housing, as otherwise the degree of protection guaranteed by Endress+Hauser no longer applies.

Note!
The Promag E/L/P/W sensors can be supplied with IP 68 rating (permanent immersion in water to a depth of 3 meters (10 ft)). In this case the transmitter must be installed remote from the sensor.
The Promag L sensors with IP 68 rating are only available with stainless steel flanges.

4.5 Post-connection check

Perform the following checks after completing electrical installation of the measuring device:

Device condition and specifications	Notes
Are cables or the device damaged (visual inspection)?	–
Electrical connection	**Notes**
Does the supply voltage match the specifications on the nameplate?	▪ 85 to 250 V AC (50 to 60 Hz) ▪ 20 to 28 V AC (50 to 60 Hz), 11 to 40 V DC
Do the cables used comply with the necessary specifications?	→ 🖹 47
Do the cables have adequate strain relief?	–
Is the cable type route completely isolated? Without loops and crossovers?	–
Are the power-supply and signal cables correctly connected?	See the wiring diagram inside the cover of the terminal compartment
Only remote version: Is the flow sensor connected to the matching transmitter electronics?	Check serial number on nameplates of sensor and connected transmitter.
Only remote version: Is the connecting cable between sensor and transmitter connected correctly?	→ 🖹 42
Are all screw terminals firmly tightened?	–
Have the measures for grounding/potential equalization been correctly implemented?	→ 🖹 50
Are all cable entries installed, firmly tightened and correctly sealed? Cables looped as "water traps"?	→ 🖹 53
Are all housing covers installed and firmly tightened?	–

5 Operation

5.1 Display and operating elements

The local display enables you to read all important parameters directly at the measuring point and configure the device.
The display area consists of two lines; this is where measured values are displayed, and/or status variables (partially filled pipe, etc.). The assignment of the display lines in operating mode is specified. The top line displays the volume flow and the bottom line displays the totalizer status.

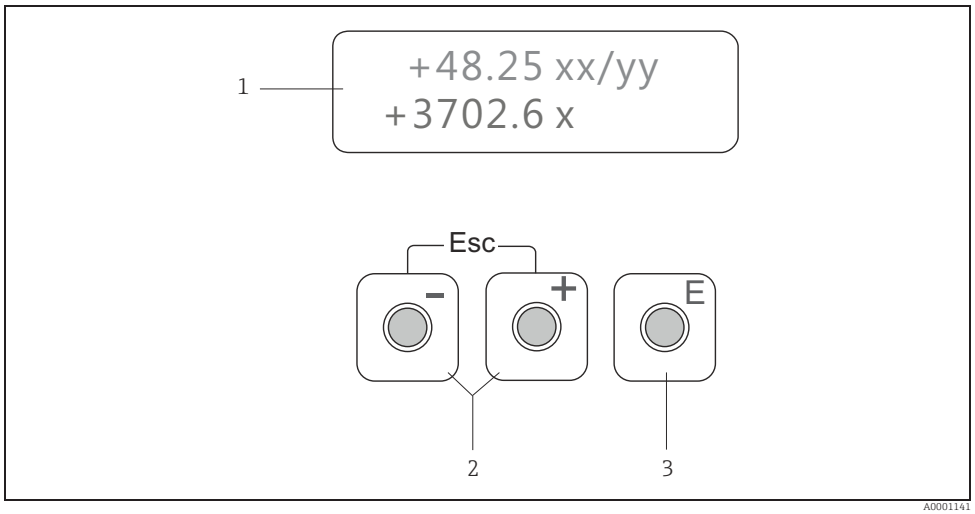

Fig. 41: Display and operating elements

1 Liquid crystal display
The two-line liquid-crystal display shows measured values, dialog texts, error messages and information messages. The display as it appears when normal measuring is in progress is known as the HOME position (operating mode).
- *Upper display line: Shows primary measured values, e.g. volume flow [e.g. in ml/min]*
- *Lower display line: Shows the totalizer status, [e.g. in m^3]*

2 Plus/minus keys
- *Enter numerical values, select parameters*
- *Select different function groups within the function matrix*

Press the +/- keys simultaneously to trigger the following functions:
- *Exit the function matrix step by step → HOME position*
- *Press and hold down +/- keys for longer than 3 seconds → Return directly to HOME position*
- *Cancel data entry*

3 Enter key
- *HOME position → Entry into the function matrix*
- *Save the numerical values you input or settings you change*

5.2 Brief operating instructions on the function matrix

Note!
- See the general notes on → 57.
- Function matrix overview → 108
- Detailed description of all functions → 109 ff.

The function matrix comprises two levels, namely the function groups and the functions of the function groups.
The groups are the highest-level grouping of the control options for the device. A number of functions is assigned to each group. You select a group in order to access the individual functions for operating and configuring the device.

1. HOME position → E → Enter the function matrix
2. Select a function group (e.g. OPERATION)
3. Select a function (e.g. LANGUAGE)
   Change parameter/enter numerical values:
   ± → select or enter enable code, parameters, numerical values
   E → save your entries
4. Exit the function matrix:
   – Press and hold down Esc key (Esc) for longer than 3 seconds → HOME position
   – Repeatedly press Esc key (Esc) → return step by step to HOME position

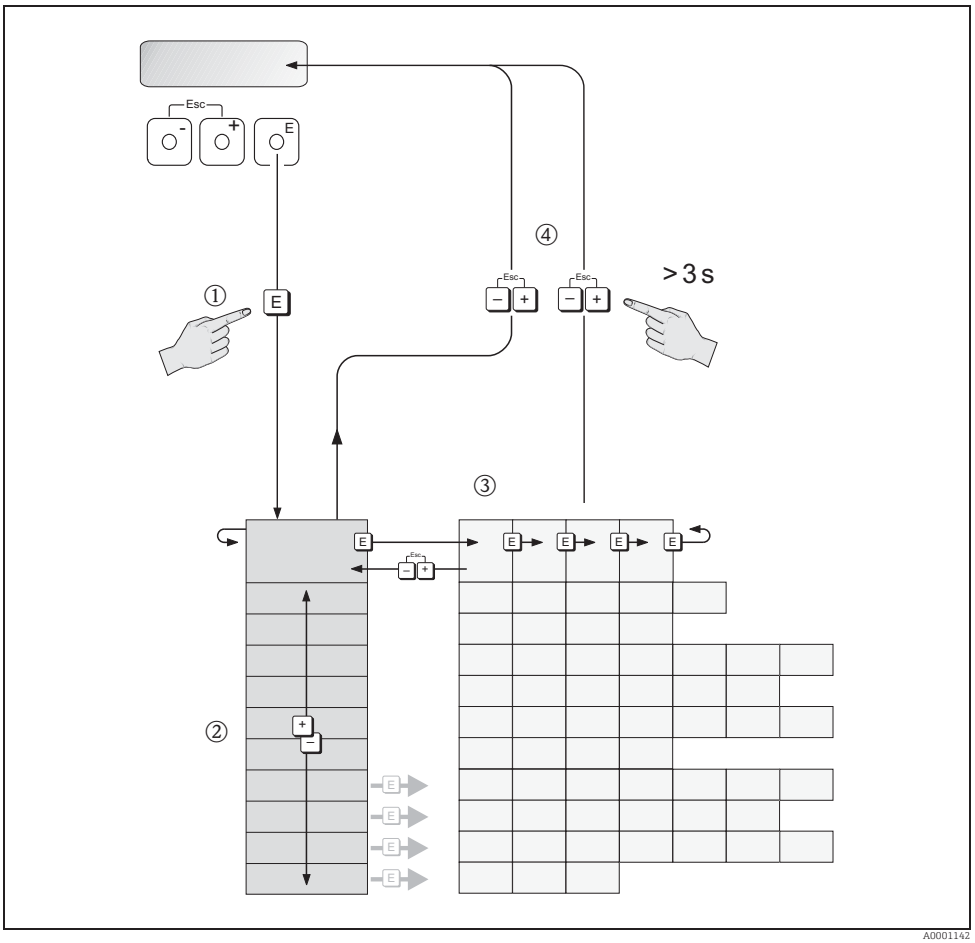

Fig. 42: Selecting functions and configuring parameters (function matrix)

5.2.1 General notes

The brief commissioning guide (→ 66) is adequate for commissioning in most instances. Complex measuring operations on the other hand necessitate additional functions that you can configure as necessary and customize to suit your process parameters. The function matrix, therefore, comprises a multiplicity of additional functions which, for the sake of clarity, are arranged in a number of function groups.

Comply with the following instructions when configuring functions:
- You select functions as described on → 56.
- You can switch off certain functions (OFF). If you do so, related functions in other function groups will no longer be displayed.
- Certain functions prompt you to confirm your data entries.
  Press ± to select "SURE [YES]" and press E again to confirm. This saves your setting or starts a function, as applicable.
- Return to the HOME position is automatic if no key is pressed for 5 minutes.

Note!
- The transmitter continues to measure while data entry is in progress, i.e. the current measured values are output via the signal outputs in the normal way.
- If the power supply fails, all preset and configured values remain safely stored in the EEPROM.

5.2.2 Enabling the programming mode

The function matrix can be disabled. Disabling the function matrix rules out the possibility of inadvertent changes to device functions, numerical values or factory settings. A numerical code (factory setting = 10) has to be entered before settings can be changed.
If you use a code of your choice, you exclude the possibility of unauthorized persons accessing data, see ACCESS CODE function → 111.

Comply with the following instructions when entering codes:
- If programming is disabled and the ± operating elements are pressed in any function, a prompt for the code automatically appears on the display.
- If "0" is specified as the customer's code, programming is always enabled.
- The Endress+Hauser service organization can be of assistance if you mislay your personal code.

Caution!
Changing certain parameters such as all sensor characteristics, for example, influences numerous functions of the entire measuring system, particularly measuring accuracy. Normally, such parameters may not be changed! Please contact Endress+Hauser if you have any questions.

5.2.3 Disabling the programming mode

Programming is disabled if you do not press the operating elements within 60 seconds following automatic return to the HOME position.
You can also disable programming in the "ACCESS CODE" function by entering any number (other than the customer's code).

5.3 Displaying error messages

5.3.1 Type of error

Errors which occur during commissioning or measuring operation are displayed immediately. If two or more system or process errors occur, the error with the highest priority is the one shown on the display.

The measuring system distinguishes between two types of error:
- *System errors* → 📄 *74:*
  This group comprises all device errors, e.g. communication errors, hardware faults, etc.
- *Process errors* → 📄 76:
  This group comprises all application errors, e.g. empty pipe, etc.

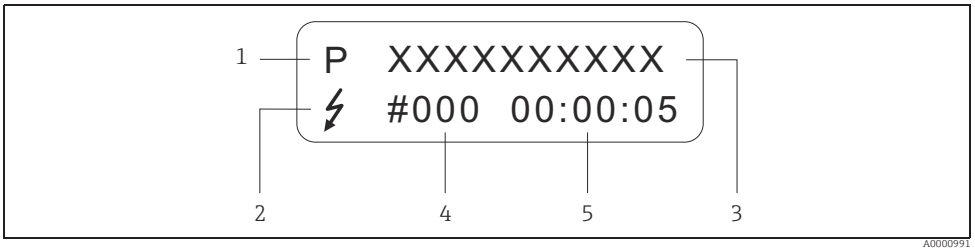

Fig. 43: Error messages on the display (example)

1 Error type:
– P = process error
– S = system error
2 Error message type:
– ϟ = fault message
– ! = notice message
3 Error designation: e.g. EMPTY PIPE = measuring tube is only partly filled or completely empty
4 Error number: e.g. #401
5 Duration of most recent error occurrence (in hours, minutes and seconds)

5.3.2 Error message types

Notice message (!)

- Displayed as → Exclamation mark (!), error type (S: system error, P: process error)
- The error in question has no effect on the outputs of the measuring device.

Fault message (ϟ)

- Displayed as → Lightning flash (ϟ), error type (S: system error, P: process error).
- The error in question has a direct effect on the outputs.
  The response of the individual outputs (failsafe mode) can be defined in the function matrix using the "FAILSAFE MODE" function → 📄 129.

Note!
For security reasons, error messages should be output via the status output.

5.4 Communication

In addition to local operation, the measuring device can be configured and measured values can be obtained by means of the HART protocol. Digital communication takes place using the 4–20 mA current output HART → 🖹 49.

The HART protocol allows the transfer of measuring and device data between the HART master and the field devices for configuration and diagnostics purposes.
The HART master, e.g. a handheld terminal or PC-based operating programs (such as FieldCare), require device description (DD) files which are used to access all the information in a HART device. Information is exclusively transferred using so-called "commands". There are three different command classes:

- *Universal commands:*
  All HART device support and use universal commands.
  The following functionalities are linked to them:
  – Identify HART devices
  – Reading digital measured values (volume flow, totalizer, etc.)
- *Common practice commands:*
  Common practice commands offer functions which are supported and can be executed by most but not all field devices.
- *Device-specific commands:*
  These commands allow access to device-specific functions which are not HART standard. Such commands access individual field device information, amongst other things, such as empty/full pipe calibration values, low flow cutoff settings, etc.



Note!
The device has access to all three command classes. A list of all the "Universal commands" and "Common practice commands" is provided on → 🖹 61.

5.4.1 Operating options

For the complete operation of the measuring device, including device-specific commands, there are DD files available to the user to provide the following operating aids and programs:

Field Xpert HART Communicator

Selecting device functions with a HART Communicator is a process involving a number of menu levels and a special HART function matrix.
The HART manual in the carrying case of the HART Communicator contains more detailed information on the device.

Operating program "FieldCare"

FieldCare is Endress+Hauser's FDT-based plant Asset Management Tool and allows the configuration and diagnosis of intelligent field devices. By using status information, you also have a simple but effective tool for monitoring devices. The Proline flow measuring devices are accessed via a service interface or via the service interface FXA193.

Operating program "SIMATIC PDM" (Siemens)

SIMATIC PDM is a standardized, manufacturer-independent tool for the operation, configuration, maintenance and diagnosis of intelligent field devices.

Operating program "AMS" (Emerson Process Management)

AMS (Asset Management Solutions): program for operating and configuring devices.

5.4.2 Current device description files

The following table illustrates the suitable device description file for the operating tool in question and then indicates where these can be obtained.

HART protocol:

Valid for device software:	1.04.XX	→ Function DEVICE SOFTWARE
Device data HART Manufacturer ID: Device ID:	 11_{hex} (ENDRESS+HAUSER) 56_{hex}	 → Function MANUFACTURER ID → Function DEVICE ID
HART version data:	Device Revision 5/ DD Revision 1	
Software release:	01.2012	

Operating program:	Sources for obtaining device descriptions:
Handheld Field Xpert SFX100	Use update function of handheld terminal
FieldCare / DTM	▪ www.endress.com → Download ▪ CD-ROM (Endress+Hauser order number 56004088) ▪ DVD (Endress+Hauser order number 70100690)
AMS	www.endress.com → Download
SIMATIC PDM	www.endress.com → Download

Tester/simulator:	Sources for obtaining device descriptions:
Fieldcheck	Update by means of FieldCare with the flow device FXA193/291 DTM in the Fieldflash module

Note!
The "Fieldcheck" tester/simulator is used for testing flowmeters in the field. When used in conjunction with the "FieldCare" software package, test results can be imported into a database, printed out and used for official certification. Contact your Endress+Hauser representative for more information.

5.4.3 Device variables

The following device variables are available using the HART protocol:

Code (decimal)	Device variable
0	OFF (not assigned)
1	Volume flow
250	Totalizer

At the factory, the process variables are assigned to the following device variables:
- Primary process variable (PV) → Volume flow
- Second process variable (SV) → Totalizer
- Third process variable (TV) → not assigned
- Fourth process variable (FV) → not assigned

5.4.4 Switching HART write protection on/off

The HART write protection can be switched on and off using the HART WRITE PROTECT device function → 🖹 121.

5.4.5 Universal and common practice HART commands

The following table contains all the universal commands supported by the device.

Command No. HART command / Access type		Command data (numeric data in decimal form)	Response data (numeric data in decimal form)
Universal commands			
0	Read unique device identifier Access type = read	none	Device identification delivers information on the device and the manufacturer. It cannot be changed. The response consists of a 12 byte device ID: – Byte 0: fixed value 254 – Byte 1: Manufacturer ID, 17 = E+H – Byte 2: Device type ID, 69 = Promag 10 – Byte 3: Number of preambles – Byte 4: Universal commands rev. no. – Byte 5: Device-specific commands rev. no. – Byte 6: Software revision – Byte 7: Hardware revision – Byte 8: Additional device information – Bytes 9-11: Device identification
1	Read primary process variable Access type = read	none	– Byte 0: HART unit code of the primary process variable – Bytes 1-4: Primary process variable Factory setting: Primary process variable = Volume flow ✎ Note! Manufacturer-specific units are represented using the HART unit code "240".
2	Read the primary process variable as current in mA and percentage of the set measuring range Access type = read	none	– Bytes 0-3: actual current of the primary process variable in mA – Bytes 4-7: % value of the set measuring range Factory setting: Primary process variable = Volume flow
3	Read the primary process variable as current in mA and four dynamic process variables Access type = read	none	24 bytes are sent as a response: – Bytes 0-3: primary process variable current in mA – Byte 4: HART unit code of the primary process variable – Bytes 5-8: Primary process variable – Byte 9: HART unit code of the second process variable – Bytes 10-13: Second process variable – Byte 14: HART unit code of the third process variable – Bytes 15-18: Third process variable – Byte 19: HART unit code of the fourth process variable – Bytes 20-23: Fourth process variable *Factory setting:* ▪ Primary process variable = Volume flow ▪ Second process variable = Totalizer ▪ Third process variable = OFF (not assigned) ▪ Fourth process variable = OFF (not assigned) The assignment of the process variables is fixed and cannot be changed. ✎ Note! Manufacturer-specific units are represented using the HART unit code "240".
6	Set HART shortform address Access type = write	Byte 0: desired address (0 to 15) Factory setting: 0 ✎ Note! With an address >0 (multidrop mode), the current output of the primary process variable is set to 4 mA.	Byte 0: active address

Command No. HART command / Access type		Command data (numeric data in decimal form)	Response data (numeric data in decimal form)
11	Read unique device identification using the TAG (measuring point designation) Access type = read	Bytes 0-5: TAG	Device identification delivers information on the device and the manufacturer. It cannot be changed. The response consists of a 12 byte device ID if the given TAG agrees with the one saved in the device: – Byte 0: fixed value 254 – Byte 1: Manufacturer ID, 17 = E+H – Byte 2: Device type ID, 69 = Promag 10 – Byte 3: Number of preambles – Byte 4: Universal commands rev. no. – Byte 5: Device-specific commands rev. no. – Byte 6: Software revision – Byte 7: Hardware revision – Byte 8: Additional device information – Bytes 9-11: Device identification
12	Read user message Access type = read	none	Bytes 0-24: User message ✎ Note! You can write the user message using Command 17.
13	Read TAG, descriptor and date Access type = read	none	– Bytes 0-5: TAG – Bytes 6-17: descriptor – Bytes 18-20: Date ✎ Note! You can write the TAG, descriptor and date using Command 18.
14	Read sensor information on primary process variable	none	– Bytes 0-2: Sensor serial number – Byte 3: HART unit code of sensor limits and measuring range of the primary process variable – Bytes 4-7: Upper sensor limit – Bytes 8-11: Lower sensor limit – Bytes 12-15: Minimum span ✎ Note! ▪ The data relate to the primary process variable (= volume flow). ▪ Manufacturer-specific units are represented using the HART unit code "240".
15	Read output information of primary process variable Access type = read	none	– Byte 0: Alarm selection ID – Byte 1: Transfer function ID – Byte 2: HART unit code for the set measuring range of the primary process variable – Bytes 3-6: upper range, value for 20 mA – Bytes 7-10: lower range, value for 4 mA – Bytes 11-14: Damping constant in [s] – Byte 15: Write protection ID – Byte 16: OEM dealer ID, 17 = E+H Factory setting: Primary process variable = Volume flow ✎ Note! Manufacturer-specific units are represented using the HART unit code "240".
16	Read the device production number Access type = read	none	Bytes 0-2: Production number
17	Write user message Access = write	Save any 32-character text in the device. Bytes 0-23: Desired user message	Displays the current user message in the device: Bytes 0-23: Current user message in the device
18	Write TAG, descriptor and date Access = write	With this parameter, you can store an 8 character TAG, a 16 character descriptor and a date: – Bytes 0-5: TAG – Bytes 6-17: descriptor – Bytes 18-20: Date	Displays the current information in the device: – Bytes 0-5: TAG – Bytes 6-17: descriptor – Bytes 18-20: Date
19	Write the device production number Access = write	Bytes 0-2: Production number	Bytes 0-2: Production number

The following table contains all the common practice commands supported by the device:

Command No. HART command / Access type		Command data (numeric data in decimal form)	Response data (numeric data in decimal form)
Common practice commands			
34	Write damping value for primary process variable Access = write	Bytes 0-3: Damping value of the primary process variable "volume flow" in seconds *Factory setting:* Primary process variable = Current output damping	Displays the current damping value in the device: Bytes 0-3: Damping value in seconds
35	Write measuring range of primary process variable Access = write	Write the desired measuring range: – Byte 0: HART unit code of the primary process variable – Bytes 1-4: upper range, value for 20 mA – Bytes 5-8: lower range, value for 4 mA *Factory setting:* Primary process variable = Volume flow Note! ▪ The start of the measuring range (4 mA) must correspond to the zero flow. ▪ If the HART unit code is not the correct one for the process variable, the device will continue with the last valid unit.	The currently set measuring range is displayed as a response: – Byte 0: HART unit code for the set measuring range of the primary process variable – Bytes 1-4: upper range, value for 20 mA – Bytes 5-8: lower range, value for 4 mA Note! Manufacturer-specific units are represented using the HART unit code "240".
38	Device status reset (configuration changed) Access = write	none Note! It is also possible to execute this HART command when write protection is activated (= ON)!	none
40	Simulate input current of primary process variable Access = write	Simulation of the desired output current of the primary process variable. An entry value of 0 exits the simulation mode: Bytes 0-3: Output current in mA *Factory setting:* Primary process variable = Volume flow Note! You can set the assignment of device variables to process variables using Command 51.	The momentary output current of the primary process variable is displayed as a response: Bytes 0-3: Output current in mA
42	Perform master reset Access = write	none	none
44	Write unit of primary process variable Access = write	Set unit of primary process variable. Only units which are suitable for the process variable are transferred to the device: Byte 0: HART unit code *Factory setting:* Primary process variable = Volume flow Note! ▪ If the written HART unit code is not the correct one for the process variable, the device will continue with the last valid unit. ▪ If you change the unit of the primary process variable, this has a direct impact on the system units.	The current unit code of the primary process variable is displayed as a response: Byte 0: HART unit code Note! Manufacturer-specific units are represented using the HART unit code "240".
48	Read additional device status Access = read	none	The device status is displayed in extended form as the response: Coding: see table → 65.

Command No. HART command / Access type		Command data (numeric data in decimal form)	Response data (numeric data in decimal form)
50	Read assignment of the device variables to the four process variables Access = read	none	Display of the current variable assignment of the process variables: – Byte 0: Device variable code to the primary process variable – Byte 1: Device variable code to the second process variable – Byte 2: Device variable code to the third process variable – Byte 3: Device variable code to the fourth process variable *Factory setting:* ▪ Primary process variable: Code 1 for volume flow ▪ Second process variable: Code 250 for totalizer ▪ Third process variable: Code 0 for OFF (not assigned) ▪ Fourth process variable: Code 0 for OFF (not assigned)
53	Write device variable unit Access = write	This command sets the unit of the given device variables. Only those units which suit the device variable are transferred: – Byte 0: Device variable code – Byte 1: HART unit code *Code of the supported device variables:* See information → 🖹 60 ✎ Note! ▪ If the written unit is not the correct one for the device variable, the device will continue with the last valid unit. ▪ If you change the unit of the device variable, this has a direct impact on the system units.	The current unit of the device variables is displayed in the device as a response: – Byte 0: Device variable code – Byte 1: HART unit code ✎ Note! Manufacturer-specific units are represented using the HART unit code "240".
59	Write number of preambles in response message Access = write	This parameter sets the number of preambles which are inserted in the response messages: Byte 0: Number of preambles (4 to 20)	As a response, the current number of the preambles is displayed in the response message: Byte 0: Number of preambles

5.4.6 Device status and error messages

You can read the extended device status, in this case, current error messages, via Command "48". The command delivers information which is partly coded in bits (see table below).

Note!
- You can find a detailed explanation of the device status and error messages and their elimination on → 📄 65
- Bits and bytes not listed are not assigned.

Byte	Bit	Error No.	Short error description
0	0	001	Serious device error
	1	011	Measuring amplifier has faulty EEPROM
	2	012	Error when accessing data of the measuring amplifier EEPROM
3	3	111	Totalizer checksum error
5	0	321	Coil current of the sensor is outside the tolerance.
7	3	351	Current output: Flow is out of range
8	3	359	Pulse output: The pulse output frequency is out of range
10	7	401	Measuring tube partially filled or empty
11	2	461	EPD calibration not possible because the fluid's conductivity is either too low or too high
	4	463	The EPD calibration values for empty pipe and full pipe are identical, and therefore incorrect.
12	7	501	Amplifier software version is loaded. Currently no other commands are possible.
14	3	601	Positive zero return active
18	3	691	Simulation of response to error (outputs) active
	4	692	Simulation of volume flow active

6 Commissioning

6.1 Function check

Make sure that all final checks have been completed before you start up your measuring point:
- Checklist for "Post-installation check" → 41
- Checklist for "Post-connection check" → 54

6.2 Switching on the measuring device

Once the connection checks have been successfully completed, it is time to switch on the power supply. The device is now operational. The measuring device performs a number of post switch-on self-tests. As this procedure progresses the following sequence of messages appears on the local display:

PROMAG 10 V 1.XX.XX	Start-up message

Normal measuring mode commences as soon as start-up completes.
Various measured-value and/or status variables (HOME position) appear on the display.

Note!
If start-up fails, an error message indicating the cause is displayed.

6.3 Brief commissioning guide

HOME position → E → +

Configure display	
UI language	→ 111
Display contrast	→ 112
Number of decimal places	→ 112

Select engineering units	
Volume flow	→ 109
Totalizer	→ 113

Configure outputs			
Current output		*Pulse/status output*	
Current range	→ 114	Operating mode	→ 116
Full scale value	→ 115	Pulse value	→ 116
		Pulse width	→ 116
		or	
		Assign status output	→ 117
		Switch-on point	→ 117

Complex applications The quickest way to find information on configuring additional functions is via the following pages:	
Operating matrix	→ 108
Index	→ 135

For optimum measurement results	
Low flow cut off	→ 122
Empty pipe detection	→ 122

6.4 Commissioning after installing a new electronics board

After startup, the device checks whether a serial number is available. If this is not the case, the following setup is started. Installing a new electronics board → 79.

6.4.1 "Commissioning" setup

Note!
- The setup can no longer be called up once a serial number has been entered and stored. If a parameter is entered incorrectly during the setup, this must be corrected in the relevant function via the function matrix.
- The appropriate information is documented on the nameplate of the sensor and on the inside of the housing cover, → 2 → 7.

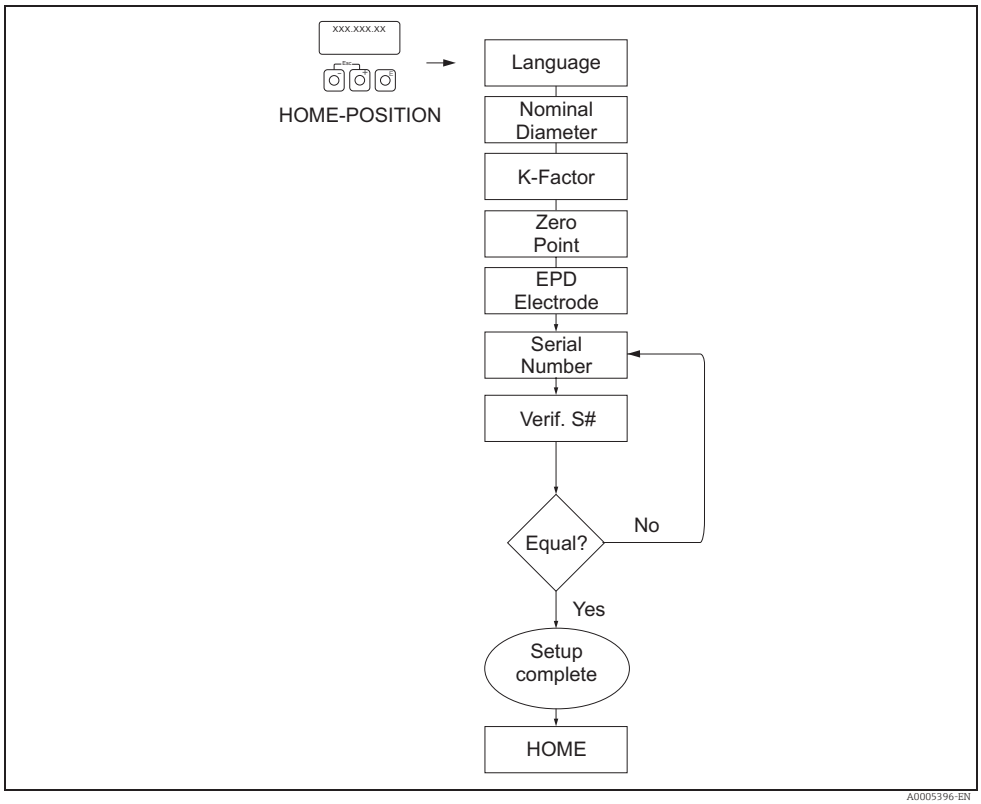

Fig. 44: The "Commissioning" setup starts after installation of a new electronics board if no serial number is present.

6.5 Empty-pipe/full-pipe adjustment

Flow cannot be measured correctly unless the measuring tube is completely full.
This status can be permanently monitored using the Empty Pipe Detection:
EPD = Empty Pipe Detection (with the help of an EPD electrode)

Caution!
More detailed information on empty-pipe and full-pipe adjustment can be found in the description of the functions:
- EPD ADJUSTMENT (carrying out the adjustment) → 123.
- EPD (switching empty pipe detection on and off) → 122

Note!
- The EPD function is not available unless the sensor is fitted with an EPD electrode.
- The devices are already calibrated at the factory with water (approx. 500 µS/cm). If the fluid conductivity differs from this reference, empty-pipe/full-pipe adjustment has to be performed again on site.
- The default setting for EPD when the devices are delivered is OFF; the function has to be activated if required.
- The EPD process error can be output by means of the configurable status output.

6.5.1 Performing empty-pipe and full-pipe adjustment (EPD)

1. Select the appropriate function in the function matrix:
   HOME → E → + → PROCESS PARAMETER → E → + → EPD ADJUSTMENT
2. Empty the piping. The wall of the measuring tube should still be wet with fluid during EPD empty pipe adjustment
3. Start empty-pipe adjustment: Select "EMPTY PIPE ADJUST" and press E to confirm.
4. After empty-pipe adjustment, fill the piping with fluid.
5. Start full-pipe adjustment: Select "FULL PIPE ADJUST" and press E to confirm.
6. Having completed the adjustment, select the setting "OFF" and exit the function by pressing E.
7. Now switch on empty pipe detection in the EPD function by selecting the option "ON".

   Caution!
   The adjustment coefficients must be valid before you can activate the EPD function. If adjustment is incorrect the following messages might appear on the display:
   – FULL = EMPTY
     The adjustment values for empty pipe and full pipe are identical. In cases of this nature you must repeat empty-pipe or full-pipe adjustment!
   – ADJUSTMENT NOT OK
     Adjustment is not possible because the fluid's conductivity is out of range.

7 Maintenance

No special maintenance work is required.

7.1 Exterior cleaning

When cleaning the exterior of measuring devices, always use cleaning agents that do not attack the surface of the housing and the seals.

7.2 Seals

The seals of the Promag H sensor must be replaced periodically, particularly in the case of gasket seals (aseptic version).
The period between changes depends on the frequency of cleaning cycles, the cleaning temperature and the fluid temperature.

Replacement seals (accessories) → 70.

8 Accessories

Various accessories, which can be ordered separately from Endress+Hauser, are available for the transmitter and the sensor. Your Endress+Hauser service organization can provide detailed information on the specific order codes on request.

8.1 Device-specific accessories

Accessory	Description	Order code
Proline Promag 10 transmitter	Transmitter for replacement or storage. Use the order code to define the following specifications: ▪ Approvals ▪ Degree of protection/version ▪ Cable for remote version ▪ Cable entry ▪ Display/power supply/operation ▪ Software ▪ Outputs/inputs	10XXX – XXXXX******

8.2 Measuring principle-specific accessories

Accessory	Description	Order code
Mounting set for Promag 10 transmitter	Mounting set for aluminum field housing (remote version). Suitable for Pipe mounting	DK5WM – B
Wall-mounting kit for Promag H	Wall-mounting kit for the Promag H sensor.	DK5HM – **
Cable for remote version	Coil and signal cables, various lengths.	DK5CA – **
Mounting kit for Promag D, wafer version	▪ Mounting bolts ▪ Nuts incl. washers ▪ Flange seals ▪ Centering sleeves (if required for the flange)	DKD** – **
Set of seals for Promag D	Set of seals consisting of two flange seals.	DK5DD – ***
Mounting kit for Promag H	▪ 2 process connections ▪ Threaded fasteners ▪ Seals	DKH** – ****
Set of seals for Promag H	For regular replacement of the seals of the Promag H sensor.	DK5HS – ***
Welding jig for Promag H	Weld nipple as process connection: welding jig for installation in pipe.	DK5HW – ***
Adapter connection for Promag A, H	Adapter connections for installing a Promag H instead of a Promag 30/33 A or Promag 30/33 H DN 25.	DK5HA – *****
Ground cable for Promag E/L/P/W	Ground cable for potential equalization.	DK5GC – ***
Ground disk for Promag E/L/P/W	Ground disk for potential equalization.	DK5GD – * * ***
Process display RIA45	Multifunctional 1-channel display unit: ▪ Universal input ▪ Transmitter power supply ▪ Limit relay ▪ Analog output	RIA45 – ******
Process display RIA251	Digital display device for looping into the 4 to 20 mA current loop.	RIA251 – **

Accessory	Description	Order code
Field display unit RIA16	Digital field display device for looping into the 4 to 20 mA current loop.	RIA16 – ***
Application Manager RMM621	Electronic recording, display, balancing, control, saving and event and alarm monitoring of analog and digital input signals. Values and conditions determined are output by means of analog and digital output signals. Remote transmission of alarms, input values and calculated values using a PSTN or GSM modem.	RMM621 – **********

8.3 Communication-specific accessories

Accessory	Description	Order code
HART Communicator Field Xpert SFX 100	Handheld terminal for remote configuration and for obtaining measured values via the HART current output (4 to 20 mA). Contact your Endress+Hauser representative for more information.	SFX100 – *******
Fieldgate FXA320	Gateway for remote interrogation of HART sensors and actuators via Web browser: ▪ 2-channel analog input (4 to 20 mA) ▪ 4 binary inputs with event counter function and frequency measurement ▪ Communication via modem, Ethernet or GSM ▪ Visualization via Internet/Intranet in Web browser and/or WAP cellular phone ▪ Limit value monitoring with alarm by e-mail or SMS ▪ Synchronized time stamping of all measured values.	FXA320 – *****
Fieldgate FXA520	Gateway for remote interrogation of HART sensors and actuators via Web browser: ▪ Web server for remote monitoring of up to 30 measuring points ▪ Intrinsically safe version [EEx ia]IIC for applications in hazardous areas ▪ Communication via modem, Ethernet or GSM ▪ Visualization via Internet/Intranet in Web browser and/or WAP cellular phone ▪ Limit value monitoring with alarm by e-mail or SMS ▪ Synchronized time stamping of all measured values ▪ Remote diagnosis and remote configuration of connected HART devices	FXA520 – ****
FXA195	The Commubox FXA195 connects intrinsically safe Smart transmitters with HART protocol to the USB port of a personal computer. This makes the remote operation of the transmitters possible with the aid of configuration programs (e.g. FieldCare). Power is supplied to the Commubox by means of the USB port	FXA195 – *

8.4 Service-specific accessories

Accessory	Description	Order code
Applicator	Software for selecting and planning flowmeters. The Applicator software can be downloaded from the Internet or ordered on CD-ROM for installation on a local PC. Contact your Endress+Hauser representative for more information.	DXA80 – *
Fieldcheck	Tester/simulator for testing flowmeters in the field. When used in conjunction with the "FieldCare" software package, test results can be imported into a database, printed out and used for official certification. Contact your Endress+Hauser representative for more information.	50098801
FieldCare	FieldCare is Endress+Hauser's FDT-based asset management tool. It can configure all intelligent field units in your system and helps you manage them. By using status information, it is also a simple but effective way of checking their status and condition.	See the product page on the Endress+Hauser Web site: www.endress.com
Memograph M graphic display recorder	The Memograph M graphic display recorder provides information on all the relevant process variables. Measured values are recorded correctly, limit values are monitored and measuring points analyzed. The data are stored in the 256 MB internal memory and also on a DSD card or USB stick. Memograph M boasts a modular design, intuitive operation and a comprehensive security concept. The ReadWin® 2000 PC software is part of the standard package and is used for configuring, visualizing and archiving the data captured. The mathematics channels which are optionally available enable continuous monitoring of specific power consumption, boiler efficiency and other parameters which are important for efficient energy management.	RSG40 – **********
FXA193	Service interface from the device to the PC for operation via FieldCare.	FXA193 – *

9 Troubleshooting

9.1 Troubleshooting instructions

Always start troubleshooting with the checklist below if faults occur after start-up or during operation. The routine takes you directly to the cause of the problem and the appropriate remedial measures.

Check the display	
No display visible and no output signals present.	1. Check the supply voltage → terminals 1, 2 2. Check the power line fuse → 🖹 81 85 to 250 V AC: TR5 1 A slow-blow / 250 V 11 to 40 V DC / 20 to 28 V AC: TR5 1.6A slow-blow / 250 V 3. Measuring electronics defective → order spare parts → 🖹 78
No display visible, but output signals are present.	1. Check whether the ribbon-cable connector of the display module is correctly plugged into the amplifier board → 🖹 79 2. Display module defective → order spare parts → 🖹 78 3. Measuring electronics defective → order spare parts → 🖹 78
Display texts are in a foreign language.	Switch off power supply. Press and hold down both the ± buttons and switch on the measuring device. The display text will appear in English (default) and is displayed at maximum contrast.
Measured value indicated, but no signal at the current or pulse output.	Electronics board defective → order spare parts → 🖹 78
↓	
Error messages on display	
Errors which occur during commissioning or measuring operation are displayed immediately. Error messages consist of a variety of icons: the meanings of these icons are as follows (example): – Error type: S = system error, P = process error – Error message type: ϟ = fault message, ! = notice message – EMPTY PIPE = Type of error, e.g. measuring tube is only partly filled or completely empty – 03:00:05 = duration of error occurrence (in hours, minutes and seconds) – #401 = error number ☝ Caution! ▪ See the information on → 🖹 58! ▪ The measuring system interprets simulations and positive zero return as system errors, but displays them as notice message only.	
Error number: No. 001 – 399 No. 501 – 699	System error (device error) has occurred → 🖹 74
Error number: No. 401 - 499	Process error (application error) has occurred → 🖹 76
↓	
Other error (without error message)	
Some other error has occurred.	Diagnosis and rectification → 🖹 76

9.2 System error messages

Serious system errors are always recognized by the device as "Fault message", and are shown as a lightning flash (ϟ) on the display. Fault messages immediately affect the outputs. Simulations and positive zero return, on the other hand, are only classed and displayed as notice messages.

Caution!
In the event of a serious fault, a flowmeter might have to be returned to the manufacturer for repair. Necessary procedures must be carried out before you return the measuring device to Endress+Hauser → 🖹 5.
Always enclose a duly completed "Declaration of Contamination" form. You will find a master copy of this form at the back of this manual.

Note!
- The error types listed in the following correspond to the factory settings.
- Also observe the information on → 🖹 58

Type	Error message / No.	Cause	Remedy (Replace electronics board → 🖹 79)
S = System error ϟ = Fault message (with an effect on the outputs) ! = Notice message (without an effect on the outputs)			
No. # 0xx→ Hardware error			
S ϟ	CRITICAL FAIL. # 001	Serious device error	Replace electronics board.
S ϟ	AMP HW EEPROM # 011	Electronics board: Defective EEPROM	Replace electronics board.
S ϟ	AMP SW EEPROM # 012	Amplifier: Error accessing EEPROM data.	The EEPROM data blocks in which an error has occurred are displayed in the TROUBLESHOOTING function. Press Enter to acknowledge the errors in question; default values are automatically inserted instead of the errored parameter values. Note! The measuring device has to be restarted if an error has occurred in a totalizer block (see error No. 111 / CHECKSUM TOTAL).
No. # 1xx→ Software error			
S ϟ	GAIN ERROR AMP # 101	Impermissible gain deviation compared to reference.	Replace electronics board.
S ϟ	CHECKSUM TOTAL. # 111	Totalizer checksum error	1. Restart the measuring device 2. Replace electronics board if necessary.
No. # 3xx→ System limits exceeded			
S ϟ	TOL. COIL CURR. # 321	Sensor: Coil current is out of tolerance.	Warning! Switch off power supply before manipulating the coil current cable, coil current cable connector or measuring electronics boards! Remote version: 1. Check wiring of terminals 41/42 → 🖹 42 2. Check coil current cable connector. Compact and remote version: Replace measuring electronics boards if necessary
S !	CURRENT RANGE # 351	Current output: flow is out of range.	– Change the upper or lower limit setting, as applicable. – Increase or reduce flow, as applicable.

Type	Error message / No.	Cause	Remedy (Replace electronics board → 79)
S !	RANGE PULSE # 359	Pulse output: the pulse output frequency is out of range.	1. Increase the setting for pulse weighting 2. When selecting the pulse width, choose a value that can still be processed by a connected counter (e.g. mechanical counter, PLC etc.). *Determine the pulse width:* – Variant 1: Enter the minimum duration that a pulse must be present at the connected counter to ensure its registration. – Variant 2: Enter the maximum (pulse) frequency as the half "reciprocal value" that a pulse must be present at the connected counter to ensure its registration. Example: The maximum input frequency of the connected counter is 10 Hz. The pulse width to be entered is: 1 / (2 · 10 Hz) = 50 ms 3. Reduce flow.
No. # 5xx→ Application error			
S !	SW.-UPDATE ACT. # 501	Electronics board: New software version being loaded, no other commands are possible at present.	Wait until process is completed and restart device.
S !	UP-/DOWNL. ACT. # 502	Data are being uploaded or downloaded via FieldCare. ✎ Note! Measuring device configuration is locked during the upload/download.	Wait until uploading/downloading process is finished.
No. # 6xx→ Simulation mode active			
S !	POS. ZERO-RET. # 601	Positive zero return active	Switch off positive zero return.
S ϟ	SIM. FAILSAFE # 691	Simulation of response to error (outputs) active.	Switch off simulation.
S !	SIM. VOL. FLOW # 692	Simulation of volume flow active.	Switch off simulation.

9.3 Process error messages

Process errors are permanently defined as fault messages or notice messages.

Type	Error message / No.	Cause	Remedy / spare part
P = Process error ϟ = Fault message (with an effect on the outputs) ! = Notice message (without an effect on the outputs)			
P !	EMPTY PIPE # 401	Measuring tube partially filled or empty	1. Check the process conditions of the plant 2. Fill the measuring tube
P !	ADJ. NOT OK # 461	EPD calibration not possible because the fluid's conductivity is either too low or too high.	The EPD function cannot be used with fluids of this nature.
P ϟ	FULL = EMPTY # 463	The EPD calibration values for empty pipe and full pipe are identical, therefore incorrect.	Repeat calibration, making sure procedure is correct → 🖹 68.

9.4 Process errors without messages

Symptoms	Rectification
Remark: You may have to change or correct certain settings in functions in the function matrix in order to rectify the fault.	
Flow values are negative, even though the fluid is flowing forwards through the pipe.	1. Remote version: – Switch off the power supply and check the wiring → 🖹 42 – If necessary, reverse the connections at terminals 41 and 42 2. Change the setting in the "INSTALLATION DIRECTION SENSOR" function accordingly
Measured-value reading fluctuates even though flow is steady.	1. Check grounding and potential equalization → 🖹 50 2. Check the fluid for presence of gas bubbles. 3. In the "SYSTEM DAMPING" function → increase the value
Measured-value reading shown on display, even though the fluid is at a standstill and the measuring tube is full.	1. Check grounding and potential equalization → 🖹 50 2. Check the fluid for presence of gas bubbles. 3. Activate the "LOW FLOW CUTOFF" function, i.e. enter or increase the value for the switching point.
Measured-value reading on display, even though measuring tube is empty.	1. Perform empty-pipe/full-pipe adjustment and then switch on Empty Pipe detection → 🖹 68 2. Remote version: Check the terminals of the EPD cable → 🖹 42 3. Fill the measuring tube.
The current output signal is always 4 mA, irrespective of the flow signal at any given time.	1. Select the "BUS ADDRESS" function and change the setting to "0". 2. Value for creepage too high. Reduce the value in the "LOW FLOW CUTOFF" function.
The fault cannot be rectified or some other fault not described above has arisen. In these instances, please contact your Endress+Hauser service organization.	The following options are available for tackling problems of this nature: Request the services of an Endress+Hauser service technician If you contact our service organization to have a service technician sent out, please be ready to quote the following information: – Brief description of the fault – Nameplate specifications (→ 🖹 6): order code, serial number Returning devices to Endress+Hauser The necessary procedures on → 🖹 5 must be carried out before you return a flowmeter requiring repair or calibration to Endress+Hauser. Always enclose a duly completed "Declaration of Conformity" form with the flowmeter. You will find a master copy of this form at the back of this manual. Replace transmitter electronics Components in the measuring electronics defective → order spare parts → 🖹 78

9.5 Response of outputs to errors

Note!
The response of the totalizer, current output, pulse output and status output is defined in the FAILSAFE MODE function (→ 129).

You can use positive zero return to set the signals of the current, pulse and status outputs to their fallback value, for example when measuring has to be interrupted while a pipe is being cleaned. This function takes priority over all other device functions: simulations, for example, are suppressed.

Failsafe mode of outputs and totalizers		
	Process/system error is current	**Positive zero return is activated**
Caution! System or process errors defined as "Notice messages" have no effect whatsoever on the inputs and outputs. See the information on → 58		
Current output	MINIMUM VALUE 4–20 mA (25 mA) → 2 mA 4–20 mA NAMUR →3.5 mA 4–20 mA US → 3.75 mA 4–20 mA (25 mA) HART → 2 mA 4–20 mA HART NAMUR →3.5 mA 4–20 mA HART US → 3.75 mA MAXIMUM VALUE 4–20 mA (25 mA) → 25 mA 4–20 mA NAMUR → 22.6 mA 4–20 mA US → 22.6 mA 4–20 mA (25 mA) HART → 25 mA 4–20 mA HART NAMUR → 22.6 mA 4–20 mA HART US → 22.6 mA HOLD VALUE Last valid value (preceding occurrence of the fault) is output. ACTUAL VALUE Measured value display on the basis of the current flow measurement. The fault is ignored.	Output signal corresponds to "zero flow"
Pulse output	MIN/MAX VALUE → FALLBACK VALUE Signal output → no pulses HOLD VALUE Last valid value (preceding occurrence of the fault) is output. ACTUAL VALUE Fault is ignored, i.e. normal measured-value output on the basis of ongoing flow measurement.	Output signal corresponds to "zero flow"
Totalizer	*MINIMUM/MAXIMUM VALUE → STOP* The totalizers are paused until the error is rectified. *ACTUAL VALUE* The fault is ignored. The totalizer continues to count in accordance with the current flow value.	Totalizer stops
Status output	In the event of a fault or power supply failure: Status output → non-conductive	No effect on status output

9.6 Spare parts

Detailed troubleshooting instructions are provided in the previous sections → 🖹 73
The measuring device, moreover, provides additional support in the form of continuous self-diagnosis and error messages.

Fault rectification can entail replacing defective components with tested spare parts. The illustration below shows the available scope of spare parts.

Note!
You can order spare parts directly from your Endress+Hauser service organization by providing the serial number printed on the transmitter's nameplate → 🖹 6.

Spare parts are shipped as sets comprising the following parts:
- Spare part
- Additional parts, small items (threaded fasteners, etc.)
- Mounting instructions
- Packaging

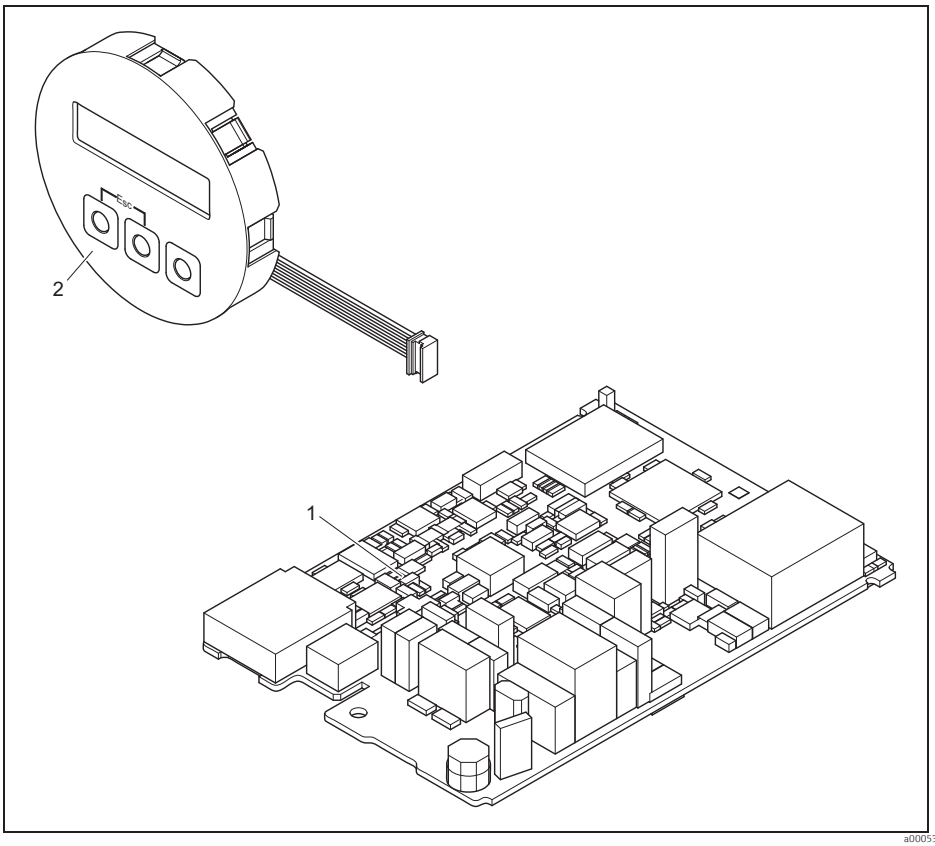

Fig. 45: Spare parts for Promag 10 transmitter

1 Electronics board
2 Display module

9.6.1 Removing and installing printed circuit boards

Field housing: removing and installing electronics boards → 46

Warning!
- Risk of electric shock!
  Exposed components carry dangerous voltages. Make sure that the power supply is switched off before you remove the cover of the electronics compartment.
- Risk of damaging electronic components (ESD protection). Static electricity can damage electronic components or impair their operability. Use a workplace with a grounded working surface purpose-built for electrostatically sensitive devices!
- If you cannot guarantee that the dielectric strength of the device is maintained in the following steps, then an appropriate inspection must be carried out in accordance with the manufacturer's specifications.

Caution!
Use only original Endress+Hauser parts.

Note!
Commissioning a new electronics board: → 67

1. Switch off power supply.
2. Unscrew cover of the electronics compartment from the transmitter housing.
3. Remove the local display (a) from the connection compartment cover.
4. Press the side latches (b) and flip down the cover of the connection compartment.
5. Disconnect the connector of the electrode signal cable (c) and the coil current cable (d).
6. Disconnect the connector for the power supply (e) and the outputs (f).
7. Disconnect the connector of the local display (g).
8. Remove the cover from the connection compartment (h) by loosening the screws.
9. Plug out the ground cable (i) of the electronics board.
10. Pull entire module (plastic retainer and electronics board) out of the housing.
11. Press the side latches (j) slightly outwards and partly push out the electronics board towards the rear from the front.
12. Remove the electronics board from the plastic retainer from the rear.
13. Installation is the reverse of the removal procedure.

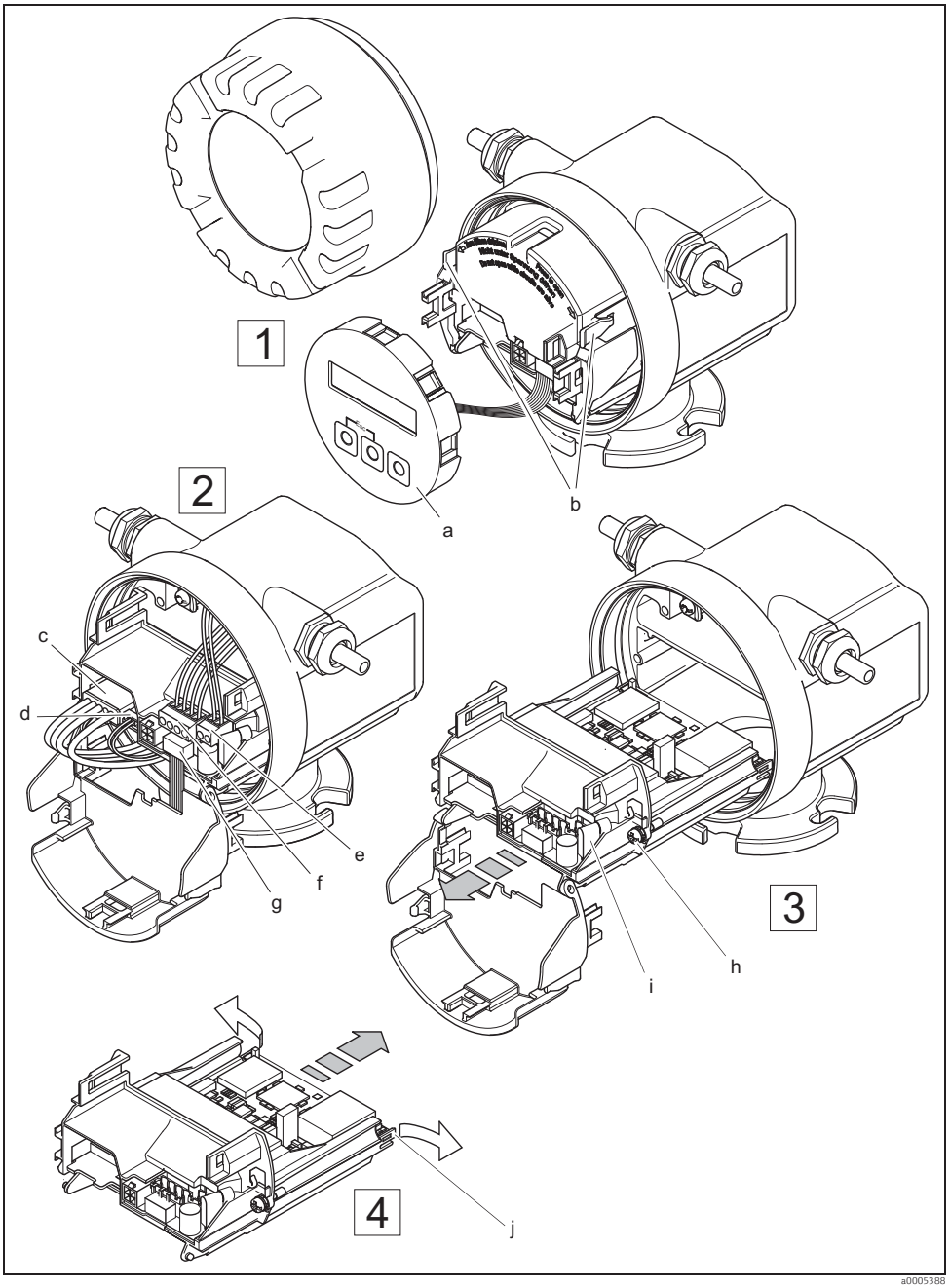

Fig. 46: Field housing: removing and installing printed circuit boards

a Local display
b Latches
c Connector of the electrode signal cable
d Connector of the coil current cable
e Connector for the power supply
f Connector for current output and pulse/status output
g Connector of local display
h Screws of electronics compartment cover
i Connector of the ground cable
j Latches for the electronics board

9.6.2 Replacing the device fuse

Warning!
Risk of electric shock!
Exposed components carry dangerous voltages. Make sure that the power supply is switched off before you remove the cover of the electronics compartment.

The main fuse is located on the electronics board (→ 47).
The procedure for replacing the fuse is as follows:

1. Switch off power supply.
2. Unscrew cover of the electronics compartment from the transmitter housing.
3. Press the side latches and flip down the cover of the connection compartment.
4. Remove the connector for the power supply (a).
5. Replace device fuse (b). Only use the following fuse type.
   Use only fuses of the following type:
   – Power supply 11 to 40 V DC / 20 to 28 V AC → 1.6 A slow-blow / 250 V TR5
   – Power supply 85 to 250 V DC → 1 A slow-blow / 250 V TR5
6. Installation is the reverse of the removal procedure.

Caution!
Use only original Endress+Hauser parts.

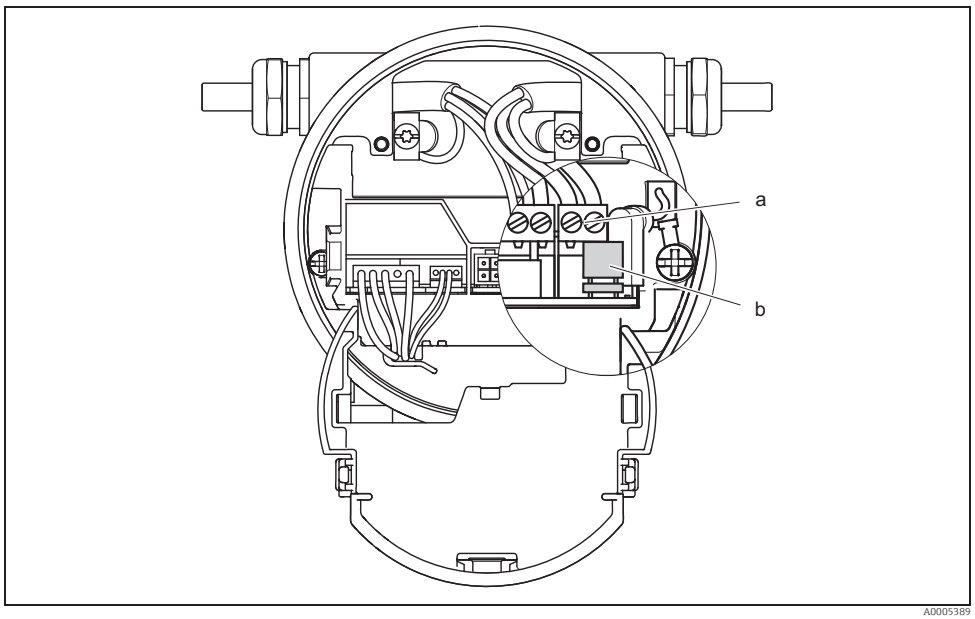

Fig. 47: Replacing the device fuse on the electronics board

a Connector for power supply
b Device fuse

9.7 Return

Caution!
Do not return a measuring device if you are not absolutely certain that all traces of hazardous substances have been removed, e.g. substances which have penetrated crevices or diffused through plastic.
Costs incurred for waste disposal and injury (burns, etc.) due to inadequate cleaning will be charged to the owner-operator.

The following steps must be taken before returning a flow measuring device to Endress+Hauser, e.g. for repair or calibration:
- Always enclose a duly completed "Declaration of contamination" form. Only then can Endress+Hauser transport, examine and repair a returned device.
- Enclose special handling instructions if necessary, for example a safety data sheet as per EC REACH Regulation No. 1907/2006.
- Remove all residues. Pay special attention to the grooves for seals and crevices which could contain residues. This is particularly important if the substance is hazardous to health, e.g. flammable, toxic, caustic, carcinogenic, etc.

Note!
You will find a preprinted "Declaration of contamination" form at the back of these Operating Instructions.

9.8 Disposal

Observe the regulations applicable in your country!

9.9 Software history

Date	Software version	Changes to software	Operating Instructions
01.2012	V 1.04.00	Introduction of new nominal diameters; faster coil current control; calf-values to 2.5	71249469/15.14
11.2009	V 1.03.00	Introduction of Calf history	71106179/12.09 71105338/11.09
06.2009	V 1.02.00	Introduction of Promag L	71095705/06.09
03.2009	V 1.02.00	Introduction of Promag D; introduction of new nominal diameter.	71088674/03.09
10.2004	V 1.02.00	Software modification/extension Function: SELF CHECKING	50104787/05.05
09.2004	V 1.01.01	Software modification; extension of nominal diameter range	50104787/04.03
06.2004	V 1.01.00	Software extension; preparation for uploading/ downloading via ToF Tool - Fieldtool Package	50104787/04.03
08.2003	V 1.00.02	Production-related software modification	50104787/04.03
01.2003	V 1.00.00	Original software. Compatible with: ToF Tool - Fieldtool Package, HART Communicator DXR 275 (from OS 4.6) with Rev. 1, DD 1.	50104787/04.03

Note!
Uploads or downloads between the individual software versions are only possible with a special service software.

10 Technical data

10.1 Technical data at a glance

10.1.1 Application

→ 🖹 4

10.1.2 Function and system design

Measuring principle

Electromagnetic flow measurement on the basis of Faraday's Law.

Measuring system

→ 🖹 6

10.1.3 Input

Measured variable

Flow velocity (proportional to induced voltage)

Measuring range

Typically v = 0.01 to 10 m/s (0.033 to 33 ft/s) with the specified accuracy

Operable flow range

Over 1000 : 1

10.1.4 Output

Output signal

Current output

- Galvanically isolated
- Active: 4 to 20 mA, R_L <700 Ω (for HART: RL ≥250 Ω)
- Full scale value adjustable
- Temperature coefficient: typ. 2 µA/°C, resolution: 1.5 µA

Pulse/status output:

- Galvanically isolated
- Passive: 30 V DC / 250 mA
- Open collector
- Can be configured as:
  - Pulse output
    Pulse value and pulse polarity can be selected, max. pulse width adjustable (5 to 2000 ms), pulse frequency max. 100 Hz
  - Status output
    For example, can be configured for error messages, empty pipe detection, flow recognition, limit value

Signal on alarm

Current output

Failsafe mode can be selected (e.g. in accordance with NAMUR Recommendation NE 43) → 🖹 129

Pulse output

Failsafe mode can be selected → 🖹 129

Status output

"Not conductive" in the event of fault or power supply failure

Load

See "Output signal"

Low flow cut off

Low flow cut off, switch-on point can be selected as required

Galvanic isolation

All circuits for inputs, outputs, and power supply are galvanically isolated from each other.

10.1.5 Power supply

Electrical connections

→ 🖹 42

Supply voltage (power supply)

- 20 to 28 V AC, 45 to 65 Hz
- 85 to 250 V AC, 45 to 65 Hz
- 11 to 40 V DC

Cable entry

Power supply and signal cables (inputs/outputs):

- Cable entry M20 × 1.5 (8 to 12 mm/0.31 to 0.47 inch)
- Threads for cable entries ½" NPT, G ½"

Connecting cable for remote version:

- Cable entry M20 × 1.5 (8 to 12 mm/0.31 to 0.47 inch)
- Threads for cable entries ½" NPT, G ½"

Cable specifications

→ 🖹 47

Power consumption

Power consumption

- 20 to 28 V AC: <8 VA (incl. sensor)
- 85 to 250 V AC: <12 VA (incl. sensor)
- 11 to 40 V DC: <6 W (incl. sensor)

Switch-on current:

- Max. 3.3 A (<5 ms) for 24 V DC
- Max. 5.5 A (<5 ms) for 28 V DC
- Max. 16 A (<5 ms) for 250 V DC

Power supply failure

Lasting min. ½ cycle frequency: EEPROM saves measuring system data

Potential equalization

→ 🖹 50

10.1.6 Performance characteristics

Reference operating conditions

To DIN EN 29104 and VDI/VDE 2641:

- Fluid temperature: +28 ± 2 °C (+82 ± 4 °F)
- Ambient temperature: +22 ± 2 °C (+72 ± 4 °F)
- Warm-up period: 30 minutes

Installation:

- Inlet run >10 × DN
- Outlet run > 5 × DN
- Sensor and transmitter grounded.
- The sensor is centered in the pipe.

Maximum measured error

- Current output: plus typically ± 5 µA
- Pulse output: ± 0.5% o.r. ± 2 mm/s (o.r. = of reading)

Fluctuations in the supply voltage do not have any effect within the specified range.

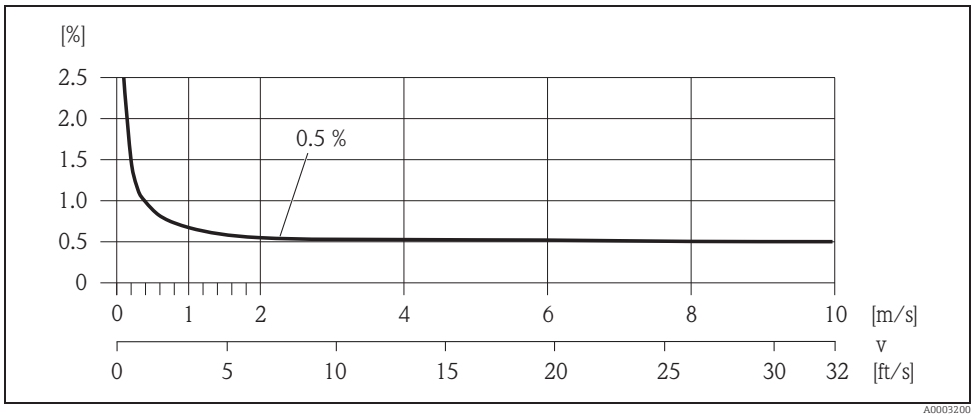

Fig. 48: Max. measured error in % of reading

Repeatability

Max. ± 0.2% o.r. ± 2 mm/s (o.r. = of reading)

10.1.7 Installation

Installation instructions

Any orientation (vertical, horizontal), restrictions and additional installation instructions → 11

Inlet and outlet runs

If possible, install the sensor upstream from fittings such as valves, T-pieces, elbows, etc. The following inlet and outlet runs must be observed in order to meet accuracy specifications (→ 14, → 12):
- Inlet run: ≥ 5 × DN
- Outlet run: ≥ 2 × DN

Adapters

→ 15

Length of connecting cable

- The permitted length of connecting cable L_{max} is determined by the fluid conductivity (→ 18, → 16). A minimum conductivity of 50 µS/cm is needed for all fluids.
- The maximum connecting cable length is 10 m (32.81 ft) when empty pipe detection (EPD → 68) is switched on.

10.1.8 Environment

Ambient temperature range

- Transmitter: −20 to +60 °C (−4 to +140 °F)

  Note!
  At ambient temperatures below −20 (−4 °F) the readability of the display may be impaired.
- Sensor (flange material carbon steel): −10 to +60 °C (+14 to +140 °F)

Caution!
- The permitted temperature range of the measuring tube lining may not be undershot or overshot (→ "Operating conditions: Process" → "Medium temperature range").
- Install the device in a shady location. Avoid direct sunlight, particularly in warm climatic regions.
- The transmitter must be mounted separate from the sensor if both the ambient and fluid temperatures are high.

Storage temperature

The storage temperature corresponds to the operating temperature range of the measuring transmitter and the appropriate measuring sensors.

Caution!
- The measuring device must be protected against direct sunlight during storage in order to avoid unacceptably high surface temperatures.
- A storage location must be selected where moisture does not collect in the measuring device. This will help prevent fungus and bacteria infestation which can damage the liner.

Degree of protection

Standard: IP 67 (NEMA 4X) for transmitter and sensor

Shock and vibration resistance

Acceleration up to 2 g following IEC 600 68-2-6

CIP cleaning

Caution!
The maximum fluid temperature permitted for the device may not be exceeded.

CIP cleaning is possible:
Promag E (100 °C / 212 °F), Promag H/P

CIP cleaning is not possible:
Promag D/L/W

SIP cleaning

Caution!
The maximum fluid temperature permitted for the device may not be exceeded.

SIP cleaning is possible:
Promag H

SIP cleaning is not possible:
Promag D/E/L/P/W

Electromagnetic compatibility (EMC)

- As per IEC/EN 61326 and NAMUR Recommendation NE 21
- Emission: to limit value for industry EN 55011

10.1.9 Process

Medium temperature range

The permissible temperature depends on the lining of the measuring tube

Promag D

0 to +60 °C (+32 to +140 °F) for polyamide

Promag E

−10 to +110 °C (+14 to +230 °F) for PTFE,
Restrictions → see the following diagram

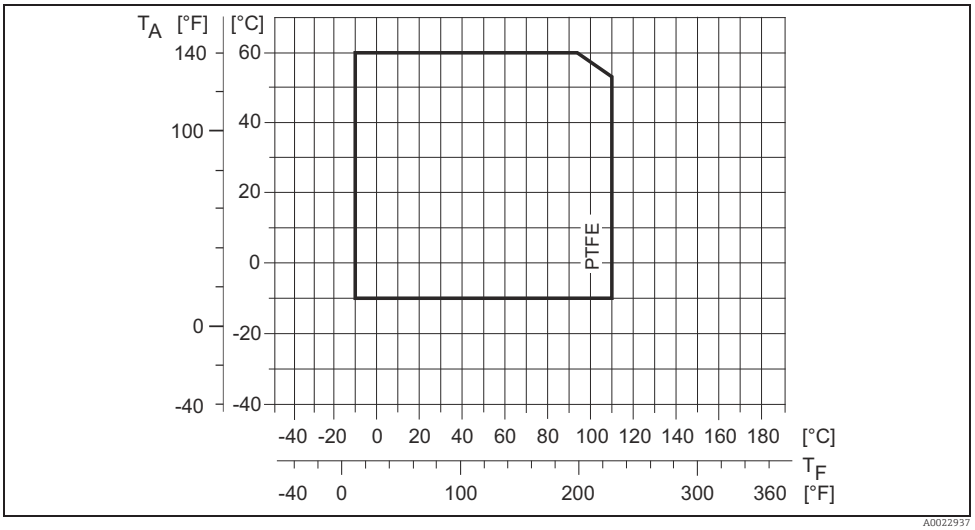

Fig. 49: Compact and remote version Promag E (TA = ambient temperature; TF = fluid temperature)

Promag H

Sensor:
- DN 2 to 25 (1/12 to 1"): −20 to +150 °C (−4 to +302 °F)
- DN 40 to 100 (1 ½ to 4"): −20 to +150 °C (−4 to +302 °F)

Seals:
- EPDM/Viton (FKM)/Kalrez: −20 to +150 °C (−4 to +302 °F)

Promag L

- 0 to +80 °C (+32 to +176 °F) for hard rubber (DN 350 to 2400 / 14 to 90")
- −20 to +50 °C (−4 to +122 °F) for polyurethane (DN 25 to 1200 / 1 to 48")
- −20 to +90 °C (−4 to +194 °F) for PTFE (DN 25 to 300 / 1 to 12")

Promag P

−40 to +130 °C (−40 to +266 °F) for PTFE (DN 25 to 600 / 1 to 24"),
Restrictions → see the following diagram

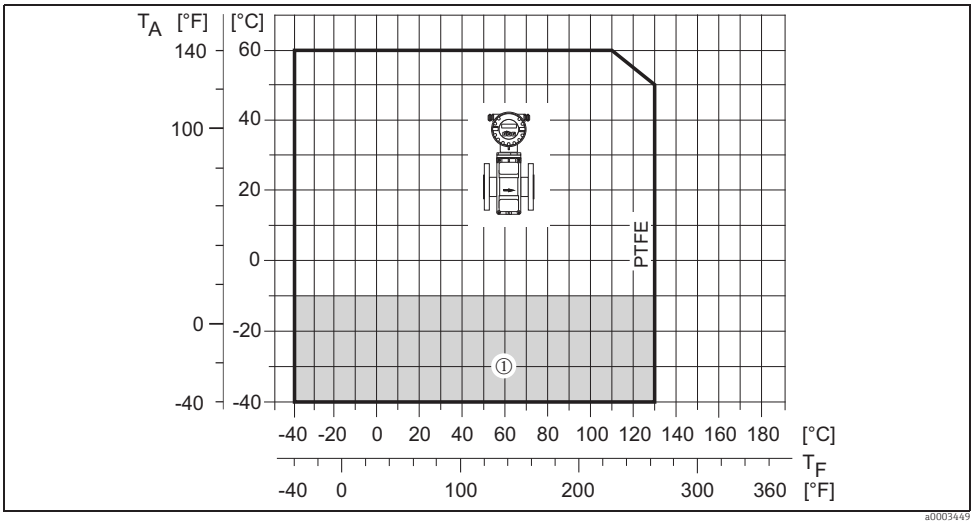

Fig. 50: Compact version Promag P with PTFE-lining

TA = ambient temperature; TF = fluid temperature
① = light gray area → temperature range from −10…−40 °C (−14…−40 °F) valid for stainless steel version only

Promag W

- 0 to +80 °C (+32 to +176 °F) for hard rubber (DN 65 to 2000 / 2 ½ to 78")
- −20 to +50 °C (−4 to +122 °F) for polyurethane (DN 25 to 1000 / 1 to 48")

Conductivity

The minimum conductivity is ≥ 50 µS/cm

Note!
Note that in the case of the remote version, the requisite minimum conductivity is also influenced by the length of the connecting cable → 18

Medium pressure range (nominal pressure)

Promag D

- EN 1092-1 (DIN 2501)
  - PN 16
- ASME B 16.5
  - Class 150
- JIS B2220
  - 10 K

Promag E

- EN 1092-1 (DIN 2501)
  - PN 10 (DN 200 to 600 / 8 to 24")
  - PN 16 (DN 65 to 600 / 3 to 24")
  - PN 40 (DN 15 to 150 / ½ to 2")
- ASME B 16.5
  - Class 150 (½ to 24")
- JIS B2220
  - 10 K (DN 50 to 300 / 2 to 12")
  - 20 K (DN 15 to 40 / ½ to 1½")

Promag H

The permissible nominal pressure depends on the process connection and the seal:
- PN 40, Class 150, 20 K → Couplings, flanges (with O-ring seal)
- PN 16 → Welding nipple, couplings, clamp, flange (with aseptic gasket seal)

Promag L

- EN 1092-1 (DIN 2501)
  - PN 6 (DN 350 to 2400 / 14 to 90")
  - PN 10 (DN 200 to 2400 / 8 to 90")
  - PN 16 (DN 25 to 300 / 1 to 12")
- EN 1092-1, lap joint flange, stampel plate
  - PN 10 (DN 25 to 300 / 1 to 12")
- ASME B16.5
  - Class 150 (1 to 24")
- AWWA
  - Class D (28 to 90")
- AS2129
  - Table E (350 to 1200 / 14 to 48")
- AS4087
  - PN 16 (350 to 1200 / 14 to 48")

Promag P

- EN 1092-1 (DIN 2501)
  - PN 10 (DN 200 to 600 / 8 to 24")
  - PN 16 (DN 65 to 600 / 3 to 24")
  - PN 25 (DN 200 to 600 / 8 to 24")
  - PN 40 (DN 25 to 150 / 1 to 6")
- ASME B 16.5
  - Class 150 (1 to 24")
  - Class 300 (1 to 6")
- JIS B2220
  - 10 K (DN 50 to 300 / 2 to 12")
  - 20 K (DN 25 to 300 / 1 to 12")
- AS 2129
  - Table E (DN 25 / 1"), 50 / 2")
- AS 4087
  - PN 16 (DN 50 / 2")

Promag W

- EN 1092-1 (DIN 2501)
  - PN 6 (DN 350 to 2000 / 14 to 84")
  - PN 10 (DN 200 to 2000 / 8 to 84")
  - PN 16 (DN 65 to 2000 / 3 to 84")
  - PN 25 (DN 200 to 1000 / 8 to 40")
  - PN 40 (DN 25 to 150 / 1 to 6")
- ASME B 16.5
  - Class 150 (1 to 24")
  - Class 300 (1 to 6")
- AWWA
  - Class D (28 to 78")
- JIS B2220
  - 10 K (DN 50 to 300 / 2 to 12")
  - 20 K (DN 25 to 300 / 1 to 12")
- AS 2129
  - Table E (DN 80 / 3", 100 / 4", 150 to 1200 / 6 to 48")
- AS 4087
  - PN 16 (DN 80 / 3", 100 / 4", 150 to 1200 / 6 to 48")

Pressure tightness

Promag D

Measuring tube: 0 mbar abs (0 psi abs) with a fluid temperature of ≤ 60 °C (140 °F)

Promag E (Measuring tube lining: PTFE)

Nominal diameter		Resistance of measuring tube lining to partial vacuum Limit values for abs. pressure [mbar] ([psi]) at various fluid temperatures							
		25 °C		80 °C		100 °C		110 °C	
		77 °F		176 °F		212 °F		230 °F	
[mm]	[inch]	[mbar]	[psi]			[mbar]	[psi]	[mbar]	[psi]
15	½"	0	0	0	0	0	0	100	1.45
25	1"	0	0	0	0	0	0	100	1.45
32	–	0	0	0	0	0	0	100	1.45
40	1 ½"	0	0	0	0	0	0	100	1.45
50	2"	0	0	0	0	0	0	100	1.45
65	–	0	0	*	*	40	0.58	130	1.89

Nominal diameter		Resistance of measuring tube lining to partial vacuum Limit values for abs. pressure [mbar] ([psi]) at various fluid temperatures							
		25 °C		80 °C		100 °C		110 °C	
		77 °F		176 °F		212 °F		230 °F	
[mm]	[inch]	[mbar]	[psi]			[mbar]	[psi]	[mbar]	[psi]
80	3"	0	0	*	*	40	0.58	130	1.89
100	4"	0	0	*	*	135	1.96	170	2.47
125	–	135	1.96	*	*	240	3.48	385	5.58
150	6"	135	1.96	*	*	240	3.48	385	5.58
200	8"	200	2.90	*	*	290	4.21	410	5.95
250	10"	330	4.79	*	*	400	5.80	530	7.69
300	12"	400	5.80	*	*	500	7.25	630	9.14
350	14"	470	6.82	*	*	600	8.70	730	10.59
400	16"	540	7.83	*	*	670	9.72	800	11.60
450	18"	Partial vacuum is impermissible!							
500	20"								
600	24"								
* No value can be quoted.									

Promag H (Measuring tube lining: PFA)

Nominal diameter		Resistance of measuring tube lining to partial vacuum Limit values for abs. pressure [mbar] ([psi]) at various fluid temperatures					
		25 °C	80 °C	100 °C	130 °C	150 °C	180 °C
[mm]	[inch]	77 °F	176 °F	212 °F	266 °F	302 °F	356 °F
2 to 100	1/12 to 4"	0	0	0	0	0	0

Promag L (Measuring tube lining: Polyurethane, Hard rubber)

Nominal diameter		Measuring tube lining	Resistance of measuring tube lining to partial vacuum Limit values for abs. pressure [mbar] ([psi]) at various fluid temperatures		
			25 °C	50 °C	80 °C
[mm]	[inch]		77 °F	122 °F	176 °F
25 to 1200	1 to 48"	25 to 1200	1 to 48"	0	–
350 to 2400	14 to 90"	Hard rubber	0	0	0

Promag L (Measuring tube lining: PTFE)

Nominal diameter		Resistance of measuring tube lining to partial vacuum Limit values for abs. pressure [mbar] ([psi]) at various fluid temperatures			
		25 °C		90 °C	
		77 °F		194 °F	
[mm]	[inch]	[mbar]	[psi]	[mbar]	[psi]
25	1"	0	0	0	0
32	–	0	0	0	0
40	1 ½"	0	0	0	0
50	2"	0	0	0	0
65	–	0	0	40	0.58
80	3"	0	0	40	0.58
100	4"	0	0	135	1.96
125	–	135	1.96	240	3.48
150	6"	135	1.96	240	3.48

Nominal diameter		Resistance of measuring tube lining to partial vacuum Limit values for abs. pressure [mbar] ([psi]) at various fluid temperatures			
		25 °C		90 °C	
		77 °F		194 °F	
[mm]	[inch]	[mbar]	[psi]	[mbar]	[psi]
200	8"	200	2.90	290	4.21
250	10"	330	4.79	400	5.80
300	12"	400	5.80	500	7.25

Promag P (Measuring tube lining: PTFE)

Nominal diameter		Resistance of measuring tube lining to partial vacuum Limit values for abs. pressure [mbar] ([psi]) at various fluid temperatures									
		25 °C		80 °C		100 °C		130 °C		150 °C	180 °C
		77 °F		176 °F		212 °F		266 °F		302 °F	356 °F
[mm]	[inch]	[mbar]	[psi]			[mbar]	[psi]	[mbar]	[psi]		
25	1"	0	0	0	0	0	0	100	1.45	–	–
32	–	0	0	0	0	0	0	100	1.45	–	–
40	1 ½"	0	0	0	0	0	0	100	1.45	–	–
50	2"	0	0	0	0	0	0	100	1.45	–	–
65	–	0	0	*	*	40	0.58	130	1.89	–	–
80	3"	0	0	*	*	40	0.58	130	1.89	–	–
100	4"	0	0	*	*	135	1.96	170	2.47	–	–
125	–	135	1.96	*	*	240	3.48	385	5.58	–	–
150	6"	135	1.96	*	*	240	3.48	385	5.58	–	–
200	8"	200	2.90	*	*	290	4.21	410	5.95	–	–
250	10"	330	4.79	*	*	400	5.80	530	7.69	–	–
300	12"	400	5.80	*	*	500	7.25	630	9.14	–	–
350	14"	470	6.82	*	*	600	8.70	730	10.59	–	–
400	16"	540	7.83	*	*	670	9.72	800	11.60	–	–
450	18"	Partial vacuum is impermissible!									
500	20"										
600	24"										
* No value can be quoted.											

Promag W

Nominal diameter		Measuring tube lining	Resistance of measuring tube lining to partial vacuum Limit values for abs. pressure [mbar] ([psi]) at various fluid temperatures						
			25 °C	50 °C	80 °C	100 °C	130 °C	150 °C	180 °C
[mm]	[inch]		77 °F	122 °F	176 °F	212 °F	266 °F	302 °F	356 °F
25 to 1200	1 to 40"	Polyurethane	0	0	–	–	–	–	–
50 to 2000	2 to 78"	Hard rubber	0	0	0	–	–	–	–

Limiting flow

→ 🖹 16

Pressure loss

- No pressure loss if the sensor is installed in a pipe with the same nominal diameter.
- Pressure losses for configurations incorporating adapters according to DIN EN 545 (see "Adapters" → 🖹 15)

10.1.10 Mechanical construction

Design, dimensions

The dimensions and installation lengths of the sensor and transmitter can be found in the "Technical Information" for the device in question. This document can be downloaded as a PDF file from www.endress.com. A list of the "Technical Information" documents available is provided in the "Documentation" section on → 🖹 107.

Weight (SI units)

Promag D

Weight data in kg				
Nominal diameter		Compact version	Remote version (without cable)	
[mm]	[inch]		Sensor	Transmitter
25	1"	2.9	2.5	3.1
40	1 ½"	3.5	3.1	3.1
50	2"	4.3	3.9	3.1
65	2 ½"	5.1	4.7	3.1
80	3"	6.1	5.7	3.1
100	4"	8.8	8.4	3.1
Transmitter Promag (compact version): 1.8 kg (Weight data valid without packaging material)				

Promag E

Weight data in kg							
Nominal diameter		Compact version					
		EN (DIN)				ASME	JIS
[mm]	[inch]	PN 6	PN 10	PN 16	PN 40	Class 150	10K
15	½"	–	–	–	6.5	6.5	6.5
25	1"	–	–	–	7.3	7.3	7.3
32	–	–	–	–	8.0	–	7.3
40	1½"	–	–	–	9.4	9.4	8.3
50	2"	–	–	–	10.6	10.6	9.3
65	–	–	–	12.0	–	–	11.1
80	3"	–	–	14.0	–	14.0	12.5
100	4"	–	–	16.0	–	16.0	14.7
125	–	–	–	21.5	–	–	21.0
150	6"	–	–	25.5	–	25.5	24.5
200	8"	–	45.0	46.0	–	45.0	41.9
250	10"	–	65.0	70.0	–	75.0	69.4
300	12"	–	70.0	81.0	–	110.0	72.3
350	14"	77.4	88.4	99.4	–	137.4	–
400	16"	89.4	104.4	120.4	–	168.4	–
450	18"	99.4	112.4	133.4	–	191.4	–
500	20"	114.4	132.4	182.4	–	228.4	–
600	24"	155.4	162.4	260.4	–	302.4	–

- Transmitter (compact version): 1.8 kg
- Weight data without packaging material

Weight data in kg								
Nominal diameter		Remote version (without cable)						
		Sensor						Transmitter
		EN (DIN)				ASME	JIS	
[mm]	[inch]	PN 6	PN 10	PN 16	PN 40	Class 150	10K	Wall-mount housing
15	½"	–	–	–	4.5	4.5	4.5	6.0
25	1"	–	–	–	5.3	5.3	5.3	
32	–	–	–	–	6.0	–	5.3	
40	1½"	–	–	–	7.4	7.4	6.3	
50	2"	–	–	–	8.6	8.6	7.3	
65	–	–	–	10.0	–	–	9.1	
80	3"	–	–	12.0	–	12.0	10.5	
100	4"	–	–	14.0	–	14.0	12.7	
125	–	–	–	19.5	–	–	19.0	
150	6"	–	–	23.5	–	23.5	22.5	
200	8"	–	43.0	44.0	–	43.0	39.9	
250	10"	–	63.0	68.0	–	73.0	67.4	
300	12"	–	68.0	79.0	–	108.0	70.3	
350	14"	73.1	84.1	95.1	–	133.1		
400	16"	85.1	100.1	116.1	–	164.1		
450	18"	95.1	108.1	129.1	–	187.1		
500	20"	110.1	128.1	178.1	–	224.1		
600	24"	158.1	158.1	256.1	–	298.1		

- Transmitter (remote version): 3.1 kg
- Weight data without packaging material

Promag H

Weight data in kg				
Nominal diameter		Compact version	Remote version (without cable)	
[mm]	[inch]	DIN	Sensor	Transmitter
2	1/12"	3.6	2	3.1
4	1/8"	3.6	2	3.1
8	3/8"	3.6	2	3.1
15	½"	3.7	1.9	3.1
25	1"	3.9	2.8	3.1
40	1 ½"	4.9	4.5	3.1
50	2"	7.4	7.0	3.1
65	2 ½"	7.9	7.5	3.1
80	3"	17.4	17.0	3.1
100	4"	16.9	16.5	3.1
Transmitter Promag (compact version): 1.8 (Weight data valid for standard pressure ratings and without packaging material)				

Promag L

Weight data in kg												
Nominal diameter		Compact version (including transmitter)[1]										
[mm]	[inch]	EN (DIN)						ASME/ AWWA		AS		
25	1"	PN 6	–	PN 10	–	PN 16	7.3	ASME / Class 150	7.9	PN 16	–	Tabelle E	–
32	1 ¼"		–		–		8.0		–		–		–
40	1 ½"		–		–		9.0		7.5		–		–
50	2"		–		–		9.4		7.6		–		–
65	2 ½"		–		–		10.4		–		–		–
80	3"		–		–		12.4		12.8		–		–
100	4"		–		–		14.4		16.1		–		–
125	5"		–		–		15.9		–		–		–
150	6"		–		–		23.9		24.4		–		–
200	8"		–		43.4		44.9		49.6		–		–
250	10"		–		63.4		70.7		75.1		–		–
300	12"		–		68.4		85.8		100		–		–
350	14"		77.4		88.4		103		137		99.4		99.4
375	15"		–		–		–		–		105		–
400	16"		89.4		104		124		168		120		120
450	18"		99.4		112		139		191		133		143
500	20"		114		132		174		228		182		182
600	24"		155		162		303		302		260		260
700	28"		190		240		288	AWWA / Class D	266		367		346
750	30"		–		–		–		318		445		433
800	32"		240		315		364		383		503		493
900	36"		308		393		456		470		702		690
1000	40"		359		468		579		587		759		761
1050	42"		–		–		–		670		–		–
1200	48"		529		717		866		901		–		1237
–	54"		–		–		–		1273		–		–
1400	–		784		1114		1274		–		–		–
–	60"		–		–		–		1594		–		–
1600	–		1058		1624		1872		–		–		–
1650	66"		–		–		–		2131		–		–
1800	72"		1418		2107		2409		2568		–		–
2000	78"		1877		2630		2997		3113		–		–
–	84"		–		–		–		3755		–		–
2200	–		2512		3422		–		–		–		–
–	90"		–		–		–		4797		–		–
2400	–		2996		4094		–		–		–		–
Transmitter Promag (compact version): 3.1 kg (Weight data valid without packaging material)													

1) Lap joint flanges / welded flanges DN > 300 (12")

Weight data in kg

Nominal diameter		Remote version (sensor plus sensor housing without cable)[1]											
[mm]	[inch]	EN (DIN)						ASME/ AWWA		AS			
25	1"	PN 6	–	PN 10	–	PN 16	5.3	ASME / Class 150	5.9	PN 16	–	Tabelle E	–
32	1 ¼"		–		–		6.0		–		–		–
40	1 ½"		–		–		7.0		5.5		–		–
50	2"		–		–		7.4		5.6		–		–
65	2 ½"		–		–		8.4		–		–		–
80	3"		–		–		10.4		10.8		–		–
100	4"		–		–		12.4		14.1		–		–
125	5"		–		–		13.9		–		–		–
150	6"		–		–		21.9		22.4		–		–
200	8"		–		41.4		42.9		47.6		–		–
250	10"		–		61.4		68.7		73.1		–		–
300	12"		–		66.4		83.8		98		–		–
350	14"		75.4		86.4		103		135		97.4		97.4
375	15"		–		102		–		–		103		–
400	16"		87.4		102		124		166		118		118
450	18"		97.4		110		139		189		131		141
500	20"		112		130		174		226		180		180
600	24"		153		160		303		300		258		258
700	28"		188		238		288	AWWA / Class D	264		365		344
750	30"		–		–		–		316		443		431
800	32"		238		313		364		381		501		491
900	36"		306		391		456		468		700		688
1000	40"		357		466		579		585		757		759
1050	42"		–		–		–		668		–		–
1200	48"		527		715		866		899				1235
–	54"		–		–		–		1271		–		–
1400	–		782		1112		1274		–		–		–
–	60"		–		–		–		1592		–		–
1600	–		1056		1622		1872		–		–		–
1650	66"		–		–		–		2129		–		–
1800	72"		1416		2105		2409		2566		–		–
2000	78"		1875		2628		2997		3111		–		–
–	84"		–		–		–		3753		–		–
2200	–		2510		3420		–		–		–		–
–	90"		–		–		–		4795		–		–
2400	–		2994		4092		–		–		–		–

Transmitter Promag (remote version): 3.4 kg
(Weight data valid without packaging material)

1) Lap joint flanges / welded flanges DN > 300 (12")

Weight data in kg						
Nominal diameter		Compact version[1]		Remote version (without cable)[1]		
[mm]	[inch]	EN (DIN)		Sensor EN (DIN)		Transmitter
25	1"	PN 10	5.8	PN 10	3.8	4.2
32	1 ¼"		5.4		3.4	4.2
40	1 ½"		6.3		4.7	4.2
50	2"		5.4		3.4	4.2
65	2 ½"		6.2		4.2	4.2
80	3"		7.2		5.2	4.2
100	4"		9.7		7.7	4.2
125	5"		13.2		11.2	4.2
150	6"		17.2		15.2	4.2
200	8"		35.7		33.7	4.2
250	10"		54.2		52.2	4.2
300	12"		55.2		53.2	4.2
Transmitter Promag (compact version): 1.8 kg (Weight data valid for standard pressure ratings and without packaging material)						

1) Lap joint flanges, stamped plate

Promag P

Weight data in kg														
Nominal diameter		Compact version						Remote version (without cable)						
								Sensor						Trans-mitter
[mm]	[inch]	EN (DIN) / AS*		JIS		ASME/ AWWA		EN (DIN) / AS*		JIS		ASME/ AWWA		
25	1"	PN 40	5.7	10K	5.7	Class 150	5.7	PN 40	5.3	10K	5.3	Class 150	5.3	3.1
32	1 ¼"		6.4		5.7		–		6.0		5.3		–	3.1
40	1 ½"		7.8		6.7		7.8		7.4		6.3		7.4	3.1
50	2"		9.0		7.7		9.0		8.6		7.3		8.6	3.1
65	2 ½"	PN 16	10.4		9.5		–	PN 16	10.0		9.1		–	3.1
80	3"		12.4		10.9		12.4		12.0		10.5		12.0	3.1
100	4"		14.4		13.1		14.4		14.0		12.7		14.0	3.1
125	5"		19.9		19.4		–		19.5		19.0		–	3.1
150	6"		23.9		22.9		23.9		23.5		22.5		23.5	3.1
200	8"	PN 10	43.4		40.3		43.4	PN 10	43		39.9		43	3.1
250	10"		63.4		67.8		73.4		63		67.4		73	3.1
300	12"		68.4		70.7		108.4		68		70.3		108	3.1
350	14"		113.4				172.4		113				173	3.1
400	16"		133.4				203.4		133				203	3.1
450	18"		173.4				253.4		173				253	3.1
500	20"		173.4				283.4		173				283	3.1
600	24"		233.4				403.4		233				403	3.1
Transmitter Promag (compact version): 1.8 kg (Weight data valid for standard pressure ratings and without packaging material) * Flanges according to AS are only available for DN 25 and 50.														

Promag W

Weight data in kg

Nominal diameter		Compact version						Remote version (without cable)						Transmitter
								Sensor						
[mm]	[inch]	EN (DIN) / AS*		JIS		ASME/ AWWA		EN (DIN) / AS*		JIS		ASME/ AWWA		
25	1"	PN 40	5.7	10K	5.7	Class 150	5.7	PN 40	5.3	10K	5.3	Class 150	5.3	3.1
32	1 ¼"		6.4		5.7		–		6.0		5.3		–	3.1
40	1 ½"		7.8		6.7		7.8		7.4		6.3		7.4	3.1
50	2"		9.0		7.7		9.0		8.6		7.3		8.6	3.1
65	2 ½"	PN 16	10.4		9.5		–	PN 16	10.0		9.1		–	3.1
80	3"		12.4		10.9		12.4		12.0		10.5		12.0	3.1
100	4"		14.4		13.1		14.4		14.0		12.7		14.0	3.1
125	5"		19.9		19.4		–		19.5		19.0		–	3.1
150	6"		23.9		22.9		23.9		23.5		22.5		23.5	3.1
200	8"	PN 10	43.4		40.3		43.4	PN 10	43		39.9		43	3.1
250	10"		63.4		67.8		73.4		63		67.4		73	3.1
300	12"		68.4		70.7		108.4		68		70.3		108	3.1
350	14"		113.4				172.4		113				173	3.1
400	16"		133.4				203.4		133				203	3.1
450	18"		173.4				253.4		173				253	3.1
500	20"		173.4				283.4		173				283	3.1
600	24"		233.4				403.4		233				403	3.1
700	28"		353.4			Class D	398.4		353			Class D	398	3.1
–	30"		–				458.4		–				458	3.1
800	32"		433.4				548.4		433				548	3.1
900	36"		573.4				798.4		573				798	3.1
1000	40"		698.4				898.4		698				898	3.1
–	42"	PN 6	–				1098.4	PN 6	–				1098	3.1
1200	48"		848.4				1398.4		848				1398	3.1
–	54"		–				2198.4		–				2198	3.1
1400	–		1298.4				–		1298				–	3.1
–	60"		–				2698.4		–				2698	3.1
1600	–		1698.4				–		1698				–	3.1
–	66"		–				3698.4		–				3698	3.1
1800	72"		2198.4				4098.4		2198				4098	3.1
–	78"		–				4598.4		–				4598	3.1
2000	–		2798.4				–		2798				–	3.1

Transmitter Promag (compact version): 1.8 kg
(Weight data valid for standard pressure ratings and without packaging material)
*Flanges according to AS are only available for DN 80, 100, 150 to 400, 500 and 600

Weight (US units)

Promag D

Weight data in lbs				
Nominal diameter		Compact version	Remote version (without cable)	
[mm]	[inch]		Sensor	Transformer
25	1"	6	6	7
40	1 ½"	8	7	7
50	2"	9	9	7
80	3"	13	13	7
100	4"	19	19	7
Transmitter Promag (compact version): 3.9 lbs (Weight data valid without packaging material)				

Promag E

Weight data in lbs				
Nominal diameter		Compact version	Remote version (without cable)	
			Sensor	Transmitter
		ASME	ASME	
[mm]	[inch]	Class 150	Class 150	Wall-mount housing
15	½"	14.3	9.92	13.2
25	1"	16.1	11.7	
40	1½"	20.7	16.3	
50	2"	23.4	19.0	
80	3"	30.9	26.5	
100	4"	35.3	30.9	
150	6"	56.2	51.8	
200	8"	99.2	94.8	
250	10"	165.4	161.0	
300	12"	242.6	238.1	
350	14"	303.0	293.5	
400	16"	371.3	361.8	
450	18"	422.0	412.6	
500	20"	503.6	494.1	
600	24"	666.8	657.3	

- Transmitter: 4.0 lbs (compact version); 6.8 lbs (remote version)
- Weight data without packaging material

Promag H

Weight data in lbs				
Nominal diameter		Compact version	Remote version (without cable)	
[mm]	[inch]		Sensor	Transformer
2	1/12"	8	4	7
4	1/8"	8	4	7
8	3/8"	8	4	7
15	½"	8	4	7
25	1"	9	6	7
40	1 ½"	11	10	7
50	2"	16	15	7
65	2 ½"	17	17	7
80	3"	38	37	7
100	4"	37	36	7
Transmitter Promag (compact version): 3.9 lbs (Weight data valid for standard pressure ratings and without packaging material)				

Promag L (ASME/AWWA)

Weight data in lbs					
Nominal diameter		Compact version[1]		Remote version1)	
[mm]	[inch]	ASME/AWWA		ASME/AWWA	
25	1"	ASME / Class 150	17.4	ASME / Class 150	13
32	1 ¼"		–		–
40	1 ½"		16.5		12.1
50	2"		16.8		12.3
65	2 ½"		–		–
80	3"		28.2		23.8
100	4"		35.5		31.1
125	5"		–		–
150	6"		53.8		49.4
200	8"		109		105
250	10"		166		161
300	12"		221		216
350	14"		302		298
375	15"		–		–
400	16"		370		366
450	18"		421		417
500	20"		503		498
600	24"		666		662
700	28"	AWWA / Class D	587	AWWA / Class D	582
750	30"		701		697
800	32"		845		840
900	36"		1036		1032
1000	40"		1294		1290
1050	42"		1477		1473
1200	48"		1987		1982
–	54"		2807		2803
1400	–		–		–
–	60"		3515		3510
1600	–		–		–
1650	66"		4699		4694
1800	72"		5662		5658
2000	78"		6864		6860
–	84"		8280		8275
2200	–		–		–
–	90"		10577		10573
2400	–		–		–
Transmitter Promag (compact version): 4.0 lbs Transmitter Promag (remote version): 6.8 lbs (Weight data valid without packaging material)					

1) Lap joint flanges / welded flanges DN > 300 (12")

Promag P (ASME/AWWA)

Weight data in lbs						
Nominal diameter		Compact version		Remote version (without cable)		
[mm]	[inch]				Sensor	Transformer
25	1"	Class 150	13	Class 150	12	7
40	1 ½"		17		16	7
50	2"		20		19	7
80	3"		27		26	7
100	4"		32		31	7
150	6"		53		52	7
200	8"		96		95	7
250	10"		162		161	7
300	12"		239		238	7
350	14"		380		381	7
400	16"		448		448	7
450	18"		559		558	7
500	20"		625		624	7
600	24"		889		889	7
Transmitter Promag (compact version): 3.9 lbs (Weight data valid for standard pressure ratings and without packaging material)						

Promag W (ASME/AWWA)

Weight data in lbs						
Nominal diameter		Compact version		Remote version (without cable)		
[mm]	[inch]				Sensor	Transformer
25	1"	Class 150	13	Class 150	12	7
40	1 ½"		17		16	7
50	2"		20		19	7
80	3"		27		26	7
100	4"		32		31	7
150	6"		53		52	7
200	8"		96		95	7
250	10"		162		161	7
300	12"		239		238	7
350	14"		380		381	7
400	16"		448		448	7
450	18"		559		558	7
500	20"		625		624	7
600	24"		889		889	7
700	28"	Class D	878	Class D	878	7
–	30"		1011		1010	7
800	32"		1209		1208	7
900	36"		1760		1760	7
1000	40"		1981		1980	7
–	42"		2422		2421	7
1200	48"		3083		3083	7
–	54"		4847		4847	7
–	60"		5950		5949	7
–	66"		8155		8154	7
1800	72"		9037		9036	7
–	78"		10139		10139	7
Transmitter Promag (compact version): 3.9 lbs (Weight data valid for standard pressure ratings and without packaging material)						

Material

Promag D

- Transmitter housing: powder-coated die-cast aluminum
- Sensor housing: powder-coated die-cast aluminum
- Measuring tube: polyamide, O-rings EPDM
  (Drinking water approvals: WRAS BS 6920, ACS, NSF 61, KTW/W270)
- Electrodes: 1.4435 (316, 316L)
- Ground disks: 1.4301 (304)

Promag E

- Transmitter housing: powder-coated die-cast aluminum
- Sensor housing
  – DN 15 to 300 (½ to 12"): powder-coated die-cast aluminum
  – DN 350 to 600 (14 to 24"): with protective lacquering
- Measuring tube
  – DN ≤ 300 (12"): stainless steel 1.4301 (304) or 1.4306 (304L) (with Al/Zn protective coating)
  – DN ≥ 350 (14"): stainless steel 1.4301 (304) or 1.4306 (304L) (with protective lacquering)
- Electrodes: 1.4435 (316, 316L), Alloy C22
- Flanges (with protective lacquering)
  – EN 1092-1 (DIN2501): RSt37-2 (S235JRG2); Alloy C22; Fe 410W B
  – ASME: A105
  – JIS: RSt37-2 (S235JRG2); HII
- Seals: to DIN EN 1514-1
- Ground disks: 1.4435 (316, 316L) or Alloy C22

Promag H

- Transmitter housing: powder-coated die-cast aluminum
- Window material: glass or polycarbonate
- Sensor housing: stainless steel 1.4301 (304)
- Wall mounting kit: stainless steel 1.4301 (304)
- Measuring tube: stainless steel 1.4301 (304)
- Liner: PFA (USP class VI; FDA 21 CFR 177.1550: 3A)
- Electrodes: 11.4435 (316, 316L) (optional: Alloy C22, tantalum, platinum)
- Flanges: connections generally made of 1.4404 (316L)
- Seals
  – DN 2 to 25: O-ring (EPDM, Viton, Kalrez), gasket seal (EPDM*, Viton, Silicone*)
  – DN 40 to 100: gasket seal (EPDM*, Silicone*)

  * = USP class VI; FDA 21 CFR 177.2600: 3A
- Ground rings: 1.4435 (316, 316L) (optional: Alloy C22)

Promag L

- Transmitter housing:
  – Compact housing: powder-coated die-cast aluminum
  – Wall-mounted housing: powder-coated die-cast aluminum

- Sensor housing
  - DN 25 to 300 (1 to 12"): powder-coated die-cast aluminum
  - DN 350 to 1200 (14 to 48"): with protective lacquering
- Measuring tube:
  - DN ≤ 300 (12"); stainless steel 1.4301 (304) or 1.4306 (304L)
  - DN ≥ 350 (14"); stainless steel 202 or 304
- Electrodes: 1.4435 (316, 316L), Alloy C22
- Flange
  - EN 1092-1 (DIN 2501): DN ≤ 300: 1.4306; 1.4307; 1.4301 (304); 1.0038 (S235JRG2)
  - EN 1092-1 (DIN 2501): DN ≥ 350: A105; 1.0038 (S235JRG2)
  - AWWA: A181/A105; 1.0425 (316L) (P265GH); 1.0044 (S275JR)
  - AS 2129: A105; 1.0345 (P235GH); 1.0425 (316L) (P265GH); 1.0038 (S235JRG2); FE 410 WB
  - AS 4087: A105; 1.0425 (316L) (P265GH); 1.0044 (S275JR)
- Seals: to DIN EN 1514-1
- Ground disks: 11.4435 (316, 316L) or Alloy C22

Promag P/W

- Transmitter housing: powder-coated die-cast aluminum
- Sensor housing
  - DN 25 to 300: powder-coated die-cast aluminum
  - DN 350 to 2000: with protective lacquering
- Measuring tube
  - DN ≤ 300: stainless steel 1.4301 (304) or 1.4306 (304L)
    (Flange material: carbon steel with Al/Zn protective coating)
  - DN ≥ 350: stainless steel 1.4301 (304) or 1.4306 (304)
    (Flange material: carbon steel with protective lacquering)
- Electrodes: 1.4435 (316, 316L), Alloy C22
- Flange
  - EN 1092-1 (DIN2501): RSt37-2 (S235JRG2); Alloy C22; FE 410 WB
    (DN ≤ 300: with Al/Zn protective coating; DN ≥ 350 with protective lacquering)
  - ASME: A105
    (DN ≤ 300 with Al/Zn protective coating; DN ≥ 350 with protective lacquering)
  - AWWA (only Promag W): 1.0425 (with protective lacquering)
  - JIS: RSt37-2 (S235JRG2); HII; 1.0425
    (DN ≤ 300 with Al/Zn protective coating; DN ≥ 350 with protective lacquering)
  - AS 2129
    - (DN 25, 80, 100, 150 to 1200) A105 or RSt37-2 (S235JRG2)
    - (DN 50, 80, 350, 400, 500) A105 or St44-2 (S275JR)
      (DN ≤ 300 with Al/Zn protective coating; DN ≥ 350 with protective lacquering)
  - AS 4087: A105 or St44-2 (S275JR)
    (DN ≤ 300 with Al/Zn protective coating; DN ≥ 350 with protective lacquering)
- Seals: to DIN EN 1514-1
- Ground disks: 1.4435 (316, 316L) or Alloy C22

Material load diagram

The material load diagrams (pressure-temperature graphs) for the process connections are to be found in the "Technical Information" documents of the device in question:
List of supplementary documentation → 🖹 107.

Fitted electrodes

Promag D

- 2 measuring electrodes for signal detection

Promag E/L/P/W

- 2 measuring electrodes for signal detection
- 1 EPD electrode for empty pipe detection
- 1 reference electrode for potential equalization

Promag H

- 2 measuring electrodes for signal detection
- 1 EPD electrode for empty pipe detection (apart from DN 2 to 15)

Process connections

Promag D

Wafer version → without process connections

Promag E

Flange connection:
- EN 1092-1 (DIN 2501), DN ≤ 300 (12") form A, DN ≥ 350 (14") form B (Dimensions to DIN 2501, DN 65 PN 16 and DN 600 (24") PN 16 exclusively to EN 1092-1)
- ASME B16.5
- JIS B2220

Promag H

With O-ring:
- Flange EN (DIN), ASME, JIS
- External thread

With gasket seal:
- Weld nipple DIN 11850, ODT/SMS
- TriClamp L14 AM7
- Threaded joint DIN 11851, DIN 11864-1, SMS 1145
- Flange DIN 11864-2

Promag L

Flange connection:
- EN 1092-1 (DIN 2501)
  - DN ≤ 300 (12") = form A
  - DN ≥ 350 (14") = form B
- ASME B16.5
- AWWA C207
- AS

Promag P/W

Flange connections:
- EN 1092-1 (DIN 2501)
  - DN ≤ 300 = form A
  - DN ≥ 350 = flat face
  - DN 65 PN 16 and DN 600 PN 16 only as per EN 1092-1

- ASME
- AWWA (only Promag W)
- JIS
- AS

Surface roughness

All data relate to parts in contact with fluid.

- Liner → PFA: ≤ 0.4 µm (15 µin)
- Electrodes → 1.4435 (316, 316L), Alloy C22: 0.3 to 0.5 µm (12 to 20 µin)
- Process connection made of stainless-steel (Promag H):
  - with O-ring seal: ≤ 1.6 µm (63 µin)
  - with aseptic gasket seal: ≤ 0.8 µm (31.5 µin)
  - optional: ≤ 0.38 µm (15 µin)

10.1.11 Human interface

Display elements

- Liquid crystal display: unilluminated, two-line, 16 characters per line
- Display (operating mode) preconfigured: volume flow and totalizer status
- 1 totalizer

Note!
At ambient temperatures below −20 (−4 °F) the readability of the display may be impaired.

Operating elements

Local operation with three keys (⊟ ⊞ Ⓔ)

Remote operation

Operation via HART protocol and FieldCare

10.1.12 Certificates and approvals

CE mark

The measuring system is in conformity with the statutory requirements of the EC Directives. Endress+Hauser confirms successful testing of the device by affixing to it the CE mark.

C-tick mark

The measuring system meets the EMC requirements of the Australian Communications and Media Authority (ACMA)

Ex approval

Information about currently available Ex versions (ATEX, FM, CSA, IECEx, NEPSI etc.) can be supplied by your Endress+Hauser Sales Center on request. All explosion protection data are given in a separate documentation which is available upon request.

Sanitary compatibility

Promag D/E/L/P/W

No applicable approvals or certification

Promag H

- 3A authorization and EHEDG-certified
- Seals: in conformity with FDA (except Kalrez seals)

Drinking water approval

Promag D/L/W

- WRAS BS 6920
- ACS
- NSF 61
- KTW/W270

Promag E/H/P

No drinking water approval

Pressure Equipment Directive

Promag D/L

No pressure measuring device approval

Promag E/H/P/W

The devices can be ordered with or without a PED approval. If a device with a PED approval is required, this must be explicitly stated in the order. For devices with nominal diameters less than or equal to DN 25 (1"), this is neither possible nor necessary.

- With the PED/G1/x (x = category) marking on the sensor nameplate, Endress+Hauser confirms compliance with the "Essential Safety Requirements" specified in Annex I of the Pressure Equipment Directive 97/23/EC.
- Devices bearing this marking (PED) are suitable for the following types of medium: Media in Group 1 and 2 with a vapor pressure greater than, or smaller and equal to 0.5 bar (7.3 psi)
- Devices not bearing this marking (PED) are designed and manufactured according to good engineering practice. They meet the requirements of Art.3 Section 3 of the Pressure Equipment Directive 97/23/EC. The range of application is indicated in tables 6 to 9 in Annex II of the Pressure Equipment Directive.

Other standards and guidelines

- EN 60529:
  Degrees of protection by housing (IP code).
- EN 61010-1
  Safety requirements for electrical equipment for measurement, control and laboratory use
- IEC/EN 61326
  Electromagnetic compatibility (EMC requirements)
- ASME/ISA-S82.01
  Safety Standard for Electrical and Electronic Test, Measuring, Controlling and related Equipment - General Requirements. Pollution degree 2, Installation Category II.
- CAN/CSA-C22.2 (No. 1010.1-92)
  Safety requirements for Electrical Equipment for Measurement and Control and Laboratory Use. Pollution degree 2, Installation Category I.

10.1.13 Ordering information

Detailed ordering information is available from the following sources:
- In the Product Configurator on the Endress+Hauser website: www.endress.com → Select country → Instruments → Select device → Product page function: Configure this product
- From your Endress+Hauser Sales Center: www.endress.com/worldwide



Note!
Product Configurator - the tool for individual product configuration
- Up-to-the-minute configuration data
- Depending on the device: Direct input of measuring point-specific information such as measuring range or operating language
- Automatic verification of exclusion criteria
- Automatic creation of the order code and its breakdown in PDF or Excel output format
- Ability to order directly in the Endress+Hauser Online Shop

10.1.14 Accessories

Various accessories, which can be ordered separately from Endress+Hauser, are available for the transmitter and the sensor.→ 70
Your Endress+Hauser service organization can provide detailed information on the specific order codes on request.

10.1.15 Documentation

- Flow measuring technology (FA00005D/06)
- Technical Information Promag 10D (TI00081D/06)
- Technical Information Promag 10E (TI01160D/06)
- Technical Information Promag 10H (TI00095D/06)
- Technical Information Promag 10L(TI00100D/06)
- Technical Information Promag 10P (TI00094D/06)
- Technical Information Promag 10W (TI00093D/06)

11 Appendix

11.1 Illustration of the function matrix

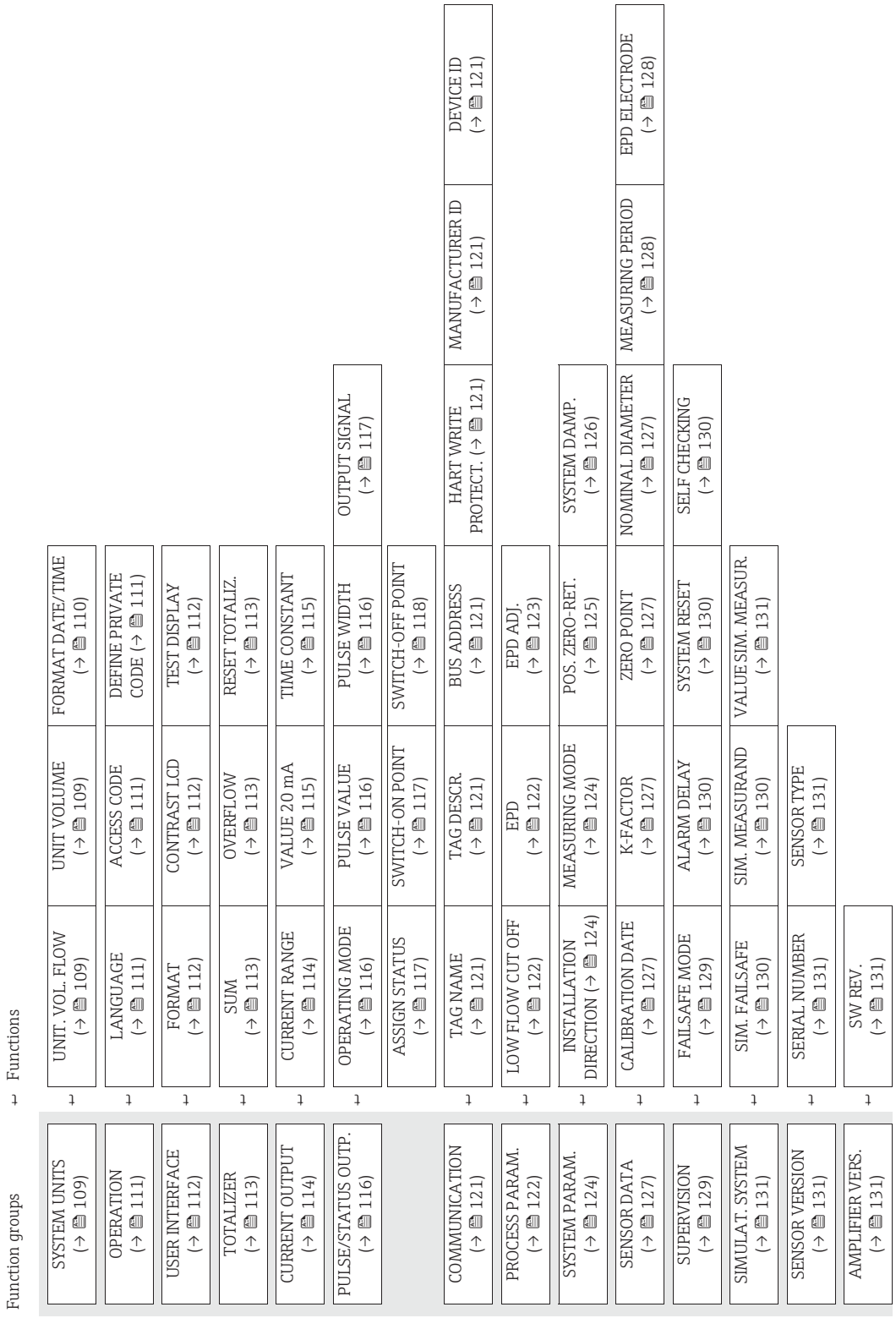

11.2 Group SYSTEM UNITS

Functional description SYSTEM UNITS	
Use this function group to select the unit required and displayed for the measured variable.	
UNIT VOLUME FLOW	Use this function to select the unit required and displayed for the volume flow. The unit you select here is also valid for: ▪ Volume flow display ▪ Current output ▪ Switch points (limit value for volume flow, flow direction) ▪ Low flow cut off Options: *Metric:* Cubic centimeter → cm^3/s; cm^3/min; cm^3/h; cm^3/day Cubic decimeter → dm^3/s; dm^3/min; dm^3/h; dm^3/day Cubic meter → m^3/s; m^3/min; m^3/h; m^3/day Milliliter → ml/s; ml/min; ml/h; ml/day Liter → l/s; l/min; l/h; l/day Hectoliter → hl/s; hl/min; hl/h; hl/day Megalith → Ml/s; Ml/min; Ml/h; Ml/day *US*: Cubic centimeter → cc/s; cc/min; cc/h; cc/day Acre foot → af/s; af/min; af/h; af/day Cubic foot → ft3/s; ft3/min; ft3/h; ft3/day Fluid ounce → oz f/s; oz f/min; oz f/h; oz f/day Gallon → gal/s; gal/min; gal/h; gal/day Kilo gallons → kgal/s; kgal/min; kgal/h; kgal/day Million gallons → Mgal/s; Mgal/min; Mgal/h; Mgal/day Barrel (normal fluids: 31.5 gal/bbl) → bbl/s; bbl/min; bbl/h; bbl/day Barrel (beer: 31.0 gal/bbl) → bbl/s; bbl/min; bbl/h; bbl/day Barrel (petrochemicals: 42.0 gal/bbl) → bbl/s; bbl/min; bbl/h; bbl/day Barrel (filling tanks: 55.0 gal/bbl) → bbl/s; bbl/min; bbl/h; bbl/day *Imperial*: Gallon → gal/s; gal/min; gal/h; gal/day Mega gallon → Mgal/s; Mgal/min; Mgal/h; Mgal/day Barrel (beer: 36.0 gal/bbl) → bbl/s; bbl/min; bbl/h; bbl/day Barrel (petrochemicals: 34.97 gal/bbl) → bbl/s; bbl/min; bbl/h; bbl/day Factory setting: Depends on nominal diameter and country (dm^3/min to m^3/h or US-gal/min), corresponding to the full scale value unit factory setting → 🖹 132
UNIT VOLUME	Use this function to select the unit required and displayed for the volume. The unit you select here is also valid for: ▪ Totalizer status display ▪ Totalizer unit ▪ Pulse value (e.g. m^3/p) Options: *Metric* → cm^3; dm^3; m^3; ml; l; hl; Ml *US* → cc; af; ft3; oz f; gal; Mgal; bbl (normal fluids); bbl (beer); bbl (petrochemicals); bbl (filling tanks) *Imperial* → gal; Mgal; bbl (beer); bbl (petrochemicals) Factory setting: Depends on nominal diameter and country (dm^3 to m^3 or US-gal corresponding to the totalizer unit factory setting. → 🖹 132

Functional description SYSTEM UNITS	
FORMAT DATE/TIME	Use this function to select the format for the date and the time. The unit you select here is also valid for displaying the current calibration date (function CALIBRATION DATE on → 127 Options: DD.MM.YY 24H MM/DD/YY 12H A/P DD.MM.YY 12H A/P MM/DD/YY 24H Factory setting: DD.MM.YY 24H (SI units) MM/DD/YY 12H A/P (US units)

11.3 Group OPERATION

Functional description OPERATION	
LANGUAGE	Use this function to select the language for all texts, parameters and messages shown on the local display. Options: ENGLISH DEUTSCH FRANCAIS ESPANOL ITALIANO Factory setting: Depends on country, see factory setting → 🖹 132 ✎ Note! If you press the ⊕⊖keys simultaneously at startup, the language defaults to "ENGLISH".
ACCESS CODE	All data of the measuring system are protected against inadvertent change. Programming is disabled and the settings cannot be changed until a code is entered in this function. If you press the ℗ keys in any function, the measuring system automatically goes to this function and the prompt to enter the code appears on the display (when programming is disabled). You can activate programming by entering your private code (factory setting = 10, see also the subsequent DEFINE PRIVATE CODE function) User input: Max. 4-digit number: 0 to 9999 ✎ Note! ▪ The programming levels are disabled if you do not press the operating elements within 60 seconds following automatic return to the HOME position. ▪ You can also disable programming in this function by entering any number (other than the defined private code). ▪ The Endress+Hauser service organization can be of assistance if you mislay your personal code.
DEFINE PRIVATE CODE	Use this function to enter a personal code to enable programming. User input: 0 to 9999 (max. 4-digit number) Factory setting: 10 ✎ Note! ▪ This function only appears if the private code was entered in the ACCESS CODE function. ▪ Programming is always enabled with the code "0". ▪ Programming has to be enabled before this code can be changed. When programming is disabled this function is not available, thus preventing others from accessing your personal code.

11.4 USER INTERFACE

Functional description USER INTERFACE	
FORMAT	Use this function to define the maximum number of places after the decimal point displayed for the reading in the main line. Options: XXXXX. XXXX.X XXX.XX XX.XXX X.XXXX Factory setting: X.XXXX ✎ Note! ▪ Note that this setting only affects the reading as it appears on the display, it has no influence on the accuracy of the system's calculations. ▪ The places after the decimal point as computed by the measuring device cannot always be displayed, depending on this setting and the engineering unit. In such instances an arrow appears on the display between the measuring value and the engineering unit (e.g. 1.2 → l/h), indicating that the measuring system is computing with more decimal places than can be shown on the display.
CONTRAST LCD	Use this function to optimize display contrast to suit local operating conditions. User input: 10 to 100% Factory setting: 50%
TEST DISPLAY	Use this function to test the operability of the local display and its pixels. Options: OFF ON Factory setting: OFF Test sequence: 1. Start the test by selecting ON. 2. All pixels of the main line and additional line are darkened for minimum 0.75 seconds. 3. The main line and additional line show an "8" in each field for minimum 0.75 seconds. 4. The main line and additional line show a "0" in each field for minimum 0.75 seconds. 5. The main line and additional line show nothing (blank display) for minimum 0.75 seconds. When the test completes the local display returns to its initial state and the setting changes to "OFF".

11.5 Group TOTALIZER

Functional description TOTALIZER	
SUM	The total for the totalizer's measured variable aggregated since measuring commenced appears on the display. This value can be positive or negative, depending on: ▪ Flow direction and/or ▪ Setting in the MEASURING MODE function → 🖹 124 Display: Max. 6-digit floating-point number, incl. sign and unit (e.g. 15467.4 m^3) ✎ Note! ▪ The totalizer's response to faults is defined in the central "FAILSAFE MODE" function → 🖹 129. ▪ The unit of the totalizer is defined in the UNIT VOLUME function → 🖹 109.
OVERFLOW	The total for the totalizer's overflow aggregated since measuring commenced appears on the display. Total flow quantity is represented by a floating-point number consisting of max. 7 digits. You can use this function to view higher numerical values (>9,999,999) as overflows. The effective quantity is thus the total of the OVERFLOW function plus the value displayed in the SUM function. Example: Reading for 2 overflows: 2 E7 dm^3 (= 20,000,000 dm^3) The value displayed in the function "SUM" = 196,845 dm^3 Effective total quantity = 20,196,845 dm^3 Display: Integer with exponent, including sign and unit, e.g. 2 E7 dm^3
RESET TOTALIZER	Use this function to reset the sum and the overflow of the totalizer to "zero" (= RESET). Options: NO YES Factory setting: NO

11.6 Group CURRENT OUTPUT

Functional description CURRENT OUTPUT	
Note! **The functions of the CURRENT OUTPUT group are only available if the "0" value was entered in the BUS ADDRESS function → 121.**	
CURRENT RANGE	Use this function to specify the current range. You can configure the current output either in accordance with the NAMUR recommendation (max. 20.5 mA) or for a maximum drive of 25 mA. Options: OFF 4-20 mA (25 mA) 4-20 mA (25 mA) HART 4-20 mA NAMUR 4-20 mA HART NAMUR 4-20 mA US 4-20 mA HART US Factory setting: 4-20 mA HART NAMUR Current range, work range and signal on alarm level 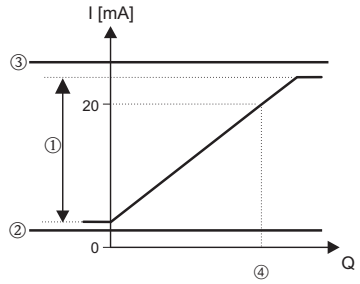 **A** | ① | ② | ③ OFF | 4 mA | - | - 4-20 mA (25 mA) | 4 - 24 mA | 2 | 25 4-20 mA (25 mA) HART | 4 - 24 mA | 2 | 25 4-20 mA NAMUR | 3,8 - 20,5 mA | 3,5 | 22,6 4-20 mA HART NAMUR | 3,8 - 20,5 mA | 3,5 | 22,6 4-20 mA US | 3,9 - 20,8 mA | 3,75 | 22,6 4-20 mA HART US | 3,9 - 20,8 mA | 3,75 | 22,6 A0005392 *A = Work range* *① = Work range* *② = Lower signal on alarm level* *③ = Upper signal on alarm level* *④ = Scaled full scale value* *Q = Flow* Note! ▪ If the measured value is outside the measuring range (defined in the VALUE 20 mA function → 115), a notice message is generated. ▪ The current output's response to faults is defined in the central FAILSAFE MODE function → 129.

Functional description CURRENT OUTPUT	
VALUE 20 mA	Use this function to assign the 20 mA current a full scale value. Positive and negative values are permitted. The required measuring range is defined by defining the VALUE 20 mA . In the SYMMETRY measuring mode → 🖹 124, the value assigned applies to both flow directions; in the STANDARD measuring mode it applies only to the flow direction selected. User input: 5-digit floating-point number, with sign Factory setting: Depends on nominal diameter and country, [value] / [dm^3...m^3 or US-gal...US-Mgal] Corresponds to the factory setting for the full scale value → 🖹 132 ✎ Note! ▪ The appropriate unit is taken from the SYSTEM UNITS group → 🖹 109. ▪ The value for 4 mA always corresponds to the zero flow (0 [unit]). This value is fixed and cannot be edited.
TIME CONSTANT	Use this function to enter a time constant defining how the current output signal reacts to severely fluctuating measured variables, either very quickly (enter a low time constant) or with damping (enter a high time constant). User input: Fixed-point number 0.01 to 100.00 s Factory setting: 1.00 s

11.7 Group PULSE/STATUS OUTPUT

Functional description PULSE/STATUS OUTPUT	
OPERATING MODE	Configuration of the output as a pulse or status output. The functions available in this function group vary, depending on which option you select here. Options: OFF PULSE STATUS Factory setting: PULSE
PULSE VALUE	✎ Note! This function is not available unless the PULSE setting was selected in the OPERATING MODE function. Use this function to define the flow at which a pulse is triggered. These pulses can be totaled by an external totalizer, and the total flow quantity since measuring started can be registered in this way. In the SYMMETRY measuring mode → 🖹 124, the value assigned applies to both flow directions; in the STANDARD measuring mode it applies only to the positive flow direction. User input: 5-digit floating-point number, [unit] Factory setting: Depends on nominal diameter and country, [value] [dm^3...m^3 or US-gal] / pulse; Corresponds to the factory setting for the pulse value → 🖹 132 ✎ Note! The appropriate unit is taken from the SYSTEM UNITS group.
PULSE WIDTH	✎ Note! This function is not available unless the PULSE setting was selected in the OPERATING MODE function. Use this function to enter the maximum pulse width of the output pulses. User input: 5 to 2000 ms Factory setting: 100 ms Pulse output is always with the pulse width (B) entered in this function. The pauses (P) between the individual pulses are automatically configured. However, they must at least correspond to the pulse width (B = P). 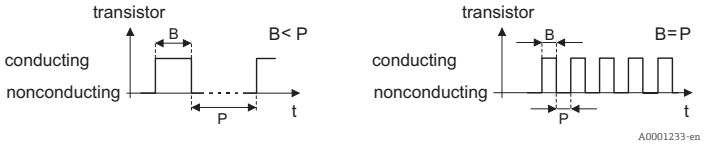 *P = Intervals between the individual pulses* *B = Pulse width entered (the illustration applies to positive pulses)* ☝ Caution! Buffering (pulse memory) takes place if the number of pulses is too large to output the pulses with the selected pulse width (see PULSE VALUE function on → 🖹 116). The system error message RANGE PULSE is displayed if more pulses are in the pulse memory than can be output in 4 seconds. ✎ Note! ▪ When selecting the pulse width, choose a value that can still be processed by a connected counter (e.g. mechanical counter, PLC etc.). ▪ The pulse output's response to faults is defined in the central FAILSAFE MODE function → 🖹 129.

Functional description PULSE/STATUS OUTPUT	
OUTPUT SIGNAL	Note! This function is not available unless the PULSE setting was selected in the OPERATING MODE function. Use this function to configure the output in such a way that it matches an external counter, for example. Depending on the application, you can select the direction of the pulses here. Options: PASSIVE - POSITIVE PASSIVE - NEGATIVE Factory setting: PASSIVE - NEGATIVE
ASSIGN STATUS OUTPUT	Note! This function is not available unless the STATUS setting was selected in the OPERATING MODE function. Configuration of the status output. Options: ON (operation) FAULT MESSAGE NOTICE MESSAGE FAULT MESSAGE or NOTICE MESSAGE EPD (empty pipe detection, only if active) FLOW DIRECTION VOLUME FLOW LIMIT VALUE Factory setting: FAULT MESSAGE Note! ▪ The behavior of the status output is a normally closed behavior, in other words the output is closed (trASMEstor conductive) when normal, error-free measuring is in progress. ▪ It is very important to read and comply with the information on the switching characteristics of the status output → 120.
SWITCH-ON POINT	Note! This function is not available unless LIMIT VALUE or FLOW DIRECTION was selected in the ASSIGN STATUS OUTPUT function. Use this function to assign a value to the switch-on point (status output pulls up). The value can be equal to, greater than or less than the switch-off point. Positive and negative values are permitted. User input: 5-digit floating-point number, [unit] Factory setting: 0 [unit] Note! ▪ The appropriate unit is taken from the SYSTEM UNITS group. ▪ Only the switch-on point is available for flow direction output (no switch-off point). If you enter a value not equal to the zero flow (e.g. 5), the difference between the zero flow and the value entered corresponds to half the switchover hysteresis.

Functional description PULSE/STATUS OUTPUT	
SWITCH-OFF POINT	✎ Note! This function is not available unless LIMIT VALUE was selected in the ASSIGN STATUS OUTPUT function. Use this function to assign a value to the switch-off point (status output drops off). The value can be equal to, greater than or less than the switch-on point. Positive and negative values are permitted. User input: 5-digit floating-point number, [unit] Factory setting: 0 [unit] ✎ Note! ▪ The appropriate unit is taken from the SYSTEM UNITS group. ▪ If SYMMETRY is selected in the MEASURING MODE function and values with different signs are entered for the switch-on and switch-off points, the notice message "INPUT RANGE EXCEEDED" appears.

11.7.1 Information on the response of the status output

General

If you have configured the status output for "LIMIT VALUE" or "FLOW DIRECTION", you can configure the requisite switch points in the SWITCH-ON POINT and SWITCH-OFF POINT functions. When the measured variable in question reaches these predefined values, the status output switches as shown in the illustrations below.

Status output configured for flow direction

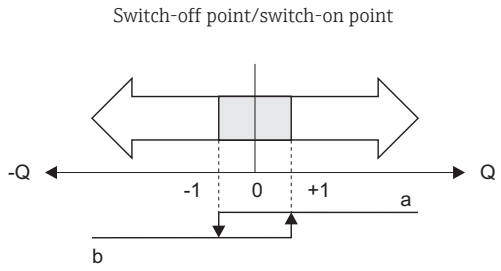

a = Status output conductive
b = Status output not conductive

The value you entered in the function SWITCH-ON POINT defines the switch point for the positive and negative directions of flow. If, for example, the switch point entered is = 1 m^3/h, the status output switches off at −1 m^3/h (not conductive) and switches on again at +1 m^3/h (conductive). Set the switch point to 0 if your process calls for direct switchover (no switching hysteresis). If low flow cut off is used, it is advisable to set hysteresis to a value greater than or equal to the low flow cut off rate.

Status output configured for limit value

The status output switches as soon as the measured variable undershoots or overshoots a defined switch point.

Application: monitoring flow or process-related boundary conditions.

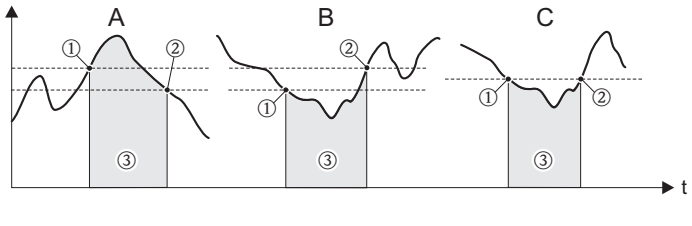

- A = Maximum safety:
  ① SWITCH-OFF POINT > ② SWITCH-ON POINT
- B = Minimum safety:
  ① SWITCH-OFF POINT < ② SWITCH-ON POINT
- C = Minimum safety:
  ① SWITCH-OFF POINT = ② SWITCH-ON POINT (this configuration should be avoided)
- ③ = Relay de-energized

11.7.2 Switching behavior of the status output

Function	State	Open collector behavior (TrASMEstor)
ON (operation)	System in measuring mode 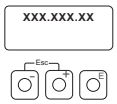	conductive  A0001237
	System not in measuring mode (power supply failed) 	not conductive  A0001239
Fault message	System OK 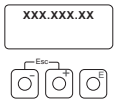	conductive  A0001237
	(System error or process error) fault → Response to error, outputs/inputs and totalizers 	not conductive  A0001239
Notice message	System OK 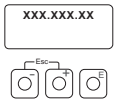	conductive  A0001237
	(System error or process error) Notice → Continuation of measuring 	not conductive  A0001239
Fault message or notice message	System OK 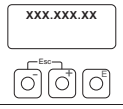	conductive  A0001237
	(System error or process error) Fault → Response to error or Notice → Continuation of measuring 	not conductive  A0001239
Empty pipe detection (EPD)	Measuring tube full 	conductive  A0001237
	Measuring tube partially filled / empty measuring tube 	not conductive  A0001239
Flow direction	Forwards  A0001241	conductive  A0001237
	Backwards  A0001242	not conductive  A0001239
Volume flow limit value	Limit value not overshot or undershot 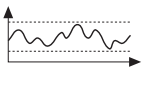 A0001243	conductive  A0001237
	Limit value overshot or undershot 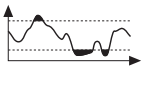 A0001244	not conductive  A0001239

11.8 Group COMMUNICATION

Functional description COMMUNICATION	
✎ **Note!** **The communication group is only visible if the HART option was selected in the CURRENT RANGE function.**	
TAG NAME	Use this function to enter a tag name for the measuring device. You can edit and read this tag name at the local display or via the HART protocol. User input: Max. 8-character text, permitted characters are: A-Z, 0-9, +,-, underscore, space, period Factory setting: "_ _ _ _ _ _ _ _" (no text)
TAG DESCRIPTION	Use this function to enter a tag description for the measuring device. You can edit and read this tag description at the local display or via the HART protocol. User input: Max. 16-character text, permitted characters are: A-Z, 0-9, +,-, underscore, space, period Factory setting: "_ _ _ _ _ _ _ _ _ _ _ _ _ _ _ _" (no text)
BUS ADDRESS	Use this function to define the address for the exchange of data with the HART protocol. User input: 0 to 15 Factory setting: 0 ✎ Note! Addresses 1 to 15: a constant 4 mA current is applied.
HART WRITE PROTECTION	Use this function to activate HART write protection. Options: OFF = function can be edited/read via the HART protocol ON = HART protocol write-protected (only readable) Factory setting: OFF
MANUFACTURER ID	Use this function to view the manufacturer ID in decimal numerical format. Display: – Endress+Hauser – 17 (≙ 11 hex) for Endress+Hauser
DEVICE ID	Use this function to view the device ID in hexadecimal numerical format. Display: 45 hex (≙ 69 dec) for Promag 10

11.9 Group PROCESS PARAMETER

Functional description PROCESS PARAMETER	
SWITCH-ON POINT LOW FLOW CUT OFF	Use this function to enter the switch-on point for low flow cut off. Low flow cut off is active if the value entered is not equal to 0. The sign of the flow value is highlighted on the display to indicate that low flow cut off is active. User input: 5-digit floating-point number, [unit] Factory setting: Depends on nominal diameter and country, [value] / [dm^3...m^3 or US-gal] Corresponds to the factory setting for the low flow cut off → 🖹 132 ✎ Note! The appropriate unit is taken from the SYSTEM UNITS group. The switch-off point is specified as a positive hysteresis from the switch-on point with 50%. 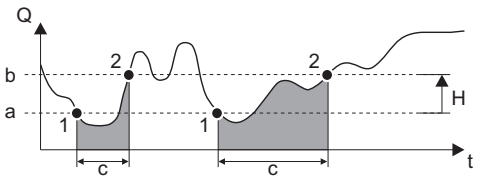 A0001245 *Q* *Flow [volume/time]* *t* *Time* *H* *Hysteresis* *a* *SWITCH-ON POINT LOW FLOW CUT OFF = 200 dm^3/h* *b* *Low flow cut off switch-off point = 50%* *c* *Low flow cut off active* *1* *Low flow cut off is switched on at 200 dm^3/h* *2* *Low flow cut off is switched off at 300 dm^3/h*
EPD	Activating empty pipe detection (EPD). Options: OFF ON (empty pipe detection) Factory setting: OFF ✎ Note! ▪ The ON option is not available unless the sensor is fitted with an EPD electrode. ▪ The default setting for the EPD function when the device is delivered is OFF. The function must be activated as required. ▪ When delivered, the measuring device is calibrated with water (500 µS/cm). If the fluid differs from this conductivity, empty-pipe and full-pipe adjustment has to be performed on site. ▪ To activate the function (ON option), valid adjustment coefficients have to be available. ▪ The following error messages are displayed if the empty-pipe and full-pipe adjustment is incorrect: ▪ ADJUSTMENT FULL = EMPTY: the adjustment values for empty pipe and full pipe are identical. ▪ ADJUSTMENT NOT OK: adjustment is not possible as the fluid conductivity values are outside the permitted range. ▪ In cases of this nature you must repeat empty-pipe or full-pipe adjustment.

Functional description PROCESS PARAMETER	
EPD-MODE (continued)	Notes on empty pipe detection (EPD) ▪ Flow cannot be measured correctly unless the measuring tube is completely full. This status can be monitored at all times by means of the EPD. ▪ An empty or partially filled pipe is a process error. A default factory setting defines that a notice message is issued and that this process error does not have any effect on the outputs. ▪ The EPD process error can be output via the configurable status output. Response to partially filled pipe If the EPD is switched on and responds to a partially filled or empty pipe, the notice message "EMPTY PIPE" appears on the display and zero flow is indicated. If the pipe is partially empty and the EPD is not switched on, the response can vary in identically configured systems: ▪ Flow reading fluctuates ▪ Zero flow ▪ Excessively high flow values
EPD ADJUSTMENT	Use this function to activate adjustment for an empty or full measuring tube. Options: OFF EPD EMPTY PIPE ADJ. EPD FULL PIPE ADJUST Factory setting: OFF ✎ Note! An exact description of the procedure for an EPD empty-pipe/full-pipe adjustment is provided on → 🖹 68.

11.10 Group SYSTEM PARAMETER

Functional description SYSTEM PARAMETER	
INSTALLATION DIRECTION SENSOR	Use this function to reverse the sign of the flow quantity, if necessary. Options: FORWARDS (flow as indicated by the arrow) BACKWARDS (flow opposite to direction indicated by the arrow) Factory setting: FORWARDS ✎ Note! Ascertain the actual direction of fluid flow with reference to the direction indicated by the arrow on the sensor (nameplate).
MEASURING MODE	Use this function to select the measuring mode for all outputs and for the internal totalizer. Options: STANDARD SYMMETRY Factory setting: STANDARD The responses of the individual outputs and the internal totalizer in each of the measuring modes are described in detail on the following pages: Current output STANDARD Only the flow components for the selected flow direction are output, (positive or negative full scale value ② = flow direction). Flow components in the opposite direction are not taken into account (suppression). Example for current output: 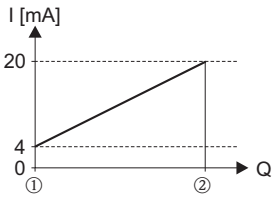 A0001248 SYMMETRY The output signals of the current output are independent of the direction of flow (absolute amount of the measured variable). The "VALUE20mA" ③ (e.g. backflow) corresponds to the mirrored VALUE20mA ② (e.g. flow). Positive and negative flow components are taken into account. Example for current output: 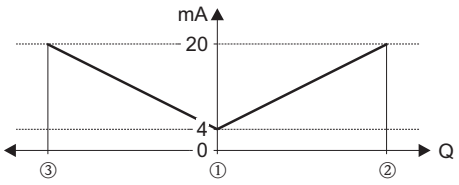 A0001249 ✎ Note! The direction of flow can be output via the configurable status output.

Functional description SYSTEM PARAMETER	
MEASURING MODE (Contd)	Pulse output STANDARD Only flow components of the positive flow direction are output. Components in the opposite direction are not taken into account. SYMMETRY The absolute value of the positive and negative flow components is taken into account. Status output ✎ Note! The information is only applicable if LIMIT VALUE was selected in the function ASSIGN STATUS OUTPUT. STANDARD The status output signal switches at the defined switch points. SYMMETRY The status output signal switches at the defined switch points, irrespective of the sign. In other words, if you define a switch point with a positive sign, the status output signal switches as soon as the value is reached in the negative direction (negative sign), (see illustration). Example for the SYMMETRY measuring mode: Switch-on point: Q = 4 Switch-off point: Q = 10 ① = Status output switched on (conductive) ② = Status output switched off (nonconductive) 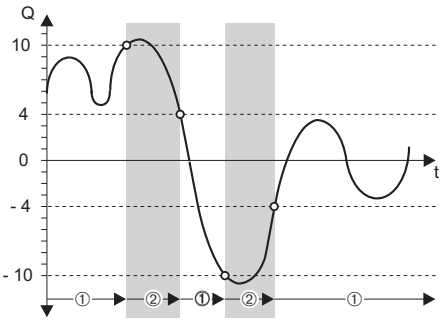 A0001247 Totalizer STANDARD Only positive flow components are output. Negative components are not taken into account. SYMMETRY The positive and negative flow components are balanced. In other words, net flow in the flow direction is registered.
POSITIVE ZERO RETURN	Use this function to interrupt evaluation of measured variables. This is necessary when a piping system is being cleaned, for example. This setting acts on all function and outputs of the measuring device. Options: OFF ON → Signal output is set to the "ZERO FLOW" value. Factory setting: OFF

Functional description SYSTEM PARAMETER	
SYSTEM DAMPING	Use this function to set the filter depth of the digital filter. This reduces the sensitivity of the measuring signal to interference peaks (e.g. high solids content, gas bubbles in the fluid, etc.). The system reaction time increases with the filter setting. User input: 0 to 4 Factory setting: 3 ✎ Note! ▪ The system damping acts on all functions and outputs of the measuring device. ▪ The higher the value set, the stronger the damping (higher response time).

11.11 Group SENSOR DATA

All sensor data (calibration factors, zero point and nominal diameter etc.) are set at the factory.

Caution!
Under normal circumstances you should not change the following parameter settings, because changes affect numerous functions of the entire measuring facility in general and the accuracy of the measuring system in particular. Therefore, the functions described below are provided with an additional prompt (with the code 10) once you enter your private code.

Functional description SENSOR DATA	
CALIBRATION DATE	Use this function to view the current calibration date and time for the sensor. User input: Calibration date and time. Factory setting: Calibration date and time of the current calibration. Note! The calibration date and time format is defined in the FORMAT DATE/TIME function, → 110 Selectable formats: DD.MM.YY 24H MM/DD/YY 12H A/P DD.MM.YY 12H A/P MM/DD/YY 24H
K-FACTOR	Use this function to display the current calibration factor (positive and negative flow direction) for the sensor. The calibration factor is determined and set at the factory. User input: 5-digit fixed-point number: 0.5000 to 2.0000 Factory setting: Depends on nominal diameter and calibration Note! This value is also provided on the sensor nameplate.
ZERO POINT	This function shows the current zero-point correction value for the sensor. Zero-point correction is determined and set at the factory. User input: Max. 4-digit number: -1000 to +1000 Factory setting: Depends on nominal diameter and calibration Note! This value is also provided on the sensor nameplate.
NOMINAL DIAMETER	This function shows the nominal diameter for the sensor. The nominal diameter depends on the size of the sensor and is set at the factory. Options: 2 to 2000 mm 1/12 to 78" Factory setting: Depends on the size of the sensor Note! This value is also provided on the sensor nameplate.

Functional description SENSOR DATA	
MEASURING PERIOD	Use this function to set the time for a full measuring period. The duration of the measuring period is calculated from the rise time of the magnetic field, the brief recovery time, the (automatically tracked) integration time and the empty pipe detection time. User input: 10 to 1000 ms Factory setting: Depends on nominal diameter
EPD ELECTRODE	Indicates whether the sensor is equipped with an EPD electrode. Display: YES NO Factory setting: YES → Electrode fitted as standard

11.12 Group SUPERVISION

Functional description SUPERVISION	
FAILSAFE MODE	The dictates of safety render it advisable to ensure that the device signal processing assumes a predefined state in the event of a fault. The setting you select here is valid for: ▪ Current output ▪ Pulse output ▪ Totalizer ✎ Note! This has no effect on the display. Options: MINIMUM VALUE MAXIMUM VALUE ACTUAL VALUE Factory setting: MINIMUM VALUE The response of the individual outputs and the totalizer is listed below. Current output: MINIMUM VALUE The current output adopts the value of the lower signal on alarm level (as defined in the CURRENT RANGE function → 🖹 114). MAXIMUM VALUE The current output is set to the upper value of the signal on alarm level. (The values in question can be found in the CURRENT RANGE function on → 🖹 114). ACTUAL VALUE Measured value output is based on the current flow measurement. The fault is ignored. Pulse output: MINIMUM or MAXIMUM VALUE Output is zero pulse ACTUAL VALUE Measured value output is based on the current flow measurement (fault is ignored). Totalizer: MINIMUM or MAXIMUM VALUE The totalizer is paused until the fault is rectified. ACTUAL VALUE The totalizer continues to count on the basis of the current flow value. The fault is ignored.

Functional description SUPERVISION	
ALARM DELAY	Use this function to define a time span in which the criteria for an error have to be satisfied without interruption before an error or notice message is generated. Depending on the setting and the type of error, this suppression acts on: ▪ Display ▪ Current output ▪ Pulse/status output User input: 0 to 100 s (in increments of one second) Factory setting: 0 s ☝ Caution! If this function is activated error and notice messages are delayed by the time corresponding to the setting before being forwarded to the higher-order controller (process controller, etc.). It is therefore imperative to check in advance in order to make sure whether a delay of this nature could affect the safety requirements of the process. If error and notice messages cannot be suppressed, a value of 0 seconds must be entered here.
SYSTEM RESET	Use this function to perform a reset of the measuring system. Options: NO RESTART SYSTEM (Restart without disconnecting main power) RESET DELIVERY (Restart without disconnecting main power, the saved settings of the delivery status (factory settings) are applied). Factory setting: NO
SELF CHECKING	Use this function to switch on and off the self-checking function of the electrode amplifier. When the function is switched on, the electrode signal circuit is checked against a reference voltage at 60-second intervals. If there is an impermissible deviation from the value, system error message #101 is output and displayed on the local display. Options: ON OFF Factory setting: OFF

11.13 Group SIMULATION SYSTEM

Functional description SIMULATION SYSTEM	
SIMULATION FAILSAFE MODE	Use this function to set all outputs and the totalizer to their defined failsafe modes, in order to check whether they respond correctly. During this time, the words "SIMULATION FAILSAFE MODE" appear on the display. Options: ON OFF Factory setting: OFF
SIMULATION MEASURAND	Use this function to set all outputs and the totalizer to their defined flow-response modes, in order to check whether they respond correctly. During this time, the words "SIMULATION MEASURAND" appear on the display. Options: OFF VOLUME FLOW Factory setting: OFF Note! ▪ The measuring device cannot be used for measuring while this simulation is in progress. ▪ The setting is not saved if the power supply fails.
VALUE SIMULATION MEASURAND	Note! This function is not available unless the SIMULATION MEASURAND function is active (= VOLUME FLOW). In this function, a freely selectable value (e.g. 12 m^3/s) is specified. This value is used to test downstream devices and the flowmeter itself. User input: 5-digit floating-point number [unit], with sign Factory setting: 0 [unit] Caution! The setting is not saved if the power supply fails. Note! The appropriate unit is taken from the SYSTEM UNITS group.

11.14 Group SENSOR VERSION

Functional description SENSOR VERSION	
SERIAL NUMBER	Use this function to view the serial number of the sensor.
SENSOR TYPE	Use this function to view the sensor type.

11.15 Group AMPLIFIER VERSION

Functional description AMPLIFIER VERSION	
SOFTWARE REVISION NUMBER	Use this function to view the software revision number of the electronics board.

11.16 Factory settings

11.16.1 SI units (not for USA and Canada)

Low flow cut off, full scale value, pulse value, totalizer

Nominal diameter		Low flow cut off		Full scale value current output		Pulse value		Totalizer
[mm]	[inch]	(approx. v = 0.04 m/s)		(approx. v = 2.5 m/s)		(approx. 2 pulses/s at v = 2.5 m/s)		
2	1/12"	0.01	dm³/min	0.5	dm³/min	0.005	dm³	dm³
4	1/8"	0.05	dm³/min	2	dm³/min	0.025	dm³	dm³
8	3/8"	0.1	dm³/min	8	dm³/min	0.10	dm³	dm³
15	½"	0.5	dm³/min	25	dm³/min	0.20	dm³	dm³
25	1"	1	dm³/min	75	dm³/min	0.50	dm³	dm³
32	1 ¼"	2	dm³/min	125	dm³/min	1.00	dm³	dm³
40	1 ½"	3	dm³/min	200	dm³/min	1.50	dm³	dm³
50	2"	5	dm³/min	300	dm³/min	2.50	dm³	dm³
65	2 ½"	8	dm³/min	500	dm³/min	5.00	dm³	dm³
80	3"	12	dm³/min	750	dm³/min	5.00	dm³	dm³
100	4"	20	dm³/min	1200	dm³/min	10.00	dm³	dm³
125	5"	30	dm³/min	1850	dm³/min	15.00	dm³	dm³
150	6"	2.5	m³/h	150	m³/h	0.025	m³	m³
200	8"	5.0	m³/h	300	m³/h	0.05	m³	m³
250	10"	7.5	m³/h	500	m³/h	0.05	m³	m³
300	12"	10	m³/h	750	m³/h	0.10	m³	m³
350	14"	15	m³/h	1000	m³/h	0.10	m³	m³
375	15"	20	m3/h	1200	m3/h	0.15	m3	m3
400	16"	20	m³/h	1200	m³/h	0.15	m³	m³
450	18"	25	m³/h	1500	m³/h	0.25	m³	m³
500	20"	30	m³/h	2000	m³/h	0.25	m³	m³
600	24"	40	m³/h	2500	m³/h	0.30	m³	m³
700	28"	50	m³/h	3500	m³/h	0.50	m³	m³
–	30"	60	m³/h	4000	m³/h	0.50	m³	m³
800	32"	75	m³/h	4500	m³/h	0.75	m³	m³
900	36"	100	m³/h	6000	m³/h	0.75	m³	m³
1000	40"	125	m³/h	7000	m³/h	1.00	m³	m³
–	42"	125	m³/h	8000	m³/h	1.00	m³	m³
1200	48"	150	m³/h	10000	m³/h	1.50	m³	m³
–	54"	200	m³/h	13000	m³/h	1.50	m³	m³
1400	–	225	m³/h	14000	m³/h	2.00	m³	m³
–	60"	250	m³/h	16000	m³/h	2.00	m³	m³
1600	–	300	m³/h	18000	m³/h	2.50	m³	m³
–	66"	325	m³/h	20500	m³/h	2.50	m³	m³
1800	72"	350	m³/h	23000	m³/h	3.00	m³	m³
–	78"	450	m³/h	28500	m³/h	3.50	m³	m³
2000	–	450	m³/h	28500	m³/h	3.50	m³	m³

Language

Country	Language
Austria	Deutsch
Belgium	English
Denmark	English
England	English
Finland	English
France	Francais
Germany	Deutsch
Holland	English
Hong Kong	English
International Instruments	English
Italy	Italiano
Japan	English
Malaysia	English
Norway	English
Singapore	English
South Africa	English
Spain	Espanol
Sweden	English
Switzerland	Deutsch
Thailand	English

11.16.2 US units (only for USA and Canada)

Low flow cut off, full scale value, pulse value, totalizer

Nominal diameter		Low flow cut off		Full scale value current output		Pulse value		Totalizer
[inch]	[mm]	(approx. v = 0.04 m/s)		(approx. v = 2.5 m/s)		(approx. 2 pulses/s at v = 2.5 m/s)		
1/12"	2	0.002	gal/min	0.1	gal/min	0.001	gal	gal
1/8"	4	0.008	gal/min	0.5	gal/min	0.005	gal	gal
3/8"	8	0.025	gal/min	2	gal/min	0.02	gal	gal
½"	15	0.10	gal/min	6	gal/min	0.05	gal	gal
1"	25	0.25	gal/min	18	gal/min	0.20	gal	gal
1 ¼"	32	0.50	gal/min	30	gal/min	0.20	gal	gal
1 ½"	40	0.75	gal/min	50	gal/min	0.50	gal	gal
2"	50	1.25	gal/min	75	gal/min	0.50	gal	gal
2 ½"	65	2.0	gal/min	130	gal/min	1	gal	gal
3"	80	2.5	gal/min	200	gal/min	2	gal	gal
4"	100	4.0	gal/min	300	gal/min	2	gal	gal
5"	125	7.0	gal/min	450	gal/min	5	gal	gal
6"	150	12	gal/min	600	gal/min	5	gal	gal
8"	200	15	gal/min	1200	gal/min	10	gal	gal
10"	250	30	gal/min	1500	gal/min	15	gal	gal
12"	300	45	gal/min	2400	gal/min	25	gal	gal
14"	350	60	gal/min	3600	gal/min	30	gal	gal
15"	375	60	gal/min	4800	gal/min	50	gal	gal
16"	400	60	gal/min	4800	gal/min	50	gal	gal
18"	450	90	gal/min	6000	gal/min	50	gal	gal
20"	500	120	gal/min	7500	gal/min	75	gal	gal
24"	600	180	gal/min	10500	gal/min	100	gal	gal
28"	700	210	gal/min	13500	gal/min	125	gal	gal
30"	–	270	gal/min	16500	gal/min	150	gal	gal
32"	800	300	gal/min	19500	gal/min	200	gal	gal
36"	900	360	gal/min	24000	gal/min	225	gal	gal
40"	1000	480	gal/min	30000	gal/min	250	gal	gal
42"	–	600	gal/min	33000	gal/min	250	gal	gal
48"	1200	600	gal/min	42000	gal/min	400	gal	gal
54"	–	1.3	Mgal/d	75	Mgal/d	0.0005	Mgal	Mgal
–	1400	1.3	Mgal/d	85	Mgal/d	0.0005	Mgal	Mgal
60"	–	1.3	Mgal/d	95	Mgal/d	0.0005	Mgal	Mgal
–	1600	1.7	Mgal/d	110	Mgal/d	0.0008	Mgal	Mgal
66"	–	2.2	Mgal/d	120	Mgal/d	0.0008	Mgal	Mgal
72"	1800	2.6	Mgal/d	140	Mgal/d	0.0008	Mgal	Mgal
78"	–	3.0	Mgal/d	175	Mgal/d	0.001	Mgal	Mgal
–	2000	3.0	Mgal/d	175	Mgal/d	0.001	Mgal	Mgal

Language

Country	Language
USA	English
Canada	English

Index

A

ACCESS CODE 111
Accessories 70
Adapters 15
ALARM DELAY 130
Ambient temperature range 86
Applicator (selection and configuration software) 72
Approvals 8, 105
ASSIGN STATUS OUTPUT 117

B

Brief commissioning guide 66
BUS ADDRESS 121

C

Cable entry 84
Cable specifications 47
CALIBRATION DATE 127
Calibration factor 7
CE mark 105
CE mark (Declaration of Conformity) 8
Centering sleeve
  Promag D 20
Certificates 8, 105
CIP cleaning 87
Cleaning (exterior cleaning) 69
Code entry (function matrix) 57
Commissioning
  Brief operating instructions 66
  General 66
  Setup 67
  With a new electronics board 67
Commissioning setup 67
Communication 59
Conductivity of fluid 89
Connecting cable 18
Connection
  HART 49
  Remote version 42
  Terminal assignment 49
  Transmitter 48
CONTRAST LCD 112
C-tick mark 105
CURRENT RANGE 114

D

Declaration of Conformity (CE mark) 8
DEFINE PRIVATE CODE 111
Degree of protection 53, 86
Design 93
Device description files 60
DEVICE ID 121
Device variable via HART protocol 60
Display
  Elements 55, 105
  Turning 39
Documentation 107
Drinking water approval 106

E

Electrical connections 84
Electrodes
  EPD electrode 13
EMC (electromagnetic compatibility) 47, 87
Empty-pipe/full-pipe adjustment 68
Environment 86
EPD 122
EPD ADJUSTMENT 123
EPD ELECTRODE 128
Error message types 58
Ex approval 105
Exterior cleaning 69

F

Factory setting
  SI units 132
  US units 134
FAILSAFE MODE 129
Field Xpert SFX100 49
FieldCare 59, 72
Fieldcheck (tester and simulator) 72
Fitted electrodes 104
Flow rate/limits 16
FORMAT 112
FORMAT DATE/TIME 110
Function matrix
  Brief operating instructions 56
  Illustration 108
FXA 193 service interface 72
FXA193 72

G

Galvanic isolation 84
Ground cable
  Promag E 22
  Promag L 27
  Promag P 31
  Promag W 34
Group
  AMPLIFIER VERSION 131
  COMMUNICATION 121
  CURRENT OUTPUT 114
  DISPLAY 112
  OPERATION 111
  PROCESS PARAMETER 122
  PULSE/STATUS OUTPUT 116
  SENSOR DATA 127
  SENSOR VERSION 131
  SIMULATION SYSTEM 131
  SUPERVISION 129
  SYSTEM PARAMETER 124
  SYSTEM UNITS 109
  TOTALIZER 113

H

HART
- Command classes . . . 59
- Commands . . . 61
- Communicator DXR 375 . . . 59
- Device description files . . . 60
- Device status / Error messages . . . 65
- Write protection . . . 60

HART WRITE PROTECTION . . . 121
Hazardous substances . . . 82
HOME position (operating mode) . . . 55

I

Incoming acceptance . . . 9
Inlet/outlet run . . . 14
Installation
- Promag D . . . 19
- Promag E . . . 22
- Promag H . . . 25
- Promag L . . . 27
- Promag P . . . 31
- Promag W . . . 34
- Remote version . . . 40
- See Installation instructions

Installation conditions
- Adapters . . . 15
- Dimensions . . . 11
- Down pipe . . . 12
- EPD electrode . . . 13
- Foundations, supports . . . 15
- Inlet/outlet run . . . 14
- Installation of pumps . . . 11
- Mounting location . . . 11
- Orientation . . . 13
- Partially filled pipes . . . 12
- Vibrations . . . 14

INSTALLATION DIRECTION SENSOR . . . 124

K

K-FACTOR . . . 127

L

LANGUAGE . . . 111
Load . . . 84
Local display
- See Display

Low flow cut off . . . 84

M

Maintenance . . . 69
MANUFACTURER ID . . . 121
Material . . . 102
Material load diagram . . . 103
Maximum measured error . . . 85
Measured variable . . . 83
MEASURING MODE . . . 124–125
MEASURING PERIOD . . . 128
Measuring principle . . . 83
Measuring range . . . 83
Measuring system . . . 83
Mechanical construction . . . 93
Medium pressure range . . . 89
Medium temperature range . . . 87
Mounting bolts
- Promag D . . . 20

N

Nameplate specifications
- Connections . . . 7
- Sensor . . . 7
- Transmitter . . . 6

NOMINAL DIAMETER . . . 127
Nominal diameter and flow rate
- Promag W . . . 16

O

Operable flow range . . . 83
Operating conditions
- Process . . . 87

Operating elements . . . 55, 105
OPERATING MODE . . . 116
Operation . . . 55
- Device description files . . . 60
- FieldCare . . . 59
- Operating programs . . . 59

Operational safety . . . 4
Order code
- Accessories . . . 70
- Sensor . . . 7
- Transmitter . . . 6

Output . . . 83
OUTPUT SIGNAL . . . 117
Output signal . . . 83
OVERFLOW . . . 113

P

Performance characteristics . . . 85
Pig (cleaning) . . . 26
POSITIVE ZERO RETURN . . . 125
Post-connection
- Check . . . 54

Post-installation
- Check . . . 41

Potential equalization . . . 50
Power consumption . . . 85
Power supply . . . 84
Power supply failure . . . 85
Pressure Equipment Directive . . . 106
Pressure loss
- Adapters (reducers, expanders) . . . 15

Pressure tightness . . . 90
Process connections . . . 104
Process error messages . . . 76
Process errors (definition) . . . 58
Programming mode
- Disable . . . 57
- Enable . . . 57

Promag D
- Centering sleeve . . . 20
- Installation . . . 19

Mounting bolts 20
Seals 19
Tightening torques 21
Promag D mounting kit 19
Promag E
Ground cable 22
Installation 22
Seals 22
Tightening torques 23
Promag H
Cleaning with pigs 26
Installation 25
Seals 25
Weld nipple 26
Promag H cleaning with pigs 26
Promag H with weld nipples 26
Promag L
Ground cable 27
Installation 27
Seals 27
Tightening torques 28
Promag P
Ground cable 31
Installation 31
Seals 31
Tightening torques 31
Promag W
Ground cable 34
Installation 34
Seals 34
Tightening torques 34
PULSE VALUE 116
PULSE WIDTH 116

R
Reference operating conditions 85
Registered trademarks 8
Remote operation 105
Remote version
Connection 42
Installation 40
Repair 82
Repeatability 86
RESET TOTALIZER 113
Response of the status output 119
Response to errors 77
Returning devices 82

S
Safety icons 5
Safety instructions 4
Sanitary compatibility 105
Seals 69
Promag D 19
Promag E 22
Promag H 25
Promag L 27
Promag P 31
Promag W 34
SELF CHECKING 130
SENSOR TYPE 131
SERIAL NUMBER 131
Serial number
Sensor 7
Transmitter 6
Shock resistance 87
Signal on alarm 84
SIMULATION FAILSAFE MODE 131
SIMULATION MEASURAND 131
SIP cleaning 87
Spare parts 78
Standards, guidelines 106
Storage temperature 86
SUM 113
Supply voltage 84
Surface roughness 105
SW REV. NUMBER 131
Switching behavior of the status output 120
Switching on (measuring device) 66
SWITCH-OFF POINT 118
SWITCH-ON POINT 117
SWITCH-ON POINT LOW FLOW CUT OFF 122
SYSTEM DAMPING 126
System error messages 74
System errors (definition) 58
SYSTEM RESET 130

T
TAG DESCRIPTION 121
TAG NAME 121
Technical data 83
Temperature
Ambient 86
Medium 87
Storage 86
TEST DISPLAY 112
Tightening torques
Promag D 21
Promag E 23
Promag L 28
Promag P 31
Promag W 34
TIME CONSTANT 115
Troubleshooting 73
Types of error (system and process errors) 58

U
UNIT VOLUME 109
UNIT VOLUME FLOW 109

V
VALUE 20 mA 115
VALUE SIMULATION MEASURAND 131
Vibration resistance 87
Vibrations 14

W
Weight 93, 99
Wiring 42

Z

ZERO POINT 127

www.addresses.endress.com

Endress+Hauser

People for Process Automation

Heater, Forced Air, Ouellet, 4.8kW, OAC04804BL

180, 3rd Avenue, L'Islet, Quebec, G0R 2C0, CANADA
Tel.: (418) 247-3947, 1-800-463-7043 Fax: (418) 247-7801
www.ouellet.com

INSTRUCTIONS "OAC" Series

WARNING

When using electrical appliances, basic precautions should always be taken to reduce the risk of fire, electrical shock and injury, including the following.

Read carefully these instructions before installation, operation of the heater. Failure to adhere to the instructions could result in fire, electric shock, serious personal injury, and death or property damage. Review frequently for continuing safe operation and instruction of future users, if necessary.

IMPORTANT INSTRUCTIONS

1- Read all instructions before installing or using this heater.
2- This heater is hot when in use. To avoid burns, do not let bare skin touch hot surfaces. Keep combustible materials, like furniture, pillows, bedding, papers, clothes, and curtains at least 36 in. (915 mm) from the front of the heater.
3- Extreme caution is necessary when any heater is used by or near children or invalids and whenever the heater is left operating and unattended.
4- Do not operate any heater after it malfunctions. Disconnect power at service panel and have heater inspected by a reputable electrician before reusing.
5- Do not use outdoors.
6- Do not insert or allow foreign objects to enter any ventilation or exhaust opening as this may cause an electric shock or fire, or damage the heater.
7- Do not block air intakes or exhaust in any way whatsoever.
8- This heater has hot and arcing or sparking parts inside. Do not use it in areas where gasoline, paint, or flammable liquids are used or stored.
9- Use this heater only as described in this manual. Any other use not recommended by the manufacturer may cause fire, electric shock, or injury.
10- **AMERICAN VERSION ONLY:** Some models (up to 6000W maximum and 240V maximum) include a visual alarm to warn that parts of the heater are getting excessively hot. If the light turns on, immediately turn the heater off and inspect for any objects on or adjacent to the heater that may have blocked the airflow or otherwise caused high temperatures to have occured. If no obstruction is visible, the heater must be checked by a qualified person. **DO NOT OPERATE THE HEATER WHEN THE ALARM LIGHT IS ON.**
11- The thermostat should not be considered an infallible device in cases where maintaining a temperature is considered critical. Examples: Hazardous material storage, computer server room, etc. In these particular cases, it is imperative to add a monitoring system to avoid the consequences of a thermostat failure.

OPERATING INSTRUCTIONS

1- The heater must be properly installed before it is used.
2- Turn the power on at the circuit breaker panel.
3- Electronic thermostat: be sure to set it on the fan mode.
4- Built-in thermostat: to set thermostat at the desired temperature, follow these steps:
   - Set thermostat at maximum temperature (turn clockwise).
   - When the desired temperature is reached, turn the thermostat counter-clockwise slowly until you hear a click.
   - The thermostat will keep this room temperature.
5- Built-in thermostat with control knob, the setting can be adjusted with the knob supplied, located on the front cover.
6- Built-in tamperproof thermostat: the setting can be adjusted through the hole in the front cover with a small slotted screwdriver.
7- **AMERICAN VERSION ONLY**:
   Some models (up to 6000W maximum and 240V maximum) include a visual alarm to warn that parts of the heater are getting excessively hot. If the light turns on, immediately turn the heater off and inspect for any objects on or adjacent to the heater that may have blocked the airflow or otherwise caused high temperatures to have occured.
   DO NOT OPERATE THE HEATER WHEN THE ALARM LIGHT IS ON.

OPTIONS:

Fan switch:
This option allows the use of the fan in continuous or automatic mode.
The switch can be switched through the upper grille with a screwdriver.
Position ON: The fan runs continuously, with or without heating demand.
Position AUTO: The fan operates in automatic mode, only during a heating demand.

Heating switch:
This option allows the standby of the heating function of the heater.
The switch can be switched through the upper grille with a screwdriver.
Position ON: The heater is operating normally, depending of the heating demand from the thermostat.
Position STBY: The heater does not allow to heat the room, even with a heating demand from the thermostat.
However, the fan can be used for air circulation with the fan switch option, if applicable.

MAINTENANCE INSTRUCTIONS

1- Once a year, remove the front panel and use a vacuum cleaner to remove the dust accumulation inside the heater and through openings of the front panel.
2- Cleaning should be done while the heater is disconnected from the main service panel. Wait until the housing and heating element cool before performing maintenance.
3- Replace the front panel before energizing.
4- Any other servicing should be performed by a qualified technician.

WARRANTY

Please refer to the product sheet at www.ouellet.com.

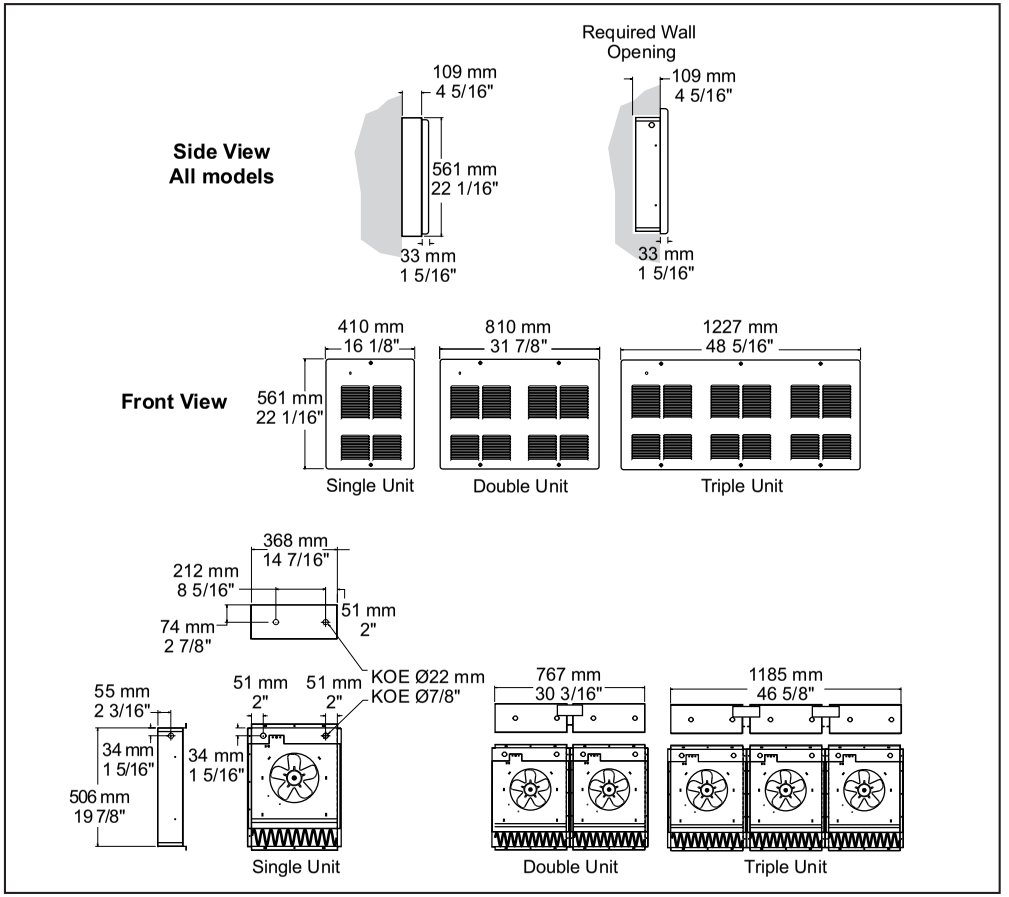

SAVE THESE INSTRUCTIONS

INSTALLATION INSTRUCTIONS

RECESS MOUNTING:

1- Heater must be used with recess box.
2- Never install warm air outlet of heater less than 10 in. (250 mm) from floor or adjacent wall.
3- Provide a wall opening as:
   Depth : 4 5/16 in. (109 mm)
   Height : 19 7/8 in. (506 mm)
   Length : - Single unit : 14 7/16 in. (368 mm)
   - Double unit : 30 3/16 in. (767 mm)
   - Triple unit : 46 5/8 in. (1185 mm)
4- Remove the appropriate knock-out from the recess box for the electrical supply.
5- Attach firmly the recess box using provided screws. Make sure that the edge on each side of the recess box lean on the gypsum panel and not on the structural parts of the wall. See marking on the sides of the recess box.
6- Install the heater to the recess box and be sure that the heater is attach firmly with four (4) provided screws.
7- Connect the heater leads to the supply leads according to national and local codes. See wiring diagram in the front cover of the heater.
8- Make sure the fan rotates freely and that there is no foreign object in the heater.
9- Install the front cover using the provided screws. IMPORTANT: To insure that the front cover is not upside down, check if the logo is in the correct orientation.
10- To test the heater temporarily, set thermostat at maximum temperature.

SURFACE MOUNTING:

Model 4 in. (102 mm)

1- The surface box must be used with recess box.
2- Never install warm air outlet of heater less than 10 in. (250 mm) from floor or adjacent wall.
3- Locate the power supply leads behind the planned location of the heater (surface box).
4- Mount the surface box securely to the wall with provided screws. IMPORTANT: For a single surface box, there are two bracktets fixed at the top and bottom. Unfold the metal hooks to remove the brackets. Insert brackets in the surface box before continuing the installation. See illustration to install properly.
5- Follow instructions 4 to 10 as above for recess mounting.

SEMI-RECESSED MOUNTING:

Model 1 in. (25 mm) and Model 2 in. (51 mm)

1- The surface box must be used with recess box.
2- Never install warm air outlet of heater less than 10 in. (250 mm) from floor or adjacent wall.
3- Provide a wall opening as:
   Depth for 1 in. model : 3 5/16 in. (84 mm)
   Depth for 2 in. model : 2 5/16 in. (59 mm)
   Height : 19 7/8 in. (506 mm)
   Length : - Single unit : 14 7/16 in. (368 mm)
   - Double unit : 30 3/16 in. (767 mm)
   - Triple unit : 46 5/8 in. (1185 mm)
4- Locate the power supply leads behind the planned location of the heater (surface box).
5- Mount the surface box securely to the wall with provided screws. IMPORTANT: For a single surface box, model 2 in. (51 mm) there are two bracktets fixed at the top and bottom. Unfold the metal hooks to remove the brackets. Insert brackets in the surface box before continuing the installation. See illustration to install properly.
6- Follow instructions 4 to 10 as above for recess mounting.

CAUTION:

High temperature, risk of fire, keep electrical cords, drapery, furnishings, and other combustibles at least 36 in. (915 mm) from the front of the heater. To reduce the risk of fire, do not store or use gasoline or other flammable vapors and liquids in the vicinity of the heater.

IMPORTANT

1- Do not obstruct front of heater for at least 48 in. (1220 mm).
2- Any remote thermostat or relay must be connected to the heater control terminal block.
3- Do not interrupt power supply to control this heater.

Surface mounting and Semi-recessed mounting
Single unit
Model 4 in. (102 mm)
Model 2 in. (51 mm)

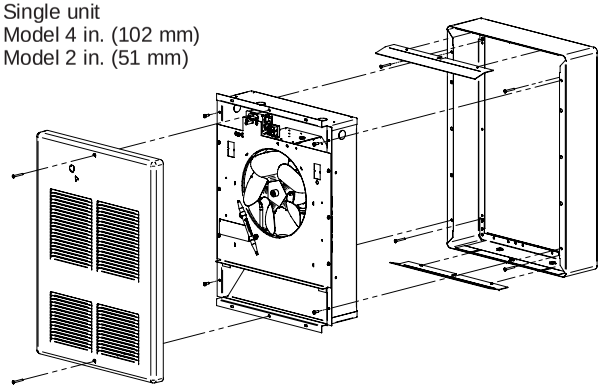

Semi-recessed mounting
Single unit
Model 1 in. (25 mm)

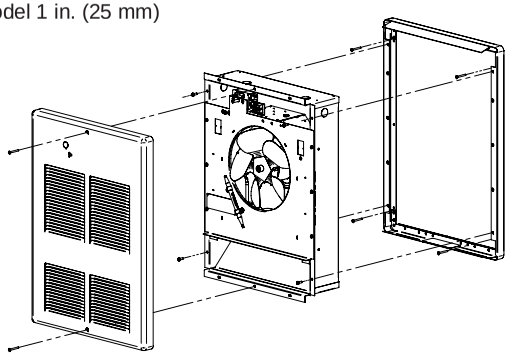

Surface mounting and Semi-recessed mounting
Double unit
All models

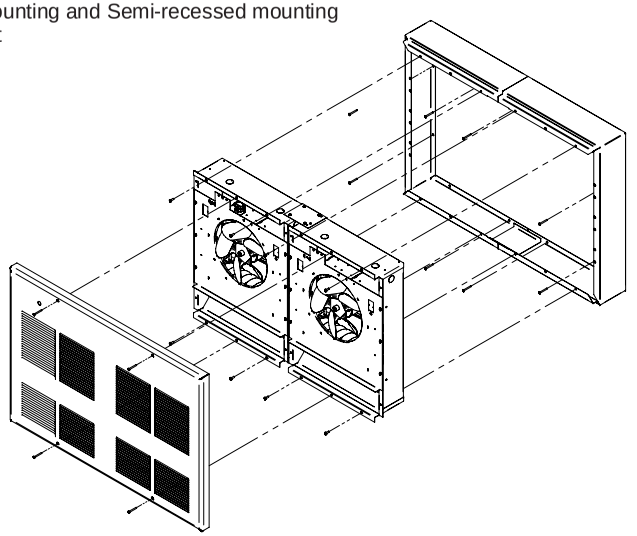

Surface mounting and Semi-recessed mounting
Triple unit
All models

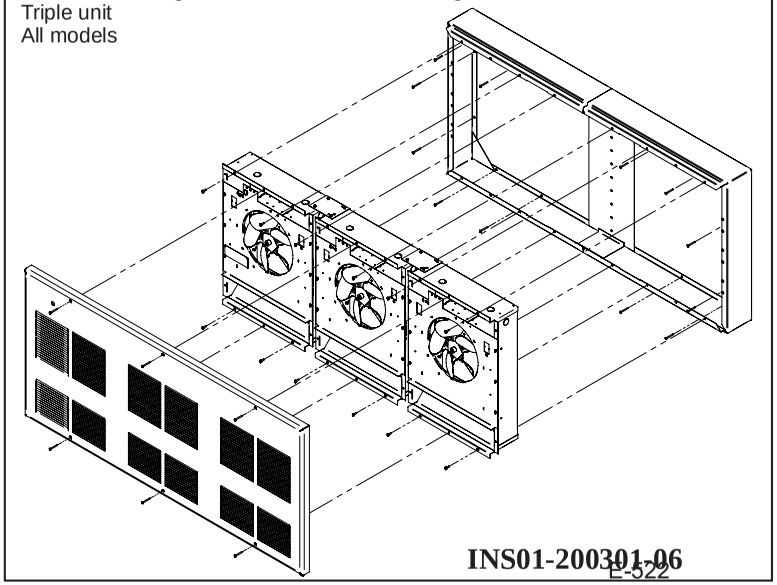

OAC *series*

Commercial Wall Heater

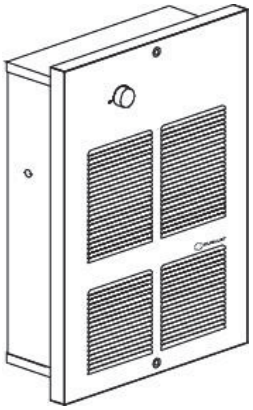

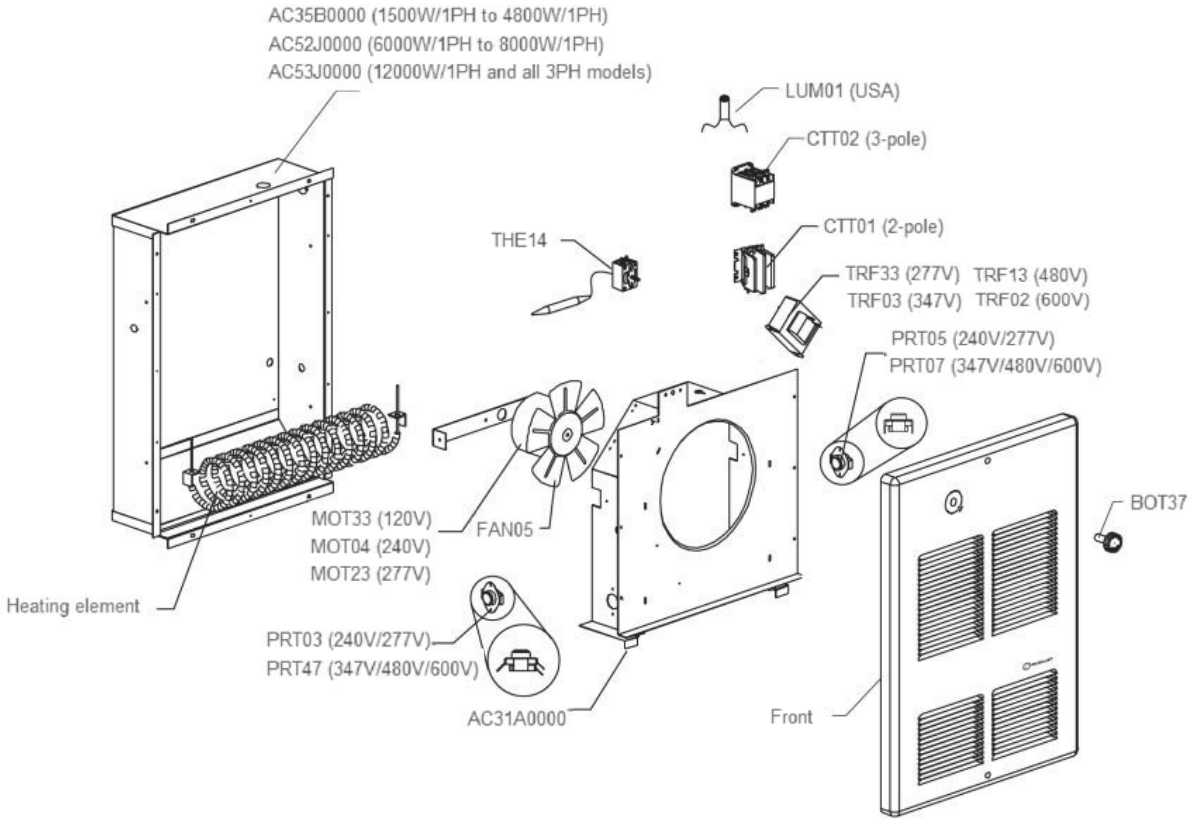

Amp	Fusible *Fuse*	Porte fusible *Fuse holder*	
		Avant le 14 août 2013 *Before August 14, 2013*	After le 14 août 2013 *After August 14, 2013*
15	FUS02	FUS03	FUS07
30	FUS09	FUS07	FUS07

Watts (PH)	Devant *Front*
1500 (1) - 4000 (1)	AC07A000*
4800 (1)	AC29A000*
6000 (1) - 8000 (1)	AC11A000*
12000 (1) **	AC14A000*

* Couleurs sur mesure disponible sur demande. / Custom colors available upon request.
** 12000W/1PH et tous les modèles 3PH. / 12000W/1PH and all 3PH models.

Watts (PH)	Élément chauffant *Heating element*						
	120V	208V	240V	277V	347V	480V	600V
1500 (1)	ELO114	-	ELO71	ELU32	ELO66	ELU71	ELO67
2000 (1)	-	ELO72	ELO47	ELU20	ELO50	ELU24	ELO53
3000 (1)	-	-	ELO48	ELU21	ELO51	ELU25	ELO54
4000 (1)	-	ELO46	ELO49	ELU22	ELO52	ELU26	ELO55
4800 (1)	-	ELU30	ELU31	ELU33	ELO107	ELU58	ELO106
6000 (1)	-	-	ELO48	ELU21	ELO51	ELU25	ELO54
6000 (3)	-	ELO72	-	-	-	-	ELO53
8000 (1)	-	ELO46	ELO49	ELU22	ELO52	ELU26	ELO55
9000 (3)	-	ELO49	-	-	-	-	ELO54
12000 (1)	-	ELO46	ELO49	ELU22	ELO52	ELU26	ELO55
12000 (3)	-	ELO46	-	-	-	ELU26	ELO55

test

watts	volts	
	ELU26	

H-301/302H-401/402 H-501/502 H-503/504 - Heater, Immersion, Caloritech 6KW 460V 3ph

INC.
Tel.: (905) 829-4422
Fax: (905) 829-4430
Tel.: (705) 325-3473
Fax: (705) 325-2106
Tel.: (514) 334-3720
Fax: (514) 334-6491
Tel.: (716) 564-0010
Fax: (716) 564-0044

INSTALLATION AND MAINTENANCE INSTRUCTIONS IMMERSION HEATERS - TYPES CX & DX

1.0 INSTALLATION

1.1 Immersion heaters are designed for operation only while completely immersed in liquids. Never allow the heating elements to be exposed while energized or failure will result.

1.2 CAUTION: Use the heater only in liquids and at pressures for which it was designed. Normally copper sheath is recommended in water, steel or alloy sheath in oil, and the appropriate alloy sheath for heating chemical solutions. Check factory for recommendations.

1.3 In the case of flanged (and some screwplug type) heaters where a gasket seal is required, the gasket surface should be clean and dry before the heater is seated.

1.4 The terminals must be protected at all times from moisture or vapour. In hazardous locations, explosion resistant terminal housings must be used. In outdoor locations, moisture resistant housings are required.

1.5 Protect terminals of heating elements from drippings, condensation, fumes, spray or any other substance which could result in element contamination.

1.6 When melting solids by direct immersion, a surface vent should be provided to allow gases to escape. Operate the heater on $^1/_2$ voltage until melted material completely covers the heating elements. Heaters used for this purpose may require special design features. Check factory for recommendations.

2.0 WIRING AND CONTROL

2.1 Heaters must be wired by qualified personnel to electrical code requirements.

2.2 Check supply voltage for compliance with heater nameplate voltage.

2.3 A line voltage or pilot duty thermostat should be used to control the heater. The pilot duty thermostat must be used with a contactor and (if required) a transformer. Generally, heaters supplied with built-in thermostats will be factory prewired if suitable for line voltage operation. Integral thermostats not factory prewired are usually intended for pilot duty.

2.4 It is recommended that the control circuits be supplied from the isolated secondary windings of transformers obviating the need for two supply circuits, or as an alternative, that mechanical or electrical interlocking be provided so that both supplies must be disconnected before live parts can be made accessible.

2.5 If there is even the slightest possibility that the liquid level may fall below the elements, a level control switch or over-temperature sensing device affixed to the uppermost heating element is required. Check factory for recommendations.

2.6 Heaters with explosion resistant terminal housings must only be used in locations for which the heaters are certified.

a) Check heater nameplate information for approval code.

b) Never energize an explosion resistant heater unless the terminal housing cover is properly tightened.

c) An immersion heater for hazardous locations is approved for use only if an approved liquid level control is used to de-energize the heater under low liquid conditions.

3.0 START-UP INSPECTION

3.1 Check that all terminal connections are tight.

3.2 Heaters stored for prolonged periods may absorb moisture. Using a megger (insulation resistance tester) check the value of the insulation resistance to ground for each circuit. Initial readings of over 500,000 ohms to ground are normally acceptable. Should lower readings be observed, check factory for instructions.

4.0 MAINTENANCE

4.1 DISCONNECT POWER BEFORE SERVICING.

4.2 Remove the immersion heater periodically to inspect for corrosion, sludge built-up and for scale removal.

4.3 Periodically check electrical connections for tightness.

INDEECO

Owner's Manual

ULTRA-SAFE EXP Series

Electric Forced Air Heater for Hazardous Locations

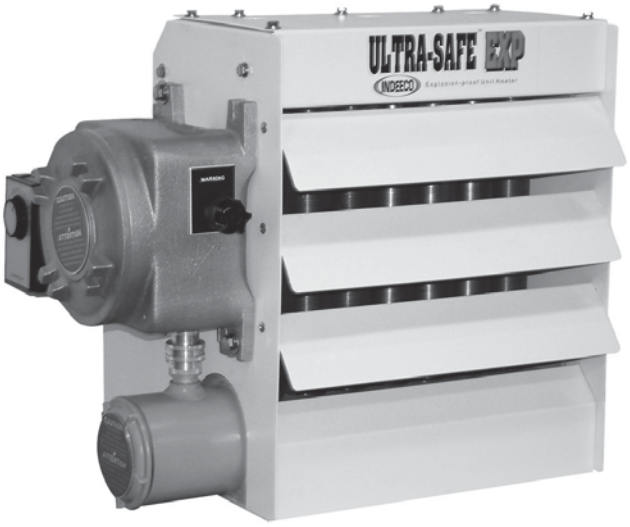

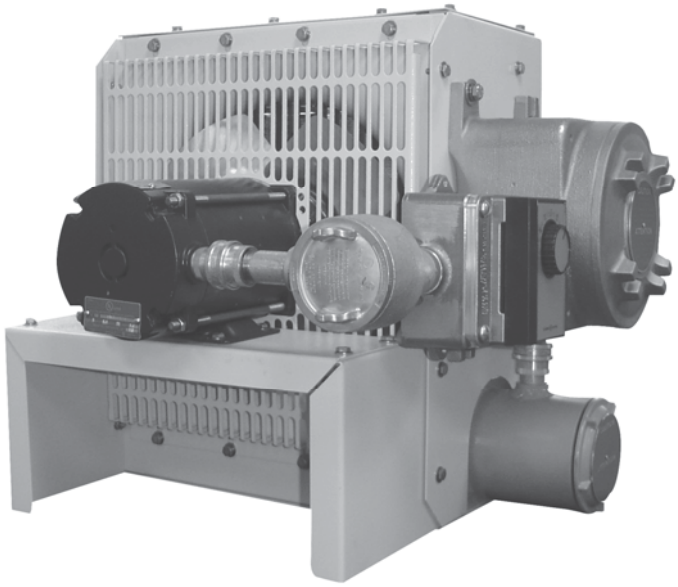

This manual covers installation, maintenance and repair parts.

FM and CSA Approved for the following classified areas:
Class I, Divisions 1 & 2, Groups C & D
Class II, Divisions 1 & 2, Groups F & G
Operating Temperature Code T3C - 320°F (160°C)
Class I, Zones 1 & 2, Group IIB, T3 (FMUS & CSAUS only)
or
Class I, Divisions 1 & 2, Groups C & D
Class II, Divisions 1 & 2, Groups E, F & G
Operating Temperature Code T3C - 320ºF (160ºC)
Class I, Zones 1 & 2, Group IIB T3 (FMUS & CSAUS only)
See Data Plate for Specific Area Classification

For details on the particular hazardous environments having the potential for explosion, refer to Articles 500 through 516 of the National Electric Code, and/or Section 18 of the Canadian Electric Code, Part I.

C SA ® US

C FM US APPROVED

23-2199-83-1
E-526

WARNINGS

Installation and maintenance personnel should familiarize themselves with this manual and all the **WARNINGS** before installing or working on this heater to avoid potential hazardous conditions, severe property damage, personal injury or death.

1. To reduce the risk of ignition of hazardous atmospheres: Do not install where the operating temperature code limit exceeds the ignition temperature of the hazardous atmosphere.
2. Potentially lethal voltages are present. Be sure to lock the branch circuit disconnect switch in the OFF position and tag the circuit "Out for Maintenance" before working on this equipment.
3. Keep electrical enclosure covers tightly closed while in operation.
4. Hazard of Electric Shock. Heater must be grounded in accordance with the N.E.C. and/or C.E.C.
5. This heater should be installed by qualified personnel familiar with the National Electric Code and/or the Canadian Electrical Code requirements for hazardous locations. It is the responsibility of the installer to verify the safety and suitability of the installation.
6. Disassembly of the unit, for installation, is not required or authorized.
7. When connecting the room thermostat, be sure that the thermal cutouts remain connected in series with the controlling contactor. The unit must not operate without the thermal cutouts properly connected in the circuit.
8. Do not attempt to install a "Fan Only" switch on a standard unit heater and do not try to field modify a standard unit heater for this option. The heater must have been ordered for this option to have the necessary internal controls.
9. Replacement of electrical components should only be done by qualified personnel familiar with the requirements of maintaining electrical equipment in hazardous locations.
10. Replacement electrical components must be obtained from the factory in order to maintain the hazardous location rating.
11. The heat exchanger is a factory vacuum-sealed unit. Do not attempt to loosen or tighten any of the fill or drain plugs or attempt to operate the pressure relief valve. A loss of vacuum could cause nuisance tripping of the cutouts or high pressures which will cause the relief valve to actuate with an accompanying loss of liquid. Should leakage occur, remove unit from service and investigate cause.
12. The heat exchanger is filled with a mixture of water and inhibited propylene glycol. Contact with the fluid at operating temperatures may produce a burn hazard. The Material Safety Data sheets indicate that there is not a health hazard from coming in contact with the inhibited propylene glycol. Suggested first aid consists of flushing eyes with plenty of water and to wash off skin in flowing water or a shower.
13. Install and operate in an upright position only. Failure to comply will cause the overtemperature thermal cutouts to trip.
14. Installation minimum mounting clearances on nameplate must be maintained.
15. Use copper wire for supply connections according to size and rating on nameplate.
16. Do not attempt to override louver stops or operate unit with louvers fully closed.
17. "Warning Light", if supplied, will turn on if the high temperature thermal cutout opens. This could result if the heat exchanger is dirty, inlet air is obstructed, vacuum loss in heat exchanger, fan not turning or incorrect supply voltage. Disconnect power to unit before servicing.
18. Crackling noises within the heat exchanger at startup are normal.

WARRANTY WILL BE VOID IF INSTRUCTIONS ARE NOT FOLLOWED.

GENERAL

The air heaters are designed for comfort heating and should not be used in ambient temperatures exceeding 104ºF (40ºC). The units may be wall, pole or ceiling mounted. They utilize a hermetically sealed, liquid-to-air heat exchanger containing immersion type electric heating elements. A mixture of nontoxic propylene glycol and water is place in the heater core to act as a heat transfer fluid. The propylene glycol provides freeze damage protection to -49ºF (-45ºC). The unit is designed to give years of safe, trouble-free operation when properly installed and maintained.

INSTALLATION

A. Site Selection:

The Heaters should not be mounted close to drapery or similar materials which could lay on the cabinet, or block the inlet or outlet of the heater. The heaters are intended for elevated mounting locations so that they blow warm air down to the floor area. A mounting height should be selected so that the heater is out of the way of possible moving equipment or personnel, yet low enough to deliver warm air to the selected area. See mechanical installation instructions for recommended installation heights.

B. Mechanical Installation:

Once an acceptable location has been determined, follow these instructions to complete the mechanical installation.

1. The Heaters are designed for use only while permanently mounted in an upright, level position. See figure below maximum tilt angles:

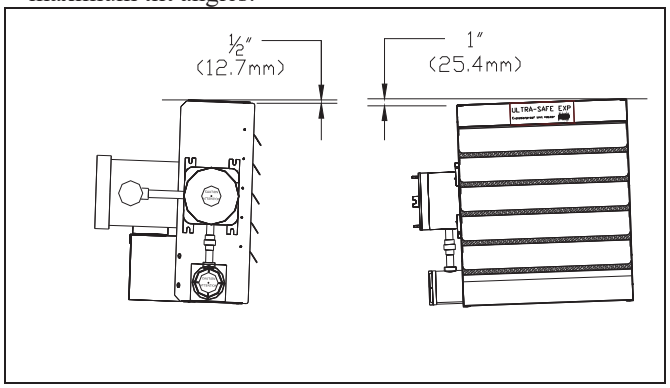

2. To ensure proper heating of floor surfaces, observe the following recommended maximum mounting heights (to bottom of heater):

Maximum Mounting Height from Floor:		
233-FA	233-FB	233-FC
9 ft.	10 ft.	13 ft.
(2.7m)	(3.0m)	(4.0m)

3. The supporting structure that the heater is attached to must have adequate strength to safely support the heater and be sufficient to keep the heater in its proper upright operating position. The maximum unit weights are:

MODEL	lbs	(kgs)
233-FA	150	68
233-FB	200	91
233-FC	250	114

4. See figure below for minimum installation clearances:

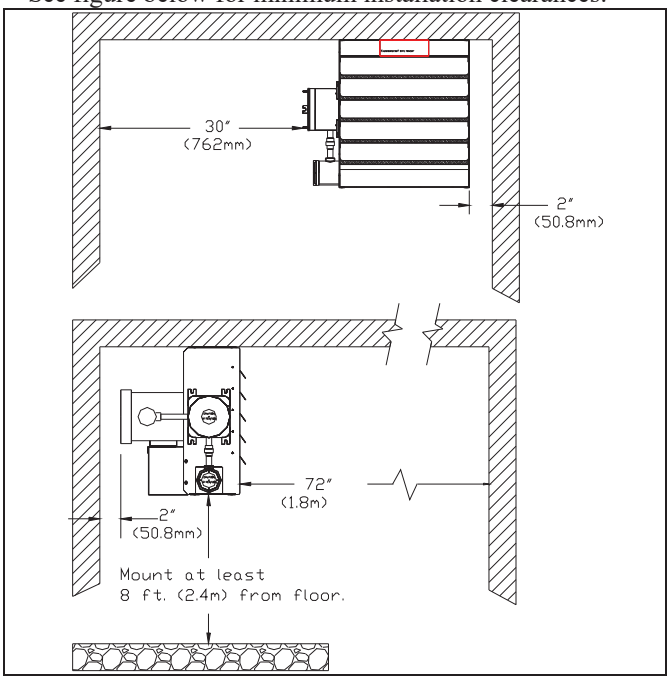

5. The heater may be suspended from overhead beams or mounted to a side wall or a 4" pipe using one of the approved mounting kits. Use of non-approved mounting kits voids all warranties, expressed or implied.
6. Wall mounting should be to structural steel. If the wall construction is plasterboard with wooden 2 X 4 framing or similar, it must be reinforced with angle iron or wooden cross braces.
7. Lock washers should be used on all mounting nuts and bolts to ensure they don't vibrate or work loose due to fan vibration or other vibration transmitted to the heater.

C. Electrical Installation:

Follow these instructions to complete the electrical installation:

1. External branch circuit protection is required. See nameplate ratings and follow Code recommendations.
2. Use only an approved explosion-proof means of wiring, such as mineral insulated cable or copper conductors in rigid conduit with conduit seals as required to make connection to the heater.
3. Follow the NEC and/or CEC and any local electrical and building codes related to the installation and intended use of the heater in an explosion-hazard area.
4. When doing any work on a heater, including the initial electrical connection, disconnect the electrical current at the main branch circuit switch, and lock the switch in the off (open) position and tag the circuit "Out for Maintenance" to prevent potential lethal shock hazards.
5. Confirm that the electrical power supply matches the nameplate voltage, phase, amperage and frequency rating of the heater to be connected.
6. Ensure conductors are of appropriate gauge size. The minimum gauge is stamped on the nameplate. Size all input conductors according to accepted standards consistent with the temperature rating of the wire being used. Use minimum 75°C rated wire.

7. Proper installation of the heater requires that an adequate grounding conductor be connected to the ground terminal. This terminal is painted green or marked with the letter "G" and is located on the inside of the control enclosure next to the power input opening.
8. Check and confirm all connections are securely fastened.
9. Before application of electrical power, check all connections to ensure compliance with the wiring diagram and any code requirements. Remove any foreign objects from the control boxes. Reinstall covers tightly.
10. On all 3-phase heaters, it is necessary to verify that the fan is rotating in the proper direction. If air delivery is not from the front of the heater, exchange any 2 input wires at the main contactor terminal located in the control enclosure.
11. The explosion-proof control box is designed with threaded joints and metal-to-metal contact at the lid or cover joint to prevent an explosion. Do not attempt to install gasket material of any type at these joints. A light coating of anti-seize compound is applied to the threads to prevent seizing.
12. See section titled "operation" before energizing the heater.

D. Field Installed Controls:

1. Power Disconnect Switch:
The NEC requires that a power disconnect switch be mounted within sight of the heater. The CEC or local codes may require a disconnect switch within sight of the heater. Refer to the electrical diagram and follow these steps:
   a.) The remote power disconnect switch must be an explosion-proof disconnect switch rated for the area classification.
   b.) The switch must be indicating and have a locked off position.
   c.) The switch must be rated for the nameplate voltage and current per the NEC, CEC and any local codes.
   d.) Follow steps 6 through 12 of the electrical installation instructions to complete the installation.

2. Room Thermostat:
Refer to the electrical wiring diagram and follow these steps:
   a.) Connect the remote thermostat across the leads marked "C" and "C1". The external thermostat will then be in series with the heater thermal high-limit switches and correct operation of the heater will result.
   b.) The wiring to the remote thermostat must be copper wire, 16 gauge minimum (for Class II) or 14 gauge minimum (Class I) and run in explosion-proof conduit with appropriate conduit seals installed per the NEC, CEC and any local codes.
   c.) Any room thermostat used with this heater must be of an explosion-proof type rated for the area classification, open on temperature rise, rated 250VAC, 75VA inductive capacity.
3. 'Fan Only' Switch:
Refer to the electrical wiring diagram and follow these steps:
   a.) Do not attempt to install a "Fan Only" switch on a standard unit heater and do not try to field modify a standard unit heater for this option. The heater must have been ordered for this option to have the necessary internal controls.
   b.) Connect the remote 'fan only' selector switch across the leads marked "C" and "F".
   c.) The wiring to the fan selector switch must be copper wire, 16 gauge minimum (for Class II) or 14 gauge minimum (for Class I) and run in explosion-proof conduit with appropriate conduit seals installed per the NEC, CEC and any local codes.
   d.) Any selector switch used with this heater must be an explosion-proof switch rated for the area classification, maintained 2 position selector switch rated for 250 VAC, 75 VA inductive.

OPERATION

The unit heater may be operated normally at ambient temperatures of 104°F (40°C) or less and at altitudes of 3,300 feet (1000m) or less in atmospheres containing less than 21% oxygen by volume, and as classified on the nameplate. All of these conditions must be met before attempting to operate the heater. The heater should never be operated in an oxygen-enriched atmosphere or at ambient temperatures above 104°F, (40°C). The heater may be operated at higher altitudes if the ambient temperatures are below 104°F, (40°C).

A. Initial Operation:

Check to make sure the mechanical and electrical installation is complete and that it is safe to operate the heater.

1.) Heater without built on or remotely mounted fan switch:
   a.) Set the temperature control thermostat to a setting above the current room temperature.
   b.) Energize the heater electrical supply circuit.
   c.) The heater and fan should come on and in 5 to 15 minutes reach a stable operating temperature. If the room temperature is high and the installation is above 3,300 feet, the unit heater may cycle on the thermal high limits of the motor or the heater.
   d.) Check out and report any unusual or questionable operating characteristics, such as noise, vibration, loss of fluid, etc. Note that crackling noises coming from the heat exchanger during warm up are normal.
   e.) Set the temperature control thermostat to the desired room temperature setting.
   f.) De-energize the heater electrical supply circuit until heater operation is required.
2.) Heater with fan switch:
   a.) Place the fan switch in the fan position.
   b.) Set the temperature control thermostat to a setting below the current room temperature.
   c.) Energize the heater electrical supply circuit.
   d.) The heater fan should come on but the heater should remain off.
   e.) Place the fan switch in the auto position.
   f.) The fan should go off.
   g.) Set the temperature control thermostat to a setting above the current room temperature.

h.) The fan and heater should operate. If the room temperature is high and the installation is above 3,300 feet (1000m), the unit heater may cycle on the thermal high limit cutouts of the motor or the heater.

i.) Check out and report any unusual or questionable operating characteristics, such as noise, vibration, loss of fluid, etc.
Note that crackling noises coming from the heat exchanger during warm up are normal.

j.) Set the fan switch and temperature control thermostat to the desired operating positions.

B. Normal Operation:

Prior to the start of the heating season, perform the electrical and mechanical steps outlined in the section titled "maintenance".

a.) Perform the Operation steps for the applicable temperature control option.

b.) Place all switches in their normal operating position and place the unit heater in service.

MAINTENANCE

Maintenance and repair must be performed by qualified personnel only.

A. Electrical:

1. Inspect all terminal connections, contactor and conductor insulation for damage, looseness, fraying, etc., as applicable. Tighten any loose terminals and replace or repair wire with damaged or deteriorated insulation. If contactor contacts are badly pitted, welded together, or burned, replace the contactor. Check all explosion-proof conduit for visible damage and tightness.
2. If reduced heat output is suspected, perform the mechanical checks. If low heat output is still suspected after completing the mechanical checks, verify the condition of the heating elements by using an amperage meter to check the current draw of each input line. All input lines should draw approximately equal current which should agree with nameplate rating. If they do not, one or more of the heating elements could be burned out and the heater/core assembly should be replaced.
3. The electric motor is permanently lubricated and thermally protected. Check for smooth and quiet running at all inspections. Replace motor if excessive bearing play is detected. Contact the factory for instructions.

B. Mechanical:

1. Never attempt to fill, drain or check the liquid level of the heat exchanger or check the action of the pressure relief valve. Contact the factory for instructions.
2. The explosion-proof control box is designed with threaded joints and metal-to-metal contact at the lid or cover joints to prevent an explosion. Do not attempt to install gasket material of any type at these joints. A light coating of anti-seize compound is applied to the threads to prevent seizing.
3. Annually check the tightness of all visible bolts and nuts, in particular the support structure bolts and nuts. Similarly check the motor mounting bolts and nuts.
4. Periodically, check the motor, fan and heater core fins for cleanliness. A dirty heat exchanger can cause the unit to over heat and cycle on the thermal cutouts. If the dirt is loose dust, clean with a vacuum or by air jet. If the dirt can't be vacuumed or blown off, use a warm water spray directed to the inlet side of the heat exchanger then to the outlet side. A soft bristled brush may be required to loosen stubborn deposits. Be careful not to bend the aluminum fins on the heat exchanger or the fan blade propeller. Allow unit to dry before re-energizing.
5. Check louvers for position tightness and equal angle settings. Check motor and fan for smooth running operation. Any unusual noise or vibration must be investigated and rectified.
6. Should there be any evidence of fluid leakage from the heater core, the heater should be repaired immediately. The heater will not operate properly with a low fluid level. Contact the factory for replacement core.

REPAIR AND REPLACEMENT

Maintenance and repair must be performed by qualified personnel only.

A. Replacing the Heat Exchanger Core:

The heat exchanger core is not field repairable. Contact factory for replacement.

1. Disconnect the heater electrical power supply, unwire and lower the heater from it's mounting location. Set heater face down on a table or on the floor.
2. Remove the cabinet bottom, cabinet top, wiring and heater enclosure covers.
3. Disconnect all heater wires from the contactor in the wiring enclosure. Disconnect the control wiring from thermal cutout.
4. Thread conduit into wiring enclosure to disconnect the heater terminal box.
5. With an assistant supporting the weight of the heat exchanger, remove the 3 heat exchanger mounting bolts. Carefully remove the heat exchanger out of the bottom of the cabinet.
6. Locate rating tag on the heat exchanger and verify that electrical ratings of the core to be installed match the electrical ratings on the heater nameplate.
7. To reinstall, slide the core through the bottom of the cabinet while an assistant lines up and installs the 3 heat exchanger mounting bolts.
8. Guide the heater lead wires back into the wiring enclosure.
9. Reconnect the heater lead wires to the contactor and the conduit.
10. Reattach the cabinet bottom and enclosure covers before mounting heater and energizing.

B. Replacing the Temperature High-Limit Cutouts:

1. Disconnect the heater electrical power supply and remove the heater enclosure cover.

2. Remove the wire barrier to expose the high limit cutout.
3. Disconnect the wires from the high limit cutout and mark their location.
4. Remove the two nuts used to attach the temperature high limit cutout.
5. Lift and remove the sheetmetal mounting plate.
6. Carefully lift and remove the temperature high limit cutout.
7. Use only factory supply parts for safe operation.
8. Lightly coat the new manual and automatic cutout bulbs with the supplied thermal transfer compound. This is critical for proper cutout operation.
9. Carefully slide the automatic cutout bulb into the **left** thermowell and the manual cutout bulb into the **right** thermowell.
10. Reinstall the sheetmetal plate. Note that the sheetmetal plate also acts as a stop to keep the cutout bulbs from backing out of the wells.
11. Carefully install the temperature high limit control to avoid putting kinks into the capillary.
12. Reattach the wires to the cutout and reinstall the wire barrier.
13. Ensure heater enclosure cover is in place before energizing heater.

C. Resetting the Manual Cutout:

All unit heaters contain a built-in manual reset thermal cutout with or without backup contactor.

1. Disconnect the heater electrical power supply and remove the heater enclosure cover.
2. Determine the reason for the manual reset thermal cutout actuating and rectify the situation. See section titled “maintenance”.
3. Reset the manual reset thermal cutout by pressing on the red stem in the center of the control.
4. Replace the heater enclosure cover securely.
5. Energize the heater electrical supply circuit.
6. The heater and fan should come on and in 5 to 15 minutes reach a stable operating temperature.
7. Check out and report any unusual or questionable operating characteristics, such as noise, vibration, loss of fluid, etc.
8. If heater operation appears normal, place the unit into normal operation.

D. Replacing the Fan Motor and Blade:

The fan motor is permanently lubricated and does not require any maintenance. If the fan motor is defective, a replacement must be obtained from the factory.

1. To replace the fan motor:
   a. Disconnect the heater electrical power supply.
   b. Disconnect the motor supply wires from the contactor in the wiring enclosure.
   c. Disassemble the conduit union located at the motor wiring hub.
   d. Remove top fan guard and motor mounting bolts.
   e. Lift motor out of heater assembly.
   f. Remove fan blade and conduit union from defective motor and install on new motor.
   g. Install new motor to heater using existing motor mounting hardware.
   h. Reinstall top fan guard and ensure that the fan blade rotates freely.
   i. Feed motor wires through conduit and into wiring enclosure.
   j. Reattach conduit union. Reconnect motor wires to contactor.
   k. Check fan rotation by momentarily energizing heater. Airflow should exit from front of heater cabinet. If rotation is incorrect, disconnect electrical power supply and reverse two of the motor lead wires at the contactor.
   l. Reattach wiring enclosure cover before placing heater back in service.

2. To replace the motor fan blade:
   a. Remove the top fan guard.
   b. Remove the four motor mounting bolts and disconnect the conduit union at the motor.
   c. Loosen the bolt that connects the fan blade to the motor shaft.
   d. Slide the motor back and tilt in order to remove the old blade & install a new one.
   e. Tighten the fan blade attachment bolt to the motor shaft.
   f. Reattach the motor conduit union and the four motor mounting bolts.
   g. Reinstall the top fan guard and ensure that the fan blade rotates freely.

REPLACEMENT PARTS

1. All replacements must be factory supplied to ensure safe heater operation.
2. Mark wires and refer to wiring diagram to ensure proper electrical connections.

Reference heater catalog number and item number in figures below when contacting factory for replacement parts. Contact factory for items not shown.

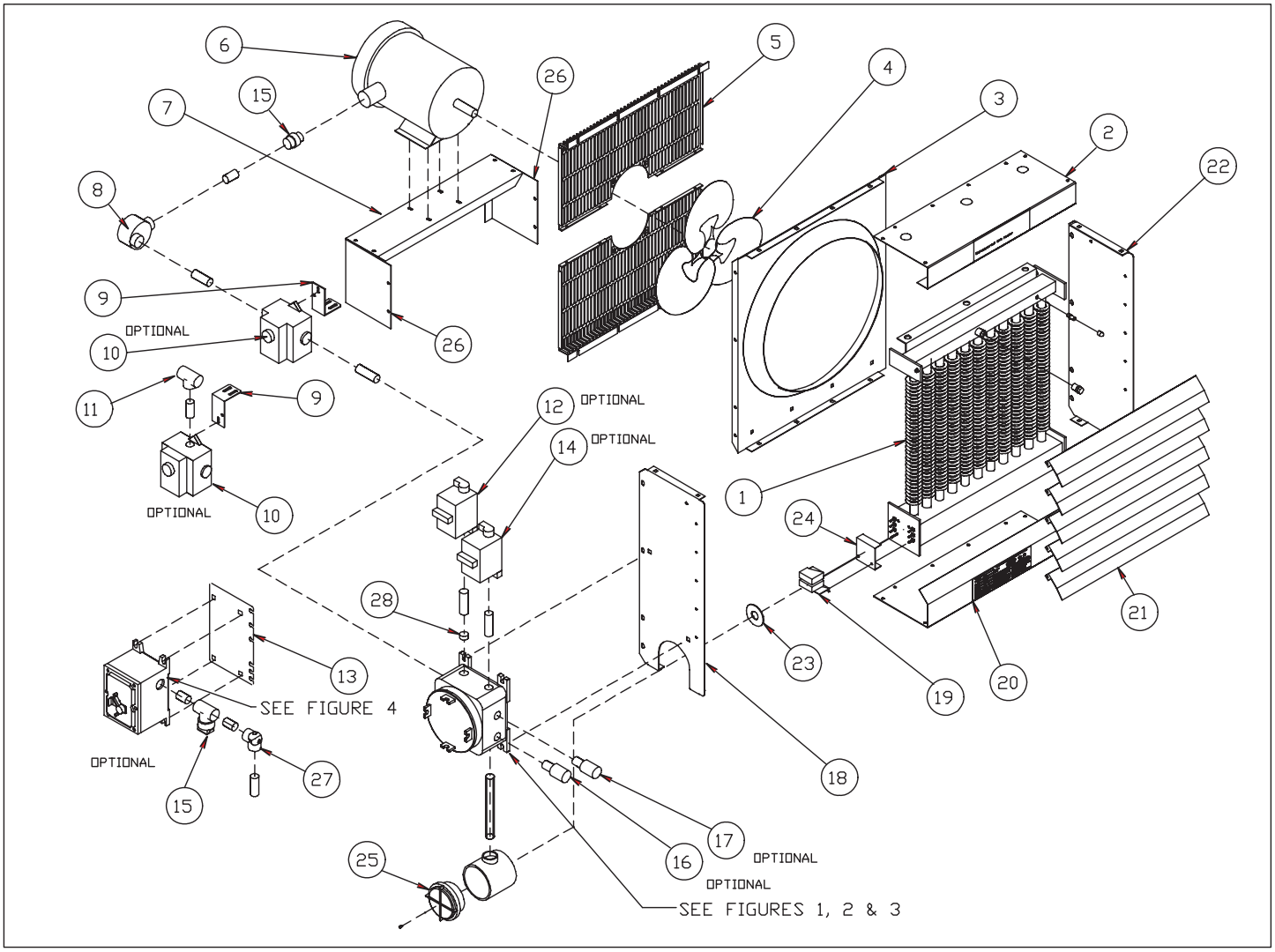

ITEM	DESCRIPTION
1	Heat Exchanger Core Assy.
2	Cabinet – Top
3	Fan Venturi
4	Fan Blade
5	Fan Guard
6	Fan Motor
7	Motor Support – Top
8	Motor Junction Box
9	Thermostat Support Bracket
10	Thermostat
11	Conduit Tee
12	Disconnect Switch – Small
13	Large Disconnect Support Bkt.
14	Fan Switch

ITEM	DESCRIPTION
15	Conduit Seal
16	Pilot Light – Bottom
17	Pilot Light – Top
18	Cabinet – Left Side
19	High Limit Cutout
20	Cabinet – Bottom
21	Cabinet - Louver
22	Cabinet – Right Side
23	High Limit Barrier
24	High Limit Mounting Bridge
25	Heater Enclosure Cover
26	Motor Support – Side
27	¾” Conduit Pull Elbow
28	Reducer Bushing

Select the Figure that corresponds to your heater.

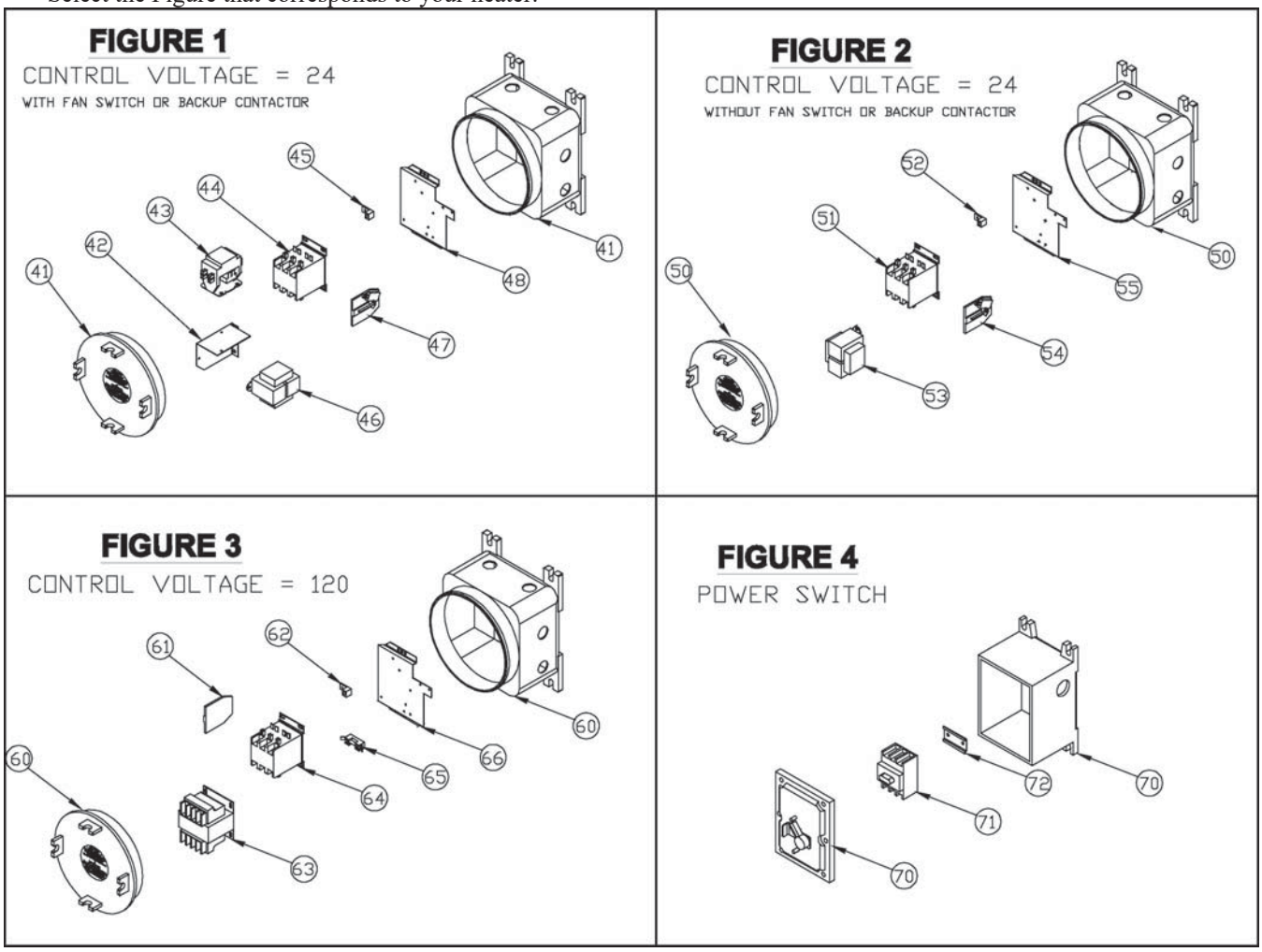

FIGURE 1:

ITEM	DESCRIPTION
41	Wiring Enclosure and Cover
42	Option Mounting Bridge
43	Option Contactor
44	Main Contactor
45	Ground Lug
46	Transformer
47	Auxiliary Contact
48	Main Mounting Bridge

FIGURE 2:

ITEM	DESCRIPTION
50	Wiring Enclosure and Cover
51	Main Contactor
52	Ground Lug
53	Transformer
54	Auxiliary Contact
55	Main Mounting Bridge

FIGURE 3:

ITEM	DESCRIPTION
60	Wiring Enclosure and Cover
61	Auxiliary Contact
62	Ground Lug
63	Transformer
64	Main Contactor
65	Transformer Fuse & Fuse Block
66	Main Mounting Bridge

FIGURE 4:

ITEM	DESCRIPTION
70	Switch Enclosure and Cover
71	Disconnect Switch
72	Disconnect Switch Track

Magelis
GTO HMI
User Manual

10/2014

EIO0000001133.03

www.schneider-electric.com

Schneider Electric

The information provided in this documentation contains general descriptions and/or technical characteristics of the performance of the products contained herein. This documentation is not intended as a substitute for and is not to be used for determining suitability or reliability of these products for specific user applications. It is the duty of any such user or integrator to perform the appropriate and complete risk analysis, evaluation and testing of the products with respect to the relevant specific application or use thereof. Neither Schneider Electric nor any of its affiliates or subsidiaries shall be responsible or liable for misuse of the information contained herein. If you have any suggestions for improvements or amendments or have found errors in this publication, please notify us.

No part of this document may be reproduced in any form or by any means, electronic or mechanical, including photocopying, without express written permission of Schneider Electric.

All pertinent state, regional, and local safety regulations must be observed when installing and using this product. For reasons of safety and to help ensure compliance with documented system data, only the manufacturer should perform repairs to components.

When devices are used for applications with technical safety requirements, the relevant instructions must be followed.

Failure to use Schneider Electric software or approved software with our hardware products may result in injury, harm, or improper operating results.

Failure to observe this information can result in injury or equipment damage.

© 2014 Schneider Electric. All rights reserved.

Table of Contents

Safety Information 5
About the Book 7
Chapter 1 Overview 9
HMIGTO Package Contents 10
Certifications and Standards 11
GTO Series of Panels 13
Chapter 2 Device Connectivity 15
System Design 16
Accessories 21
Chapter 3 Parts Identification and Functions 25
Parts Identification and Functions 25
Chapter 4 Specifications 35
4.1 HMIGTO1300/1310 36
Electrical Specifications 37
Environmental Specifications 38
Structural Specifications 39
Display Specifications 40
Memory, Clock, Touch Panel and Function Switches 41
Interface Specifications 42
Specifications of Serial Interface COM1 43
Specifications of Serial Interface COM2 45
Dimensions 46
4.2 HMIGTO2300/2310/2315 50
Electrical Specifications 51
Environmental Specifications 52
Structural Specifications 53
Display Specifications 55
Memory, Clock, and Touch Panel 56
Interface Specifications 57
Specifications of Serial Interface COM1 58
Specifications of Serial Interface COM2 60
Dimensions 61
4.3 HMIGTO3510/4310 68
Electrical Specifications 69
Environmental Specifications 70
Structural Specifications 71
Display Specifications 72
Memory, Clock, Touch Panel, and Function Switches 73
Interface Specifications 74
Specifications of Serial Interface COM1 75
Specifications of Serial Interface COM2 77
Dimensions 78
4.4 HMIGTO5310/5315 84
Electrical Specifications 85
Environmental Specifications 86
Structural Specifications 87
Display Specifications 89
Memory, Clock, and Touch Panel 90

Interface Specifications 91
Specifications of Serial Interface COM1 92
Specifications of Serial Interface COM2 94
Dimensions 95
4.5 HMIGTO6310/6315 101
Electrical Specifications 102
Environmental Specifications 103
Structural Specifications 104
Display Specifications 106
Memory, Clock, and Touch Panel 107
Interface Specifications 108
Specifications of Serial Interface COM1 109
Specifications of Serial Interface COM2 111
Dimensions 112
Chapter 5 Installation and Wiring 119
5.1 Installation 120
Installation Procedures 120
5.2 Wiring Principles 125
Connecting the Power Cord 126
Connecting the Power Supply 128
Grounding 130
5.3 SD Card Insertion/Removal 131
Introduction 132
Inserting the SD Card 133
Removing the SD Card 134
SD Card Data Backup 135
5.4 USB Cable Clamp 136
USB Cable Clamp for USB (Type A) 137
USB Holder for USB (mini-B) 139
Chapter 6 Maintenance 141
Regular Cleaning 142
Replacing the Installation Gasket 143
Periodic Check Points 145
Replacing the Primary Battery 146
Index 149

Safety Information

Important Information

NOTICE

Read these instructions carefully, and look at the equipment to become familiar with the device before trying to install, operate, or maintain it. The following special messages may appear throughout this documentation or on the equipment to warn of potential hazards or to call attention to information that clarifies or simplifies a procedure.



The addition of this symbol to a “Danger” or “Warning” safety label indicates that an electrical hazard exists which will result in personal injury if the instructions are not followed.



This is the safety alert symbol. It is used to alert you to potential personal injury hazards. Obey all safety messages that follow this symbol to avoid possible injury or death.

⚠ DANGER

DANGER indicates a hazardous situation which, if not avoided, **will result in** death or serious injury.

⚠ WARNING

WARNING indicates a hazardous situation which, if not avoided, **could result in** death or serious injury.

⚠ CAUTION

CAUTION indicates a hazardous situation which, if not avoided, **could result** in minor or moderate injury.

NOTICE

NOTICE is used to address practices not related to physical injury.

PLEASE NOTE

Electrical equipment should be installed, operated, serviced, and maintained only by qualified personnel. No responsibility is assumed by Schneider Electric for any consequences arising out of the use of this material.

A qualified person is one who has skills and knowledge related to the construction and operation of electrical equipment and its installation, and has received safety training to recognize and avoid the hazards involved.

About the Book

At a Glance

Document Scope

This manual describes how to use the HMIGTO panels.

Validity Note

This documentation is valid for Vijeo Designer 6.2 or higher.

The technical characteristics of the devices described in this document also appear online. To access this information online:

Step	Action
1	Go to the Schneider Electric home page *www.schneider-electric.com*.
2	In the **Search** box type the reference of a product or the name of a product range. ● Do not include blank spaces in the model number/product range. ● To get information on grouping similar modules, use asterisks (*).
3	If you entered a reference, go to the **Product Datasheets** search results and click on the reference that interests you. If you entered the name of a product range, go to the **Product Ranges** search results and click on the product range that interests you.
4	If more than one reference appears in the **Products** search results, click on the reference that interests you.
5	Depending on the size of your screen, you may need to scroll down to see the data sheet.
6	To save or print a data sheet as a .pdf file, click **Download XXX product datasheet**.

The characteristics that are presented in this manual should be the same as those characteristics that appear online. In line with our policy of constant improvement, we may revise content over time to improve clarity and accuracy. If you see a difference between the manual and online information, use the online information as your reference.

Product Related Information

⚠ WARNING

UNINTENDED EQUIPMENT OPERATION

The application of this product requires expertise in the design and programming of control systems. Only persons with such expertise should be allowed to program, install, alter, and apply this product.

Follow all local and national safety standards.

Failure to follow these instructions can result in death, serious injury, or equipment damage.

Chapter 1
Overview

Overview

This chapter describes the panels and general topics such as package contents and standards.

What Is in This Chapter?

This chapter contains the following topics:

Topic	Page
HMIGTO Package Contents	10
Certifications and Standards	11
GTO Series of Panels	13

HMIGTO Package Contents

Overview

Verify all items listed here are present in your package:

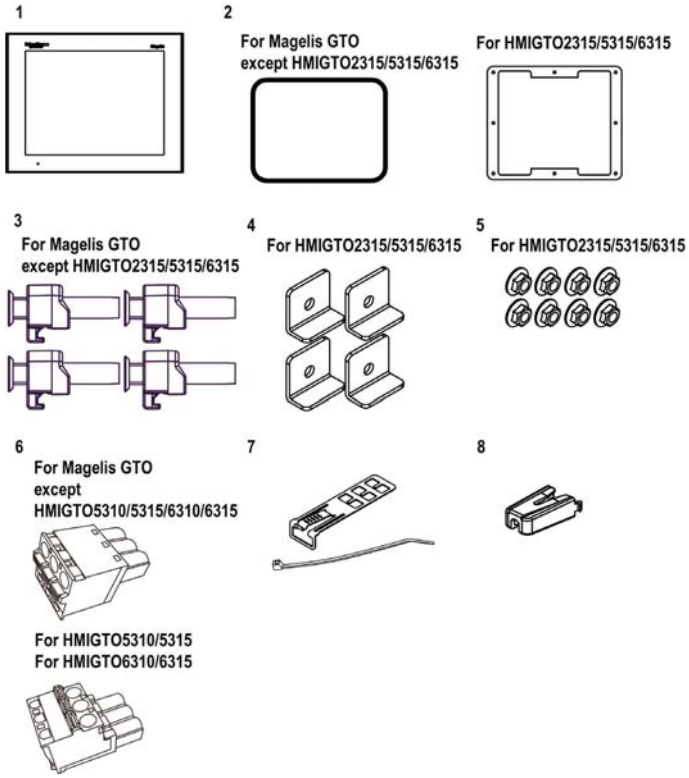

1 HMIGTO: 1
2 Installation gasket: 1 (attached to the panel)
3 Installation fasteners: 4 per set
4 Brackets: 4
5 M4 Hex Nuts: 8
6 DC power connector: 1[*1]
7 USB cable clamp Type A: 1 set (1 clip and 1 tie)
8 USB cable clamp mini-B: 1 (1 USB holder)
9 HMIGTO Quick Reference Guide: 1

This product has been carefully packed with special attention to quality. However, should you find anything damaged or missing, please contact your local distributor.

[*1] You can use the DC power connector for HMIGTO1300/1310/2300/2310/2315/3510/4310 to supply power to HMIGTO5310/5315/6310/6315. However the reverse is not possible. You cannot use the power connector for HMIGTO5310/5315/6310/6315 on HMIGTO1300/1310/2300/2310/2315/3510/4310.

Revision

You can identify the product version (PV), revision level (RL) and the software version (SV) from the unit product label.

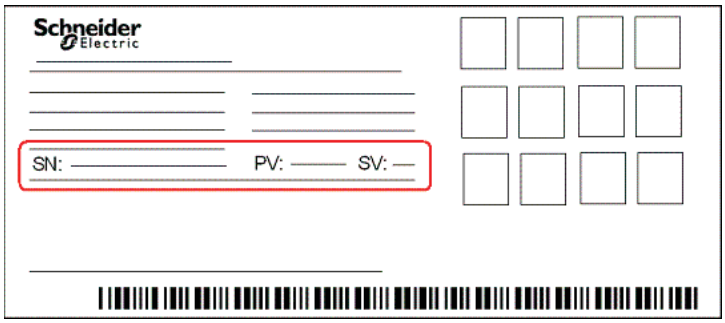

Certifications and Standards

Introduction

Schneider Electric submitted this product for independent testing and qualification by third-party listing agencies. These agencies have certified this product as meeting the following standards.

Agency Certifications

The HMIGTO is manufactured in accordance with:

- Standard UL 508 and CSA C22.2 n°142 for Industrial Control Equipment
- Standard ANSI/ISA - 12.12.01 and CSA C22.2 n°213 for Electrical Equipment for Use in Class I, Division 2 Hazardous Locations
  NOTE:
- For use in Pollution Degree 2 environments.
- For use on a flat surface of a Type 1, Type 4X (Indoor Use Only) or Type 13 Enclosure.
- 24 Vdc input panel must be used with a Class 2 power supply.
- Suitable for use in Class I, Division 2 Groups A, B, C, and D Hazardous Locations.

- GOST certification.
  Please refer to product markings.
- ATEX certification by Technical Inspection Association.
  Please refer to product label.
- Merchant Navy rules. (Except Magelis GTOxxx5.)
  Products are designed to comply with Merchant Navy rules.
  Please refer to the Schneider Electric Web site for Merchant Navy rules installation guidelines.
- Standard EN1672-2 (Magelis GTOxxx5).
- FDA regulation 21 CFR 177 (Magelis GTOxxx5).

Refer to the Schneider Electric web site for installation guidelines.

For detailed information, contact your local distributor or see the catalog & marking on the product.

Hazardous Substances

The HMIGTO is a device for use in factory systems. When using the HMIGTO in a system, the system should comply with the following standards in regards to the installation environment and handling:

- WEEE, Directive 2002/96/EC
- RoHS, Directive 2011/65/EU
- RoHS China, Standard SJ/T 11363-2006

CE Markings

This product conforms to the necessary requirements of the following Directives for applying the CE label:

- 2006/95/EC Low Voltage Directive
- 2004/108/EC EMC Directive

This conformity is based on compliance with EN61000-6-4, EN61000-6-2

⚠ DANGER

POTENTIAL FOR EXPLOSION

- Verify that the power, input and output (I/O) wiring are in accordance with Class I, Division 2 wiring methods.
- Substitution of any component may impair suitability for Class I, Division 2.
- Do not connect or disconnect equipment unless power has been switched off or the area is known to be non-hazardous.
- Securely lock externally connected units and each interface before turning on the power supply.
- Do not use, connect, or disconnect USB cable unless area is known to be non-hazardous.
- Do not disconnect while circuit is live or unless the area is known to be free of ignitable concentrations.
- Potential electrostatic charging hazard. Wipe the front panel of the terminal with a damp cloth before turning ON.

Failure to follow these instructions will result in death or serious injury.

KC Markings

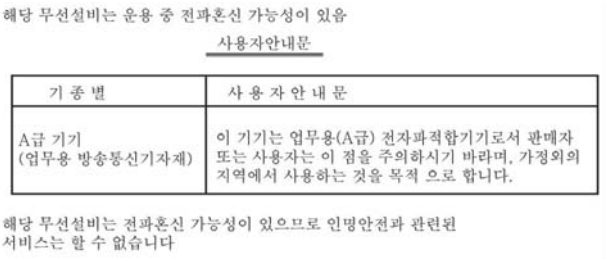

해당 무선설비는 운용 중 전파혼신 가능성이 있음

사용자안내문

기 종 별	사 용 자 안 내 문
A급 기기 (업무용 방송통신기자재)	이 기기는 업무용(A급) 전자파적합기기로서 판매자 또는 사용자는 이 점을 주의하시기 바라며, 가정외의 지역에서 사용하는 것을 목적 으로 합니다.

해당 무선설비는 전파혼신 가능성이 있으므로 인명안전과 관련된 서비스는 할 수 없습니다

GTO Series of Panels

Critical systems, alarms and handling Requirements

Critical alarm indicators and system functions require independent and redundant protection hardware and/or mechanical interlocks.

When you cycle power, wait at least 10 seconds before restoring the power to the panel after it has been turned off. Switching the power OFF and ON quickly can damage the panel.

In the event the screen cannot be properly read, for example, if the backlight is not functioning, it may be difficult or impossible to identify a function. Functions that may present a hazard if not immediately executed, such as a fuel shut-off, must be provided independently of the panel. The machine's control system design must take into account the possibility of the backlight no longer functioning and the operator being unable to control the machine or making mistakes in the control of the machine.

⚠ WARNING

LOSS OF CONTROL

- The designer of any control scheme must consider the potential failure modes of control paths and, for certain critical control functions, provide a means to achieve a safe state during and after a path failure. Examples of critical control functions are emergency stop and overtravel stop, power outage and restart.
- Separate or redundant control paths must be provided for critical control functions.
- System control paths may include communication links. Consideration must be given to the implications of unanticipated transmission delays or failures of the link.
- Observe all accident prevention regulations and local safety guidelines.
- Each implementation of this equipment must be individually and thoroughly tested for proper operation before being placed into service.
- The machine control system design must take into account the possibility of the backlight no longer functioning and the operator being unable to control the machine, or making errors in the control of the machine.

Failure to follow these instructions can result in death, serious injury, or equipment damage.

For additional information, refer to NEMA ICS 1.1 (latest edition), "Safety Guidelines for the Application, Installation, and Maintenance of Solid State Control" and to NEMA ICS 7.1 (latest edition), "Safety Standards for Construction and Guide for Selection, Installation and Operation of Adjustable-Speed Drive Systems" or their equivalent governing your particular location.

⚠ WARNING

UNINTENDED EQUIPMENT OPERATION

- Do not use this equipment as the only means of control for critical system functions such as motor start/stop or power control.
- Do not use this equipment as the only notification device for critical alarms, such as device overheating or overcurrent.

Failure to follow these instructions can result in death, serious injury, or equipment damage.

Handling the LCD panel

The following characteristics are specific to the LCD panel and are considered normal behavior:

- LCD screen may show unevenness in the brightness of certain images or may appear different when seen from outside the specified viewing angle. Extended shadows, or crosstalk may also appear on the sides of screen images.
- LCD screen pixels may contain black and white colored spots and color display may seem to have changed.
- When the same image is displayed on the screen for a long period, an afterimage may appear when the image is changed.

NOTE: Change the screen image periodically and try not to display the same image for a long period of time.

⚠ CAUTION

SERIOUS EYE AND SKIN INJURY

The liquid in the LCD panel contains an irritant:
- Avoid direct skin contact with the liquid.
- Wear gloves when you handle a broken or leaking unit.
- Do not use sharp objects or tools in the vicinity of the LCD touch panel.
- Handle the LCD panel carefully to prevent puncture, bursting, or cracking of the panel material.

Failure to follow these instructions can result in injury or equipment damage.

If the panel is damaged and any liquid comes in contact with your skin, immediately rinse the area with running water for at least 15 minutes. If the liquid gets in your eyes, immediately rinse your eyes with running water for at least 15 minutes and consult a doctor.

Chapter 2
Device Connectivity

Introduction

This chapter presents the equipment you can connect to the panel.

What Is in This Chapter?

This chapter contains the following topics:

Topic	Page
System Design	16
Accessories	21

System Design

Introduction

The following diagrams represent equipment you can connect to the panel.

	COM1	COM2
HMIGTO1300	RS-232C *(see page 16)*	RS-485 *(see page 19)*
HMIGTO1310	RS-232C / RS-485 *(see page 18)*	–
HMIGTO2300	RS-232C *(see page 16)*	RS-485 *(see page 19)*
HMIGTO2310	RS-232C *(see page 16)*	RS-485 *(see page 19)*
HMIGTO2315	RS-232C *(see page 16)*	RS-485 *(see page 19)*
HMIGTO3510	RS-232C *(see page 16)*	RS-485 *(see page 19)*
HMIGTO4310	RS-232C *(see page 16)*	RS-485 *(see page 19)*
HMIGTO5310	RS-232C *(see page 16)*	RS-485 *(see page 19)*
HMIGTO5315	RS-232C *(see page 16)*	RS-485 *(see page 19)*
HMIGTO6310	RS-232C *(see page 16)*	RS-485 *(see page 19)*
HMIGTO6315	RS-232C *(see page 16)*	RS-485 *(see page 19)*

RUN Mode Peripherals - RS-232C

⚠ CAUTION

LOSS OF POWER

- Make sure all connections to the communication ports on the bottom and sides of the panel do not put excessive stress on the ports.
- Securely attach communication cables to the panel or cabinet.
- Use only D-Sub 9 pin cables with a locking system in good condition.

Failure to follow these instructions can result in injury or equipment damage.

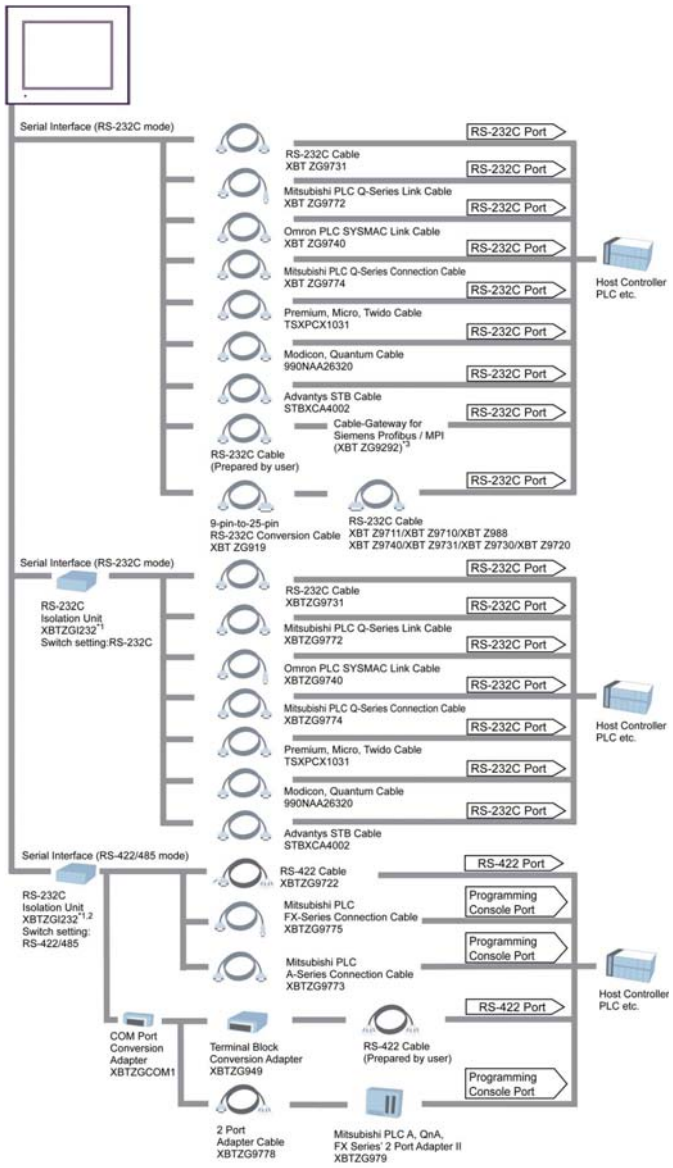

*1 When connecting the XBTZGI232, the COM port's pin 9 setting should be VCC. You can define COM port settings in Vijeo Designer or in the HMIGTO's offline menu.

*2 The RS-232C Isolation Unit works with only RS-422/485 (4 wire) communication.

*3 Cable-Gateway for Siemens Profibus / MPI (XBT ZG9292) is not supported by HMIGTO1310.

RUN Mode Peripherals - RS-232C / RS-485

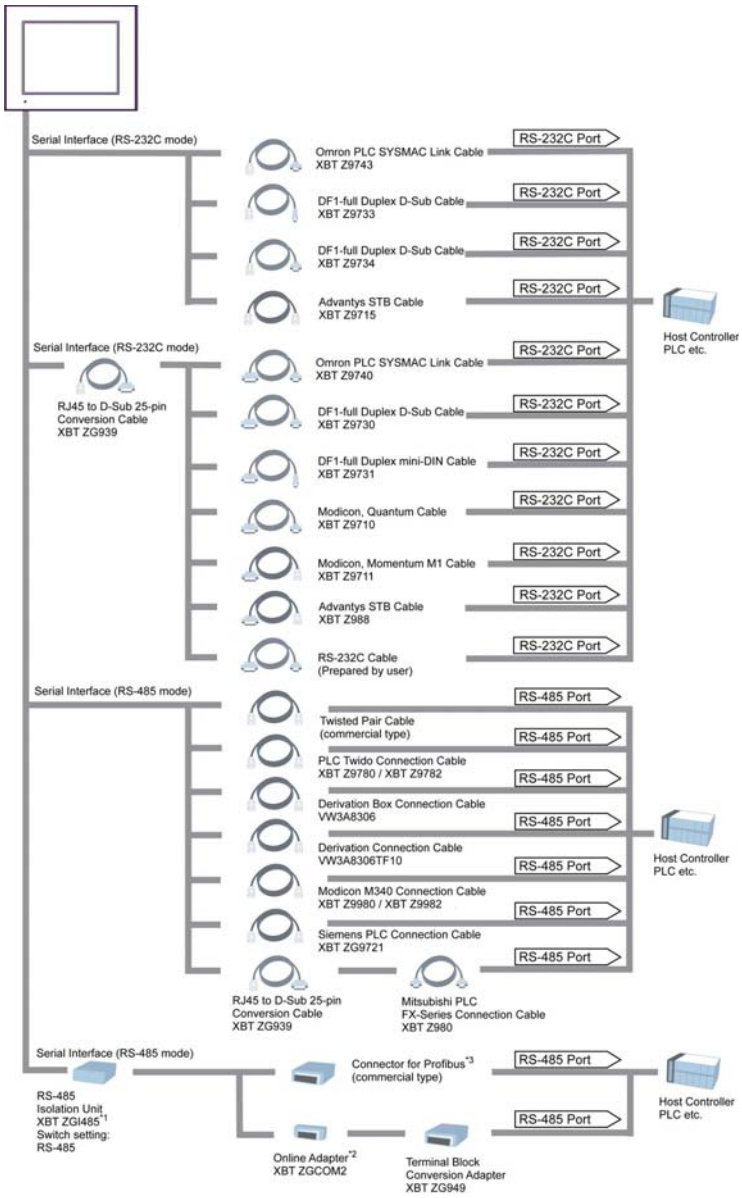

*1 Use the RS-485 Isolation Unit's USB port to supply power to itself. There is no need to set up a separate power supply.

*2 In 1:n, n:1, or n:m communication, you can use the online adapter as a terminal. (Use 1 unit in either communication setup.)

*3 The connector has a switch to control the terminal. Turn on the switch to enable communication.

RUN Mode Peripherals - RS-485

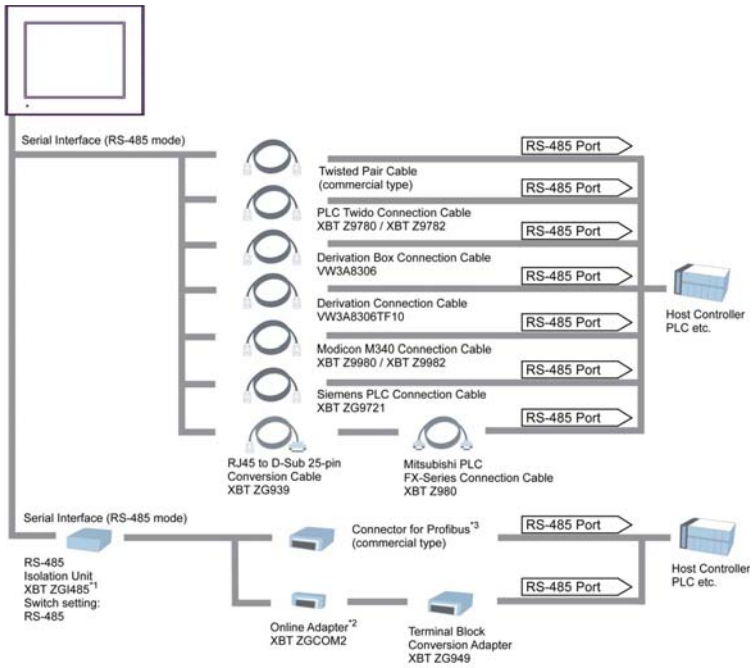

*1 Use the RS-485 Isolation Unit's USB port to supply power to itself. There is no need to set up a separate power supply.

*2 In 1:n, n:1, or n:m communication, you can use the online adapter as a terminal. (Use 1 unit in either communication setup.)

*3 The connector has a switch to control the terminal. Turn on the switch to enable communication.

RUN Mode Peripherals - Ethernet Communication

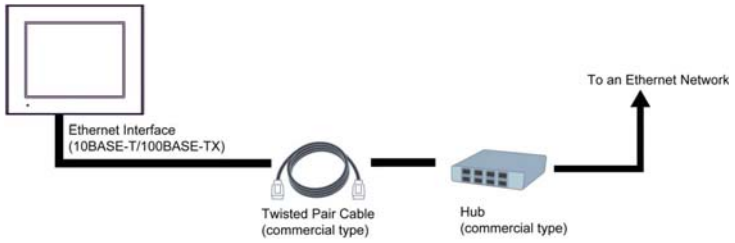

RUN Mode Peripherals - USB Type A / mini-B Interface

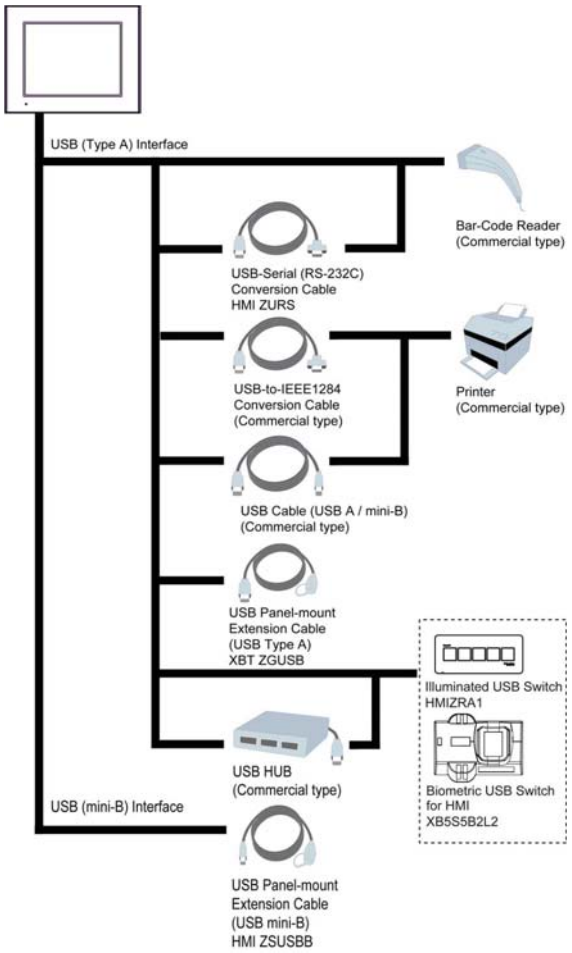

Edit Mode Peripherals

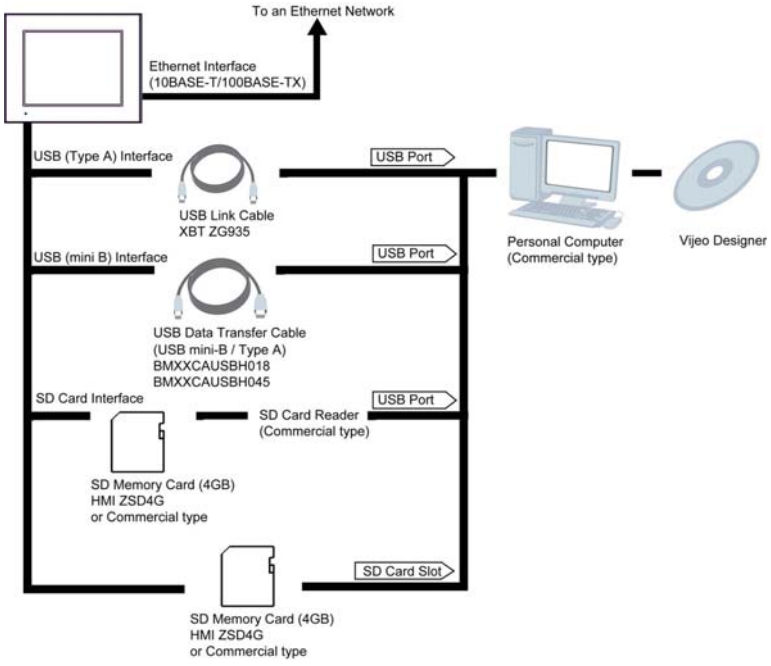

Accessories

Serial Interface Items

Product Name	Product Number	Description
RS-232C Cable	XBT ZG9731	Connects a host controller to the panel. (RS-232C)
RS-422 Cable	XBT ZG9722	Connects a host controller to the panel. (RS-422)
Mitsubishi PLC Q-Series Link Cable	XBT ZG9772	Connects Mitsubishi PLC Q-Series (or other host controller) to the panel. (RS-232C)
Omron PLC SYSMAC Link Cable	XBT ZG9740 XBT Z9743 XBT Z9740	Connects Omron PLC SYSMAC Series unit (or other host controller) to the panel. (RS-232C)
Mitsubishi PLC A-Series Connection Cable	XBT ZG9773	Connects Mitsubishi PLC A or QnA Series programming console I/F to panel. (Simultaneous use of programming consoles is not possible.)
Mitsubishi PLC Q-Series Connection Cable	XBT ZG9774	Connects Mitsubishi PLC Q-Series programming console I/F to panel. (Simultaneous use of programming consoles is not possible.)
Mitsubishi PLC FX-Series Connection Cable	XBT ZG9775 XBT Z980	Connects Mitsubishi PLC FX-Series programming console I/F and panel. (Simultaneous use of programming consoles is not possible.)
Premium, Micro, Twido Cable	TSXPCX1031	Connects Premium, Micro, or Twido to the panel.
Modicon, Quantum Cable	990NAA26320 XBT Z9710	Connects Modicon or Quantum to the panel.
2 Port Adapter Cable	XBT ZG9778	Connects Mitsubishi PLC directly to the panel (D-sub 9 pin plug) using 2 port adapter II (RS-422).
Mitsubishi PLC A, QnA, FX Series 2 Port Adapter II	XBT ZG979	Enables simultaneous use of a panel and a Mitsubishi PLC A, QnA, or FX Series peripheral device.
Advantys STB Cable	STBXCA4002 XBT Z9715 XBT Z988	Connects Advantys STB to panel.
Terminal Block Conversion Adapter	XBT ZG949	Connects output from a panel's Serial Interface (D-sub 9 pin plug) directly with an RS-422 terminal block.
COM Port Conversion Adapter	XBT ZGCOM1	Connects optional RS-422 communication items to panel's COM1 port.
DF1-full Duplex D-Sub Cable	XBT Z9730 XBT Z9733 XBT Z9734	Connects DF1-full Duplex to HMIGTO.
DF1-full Duplex mini-DIN Cable	XBT Z9731 XBT Z9720	Connects DF1-full Duplex to HMIGTO.
Modicon, Momentum M1 Cable	XBT Z9711	Connects Modicon, Momentum M1 to HMIGTO.
PLC Twido Connection Cable	XBT Z9780 / XBT Z9782	Connects PLC Twido to HMIGTO.
Derivation Box Connection Cable	VW3A8306	Connects Derivation Box to HMIGTO.
Derivation Connection Cable	VW3A8306TF10	Connects Derivation to HMIGTO.
Modicon M340 Connection Cable	XBT Z9980 / XBT Z9982	Connects Modicon M340 to HMIGTO.
Siemens PLC Connection Cable	XBT ZG9721	Connects Siemens PLC to HMIGTO.
RS-232C Isolation Unit	XBT ZGI232	Connects a host controller to HMIGTO with isolation. (RS-232C and RS-422 are switchable.)
RS-485 Isolation Unit	XBT ZGI485	Connects a host controller to HMIGTO with isolation.
Cable-gateway for Siemens Profibus / MPI	XBT ZG9292	Connects Siemens Profibus / MPI units to HMIGTO.
RJ45 to D-Sub 25 pin Conversion Cable	XBT ZG939	Connects a RJ45 cable to HMIGTO (D-sub 9 pin plug).
9-pin to 25-pin RS-232C Conversion Cable	XBT ZG919	Connects a standard RS-232C cable (D-Sub 25-pin socket) to HMIGTO (D-sub 9 pin plug).
Online Adapter	XBT ZGCOM2	Terminal adapter for RS-485 communication.

USB Interface Items

Product Name	Product Number	Description
USB Transfer Cable	XBT ZG935	Downloads project data created with the software via the panel's USB I/F.
USB Front Cable	XBT ZGUSB	Extension cable attaching USB interface to front panel.
USB-Serial (RS-232C) Conversion Cable	HMIZURS	Cable for converting a panel's USB interface into a serial interface (RS-232C). Allows connection to modems*1 or bar code readers*1 that support RS-232C.
USB Transfer Cable (USB Type A/mini-B)	BMXXCAUSBH018 BMXXCAUSBH045	Cable for transferring screen data from a PC (USB Type A) to the panel (USB mini-B).
Remote USB port location for mini-USB	HMIZSUSBB XBT ZGUSBB	Extension cable that attaches to the USB (mini-B) interface on the front side of the operation panel.
Illuminated USB Switch	HMIZRA1	A unit of 5 illuminated switches with multiple color LED easily connected with HMIGTO via USB.
Biometric USB Switch for HMI	XB5S5B2L2	Fingerprint recognition unit easily connected with HMIGTO via USB.

Software

Product name	Description
Vijeo Designer (Version 6.1 or later)	Software you install on your computer to create project data for your HMIGTO.

SD Card Items

Product Name	Product Number	Description
SD Memory Card (4 GB)	HMIZSD4G	SD Memory Card (4 GB, CLASS4)

Option Items

Product Name	Product Number	Corresponding panel	Description
12.1-inch Screen Protection Sheet	XBT ZG66	HMIGTO6310/6315	Disposable, dirt-resistant sheet for the HMIGTO screen (5 sheets/set)
10.4-inch Screen Protection Sheet	XBT ZG65	HMIGTO5310/5315	
7.5-inch Screen Protection Sheet	XBT ZG64	HMIGTO4310	
7.0-inch Wide Screen Protection Sheet	XBT ZG63	HMIGTO3510	
5.7-inch Screen Protection Sheet	XBT ZG62	HMIGTO2300/2310/2315	
3.5-inch Screen Protection Sheet	XBT ZG60	HMIGTO1300/1310	
12.1-inch Environment Cover	XBT ZECOV6	HMIGTO6310	Disposable, environment cover for the HMIGTO screen (1 sheet/set)
10.4-inch Environment Cover	XBT ZECOV5	HMIGTO5310	
7.0/7.5-inch Environment Cover	XBT ZECOV4	HMIGTO3510/4310	
5.7-inch Environment Cover	XBT ZECOV2	HMIGTO2300/2310	
3.5-inch Environment Cover	XBT ZECOV1	HMIGTO1300/1310	

Maintenance Options

Product Name	Product Number	Corresponding panel	Description
Installation Fastener	HMI ZGFIX	HMIGTO except HMIGTO2315/5315/6315	Used to install the HMIGTO into a solid panel (4 pieces/set)
Installation System	HMI ZGFIX2	HMIGTO2315/5315/6315	Used to install the HMIGTO into a solid panel. Brackets (4 pieces/set) M4 Hex nuts (8 pieces/set)
12.1-inch Installation Gasket	HMI ZG56	HMIGTO6310	Provides dust and moisture resistance when HMIGTO is installed into a solid panel (1 piece)
	HMI ZG562	HMIGTO6315	
10.4-inch Installation Gasket	HMI ZG55	HMIGTO5310	
	HMI ZG552	HMIGTO5315	
7.0-inch Wide & 7.5-inch Installation Gasket	HMI ZG54	HMIGTO3510/4310	
5.7-inch Installation Gasket	HMI ZG52	HMIGTO2300/2310	
	HMI ZG522	HMIGTO2315	
3.5-inch Installation Gasket	HMI ZG51	HMIGTO1300/1310	
USB Clamp TypeA (1 port)	HMI ZGCLP1	Magelis GTO	Clamp to prevent disconnection of USB cable (USB/A, 1 port, 5 clamps/set)
USB Clamp mini-B (1 port)	HMI ZGCLP3	Magelis GTO	Clamp to prevent disconnection of USB cable (USB/mini-B, 1 port, 5 clamps/set)
DC Power Supply Connector	HMI ZGPWS	HMIGTO3510/4310 HMIGTO2300/2310/2315 HMIGTO1300/1310	Connector to connect DC power supply cables (5 pcs/set)
DC Power Supply Connector (Right-angle)	HMI ZGPWS2	HMIGTO6310/6315 HMIGTO5310/5315	Right-angle connector to connect DC power supply cables (5 pcs/set)
Battery for Memory Backup	HMI ZGBAT	HMIGTO (except HMIGTO1300/1310/2300)	Primary battery for memory and time data backup
Panel Cutout Adapter	XBT ZGGCO4	HMIGTO5310	Panel cutout adapter for mounting HMIGTO5310 in cutout for XBT GT5230.
Insert Label	HMI ZLYGO3	HMIGTO3510	Label insert for HMIGTO 7-inch Wide models.
	HMI ZLYGO1	HMIGTO1300/1310	Label insert for HMIGTO 3.5-inch models

Chapter 3
Parts Identification and Functions

Parts Identification and Functions

HMIGTO1300/1310 Parts Identification

Side	HMIGTO1300/1310
Front	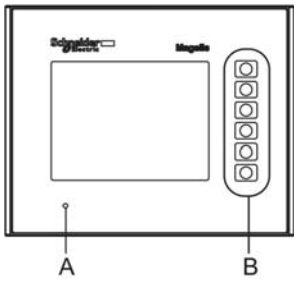
Rear	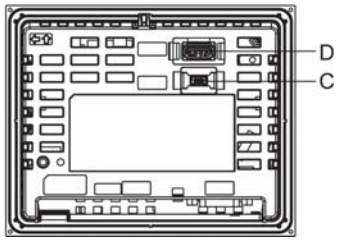
Bottom	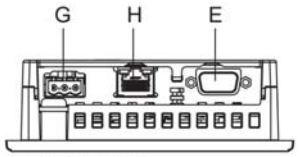 HMIGTO1300 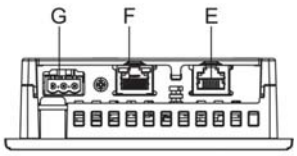 HMIGTO1310

Part	Name	Description
A	Status LED	*1
B	Function Switches	Six switches (F1 to F6). You can define operations for these switches using Vijeo Designer.
C	USB (mini-B) Interface	Conforms to USB2.0 (mini-B) x 1. Communication Distance: 5 m (16.4 ft) or less.
D	USB (Type A) Interface	Conforms to USB2.0 (Type A) x 1. Power supply voltage: 5Vdc+/-5%. Output Current: 500 mA or less. Maximum communication distance: 5 m (16.4 ft).
E	Serial Interface (COM1)	HMIGTO1300: RS-232C Serial Interface. Connector: D-Sub 9 pin (plug) x 1. HMIGTO1310: RS-232C/485 Serial Interface. (You can switch the communication method via software.) Connector: Modular jack (RJ-45).

Part	Name	Description
F	Ethernet Interface*2	Ethernet transmission interface (10BASE-T/100BASE-TX) Connector: Modular jack (RJ-45) x 1. Ethernet Interface is not attached to HMIGTO1300.
G	Power Plug Connector	-
H	Serial Interface (COM2)	HMIGTO1300: RS-485 Serial Interface. Connector: Modular jack (RJ-45) x 1.

*1 Status LED operations are as shown below:

Color	Indicator	Description
Green	ON	Offline
		In operation
Orange	Flashing	Software starting up.
Red	ON	Power is turned ON.
-	OFF	Power is turned OFF.

*2 Ethernet LED operations are as shown below.

	Color	Indicator	Description
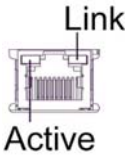	Green (Active)	Flashing	Data transmission is occurring.
		OFF	No data transmission.
	Green (Link)	ON	Data transmission is available in 10BASE-T/100BASE-TX.
		OFF	No connection or subsequent transmission failure.

HMIGTO2300/2310/2315 Parts Identification

Side	HMIGTO2300/HMIGTO2310	HMIGTO2315
Front	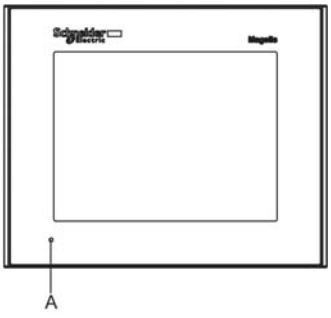	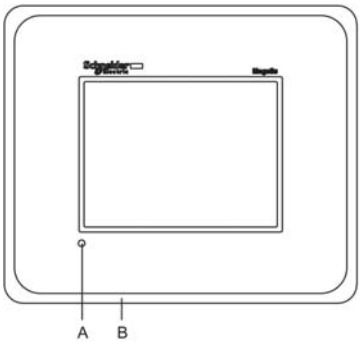
Right	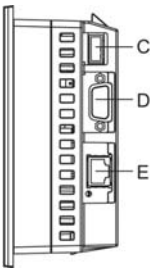	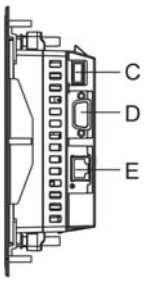

Side	HMIGTO2300/HMIGTO2310	HMIGTO2315
Rear	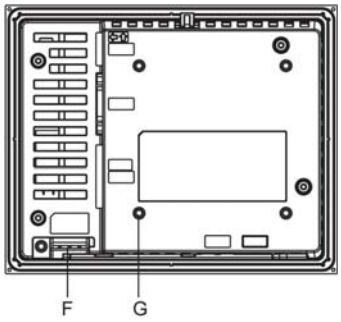	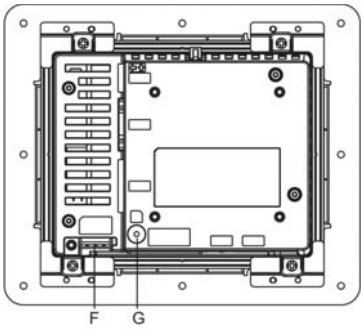
Bottom	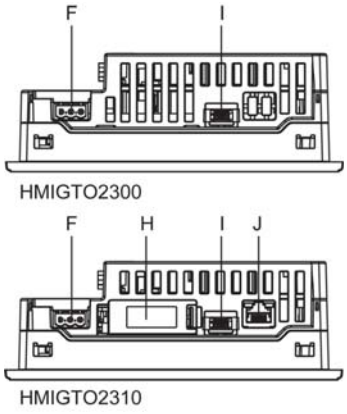	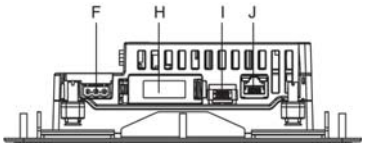

Part	Name	Description
A	Status LED	*1
B	Stainless Steel Bezel	HMIGTO2315 only.
C	USB (Type A) Interface	Conforms to USB2.0 (Type A) x 1. Power supply voltage: 5Vdc+/-5%. Output Current: 500 mA or less. Maximum communication distance: 5 m (16.4 ft).
D	Serial Interface (COM1)	RS-232C Serial Interface. Connector: D-Sub 9 pin (plug) x 1.
E	Serial Interface (COM2)*2	RS-485 Serial Interface. Connector: Modular jack (RJ-45).
F	Power Plug Connector	-
G	SD Card Access LED *3	This lamp lights up when SD Card is inserted. For more information, refer to SD Card Insertion/Removal *(see page 131)*. **NOTE:** SD Card Access LED is not available on HMIGTO2300.
H	SD Card Interface Cover/Replacement Battery Insertion Cover	For information on how to open the cover, and insert or remove the SD Card, refer to SD Card Insertion / Removal *(see page 131)*. For information on how to open the cover and replace the battery, refer to Replacing the Primary Battery *(see page 146)*. **NOTE:** This cover is not on HMIGTO2300.
I	USB (mini-B) Interface	Conforms to USB2.0 (mini-B) x 1. Communication Distance: 5 m (16.4 ft) or less.
J	Ethernet Interface *4	Ethernet transmission interface (10BASE-T/100BASE-TX) Connector: Modular jack (RJ-45) x 1. **NOTE:** Ethernet Interface is not available on HMIGTO2300.

*1 Status LED operations are as shown below:

Color	Indicator	Description
Green	ON	Offline
		In operation
Orange	Flashing	Software starting up.
Red	ON	Power is turned ON.
-	OFF	Power is turned OFF.

*2 COM2 LED operations are as shown below.

Color	Indicator	Description
Yellow	ON	Communication (sending or receiving data) is occurring.
	OFF	No communication.

*3 SD Card Access LED operations are as shown below.

Color	Indicator	Description
Green (Active)	ON	The SD Card is inserted.
	OFF	The SD Card is not inserted or is not being accessed.

*4 Ethernet LED operations are as shown below.

	Color	Indicator	Description
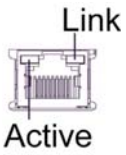	Green (Active)	Flashing	Data transmission is occurring.
		OFF	No data transmission.
	Green (Link)	ON	Data transmission is available in 10BASE-T/100BASE-TX.
		OFF	No connection or subsequent transmission failure.

HMIGTO3510/4310 Parts Identification

Side	HMIGTO3510/4310
Front	HMIGTO3510 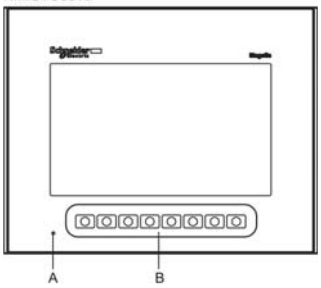 HMIGTO4310 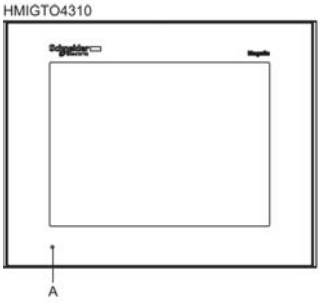
Right	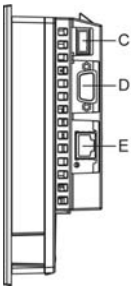
Rear	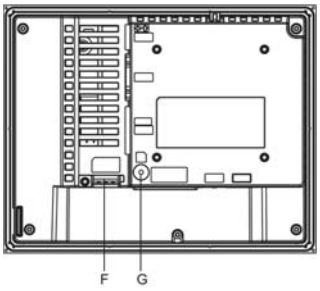
Bottom	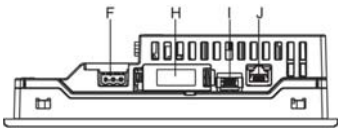

Part	Name	Description
A	Status LED	*1
B	Function Switches	HMIGTO3510 only. Eight switches (F1 to F8). You can define operations for these switches using Vijeo Designer.
C	USB (Type A) Interface	Conforms to USB2.0 (Type A) x 1. Power supply voltage: 5 Vdc+/-5%. Output Current: 500 mA or less. Maximum communication distance: 5 m (16.4 ft).
D	Serial Interface (COM1)	RS-232C Serial Interface. Connector: D-Sub 9 pin (plug) x 1.
E	Serial Interface (COM2)*2	RS-485 Serial Interface. Connector: Modular jack (RJ-45) x 1.
F	Power Plug Connector	-
G	SD Card Access LED *3	This lamp lights up when SD Card is inserted. For more information, refer to SD Card Insertion / Removal *(see page 131)*.
H	SD Card Interface Cover/Replacement Battery Insertion Cover	For information on how to open the cover, and insert or remove the SD Card, refer to SD Card Insertion / Removal *(see page 131)*. For information on how to open the cover and replace the battery, refer to Replacing the Primary Battery *(see page 146)*.
I	USB (mini-B) Interface	Conforms to USB2.0 (mini-B) x 1. Communication Distance: 5 m (16.4 ft) or less.
J	Ethernet Interface *4	Ethernet transmission interface (10BASE-T/100BASE-TX) Connector: Modular jack (RJ-45) x 1.

*1 Status LED operations are as shown below:

Color	Indicator	Description
Green	ON	Offline
		In operation
Orange	Flashing	Software starting up.
Red	ON	Power is turned ON.
-	OFF	Power is turned OFF.

*2 COM2 LED operations are as shown below.

Color	Indicator	Description
Yellow	ON	Communication (sending or receiving data) is occurring.
	OFF	No communication.

*3 SD Card Access LED operations are as shown below.

Color	Indicator	Description
Green (Active)	ON	The SD Card is inserted.
	OFF	The SD Card is not inserted or is not being accessed.

*4 Ethernet LED operations are as shown below.

	Color	Indicator	Description
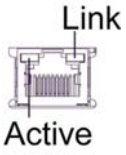	Green (Active)	Flashing	Data transmission is occurring.
		OFF	No data transmission.
	Green (Link)	ON	Data transmission is available in 10BASE-T/100BASE-TX.
		OFF	No connection or subsequent transmission failure.

HMIGTO5310/5315 Parts Identification

Side	HMIGTO5310	HMIGTO5315
Front	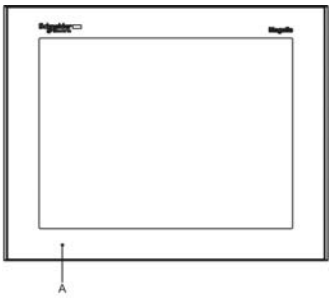	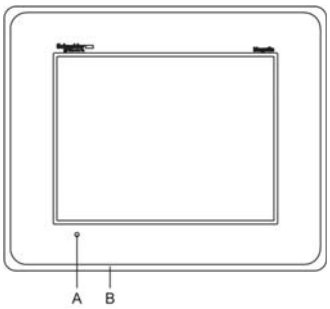
Rear	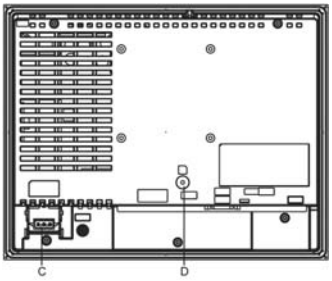	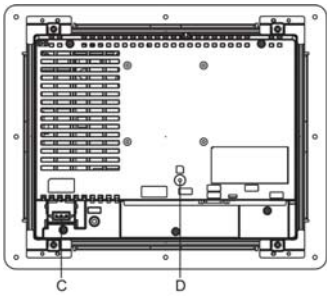
Bottom	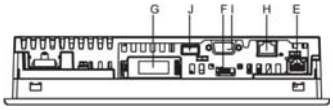	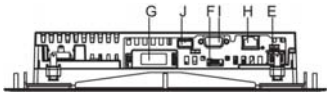

Part	Name	Description
A	Status LED	*1
B	Stainless Steel Bezel	HMIGTO5315 only.
C	Power Plug Connector	-
D	SD Card Access LED *2	This lamp lights up when SD Card is inserted. **NOTE:** Do not remove or insert the SD Card when the LED lamp is on. Doing so may damage data on the SD Card.
E	Ethernet Interface *3	Ethernet transmission interface (10BASE-T/100BASE-TX) Connector: Modular jack (RJ-45) x 1.
F	USB (mini-B) Interface	Conforms to USB2.0 (mini-B) x 1. Communication Distance: 5 m (16.4 ft) or less.
G	SD Card Interface Cover/Replacement Battery Insertion Cover	For information on how to open the cover, and insert or remove the SD Card, refer to SD Card Insertion/Removal *(see page 131)*. For information on how to open the cover and replace the battery, refer to Replacing the Primary Battery *(see page 146)*.
H	Serial Interface (COM2)*4	RS-485 Serial Interface. Connector: Modular jack (RJ-45).
I	Serial Interface (COM1)	RS-232C Serial Interface. Connector: D-Sub 9 pin (plug) x 1.
J	USB (Type A) Interface	Conforms to USB2.0 (Type A) x 1. Power supply voltage: 5Vdc+/-5%. Output Current: 500 mA or less. Maximum communication distance: 5 m (16.4 ft).

*1 Status LED operations are as shown below:

Color	Indicator	Description
Green	ON	Offline
		In operation
Orange	Flashing	Software starting up.
Red	ON	Power is turned ON.
-	OFF	Power is turned OFF.

*2 SD Card Access LED operations are as shown below.

Color	Indicator	Description
Green (Active)	ON	The SD Card is inserted.
	OFF	The SD Card is not inserted or is not being accessed.

*3 Ethernet LED operations are as shown below.

	Color	Indicator	Description
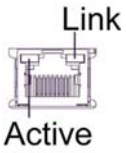	Green (Active)	Flashing	Data transmission is occurring.
		OFF	No data transmission.
	Green (Link)	ON	Data transmission is available in 10BASE-T/100BASE-TX.
		OFF	No connection or subsequent transmission failure.

*4 COM2 LED operations are as shown below.

Color	Indicator	Description
Yellow	ON	Communication (sending or receiving data) is occurring.
	OFF	No communication.

HMIGTO6310/6315 Parts Identification

Side	HMIGTO6310	HMIGTO6315
Front	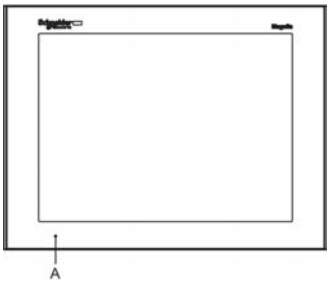	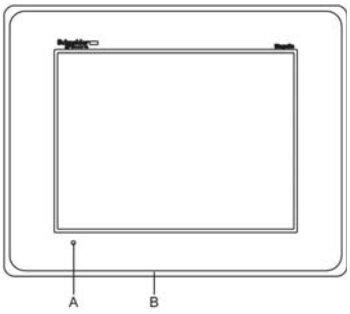
Rear	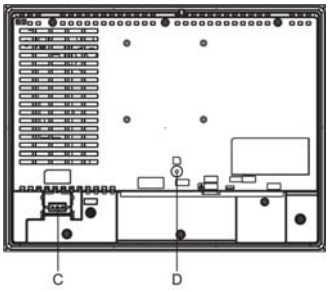	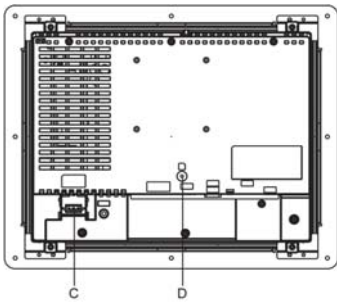
Bottom	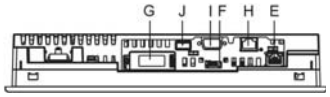	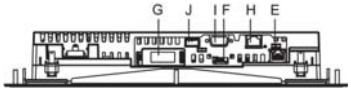

Part	Name	Description
A	Status LED	*1
B	Stainless Steel Bezel	HMIGTO6315 only.
C	Power Plug Connector	-
D	SD Card Access LED *2	This lamp lights up when SD Card is inserted. **NOTE:** Do not remove or insert the SD Card when the LED lamp is on. Doing so may damage data on the SD Card.
E	Ethernet Interface *3	Ethernet transmission interface (10BASE-T/100BASE-TX) Connector: Modular jack (RJ-45) x 1.
F	USB (mini-B) Interface	Conforms to USB2.0 (mini-B) x 1. Communication Distance: 5 m (16.4 ft) or less.
G	SD Card Interface Cover/Replacement Battery Insertion Cover	For information on how to open the cover, and insert or remove the SD Card, refer to SD Card Insertion/Removal *(see page 131)*. For information on how to open the cover and replace the battery, refer to Replacing the Primary Battery *(see page 146)*.
H	Serial Interface (COM2)	RS-485 Serial Interface. Connector: Modular jack (RJ-45)
I	Serial Interface (COM1)	RS-232C Serial Interface. Connector: D-Sub 9 pin (plug) x 1.
J	USB (Type A) Interface	Conforms to USB2.0 (Type A) x 1. Power supply voltage: 5Vdc+/-5%. Output Current: 500 mA or less. Maximum communication distance: 5 m (16.4 ft).

*1 Status LED operations are as shown below:

Color	Indicator	Description
Green	ON	Offline
		In operation
Orange	Flashing	Software starting up.
Red	ON	Power is turned ON.
-	OFF	Power is turned OFF.

*2 SD Card Access LED operations are as shown below.

Color	Indicator	Description
Green (Active)	ON	The SD Card is inserted.
	OFF	The SD Card is not inserted or is not being accessed.

*3 Ethernet LED operations are as shown below.

	Color	Indicator	Description
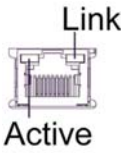	Green (Active)	Flashing	Data transmission is occurring.
		OFF	No data transmission.
	Green (Link)	ON	Data transmission is available in 10BASE-T/100BASE-TX.
		OFF	No connection or subsequent transmission failure.

*4 COM2 LED operations are as shown below.

Color	Indicator	Description
Yellow	ON	Communication (sending or receiving data) is occurring.
	OFF	No communication.

Chapter 4
Specifications

Overview

This chapter presents the HMIGTO specifications.

What Is in This Chapter?

This chapter contains the following sections:

Section	Topic	Page
4.1	HMIGTO1300/1310	36
4.2	HMIGTO2300/2310/2315	50
4.3	HMIGTO3510/4310	68
4.4	HMIGTO5310/5315	84
4.5	HMIGTO6310/6315	101

Section 4.1
HMIGTO1300/1310

What Is in This Section?

This section contains the following topics:

Topic	Page
Electrical Specifications	37
Environmental Specifications	38
Structural Specifications	39
Display Specifications	40
Memory, Clock, Touch Panel and Function Switches	41
Interface Specifications	42
Specifications of Serial Interface COM1	43
Specifications of Serial Interface COM2	45
Dimensions	46

Electrical Specifications

Power Supply	Rated Input Voltage		24 Vdc
	Input Voltage Limits		19.2...28.8 Vdc
	Voltage Drop		2 ms or less
	Power Consumption		9.6 W or less
		When power is not supplied to external devices	5.2 W or less
		Backlight OFF (Standby Mode)	4.2 W or less
		Backlight Dimmed (Brightness: 20%)	4.3 W or less
	In-Rush Current		30 A or less
Voltage Endurance			1,000 Vac 20 mA for 1 minute (between charging and FG terminals)
Insulation Resistance			500 Vdc, 10 MΩ or more (between charging and FG terminals)

Environmental Specifications

Physical Environment	Surrounding Air Temperature	0...50 °C (32...122 °F)
	Storage Temperature	-20...60 °C (-4...140 °F)
	Surrounding Air and Storage Humidity	10%...90% RH (Non condensing, wet bulb temperature 39 °C [102.2 °F] or less)
	Dust	0.1 mg/m^3 (10^{-7} oz/ft^3) or less (non-conductive levels)
	Pollution Degree	For use in Pollution Degree 2 environment
	Corrosive Gases	Free of corrosive gases
	Atmospheric Pressure (Operating Altitude)	800...1,114 hPa (2,000 m [6,561 ft] or lower)
Mechanical Environment	Vibration Resistance	IEC/EN 61131-2 compliant 5...9 Hz Single amplitude 3.5 mm (0.14 in.) 9...150 Hz Fixed acceleration: 9.8 m/s^2 X, Y, Z directions for 10 cycles (approx. 100 min.)
	Concussion Resistance	IEC/EN 61131-2 compliant 147 m/s^2, X, Y, Z directions for 3 times
Electrical Environment	Noise immunity	Noise Voltage: 1,000 Vp-p Pulse Width: 1 µs Rise Time: 1 ns (via noise simulator)
	Electrostatic Discharge Immunity	Contact Discharge Method: 6 kV (IEC/EN 61000-4-2 Level 3)

Air quality requirements

Do not operate or store the panel where chemicals evaporate, or where chemicals are present in the air:

- Corrosive chemicals: Acids, alkalines, liquids containing salt.
- Flammable chemicals: Organic solvents.

⚠ CAUTION

INOPERATIVE EQUIPMENT

Do not allow water, liquids, metal, and wiring fragments to enter the panel case.

Failure to follow these instructions can result in injury or equipment damage.

Structural Specifications

Grounding	Functional grounding: Grounding resistance of 100Ω, 2mm^2 (AWG 14) or thicker wire, or your country's applicable standard. (Same for FG and SG terminals)
Cooling Method	Natural air circulation
Structure *1	IP65f NEMA #250 TYPE 4X/13 (on the front panel when properly installed in an enclosure)
External Dimensions	W132 x H106 x D42 mm (W5.2 x H4.17 x D1.65 in.)
Panel Cut Dimensions	W118.5 x H92.5 mm (W4.67 x H3.64 in.)*2 Panel thickness area: 1.6...5 mm (0.06...0.2 in)*3
Weight	0.4 kg (0.9 lb) or less (main unit only)

*1 The front face of the HMIGTO, installed in a solid panel, has been tested using conditions equivalent to the standards shown in the specification. Even though the HMIGTO's level of resistance is equivalent to these standards, oils that should have no effect on the HMIGTO can possibly harm the panel. This can occur in areas where either vaporized oils are present, or where low viscosity cutting oils are allowed to adhere to the panel for long periods of time. If the panel's front face protection sheet peels off, these conditions can lead to the ingress of oil into the panel and separate protection measures are suggested.

Also, if non-approved oils are present, they may cause deformation or corrosion of the front panel's plastic cover. Therefore, prior to installing the panel, be sure to confirm the type of conditions that will be present in the panel's operating environment. If the installation gasket is used for a long period of time, or if the panel and its gasket are removed from the panel, the original level of protection cannot be kept. To maintain the original protection level, be sure to replace the installation gasket regularly.

*2 For dimensional tolerance, everything +1/-0 mm (+0.04/-0 in.) and R in angle are below R3 (R0.12 in.)

*3 Even if the installation wall thickness is within the recommended range for the "Panel Cut Dimensions", depending on wall's material, size, and installation location of the panel and other devices, the installation wall could warp. To prevent warping, the installation surface may need to be strengthened.

The front face of the panel, installed in a solid panel, has been tested using conditions equivalent to the standards shown in the specification.

⚠ CAUTION

EQUIPMENT DAMAGE

Ensure that the panel is not in permanent and direct contact with oils.

Failure to follow these instructions can result in injury or equipment damage.

NOTICE

STORAGE AND OPERATION OUTSIDE OF SPECIFICATIONS

- Store the panel in areas where temperatures are within the panel's specifications.
- Do not restrict or block the panel's rear-face ventilation slots.

Failure to follow these instructions can result in equipment damage.

NOTICE

GASKET AGING

- Inspect the gasket periodically as required by your operating environment to keep the initial IP level.
- Change the gasket at least once a year, or as soon as scratches or dirt become visible.

Failure to follow these instructions can result in equipment damage.

Display Specifications

		HMIGTO1310	HMIGTO1300
Display Type		TFT Color LCD	
Display Size		3.5”	
Resolution		320 x 240 pixels (QVGA)	
Effective Display Area		W70.56 x H52.92 mm (W2.78 x H2.08 in.)	
Display Colors		65,536 colors (No blink) / 16,384 colors (Blink)	
Backlight		White LED (Not user replaceable. When replacement is required, contact your local distributor.)	
Backlight Service Life		50,000 hours or more (continuous operation at 25 °C [77 °F] before backlight brightness decreased to 50%)	
Brightness Control		16 levels (Adjusted with touch panel or software	
Language Fonts		ASCII: (Code page 850) Alphanumeric (including European characters) Chinese: (GB2312-80 codes) Simplified Chinese fonts Japanese (except for XBT GT1000 series): ANK 158, Kanji: 6,962 (JIS Standards 1 & 2) (including 607 non-kanji characters) Korean: (KSC5601 - 1992 codes) Hangul fonts Taiwanese: (Big 5 codes) Traditional Chinese fonts	
Character sizes		8 x 8, 8 x 16, 16 x 16 and 32 x 32 pixel fonts	
Font sizes		You can expand width up to 8 times, and expand height up to 8 times.*1	
Text	8 x 8 pixels	40 characters per row x 30 rows	
	8 x 16 pixels	40 characters per row x 15 rows	
	16 x 16 pixels	20 characters per row x 15 rows	
	32 x 32 pixels	10 characters per row x 7 rows	

*1 You can set up other font sizes using the software.

Memory, Clock, Touch Panel and Function Switches

Memory

	HMIGTO1310	HMIGTO1300
Application Memory *1	FLASH EPROM 96 MB	FLASH EPROM 64 MB
Application run DRAM	128 MB	128 MB
Data Backup	SRAM 512 KB (Rechargeable lithium battery for data backup)	SRAM 128 KB (Rechargeable lithium battery for data backup)

*1 Capacity available for user application.

NOTE:

- When the message "Battery level is low" is displayed, supply power to the panel and fully charge the battery. In 24 hours the battery charges to a level that allows backup operation. Completing a full charge requires about 120 hours (5 days).
- The lifetime of the rechargeable lithium battery is 10 years when the battery's ambient temperature is 40 °C (104 °F) or less, 4.1 years when the battery's ambient temperature is 50 °C (122 °F) or less, and 1.5 years when the battery's ambient temperature is 60 °C (140 °F) or less.
  When used for backup:
  Approximately 100 days with a fully charged battery.
  Approximately 6 days with a half-charged battery.

Clock

Clock Accuracy*1	±65 seconds/month (deviation at room temperature and power is OFF).

*1 Depending on the operating temperature and age of panel, the clock can deviate from -380 to +90 sec/month. For systems where this level of precision is insufficient, the user should monitor and make adjustments when required.

NOTE:

- When the message "Battery level is low" is displayed, supply power to the panel and fully charge the battery. In 24 hours the battery charges to a level that allows backup operation. Completing a full charge requires about 120 hours (5 days).
- The lifetime of the rechargeable lithium battery is 10 years when the battery's ambient temperature is 40 °C (104 °F) or less, 4.1 years when the battery's ambient temperature is 50 °C (122 °F) or less, and 1.5 years when the battery's ambient temperature is 60 °C (140 °F) or less.
  When used for backup:
  Approximately 100 days with a fully charged battery.
  Approximately 6 days with a half-charged battery.

Touch Panel

Touch Panel Type	Resistive Film (analog)
Touch Panel Resolution	1,024 x 1,024
Touch Panel Service Life	1 million times or more

Function Switches

Six switches (F1 to F6).

Interface Specifications

Serial Interface COM1

	HMIGTO1310	HMIGTO1300
Asynchronous Transmission	RS-232C / RS-485	RS-232C
Data Length	7 or 8 bits	
Stop Bit	1 or 2 bits	
Parity	None, odd or even	
Data Transmission Speed	2,400...115,200 bps, 187,500 bps (MPI)	2,400...115,200 bps
Connector	Modular jack (RJ-45)	D-Sub 9 pin (plug)

Serial Interface COM2

	HMIGTO1300
Asynchronous Transmission	RS-485
Data Length	7 or 8 bits
Stop Bit	1 or 2 bits
Parity	None, odd or even
Data Transmission Speed	2,400...115,200 bps, 187,500 bps (MPI)
Connector	Modular jack (RJ-45)

USB Interface

	USB (Type A) Interface	USB (mini-B) Interface
Connector	USB 2.0 (Type A) x 1	USB 2.0 (mini-B) x 1
Power Supply Voltage	5 Vdc ±5%	-
Maximum Current Supplied	500 mA	-
Maximum Transmission Distance	5 m (16.4 ft)	

Ethernet Interface

	HMIGTO1310
Ethernet (LAN)	IEEE802.3i / IEEE802.3u, 10BASE-T/100BASE-TX
Connector	Modular jack (RJ45) x 1

NOTE: HMIGTO1300 does not have an Ethernet interface.

Specifications of Serial Interface COM1

Introduction

⚠ CAUTION

LOSS OF POWER

- Make sure all connections to the communication ports on the bottom and sides of the panel do not put excessive stress on the ports.
- Securely attach communication cables to the panel or cabinet.
- Use only D-Sub 9 pin cables with a locking system in good condition.

Failure to follow these instructions can result in injury or equipment damage.

The serial port is not isolated. The SG (signal ground) and FG (frame ground) terminals are connected inside the panel.

⚠⚠ DANGER

ELECTRIC SHOCK

When using the SG terminal to connect an external device to the panel:

- Verify that a short-circuit loop is not created when you set up the system.
- For HMIGTO1300, connect the #5 SG terminal to remote equipment when the host (PLC) unit is not isolated. Connect the #5 SG terminal to a known reliable ground connection to reduce the risk of damaging the circuit.
- For HMIGTO1310, connect the #8 SG terminal to remote equipment when the host (PLC) unit is not isolated. Connect the #8 SG terminal to a known reliable ground connection to reduce the risk of damaging the circuit.

Failure to follow these instructions will result in death or serious injury.

Serial Interface COM1

HMIGTO1300: D-Sub 9 pin plug connector via an RS-232C cable.

Pin Connection	Pin No.	RS-232C		
		Signal Name	Direction	Meaning
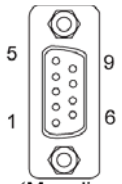 (Magelis GTO side)	1	CD	Input	Carrier Detect
	2	RD(RXD)	Input	Receive Data
	3	SD(TXD)	Output	Send Data
	4	ER(DTR)	Output	Data Terminal Ready
	5	SG	-	Signal Ground
	6	DR(DSR)	Input	Data Set Ready
	7	RS(RTS)	Output	Request to Send
	8	CS(CTS)	Input	Send possible
	9	CI(RI)/VCC	Input/–	Called Status Display +5V±5% Output 0.25A
	Shell	FG	–	Frame Ground (Common with SG)

You can switch pin #9 between RI and VCC via software.

NOTICE

EQUIPMENT DAMAGE

Use only the rated current.

Failure to follow these instructions can result in equipment damage.

Interfit bracket is #4-40 (UNC).

⚠ CAUTION

LOSS OF COMMUNICATION

- All connections to the communication ports must not put excessive stress on the ports.
- Securely attach communication cables to the panel wall or cabinet.
- Use only D-Sub 9 pin cables with a locking tab in good condition.

Failure to follow these instructions can result in injury or equipment damage.

HMIGTO1310: RJ-45 connector via an RS-232C or RS-485 cable.

Pin Connection	Pin No.	RS-232C/RS-485		
		Signal Name	Direction	Meaning
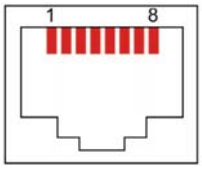	1	RD(RXD)	Input	Receive Data (RS-232C)
	2	SD(TXD)	Output	Send Data (RS-232C)
	3	NC	–	–
	4	D1	Input/Output	Transfer Data (RS-485)
	5	D0	Input/Output	Transfer Data (RS-485)
	6	RS(RTS)	Output	Request to Send
	7	NC	–	–
	8	SG	–	Signal Ground
	Shell	FG	–	Frame Ground (Common with SG)

⚠ CAUTION

LOSS OF COMMUNICATION

- All connections to the communication ports must not put excessive stress on the ports.
- Securely attach communication cables to the panel wall or cabinet.
- Use only RJ45 with a locking tab in good condition.

Failure to follow these instructions can result in injury or equipment damage.

Specifications of Serial Interface COM2

Introduction

The serial port is not isolated. The SG (signal ground) and FG (frame ground) terminals are connected inside the panel.

⚠⚠ DANGER

ELECTRIC SHOCK

When using the SG terminal to connect an external device to the panel:
- Verify that a short-circuit loop is not created when you set up the system.
- Connect the #8 SG terminal to remote equipment when the host (PLC) unit is not isolated. Connect the #8 SG terminal to a known reliable ground connection to reduce the risk of damaging the circuit.

Failure to follow these instructions will result in death or serious injury.

Serial Interface COM2

HMIGTO1300: RJ-45 connector via an RS-485 cable

NOTE: When setting up RS-485 communication, the cable diagram for some equipment may require polarization on the terminal side. This terminal does not require any special setting as it handles polarization automatically.

Pin Connection	Pin No.	RS-485		
		Signal Name	Direction	Meaning
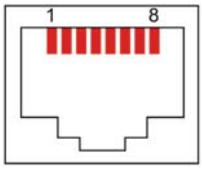	1	NC	–	–
	2	NC	–	–
	3	NC	–	–
	4	Line A	Input/Output	Transfer Data (RS-485)
	5	Line B	Input/Output	Transfer Data (RS-485)
	6	RS(RTS)	Output	Request to Send
	7	NC	–	–
	8	SG	–	Signal Ground

⚠ CAUTION

LOSS OF COMMUNICATION

- All connections to the communication ports must not put excessive stress on the ports.
- Securely attach communication cables to the panel wall or cabinet.
- Use only RJ45 with a locking tab in good condition.

Failure to follow these instructions can result in injury or equipment damage.

Dimensions

External Dimensions

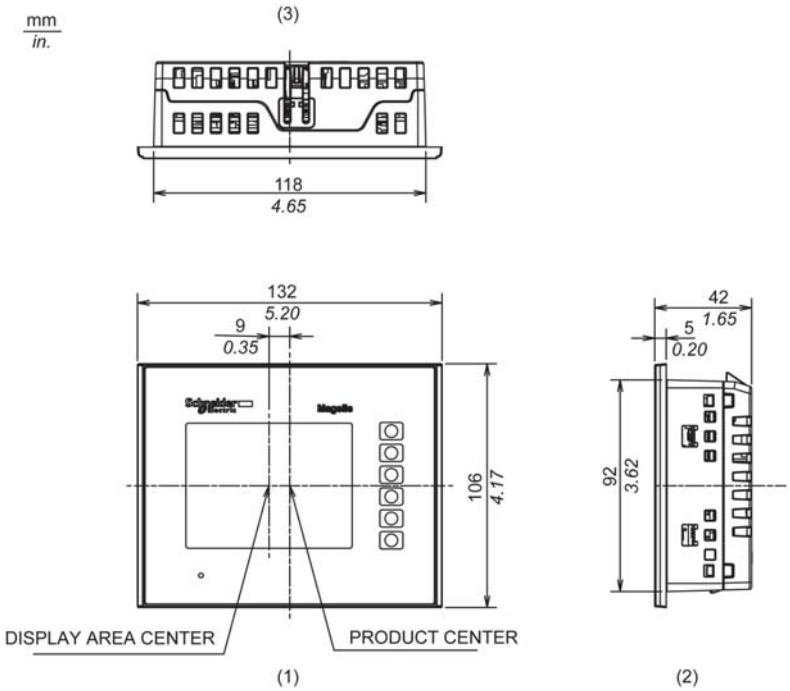

1 Front
2 Right Side
3 Top

Installation with Installation Fasteners

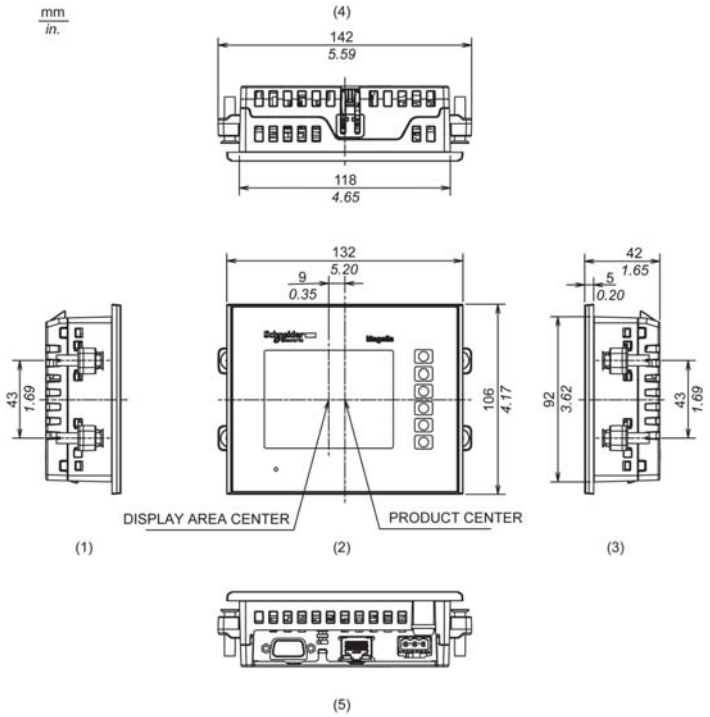

1 Left Side
2 Front
3 Right Side
4 Top
5 Bottom

Dimensions with Cables: HMIGTO1300

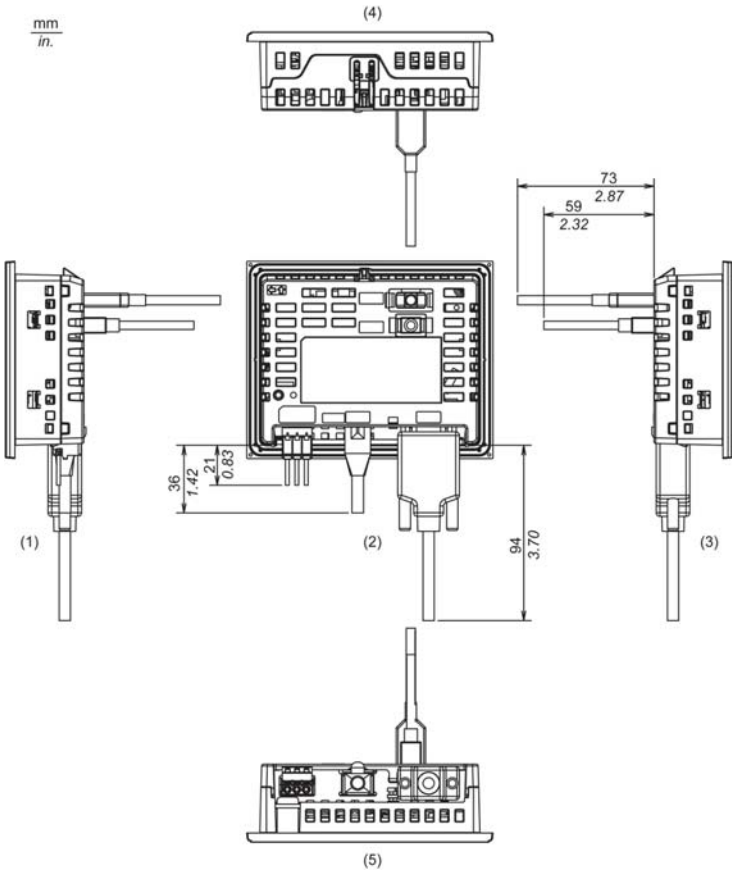

1 Left Side
2 Rear
3 Right Side
4 Top
5 Bottom

NOTE: All the above values are designed with cable bending in mind. The dimensions given here are representative values depending on the type of connection cable in use. Therefore, these values are intended for reference only.

Dimensions with Cables: HMIGTO1310

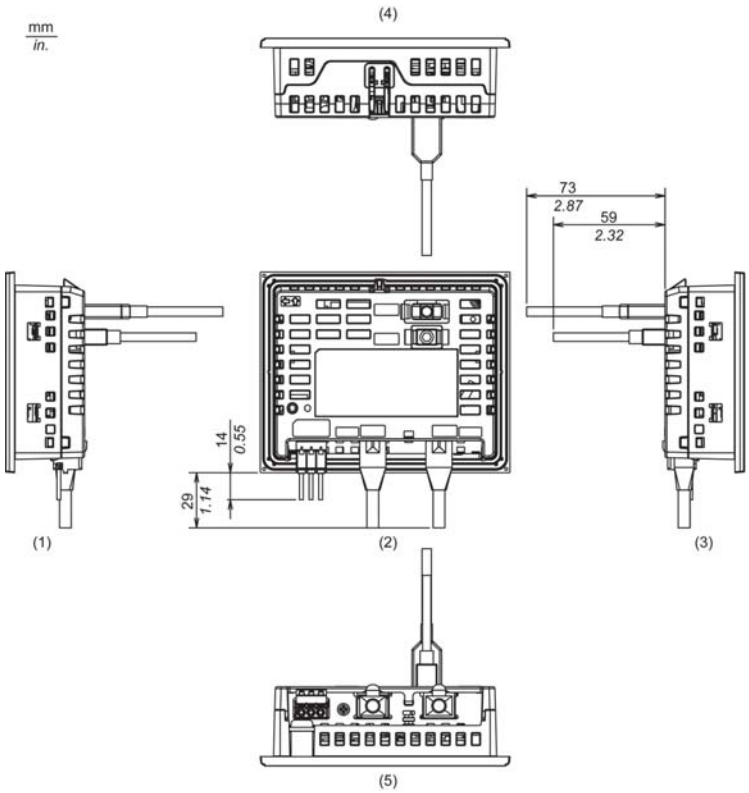

1 Left Side
2 Rear
3 Right Side
4 Top
5 Bottom

NOTE: All the above values are designed with cable bending in mind. The dimensions given here are representative values depending on the type of connection cable in use. Therefore, these values are intended for reference only.

Panel Cut Dimensions

Create a panel cut and insert the panel into the opening from the front.

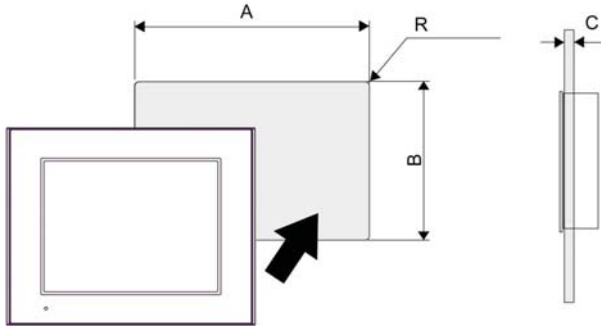

A	B	C	R
118.5 mm (+1, -0 mm) (4.67 in [+0.04, -0 in.])	92.5 mm (+1, -0 mm) (3.64 in. [+0.04, -0 in.])	1.6...5 mm (0.06...0.2 in)	3 mm (0.12 in.) maximum

NOTE: Before designing the panel cut, refer to Installation *(see page 120)*.

Installation Fastener Dimensions

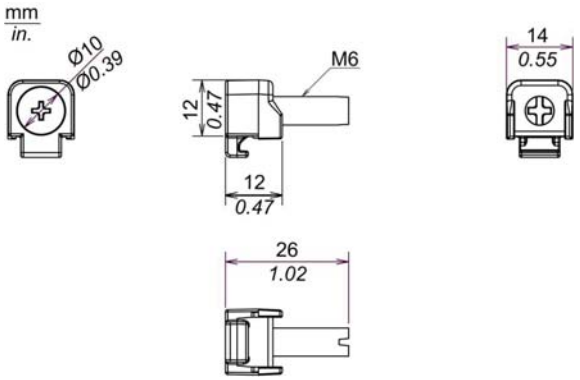

Section 4.2
HMIGTO2300/2310/2315

What Is in This Section?

This section contains the following topics:

Topic	Page
Electrical Specifications	51
Environmental Specifications	52
Structural Specifications	53
Display Specifications	55
Memory, Clock, and Touch Panel	56
Interface Specifications	57
Specifications of Serial Interface COM1	58
Specifications of Serial Interface COM2	60
Dimensions	61

Electrical Specifications

Power Supply	Rated Input Voltage		24 Vdc
	Input Voltage Limits		19.2...28.8 Vdc
	Voltage Drop		5 ms or less
	Power Consumption		10.5 W or less
		When power is not supplied to external devices	6.5 W or less
		Backlight OFF (Standby Mode)	4.5 W or less
		Backlight Dimmed (Brightness: 20%)	5 W or less
	In-Rush Current		30 A or less
Voltage Endurance			1,000 Vac, 20 mA for 1 minute (between charging and FG terminals)
Insulation Resistance			500 Vdc, 10 MΩ or more (between charging and FG terminals)

Environmental Specifications

		HMIGTO2310 / HMIGTO2315	HMIGTO2300
Physical Environment	Surrounding Air Temperature	0...55 °C (32 °F...131 °F)	0...50 °C (32...122 °F)
	Storage Temperature	-20...60 °C (-4...140 °F)	
	Surrounding Air and Storage Humidity	10...90% RH (Non condensing, wet bulb temperature 39 °C [102.2 °F] or less)	
	Dust	0.1 mg/m^3 (10^{-7} oz/ft^3) or less (non-conductive levels)	
	Pollution Degree	For use in Pollution Degree 2 environment	
	Corrosive Gases	Free of corrosive gases	
	Atmospheric Pressure (Operating Altitude)	800...1,114 hPa (2,000 m [6,561 ft] or lower)	
Mechanical Environment	Vibration Resistance	IEC/EN 61131-2 compliant 5...9 Hz Single amplitude 3.5 mm (0.14 in.) 9...150 Hz Fixed acceleration: 9.8 m/s^2 X, Y, Z directions for 10 cycles (approx. 100 min)	
	Concussion Resistance	IEC/EN 61131-2 compliant 147 m/s^2, X, Y, Z directions for 3 times	
Electrical Environment	Noise Immunity	Noise Voltage: 1,000 Vp-p Pulse Width: 1 µs Rise Time: 1 ns	
	Electrostatic Discharge Immunity	Contact Discharge Method: 6 kV (IEC/EN 61000-4-2 Level 3)	

Air quality requirements

Do not operate or store the panel where chemicals evaporate, or where chemicals are present in the air:

- Corrosive chemicals: Acids, alkalines, liquids containing salt.
- Flammable chemicals: Organic solvents.

⚠ CAUTION

INOPERATIVE EQUIPMENT

Do not allow water, liquids, metal, and wiring fragments to enter the panel case.

Failure to follow these instructions can result in injury or equipment damage.

Structural Specifications

	HMIGTO2300/HMIGTO2310	HMIGTO2315
Grounding	Functional grounding: Grounding resistance of 100Ω, 2mm^2 (AWG 14) or thicker wire, or your country's applicable standard. (Same for FG and SG terminals)	
Cooling Method	Natural air circulation	
Structure[*1]	IP65f NEMA #250 TYPE 4X/13 (on the front panel when properly installed in an enclosure)	IP66k NEMA #250 TYPE 4X/13 (on the front panel when properly installed in an enclosure)[*2]
External Dimensions	W169.5 x H137 x D59.5 mm (W6.67 x H5.39 x D2.34 in.)	W213.5 x H181 x D59.5 mm (W8.41 x H7.13 x D2.34 in.)
Panel Cut Dimensions	W156 x H123.5 mm (W6.14 x H4.86 in.) [*3] Panel thickness area: 1.6...5 mm (0.06...0.2 in.) [*4]	W195 x H162.5 mm (W7.68 x H6.40 in.) [*3] Panel thickness area: 1.6...5 mm (0.06...0.2 in.) [*4]
Weight	0.8 kg (1.8 lbs) or less (main unit only)	1.2 kg (2.6 lbs) or less (main unit only)

NOTE: [*1] The front face of the HMIGTO, installed in a solid panel, has been tested using conditions equivalent to the standards shown in the specification. Even though the HMIGTO's level of resistance is equivalent to these standards, oils that should have no effect on the HMIGTO can possibly harm the panel. This can occur in areas where either vaporized oils are present, or where low viscosity cutting oils are allowed to adhere to the panel for long periods of time. If the panel's front face protection sheet peels off, these conditions can lead to the ingress of oil into the panel and separate protection measures are suggested.
Also, if non-approved oils are present, they may cause deformation or corrosion of the front panel's plastic cover. Therefore, prior to installing the panel, be sure to confirm the type of conditions that will be present in the panel's operating environment. If the installation gasket is used for a long period of time, or if the panel and its gasket are removed from the panel, the original level of protection cannot be kept. To maintain the original protection level, be sure to replace the installation gasket regularly.

[*2] When installing the HMIGTO in a panel, you may not be able to mount the HMIGTO flush with the panel. This occurs due to the thickness of the gasket. The difference in level between the HMIGTO and panel depends on how much the gasket is compressed.

NOTICE

EQUIPMENT DAMAGE

For food and beverage and pharmaceutical industries, when the HMIGTO is not flush with panel, use silicon to form a seal to prevent water, chemicals, or food from lodging into place. Otherwise, the panel face could leak.

Failure to follow these instructions can result in equipment damage.

[*3] For dimensional tolerance, everything +1/-0 mm (+0.04/-0 in.) and R in angle are below R3 (R0.12 in.)

[*4] Even if the installation wall thickness is within the recommended range for the "Panel Cut Dimensions", depending on wall's material, size, and installation location of the panel and other devices, the installation wall could warp. To prevent warping, the installation surface may need to be strengthened.

⚠ CAUTION

EQUIPMENT DAMAGE

Ensure that the panel is not in permanent and direct contact with oils.

Failure to follow these instructions can result in injury or equipment damage.

NOTICE

STORAGE AND OPERATION OUTSIDE OF SPECIFICATIONS

- Store the panel in areas where temperatures are within the panel's specifications.
- Do not restrict or block the panel's rear-face ventilation slots.

Failure to follow these instructions can result in equipment damage.

NOTICE

GASKET AGING

- Inspect the gasket periodically as required by your operating environment to keep the initial IP level.
- Change the gasket at least once a year, or as soon as scratches or dirt become visible.

Failure to follow these instructions can result in equipment damage.

Display Specifications

Display Type		TFT Color LCD
Display Size		5.7”
Resolution (pixels)		320 x 240 pixels (QVGA)
Effective Display Area		W115.2 x H86.4 mm (W4.54 x H3.40 in.)
Display Colors		65,536 colors (No blink) / 16,384 colors (Blink)
Backlight		White LED (Not user replaceable. When replacement is required, contact your local distributor.)
Backlight Service Life		50,000 hours or more (continuous operation at 25 °C [77 °F] before backlight decreases to 50%.)
Brightness Control		16 levels (Adjusted with touch panel or software)
Language Fonts		ASCII: (Code page 850) Alphanumeric (including European characters) Chinese: (GB2312-80 codes) Simplified Chinese fonts Japanese (except for XBT GT1000 series): ANK 158, Kanji: 6,962 (JIS Standards 1 & 2) (including 607 non-kanji characters) Korean: (KSC5601 - 1992 codes) Hangul fonts Taiwanese: (Big 5 codes) Traditional Chinese fonts
Character Sizes		8 x 8, 8 x 16, 16 x 16 and 32 x 32 pixel fonts
Font Sizes		You can expand the width up to 8 times, and expand the height up to 8 times.*1
Text	8 x 8 pixels	40 characters per row x 30 rows
	8 x 16 pixels	40 characters per row x 15 rows
	16 x 16 pixels	20 characters per row x 15 rows
	32 x 32 pixels	10 characters per row x 7 rows

*1 You can set up other font sizes using the software.

Memory, Clock, and Touch Panel

Memory

	HMIGTO2310 / HMIGTO2315	HMIGTO2300
Application Memory *1	FLASH EPROM 96 MB	FLASH EPROM 64 MB
Application run DRAM	128 MB	128 MB
Data Backup	SRAM 512 KB (Replaceable lithium battery for data backup)	SRAM 128 KB (Rechargeable lithium battery for data backup)

*1 Capacity available for user application.

NOTE:

- When the message "Battery level is low" is displayed on the HMIGTO2300, supply power to the panel and fully charge the battery. In 24 hours the battery charges to a level that allows backup operation. Completing a full charge requires about 120 hours (5 days).
- The lithium battery's lifetime is: 10 years when the battery's ambient temperature is 40 °C (104 °F) or less, 4.1 years when the battery's ambient temperature is 50 °C (122 °F) or less, and 1.5 years when the battery's ambient temperature is 60 °C (140 °F) or less.
  When used for backup:
  Approximately 100 days, with a fully charged battery.
  Approximately 6 days, with a half-charged battery.

Clock

Clock Accuracy*1	±65 seconds/month (deviation at room temperature and power is OFF).

*1 Depending on the operating temperature and age of panel, the clock can deviate from -380 to +90 sec/month. For systems where this level of precision is insufficient, the user should monitor and make adjustments when required.

NOTE:

- When the message "Battery level is low" is displayed on the HMIGTO2300, supply power to the panel and fully charge the battery. In 24 hours the battery charges to a level that allows backup operation. Completing a full charge requires about 120 hours (5 days).
- The lithium battery's lifetime is: 10 years when the battery's ambient temperature is 40 °C (104 °F) or less, 4.1 years when the battery's ambient temperature is 50 °C (122 °F) or less, and 1.5 years when the battery's ambient temperature is 60 °C (140 °F) or less.
  When used for backup:
  Approximately 100 days, with a fully charged battery.
  Approximately 6 days, with a half-charged battery.

Touch Panel

Touch Panel Type	Resistive Film (analog)
Touch Panel Resolution	1,024 x 1,024
Touch Panel Service Life	1 million times or more

Interface Specifications

Serial Interface COM1

Asynchronous Transmission	RS-232C
Data Length	7 or 8 bits
Stop Bit	1 or 2 bits
Parity	None, odd or even
Data Transmission Speed	2,400...115,200 bps
Connector	D-Sub 9 pin (plug)

Serial Interface COM2

Asynchronous Transmission	RS-485
Data Length	7 or 8 bits
Stop Bit	1 or 2 bits
Parity	None, odd or even
Data Transmission Speed	2,400...115,200 bps, 187,500 bps (MPI)
Connector	Modular jack (RJ-45)

USB Interface

	USB (Type A) Interface	**USB (mini-B) Interface**
Connector	USB 2.0 (Type A) x 1	USB 2.0 (mini-B) x 1
Power Supply Voltage	5 Vdc ±5%	-
Maximum Current Supplied	500 mA	-
Maximum Transmission Distance	5 m (16.4 ft)	

Ethernet Interface

	HMIGTO2310 / HMIGTO2315
Ethernet (LAN)	IEEE802.3i / IEEE802.3u, 10BASE-T/100BASE-TX
Connector	Modular jack (RJ45) x 1

SD Card Interface

HMIGTO2310/HMIGTO2315: SD Card slot x 1 (maximum 32 GB SD/SDHC Card)

NOTE: HMIGTO2300 does not have an SD Card interface.

Specifications of Serial Interface COM1

Introduction

⚠ CAUTION

LOSS OF POWER

- Make sure all connections to the communication ports on the bottom and sides of the panel do not put excessive stress on the ports.
- Securely attach communication cables to the panel or cabinet.
- Use only D-Sub 9 pin cables with a locking system in good condition.

Failure to follow these instructions can result in injury or equipment damage.

The serial port is not isolated. The SG (signal ground) and FG (frame ground) terminals are connected inside the panel.

⚠⚠ DANGER

ELECTRIC SHOCK

When using the SG terminal to connect an external device to the panel:

- Verify that a short-circuit loop is not created when you set up the system.
- Connect the #5 SG terminal to remote equipment when the host (PLC) unit is not isolated. Connect the #5 SG terminal to a known reliable ground connection to reduce the risk of damaging the circuit.

Failure to follow these instructions will result in death or serious injury.

Serial Interface COM1

HMIGTO2300 / HMIGTO2310/ HMIGTO2315: D-Sub 9 pin plug connector via an RS-232C cable.

Pin Connection	Pin No.	RS-232C		
		Signal Name	Direction	Meaning
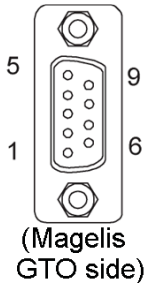 (Magelis GTO side)	1	CD	Input	Carrier Detect
	2	RD(RXD)	Input	Receive Data
	3	SD(TXD)	Output	Send Data
	4	ER(DTR)	Output	Data Terminal Ready
	5	SG	-	Signal Ground
	6	DR(DSR)	Input	Data Set Ready
	7	RS(RTS)	Output	Request to Send
	8	CS(CTS)	Input	Send possible
	9	CI(RI)/VCC	Input/–	Called Status Display +5V±5% Output 0.25A[*1]
	Shell	FG	–	Frame Ground (Common with SG)

NOTE: [*1] You can switch pin #9 between RI and VCC via software.

NOTICE

EQUIPMENT DAMAGE

Use only the rated current.

Failure to follow these instructions can result in equipment damage.

Interfit bracket is #4-40 (UNC).

⚠ CAUTION

LOSS OF COMMUNICATION

- All connections to the communication ports must not put excessive stress on the ports.
- Securely attach communication cables to the panel wall or cabinet.
- Use only D-Sub 9 pin cables with a locking tab in good condition.

Failure to follow these instructions can result in injury or equipment damage.

Specifications of Serial Interface COM2

Introduction

The serial port is not isolated. The SG (signal ground) and FG (frame ground) terminals are connected inside the panel.

⚠⚠ DANGER

ELECTRIC SHOCK

When using the SG terminal to connect an external device to the panel:
- Verify that a short-circuit loop is not created when you set up the system.
- Connect the #8 SG terminal to remote equipment when the host (PLC) unit is not isolated. Connect the #8 SG terminal to a known reliable ground connection to reduce the risk of damaging the circuit.

Failure to follow these instructions will result in death or serious injury.

Serial Interface COM2

HMIGTO2300 / HMIGTO2310/ HMIGTO2315: RJ45 connector via an RS-485 cable.

NOTE: When setting up RS-485 communication, the cable diagram for some equipment may require polarization on the terminal side. This terminal does not require any special setting as it handles polarization automatically.

Pin Connection	Pin No.	RS-422/RS-485		
		Signal Name	Direction	Meaning
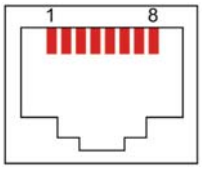	1	NC	-	-
	2	NC	-	-
	3	NC	-	-
	4	Line A	Input/Output	Transfer Data (RS-485)
	5	Line B	Input/Output	Transfer Data (RS-485)
	6	RS(RTS)	Output	Request To Send
	7	NC	-	-
	8	SG	-	Signal Ground

⚠ CAUTION

LOSS OF COMMUNICATION

- All connections to the communication ports must not put excessive stress on the ports.
- Securely attach communication cables to the panel wall or cabinet.
- Use only RJ45 with a locking tab in good condition.

Failure to follow these instructions can result in injury or equipment damage.

Dimensions

External Dimensions: HMIGTO2300/HMIGTO2310

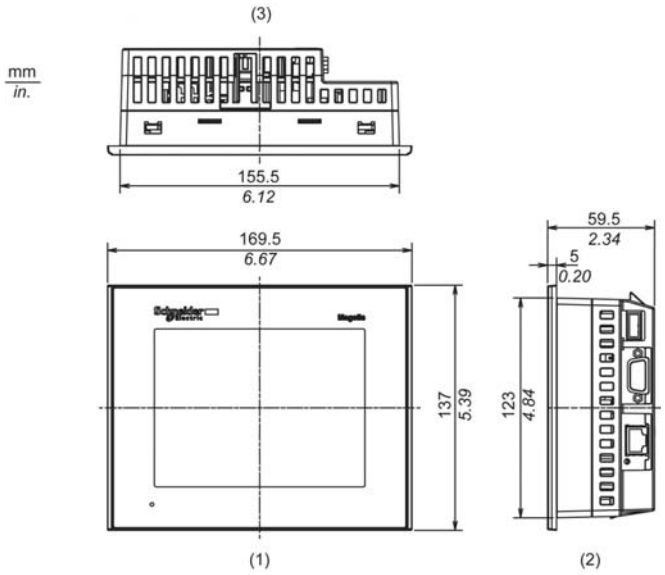

1 Front
2 Right Side
3 Top

External Dimensions: HMIGTO2315

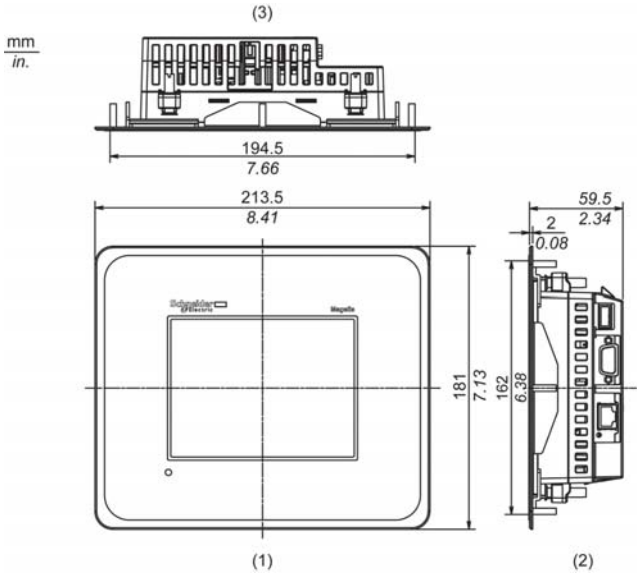

1 Front
2 Right Side
3 Top

Installation with Installation Fasteners: HMIGTO2300/HMIGTO2310

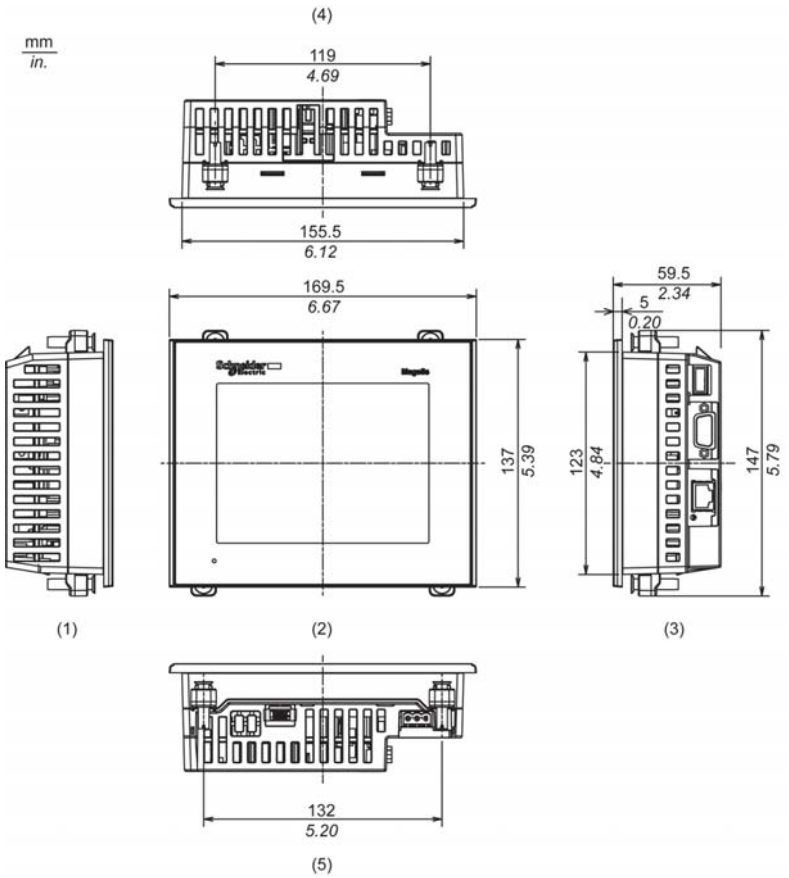

1 Left Side
2 Front
3 Right Side
4 Top
5 Bottom

Installation with Installation Fasteners: HMIGTO2315

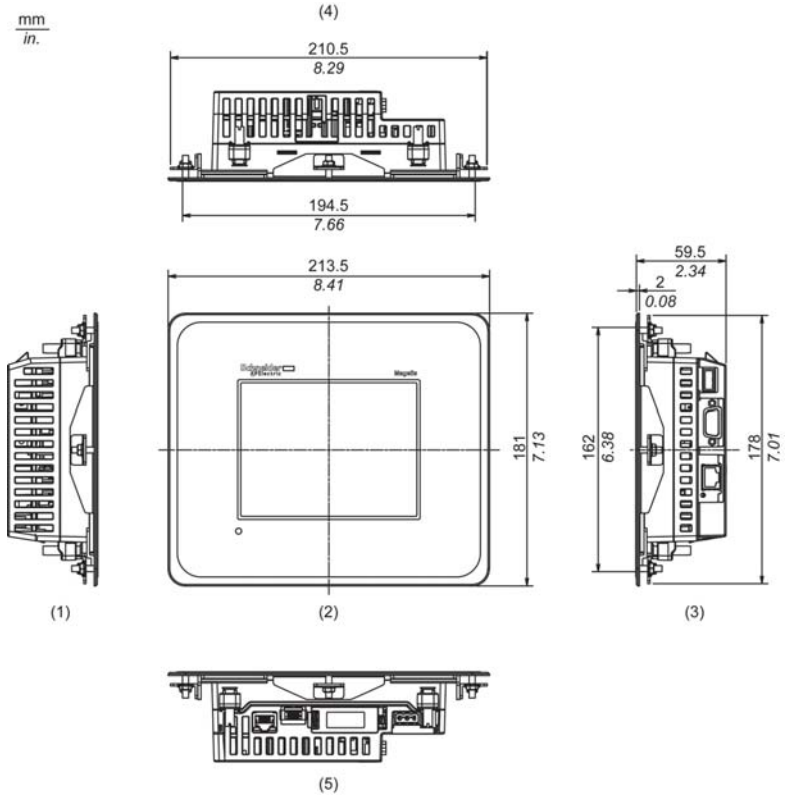

1 Left Side
2 Front
3 Right Side
4 Top
5 Bottom

Dimensions with Cables: HMIGTO2300

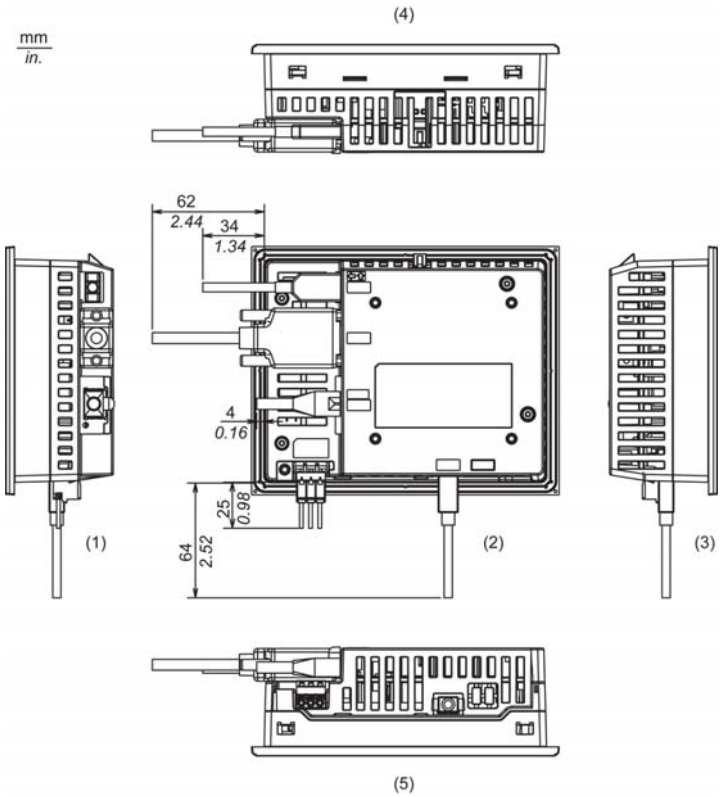

1 Left Side
2 Rear
3 Right Side
4 Top
5 Bottom

NOTE: All the above values are designed with cable bending in mind. The dimensions given here are representative values depending on the type of connection cable in use. Therefore, these values are intended for reference only.

Dimensions with Cables: HMIGTO2310

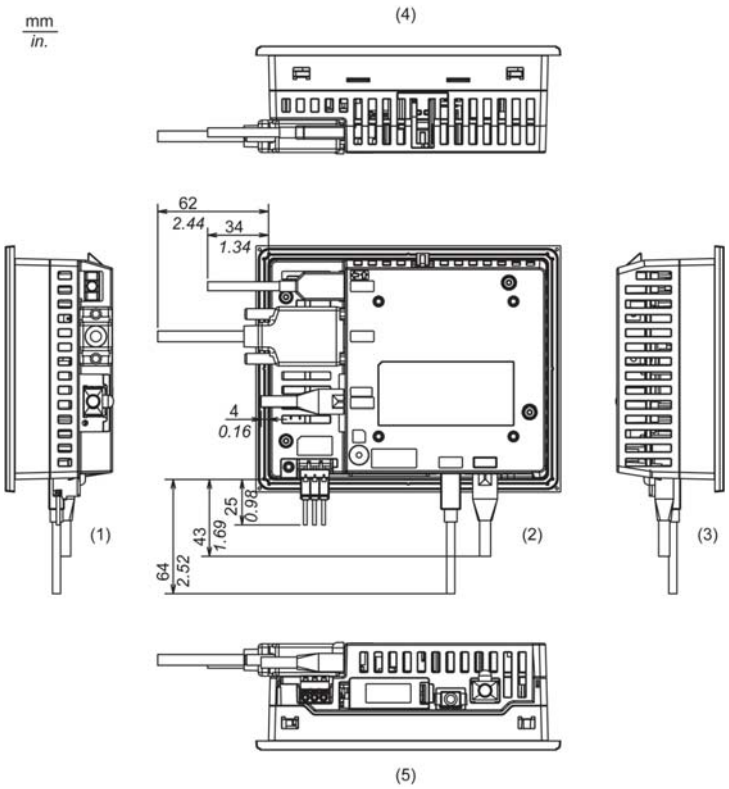

1 Left Side
2 Rear
3 Right Side
4 Top
5 Bottom

NOTE: All the above values are designed with cable bending in mind. The dimensions given here are representative values depending on the type of connection cable in use. Therefore, these values are intended for reference only.

Dimensions with Cables: HMIGTO2315

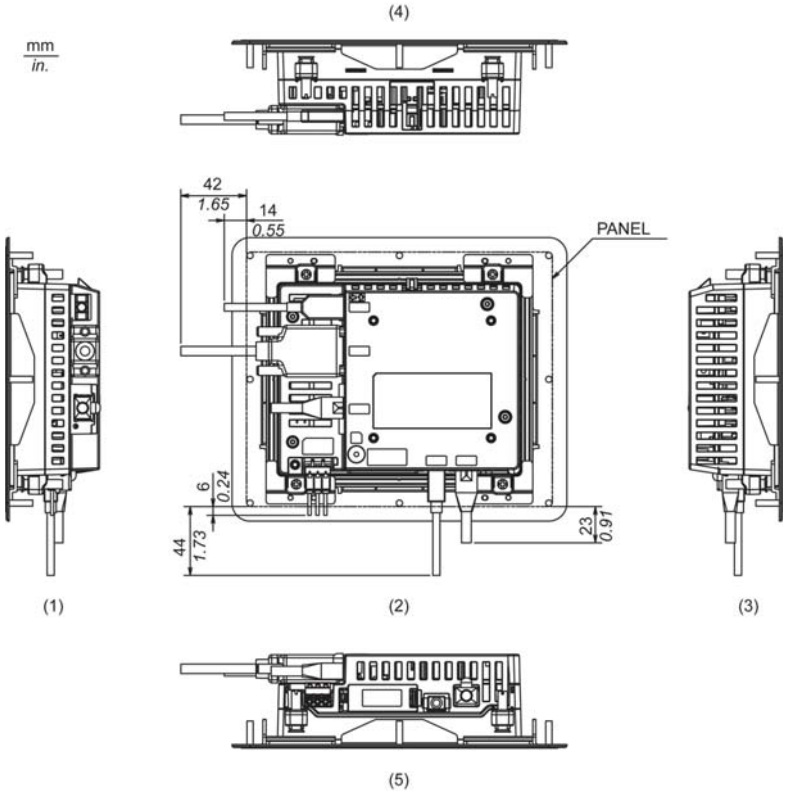

1 Left Side
2 Rear
3 Right Side
4 Top
5 Bottom

NOTE: All the above values are designed with cable bending in mind. The dimensions given here are representative values depending on the type of connection cable in use. Therefore, these values are intended for reference only.

Panel Cut Dimensions

Create a panel cut and insert the panel into the opening from the front.

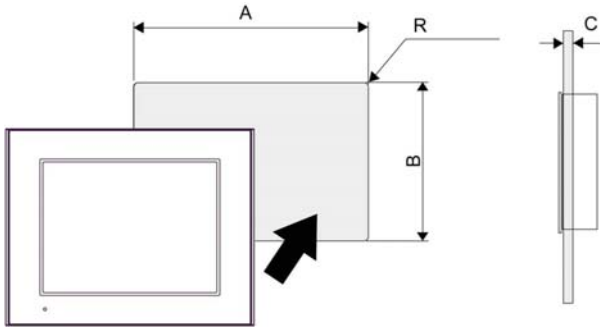

	A	B	C	R
HMIGTO2310 HMIGTO2300	156 mm (+1/-0) mm (6.14 in [+0.04, -0 in.])	123.5 mm (+1, -0 mm) (4.86 in [+0.04, -0 in.])	1.6...5 mm (0.06...0.2 in.)	3 mm (0.12 in.) maximum
HMIGTO2315	195 mm (+1/-0) mm (7.68 in [+0.04, -0in.])	162.5 mm (+1/-0) mm (6.40 in [+0.04, -0in.])		

NOTE: Before designing the panel cut, refer to Installation *(see page 120)*.

Installation Fastener Dimensions

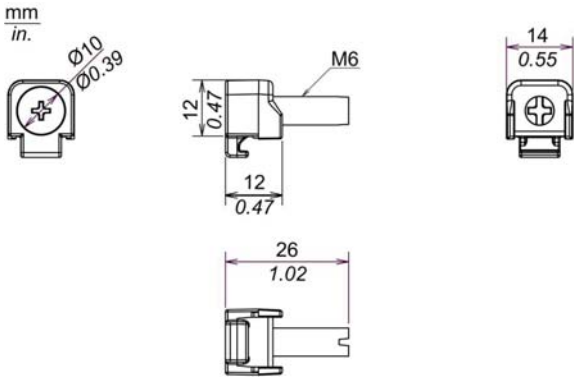

Section 4.3
HMIGTO3510/4310

What Is in This Section?

This section contains the following topics:

Topic	Page
Electrical Specifications	69
Environmental Specifications	70
Structural Specifications	71
Display Specifications	72
Memory, Clock, Touch Panel, and Function Switches	73
Interface Specifications	74
Specifications of Serial Interface COM1	75
Specifications of Serial Interface COM2	77
Dimensions	78

Electrical Specifications

Power Supply	Rated Input Voltage		24 Vdc
	Input Voltage Limits		19.2...28.8 Vdc
	Voltage Drop		5 ms or less
	Power Consumption		12 W or less
		When power is not supplied to external devices	8 W or less
		Backlight OFF (Standby Mode)	5 W or less
		Backlight Dimmed (Brightness: 20%)	5.5 W or less
	In-Rush Current		30 A or less
Voltage Endurance			1,000 Vac, 20 mA for 1 minute (between charging and FG terminals)
Insulation Resistance			500 Vdc, 10 MΩ or more (between charging and FG terminals)

Environmental Specifications

		HMIGTO4310	HMIGTO3510
Physical Environment	Surrounding Air Temperature	0...55 °C (32...131 °F)	0...50 °C (32...122 °F)
	Storage Temperature	-20...60 °C (-4...140 °F)	
	Surrounding Air and Storage Humidity	10...90% RH (Non condensing, wet bulb temperature 39 °C [102.2 °F] or less)	
	Dust	0.1 mg/m^3 (10^{-7} oz/ft^3) or less (non-conductive levels)	
	Pollution Degree	For use in Pollution Degree 2 environment	
	Corrosive Gases	Free of corrosive gases	
	Atmospheric pressure (Operating Altitude)	800...1,114 hPa (2,000 m [6,561 ft] or lower)	
Mechanical Environment	Vibration Resistance	IEC/EN 61131-2 5...9 Hz Single amplitude 3.5 mm (0.14 in.) 9...150 Hz Fixed acceleration: 9.8 m/s^2 X, Y, Z directions for 10 cycles (approx. 100 min)	
	Concussion Resistance	IEC/EN 61131-2 compliant 147 m/s^2, X, Y, Z directions for 3 times	
Electrical Environment	Noise Immunity	Noise Voltage: 1,000 Vp-p Pulse Width: 1 µs Rise Time: 1 ns	
	Electrostatic Discharge Immunity	Contact Discharge Method: 6 kV (IEC/EN 61000-4-2 Level 3)	

Air quality requirements

Do not operate or store the panel where chemicals evaporate, or where chemicals are present in the air:

- Corrosive chemicals: Acids, alkalines, liquids containing salt.
- Flammable chemicals: Organic solvents.

⚠ CAUTION

INOPERATIVE EQUIPMENT

Do not allow water, liquids, metal, and wiring fragments to enter the panel case.

Failure to follow these instructions can result in injury or equipment damage.

Structural Specifications

Grounding	Functional grounding: Grounding resistance of 100 Ω, 2 mm^2 (AWG 14) or thicker wire, or your country's applicable standard. (Same for FG and SG terminals)
Cooling Method	Natural air circulation
Structure*1	IP65f NEMA #250 TYPE 4X/13 (on the front panel when properly installed in an enclosure)
External Dimensions	W218 x H173 x D60 mm (W8.58 x H6.81 x D2.36 in.)
Panel Cut Dimensions	W204.5 x H159.5 mm (W8.05 x H6.28 in.)*2 Panel thickness area: 1.6...5 mm (0.06...0.2 in.)*3
Weight	1.2 kg (2.6 lb) or less (main unit only)

NOTE: *1 The front face of the HMIGTO, installed in a solid panel, has been tested using conditions equivalent to the standards shown in the specification. Even though the HMIGTO's level of resistance is equivalent to these standards, oils that should have no effect on the HMIGTO can possibly harm the panel. This can occur in areas where either vaporized oils are present, or where low viscosity cutting oils are allowed to adhere to the panel for long periods of time. If the panel's front face protection sheet peels off, these conditions can lead to the ingress of oil into the panel and separate protection measures are suggested.
Also, if non-approved oils are present, they may cause deformation or corrosion of the front panel's plastic cover. Therefore, prior to installing the HMIGTO, be sure to confirm the type of conditions that will be present in the panel's operating environment. If the installation gasket is used for a long period of time, or if the HMIGTO and its gasket are removed from the panel, the original level of protection cannot be kept. To maintain the original protection level, be sure to replace the installation gasket regularly.

*2 For dimensional tolerance, everything +1/-0 mm (+0.04/-0 in.) and R in angle are below R3 (R0.12 in.)

*3 Even if the installation wall thickness is within the recommended range for the "Panel Cut Dimensions", depending on wall's material, size, and installation location of the panel and other devices, the installation wall could warp. To prevent warping, the installation surface may need to be strengthened.

⚠ CAUTION

EQUIPMENT DAMAGE

Ensure that the panel is not in permanent and direct contact with oils.

Failure to follow these instructions can result in injury or equipment damage.

NOTICE

STORAGE AND OPERATION OUTSIDE OF SPECIFICATIONS

- Store the panel in areas where temperatures are within the panel's specifications.
- Do not restrict or block the panel's rear-face ventilation slots.

Failure to follow these instructions can result in equipment damage.

NOTICE

GASKET AGING

- Inspect the gasket periodically as required by your operating environment to keep the initial IP level.
- Change the gasket at least once a year, or as soon as scratches or dirt become visible.

Failure to follow these instructions can result in equipment damage.

Display Specifications

		HMIGTO4310	HMIGTO3510
Display Type		TFT Color LCD	
Display Size		7.5”	7.0”
Resolution		640 x 480 pixels (VGA)	800 x 480 pixels (WVGA)
Effective Display Area		W153.7 x H115.8 mm (W6.05 x H4.56 in.)	W152.4 x H91.44 mm (W6.0 x H3.6 in.)
Display Colors		65,536 colors (No blink) / 16,384 colors Blink)	
Backlight		White LED (Not user replaceable. When replacement is required, contact your local distributor.)	
Backlight Service Life		50,000 hours or more (continuous operation at 25 °C [77 °F] before backlight brightness decreases to 50%)	
Brightness Control		16 levels (Adjusted with touch panel or software)	
Language Fonts		ASCII: (Code page 850) Alphanumeric (including European characters) Chinese: (GB2312-80 codes) Simplified Chinese fonts Japanese (except for XBT GT1000 series): ANK 158, Kanji: 6,962 (JIS Standards 1 & 2) (including 607 non-kanji characters) Korean: (KSC5601 - 1992 codes) Hangul fonts Taiwanese: (Big 5 codes) Traditional Chinese fonts	
Character sizes		8 x 8, 8 x 16, 16 x 16 and 32 x 32 pixel fonts	
Font sizes		You can expand the width up to 8 times, and expand the height up to 8 times.*1	
Text	8 x 8 pixels	80 characters per row x 60 rows	100 characters per row x 60 rows
	8 x 16 pixels	80 characters per row x 30 rows	100 characters per row x 30 rows
	16 x 16 pixels	40 characters per row x 30 rows	50 characters per row x 30 rows
	32 x 32 pixels	20 characters per row x 15 rows	25 characters per row x 15 rows

*1 You can set up other font sizes using the software.

Memory, Clock, Touch Panel, and Function Switches

Memory

	HMIGTO4310	HMIGTO3510
Application Memory *1	FLASH EPROM 96 MB	FLASH EPROM 96 MB
Application run DRAM	128 MB	128 MB
Data Backup	SRAM 512 KB (Replaceable lithium battery for data backup)	SRAM 128 KB (Replaceable lithium battery for data backup)

*1 Capacity available for user application.

NOTE:

- When the message "Battery level is low" is displayed, supply power to the panel and fully charge the battery.

Clock

Clock Accuracy*1	±65 seconds/month (deviation at room temperature and power is OFF).

*1 Depending on the operating temperature and age of panel, the clock can deviate from -380 to +90 sec/month. For systems where this level of precision is insufficient, the user should monitor and make adjustments when required.

Touch Panel

Touch Panel Type	Resistive Film (analog)
Touch Panel Resolution	1,024 x 1,024
Touch Panel Service Life	1 million times or more

Function Switches

HMIGTO3510: Eight switches (F1 to F8).

Interface Specifications

Serial Interface COM1

Asynchronous Transmission	RS-232C
Data Length	7 or 8 bits
Stop Bit	1 or 2 bits
Parity	None, odd or even
Data Transmission Speed	2,400...115,200 bps
Connector	D-Sub 9 pin (plug)

Serial Interface COM2

Asynchronous Transmission	RS-485
Data Length	7 or 8 bits
Stop Bit	1 or 2 bits
Parity	None, odd or even
Data Transmission Speed	2,400...115,200 bps, 187,500 bps (MPI)
Connector	Modular jack (RJ-45)

USB Interface

	USB (Type A) Interface	**USB (mini-B) Interface**
Connector	USB 2.0 (Type A) x 1	USB 2.0 (mini-B) x 1
Power Supply Voltage	5 Vdc ±5%	-
Maximum Current Supplied	500 mA	-
Maximum Transmission Distance	5 m (16.4 ft)	

Ethernet Interface

Ethernet (LAN)	IEEE802.3i / IEEE802.3u, 10BASE-T/100BASE-TX
Connector	Modular jack (RJ45) x 1

SD Card Interface

SD Card slot x 1 (maximum 32 GB SD/SDHC Card)

Specifications of Serial Interface COM1

Introduction

⚠ CAUTION

LOSS OF POWER

- Make sure all connections to the communication ports on the bottom and sides of the panel do not put excessive stress on the ports.
- Securely attach communication cables to the panel or cabinet.
- Use only D-Sub 9 pin cables with a locking system in good condition.

Failure to follow these instructions can result in injury or equipment damage.

The serial port is not isolated. The SG (signal ground) and FG (frame ground) terminals are connected inside the panel.

⚠⚠ DANGER

ELECTRIC SHOCK

When using the SG terminal to connect an external device to the panel:

- Verify that a short-circuit loop is not created when you set up the system.
- Connect the #5 SG terminal to remote equipment when the host (PLC) unit is not isolated. Connect the #5 SG terminal to a known reliable ground connection to reduce the risk of damaging the circuit.

Failure to follow these instructions will result in death or serious injury.

Serial Interface COM1

HMIGTO3510 / HMIGTO4310: D-Sub 9 pin plug connector via an RS-232C cable.

Pin Connection	Pin No.	RS-232C		
		Signal Name	Direction	Meaning
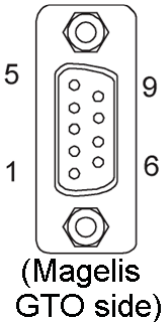 (Magelis GTO side)	1	CD	Input	Carrier Detect
	2	RD(RXD)	Input	Receive Data
	3	SD(TXD)	Output	Send Data
	4	ER(DTR)	Output	Data Terminal Ready
	5	SG	-	Signal Ground
	6	DR(DSR)	Input	Data Set Ready
	7	RS(RTS)	Output	Request to Send
	8	CS(CTS)	Input	Send possible
	9	CI(RI)/VCC	Input/–	Called Status Display +5V±5% Output 0.25A[*1]
	Shell	FG	–	Frame Ground (Common with SG)

NOTE: [*1] You can switch pin #9 between RI and VCC via software.

NOTICE

EQUIPMENT DAMAGE

Use only the rated current.

Failure to follow these instructions can result in equipment damage.

Interfit bracket is #4-40 (UNC).

⚠ CAUTION

LOSS OF COMMUNICATION

- All connections to the communication ports must not put excessive stress on the ports.
- Securely attach communication cables to the panel wall or cabinet.
- Use only D-Sub 9 pin cables with a locking tab in good condition.

Failure to follow these instructions can result in injury or equipment damage.

Specifications of Serial Interface COM2

Introduction

The serial port is not isolated. The SG (signal ground) and FG (frame ground) terminals are connected inside the panel.

⚠⚠ DANGER

ELECTRIC SHOCK

When using the SG terminal to connect an external device to the panel:
- Verify that a short-circuit loop is not created when you set up the system.
- Connect the #8 SG terminal to remote equipment when the host (PLC) unit is not isolated. Connect the #8 SG terminal to a known reliable ground connection to reduce the risk of damaging the circuit.

Failure to follow these instructions will result in death or serious injury.

Serial Interface COM2

HMIGTO3510 / HMIGTO4310: RJ45 connector via a RS-485 cable.

NOTE: When setting up RS-485 communication, the cable diagram for some equipment may require polarization on the terminal side. This terminal does not require any special setting as it handles polarization automatically.

Pin Connection	Pin No.	RS-485		
		Signal Name	Direction	Meaning
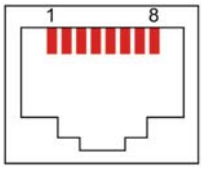	1	NC	-	-
	2	NC	-	-
	3	NC	-	-
	4	Line A	Input/Output	Transfer Data (RS-485)
	5	Line B	Input/Output	Transfer Data (RS-485)
	6	RS(RTS)	Output	Request To Send
	7	NC	-	-
	8	SG	-	Signal Ground

⚠ CAUTION

LOSS OF COMMUNICATION

- All connections to the communication ports must not put excessive stress on the ports.
- Securely attach communication cables to the panel wall or cabinet.
- Use only RJ45 with a locking tab in good condition.

Failure to follow these instructions can result in injury or equipment damage.

Dimensions

External Dimensions: HMIGTO3510

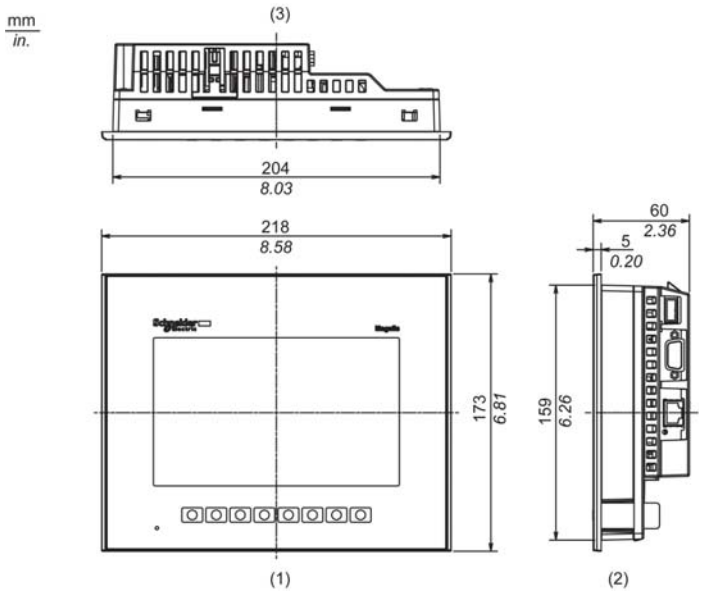

1 Front
2 Right Side
3 Top

External Dimensions: HMIGTO4310

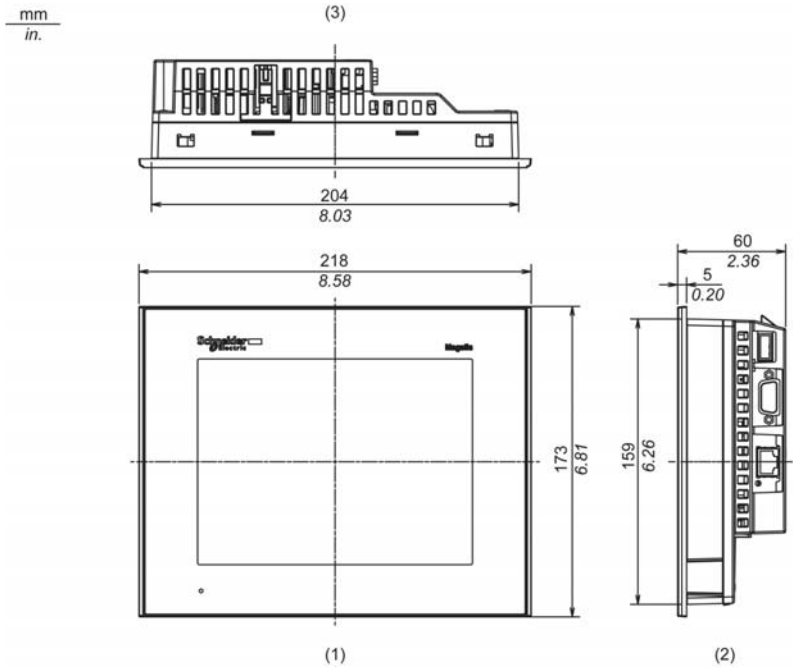

1 Front
2 Right Side
3 Top

Installation with Installation Fasteners: HMIGTO3510

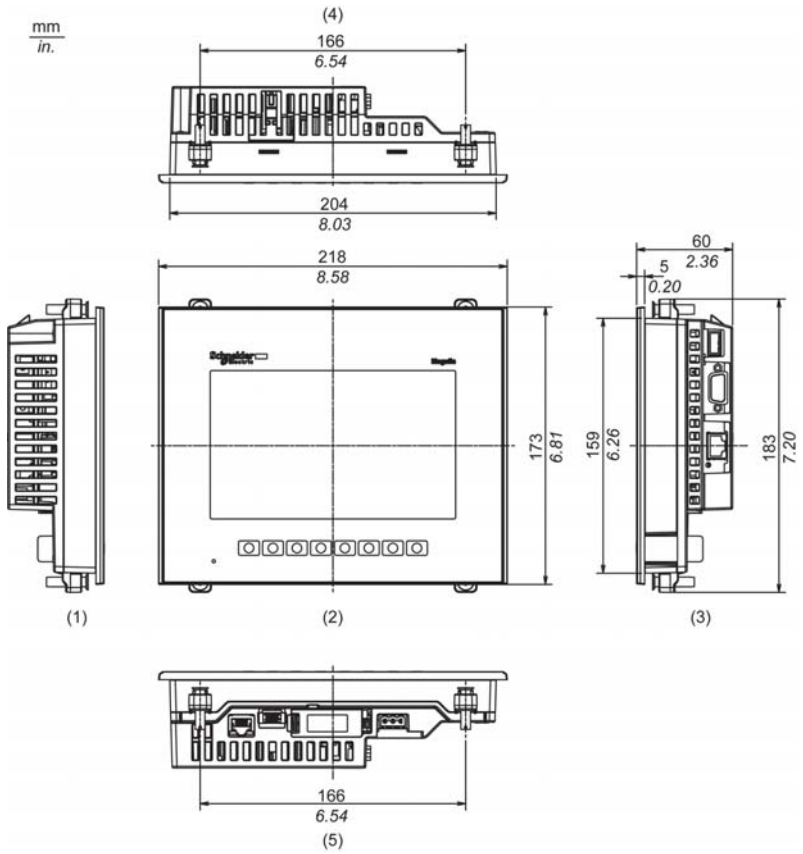

1 Left Side
2 Front
3 Right Side
4 Top
5 Bottom

Installation with Installation Fasteners: HMIGTO4310

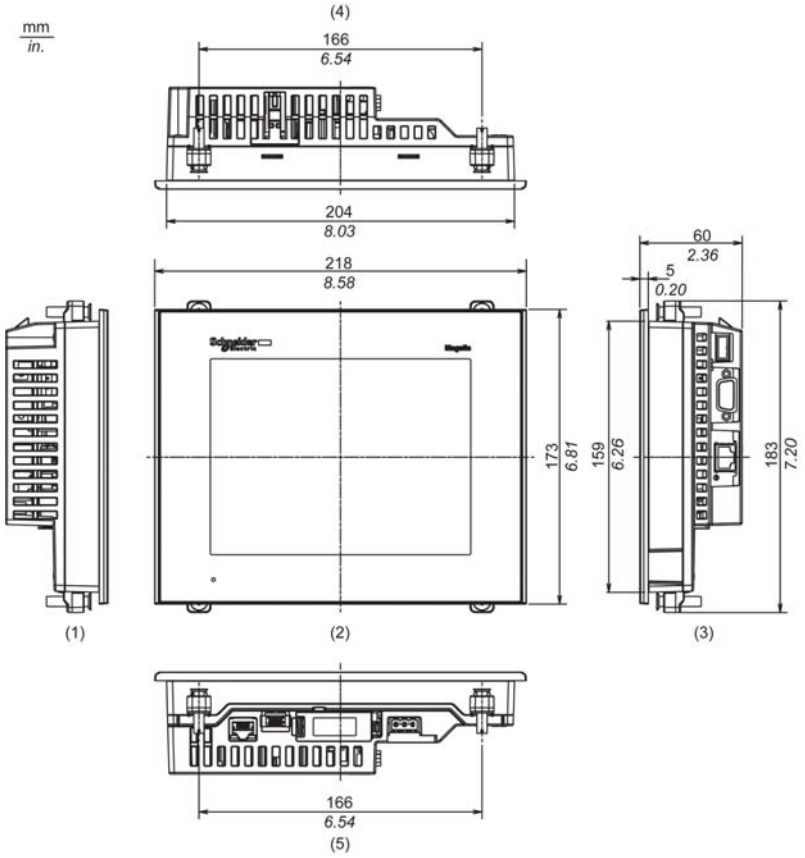

1 Left Side
2 Front
3 Right Side
4 Top
5 Bottom

Dimensions with Cables: HMIGTO3510

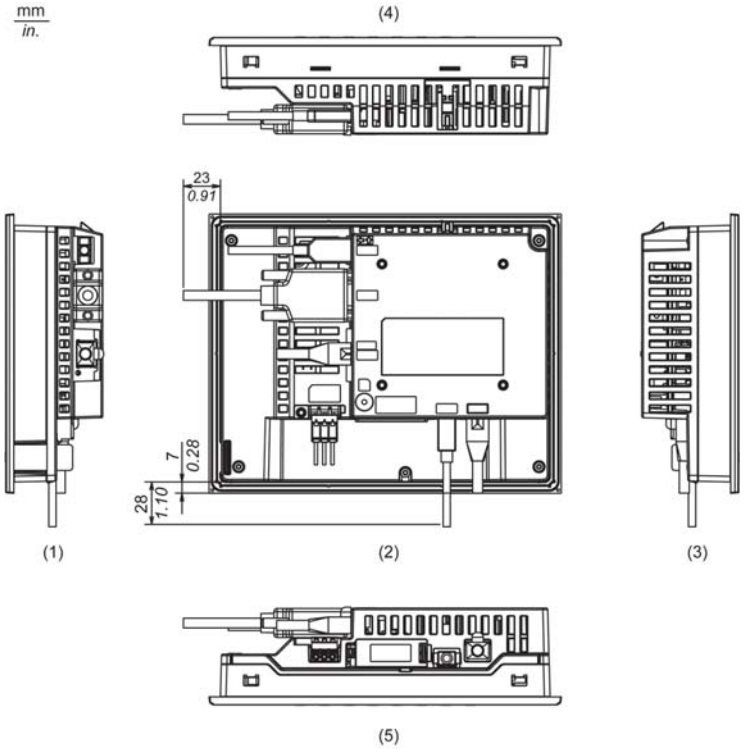

1 Left Side
2 Rear
3 Right Side
4 Top
5 Bottom

NOTE: All the above values are designed with cable bending in mind. The dimensions given here are representative values depending on the type of connection cable in use. Therefore, these values are intended for reference only.

Dimensions with Cables: HMIGTO4310

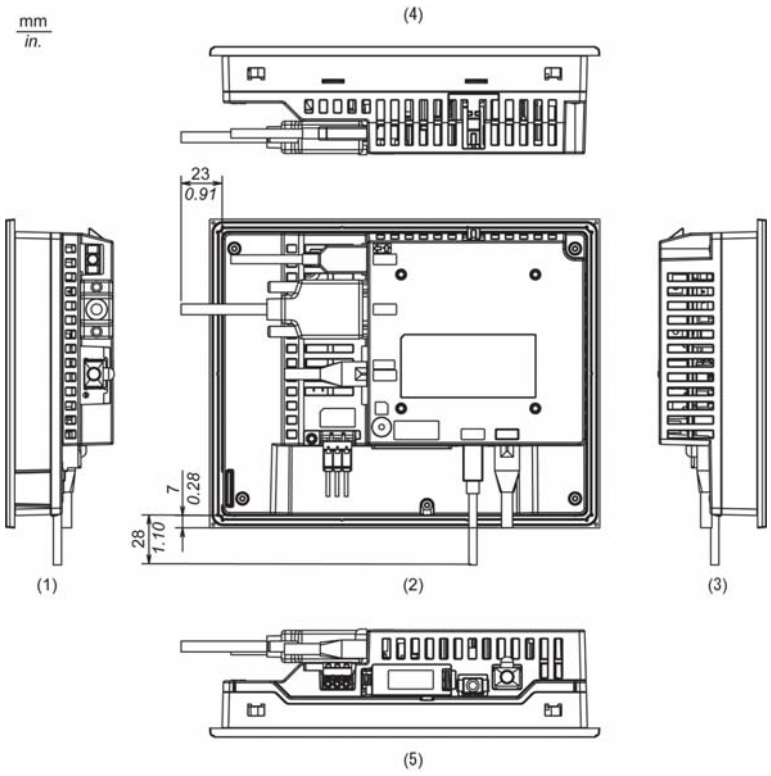

1 Left Side
2 Rear
3 Right Side
4 Top
5 Bottom

NOTE: All the above values are designed with cable bending in mind. The dimensions given here are representative values depending on the type of connection cable in use. Therefore, these values are intended for reference only.

Panel Cut Dimensions

Create a panel cut and insert the panel into the opening from the front.

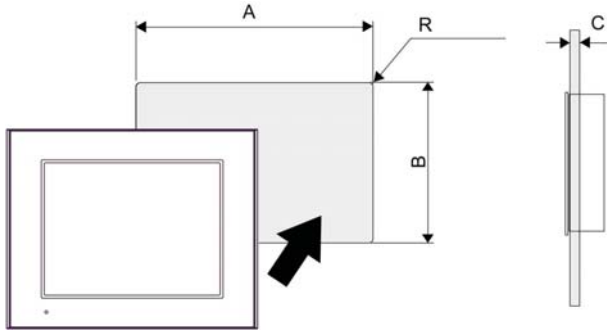

A	B	C	R
204.5 mm (+1, -0 mm) (8.05 in. [+0.04, -0 in.])	159.5 mm (+1, -0 mm) (6.28 in. [+0.04, -0 in.])	1.6...5 mm (0.06...0.2 in.)	3 mm (0.12 in.) maximum

NOTE: Before designing the panel cut, refer to Installation *(see page 120)*.

Installation Fastener Dimensions

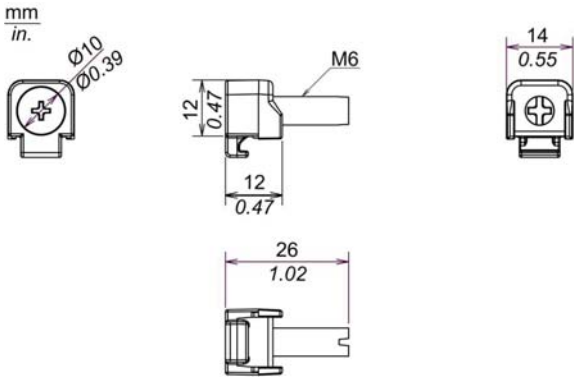

Section 4.4
HMIGTO5310/5315

What Is in This Section?

This section contains the following topics:

Topic	Page
Electrical Specifications	85
Environmental Specifications	86
Structural Specifications	87
Display Specifications	89
Memory, Clock, and Touch Panel	90
Interface Specifications	91
Specifications of Serial Interface COM1	92
Specifications of Serial Interface COM2	94
Dimensions	95

Electrical Specifications

Power Supply	Rated Input Voltage		24 Vdc
	Input Voltage Limits		19.2...28.8 Vdc
	Voltage Drop		10 ms or less
	Power Consumption		17 W or less
		When power is not supplied to external devices	12 W or less
		Backlight OFF (Standby Mode)	7 W or less
		Backlight Dimmed (Brightness: 20%)	8 W or less
	In-Rush Current		30 A or less
Voltage Endurance			1500 Vac, 20 mA for 1 min. (between charging and FG terminals)
Insulation Resistance			500 Vdc, 10 MΩ or more (between charging and FG terminals)

Environmental Specifications

Physical Environment	Surrounding Air Temperature	0...55 °C (32...131 °F)
	Storage Temperature	-20...60 °C (-4...140 °F)
	Surrounding Air and Storage Humidity	10...90% RH (Non condensing, wet bulb temperature 39 °C [102.2 °F] or less)
	Dust	0.1 mg/m^3 (10^{-7} oz/ft^3) or less (non-conductive levels)
	Pollution Degree	For use in Pollution Degree 2 environment
	Corrosive Gases	Free of corrosive gases
	Atmospheric Pressure (Operating Altitude)	800...1,114 hPa (2,000 m [6,561 ft] or lower)
Mechanical Environment	Vibration Resistance	IEC/EN 61131-2 compliant 5...9 Hz Single amplitude 3.5 mm (0.14 in.) 9...150 Hz Fixed acceleration: 9.8 m/s^2 X, Y, Z directions for 10 cycles (approx. 100 min.)
	Concussion Resistance	IEC/EN 61131-2 compliant 147 m/s^2, X, Y, Z directions for 3 times
Electrical Environment	Noise Immunity	Noise Voltage: 1,000 Vp-p Pulse Width: 1 µs Rise Time: 1 ns
	Electrostatic Discharge Immunity	Contact Discharge Method: 6 kV (IEC/EN 61000-4-2 Level 3)

Air quality requirements

Do not operate or store the panel where chemicals evaporate, or where chemicals are present in the air:

- Corrosive chemicals: Acids, alkalines, liquids containing salt.
- Flammable chemicals: Organic solvents.

⚠ CAUTION

INOPERATIVE EQUIPMENT

Do not allow water, liquids, metal, and wiring fragments to enter the panel case.

Failure to follow these instructions can result in injury or equipment damage.

Structural Specifications

	HMIGTO5310	HMIGTO5315
Grounding	Functional grounding: Grounding resistance of 100Ω, 2mm^2 (AWG 14) or thicker wire, or your country's applicable standard. (Same for FG and SG terminals)	
Cooling Method	Natural air circulation	
Structure[*1]	IP65f NEMA #250 TYPE 4X/13 (on the front panel when properly installed in an enclosure)	IP66k NEMA #250 TYPE 4X/13 (on the front panel when properly installed in an enclosure)[*2]
External Dimensions	W272.5 x H214.5 x D57 mm (W10.73 x H8.44 x D2.24 in.)	W316.5 x H258.5 x D57 mm (W12.44 x H10.18 x D2.24 in.)
Panel Cut Dimensions	W259 x H201 mm (W10.2 x H7.91 in.)[*3] Panel thickness area: 1.6...5 mm (0.06...0.2 in.)[*4]	W298 x H240 mm (W11.73 x H9.45 in.)[*3] Panel thickness area: 1.6...5 mm (0.06...0.2 in.)[*4]
Weight	2.0 kg (4.4 lb) or less (main unit only)	2.5 kg (5.5 lb) or less (main unit only)

NOTE: [*1] The front face of the HMIGTO, installed in a solid panel, has been tested using conditions equivalent to the standards shown in the specification. Even though the HMIGTO's level of resistance is equivalent to these standards, oils that should have no effect on the HMIGTO can possibly harm the panel. This can occur in areas where either vaporized oils are present, or where low viscosity cutting oils are allowed to adhere to the panel for long periods of time. If the panel's front face protection sheet peels off, these conditions can lead to the ingress of oil into the panel and separate protection measures are suggested.
Also, if non-approved oils are present, they may cause deformation or corrosion of the front panel's plastic cover. Therefore, prior to installing the HMIGTO, be sure to confirm the type of conditions that will be present in the panel' operating environment. If the installation gasket is used for a long period of time, or if the HMIGTO and its gasket are removed from the panel, the original level of protection cannot be kept. To maintain the original protection level, be sure to replace the installation gasket regularly.
[*2] When installing the HMIGTO in a panel, you may not be able to mount the HMIGTO flush with the panel. This occurs due to the thickness of the gasket. The difference in level between the HMIGTO and panel depends on how much the gasket is compressed.

NOTICE

EQUIPMENT DAMAGE

For food and beverage and pharmaceutical industries, when the HMIGTO is not flush with panel, use silicon to form a seal to prevent water, chemicals, or food from lodging into place. Otherwise, the panel face could leak.

Failure to follow these instructions can result in equipment damage.

[*3] For dimensional tolerance, everything +1/-0 mm (+0.04/-0 in.) and R in angle are below R3 (R0.12 in.)

[*4] Even if the installation wall thickness is within the recommended range for the "Panel Cut Dimensions", depending on wall's material, size, and installation location of the panel and other devices, the installation wall could warp. To prevent warping, the installation surface may need to be strengthened.

⚠ CAUTION

EQUIPMENT DAMAGE

Ensure that the panel is not in permanent and direct contact with oils.

Failure to follow these instructions can result in injury or equipment damage.

NOTICE

STORAGE AND OPERATION OUTSIDE OF SPECIFICATIONS

- Store the panel in areas where temperatures are within the panel's specifications.
- Do not restrict or block the panel's rear-face ventilation slots.

Failure to follow these instructions can result in equipment damage.

NOTICE

GASKET AGING

- Inspect the gasket periodically as required by your operating environment to keep the initial IP level.
- Change the gasket at least once a year, or as soon as scratches or dirt become visible.

Failure to follow these instructions can result in equipment damage.

Display Specifications

Display Type		TFT Color LCD
Display Size		10.4”
Resolution		640 x 480 pixels (VGA)
Effective Display Area		W211.2 x H158.4 mm (8.31 x 6.24 in.)
Display Colors		65,536 colors (No blink) / 16,384 colors (Blink)
Backlight		White LED (Not user replaceable. When replacement is required, contract your local distributor.)
Backlight Service Life		50,000 hours or more (continuous operation at 25 °C [77 °F] before backlight brightness dimmed to 50%
Brightness Control		16 levels (Adjusted with the touch panel or software)
Language Fonts		ASCII: (Code page 850) Alphanumeric (including European characters) Chinese: (GB2312-80 codes) Simplified Chinese fonts Japanese: ANK 158, Kanji: 6,962 (JIS Standards 1 & 2) (including 607 non-kanji characters) Korean: (KSC5601 - 1992 codes) Hangul fonts Taiwanese: (Big 5 codes) Traditional Chinese fonts
Character Sizes		8 x 8, 8 x 16, 16 x 16 and 32 x 32 pixel fonts
Font Sizes		You can expand the width up to 8 times, and expand the height up to 8 times.*1
Text	8 x 8 pixels	80 characters per row x 60 rows
	8 x 16 pixels	80 characters per row x 30 rows
	16 x 16 pixels	40 characters per row x 30 rows
	32 x 32 pixels	20 characters per row x 15 rows

*1 You can set up other font sizes using the software.

Memory, Clock, and Touch Panel

Memory

Application Memory *1	FLASH EPROM 96 MB
Application run DRAM	128 MB
Data Backup	SRAM 512 KB (Replaceable lithium battery for data backup)

*1 Capacity available for user application.

NOTE:

- When the message "Battery level is low" is displayed, supply power to the panel and fully charge the battery.

Clock

Clock Accuracy*1	±65 seconds/month (deviation at room temperature and power is OFF).

*1 Depending on the operating temperature and age of panel, the clock can deviate from -380 to +90 sec/month. For systems where this level of precision is insufficient, the user should monitor and make adjustments when required.

Touch Panel

Touch Panel Type	Resistive Film (analog)
Touch Panel Resolution	1,024 x 1,024
Service Life	1 million times or more

Interface Specifications

Serial Interface COM1

Asynchronous Transmission	RS-232C
Data Length	7 or 8 bits
Stop Bit	1 or 2 bits
Parity	None, odd or even
Data Transmission Speed	2,400...115,200 bps
Connector	D-Sub 9 pin (plug)

Serial Interface COM2

Asynchronous Transmission	RS-485
Data Length	7 or 8 bits
Stop Bit	1 or 2 bits
Parity	None, odd or even
Data Transmission Speed	2,400...115,200 bps, 187,500 bps (MPI)
Connector	Modular jack (RJ-45)

USB Interface

	USB (Type A) Interface	**USB (mini-B) Interface**
Connector	USB 2.0 (Type A) x 1	USB 2.0 (mini-B) x 1
Power Supply Voltage	5 Vdc ±5%	-
Maximum Current Supplied	500 mA	-
Maximum Transmission Distance	5 m (16.4 ft)	

Ethernet Interface

Ethernet (LAN)	IEEE802.3i / IEEE802.3u, 10BASE-T/100BASE-TX
Connector	Modular jack (RJ45) x 1

SD Card Interface

SD Card slot x 1 (maximum 32 GB SD/SDHC Card)

Specifications of Serial Interface COM1

Introduction

⚠ CAUTION

LOSS OF POWER

- Make sure all connections to the communication ports on the bottom and sides of the panel do not put excessive stress on the ports.
- Securely attach communication cables to the panel or cabinet.
- Use only D-Sub 9 pin cables with a locking system in good condition.

Failure to follow these instructions can result in injury or equipment damage.

The serial port is not isolated. The SG (signal ground) and FG (frame ground) terminals are connected inside the panel.

⚠⚠ DANGER

ELECTRIC SHOCK

When using the SG terminal to connect an external device to the panel:

- Verify that a short-circuit loop is not created when you set up the system.
- Connect the #5 SG terminal to remote equipment when the host (PLC) unit is not isolated. Connect the #5 SG terminal to a known reliable ground connection to reduce the risk of damaging the circuit.

Failure to follow these instructions will result in death or serious injury.

Serial Interface COM1

HMIGTO5310 / HMIGTO5315: D-Sub 9 pin plug connector via an RS-232C cable.

Pin Connection	Pin No.	RS-232C		
		Signal Name	Direction	Meaning
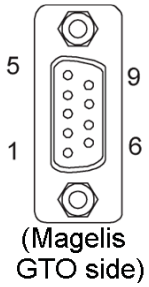 (Magelis GTO side)	1	CD	Input	Carrier Detect
	2	RD(RXD)	Input	Receive Data
	3	SD(TXD)	Output	Send Data
	4	ER(DTR)	Output	Data Terminal Ready
	5	SG	-	Signal Ground
	6	DR(DSR)	Input	Data Set Ready
	7	RS(RTS)	Output	Request to Send
	8	CS(CTS)	Input	Send possible
	9	CI(RI)/VCC	Input/–	Called Status Display +5V±5% Output 0.25A[*1]
	Shell	FG	–	Frame Ground (Common with SG)

NOTE: [*1] You can switch pin #9 between RI and VCC via software.

NOTICE

EQUIPMENT DAMAGE

Use only the rated current.

Failure to follow these instructions can result in equipment damage.

Interfit bracket is #4-40 (UNC).

⚠ CAUTION

LOSS OF COMMUNICATION

- All connections to the communication ports must not put excessive stress on the ports.
- Securely attach communication cables to the panel wall or cabinet.
- Use only D-Sub 9 pin cables with a locking tab in good condition.

Failure to follow these instructions can result in injury or equipment damage.

Specifications of Serial Interface COM2

Introduction

The serial port is not isolated. The SG (signal ground) and FG (frame ground) terminals are connected inside the panel.

⚠⚠ DANGER

ELECTRIC SHOCK

When using the SG terminal to connect an external device to the panel:
- Verify that a short-circuit loop is not created when you set up the system.
- Connect the #8 SG terminal to remote equipment when the host (PLC) unit is not isolated. Connect the #8 SG terminal to a known reliable ground connection to reduce the risk of damaging the circuit.

Failure to follow these instructions will result in death or serious injury.

Serial Interface COM2

HMIGTO5310 / HMIGTO5315: RJ45 connector via a RS-485 cable.

NOTE: When setting up RS-485 communication, the cable diagram for some equipment may require polarization on the terminal side. This terminal does not require any special setting as it handles polarization automatically.

Pin Connection	Pin No.	RS-485		
		Signal Name	Direction	Meaning
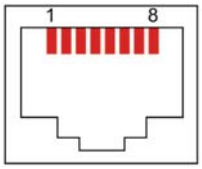	1	NC	-	-
	2	NC	-	-
	3	NC	-	-
	4	Line A	Input/Output	Transfer Data (RS-485)
	5	Line B	Input/Output	Transfer Data (RS-485)
	6	RS(RTS)	Output	Request To Send
	7	NC	-	-
	8	SG	-	Signal Ground

⚠ CAUTION

LOSS OF COMMUNICATION

- All connections to the communication ports must not put excessive stress on the ports.
- Securely attach communication cables to the panel wall or cabinet.
- Use only RJ45 with a locking tab in good condition.

Failure to follow these instructions can result in injury or equipment damage.

Dimensions

External Dimensions: HMIGTO5310

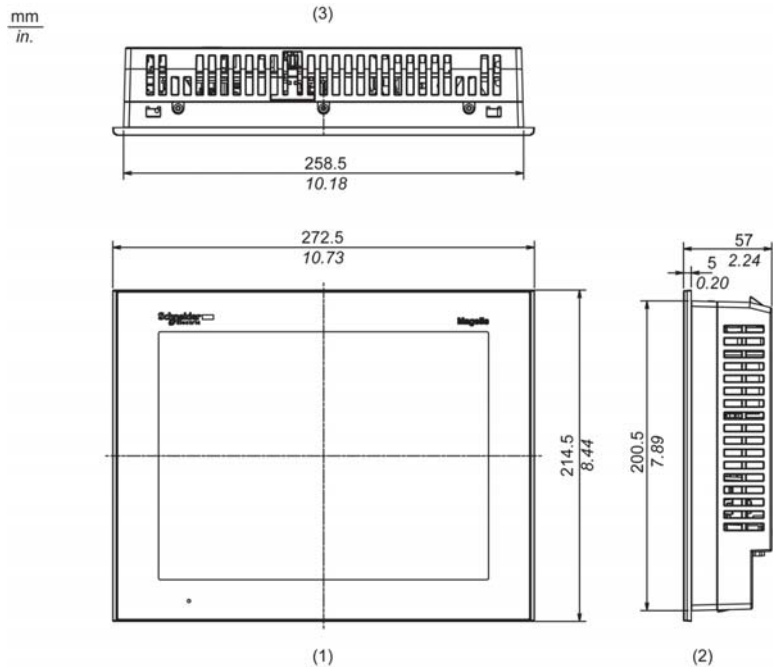

1 Front
2 Right Side
3 Top

External Dimensions: HMIGTO5315

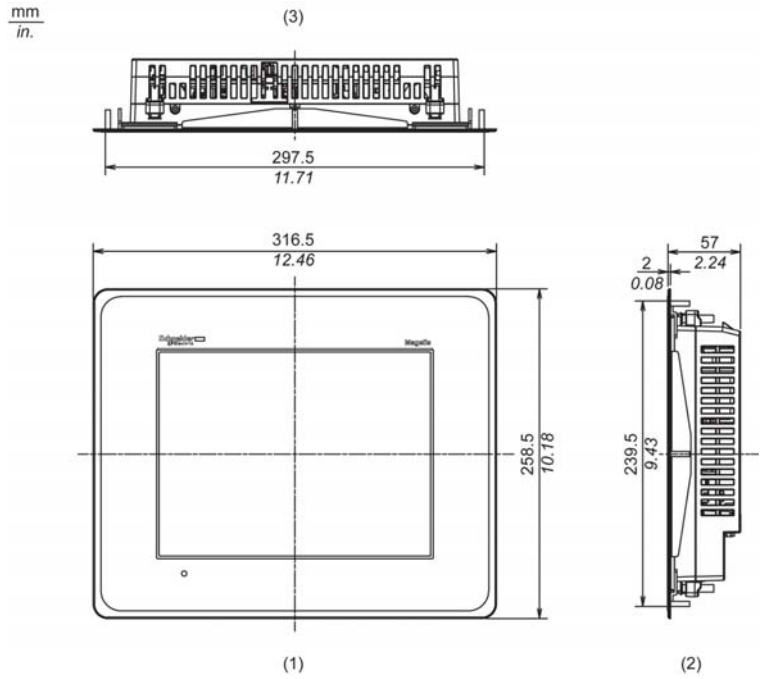

1 Front
2 Right Side
3 Top

Installation with Installation Fasteners: HMIGTO5310

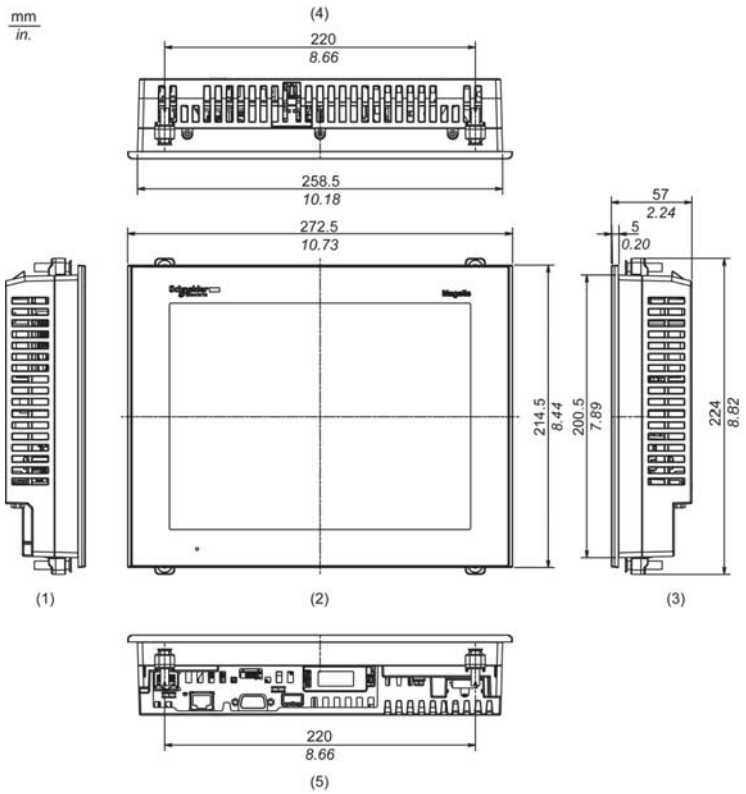

1 Left Side
2 Front
3 Right Side
4 Top
5 Bottom

Installation with Installation Fasteners: HMIGTO5315

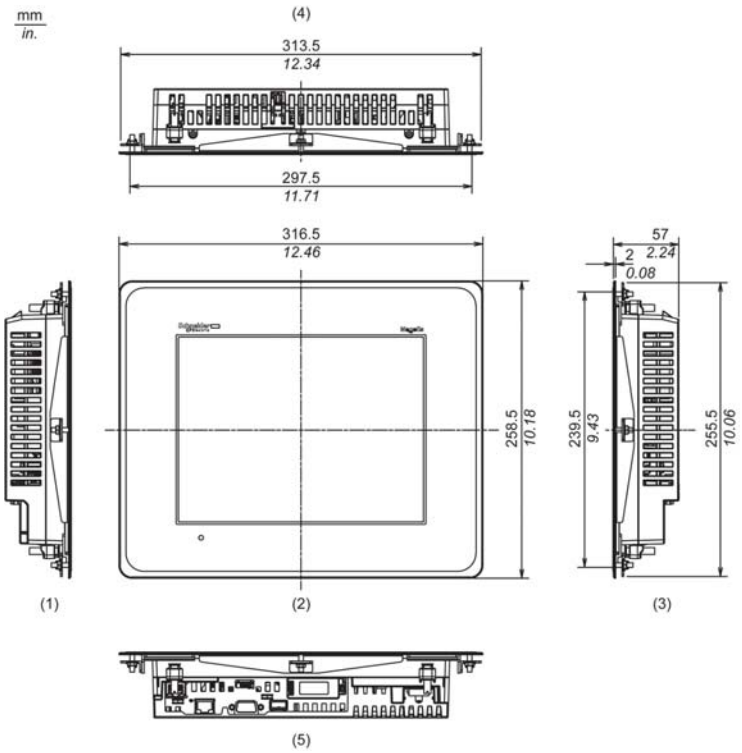

1 Left Side
2 Front
3 Right Side
4 Top
5 Bottom

Dimensions with Cables: HMIGTO5310

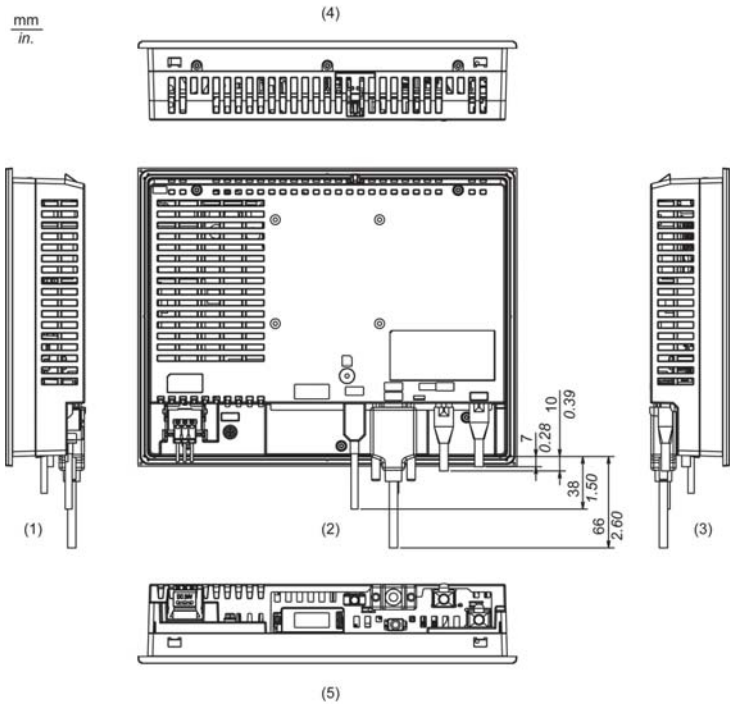

1 Left Side
2 Rear
3 Right Side
4 Top
5 Bottom

NOTE: All the above values are designed with cable bending in mind. The dimensions given here are representative values depending on the type of connection cable in use. Therefore, these values are intended for reference only.

Dimensions with Cables: HMIGTO5315

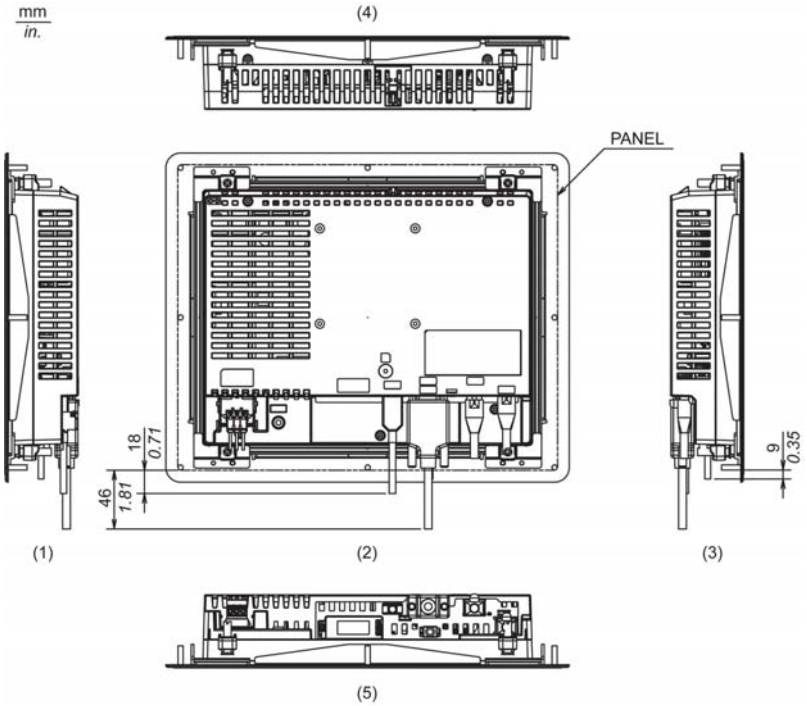

1 Left Side
2 Rear
3 Right Side
4 Top
5 Bottom

NOTE: All the above values are designed with cable bending in mind. The dimensions given here are representative values depending on the type of connection cable in use. Therefore, these values are intended for reference only.

Panel Cut Dimensions

Create a panel cut and insert the panel into the opening from the front.

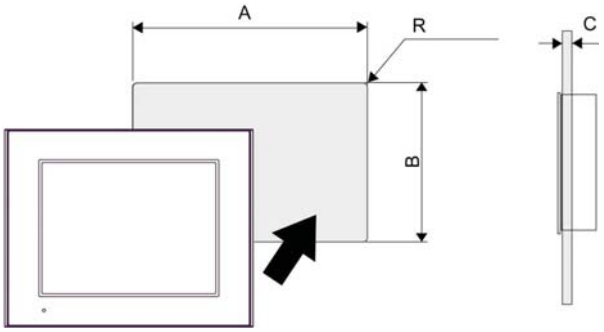

	A	B	C	R
HMIGTO5310	259 mm (+1, -0 mm) (10.2 in. [+0.04, -0 in.])	201 mm (+1, -0 mm) (7.91 in. [+0.04, -0 in.])	1.6...5 mm (0.06...0.2 in.)	3 mm (0.12 in.) maximum
HMIGTO5315	298 mm (+1, -0 mm) (11.73 in. [+0.04, -0 in.])	240 mm (+1, -0 mm) (9.45 in. [+0.04, -0 in.])		

NOTE: Before designing the panel cut, refer to Installation *(see page 120)*.

Installation Fastener Dimensions

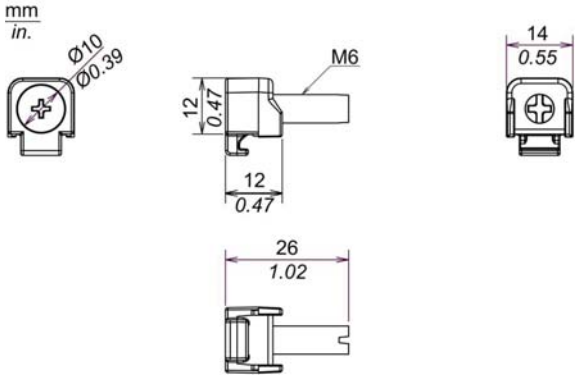

Section 4.5
HMIGTO6310/6315

What Is in This Section?

This section contains the following topics:

Topic	Page
Electrical Specifications	102
Environmental Specifications	103
Structural Specifications	104
Display Specifications	106
Memory, Clock, and Touch Panel	107
Interface Specifications	108
Specifications of Serial Interface COM1	109
Specifications of Serial Interface COM2	111
Dimensions	112

Electrical Specifications

Power Supply	Rated Input Voltage		24 Vdc
	Input Voltage Limits		19.2...28.8 Vdc
	Voltage Drop		10 ms or less
	Power Consumption		17 W or less
		When power is not supplied to external devices	12 W or less
		Backlight OFF (Standby Mode)	7 W or less
		Backlight Dimmed (Brightness: 20%)	8 W or less
	In-Rush Current		30 A or less
Voltage Endurance			1,500 Vac, 20 mA for 1 minute (between charging and FG terminals)
Insulation Resistance			500 Vdc, 10 MΩ or more (between charging and FG terminals)

Environmental Specifications

Physical Environment	Surrounding Air Temperature	0...55 °C (32...131 °F)
	Storage Temperature	-20...60 °C (-4...140 °F)
	Surrounding Air and Storage Humidity	10...90% RH (Non condensing, wet bulb temperature 39 °C [102.2 °F] or less)
	Dust	0.1 mg/m^3 (10^{-7} oz/ft^3) or less (non-conductive levels)
	Pollution Degree	For use in Pollution Degree 2 environment
	Corrosive gases	Free of corrosive gases
	Atmospheric Pressure (Operating Altitude)	800...1,114 hPa (2,000 m [6,561 ft] or lower)
Mechanical Environment	Vibration Resistance	IEC/EN 61131-2 compliant 5...9 Hz Single amplitude 3.5 mm (0.14 in.) 9...150 Hz Fixed acceleration: 9.8 m/s^2 X, Y, Z directions for 10 cycles (approx.100 minute)
	Concussion Resistance	IEC/EN 61131-2 compliant 147 m/s^2, X, Y, Z directions for 3 times
Electrical Environment	Noise immunity	Noise Voltage: 1,000 Vp-p Pulse Width: 1 µs Rise Time: 1 ns
	Electrostatic Discharge Immunity	Contact Discharge Method: 6 kV (IEC/EN 61000-4-2 Level 3)

Air quality requirements

Do not operate or store the panel where chemicals evaporate, or where chemicals are present in the air:

- Corrosive chemicals: Acids, alkalines, liquids containing salt.
- Flammable chemicals: Organic solvents.

⚠ CAUTION

INOPERATIVE EQUIPMENT

Do not allow water, liquids, metal, and wiring fragments to enter the panel case.

Failure to follow these instructions can result in injury or equipment damage.

Structural Specifications

	HMIGTO6310	HMIGTO6315
Grounding	Functional grounding: Grounding resistance of 100 Ω, 2 mm^2 (AWG 14) or thicker wire, or your country's applicable standard. (Same for FG and SG terminals)	
Cooling Method	Natural air circulation	
Structure[*1]	IP65f NEMA #250 TYPE 4X/13 (on the front panel when properly installed in an enclosure)	IP66k NEMA #250 TYPE 4X/13 (on the front panel when properly installed in an enclosure)[*2]
External Dimensions	W315 x H241 x D56 mm (W12.4 x H9.49 x D2.2 in.)	W359 x H285 x D56 mm (W14.13 x H11.22 x D2.2 in.)
Panel Cut Dimensions	W301.5 x H227.5 mm (W11.87 x H8.96 in.)[*3] Panel thickness area: 1.6...5 mm (0.06...0.2 in.)[*4]	W340.5 x H266.5 mm (W13.41 x H10.49 in.)[*3] Panel thickness area: 1.6...5 mm (0.06...0.2 in.)[*4]
Weight	2.5 kg (5.5 lb) or less (main unit only)	3 kg (6.6 lb) or less (main unit only)

NOTE: [*1] The front face of the HMIGTO, installed in a solid panel, has been tested using conditions equivalent to the standards shown in the specification. Even though the HMIGTO's level of resistance is equivalent to these standards, oils that should have no effect on the HMIGTO can possibly harm the panel. This can occur in areas where either vaporized oils are present, or where low viscosity cutting oils are allowed to adhere to the panel for long periods of time. If the panel's front face protection sheet peels off, these conditions can lead to the ingress of oil into the panel and separate protection measures are suggested.

Also, if non-approved oils are present, they may cause deformation or corrosion of the front panel's plastic cover. Therefore, prior to installing the HMIGTO, be sure to confirm the type of conditions that will be present in the panel's operating environment. If the installation gasket is used for a long period of time, or if the HMIGTO and its gasket are removed from the panel, the original level of protection cannot be kept. To maintain the original protection level, be sure to replace the installation gasket regularly.

[*2] When installing the HMIGTO in a panel, you may not be able to mount the HMIGTO flush with the panel. This occurs due to the thickness of the gasket. The difference in level between the HMIGTO and panel depends on how much the gasket is compressed.

NOTICE

EQUIPMENT DAMAGE

For food and beverage and pharmaceutical industries, when the HMIGTO is not flush with panel, use silicon to form a seal to prevent water, chemicals, or food from lodging into place. Otherwise, the panel face could leak.

Failure to follow these instructions can result in equipment damage.

[*3] For dimensional tolerance, everything +1/-0 mm (+0.04/-0 in.) and R in angle are below R3 (R0.12in.)

[*4] Even if the installation wall thickness is within the recommended range for the "Panel Cut Dimensions", depending on wall's material, size, and installation location of the panel and other devices, the installation wall could warp. To prevent warping, the installation surface may need to be strengthened.

⚠ CAUTION

EQUIPMENT DAMAGE

Ensure that the panel is not in permanent and direct contact with oils.

Failure to follow these instructions can result in injury or equipment damage.

NOTICE

STORAGE AND OPERATION OUTSIDE OF SPECIFICATIONS

- Store the panel in areas where temperatures are within the panel's specifications.
- Do not restrict or block the panel's rear-face ventilation slots.

Failure to follow these instructions can result in equipment damage.

NOTICE

GASKET AGING

- Inspect the gasket periodically as required by your operating environment to keep the initial IP level.
- Change the gasket at least once a year, or as soon as scratches or dirt become visible.

Failure to follow these instructions can result in equipment damage.

Display Specifications

Display Type		TFT Color LCD
Display Size		12.1”
Resolution		800 x 600 pixels (SVGA)
Effective Display Area		W246.0 x H184.5 mm (W9.69 x H7.26 in.)
Display Colors		65,536 colors (No blink) / 16,384 colors (Blink)
Backlight		White LED (Not user replaceable. When replacement is required, contact your local distributor.)
Backlight Service Life		50,000 hours (continuous operation at at 25 °C [77 °F] before backlight brightness decreases to 50%)
Brightness Control		16 levels (Adjusted with touch panel or software)
Language Fonts		ASCII: (Code page 850) Alphanumeric (including European characters) Chinese: (GB2312-80 codes) Simplified Chinese fonts Japanese: ANK 158, Kanji: 6,962 (JIS Standards 1 & 2) (including 607 non-kanji characters) Korean: (KSC5601 - 1992 codes) Hangul fonts Taiwanese: (Big 5 codes) Traditional Chinese fonts
Character Sizes		8 x 8, 8 x 16, 16 x 16 and 32 x 32 pixel fonts
Text	8 x 8 pixels	100 characters per row x 75 rows
	8 x 16 pixels	100 characters per row x 37 rows
	16 x 16 pixels	50 characters per row x 37 rows
	32 x 32 pixels	25 characters per row x 18 rows

*1 You can set up other font sizes using the software.

Memory, Clock, and Touch Panel

Memory

Application Memory*1	FLASH EPROM96 MB
Application run DRAM	128 MB
Data Backup	SRAM 512 KB (Replaceable lithium battery for backup memory)

*1 Capacity available for user application.

NOTE:

- When the message "Battery level is low" is displayed, supply power to the panel and fully charge the battery.

Clock

Clock Accuracy*1	±65 seconds/month (deviation at room temperature and power is OFF).

*1 Depending on the operating temperature and age of the panel, the clock can deviate from -380 to +90 sec/month. For systems where this level of precision is insufficient, the user should monitor and make adjustments when required.

Touch Panel

Touch Panel Type	Resistive Film (analog)
Touch Panel Resolution	1,024 x 1,024
Touch Panel Service Life	1 million times or more

Interface Specifications

Serial Interface COM1

Asynchronous Transmission	RS-232C
Data Length	7 or 8 bits
Stop Bit	1 or 2 bits
Parity	None, odd or even
Data Transmission Speed	2,400...115,200 bps
Connector	D-Sub 9 pin (plug)

Serial Interface COM2

Asynchronous Transmission	RS-485
Data Length	7 or 8 bits
Stop Bit	1 or 2 bits
Parity	None, odd or even
Data Transmission Speed	2,400...115,200 bps, 187,500 bps (MPI)
Connector	Modular jack (RJ-45)

USB Interface

	USB (Type A) Interface	**USB (mini-B) Interface**
Connector	USB 2.0 (Type A) x 1	USB 2.0 (mini-B) x 1
Power Supply Voltage	5 Vdc ±5%	-
Maximum Current Supplied	500 mA	-
Maximum Transmission Distance	5 m (16.4 ft)	

Ethernet Interface

Ethernet (LAN)	IEEE802.3i / IEEE802.3u, 10BASE-T/100BASE-TX
Connector	Modular jack (RJ45) x 1

SD Card Interface

SD Card slot x 1 (maximum 32 GB SD/SDHC Card)

Specifications of Serial Interface COM1

Introduction

⚠ CAUTION

LOSS OF POWER

- Make sure all connections to the communication ports on the bottom and sides of the panel do not put excessive stress on the ports.
- Securely attach communication cables to the panel or cabinet.
- Use only D-Sub 9 pin cables with a locking system in good condition.

Failure to follow these instructions can result in injury or equipment damage.

The serial port is not isolated. The SG (signal ground) and FG (frame ground) terminals are connected inside the panel.

⚠⚠ DANGER

ELECTRIC SHOCK

When using the SG terminal to connect an external device to the panel:

- Verify that a short-circuit loop is not created when you set up the system.
- Connect the #5 SG terminal to remote equipment when the host (PLC) unit is not isolated. Connect the #5 SG terminal to a known reliable ground connection to reduce the risk of damaging the circuit.

Failure to follow these instructions will result in death or serious injury.

Serial Interface COM1

HMIGTO6310 / HMIGTO6315: D-Sub 9 pin plug connector via an RS-232C cable.

Pin Connection	Pin No.	RS-232C		
		Signal Name	Direction	Meaning
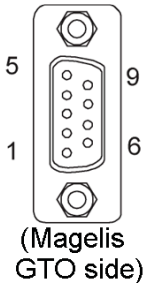 (Magelis GTO side)	1	CD	Input	Carrier Detect
	2	RD(RXD)	Input	Receive Data
	3	SD(TXD)	Output	Send Data
	4	ER(DTR)	Output	Data Terminal Ready
	5	SG	-	Signal Ground
	6	DR(DSR)	Input	Data Set Ready
	7	RS(RTS)	Output	Request to Send
	8	CS(CTS)	Input	Send possible
	9	CI(RI)/VCC	Input/–	Called Status Display +5V±5% Output 0.25A[*1]
	Shell	FG	–	Frame Ground (Common with SG)

NOTE: [*1] You can switch pin #9 between RI and VCC via software.

NOTICE

EQUIPMENT DAMAGE

Use only the rated current.

Failure to follow these instructions can result in equipment damage.

Interfit bracket is #4-40 (UNC).

⚠ CAUTION

LOSS OF COMMUNICATION

- All connections to the communication ports must not put excessive stress on the ports.
- Securely attach communication cables to the panel wall or cabinet.
- Use only D-Sub 9 pin cables with a locking tab in good condition.

Failure to follow these instructions can result in injury or equipment damage.

Specifications of Serial Interface COM2

Introduction

The serial port is not isolated. The SG (signal ground) and FG (frame ground) terminals are connected inside the panel.

⚠⚠ DANGER

ELECTRIC SHOCK

When using the SG terminal to connect an external device to the panel:
- Verify that a short-circuit loop is not created when you set up the system.
- Connect the #8 SG terminal to remote equipment when the host (PLC) unit is not isolated. Connect the #8 SG terminal to a known reliable ground connection to reduce the risk of damaging the circuit.

Failure to follow these instructions will result in death or serious injury.

Serial Interface COM2

HMIGTO6310 / HMIGTO6315: RJ45 connector via a RS-485 cable.

NOTE: When setting up RS-485 communication, the cable diagram for some equipment may require polarization on the terminal side. This terminal does not require any special setting as it handles polarization automatically.

Pin Connection	Pin No.	RS-485		
		Signal Name	Direction	Meaning
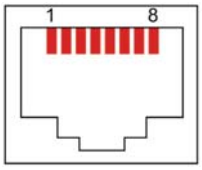	1	NC	-	-
	2	NC	-	-
	3	NC	-	-
	4	Line A	Input/Output	Transfer Data (RS-485)
	5	Line B	Input/Output	Transfer Data (RS-485)
	6	RS(RTS)	Output	Request To Send
	7	NC	-	-
	8	SG	-	Signal Ground

⚠ CAUTION

LOSS OF COMMUNICATION

- All connections to the communication ports must not put excessive stress on the ports.
- Securely attach communication cables to the panel wall or cabinet.
- Use only RJ45 with a locking tab in good condition.

Failure to follow these instructions can result in injury or equipment damage.

Dimensions

External Dimensions: HMIGTO6310

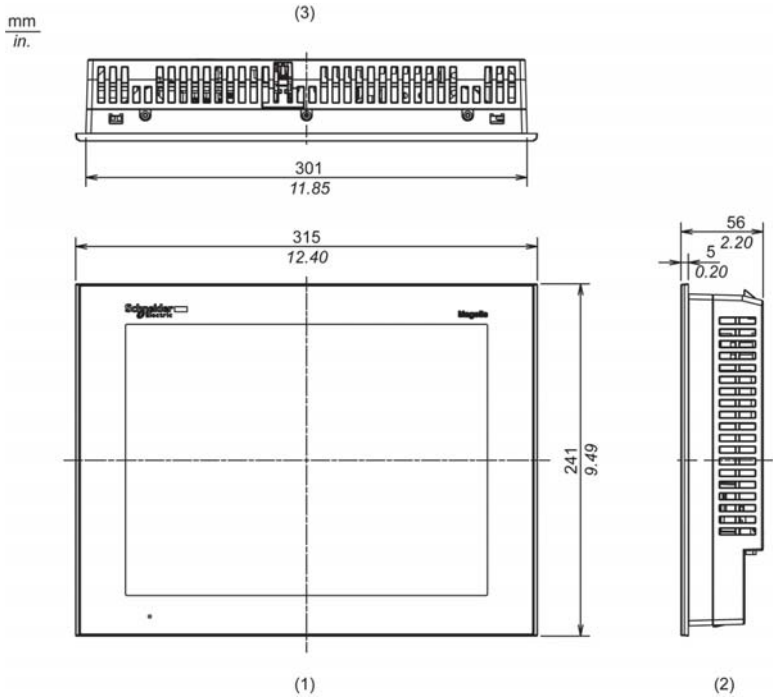

1 Front
2 Right Side
3 Top

External Dimensions: HMIGTO6315

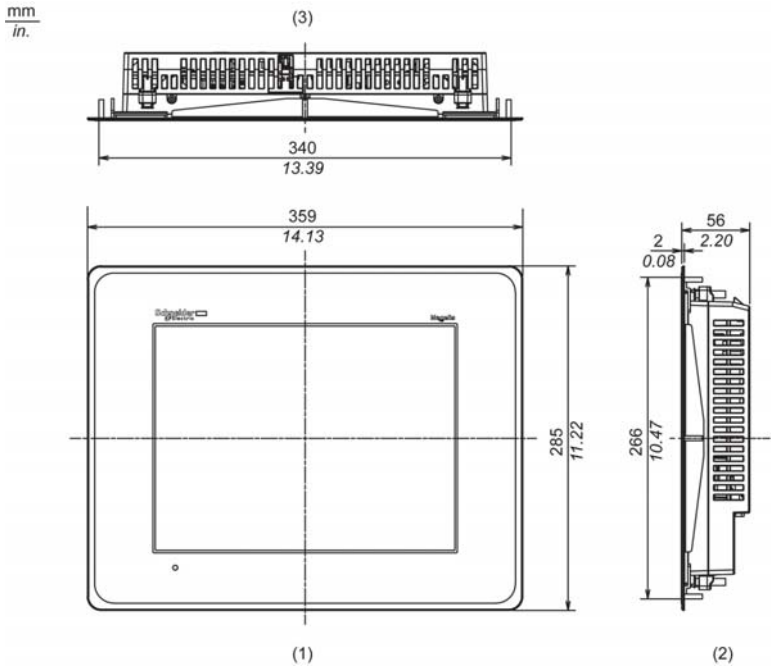

1 Front
2 Right Side
3 Top

Installation with Installation Fasteners: HMIGTO6310

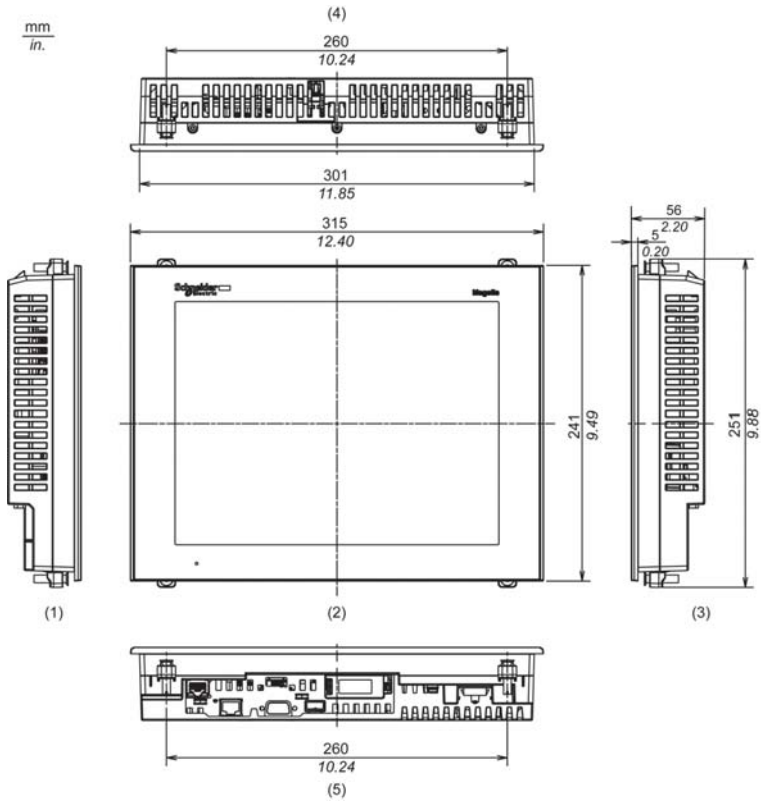

1 Left Side
2 Front
3 Right Side
4 Top
5 Bottom

Installation with Installation Fasteners: HMIGTO6315

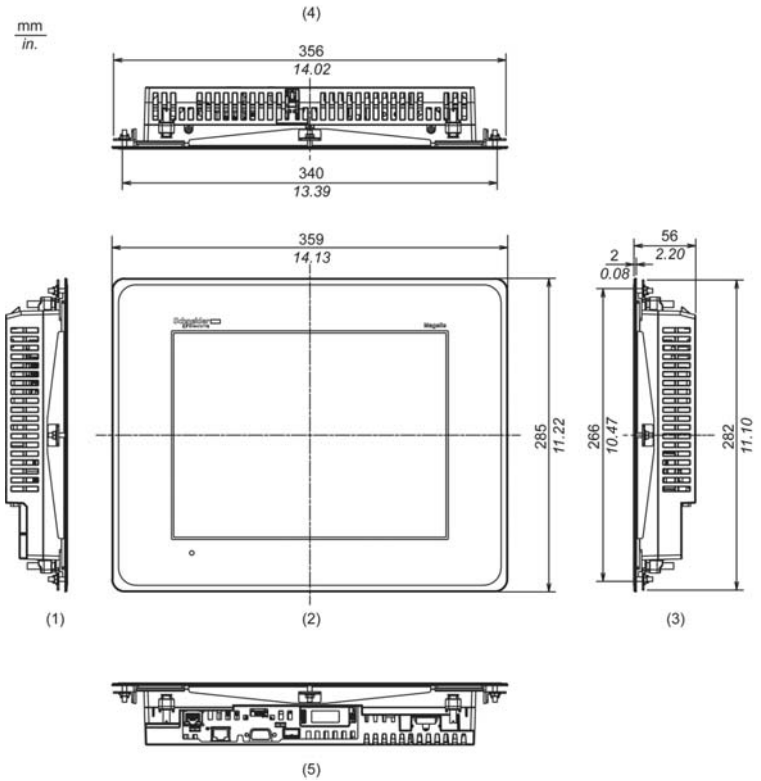

1 Left Side
2 Front
3 Right Side
4 Top
5 Bottom

Dimensions with Cables: HMIGTO6310

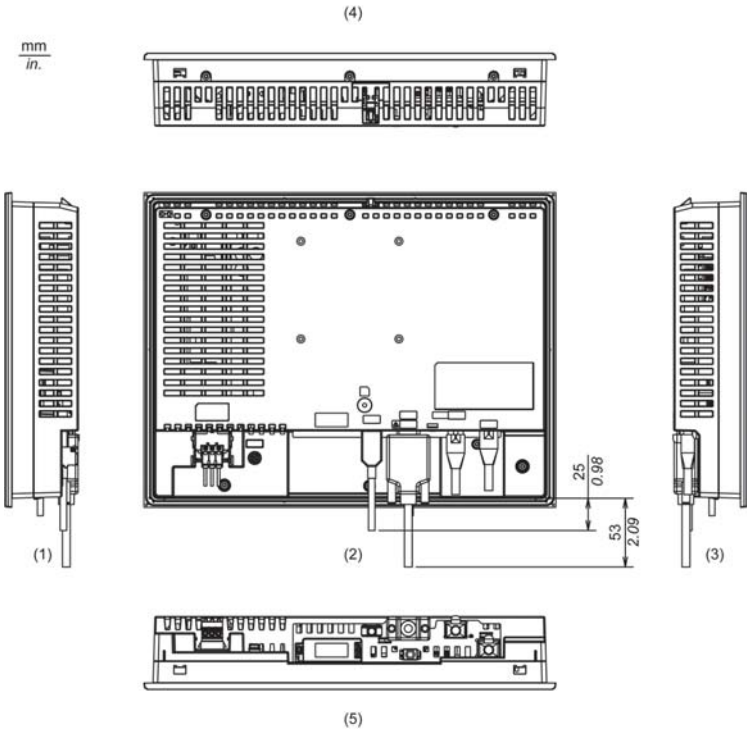

1 Left Side
2 Rear
3 Right Side
4 Top
5 Bottom

NOTE: All the above values are designed with cable bending in mind. The dimensions given here are representative values depending on the type of connection cable in use. Therefore, these values are intended for reference only.

Dimensions with Cables: HMIGTO6315

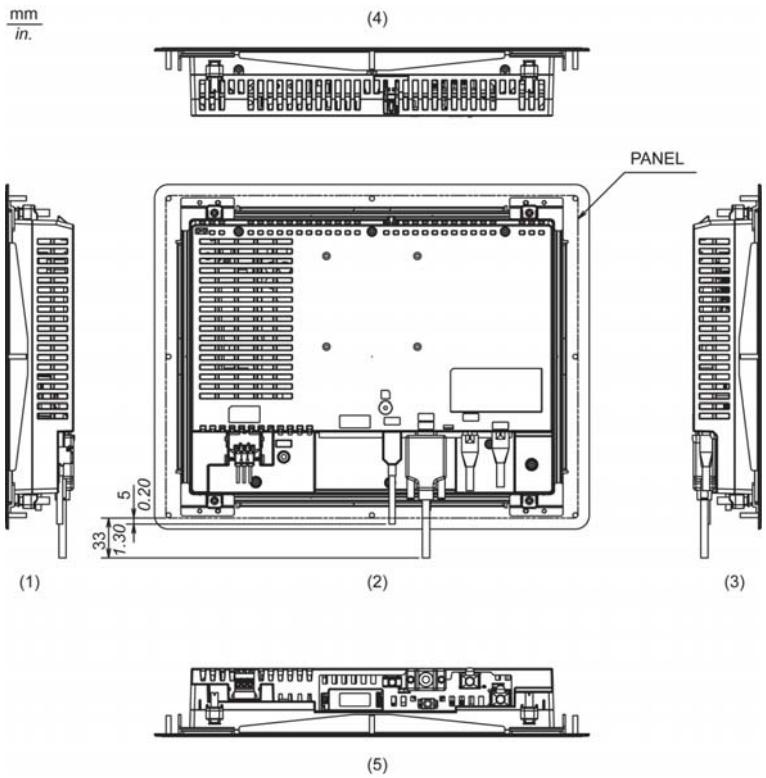

1 Left Side
2 Rear
3 Right Side
4 Top
5 Bottom

NOTE: All the above values are designed with cable bending in mind. The dimensions given here are representative values depending on the type of connection cable in use. Therefore, these values are intended for reference only.

Panel Cut Dimensions

Create a panel cut and insert the panel into the opening from the front.

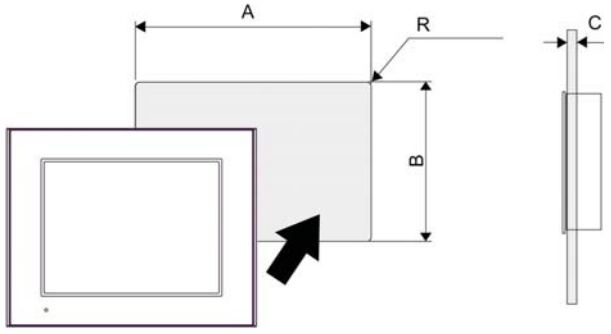

	A	B	C	R
HMIGTO6310	301.5 mm (+1, -0 mm) (11.87 [+0.04, -0 in.])	227.5 mm (+1, -0 mm) (8.96 in. [+0.04, -0 in.])	1.6...5 mm (0.06...0.2 in.)	3 mm (0.12 in.) maximum
HMIGTO6315	340.5 mm (+1, -0 mm) (13.41 [+0.04, -0 in.])	266.5 mm (+1, -0 mm) (10.49 in. [+0.04, -0 in.])		

NOTE: Before designing the panel cut, refer to Installation *(see page 120)*.

Installation Fastener Dimensions

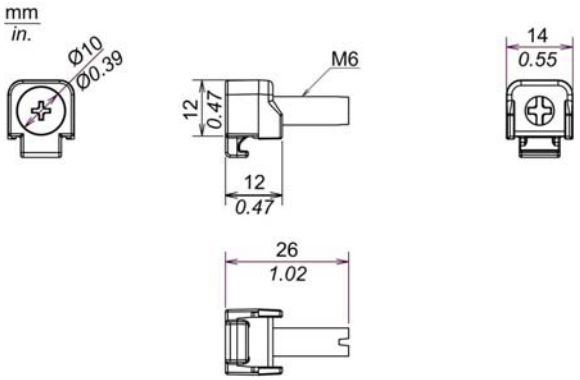

Chapter 5
Installation and Wiring

What Is in This Chapter?

This chapter contains the following sections:

Section	Topic	Page
5.1	Installation	120
5.2	Wiring Principles	125
5.3	SD Card Insertion/Removal	131
5.4	USB Cable Clamp	136

Section 5.1
Installation

Installation Procedures

Introduction

The installation fasteners are required when installing the panel.

Mount the panel in an enclosure that provides a clean, dry, robust and controlled environment. (HMIGTO except HMIGTO2315/HMIGTO5315/HMIGTO6315: IP65, Type 1, Type 4X [Indoor Use Only] or Type 13 Enclosure. HMIGTO2315/HMIGTO5315/HMIGTO6315: IP66k, Type 1, Type 4X [Indoor Use Only] or Type 13 Enclosure.)

Installation Requirements

Check that the installation wall or cabinet's surface is flat, in good condition and has no jagged edges. Metal reinforcing strips may be attached to the inside of the wall, near the panel-cut, to increase its rigidity.
Decide on the thickness of the enclosure wall, based on the level of strength required: 1.6...5 mm (0.06...0.2 in.).
Be sure that the surrounding air temperature and the ambient humidity are within their designated ranges. Surrounding air temperature: 0 to 50 °C (32 to 122 °F) or 0 to 55 °C (32 to 131 °F) (please see the Environment Specifications for your HMIGTO); ambient humidity: 10 to 90%RH; wet bulb temperature: maximum 39 °C [102 °F]. When installing the panel in a cabinet or enclosure, the surrounding air temperature is the cabinet's or enclosure's internal temperature. 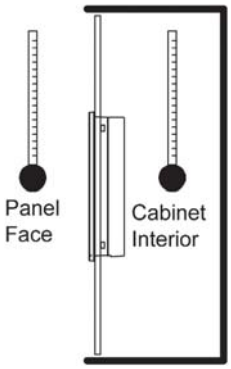
Be sure that heat from surrounding equipment does not cause the panel to exceed its standard operating temperature.
When mounting the panel vertically, ensure that the right side of the unit faces up. In other words, the power connector should be at the top. 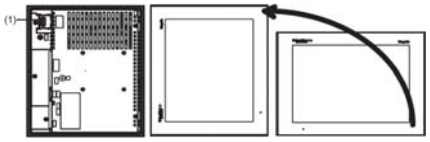 **1** Power connector
When installing the panel in a slanted position, the panel face should not incline more than 30° . 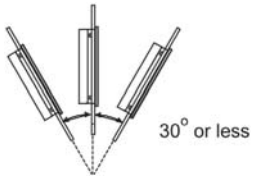
When installing the panel in a slanted position with an incline more than 30° , the ambient temperature must not exceed 40 °C (104 °F). You may need to use forced air cooling (fan, A/C) to ensure the ambient operating temperature is 40° C or less (104 °F or less).

For easier maintenance, operation and improved ventilation, install the panel at least 100 mm (3.94 in.) away from adjacent structures and other equipment as shown in the following illustration:

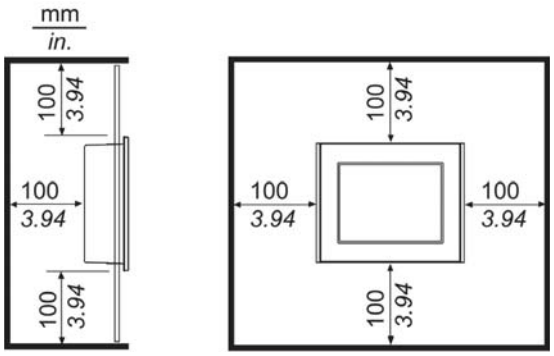

The holes on the rear of the panel (except HMIGTO1300/1310) do not correspond to VESA 75 mm standards. Do not attach the panel to a commercial-type VESA arm.

Panel Mounting Procedure: (except HMIGTO2315/HMIGTO5315/HMIGTO6315)

NOTICE

PANEL UNSTEADY WHEN UNSECURED

Keep HMIGTO stabilized in the panel-cut while you are installing or removing the screw fasteners.

Failure to follow these instructions can result in equipment damage.

Step	Action
1	Place the panel on a clean and level surface with the display facing downward.
2	Check that the panel's gasket is seated securely into the gasket's groove, which runs around the perimeter of the panel frame.
3	Cut a hole in the installation panel as defined by the HMIGTO's panel cutout dimensions. HMIGTO1300/HMIGTO1310 *(see page 48)* HMIGTO2300/HMIGTO2310 *(see page 66)* HMIGTO3510/HMIGTO4310 *(see page 82)* HMIGTO5310 *(see page 99)* HMIGTO6310 *(see page 116)*
4	Insert the HMIGTO into the panel-cut.

Step	Action
5	Insert the installation fasteners into the HMIGTO's insertion slots on the top and bottom sides (left and right sides for the HMIGTO1300/1310). Slide the fasteners to the back. If the fasteners are not correctly attached, the HMIGTO may shift or fall out. 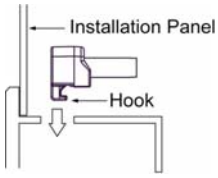 HMIGTO2310 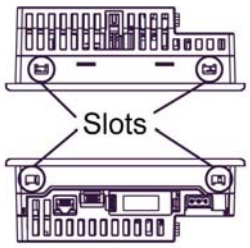 HMIGTO1310 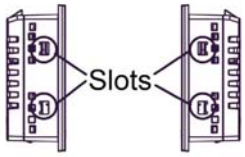
6	Insert each of the fasteners shown below. Make sure you pull the fastener back until it is flush with the rear of the attachment hole insert. 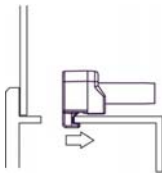
7	Use a Phillips screwdriver to tighten each fastener screw and secure the panel in place. The necessary torque is 0.5 Nm (4.4 lb•in). 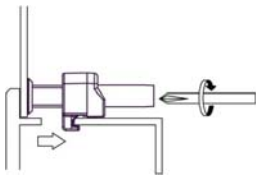

NOTICE

BROKEN ENCLOSURE

- Do not exert more than 0.5 Nm (4.4 lb•in) of torque when tightening the fastener's screws.
- Use on flat surface of a Type 1, Type 4X (Indoor Use Only) or Type 13 Enclosure.

Failure to follow these instructions can result in equipment damage.

Removal Procedure: (except HMIGTO2315/HMIGTO5315/HMIGTO6315)

Step	Action
1	Loosen the installation fasteners (4) from the HMIGTO.
2	Remove the HMIGTO slowly from the panel while pressing the projections on the top of the HMIGTO. 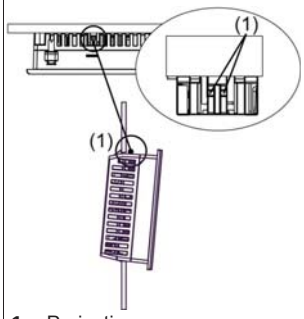 **1** Projections **NOTE:** ● You could damage the HMIGTO if you try and remove it without holding down the projections. ● Watch your fingers so they do not get caught when holding down the projections.

⚠ CAUTION

RISK OF INJURY

Do not drop the HMIGTO when you remove it from the panel.

- Hold the HMIGTO in place after removing the fasteners.
- Use both hands.

Failure to follow these instructions can result in injury or equipment damage.

HMIGTO2315/HMIGTO5315/HMIGTO6315 Panel Mounting Procedure

⚠ CAUTION

RISK OF INJURY

Do not drop the HMIGTO when you install or remove it from the panel.

- Hold the HMIGTO in place after removing the M4 Hex nuts and brackets.
- Use both hands.

Failure to follow these instructions can result in injury or equipment damage.

NOTICE

PANEL UNSTEADY WHEN UNSECURED

Keep panel stabilized in the panel-cut while you are installing or removing the M4 Hex nuts and brackets.

Failure to follow these instructions can result in equipment damage.

Step	Action
1	Place the panel on a clean and level surface with the display facing downward.
2	Confirm that the panel's gasket is seated properly on the rear of the panel.
3	Cut a hole in the panel as defined by the HMIGTO panel cutout dimensions. HMIGTO2315 *(see page 66)* HMIGTO5315 *(see page 99)* HMIGTO6315 *(see page 116)*

Step	Action
4	Insert the HMIGTO into the panel-cut. 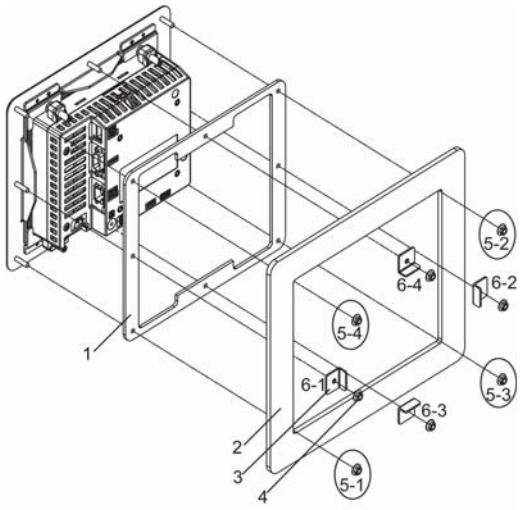 **1** Gasket **2** Panel **3** Brackets **4** M4 Hex Nut **5** Please read Step 5. **6** Please read Step 6.
5	Tighten the four corners of the rear of the panel with the M4 Hex nuts, in the order shown in the example in Step 4. Use an M4 box-type screwdriver to tighten each M4 Hex nut and secure the panel in place. The necessary torque is 0.5 Nm (4.4 lb•in). If the M4 Hex nuts are not correctly attached, the panel may shift or fall out.
6	Attach the bracket onto the screws in the middle between the M4 Hex nuts in the order shown in the example in Step 4. Use an M4 box-type screwdriver to tighten each M4 Hex nut and secure the panel in place. The necessary torque is 0.5 Nm (4.4 lb•in). If the M4 Hex nuts are not correctly attached, the panel may shift or fall out.
7	Tighten all the M4 Hex nuts again. The necessary torque is 0.5 Nm (4.4 lb•in). **NOTE:** Do not loosen the installation fasteners, marked with red squares below. 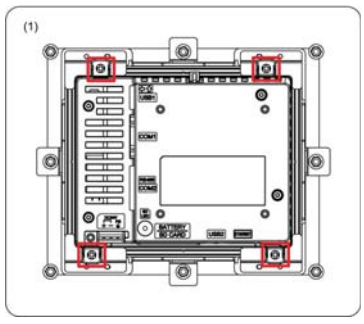 **1** Panel

NOTICE

BROKEN ENCLOSURE

- Do not exert more than 0.5 Nm (4.4 lb•in) of torque when tightening the M4 Hex nuts.
- Use on flat surface of a Type 1, Type 4X (Indoor Use Only) or Type 13 Enclosure.

Failure to follow these instructions can result in equipment damage.

Section 5.2
Wiring Principles

Overview

This section presents the HMIGTO wiring principles.

What Is in This Section?

This section contains the following topics:

Topic	Page
Connecting the Power Cord	126
Connecting the Power Supply	128
Grounding	130

Connecting the Power Cord

⚠ WARNING

EXCESSIVE ELECTROMAGNETIC INTERFERENCE

- When the functional ground (FG) terminal is connected, be sure the wire is grounded. Not grounding the HMIGTO can result in excessive Electromagnetic Interference (EMI). Grounding is required to meet EMC level immunity.
- Remove power before wiring the HMIGTO's power terminals.
- The DC model uses only 24 Vdc power. Using any other level of power can damage both the power supply and the HMIGTO.
- Since the HMIGTO is not equipped with a power switch, be sure to connect a power switch to the power supply.
- Be sure to ground the HMIGTO's FG terminal.
- Replace and secure all elements of the system before applying power to the HMIGTO.

Failure to follow these instructions can result in death, serious injury, or equipment damage.

NOTE: The shield ground (SG) and FG terminals are connected internally in the panel.

DC Power Cord Preparation

- Make sure the ground wire is either the same or heavier gauge than the power wires.
- Do not use aluminum wires in the power supply's power cord.
- If the ends of the individual wires are not twisted correctly, the wires may create a short circuit.
- Wherever possible, use wires that are 0.75 to 2.5 mm^2 (AWG 18 - 13) for the power cord, and twist the wire ends before attaching the terminals.
- The conductor type is solid or stranded wire.
- Field wiring terminal marking for wire type (75 °C [167 °F] copper conductors only).

DC Power Supply Connector (Plug) Specifications: Spring Clamp Terminal Blocks

HMIGTO1300/1310 / HMIGTO2300/2310/2315 / HMIGTO3510/4310

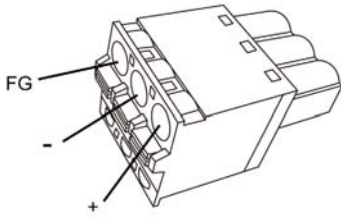

HMIGTO5310/5315 / HMIGTO6310/6315

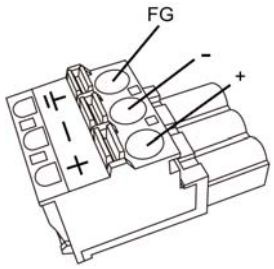

Connection	Wire
+	24 Vdc
-	0 Vdc
FG	Grounded terminal connected to the panel chassis.

How to connect the DC Power Cord

Step	Action
1	Confirm the power cord is not connected to the power supply.
2	Check the rated voltage and remove the “DC24V” sticker on the DC power supply connector.
3	Remove 10 mm (0.39 in.) of the vinyl membrane off the ends of the power cord wires.
4	If using stranded wire, twist the ends. Tinning the ends with solder reduces risk of fraying and ensures good electrical transfer.
5	Push the Opening button with a small and flat screwdriver to open the desired pin hole.
6	Insert each pin terminal into its corresponding hole. Release the Opening button to clamp the pin in place. HMIGTO1300/1310 / HMIGTO2300/2310/2315 / HMIGTO3510/4310 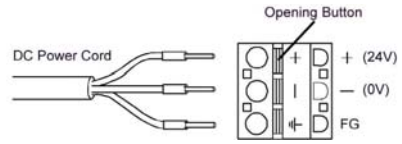 HMIGTO5310/5315 / HMIGTO6310/6315 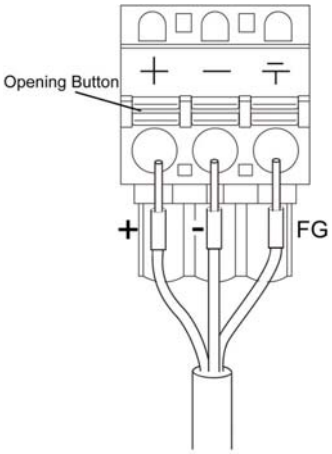
7	After inserting all three pins, insert the power plug into the power connector on the panel.

NOTE:

- Do not solder the wire directly to the power receptacle pin.
- To prevent the possibility of a terminal short, use a pin terminal that has an insulating sleeve.
- You can connect the DC power supply connector for HMIGTO1300/1310, HMIGTO2300/2310/2315, or HMIGTO3510/4310 to HMIGTO5310/5315 or HMIGTO6310/6315 units. However, the reverse is not possible. You cannot connect the DC power supply connector for HMIGTO5310/5315 or HMIGTO6310/6315 to HMIGTO1300/1310, HMIGTO2300/2310/2315, or HMIGTO3510/4310 units.

Connecting the Power Supply

Precautions

- You must use a 24 Vdc input unit with a Class 2 power supply.
- To increase the electromagnetic noise resistance, make sure you twist the ends of the power cord wires before connecting them to the power plug.
- The panel's power supply cord should not be bundled with or kept close to main circuit lines (high voltage, high current), or input/output signal lines.
- Connect a lightning surge absorber to handle power surges.
- To reduce electromagnetic noise, make the power cord as short as possible.

⚠ WARNING

SHORT CIRCUIT, FIRE, OR UNINTENDED EQUIPMENT OPERATION

Avoid excessive force on the power cable to prevent accidental disconnection

- Securely attach power cables to the HMIGTO or cabinet.
- Use the designated torque to tighten the unit terminal block screws.
- Install and fasten the HMIGTO on installation panel or cabinet prior to connecting power supply and communication lines.

Failure to follow these instructions can result in death, serious injury, or equipment damage.

Power Supply Connections

When supplying power to the panel, separate the input/output and power lines, as shown.

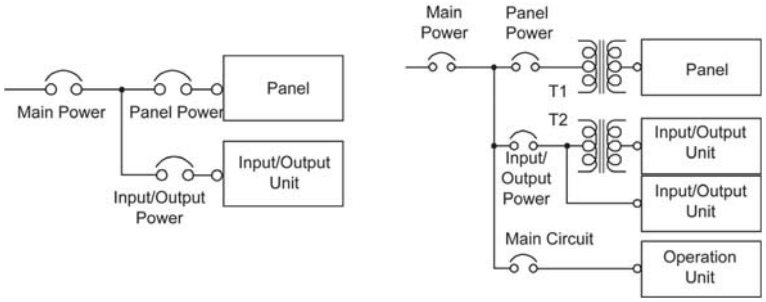

NOTE:
The following shows a lightning surge absorber connection:

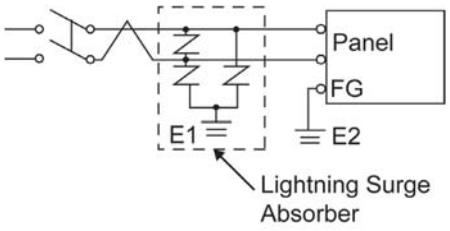

- Ground the surge absorber (E1) separately from the panel (E2).
- Select a surge absorber that has a maximum circuit voltage greater than that of the peak voltage of the power supply.

If the supplied voltage exceeds the panel range, connect a constant voltage transformer.

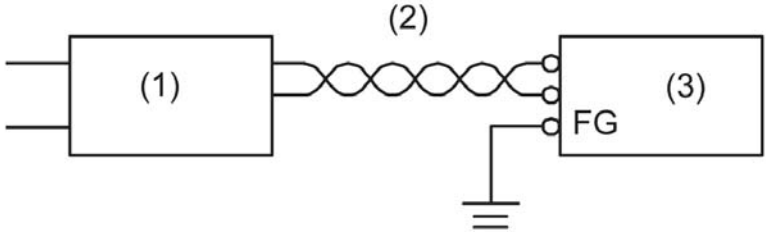

1 Constant voltage transformer
2 Twisted-pair cord
3 panel

Select a power supply low in noise for between the line and ground. If there is an excess amount of noise, connect an insulating transformer.

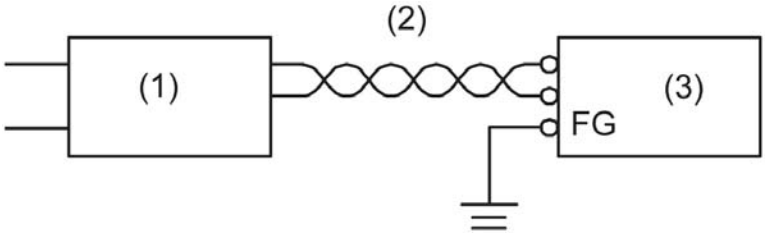

1 Insulating transformer
2 Twisted-pair cord
3 panel

NOTE: Use constant voltage and insulating transformers with capacities exceeding the Power Consumption value.

Grounding

Exclusive Grounding

When supplying power to the panel, separate the input/output and power lines as shown below.

Connect the frame ground (FG) terminal on the power plug to an exclusive ground.

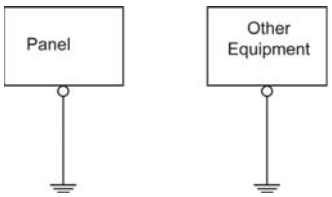

Precautions

Electromagnetic Interference (EMI) can be created if the devices are improperly grounded. EMI can cause loss of communication. Do not use common grounding, except for the authorized configuration described below. If exclusive grounding is not possible, use a common grounding point.

Correct grounding

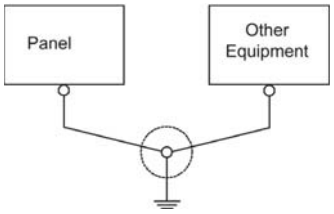

Incorrect grounding

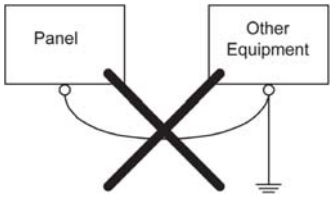

- Check that the grounding resistance is 100 Ω or less.[*1]
- The FG wire should have a cross sectional area greater than 2 mm^2 (AWG 14) [(1)]. Create the connection point as close to the panel as possible, and make the wire as short as possible. When using a long grounding wire, replace the thin wire with a thicker wire, and place it in a duct.
- FG and SG terminals are internally connected in the panel. When connecting an external device to the panel using the SG terminal, check that you do not create a short-circuit loop when you set up the system.

[*1] Observe local codes and standards. Ensure the ground connection has a resistance of 100 Ω and that the ground wire has a cross-section of at least 2 mm^2 or AWG 14.

Section 5.3
SD Card Insertion/Removal

What Is in This Section?

This section contains the following topics:

Topic	Page
Introduction	132
Inserting the SD Card	133
Removing the SD Card	134
SD Card Data Backup	135

Introduction

NOTICE

LOSS OF DATA

When using the HMIGTO and a SD Card, observe the following to avoid losing valuable data:

- Since accidental data loss can occur at any time, back up HMIGTO screen and SD Card data regularly. Once HMIGTO data is lost, it cannot be recovered.
- While a SD Card is accessed, do not turn OFF or reset the HMIGTO, and do not insert or remove the SD Card. Doing so could damage the SD Card, or corrupt its data.
- Before using the SD Card, familiarize yourself with the SD Card's front and rear face orientation, as well as the position of the SD Card connectors. If the SD Card is not positioned correctly when inserted into the HMIGTO, the card's internal data and HMIGTO could become damaged.

Failure to follow these instructions can result in equipment damage.

NOTICE

LOSS OF DATA

When handling the SD Card, follow the instructions below to prevent internal data on the SD Card from being destroyed or a SD Card malfunction from occurring:

- Avoid storing the SD Card where there is static electricity or electromagnetic waves.
- Avoid storing the SD Card in direct sunlight, near a heater, or other locations where high temperatures can occur.
- Do not bend the SD Card.
- Do not drop or strike the SD Card against another object.
- Keep the SD Card dry.
- Do not touch the SD Card connectors.
- Do not disassemble or modify the SD Card.
- Use only SD Cards formatted using FAT or FAT32. The HMIGTO does not recognize NTFS formatted SD Cards. Format the SD Card on your computer using FAT or FAT32.

Failure to follow these instructions can result in equipment damage.

Inserting the SD Card

NOTE: As shown in the image below (example on the left-hand side), you can set the Write-Control Tab to prevent write operations to the SD Card. Push the tab up, as shown in the example on the right-hand side, to release the lock and enable writing to the SD Card. Before using a commercial-type SD Card, read the manufacturer's instructions.

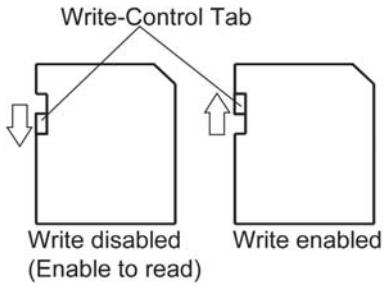

Step	Action
1	Pull on the tab and open the SD Card cover. 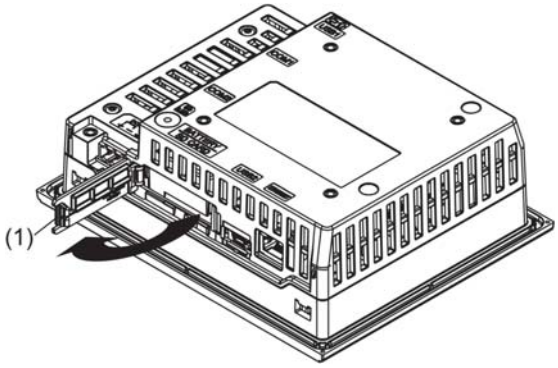 **1** Tab
2	Insert the SD Card into the SD Card interface, and push until you hear it "click". 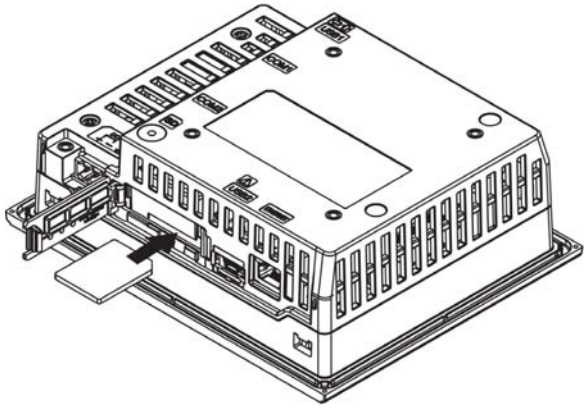
3	Close the SD Card cover.

Removing the SD Card

Step	Action
1	Make sure the SD Card Access LED is off. 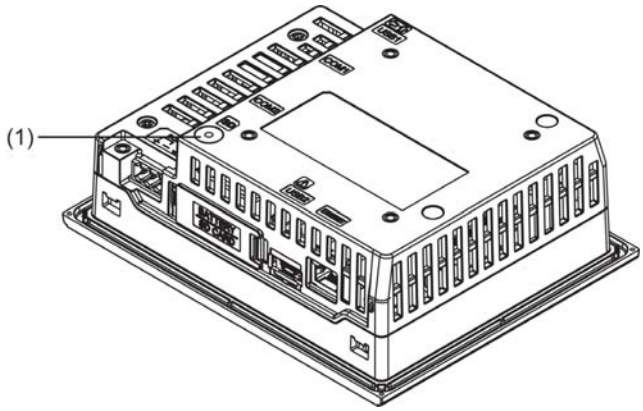 **1** SD Card Access LED
2	Push down the tab on the SD Card cover, then pull open the cover. 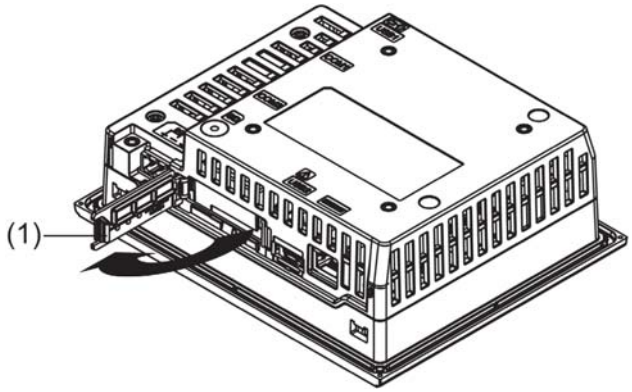 **1** Tab
3	Push the SD Card once to release, and pull out the card. After removing the card, close the cover. **NOTE:** After using the SD Card, store the SD Card in its case or other safe location.

SD Card Data Backup

To make your backups, you can either insert the SD Card directly into the SD Card interface on your computer, or use a commercially available SD Card reader.

Section 5.4
USB Cable Clamp

Overview

This section presents the USB cable clamp.

What Is in This Section?

This section contains the following topics:

Topic	Page
USB Cable Clamp for USB (Type A)	137
USB Holder for USB (mini-B)	139

USB Cable Clamp for USB (Type A)

Introduction

When using a USB device, attaching a USB cable clamp to the USB interface to prevent the USB cable from being disconnected.

⚠ DANGER

POTENTIAL FOR EXPLOSION

- Verify the power, input, and output (I/O) wiring are in accordance with Class I, Division 2 wiring methods.
- Substitution of any components may impair suitability for Class I, Division 2.
- Confirm that the USB cable has been fixed with the USB cable clamp before using the USB interface.
- Remove power before attaching or detaching any connectors to or from the unit.

Failure to follow these instructions will result in death or serious injury.

Attaching the USB Cable Clamp

NOTE: Watch your fingers. The edge of the clip is sharp.

Step	Action
1	Mount the clip to the USB mark connector shell so that it overlaps. The clip matches the 27 to 43.5 mm [1.06 to 1.71 in.] length of the USB connector. 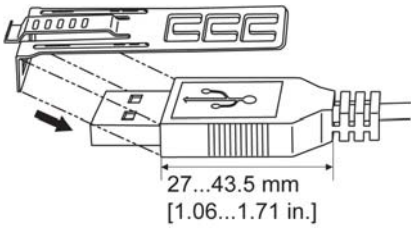
2	Align the clip and the USB cable connector shell. Adjust the position of the holes where the clip is attached. To ensure stability, select the clip-hole position that is closest to the base of the connector shell. 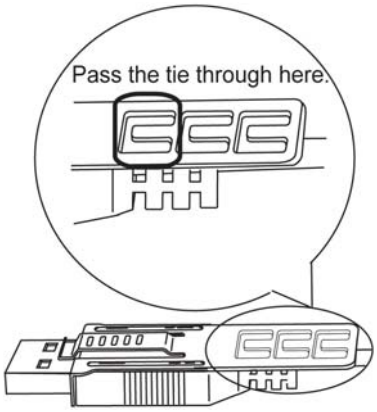

Step	Action
3	As shown, pass the tie through the clip hole. Next, turn the tie and pass it through the head so that the USB cable can pass through the center of the tie loop. The clip is now attached to the USB cable. 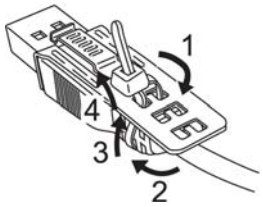 **NOTE:** ● Check the direction of the head beforehand. Make sure the USB cable is through the center of the tie loop and that the tie can pass through the head. ● You can substitute the tie provided with commercially available ties with a width of 4.8 mm [0.19 in.] and thickness of 1.3 mm [0.05 in.].
4	While pressing the grip on the clip, insert the cable from step 3 all the way into the USB host interface. Make sure that the clip tab is secured to the USB cable attached to the HMIGTO. 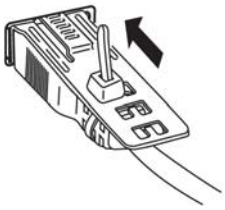

Removing the USB Cable

Remove the USB cable while pushing the grip section of the clip.

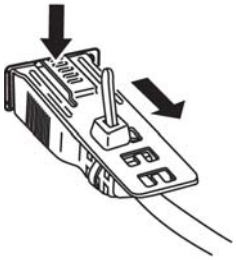

USB Holder for USB (mini-B)

Introduction

When using a USB device, you can attach a USB holder to the USB (mini-B) interface to prevent the USB cable from being disconnected.

⚠ DANGER

POTENTIAL FOR EXPLOSION

- Verify the power, input, and output (I/O) wiring are in accordance with Class I, Division 2 wiring methods.
- Substitution of any components may impair suitability for Class I, Division 2.
- Confirm that the USB cable has been fixed with the USB cable clamp before using the USB interface.
- Remove power before attaching or detaching any connectors to or from the unit.

Failure to follow these instructions will result in death or serious injury.

Attaching the USB Holder

Step	Action
1	Insert the USB cable into the USB (mini-B) interface. 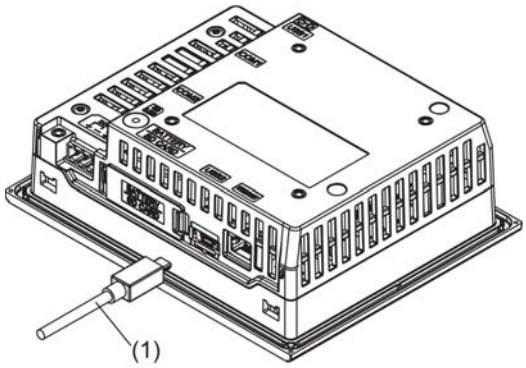 **1** USB cable
2	Attach the USB holder to fix the USB cable in place. Insert the USB holder into the USB (mini-B) interface. 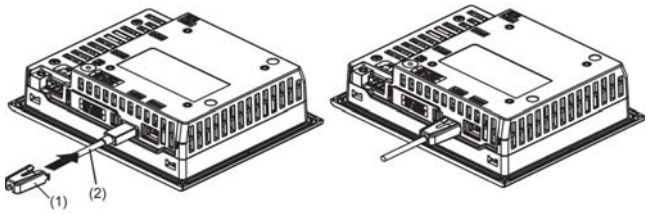 **1** USB holder **2** USB cable

Removing the USB Holder

Remove the USB holder by pressing the tabs from the sides.

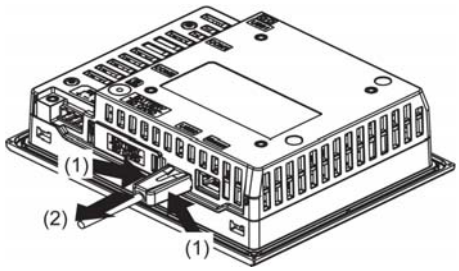

1 USB holder
2 USB cable

Chapter 6
Maintenance

Overview

This chapter explains how to maintain your panel.

What Is in This Chapter?

This chapter contains the following topics:

Topic	Page
Regular Cleaning	142
Replacing the Installation Gasket	143
Periodic Check Points	145
Replacing the Primary Battery	146

Regular Cleaning

Cleaning the display

NOTICE
EQUIPMENT DAMAGE ● Power off the panel before cleaning it. ● Do not use hard or pointed objects to operate the touch panel as you may damage the panel surface. ● Do not use paint thinner, organic solvents, or a strong acid compound to clean the unit. **Failure to follow these instructions can result in equipment damage.**

When the surface or the frame of the display gets dirty, soak a soft cloth in water with a neutral detergent, wring the cloth tightly and wipe the display.

Replacing the Installation Gasket

Overview

The installation gasket provides protection against dust and moisture.

NOTICE
GASKET AGING ● Inspect the gasket periodically as required by your operating environment to keep the initial IP level. ● Change the gasket at least once a year, or as soon as scratches or dirt become visible. **Failure to follow these instructions can result in equipment damage.**

Installing the Installation Gasket

NOTE: For instructions on how to install the installation gasket when using HMIGTO2315/HMIGTO5315/HMIGTO6315, see HMIGTO2315/HMIGTO5315/HMIGTO6315 Panel Mounting Procedure *(see page 123)*.

Stage	Description
1	Place the panel on a flat, level surface, with the display face pointing down.
2	Remove the gasket from the panel.
3	Attach the new gasket to the panel. Position the gasket in the installation groove so that the gasket seam is at the bottom of the panel. First, insert the gasket into the 4 corners, in the order shown in the image below. Then, insert the rest of the gasket into the installation groove. **NOTE:** ● The center of the panel bezel's installation groove is ribbed. Make sure you insert the gasket all the way in without catching the ribbed sections. ● When using a tool to insert the gasket, make sure the tool does not catch the rubber gasket and cause a tear. 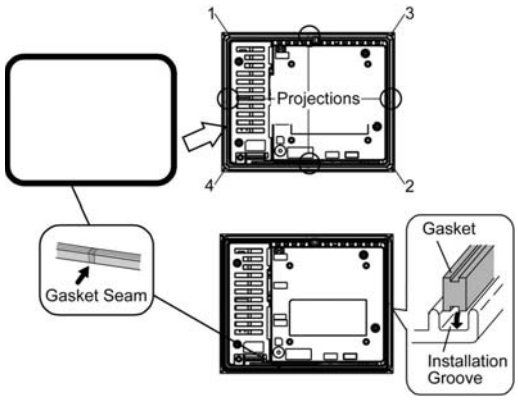
4	The upper surface of the gasket should protrude approximately 2.0 mm (0.06 in.) from the groove. Check the gasket is inserted correctly before installing the HMIGTO into a panel. 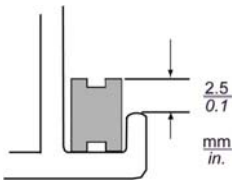

The gasket must be inserted correctly into the groove for IP65f moisture resistance for the panel. (IP66k moisture resistance for HMIGTO2315/HMIGTO5315/HMIGTO6315.)

⚠ CAUTION

EQUIPMENT DAMAGE

- Since the gasket is flexible but not elastic, be careful not to stretch it unnecessarily.
- Make sure the gasket seam is not inserted into any of the panel corners.
- Insert the gasket in the installation groove

Failure to follow these instructions can result in injury or equipment damage.

Periodic Check Points

Operation Environment

- Is the operating temperature within the allowable range? Refer to Environmental Specifications *(see page 38)*, *(see page 52)*, *(see page 70)*, *(see page 86)*, *(see page 103)*.
- Is the operating humidity within the specified range? (10%RH to 90%RH, dry bulb temperature of 39 °C [102.2 °F] or less)
- Is the operating atmosphere free of corrosive gasses?

When the HMIGTO is inside a panel, the ambient environment refers to the interior of the panel.

Electrical Specifications

Is the input voltage appropriate?

- 100 Vac to 240 Vac 50/60 Hz
- 19.2 Vdc to 28.8 Vdc

Related Items

- Are all power cords and cables connected properly? Are there any loose cables?
- Are all mounting brackets holding the unit securely?
- Are there scratches or traces of dirt on the installation gasket?

Replacing the Primary Battery

Introduction

The replacement battery HMI ZGBAT (sold separately) for the primary battery in the HMIGTO is available from Schneider Electric.

NOTE: The HMIGTO1300/1310 and HMIGTO2300 are not equipped with a primary battery.

⚠⚠ DANGER

HAZARD OF ELECTRIC SHOCK, EXPLOSION, OR ARC FLASH

- Follow the procedures step by step to replace the battery correctly and safely.
- Before replacing the battery, turn OFF the HMIGTO's power.

Failure to follow these instructions will result in death or serious injury.

⚠ DANGER

EXPLOSION, FIRE, OR CHEMICAL HAZARD

- Use only the replacement battery HMI ZGBAT manufactured by Schneider Electric.
- Do not cause a short circuit.
- Recycle or properly dispose of used batteries.

Failure to follow these instructions will result in death or serious injury.

NOTICE

LOSS OF DATA

The primary battery is non-rechargeable, and is used for data backup of memory and the internal clock. If the primary battery is depleted, the backup data is lost. One month before the primary battery is completely depleted, a message will appear to indicate it is time to replace the primary battery.

- Replace the battery within one month after the message appears. Otherwise, backup data may be lost.
- Complete replacing the battery within ten minutes of shutting down the HMIGTO.
- The primary battery replacement time (within a month after the message appears) is only a guideline. When backup SRAM data and clock data is lost after the message appears, Schneider Electric does not perform data recovery/retrieval. Schneider Electric does not accept any responsibility for the loss of data.
- Replace the primary battery regularly every five years after you purchase the HMIGTO.

Failure to follow these instructions can result in equipment damage.

Step	Action
1	Disconnect the power supply from the HMIGTO.
2	Touch the housing or ground connection (not the power supply) to discharge any electrostatic charge from your body.
3	Open the SD Card Interface Cover by pressing its tab. Next, open the Replacement Battery Insertion Cover by pressing its tab. 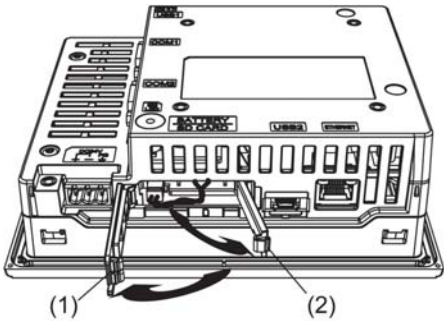 **1** SD Card Interface Cover / Tab **2** Replacement Battery Insertion Cover / Tab

Step	Action
4	Remove the primary battery and connector. 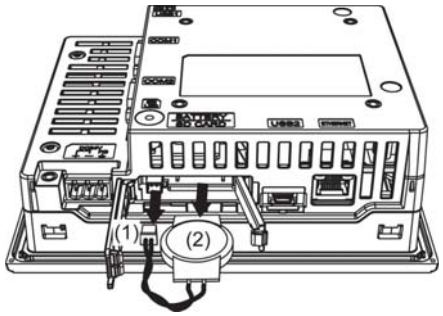 **1** Connector **2** Primary battery
5	Attach the new primary battery and connector. 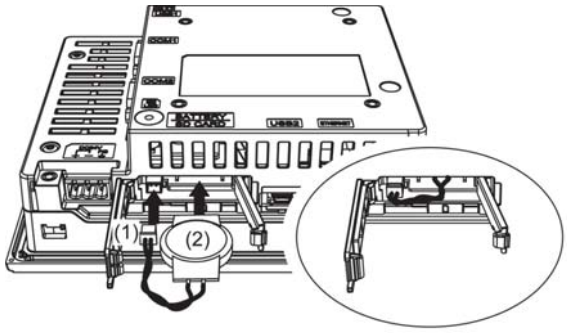
6	First close the replacement battery cover, then close the SD Card Interface Cover. **NOTE:** Make sure the cables are inserted completely inside the enclosure. Otherwise, you can damage the cables when you close the cover.
7	Reconnect the power supply to the HMIGTO.

Index

A
Accessories, *21*

B
battery, *146*

C
caution
  loss of data, *132*
  equipment damage, *144*
  injury, *123*, *123*
  loss of communication, *44*, *44*, *45*, *59*, *60*, *76*, *77*, *93*, *94*, *110*, *111*
CE marking, *11*
Certifications and Standards, *11*
cleaning, *142*
clock, *41*, *56*, *73*, *90*, *107*
COM1, *16*, *18*, *19*
connecting the power cord, *126*
connecting the power supply, *128*

D
danger
  arc flash, *146*
  chemical hazard, *146*
  electric shock, *43*, *45*, *58*, *60*, *75*, *77*, *92*, *94*, *109*, *111*, *146*
  explosion, *137*, *139*, *146*, *146*
  fire, *146*
dimensions, *46*, *61*, *78*, *95*, *112*

E
Ethernet, *19*

F
function keys, *41*

G
gasket, *144*
grounding, *130*

I
installation
  procedures, *120*
installation gasket, *143*

K
KC marking, *12*

M
maintenance, *141*
  check points, *145*
Maintenance
  Cleaning, *142*
maintenance accessories, *23*
memory, *41*, *56*, *73*, *90*, *107*

N
notice
  loss of data, *132*
  panel unsteady when unsecured, *121*
  loss of data, *146*
  overtorque, *122*, *124*
  panel unsteady when unsecured, *123*

O
optional accessories, *22*

P
parts identification and functions, *25*
power plug, *126*

R
replacing the battery, *146*
RS-232C, *16*, *18*
RS-422/RS-485, *18*
RS-485, *19*

S
SD Card, *131*
  backup, *135*
  insertion, *133*
SD Card accessories, *22*
serial interface accessories, *21*
specifications
  COM, *43*, *58*, *60*, *77*, *92*, *94*, *109*, *111*
  COM1, *42*, *57*, *58*, *74*, *75*, *91*, *92*, *108*, *109*
  COM2, *42*, *45*, *57*, *60*, *74*, *77*, *91*, *94*, *108*, *111*
  display, *40*, *55*, *72*, *89*, *106*
  electrical, *37*, *51*, *69*, *85*, *102*
  environmental, *38*, *52*, *70*, *86*, *103*
  Ethernet, *108*
  interfaces, *42*, *57*, *74*, *91*, *108*
  SD Card, *57*, *74*, *108*
  structural, *39*, *53*, *71*, *87*, *104*
  USB, *42*, *42*, *57*, *57*, *74*, *74*, *91*, *91*, *91*, *108*

T
touch panel, *41*, *56*, *73*, *90*, *107*

U

USB
cable clamp for USB Type A, *137*
holder mini-B, *139*
USB interface accessories, *22*
USB mini-B, *20*
USB Type A, *20*

W

warning
electromagnetic interference, *126*
fire, *128*
short circuit, *128*
unintended equipment operation, *7*, *128*

LS	19279	Switch, Level, Mech Float, Narrow Angle, N.C., YEL	N/C, Yellow float
LS	M1343	Switch, Level, Mech Float, Narrow Angle, N.O., Blue	Tilt Float Level Switch w 40' cable
LS-101/2/3	19279	Switch, Level, Mech Float, Narrow Angle, N.C., YEL	N/C, Yellow float
LSHH-101.102/103 LSHH-301 LSHH-401 LSHH-501 LSHH-502 LSHH-601/602	19279	Switch, Level, Mech Float, Narrow Angle, N.C., YEL	N/C, Yellow float
LSLL-301/401/501/502	M1108	Switch, Level, Mech Float, Wide Angle, N.O., Red	13A, SPST, N/O, Red

Form 237
Sheet P/N 7801165
Rev. D

Warrick®
Series M Mechanical Tilt Float Switch
Installation and Operation Bulletin

Specifications

Cord	16 gauge, 2 or 3 conductor SJOW, Oil Resistant CPE
Contact Rating	13 amp @ 120/240 VAC, 1/2hp
Contact Design	SPST, Normally Open or Normally Closed, Common with N.O. & N.C. (Form C)
Temperature Rating	32°F (0°C) to 194°F (90°C) Dry and 140°F (60°C) Water Resistant
Overall Weight	1.0 lbs. (not including weight)
Tether Method	Tie-wrap nylon, weight: 2.5 lbs.
Approvals	U.L. Recognized, CSA Certified

Installation

Tether Tie-Wrap (Fig 1)
Attach cord, using a tie-wrap, to a stationary structure. This is known as the tether point, it will determine the pumping range. The farther the float is placed from the tether point, the greater the pumping range. The minimum distance that the float should be placed from the tether point is 3 inches.

Tether-Weight (Fig 2)
Place tension-brand over the cord before installation. Place the weight at the desired position and secure with the tension-band. This position will determine the pumping range. The farther the float is placed from the tether point, the greater the pumping range. The minimum distance that the float should be placed from the tether point is 3 inches.

Determine tether point using charts below as a reference

Notes:
1. To Prevent Motor Burnout - In a pumpdown application make sure the turn-off level is at least 2 inches above the intake of the submersible pump.

2. Securing Tether Points - Make sure levels are correct and that floats are free from any obstructions before securing tether points.

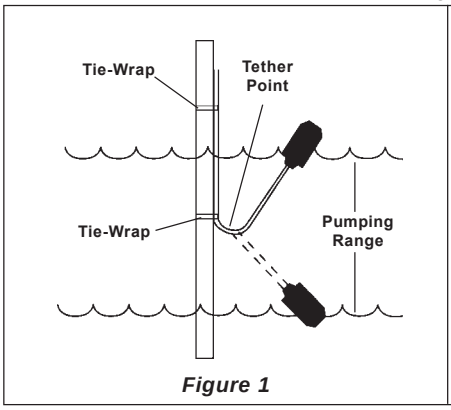

Figure 1

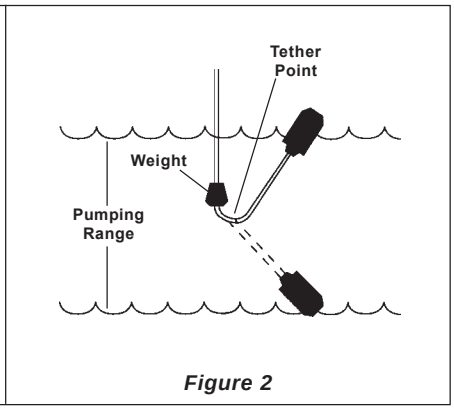

Figure 2

Tether Data For Wide Angle Float

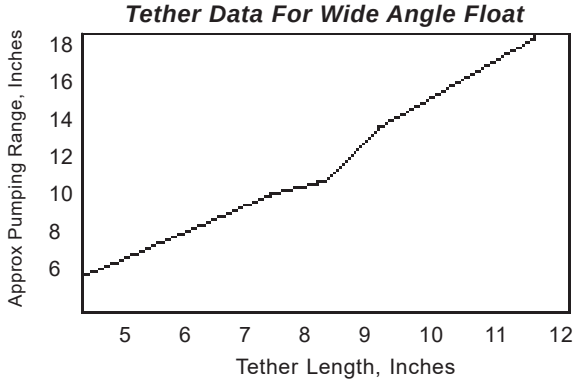

Tether Data For Narrow Angle Float

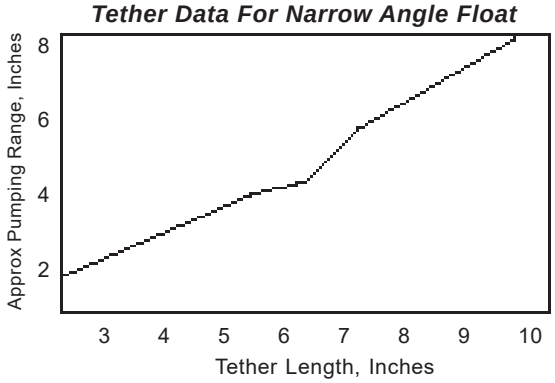

Notes:
1. Narrow angle pumping range is approximately 2 In. to 8 In.
2. Wide angle pumping range is approximately 5 In. to 18 In.

Dimensions

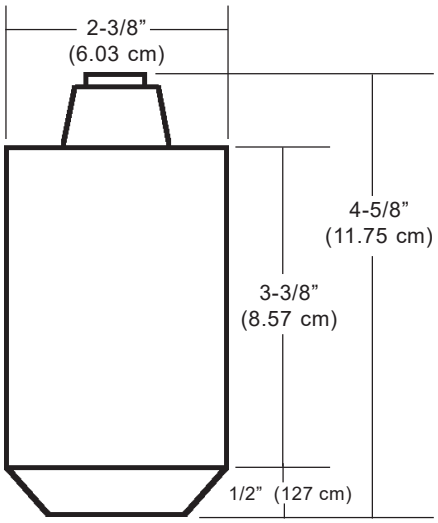

Contact Configurations

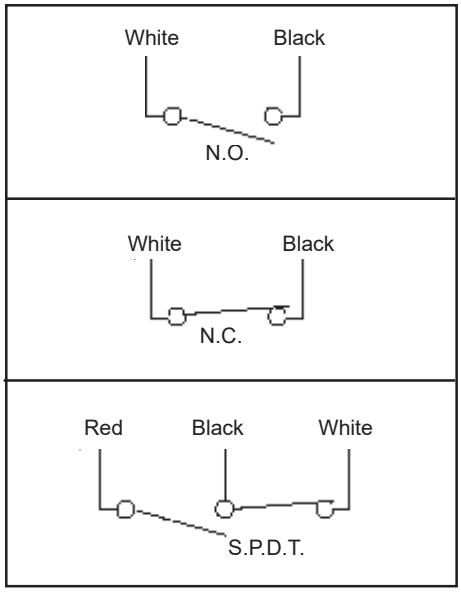

Important Points:

- Gems products must be maintained and installed in strict accordance with the National Electrical Code and the applicable Gems Product Instruction Bulletin that covers installation, operation and proper maintenance. Failure to observe this information may result in serious injury or damages.
- For hazardous area applications involving such things as, but not limited to, ignitable mixtures, combustible dust and flammable materials, use an appropriate explosionproof enclosure or intrinsically safe interface device.
- Please adhere to the pressure and temperature limitations shown throughout this catalog for our level and flow sensors. These limitations must not be exceeded. These pressures and temperatures take into consideration possible system surge pressures/temperatures and their frequencies.
- Selection of materials for compatibility with the media is critical to the life and operation of Gems products. Take care in the proper selection of materials of construction, testing is required.
- NSF-approved sensors are made of materials approved for potable water applica tions according to Standard 61.
- Stainless steel is generally regarded as safe by NSF and FDA.
- Life expectancy of switch contacts varies with application. Contact Gems if life cycle testing is required.
- Ambient temperature changes do affect switch set points, since the gravity of a liquid can vary with temperature.
- Our sensors have been designed to resist shock and vibration. However, shock and vibration should be minimized.
- Filter liquid media containing particulate and/or debris to ensure the proper operation of our products.
- Electrical entries and mounting points in an enclosed tank may require liquid/vapor sealing.
- Our sensors must not be field-repaired.
- Physical damage sustained by product may render it unserviceable.

Return Policy

Returns are accepted on stock items up to 30 days from date of order. You must contact our Returns Department for a Return Authorization (RA) number. Return the goods - freight prepaid - in the original container and include original packing slip. C. O. D. returns are not accepted. Gems reserves the right to apply restocking charges.

Tel: 860-793-4357
Fax: 860-793-4563

Gems Sensors Inc.
One Cowles Road
Plainville, CT 06062-1198
Tel: 860-793-4579
Fax: 860-793-4580

LSHH - Switch, Level, Almeg, Vertical, ATB3-48B
LSHH-7901 - "LSLL-301/401/ 501/502"M1108Switch, Level, Mech Float, Wide Angle, N.O., Red13A, SPST, N/O, Red
Switch, Level, Almeg, Vertical, ATB3-48B

ATB 3 and ATS3 Series Spec Sheet
Level Switch - Small Size - Heavy Duty



The ATB3 is designed for high or low level alarm or switch point applications in rugged situations similar to oil tank reservoirs or industry vessels that require a more robust level switch. Notice the larger brass one piece machined hex to get a wrench on - this model also has an optional brass set screw locking collar in place of the clip.

Internal reed switch selection is the same Almeg quality standard but we've beefed up the external part as well as fully encapsulated the reed switch to maintain a complete moisture free environment. The leads are wire wrapped (not clipped) soldered and heat shrink sealed to the reed switch before encapsulating.

The TRUE closed cell Buna float will not swell or take on moisture - even if cut or drilled. It is designed like a tight bee hive or honey comb construction.

100% of our controls are tested before shipping.

The ATB3 is available in a single order or OEM applications.

LT-301/501 - Transmitter, Pressure, KPSI 750 series 0-10ft H20Part Number 750S14D4A004.334000.000B10015B

KPSI®

Level Transducers



KPSI® User's Manual

18th Edition

February 2010

E-688

©This User's Manual is a copyright product of Pressure Systems, Inc., 2009.

Permission is hereby granted to make copies and distribute verbatim copies of this manual, provided the copyright notice and this permission notice are preserved on all copies.

Our Company

Pressure Systems is an ISO9001:2000 certified U.S. manufacturer of submersible and non-submersible (above ground) pressure transducers for environmental, industrial and municipal applications. Our KPSI™ Level and Pressure Transducers have been specified in thousands of projects throughout the United States, Canada and Europe by geologists, system integrators, national engineering firms and a variety of government agencies. Typical applications include, but are not limited to, pump control, tank level monitoring, sewage lift station operation, reservoirs, weirs, flumes, site remediation, watershed management, storm water/well monitoring, pump/pipeline pressures and compressor pressures.

Website and E-Mail

You may visit our website at www.PressureSystems.com to look at our latest new product releases, application notes, product certifications and specifications, as well as Intrinsic Safety control installation drawings. E-mail your questions and comments to us: sales@PressureSystems.com.

E-commerce

Orders may be placed on-line by visiting our e-commerce site *(www.LEVELandPRESSURE.com)* or by contacting the factory or local representative.

Applicable Products

This manual provides information applicable to the use of the following KPSI Level and Pressure Transducers:

Please note: Series 500 and Series 550 (waterMONITOR) have separate manuals.

Level Transducers (Submersible)
Series 700/710/720/730/735
Series 320/330/335/340
Series 300DS
Series 705
Series 750

Pressure Transducers (Non-submersible)
Series 27/28/30

Table of Contents

1.0 Product Description 1
General Characteristics 1
Care and Handling 1
Calibration 1
Approvals 1

2.0 Product Accessories and Options 2
Nose Caps 2
810 SuperDry™ Vent Filter or 815 Aneroid Bellows 2
Sacrificial Anode 2
Absolute/Sealed Gage Transducer 3
Polyurethane & ETFE Jacketed Cable 3
Lightning Protection 4
½" Male NPT Conduit Fitting 4
Electrical Outputs 4
Reverse Signal Output 5
Temperature Output 5
Cable Hanger 5
Submersible Cable Splicing Kit 5

3.0 Installation & Maintenance Tips 6
General Installation Procedures 6
Transducer Anchors 6
Transducer Submersion 6
SuperDry™ Vent Filter (Desiccant) or 815 Aneroid Bellows Installation 6
Cable Protection 6
Bending of Cable 7
Cable Compression 7
4-20 mA Output Wiring 7
VDC Output Wiring 7
Model 750 7
Sealed-Gage Transducer Configured for Altitude Above Sea Level 7
Transducer Position Sensitivity 7
General Maintenance Tips 8
Desiccant Maintenance 8
Clogged Nose Piece or Dirty Diaphragm 8
Cleaning Your Transducer 9
Cleaning the Lightning Protection Data Line Protector 9

4.0 Warranty and Product Return Procedures 10
Restocking Policy 11

Appendix A - Drawings and Diagrams 13
Appendix B - Frequently Asked Questions 17
Appendix C - Field Checkout and Troubleshooting Techniques 20
Appendix D - Calibration Calculations 28

1.0 Product Description

General Characteristics

KPSI™ Level and Pressure Transducers use isolated-diaphragm sensors that are specifically designed for use with hostile fluids and gases. These sensors utilize a silicon pressure cell that has been fitted into a stainless steel or titanium package with an integral, compliant stainless steel or titanium barrier diaphragm. This sensor assembly is housed in a rugged 316 stainless steel or titanium case which provides for a variety of level ranges from 2.3 ft (0.75 m) H_2O through 4614 ft (1408 m) H_2O and pressure inputs from 0-1 (7 kPa) through 0-15000 psi (103 mPa). Our devices feature internal signal conditioning. Standard outputs are 4-20 mA and VDC.

All units containing active electronic components have surge and reverse polarity protection. For ease of use in the field, our transducers are permanently laser engraved with our logo and name, wiring information, part number (P/N), serial number (S/N), date of manufacture (DOM), range, excitation and output. Transducers are offered in diameters of 1.0 (25 mm) and 0.75 inches (19 mm).

Care and Handling

Our transducers are designed for rugged use. However, they need protection from over pressure and sharp impact. When lowering them into a liquid, penetrate the surface slowly and only to the depth necessary. Avoid dropping the unit from above the surface. Clean all transducers by rinsing them in a mild detergent. Direct probing of the diaphragm or attempts to remove protective screens will damage the sensor, voiding the warranty.

Calibration

All transducers are shipped with calibration information unique to each transducer. Make sure you keep each calibration report. However, should you misplace your calibration sheet, you can contact the factory and request a duplicate. All KPSI™ Transducer calibrations are traceable to the National Institute of Standards and Technology (NIST).

Approvals

Most of our products have UL and FM certification for intrinsic safety. Their respective installation control drawings can be downloaded from our website. Several of our product lines also carry ABS approval. Most products are CE compliant to EN 61326-1:2006 and EN 61326-2-3:2006. CE compliant units are labeled accordingly.

2.0 Product Accessories and Options



Nose Caps

There are several different user-installable nose caps for the 700, 710, 720, 730, 735 submersible level transducers. The ported nose cap (Delrin) with #8-32UNC-2B threaded hole is best used where weights are required and for those installations where users may encounter sharp, protruding objects. The open-face nose cap which allows maximum contact with the liquid media is ideal for wastewater and "greasy" applications where clogging of the sensor is a concern. The piezometer nose cap allows the unit to be buried in saturated soil without damage to the sensor diaphragm. The 1/4" male NPT pressure nose cap is not only useful for calibration purposes but also allows the device to be used as a submersible or above ground pressure transducer.



810 SuperDry™ Vent Filter or 815 Aneroid Bellows

All submersible transducers with vented gauge format are supplied with a protective barrier that guards against moisture buildup in the cable vent tube. The 810 SuperDry™ vent filter is installed free of charge and is guaranteed to operate maintenance free for one year. We also offer the 815 Aneroid Bellows as a maintenance free option that can be used on submersibles with accuracies of: ±1%, ±0.5%, or ±0.25% FSO. These barriers ensure reliable operation and long life as they protect sensitive electronic components from mildew and prevent the formation of a liquid column in the vent tube. Any such liquid column directly affects calibration of the transducer.

Sacrificial Anodes

Our sacrificial anodes are made from a special zinc alloy formulated to guarantee continued effectiveness over long periods. Because the anodes are 95% galvanic, they will not corrode unless there is an electrolytic demand. The anode maintains a high driving potential throughout its 12 month life, is self-sluffing and always exposes new zinc for the best possible protection. For those applications where cable buoyancy is a problem, the sacrificial anode can be substituted for hanging weights.

Sacrificial Anodes provide cathodic protection against galvanic corrosion for our submersible pressure transducers. Galvanic corrosion occurs when dissimilar metals are placed in contact with an electrolyte. This condition causes a potential difference to exist between the two metals, causing electron flow between them. Corrosion of the less corrosion-resistant metal is increased and attack of the more resistant metal is decreased. The 820 Sacrificial Anode is clamped to the exterior of a one-inch bore submersible transducer. We also offer a 1" diameter pencil anode, the 825, that attaches to the nose cap of either a 3/4" or 1" bore submersible transducer.

Absolute/Sealed Gage Transducer

The sealed gage option for submersible transducers eliminates the need for a vent filter. The standard output of a sealed gauge transducer is 4 mA at 14.70 psia. Before ordering a sealed gauge transducer, the customer should determine the altitude (above sea level) of the installation and inform PSI's Customer Service of this value before order entry. During manufacture, the output of the transducer will be adjusted to compensate for the altitude difference, if applicable.

Polyurethane & ETFE Jacketed Cable

Most installations of our submersible level transducers connect our polyurethane or ETFE cable to a junction box. From this junction box (P/N 840), users typically run their own cable to the required instrumentation. Polyurethane-jacketed cable is used for most applications while ETFE material is recommended for more aggressive environments.

Specifications for our standard polyurethane and ETFE jacketed cable are as follows:

Specifications	Standard Submersible Cable	Standard Non-Submersible Cable
Weight	0.05 lbs/ft (0.07 kg/m)	0.025 lbs/ft (0.035 kg/m)
Min. OD	0.28" (7.10 mm)	0.189" (4.8 mm)
Max OD	0.31" (7.87 mm)	0.19" (4.9 mm)
Conductors	4 - 22 AWG	22 AWG
Insulation Conductors Outer jacket	PVC Polyurethane or ETFE	Color coded PVC
Shield	36 gauge spiral tinned copper wire foil shield with drain wire	Aluminum/polyester foil facing outward
Vent Tube	Polyethylene, .060" ID (1.52 mm)	Drain wire 7/32 tinned copper

- **Chemical resistance of polyurethane:** Potable Water, Wastewater, Borax, Butane, Animal Fat, Carbonic Acid, Citric Acid, Cod Liver Oil, Corn Oil, Glycerin, Glycol, Mineral Oils, Potassium Nitrate, Potassium Sulfate, Silicone Oils, Stoddard Solvent, Tannic Acid (10), Tartaric Acid, Turbine Oil.

- **Chemical resistance of ETFE:** Acetic Acid (Glacial), Acetic Anhydride, Acetone, Aluminum Chloride, Anti-Freeze, Bromine, Calcium Chloride, Calcium Hydroxide, Chlorine, Copper Chloride, Ferrous Chloride, Hydrochloric Acid, Ketones, Lacquer Thinners, Sulfuric Acid.

The vented cable termination end is specially prepared at the factory to eliminate the potential for moisture migration. Where the lead wires emerge from under the jacket, there's potting material and a shrink tube "boot", every effort should be made to leave this feature intact. Should the cable be longer than needed for the installation, it is recommended that the excess length be accommodated in a service loop and that the potted end of the cable **NOT** be shortened.

The cable attached to this instrument is specifically engineered for submersible applications. The polyurethane outer jacket provides long term reliability under most conditions. The cable should be handled carefully, however, as the jacket may be subject to cutting should it be "raked" over extremely sharp edges. To guard against water incursion should an inadvertent minor cut occur, we have incorporated an exclusive "water block" feature immediately beneath the jacket. The cable is fully shielded, with the shield connected to the metal housing at the transducer end and terminated in a drain wire at the termination or user end. The shield should always be terminated to a good earth ground, unless the transducer is installed in an area where galvanic corrosion is known to be a serious problem.

Lightning Protection

Lightning and surge protection for VDC, SDI-12 and 4-20 mA output are available. This is achieved through the use of 2 protectors, one is integral to the transducer housing and one is provided for the outside line located at the surface and grounded to a DIN-Rail. Please remember this option must be factory installed at the time of order entry or as a factory upgrade. **This option cannot be installed in the field.** Lightning protection is also available for unit only. Contact customer service for details.

Featuring quick response and low clamping voltages, these devices protect against fast rising voltage transients as well as severe current surges associated with lightning discharges up to 20,000 amperes. Following a surge, the protector automatically restores the line to normal operation and awaits the next surge without having to reset a breaker or replace a fuse. The power supply needs to be limited to 150 mA to avoid lock up of the gas tube after a suppression event. **Transducers installed with this option have a lifetime warranty *against damage due to voltage surge***.

Please note: When using the lightning protection option on 4-20 mA products, users should take into account the additional series resistance of this option when selecting the loop power supply. This option will increase total loop resistance by 88 Ohms.

½" Male NPT Conduit Fitting

Submersible level transducers can be attached to a rigid conduit and the cable run through the conduit. To achieve this, all of our submersible transducers can be fitted with an optional ½" NPT male conduit fitting (specify "Electrical Connection Option 4" when ordering) where the cable exits the transducer. This fitting can be mated to a standard rigid conduit.

Electrical Outputs

We offer the industry standard 0-5 VDC and 4-20 mA outputs. In addition we also offer a variety of voltage output ranges.

Reverse Signal Output

For some applications, it is important to know how far the water is from the top of the tank or the surface of the ground. If specified by the customer, our factory can set the transducer so that zero pressure reads full scale electrical output and maximum pressure reads zero electrical output.

Temperature Output

A temperature output option is available for most transducers having 4-20 mA pressure output. The temperature sensor requires an excitation of 9-28 VDC and is calibrated for a temperature range of -20 to 60ºC with an accuracy of ±4ºC.

Output Option 6 (4-20mA output for -20 to 60ºC) (mA Reading x 5) - 40 = Temperature ºC

Example:	Reading is 20mA	(20 x 5) - 40 = 60ºC
	Reading is 12mA	(12 x 5) - 40 = 20ºC
	Reading is 4mA	(4 x 5) - 40 = -20ºC

Cable Hanger

We can supply an optional cable hanger (P/N 12-90-0931) to help end users secure the cable. The cable hanger can be positioned anywhere on the cable by pushing the ends together. Once positioned, the cable hanger expands and provides a snug grip on the cable.

When mounting the transducer in a well casing, the cable hanger can be secured to a hook on the well plate or an eye bolt may be attached to the side of the well casing. The cable hanger loop is then secured to the eye bolt by using any number of types of fasteners. A similar technique can be used when working in stilling wells for surface water level measurement. In this case, the loop-end of the cable hanger can be attached directly to a screw or bolt bored into the still well shelf.

Submersible Cable Splicing Kit

Our field-installable cable splice kit (P/N 830) allows you to splice polyurethane and ETFE submersible cable. It is most commonly used for well applications where the more expensive ETFE cable is required for suspension in corrosive media where the liquid level is fairly shallow, but the well is hundreds of feet in depth. It is also used in emergency situations where cable must be spliced together to get an application up and running.

3.0 Installation & Maintenance Tips



General Installation Procedures

The following is important installation and preventive maintenance information. Our Customer Service or Applications Engineering Support staff can provide additional instruction.

1. **Transducer Anchors:** Most users either suspend our submersible transducers in stilling wells or attach them to rigid conduit. This is done to prevent damage to the transducer from shock caused by water turbulence. It is not advisable to tie your transducer to a pump or to piping, as any problem with the transducer could require that the pump be pulled from the installation. This could prove to be *very expensive*. (Please refer to the Cable Anchoring Schemes drawing in **Appendix A**.)

   Some applications use our optional bracket (P/N 49-06-00PC) to clamp the transducer to a fixed object (i.e., wall, ladder, step) or require the unit to be suspended without any protective still well or attachment device. In all installations, care should be taken to ensure no damage occurs to the cable.

2. **Transducer Submersion:** Damage to submersible cable is one of the most frequent causes of transducer failure. Lower your transducer into the liquid slowly, making sure the cable does not drag over sharp edges and only to the depth necessary. Avoid dropping the unit from the surface. This does not apply to Series 27, 28, and 30 transducers.

3. **SuperDry™ Vent Filter (Desiccant) or Aneroid Bellows Installation** (For submersible transducers vented gage pressure format only) ***Always*** install a desiccant vent filter or aneroid bellows immediately after transducer installation**.** Failure to use one or the other could result in premature failure of the transducer; which would not be covered by warranty. If you use a desiccant filter, you should establish a regular maintenance schedule. You should change your vent filter when it is 75% spent (pink color). Replacement filters are available at a nominal cost from the factory. Do not remove the old vent filter until a new one is available. The most common failure mode of our transducers is moisture and corrosion damage due to lack of use or maintenance of the vent filter. This will allow air into the desiccant filter and allows the transducer to properly vent with changes in barometric pressure.

   To install/replace either the aneroid bellows or the vent filter, simply unplug the old unit from the vent tube and plug the 0.062" x 1" stainless steel connector tube (supplied with each filter or bellows) into the vent tube. (Installation and mounting instructions are supplied with each aneroid bellows and vent filter.) The diagram on page 16 shows typical vent filter and aneroid bellows hookups.

4. **Cable Protection** An inexpensive way to protect the cable from damage is to order the submersible pressure transducer with a ½" conduit attachment. Connect an inexpensive flexible 5/8" garden hose to the ½" conduit fitting with an equally inexpensive female PVC ½" NPT x 3/4" NHT swivel fitting, available at your local hardware store

5. **Bending of Cable** Our polyurethane and ETFE jacketed cables are quite flexible. Care needs to be taken to ensure that when bending the cable to suit your installation you do not crimp the vent tube inside the cable. Consequently, do not bend the cable more than a radius of 1 inch.

6. **Cable Compression** Many users require a compression fitting to secure our ETFE and polyurethane jacketed cable as it enters a junction box. Care needs to be taken that you do not over-tighten the fitting so as to damage the cable.

7. **4-20 mA Wiring** When connecting a 2-wire 4-20 mA transducer to a typical power supply and mA meter, verify that the meter has an input impedance of at least 10 Ohms. If you are unsure of the input impedance, then a 10 Ohm resistor may be placed in series with the meter and transducer. Connect the + (red) lead of the transducer to the + terminal of the power supply. If the 10 Ohm resistor is required, connect it to the - (black) lead of the transducer. Use a short length of 22 AWG or heavier wire to connect the + terminal of the meter to the resistor (if it is required) or the - (black) wire of the transducer. Connect the - terminal of the meter to the - terminal of the power supply with a length of 22 AWG or heavier wire. Connect the drain wire from the transducer to a good earth ground. (See **Appendix**, page **14** for wiring diagram.) Please refer to "**Maximum Cable Lengths and Minimum Supply Voltage**" in **Appendix C**, page **22** to verify minimum loop supply voltage requirements.

8. **VDC Wiring** To connect a 3 wire VDC output transducer to a typical power supply and the voltmeter, connect the - terminal of the power supply to the - input terminal of the meter with a length of 22 AWG or heavier wire. Connect the - excitation (black) lead of the transducer to the - input terminal of the meter. Connect the + input terminal of the meter to the signal lead (white) of the transducer. Connect the + terminal of the power supply to the + lead (red) of the transducer. Connect the drain wire to a good earth ground. (See **Appendix A**, **page 14**.)

9. **The Model 750** comes standard with a field removable diaphragm protector (one-inch or 25 mm standoff). The diaphragm protector can easily be taken off by removing six (6) fasteners located on the bottom of the unit.

10. **Sealed-Gage Transducer Configured For Altitude Above Sea Level** Since sealed-gauge transducers are normally calibrated at sea level, there may be considerable error induced when used at a higher elevation. If the transducer was calibrated without taking into consideration the difference in atmospheric pressure at sea level and the higher elevation, an offset error will occur. In order to eliminate error due to this difference, the customer must identify the elevation where the transducer will be installed. The nominal atmospheric pressure at the location is calculated and the transducer will be ranged accordingly. Not all KPSI Transducers are available in a sealed pressure format. Please refer to the appropriate datasheet for availability.

11. **Position Sensitivity** The transducer should be installed so that the diaphragm located behind the nose cap is oriented in a vertical position, otherwise the unit could exhibit an offset.

General Maintenance Tips for Submersible Transducers

1. **Desiccant Maintenance**



If you use a desiccant vent filter, you should establish a regular maintenance schedule. You should change your vent filter when it is 75% spent (pink color). Replacement filters are available at a nominal cost from the factory. Do not remove the old vent filter until a new one is available. Remember that Pressure Systems' improved 810 SuperDry™ Vent Filter are designed to be effective for at least one year before requiring replacement.

2. **Clogged Nose Piece or Dirty Diaphragm**

Either of these conditions could result in erroneous readings from your transducer.



Your transducer may be cleaned in accordance with the procedures listed in step 4, below.

3. **Cleaning your transducer**

Materials required:

- Plastic bowls 8-12 inches (200-300 mm) in diameter and 4-6 inches (100 - 150 mm) deep
- Supply of clean, lint-free cleaning rags
- 32 ounce bottle of "The Works-Tub and Shower Cleaner" (a mild detergent) manufactured by Lime-O-Sol Company in Ashley, IN 46705 and available locally through Wal-Mart, K-Mart, Target, and Ace Hardware stores at $2 to $4 per bottle

Preparation: Prior to cleaning your pressure transducer, ensure that all procedures have been followed in the proper cleaning of the cable and transducer to remove any hazardous materials. The vent filter (or bellows) must be properly attached. The cable should be coiled to ensure ease of handling and it must be protected against the possibility of accidental abrasion and/or penetration of the cable jacket by sharp objects. A lead length of 1 to 1 ½ feet (0.3 - 0.45 m) of cable from the transducer should be allowed to facilitate handling during cleaning. The protective covering (or similar protective device) that is shipped with each transducer should be attached to the transducer at all times. It should only be removed prior to installation or cleaning.

Your work surface needs to be clean and free of clutter and large enough to accommodate all materials required in addition to the transducer and cable. Fill one of the bowls with fresh water, one with a mild detergent mixed with water and the last with 16 ounces (0.45 kg) of "The Works".

Cleaning:

Step 1: Holding the cable 6 inches (150 mm) from the transducer, immerse the unit in the bowl containing the mild detergent and stir for 20-30 seconds. Remove and rinse in the bowl containing the fresh water, using the same stirring motion used in the mild detergent. Rinse and wipe dry.

Step 2: Holding the body of the transducer with one hand so that you are looking at the retaining screen protecting the sensor, carefully remove the sensor nose piece by simply unscrewing it from the transducer body. *Do not touch the sensor diaphragm with your finger or any other object. Also, do not try to dry the inside portion of the transducer, as you risk damaging the pressure sensor*.

Step 3: Place the transducer in a vertical position with the sensing end facing downward in the bowl containing "The Works" solution for approximately 15-20 seconds. Rinse in the bowl containing clean water and wipe dry the external casing only. Place the protective screen in the same solution for 15-20 seconds, rinse and wipe dry.

Step 4: Holding the transducer in a vertical position so that you can see the face of the sensor, screw the protective nose piece back into place.

4. Cleaning the Lightning Protection Data Line Protector



4.0 Warranty and Product Return Procedure

Any transducer/transmitter that is less than 2 years old (see DOM) which does not meet the product's specifications and exhibits **no obvious physical damage to the housing, sensor, or cable (cuts),** will be replaced under warranty.

Units 2-3 years old: Units that fall within this age group and exhibit no obvious physical damage to the housing, sensor, or cable (cuts), may be replaced at a discounted list price.

Units greater than 3 years old: Units that fall within this age group are not replaced under warranty.

Merchandise Return Procedures

Contact the **Applications Support Group** or the **Customer Service Department** at Pressure Systems if your transducer is not operating properly. Our staff is available for troubleshooting at **(757) 865-1243** or toll free at **1-800-328-3665** during normal working hours, Eastern time. If your transducer or accessory needs to be returned to Pressure Systems, obtain a *Returned Merchandise Authorization* (RMA) from the Customer Service Department prior to shipment. Be prepared to supply the following information when requesting the RMA:

- Part number
- Serial number
- Complete description of problems/symptoms
- **Bill To** and **Ship To** address
- Purchase order number (not required for warranty repairs)
- Customer contact and telephone number

The above information, including the RMA number, must be on the customer's shipping documents that accompany the equipment to be repaired. Pressure Systems also requests that the outside of the shipping container be labeled with the RMA number to assist in tracking the repairs. All equipment should be sent to the following address:

ATTN: KPSI TRANSDUCER REPAIR DEPARTMENT (7-digit RMA number)
Pressure Systems, Inc.
34 Research Drive
Hampton, Virginia 23666

Prior to returning to Pressure Systems, the transducer and cable must be cleaned per instructions provided on the cleaning certificate supplied when the transducer was delivered. The certificate can also be found on Pressure Systems website:

www.PressureSystems.com/cleaning.html

The completed certificate must accompany the transducer when shipped to Pressure Systems. If the transducer has been used in media other than potable water, PSI customer service must be notified at the same time an RMA number is requested. PSI reserves the right to reject any shipment deemed to be unsanitary or environmentally unsafe to handle. If these guidelines are not met, the package will be sent back unopened and at the customer's expense. ***Please***

include the attached vent filter or aneroid bellow with each returned vented gage submersible transducer.

Pressure Systems will return warranty items prepaid via UPS GROUND. If the customer desires another method of return shipment, Pressure Systems will prepay and add the shipping charges to the repair bill.

Incoming freight charges are the customer's responsibility. The customer is also responsible for shipping charges to and from Pressure Systems for all equipment not under warranty.

Once the return is received, it typically takes 5-10 working days for the technician to make a fault determination.

A cable reconnect fee will be charged when the customer requests a different length of cable.

Restocking Policy

Pressure Systems does allow standard products to be returned for credit in the event it is no longer required, providing the products are in new and unused condition. A restocking fee will be assessed depending on the model type and variety.

A **25% restocking fee** applies to the following models, providing they are vented-gage reference format and [pressure ranges above 3 psig (20 kPa) and below 100 psig (690 kPa)].

27	320	700	710
28	342	705	720
Display Meters - all models			750

A **50% restocking fee** applies to the following models. This also applies to all other models with sealed-gage and absolute pressure formats as well as vented-gage reference formats with [pressure ranges below 3 psig (20 kPa) and above 100 psig (690 kPa)].

30	335
300DS	730
330	735

NOTE: Expedite premiums and shipping charges are non-refundable.

Please consult the individual manuals for the Series 500 and Series 550 (waterMONITOR) for the restocking policy.

This page intentionally left blank.

Appendix A

Drawings and Diagrams

Wiring Diagram VDC, mA, and Temp Output 14
Cable Anchoring Schemes 15
Reference Connection Schemes 16
Submersible Cable Termination 17

Wiring Diagram VDC, mA, and Temp Output

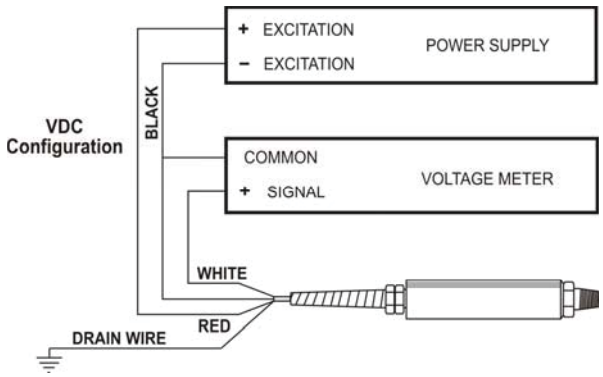

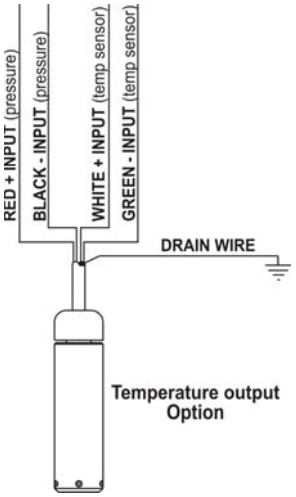

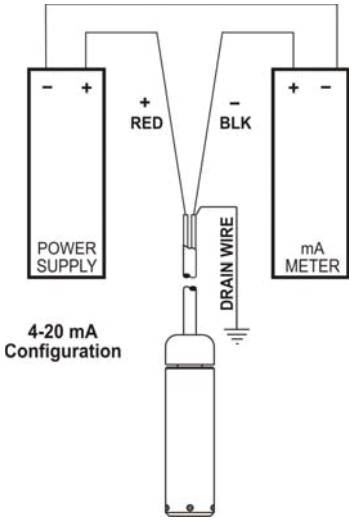

Notes:

1. These diagrams depict typical installations. Refer to your power supply and instrumentation Manufacturer for the specifics of your application.

PRICE® PUMP CO.

RCCI_P.dwg rev. C

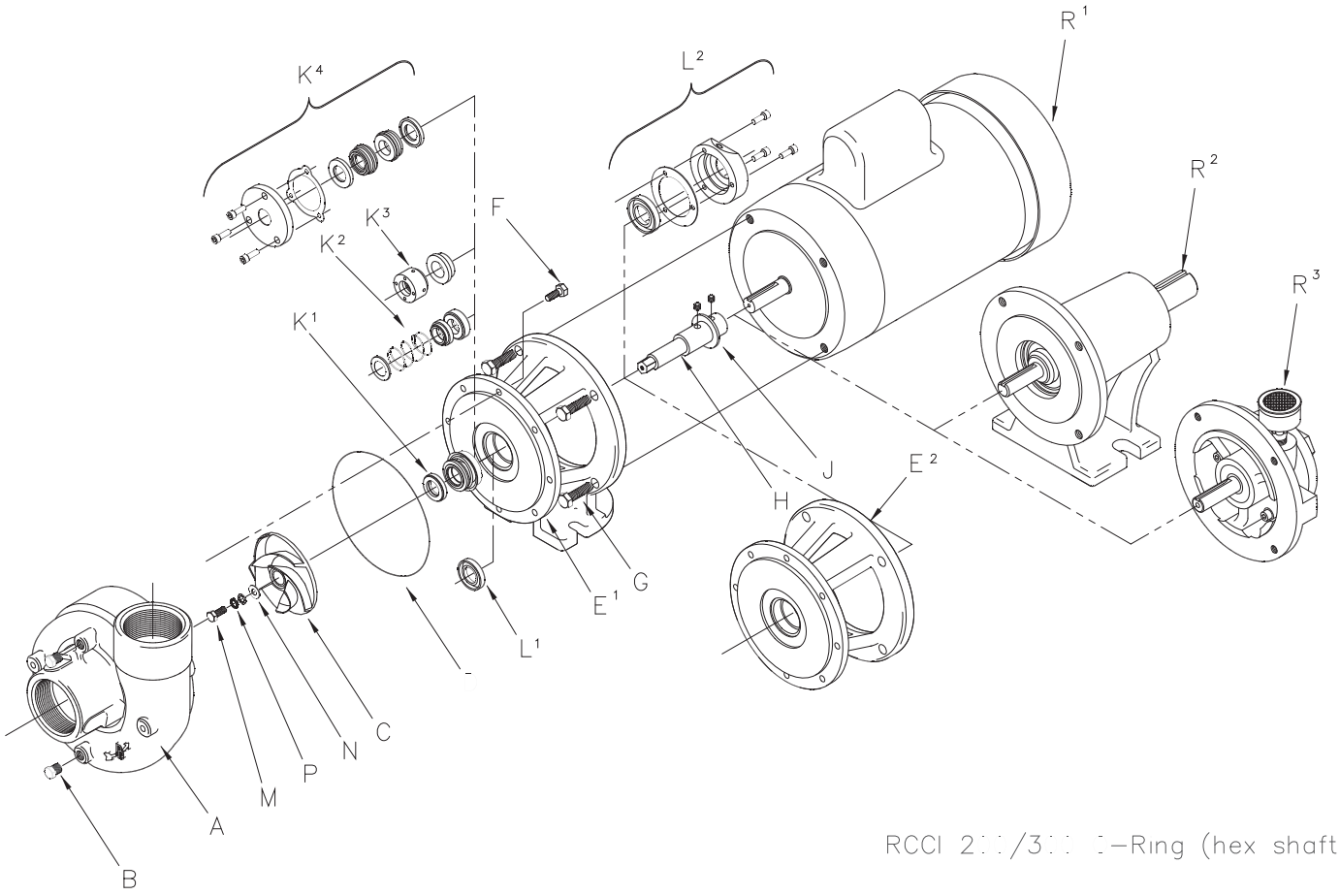

RCCI 2::/3:: :-Ring (hex shaft)

Price® Pump C:.
21775 Eighth Street East * Sonoma, CA 95476-0329 * (707) 938-8441 * Fax (707) 938-0764

PRICE CENTRIFUGAL PUMP CAUTIONS & WARNINGS

- **CAUTION:** Price Pump centrifugal pumps must be operated above minimum flow rate to avoid damage.
- **CAUTION:** All Price Pump centrifugal pumps require the suction to be flooded.
- **CAUTION:** It is recommended that all piping connections to the pump be flexible.
- **WARNNING:** Verify chemical compatibility of the pump materials of construction with the fluid being pumped.
- **WARNNING:** Price centrifugal pumps are not designed for use in sanitary or food applications.
- **CAUTION:** Use only Price Pump original equipment factory replacement parts.
- **WARNNING:** Price pump fluid temperature limits must be observed. Maximum operating temperature is 300°F.
- **CAUTION:** The pump should be thoroughly flushed and drained before disassembly.
- **CAUTION:** For larger pump motor units, weight may exceed 65 1bs. (30 kg).

CAUTION: Maximum working pressure for seals:

- Type 6 Seal **75 PSI** (5.2 bar)
- Type 6A Seal **75 PSI** (5.2 bar)
- Type 8 Seal **325 PSI** (22.4 bar)
- Type 9 Seal **350 PSI** (24.1 bar)
- Type 21 Seal **150 PSI** (10.3 bar)
- Type 2106 Seal **150 PSI** (10.3 bar)

CAUTION: Maximum solid size by pump

- HP75 / MS50 **0.030"** (0.76mm)
- SP150 **0.060"** (1.50mm)
- LT25 **0.120"** (3.05mm)
- F50/75/95 **0.150"** (3.81mm)
- OH75 **0.150"** (3.81mm)
- CD100/150 **0.150"** (3.81mm)
- CL150 **0.150"** (3.81mm)
- RC200/300 **0.380"** (9.60mm)
- XJ-JB100 **0.120"** (3.05mm)
- XJ-JB150 **0.250"** (6.40mm)
- XJ-JB200 **0.440"** (11.2mm)
- XL-XT100 **0.120"** (3.05mm)
- XL-XT150 **0.250"** (6.40mm)
- XL-XT200 **0.440"** (11.2mm)

- HP75 / MS50 **0.5 GPM** (1.9 LPM)
- SP150 **10 GPM** (38 LPM)
- LT25 **0.5 GPM** (1.9 LPM)
- F50/75/95 **5.0 GPM** (19 LPM)
- OH75 **7.0 GPM** (26 LPM)
- CD100 **12 GPM** (45 LPM)
- CD150 **25 GPM** (94 LPM)
- CL150 **40 GPM** (150 LPM)
- RC200 **10 GPM** (38 LPM)
- RC300 **50 GPM** (189 LPM)
- XJ-JB150 **20 GPM** (75 LPM)
- XJ-JB150 **40 GPM** (150 LPM)
- XJ-JB200 **90 GPM** (340 LPM)
- XL-XT100 **10 GPM** (38 LPM)
- XL-XT150 **35 GPM** (132 LPM)
- XL-XT200 **50 GPM** (189 LPM)

GENERAL TERMS OF SALE FOR PRODUCTS

1. GENERAL

A. Seller's price is based on these sales terms and conditions. The agreement and inclusion of other or amended terms in this contract will result in a change (including increase) in Seller's pric e (as may be contained in any price books or quotations) to reflect such other or amended terms . This contract shall represent the final, complete and exclusive statement of the agreement between the parties and may not be modified, supplemented, explained or waived by parole evidence, any Terms and Conditions contained in Buyer's purchase order or request for quotation, any course of dealings between the parties, Seller's performance or delivery, or in any other way. The Terms and Conditions of this contr act may only be modified or waived in a written document signed by an Officer of Seller. These terms are intended to cover all activity of Seller and Buyer hereunder, including sales and use of products, parts and work and all related matters (references t o products include parts and references to work include construction, installation and start -up). Any reference by Seller to Buyer's specifications and similar requirements are only to describe the products and work covered hereby and no warranties or oth er terms therein shall have any force of effect. Any information provided by Seller including, but not limited to, suggestions as to specific equipment does not imply any guarantee of specific suitability and/or material compatibility in a particular appl ication, since many factors outside the control of Seller may affect the suitability of products in a particular application. Catalogs, circulars, similar pamphlets and information contained on websites of the Seller are issued for general information pur poses only and shall not be deemed to modify the provisions hereof.

B. The agreement formed hereby and the language herein shall be construed and enforced under the Uniform Commercial Code as in effect in the State of California on the date hereof.

2. TAXES

Any sales, use or other similar type taxes imposed on this sale or on this transaction and/or any import or export duties or fees as may be assessed or imposed on or as a result of deliveries under this transaction are not included in the price . Such taxes shall be billed separately to the Buyer. Seller will accept a valid exemption certificate from the Buyer if applicable; however, if an exemption certificate previously accepted is not recognized by the governmental taxing authority involved and the Seller is required to pay the tax covered by such exemption certificate. Buyer agrees to promptly reimburse Seller for the taxes paid.

3. PERFORMANCE, INSPECTION AND ACCEPTANCE

A. Unless Seller specifically assumes installation, construction or start-up responsibility, all products shall be finally inspected and accepted within thirty (30) days after arrival at point of delivery. Where seller has responsibility for installation, construction or start -up all work shall be finally inspected and accepted with thirty (30) days after completion of the applicable work by Seller. All claims whatsoever by Buyer, (including claims for shortages) except only those provided for under the WARRANTY AND LIMITATION OF LIABILITY and PATENTS Clauses, hereof, must be asserted in writing by Buyer within said thirty (30) day period or they are waived. If this contract involves partial performance, all such claims must be asserted within said thirty - (30) day period for each partial performance. There shall be n o revocation of acceptance. Rejection may be only for defects substantially impairing the value of products or work and Buyer's remedy for lesser defects shall be those provided for under the WARRANTY AND LIMITATION OF LIABILITY Clause.

B. Seller shall not be responsible for non -performance or for delays in performance occasioned by any causes beyond Seller's reasonable control, including, by way of example and not limitation, to labor difficulties, delays of vendors or carriers, fires, governmental act ions, or shortages of material, components, labor, or manufacturing facilities. Any delays so occasioned shall affect a corresponding extension of Seller's performance dates, which are, in any event, understood to be approximate. IN NO EVENT SHALL BUYER BE ENTITLED TO INCIDENTAL OR CONSEQUENTIAL DAMAGES FOR LATE PERFORMANCE OR FOR A FAILURE TO PERFORM. Seller reserves the right to make partial shipments and to ship products, parts or work which may be completed prior to the scheduled performance date.

C. In the event that Seller has agreed to mount motors, turbines, gears, or other products which are not manufactured by Seller and which are not an integral part of Seller's manufactured product, and a delay in the delivery of such products to Seller occ urs that will cause a delay in Seller's performance date, Seller reserves the right to ship its product upon completion of manufacture and to refund an equitable portion of the amount originally included in the purchase price for mounting without incurring liability for non -performance.

D. Seller reserves to itself the right to change its specifications, drawings and standards if such changes will not impair the performance of its products, and parts, and further those products , and parts, will meet any of Buyer's specifications and other specific product requirements which are a part of this agreement. Seller is a global supplier of products and utilizes parts and products obtained worldwide, and Seller's products supplied under this contract shall be s ubject to Seller's sole determination as to all manufacturing, sourcing, assembly and supply unless otherwise specifically agreed in writing.

E. The manufacture and inspection of products and parts shall be to Seller's Engineering and Quality Assurance st andards, plus such other inspections or tests of documentation as are specifically agreed to by Seller. Requirements for any additional inspection, tests, documentation, or Buyer witness of manufacture, test, and/or inspection shall be subject to addition al charges.

4. TITLE AND RISK OF LOSS

Title and risk of loss shall pass to buyer upon delivery of products at the designated "Ex Works" as defined by Incoterms, unless other wise agreed by the parties.

5. EROSION AND CORROSION

It is specifically unde rstood that products and parts sold hereunder are not warranted for operation with erosive or corrosive fluids or for operation with any fluid or under any operating condition in variance with the specifications of this contract . No product or part shall b e deemed to be defective by reason of failure to resist erosive or corrosive action of any fluid and Buyer shall have no claim whatsoever against Seller therefore. No product shall be deemed defective by reason of any effect on Seller's products of the ac tion or results (such as vibration) of any goods or system (such as piping) not supplied by Seller.

6. BUYER'S RESPONSIBILITY

The design specifications of the equipment require the operation of the equipment within certain parameters and m ay call for the use of speed controls, safety devices, set points or other control devices to insure that the operation remains within design parameters. Buyer agrees and understands that the equipment must be operated and maintained within design specific ations and operated within the specifications of the contract, irrespective of whether controls or devices are otherwise required.

7. WARRANTY AND LIMITATION OF LIABILITY.

A. Seller warrants only that its product and parts, when shipped, will be free fr om defects in materials and workmanship. All claims for defective products or parts under this warranty must be made in writing immediately upon discovery and, in any event, within two (2) years of shipment by seller and all claims for defective work must be made in writing immediately upon discovery. Defective items must be held for Seller's inspection and returned to the sellers' point of original shipment upon request.

ANY UNAUTHORIZED DISSASSEMBLY, ALTERATION OF OR TAMPERING WITH ANY PRODUCT OR COMPONENT MAY "VOID" THE WARRANTY, IN THAT SUCH ACTION WILL RESULT IN SELLER BEING RELEASED AND RELIEVED FROM ITS OBLIGATIONS UNDER THIS WARRANTY AND FOR ANY FURTHER COSTS OR ACTIONS UNDER CLAUSE 7.C, FOLLOWING, AND THE BUYER ASSUMING SOLE RESPONSIBILITY FOR THE COSTS AND RESULTS OF SUCH ACTION.

THE FOREGOING IS EXPRESSLY IN LIEU OF ALL OTHER WARRANTIES WHATSOEVER, EXPRESS, IMPLIED AND STATUTORY, INCLUDING WITHOUT LIMITATION, THE IMPLIED, WARRANTIES OF MERCHANTABILITY AND FITNESS.

B. ANY PRODUCT (S) SOLD HEREU NDER WHICH ARE NOT MANUFACTURED BY SELLER ARE NOT WARRANTED BY SELLER and shall be covered only by the express warranty, if any, of the manufacturer thereof. With respect to products and parts not manufactured by Seller, Seller's only obligation shall be to assign to Buyer, to the extent possible, whatever warranty Seller obtains from the manufacturer.

C. Upon Buyer's submission of a claim as provided above and its substantiation, Seller shall at its option either (i) repair or replace its product, part o r work at the original place of shipment, or (ii) refund an equitable portion of the purchase price.

D. THE FOREGOING IS SELLER'S ONLY OBLIGATION AND BUYER'S EXCLUSIVE REMEDY FOR BREACH OF WARRANTY AND, EXCEPT FOR THE REMEDIES PERMITTED UNDER THE PERFORMANCE, INSPECTION AND ACCEPTANCE AND THE PATENTS CLAUSES HEREOF, THE FOREGOING IS BUYER EXCLUSIVE REMEDY AGAINST SELLER FOR ALL CLAIMS ARISING HEREUNDER OR RELATING HERETO WHETHER SUCH CLAIMS ARE BASED ON BREACH OF CONTRACT, TORT (INCLUDING NEGLIGENCE OR S TRICT LIABILITY) , INDEMNITY OR OTHER THEORIES. BUYER'S FAILURE TO SUBMIT A CLAIM AS PROVIDED ABOVE SHALL SPECIFICALLY WAIVE ALL CLAIMS FOR DAMAGES OR OTHER RELIEF, INCLUDING BUT NOT LIMITED TO CLAIMS BASED ON LATENT DEFECTS. IN NO EVENT SHALL BUYER BE EN TITLED TO INDIRECT, SPECIAL, INCIDENTAL OR CONSEQUENTIAL DAMAGES, NOR FOR DAMAGES FOR LOSS OF USE, LOST PROFITS OR REVENUE, INTEREST, LOST GOODWILL, WORK OR PRODUCTION STOPPAGE, IMPAIRMENT OF OTHER GOODS, INCREASED EXPENSES OF OPERATION, OR THE COST OF PURCHASING REPLACEMENT POWER OR OTHER SERVICES BECAUSE OF SERVICE INTERRUPTIONS. FURTHERMORE, IN NO EVENT SHALL SELLER'S TOTAL LIABILITY FOR DAMAGES OF BUYER EXCEED THE PURCHASE PRICE OF THE PRODUCTS OR PARTS MANUFACTURED BY SELLER AND UPON WHICH SUCH LIABIL ITY IS BASED. ANY ACTION ARISING HEREUNDER RELATED HERETO, WHETHER BASED ON BREACH OF CONTRACT, TORT (INCLUDING NEGLIGENCE) OR OTHER THEORIES, MUST BE COMMENCED WITHIN ONE (1) YEAR AFTER THE CAUSE OF ACTION ACCRUES OR IT SHALL BE BARRED.

8. PURCHASER'S R EPRESENTATIONS & WARRANTIES

Purchaser represents and warranties that the products(s) covered by this contract shall not be used in or in connection with a nuclear facility or application. The parties agree that this representation and warranty is material and is being relied on by seller. This provision may be modified in a separate writing signed by an officer of Price Pump Co.

9. PATENTS

Seller agrees to assume the defense of any suit for infringement of any patents brought against Buyer to the extent of such suit charges infringement of an apparatus or product claim by Seller's product in and of itself, provided (i) said product is built entirely to Seller's design, (ii) Buyer notifies Seller in writing of the filing of such suit within ten (10) days a fter the service of process thereof, and (iii) Seller is given complete control of the defense of such suit, including the right to defend, settle and make changes in the product for the purpose of avoiding infringement of any process or method claims. Pr ovided however, Seller will not defend any suit for infringement of a claimed patent where such alleged infringement is the result of following specific instruction furnished by Seller.

10. EXTENT OF SUPPLY

Only products as listed in Seller's proposal are included in this agreement. It must not be assumed that Seller has included anything beyond same.

11. MANUFACTURING SOURCES

To maintain delivery schedules, Seller reserves the right to have all or any part of the Buyer's order manufactured at an y of Sellers', sellers' licensees or sub contractors' plants, globally.

12. TERMS OF PAYMENT

Net 30 days from date of invoice .

13. ARBITRATION

In the event a dispute arises between the parties relating to or arising out of this agreement, the parties agree to attempt to have their senior management amicably settle the matter. In the event that the matter cannot be settled, the parties shall submit all disputes relating to this Agreement (whether contract, tort, products liability or otherwise) to bind ing Arbitration before a panel of arbitrators under the Commercial Dispute Resolution Procedures of the American Arbitration Association. Each party shall appoint an arbitrator and the third shall be selected in accordance with the rules of the American A rbitration Association. Judgment upon the award may be entered in any court having jurisdiction. The parties shall cooperate in providing reasonable disclosure of relevant documents. Each party shall bear its own expenses, and the costs and fees of the ar bitration shall be borne as allocated by the Arbitrator.

P-6101,2,3 - Beta - BT4b - BT4B0708PVT2000UD010A01Flow: 1.88GPH / 7.10L/HPressure: 102PSI / 07BAR"

ProMinent®

Operating instructions

Solenoid Metering Pump

Beta® b BT4b and BT5b

EN

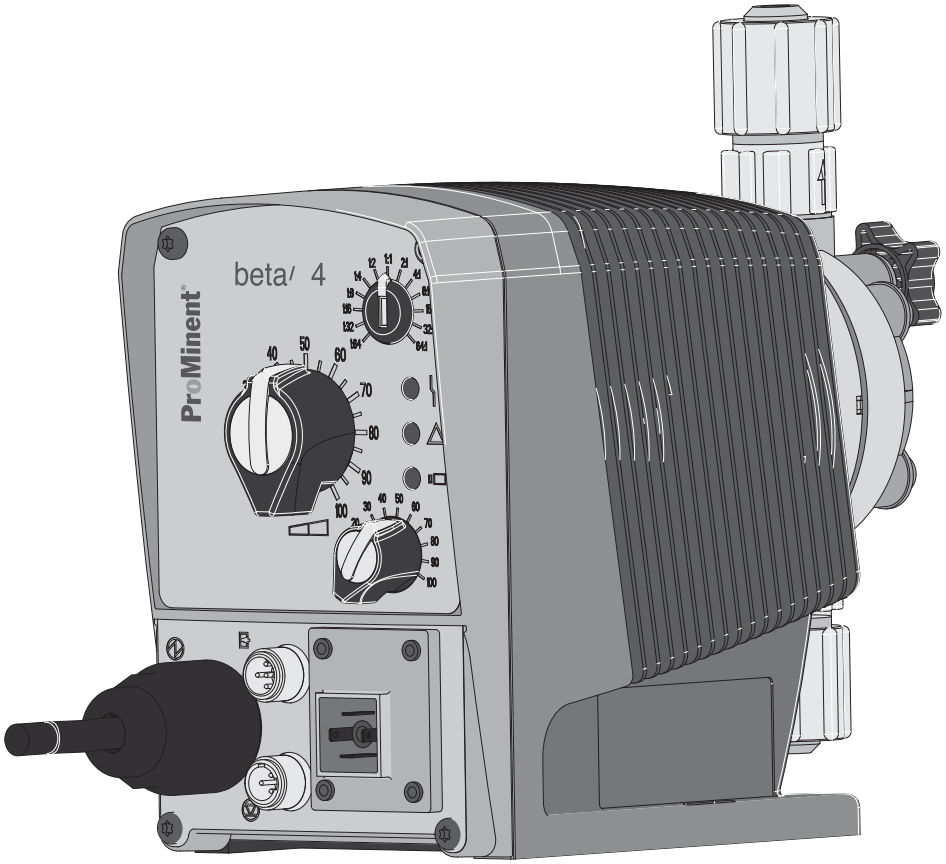

Please carefully read these operating instructions before use. · Do not discard.
The operator shall be liable for any damage caused by installation or operating errors.
The latest version of the operating instructions are available on our homepage.

Supplementary information



Fig. 1: Please read!

Read the following supplementary information in its entirety! You will benefit more from using the operating instructions should you already know this information.

The following are highlighted separately in the document:

- Enumerated lists

→ Instructions

⇨ Outcome of the instructions

↳ *'State the identity code and serial number' on page 2*: Links to points in this chapter

- refer to ... : References to points in this document or another document

[Keys]

Information

This provides important information relating to the correct operation of the unit or is intended to make your work easier.

Safety Information

Safety information is identified by pictograms - see Safety Chapter.

Validity

These operating instructions conform to current EU regulations applicable at the time of publication.

State the identity code and serial number

Please state identity code and serial number, which you can find on the nameplate when you contact us or order spare parts. This enables us to clearly identify the unit type and material versions.

Table of contents

1 Identity code 5
2 About this pump 7
3 Safety Chapter 8
4 Storage, Transport and Unpacking 13
5 Overview of Equipment and Control Elements 14
5.1 Overview of Equipment 14
5.2 Control Elements 15
5.2.1 Pulse control switch 15
5.2.2 Stroke Length Adjustment Button 15
5.2.3 Multifunctional Switch 15
5.2.4 Functional and Fault Indicators 16
5.2.5 "External control" terminal 16
5.2.6 "Level switch" terminal 16
6 Functional description 17
6.1 Liquid End 17
6.2 Drive Unit 17
6.3 Capacity 17
6.4 Self-Bleeding 17
6.5 Operating modes 17
6.6 Functions 18
6.7 Relay 18
6.8 Hierarchy of Operating Modes, Functions and Fault Statuses 18
7 Assembly 19
8 Installation, hydraulic 20
8.1 Installing hose lines 21
8.1.1 Installation of Metering Pumps Without Bleed Valve 21
8.1.2 Installation of Metering Pumps With Bleed Valve 23
8.1.3 Installation of Metering Pumps With Self-bleeding (SEK Type) 24
8.1.4 Basic installation notes 25
9 Electrical Installation 27
9.1 Supply voltage connector 28
9.1.1 Mains voltage 28
9.2 Supply voltage connector - low voltage 28
9.3 Description of the Terminals 29
9.3.1 "External control" terminal 29
9.3.2 "Level switch" terminal 31
9.4 Relay 32
9.4.1 Relay functions 32
9.4.2 "Fault indicating relay" output (identity code 1 + 3) 32
9.4.3 "Fault indicating relay" + "Pacing relay" output (identity code 4 + 5) 33
10 Start up 34
11 Operation 37
11.1 Manual 37
11.1.1 Capacity 37
11.1.2 Functions 37
11.1.3 External contact 38
11.1.4 External analog 39
11.2 Remote operation 39
12 Maintenance 40

13 Repairs ... 42
13.1 Cleaning valves ... 43
13.2 Replacing the diaphragm ... 44
14 Troubleshooting ... 47
14.1 Faults without a fault message ... 47
14.2 Fault messages ... 48
14.3 Warning messages ... 48
14.4 All Other Faults ... 48
15 Decommissioning ... 49
16 Technical data ... 51
16.1 Performance data ... 51
16.2 Accuracy ... 53
16.2.1 Standard Liquid End ... 53
16.2.2 Self-Bleeding Liquid End ... 53
16.3 Viscosity ... 53
16.4 Material Data ... 54
16.5 Electrical data ... 54
16.6 Temperatures ... 56
16.7 Climate ... 56
16.8 Degree of Protection and Safety Requirements ... 57
16.9 Compatibility ... 57
16.10 Sound pressure level ... 57
16.11 Shipping weight ... 57
17 Dimensional drawings ... 58
18 Diagrams for setting the metering capacity ... 64
19 Exploded Views of Liquid Ends ... 70
20 Further order information ... 107
21 EC Declaration of Conformity for Machinery ... 109
22 EC Declaration of Conformity for Machinery ... 110
23 Index ... 111

1 Identity code

Product range Beta b							
BT4b	Type	Capacity					
		bar	l/h				
	1000	10	0.74				
	1601	16	1.10				
	1602	16	2.20				
	1604	16	3.60				
	0708	7	7.10				
	0413	4	12.30				
	0220	2	19.00				
BT5b							
	2504	25	2.90				
	1008	10	6.80				
	0713	7	11.00				
	0420	4	17.10				
	0232	2	32.00				
		Material of dosing head/valves					
		PP	Polypropylene/PVDF. With the self-bleeding version (SEK): polypropylene/polypropylene				
		NP	Clear acrylic/PVDF. With the self-bleeding version (SEK): Clear acrylic/PVC				
		PV	PVDF/PVDF				
		TT	PTFE/PTFE				
		SS	Stainless steel 1.4404/1.4404				
			Material of seals/diaphragm				
			T	PTFE/PTFE coated			
			E	EPDM/PTFE coated, only for PP and NP self-bleeding (SEK)			
			B	FPM-B/PTFE coated, only for PP and NP self-bleeding (SEK)			
			W	Diaphragm additionally with FPM coating for media containing silicate			
				Dosing head design			
				0	without bleed valve, without valve spring only for NP, TT, SS and type 0232		
				1	without bleed valve, with valve spring only for NP, TT, SS and type 0232		
				2	with bleed valve, without valve spring only for PP, PV, NP not for type 0232		
				3	with bleed valve, with valve spring only for PP, PV, NP not for type 0232		
				4	version for higher-viscous media only for PVT, type 1604, 2504, 0708, 1008, 0413, 0713, 0220, 0420		
				7	self-bleeding (SER) only for PV/NP, not for types 1000, 1601 and 0232		
				9	self-bleeding (SEK) only for PP/NP, not for types 1000 and 0232		
					Hydraulic connector		
					0	Standard connection in line with technical data	
					5	Connector for 12/6 tube, discharge side only	
					9	Connector for 10/4 tube, discharge side only	

Product range Beta b																
						Design										
						0	Standard									
							Logo									
							0	with ProMinent logo								
								Electrical connections								
								U	100 ... 230 V ± 10%, 50/60 Hz*							
									Cable and plug							
									A	2 m European						
									B	2 m Swiss						
									C	2 m Australian						
									D	2 m USA						
									1	2 m open end						
										Relay						
										0	No relay					
										1	fault indicating relay (NC) (change-over relay)					
										3	fault indicating relay (NO) (change-over relay)					
										4	as 1 + pacing relay, (ONE each)					
										5	as 3 + pacing relay, (ONE each)					
											Accessories					
											0	without accessories				
											1	with foot and injection valve, 2 m PVC suction line, 5 m PE metering line				
												Control type				
												0	no lock			
												1	with lock: manual operation locked when external cable plugged in			
												H	External without PCS stop			
													Control version			
													0	Standard		
													A	External analogue 0...20 mA / 4...20 mA		
														Options		
														00	no options	

2 About this pump

Properties of the device

This solenoid metering pump Beta b is equipped with all adjustment and activation functions for modern water treatment and the dosing of chemicals. It has pulse step-up and pulse step-down compared with the preceding model. This enables it to adapt more precisely to external signal generators. The result is the simpler and more precise adjustment of chemical consumption to the actual need. It also has a 10 percent increase in efficiency and energy efficiency over the preceding model. The Beta b can be simply adjusted during operation.

3 Safety Chapter

Identification of safety notes

The following signal words are used in these operating instructions to denote different severities of danger:

Signal word	Meaning
WARNING	Denotes a possibly dangerous situation. If this is disregarded, you are in a life-threatening situation and this can result in serious injuries.
CAUTION	Denotes a possibly dangerous situation. If this is disregarded, it could result in slight or minor injuries or material damage.

Warning signs denoting different types of danger

The following warning signs are used in these operating instructions to denote different types of danger:

Warning signs	Type of danger
	Warning – automatic start-up.
	Warning – high-voltage.
	Warning – danger zone.

Intended Use

- Only use the pump to meter liquid feed chemicals.
- Only use the pump after it has been correctly installed and started up in accordance with the technical data and specifications contained in the operating instructions.
- Observe the general limitations with regard to viscosity limits, chemical resistance and density - see also ProMinent resistance list in the Product Catalogue or at www.prominent.com!
- All other uses or modifications are prohibited.
- The pump is not intended for the metering of gaseous media and solids.
- The pump is not intended for the metering of flammable media without implementing suitable protective measures.
- The pump is not intended for the metering of explosive media.
- The pump is not intended for operation in areas at risk from explosion.
- The pump is not intended for exterior applications without the implementation of suitable protective measures.
- The pump should only be operated by trained and authorised personnel, see the following "Qualifications" table.
- You are obliged to observe the information contained in the operating instructions at the different phases of the unit's service life.

Safety Information



WARNING!

Warning about personal and material damage

The pump can start to pump, as soon as it is connected to the mains voltage.

– Install an emergency cut-off switch in the pump power supply line or integrate the pump in the emergency cut-off management of the system.



WARNING!

Danger of electric shock

A mains voltage may exist inside the pump housing.

– If the pump housing has been damaged, you must disconnect it from the mains immediately. It may only be returned to service after an authorised repair.



WARNING!

Warning of dangerous or unknown feed chemical

Should a dangerous or unknown feed chemical be used: It may escape from the hydraulic components when working on the pump.

– Take appropriate protective measures before working on the pump (e.g. safety glasses, safety gloves, ...). Observe the safety data sheet for the feed chemical.
– Drain and flush the liquid end before working on the pump.



WARNING!

Fire danger

When pumping inflammable media the operator must take suitable safety precautions.



WARNING!

Danger from hazardous substances!

Possible consequence: Fatal or very serious injuries.

Please ensure when handling hazardous substances that you have read the latest safety data sheets provided by the manufacture of the hazardous substance. The actions required are described in the safety data sheet. Check the safety data sheet regularly and replace, if necessary, as the hazard potential of a substance can be re-evaluated at any time based on new findings.

The system operator is responsible for ensuring that these safety data sheets are available and that they are kept up to date, as well as for producing an associated hazard assessment for the workstations affected.



CAUTION!

Warning of feed chemical spraying around

Feed chemical can spray out of the hydraulic components if they are manipulated or opened due to pressure in the liquid end and adjacent parts of the system.

– Disconnect the pump from the mains power supply and ensure that it cannot be switched on again by unauthorised persons.
– Depressurise the system before commencing any work on hydraulic parts.



CAUTION!

Warning of feed chemical spraying around

The metering pump can generate a multiple of its rated pressure. Hydraulic parts can rupture if a discharge line is blocked.

– Correctly install a relief valve in the discharge line downstream of the metering pump.



CAUTION!

Warning of feed chemical spraying around

An unsuitable feed chemical can damage the wetted parts of the pump.

– Take into account the resistance of the wetted materials when selecting the feed chemical - see the ProMinent Product Catalogue or visit our homepage.



CAUTION!

Danger of injury to personnel and material damage

The use of untested third party components can result in injury to personnel and material damage.

– Only fit parts to metering pumps that have been tested and recommended by ProMinent.



CAUTION!

Danger from incorrectly operated or inadequately maintained pumps

Danger can arise from a poorly accessible pump due to incorrect operation and poor maintenance.

– Ensure that the pump is accessible at all times.
– Adhere to the maintenance intervals.



CAUTION!

Danger from incorrect metering

Should a different liquid end size be fitted, this will change the metering behaviour of the pump.

– Have the pump reprogrammed in the works.



CAUTION!

Warning against illegal operation

Observe the regulations that apply where the device is installed.

Fixed separating protective equipment

- Dosing head
- Housing
- Hood (houses the control elements)

The dosing head may only be removed by the customer in accordance with the "Repair" chapter.

The housing and the hood may only be removed by ProMinent customer service department.

Information in the event of an emergency

In an emergency, either pull out the mains plug, turn the multifunctional switch to "Stop" or press the Emergency Stop switch installed on the customer's side or disconnect the pump from the mains power supply in line with the emergency shut-down management guidelines for your system!

If feed chemical escapes, additionally ensure that the hydraulic system around the pump is at atmospheric pressure. Adhere to the safety data sheet for the feed chemical.

Qualification of personnel

Task	Qualification
Storage, transport, unpacking	Instructed person
Assembly	Technical personnel, service
Planning the hydraulic installation	Qualified personnel who have a thorough knowledge of metering pumps
Hydraulic installation	Technical personnel, service
Installation, electrical	Electrical technician
Operation	Instructed person
Maintenance, repair	Technical personnel, service
Decommissioning, disposal	Technical personnel, service
Troubleshooting	Technical personnel, electrical technician, instructed person, service

Explanation of the table:

Qualified personnel

A qualified employee is deemed to be a person who is able to assess the tasks assigned to him and recognise possible dangers based on his/her technical training, knowledge and experience, as well as knowledge of pertinent regulations.

Note:

A qualification of equal validity to a technical qualification can also be gained by several years of employment in the relevant field of work.

Electrical technician

An electrical technician is able to complete work on electrical systems and recognise and avoid possible dangers independently based on his/her technical training and experience, as well as knowledge of pertinent standards and regulations.

The electrical technician should be specifically trained for the working environment in which he is employed and know the relevant standards and regulations.

An electrical technician must comply with the provisions of the applicable statutory directives on accident prevention.

Instructed person

An instructed person is deemed to be a person who has been instructed and, if required, trained in the tasks assigned to him/her and possible dangers that could result from improper behaviour, as well as having been instructed in the required protective equipment and protective measures.

Service

The Service department refers to service technicians, who have received proven training and have been authorised by ProMinent to work on the system.

Sound pressure level

Sound pressure level LpA < 70 dB according to EN ISO 20361

at maximum stroke length, maximum stroke rate, maximum back pressure (water)

4 Storage, Transport and Unpacking

Safety Information

WARNING!

The transporting of pumps which have been used with radioactive feed chemicals is forbidden!

They will also not be accepted by ProMinent!

WARNING!

Only return metering pumps for repair in a cleaned state and with a flushed liquid end - refer to "Decommissioning!

Only return metering pumps with a completed Decontamination Declaration form. The Decontamination Declaration constitutes an integral part of an inspection / repair order. A unit can only be inspected or repaired when a Declaration of Decontamination Form is submitted that has been completed correctly and in full by an authorised and qualified person on behalf of the pump operator.

The "Decontamination Declaration Form" can be found on our homepage.

CAUTION!

Danger of material damage

The device can be damaged by incorrect or improper storage or transportation!

- The unit should only be stored or transported in a well packaged state - preferably in its original packaging.
- The packaged unit should also only be stored or transported in accordance with the stipulated storage conditions.
- The packaged unit should be protected from moisture and the ingress of chemicals.

Ambient conditions

Data	Value	Unit
Minimum storage and transport temperature	-20	°C
Maximum storage and transport temperature	+60	°C
Maximum air humidity *	95	% rel. humidity

* non-condensing

Scope of delivery

Compare the delivery note with the scope of delivery:

- Metering pump with mains cable
- Connector kit for hose/pipe connection (optional)
- Product-specific operating instructions with EC Declaration of Conformity
- Optional accessories

5 Overview of Equipment and Control Elements

5.1 Overview of Equipment

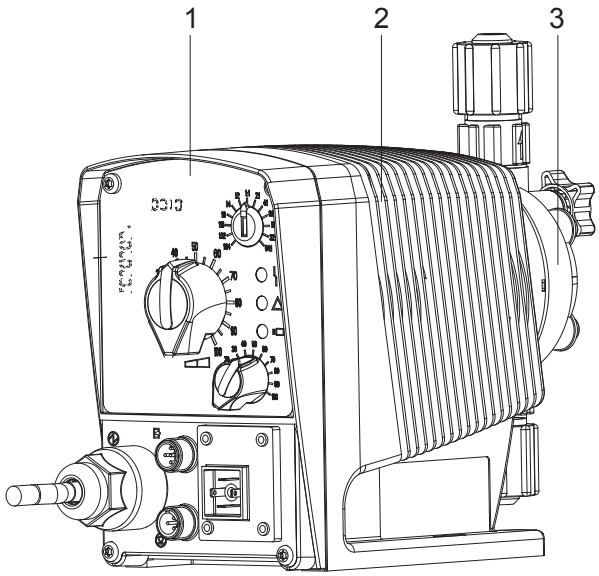

Fig. 2: Complete overview

1 Control unit
2 Drive unit
3 Liquid end

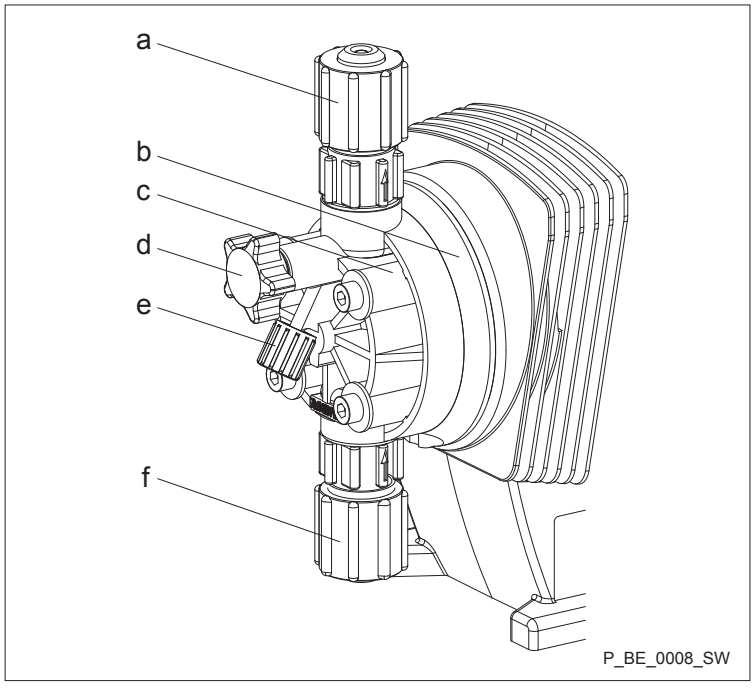

Fig. 3: Overview of liquid end (PV)

a Discharge valve
b Backplate
c Dosing head
d Bleed valve
e Bypass hose sleeve
f Suction valve

5.2 Control Elements

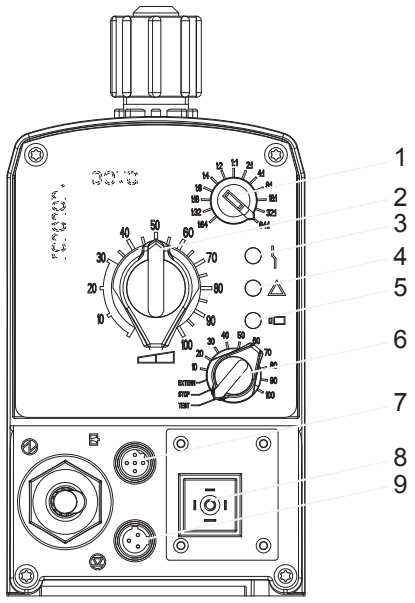

P_BE_0011_SW

Fig. 4

1 Pulse control switch
2 Stroke Length Adjustment Button
3 Fault indicator (red)
4 Warning indicator (yellow)
5 Operating indicator (green)
6 Multifunctional Switch
7 "External control" terminal
8 Relay connection (optional)
9 "Level switch" terminal

5.2.1 Pulse control switch

In **"External Contact" operating mode**, the pulse control switch either triggers a series of strokes or steps down an incoming series of contacts by a single contact (at the "external control" terminal).

In **"External Analogue" operating mode**, the stroke rate can be controlled by an mA signal via the pulse control switch. To do so, the multifunctional switch has to be turned to "Extern".

5.2.2 Stroke Length Adjustment Button

The stroke length adjustment button can be used to adjust the stroke length.

5.2.3 Multifunctional Switch

The multifunctional switch can be used to set the following functions, operating modes and stroke rate.

The operating modes that can be set are:

- Test (priming function)
- Stop (optionally missing)
- Extern (Contact)
- External (analogue, optional)
- Manual (setting stroke rate in 10% increments)

5.2.4 Functional and Fault Indicators

Fault indicator (red)

The fault indicator lights up if the fluid level in the dosing tank falls below the second switching point of the level switch (20 mm residual filling level in the dosing tank).

The fault indicator lights up if the current falls below 3.8 mA (only with 4...20 mA) or exceeds 23 mA in "External Analogue" operating mode.

This LED flashes in the event of an undefined operating status.

Warning indicator (yellow)

The warning indicator lights up if the fluid level in the dosing tank falls below the first switching point of the level switch.

Operating indicator (green)

The operating indicator lights up if the pump is ready for operation and there are no fault or warning alerts. It goes out quickly as soon as the pump has performed a stroke.

5.2.5 "External control" terminal

The "external control" terminal is a five-pole panel terminal.

It enables the following functions and operating modes to be used:

- Pause
- External contact
- External Analogue (optional)
- Auxiliary frequency (external frequency changer)



The two- and four-pole cables used to date can continue to be used. The "Auxiliary frequency" function can, however, only be used with a five-pole cable.

5.2.6 "Level switch" terminal

A 2-stage level switch with pre-warning and end switch-off can be connected.

6 Functional description

6.1 Liquid End

The dosing process is performed as follows: The diaphragm is pressed into the dosing head; the pressure in the dosing head closes the suction valve and the feed chemical flows through the discharge valve out of the dosing head. The diaphragm is now drawn out of the dosing head; the discharge valve closes due to the negative pressure in the dosing head and fresh feed chemical flows through the suction valve into the dosing head. One cycle is completed.

6.2 Drive Unit

The diaphragm is driven by an electromagnet, which is controlled by an electronic controller.

6.3 Capacity

The capacity is determined by the stroke length and the stroke rate.

The stroke length is adjusted by the stroke length adjustment knob within a range of 0 ... 100 %. A stroke length of between 30 ... 100 % (SEK type: 50 ... 100 %) is recommended to achieve the specified reproducibility!

Data	Value	Unit
Recommended stroke length, standard type	30 ... 100	%
Recommended stroke length, SEK type	50 ... 100	%

The stroke rate can be set within a range of 10 ... 100 % using the multifunctional switch.

6.4 Self-Bleeding

Self-bleeding liquid ends (SEK types) are capable of independent priming when a discharge line is connected and diverting existent air pockets via a bypass. During operation they are also capable of conveying away gases which are produced, independently of the operating pressure in the system. It is also possible to dose precisely in a depressurised state due to the integral back pressure valve.

6.5 Operating modes

The operating modes are selected by means of the multifunctional switch.

"Manual" operating mode

As soon as the stroke rate has been set by the multifunctional switch, the pump finds itself in "Manual" operating mode. 100% corresponds to 180 strokes/min.

"External contact" operating mode

The "External Contact" operating mode is described below in the "Operation" and "Installation, Electrical" chapters.

"External Analogue" operating mode

The "External Analogue" operating mode is described below in the "Operation" and "Installation, Electrical" chapters.

6.6 Functions

The functions are described below in the "Operation" chapter.

6.7 Relay

The pump has two connecting options.

Fault indicating relay option

The relay can switch a connected power circuit (e.g. for an alarm horn) in the event of warnings or fault messages (e.g. warning levels).

The relay can be retrofitted with the retrofit kit via a knock-out opening in the pump foot - refer to "Retrofitting relays".

Fault indicating and pacing relay option

This combined relay can generate a contact with each stroke via its pacing relay in addition to its function as a fault indicating relay.

The relay can be retrofitted with the retrofit kit via a knock-out opening in the pump foot - refer to "Retrofitting relays".

6.8 Hierarchy of Operating Modes, Functions and Fault Statuses

The different operating modes, functions and fault statuses have a different effect on if and how the pump reacts.

The following list shows the order:

1. - Test (priming)
2. - Fault, Stop, Pause
3. - Auxiliary frequency (external frequency changeover)
4. - Manual, Extern Contact

Comments:

re 1 - "Priming" can take place in any mode of the pump (providing it is functioning).

re 2 - "Fault", "Stop" und "Pause" stop everything apart from "Priming".

re 3 - The stroke rate of "Auxiliary frequency" always has priority over the stroke rate specified by an operating mode in 4.

7 Assembly

– *Compare the dimensions on the dimension sheet with those of the pump.*



WARNING!

Danger of electric shock

If water or other electrically conducting liquids penetrate into the drive housing, in any other manner than via the pump's suction connection, an electric shock may occur.

– Position the pump so that it cannot be flooded.



CAUTION!

Danger from incorrectly operated or inadequately maintained pumps

Danger can arise from a poorly accessible pump due to incorrect operation and poor maintenance.

– Ensure that the pump is accessible at all times.
– Adhere to the maintenance intervals.

Capacity too low

The liquid end valves can be disturbed by vibrations.

– *Secure the metering pump so that no vibrations can occur.*

Capacity too low

If the valves of the liquid end are not vertical, they cannot close correctly.

– *Suction and discharge valves must stand vertically upwards (for self-bleeding liquid end, the bleed valve).*

Mount the metering pump with the pump foot on a horizontal, level and load-bearing supporting surface.

8 Installation, hydraulic

Safety Information



CAUTION!

Warning of feed chemical spraying around

An unsuitable feed chemical can damage the wetted parts of the pump.

– Take into account the resistance of the wetted materials when selecting the feed chemical - see the ProMinent Product Catalogue or visit our homepage.



CAUTION!

Warning of feed chemical spraying around

Pumps which are not fully installed hydraulically can pump feed chemical from the outlet opening of the discharge valve as soon as they are connected to the mains power supply.

– First install the pump hydraulically, then electrically.
– In the event that you have failed to do so, turn the multi-functional switch to *[Stop]* (if fitted) or press an On / Off switch or Emergency Stop switch on site.



CAUTION!

Warning of feed chemical spraying around

Feed chemical can spray out of the hydraulic components if they are manipulated or opened due to pressure in the liquid end and adjacent parts of the system.

– Disconnect the pump from the mains power supply and ensure that it cannot be switched on again by unauthorised persons.
– Depressurise the system before commencing any work on hydraulic parts.



CAUTION!

Danger from rupturing hydraulic components

Peak loads during the dosing stroke can cause the maximum permissible operating pressure of the system and pump to be exceeded.

– The discharge lines are to be properly designed.



CAUTION!

Danger of personnel injury and material damage

The use of untested third party parts can result in personnel injuries and material damage.

– Only fit parts to metering pumps, which have been tested and recommended by ProMinent.

8.1 Installing hose lines

8.1.1 Installation of Metering Pumps Without Bleed Valve

Safety Information



CAUTION!

Warning of feed chemical spraying around

The pipes can loosen or rupture if they are not installed correctly.

- Route all hose lines so they are free from mechanical stresses and kinks.
- Only use original hoses with the specified hose dimensions and wall thicknesses.
- Only use clamp rings and hose nozzles that are intended for the hose diameter in question to ensure the long service life of the connections.



CAUTION!

Danger from rupturing hydraulic components

Hydraulic components can rupture if the maximum permissible operating pressure is exceeded.

- Always adhere to the maximum permissible operating pressure of all hydraulic components - please refer to the product-specific operating instructions and system documentation.
- Never allow the metering pump to run against a closed shut-off device.
- Install a relief valve.



CAUTION!

Hazardous feed chemicals can escape

Hazardous or extremely aggressive feed chemicals can leak out when using conventional bleeding procedures with metering pumps.

- Install a bleed line with return line into the storage tank.



CAUTION!

Hazardous feed chemicals can escape

Hazardous or extremely aggressive feed chemicals can leak out in the event that the metering pump is removed from the installation.

- Install a shut-off valve on the metering pump's pressure and discharge sides.



CAUTION!

Uncontrolled flow of feed chemical

Feed chemical can press through a stopped metering pump if there is back pressure.

- Use an injection valve or a vacuum breaker.

CAUTION!

Uncontrolled flow of feed chemical

Feed chemicals can leak through the metering pump in an uncontrolled manner in the event of excessive priming pressure.

– Do not exceed the maximum permissible priming pressure for the metering pump.

Align the pipes so that the metering pump and the liquid end can be removed from the side if necessary.

Installing hose lines - PP, NP, PV, TT designs

1. Cut off the ends of the hoses at right angles.
2. Pull the union nut (2) and clamp ring (3) over the hose (1) - see figure Fig. 5.
3. Push the hose end (1) up to the stop over the nozzle (4) and widen, if necessary.

Ensure that the O-ring and flat seal (5) is properly fitted to the valve (6).

Never re-use used PTFE seals. An installation sealed in this way is not watertight.

This type of seal is permanently distorted when subjected to pressure.

In order to enable it to be distinguished from the EPDM flat seal, the FPM flat seal PV design has a dot.

4. Place the hose (1) with the nozzle (4) onto the valve (6).
5. Clamp the hose connector: Tighten the union nut (2) while simultaneously pressing on the hose (1).
6. Re-tighten the hose connector: Pull on the hose (1) briefly, which is fastened to the dosing head and then tighten the union nut (2) once more.

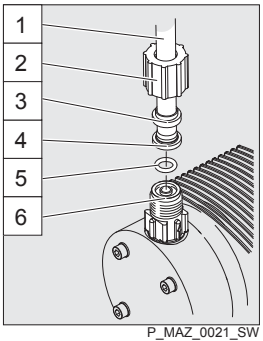

1 Hose
2 Union nut
3 Clamp ring
4 Nozzle
5 O-ring or flat seal
6 Valve

Fig. 5: PP, NP, PV and TT designs

Installing stainless steel pipe - SS design

1. Pull the union nut (2) and clamp rings (3, 4) over the pipe (1) with approx. 10 mm overhang - see *'Installing stainless steel pipe - SS design' on page 23*.
2. Insert the pipe (1) up to the stop in the valve (5).
3. Tighten the union nut (2).

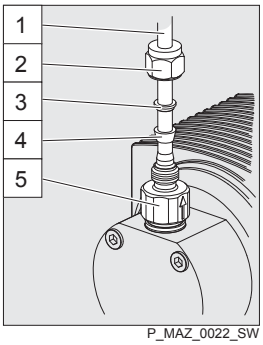

1 pipe
2 Union nut
3 Rear clamp ring
4 Front clamp ring
5 Valve

Fig. 6: SS design

Installing hose lines - SS design

CAUTION!

Warning of feed chemical spraying around

Connections can come loose in the event that hose lines are installed incorrectly on stainless steel valves.

– Only use PE or PTFE hose lines.
– In addition, insert a stainless steel support insert into the hose line.

8.1.2 Installation of Metering Pumps With Bleed Valve

Safety Information

CAUTION!

– All the installation and safety notes for metering pumps without bleed valves also apply.

Installation of the return line

A return line is also connected in addition to the suction and discharge line.

1. Attach the hose line to the return hose nozzle or to the liquid end bleed valve. PVC hose, soft, 6x4 mm is recommended.
2. Feed the free end of the return line back to the storage tank.
3. Shorten the return line so that it is not immersed in the feed chemical in the storage tank.

8.1.3 Installation of Metering Pumps With Self-bleeding (SEK Type)

Safety Information

CAUTION!

- All of the installation and safety notes for metering pumps without self-bleeding also apply.
- Do not exceed the maximum values for priming lift, priming pressure and viscosity of the feed chemical.
- Do not allow the suction side line cross-section to exceed the line cross-section on the suction valve.

Information about priming pressure

- *Make sure that the priming pressure on the suction end is at least equal to the return line pressure.*
- *Priming pressure in the return line restricts the bleeding function.*
- *However, operation with priming pressure in the return line and the suction end at atmospheric pressure is possible.*

Installation of the return line

A return line is also connected in addition to the suction and discharge line.

- *The return line is connected to the vertical valve on the upper side of the liquid end. It is factory-labelled with a red sleeve - see ‘Installation of the return line’ on page 24.*
- *The discharge line is connected to the horizontal valve.*

1. Attach the hose line to the return hose nozzle or to the liquid end bleed valve. PVC hose, soft, 6x4 mm is recommended.
2. Feed the free end of the return line back to the storage tank.
3. SEK only: Insert the return line into the anti-kink device on the bleed valve and screw it in place until the anti-kink device engages.

The anti-kink device prevents the return line from kinking, avoiding the risk of self-bleeding failure.

4. Shorten the return line so that it is not immersed in the feed chemical in the storage tank.

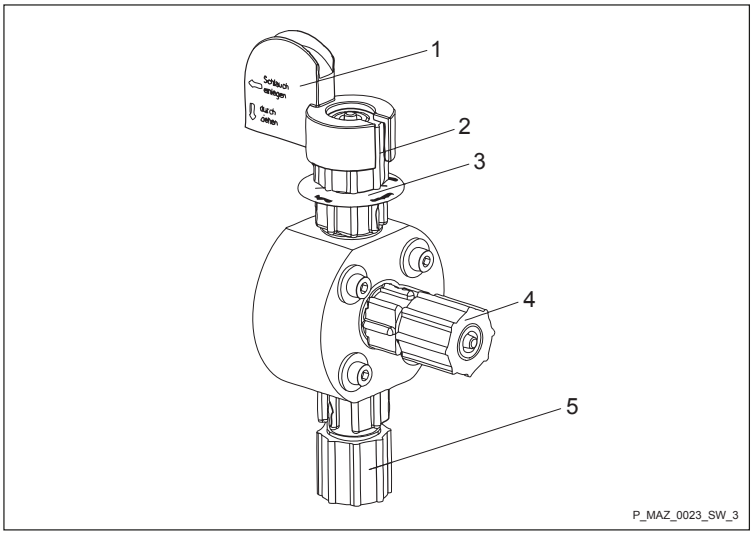

Fig. 7: SEK liquid end

1 Anti-kink device
2 Bleed valve for the return line into the storage tank, 6/4 mm
3 Red sleeve
4 Discharge valve for discharge line to the injection point, 6/4 - 12/9 mm
5 Suction valve for suction line in the storage tank, 6/4 - 12/9 mm

8.1.4 Basic installation notes

Safety notes

CAUTION!

Danger resulting from rupturing hydraulic components

Hydraulic components can rupture if the maximum permissible operating pressure is exceeded.

– Never allow the metering pump to run against a closed shut-off device.
– With metering pumps without integral relief valve: Install a relief valve in the discharge line.

CAUTION!

Hazardous feed chemicals can escape

With hazardous feed chemicals: Hazardous feed chemical can leak out when using conventional bleeding procedures with metering pumps.

– Install a bleed line with a return into the storage tank.

→ Shorten the return line so that it does not dip into the feed chemical in the storage tank.

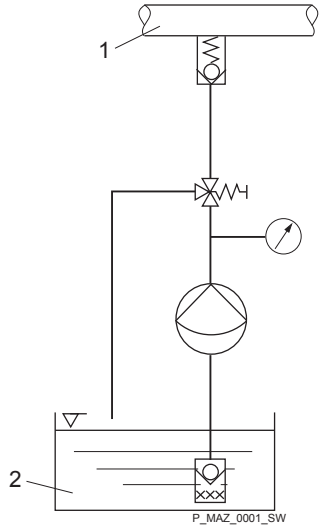

Fig. 8: Standard installation

1 Main line
2 Storage tank

Legend for hydraulic diagram

Symbol	Explanation	Symbol	Explanation
	Metering pump		Foot valve with filter meshes
	Injection valve		Level switch
	Multifunctional valve		Manometer

9 Electrical Installation



WARNING!

Danger of electric shock

A mains voltage may exist inside the device.

– Before any work, disconnect the device's mains cable from the mains.



WARNING!

Risk of electric shock

This pump is supplied with a grounding conductor and a grounding-type attachment plug.

– To reduce the risk of electric shock, ensure that it is connected only to a proper grounding-type receptacle.



WARNING!

Risk of electric shock

In the event of an electrical accident, the pump must be quickly disconnected from the mains.

– Install an emergency cut-off switch in the pump power supply line or
– Integrate the pump in the emergency cut-off management of the system and inform personnel of the isolating option.



WARNING!

Danger of electric shock

A mains voltage may exist inside the pump housing.

– If the pump housing has been damaged, you must disconnect it from the mains immediately. It may only be returned to service after an authorised repair.



CAUTION!

Material damage possible due to power surges

Should the pump be connected to the mains power supply in parallel to inductive consumers (such as solenoid valves, motors), inductive power surges can damage the controller when it is switched off.

– Provide the pump with its own contacts and supply with voltage via a contactor relay or relay.

Personnel: ■ Electrician

→ Install the pump in line with best working practice and in accordance with the operating instructions and applicable regulations.

9.1 Supply voltage connector



WARNING!

Unexpected startup is possible

As soon as the pump is connected to the mains, the pump may start pumping and consequently feed chemical may escape.

– Prevent dangerous feed chemicals from escaping.
– If you have not successfully prevented this, immediately press the *[STOP/START]* key or disconnect the pump from mains, e.g. via an emergency cu-off switch.



CAUTION!

If the pump is integrated into a system: Design the system so that potential hazardous situations are avoided by pumps starting up automatically subsequent to unintended power interruptions.



CAUTION!

Provide an option to disconnect the pump without Emergency Stop switch from the mains power supply.

9.1.1 Mains voltage

Parallel connection to inductive consumers

Should the pump be connected to the mains in parallel to inductive consumers (e.g. solenoid valves, motor), the pump must be electrically isolated when these consumers are switched off.

- Supply the pumps with voltage via a contactor relay or relay using separate contacts for the pump.
- If this is not possible then connect a varistor (part no. 710912) or an RC member, 0.22 µF / 220 Ω in parallel.

Interference suppression aids

Product	Part no.
Varistor:	710912
RC Gate, 0.22 µF / 220 Ω:	710802

9.2 Supply voltage connector - low voltage



WARNING!

Danger of electric shock

– For safety reasons, the low voltage pumps must be operated using only protective low voltage (SELV in accordance with EN 60335-1).



CAUTION!

Supply voltages that are too high destroy the pump.

– Do not connect the low voltage pump to voltages > 30 V.



- *The pump will generate a fault ("switch-off threshold for supply") in the event that the supply voltage to the pump is insufficient to ensure reliable function. The pump will recommence operation as soon as the supply voltage is restored.*
- *The fault indicator flashes additionally if the supply voltage is interrupted during a stroke, ("threshold for stroke abort"). Aborted strokes are not counted by the stroke counter. In doing so, the pump's electronic controller periodically checks the supply voltage ("wait time after stroke abort": 10 min). The pump will recommence operation if the supply voltage is sufficient.*
- *The pump's electrical system will shut down completely in the event that the supply voltage undershoots another threshold. The pump will come out of standby mode and recommence operation as soon as sufficient supply voltage is restored.*
- *The programmed thresholds apply to standard lead-acid batteries. ProMinent can match these to customer requirements.*
- *Use short large-diameter power leads in order to minimise faults. Use batteries with low internal resistance.*
- *If the pump is connected with incorrect polarity, it will not run because the polarity protection does not allow any current to flow.*

9.3 Description of the Terminals

9.3.1 "External control" terminal

The "external control" socket is a five-pin panel socket. It is compatible with two- and four-pole cables.

The "Auxiliary rate" function can only be used with a five conductor cable.

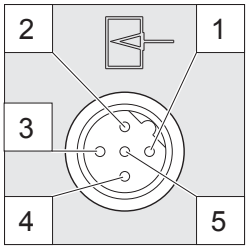

P_BE_0014_SW

Fig. 9: Pump assignment

Electrical interface for pin 1 "Pause" - pin 2 "External contact" - pin 5 "Auxiliary frequency"

Data	Value	Unit
Voltage with open contacts	5	V
Input resistance	10	kΩ
Max. pulse frequency	25	pulse/s
Min. pulse duration	20	ms
Min. pause between pulses	3	ms

Control via:

- potential-free contact (load: 0.5 mA at 5 V) or
- Semiconductor switch (residual voltage < 0.7 V)

Electrical interface for pin 3 "mA input" (with identity code characteristic "Control version": A - "External Analogue")

Data	Value	Unit
Input apparent ohmic resistance, approx.	120	Ω

Behaviour of the pump

At **approx. 0.1 mA (4.1 mA)** the metering pump makes its **first metering stroke**.
At **approx. 19.9 mA** the pump moves to continuous operation at **180 strokes / min** .
With current signals **above 23 mA**, the red fault indicator lights up, the pump stops and any fault indicating relay fitted switches (a **fault** is pending).
Only with 4...20 mA: With current signals **below 3.8 mA**, the red fault indicator lights up, the pump stops and any fault indicating relay fitted switches (**Fault** for example with a cable break).

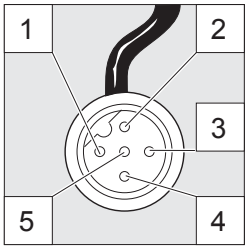

P_BE_0015_SW

Fig. 10: Cable assignment

Pin	Function	5-wire cable	2-wire cable
1	Pause	brown	bridged at pin 4
2	External contact	white	brown
3	mA input*	blue	-
4	Earth GND	black	white
5	Auxiliary frequency	grey	-

* with identity code characteristic "Control version": A - "External Analogue"

Refer to the functional description for the hierarchy of functions and operating modes.

"Pause" function

The pump does not work if:

- the cable is connected and pin 1 and pin 4 are open.

The pump works if:

- the cable is connected and pin 1 and pin 4 are connected.
- no cable is connected.

"External contact" operating mode

The pump performs one or more strokes if:

- Pin 2 and pin 4 are connected to each other for at least 20 ms. At the same time, pin 1 and pin 4 must also be connected to each other.

"External Analogue" operating mode

- The metering pump makes its first metering stroke at approx. 0.1 mA (4.1 mA) and enters into continuous operation at approx. 19.9 mA.

"Auxiliary frequency" operating mode

The pump works at a pre-set stroke rate if:

- Pin 5 and pin 4 are connected to each other. At the same time, pin 1 and pin 4 must also be connected to each other. The auxiliary frequency is factory-preset to the maximum stroke rate.

9.3.2 "Level switch" terminal

There is a connecting option for a 2-stage level switch with pre-warning and limit stop.

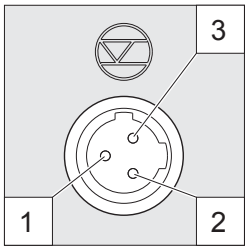

P_BE_0016_SW

Fig. 11: Pump assignment

Electrical interface

Data	Value	Unit
Voltage with open contacts	5	V
Input resistance	10	kΩ

Control via:

- potential-free contact (load: 0.5 mA at 5 V) or
- Semiconductor switch (residual voltage < 0.7 V)

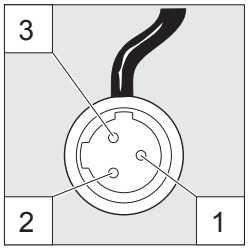

P_BE_0017_SW

Fig. 12: Cable assignment

Pin	Function	3-wire cable
1	Earth GND	black
2	Minimum pre-warning	blue
3	Minimum limit stop	brown

9.4 Relay

9.4.1 Relay functions

Beta b BT4b/BT5b

Identity code	Description	Type	Maximum voltage	Maximum current	Behaviour of relay type when retrofitting, as standard
0	no relay	-	-	-	-
1	Fault indicating relay	NC changeover contact	230 V	8 A	X
3	Fault indicating relay	NO changeover contact	230 V	8 A	-
4	Fault indicating relay	N/O	24 V	100 mA	X
	Pacing relay	N/O	24 V	100 mA	-
5	Fault indicating relay	N/O	24 V	100 mA	-
	Pacing relay	N/O	24 V	100 mA	-

Relay type switches in the event of...

Relay type	level Warning	level low	Calibrated stroke length Error	Processor Error
Fault indicating relay:	X	X	X	X

9.4.2 "Fault indicating relay" output (identity code 1 + 3)

A fault indicating relay can optionally be ordered. It is used to emit a signal when there is a fault with the pump and for the "Liquid level low, 1st stage" warning message and "Liquid level low 2nd stage" fault message.

A cut-off relay works when there are fault alerts from the pump and in the event of the "Liquid level low 2nd stage" alert.

The fault indicating relay can be retrofitted and is operational once attached to the relay board - refer to the "Operating Instructions for Retrofitting Relays for Beta b and delta".

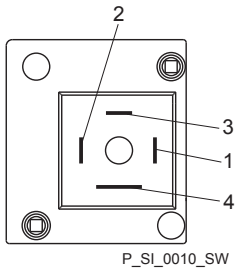

Fig. 13: Pump assignment

Electrical interface

Data	Value	Unit
Maximum contact load at 230 V and 50/60 Hz:	8	A
Minimum mechanical lifespan:	200,000	switching operations

Identity code 1 + 3

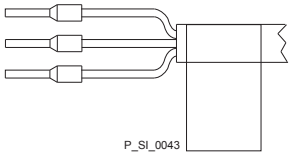

Fig. 14: Cable assignment

Pin assignment

To pin	VDE cable	Contact	CSA cable
1	white	NO (normally open)	white
2	green	NC (normally closed)	red
4	brown	C (common)	black

9.4.3 "Fault indicating relay" + "Pacing relay" output (identity code 4 + 5)

A fault indicating / pacing relay can optionally be ordered. The pacing output is electrically-isolated by means of an optocoupler with a semiconductor switch. The second switch is a relay.

The fault indicating /pacing relay can be retrofitted and is operational once attached to the relay board - refer to the "Operating Instructions for Retrofitting Relays for Beta b and delta".

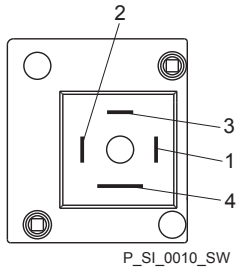

Fig. 15: Pump assignment

Electrical interface

for fault indicating relays:

Data	Value	Unit
Maximum contact load at 24 V and 50/60 Hz:	8	A
Minimum mechanical lifespan:	200,000	switching operations

for semiconductor switch pacing relay:

Data	Value	Unit
Residual voltage max. at I_c = 1 mA	0.4	V
Maximum current	100	mA
Maximum voltage	24	VDC
Pacing pulse duration, approx.	100	ms

Identity code 4 + 5

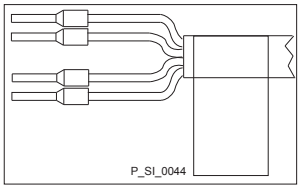

Fig. 16: Cable assignment

Pin assignment

To pin	VDE cable	Contact	Relay
1	yellow	NO (normally open)	Fault indicating relay
4	green	C (common)	Fault indicating relay
3	white	NO (normally open)	Pacing relay
2	brown	C (common)	Pacing relay

10 Start up

WARNING!

Dangerous reactions are possible due to contact of feed chemical with water

The feed chemical can mix and react in the liquid end with water remaining after testing in the factory.

- Read the safety data sheet on the feed chemical.
- Blast the liquid end with compressed air.
- Flush the liquid end with a suitable medium through the suction connector.

WARNING!

Fire hazard with flammable media

Only with combustible media: These may start to burn when combined with oxygen.

- During filling and draining of the liquid end, an expert must ensure that feed chemical does not come into contact with oxygen.

CAUTION!

Danger with dangerous feed chemicals

Contact with the feed chemical is possible provided the following handling instructions are adhered to.

- If the feed chemical is dangerous, take appropriate safety precautions when carrying out the following handling instructions.
- Adhere to the feed chemical safety data sheet.

CAUTION!

Warning of feed chemical spraying around

An unsuitable feed chemical can damage the parts of the pump that come into contact with the chemical.

- Take into account the resistance of the materials that will come into contact with the medium when selecting the feed chemical - refer to the ProMinent® Resistance List in the Product Catalogue or at www.prominent.com.

- *Reliable metering cannot be guaranteed after the metering pump has been idle for some time, as the feed chemical can crystallise in the valves and on the diaphragm. Regularly check the valves and diaphragm.*
- *Only adjust the stroke length when the pump is running.*
- *The metering pump should prime at 100% stroke length, as the priming lift depends on the stroke volume when the liquid end is empty. If the metering pump has to prime at a smaller stroke length and is not priming, reduce the priming lift (i.e. briefly lift up the storage tank with the feed chemical).*
- *SEK-type only: The suction lift corresponds to the priming lift, as some gas always remains in the liquid end with gaseous media.*

Starting up the metering pump

1. Fill the liquid end - *'Filling the liquid end' on page 35*.
2. Check the pump connectors and connections for leak-tightness.
3. Check the suction valve and discharge valve for leak-tightness and tighten if necessary.
4. Check the liquid end for leak-tightness and tighten the screws on the dosing head if necessary - see below for starting torque.
5. Only with bleed valve: Check whether the bleed valve is closed.
6. Start up the relief valve in the system in line with its operating instructions.
7. Start up the system.
8. After 24 hours of operation: Tighten the screws on the dosing head - see below for tightening torque.

Tightening torque

Data	Value	Unit
Tightening torque for screws:	4.5 ... 5.0	Nm

Draining the liquid end

With feed chemicals that should not come into contact with water.

1. Turn the pump so that the pressure connector is facing downwards.
2. Allow water to flow out of the liquid end.
3. Flush the suction connector from above with a suitable medium or blast with compressed air.

Filling the liquid end

With liquid ends without bleed valve:

1. Connect the suction line to the liquid end but not yet to the discharge line.
2. If fitted: Close the shut-off valve on the discharge side.
3. Connect a short, transparent section of hose to the discharge valve.
4. Switch on the metering pump and allow to work at maximum stroke length and stroke rate until some feed chemical becomes visible in the short section of hose.
   ⇨ The liquid end has been filled completely without bubbles.
5. Switch off the metering pump.
6. Connect the discharge line to the liquid end.
   ⇨ The metering pump is ready for operation.

With liquid ends with bleed valves (not SEK):

1. Connect the suction and discharge line to the liquid end.
2. Connect the return line.
3. Open the bleed valve by turning the star-shaped handle in a counter-clockwise direction.
   ⇨ You can now use the return line to bleed the pump.
4. Switch on the metering pump and allow to work at maximum stroke length and stroke rate until some feed chemical becomes visible in the return or discharge line.
   ⇨ The liquid end has been filled completely without bubbles.
5. Switch off the metering pump.
6. Close the bleed valve.
   ⇨ The metering pump is ready for operation.

With self-bleeding metering pumps (SEK type):

- *The return line is connected to the vertical valve on the top of the liquid end. It is labelled with a red sleeve ex-works.*
- *The discharge line is connected to the horizontal valve.*

1. Switch on the metering pump and allow to work at maximum stroke length and stroke rate until some feed chemical becomes visible in the return or discharge line.
   ⇨ The liquid end has been filled completely without bubbles.
2. Switch off the metering pump.
   ⇨ The metering pump is ready for operation.

Setting the precise dosage

Stroke length and stroke rate

- *Select as large a stroke length as possible with gaseous feed chemicals.*
- *Select as high a stroke rate as possible for good mixing.*
- *Do not set the stroke length to less than 30 % for precise metering using quantity-proportional metering.*

11 Operation



WARNING!

Fire hazard with flammable media

Only with combustible media: These may start to burn when combined with oxygen.

– During filling and draining of the liquid end, an expert must ensure that feed chemical does not come into contact with oxygen.



WARNING!

Danger of electric shock

Incompletely installed electrical options can allow moisture into the inside of the housing.

– Knock-out openings in the pump housing must be equipped with matching modules or be sealed in a leak-tight manner.



WARNING!

Danger of electric shock

A mains voltage may exist inside the pump housing.

– If the pump housing has been damaged, you must disconnect it from the mains immediately. It may only be returned to service after an authorised repair.

11.1 Manual

Personnel: ■ Instructed personnel

11.1.1 Capacity

The capacity is determined by the stroke length and the stroke rate.

The stroke length is adjusted by the stroke length adjustment knob within a range of 0 ... 100 %. A stroke length of between 30 ... 100 % (SEK type: 50 ... 100 %) is recommended to achieve the specified reproducibility!

Data	Value	Unit
Recommended stroke length, standard type	30 ... 100	%
Recommended stroke length, SEK type	50 ... 100	%

The stroke rate can be set within a range of 10 ... 100 % using the multi-functional switch.

11.1.2 Functions

The pump has the following functions:

"Pause" function

The pump can be remotely stopped via the "External Control" terminal. The "Pause" function only works via the "External Control" terminal.

"Stop" function (optional)

The pumps can be stopped by turning the multifunctional switch to "Stop" without disconnecting it from the mains power supply.

"Priming" function

Priming (transient conveyance at maximum frequency) can be provided by turning the multifunctional switch to "Test".

"Level switch" function

Information about the liquid/powder level in the feed chemical container is reported to the pump. To do so, a two-stage level switch must be fitted; it is connected to the "Level switch" terminal.

"Auxiliary rate" function

Enables switching of a stroke rate via the "External control" jack. This auxiliary rate has priority over the operating mode stroke rate settings . In the standard version, the "Auxiliary frequency" function is programmed to 100 % stroke rate.

11.1.3 External contact

"Extern" operating mode:

In the Extern Contact operating mode, either a series of strokes can be triggered or an inbound series of contacts can be stepped down via the pulse control switch by a single contact on the "External control" terminal. To do so, the multifunctional switch has to be turned to "Extern".

Explanation of the stepped-down values:

Settable values	Incoming contacts	Strokes performed
1:1	1	1
1:2	2	1
1:4	4	1
1:8	8	1
1:16	16	1
1:32	32	1
1:64	64	1

Explanation of stepped-up values:

Settable values	Incoming contacts	Strokes performed
1:1	1	1
2:1	1	2
4:1	1	4
8:1	1	8
16:1	1	16
32:1	1	32
64:1	1	64

11.1.4 External analog

"External Analogue" operating mode

In "External Analogue" operating mode, the stroke rate can be controlled by an mA signal via the pulse control switch. To do so, the multifunctional switch has to be turned to "Extern".

In the same way, a single contact via the pulse control switch at the "external control" terminal can either be used to trigger a series of strokes or to step down an incoming series of contacts. To do so, the multifunctional switch has to be turned to "Extern".

Explanation of the stepped-down values:

Settable values	Incoming contacts	Strokes performed
such as "External Analogue"	such as "External Analogue"	such as "External Analogue"
...	...	...
01:16	16	1
01:32	32	1
0-20 mA	-	corresponding to the mA signal

Explanation of stepped-up values:

Settable values	Incoming contacts	Strokes performed
such as "External Analogue"	such as "External Analogue"	such as "External Analogue"
...	...	...
16:1	1	16
32:1	1	32
4-20 mA	-	corresponding to the mA signal

11.2 Remote operation

There is an option to control the pump remotely via a signal cable - refer to your system documentation and to "Electrical Installation".

12 Maintenance

WARNING!

It is mandatory that you read the safety information and specifications in the "Storage, Transport and Unpacking" chapter prior to shipping the pump.

WARNING!

Fire hazard with flammable media

Only with combustible media: These may start to burn when combined with oxygen.

– During filling and draining of the liquid end, an expert must ensure that feed chemical does not come into contact with oxygen.

CAUTION!

Warning of feed chemical spraying around

Feed chemical can spray out of the hydraulic components if they are manipulated or opened due to pressure in the liquid end and adjacent parts of the system.

– Disconnect the pump from the mains power supply and ensure that it cannot be switched on again by unauthorised persons.
– Depressurise the system before commencing any work on hydraulic parts.

Third party spare parts for the pumps may lead to problems when pumping.

– *Use only original spare parts.*
– *Use the correct spare parts kits. In the event of doubt, refer to the exploded views and ordering information in the appendix.*

Standard liquid ends:

Interval	Maintenance work	Personnel
Quarterly*	■ Check the metering diaphragm for damage** - refer to "Repair". ■ Check that the hydraulic lines are fixed firmly to the liquid end. ■ Check that the suction valve and discharge valve are fitted tightly. ■ Check the tightness of the entire liquid end - particularly around the leakage hole - refer to *'Standard liquid ends:' on page 40*! ■ Check that the flow is correct: Allow the pump to prime briefly - turn the multifunctional switch briefly to "Test" ■ Check that the electrical connections are intact. ■ Check the integrity of the housing. ■ Check that the dosing head screws are tight.	Technical personnel

* Under normal loading (approx. 30 % of continuous operation)

Under heavy loading (e.g. continuous operation): Shorter intervals.

** Check the diaphragm frequently with feed chemicals that put particular pressure on the diaphragm, e.g. those containing abrasive additives.

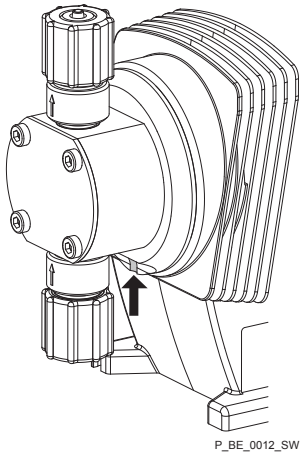

Fig. 17: Leakage hole

Liquid ends with bleed valve:

Interval	Maintenance work
Quarterly*	In addition: ■ Check that the bypass line is fixed firmly to the liquid end ■ Check that the bleed valve is tight. ■ Check the discharge and bypass line for kinks ■ Check that the bleed valve is operating correctly.

* Under normal loading (approx. 30 % of continuous operation)

Under heavy loading (e.g. continuous operation): Shorter intervals.

Tightening torque

Data	Value	Unit
Tightening torque for screws:	4.5 ... 5.0	Nm

13 Repairs

Safety Information



WARNING!

Danger of electric shock

Unauthorised repairs inside the pump can result in an electric shock.

For this reason, only allow a ProMinent branch or representative to perform repair inside the pump, in particular the following:

– Replacement of damaged mains connection lines
– Replacement of fuses
– Replacement of electronic control



WARNING!

Fire hazard with flammable media

Only with combustible media: These may start to burn when combined with oxygen.

– During filling and draining of the liquid end, an expert must ensure that feed chemical does not come into contact with oxygen.



WARNING!

It is mandatory that you read the safety information and specifications in the "Storage, Transport and Unpacking" chapter prior to shipping the pump.



WARNING!

Contact with the feed chemical

Parts that come into contact with the feed chemical are exposed and touched during repair work.

– Protect yourself against the feed chemical in case it is hazardous. Read the safety data sheet on the feed chemical.



CAUTION!

Warning of feed chemical spraying around

Feed chemical can spray out of the hydraulic components if they are manipulated or opened due to pressure in the liquid end and adjacent parts of the system.

– Disconnect the pump from the mains power supply and ensure that it cannot be switched on again by unauthorised persons.
– Depressurise the system before commencing any work on hydraulic parts.

Repairs that may be carried out by qualified technical personnel, in accordance with the operating instructions:

- Cleaning valves
- Replacing the diaphragm

All other repairs: Contact the responsible ProMinent branch!

13.1 Cleaning valves

Warning of faulty operation

Refer to the exploded drawings in the appendix when working on the unit.

Cleaning a discharge valve or a suction valve on types (PP, PV, NP) 1000, 1601, 1602, 1604, 2504

Warning of faulty operation

- *Discharge and suction valves differ from each other! Only take them apart one after each other, so that you do not confuse the components!*
- *Only use new components which fit your valve - both in terms of shape and chemical resistance!*
- *Recalibrate the pump after replacing a valve!*
- *Using an Allen key or similar, insert it into the smaller hole of the discharge connector and push the valve inserts out of it.*

A suction valve is constructed in almost the same way as a discharge valve.

Please note, however, that:

- the two valve inserts are identical here
- There is an additional spacer between the valve inserts.
- There is a shaped seal in the dosing head instead of an O-ring.
- The flow direction of the suction connector is the opposite to that of the discharge connector.

Cleaning a discharge valve or a suction valve on types (PP, PV, NP) 0708, 1008, 0220, 0420, 0413, 0713, 0232

Warning of faulty operation

- *Discharge and suction valves differ from each other! Only take them apart one after each other, so that you do not confuse the components!*
- *Only use new components which fit your valve - both in terms of shape and chemical resistance!*
- *With the PVT material version, the ball seat is integrated in the dosing head and so has to be cleaned separately!*
- *On the PVT material version, the discharge valve is a double ball valve!*
- *Using an Allen key or similar, insert it into the smaller hole of the discharge connector and push the valve inserts out of it.*

A suction valve is constructed in almost the same way as a discharge valve.

Please note, however, that:

- The flow direction of the suction connector is the opposite to that of the discharge connector.

13.2 Replacing the diaphragm

WARNING!
A little feed chemical may have accumulated behind the diaphragm in the backplate following a leak - depending on the design!

– Take this feed chemical into consideration when you are planning a repair - especially if it is hazardous!

- If necessary take protective measures.
- Adhere to the material safety data sheet for the feed chemical.
- Ensure that the system is at atmospheric pressure.

1. Empty the liquid end (turn the liquid end upside down and allow the feed chemical to run out; flush out with a suitable medium; flush the liquid end thoroughly when using hazardous feed chemicals!)
2. Turn the stroke adjustment dial as far as 0% stroke length when the pump is running (the drive axle is then difficult to turn).
3. Switch off the pump.
4. Unscrew the hydraulic connectors on the discharge and suction side.
5. With PP types with bleed valve: Firstly remove the bleed valve (grip), then lift off the cover of the liquid end with a screw driver.
6. Remove the screws (1).
7. Loosen the dosing head (2) and the backplate (4) from the pump housing (6) - but only loosen!
8. Hold the pump housing (6) with one hand and clamp the diaphragm (3) with the other hand between the dosing head (2) and the backplate (4).
9. Loosen the diaphragm (3) from the drive axle with a gentle backwards turn of the dosing head (2), diaphragm (3) and backplate (4) in an anticlockwise direction.
10. Unscrew the diaphragm (3) completely from the drive axle.
11. Remove the backplate (4) from the pump housing (6).
12. Check the condition of the safety diaphragm (5) and replace if necessary.
13. Push the safety diaphragm (5) onto the drive axle only until it lies flush with the pump housing (6) and no further!
14. Tentatively screw the new diaphragm (3) onto the drive axle until it can go no further.

    ⇨ The diaphragm (3) is now sitting at the stop of the thread.
15. Should this not work, remove dirt or swarf from the threads and screw the diaphragm (3) onto the drive axle correctly this time.

Ensure that the diaphragm is screwed exactly onto the drive axle otherwise the pump will subsequently not meter accurately!

16. Unscrew the diaphragm (3) again.
17. Place the backplate (4) on the pump housing (6).

CAUTION!
Leakage may become apparent at a later stage.
– Make sure that the leakage hole points downwards when the pump is installed later - please refer to !
– Place the backplate (4) immediately into the correct position on the pump housing (6)! Do not twist the backplate on the pump housing to prevent the safety diaphragm (5) becoming warped!

18. Place the diaphragm (3) into the backplate (4).

CAUTION!
Leakage may become apparent at a later stage.
– Do not over-tighten the diaphragm (3) in the following step!
– Ensure that the backplate (4) remains in its position so that the safety diaphragm does not become warped!

19. Hold the backplate (4) firmly and screw the diaphragm (3) in a clockwise direction until it is sitting tightly (the twisting resistance of the return spring can be felt).

20. Set the stroke length to 100%.

21. Place the dosing head (2) with the screws (1) onto the diaphragm (3) and the backplate (4) - ensure that the suction connector points downwards when the pump is in its subsequent fitting position.

22. Gently tighten the screws (1) and then tighten them diagonally. See below for the tightening torque.

23. With PP types with bleed valve: Allow the cover of the liquid end to rest in the dosing head, then press the grip on the bleed valve into the dosing head.

CAUTION!
Leakage possible
– Check the tightening torque of the screws after 24 hours of operation!
– With PP and PV dosing heads, check the tightening torque again after three months!

Tightening torque

Data	Value	Unit
Tightening torque for screws:	4.5 ... 5.0	Nm

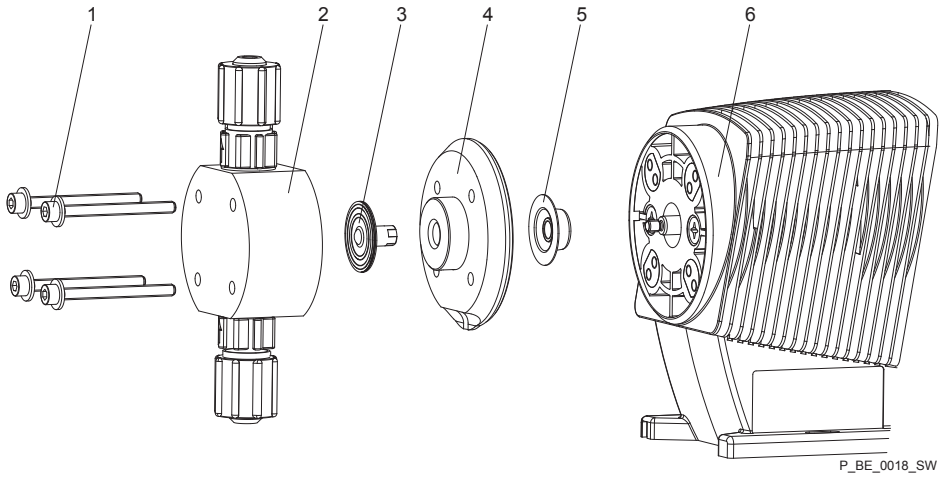

Fig. 18: Partially exploded view of liquid end

14 Troubleshooting

Safety Information



WARNING!

Warning of dangerous or unknown feed chemical

Should a dangerous or unknown feed chemical be used: It may escape from the hydraulic components when working on the pump.

– Take appropriate protective measures before working on the pump (e.g. safety glasses, safety gloves, ...). Observe the safety data sheet for the feed chemical.
– Drain and flush the liquid end before working on the pump.



WARNING!

Fire hazard with flammable media

Only with combustible media: These may start to burn when combined with oxygen.

– During filling and draining of the liquid end, an expert must ensure that feed chemical does not come into contact with oxygen.



CAUTION!

Warning of feed chemical spraying around

Feed chemical can spray out of the hydraulic components if they are manipulated or opened due to pressure in the liquid end and adjacent parts of the system.

– Disconnect the pump from the mains power supply and ensure that it cannot be switched on again by unauthorised persons.
– Depressurise the system before commencing any work on hydraulic parts.

14.1 Faults without a fault message

Fault description	Cause	Remedy	Personnel
Pump does not prime in spite of full stroke motion and bleeding.	Minor crystalline deposits on the ball seat due to the valves drying out.	Take the suction hose out of the storage tank and thoroughly flush out the liquid end.	Technical personnel
	Serious crystalline deposits on the ball seat due to the valves drying out.	Dismantle the valves and clean them - refer to "Repair"	Technical personnel
Fluid is escaping from the backplate.	The screws in the dosing head are too loose.	Tighten the screws in the dosing head crosswise - refer to "Repair" for tightening torque.	Instructed personnel
	The diaphragm is not leak-tight.	Replace the diaphragm - refer to "Repair".	Technical personnel
Green LED display (operating indicator) does not light up.	The wrong mains voltage or no mains voltage is connected.	Connect the pump correctly to the specified mains voltage - according to the specification on the nameplate	Electrician

14.2 Fault messages

Fault description	Cause	Remedy	Personnel
Red LED indicator (fault indicator) lights up and the pump stops	The fluid level in the storage tank has reached "Liquid level low 2nd stage".	Fill the storage tank.	Instructed personnel
	The pump is in "External Analogue" operating mode and the control current has risen above 23 mA (fault signal).	Clear the cause of the fault on the pump.	
	The pump is in "External Analogue" operating mode, set to "4-20 mA" and the control current has fallen below 4 mA.	Clear the cause of the low control current (e.g. cable break).	
	The multifunctional switch is not turned to "Extern" but an external cable is connected and the pump has the identity code feature "Control type" - "1" "with lock".	Either turn the multifunctional switch to "Extern" or remove the Extern cable from the pump	Technical personnel

14.3 Warning messages

Fault description	Cause	Remedy	Personnel
Yellow LED indicator (warning indicator) lights up	The fluid level in the storage tank has reached "Liquid level low 1st stage".	Fill the storage tank.	Instructed personnel

14.4 All Other Faults

Please contact the responsible ProMinent branch or representative!

15 Decommissioning

Decommissioning

WARNING!

Danger from chemical residues

There is normally chemical residue in the liquid end and on the housing after operation. This chemical residue could be hazardous to people.

- It is mandatory that the safety notes in the "Storage, Transport and Unpacking" chapter are read before shipping or transport.
- Thoroughly clean the liquid end and the housing of chemicals and dirt. Adhere to the material safety data sheet for the feed chemical.

WARNING!

Warning of dangerous or unknown feed chemical

Should a dangerous or unknown feed chemical be used: It may escape from the hydraulic components when working on the pump.

- Take appropriate protective measures before working on the pump (e.g. safety glasses, safety gloves, ...). Observe the safety data sheet for the feed chemical.
- Drain and flush the liquid end before working on the pump.

WARNING!

Fire hazard with flammable media

Only with combustible media: These may start to burn when combined with oxygen.

- During filling and draining of the liquid end, an expert must ensure that feed chemical does not come into contact with oxygen.

CAUTION!

Warning of feed chemical spraying around

Feed chemical can spray out of the hydraulic components if they are manipulated or opened due to pressure in the liquid end and adjacent parts of the system.

- Disconnect the pump from the mains power supply and ensure that it cannot be switched on again by unauthorised persons.
- Depressurise the system before commencing any work on hydraulic parts.

Danger of damage to the device

Take into account the information in the "Storage, Transport and Unpacking" chapter if the system is decommissioned for a temporary period.

1. Disconnect the pump from the mains/power supply.
2. Drain the liquid end by turning the pump upside down and allowing the feed chemical to run out.

3. Flush the liquid end with a suitable medium; flush the dosing head thoroughly when using hazardous feed chemicals!

Disposal



CAUTION!

Environmental hazard due to electronic waste

There are electronic components in the pump, which can have a toxic effect on the environment.

– Separate the electronic components from the remaining parts.
– Note the pertinent regulations currently applicable in your country!

16 Technical data

16.1 Performance data

Beta b operating at 180 strokes/minute and 100% stroke length

Type	Minimum pump capacity at maximum back pressure			Minimum pump capacity at medium back pressure			Connection size outside Ø x inside Ø	Suction lift*	Priming lift**	Maximum priming pressure on suction side
	bar	l/h	ml/stroke	bar	l/h	ml/stroke	mm	m WS	m WS	bar
Beta b										
1000	10	0.74	0.069	5.0	0.82	0.076	6x4	6.0	1.8	8
0700	7	0.8	0.074	3.5	0.88	0.074	6x4	6.0	1.8	8
0400	4	0.84	0.078	2.0	0.92	0.078	6x4	6.0	1.8	8
2001	20	0.96	0.089	10	1.5	0.13	6x3	6.0	2.0	8
1601	16	1.1	0.10	8.0	1.40	0.13	6x4	6.0	2.0	8
1001	10	1.3	0.12	5.0	1.5	0.14	6x4	6.0	2.0	8
0701	7	1.4	0.13	3.5	1.7	0.14	6x4	6.0	2.0	8
0401	4	1.5	0.14	2.0	2.0	0.18	6x4	6.0	2.0	8
2002	20	1.7	0.16	10	2.8	0.26	6x3	6.0	2.5	5.5
1602	16	2.2	0.20	8.0	2.5	0.24	6x4	6.0	2.5	5.5
1002	10	2.4	0.22	5.0	2.8	0.26	6x4	6.0	2.5	5.5
0702	7	2.6	0.24	3.5	3.1	0.29	6x4	6.0	2.5	5.5
0402	4	2.8	0.26	2.0	3.6	0.36	6x4	6.0	2.5	5.5
1604	16	3.6	0.33	8.0	4.3	0.40	6x4	5.0	3.0	3
1004	10	3.9	0.36	5.0	4.7	0.44	6x4	5.0	3.0	3
0704	7	4.2	0.39	3.5	5.1	0.47	6x4	5.0	3.0	3
0404	4	4.5	0.42	2.0	5.6	0.52	6x4	5.0	3.0	3
0708	7	7.1	0.66	3.5	8.4	0.78	8x5	4.0	2.0	2
0408	4	8.3	0.77	2	10.0	0.93	8x5	4.0	2.0	2
0413	4	12.3	1.14	2.0	14.2	1.31	8x5	3.0	2.5	1.5
0220	2	19.0	1.76	1.0	20.9	1.94	12x9	2.0	2.0	1
2504	25	2.9	0.27	12.5	3.7	0.34	8x4[1]	4.0	3.0	3
1605	16	4.1	0.38	8.0	4.9	0.45	8x5	4.0	3.0	3
1008	10	6.8	0.63	5.0	8.3	0.76	8x5	3.0	3.0	2
0713	7	11.0	1.02	3.5	13.1	1.21	8x5	3.0	3.0	1.5
0420	4	17.1	1.58	2.0	19.1	1.77	12x9	3.0	3.0	1
0232	2	32.0	2.96	1.0	36.2	3.35	12x9	2.0	2.0	0.8
Beta b Metering pumps with self-bleeding dosing head SEK* **										
1601	16	0.59	0.055	8.0	0.80	0.072	6x4	6.0	2.0	0.5
1001	10	0.72	0.067	5.0	0.60	0.08	6x4	6.0	2.0	0.5
0701	7	0.84	0.078	3.5	1.12	0.10	6x4	6.0	2.0	0.5

Type	Minimum pump capacity at maximum back pressure			Minimum pump capacity at medium back pressure			Connection size outside Ø x inside Ø	Suction lift*	Priming lift**	Maximum priming pressure on suction side
	bar	l/h	ml/ stroke	bar	l/h	ml/ stroke	mm	m WS	m WS	bar
0401	4	0.9	0.083	2.0	1.2	0.11	6x4	6.0	2.0	0.5
2002	20	0.78	0.07	10.0	1.8	0.17	6x4	6.0	2.5	0.5
1602	16	1.40	0.13	8.0	1.70	0.16	6x4	6.0	2.5	0.5
1002	10	1.7	0.16	5.0	2.0	0.18	6x4	6.0	2.5	0.5
0702	7	1.8	0.17	3.5	2.2	0.20	6x4	6.0	2.5	0.5
0402	4	2.1	0.19	2.0	2.5	0.23	6x4	6.0	2.5	0.5
1604	16	2.7	0.25	8.0	3.6	0.33	6x4	6.0	3.0	0.5
1004	10	3.3	0.30	5.0	3.9	0.36	6x4	6.0	3.0	0.5
0704	7	3.6	0.33	3.5	4.0	0.37	6x4	6.0	3.0	0.5
0404	4	3.9	0.36	2.0	4.2	0.39	6x4	6.0	3.0	0.5
0708	7	6.60	0.61	3.5	7.50	0.69	8x5	6.0	2.0	0.5
0408	4	7.5	0.64	2.0	8.1	0.77	8x5	6.0	2.0	0.5
0413	4	10.8	1.0	2.0	12.6	1.17	8x5	6.0	2.5	0.5
0220	2	16.2	1.5	1.0	18.0	1.67	12x9	6.0	2.0	0.5
1008	10	6.3	0.58	5.0	7.5	0.69	8x5	6.0	3.0	0.5
0713	7	10.5	0.97	3.5	12.3	1.14	8x5	6.0	2.5	0.5
0420	4	15.6	1.44	2.0	17.4	1.61	12x9	6.0	2.5	0.5
Beta b metering pumps with self-bleeding dosing head SER**										
1002	10	1.40	0.13	8.0	1.70	0.174	6x4	6.0	1.8	0.5
1004	10	2.7	0.25	8.0	3.6	0.33	6x4	6.0	1.8	0.5
0708	7	6.60	0.61	3.5	7.50	0.69	8x5	6.0	1.8	0.5
0413	4	10.8	1.0	2.0	12.6	1.17	8x5	6.0	1.8	0.5
0220	2	16.2	1.5	1.0	18.0	1.67	12x9	6.0	2.0	0.5
1008	10	6.3	0.58	5.0	7.5	0.69	8x5	6.0	1.8	0.5
0713	7	10.5	0.97	3.5	12.3	1.14	8x5	6.0	1.8	0.5
0420	4	15.6	1.44	2.0	17.4	1.61	12x9	6.0	1.8	0.5

* - Suction lift with a filled suction line and filled liquid end. With self-bleeding dosing head with air in the suction line.

** - Priming lift with clean and moist valves. Priming lift at 100% stroke length and free outlet or opened bleed valve.

*** - The given performance data constitutes guaranteed minimum values, calculated using water as the medium at room temperature. The bypass connection with a self-bleeding dosing head SEK is 6x4 mm.

*** - The given performance data constitutes guaranteed minimum values, calculated using water as the medium at room temperature.

[1] - The connector width is 6 mm on SST material versions.

Beta b Metering pumps with dosing heads for higher-viscosity media (HV) have a 10-20% lower capacity and are not self-priming. Connection G 3/4-DN 10 with hose nozzle d16-DN10.

16.2 Accuracy

16.2.1 Standard Liquid End

Data	Value	Unit
Capacity range of the series	-5 ... +10	% *
Reproducibility	±2	% **

* - at max. stroke length and max. operating pressure for all material versions

** - at constant conditions and min. 30 % stroke length

16.2.2 Self-Bleeding Liquid End

As the self-bleeding liquid end is used with outgassing media and when operating with air bubbles, no dosing accuracy or reproducibility can be provided.

The recommended minimum stroke length with self-bleeding dosing pumps is 50 %.

16.3 Viscosity

The liquid ends are suitable for the following viscosity ranges:

Version	Range	Unit
standard	0 ... 200	mPas
With valve springs	200 ... 500	mPas
Self-bleeding (SEK)	0 ... 50	mPas
HV (highly viscous)	500 ... 3000*	mPas

* Only when the installation is correctly adjusted

16.4 Material Data

Standard liquid ends

Version	Dosing head	Suction/Discharge connector	Seals	Valve balls
PPE	Polypropylene	Polypropylene	EPDM	Ceramic
PPB	Polypropylene	Polypropylene	FPM	Ceramic
PPT	Polypropylene	PVDF	PTFE	Ceramic
NPE	Acrylic glass	PVC	EPDM	Ceramic
NPB	Acrylic glass	PVC	FPM	Ceramic
NPT	Acrylic glass	PVDF	PTFE	Ceramic
PVT	PVDF	PVDF	PTFE	Ceramic
TTT	PTFE with carbon	PTFE with carbon	PTFE	Ceramic
SST	Stainless steel 1.4404	Stainless steel 1.4404	PTFE	Ceramic

Only the self-bleeding version in PPE, PPB, NPE and NPB material models with a valve spring made of hastealloy C and a valve insert made of PVDF. Diaphragm with a PTFE coating.

FPM = fluororubber

Pump

Housing parts: polyphenyl ether (PPE with fibreglass)

16.5 Electrical data

Version: 100 - 230 V ±10 %, 50/60 Hz, Beta b BT4b

Data	Value	Unit
Nominal power, approx.	6.4 ... 16.5	W
Current I eff	0.65 ... 0.1	A
Peak current	4.2 ...1.3	A
Switch on peak current, (within approx. 50 ms falling)	15	A
Fuse*	0.8	AT

Version: 100 - 230 V ±10 %, 50/60 Hz, Beta b BT5b

Data	Value	Unit
Nominal power, approx.	20 ... 25	W
Current I eff	0.9 ... 0.3	A
Peak current	5.9 ... 2.3	A
Switch on peak current, (within approx. 50 ms falling)	15	A
Fuse*	0.8	AT

* Fuses must have VDE, UL and CSA certification. E.G. type 19195 manufactured by Wickmann in compliance with IEC Publ. 127 - 2/3.

Power consumption

Type	Perform-ance	Type	Perform-ance	Type	Perform-ance
	W		W		W
1000	7.6	1602	12.2	0408	12.7
0700	6.4	1002	10.6	0413	16.5
0400	5.7	0702	9.3	0220	16.5
2001	10.5	0402	7.9	2504	21.2
1601	10.0	1604	16.5	1008	20.3
1001	8.3	1004	12.7	0713	21.2
0701	7.5	0704	11.1	0420	21.2
0401	6.9	0404	9.5	0232	24.9
2002	13.5	0708	16.5		

Design: 12 - 24 VDC# -8/+24 %, identity code M

Parameter	Beta b BT4b
Nominal power, approx.	17.4 W.
Nominal current (averaged at 180 H/min)	3.9 ... 1.9 A.
Peak current	15.6... 8.7 A.
closed current (no stroke)	32 ... 24 mA.
Fuse*	5 AT

SELV in accordance with EN 60335-1

* 5 AT, 5x20 mm, order no. 712028

The pump only works if the polarity is correct.

Design: 24 VDC# -15/+24 %, identity code N

Parameter	Beta b BT5b
Nominal power, approx.	24.4 W.
Nominal current (averaged at 180 H/min)	2.5 A.
Peak current	11.7 A.
Closed current (no stroke)	24 mA.
Fuse*	5 AT

SELV in accordance with EN 60335-1

* 5 AT, 5x20 mm, order no. 712028

The pump only works if the polarity is correct.

16.6 Temperatures

Pump, fully assembled

Data	Value	Unit
Storage and transport temperature:	-10 ... +50	°C
Ambient temperature in operation (power end/drive and control):	-10 ... +45	°C

Liquid end, long-term*

Maximum temperature, liquid end

Material version	Value	Unit
PP	50	°C
NP	40	°C
PV	50	°C
TT	50	°C
SS	50	°C

* long term at max. operating pressure, dependent on the ambient temperature and the feed chemical temperature

Minimum temperature, liquid end

Minimum temperature, liquid end

Material version	Value	Unit
All	-10	°C

Liquid end, short-term*

Maximum temperature, liquid end

Material version	Value	Unit
PPT	100	°C
NPT	60	°C
PVT	120	°C
TTT	120	°C
SST	120	°C

* Temp. max., for 15 min at max. 2 bar, dependent on the ambient and feed chemical temperatures

16.7 Climate

Data	Value	Unit
Maximum air humidity *:	95	% rel. humidity

* non-condensing

Exposure in a humid and alternating climate:

FW 24 according to DIN 50016

16.8 Degree of Protection and Safety Requirements

Degree of protection

Protection against accidental contact and humidity:

IP 65 according to DIN EN 60529

Safety requirements

Degree of protection:

1 - mains power connection with protective earth conductor

16.9 Compatibility

Some hydraulic parts of the Beta® b are identical to those of the Beta® a, gamma/ L and delta®.

There is most compatibility with pumps of the Beta® a, gamma/ L and delta® series with the following components and accessories:

- Signal cable gamma/Vario 2-, 4- and 5-wire for the "Extern" function
- Level switch 2-stage (gamma / Vario / Beta®)
- Dosing line cross-sections
- Standard gamma connector kit
- Chemical feed container
- Overall height (distance between the suction and discharge connector)
- Same use of accessories, such as back pressure valves, multifunctional valves, dosing monitor and flushing equipment

16.10 Sound pressure level

Sound pressure level

Sound pressure level LpA < 70 dB according to EN ISO 20361

at maximum stroke length, maximum stroke rate, maximum back pressure (water)

16.11 Shipping weight

Shipping weight of Beta b types - in kg

Material	BT4b						BT5b		
	1000, 0700, 0400	2001, 1601, 1001, 0701, 0401	2002, 1602, 1002, 0702, 0402	1604, 1004, 0704, 0404	0708, 0408, 0413	0220	2504, 1008, 0713	0420	0232
PP, NP, PV, TT	2.5	2.9	2.9	3.1	3.1	3.3	4.5	4.7	5.1
SS	3.0	3.6	3.6	3.9	3.9	4.4	5.3	5.8	6.6

17 Dimensional drawings

- *Compare the dimensions on the dimensional drawing and pump.*
- *All dimensions are in mm.*

Dimensional drawing Beta b, material version PP

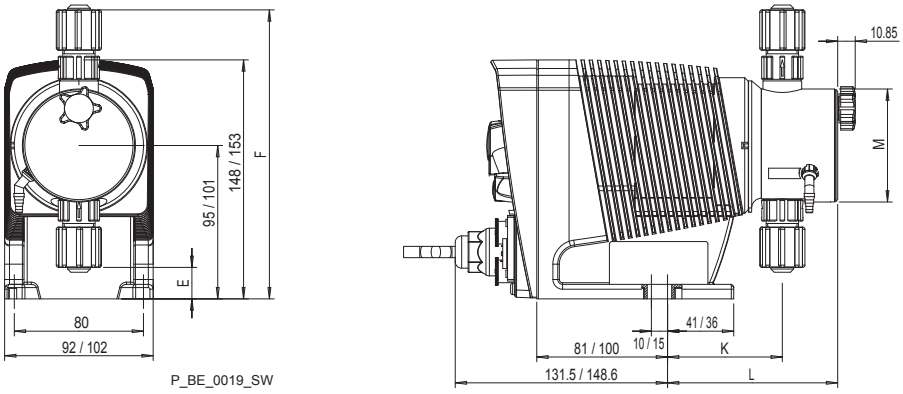

Fig. 19: Dimension drawing Beta b BT4b/BT5b, material version PP - dimensions in mm

	1000 - 1604	0708 - 0220	1008 - 0420	0232
E	19.5	7	14	1.5
F	179	186.5	191.5	200.5
K	71	77.5	74	77.5
L	105.5	111	107.5	94.5
M	Ø 70	Ø 90	Ø 90	Ø 110

Dimensional drawing Beta b, material version PP

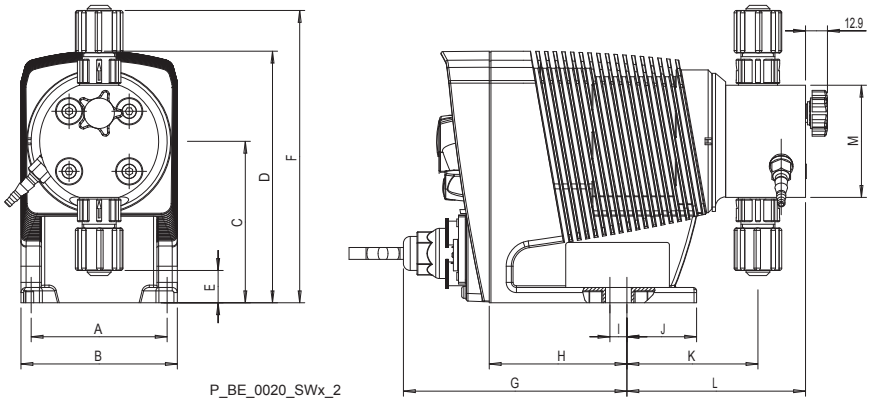

Fig. 20: Dimension drawing Beta b BT4b/BT5b, material version PP - dimensions in mm

	1000 - 1604	0708 - 0220	2504	1008 - 0420	0232
A	80	80	80	80	80
B	92	92	102	102	102
C	95	95	101	101	101
D	148	148	153	153	153
E	19	7.2	24.6	14	3.2
F	172	182.8	178.4	188	198.8
G	131.5	131.5	148.6	148.6	148.6
H	81	81	100	100	100
I	10	10	15	15	15
J	41	41	36	36	36
K	77	77.5	77.1	74.1	76
L	105	105.5	105.1	102.1	104.5
M	Ø 70	Ø 90	Ø 70	Ø 90	Ø 110

Dimensional drawing Beta b, material version PP and NP SEK

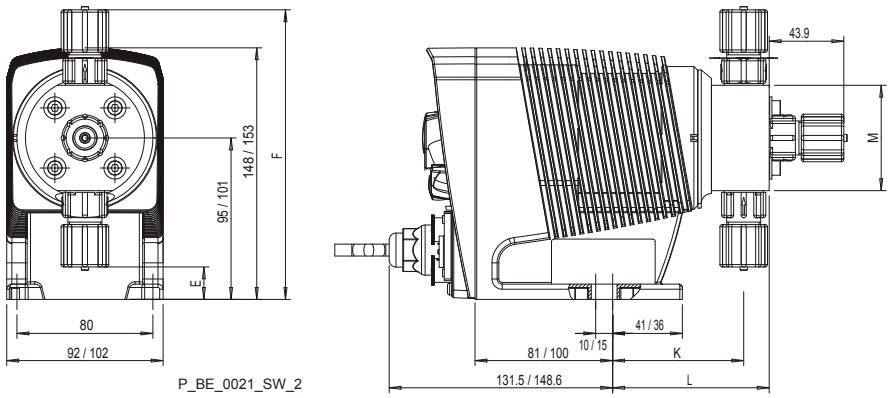

Fig. 21: Dimensional drawing Beta b BT4b/BT5b, material versions PP and NP with self-bleeding dosing head SEK - dimensions in mm

	1604	0708 - 0220	1008 - 0232
E	19	7.5	13.6
F	170.5	182.5	188.4
K	77	74	74
L	92	105.5	89
M	Ø 70	Ø 90	Ø 90

Dimensional drawing Beta b, material version PV

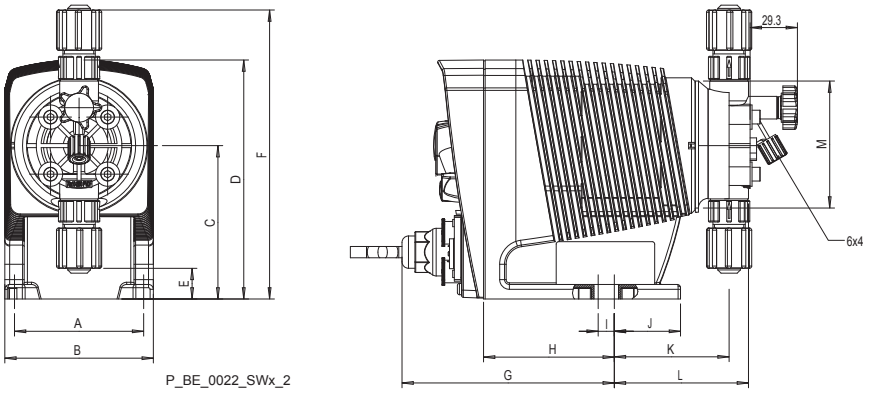

Fig. 22: Dimension drawing Beta b BT4b/BT5b, material version PV - dimensions in mm

	1604	0708 - 0220	1008 - 0420	0232
A	80	80	80	80
B	92	92	102	102
C	95	95	101	101
D	148	148	153	153
E	19	8.1	14.1	3.2
F	179	185.5	191.5	199
G	131.5	131.5	148.5	148.5
H	81	81	100	100
I	10	10	15	15
J	41	41	36	36
K	71	73	73	76
L	83	90	90	93
M	Ø 70	Ø 90	Ø 90	Ø 110

Dimensional drawing Beta b, material version PV HV

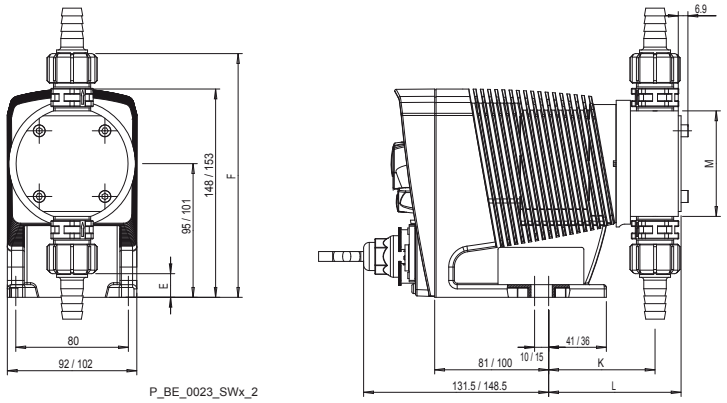

Fig. 23: Dimensional drawing Beta b BT4b/BT5b, material version PV for highly viscous feed chemicals - dimensions in mm

	1604	0708 - 0413	0220	1008 - 0713	0420
E	17	13	13	22.8	19
F	173	177	177	179.2	183
K	75.5	77	77	75.5	78.5
L	94	95	95	94	96.5
M	Ø 70	Ø 80	Ø 85	Ø 85	Ø 85

Dimensional drawing Beta b, material version TT

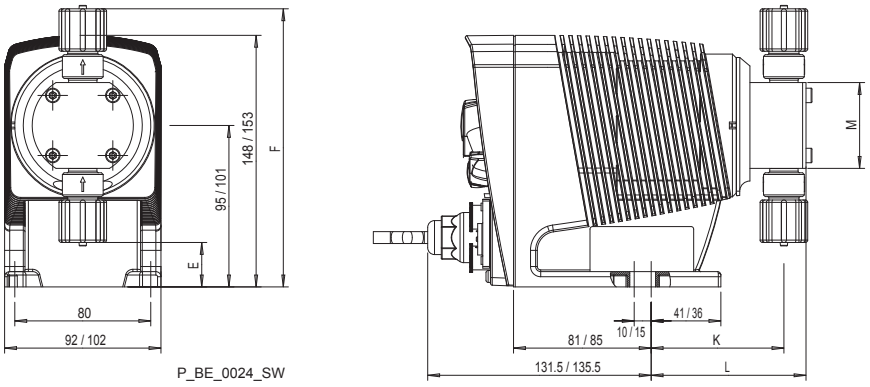

Fig. 24: Dimension drawing Beta b BT4b/BT5b, material version TT - dimensions in mm

	1000 - 1601	1602 - 1604	0708 - 0220	1008 - 0420	0232
E	26.2	21.3	-13.2	-7.2	-14.2
F	163.7	168.8	202.7	208.7	215.7
K	78	72	77	77.1	78
L	91	86	94	94	97
M	Ø 60	Ø 70	Ø 85	Ø 85	Ø 100

Dimensional drawing Beta b, material version SS

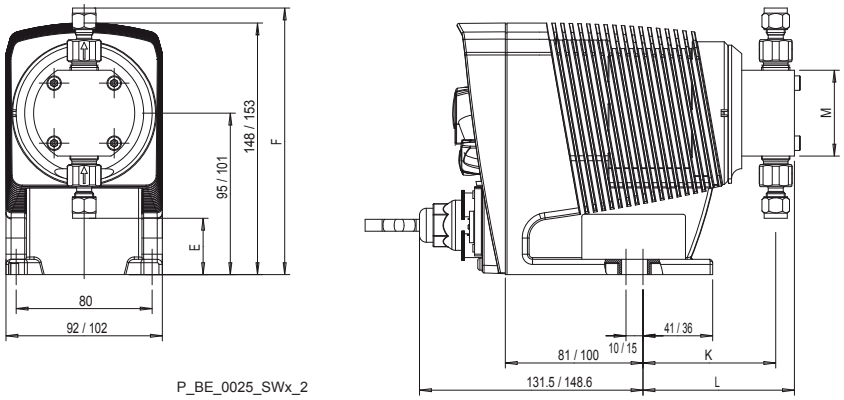

Fig. 25: Dimensional drawing Beta b BT4b/BT5b, material version SS - dimensions in mm

	1000 - 1601	1602 - 1604	0708 - 0220	2504	1008 - 0420	0232
E	33.2	24.4	-7.8	31.7	-1.8	-8
F	156.9	165.6	197.3	170.4	203.3	210
K	78	75	82	72	77	78
L	89	87	97	84	92	95
M	Ø 60	Ø 70	Ø 85	Ø 70	Ø 85	Ø 110

18 Diagrams for setting the metering capacity

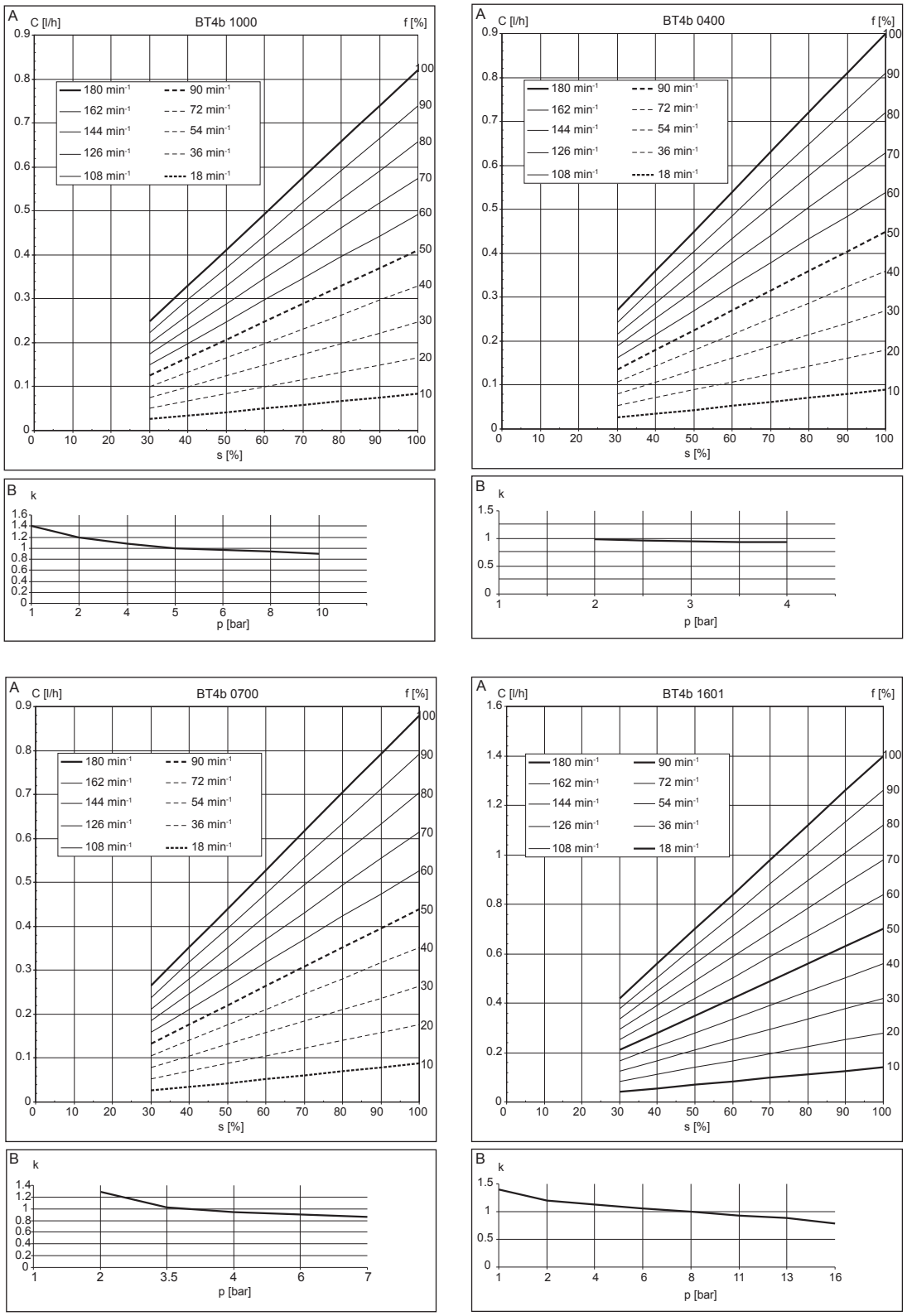

Fig. 26: A) Metering capacity C for medium back pressure dependent on the stroke length s for different stroke rates f. B) Corresponding correction factors k dependent on back pressure p.

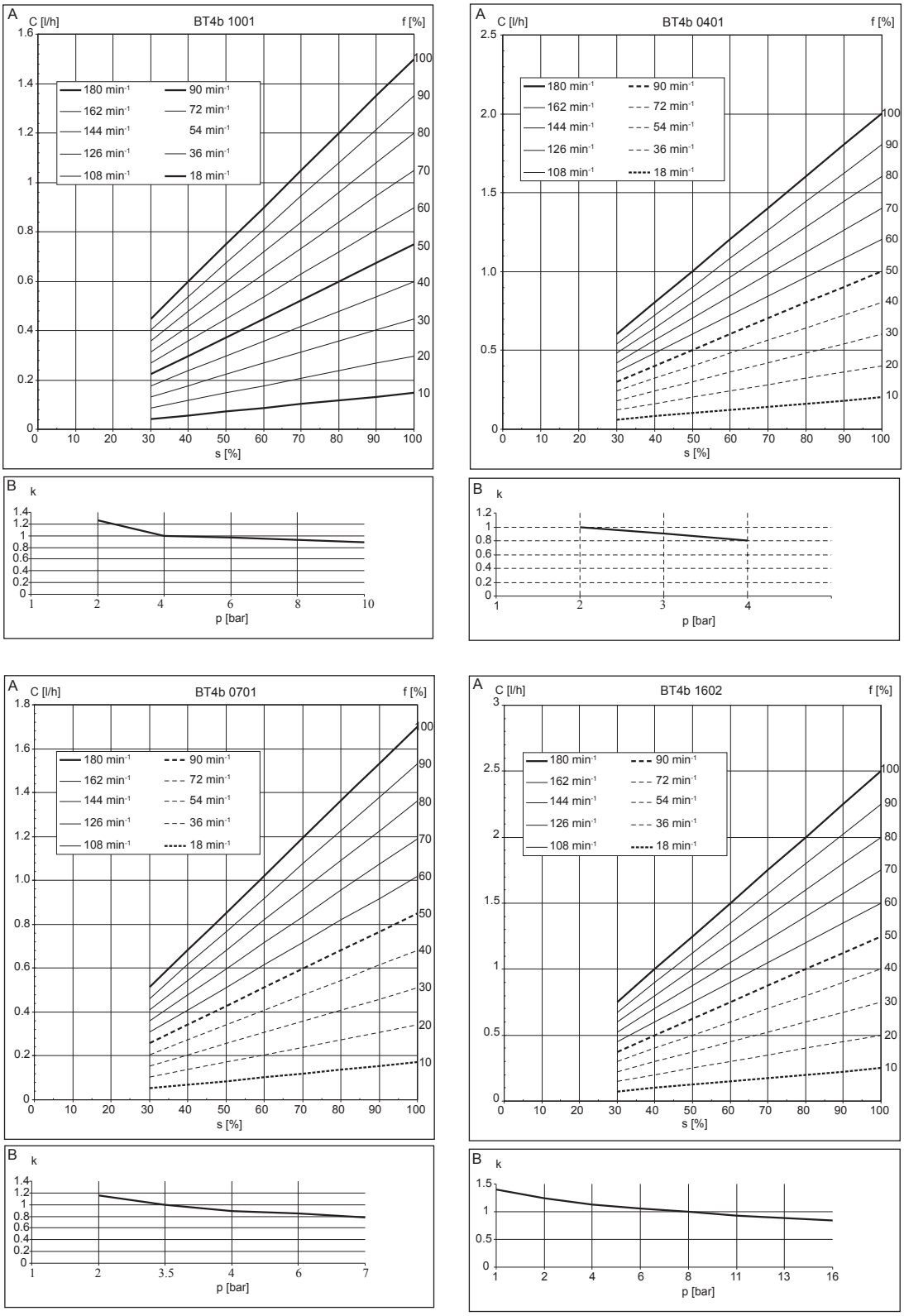

Fig. 27: A) Metering capacity C for medium back pressure dependent on the stroke length s for different stroke rates f. B) Corresponding correction factors k dependent on back pressure p.

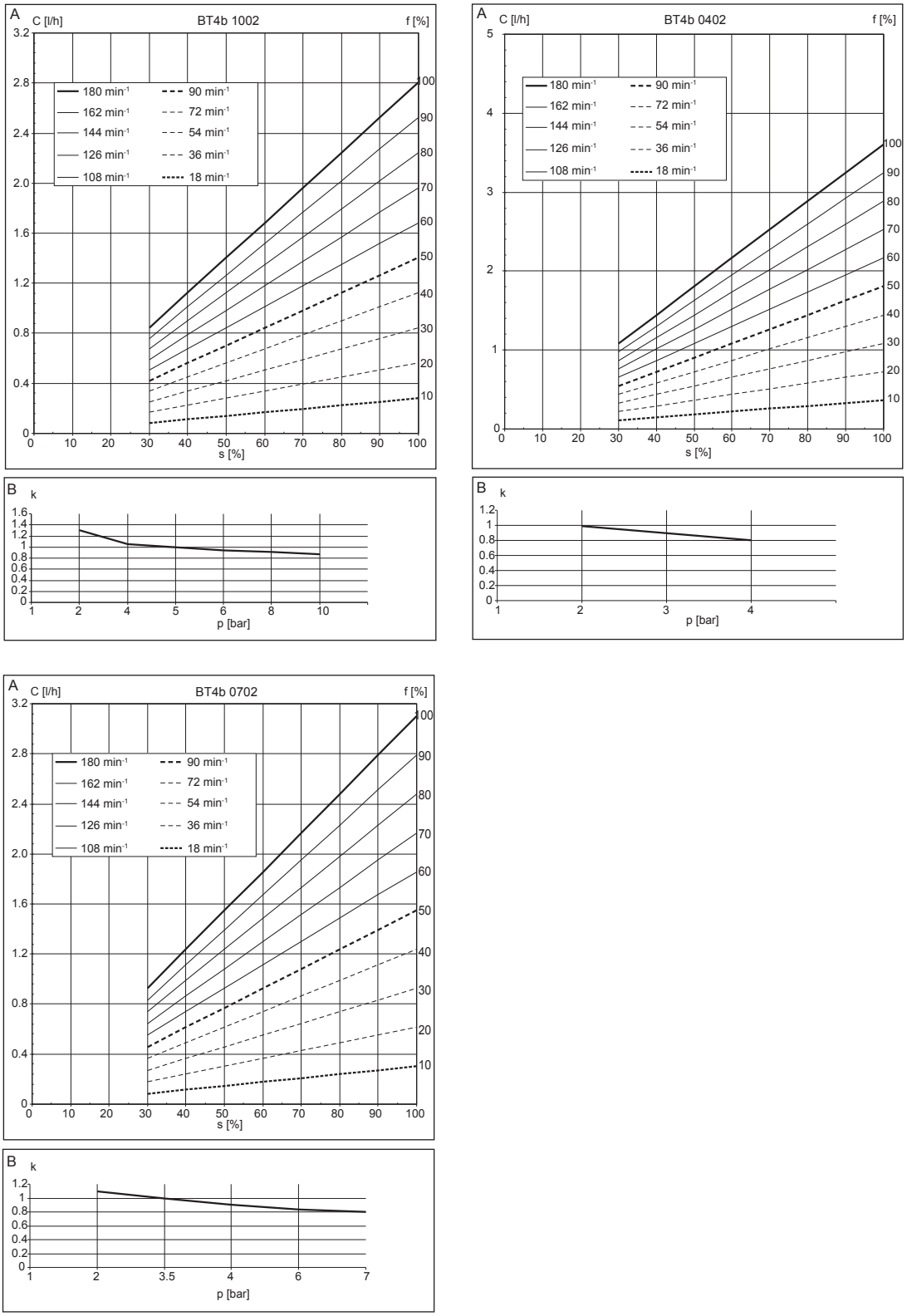

Fig. 28: A) Metering capacity C for medium back pressure dependent on the stroke length s for different stroke rates f. B) Corresponding correction factors k dependent on back pressure p.

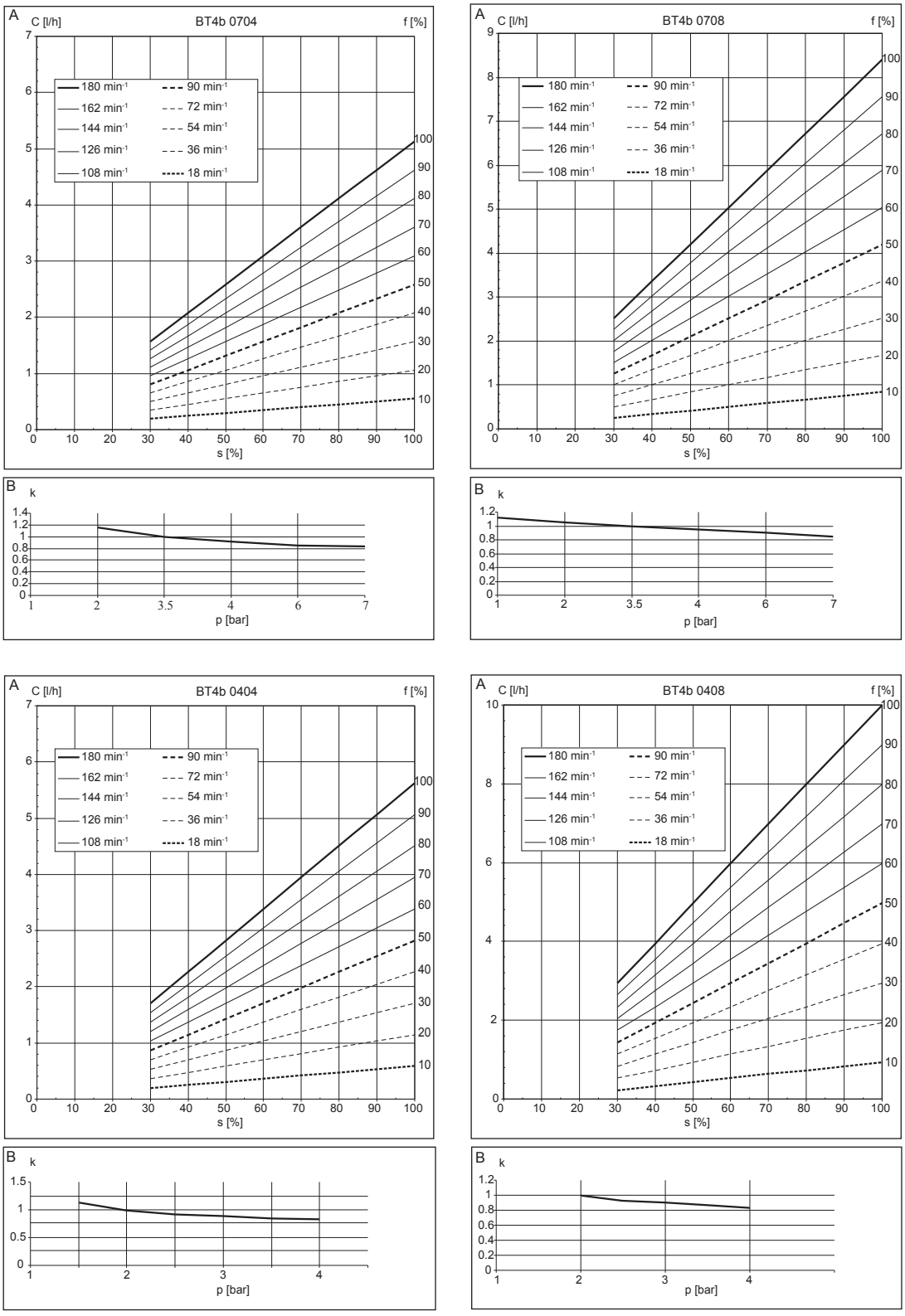

Fig. 29: A) Metering capacity C for medium back pressure dependent on the stroke length s for different stroke rates f. B) Corresponding correction factors k dependent on back pressure p.

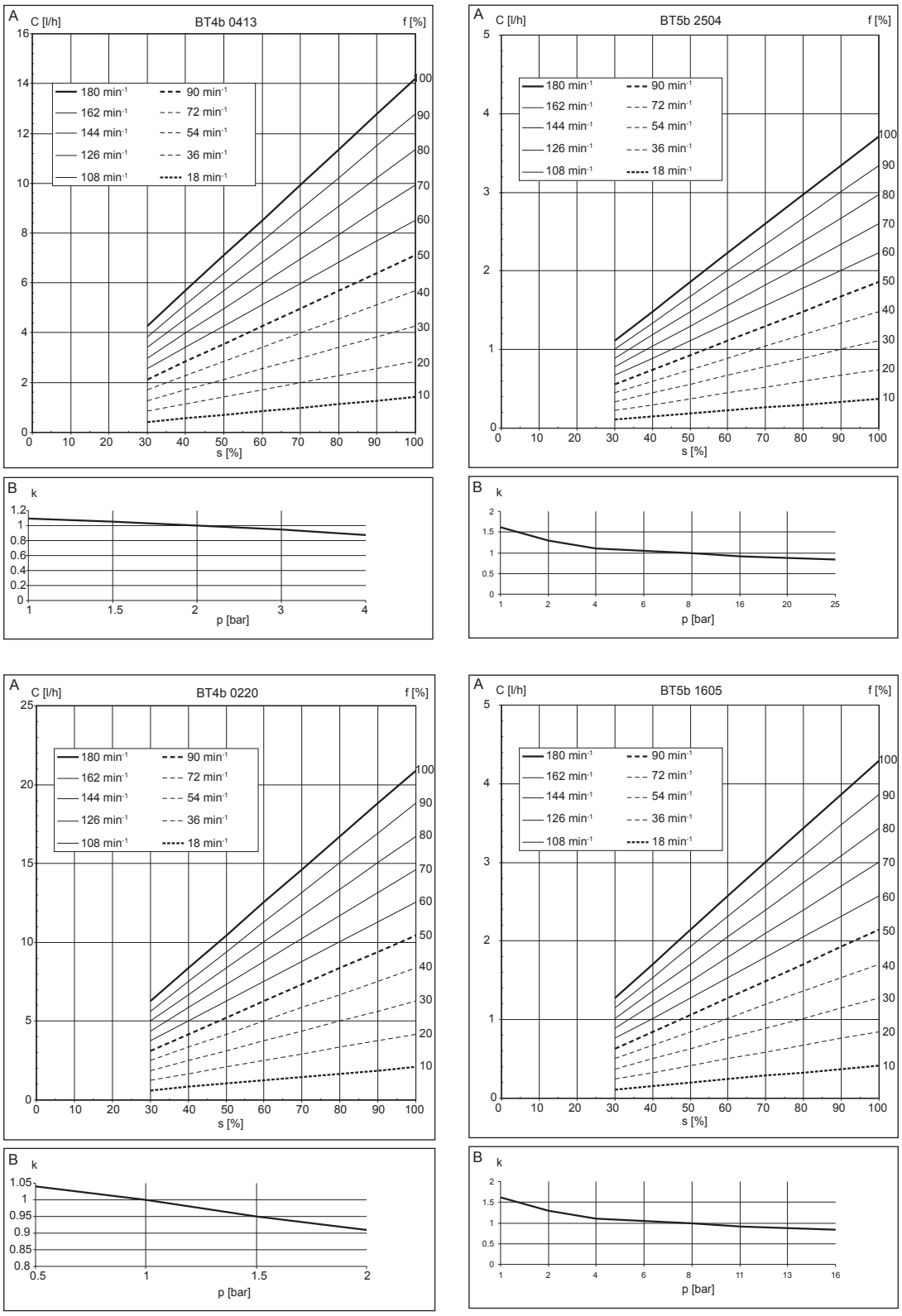

Fig. 30: A) Metering capacity C for medium back pressure dependent on the stroke length s for different stroke rates f. B) Corresponding correction factors k dependent on back pressure p.

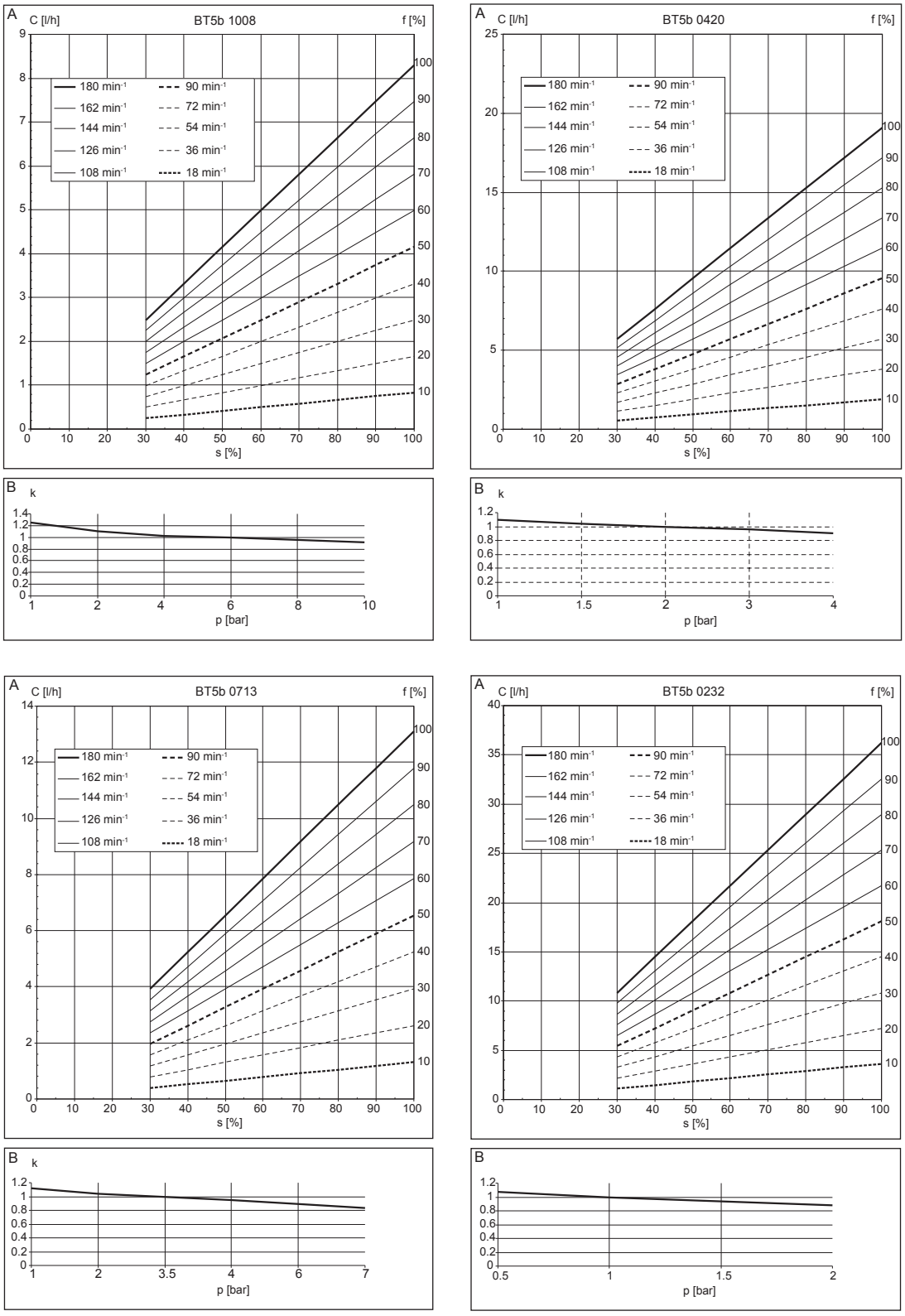

Fig. 31: A) Metering capacity C for medium back pressure dependent on the stroke length s for different stroke rates f. B) Corresponding correction factors k dependent on back pressure p.

19 Exploded Views of Liquid Ends

Liquid end Beta® 1000 - 1604 PP with bleed valve

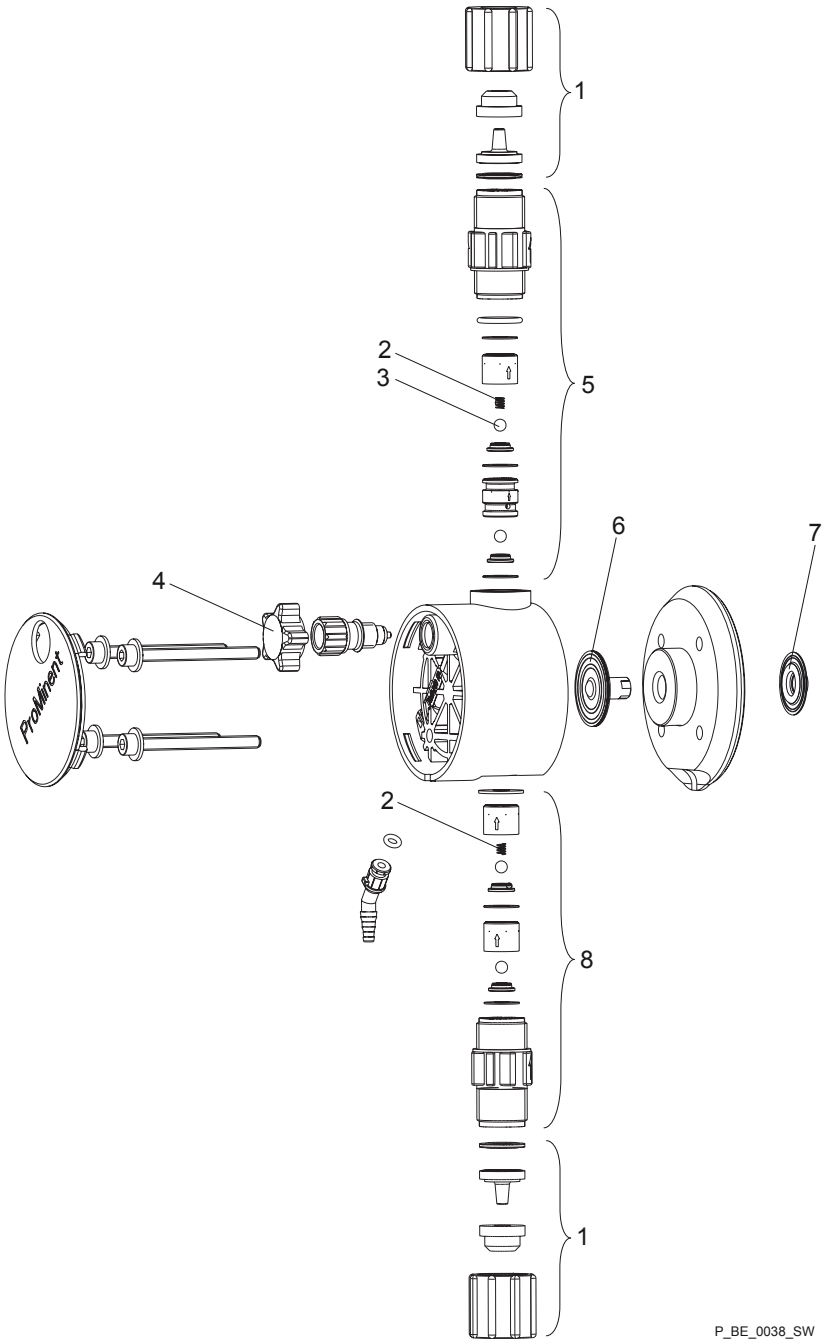

Fig. 32

Item	Description	Type 1000	Type 1601	Type 1602	Type 1604
1	Connector kit 6/4 PVT	1023246	1023246	1023246	1023246
3	4 Valve balls	404201	404201	404201	404201
4	Bleed valve	1021662	1021662	1021662	1021662

Spring (item 2) is a special accessory. The positions listed are included in the spare parts kit. Technical changes reserved.

Item	Description	Type 1000	Type 1601	Type 1602	Type 1604
5	Discharge valve, compl. 4.7-2 PVT	1023127	1023127	1023127	1023127
6	Diaphragm	1000244	1000245	1000246	1034612
7	Safety diaphragm	1006061	1006061	1006061	1006061
8	Suction valve, compl. 4.7-2 PVT	1023128	1023128	1023128	1023128

Spring (item 2) is a special accessory. The positions listed are included in the spare parts kit. Technical changes reserved.

Liquid end Beta® 0708 (1008) - 0220 (0420) PP with bleed valve

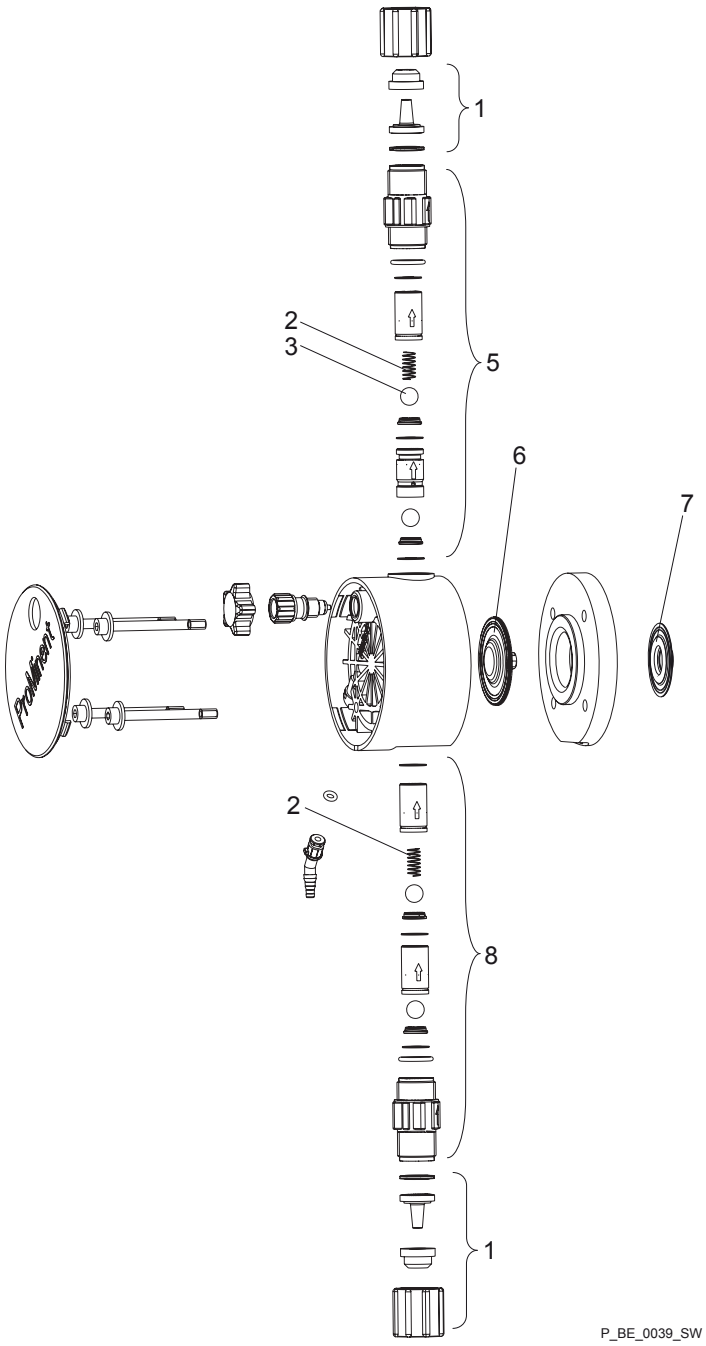

Fig. 33

Item	Description	Type 0708 (1008)	Type 0413 (0713)	Type 0220 (0420)
1	Connector kit 8/5 PVT	1023247	1023247	1023247
3	4 Valve balls	404281	404281	404281
4	Bleed valve	1021662	1021662	1021662
5	Discharge valve, compl. 9.2-2 PVT	1023125	1023125	1023125

Spring (item 2) is a special accessory. The positions listed are included in the spare parts kit. Technical changes reserved.

Item	Description	Type 0708 (1008)	Type 0413 (0713)	Type 0220 (0420)
6	Diaphragm	1000248	1000249	1000250
7	Safety diaphragm	1006061	1006061	1006061
8	Suction valve, compl. 9.2-2 PVT	1023126	1023126	1023126

Spring (item 2) is a special accessory. The positions listed are included in the spare parts kit. Technical changes reserved.

Liquid end Beta® 0232 PP without bleed valve

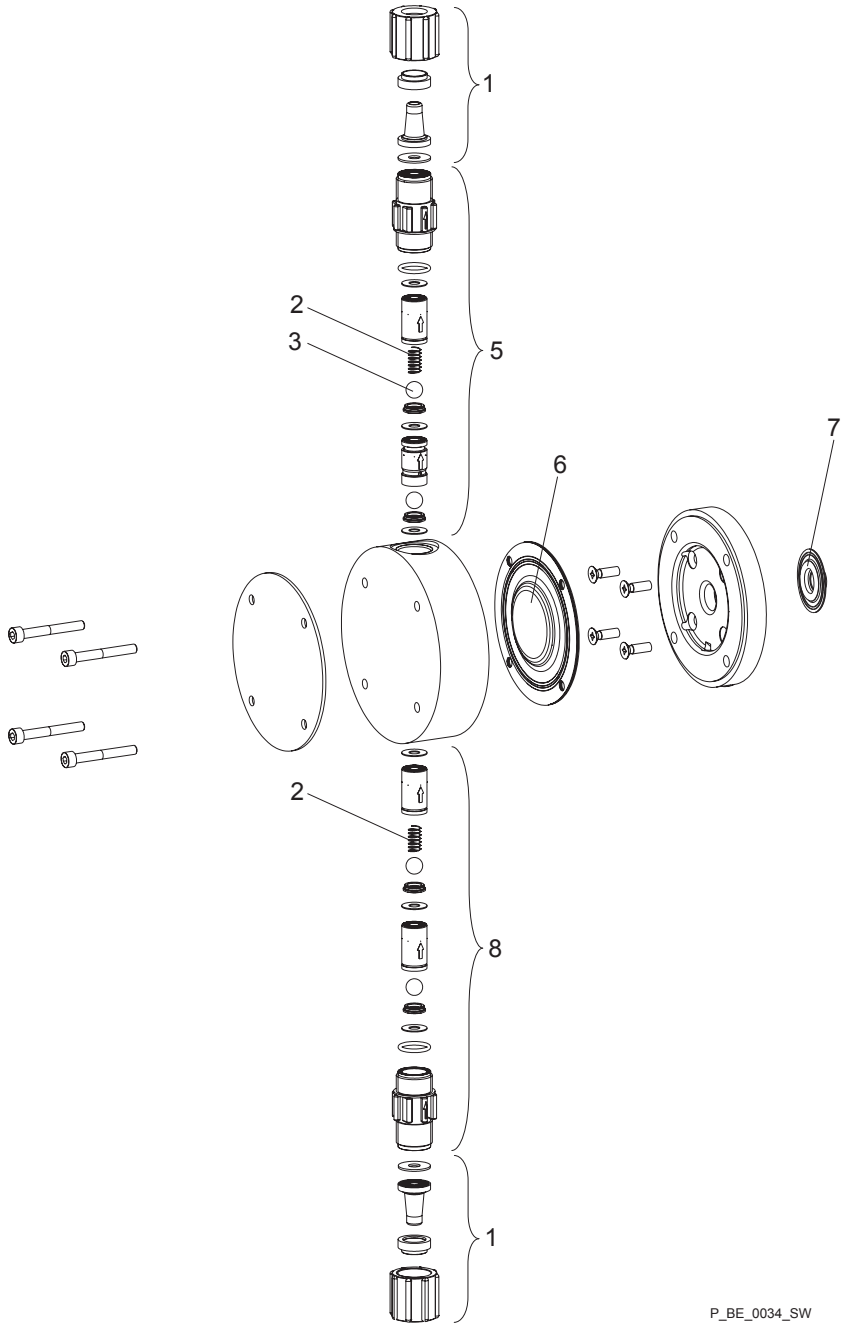

Fig. 34

Item	Description	Type 0232
1	Connector kit 12/9 PVT	1023248
3	4 Valve balls	404281
5	Discharge valve, compl. 9.2-2 PVT	1023125
6	Diaphragm	1000251

Spring (item 2) is a special accessory. The positions listed are included in the spare parts kit. Technical changes reserved.

Item	Description	Type 0232
7	Safety diaphragm	1006061
8	Suction valve, compl. 9.2-2 PVT	1023126

Spring (item 2) is a special accessory. The positions listed are included in the spare parts kit. Technical changes reserved.

Liquid end Beta® 1000 - 1604 NP with and without bleed valve

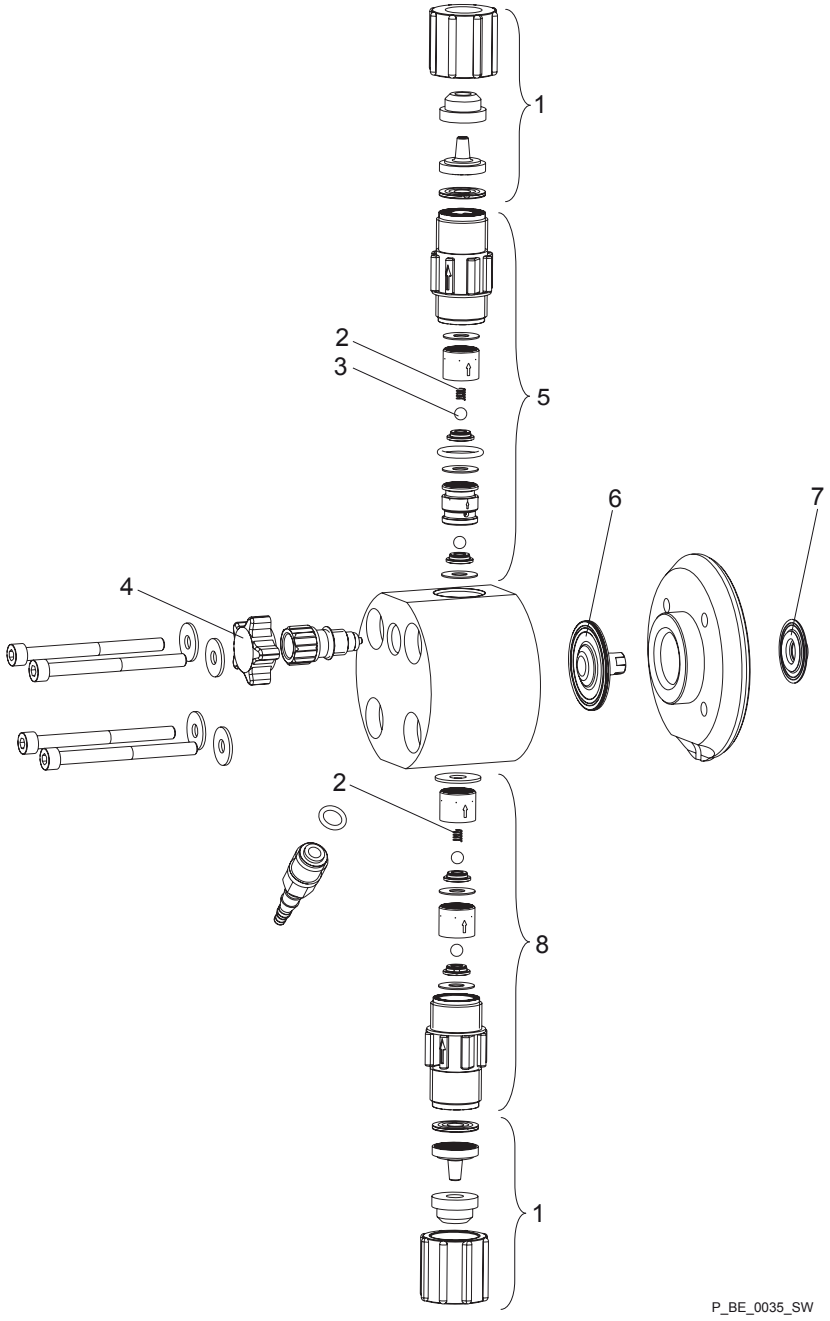

Fig. 35

Item	Description	Type 1000	Type 1601	Type 1602	Type 1604
1	Connector kit 6/4 PVT	1023246	1023246	1023246	1023246
3	4 Valve balls	404201	404201	404201	404201
4	Bleed valve	1021662	1021662	1021662	1021662
5	Discharge valve, compl. 4.7-2 PVT	1023127	1023127	1023127	1023127

Spring (item 2) is a special accessory. The positions listed are included in the spare parts kit. Technical changes reserved.

Item	Description	Type 1000	Type 1601	Type 1602	Type 1604
6	Diaphragm	1000244	1000245	1000246	1034612
7	Safety diaphragm	1006061	1006061	1006061	1006061
8	Suction valve, compl. 4.7-2 PVT	1023128	1023128	1023128	1023128

Spring (item 2) is a special accessory. The positions listed are included in the spare parts kit. Technical changes reserved.

Liquid end Beta® 0708 (1008) - 0220 (0420) NP with and without bleed valve

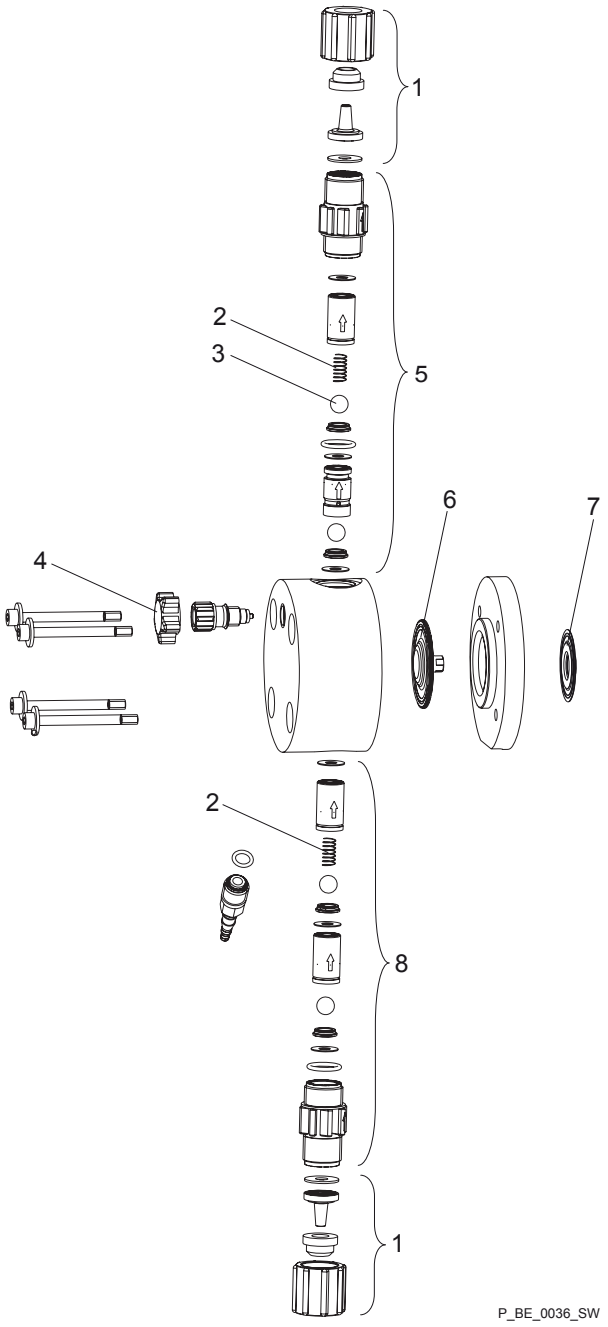

Fig. 36

Item	Description	Type 0708 (1008)	Type 0413 (0713)	Type 0220 (0420)
1	Connector kit 8/5 PVT	1023247	1023247	1023247
3	4 Valve balls	404281	404281	404281
4	Bleed valve	1021662	1021662	1021662
5	Discharge valve, compl. 9.2-2 PVT	1023125	1023125	1023125

Spring (item 2) is a special accessory. The positions listed are included in the spare parts kit. Technical changes reserved.

Item	Description	Type 0708 (1008)	Type 0413 (0713)	Type 0220 (0420)
6	Diaphragm	1000248	1000249	1000250
7	Safety diaphragm	1006061	1006061	1006061
8	Suction valve, compl. 9.2-2 PVT	1023126	1023126	1023126

Spring (item 2) is a special accessory. The positions listed are included in the spare parts kit. Technical changes reserved.

Liquid end Beta® 0232 NP with and without bleed valve

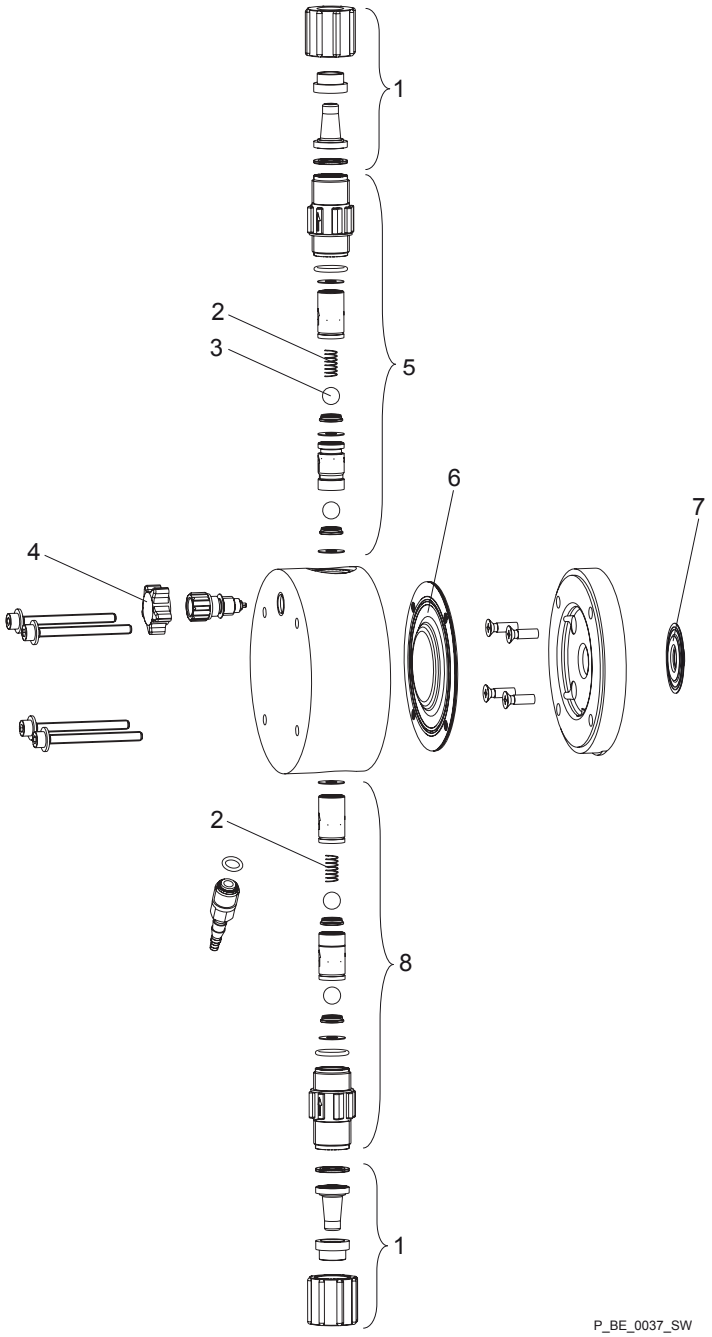

Fig. 37

Item	Description	Type 0232
1	Connector kit 12/9 PVT	1023248
3	4 Valve balls	404281
5	Discharge valve, compl. 9.2-2 PVT	1023125
6	Diaphragm	1000251

Spring (item 2) is a special accessory. The positions listed are included in the spare parts kit. Technical changes reserved.

Item	Description	Type 0232
7	Safety diaphragm	1006061
8	Suction valve, compl. 9.2-2 PVT	1023126

Spring (item 2) is a special accessory. The positions listed are included in the spare parts kit. Technical changes reserved.

Liquid end Beta® 1000 - 1604 PV with bleed valve

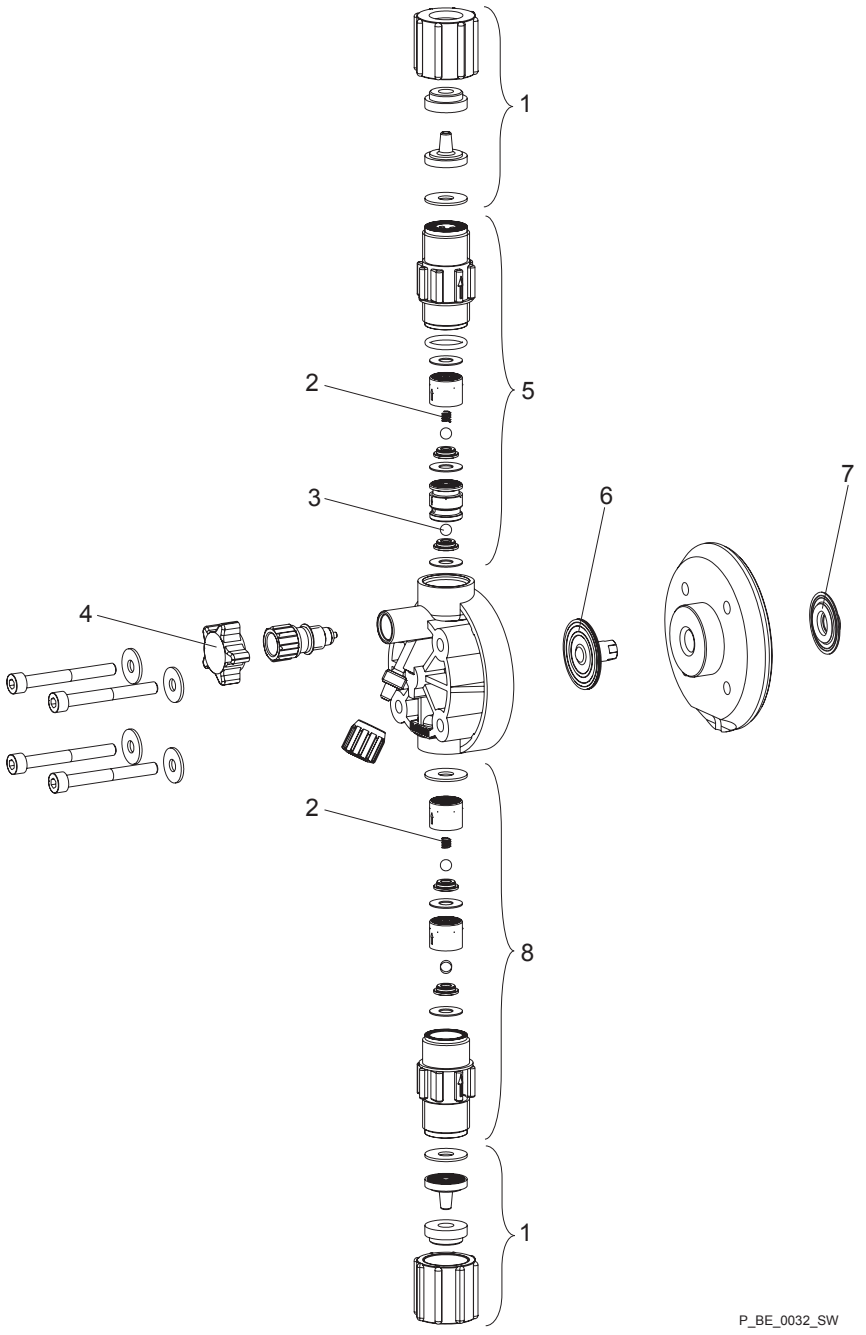

Fig. 38

Item	Description	Type 1000	Type 1601	Type 1602	Type 1604
1	Connector kit 6/4 PVT	1035660	1035660	1035660	1035660
3	4 Valve balls	404201	404201	404201	404201
4	Bleed valve	1021662	1021662	1021662	1021662
5	Discharge valve, compl. 4.7-2 PVT	1023127	1023127	1023127	1023127

Spring (item 2) is a special accessory. The positions listed are included in the spare parts kit. Technical changes reserved.

Item	Description	Type 1000	Type 1601	Type 1602	Type 1604
6	Diaphragm	1000244	1000245	1000246	1034612
7	Safety diaphragm	1006061	1006061	1006061	1006061
8	Suction valve, compl. 4.7-2 PVT	1023128	1023128	1023128	1023128

Spring (item 2) is a special accessory. The positions listed are included in the spare parts kit. Technical changes reserved.

Liquid end Beta® 0708 (1008) - 0220 (0420) PV with bleed valve

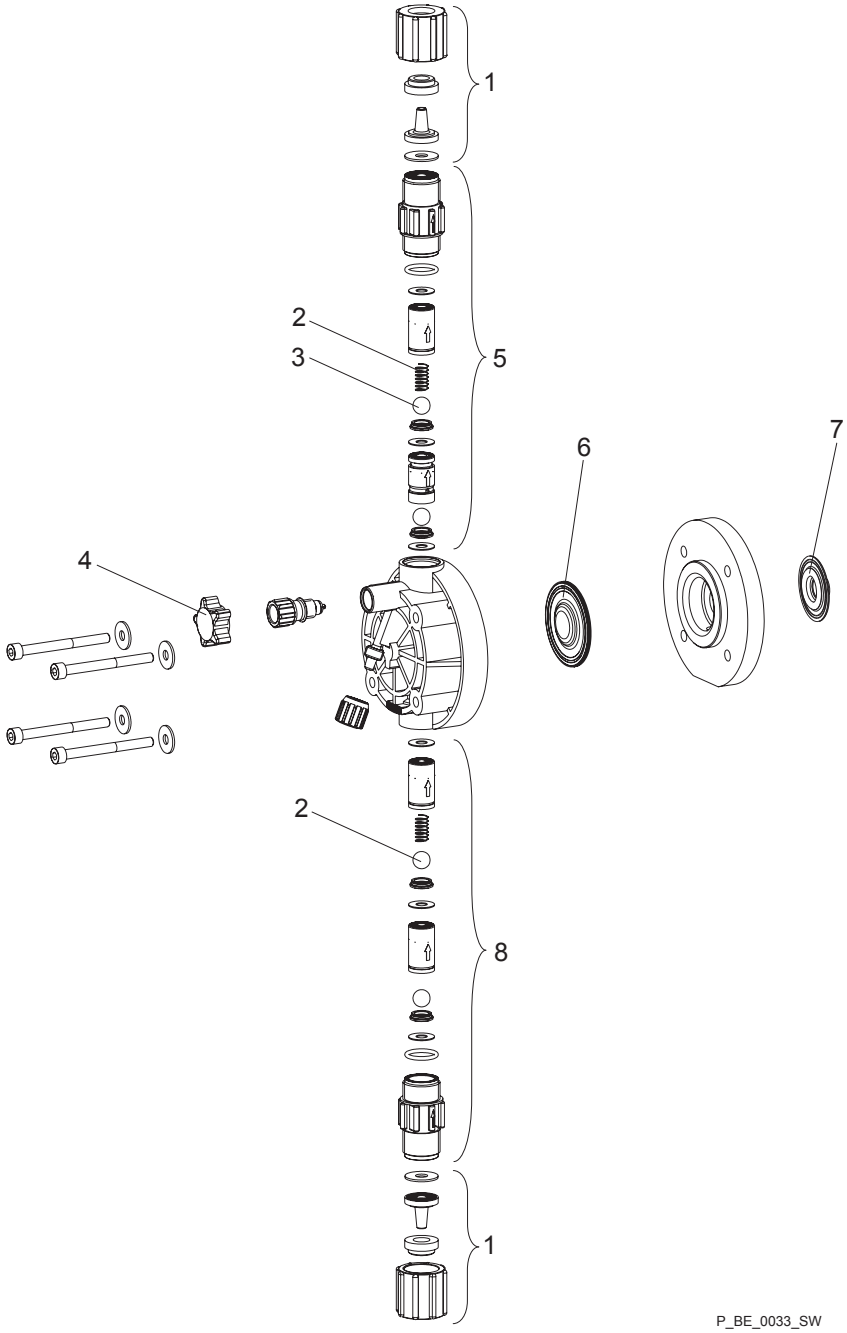

Fig. 39

Item	Description	Type 0708 (1008)	Type 0413 (0713)	Type 0220 (0420)
1	Connector kit 8/5 PVT (0220/0420: 12/9)	1035661	1035661	1035659
3	4 Valve balls	404281	404281	404281
4	Bleed valve	1021662	1021662	1021662
5	Discharge valve, compl. 9.2-2 PVT	1023125	1023125	1023125

Spring (item 2) is a special accessory. The positions listed are included in the spare parts kit. Technical changes reserved.

Item	Description	Type 0708 (1008)	Type 0413 (0713)	Type 0220 (0420)
6	Diaphragm	1000248	1000249	1000250
7	Safety diaphragm	1006061	1006061	1006061
8	Suction valve, compl. 9.2-2 PVT	1023126	1023126	1023126

Spring (item 2) is a special accessory. The positions listed are included in the spare parts kit. Technical changes reserved.

Liquid end Beta® 0232 PV without bleed valve

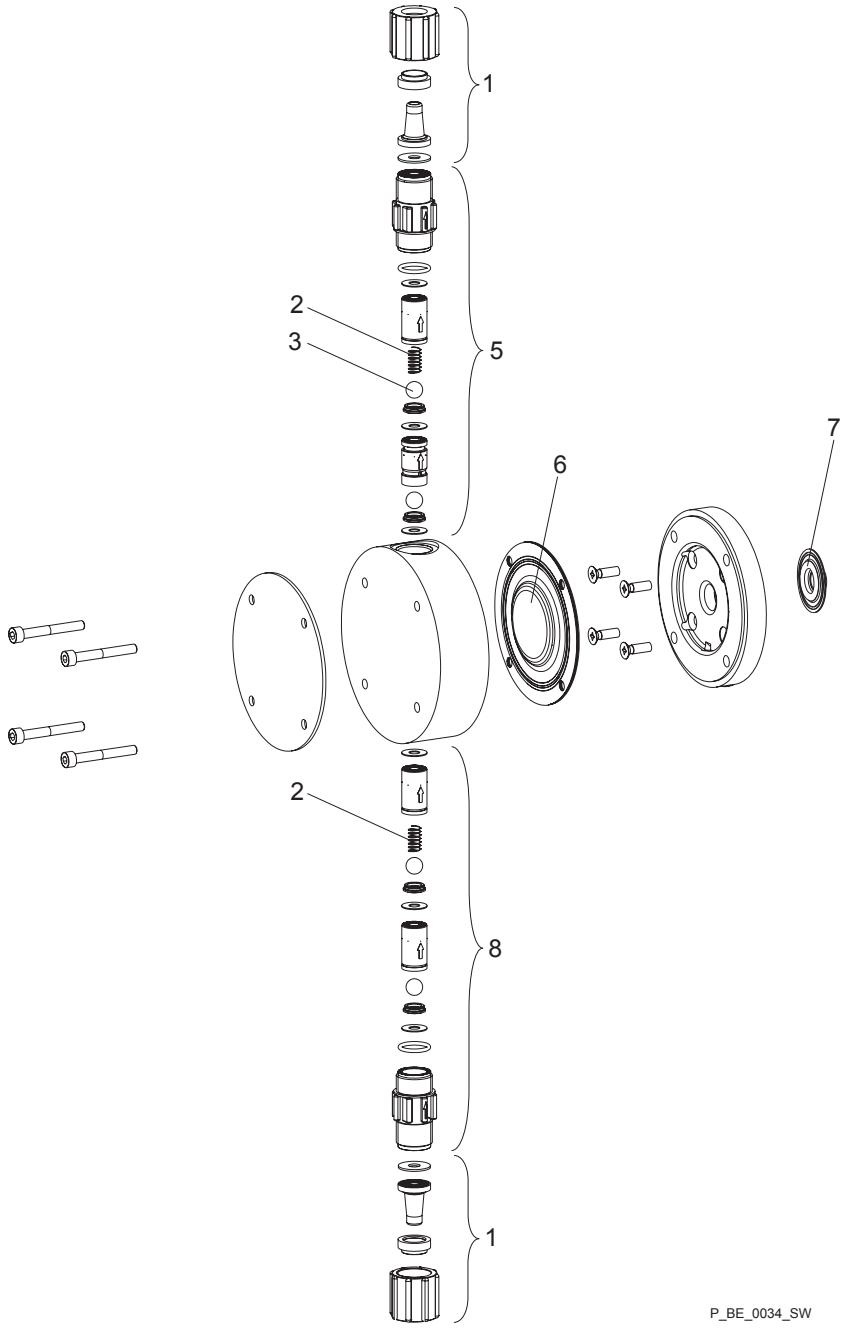

Fig. 40

Item	Description	Type 0232
1	Connector kit 12/9 FVD PVT	1035659
3	4 Valve balls	404281
5	Discharge valve, compl. 9.2-2 PVT	1023125
6	Diaphragm	1000251

Spring (item 2) is a special accessory. The positions listed are included in the spare parts kit. Technical changes reserved.

Item	Description	Type 0232
7	Safety diaphragm	1006061
8	Suction valve, compl. 9.2-2 PVT	1023126

Spring (item 2) is a special accessory. The positions listed are included in the spare parts kit. Technical changes reserved.

Liquid end Beta® 1604 - 0220 (0420) PV
HV, for highly viscous feed chemicals

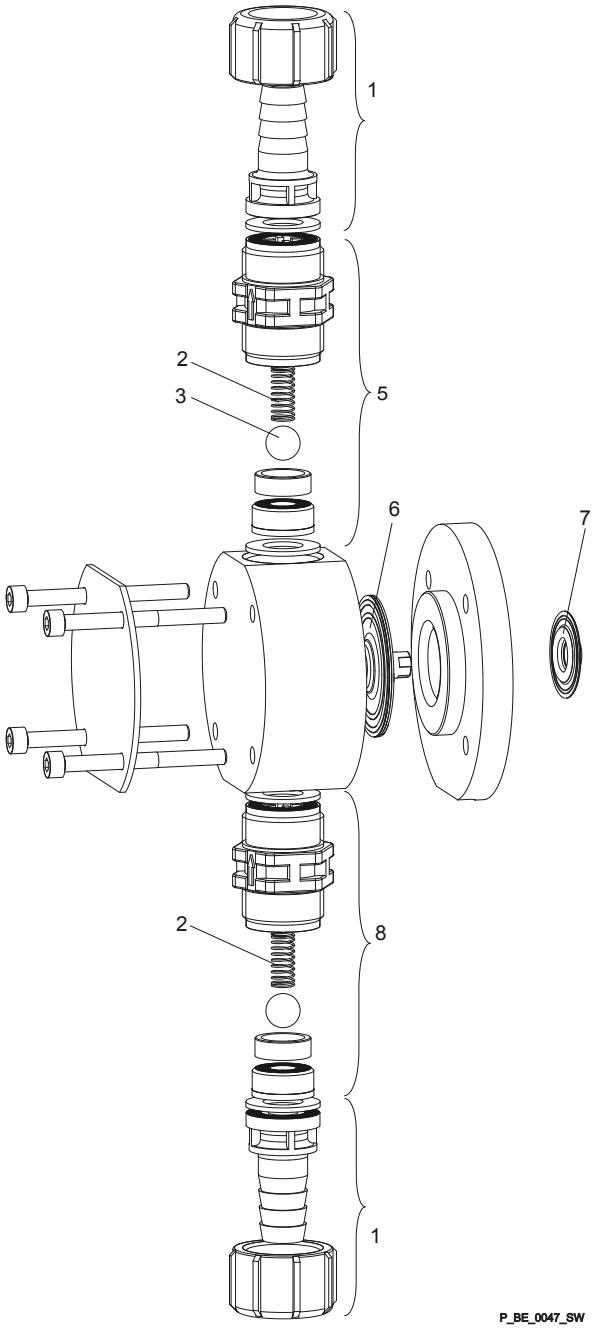

Fig. 41

Item	Description	Type 1604	Type 0708	Type 0413	Type 0220
1	Connector kit DN10 HV with PVT tube nozzle	1017405	1017405	1017405	1017405
3	4 Valve balls	404277	404277	404277	404277
6	Diaphragm	1006061	1006061	1006061	1006061
7	Safety diaphragm	1027414	1027414	1027414	1027414
The positions listed are included in the spare parts kit. Technical changes reserved.					

Liquid end Beta® 1000 - 1604 TT

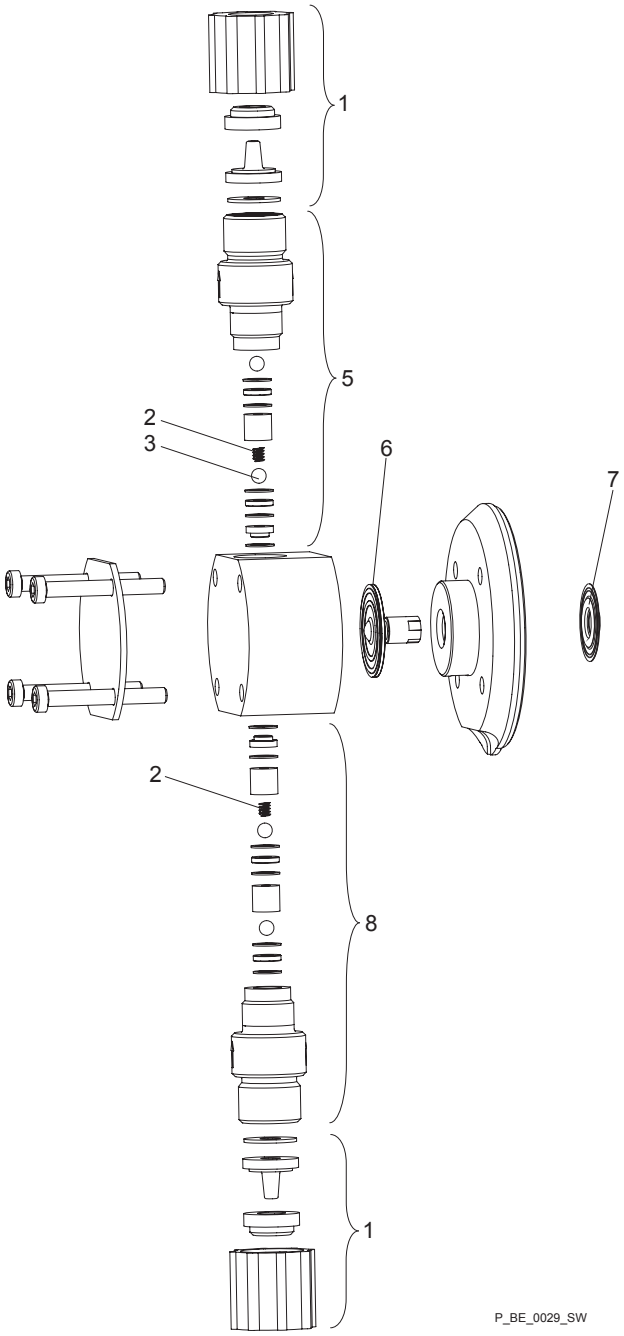

Fig. 42

Item	Description	Type 1000	Type 1601	Type 1602	Type 1604
1	Connector kit 6/4 TTT	817201	817201	817201	817201
3	4 Valve balls	404201	404201	404201	404201
5	Discharge valve, compl. 4.7-2 TTT	809406	809406	809406	809406
6	Diaphragm	1000244	1000245	1000246	1034612

Spring (item 2) is a special accessory. The positions listed are included in the spare parts kit. Technical changes reserved.

Item	Description	Type 1000	Type 1601	Type 1602	Type 1604
7	Safety diaphragm	1006061	1006061	1006061	1006061
8	Suction valve, compl. 4.7-2 TTT	809407	809407	809407	809407

Spring (item 2) is a special accessory. The positions listed are included in the spare parts kit. Technical changes reserved.

Liquid end Beta® 0708 (1008) - 0220 (0420) TT

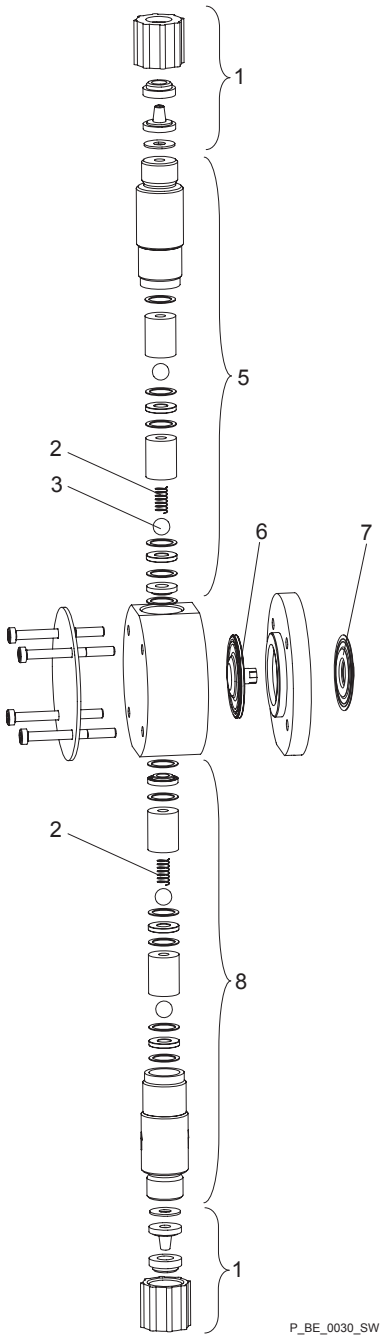

Fig. 43

Item	Description	Type 0708 (1008)	Type 0413 (0713)	Type 0220 (0420)
1	Connector kit 8/5 TTT	817204	817204	817204
3	4 Valve balls	404281	404281	404281
5	Discharge valve, compl. 9.2-2 TTT	809444	809444	809444
6	Diaphragm	1000248	1000249	1000250

Spring (item 2) is a special accessory. The positions listed are included in the spare parts kit. Technical changes reserved.

Item	Description	Type 0708 (1008)	Type 0413 (0713)	Type 0220 (0420)
7	Safety diaphragm	1006061	1006061	1006061
8	Suction valve, compl. 9.2-2 TTT	809445	809445	809445

Spring (item 2) is a special accessory. The positions listed are included in the spare parts kit. Technical changes reserved.

Liquid end Beta® 0232 TT

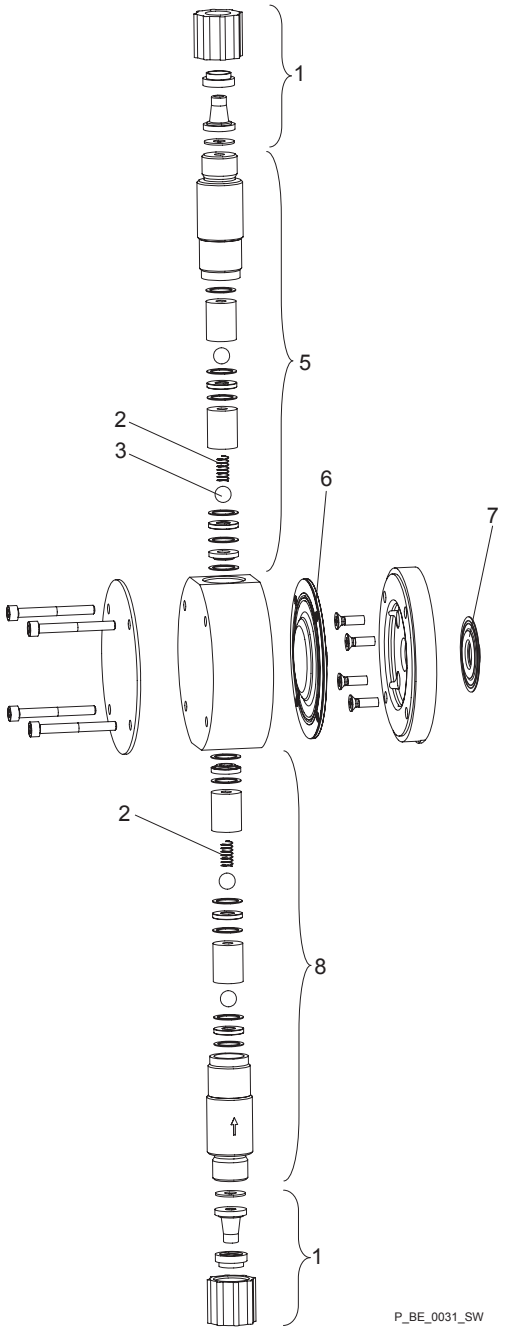

Fig. 44

Item	Description	Type 0232
1	Connector kit 12/9 TTT	817202
3	4 Valve balls	404281
5	Discharge valve compl. TTT	809444
6	Diaphragm	1000251

Spring (item 2) is a special accessory. The positions listed are included in the spare parts kit. Technical changes reserved.

Item	Description	Type 0232
7	Safety diaphragm	1006061
8	Suction valve compl. TTT	809445

Spring (item 2) is a special accessory. The positions listed are included in the spare parts kit. Technical changes reserved.

Liquid end Beta® 1000 - 1604 SS

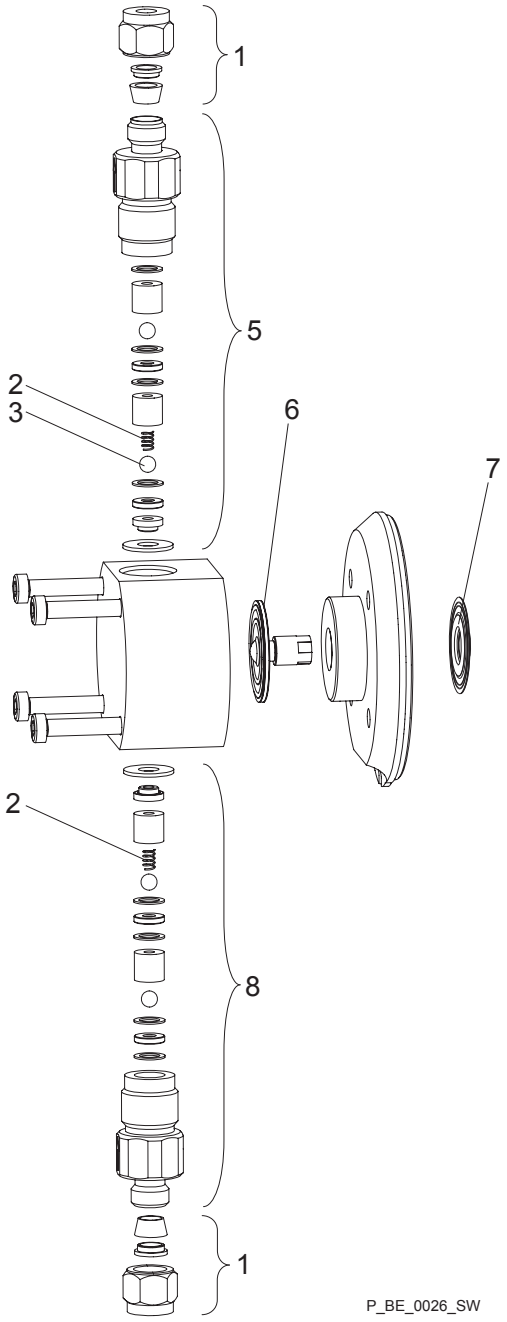

Fig. 45

Item	Description	Type 1000	Type 1601	Type 1602	Type 1604
1	Connector kit 6 mm SS	104233	104233	104233	104233
3	4 Valve balls	404201	404201	404201	404201
5	Discharge valve compl. 6 mm SST	809418	809418	809418	809418
6	Diaphragm	1000244	1000245	1000246	1034612

Spring (item 2) is a special accessory. The positions listed are included in the spare parts kit. Technical changes reserved.

Item	Description	Type 1000	Type 1601	Type 1602	Type 1604
7	Safety diaphragm	1006061	1006061	1006061	1006061
8	Suction valve compl. 6 mm SST	809419	809419	809419	809419

Spring (item 2) is a special accessory. The positions listed are included in the spare parts kit. Technical changes reserved.

Liquid end Beta® 0708 (1008) - 0220 (0420) SS

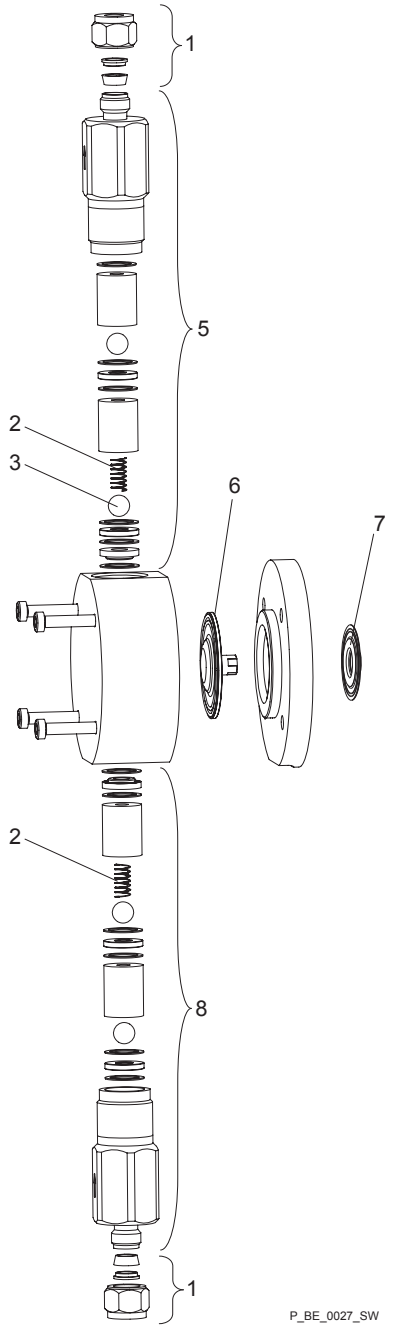

Fig. 46

Item	Description	Type 0708 (1008)	Type 0413 (0713)	Type 0220 (0420)
1	Connector kit SS	104237	104237	104245
3	4 Valve balls	404281	404281	404281
5	Discharge valve compl. SST	809494	809494	809446
6	Diaphragm	1000248	1000248	1000250

Spring (item 2) is a special accessory. The positions listed are included in the spare parts kit. Technical changes reserved.

Item	Description	Type 0708 (1008)	Type 0413 (0713)	Type 0220 (0420)
7	Safety diaphragm	1006061	1006061	1006061
8	Suction valve compl. SST	809495	809495	809447

Spring (item 2) is a special accessory. The positions listed are included in the spare parts kit. Technical changes reserved.

Liquid end Beta® 0232 SS

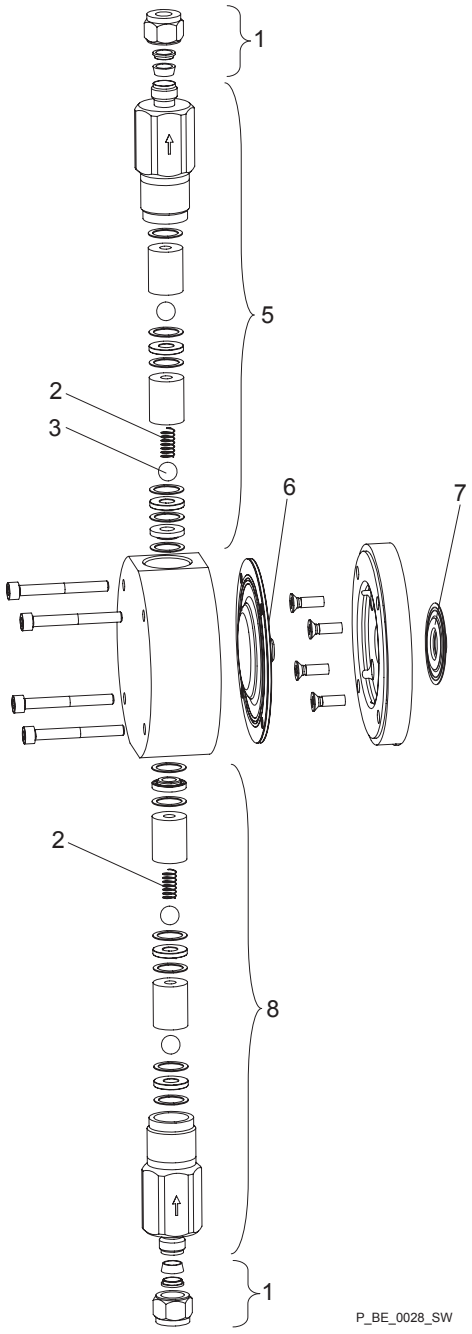

Fig. 47

Item	Description	Type 0232
1	Connector kit 12 mm SS	104245
3	4 Valve balls	404281
5	Discharge valve compl. 12 mm SST	809446
6	Diaphragm	1000251

Spring (item 2) is a special accessory. The positions listed are included in the spare parts kit. Technical changes reserved.

Item	Description	Type 0232
7	Safety diaphragm	1006061
8	Suction valve compl. 12 mm SST	809447

Spring (item 2) is a special accessory. The positions listed are included in the spare parts kit. Technical changes reserved.

Liquid end Beta® 1601 - 1604 PP SEK and 1601 - 1604 NP SEK, self-bleeding

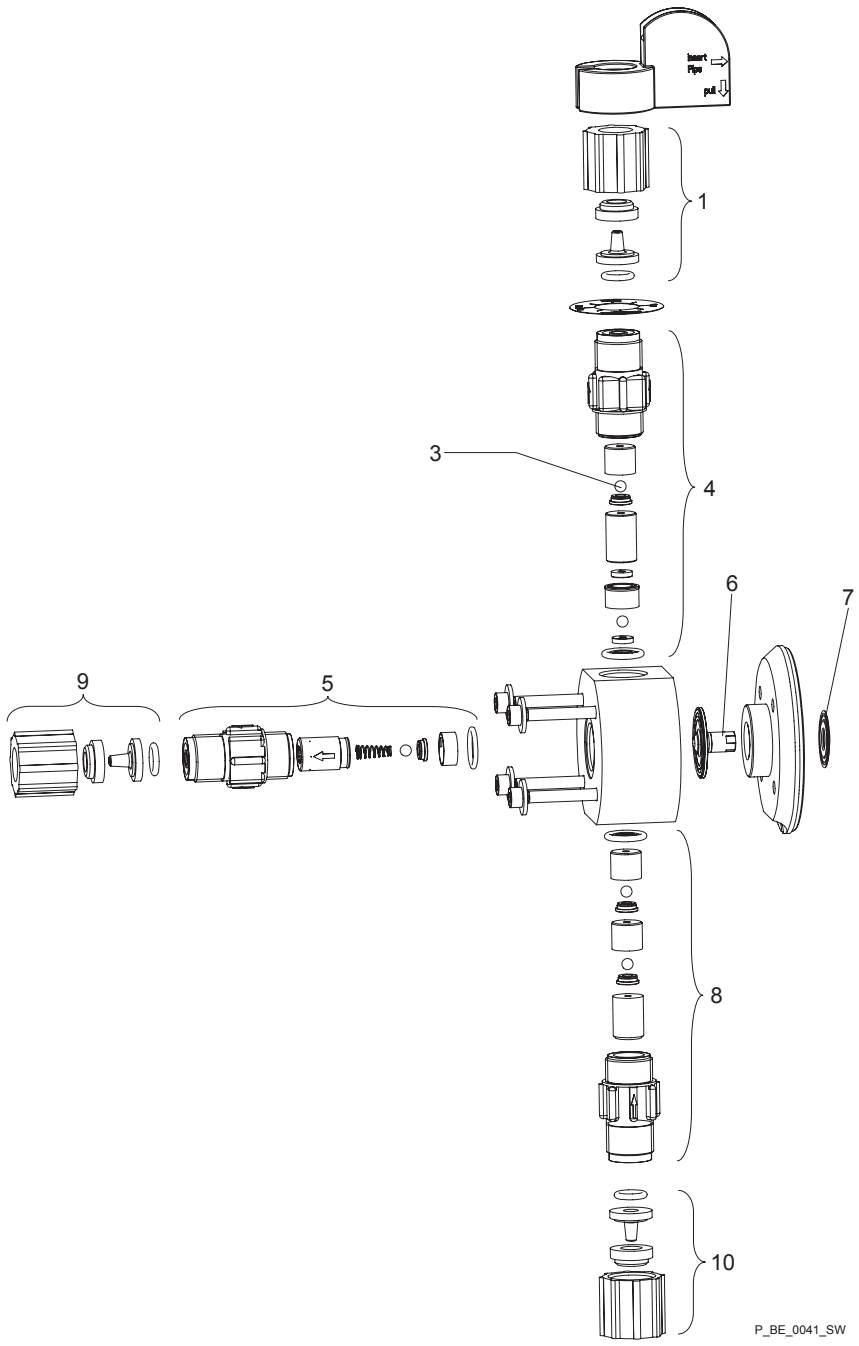

Fig. 48

Item	Part	Material version	Part no.
1, 9, 10	Connector kit 6/4	PPE	817160
1, 9, 10	Connector kit 6/4	PPB	817173
1, 9, 10	Connector kit 6/4	PCE	791161
1, 9, 10	Connector kit 6/4	PCB	817165
9, 10	Connector kit 8/5	PPE	817161
9, 10	Connector kit 8/5	PPB	817174

Item	Part	Material version	Part no.
9, 10	Connector kit 8/5	PCE	792058
9, 10	Connector kit 8/5	PCB	817066
9	With 2504: Connector kit 8/4	PCB	1035844
10	With 2504: Connector kit 6/4	PCE	791161
10	With 2504: Connector kit 6/4	PCB	817065
3	4 Valve balls		404201
4	Bleed valve	PPE	1001063
4	Bleed valve	PPB	1001062
4	Bleed valve	PCE	1001061
4	Bleed valve	PCB	1001060
5	Discharge valve compl.	PPE	1001067
5	Discharge valve compl.	PPB	1001066
5	Discharge valve compl.	PCE	1001065
5	Discharge valve compl.	PCB	1001064
6	Diaphragm 1601		1000245
6	Diaphragm 1602		1000246
6	Diaphragm 1604		1034612
7	Safety diaphragm		1006061
8	Suction valve compl.	PPE	792644
8	Suction valve compl.	PPB	792646
8	Suction valve compl.	PCE	792119
8	Suction valve compl.	PCB	792026

Spare parts kits for type:	Material version	Part no.
1601	PPE	1001756
1602	PPE	1001757
1604 with spring	PPE	1035335
1604 without spring	PPE	1035339
1601	PPB	1001762
1602	PPB	1001763
1604 with spring	PPB	1035336
1604 without spring	PPB	1035340
1601	NPE	1001660
1602	NPE	1001661

Spare parts kits for type:	Material version	Part no.
1604 without spring	NPE	1035337
1604 with spring	NPE	1035333
1601	NPB	1001666
1602	NPB	1001667
1604 without spring	NPB	1035338
1604 with spring	NPB	1035334

Sealing sets	Material	Part no.
1 Sealing set	EPDM	1001674
1 Sealing set	FPM	1001672

The positions listed are included in the spare parts kit.

Technical changes reserved.

Liquid end Beta® 0708 (1008) - 0220 (0420) PP / NP SEK, self-bleeding

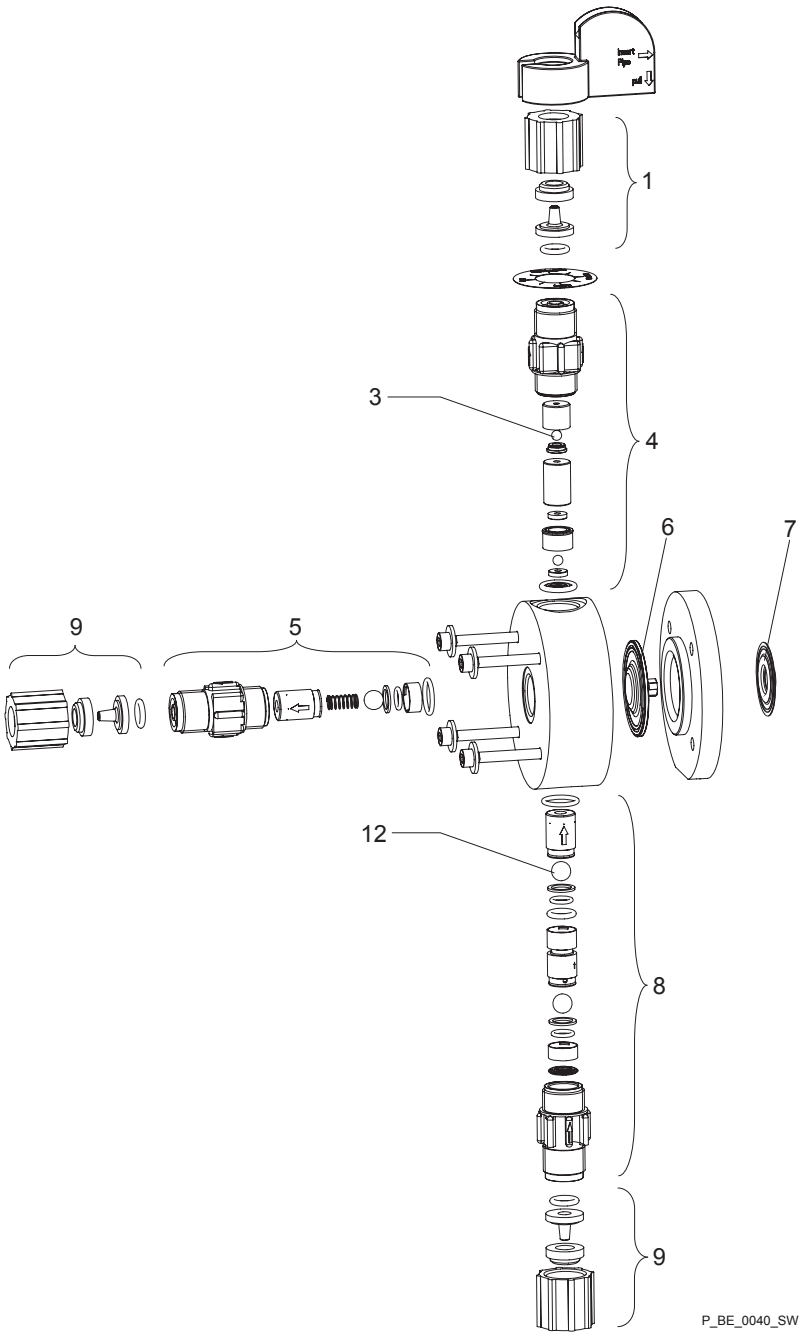

Fig. 49

Item	Part	Material version	Part no.
1	Connector kit 6/4	PPE	817160
1	Connector kit 6/4	PPB	817173
1	Connector kit 6/4	PCE	791161
1	Connector kit 6/4	PCB	817165
9	Connector kit 8/5	PPE	817161
9	Connector kit 8/5	PPB	817174

Item	Part	Material version	Part no.
9	Connector kit 8/5	PCE	792058
9	Connector kit 8/5	PCB	817066
9	Connector kit 12/9	PPE	817162
9	Connector kit 12/9	PPB	817175
9	Connector kit 12/9	PCE	790577
9	Connector kit 12/9	PCB	817067
3	4 Valve balls		404201
4	Bleed valve	PPE	1001063
4	Bleed valve	PPB	1001062
4	Bleed valve	PCE	1001061
4	Bleed valve	PCB	1001060
5	Discharge valve compl.	PPE	1001071
5	Discharge valve compl.	PPB	1001070
5	Discharge valve compl.	PCE	1001069
5	Discharge valve compl.	PCB	1001068
6	Diaphragm 0708		1000248
6	Diaphragm 0413		1000249
6	Diaphragm 0220		1000250
7	Safety diaphragm		1006061
8	Suction valve compl.	PPE	1001437
8	Suction valve compl.	PPB	1001436
8	Suction valve compl.	PCE	1001435
8	Suction valve compl.	PCB	1001434

Spare parts kits for type:	Material version	Part no.
0708 (1008)	PPE	1001759
0413 (0713)	PPE	1001760
0220 (0420)	PPE	1001761
0708 (1008)	PPB	1001765
0413 (0713)	PPB	1001766
0220 (0420)	PPB	1001767
0708 (1008)	NPE	1001663
0413 (0713)	NPE	1001664
0220 (0420)	NPE	1001665
0708 (1008)	NPB	1001669
0413 (0713)	NPB	1001670
0220 (0420)	NPB	1001671

Sealing sets	Material	Part no.
1 Sealing set	EPDM	1001674
1 Sealing set	FPM	1001672

The positions listed are included in the spare parts kit.

Technical changes reserved.

20 Further order information

Spare parts kits for SEK types

The information is given in the corresponding exploded views.

Spare parts kits for SER types

Type	NPT7 / PVT7
1602	1047830
1604	1047858
0708 (1008)	1047832
0413 (0713)	1047833
0220 (0420)	1047837

Spare parts kits for other types

Type	PP, NP, PV	TT	SS	HV types
1000	1023107	1001737	1001729	-
1601	1023108	1001738	1001730	-
1602	1023109	1001739	1001731	-
1604 (2504)	1035332	1035330	1035331	1035342
0708 (1008)	1023111	1001741	1001733	1019067
0413 (0713)	1023112	1001742	1001734	1019069
0220 (0420)	1023113	1001754	1001735	1019070
0232	1024124	1001755	1001736	-

Sealing sets for SEK types

The information is given in the corresponding exploded views.

Sealing sets for other types

Type	PP, NP	PV	TT, SS
1000, 1601, 1602, 1604	1023130	1023130	483907 *
0708 (1008) 0413 (0713) 0220 (0420)	1023129	1023129	483975
0232	1023129	1023129	483975
All HV types	-	1019364	-
* 11-part			

Relay retrofit kit for Beta® b

Name	Part no.
Fault indicating relay for Beta® b	1029309
Fault indicating and pacing relay for Beta® b	1029310

Interference suppression aids

Product	Part no.
Varistor:	710912
RC Gate, 0.22 µF / 220 Ω:	710802

Further sources of information

Further information on spare parts, accessories and options can be found in:

- the exploded drawings
- the identity code
- under www.prominent.com
- the ProMinent product catalogue

21 EC Declaration of Conformity for Machinery

In accordance with DIRECTIVE 2006/42/EC OF THE EUROPEAN PARLIAMENT AND OF THE COUNCIL, Appendix I, BASIC HEALTH AND SAFETY REQUIREMENTS, section 1.7.4.2. C.

We,

- ProMinent GmbH
- Im Schuhmachergewann 5 - 11
- D - 69123 Heidelberg,

hereby declare that the product specified in the following, complies with the relevant basic health and safety requirements of the EC Directive, on the basis of its functional concept and design and in the version distributed by us. Any modification to the product not approved by us will invalidate this declaration.

Extract from the EC Declaration of Conformity

Designation of the product:	Metering pump, product range Beta/4 and Beta/5
Product type:	BT4b _ _ _ _ _ _ _ _ _ _ _ U BT5b _ _ _ _ _ _ _ _ _ _ _ U
Serial number:	see nameplate on the device
Relevant EC directives:	Machinery Directive (2006/42/EC) EMC Directive (2004/108/EC) Compliance with the protection targets of the Low Voltage Directive 2006/95/EC according to Appendix I, No. 1.5.1 of the Machinery Directive 2006/42/EC RoHS Directive (2011/65/EU)
Harmonised standards applied, in particular:	EN 809: 2010 EN ISO 12100: 2010 EN 61010-1: 2010 EN 61000-6-2: 2005 EN 61000-6-3: 2011 EN 50581: 2013
Place, Date:	Heidelberg, 22.07.2014

You will find the EC Declaration of Conformity to download on our homepage.

22 EC Declaration of Conformity for Machinery

In accordance with DIRECTIVE 2006/42/EC OF THE EUROPEAN PARLIAMENT AND OF THE COUNCIL, Appendix I, BASIC HEALTH AND SAFETY REQUIREMENTS, section 1.7.4.2. C.

We,

- ProMinent GmbH
- Im Schuhmachergewann 5 - 11
- D - 69123 Heidelberg,

hereby declare that the product specified in the following, complies with the relevant basic health and safety requirements of the EC Directive, on the basis of its functional concept and design and in the version distributed by us. Any modification to the product not approved by us will invalidate this declaration.

Extract from the EC Declaration of Conformity

Designation of the product:	Metering pump, product range Beta/4 and Beta/5
Product type:	BT4b _ _ _ _ _ _ _ _ _ _ _ M BT4b _ _ _ _ _ _ _ _ _ _ _ N BT5b _ _ _ _ _ _ _ _ _ _ _ N
Serial number:	see nameplate on the device
Relevant EC directives:	EC Machinery Directive (2006/42/EC) EC EMC Directive (2004/108/EC) EU RoHS Directive (2011/65/EU)
Harmonised standards applied, in particular:	EN 809: 2010 EN ISO 12100: 2010 EN 61010-1: 2010 EN 61000-6-2: 2005 EN 61000-6-3: 2011 EN 50581: 2013
Place, Date:	Heidelberg, 22.07.2014

You will find the EC Declaration of Conformity on our homepage.

23 Index

1, 2, 3 ...

"External control" terminal 15, 16, 29, 37, 38
"Level switch" terminal 15, 16

A

About this pump 7
Accuracy 53
Anti-kink device 25
Applied harmonised standards 109, 110
Assembly 19
Auxiliary frequency 16, 18, 30, 31, 38

B

Backplate 14
Bleed valve 14, 23, 24, 25
Bypass hose sleeve 14

C

Capacity 17, 37
Cleaning valves 43
Compatibility 57
Connector size 51
Contacter relay 28
Contacts 38, 39
Control Elements 15
Control type 48

D

Decommissioning 49
Degree of protection 57
Designation of the product 109, 110
Dimensional drawings 58
Discharge valve 14, 25
Disposal 50
Dosing head 14
Draining the liquid end 49

E

Electrical data 54
Emergency 11
Extern Contact 18, 38
External 39
External analog 15, 16, 31, 39
External contact 15, 16, 30, 31
External frequency changeover 18
External frequency changer 16

F

Fault 18
Fault indicating and pacing relay option 18
Fault indicating relay 18, 32, 33
Fault indicator (red) 15, 16
Fault messages 48
Fault Statuses 18
Functions 15, 16, 18, 37

H

Hierarchy of Operating Modes 18

I

Identification of safety notes 8
Identity code 5
Inductive consumers 28
Information in the event of an emergency 11
Installation, electrical 27
Installation, hydraulic 20
Installing hose lines 21
Intended Use 8
IP 57

L

Leakage hole 40
level 32
Level switch 16, 31, 38

M

mA input 30
mA signal 39
Mains 38
Mains cables 28
Maintenance 40
Manual 15, 17, 18
Manual operation 37
Material Data 54
Metering pumps with bleed valve 23
Metering pumps with self-bleeding 24
Metering pumps without integral relief valve 25
Metering pumps without self-bleeding 21
Minimum Stroke Length 53
Multifunctional Switch 15, 17, 38

O

Operating indicator (green) 15, 16
Operating modes 15, 16, 17, 18
Operation 37
Ordering Information 107
Overview of Equipment 14

P

Pacing relay 33
Parallel connection 28
Pause 16, 18, 30, 37
Performance data 51
Power consumption 54
Priming 18, 38
Priming function 15
Priming pressure 24
Protection against contact and humidity 57
Protection class 57
Pulse control switch 15, 38, 39

Q

Qualification of personnel 11

R

Radioactive 13
RC member 28
Relay 18, 32
Relay connection 15
Relay retrofit kit 107
Relevant EC directives 109, 110
Remote operation 37, 39
Repairs 42
Replacing the diaphragm 44
Reproducibility 17, 37, 53
Return line 25
Return pipe 21, 23, 24

S

Safety Chapter 8
Safety declaration form 13
Safety requirements 57
Scope of Delivery 13
SEK 24
SEK types 17

Self-Bleeding 17
Semiconductor switch 33
Serial number 109, 110
Shipping weight 57
Sleeve 25
Sound pressure level 12, 57
Standard installation 26
Start up 34
Stop 18, 38
Storage 13
stroke length 17, 37
Stroke Length Adjustment Button 15
Stroke rate 15, 17, 37
Strokes 38, 39
Suction valve 14
Supply voltage 28
Symbols 26

T

Technical data 51
Test (function) 15, 18, 38
Transport 13
Troubleshooting 47

U

Unpacking 13

V

Varistor 28
Viscosity 53

W

Warning indicator (yellow) 15, 16
Warning message 32, 48
Warning sign 8



ProMinent GmbH
Im Schuhmachergewann 5-11
D-69123 Heidelberg
Telephone: +49 6221 842-0
Fax: +49 6221 842-419
Email: info@prominent.com
Internet: www.prominent.com

Heidelberg, 6, en_GB

© 2009

P-610x - Pump, Metering, Parts, Multi-function ValvePVDF, 87PSIG Size 2

Betriebsanleitung / Operating Instructions
Mode d'emploi / Instrucciones de servicio

ProMinent® Mehrfunktionsventil
ProMinent® Multi-Function Valve
Vanne multifonctions ProMinent®
Válvula multifuncional ProMinent®

D/GB/F/E

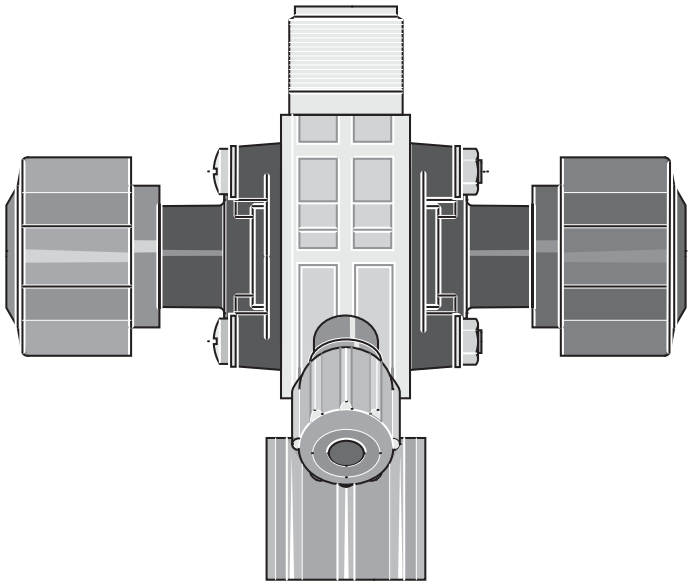

Teile Nr./Part No.: 987629 **ProMinent Dosiertechnik GmbH · 69123 Heidelberg · Germany** BA MAZ 623 10/04 G/GB/F/E

(D) Betriebsanleitung in Deutsch
von Seite 4 bis 8

(GB) Operating Instructions in English
from page 9 to page 14

(F) Mode d'emploi en français
de la page 15 à la page 20

(E) Instrucciones de servicio en español
de página 21 hasta página 26

Impressum:

Betriebsanleitung ProMinent® Mehrfunktionsventil
© ProMinent Dosiertechnik GmbH, 2000

Anschrift:

ProMinent Dosiertechnik GmbH
Im Schuhmachergewann 5-11
69123 Heidelberg · Germany

Telefon: 06221 842-0
Fax: 06221 842-617

info@prominent.com
www.prominent.com

Technische Änderungen vorbehalten.

Betriebsanleitung bitte zuerst vollständig durchlesen. Nicht wegwerfen! Bei Schäden durch Bedienungsfehler erlischt die Garantie!

Seite

1	**Aufbau**	4
2	**Funktionsbeschreibung**	4
3	**Bestimmungsgemäßer Gebrauch**	6
4	**Montage / Installation**	6
5	**Betrieb / Bedienung**	7
6	**Technische Daten / Bestellhinweise**	8

1 Aufbau

Die Funktionen des Mehrfunktionsventils werden durch je eine federbelastete Membran erzeugt. Es ist je ein Entlastungsmechanismus für die Druckhalte-Funktion und für die Überdruckfunktion vorgesehen.

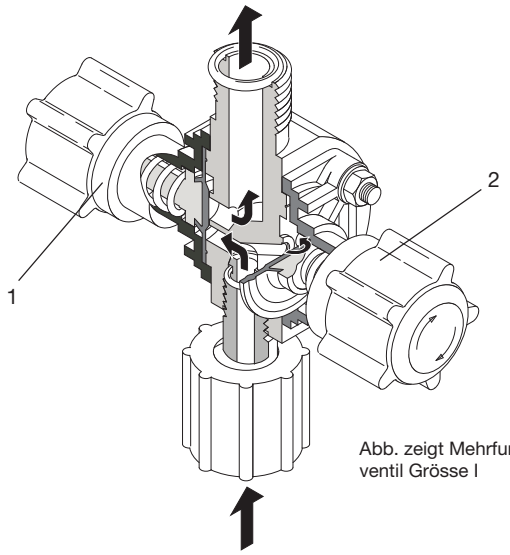

Abb. zeigt Mehrfunktionsventil Grösse I

2 Funktionsbeschreibung

Funktionen

- Erzeugung eines definierten Gegendruckes bei Dosierung gegen freien Auslauf.
  Das Aufheben dieser Funktion erfolgt durch Drehen am schwarzen Drehknopf im Uhrzeigersinn (1).
- Verhindern von Durchhebern aus dem Vorratsgebinde bei Unterdruck an der Dosierstelle.
  Das Aufheben dieser Funktion erfolgt durch Drehen am schwarzen Drehknopf im Uhrzeigersinn (1).

ACHTUNG

- **Multifunktionsventile sind keine absolut dicht schließende Absperrorgane.**

Wenn absolut kein Dosiermedium zur Dosierstelle gelangen darf, so ist ein zusätzliches Absperrorgan saugseitig der Pumpe vorzusehen.

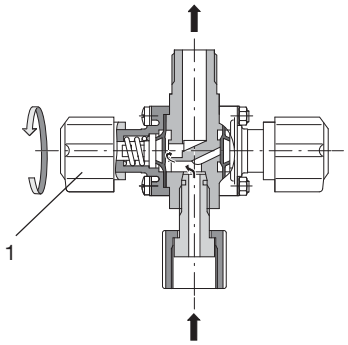

- Ansaughilfe bei der Inbetriebnahme der Pumpe gegen Druck. Das Lösen der Druckleitung ist nicht erforderlich. Dies erfolgt durch Drehen am roten Drehknopf (2).

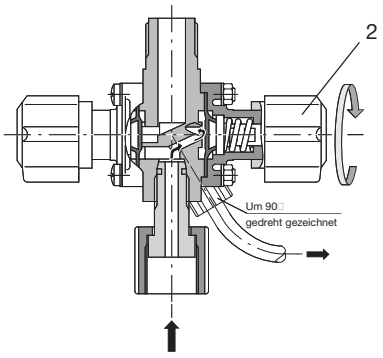

ACHTUNG

- **An der Dosierstelle muß ein Rückschlagventil installiert werden, da bei der Betätigung des Ventils der gesamte Inhalt der Anlage über den Bypass zurückfließen kann.**

- Entlastung der Dosierleitung bei Stillstand der Anlage (z.B. Reparatur). Dies erfolgt durch Drehen am roten Drehknopf (2).
- Überströmventil zum Schutz der Anlage gegen unzulässigen Überdruck, der von der Dosierpumpe verursacht wird. Rückführung über eine Bypassleitung. Diese Funktion erfolgt automatisch.

3 Bestimmungsgemäßer Gebrauch

Bestimmungsgemäßer Gebrauch

Schutz der Dosierleitung vor unzulässigem Überdruck, der durch die Dosierpumpe erzeugt wird, wenn ein in der Dosierleitung befindlicher Absperrhahn geschlossen wird.

- Das Multifunktionsventil darf nicht verwendet werden zum Schutz der Dosierleitung vor unzulässigem Überdruck, der andere Ursachen hat als der von der Dosierpumpe erzeugte Druck.
- Das Ventil darf **nicht** als Absperrorgan verwendet werden.

4 Montage / Installation

Sicherheitsanforderung, Sicherheitshinweise



ACHTUNG

- **Bei druckbeaufschlagten Systemen muss an der Dosierstelle ein Rückschlagventil installiert sein, da sonst bei Betätigung des Ventils der gesamte Inhalt der Anlage über den Bypass zurückfließen kann.**
- **Die Bypassleitung muß immer angeschlossen sein, da es beim Betrieb des Ventils nahe der Überdruckfunktion zu einem minimalen Überströmen in die Bypassleitung kommen kann.**
- **Multifunktionsventile sind keine absolut dicht schließenden Absperrorgane!**

Montagebeschreibung mechanisch/hydraulisch

Das Mehrfunktionsventil wird direkt auf den Druckanschluß der Pumpe aufgeschraubt. Das Ventil kann um 360□gedreht und ausgerichtet werden.

Abgangsseitig wird mittels Anschlußset bzw. GF-Verschraubung die Dosierleitung bzw. Dosierschlauch befestigt. Werkseitig ist in der O-Ringnut am Abgang ein EPDM O-Ring eingelegt. Für Anwendungen, bei denen EPDM nicht beständig ist, wird die Montage eines Viton® B O-Rings empfohlen. Dieser O-Ring (bräunlich) ist dem Ventil beigelegt.

Die Bypassleitung wird in den Vorratsbehälter zurückgeführt. Befestigung über Schlauchtülle und Überwurfmutter.

5 Betrieb / Bedienung



ACHTUNG

- **Die Bypassleitung muß immer angeschlossen sein, da es beim Betrieb des Ventils nahe der Überdruckfunktion zu einem minimalen Überströmen in die Bypassleitung kommen kann.**
- **Multifunktionsventile sind keine absolut dicht schließenden Absperrorgane!**

Bedienung und Einstellung Ansaughilfe

Durch Drehen des roten Drehknopfes (2) in Pfeilrichtung (Uhrzeigersinn) wird der Weg zum Bypass frei. Das Medium fließt in den Vorratsbehälter zurück.

HINWEIS

- **Dabei wird auch die Druckleitung teilweise entlastet und es kann Flüssigkeit am Bypass austreten.**

Die ProMinent Dosierpumpe ist jetzt auf „Ansaugen" zu stellen (s. hierzu auch Betriebsanleitung der Pumpe), bis Flüssigkeit in der Bypassleitung sichtbar wird.

Die Pumpe hat angesaugt und kann in Betrieb genommen werden. Nach dem Loslassen des roten Drehknopfes (2) geht dieser selbständig in die Ausgangsstellung zurück.

Entlastung der Druckleitung

Durch Herausdrehen des roten Drehknopfes (2) und des schwarzen Drehknopfes (1) im Uhrzeigersinn wird der Weg von der Druckleitung zum Bypass frei. Wird nur der rote Drehknopf (2) betätigt, so fällt der Druck in der Leitung auf ca. 1,5 bar ab.

Die beiden Knöpfe müssen solange herausgedreht bleiben, bis keine Flüssigkeit mehr an der Bypassöffnung austritt bzw. keine Flüssigkeit mehr in den Vorratsbehälter zurückfließt. Die Dosierleitung ist jetzt druckentlastet. Nach dem Loslassen der beiden Drehknöpfe, drehen sich beide wieder selbständig in ihre Ausgangsstellung zurück.

6 Technische Daten / Bestellhinweise

Mediumberührte Werkstoffe

Ventilkörper	PVDF
Membrane	PTFE-beschichtet
Dichtungen	Viton® oder EPDM
Adapter bei Größe III	PVC

Viton® ist ein eingetragenes Warenzeichen von DuPont Dow Elastomers.

Typ	Best. Nr.	Überström-Öffnungsdruck*	Anschluß-größe	Bypass-Anschluß
Größe I	792011.9	16 bar	6-12 mm	6/4 mm
Größe I	791715.6	10 bar	6-12 mm	6/4 mm
Größe I	1005745	6 bar	6-12 mm	6/4 mm
Größe II	792203.4	10 bar	6-12 mm	12/9 mm
Größe II	740427.0	6 bar	6-12 mm	12/9 mm
Größe III	792215.6	10 bar	DN 10	12/9 mm

* Der hier angegebene Überström-Öffnungsdruck ist der Druck, bei dem das Ventil zu öffnen beginnt. Je nach Pumpentyp kann der Druck bis zum vollständigen Öffnen des Ventils um bis zu 50 % höher liegen.

Einsatzbereich

Größe I	CONCEPT, Pneumados und Beta® 4: alle Typen gamma/ L: Typ 1000, 1601, 1602, 1005, 0708, 0413, 0220 und 1605
Größe II	alle Typen unter Größe I Beta® 5: Typ 1008, 0713, 0420 und 0232 gamma/ L: Typ 1008, 0713, 0420 und 0232
Größe III	Sigma/ 1 mit Anschlussgewinde DN 10

Technische Änderungen vorbehalten.

Please completely read through these operating instructions. Do not discard! The warranty shall be invalidated by damage caused by operating errors!

		Page
1	Design	10
2	Functional Description	10
3	Use for Intended Purpose	12
4	Mounting / Installation	12
5	Operation	13
6	Technical Data / Ordering Notes	14

1 Design

Each of the functions of the multi-function valve is produced by a spring-loaded diaphragm. The valve features a pressure relief mechanism for both the pressure retaining function as well as for the pressure relief function.

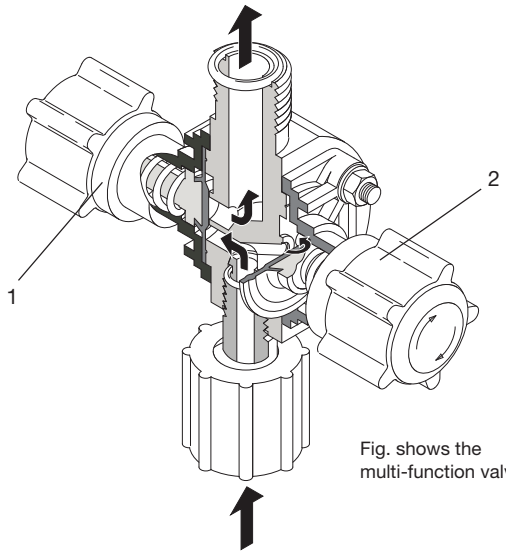

Fig. shows the multi-function valve, Size I

2 Functional Description

Functions

- Producing a defined backpressure for metering with respect to free outlet.
  Turn the black rotary knob clockwise (1) to disable this function.
- Prevents lift-through from the supply vessel in the case of vacuum at the metering point.
  Turn the black rotary knob clockwise (1) to disable this function.

IMPORTANT

- **Multi-function valves are not intended to act as fully sealing stop taps.**

If it is imperative that no metering chemical reaches the metering point, fit an additional stop cock to the suction side of the pump.

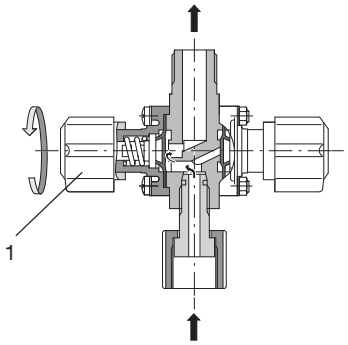

- Intake aid to prevent pressure when starting up pumps. It is not necessary to release the delivery line.
  Turn the red rotary knob (2) for this purpose.

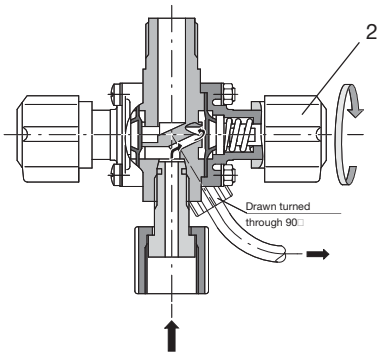

IMPORTANT

- **A non-return valve must be installed at the metering point since the entire content of the system can flow via the bypass when the valve is operated.**

- Depressurizing the metering line when the relevant system is at a standstill (e.g. repairs). Turn the red rotary knob (2) for this purpose.
- Overflow valve to protect the system from impermissible overpressure caused by the metering pump. Return flow via a bypass line. This function operates automatically.

3 Use for Intended Purpose

Use for Intended Purpose

To protect the metering line from impermissible overpressure caused by the metering pump when a stop cock valve is connected in the metering line.

- The multi-function valve may not be used to protect the discharge line from inadmissible excess pressure caused by anything other than the pressure generated by the metering pump.
- The valve must **not** be used as a shut-off.

4 Mounting / Installation

Safety Requirements, Notes on Safety



IMPORTANT

- **Pressurised systems must have a non-return valve fitted at the metering point because the entire contents of the system can flow back via the bypass when the valve is operated.**
- **The bypass line must always be connected since minimum overflow into the bypass line can occur during operation of the valve close to the pressure relief function.**
- **Multi-function valves are not intended to act as fully sealing stop taps!**

Mounting Description, Mechanical/Hydraulic

The multi-function valve is screwed directly on to the pressure connection of the pump. The valve can be turned and aligned through 360□.

The metering line or metering hose is secured on the outlet end by means of a connection set or GF screw fitting. An EPDM O-ring is fitted at the factory in the O-ring groove at the outlet. For applications in which EPDM is not suitable, it is advisable to fit a Viton B O-ring. This O-ring (brown) is supplied together with the valve.

The bypass line is routed into the supply vessel. It is secured by means of a hose grommet and union nut.

5 Operation



IMPORTANT

- **The bypass line must always be connected since minimum overflow into the bypass line can occur during operation of the valve close to the pressure relief function.**
- **Multi-function valves are not intended to act as fully sealing stop taps!**

Operation and Setting Intake Aid

Turn the red rotary knob (2) in the direction of the arrow (clockwise) to open the way to the bypass. The medium flows back into the supply tank.

NOTE

- **In this case, the delivery line is partly depressurized and liquid can flow out of the bypass.**

The ProMinent metering pump must now be set to “intake“ (refer to pump operating instructions) until liquid can be seen in the bypass line.

The pump is now primed and ready for use. After being released, the red rotary knob (2) reverts of its own accord back to its initial position.

Depressurizing the Delivery Line

The passage from the delivery line to the bypass is cleared by turning the red rotary knob (2) and the black rotary knob (1). The pressure drops in the line to approx. 1.5 bar if only the red rotary knob (2) is turned.

Both knobs must remain unscrewed until no more liquid flows out of the bypass line or no more liquid flows back into the supply tank. The metering line is now depressurized. Once released, both rotary knobs turn of their own accord back to their initial position.

6 Technical Data / Ordering Notes

Materials in Contact with Medium

Valve housing	PVDF
Diaphragm	PTFE-coated
Seals	Viton® or EPDM
Adapter for size III	PVC

Viton® is a registered trademark of DuPont Dow Elastomers.

Type	Order No.	Overflow opening pressure*	Connection size	Bypass connection
Size I	792011.9	16 bar	6-12 mm	6/4 mm
Size I	791715.6	10 bar	6-12 mm	6/4 mm
Size I	1005745	6 bar	6-12 mm	6/4 mm
Size II	792203.4	10 bar	6-12 mm	12/9 mm
Size II	740427.0	6 bar	6-12 mm	12/9 mm
Size III	792215.6	10 bar	DN 10	12/9 mm

* The overflow opening pressure stated here is the pressure at which the valve starts to open. Depending on the pump type, the pressure may be higher up to 50 % until complete opening of the valve.

Operating range

Size I	CONCEPT, Pneumados and Beta® 4: all types gamma/ L: type 1000, 1601, 1602, 1005, 0708, 0413, 0220 and 1605
Size II	all types below size I Beta® 5: type 1008, 0713, 0420 and 0232 gamma/ L: type 1008, 0713, 0420 and 0232
Size III	Sigma/ 1 with threaded connection DN 10

Subject to technical modifications.

Veuillez lire en premier lieu entièrement ce mode d'emploi. Ne surtout pas le jeter ! En cas de dommages occasionnés par des erreurs d'utilisation, il y a automatiquement perte du droit de garantie !

		Page
1	Structure	16
2	Description fonctionnelle	16
3	Utilisation conforme	18
4	Montage / Installation	18
5	Mise en service	19
6	Caractéristiques techniques / Remarques concernant la commande	20

1 Structure

Les fonctionnalités de la vanne multifonctions sont générées à chaque fois par une membrane équipée d'un ressort. Un mécanisme de décharge est prévu pour la fonction de maintien en pression et pour la fonction de surpression.

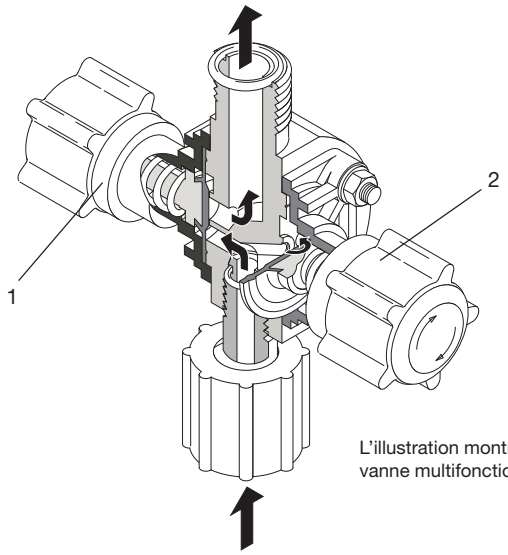

L'illustration montre une vanne multifonctions taille I

2 Description fonctionnelle

Fonctionnalités

- Génération d'une contre-pression définie pour un dosage contre une sortie libre.
  Cette fonction peut être arrêtée en tournant le bouton rotatif noir en sens horaire (1).
- Eviter les coups de siphon du réservoir en présence d'un vide au point de dosage.
  Cette fonction peut être arrêtée en tournant le bouton rotatif noir en sens horaire (1).

ATTENTION

- **Les vannes multifonctions ne sont pas des organes d'arrêt à fermeture absolument étanche.**

Si aucune quantité de fluide ne doit parvenir au point de dosage, il faut prévoir un organe d'arrêt supplémentaire côté aspiration de la pompe.

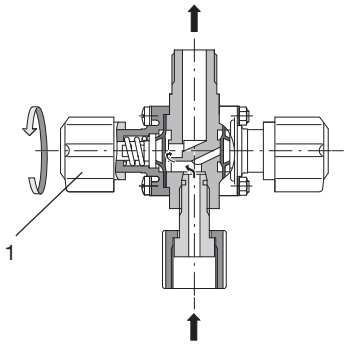

- Dispositif auxiliaire d'aspiration pour la mise en service de la pompe contre pression. Pas besoin de desserrer le tuyau de refoulement.
  Tourner à cet effet le bouton rotatif rouge (2).

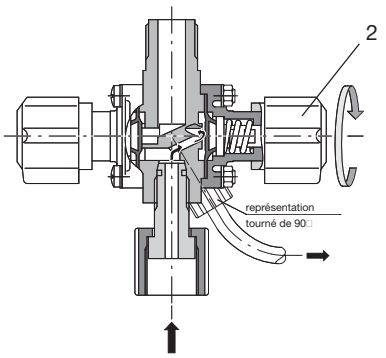

ATTENTION

- **Un clapet anti-retour doit être installé au point de dosage étant donné qu'en actionnant la vanne, le contenu total de l'installation est susceptible de recouler via la dérivation.**

- Décharge de la conduite de dosage à l'arrêt de l'installation (réparation par exemple). Tourner à cet effet le bouton rotatif rouge (2).
- Soupape de décharge pour protéger l'installation contre une surpression inadmissible provoquée par la pompe doseuse. Retour via une conduite de dérivation (bypass). Cette fonction s'exécute automatiquement.

3 Utilisation conforme

Utilisation conforme

Protection de la conduite de dosage contre une surpression non autorisée, générée par la pompe doseuse après la fermeture d'un robinet d'arrêt monté dans la conduite de dosage.

- La vanne multifonctions ne doit pas être utilisée pour la protection de la conduite de dosage contre une surpression inadmissible ayant d'autres causes que la pression générée par la pompe doseuse.
- La vanne **ne doit pas** être utilisée en tant qu'organe d'arrêt.

4 Montage / Installation

Exigences concernant la sécurité, consignes de sécurité



ATTENTION

- **Lors d'injection dans un système sous pression, un clapet anti-retour doit être installé au point de dosage sinon un retour de flux est susceptible d'être refoulé via le bypass de la vanne multifonctions lorsque celle-ci est actionnée.**
- **La conduite de bypass doit toujours être raccordée. Lorsque la pression d'exploitation de la pompe est proche de la pression de décharge de la vanne, il se peut qu'un peu de produit s'écoule du raccord de bypass.**
- **Les vannes multifonctions ne sont pas des organes d'arrêt à fermeture absolument étanche.**

Description du montage de l'installation mécanique/hydraulique

La vanne multifonctions se visse directement sur le raccord de refoulement de la pompe. La vanne peut être tournée et alignée de 360□.

Côté sortie, il convient de fixer le tuyau ou resp. la conduite de dosage au moyen du lot de raccordement ou via un raccord vissé GF. Un joint torique en EPDM est posé départ usine dans la rainure du joint torique en sortie. En cas d'utilisations pour lesquelles l'EPDM ne serait pas résistant, nous recommandons le montage d'un joint torique en Viton B. Ce joint torique (brunâtre) est joint à la vanne.

La conduite de dérivation est ramenée dans le réservoir. Elle est fixée par un embout de tuyau flexible et un écrou-raccord.

5 Mise en service / Commande



ATTENTION

- **La conduite bypass doit toujours être raccordée étant donné qu'en cas d'exploitation de la vanne à proximité de la fonction de surpression, un débordement minimal est susceptible de se produire dans la conduite de dérivation.**
- **Les vannes multifonctions ne sont pas des organes d'arrêt à fermeture absolument étanche.**

Commande et réglage
Dispositif auxiliaire d'aspiration

Tourner le bouton rotatif rouge (2) dans le sens de la flèche (sens horaire) pour dégager la voie vers le (bypass). Le milieu s'écoule de nouveau dans le réservoir.

REMARQUE

- **Ce faisant, la conduite de refoulement est partiellement déchargée et du liquide peut sortir du bypass.**

Dès à présent, commuter la pompe doseuse ProMinent® sur „Amorçage" (voir à cet effet également le mode d'emploi de la pompe), jusqu'à ce que du liquide devienne visible dans la conduite de dérivation.

La pompe s'est amorcée et peut être mise en service. En laissant revenir le bouton rotatif rouge (2), celui-ci reprend automatiquement sa position d'origine.

Décharge de la conduite de refoulement

En sortant le bouton rotatif rouge (2) et le bouton rotatif noir (1) par rotation dans le sens des aiguilles d'une montre, le parcours allant de la conduite de refoulement vers le bypass est libéré. En actionnant uniquement le bouton rotatif rouge (2), la pression dans la conduite tombe à 1,5 bar environ.

Les deux boutons doivent demeurer tournés jusqu'à ce que plus aucun liquide ne sorte de l'ouverture du bypass ou que plus aucun liquide ne soit refoulé dans le réservoir. La conduite de dosage est maintenant hors pression. En relâchant les deux boutons rotatifs, ceux-ci se remettent à tourner automatiquement sur leur position d'origine.

6 Caractéristiques techniques / Remarques concernant la commande

Matériaux en contact avec le milieu

Corps de la vanne	PVDF
Membranes	revêtues de PTFE
Joints	Viton® ou EPDM
Adapteur taille III	PVC

Viton® est une marque déposée de DuPont Dow Elastomers.

Type	Nº de commande	Pression d'ouverture de décharge*	Grandeur de raccordement	Raccord bypass
taille I	792011.9	16 bar	6-12 mm	6/4 mm
taille I	791715.6	10 bar	6-12 mm	6/4 mm
taille I	1005745	6 bar	6-12 mm	6/4 mm
taille II	792203.4	10 bar	6-12 mm	12/9 mm
taille II	740427.0	6 bar	6-12 mm	12/9 mm
taille III	792215.6	10 bar	DN 10	12/9 mm

* La pression d'ouverture de décharge indiquée ici constitue la pression à laquelle la vanne commence à s'ouvrir. En fonction du type de pompe, la pression jusqu'à l'ouverture complète de la vanne peut être jusqu'à 50 % plus élevée.

Domaine d'utilisation

taille I	CONCEPT, Pneumados et Beta® 4: tous types gamma/ L: type 1000, 1601, 1602, 1005, 0708, 0413, 0220 et 1605
taille II	tous types inférieurs à la taille I Beta® 5: type 1008, 0713, 0420 et 0232 gamma/ L: type 1008, 0713, 0420 et 0232
taille III	Sigma/ 1 avec taraudage de raccordement DN 10

Sous réserve de modifications.

Le rogamos lea primeramente en su totalidad las instrucciones de servicio. No las tire. En caso de daños ocasionados por error en el manejo del equipo, desaparece la garantía.

Página

1	Principio de funcionamiento	22
2	Características funcionales	22
3	Uso conforme a los fines previstos	24
4	Montaje / Instalación	24
5	Operación / Manejo	25
6	Características técnicas / Instrucciones para el pedido	26

1 Principio de funcionamiento

Las funciones de la válvula multifuncional son generadas, en cada caso, por una membrana sometida a la presión de un muelle. Están previstos un mecanismo de descarga para la función de mantenimiento de la presión y otro para la de sobrepresión.

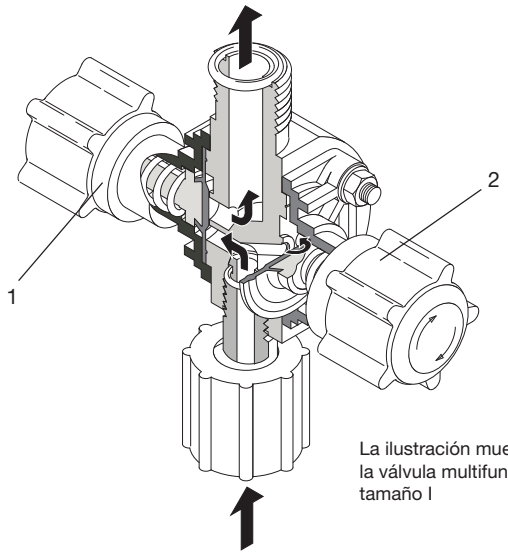

La ilustración muestra la válvula multifuncional tamaño I

2 Características funcionales

Funciones

- Generar una contrapresión definida en la dosificación a salida libre.
  La supresión de esta función se realiza girando el botón giratorio negro en sentido horario (1).
- Evitar el "efecto sifón" desde el depósito dosificador en caso de presión negativa en el punto de dosificación.
  La supresión de esta función se realiza girando el botón giratorio negro en sentido horario (1).

ATENCIÓN

- **Las valvulas multifuncionales no son órganos de cierre absolutamente herméticos.**

Si no debe llegar absolutamente ningún medio de dosificación al punto de dosificación debe instalarse un órgano de cierre adicional en el lado de aspiración de la bomba.

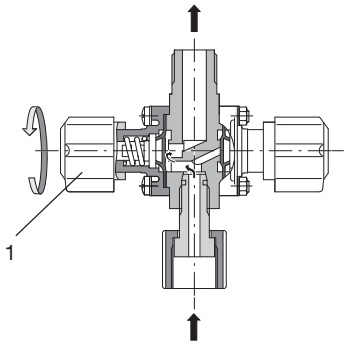

- Ayudar en la aspiración en la puesta en servicio de la bomba contra presión. No es necesario aflojar el tubo de presión. Esto se realiza girando el botón giratorio rojo (2).

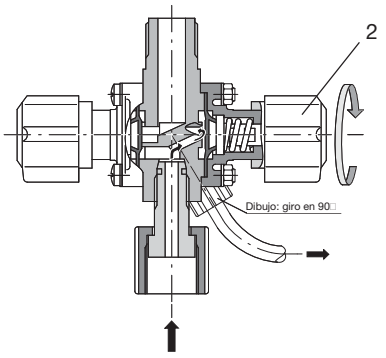

ATENCIÓN

- **En el punto de dosificación se debe instalar una válvula de retención, ya que al operar la válvula, todo el contenido de la instalación puede refluir a través de la derivación.**

- Descargar el tubo de dosificación cuando la instalación esté parada (p.ej. por motivos de reparación). Esto se realiza girando el botón giratorio rojo (2).
- Válvula de seguridad para proteger la instalación contra sobrepresiones inadmisibles generadas por la bomba dosificadora. Retorno a través de un tubo de derivación. Esta función es automática.

3 Uso conforme a los fines previstos

Uso conforme a los fines previstos

Protección del tubo dosificador contra sobrepresiones inadmisibles generadas por la bomba dosificadora al cerrar una llave de retención ubicada en el tubo dosificador.

- La válvula multifuncional no debe utilizarse para protección de la tubería de dosificación contra sobrepresión indebida, que tiene otras causas que la presión generada por la bomba dosificadora.
- La válvula **no** debe ser empleada como órgano de cierre.

4 Montaje / Instalación

Requisitos e indicaciones de seguridad



ATENCIÓN

- **En sistemas presurizados debe estar instalada una válvula antirretorno en los puntos de dosificación, ya que de lo contrario, al operarse la válvula todo el contenido de la instalación puede refluir a través de la derivación.**
- **El tubo de derivación debe mantenerse siempre conectado, ya que al operar la válvula cerca de la función de sobre-presión es posible que rebase una pequeña cantidad de líquido hacia el tubo de derivación.**
- **Las válvulas multifuncionales no son órganos de cierre absolutamente herméticos.**

Descripción del montaje mecánico / hidráulico

La válvula multifuncional se enrosca directamente en la conexión de presión de la bomba. La válvula tiene un giro de 360□y puede orientarse según conveniencia.

En el lado de salida, se fija el tubo o conducto dosificador mediante un juego de conexiones o bien la unión roscada GF. En la ranura anular en O del lado de salida, viene colocada de fábrica una junta toroidal de EPDM. Para las aplicaciones en las que el EPDM no sea resistente a los líquidos utilizados, se recomienda el montaje de una junta toroidal de Viton B. Esta junta toroidal (de color marrón) viene adjunta a la válvula.

El tubo de derivación se lleva nuevamente al depósito dosificador. Fijarlo mediante boquilla portatubo y tuerca de racor.

5 Operación / Manejo



ATENCIÓN

- **El tubo de derivación debe mantenerse siempre conectado, ya que al operar la válvula cerca de la función de sobre-presión es posible que rebase una pequeña cantidad de líquido hacia el tubo de derivación.**
- **Las válvulas multifuncionales no son órganos de cierre absolutamente herméticos.**

Operación y puesta a punto
Ayuda en la aspiración

Mediante giro del botón giratorio rojo (2) en la dirección de la flecha (sentido horario) queda libre la vía al bypass. El líquido a dosificar retorna al depósito dosificador.

NOTA

- **Se produce una descarga parcial del tubo de presión, por lo que puede salir líquido en la derivación.**

La bomba dosificadora ProMinent debe ponerse entonces en "aspirar" (véase tambièn al respecto las instrucciones de servicio de la bomba), hasta que aparezca líquido en el tubo de derivación.

La bomba ha aspirado y puede ser puesta en marcha. Al soltar el botón giratorio rojo (2), éste retorna automáticamente a la posición inicial.

Descarga del tubo de presión

Girando hacia fuera el botón giratorio rojo (2) y el botón giratorio negro (1) en el sentido de las agujas del reloj, queda libre el recorrido de la tubería de impulsión hasta el bypass. Si sólo es accionado el botón giratorio rojo (2), la presión en la tubería bajará hasta 1,5 bar, aproximadamente.

Ambos mandos deben permanecer en esa posición hasta que ya no salga líquido por el orificio de derivación ni que retorne líquido al depósito dosificador. El tubo de dosificación está entonces descargado de presión. Al soltar los dos mandos giratorios, éstos retornan automáticamente a su posición inicial.

6 Características técnicas / Instrucciones para el pedido

Materiales empleados para los elementos en contacto con el líquido a dosificar

Cuerpo de válvula	PVDF
Membrana	revestida de Teflón
Juntas	Viton® o EPDM
Pieza de ajuste para tamaño III	PVC

Viton® es una marca registrada de DuPont Dow Elastomers.

Tipo	No. de ref.	Presión de apertura de rebose*	Tamaño de conexión	Conexión de derivación
Tamaño I	792011.9	16 bar	6-12 mm	6/4 mm
Tamaño I	791715.6	10 bar	6-12 mm	6/4 mm
Tamaño I	1005745	6 bar	6-12 mm	6/4 mm
Tamaño II	792203.4	10 bar	6-12 mm	12/9 mm
Tamaño II	740427.0	6 bar	6-12 mm	12/9 mm
Tamaño III	792215.6	10 bar	DN 10	12/9 mm

* La presión de apertura de rebose indicada aquí es la presión a la que empieza a abrirse la válvula. Según el tipo de bomba, la presión hasta la apertura total de la válvula puede ser hasta el 50 % mayor.

Aplicaciones

Tamaño I	CONCEPT, Pneumados y Beta® 4: todos los tipos gamma/ L: tipo 1000, 1601, 1602, 1005, 0708, 0413, 0220 y 1605
Tamaño II	todos los tipos bajo tamaño I Beta® 5: tipo 1008, 0713, 0420 y 0232 gamma/ L: tipo 1008, 0713, 0420 y 0232
Tamaño III	Sigma/ 1 con rosca de unión DN 10

Sujeto a modificaciones técnicas.

Anschriften- und Liefernachweise durch den Hersteller /
Addresses and delivery through manufacturer /
Adresses et liste des fournisseurs fournies par le constructeuer /
Para informarse de las direcciones de los distribuidores, dirigirse al fabricante:

ProMinent Dosiertechnik GmbH
Im Schuhmachergewann 5-11 · 69123 Heidelberg
Germany
Tel.: +49 6221 842-0
Fax: +49 6221 842-419
info@prominent.com · www.prominent.com

P-701/702	12026	Motor, Teco, 1hp, 1800rpm, 143T	208-230/460V, 3ph, CSA/UR

TECO Westinghouse

OPERATION & MAINTENANCE MANUAL FOR THREE PHASE INDUCTION MOTORS

TECO-Westinghouse Motor Company
5100 North IH-35
Round Rock, Tx. 78681

INDEX PAGE

1. INTRODUCTION……. 1
2. ACCEPTING, INSPECTION, STORAGE, TRANSPORTATION…… 2
3. INSTALLATION…….. 4
   3.1 Site and environment for motor installation…….. 4
   3.2 Foundation…….. 4
   3.3 Installation of shaft coupling…….. 6
   3.4 Installation of belt drive…… 9
   3.5 Conveyance with chain or gear……. 10
   3.6 Electrical connections……. 11
4. OPERATION…… 12
   4.1 Examination before starting…… 12
   4.2 Starting operation…….. 15
5. MAINTENANCE…….. 17
   5.1 Major points in regular inspection and maintenance…….. 17
   5.2 Motor windings……... 18
   5.3 Cleaning of the interior of the motor…… 18
   5.4 Cleaning of the exterior of the motor……... 19
   5.5 Maintenance of anti-friction bearings…….. 19
      5.5.1 Frequency of re-lubrication…….. 19
      5.5.2 Kinds of grease…… 20
      5.5.3 Grease quantity…… 20
      5.5.4 Re-greasing…….. 20
      5.5.5 Oil re-lubrication……. 22
      5.5.6 Cleaning and installation of bearings…… 23
   5.6 Maintenance of sleeve bearings…… 24
      5.6.1 Daily inspection……... 24
      5.6.2 Regular examination…….. 24
      5.6.3 Disassembly……. 25
      5.6.4 Re-assembly……. 26
   5.7 Maintenance of slip rings (for Wound Rotor only)…… 27
   5.8 Maintenance of non-reverse ratchet mechanism (Vertical Motors only) 29
6. FAULT FINDING AND RECOGNITION…….. 31

1. INTRODUCTION

This and the following instruction address the more common situations encountered in motor installation, operation and maintenance. For the TWMC motor warranty to be and to remain in effect, the motor must be installed and operated in strict accordance with the outline drawing, motor nameplates and these instructions and must not be altered or modified in any unauthorized manner.

During the installation and operation of motors in heavy industrial applications there is a danger of live electrical parts and rotating parts. Therefore to prevent injury and/or damage the basic planning work for installation, transportation, assembly, operation, etc... needs to be done and checked by authorized and competent personnel only.

Since these instructions cannot cover every eventuality of installation, operation and maintenance, the following points should be considered and checked.

- The technical data and information on permissible use such as assembly, connection, ambient and operating conditions given in the related catalogue, operating instructions, nameplates and other production documentation.
- The general erection and safety regulations.
- The local and plant-specific specifications and requirements.
- The proper use of transport, lifting devices and tools.
- The use of personal protective equipment.

Following indications should be observed when reading these instructions.

Safety instructions are marked as follows:



Warning of electric hazards for personnel.



Warning of dangers for personnel.

ATTENTION!
Warning of damage for the motor or installation.

2. ACCEPTING, INSPECTION, STORAGE, TRANSPORTATION

Inspection upon receipt
Check to following points upon receipt:

- Are the nameplate ratings identical with what you ordered?
- Are dimensions and color in compliance with your specifications?
- Are the nameplate ratings for space heater, thermal protector, temperature detector, etc. identical with what you ordered?
- Is there any damage?
- Are all accessories and accompanying instruction manuals in good order?
- Please ensure that the arrow head indicator really indicates direction of rotation.
- If there are any specific requirements, please ensure they are in conformity with your specifications.

2.1 Storage
When motors are not in operation, the following precautionary measures should be undertaken to assure best performance.

2.2 Place
(a) High and dry, well ventilated without direct sun, dust or corrosive gas.
(b) Not located near to a boiler or freezer.
(c) Entirely free form vibration and easy for movements.
(d) Motors should be put on pallets to prevent moisture.

2.3 Moisture prevention
Since moisture can be very detrimental to electrical components, the motor temperature should be maintained about 3ºC above the dew point temperature by providing either external or internal heat. If the motor is equipped with space heaters, they should be energized at the voltage shown by the space heater nameplate attached to the motor. Incandescent light bulbs can be placed within the motor to provide heat. However, if used, they must not be allowed to come in contact with any parts of the motor because of the concentrated hot spot that could result.

2.4
Even during storage, the insulation resistance should be kept above the specified values.
(a) For measurement of insulation resistance and acceptable standard values, please refer to measures stated in 3.1.2 “Measurement of insulation resistance”.
(b) Insulation resistance test should be performed once every three months.

2.5

If the motor is not in operation for a long period (one week and above) after installation or has been in operation but stopped for a period of time, the following precautions must be taken.

(a) Protect the motor as measures stated in 2.2.3.
(b) Insulation resistance test should be performed as stated in 2.2.4.

2.6 Bearing protection

(a) If the motor has been provided with a shaft shipping brace to prevent shaft movement during transit, it must be removed before operating the motor. It is very important that this brace be re-installed exactly as it was originally, before the motor is moved form storage or any time when the motor is being transported. This prevents axial rotor movement that might damage the bearings.
(b) Motors equipped with sleeve bearings are shipped from the factory with the bearing oil reservoirs drained. In storage, the oil reservoirs should be properly filled to the center of the oil level gauge with a good grade of rust inhibiting oil. To keep the bearing journals well oiled and to prevent rusting, the motor shaft should be rotated several revolutions about every month ensuring the shaft does not come to rest in its original position. While the shaft is rotating, it should be pushed to both extremes of the endplay.
(c) Motors with anti-friction bearings are properly lubricated with the correct grade of grease at the factory and no further greasing is required in storage. The shaft should be rotated several revolutions about every month to maintain proper distribution of the grease within the bearings.
(d) Tilt-pad bearings are a type of sleeve bearing used in special design applications. Due to the nature of this bearing, a loose oil ring for delivering lubricant cannot be provided. Therefore, during the storage internal, oil must be periodically manually introduced into the pads and housing to prevent the occurrence of oxidation of the precision machined components.
    (1) Remove the pipe plug from the bearing cap located above the tilt-bearing shell.
    (2) Pour in approximately one cup of oil every month and rotate the shaft a few revolutions about every two (2) weeks.
    (3) For long periods of storage, the oil that accumulates in the housing should be removed.

ATTENTION!
Care should be taken to keep parts such as fitting surfaces, key, shaft extension and axial central hole from any collision with foreign matter. Grease should also be generously applied to prevent rusting.

2.7 Transportation

To keep the rotating parts of motors from moving, thus preventing damage and scratching during transportation, they should be held securely with a locking device. Remove all transit clamps before operating the motor. It is very important that this device be reinstalled exactly as it was originally, before the motor is moved from storage or any time when the motor is being transported. The vertical mounting type motors should be transported in the vertical position.

Do not use the hoisting hook/eyebolts to lift more that the motor itself. They are designed to support the motor only. Make sure the hoisting hook is correctly attached to the eyebolt(s)/lug(s) are fully screwed in before hoisting. Also note such parts as fan cover, ventilation box, bracket, slip-ring, etc. may have their own hoisting lugs which can only carry their own weight. Nothing extra should be attached while hoisting.
Do not twist the steel wires and make sure the eyebolts have been firmly screwed and the sling angle is correct.

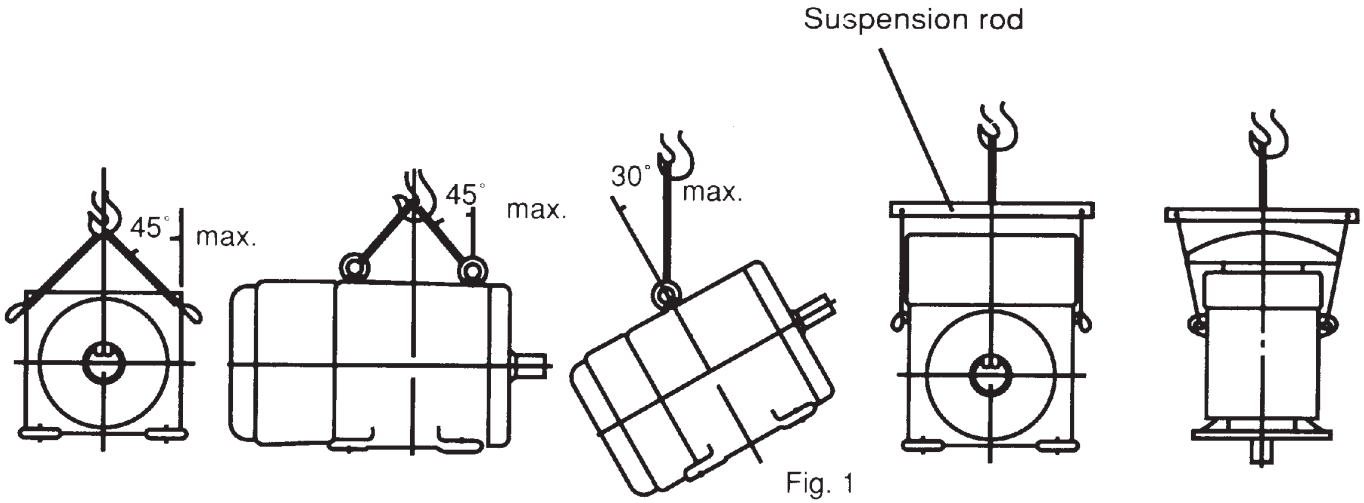

Fig. 1

3 INSTALLATION

Site and environment for motor installation

3.1.1

Standard environment and site conditions for the installation of motors are usually set as follows:

(a) Ambient temperature: -10~40ºC
(b) Humidity: Relative humidity below 90%RH for totally enclosed types, and below 80%RH for semi-enclosed types.
(c) Elevation: below 1000 meters or 3300 feet.
(d) Harmful gases, liquids, dusts, high moisture should be absent.
(e) Foundations should be strong and free of vibration.

If there are any special environmental conditions, please inform TWMC prior o ordering.

3.1.2 Ventilation and space

(a) Installation area should be well ventilated.
(b) The installation space should be large enough to facilitate heat dissipation and maintenance.

3.2 Foundation

3.2.1

Use rigid and solid sole plate or common bed as foundation.
For best motor performance, it is advisable to use a sole plate or common bed, particularly when using a shaft coupling.

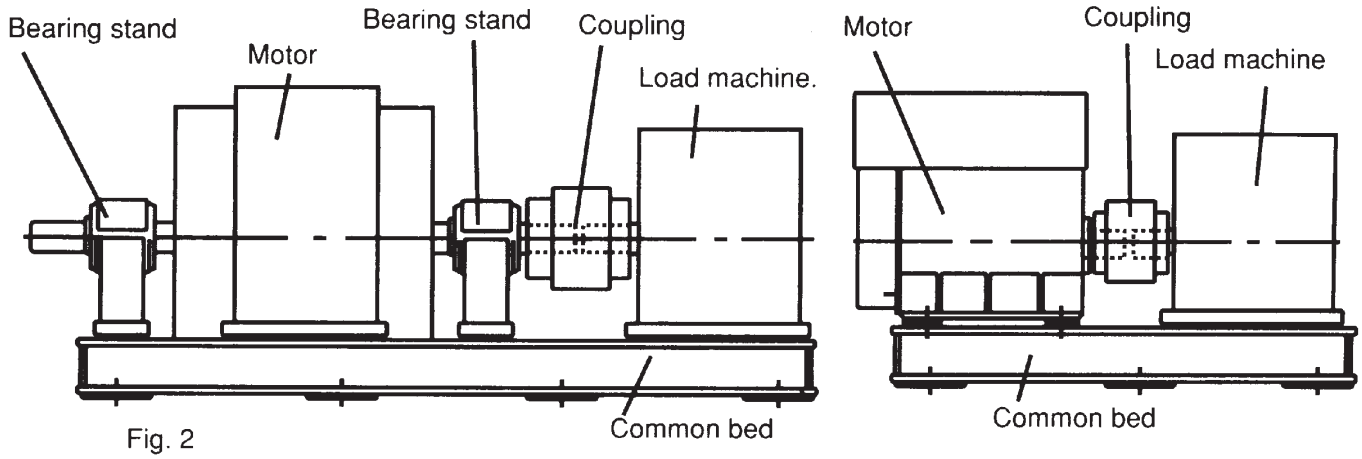

Fig. 2

3.2.2 Installation

(a) Select an appropriate foundation surface for the sole plate or common bed, which will be, considered the ultimate level.
(b) Align the position of the common bed with reference to that level.
(c) Align the level accuracy at least at four points such as bearing mounting, shaft extension etc. The accuracy should be within 0.04mm or .0015 inches
(d) Sole plate or common bed should be embedded in concrete foundation as illustrated in Fig. 3. Stiff pads should also be installed beneath the wedges, which are welded together at various spots about 400-500mm (15.75-19.70 inches) apart etc., to enable the foundation to carry evenly the weight of the whole motor.
(e) The base should be sturdy and rigid to keep it flat and level.
(f) Make sure the mortar and concrete are completely dry, and the precision of the level is acceptable, and then set the motor on the mounting foundation.
(g) Accurately install shaft couplings, belt sheaves etc., then weld the wedges solid to prevent untoward change in position.

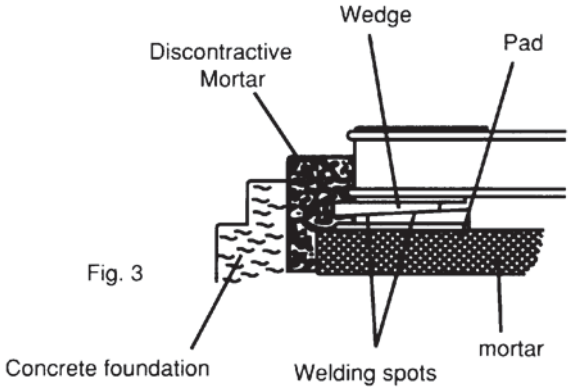

Fig. 3

3.2.3 The foundation of vertical induction motors: (Also the foundation of pump)

(a) Foundation of motor/pump must be rigid and secure to provide adequate support. There must be no vibration, twisting, misalignment etc. due to inadequate foundations.
(b) A massive concrete foundation is preferred in order to minimize vibration. Rigidity and stability are enhanced by prop plate and foundation bolt. As shown in Fig. 4.

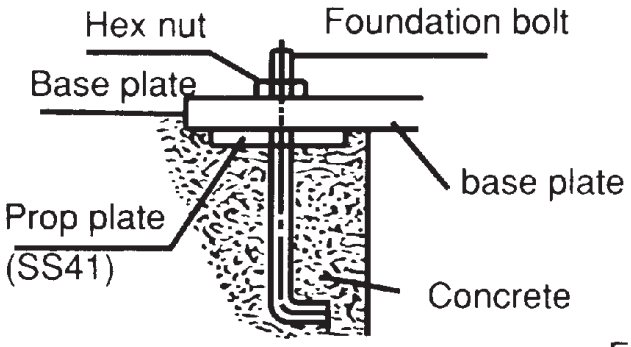

Fig. 4

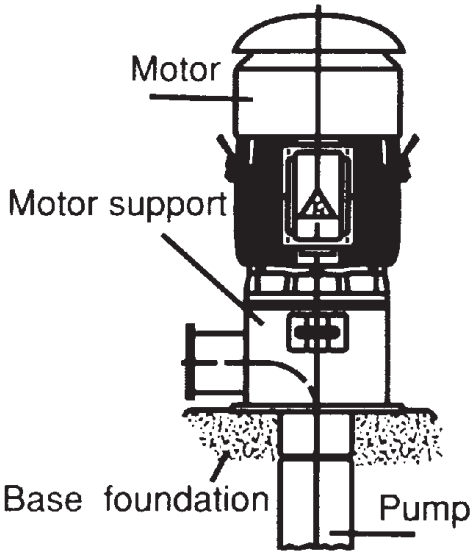

Fig. 5

3.2.4 Installation of vertical motors:

(a) All mounting surfaces must be clean and level.
(b) Foundation must be leveled at least at 4 points and guaranteed to be below 0.04mm (.0015 in.) flat and level.
(c) Make sure the mortar and concrete are completely dry, and the precision of the level is acceptable, and then set the motor on the mounting foundation.
(d) Accurately install shaft couplings.

3.3 Installation of shaft coupling

ATTENTION!
Motors must always be accurately aligned, and this applies especially where they are directly coupled.
Incorrect alignment can lead to bearing failure, vibration and even shaft fracture. As soon as bearing failure or vibration is detected, the alignment should be checked.

3.3.1

Field application of a coupling to the motor shaft should follow the procedures recommended by the coupling manufacturer. The motor shaft extension must not be subjected to either extreme heat or cold during coupling installation.

ATTENTION!
Basically, the coupling should be heated and pushed onto the shaft extension with slight axial force. Do not hammer coupling to prevent bearing damage.

3.3.2

Although the sleeve bearings are equipped with thrust faces, these are intended only to provide momentary axial restraint of rotor movement either during start-up or when operating the motor disconnected from the driven equipment. They must not be operated under a constant thrust load unless they were originally designed for this condition.

Motors with either sleeve or anti-friction bearings are suitable for connection to the driven load through a flexible coupling. Coupling solidly to the load is not acceptable. With sleeve bearings, the flexible coupling should be of the limited end float type to prevent the possibility of any end thrust from load being transmitted to the motor bearings, which could cause bearing damage. The recommended limits of end float are as follows:

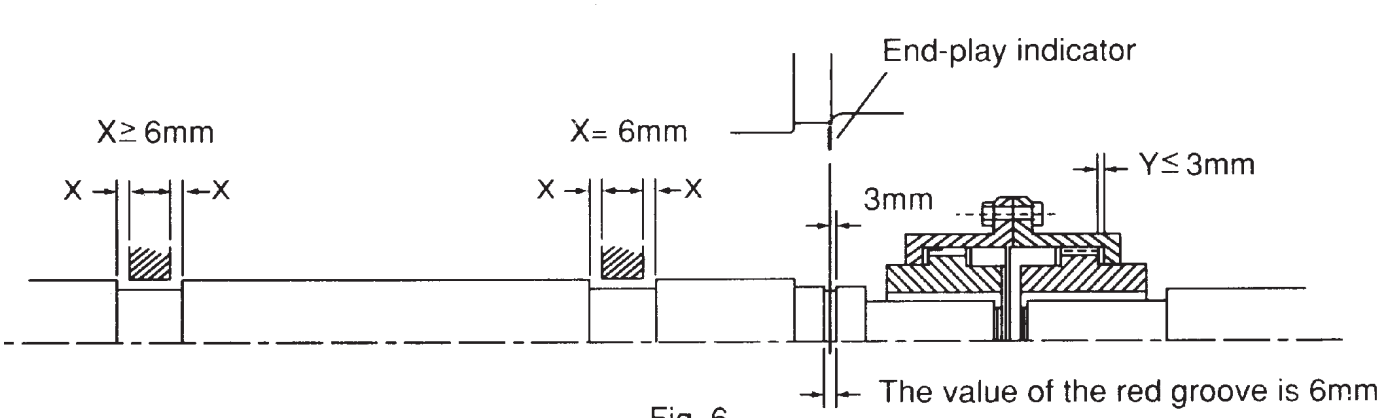

Fig. 6

(a) When the motor is in operation after installation, be sure that the end-play indicator is within the 6mm (.236 in.) of the groove on the shaft or aligned to the shaft shoulder immediately outboard of the drive-end bearing to assure there is low friction between shaft and bearing.

(b) Unless otherwise specified, the designed end-play value X of the groove for TWMC motors in general is within 6mm (.236 in.) as illustrated in Fig. 6. In essence, the endplay indicator is adjusted to point at the center of the groove or the drive-end shaft shoulder; thus X equals to 6±1mm or so, and the endplay value (Y) of the couplings should equal or be smaller than 3mm (.118 in.).

(c) If the desired value Y is grater than 3mmm (.118 in.) caused for instance by a thrust load and/or load machine with large end-play, please inform TWMC prior to entering an order.

3.3.3

In aligning the motor (and rotor) axially with the driven equipment, consideration should be given not only to the endplay indicator position but also to axial shaft expansion and increase in shaft centerline height due to thermal effects. In general, the axial shaft growth for motors can be disregarded since neither bearing is fixed and any shaft growth due to temperature increase will produce an elongation away from the coupling.

Shaft height growth (change in shaft centerline elevation) for TEFC machines can be calculated as follows:

$$\Delta=(0.0005\text{”}) \times (\text{motor foot to shaft £ dimension})$$

For non-TEFC machines, divide the number by 2.

3.3.4

It is desirable, in normal operation that the motor operates on its magnetic center, so that no axial force is exerted on the coupling.

The motor shaft and the driven shaft should be aligned within the following tolerances in both angular and parallel alignment:

Unit: mm

TIR	Range of rotating speed	Solid coupling	Flexible coupling
C	2500 rpm and above	0.03	0.03
	Below 2500 rpm	0.04	0.05
A	2500 rpm and above	0.03	0.03
	Below 2500 rpm	0.03	0.04

Angular misalignment is the amount by which the centerlines of driver and driven shafts are skewed. It can be measured using a dial indicator set up as shown in Fig. 7. The couplings are rotated together through 360 degrees so that the indicator does not measure runout of the coupling hub face. The shafts should be forced against either the in or out extreme of their end float while being rotated.

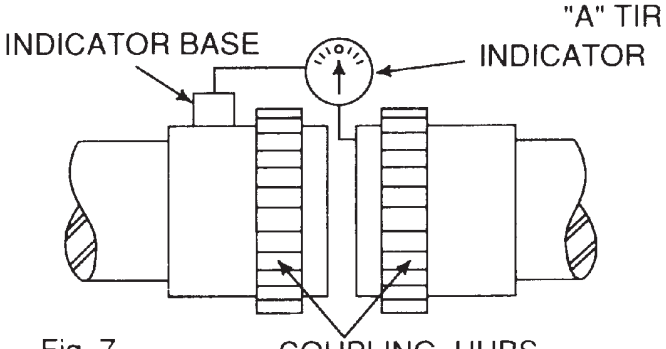

Fig. 7

TIR=Total indicator reading (by dial indicator)

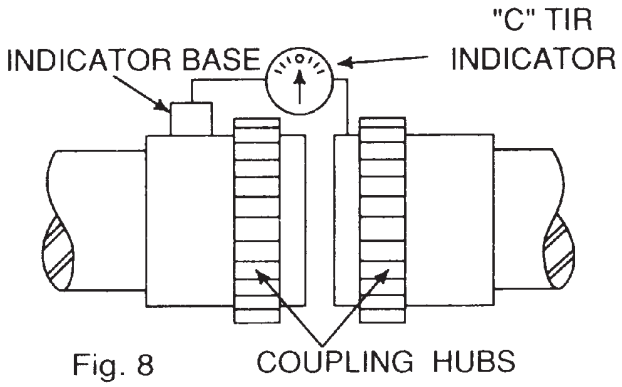

Fig. 8

Parallel misalignment is the amount by which the centerlines of the driver and driven shafts are out of parallel. It can be measured using a dial indicator set up as shown in Fig. 8. Again, the couplings are rotated together through 360 degrees so that the indicator does not measure runout of the coupling hub outside diameter.

3.3.5

After the motor has been properly aligned with the driven equipment and the hold-down bolts have been installed and tightened, for motors with fabricated frames, at least two dowel pins should be installed in two diagonally opposite motor feet.

3.3.6 Installation of shaft coupling: (Vertical hollow shaft motor only)

Bolted Coupling as shown in Fig. 9

(a) Bearings are provided to absorb some upward shaft thrust when the coupling is fitted.
(b) The coupling is fastened with bolts.
(c) This coupling type is not auto-release type.

Note: Standard high thrust motors can absorb momentary up-thrust load up to 30% of the standard down thrust load. If the up-thrust is long in duration (over 10 Seconds) and/or exceeds 30% of the standard high thrust rating, special design arrangements are required and standard motor is not suitable.

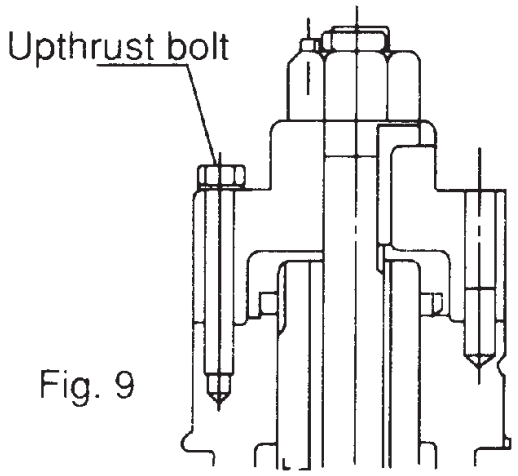

Fig. 9

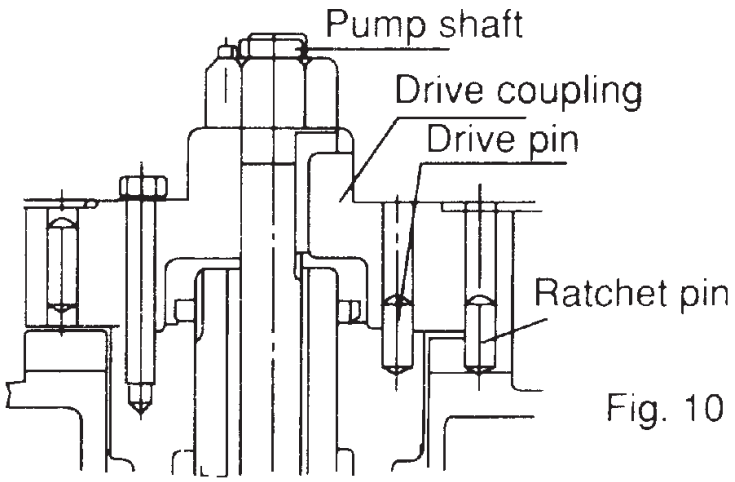

Fig. 10

3.3.7 Non-reverse ratchet/coupling, as Fig. 10 (If necessary)

The non-reverse coupling is also a bolted type and,

(a) It prevents the pump and motor from rotating in the reverse direction.
(b) It also prevents damage form over speeding and damage to pump shaft and bearings.
(c) The ratchet pins are lifted by the ratchet teeth and are held clear by centrifugal force and friction as the motor comes up to speed.
(d) When power is removed, speed decreases, and the pins fall. At the instant of reversal, a pin will catch in a ratchet tooth and prevent backward rotation.
(e) When installing the non-reverse coupling, do not use lubricant. Lubricant will interfere with proper operation. The top half of the coupling should seat solidly on the lower half and the pins should touch the bottom of the pockets between the teeth in the plate.
(f) As with the bolted coupling, the up-thrust capabilities are 30% of the standard high thrust rating for down thrust.

ATTENTION!
Do not apply non-reverse ratchets on applications in which the pump reversal time from shutdown (the instant the stop button is pressed) to zero speed is less than one second.

3.4 Installation for belt drive

In general, power transmission though direct flexible coupling is appropriate for large motors. Such motors are not suitable for belt, chain or gear connection unless specially designed for such service. However, for small and medium motors of which outputs within the ranges shown on table below, it is acceptable to use belt transmission as indicated. Beyond these ranges, do not apply belt sheaves unless specially designed.

3.4.1

The diameter ratio between conveyance sheaves should not be greater than 5 to 1 for flat belts, and 8 to 1 for V-belts. It is also advisable to limit the belt velocity to under 35m/sec (115 ft/sec) to limit belt abrasion and vibration. The smaller the outer diameter of the V-belt sheave, the greater the shaft bending stress will be. If the bending stress is in excess of the shaft fatigue stress, the shaft may break. Therefore, please inform TWMC when you have decided the size of the sheaves and the length of the belts upon ordering.

ATTENTION!
Place the sheave and belt as close as possible to the motor body (it is advisable to make x as shown in Fig. 11 equal to 0) to reduce the bending moment and improve shaft life.

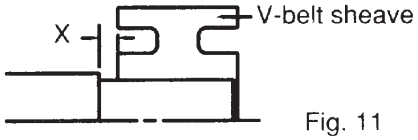

Fig. 11

3.4.2 Table of belt-sheave application for general electric motors

Output (KW/HP)			V-Belt Sheave							
			Conventional V-Belts				Narrow V-Belts			
4P	6P	8P	V-Belt Type	Number Of Belts	Min. PCD (mm)	Max Width (mm)	V-Belt Type	Number Of Belts	Min. PCD (mm)	Max Width (mm)
11/15	-	-	B	4	160	82	3V	4	125	48
-	11/15	-	B	5	170	101	3V	5	140	59
-	-	11/15	B	5	190	101	3V	6	160	69
15/20	-	-	B	5	170	101	3V	6	125	69
-	15/20	-	B	5	224	101	3V	6	160	69
-	-	15/20	C	4	224	111	5V	3	180	60
18.5/25	-	-	B	5	200	101	3V	6	140	69
-	18.5/25	-	C	4	224	111	5V	3	180	60
-	-	18.5/25	C	5	224	136	5V	4	180	78
22/30	-	-	B	5	224	101	5V	6	160	69
-	22/30	-	C	5	224	136	3V	4	180	78
-	-	22/30	C	5	250	136	5V	4	200	78
30/40	-	-	C	5	224	136	5V	4	180	78
-	30/40	-	C	5	265	136	5V	4	224	78
-	-	30/40	C	6	265	162	5V	5	224	95
37/50	-	-	C	6	224	162	5V	4	200	78
-	37/50	-	C	6	265	162	5V	4	224	78
-	-	37/50	C	7	280	187	5V	5	250	95
45/60	-	-	C	6	265	162	5V	4	224	78
-	45/60	-	C	7	280	187	5V	5	224	95
-	-	45/60	C	7	315	187	5V	6	250	113
55/75	-	-	C	7	265	187	5V	5	224	95
-	55/75	-	C	8	300	213	5V	6	250	113
-	-	55/75	D	5	355	196	5V	6	280	113
75/100	-	-	C	8	315	213	5V	6	250	113
-	75/100	-	D	6	355	233	5V	6	315	113
-	-	75/100	D	6	400	233	5V	6	355	113
-	90/120	-	D	6	400	233	5V	6	355	113
-	-	90/120	D	6	425	233	8V	4	355	124
-	110/150	-	D	7	400	270	8V	4	355	124
-	132/175	110/150	D	7	450	270	8V	4	400	124
-	160/200	132/175	D	9	450	344	8V	4	450	124

3.5 Conveyance with chain or gear

3.5.1

Make sure the loading capacity of shaft and bearings is appropriate for the size and installation position (overhung) of chain and gear. If necessary, please contact us to ensure the shaft and bearings will meet your requirements.

3.5.2
Pay close attention to ensure the parallelism of shafts.

3.5.3
The teeth of couplings should be correctly and precisely matched; the force conveyance centers should lie on the same line.

3.5.4
There should be no skip, jumping, vibration or unusual noises.

ATTENTION!
Do not hammer the conveyance devices such as couplings, belt sheaves, chain wheels, gears etc. onto the shaft. Those shaft fitments should be fitted and removed only by means of suitable devices. Heat shrinking may be a better alternative to avoid damaging bearings and components.



The exposed rotating parts should be covered to prevent accidents.

3.6 Electrical connections
All interconnecting wiring for controls and grounding should be in strict accordance with local requirements such as the USA National Electrical Code and UK IEE wiring regulations. Wiring of motor and control, overload protection and grounding should follow the instructions of connection diagrams attached to the motor.

3.6.1 Power
The rated conditions of operation for the motor are as shown on the nameplate. Within the limits, given below, of voltage and frequency variation from the nameplate values, the motor will continue to operate but with performance characteristics that may differ from those at rated conditions:

±10% of rated voltage
±5% of rated frequency
±10% combined voltage and frequency variation so long as frequency variation is no more than ±5% of rated.

Operating the motor at voltages and frequencies outside of the above limits can result in both unsatisfactory motor performance and damage to or failure of the motor.

3.6.2
The main lead box furnished with the motor has been sized to provide adequate space for the make-up of the connections between the motor lead cables and the incoming power cables.



The bolted joints between the motor lead and the power cables must be made and insulated in a workman-like manner following the best trade practices.

3.6.3
Either fabricated motors or fan cooled cast frame, motors are all provided with grounding pads or bolts.



The motor must be grounded by proper connection to the electrical system ground.

3.6.4

The rotation direction of the motor will be as shown by either a nameplate on the motor or the outline drawing. The required phase rotation of the incoming power for this motor rotation may also be stated. If either is unknown, the correct sequence can be determined in the following manner: While the motor is uncoupled from the load, start the motor and observe the direction of rotation. Allow the motor to achieve full speed before disconnecting it from the power source. Refer to the operation section of these instructions for information concerning initial start-up. If resulting rotation is incorrect, it can be reversed by interchanging any two (2) incoming cables.

3.6.5 Auxiliary devices

Auxiliary devices such as resistance temperature detectors, thermocouples, thermoguards, etc., will generally terminate on terminal blocks located in the auxiliary terminal box on the motor. Other devices may terminate in their own enclosures elsewhere on the motor. Such information can be obtained by referring to the outline drawing. Information regarding terminal designation and the connection of auxiliary devices can be obtained from auxiliary drawings or attached nameplates.

If the motor is provided with internal space heaters, the incoming voltage supplied to them must be exactly as shown by either a nameplate on the motor or the outline drawing for proper heater operation.



Caution must be exercised anytime contact is made with the incoming space heater circuit as space heater voltage is often automatically applied when the motor is shutdown.

4. OPERATION

4.1 Examination before start

4.1.1

When motors are installed in good manner, ensure the wiring is according to the diagram. Also, the following points should be noted:

(a) Make sure all wiring is correct.
(b) Ensure the sizes of cable wires are appropriate and all connections are well made for the currents they will carry.
(c) Ensure all connections are properly insulated for the voltage and temperature they will experience.
(d) Ensure the capacity of fuses, switches, magnetic switches and thermo relays etc. are appropriate and the contactors are in good condition.
(e) Make sure the frame and terminal box are grounded.
(f) Make sure that the starting method is correct.
(g) Make sure switches and starters are set at their right positions.
(h) Motor heaters must be switched off when the motor is running.

4.1.2 Measurement of insulation resistance



During and immediately after measuring, the terminals must not be touched as they may carry residual dangerous voltages. Furthermore, if power cables are connected, make sure that the power supplies are clearly disconnected and there are no moving parts.

(a) For rated voltage below 1000V, measured with a 500VDC megger.
(b) For rated voltage above 1000V, measured with a 1000VDC megger.
(c) In accordance with IEEE 43, clause 9.3, the following formula should be applied:

$$R \geq \left(\frac{\text{Rated voltage (v)}}{1000} + 1 \right) \times 10(M\Omega)$$

(d) On a new winding, where the contaminant causing low insulation resistance is generally moisture, drying the winding through the proper application of heat will normally increase the insulation resistance to an acceptable level. The following are several accepted methods for applying heat to the winding:
   (1) If the motor is equipped with space heaters, they can be energized to heat the winding.
   (2) Direct current (as from a welder) can be passed through the winding. The total current should not exceed approximately 50% of rated full load current. If the motor has only three leads, two must be connected together to form one circuit through the winding. In this case, one phase will carry the fully applied current and each of the others, one-half each. If the motor has six leads (3 mains and 3 neutrals), the three phases should be connected into one series circuit.



Ensure there is adequate guarding so live parts cannot be touched.

   (3) Heated air can either blown directly into the motor or into a temporary enclosure surrounding the motor. The source of heated air should preferably be electrical as opposed to fueled (such as kerosene) where a malfunction of the fuel burner could result in carbon entering the motor.

ATTENTION!
Caution must be exercised, when heating the motor with any source of heat other than self contained space heaters, to raise the winding temperature at a gradual rate to allow any entrapped moisture to vaporize and escape without rupturing the insulation. The entire heating cycle should extend over 15-20 hours.

Insulation resistance measurements can be made while the winding is being heated. However, they must be corrected to 40ºC for evaluation since the actual insulation resistance will decrease with increasing temperature. As an approximation for a new winding, the insulation resistance will approximately halve for each 10ºC increase in insulation temperature above the dew point temperature.

(e) Should the resistance fail to attain the specified value even after drying, careful examination should be undertaken to eliminate all other possible causes, if any.

4.1.3 Power Source

(a) Ensure the capacity of the power source is sufficient.
(b) Ensure the supply voltage and frequency ratings are identical to those on the nameplate.
(c) Voltage variation should be confined to within ±10% of the rated value and the phase to phase voltages should be balanced.

4.1.4 Bearing lubrication

(a) For sleeve bearing motors, the oil reservoir must be filled with oil to the correct level. On self-lubricated bearings, the standstill oil level will be at the center of the oil gauge. The proper oil is a rust and oxidation inhibited, turbine grade oil. Refer to the lubrication nameplate for the recommended viscosity.

(b) Motors, which are supplied with provision for flood lubrication, have an inlet orifice to meter the oil flow to the bearing. Refer to the outline drawing for these values. If the supply pressure does not match that stated on the outline, the orifice size must be adjusted to produce the specified flow rate. The drain adapter (also provided) has a weir plate fixed to the inside of the pipe to permit the establishment of the proper oil level. This weir plate must be located at the bottom of the pipe and must be parallel to the plane of the motor feet. To ensure optimum flow, the drain line should be vented to the atmosphere.

Oil inlet temperature:	Normal below 50ºC
	Alarm 60ºC
	Trip 65ºC

(c) If the motor is in storage for over three (3) months, refilling of some new oil should be undertaken before operation to prevent bearing damage due to dry friction. The oil level should be kept at the center of the oil gauge. If necessary, drain some oil after refilling.

(d) Motors that have been designed with anti-friction bearings for use with an oil mist lubrication system have been packed at the factory with a small amount of grease for short test runs. Continuous running should not be considered unless the oil mist system is installed and operating.

(e) Grease lubricant type

(1) The bearings have been well greased at the factory before delivery. However, regreasing is required if a significant period has elapsed between manufacture and use or in storage

(2) All motors with ZZ bearings will have SHELL Alvania R3 (*Lithium base grease*). All motors with open bearings will have Polyrex EM (polyurea base grease).

4.1.5 Cooling water for the cooler on water-cooled motors

Make sure the quality, volume and inlet temperature of cooling water for the motors are normal before the machine is in operation.

Water: General tower water or industrial water.	
Volume: Please see outline drawing	
Inlet temperature:	Normal below 30ºC
	Alarm 35ºC
	Trip 40ºC

ATTENTION!
Make sure all locks, which fasten the movable parts of the motors during transportation, are dismantled and the shaft can rotate freely.

ATTENTION!
Ensure there is no foreign matter or tools inside the motors before starting motors.

4.1.6
Make sure the transmission system, including belts, screws, bolts, nuts and set pins are in good condition.



The keys fitted to the shaft extensions are held by plastic tape only to prevent them from falling out during transportation or handling. The shaft key shall be removed to avoid flying out, when the motor is operated prior to the couplings etc. being fitted to the shaft extension.

4.1.7
Make sure the items above are examined. Test the motor running with or without load. Record and check according to "Maintenance" at 15-minute intervals during the first three hours of operation. Then regular examinations should take place at longer intervals. If all goes well the motor can be classified as "in good order".

4.2 Starting operation

4.2.1 Starting load
Initially run the motor unloaded prior to coupling to other machines. Unless otherwise specified, a motor usually starts with light load, which is then gradually increased, proportional to the square of the speed and at last reaches 100% load at full load speed.

4.2.2 Starting
Too frequent starts can be harmful to the motors. The following restrictions should be observed:

(a) Motor can be restarted should the initial start fail. Two starts are generally permissible when the motor is cold.
(b) Motor can be started only once when it is at normal running temperature.
(c) Should additional starts be necessary beyond the conditions stated above, the following restrictions should be noted:
    (1) Let the motor cool down for 60 minutes before restarting, fully loaded.
    (2) Let the motor cool down for 30 minutes before restarting, unloaded.
    (3) Two inching starts can be regarded as one normal start.

ATTENTION!
If the motor rotor fails to start turning within one or two seconds, shut off the power supply immediately.
Investigate thoroughly and take corrective action before attempting a restart.

Possible reasons for not starting are:
(1) Too low a voltage at the motor terminals.
(2) The load is too much for the rotor to accelerate.
(3) The load is frozen up mechanically.
(4) All electrical connections have not been made.
(5) Single-phase power has been applied.
(6) Any combination of the above.

4.2.3 Rotating direction

(a) Most TWMC motors are bi-directional. However, when some special types, such as high speed 2-Pole, certain large capacity motors, those with a non-reversing ratchet etc., should rotate in one direction, please ensure the rotation is in conformity with the directional arrow-mark shown on the attached nameplate.

(b) To reverse a bi-directional motor, cut the power and wait until the motor stops. Then interchange any two of the three phases.

4.2.4 Power source, Voltage, Current

(a) Ensure the voltage and frequency of the power source are identical to the ratings shown on the nameplate.

(b) Voltage variation should be confined to within ±10% of the rating and the three phase voltages should be in full balance

(c) Ensure the motor phase currents, when without load, are within ±5% of the average values.

4.2.5

Frequency variation should be confined to within ±5% of the rating. The aggregate variation of voltage and frequency should be confined to within ±10% of the absolute value of the ratings.

Starting time and unusual noises

ATTENTION!
Starting time is longer for the motors with large inertia. However, if starting time is longer than usual or if there is difficulty in starting, or there is abnormal noise, do not run the motor and refer to TWMC Service representative.

4.2.6 Sleeve bearing oil rings (sleeve bearing types only)

As the oil ring is used to carry lubricant to sleeve bearings, frequently check to ensure the oil ring is in motion.

4.2.7 Bearing temperature rise

Following the initial start-up, the bearing temperatures should be closely monitored. The rate of rise in bearing temperature is more indicative of impending trouble than is the actual temperature.

ATTENTION!
If the rate of rise in temperature is excessive or if the motor exhibits excessive vibration or noise, it should be shut down immediately and a thorough investigation made as to the cause before it is operated again.

If the bearing temperature rise and motor operation appear to be normal, operation should continue until the bearing temperature stabilizes.

Recommended limits on bearing temperature are as follows:

Sleeve Bearings	**Total measured temperature**
● By permanently installed detector	90ºC
● By temporary detector on top of the bearing sleeve near the oil ring	85ºC

Anti-Friction Bearings	Total measured temperature
● By permanently installed detector	100ºC
● By temporary detector measuring the outside of the bearing housing	95ºC

ATTENTION! (For sleeve bearing)

(1) It must be noted that when operating flood lubricated sleeve bearings without outside lubrication supplied, the bearing temperature must not be allowed to exceed 85ºC total temperature

(2) Under normal condition, for the self-lube bearing, the rate of temperature rise should be from 11 to 14ºC for the first ten (10) minutes after starting up and approximately 22ºC at thirty (30) minutes. The rate of bearing temperature rise is a function of the natural ventilation and operating conditions.

(3) When the rate of bearing temperature rise is less than 1ºC per half-hour, the bearing temperature is considered to be stabilized.

(4) If the total bearing temperature exceeds 95ºC, the motor should be shut down immediately.

Noise and Vibration

ATTENTION!
Any abnormal noise or vibration should be immediately investigated and corrected. Increased vibration can be indicative of a change in balance due to mechanical failure of a rotor part, a stator winding problem or a change in motor alignment.

5. MAINTENANCE

5.1 Major points in regular inspections and maintenance.



For safety, maintenance and repairs must only be carried out by properly trained personnel.



Some testing, such as insulation resistance, usually requires the motor to be stopped and isolated from power supplie(s).

Routine inspection and maintenance are usually performed by looking, listening, smelling and simple meters.



High temperature may arise under operating conditions on the motor surfaces, so that touching should be prevented or avoided. Keep away from moving and live parts. Unless deemed necessary, do not remove guards whilst assessing the motor.

Timely replacement of worn parts can assure longevity and prevent breakdown.

Routine inspection and regular inspection and maintenance are important in preventing breakdown and lengthening service life.

Owing to the varied time and circumstances, motors are used, it is difficult to set the items and periods for regular inspection and maintenance. However, as a guide it is recommended to be performed periodically according to factory maintenance program. Generally, the inspection scope determined by the following factors:

(a) Ambient temperature.
(b) Starting and stopping frequency.
(c) Troublesome parts usually affecting motor functions.
(d) Easily abraded parts.
(e) The important position of motor in the operational system of a factory should be duly recognized. Therefore, its health and wellbeing should be fully protected especially when it is operating in severe conditions.

5.2 Motor windings:

(a) Measurement of insulation resistance and standards to determine quality of insulation resistance, please refer to measures stated in 3.1.2 “Measurement of insulation resistance”.
(b) Inspection of coil-ends:
  (1) Grease and dust accumulated on coils may cause insulation deterioration and poor cooling effect.
  (2) Moisture must not accumulate. Keep coils warm when motor is not in use if moisture can be seen.
  (3) Discoloring. This is mainly caused by overheating.
(c) Ensure no untoward change of wedges from original position.
(d) Ensure the binding at the coil end is in its normal position.

5.3 Clean the interior of the motor:

(a) After a motor is in operation for some time, accumulation of dust, carbon powder and grease etc., on the inside is unavoidable, and may cause damage. Regular cleaning and examination is necessary to assure top performance.
(b) Points to note during cleaning:
  (1) If using compressed air or blower:
    (a) Compressed air should be free of moisture.
    (b) Maintain air pressure at 4 kg/cm², since high pressure can cause damage to coils.
  (2) Vacuum
    Vacuum cleaning can be used, both before and after other methods of cleaning, to remove loose dirt and debris. It is a very effective way to remove loose surface contamination from the winding without scattering. Vacuum cleaning tools should be non-metallic to avoid any damage to thee winding insulation
  (3) Wiping
    Surface contamination on the winding can be removed by wiping using a soft, lint-free wiping material. If the contamination is oily, the wiping material can be moistened (not dripping wet) with a safety type petroleum solvent. In hazardous locations, a solvent such as inhibited methyl chloroform may be used, but must be used sparingly and immediately removed. While this solvent is non-flammable under ordinary conditions, it is toxic and proper health and safety precautions should be followed while using it.

ATTENTION!
Solvents of nay type should never be used on windings provided with abrasion protection. Abrasion protection is a gray, rubber-like coating applied to the winding end-turns.



Adequate ventilation must always be provided in any area where solvents are being used to avoid the danger of fire, explosion or health hazards. In confined areas (such as pits) each operator should be provided with an airline respirator, a hose mask or a self-contained breathing apparatus. Operators should wear goggles, aprons and suitable gloves. Solvents and their vapors should never be exposed to open flames or sparks and should always be stored in approved safety containers.

(4) Keep core ducts completely clean. The difference in temperature rise could be around 10°C before and after cleaning

5.4 Clean the exterior of the motor:

(a) On open ventilated motors, screens and louvers over the inlet air openings should not be allowed to accumulate any build-up of dirt, lint, etc. that could restrict free air movement.

ATTENTION!
Screens and louvers should never be cleaned or disturbed while the motor is in operation because any dislodged dirt or debris can be drawn directly into the motor.

(b) If the motor is equipped with air filters, they should be replaced (disposable type) or cleaned and reconditioned (permanent type) at a frequency that is dictated by conditions. It is better to replace or recondition filters too often than not often enough.

(c) Totally enclosed air to air cooled and totally enclosed fan cooled motors require special cleaning considerations. The external fan must be cleaned thoroughly since any dirt build-up not removed can lead to unbalance and vibration. All of the tubes of the air-to-air heat exchanger should be cleaned using a suitable tube brush having synthetic fiber bristles (not wire of any type).

5.5 Maintenance of anti-friction bearings

5.5.1 Frequency of re-lubrication:

The life of grease varies greatly as a result of types of model, revolution speed, temperature, operational conditions etc. It is, therefore, impossible to be precise about replenishment intervals. However, for normal direct coupling transmission, the periods shown as Table 1 may be used as a guide.

Remarks:

(a) The periods shown in Table 1 should be halved where bearings are used for belt drive and/or in dirty or high ambient temperature or high humidity environments.

(b) Please refer to the lubrication nameplate, if attached to the motor.

(c) For bearing numbers outside the range of Table 1, please contact TWMC

(d) If the periods referred to in Table 1 for drive-end bearing and opposite drive-end are different, for the convenience of maintenance operation, please take the shorter one the required grease replenishment period of these bearings.

5.5.1 Kinds of grease:

All motors with ZZ bearings will have SHELL Alvania R3 (lithium base grease). All motors with open bearings will have Polyrex EM (polyurea base grease).
Certain T-frame models will utilize special grease and will be noted on the lubrication nameplate. Please us identical grease or its equivalents when maintaining lubrication schedule.

ATTENTION!
Do not mix different kinds of grease.
Mixing grease with different type of thickeners may destroy its composition and physical properties. Even if the thickeners are of the same type, possible differences in the additive may cause detrimental effects.

5.5.2 Grease quantity

The amount of grease per replenishment depends on the type, size and construction of the bearings. The maximum amount of one replenishment for each bearing is shown in Table 2.

5.5.3 Re-greasing

If re-lubrication is to be performed when the motor is running, stay clear of rotating parts.

It is advisable to re-grease when the motor is running to allow the new grease to be evenly distributed inside the bearing.
Before re-greasing, the inlet fitting should be thoroughly cleaned to prevent any accumulated dirt from being carried into the bearing with the new grease. The outlet of grease drainage should be opened to allow the proper venting of old grease.

Use a grease gun to pump grease through grease nipple into the bearings. After re-greasing, operate the motor for 10-30 minutes to allow any excess grease to vent out.

TABLE 1.

Bearing Number		600 RPM	720 RPM	750 RPM	900 RPM	1000 RPM	1200 RPM	1500 RPM	1800 RPM	3000 RPM	3600 RPM
62XX 63XX 72XX 73XX	6210										
	12									2000 Hrs.	
	13										
	14									1000 Hrs.	
	15										
	16									720 Hrs.	
	17							2000 Hrs.			
	18			3000 Hrs.							
	20										
	22										
	24							1500 Hrs.			
	26										
	28					2000 Hrs.		1000 Hrs.			
	30										
	32							500 Hrs.			
	34					1500 Hrs.					
	36										
	38			2000 Hrs.		1000 Hrs.					

Bearing Number		600 RPM	720 RPM	750 RPM	900 RPM	1000 RPM	1200 RPM	1500 RPM	1800 RPM
NU2XX NU3XX	NU214								
	15							2000 Hrs.	
	16								
	17								
	18			3000 Hrs.				1500 Hrs.	
	20								
	22							1000 Hrs.	
	24								
	26					2000 Hrs.			
	28							500 Hrs.	
	30								
	32								
	34			2000 Hrs.		1000 Hrs.			
	36								
	38	2000 Hrs.							
	40								
	44			1000 Hrs.					
	48	1000 Hrs.							

Bearing Number		600 RPM	720 RPM	750 RPM	900 RPM	1000 RPM	1200 RPM	1500 RPM	1800 RPM
222XX 223XX	22220							300 Hrs.	
	22								
	24		1000 Hrs.			500 Hrs.			
	26								
	28								
	30					300 Hrs.			
	32			500 Hrs.					
	34								
	36								
	38	500 Hrs.							
	40			300 Hrs.					
	44								
	48	300 Hrs.							

TABLE 2.

Bearing No.		Amount of replenishment
62XX 72XX NU2XX 2222XX	6210	30 g
	6212	40
	6213	50
	6214	50
	6215	60
	6216	60
	6217	80
	6218	80
	6220	100
	6222	120
	6224	120
	6226	140
	6228	160
	6230	180
	6232	200
	6234	250
	6236	300
	6238	350
	6240	400
	6244	450
	6248	500

Bearing No.		Amount of replenishment
63XX 73XX NU223XX 223XX	6310	40 g
	6312	60
	6313	80
	6314	80
	6315	100
	6316	100
	6317	120
	6318	120
	6320	160
	6322	220
	6324	270
	6326	300
	6328	400
	6330	450
	6332	500
	6334	600
	6336	700
	6338	800
	6340	900
	6344	900
	6348	900

*Fill new grease until it overflows and the old grease is entirely replaced.

5.5.4 Oil re-lubrication (For oil lubrication types only)

Maintain proper lubrication by checking the oil level periodically and adding oil when necessary. Because of the initial clearing action of the bearing and the expansion of the oil as it comes up to operating temperature, the oil level will be higher after the motor has been in operation for a while than it is with the motor at standstill.

Overfilling should be avoided not only because of the possibility that expansion may force the oil over the oil sleeve and on to the rotor, but also because too high an operating oil level prevents the bearing form clearing itself of excess oil. The resultant churning can cause extra loss, high temperatures, and oxidized oil. If, during operation, the oil level goes above the maximum shown on the sight gauge, drain enough oil to bring the level back within the recommended operating range. **Do not permit the operating level to fall below the minimum shown on the gauge.**

ATTENTION!
Should it ever become necessary to add excessive amount of make-up oil, investigate immediately for oil leaks.

Change the oil at regular intervals. The time between oil changes depends upon the severity of operating conditions and, hence, must be determined by the motor user. Two or three changes a year is typical, but special conditions, such as high ambient temperature, may require more frequent changes. Avoid operating the motor with oxidized oil.

Use only good grade, oxidation-corrosion-inhibited turbine oils produced by reputable oil companies.

The viscosity of the oil to be used depends upon the type and size of the bearings, its load and speed, the ambient temperature, and the amount and temperature of the cooling water (if used)). The lubrication nameplate or instructions with each motor specifies the viscosity range of oil suitable for average conditions. The usual oil viscosity range of oil suitable for average conditions. The usual oil viscosity recommendations are summarized in Table 3. Operation in ambient temperatures that are near or below freezing may require preheating the oil or the use of special oil. Whenever the motor is disassembled for general cleaning and reconditioning, the bearing housing may be washed out with a suitable cleaning solvent. Be sure that the oil-metering hole is clear, and then dry the housing thoroughly before re-assembly, and ensure all traces of cleaning solvent have been removed.

TABLE 3 Oil Viscosity**

Bearing function and location	Bearing Type	Oil Viscosity - SSU	
		@ 100°F	@ 200°F
Thrust Bearing	72XX, 73XX Angular contact ball And/or (62XX, 63XX)	150	45
	Spherical roller	300	53
	Plate (Kingsbury Type)	300	53

**Remark: When a lubrication nameplate attached to the motor, use lubrication oil it stipulates.

5.5.5 Cleaning and installation of bearings

(a) Apply the proper amount of grease to the disassembled parts of the bearing after they have been thoroughly cleaned with high quality cleaning oil. Then protect them from contamination before and during assembly.

(b) Bearing installation

ATTENTION!
Before installing the bearings, make sure that the shaft mounted parts inside the bearings are in place before installation.

Since the bearing is a high precision component, it is important to avoid ingression of dust and foreign matter, and hammering during cleaning and installation. Use extreme care and insure clean conditions during installation and assembly.

ATTENTION!
The best way for bearing installation is heat shrinking. Knocking and hammering during installation should be avoided absolutely.

The bearing should be heated in a bath of clean oil at a temperature of approximately 80°C. After warming, slide the bearings in place quickly and nimbly so that it has not shrunk before being fully in position.
Grease the bearing after the temperature returns to normal, and then reassemble the motor.

5.6 Maintenance of sleeve bearings

5.6.1 Daily inspections

(a) Ensure the volume and quality of lubrication oil are in compliance with specifications.

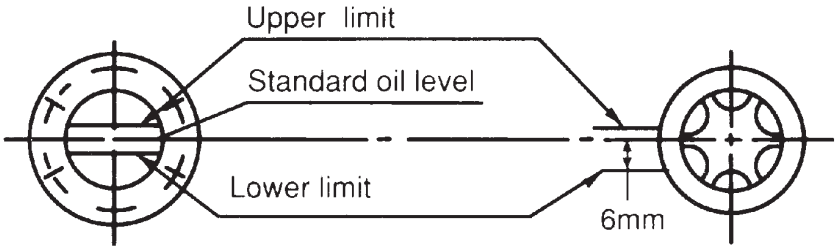

Fig. 12

(b) Ensure there is motion of the oil ring and it is not clamped.

(c) The indicator of the shaft endplay should be restricted within the specified range of the red groove of the shaft or the ±3mm (.118 in.) range of the drive-end shaft shoulder, or the bearing may be damaged.

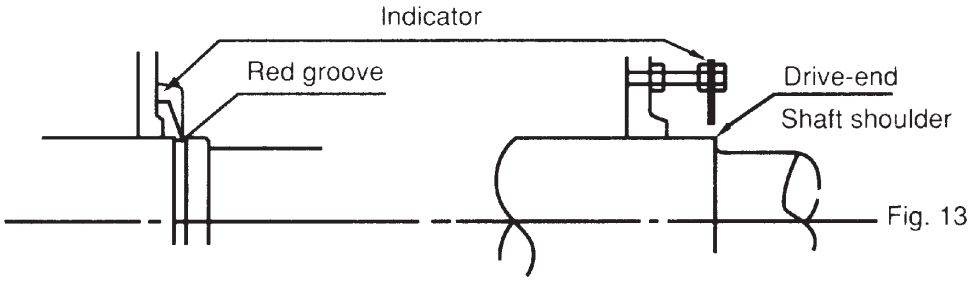

Fig. 13

5.6.2 Regular examination

(a) Periodical change of oil

The oil reservoirs of self (not flood) lubricated bearings should be drained and refilled about every six (6) months. More frequent changes may be needed on high speed (3600 rpm) motors or if severe oil discoloration or contamination occurs. In conditions where contamination does occur, it may be advisable to flush the reservoir with kerosene to remove any sediment before new oil is added. Proper care must be taken to thoroughly drain the reservoir of the flushing material before refilling with the new oil.

Refill the reservoir to the center of oil sight glass with a rust and oxidation inhibited turbine grade oil. Refer to the outline and lubrication nameplate for the correct viscosity.

(b) Quantity of lubrication oil

Please refer to the lubrication nameplate for oil quantity.

(c) Oil viscosity

(d)

ISO	Equivalents	Viscosity (SUS/100°F)
VG32	Esso Teresso 32	150
VG46	Esso Teresso 46	200
VG68	Esso Teresso 68	300

5.6.3 Disassembly

Prior to disassembling, ensure the power supplies are disconnected and there are no moving parts.

The bearing sleeve is of the spherically seated, self-aligning type. The opposite drive end bearing is normally insulated for larger motors (or when specified). On some motors, the insulation is bonded to the spherical seat of the bearing housing.

ATTENTION!
Extreme care must be exercised in removing the bearing sleeve from the insulated support to avoid damaging this insulation.

The following is the recommended procedure for removing the bearing sleeve:

(a) Remove the oil drain plug in the housing bottom and drain the oil sump.

(b) Remove all instrumentation sensors that are in contact with the bearing sleeve. These would include resistance temperature detectors, thermocouples, thermometers, etc..

(c) Remove the socket head bolts holding the bearing cap and the inner air seal. The end cover plate must also be removed if the non-drive end bearing is being disassembled. Remove the bearing cap and top half of the inner air seal. Place them on a clean, dry surface to avoid damage to the parting surfaces.

(d) Remove the top half of the bearing sleeve using suitable eyebolts in the tapped holes provided. Lift the bearing top straight up and avoid any contact with the shoulders of the shaft journals that might damage the thrust faces of the bearing. Place on a clean, dry surface taking care to prevent damage to either the parting surfaces or the locating pins that are captive n the top bearing half.

(e) Remove the screws at the partings in the oil ring and dismantle the ring by gently tapping the dowel pin ends with a soft face mallet. Remove the ring halves and immediately reassemble them to avoid any mix up I parts or damage to the surfaces at the partings.

(f) Pull up on the garter spring surrounding the floating labyrinth seal and carefully slip out the top half. Rotate the garter spring until the lock is visible. Twist counter-clockwise to disengage the lock, remove the garter spring then rotate the lower half of the seal out of the groove in the bearing housing. Note the condition of these floating labyrinth seals. If they are cracked or chipped, they must be replaced. Do not attempt to reuse a damaged seal.

(g) To remove the bottom bearing half, the shaft must be raised a slight amount to relieve pressure on the bearing. On the drive end, this can be done by jacking or lifting on the shaft extension. Protect the shaft. On the non-drive, jacing or lifting can be done using bolts threaded into the tapped holes provided in the shaft end.

(h) Roll the bottom bearing half to the top of the shaft journal and then lift it using suitable eyebolts threaded into the holes provided. Again avoid any contact with the shaft shoulders that could damage the bearing thrust faces. Place the lower bearing half on a clean, dry surface to protect the parting surfaces.

Use extreme care when rolling out the lower bearing half. Keep the hands and fingers well clear of any position where they might be caught by the bearing half if it were accidentally released and rotated back to its bottom position. Serious personal injury could result.

(i) Protect the shaft journal by wrapping it with clean, heavy paper or cardboard.

5.6.4 Re-assembly

Bearing re-assembly is basically a reverse of the disassembly procedures outlined above, with the following suggestions:

(a) The interior of the bearing housing should be cleaned and then flushed with clean oil or kerosene.

(b) The bearing halves and the shaft journal should be wiped clean using lint-free cloth soaked with clean oil.

(c) All parts should be carefully inspected for nicks, scratches, etc., in any contract surfaces. Such imperfections should be removed by an appropriate method such as stoning, scraping, filling, etc., followed by thorough cleaning.

(d) Before installing the floating labyrinth seal halves, observe their condition. Do not attempt to use a cracked or chipped seal. The bottom half seal has a set of drilled holes in its side face. These must be place at the bottom toward the inside of the bearing so that accumulating oil may drain back into the housing.

(e) Put a bead of Curil-T around the seal half O.D.'s on both sides adjacent to the garter spring groove. This will prevent oil by-passing the seal around its outside.

(f) Place the bottom seal half on top of the shaft and roll it into position. Install the top half and insert the garter spring pulling up on both ends to permit engaging the lock. Run a bead of Curil-T around the O.D's on both sides adjacent to the garter spring groove on this half also.

(g) Carefully reassemble the two oil ring halves. Inspect the dowel pins for burrs and straightness and make any corrections required. Do not force the ring halves together. Excessive force may alter the roundness or flatness of the oil ring which can change its oil delivery performance.

(h) Some of the pipe plugs in the housing are metric thread type. These are identified as those, which have a copper, lead, or similar material washer. If these plugs are removed,

be careful not to lose the washers. Before re-assembly, inspect the washers and replace them as required.

(i) Before installing the bearing cap, observe the position of the floating labyrinth seal. The "tab" must be on top to engage the pocket. Failure to position the seal properly will result in damage when the cap is assembled.

ATTENTION!
(1) Curil-T is the only approved compound for use in the assembly of the bearings on this motor. Other products may harden and impede the operation.
(2) During the re-assembly of the bearing parts, a thin layer of Curil-T should be applied to all gaskets and machined interface surfaces. This suggestion does not apply to the machined surfaces of the bearing liner halves.
(3) When seating the bearing shell, apply a thin layer of lube oil at the spherical surface of the liner. Slowly roll the lower bearing liner into the bearing housing making sure that the splinted surface of the liner and the housing are flush. Gradually lower the shaft onto the bearing. The weight of he shaft will help rotate the bearing liner so that the babbitt surface of the liner will match the slope of the journal. Sometimes it is required to use a rubber mallet to tap lightly on the bearing housing while slowly rolling the shaft to help this seating operation.

5.7 Maintenance of slip ring (For Wound Rotor Motors only)



Ensure motor is disconnected from power supplies and there are no accessible moving parts before maintenance operation.

5.7.1 Adjustment of carbon brush

(a) Brush pressure for normal operation:
- Electro-graphite brush…..0.2~0.25 kg/cm²

When frequent vibrations are evident or the brush is small (area below 0.5 cm²), the pressure should be greater than as shown.

(b) Adjustment of brush pressure:
The brush pressure should be adjusted to keep normal operation as it wears.
- The brush pressure may be reduced after use, so it is necessary to re-adjust. For adjustment, please turn adjusting screw, pressure adjusting pin or pressure adjusting plate as shown in Fig. 14 to obtain the correct tension (=0.23 x brush cross sectional area in cm²) ±10% kg.

(c) Brush pressure need not be adjusted if constant force spring is used as shown in Fig. 15 and Fig. 16.

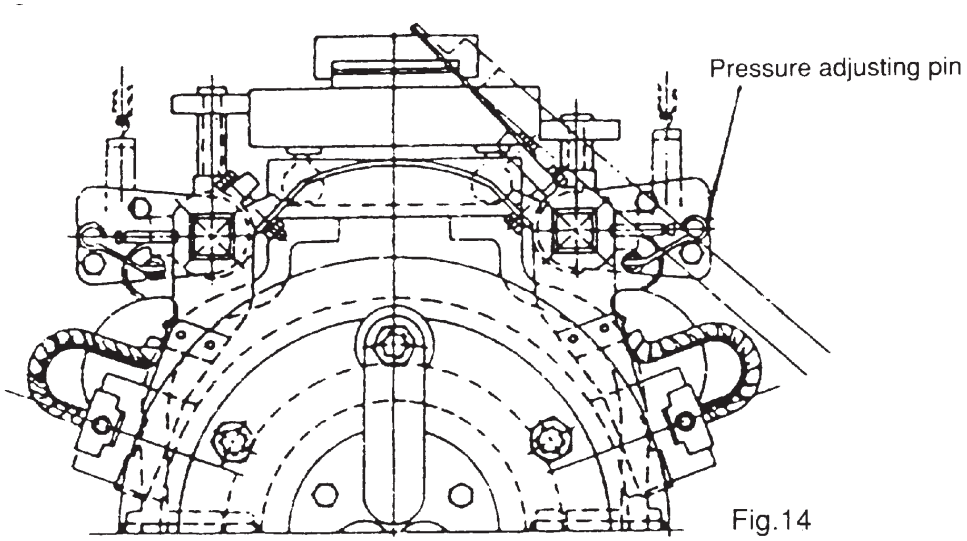

Fig.14

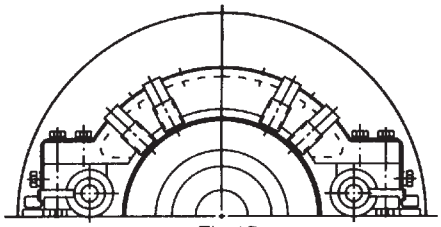
Fig.15

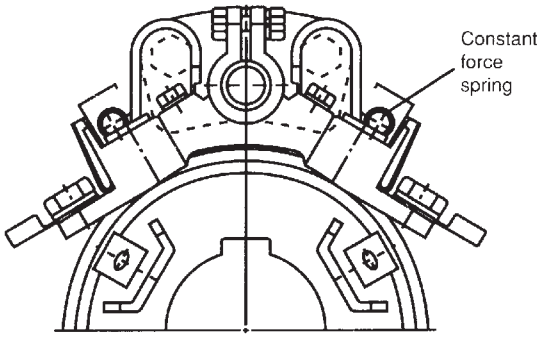

Fig.16

5.7.2 Brush replacement

The carbon brush is a part of the equipment which is easily worn away, replace it after it is worn to ½ ~ ¾ of original size.

(a) Brush material

The brush material is important to the performance of the motor. Only the most appropriate materials are chosen by TWMC, and are listed on the nameplate of the motor. It is important to know this when you replace the brush, so a recommended type is used.

(b) Dimensions

Brush, holder and gap between them, please refer to CNS 2322 C4051 or JIS C2802.

ATTENTION!
The gap between a brush and it holder is important for good performance and safety of the motor.

(c) Adjustment of new brushes (Shown in Fig. 17)

(1) Polish the new brush with a file until is assumes the appropriate contour of the slip ring which it touches.

(2) Place sand-paper (JIS R6252 No. 40…50) on the slip ring with the abrasive face of the paper against the brush to induce a closer contact by rubbing against each other.
(3) Repeat item 2 with fine sand –paper (JIS R6252 No. 100 to 200) until the contact surface between brush and slip ring exceeds 80%.
(4) Finally, clean the contaminated slip ring and brush with clean cloth or compressed air.

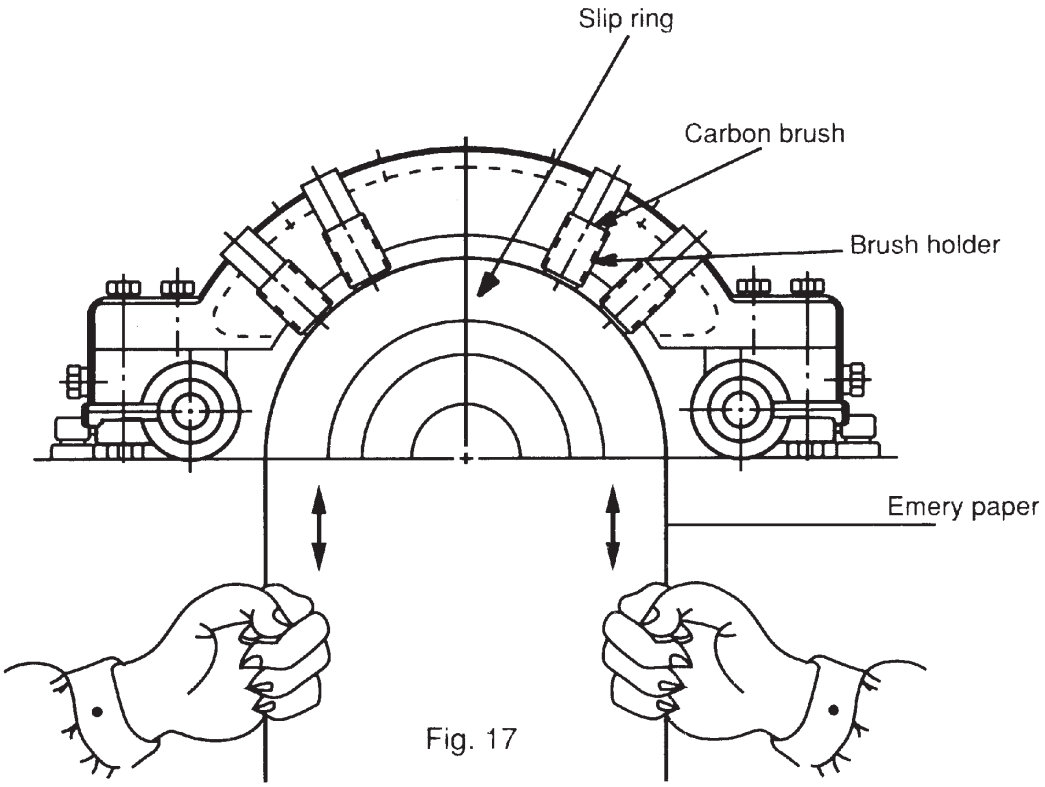

Fig. 17

5.8 Maintenance of non-reverse ratchet mechanism (For Vertical high Thrust Motor only)

5.8.1

In the pump piping system, a check valve and a stop valve should be installed in the discharge line. The check valve, placed between the pump and the stop valve, is to protect the pump from reverse flow and excessive backpressure. The stop valve is used in priming, starting and when shutting down the pump. It is advisable to close the stop valve before stopping the pump. This is especially important when the pump is operated against a high static head.

TWMC vertical high thrust motors are equipped with non-reverse ratchet (N.R.R.) mechanism only when requested by the pump manufacturer. Typical construction of the N.R.R. mechanism is shown as Fig 18 below.

The N.R.R. mechanism keeps the pump and motor from rotating in the reverse direction. Thus prevents damage from over-speeding and damage to water-lubricated pump shaft bearings

when, on shutdown, the falling water column tends to drive the pump in the reverse direction. In normal operation, the ratchet pins are lifted by the ratchet teeth and are held clear by centrifugal force and friction as the motor comes up to speed. When power is removed, the speed decreases and the pins fall. At the instant of reversal, a pin will catch in a ratchet tooth and prevent backward rotation.

5.8.2

The service life of ratchet pins depends not only on the reverse shock load between the pin and ratchet tooth when pump stopped but also the frequency of pump starting and stopping while in service. Provided that the pins are deformed due to this reverse shock load, then the up and down motion of the ratchet pins could be sluggish or jammed and that unusual noises shall arise.

The recommended replacement period for these ratchet pins is every three (3) years. If the reverse shock load is greater than 30% of motor rated torque or the starting frequency is more than twice per day, then the replacement period should be halved.

ATTENTION!
The check valve and stop valve in the discharge line should be regularly inspected and maintained to assure the normal function of these valves. This is important to protect the pump and motor from damage and increase the service life of the N.R.R. mechanism.

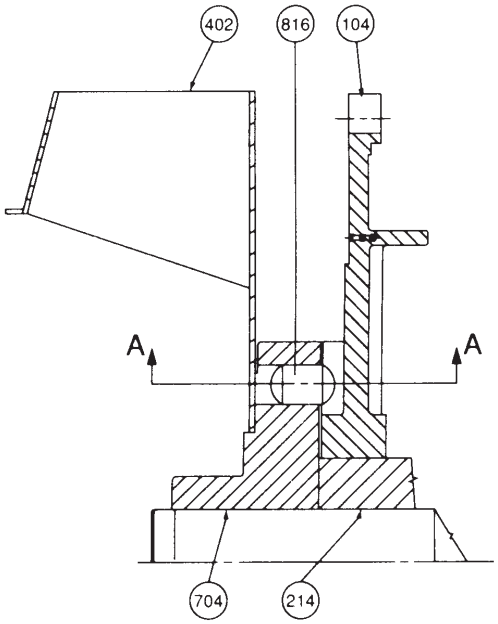

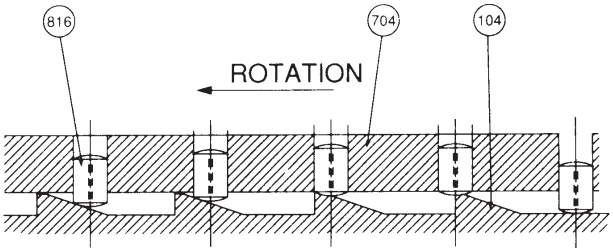

SECTION A-A

ITEM	NAME
104	RATCHET
214	BEARING SEAT
402	EXTERNAL FAN
704	RATCHET PIN CARRIER
816	RATCHET PIN

Fig. 18

6. FAULT FINDING AND RECOGNITION

Kinds of Breakdown	Symptoms	Possible Causes	Remedies
Fail to start without load	Motionless and soundless	Power-off	Consult power company
		Switch-off	Switch-on
		No fuse	Install fuse
		Broken wiring	Check wiring and repair
		Broken lead	Check wiring and repair
		Broken windings	Check windings and repair
	Fuse blowing. (Automatic switch trips off, slow start with electromagnetic noise)	Short circuit of circuit switches	Check circuit switches and replace
		Incorrect wiring	Check wiring according to nameplate
		Poor contact at terminal	Lock tightly
		Windings grounded	Factory repair
		Broken windings	Factory repair
		Poor contact of circuit switches	Check and repair
		Broken wiring	Check and repair
		Poor contact of starting switches	Check and repair
		Short circuit of starting switches	Check and repair
		Incorrect connections of starting switches	Connect according to nameplate
Loading after start	Fuse blowing. Fail to restart due to trip-off of automatic switch	Insufficient capacity of fuse	Replace fuse if wiring permits
		Overload	Lighten load
		High load at low voltage	Check circuit capacity and reduce load
	Overheating motor	Overload or intermittent overload	Lighten load
		Under-voltage	Check circuit capacity and power source
		Over-voltage	Check power source
		Ventilation duct clogged	Remove the foreign matter in the duct
		Ambient temperature exceeds 40°C	Correct insulation class to B or F, or lower ambient temperature
		Friction between rotor and stator	Factory repair
		Fuse blown (Single-phase rotating)	Install the specified fuse
		Poor contact of circuit switches	Check and repair
		Poor contact of circuit starting switches	Check and repair
		Unbalance three-phase voltage	Check circuit or consult power company

Kinds of Breakdown	Symptoms	Possible Causes	Remedies
Loading after start	Speed falls sharply	Voltage drop	Check circuit and powers source
		Sudden overload	Check machine
		Single-phase rotating	Check circuit and repair
	Switch overheat	Insufficient capacity of switch	Replace switch
		High load	Lighten load
	Bearing over-heating	High belt tension	Adjust belt tension
		Slack belt tension	Adjust belt tension
		Misalignment between motor and machine shafts	Re-align
		Over speed of bearing outer-ring	Adjust bracket
		High bearing noise	Replace the damaged bearing
Noise	Electromagnetic noise induced by electricity	Occurrence from its first operation	May be normal
		Sudden sharp noise and smoking	Short circuit of windings should be repaired at the factory
	Bearing noise	Noise of low shishi or Thru-Thru	May be normal
		Kala-Kala as a result of poor lubrication	Grease
		Kulo-Kulo as a result of poor lubrication	Clean bearing and grease
		Sa-Sa or larger noise	Replace the damaged bearing
	Mechanical noise caused by machinery	Loose belt sheave	Adjust key and lock the screw
		Loose coupling or skip	Adjust the position of couplings, lock key and screw
		Loose screw on fan cover	Lock fan cover screw tightly
		Fan rubbing	Adjust fan position
		Rubbing as a result of ingression of foreign matter	Clean motor interior and ventilation ducts
		Wind noise	Noise induced by air flowing through ventilation ducts
		Induced by conveyance machine	Repair machine
Vibration	Electromagnetic vibration	Short circuit of winding	Factory repair
		Open circuit of rotor	Factory repair
	Mechanical vibration	Unbalanced rotor	Factory repair
		Unbalanced fan	Factory repair
		Broken fan blade	Replace fan
		Unsymmetric centers between belt sheaves	Align central points
		Central points of couplings do not lie on the same level	Adjust the central points of couplings to the same level
		Improper mounting installation	Lock the mounting screws
		Motor mounting bed is not strong enough	Reinforce mounting bed

Remarks:

(1) Circuit switches: These include knife switches, electromagnetic switches, fuse and other connection switches etc.

(2) Starting switches: These include Delta-Star starters, compensate starters, reactance starters, resistor starters, starting controller's etc.

MOYNO

Always the Right Solution™

SERVICE MANUAL
MOYNO® 500 PUMPS
300 SERIES MOTORIZED
331, 332, 333, AND 344 MODELS

DESIGN FEATURES

Housing:	Cast iron/316 SS
Pump Rotor:	Chrome plated AISI 416 stainless steel/Chrome plated 316 stainless steel
Pump Stator:	NBR (Nitrile)
Seal:	Mechanical (carbon/ceramic)
Motor Shaft:	AISI 416 stainless steel/ANSI 316 stainless steel
Motor:	1/2 HP, 60 Hertz, 1725 rpm, totally enclosed, fan cooled (TEFC) C-Faced, 1 phase 115/230V or 3 phase 230/460V (other motor options available; consult sales representative)

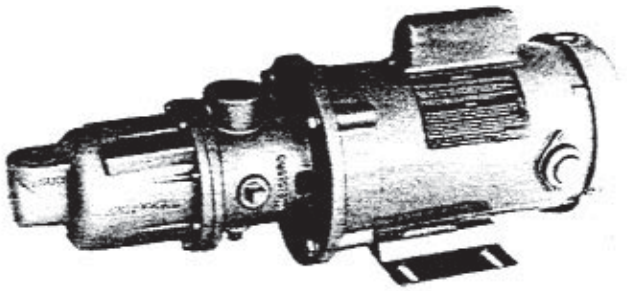

Note: Alternate elastomers available. Refer to Repair/Conversion kit numbers pages 3 and 4.

INSTALLATION

Mounting Position. Pump may be mounted in any position. When mounting vertically, it is necessary to keep bearings above seals to prevent possible seal leakage into bearings.

Pre-Wetting. Prior to connecting pump, wet pump elements and mechanical seal by adding fluid to be pumped into suction and discharge ports. Turn pump over several times in a clockwise direction to work fluid into pump elements.

Piping. Piping to pump should be self-supporting to avoid excessive strain on pump housings. See Table 1 for suction and discharge port sizes of each pump model. Use pipe "dope" or tape to facilitate disassembly and to provide seal on pipe connections.

Electrical. Follow the wiring diagram on the motor nameplate or inside the terminal box for the proper connections. The wiring should be direct and conform to local electrical codes. Check power connections for proper voltage. Voltage variations must not exceed ±10% of nameplate voltage. Motor is provided with internal automatic overload protection.

To prevent damage to pump, pump rotation must be clockwise when facing pump from motor end.

OPERATION

Self-Priming. With wetted pumping elements, the pump is capable of 25 feet of suction lift with pipe size equal to port size. Be sure suction lines are air tight or pump will not self prime. Self-priming capabilities will vary due to fluid viscosity.

DO NOT RUN DRY. Unit depends on liquid pumped for lubrication. For proper lubrication, flow rate should be at least 10% of rated capacity.

Pressure and Temperature Limits. See Table 1 for maximum discharge pressure of each model. Unit is suitable for service at temperatures shown in Table 2.

Storage. Always drain pump for extended storage periods by removing bottom drain plug in pump body.

Caution: Suction pressure should never be greater than discharge pressure.

Table 1. Pump Data

Pump Model	Suction Port (NPT)	Discharge Port (NPT)	Voltage Rating (VAC)	Discharge Pressure (psig)
331	3/4	3/4	See Motor Name Plate For Voltage Ratings	150
332	3/4	3/4	See Motor Name Plate For Voltage Ratings	100
333	3/4	3/4	See Motor Name Plate For Voltage Ratings	50
344	3/4	3/4	See Motor Name Plate For Voltage Ratings	†30

†With 3/4 HP motor, pressure is 40 psig.

Table 2. Temperature Limits

Elastomer	Temperature Limits
*NBR	10°-160°F
*EPDM	10°-210°F
*FPM	10°-240°F

*NBR = Nitrile
EPDM = Ethylene-Propylene-Diene Terpolymer
FPM = Fluoroelastomer

TROUBLESHOOTING

WARNING: Before making adjustments, disconnect power source and thoroughly bleed pressure from system prior to disassembly. Failure to do so could lead to electric shock or serious bodily harm.

Failure To Pump.

1. Motor will not start: Check power supply. Voltage must be ± 10% of nameplate rating when motor is in locked rotor condition. Check for faulty capacitor on 1 phase Models.
2. Motor runs and thermally kicks out: Check for excessive discharge pressure. Check for defective centrifugal switch on 1 phase Models. Increase ventilation to motor. Do not use less than #14 wire size.
3. Stator torn; possible excessive pressure: Replace stator, check pressure at discharge port.
4. Flexible joint broken; possible excessive pressure:

   Replace joint, check pressure at discharge port.
5. Wrong rotation (3 phase only): Rotation must be clockwise when facing pump from motor end. Reverse the connections of any two line leads to the motor.
6. Excessive suction lift or vacuum.

Pump Overloads.

1. Excessive discharge pressure: Check pressure at discharge port for maximum ratings given in Table 1.
2. Fluid viscosity too high: Limit fluid viscosity to 100 CP or 500 SSU.

Noisy Operation.

1. Excessive suction lift or vacuum: Maximum suction lift is 25 feet for water.
2. Suction line too small: Check pipe size. Be sure lines are free from obstructions.
3. Pump Cavitates: Pump speed is 1725 rpm. Viscosity of fluid should not exceed 100 CP or 500 SSU.
4. Flexible joint worn: Replace joint. Check pressure at discharge port.
5. Insufficient mounting: Mount to be secure to a firm base. Vibration induced noise can be reduced by using mount pads and short sections of hose on suction and discharge ports.

Seal Leakage.

1. Leakage at startup: If leakage is slight, allow pump to run several hours to let faces run in.
2. Persistent seal leakage: Faces may be cracked from freezing or thermal shock. Replace seal.

Pump Will Not Prime.

1. Air leak on suction side: Check pipe connections.

PUMP DISASSEMBLY

WARNING: Before disassembling pump, disconnect power source and thoroughly bleed pressure from system. Failure to do so could result in electric shock or serious bodily harm.

1. Remove suction and discharge piping. Drain pump body by removing drain plug (261B).
2. Remove screws (112) holding suction housing (2) to discharge housing (1). Remove suction housing (2) and stator (21).
3. Remove rotor (22) from flexible joint (24) by turning counterclockwise (RH thread). On pinned, 3 phase models, remove rotor pin (45) with suitable punch.
4. Flexible joint (24) can be removed from motor shaft by using a 3/16 allen wrench in end of joint and turning counterclockwise. On 3 phase motors, remove motor pin (46) with suitable punch, then remove joint:
5. Slide mechanical seal (69) off motor shaft.
6. Remove discharge housing (1) from adaptor flange (12) by removing screws (1 12B).
7. Carefully pry seal seat out of discharge housing (1). If any parts of mechanical seal are worn or broken, the complete seal assembly should be replaced. Seal components are matched parts and are not interchangeable.
8. Remove adapter flange (12) from motor (70) by removing screws (112A).
9. Remove slinger ring (77).

PUMP ASSEMBLY

1. Install slinger ring (77).
2. Attach adaptor flange (12) to motor housing using screws (112A).
3. Attach discharge housing (1) to adaptor flange (12) using screws (1128). Be sure to center seal bore on shaft.
4. Install mechanical seal (69) in discharge housing (1) using the following procedure:
   a. Clean and oil sealing faces using clean oil (not grease).

Caution: Do not use oil on EPDM parts. Substitute glycerin or soap and water.

   b. Oil outer surfaces of the seal seat, and push assembly over the motor shaft and into the discharge housing (1) seating it firmly and squarely.
   c. After cleaning and oiling the shaft, slide the seal body along the motor shaft until it meets the seal seat.
   d. Install seal spring and spring retainer on shaft.
5. Thread flexible joint (24) into motor shaft in a clockwise direction (RH thread). Tighten with 3/16 allen wrench. On 3 phase models, install motor pin (46).
6. Thread rotor (22) onto flexible joint (24) in a clockwise direction (RH thread). On 3 phase models, install rotor pin (45).
7. Slide stator (21) on rotor (22). On 331 & 332 models, insert rounded end of stator ring (135) into end of stator prior to installing stator on rotor.
8. Secure stator (21) and suction housing (2) to discharge housing (1) using screws (112).
9. Lubricate rotor and stator by filling Suction housing and discharge housing with fluid to be pumped.
10. Connect Suction and discharge piping and power source.

PARTS LIST

To determine part numbers for all parts except standard motors, enter table with item number from pump illustration. Then locate part number under applicable model number (first three digits). Parts listed down the center are applicable to all pump models. To determine part numbers for standard motor (item 70), enter table at item 70 with the last two digits of model number: motor description and part number are on that line.

Item No.	Description	Pump Model Numbers			
		331	332	333	344
1	Discharge Housing	Cast Iron 350-1016-000/Stainless Steel 350-1016-007			
2	Suction Housing	Cast Iron 330-1064-002/Stainless Steel 330-1911-002			
*21	Stator	340-3501-120	340-3502-120	340-3503-120	340-3504-120
*22	Rotor (Threaded) 416 S5	320-2729-000	330-0906-000	320-1394-000	320-1841-000
*22	Rotor (Pinned) 416 SS	320-2729-004	320-4559-004	320-1584-002	320-1569-002
24	Flexible Joint (Threaded)	Carbon Steel 320-1511-000/Stainless Steel 320-3759-000			
240	Flexible Joint (Pinned)	Carbon Steel 320-1612-000/Stainless Steel 320-4415-000			
*45	Shaft Pin (2 req.)	320-4069-002			
*69	Mechanical Seal	320-2424-000			
70	Standard Motor				
	-59 1PH TEFC 1750 RPM	330-4529-000			
	-60 3PH TEFC 1750 RPM, Pin	330-4528-100			
	-52 1PH TEFC 1750 RPM	330-4529-1 00			
	-50 3PH TEFC 1750 RPM	330-4528-003			
77	Slinger Ring	320-6382-000			
112	Screw, Cap (8 req.)	Carbon Steel 619-1430-103 (10-24 x 5/8)/Stainless Steel 619-1432-120 (10-24 x 3/4)			
112A	Screw, Hex Hd (4 req.)	Carbon Steel 619-1530-161 (3/8-16 x 1)/Stainless Steel 320-6715-005 (3/8-16 x 1)			
135	Stator Ring	Carbon Steel 320-7812-000 /Stainless Steel 362-1774-000			
215	Lock Washer (8 req.)	320-6464-000			
215A	Lock Washer (4 req.)	Carbon Steel 623-0010-411/Stainless Steel 320-6717-002			
261	Pipe Plug, 1/4 NPT	Carbon Steel 610-0120-021/Stainless Steel 610-0420-020			
	Rotor (Threaded) 316 SS	320-2933-000	320-2942-000	320-2936-000	320-2934-000
	Rotor (Pinned) 316 SS	320-2933-002			

*Recommended spare parts.
Used on 3 phase models.

REPAIR/CONVERSION KIT NUMBERS

Item No.	Description	All 331 Models (Threaded Only)			All 332 Models (Threaded Only)		
		NBR	EPDM	FPM	NBR	EPDM	FPM
—	Kit No.	311-9026-000	311-9025-000	311-9054-000	311-9027-000	311-9038-000	311-9055-000
21	• Stator	340-3501-120	340-3501-320	340-3501-520	340-3502-120	340-3502-320	340-3502-520
24	• Joint	*320-1511-000	320-6367-000	320-4670-000	*320-1511-000	320-6367-000	320-4670-000
69	• Seal	320-2424-000	320-6379-000	320-6501-000	320-2424-000	320-6379-000	320-6501-000
		All 333 Models (Threaded Only)			All 344 Models (Threaded Only)		
Item No.	Description	NBR	EPDM	FPM	NBR	EPDM	FPM
—	Kit No.	311-9029-000	311-9028-000	311-9056-000	311-9031-000	311-9030-000	311-9057-000
21	• Stator	340-3503-120	340-3503-320	340-3503-520	340-3504-120	340-3504-320	340-3504-520
24	• Joint	*320-1511-000	320-6367-000	320-4670-000	*320-1511-000	320-6367-000	320-4670-000
69	• Seal	320-2424-000	320-6379-000	320-6501-000	320-2424-000	320-6379-000	320-6501-000

NBR = Nitrile
EPDM = Ethylene-Propylene-Diene Terpolymer
FPM = Fluoroelastomer
*Carbon steel joint, for 316 SS joint use 320-3759-000.

REPAIR/CONVERSION KIT NUMBERS (CONT.)

		All 331 Models (Pinned Only)			All 332 Models (Pinned Only)		
Item No.	**Description**	**NBR**	**EPDM**	**FPM**	**NBR**	**EPDM**	**FPM**
–	Kit No.	311-9104-000	311-9108-000	311-9112-000	311-9105-000	311-9109-000	311-9113-000
21	• Stator	340-3501-120	340-3501-320	340-3501-520	340-3502-120	340-3502-320	340-3502-520
24	• Joint	*320-1612-000	320-6973-000	320-6984-000	*320-1612-000	320-6973-000	320-6984-000
69	• Seal	320-2424.000	320-6379-000	320-6501-000	320-2424-000	320-6379-000	320-6501-000
45	• Pin (2 req.)	320-4069-002			320-4069-002		
		All 333 Models (Pinned Only)			**All 344 Models (Pinned Only)**		
Item No.	**Description**	**NBR**	**EPDM**	**FPM**	**NBR**	**EPDM**	**FPM**
–	• Kit No.	311-9106-000	311-9110-000	311-9114-000	311-9107-000	311-9111~000	311-9115-000
21	• Stator	340-3503-120	340-3503-320	340-3503-520	340-3504-120	340-3504-320	340-3504-520
24	• Joint	*320-1612-000	320-6973-000	320-6984-000	*320-1612-000	320-6973-000	320-6984-000
69	• Seal	320-2424-000	320-6379-000	320-6501-000	320-2424-000	320-6379-000	320-6501-000
45	Pin (2 req.)	320-4069-002			320-4069-002		

ABRASION RESISTANT SEALS

Elastomer	All 331 – 334 Models
NBR	320-6460-000
EPDM	320-6502-000
FPM	320-6503-000

NBR = Nitrile
EPDM = Ethylene-Propylene-Diene Terpolymer
FPM = Fluoroelastomer
*Carbon steel joint, for 316 SS joint use 320-4415-000.

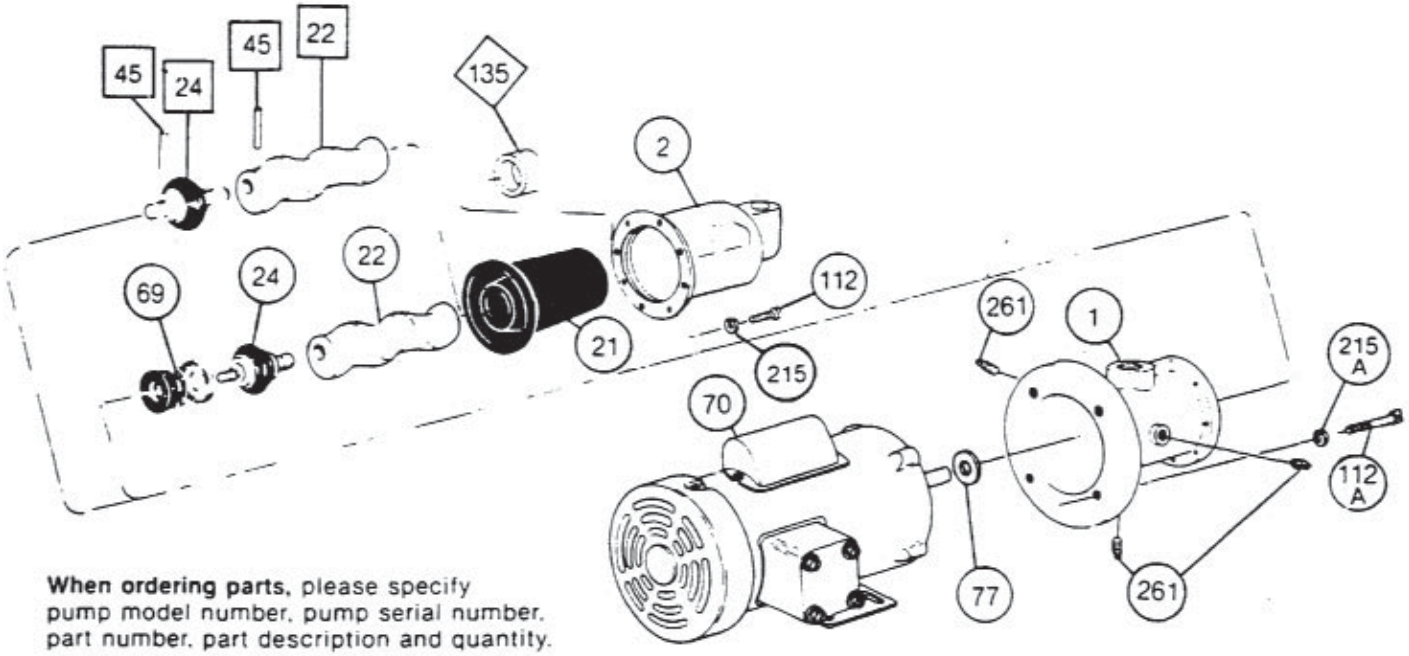

When ordering parts, please specify pump model number, pump serial number, part number, part description and quantity.

◇ Used only on 331 & 332 Models.

□ Used on 3 Phase Models

© 1999 by Moyno, Inc.
® Moyno is a registered trademark of Moyno, Inc.

Your Peace of Mind Is Our Top Priority®

Product information presented here reflects conditions at time of publication. Consult factory regarding discrepancies or inconsistencies.

ZOELLER® PUMP COMPANY

Zoeller Family of Water Solutions™

SECTION: 2.15.030
FM2780
0315
Supersedes
0114

TECHNICAL DATA SHEET
AQUA-MATE SERIES
Model 72 Submersible Dewatering Pump

PRODUCT SPECIFICATIONS

MOTOR	Horse Power	3/10
	Voltage	115
	Phase	1 Ph
	Hertz	60 Hz
	RPM	3400
	Type	Permanent split capacitor
	Insulation	Class B
	Amps	3.1
PUMP	Operation	Automatic or nonautomatic
	Auto On/Off Points	7-3/8" (18.7 cm) / 3-5/8" (9.2 cm)
	Discharge Size	1-1/2" NPT
	Solids Handling	3/8" (9 mm) spherical solids
	Cord Length	9' (3 m) standard
	Cord Type	UL listed, 3-wire, grounded plug
	Max. Head	18' (5.5 m)
	Max. Flow Rate	38 GPM (144 LPM)
	Max. Operating Temp.	110° F (43° C)
	Cooling	Oil free
	Motor Protection	Auto reset thermal overload
MATERIALS	Motor Housing	Engineered plastic
	Pump Housing	Engineered plastic
	Base	Engineered plastic
	Upper Bearing	Ball bearing
	Lower Bearing	Ball bearing
	Mechanical Seals	Carbon and ceramic
	Impeller Type	Non-clogging vortex
	Impeller	Engineered plastic
	Hardware	Stainless steel
	Motor Shaft	410 stainless steel
	Gasket	Buna-N o-ring

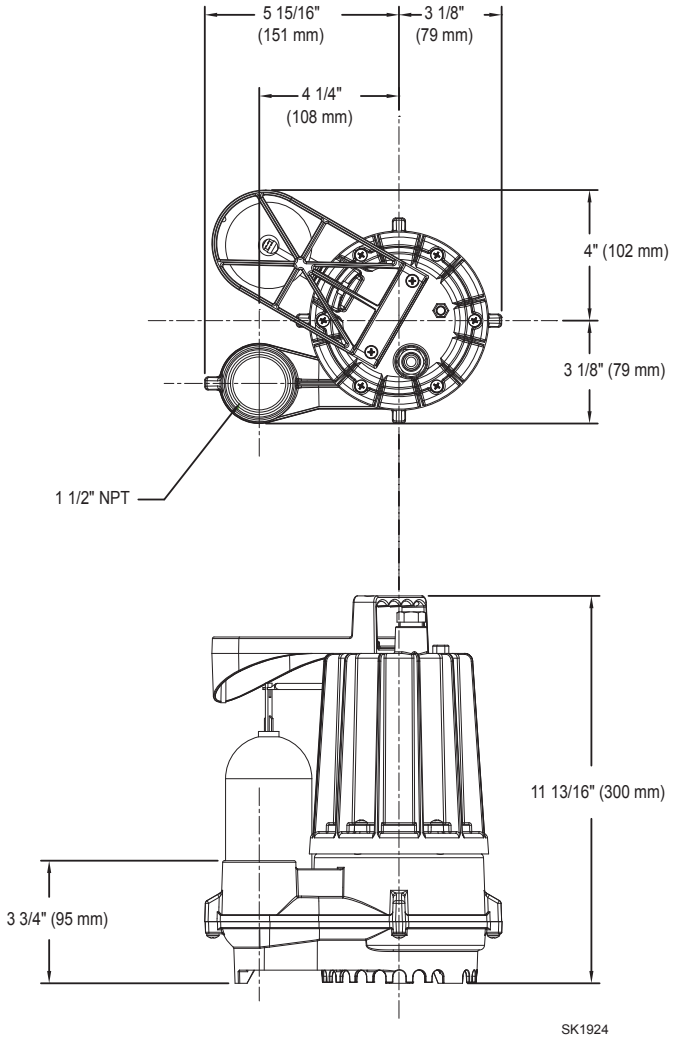

NOTE: See model comparison chart for specific details.

Certified to CSA Standard 227875

© Copyright 2015 Zoeller® Co. All rights reserved.

TOTAL DYNAMIC HEAD FLOW PER MINUTE

MODEL		72	
Feet	Meters	Gal.	Liters
5	1.5	38	144
10	3.0	30	114
15	4.6	14	53
Shut-off Head:		18 ft. (5.5 m)	

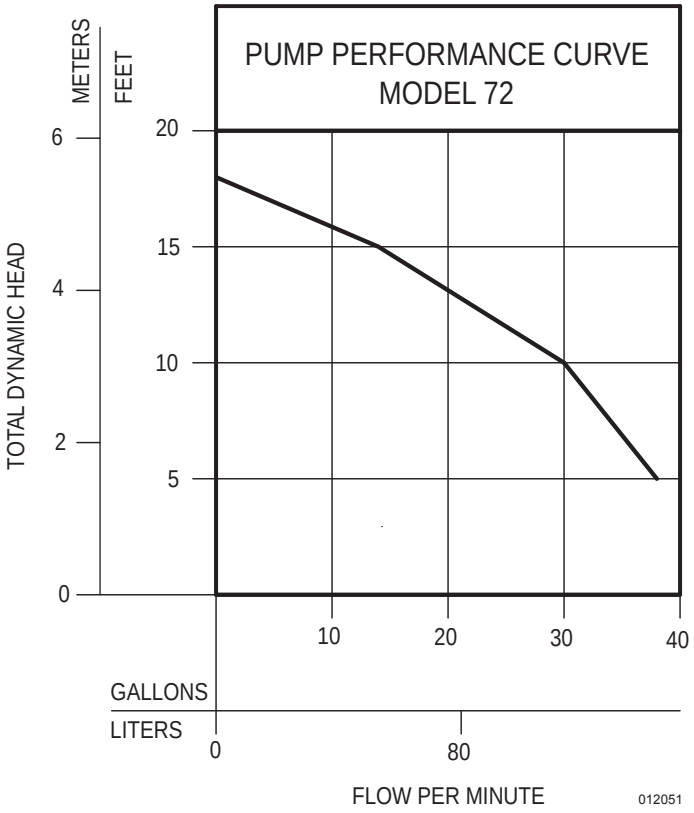

Model	MODEL COMPARISON										
	Seal	Mode	Volts	Ph	Amps	HP	Hz	Lbs	Kg	Simplex	Duplex
M72	Single	Auto	115	1	3.1	3/10	60	9.5	4.3	1	3
N72	Single	Non	115	1	3.1	3/10	60	9.5	4.3	2	2 & 3
BN72	Single	Non	115	1	3.1	3/10	60	9.5	4.3	*	---

* Single piggyback switch included.

SELECTION GUIDE

1. Integral float-operated mechanical switch, no external control required.
2. Single piggyback variable level float switch or double piggyback variable level float switch. Refer to FM0477.
3. See FM0477 for a residential alternator system.

OPTIONAL PUMP STAND P/N 10-2421

- Reduces potential clogging by debris
- Replaces rocks or bricks under the pump
- Made of durable, noncorrosive ABS
- Raises pump 2" (5 cm) off bottom of basin
- Provides the ability to raise intake by adding sections of 1½" or 2" (DN40 or DN50) PVC piping
- Attaches securely to pump
- Accommodates sump, dewatering and effluent applications

NOTE: Make sure float is free from obstruction.

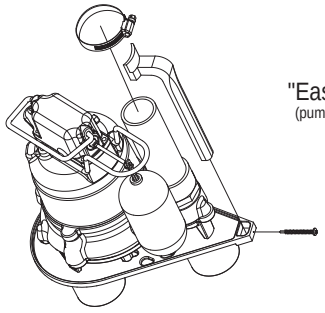

"Easy assembly"
(pump & discharge pipe not included.)

⚠ CAUTION All installation of controls, protection devices and wiring should be done by a qualified licensed electrician. All electrical and safety codes should be followed including the most recent National Electrical Code (NEC) and the Occupational Safety and Health Act (OSHA).

© Copyright 2015 Zoeller® Co. All rights reserved.
502-778-2731 | 800-928-7867 | 3649 Cane Run Road | Louisville, KY 40211-1961 | www.zoeller.com

Notice to installing contractor: Instructions must remain with installation.

Your Peace of Mind is Our Top Priority®

SECTION: 6.10.002
FM2676
1011
Supersedes
New

Product information presented here reflects conditions at time of publication. Consult factory regarding discrepancies or inconsistencies.

Zoeller Family of Water Solutions™

MAIL TO: P.O. BOX 16347 • Louisville, KY 40256-0347
SHIP TO: 3649 Cane Run Road • Louisville, KY 40211-1961
(502) 778-2731 • 1 (800) 928-PUMP • FAX (502) 774-3624

visit our web site: www.zoeller.com

NOTICE: VENT HOLE FOR CHECK VALVE SEE #3 IN CAUTION SECTION BELOW AND #4 ON PAGE 3

INSTALLATION INSTRUCTIONS
RECOMMENDED MODELS

DATE INSTALLED:
MODEL NUMBER:

P/N 151797

EFFLUENT*/SUMP/DEWATERING	SEWAGE
49 / 53 / 57 Series, 98 Series	264 Series
137 Series, 151 / 152 / 153 Series	266 / 267 / 268 Series

PREINSTALLATION CHECKLIST - ALL INSTALLATIONS

1. Inspect your pump. Occasionally, products are damaged during shipment. If the unit is damaged, contact your dealer before using. DO NOT remove the test plugs in the cover nor the motor housing.
2. Carefully read the literature provided to familiarize yourself with specific details regarding installation and use. These materials should be retained for future reference.

▲ WARNING — SEE BELOW FOR LIST OF WARNINGS

1. Make certain that the receptacle is within the reach of the pump's power supply cord. DO NOT USE AN EXTENSION CORD. Extension cords that are too long or too light do not deliver sufficient voltage to the pump motor. But, more important, they could present a safety hazard if the insulation were to become damaged or the connection end were to fall into the sump.
2. Make sure the pump electrical supply circuit is equipped with fuses or circuit breakers of proper capacity. A separate branch circuit is recommended, sized according to the "National Electrical Code" for the current shown on the pump nameplate.
3. Testing for ground. As a safety measure, each electrical outlet should be checked for ground using an Underwriters Laboratory Listed circuit analyzer which will indicate if the power, neutral and ground wires are correctly connected to your outlet. If they are not, call a qualified licensed electrician.
4. For Added Safety. Pumping and other equipment with a 3-prong grounded plug must be connected to a 3-prong grounded receptacle. For added safety the receptacle may be protected with a ground-fault circuit interrupter. When a pump needs to be connected in a watertight junction box, the plug can be removed and spliced to the supply cable with proper grounding. For added safety this circuit may be protected by a ground-fault circuit interrupter. The complete installation must comply with the National Electrical Code and all applicable local codes and ordinances.
5. FOR YOUR PROTECTION, ALWAYS DISCONNECT PUMP FROM ITS POWER SOURCE BEFORE HANDLING. Single phase pumps are supplied with a 3-prong grounded plug to help protect you against the possibility of electrical shock. DO NOT UNDER ANY CIRCUMSTANCES REMOVE THE GROUND PIN. The 3-prong plug must be inserted into a mating 3-prong grounded receptacle. If the installation does not have such a receptacle, it must be changed to the proper type, wired and grounded in accordance with the National Electrical Code and all applicable local codes and ordinances. Three phase pumps require motor starting devices with motor overload protection. See FM0486 for duplex installations.
6. The tank is to be vented in accordance with local plumbing code. Pumps must be installed in accordance with the National Electrical Code and all applicable local codes and ordinances. Pumps are not to be installed in locations classified as hazardous in accordance with National Electrical Code, ANSI/NFPA 70.
7. "Risk of electrical shock" Do not remove power supply cord and strain relief or connect conduit directly to the pump.
8. Installation and servicing of electrical circuits and hardware should be performed by a qualified licensed electrician.
9. Pump installation and servicing should be performed by a qualified person.
10. Risk of electric shock - These pumps have not been investigated for use in swimming pool and marine areas.
11. According to the state of California (Prop 65), this product contains chemicals known to the state of California to cause cancer and birth defects or other reproductive harm.

▲ CAUTION — SEE BELOW FOR LIST OF CAUTIONS

1. Check to be sure your power source is capable of handling the voltage requirements of the motor, as indicated on the pump name plate.
2. The installation of automatic pumps with variable level float switches or nonautomatic pumps using auxiliary variable level float switches is the responsibility of the installing party and care should be taken that the tethered float switch will not hang up on the pump apparatus or pit peculiarities and is secured so that the pump will shut off. It is recommended to use rigid piping and fittings and the pit be 18" or larger in diameter.
3. Information - vent hole purpose. It is necessary that all submersible sump, effluent, and sewage pumps capable of handling various sizes of solid waste be of the bottom intake design to reduce clogging and seal failures. If a check valve is incorporated in the installation, a vent hole (approx. 3/16") must be drilled in the discharge pipe below the check valve and pit cover to purge the unit of trapped air. Trapped air is caused by agitation and/or a dry basin. Vent hole should be checked periodically for clogging. The 53 / 57, and 98 Series pumps have a vent located in the pump housing opposite the float, adjacent to a housing lug, but an additional vent hole is recommended. The vent hole on a High Head application may cause too much turbulence. You may not want to drill one. If you choose not to drill a vent hole, be sure the pump case and impeller is covered with liquid before connecting the pipe to the check valve and no inlet carries air to the pump intake. NOTE: THE HOLE MUST ALSO BE BELOW THE BASIN COVER AND CLEANED PERIODICALLY. Water stream will be visible from this hole during pump run periods.
4. Pump should be checked frequently for debris and/or build up which may interfere with the float "on" or "off" position. Repair and service should be performed by Zoeller Pump Company Authorized Service Station only.
5. Dewatering and effluent sump pumps are not designed for use in pits handling raw sewage.
6. Maximum operating temperature for standard model pumps must not exceed 130°F (54°C).
7. Pump models 266, 267, 268, and 137 must be operated in an upright position. Do not attempt to start pump when tilted or laying on its side.
8. Do not operate a pump in an application where the Total Dynamic Head is less than the minimum Total Dynamic Head listed on the Pump Performance Curves.

NOTE: Pumps with the "UL" mark and pumps with the "US" mark are tested to UL Standard UL778. CSA Certified pumps are certified to CSA Standard C22.2 No. 108.

REFER TO WARRANTY ON PAGE 2.

© Copyright 2011 Zoeller Co. All rights reserved.

E-1131

Limited Warranty

Manufacturer warrants, to the purchaser and subsequent owner during the warranty period, every new product to be free from defects in material and workmanship under normal use and service, when properly used and maintained, for a period of three years from the date of original manufacture. Parts that fail within the warranty period, that inspections determine to be defective in material or workmanship, will be repaired, replaced or remanufactured at Manufacturer's option, provided however, that by so doing we will not be obligated to replace an entire assembly, the entire mechanism or the complete unit. No allowance will be made for shipping charges, damages, labor or other charges that may occur due to product failure, repair or replacement.

This warranty does not apply to and there shall be no warranty for any material or product that has been disassembled without prior approval of Manufacturer, subjected to misuse, misapplication, neglect, alteration, accident or act of God; that has not been installed, operated or maintained in accordance with Manufacturer's installation instructions; that has been exposed to outside substances including but not limited to the following: sand, gravel, cement, mud, tar, hydrocarbons, hydrocarbon derivatives (oil, gasoline, solvents, etc.), or other abrasive or corrosive substances, wash towels or feminine sanitary products, etc. in all pumping applications. The warranty set out in the paragraph above is in lieu of all other warranties expressed or implied; and we do not authorize any representative or other person to assume for us any other liability in connection with our products.

Contact Manufacturer at, 3649 Cane Run Road, Louisville, Kentucky 40211, Attention: Customer Service Department to obtain any needed repair or replacement of part(s) or additional information pertaining to our warranty.

MANUFACTURER EXPRESSLY DISCLAIMS LIABILITY FOR SPECIAL, CONSEQUENTIAL OR INCIDENTAL DAMAGES OR BREACH OF EXPRESSED OR IMPLIED WARRANTY; AND ANY IMPLIED WARRANTY OF FITNESS FOR A PARTICULAR PURPOSE AND OF MERCHANTABILITY SHALL BE LIMITED TO THE DURATION OF THE EXPRESSED WARRANTY.

Some states do not allow limitations on the duration of an implied warranty, so the above limitation may not apply to you. Some states do not allow the exclusion or limitation of incidental or consequential damages, so the above limitation or exclusion may not apply to you.

This warranty gives you specific legal rights and you may also have other rights which vary from state to state.

EASY DO'S & DON'T'S FOR INSTALLING A SUMP PUMP

1. DO read thoroughly all installation material provided with the pump.
2. DO inspect pump for any visible damage caused by shipping. Contact dealer if pump appears to be damaged.
3. DO clean all debris from the sump. Be sure that the pump will have a hard, flat surface beneath it. DO NOT install on sand, gravel or dirt.
4. DO be sure that the sump is large enough to allow proper clearance for the level control switch(es) to operate properly.
5. DO Always Disconnect Pump From Power Source Before Handling.
   DO always connect to a separately protected and properly grounded circuit.
   DO NOT ever cut, splice, or damage power cord (Only splice in a watertight junction box).
   DO NOT carry or lift pump by its power cord.
   DO NOT use an extension cord with a sump pump.
6. DO install a check valve and a union in the discharge line.
   DO NOT use a discharge pipe smaller than the pump discharge.
7. DO NOT use a sump pump as a trench or excavation pump, or for pumping sewage, gasoline, or other hazardous liquids.
8. DO test pump immediately after installation to be sure that the system is working properly.
9. DO cover sump with an adequate sump cover.
10. DO review all applicable local and national codes and verify that the installation conforms to each of them.
11. DO consult manufacturer for clarifications or questions.
12. DO consider a two pump system with an alarm where an installation may become overloaded or primary pump failure would result in property damages.
13. DO consider a D.C. Backup System where a sump or dewatering pump is necessary for the prevention of property damages from flooding due to A.C. power disruptions, mechanical or electrical problems or system overloading.
14. DO inspect and test system for proper operations at least every three months.

SERVICE CHECKLIST



▲ WARNING ELECTRICAL PRECAUTIONS- Before servicing a pump, always shut off the main power breaker and then unplug the pump - making sure you are wearing insulated protective sole shoes and not standing in water. Under flooded conditions, contact your local electric company or a qualified licensed electrician for disconnecting electrical service prior to pump removal.

▲ WARNING Submersible pumps contain oils which becomes pressurized and hot under operating conditions - allow 2½ hours after disconnecting before attempting service.

CONDITION	COMMON CAUSES
A. Pump will not start or run.	Check fuse, low voltage, overload open, open or incorrect wiring, open switch, impeller or seal bound mechanically, defective capacitor or relay when used, motor or wiring shorted. Float assembly held down. Switch defective, damaged, or out of adjustment.
B. Motor overheats and trips overload or blows fuse.	Incorrect voltage, negative head (discharge open lower than normal) impeller or seal bound mechanically, defective capacitor or relay, motor shorted.
C. Pump starts and stops too often.	Float tight on rod, check valve stuck or none installed in long distance line, overload open, level switch(s) defective, sump pit too small.
D. Pump will not shut off.	Debris under float assembly, float or float rod bound by pit sides or other, switch defective, damaged or out of adjustment.
E. Pump operates but delivers little or no water.	Check strainer housing, discharge pipe, or if check valve is used vent hole must be clear. Discharge head exceeds pump capacity. Low or incorrect voltage. Incorrect motor rotation. Capacitor defective. Incoming water containing air or causing air to enter pumping chamber.
F. Drop in head and/or capacity after a period of use.	Increased pipe friction, clogged line or check valve. Abrasive material and adverse chemicals could possibly deteriorate impeller and pump housing. Check line. Remove base and inspect.

If the above checklist does not uncover the problem, consult the factory - Do not attempt to service or otherwise disassemble pump. Service must be performed by Zoeller Authorized Service Stations. Go to www.zoellerpumps.com/servicestations **to find the Authorized Service Station in your area.**

© Copyright 2011 Zoeller Co. All rights reserved.

RECOMMENDED INSTALLATION FOR ALL APPLICATIONS

(1) Electrical wiring and protection must be in accordance with National Electrical Code and any other applicable state and local electrical requirements.
(2) Install proper Zoeller unicheck (combination union and check valve), preferably just above the basin to allow easy removal of the pump for cleaning or repair. On sewage, effluent or dewatering, if high head or below cover installation is required use 30-0164 on 1½" pipe, 30-0152 on 2" pipe and 30-0160 on 3" pipe. See (4) below.
(3) All installations require a basin cover to prevent debris from falling into the basin and to prevent accidental injury.
(4) When a Unicheck is installed, drill a 3/16" dia. hole in the discharge pipe even with the top of the pump. *NOTE: THE HOLE MUST ALSO BE BELOW THE BASIN COVER AND CLEANED PERIODICALLY.* (High Head unit see #3 under "Caution" on front page). Water stream will be visible from this hole during pump run periods.
(5) Securely tape or clamp power cord to discharge pipe, clear of the float mechanism(s).
(6) Use full-size discharge pipe.
(7) Basin must be in accordance with applicable codes and specifications.
(8) Pump must be level and float mechanism(s) clear of sides of basin before starting pump.
(9) Basin must be clean and free of debris after installation.
(10) Gate Valve or Ball Valve to be supplied by installer and installed according to any and all codes.
(11) Locate float switches as shown in sketches. The best place for the "off" point is above the motor housing and positioned 180° from the inlet. Never put "off" point below discharge on pump (Sewage & Effluent only). *NOTE: FOR AUTOMATIC PUMPS, USE DEWATERING INSTALLATION SKETCH.*
(12) Gas tight seals required to contain gases and odors.
(13) Vent gases and odors to the atmosphere through vent pipe (Sewage & Dewatering only).
(14) Install Zoeller Pump Stand (Model 10-2421) under pump to provide a settling basin. (Effluent & Dewatering only.)

For Effluent Only:

(15) Wire pump to power through a Zoeller watertight junction box or watertight splice. ***NOTE: Watertight enclosure is a must in damp areas. See No. 8 on front page of FM0732.***
(16) Refer to SSPMA Effluent Sizing Manual for determining "on" - "off" switches.
(17) Septic tank risers must be used for easy pump and filter access.

NOTE: Double seal pumps offer extra protection from damage caused by seal failure.

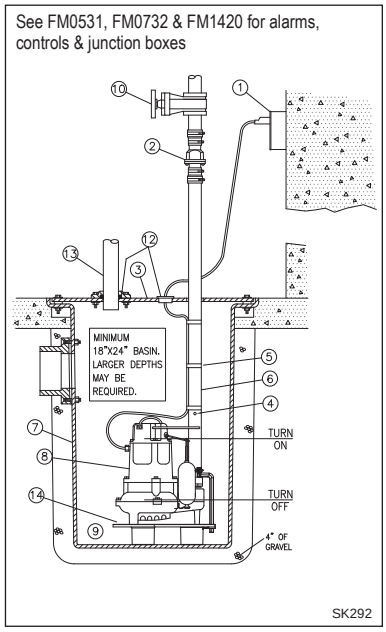

TYPICAL DEWATERING INSTALLATION

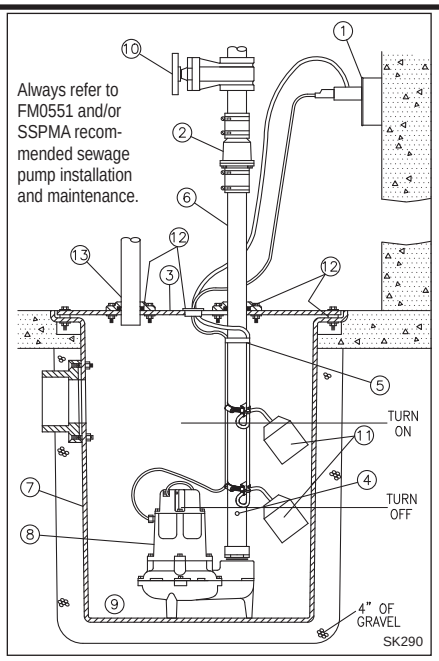

TYPICAL SEWAGE INSTALLATION

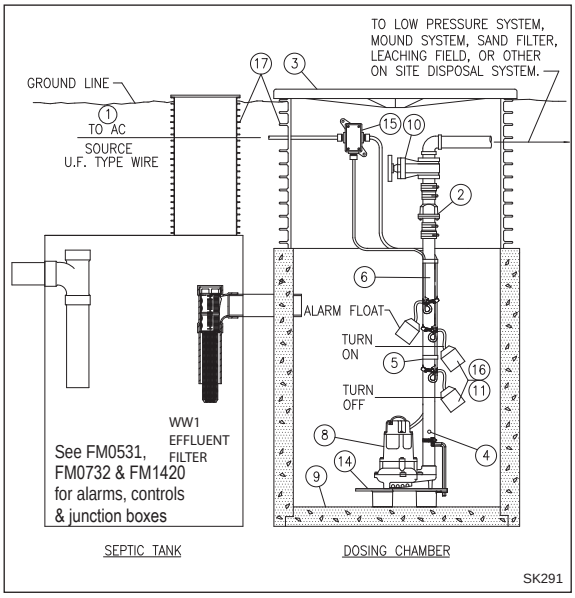

TYPICAL EFFLUENT INSTALLATION

All installations must comply with all applicable electrical and plumbing codes, including, but not limited to, National Electrical Code, local, regional, and/or state plumbing codes, etc. Not intended for use in hazardous locations.

SUGGESTED METHODS OF FLOAT INSTALLATION

On some installations it may be desirable to install an independent hanger for the level control switches to avoid possible hang ups on the pumps, piping, valves, etc. Float hangers are available from Zoeller Company on Catalog Sheet FM0526 or can be fabricated from standard pipe and fittings.

TYPICAL FLOAT HANGER ON STEEL COVER PITS

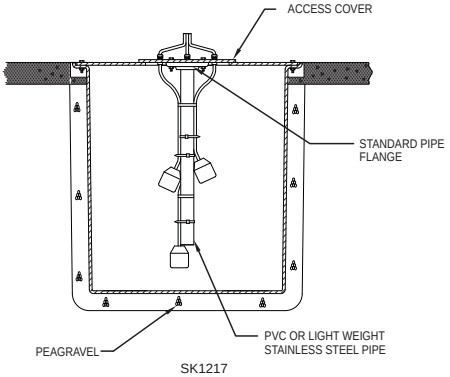

TYPICAL FLOAT HANGER ON CONCRETE PITS OR SEPTIC TANK RISERS

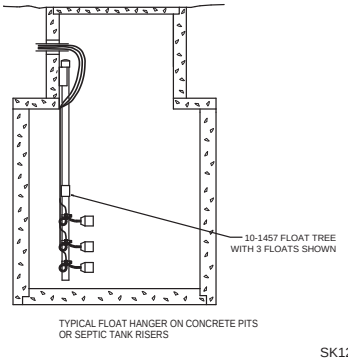

© Copyright 2011 Zoeller Co. All rights reserved.

WD & WH MODEL INSTALLATION

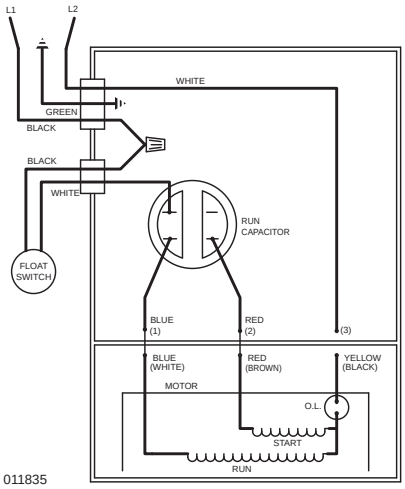

011835

WIRING DIAGRAM FOR MODELS
WD - 230V, 1 Ph, 60 Hz.
WH - 200/208V, 1 Ph, 60 Hz.

Determining Pumping Range in Inches (1 inch - 2.5 cm)

Tether Length	5 min.	10	15	20	22 max.
Pumping Range	9	13.5	18	22	24

Use only as a guide. Due to weight of cable, pumping range above horizontal is not equal to pumping range below horizontal. Ranges are based on testing in nonturbulent conditions. Range may vary due to water temperature and cord shape. As tether length increases, so does the variance of the pumping range.

Models WD & WH are fully automatic. A float switch is included and factory wired in the pump circuit to provide automatic operation once the float switch is secured properly to the outlet pipe. Use the diagram above to secure the float switch properly and obtain the proper tether to customize the on-off cycle to each application.

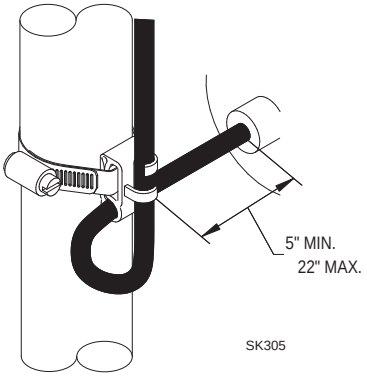

20 AMP SWITCH (WD & WH MODELS)

Note: Failure to keep within proper tether limits may prevent reliable switch operation.

Note: Cable must be mounted in horizontal position.

SINGLE PHASE WIRING INSTRUCTIONS

▲ WARNING FOR YOUR PROTECTION, ALWAYS DISCONNECT PUMP FROM ITS POWER SOURCE BEFORE HANDLING. Single phase pumps are supplied with a 3-prong grounded plug to help protect you against the possibility of electrical shock. DO NOT UNDER ANY CIRCUMSTANCES REMOVE THE GROUND PIN. The 3-prong plug must be inserted into a mating 3-prong grounded receptacle. If the installation does not have such a receptacle, it must be changed to the proper type, wired and grounded in accordance with the National Electrical Code and all applicable local codes and ordinances.

▲ WARNING "Risk of electrical shock" Do not remove power supply cord and strain relief or connect conduit directly to the pump.

▲ WARNING Installation and checking of electrical circuits and hardware should be performed by a qualified licensed electrician.

▲ WARNING Units supplied without a plug (single and three phase) and single phase nonautomatic units with a 20 amp plug must have a motor control and liquid level control provided at time of installation. The control device should have suitable voltage, ampere, frequency, grounding and horsepower rating for the pump to which it is connected.

THREE PHASE WIRING INSTRUCTIONS

▲ WARNING FOR YOUR PROTECTION, ALWAYS DISCONNECT PUMP FROM ITS POWER SOURCE BEFORE HANDLING.

To automatically operate a nonautomatic three phase pump, a control panel is required. Follow the instructions provided with the panel to wire the system. For automatic three phase pumps see automatic 3 phase wiring diagram located to the far right.

Before installing a pump, check the pump rotation to ensure that wiring has been connected properly to power source, and that the green lead of power cord (See wiring diagram), is connected to a valid ground. Momentarily energize the pump, observing the directions of kick back due to starting torque. Rotation is correct if kick back is in the opposite direction of rotation arrow on the pump casing. If rotation is not correct, switching of any two power leads other than ground, should provide the proper rotation.

All three phase pumps require motor starting devices with motor overload protection. See FM0486 for duplex installations. Pumps must be installed in accordance with the National Electrical Code and all applicable local codes and ordinances. Pumps are not to be installed in locations classified as hazardous in accordance with National Electrical Code, ANSI/NFPA 70.

NONAUTOMATIC 3 PHASE

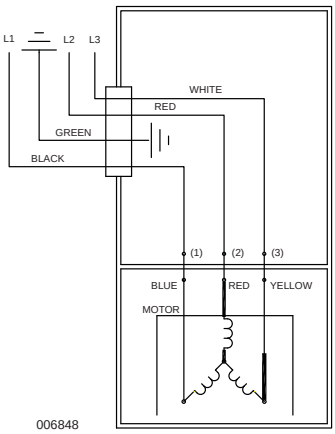

006848

AUTOMATIC 3 PHASE

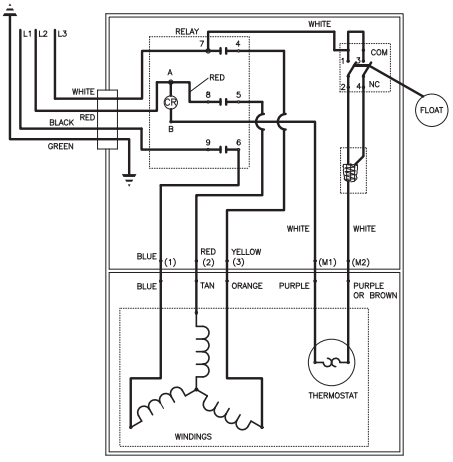

006848

013071

IMPORTANT NOTICE: Some insurance policies, both commercial and residential, extend coverage for damages incurred by product failure. You will need to have possession of the product to support your claim in most cases. Zoeller Pump Co. will exchange the unit or refund the original purchase price once the claim is settled with the insurer in the case where you need to retain possession of the product to support a damage claim you submit to your insurance company.

© Copyright 2011 Zoeller Co. All rights reserved.

Aviso al contratista instalador: Las instrucciones deberán permanecer con la instalación.

FM2676S

Su Tranquilidad es Nuestra Prioridad®

La siguiente información sobre este producto refleja las condiciones existentes en la fecha de publicación. Se debe consultar a la fábrica cualquier discrepancia o inconsistencia que existiera.

Zoeller Family of Water Solutions™

ENVIAR CORRESPONDENCIA A: P. O. Box 16347 • Louisville, KY 40256-0347 USA
ENVIAR A: 3649 Cane Run Road • Louisville KY, 40211-1961 USA
+1 (502) 778-2731 • *Fax: +1* (502) 774-3624

Visite nuestro sitio web: www.zoeller.com

FECHA DE INSTALACIÓN:
NÚMERO DE MODELO:

INSTRUCCIONES DE INSTALACIÓN
MODELOS RECOMENDADOS

AVISO: AGUJERO DE VENTILACIÓN PARA LA VÁLVULA DE RETENCIÓN, VEA EL NRO. 3 EN LA SECCIÓN DE PRECAUCIONES A CONTINUACIÓN Y EL NRO. 4 EN LA PÁGINA 3.

EFLUENTES*/SUMIDERO/ACHIQUE	AGUAS CLOACALES
49 / 53 / 57 Series, 98 Series	264 Series
137 Series, 151 / 152 / 153 Series	266 / 267 / 268 Series

LISTA DE VERIFICACIÓN DE PRE-INSTALACIÓN - TODAS LAS INSTALACIONES

1. Inspeccione su bomba. Ocasionalmente, los productos se dañan durante el envío. Si la unidad está dañada, comuníquese con su vendedor antes de usarla. NO quite los tapones de prueba de la cubierta ni del cárter del motor.
2. Lea cuidadosamente toda la literatura provista para familiarizarse con los detalles específicos relacionados con la instalación y uso. Estos materiales deberán guardarse para referencia futura.

▲ ADVERTENCIA

VER ABAJO LA LISTA DE ADVERTENCIAS

1. Asegúrese de que el tomacorriente esté al alcance del cable de alimentación eléctrica de la bomba. NO USE UN CABLE DE EXTENSIÓN. Los cables de extensión que son demasiado largos o livianos no suministran voltaje suficiente al motor de la bomba. Más importante aún, presentan un peligro a la seguridad si el aislante se daña o el extremo de conexión cae dentro del sumidero.
2. Asegúrese de que el circuito de alimentación eléctrica de la bomba esté equipado con fusibles o interruptores de circuito de capacidad adecuada. Se recomienda un circuito auxiliar, del tamaño de acuerdo al "Código Eléctrico Nacional" para la corriente que se muestra en la etiqueta de nombre de la bomba.
3. Prueba de puesta a tierra. Como medida de seguridad, cada tomacorriente debe verificarse para puesta a tierra usando un analizador de circuitos aprobado por el Underwriters Laboratory, el cual indicará si los alambres de energía, neutrales y de puesta a tierra están conectados correctamente a su tomacorriente. Si no lo están, llame a un técnico electricista calificado.
4. Para mayor seguridad. El equipo de bombeo y otro equipo eléctrico con enchufes de 3 patillas deben conectarse a un tomacorriente para 3 patillas con puesta a tierra. Para mayor seguridad, el tomacorriente puede estar protegido con un interruptor de circuito de falla a tierra. Cuando una bomba necesita ser conectada a una caja de conexión hermética, el enchufe puede ser retirado y empalmado al cable de alimentación eléctrica propiamente conectado a tierra. Para mayor seguridad, este circuito puede ser protegido mediante un interruptor de circuito de falla a tierra. La instalación completa deberá cumplir con el Código Eléctrico Nacional y todas las ordenanzas y códigos locales aplicables.
5. PARA SU PROTECCIÓN, SIEMPRE DESCONECTE LA BOMBA DE LA FUENTE DE ALIMENTACIÓN ELÉCTRICA ANTES DE MANIPULARLA. Las bombas monofásicas se suministran con enchufes de 3 patillas con puesta a tierra para ayudar a protegerle contra la posibilidad de choque eléctrico. NO RETIRE BAJO NINGUNA CIRCUNSTANCIA LA CLAVIJA DE PUESTA A TIERRA. Los enchufes de 3 patillas se deben introducir en un tomacorriente para 3 patillas apropiado. Si la instalación no posee un tomacorriente de este tipo, se debe cambiar por uno apropiado, cableado y con puesta a tierra de acuerdo al Código Eléctrico Nacional y a todas las ordenanzas y códigos locales aplicables. Las bombas trifásicas requieren dispositivos de arranque del motor con protección contra sobrecarga. Vea FM0486 para instalaciones duplex.
6. El tanque se debe ventilar conforme a los códigos de plomería locales. Las bombas se deben instalar conforme al Código Eléctrico Nacional y a todos los códigos y ordenanzas locales que correspondan. Las bombas no se deben instalar en sitios peligrosos conforme a la clasificación del Código Eléctrico Nacional, ANSI/NFPA 70.
7. "Riesgo de choque eléctrico". No quite el cable de alimentación eléctrica ni el dispositivo de alivio de tensión y no conecte un conductor directamente a la bomba.
8. La instalación y verificación de los circuitos eléctricos y del equipo deberán llevarse a cabo por un técnico electricista calificado.
9. La instalación y verificación de la bomba deberá llevarse a cabo por una persona calificada.
10. Riesgo de choque eléctrico – No se ha investigado el uso de estas bombas en áreas marinas y en piscinas.
11. Este producto contiene sustancias químicas que de acuerdo al estado de California pueden causar cáncer y defectos congénitos u otros daños a la salud reproductiva.

REFIÉRASE A LA GARANTÍA EN LA PÁGINA 2.

▲ PRECAUCIÓN

VER ABAJO LA LISTA DE PRECAUCIONES

1. Asegúrese de que la fuente de energía eléctrica sea capaz de manejar los requisitos de voltaje del motor, según se indica en la etiqueta de nombre de la bomba.
2. La instalación de bombas automáticas con interruptores de flotador de nivel variable o las bombas no automáticas que usan interruptores de flotador de nivel variable auxiliares es responsabilidad del instalador y deberá verificarse que el interruptor de flotador atado no se enganchará en el aparato de la bomba ni en las peculiaridades del foso y que está fijado de manera que permita la parada de la bomba. Se recomienda usar tubería y empalmes rígidos y que el foso tenga 45 cm (18 pulg.) o más de diámetro.
3. Información - Objetivo del agujero de ventilación. Es necesario que todas las bombas sumer-gibles de sumidero, efluentes y de aguas cloacales capaces de manejar residuos sólidos de varios tamaños tengan la entrada en la parte inferior para reducir el atascamiento y las fallas del sello. Si se incorpora a la instalación una válvula de retención, deberá perforarse un agujero de ventilación [de aprox. 5 mm (3/16 pulg.)] en la tubería de descarga debajo de la válvula de retención y de la tapa del foso a fin de purgar la unidad del aire atrapado. La causa de aire atrapado puede ser agitación y/o un estanque seco. Deberá revisarse periódicamente el agujero de ventilación para verificar que no esté atascado. Las bombas de las series 53, 57 ó 98 poseen una ventilación ubicada en la caja de la bomba del lado opuesto al flotador, junto a una aleta de la caja. Sin embargo, se recomienda un agujero de ventilación adicional. Un agujero de ventilación en una aplicación de carga elevada podría causar demasiada turbulencia. Es posible que usted prefiera no perforar uno. Si decide no perforar un agujero de ventilación, asegúrese de que la caja de la bomba y el impulsor estén cubiertos de líquido antes de conectar la tubería a la válvula de retención y que no haya ningún tipo de entrada de aire en la vía de entrada de la bomba. NOTA: EL AGUJERO TAMBIÉN DEBERÁ ESTAR POR DEBAJO DE LA TAPA DEL SUMIDERO Y SE DEBERÁ LIMPIARLO PERIÓDICAMENTE. Se verá un chorro de agua saliendo del agujero durante los períodos de bombeo.
4. Se debe revisar la bomba frecuentemente para asegurarse de que no hay escombros y/o acumulación que pueda interferir con la posición "on" (encendido) o "off" (apagado) del flotador. La reparación y servicio deberá hacerse solamente por personal de una Estación de servicio autorizada por Zoeller Pump Company.
5. Las bombas de achique y de efluentes no se diseñan para uso en fosos con aguas cloacales crudas.
6. La temperatura de funcionamiento máxima para bombas de modelo estándar no debe superar 54°C (130°F).
7. Las bombas modelos 266, 267, 268, y 137 se deben operar en posición vertical. No intente encender la bomba cuando esté inclinada o apoyada sobre uno de sus lados.
8. No opere la bomba en una aplicación donde la carga dinámica total sea menor que la carga dinámica total mínima que se indica en la Curva de rendimiento de la bomba.

AVISO: Las bombas con la marca "UL" y "US" han sido probadas de acuerdo al estándar UL778. Las bombas "aprobadas por CSA" están certificadas de acuerdo al estándar CSA C22.2 No. 108.

© Copyright 2011 Zoeller Co. All rights reserved.

E-1135

GARANTÍA LIMITADA

El Fabricante garantiza, al comprador y el propietario subsiguiente durante el período de garantía, que cada producto nuevo está libre de defectos en materiales y mano de obra bajo condiciones de uso y servicio normales, cuando se usa y mantiene correctamente, durante un período de tres años a partir de la fecha de fabricación original del producto. Las partes que fallen durante el período de garantía, un año a partir de la fecha de compra por parte del usuario final, lo que ocurra primero, cuyas inspecciones determinen que presentan defectos en materiales o mano de obra, serán reparadas, reemplazadas o remanufacturadas a opción del Fabricante, con la condición sin embargo de que por hacerlo no estemos en la obligación de reemplazar un ensamblaje completo, el mecanismo entero o la unidad completa. No se dará concesión alguna por costos de envío, daños, mano de obra u otros cargos que pudieran surgir por falla, reparación o reemplazo del producto.

Esta garantía no aplica a y no se ofrecerá garantía alguna por ningún material o producto que haya sido desarmado sin aprobación previa del Fabricante, o que haya sido sometido a uso indebido, aplicación indebida, negligencia, alteración, accidente o acto fortuito; que no haya sido instalado, usado o mantenido según las instrucciones de instalación del Fabricante; que haya sido expuesto a sustancias foráneas que incluyen pero no se limitan a lo siguiente: arena, grava, cemento, lodo, alquitrán, hidrocarburos, derivados de hidrocarburos (aceite, gasolina, solventes, etc.), u otras sustancias abrasivas o corrosivas, toallas para lavar o productos sanitarios femeninos, etc. en todas las aplicaciones de bombeo. La garantía presentada en el párrafo anterior deja sin efecto cualquier otra garantía expresa o implícita; y no autorizamos a ningún representante u otra persona para que asuma por nosotros ninguna otra responsabilidad con respecto a nuestros productos.

Comuníquese con el Fabricante en 3649 Cane Run Road, Louisville, KY 40211 EE.UU., Attention: Customer Service Department, para obtener cualquier reparación necesaria o reemplazo de partes o información adicional sobre nuestra garantía.

EL FABRICANTE EXPRESAMENTE RECHAZA RESPONSABILIDAD POR DAÑOS ESPECIALES, EMERGENTES O INCIDENTALES O POR INCUMPLIMIENTO DE LA GARANTÍA EXPRESA O IMPLÍCITA; Y CUALQUIER GARANTÍA IMPLÍCITA DE IDONEIDAD PARA UN FIN PARTICULAR Y DE COMERCIALIZACIÓN SE LIMITARÁ A LA DURACIÓN DE LA GARANTÍA EXPRESA.

Algunos estados no permiten limitaciones en la duración de una garantía implícita, de forma que la limitación anterior podría no aplicar a usted. Algunos estados no permiten la exclusión o limitación de daños incidentales o emergentes, de forma que la limitación o exclusión anterior podría no aplicar a usted.

Esta garantía le otorga a usted derechos legales específicos y podría tener otros derechos que varían de un estado a otro.

LO QUE DEBE Y NO DEBE HACER PARA INSTALAR UNA BOMBA DE SUMIDERO

1. LEA completamente todo el material sobre la instalación provisto con la bomba.
2. INSPECCIONE la bomba para ver si hay cualquier daño visible causado durante el envío. Comuníquese con el vendedor si la bomba está dañada.
3. RETIRE todos los escombros del sumidero. Asegúrese de que la bomba se apoyará sobre una superficie dura, plana y estable. NO LA INSTALE sobre arena, grava o tierra.
4. ASEGÚRESE de que el sumidero sea suficientemente grande para permitir el funcionamiento correcto de los interruptores de control de nivel.
5. SIEMPRE desconecte la bomba de la fuente de alimentación eléctrica antes de manipularla.
   SIEMPRE conecte la bomba a un circuito protegido separadamente y con puesta a tierra adecuado.
   JAMÁS corte, empalme o dañe el cable de alimentación eléctrica. (Empalme únicamente cuando hay una caja de conexión hermética.)
   JAMÁS transporte o levante la bomba por su cable de alimentación eléctrica.
   JAMÁS use un cable de extensión con una bomba de sumidero.
6. INSTALE una válvula de retención y una unión en la tubería de descarga.
   JAMÁS use una tubería de descarga de menor tamaño que la descarga de la bomba.
7. JAMÁS use una bomba de sumidero como una bomba excavadora o para zanjas, ni para bombear aguas cloacales, gasolina u otros líquidos peligrosos.
8. PRUEBE la bomba inmediatamente después de su instalación para asegurarse de que el sistema funciona correctamente.
9. CUBRA el foso con una tapa adecuada para sumidero.
10. EXAMINE todos los códigos nacionales y locales aplicables y verifique que la instalación esté de acuerdo a cada uno de ellos.
11. CONSULTE con el fabricante si necesita aclaraciones o tiene preguntas.
12. CONSIDERE un sistema de dos bombas con alarma en donde la instalación puede sobrecargarse o la falla de una bomba primaria causaría daños a la propiedad.
13. CONSIDERE un sistema de apoyo de CD en donde una bomba de achique o sumidero es necesaria para prevenir daños a la propiedad debido a inundación causada por interrupciones en el suministro de energía eléctrica, problemas mecánicos o eléctricos, o sobrecarga del sistema.
14. INSPECCIONE y pruebe el funcionamiento del sistema por lo menos cada 3 meses.

LISTA DE VERIFICACIÓN DE SERVICIO



▲ ADVERTENCIA PRECAUCIONES ELÉCTRICAS - Antes de proporcionar algún servicio a la bomba, desactive siempre el interruptor principal de suministro de energía eléctrica y desenchufe la bomba. Asegúrese de usar zapatos protectores con suelas aislantes y de no estar parado en el agua. Bajo condiciones de inundación, llame a su compañía eléctrica local o a un técnico electricista calificado para desconectar el servicio eléctrico antes de quitar la bomba.



▲ ADVERTENCIA Las bombas sumergibles contienen aceites que se presurizan y calientan bajo condiciones operativas.
Deje que pasen 2½ horas después de apagarla antes de proceder con el servicio.

CONDICIÓN		CAUSAS COMUNES
A.	La bomba no arranca o no funciona.	Verifique el fusible, voltaje bajo, protección contra sobrecarga abierta, cableado abierto o incorrecto, interruptor abierto, impulsor o sello trabado mecánicamente, capacitor o relé defectuoso, motor o cableado eléctrico en corto circuito. Conjunto del flotador enganchado. Interruptor defectuoso, dañado o fuera de punto.
B.	El motor se sobrecalienta y activa la protección contra sobrecarga o desconecta el fusible.	Voltaje incorrecto, carga negativa (descarga abierta menos de lo normal), impulsor o sello trabado mecánicamente, capacitor o relé defectuoso, motor en corto circuito.
C.	La bomba se encienda y se apaga muy a menudo.	El flotador está apretado en la varilla, la válvula de retención está atascada o no hay una instalada en una línea de larga distancia, protección contra sobrecarga abierta, interruptores defectuosos, foso del sumidero demasiado pequeño.
D.	La bomba no se apaga.	Hay escombros debajo del conjunto del flotador, el flotador o la varilla del flotador están trabados por los lados del foso u otros, interruptor defectuoso, dañado o fuera de punto.
E.	La bomba funciona pero sin o con poca agua.	Verifique la caja del filtro y la tubería de descarga, o si se usa una válvula de retención, el agujero de ventilación debe estar abierto. La carga de descarga excede la capacidad de la bomba. Voltaje bajo o incorrecto. Rotación incorrecta del motor. Capacitor defectuoso. El agua de entrada contiene aire o hace que el aire entre en la bomba.
F.	Caída en la carga y/o capacidad después de un período de uso.	Aumento de fricción en la tubería, línea o válvula de retención atascada. Material abrasivo o productos químicos adversos podrían haber deteriorado el impulsor o el cárter de la bomba. Revise la línea. Quite la base e inspeccione.

Si la lista de verificación arriba mencionada no revela el problema, consulte con la fábrica. No intente proporcionar algún servicio o desarmar la bomba. Las Estaciones de servicio autorizadas por Zoeller deberán proporcionar dicho servicio.
Visite el sitio www.zoellerpumps.com/servicestations para encontrar la estación de servicio autorizada para su zona.

© Copyright 2011 Zoeller Co. All rights reserved.

INSTALACIÓN RECOMENDADA PARA TODAS LAS APLICACIONES

1. El cableado y la protección eléctrica deben estar de acuerdo con el Código Eléctrico Nacional y todos los otros requisitos eléctricos locales y estatales aplicables.
2. Instale el "Unicheck" (combinación de unión y válvula de retención) apropiado de Zoeller, luego arriba del estanque para que se pueda quitar fácilmente la bomba para su limpieza o reparación. Si los sistemas para aguas cloacales, efluentes o achique requieren instalación de carga elevada o por debajo de la tapa, use 30-0164 en tubería de 38 mm (1½ pulg.), 30-0152 en tubería de 51 mm (2 pulg.) y 30-0160 en tubería de 76 mm (3 pulg.). Vea el número 4 más abajo.
3. Todas las instalaciones requieren una tapa para prevenir que escombros caigan dentro del estanque y prevenir lesiones accidentales.
4. Cuando instale un "Unicheck", perfore un agujero de 5 mm (3/16 pulg.) de diámetro en la tubería de descarga al mismo nivel de la parte superior de la bomba. NOTA: EL AGUJERO TAMBIÉN DEBERÁ ESTAR POR DEBAJO DE LA TAPA DEL ESTANQUE Y SE DEBE LIMPIARLO PERIÓDICAMENTE. (Para unidades de carga elevada, ver el número 3 de la lista de "Precauciones" en la página 1.) Se verá un chorro de agua saliendo del agujero durante los períodos de bombeo.
5. Fije firmemente el cable de alimentación eléctrica al tubo de descarga con cinta o abrazadera.
6. Use tubería de descarga de tamaño completo.
7. El estanque debe estar de acuerdo con los códigos y las especificaciones aplicables.
8. La bomba debe estar nivelada y el mecanismo del flotador libre de los lados del estanque antes de encender la bomba.
9. El estanque debe estar limpio y libre de escombros después de la instalación.
10. El instalador deberá suministrar una válvula de paso directo o una válvula de bola y instalarla de acuerdo con cualesquiera y todos los códigos.
11. La ubicación de los interruptores de flotador es como se muestra en el esquema a la izquierda. El punto "off" (apagado) debe estar por encima del cárter del motor y a 180° de la entrada. NOTA: PARA BOMBAS AUTOMATICAS, UTILICE EL ESQUEMA PARA LA INSTALACION PARA ACHIQUE MÁS ABAJO.
12. Los sellos herméticos contra gases son necesarios en todas las instalaciones de aguas cloacales a fin de contener los gases y olores.
13. Ventile los gases y olores a la atmósfera a través del tubo de ventilación. (sólo para cloaca y achique).
14. Instale el soporte para bomba Zoeller (Modelo 10-2421) debajo de la bomba para proporcionar un sumidero de decantación (sólo para efluente y achique).

Para efluente solamente:

15. La conexión del cableado de la bomba a la fuente de alimentación eléctrica debe hacerse a través de una caja de conexión hermética Zoeller o un empalme hermético. NOTA: La caja hermética es obligatoria en áreas húmedas. Vea FM0732. Vea el número 8 en la página 1.
16. Consulte el Manual sobre tamaños de efluentes del SSPMA para determinar la posición de los interruptores "on-off" (encendido-apagado).
17. Se debe usar tubos verticales en el tanque séptico para tener fácil acceso a la bomba y al filtro.
    NOTA: Las bombas de sello doble ofrecen protección adicional contra los daños causados por falla del sello.

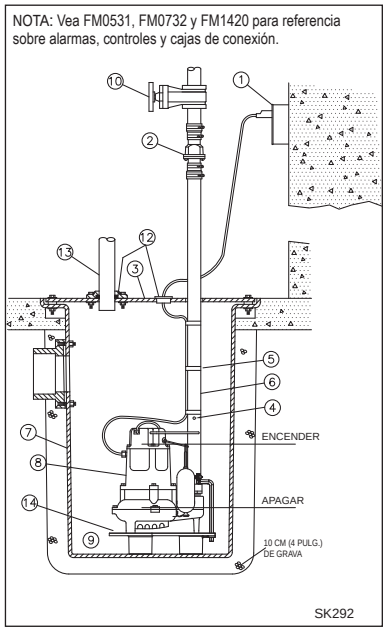

INSTALACIÓN TÍPICA PARA ACHIQUE

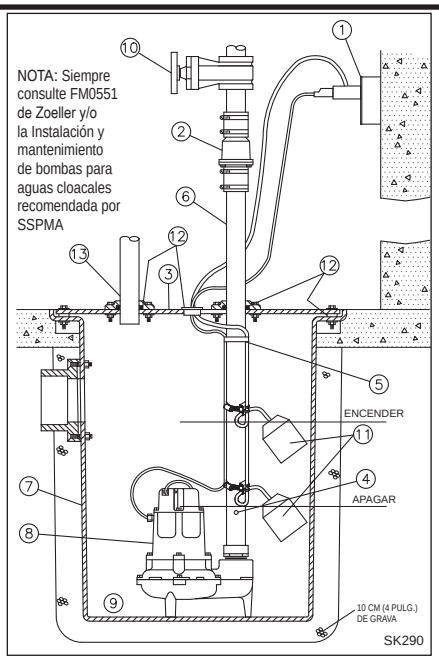

INSTALACIÓN TÍPICA PARA AGUAS CLOACALES

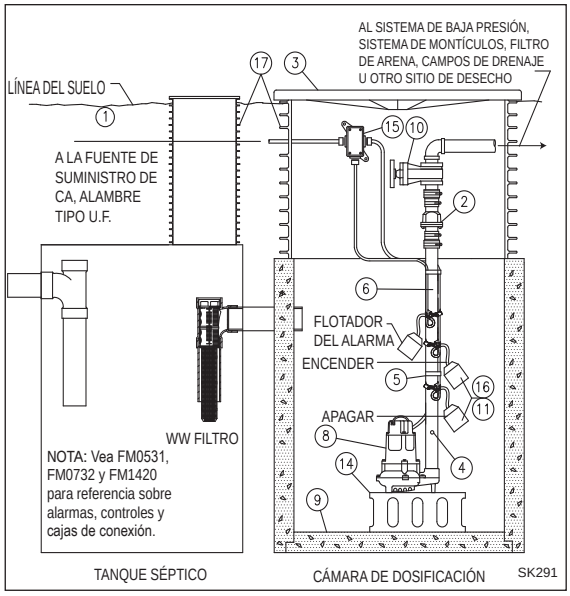

INSTALACIÓN TÍPICA PARA EFLUENTES

Todas las instalaciones deben cumplir con todos los códigos eléctricos y de instalación sanitaria aplicables, incluyendo, pero sin limitarse al Código Eléctrico Nacional, los códigos locales, regionales y/o los códigos estatales de instalación sanitaria, etc. No se debe usar las instalaciones en lugares peligrosos.

MÉTODOS SUGERIDOS PARA LA INSTALACIÓN DEL FLOTADOR

En algunas instalaciones es deseable instalar un soporte colgante independiente para los interruptores de control de nivel para evitar posibles enganches en las bombas, tubería, válvulas, etc. Los soportes colgantes del flotador se pueden comprar de Zoeller Company según la Hoja de catálogo FM0526, o fabricarse de tubería y empalmes comunes.

SOPORTE COLGANTE PARA FLOTADOR TÍPICO EN FOSOS CON TAPA DE ACERO

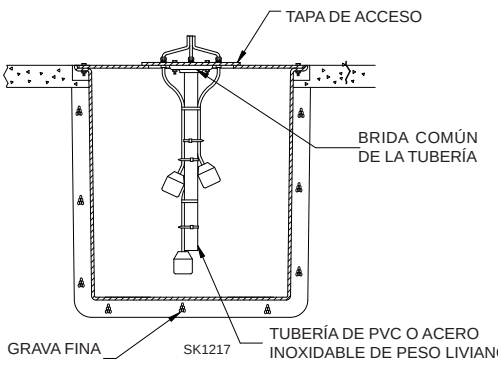

SOPORTE COLGANTE PARA FLOTADOR TÍPICO EN FOSOS DE CONCRETO O TUBOS VERTICALES PARA TANQUES SÉPTICOS

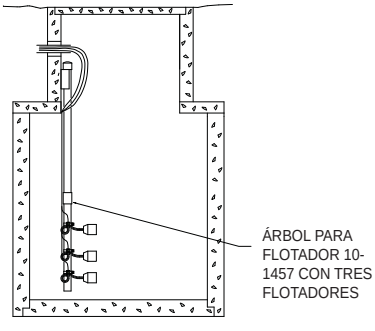

© Copyright 2011 Zoeller Co. All rights reserved.

INSTRUCCIONES PARA LA INSTALACIÓN DE LOS MODELOS WD Y WH

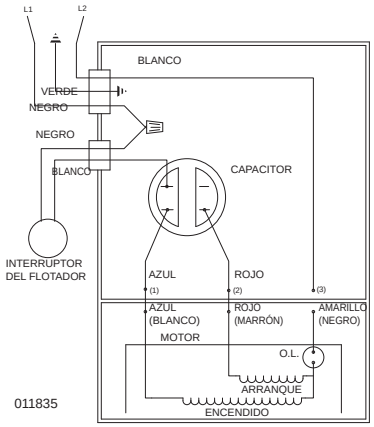

DIAGRAMA DE CABLEADO PARA LOS MODELOS:
WD-230V, 1 FASE, 60 CICLOS
WH-200/208V, 1 FASE, 60 CICLOS

Determinación del rango de bombeo en pulgadas
(1 pulg. = 2,5 cm)

Longitud de la atadura	5	10	15	20	22
	mín.				máx.
Rango de bombeo	9	13.5	18	22	24

Usar solamente como guía. Debido al peso del cable, el rango de bombeo sobre la horizontal no es igual al rango de bombeo debajo de la horizontal. Los rangos se basan en pruebas en condiciones no turbulentas. El rango puede variar debido a la temperatura del agua y a la forma del cable. A medida que aumenta la longitud de la atadura, también aumenta la variación en el rango de bombeo.

Los modelos WD y WH son completamente automáticos. Se incluye un interruptor de flotador con cableado de fábrica en el circuito de la bomba para proveer una operación automática una vez que el interruptor de flotador se haya atado correctamente a la tubería de salida. Use el diagrama de arriba para asegurar correctamente el interruptor de flotador y obtener la atadura apropiada para adecuar el ciclo de encendido-apagado a cada aplicación.

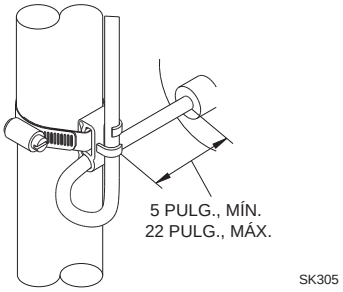

INTERRUPTOR DE 20 AMPERIOS
(MODELOS WD Y WH)

Nota: No tener en cuenta los límites adecuados de la atadura podría alterar el funcionamiento seguro del interruptor.
Nota: El cable debe ser instalado en posición horizontal.

INSTRUCCIONES PARA EL CABLEADO MONOFÁSICO

▲ ADVERTENCIA PARA SU PROTECCIÓN, SIEMPRE DESCONECTE LA BOMBA DE LA FUENTE DE ALIMENTACIÓN ELÉCTRICA ANTES DE MANIPULARLA. Las bombas monofásicas se suministran con enchufes de 3 patillas con puesta a tierra para ayudar a protegerle contra la posibilidad de choque eléctrico. NO RETIRE BAJO NINGUNA CIRCUNSTANCIA LA CLAVIJA DE PUESTA A TIERRA. Los enchufes de 3 patillas se deben introducir en un tomacorriente para 3 patillas apropiado. Si la instalación no posee un tomacorriente de este tipo, se debe cambiar por uno apropiado, cableado y con puesta a tierra de acuerdo al Código Eléctrico Nacional y a todas las ordenanzas y códigos locales aplicables.

▲ ADVERTENCIA "Riesgo de choque eléctrico". No quite el cable de alimentación eléctrica ni el dispositivo de alivio de tensión y no conecte un conductor directamente a la bomba.

▲ ADVERTENCIA La instalación y verificación de los circuitos eléctricos y del equipo deberán llevarse a cabo por un técnico electricista calificado.

▲ ADVERTENCIA A las unidades que se suministran sin enchufe (monofásico y trifásico) y a las unidades monofásicas no automáticas que poseen un enchufe de 20 amperios se les debe conectar un control de motor y un control de nivel de líquidos durante la instalación. Los niveles de voltaje, amperaje, frecuencia, puesta a tierra y potencia del dispositivo de control deben ser apropiados para la bomba a la cual se conecta.

INSTRUCCIONES PARA EL CABLEADO TRIFÁSICO

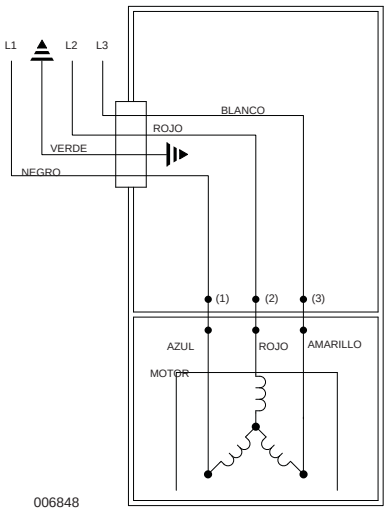

Las bombas trifásicas no son automáticas. Para operarlas automáticamente se requiere un panel de control. Siga las instrucciones provistas con el panel para completar el cableado del sistema. Para bombas trifásicas automáticas, ver el diagrama de cableado para bombas trifásicas automáticas a la derecha.

Antes de instalar una bomba, verifique la rotación de la misma para asegurarse de que los cables se hayan conectado correctamente a la fuente de alimentación eléctrica y que el conductor verde del cable de alimentación eléctrica (vea el diagrama de cableado) está conectado con puesta a tierra adecuada. Active momentáneamente la bomba, observando la dirección del retroceso debido a la torsión de arranque. La rotación es correcta si el retroceso está en dirección opuesta a la flecha de rotación en la caja de la bomba. Si la rotación no es correcta, cambiar dos de cualquiera de los conductores eléctricos, excepto el con puesta a tierra, proveerá la rotación apropiada.

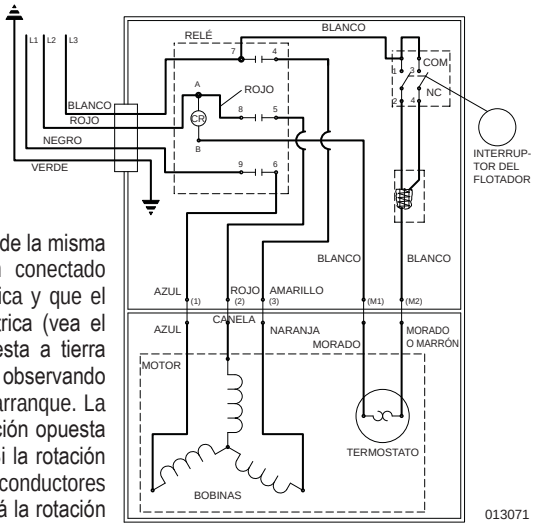

Todas las bombas trifásicas requieren dispositivos de arranque del motor con protección contra sobrecarga. Vea FM0514 para instalaciones simplex o FM0486 para instalaciones duplex. Las bombas se deben instalar de acuerdo al Código Eléctrico Nacional y a todas las ordenanzas y códigos locales aplicables. Las bombas no se deben instalar en sitios clasificados como peligrosos según el Código Eléctrico Nacional ANSI/NFPA 70.

▲ ADVERTENCIA PARA SU PROTECCIÓN, SIEMPRE DESCONECTE LA BOMBA DE LA FUENTE DE ALIMENTACIÓN ELÉCTRICA ANTES DE MANIPULARLA.

AVISO IMPORTANTE: Ciertas pólizas de seguro, tanto comerciales como residenciales, extienden la cobertura a los daños causados por la falla del producto. En la mayoría de los casos, usted deberá conservar el producto para respaldar su reclamo. Zoeller Pump Co. reemplazará la unidad o reembolsará el precio de compra original una vez que la compañía de seguros liquide el reclamo, en el caso de que usted necesite conservar el producto para respaldar un reclamo por daños que le haya presentado a su compañía de seguros.

© Copyright 2011 Zoeller Co. All rights reserved.

E-1138

Avis à l'installateur - Les instructions doivent rester avec l'installation.

FM2676F

Que vous dormiez en paix est notre priorité®

Les renseignements présentés ici reflètent les conditions au moment de la publication. Consulter l'usine en cas de contradiction ou d'inconsistance.

Zoeller Family of Water Solutions™

ADRESSE POSTALE : P.O. BOX 16437 • Louisville, KY 40256-0347 USA
ADRESSE PHYSIQUE : 3649 Cane Run Road • Louisville, KY 40211-1961 USA
TÉL : +1 (502)778-2731 • FAX +1 (502) 774-3624

www.zoeller.com

AVIS : TROU D'ÉVENT POUR LE CLAPET DE SÉCURITÉ VOIR N° 3 CI-DESSOUS ET N° 4 PAGE 3.

DATE D'INSTALLATION :
NUMÉRO DE MODÈLE :

INSTRUCTIONS D'INSTALLATION
MODÈLES RECOMMANDÉS

EFFLUENTS* / PUISARD / ASSÈCHEMENT	ÉGOUT
Série 49 / 53 / 57	Série 264
Série 137, Série 151 / 152 / 153	Série 266 / 267 / 268

LISTE DE VÉRIFICATIONS AVANT L'INSTALLATION - TOUTES LES INSTALLATIONS

1. Inspecter la pompe. De temps en temps, la pompe est endommagée en cours d'expédition. Si la pompe est endommagée, contacter le distributeur avant de l'utiliser. NE PAS enlever les bouchons test du couvercle ni du compartiment moteur.
2. Il faut lire attentivement tous les documents fournis pour se familiariser avec les détails spécifiques de l'installation et de l'utilisation. Il faut conserver ces documents pour pouvoir les consulter ultérieurement.

⚠ AVERTISSEMENT — **VOIR PLUS BAS POUR LA LISTE DES AVERTISSEMENTS**

1. Il faut vérifier que la prise est à portée du cordon d'alimentation de la pompe. NE PAS UTILISER DE RALLONGE. Les rallonges trop longues ou de trop faible capacité ne fournissent pas la tension nécessaire au moteur de la pompe, mais, encore plus important, elles peuvent être dangereuses si l'isolant est endommagé ou si l'extrémité avec le branchement tombe dans un endroit humide ou mouillé.
2. **Vérifier que le circuit d'alimentation de la pompe est équipé de fusibles ou de disjoncteurs de capacité appropriée.** Il est recommandé d'installer un circuit indépendant de capacité suffisante, conforme aux codes électriques nationaux pour la capacité indiquée sur la plaque d'identification de la pompe.
3. **Vérification de la mise à la terre.** Pour des raisons de sécurité, il faut vérifier la terre de chaque prise électrique en utilisant un analyseur de circuit sur la liste d'Underwriters Laboratory qui indique si les fils de phase, de neutre et de terre de la prise sont branchés correctement. S'ils ne sont pas branchés correctement, appeler un électricien agréé qualifié.
4. Pour des raisons de sécurité, les pompes et autre équipement équipés d'un fil à trois broches, avec mise à la terre, doivent être branchés sur une prise à trois broches. Pour des raisons de sécurité, la prise doit être protégée par un disjoncteur différentiel. Quand la pompe est branchée dans un boîtier de branchement étanche, il est possible d'enlever la fiche et de faire le branchement directement sur l'alimentation avec mise à la terre appropriée. Pour des raisons de sécurité, ce circuit peut être protégé par un disjoncteur différentiel. L'installation doit être conforme au code national d'électricité et tous les règlements locaux.
5. POUR DES RAISONS DE SÉCURITÉ, IL FAUT TOUJOURS DÉBRANCHER L'ALIMENTATION DE LA POMPE AVANT DE LA MANIPULER. Les pompes monophasées sont équipées d'un cordon avec fiche à trois broches de mise à terre pour protéger contre les électrocutions. IL NE FAUT JAMAIS ENLEVER LA BROCHE DE MISE À TERRE. Il faut brancher la fiche à trois broches dans une prise à trois broches de mise à terre. Si le circuit n'est pas équipé d'une telle prise, il faut en installer une en respectant le code national d'électricité et toute la législation et réglementation locales en vigueur. Les pompes triphasées doivent être équipées d'un dispositif de mise en marche avec protection thermique du moteur. Consulter la norme FM0486 pour les installations duplex.
6. La ventilation du réservoir doit être conforme au code de plomberie local. Les pompes doivent être installées conformément au code national d'électricité et à toute la législation et réglementation locales en vigueur. Les pompes ne doivent pas être installées dans des endroits classifiés à risque, conformément à la norme ANSI/NFPA 70 du Code national américain de l'électricité.
7. Risque d'électrocution. Ne pas enlever le cordon d'alimentation ni le distributeur de tension mécanique, ni brancher le conduit directement à la pompe.
8. L'installation et la vérification de l'équipement électrique doivent être faites par un électricien qualifié.
9. L'installation et la vérification de la pompe doivent être faites par une personne qualifiée.
10. Risque d'électrocution. L'usage de ce type de pompe dans une piscine de natation et des zones marines n'a pas été étudié.
11. Ce produit contient des produits chimiques dont l'état de la Californie a déterminer comme étant la cause de cancer et de déficiences à la naissance ou autres dommages reproductifs.

⚠ MISE EN GARDE — **VOIR PLUS BAS POUR LA LISTE DES MISES EN GARDE**

1. Vérifier que le circuit d'alimentation a une capacité suffisante pour alimenter le moteur, comme indiqué sur la pompe ou sur la plaque d'identification de l'appareil.
2. L'installateur est responsable de l'installation des pompes automatiques avec des interrupteurs à niveau variable ou des pompes non-automatiques utilisant des interrupteurs auxiliaires à niveau variable et il doit s'assurer que l'interrupteur à flotteur est installé fermement pour qu'il n'accroche pas à la pompe ni au puits pour permettre l'arrêt de la pompe. Il est recommandé d'utiliser du tuyau et des raccords rigides et le puits doit avoir un diamètre supérieur à 45 cm (18").
3. Renseignements sur le trou d'évent. Il est nécessaire que la pompe submersible, les pompes à effluents et d'égout capables de passer des solides de différentes tailles aient leur alimentation à la base pour réduire le colmatage et la défaillance des joints. Si l'installation comprend un clapet de sécurité, il faut percer un trou d'évent d'environ 5 mm (3/16") dans le tuyau de refoulement au-dessous du clapet de sécurité et le couvercle pour purger l'air de l'appareil. L'air emprisonné est causé par l'agitation et / ou un puits sec. Il faut vérifier périodiquement que le trou d'évent n'est pas colmaté. Les carters de pompe de la série 53 / 57 et 98 sont équipés d'un trou d'évent à l'opposé du flotteur, près du goujon du carter, du goujon du carter, mais un trou d'évent est recommandé. Le trou d'évent de l'application à une hauteur de refoulement dynamique élevée peut causer une turbulence trop élevée. Il peut être désirable de ne pas le percer. S'il est décidé de ne pas percer de trou d'évent, il faut s'assurer que le carter et le rotor de la pompe sont couverts de liquide avant de brancher le tuyau sur le clapet anti-retour et qu'aucune conduite d'aspiration n'amène de l'air à l'admission de la pompe. REMARQUE - LE TROU DOIT AUSSI ÊTRE AU-DESSOUS DU COUVERCLE DU PUITS ET IL FAUT LE NETTOYER RÉGULIÈREMENT. Un jet d'eau sera visible de cette orifice durant les périodes de fonctionnement de la pompe.
4. Il faut vérifier fréquemment qu'il n'y a pas de débris ni d'accumulation pouvant interférer avec le déplacement du flotteur de marche / arrêt. Les réparations ne doivent être faites que par un centre de réparation agréé par Zoeller Pump Company.
5. Les pompes d'assèchement mécanique et d'effluents sont conçues pour pompage d'eau usée non traitée dans un puits.
6. La température de fonctionnement maximale d'une pompe standard ne peut pas être plus de 54°C (130°F).
7. Il faut utiliser les pompes modèles 266, 267, et 137 en position verticale. Il ne faut pas essayer de mettre la pompe en marche quand elle est inclinée ou couchée sur le côté.
8. Il ne faut pas faire fonctionner la pompe dans une application où la hauteur de refoulement dynamique est inférieure à la hauteur de refoulement dynamique minimale donnée dans les courbes de refoulement et de capacité.

REMARQUE - Les pompes avec annotations "UL" et "US" sont vérifiées d'après la norme UL778. Les pompes certifiées CSA sont vérifiées d'après la norme C22.2 no 108.

SE RÉFÉRER À LA GARANTIE EN PAGE 2.

© Copyright 2011 Zoeller Co. All rights reserved.

E-1139

GARANTIE LIMITÉE

Le fabricant garantit à l'acheteur et au propriétaire ultérieur pendant la période de garantie, tout produit neuf contre tout vice de matériel et de main-d'œuvre, en utilisation normale et quand utilisé et entretenu correctement, pendant une période de 3 ans de la date de fabrication initiale. Les pièces devenant défectueuses pendant la période de garantie, et que des inspections prouvent contenir des vices de fabrication ou de main-d'œuvre, seront réparées, remplacées ou rénovées au choix du Fabricant, à condition qu'en faisant cela nous ne soyons pas obligés de remplacer l'ensemble, le mécanisme complet ou l'appareil complet. Aucune provision n'est faite pour les frais d'expédition, les dégâts, la main-d'œuvre ni d'autres frais causés par la défaillance, la réparation ou le remplacement du produit.

Cette garantie ne s'applique pas et ne couvre aucun matériel ou produit qui a été démonté sans l'autorisation préalable du Fabricant, soumis à un usage abusif, des applications incorrectes, de la négligence, des modifications, des accidents ou un cas de force majeure ; qui n'a pas été installé, utilisé ou entretenu selon les instructions d'installation du Fabricant; qui a été exposé, y compris, mais non de façon limitative, à du sable, des gravillons, du ciment, de la boue, du goudron, des hydrocarbures ou des dérivés d'hydrocarbures (huile, essence, solvants, etc.) ou à d'autres produits abrasifs ou corrosifs, serviettes ou produits d'hygiène féminine etc., dans toutes les applications de pompage. La garantie mentionnée ci-dessus remplace toutes les autres garanties expresses ou implicites et nous n'autorisons aucun représentant ou autre personne à accepter la responsabilité en notre nom pour nos produits.
Prendre contact avec le Fabricant, 3649 Cane Run Road, Louisville, KY 40211, à l'attention du Service à la Clientèle, pour obtenir des réparations, des pièces de remplacement ou des renseignements supplémentaires concernant la garantie.

LE FABRICANT REFUSE EXPRESSÉMENT TOUTE RESPONSABILITÉ POUR LES DÉGÂTS SPÉCIAUX, INDIRECTS OU SECONDAIRES OU POUR LES RUPTURES DE GARANTIE EXPRESSES OU IMPLICITES; ET TOUTE GARANTIE IMPLICITE D'APPLICABILITÉ À UNE UTILISATION SPÉCIFIQUE OU DE COMMERCIALITÉ EST LIMITÉE À LA DURÉE DE LA GARANTIE EXPRESSE.

Certaines provinces ne permettent pas les limitations de la durée de la garantie implicite et il est possible que cette limitation ne s'applique pas. Certaines provinces ne permettent pas l'exclusion ou la limitation des dégâts secondaires ou indirects, et il est possible que cette limitation ou exclusion ne s'applique pas.

Cette garantie vous donne des droits spécifiques reconnus par la loi et vous pouvez également avoir d'autres droits qui varient d'une province à l'autre.

CONSEILS POUR L'INSTALLATION D'UNE POMPE DE PUISARD

1. IL FAUT lire toutes les instructions d'installation fournies avec la pompe.
2. IL FAUT vérifier que les appareils n'ont pas été endommagés en cours d'expédition. Contacter le distributeur si la pompe a été endommagée.
3. IL FAUT nettoyer tous les débris dans le puisard. Vérifier qu'il y a une surface dure et plate à l'emplacement désiré pour la pompe. NE PAS installer la pompe sur du sable, du gravier ou de la terre.
4. IL FAUT vérifier que le puisard est assez large pour avoir de l'espace suffisant pour le bon fonctionnement des interrupteurs de commande de niveau.
5. IL FAUT toujours débrancher l'alimentation de la pompe avant de la manipuler.
   IL FAUT toujours brancher la pompe sur un circuit séparé mis à la terre.
   IL NE FAUT JAMAIS couper, faire une épissure ou endommager un cordon d'alimentation. (Pour faire une raccordement, il faut utiliser un boîtier de raccordement étanche.
   IL NE FAUT PAS utiliser le cordon d'alimentation pour transporter ou soulever la pompe.
   IL NE FAUT PAS utiliser de rallonge pour une pompe de puisard.
6. IL FAUT installer un clapet de sécurité et un raccord sur la conduite de refoulement. IL NE FAUT PAS utiliser une conduite de refoulement de diamètre inférieur à celui du refoulement de la pompe.
7. IL NE FAUT PAS utiliser une pompe de puisard comme pompe de tranchée ou d'excavation, ou pour pomper des égouts, de l'essence ou tout autre liquide dangereux.
8. IL FAUT essayer la pompe immédiatement après l'installation pour être certain que le système fonctionne correctement.
9. IL FAUT recouvrir la pompe de puisard d'un couvercle de puisard approprié.
10. IL FAUT étudier tous les codes locaux et nationaux applicables et vérifier que l'installation est conforme.
11. IL FAUT consulter le fabricant pour obtenir des clarifications ou des réponses aux questions.
12. IL FAUT considérer un système à deux pompes avec une alarme quand l'installation peut être surchargée ou si une défaillance de la pompe primaire causait des dégâts importants.
13. IL FAUT considérer un système de secours en courant alternatif quand une pompe de puisard ou d'séchage mécanique est nécessaire pour éviter des dégâts matériels en cas d'inondation à la suite d'une panne d'alimentation secteur, de problème mécanique ou électrique ou de surcharge du système.
14. IL FAUT inspecter le système et vérifier son fonctionnement au moins tous les trois mois.

LISTE DE VÉRIFICATIONS POUR L'ENTRETIEN



AVERTISSEMENT PRÉCAUTIONS AVEC LE SYSTÈME ÉLECTRIQUE – Avant de réparer la pompe, il faut toujours ouvrir le circuit et débrancher la pompe, en prenant soin de porter des chaussures à semelle isolante et de ne pas se tenir dans l'eau. En cas d'inondation, contacter la compagnie d'électricité ou un électricien agréé pour couper l'alimentation avant de déposer la pompe.

AVERTISSEMENT Les pompes submersibles contiennent de l'huile qui peut être sous pression ou devenir chaude en cours de fonctionnement. Attendre 2 heures et demi après l'avoir débranchée avant de travailler sur la pompe.

CONDITION	CAUSES FRÉQUENTES
A. La pompe ne démarre pas ou ne fonctionne pas.	Vérifier que le fusible est en bon état, que la tension est normale, que le circuit n'est pas surchargé et que le câblage est correct, que l'interrupteur n'est pas ouvert, que le rotor ou le joint n'est pas bloqué, que le condensateur ou le relais n'est pas défectueux, si installé, qu'il n'y a pas de court-circuit dans le moteur ou le bobinage. Flotteur bloqué en position basse. Interrupteur défectueux, endommagé ou mal réglé.
B. Le moteur surchauffe et déclenche le disjoncteur ou la sécurité thermique.	Mauvaise tension, hauteur de refoulement négative (refoulement ouvert au-dessous de la normale), blocage mécanique du rotor ou du joint, moteur court-circuité.
C. La pompe se met en marche et s'arrête trop fréquemment.	Flotteur grippé sur la tige, clapet de sécurité coincé ou pas de clapet installé sur une conduite longue, clapet de sécurité ouvert, interrupteurs de niveau défectueux, puits trop petit.
D. La pompe ne s'arrête pas.	Débris sous le flotteur, flotteur ou tige du flotteur coincé contre la paroi du puits, interrupteur défectueux, endommagé ou mal réglé.
E. La pompe fonctionne mais son débit est faible ou non existant.	Vérifier le carter de crépine, le tuyau de refoulement ou, si un clapet de sécurité est installé, le trou d'évent. La hauteur de refoulement est supérieure à la capacité de la pompe. Mauvaise tension. Mauvaise direction de rotation de la pompe. Condensateur défectueux. L'eau d'alimentation contient de l'air ou provoque l'entrée d'air dans la chambre de la pompe.
F. Baisse de capacité ou de hauteur de refoulement après une période d'utilisation.	Augmentation de la friction dans le tuyau de refoulement, tuyau ou clapet de sécurité colmaté. Des produits abrasifs ou des produits chimiques peuvent détériorer le rotor et le carter de pompe. Inspecter la conduite. Déposer la base et inspecter.

Si les vérifications ci-dessus ne résolvent le problème, consulter l'usine. Ne pas essayer de réparer ou de démonter la pompe. Toutes les réparations doivent être faites par un centre de réparation agréé par Zoeller. Visitez le site Web www.zoellerpumps.com/servicestations pour trouver le centre de service agréé le plus proche.

© Copyright 2011 Zoeller Co. All rights reserved.

INSTALLATION RECOMMANDÉE POUR TOUTES APPLICATIONS

(1) Les circuits et les protections électriques doivent être conformes aux normes des codes électriques nationaux, provinciaux et locaux.
(2) Installer un Unicheck (raccord / clapet de sécurité combiné) de Zoeller approprié, de préférence juste au-dessus du puits pour permettre la dépose de la pompe pour le nettoyage ou les réparations. Pour les égouts, les effluents ou les eaux d'assèchement mécanique, utiliser le modèle 30-0164 avec des tuyaux de 1-1/2" (38 mm), modèle 30-0152 avec des tuyaux de 2" (51 mm) et le modèle 30-0160 avec des tuyaux de 3" (76 mm) s'il faut une grande hauteur de refoulement ou en cas d'installation sous un couvercle. Voir (4) ci-dessous.
(3) Tous les puits doivent avoir un couvercle pour empêcher les débris d'y tomber et éviter les chutes accidentelles.
(4) Quand un Unicheck est installé, percer un trou de 5 mm (3/16") dans le tuyau de refoulement, de niveau avec le dessus de la pompe. Les pompes de la série 50 et 90 ont un trou d'évent intégré. REMARQUE – LE TROU DOIT AUSSI ÊTRE AU-DESSOUS DU COUVERCLE DU PUITS ET IL FAUT LE NETTOYER RÉGULIÈREMENT (pompes à hauteur de refoulement élevée, voir n° 3 de la première page « MISE EN GARDE »). Un jet d'eau sera visible de cette orifice durant les périodes de fonctionnement de la pompe.
(5) Attacher fermement le cordon d'alimentation électrique sur le tuyau de refoulement en utilisant du chatterton ou des colliers.
(6) Utiliser un tuyau de refoulement de pleines dimensions.
(7) Le puits doit être conforme à tous les règlements applicables.
(8) Avant la mise en service, la pompe doit être de niveau et le mécanisme du flotteur ne doit pas toucher les bords du puits.
(9) Après l'installation, le puits doit être propre et ne doit pas contenir de débris.
(10) L'installateur doit fournir la vanne d'arrêt et l'installer en respectant tous les codes.
(11) Identifier les interrupteurs à flotteur indiqués dans les illustrations. Le point d'arrêt doit être au-dessus du carter du moteur et à 180° de l'admission. Le point d'arrêt ne se doit trouver jamais au-dessous du refoulement de la pompe (uniquement pour les systèmes d'eaux usées et d'effluent). REMARQUE - pour les pompes automatiques, utiliser le schéma d'installation pour l'assèchement ci-dessous.
(12) Pour éviter la propagation des gaz et des odeurs, toutes les installations doivent avoir des joints étanches.
(13) Les gaz et les odeurs sont évacués à l'atmosphère au moyen d'un tuyau d'évent. (uniquement pour les systèmes d'eaux usées et d'assèchement).
(14) Installer la base de pompe Zoeller (modèle 10-2421) sous la pompe pour formir un bassin de décantation (uniquement pour les systèmes d'effluent et d'assèchement). ***Uniquement pour les systèmes d'effluent :***
(15) Brancher l'alimentation de la pompe par l'intermédiaire d'un boîtier étanche Zoeller ou d'une épissure étanche. ***REMARQUE – Le boîtier étanche est une nécessité absolue dans un milieu humide. Voir le n° 8 à la première page de FM0732.***
(16) Consulter le manuel de dimensions pour les égouts de SSPMA afin de déterminer le modèle d'interrupteur de marche / arrêt à utiliser.
(17) Un accès à la fosse septique doit être prévu pour l'entretien du filtre et de la pompe.

REMARQUE – Les pompes à joint double offrent une protection supplémentaire contre les dommages causés par la défaillance du joint.

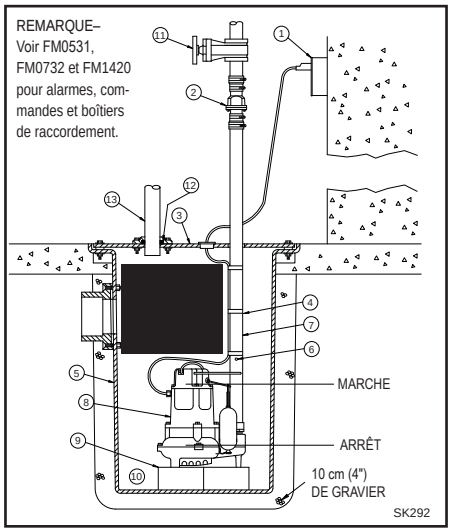

INSTALLATION TYPIQUE
POUR L'ASSÈCHEMENT MÉCANIQUE

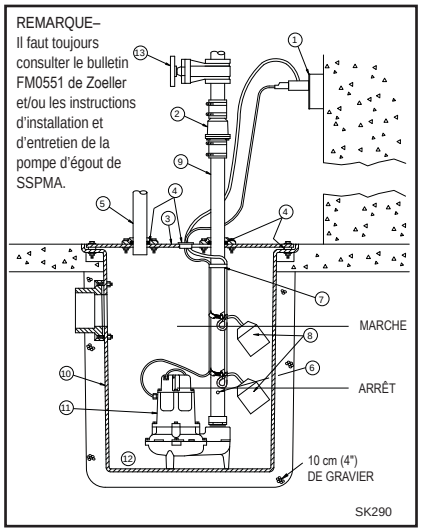

INSTALLATION TYPIQUE
POUR ÉGOUT

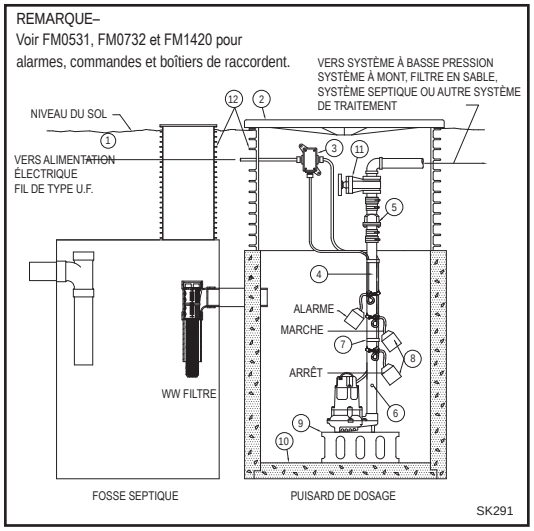

INSTALLATION TYPIQUE
POUR LES EFFLUENTS

Toutes les installations doivent être conformes aux codes électriques et de plomberie applicables, y compris, mais pas limité aux codes électriques nationaux, locaux, régionaux et aux codes de plomberie provinciaux. Pas conçu pour utilisation dans les endroits dangereux.

MÉTHODES SUGGÉRÉES POUR L'INSTALLATION DU FLOTTEUR

Pour certaines installations, il peut être nécessaire d'installer un support indépendant pour les interrupteurs de commande de niveau pour éviter des accrochages possibles sur la pompe, la tuyauterie, les vannes, etc. Il est possible de fabriquer les supports de flotteur en utilisant des tuyaux et des raccords standard pour faciliter la dépose en cas de réparation. Les supports de flottes sont disponible chez Zoeller tel que décrit au feuillet FM0526 ou peuvent être fabriqué avec de la tuyauterie et des raccords standard.

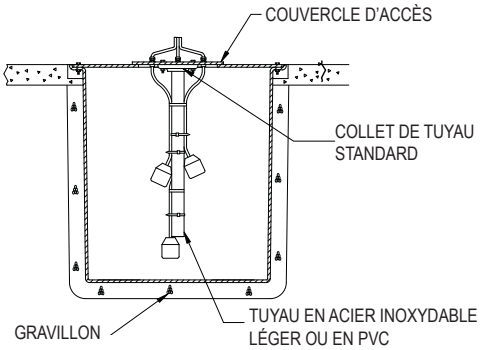

SUPPORT TYPIQUE DE FLOTTEUR POUR COUVERCLE DE PUITS EN ACIER

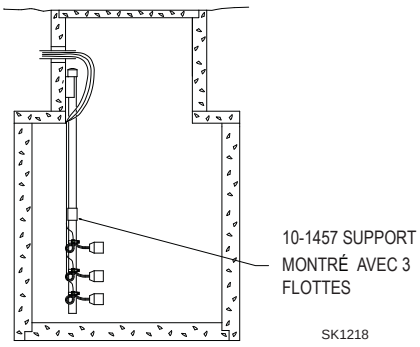

SUPPORT DE FLOTTES TYPIQUE POUR PUISARD EN BÉTON OU POUR PUIT D' ACCÉS DE FOSSE SEPTIQUE

© Copyright 2011 Zoeller Co. All rights reserved.

Installation des modèles WD et WH

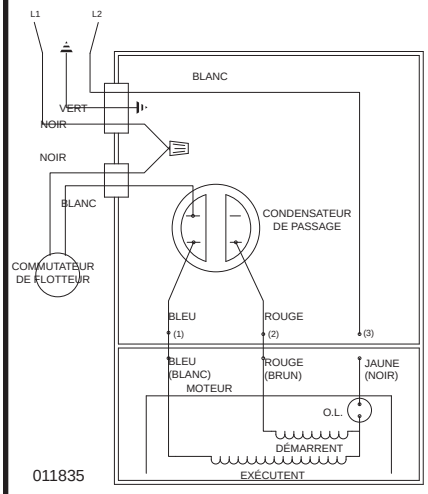

SCHÉMA ÉLECTRIQUE POUR LES MODÈLES
WD - 230 V, monophasé, 60 Hz
WH - 200/208, monophasé, 60 Hz

Définition de la plage de pompage en pouces (1 pouce = 2,5 cm)

Longueur du bras d'attache	5 min.	10	15	20	22 max.
Plage de pompage	9	13.5	18	22	24

Ce tableau ne doit être utilisé que comme guide. À cause du poids du câble, la plage de pompage au-dessus de l'horizontale n'est pas égale à la plage de pompage au-dessous de l'horizontale. Les plages sont basées sur des essais sans turbulence. La plage peut varier en fonction de la température de l'eau et de la forme du cordon. Plus le bras est long, plus les variations de plage de pompage sont importantes.

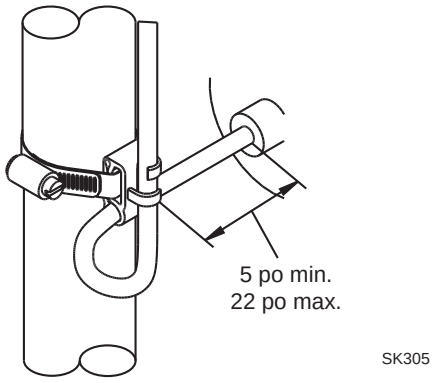

Interrupteur 20 amps (modèles WD et WH)

Les modèles WD et WH sont entièrement automatiques. Un interrupteur à flotteur est inclus et branché dans le circuit de la pompe pour permettre le fonctionnement automatique après avoir installé l'interrupteur à flotteur correctement sur le tuyau de refoulement. Il faut utiliser le schéma ci-dessus pour attacher correctement l'interrupteur à flotteur et obtenir un bras approprié pour modifier le cycle de marche-arrêt pour chaque application.

Remarque – L'interrupteur risque de mal fonctionner si le câble d'attache n'est pas maintenu dans les limites appropriées.

Remarque – Le câble doit être installé horizontalement.

Instructions de branchement monophasé

AVERTISSEMENT POUR DES RAISONS DE SÉCURITÉ, IL FAUT TOUJOURS DÉBRANCHER L'ALIMENTATION ÉLECTRIQUE DE LA POMPE AVANT L'INTERVENTION. Les pompes monophasées sont fournies avec une fiche à trois broches pour aider à protéger contre les risques d'électrocution. IL NE FAUT JAMAIS ENLEVER LA BROCHE DE TERRE. La fiche à trois broches doit être branchée dans une prise à trois alvéoles correspondantes. Si le circuit d'alimentation n'a pas une telle prise, il faut installer une prise du type approprié, branchée et mise à la terre selon le code national de l'électricité et tous les codes et règlements locaux appropriés.

AVERTISSEMENT « Risque d'électrocution ». Il ne faut pas enlever le cordon d'alimentation et le serre-câble ni brancher directement la pompe. L'installation et la vérification des circuits électriques et de la quincaillerie doivent être faites par un électricien qualifié.

AVERTISSEMENT Les unités non équipées d'une fiche (monophasée et triphasée) et les unités non automatiques monophasées à fiche de 20 ampères doivent être dotées d'une commande de moteur et d'un régulateur de niveau de liquide lors de l'installation. La tension, l'intensité, la fréquence, la mise à la terre et la puissance du dispositif de commande doivent s'accorder à la pompe sur lequel il est branché.

Instructions de branchement triphasé

Pompe non-automatique triphasée

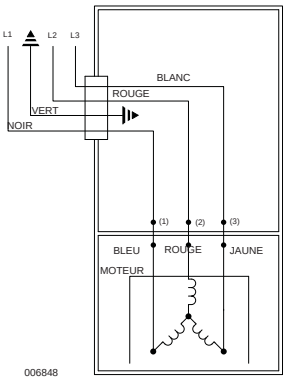

Les pompes triphasées ne sont pas automatiques. Pour qu'elles fonctionnent automatiquement, il faut installer un panneau de commande. Pour brancher le système, suivre les instructions fournies avec le panneau de commande. Pour trois phases automatique les pompes voient le diagramme de câblage automatique de 3 phases situé vers le droit.

Avant d'installer la pompe, vérifier la rotation de la pompe pour être certain que les fils ont été branchés correctement sur l'alimentation et que le fil vert du cordon d'alimentation (voir schéma électrique) est branché sur une bonne terre. Mettre la pompe momentanément sous tension et observer la direction du retour causé par le couple de démarrage. La rotation est correcte si le retour est en sense contraire à la flèche de rotation dans le carter de la pompe. Si la rotation n'est pas correcte, inverser deux des fils de phase pour obtenir la bonne direction de rotation.

Toutes les pompes triphasées doivent être équipées d'un dispositif de démarrage, avec dispositif de protection contre la surcharge. Voir FM0486 pour les installations duplex. La pompe doit être branchée conformément au code national de l'électricité et tous les codes et règlements locaux appropriés. Il ne faut pas installer les pompes dans un endroit classé dangereux conformément au code national de l'électricité, ANSI/NFPA 70.

Pompe automatique triphasée

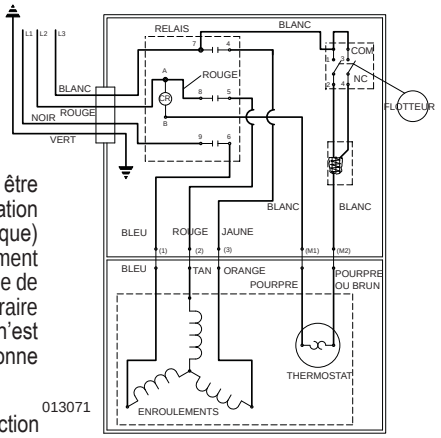

AVERTISSEMENT POUR DES RAISONS DE SÉCURITÉ, IL FAUT TOUJOURS DÉBRANCHER L'ALIMENTATION ÉLECTRIQUE DE LA POMPE AVANT L'INTERVENTION.

REMARQUE IMPORTANTE. – Certaines polices d'assurance commerciales et résidentielles couvrent les dommages résultant d'une défaillance du **produit. Dans la plupart des cas, vous devez être en possession du produit pour déposer une réclamation. Zoeller Pump Co. s'engage à remplacer l'appareil ou à rembourser le prix d'achat original après que l'assureur aura réglé la réclamation dans un cas où vous êtes tenu d'être en possession du produit pour documenter une réclamation soumise à votre assureur.**

© Copyright 2011 Zoeller Co. All rights reserved.

Your Peace of Mind is Our Top Priority®

Product information presented here reflects conditions at time of publication. Consult factory regarding discrepancies or inconsistencies.

Zoeller Family of Water Solutions™

MAIL TO: P.O. BOX 16347 • Louisville, KY 40256-0347
SHIP TO: 3649 Cane Run Road • Louisville, KY 40211-1961
(502) 778-2731 • 1 (800) 928-PUMP • FAX (502) 774-3624

SECTION: 6.10.396
FM1790
0300
Supersedes
NEW

visit our web site: www.zoeller.com

REPLACEMENT PARTS LIST FOR MODELS:

M72 AUTOMATIC 115V
N72 NONAUTOMATIC 115V
M76 AUTOMATIC 115V
N76 NONAUTOMATIC 115V

Consult factory for all other models

TO ORDER REPLACEMENT PARTS:

PLEASE FURNISH THE FOLLOWING INFORMATION:

- Model Number.
- Part Number of Pump.
- Part Number and Description of part.

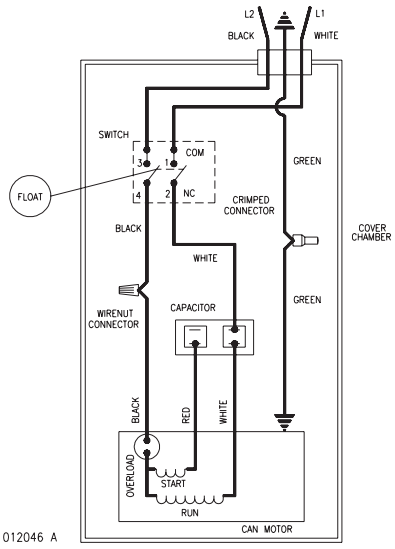

WIRING DIAGRAM FOR MODEL
M72
7/99 THRU CURRENT

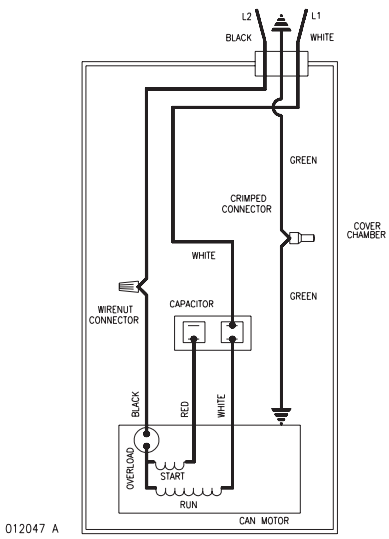

WIRING DIAGRAM FOR MODEL
N72
7/99 THRU CURRENT

© Copyright 2012 Zoeller Co. All rights reserved.

REPLACEMENT PARTS LIST FOR MODELS: "M72", "N72", "M76" and "N76".

MODEL: M72			Rev. A
REF. NO.	DESCRIPTION	QTY	7/99 thru Current
1	Guard/Handle	1	012029
2	Float-Polypropylene	1	034019
3	Float-Rod	1	054062
4	Guide	1	012043
5	Base	1	012028
6	Pump Housing	1	012027
7	Screw	13	012042

MODEL: N72			Rev. A
REF. NO.	DESCRIPTION	QTY	7/99 thru Current
1	Handle	1	012030
2	N/A	N/A	N/A
3	N/A	N/A	N/A
4	N/A	N/A	N/A
5	Base	1	012028
6	Pump Housing	1	012027
7	Screw	13	012042

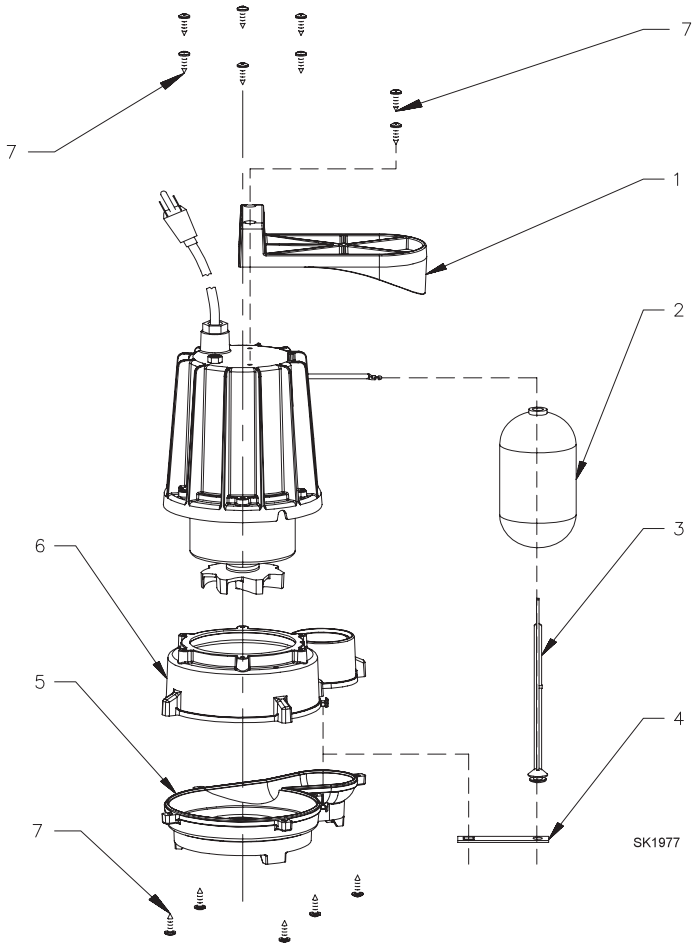

MODEL: M76			Rev. A
REF. NO.	DESCRIPTION	QTY	02/00 thru Current
1	Guard/Handle	1	012029
2	Float-Polypropylene	1	034019
3	Float-Rod	1	002524
4	Guide	1	012043
5	Base	1	012028
6	Pump Housing	1	012048
7	Screw	13	012042

MODEL: N76			Rev. A
REF. NO.	DESCRIPTION	QTY	02/00 thru Current
1	Handle	1	012030
2	N/A	N/A	N/A
3	N/A	N/A	N/A
4	N/A	N/A	N/A
5	Base	1	012028
6	Pump Housing	1	012048
7	Screw	13	012042

ZOELLER®

MAIL TO: P.O. BOX 16347 • Louisville, KY 40256-0347
SHIP TO: 3649 Cane Run Road • Louisville, KY 40211-1961
(502) 778-2731 • 1 (800) 928-PUMP • FAX (502) 774-3624

Your Peace of Mind is Our Top Priority®

visit our web site: www.zoeller.com

© Copyright 2012 Zoeller Co. All rights reserved.

Assembly and operating instructions

DULCOMETER®, Compact Controller
Measured variable: pH / ORP

PH-501 - Transmitter, pH, Prominent Dulcometer pH or ORP4-20mA output, 7781499

EN



Please carefully read these operating instructions before use. · Do not discard.
The operator shall be liable for any damage caused by installation or operating errors.
The latest version of the operating instructions are available on our homepage.

Part no.: 986214
E-1145
BA DM 207 08/15 EN

General non-discriminatory approach

In order to make it easier to read, this document uses the male form in grammatical structures but with an implied neutral sense. It is aimed equally at both men and women. We kindly ask female readers for their understanding in this simplification of the text.

Supplementary information

Please read the supplementary information in its entirety.

Information



This provides important information relating to the correct operation of the unit or is intended to make your work easier.

Safety Information

The safety information includes detailed descriptions of the hazardous situation, see
↳ *Chapter 2.1 'Explanation of the safety information' on page 8*

The following symbols are used to highlight instructions, links, lists, results and other elements in this document:

More symbols

Symbol	Description
1. ▶	Action, step by step
⇨	Outcome of an action
↳	Links to elements or sections of these instructions or other applicable documents
■	List without set order
[Button]	Display element (e.g. indicators) Operating element (e.g. button, switch)
'Display /GUI'	Screen elements (e.g. buttons, assignment of function keys)
`CODE`	Presentation of software elements and/or texts

Table of contents

1 Identity code 6

2 Introduction 8

2.1 Explanation of the safety information 8

2.2 Users' qualifications 10

3 Safety and responsibility 12

3.1 General Safety Information 12

3.2 Correct and proper use 13

4 Functional description 15

4.1 Flow diagram 16

4.2 Overview of the first level menu 17

5 Assembly and installation 20

5.1 Scope of delivery 22

5.2 Mounting (mechanical) 22

5.2.1 Wall mounting 22

5.2.2 Pipe mounting 24

5.2.3 Control panel mounting 25

5.3 Installation (electrical) 33

5.3.1 Cable Cross-Sections and Cable End Sleeves 34

5.3.2 Installation of coaxial cable to guard terminal XE1 34

5.3.3 Installation (electrical) 39

5.4 Switching of inductive loads 39

6 Commissioning 41

6.1 Initial commissioning 41

6.2 Selection of the measured variable 41

6.3 Setting the controller during commissioning 41

7 Operating diagram 43

7.1 Overview of equipment/Control elements 43

7.2 Adjusting display contrast 44

7.3 Continuous display 45

7.4 Info display 45

7.5 Password 47

8 Operating menus for the measured variables pH and ORP 48

8.1 pH sensor calibration (CAL) 48

8.2 Redox sensor calibration (CAL) ... 56
8.3 Setting limit values *[LIMITS]* ... 58
8.4 Setting the control *[CONTROL]* ... 60
8.5 Input setting (INPUT) ... 63
8.6 Output setting (OUTPUT) ... 66
8.7 DEVICE setting ... 70

9 Control parameters and functions ... 71
9.1 DULCOMETER® Compact Controller function states ... 71
9.2 STOP/START key ... 73
9.3 Priming (PRIME) ... 74
9.4 Hysteresis limit ... 75
9.5 Temperature correction variable for pH ... 76
9.6 Checkout time for measured variable and correction variable ... 77
9.7 Checkout time control ... 77
9.8 Power relay "P-REL" as limit value relay ... 78
9.9 Setting and functional description of "Relay Used as a Solenoid Valve" ... 79
9.10 Alarm relay ... 81
9.11 "Error logger" operating mode ... 81

10 Maintenance ... 82
10.1 Changing the fuse, DULCOMETER® Compact Controller ... 82
10.2 Fault reporting and troubleshooting ... 83

11 Technical data DULCOMETER® Compact Controller ... 86
11.1 Permissible ambient conditions ... 86
11.2 Sound Pressure Level ... 86
11.3 Material data ... 87
11.4 Chemical Resistance ... 87
11.5 Dimensions and weights ... 88

12 Electrical data ... 89

13 Spare parts and accessories ... 92

14 Replacing spare part units ... 93
14.1 Replacing the top part of the housing ... 93
14.2 Replacing the lower part of the housing (wall/tube retaining bracket) ... 95
14.3 Replacing the lower part of the housing (control panel installation) ... 97

15 Standards complied with and Declaration of Conformity ... 100

16 Disposal of Used Parts 101
17 Index 102

1 Identity code

DCCa	DULCOMETER® Compact,								
	Mounting type								
	E	Spare part units							
	W	Wall/pipe mounting IP 67							
	S	With fitting kit for control panel mounting IP 54							
		Design							
		00	With ProMinent® logo						
		E1	Spare part unit, controller housing lower part (processor/PCB), fully assembled						
		E2	Spare part unit, controller housing top part (processor/PCB), fully assembled						
			Operating voltage						
			6	90 … 253 V, 48/63 Hz					
				Measured variable					
				C0	Free chlorine				
				NG	pH/ORP (switchable)				
				L3	Conductive conductivity (designation: COND_C)				
				L6	Inductive conductivity (designation: COND_I)				
					Hardware extension				
					0	None			
					Approvals				
					01	CE (Standard)			
						Certificates			
						0	None		
							Operating instructions language		
							EN	German	KR	Korean

DCCa	DULCOMETER® Compact,									
							EN	English	LT	Lithuanian
							ES	Spanish	LV	Latvian
							IT	Italian	NL	Dutch
							FR	French	PL	Polish
							FI	Finish	PT	Portuguese
							BG	Bulgarian	RO	Romanian
							ZH	Chinese	SV	Swedish
							CZ	Czech	SK	Slovakian
							EL	Greek	SL	Slovenian
							HU	Hungarian	RU	Russian
							YES	Japanese	TH	Thai

2 Introduction

Data and functions

These operating instructions describe the technical data and functions of the DULCOMETER® Compact Controller, measured variable pH / ORP.

2.1 Explanation of the safety information

Introduction

These operating instructions provide information on the technical data and functions of the product. These operating instructions provide detailed safety information and are provided as clear step-by-step instructions.

The safety information and notes are categorised according to the following scheme. A number of different symbols are used to denote different situations. The symbols shown here serve only as examples.

DANGER!

Nature and source of the danger

Consequence: Fatal or very serious injuries.

Measure to be taken to avoid this danger

Danger!

– Denotes an immediate threatening danger. If this is disregarded, it will result in fatal or very serious injuries.

WARNING!

Nature and source of the danger

Possible consequence: Fatal or very serious injuries.

Measure to be taken to avoid this danger

Warning!

– Denotes a possibly hazardous situation. If this is disregarded, it could result in fatal or very serious injuries.

CAUTION!

Nature and source of the danger

Possible consequence: Slight or minor injuries, material damage.

Measure to be taken to avoid this danger

Caution!

– Denotes a possibly hazardous situation. If this is disregarded, it could result in slight or minor injuries. May also be used as a warning about material damage.

NOTICE!

Nature and source of the danger

Damage to the product or its surroundings

Measure to be taken to avoid this danger

Note!

– Denotes a possibly damaging situation. If this is disregarded, the product or an object in its vicinity could be damaged.

Type of information

Hints on use and additional information

Source of the information, additional measures

Information!

– *Denotes hints on use and other useful information. It does not indicate a hazardous or damaging situation.*

2.2 Users' qualifications

WARNING!

Danger of injury with inadequately qualified personnel!

The operator of the plant / device is responsible for ensuring that the qualifications are fulfilled.

If inadequately qualified personnel work on the unit or loiter in the hazard zone of the unit, this could result in dangers that could cause serious injuries and material damage.

– All work on the unit should therefore only be conducted by qualified personnel.
– Unqualified personnel should be kept away from the hazard zone

Training	Definition
Instructed personnel	An instructed person is deemed to be a person who has been instructed and, if required, trained in the tasks assigned to him/her and possible dangers that could result from improper behaviour, as well as having been instructed in the required protective equipment and protective measures.
Trained user	A trained user is a person who fulfils the requirements made of an instructed person and who has also received additional training specific to the system from ProMinent or another authorised distribution partner.
Trained qualified personnel	A qualified employee is deemed to be a person who is able to assess the tasks assigned to him and recognize possible hazards based on his/her training, knowledge and experience, as well as knowledge of pertinent regulations. The assessment of a person's technical training can also be based on several years of work in the relevant field.

Training	Definition
Electrician	Electricians are deemed to be people, who are able to complete work on electrical systems and recognize and avoid possible hazards independently based on his/her technical training and experience, as well as knowledge of pertinent standards and regulations. Electricians should be specifically trained for the working environment in which the are employed and know the relevant standards and regulations. Electricians must comply with the provisions of the applicable statutory directives on accident prevention.
Customer Service department	Customer Service department refers to service technicians, who have received proven training and have been authorised by ProMinent to work on the system.



Note for the system operator

The pertinent accident prevention regulations, as well as all other generally acknowledged safety regulations, must be adhered to!

3 Safety and responsibility

3.1 General Safety Information

WARNING!

Live parts!

Possible consequence: Fatal or very serious injuries

- Measure: Disconnect the mains power supply prior to opening the housing
- De-energise damaged, defective or manipulated units by disconnecting the mains plug

WARNING!

Unauthorised access!

Possible consequence: Fatal or very serious injuries

- Measure: Ensure that there can be no unauthorised access to the unit

WARNING!

Operating errors!

Possible consequence: Fatal or very serious injuries

- The unit should only be operated by adequately qualified and technically expert personnel
- Please also observe the operating instructions for controllers and fittings and any other component groups, such as sensors, measuring water pumps ...
- The operator is responsible for ensuring that personnel are qualified

CAUTION!

Electronic malfunctions

Possible consequence: Material damage to destruction of the unit

- The mains connection cable and data cable should not be laid together with cables that are prone to interference
- Measure: Take appropriate interference suppression measures

NOTICE!

Correct and proper use

Damage to the product or its surroundings

- The unit is not intended to measure or regulate gaseous or solid media
- The unit may only be used in accordance with the technical details and specifications provided in these operating instructions and in the operating instructions for the individual components

NOTICE!

Correct sensor operation / Run-in time

Damage to the product or its surroundings

- Correct measuring and dosing is only possible if the sensor is working perfectly
- It is imperative that the run-in times of the sensors are adhered to
- The run-in times should be allowed for when planning initial operation
- It may take a whole working day to run-in the sensor
- Please read the operating instructions for the sensor

NOTICE!

Correct sensor operation

Damage to the product or its surroundings

- Correct measuring and dosing is only possible if the sensor is working perfectly
- Check and calibrate the sensor regularly

NOTICE!

Compensation of control deviations

Damage to the product or its surroundings

- This controller cannot be used in control circuits which require rapid compensation (< 30 s)

3.2 Correct and proper use

NOTICE!

Compensation for control deviations

Damage to the product or its surroundings

- The controller can be used in processes, which require compensation of > 30 seconds

NOTICE!

Correct and proper use

The unit is intended to measure and regulate liquid media. The marking of the measured variables is located on the controller and is absolutely binding.

The unit may only be used in accordance with the technical details and specifications provided in this operating manual and in the operating manuals for the individual components (such as, for example, sensors, fittings, calibration devices, metering pumps etc.).

Any other uses or modifications are prohibited.

4 Functional description

Brief functional description

The DULCOMETER® Compact Controller for pH and redox measured variables provides basic functions for water treatment applications. It has a fixed configuration with the following features:

- Measured variables pH and redox (can be switched over on the DULCOMETER® Compact Controller)
- Language independent operation (use of abbreviations, such as *[INPUT]*, *[OUTPUT]*, *[CONTROL]*, *[ERROR]*)
- Illuminated display
- 3 LEDs indicate the operating states (*[f-REL]* active, *[P-REL]* active, error)
- Sensor monitoring of pH
- P or PID control characteristics
- Selectable control direction (raise or lower measured value)
- Impulse frequency relay *[f-REL]* for metering pump control
- Power relay *[P-REL]*, configurable as alarm, limit value or pulse width modulated (PWM) control output for metering pumps
- Analogue output 0/4…20 mA, can be configured as a measured value or correction variable
- Suction function for all actuators
- Digital input to switch off the DULCOMETER® Compact Controller or to process a sample water limit contact by remote control
- Temperature sensor input (Pt 1000) for temperature compensation of the pH value
- Protection class IP67 (wall/pipe mounting), protection class IP54 (control panel mounting)

Applications:

- Waste water treatment
- Treatment of drinking water
- Swimming pool water treatment

4.1 Flow diagram

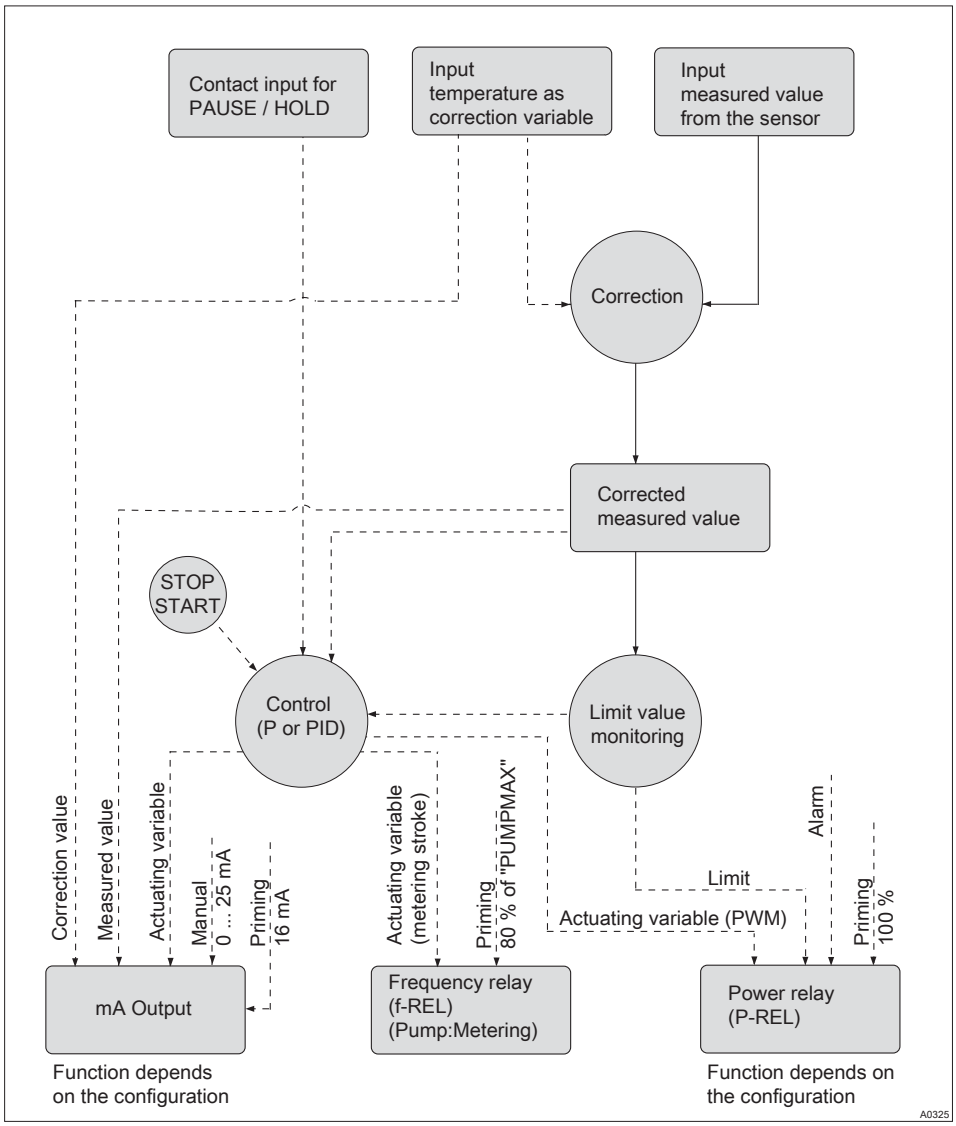

Fig. 1: Flow diagram

4.2 Overview of the first level menu

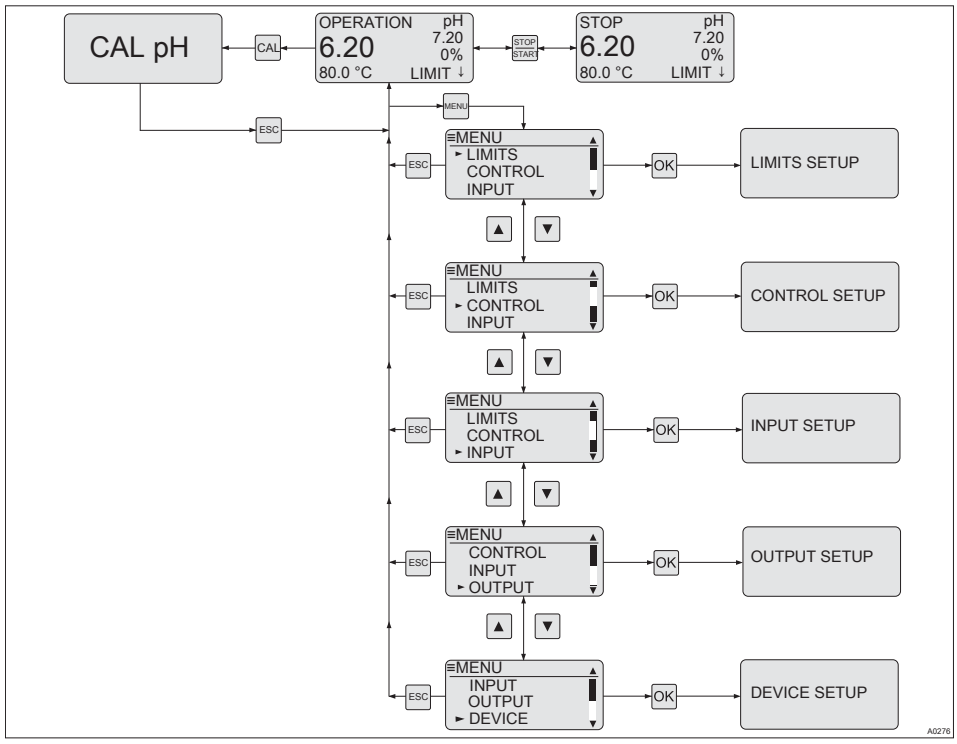

Fig. 2: Overview of the first level menu; shown for pH

Display view	Selection with:	Reference	Function
OPERATION pH 6.20 7.20 0% 80.0 °C LIMIT ↓		*Chapter 7 'Operating diagram' on page 43*	
CAL			Changes to the calibration menu.

Display view	Selection with:	Reference	Function
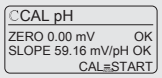	CAL	*Chapter 8.1 'pH sensor calibration (CAL)' on page 48*	The calibration menu enables calibration of controller and sensor.
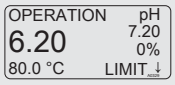			
STOP START			Stop/Start the control and metering function.
	STOP START	*Chapter 9.2 'STOP/START key' on page 73*	By pressing the STOP key, the control is stopped. The STOP key can be pressed independently of the currently displayed menu. However the STOP state is only shown in the continuous display.
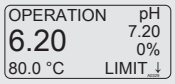	MENU	*Chapter 7.3 'Continuous display' on page 45*	Changes from the continuous display to the setting menu.
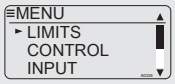	OK	*Chapter 8.3 'Setting limit values [LIMITS]' on page 58*	Enables the setting of the limit value for limit value monitoring.
▲ ▼			
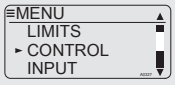	OK	*Chapter 8.4 'Setting the control [CONTROL]' on page 60*	Enables parameter setting for the control.
▲ ▼			

Display view	Selection with:	Reference	Function
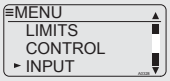	OK	*Chapter 8.5 'Input setting (INPUT)' on page 63*	Enables setting of the measured value input parameter.
			
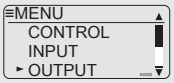	OK	*Chapter 8.6 ' Output setting (OUTPUT)' on page 66*	Enables setting of the mA output parameter.
			
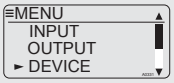	OK	*Chapter 8.7 'DEVICE setting' on page 70*	Enables adjustment of the password and the controller *[RESTART]* function.

5 Assembly and installation

- **User qualification, mechanical installation:** trained qualified personnel, see ↳ *Chapter 2.2 'Users' qualifications' on page 10*
- **User qualification, electrical installation:** Electrical technician, see ↳ *Chapter 2.2 'Users' qualifications' on page 10*

⚠ CAUTION!

Possible consequence: Material damage.

The hinge between the front and rear part of the housing cannot absorb high levels of mechanical loading. When working on the DULCOMETER® Compact Controller, firmly hold the top section of the controller housing.

⚠ CAUTION!

Check band for strain relief

Possible consequence: Material damage.

The ribbon cable and its socket cannot be mechanically loaded. Hence it is essential that when mounting the controller in the control panel mounting, the check strap (part number 1035918) is fitted for strain relief and mechanical securing. Without the check strap, the ribbon cable or its socket could be damaged if they were to fall out of the controller upper housing.

! NOTICE!

Mounting position and conditions

- The controller conforms to IP 67 degree of protection (wall/pipe mounting) or IP 54 (control panel mounting) requirements. This degree of protection is only achieved if all seals and cable glands are correctly fitted.
- The (electrical) installation should only take place after (mechanical) installation
- Ensure that there is unimpeded access for operation
- Ensure safe and low-vibration fastening
- Avoid direct sunlight
- Permissible ambient temperature of the controller at the installation location: -10 ... +60 °C at max. 95% relative air humidity (non-condensing)
- Take into consideration the permissible ambient temperature of the sensors and other components connected
- The controller is only suitable for operation in closed rooms. If operated outside, the controller must be protected against the environment by a suitable protective enclosure

Read-off and operating position

- *Install the device in a favourable position for reading and operating (preferably at eye level)*

Mounting position

– *Leave sufficient free space for the cables*

Packaging material

Dispose of packaging material in an environmentally responsible way. All packaging components carry the corresponding recycling code.

5.1 Scope of delivery

The following parts belong to the standard scope of delivery of a DULCOMETER® Compact Controller.

Description	Quantity
Assembled device	1
Cable connection set DMTa/DXMa (metr.)	1
Operating instructions	1

5.2 Mounting (mechanical)

The DULCOMETER® Compact Controller is suitable for mounting on a wall, pipe or control panel.

Mounting materials (contained in the scope of supply):

Description	Quantity
Wall/tube retaining bracket	1
Round head screws 5x45 mm	2
Washer 5.3	2
Rawlplug Ø 8 mm, plastic	2

5.2.1 Wall mounting

Mounting (mechanical)

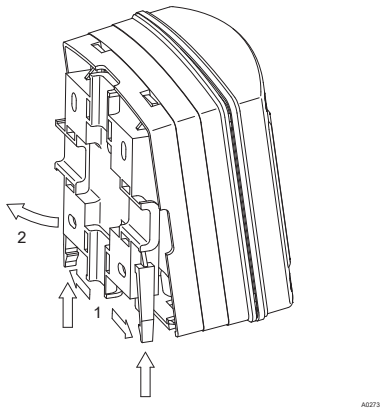

Fig. 3: Removing the wall/pipe bracket

1. Remove the wall/pipe bracket. Pull the two snap-hooks (1) outwards and push upwards
2. Fold out the wall/pipe bracket (2) and pull out in a downwards direction
3. Mark two drill holes diagonal to each other by using the wall/pipe bracket as a drilling template
4. Drill holes: Ø 8 mm, d = 50 mm

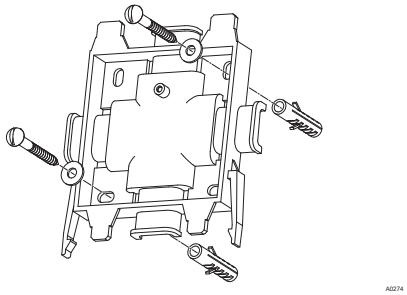

Fig. 4: Screwing on the wall/pipe bracket using washers

5. Screw on the wall/pipe bracket using the washers
6. Suspend the DULCOMETER® Compact Controller at the top in the wall/pipe bracket and push using light pressure at the bottom against the wall/pipe bracket. Then press upwards until the DULCOMETER® Compact Controller audibly snaps into position.

5.2.2 Pipe mounting

Mounting (mechanical)

Pipe diameter

Pipe diameter: 25 mm to 60 mm.

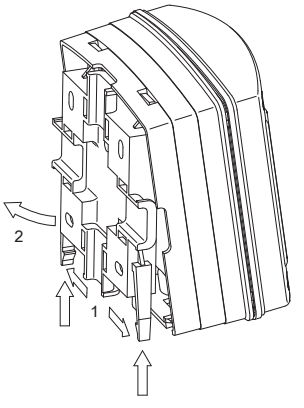

Fig. 5: Removing the wall/pipe bracket

1. Remove the wall/pipe bracket. Pull the two snap-hooks (1) outwards and push upwards
2. Fold out the wall/pipe bracket (2) and pull out in a downwards direction
3. Secure the wall/pipe bracket using cable ties (or pipe clips) to the pipe

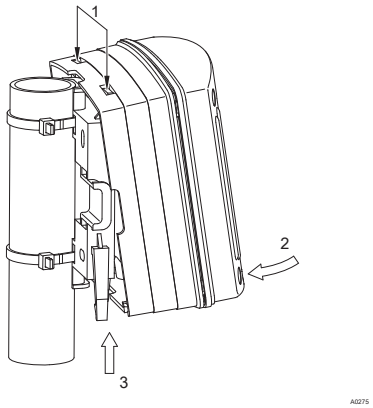

Fig. 6: Suspend and secure the DULCOMETER® Compact Controller

4. Suspend the DULCOMETER® Compact Controller at the top (1) in the wall/pipe bracket and push using light pressure at the bottom (2) against the wall/pipe bracket. Then press upwards (3) until the DULCOMETER® Compact Controller audibly snaps into position

5.2.3 Control panel mounting

Mounting kit for control panel installation of the DULCOMETER® Compact Controller: Order number 1037273

Description	Quantity
Drilling template sheet 3872-4	1
PT screw (3.5 x 22)	3
Profile seals	2
Strain relief strip DF3/DF4	1
PT screw (3.5 x 10)	2
Individual parts packed in transparent cover / Mounting kit is not contained in the standard scope of supply	

CAUTION!

Material thickness of control panel

Possible consequence: material damage

– The thickness of the material of the control panel should be at least 2 mm to ensure secure fixing

In the mounted state, the DULCOMETER® Compact Controller extends approx. 30 mm from the control panel.

Preparing the control panel

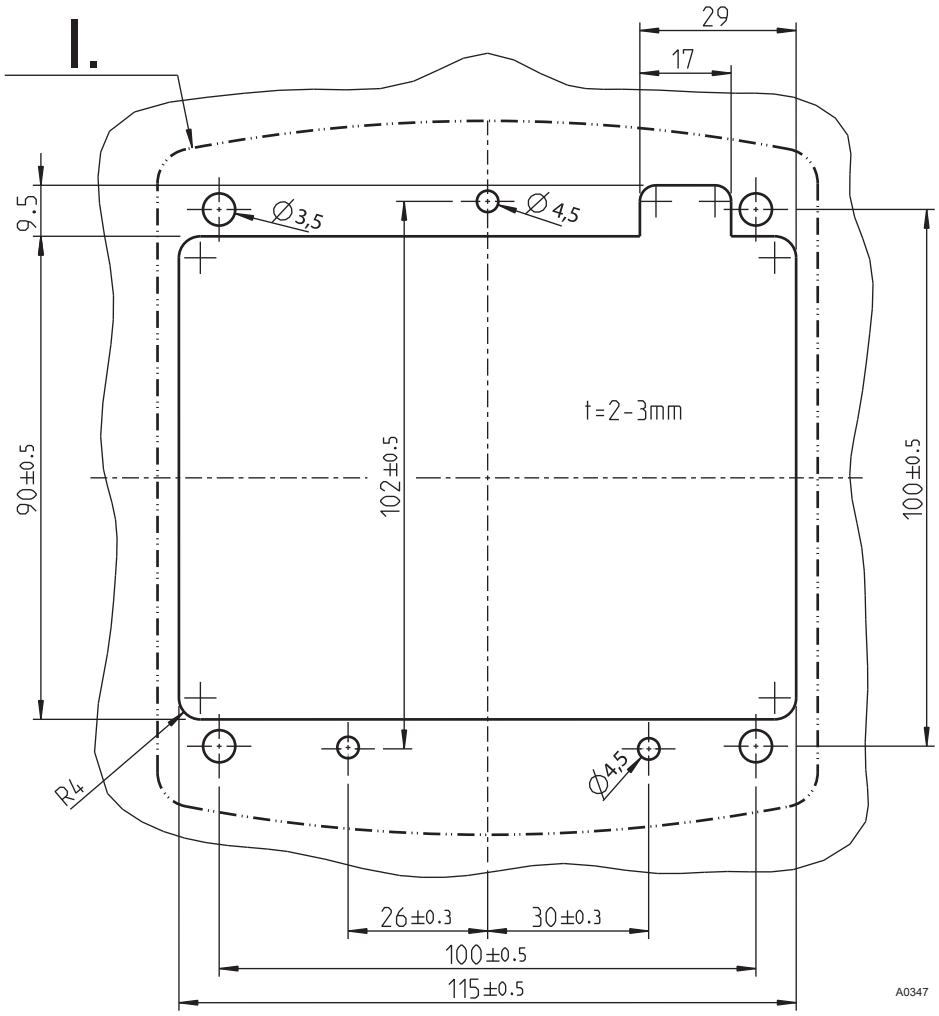

Fig. 7: The drawing is not to scale and is intended for information purposes only.

I. Outline contour of the DULCOMETER® Compact Controller housing

1. Mark the exact position of the DULCOMETER® Compact Controller on the control panel using the drilling template

2.

Core hole

Adhere to the 3.5 mm Ø as the core hole diameter for screwing in the fixing bolts.

Drill four holes for the bolts for the top section of the controller housing using a 3.5 mm Ø drill bit

3. Drill three holes for the bolts for the bottom section of the controller housing using a 4.5 mm Ø drill bit

4. Drill four holes using an 8 mm Ø drill bit and use a jigsaw to cut the cut-out

⇨ Deburr all the edges.

Fitting the DULCOMETER® Compact Controller into the cut-out in the control panel

NOTICE!

Ribbon cable base

The base for the ribbon cable is firmly soldered onto the PCB. The base cannot be removed. Open the base lock (3) to loosen the ribbon cable, see Fig. 8

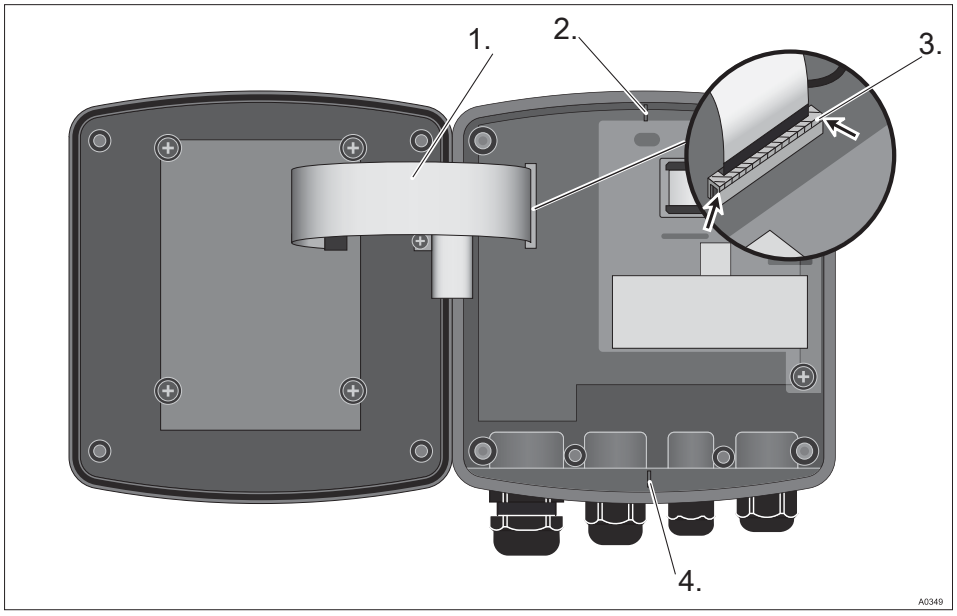

Fig. 8: Loosening the ribbon cable

1. Undo four screws and open the DULCOMETER® Compact Controller
2. Open the right and left lock (3) (arrows) on the base and pull the ribbon cable (1) out of the socket
3. Use pliers to break off the catches (2 and 4). These are not needed for control panel installation

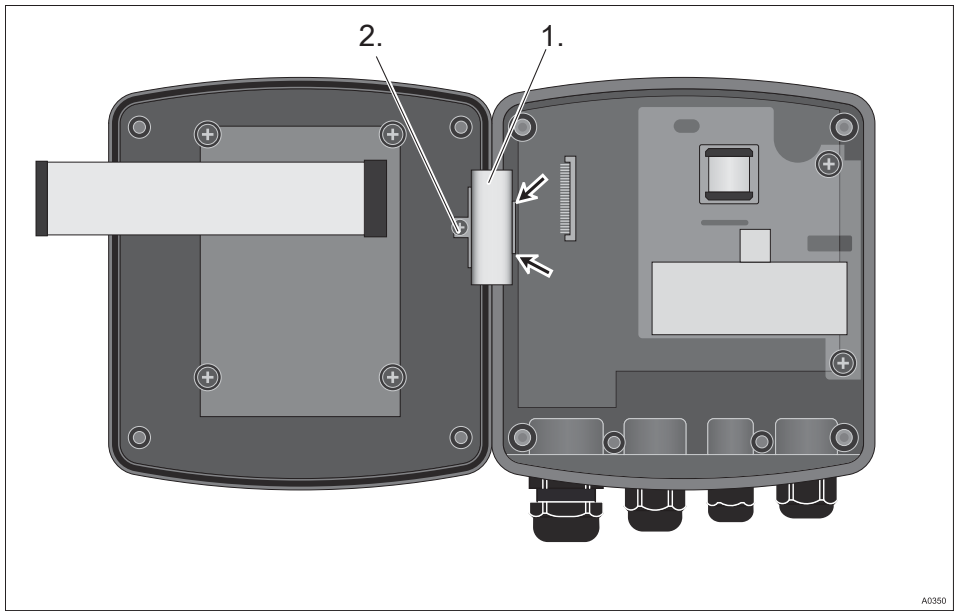

Fig. 9: Dismantle the hinge

4. Remove the screw (2), unclip the hinge (1) on the bottom section of the controller housing (arrows) and remove the hinge

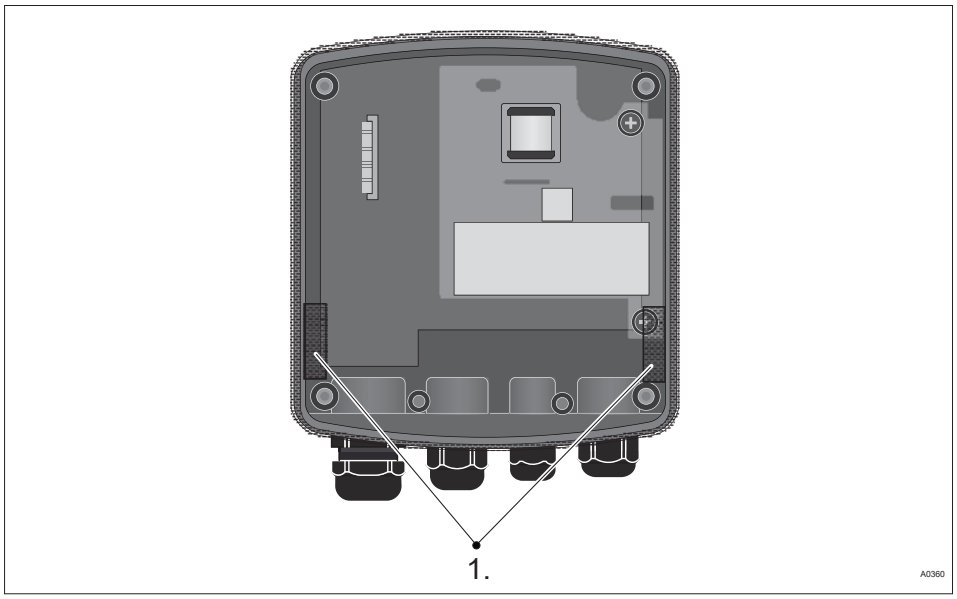

Fig. 10: Fitting the profile seal on the bottom section of the controller housing

5. Position the profile seal evenly around the upper edge of bottom section of the DULCOMETER® Compact Controller housing. Arrange the clips (1) as shown in the figure

   ⇨ Ensure that the profile seal evenly surrounds the upper edge of the housing.

6. Insert the bottom section of the DULCOMETER® Compact Controller housing with the profile seal from behind into the cut-out and use three screws to secure it in place

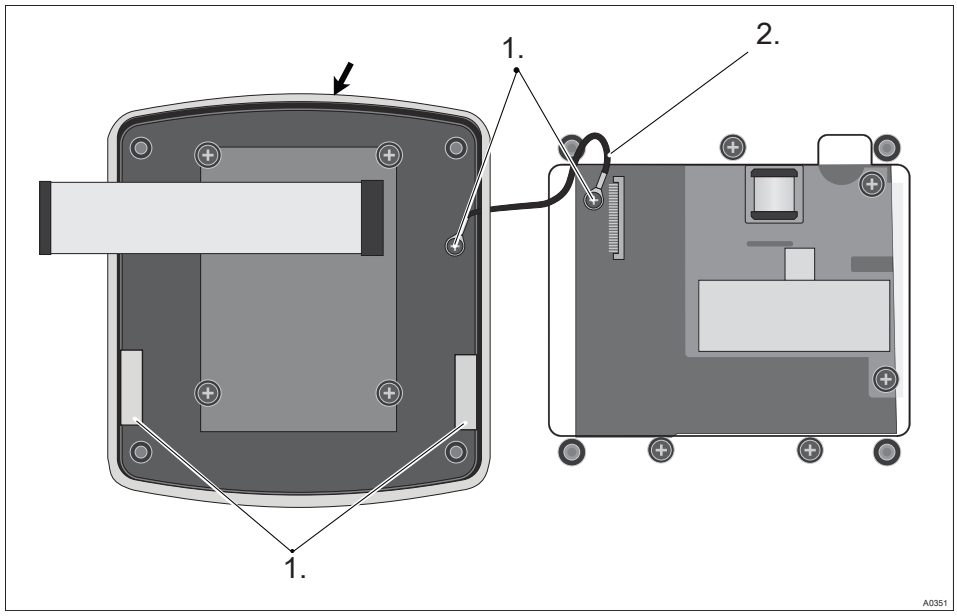

Fig. 11: Fitting the profile seal onto the top section of the controller housing

7. Position the profile seal (arrow) evenly into the groove in the top section of the DULCOMETER® Compact Controller housing. Arrange the clips (3) as shown in the figure

8. Secure the strain relief (2) using two screws (1)

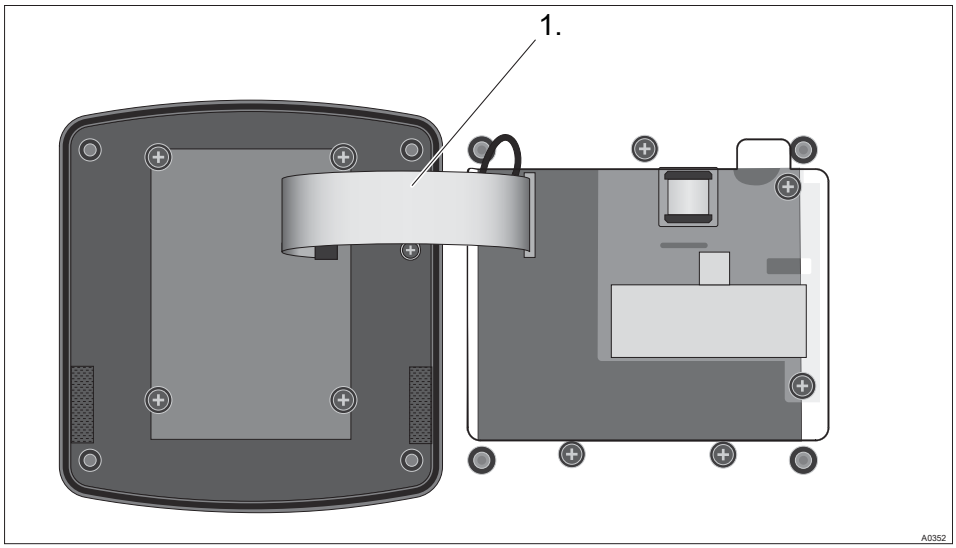

Fig. 12: Push and lock the ribbon cable in its base

9. Push and lock the ribbon cable (1) in its base
10. Screw the top section of the controller housing onto the bottom section of the DULCOMETER® Compact Controller housing
11. Once again check that the profile seals are fitted properly
    ⇨ IP 54 degree of protection can only be provided if the control panel is mounted correctly

5.3 Installation (electrical)

WARNING!

Live parts!

Possible consequence: Fatal or very serious injuries

- Measure: Disconnect the electrical power supply to the device before opening the housing and secure to prevent unintentional reconnection
- Disconnect damaged or defective devices or devices that have been tampered with and prevent unintended reconnection
- The provision of a suitable isolating device (emergency-off switch, etc.) is the responsibility of the plant operator

The signal leads of the DULCOMETER® Compact Controller must not be routed alongside interference-prone cabling. Faults could lead to malfunctions of the DULCOMETER® Compact Controller.

5.3.1 Cable Cross-Sections and Cable End Sleeves

	Minimum cross-section	Maximum cross-section	Stripped insulation length
Without cable end sleeve	0.25 mm^2	1.5 mm^2	
Cable end sleeve without insulation	0.20 mm^2	1.0 mm^2	8 - 9 mm
Cable end sleeve with insulation	0.20 mm^2	1.0 mm^2	10 - 11 mm

5.3.2 Installation of coaxial cable to guard terminal XE1

CAUTION!

Maximum length of the coaxial cable 10 m

Incorrect measured value due to too long a coaxial cable

Possible consequence: Slight or minor injuries, material damage.

The maximum length of the coaxial cable may not exceed 10 m when using redox or pH sensors. The measurement signal can otherwise be falsified by the effects of interference.

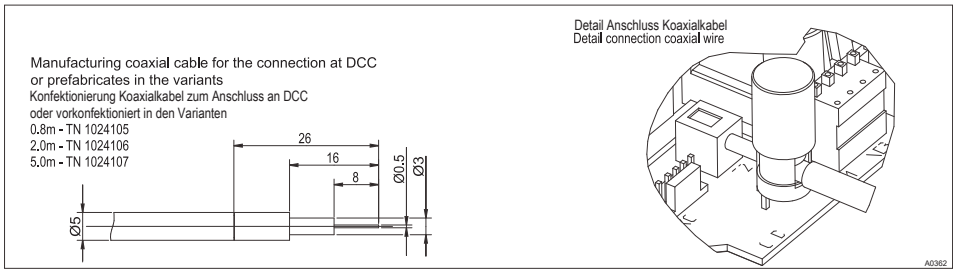

Fig. 13: Installation of Coaxial Cable to Guard Terminal XE1

When installing the coaxial cable for the guard terminal XE 1, the lengths of insulation to be removed from the coaxial cable must be adhered to. The guard terminal *'is tightened'* by hand.

5.3.2.1 Terminal diagram / wiring

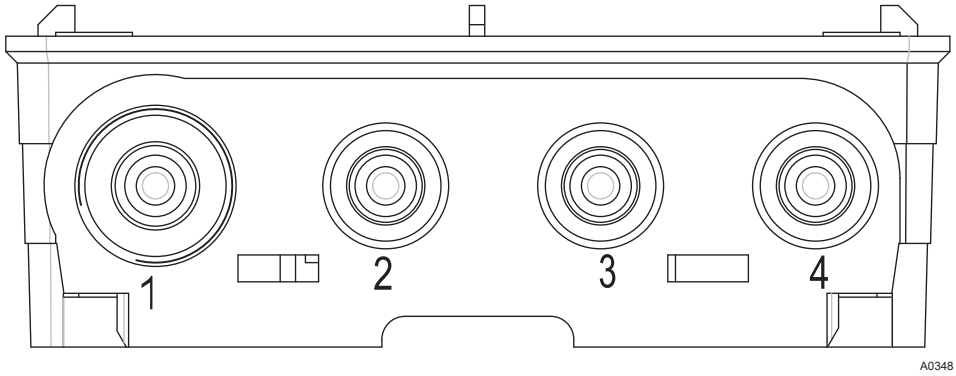

Fig. 14: Threaded connector number

Wiring

Threaded connector no. Size	Description	Terminal Description	Terminal number	Pol	Function	Recommended cable ⌀	Remarks
1 / M20	ph/redox Input 1		XE 1	Ref. El.	pH/ redox sensor	⌀ 5	Guide cable through multiple M20 / 2x**5** mm seal inserts
			XE 2	meas. sig			
	Temp. input Pt 1000	XE 4	1	+	Temp. sensor	⌀ 5	
			2	-			
2 / M16	Wire jumper **or** potential equaliser	XE 3			] Short circuit	⌀ 4,5 *	Guide 4-core cable through multiple M 16 / 2x**4,5** mm seal inserts
		XE 3	1	free	Potential equaliser***		

Threaded connector no. Size	Description	Terminal Description	Terminal number	Pol	Function	Recommended cable ⌀	Remarks
			2	Ref. volt.			
	Standard signal output	XA 1	1	+ 15 V	e.g. recorder / actuator		
			2	-			
	Contact input	XK 1	1	+	Pause	⌀ 4,5 *	Guide 4-core cable through multiple M 16 / 2x**4,5** mm seal inserts
			2	-			
	Relay output (f-relay)	XR 2	1		Frequency controlled metering pump		
			2				
*** To achieve protection class IP 67 please use original Prominent cable, part number 1036759**							
***** When using as a potential equaliser, the short circuit bridge ⌋ must be removed!**							
3 / M16	Relay output **or** Relay output **or** Relay output (P-relay)	XR1	1	COM	Solenoid valve / metering pump ** raise / lower	⌀ 5	Guide cable through single M16 seal insert
			2	NO			
		XR1	1	COM	Limit relay		
			2	NO			
		XR1	1	COM	Alarm relay		
			3	NC			

Threaded connector no. Size	Description	Terminal Description	Terminal number	Pol	Function	Recommended cable ⌀	Remarks
** An RC suppressor must be connected (not part of the scope of delivery)							
4 M16	Mains connection	XP 1	1	N	85 ... 253 V eff.	⌀ 6,5	Guide cable through single M16 seal insert
			2	L			

Legend to the "Wiring" table

Abbreviation	Meaning
Pol.	Polarity
Ref. El.	Reference electrode
meas sig.	Measurement signal (glass electrode)
Ref. pot.	Internal reference potential
f-relay	Pump frequency relay
P-relay	Power relay
COM	Common relay contact (root)
NO	Contact *'normally opened'*
NC	Contact *'normally closed'*

Terminal diagram

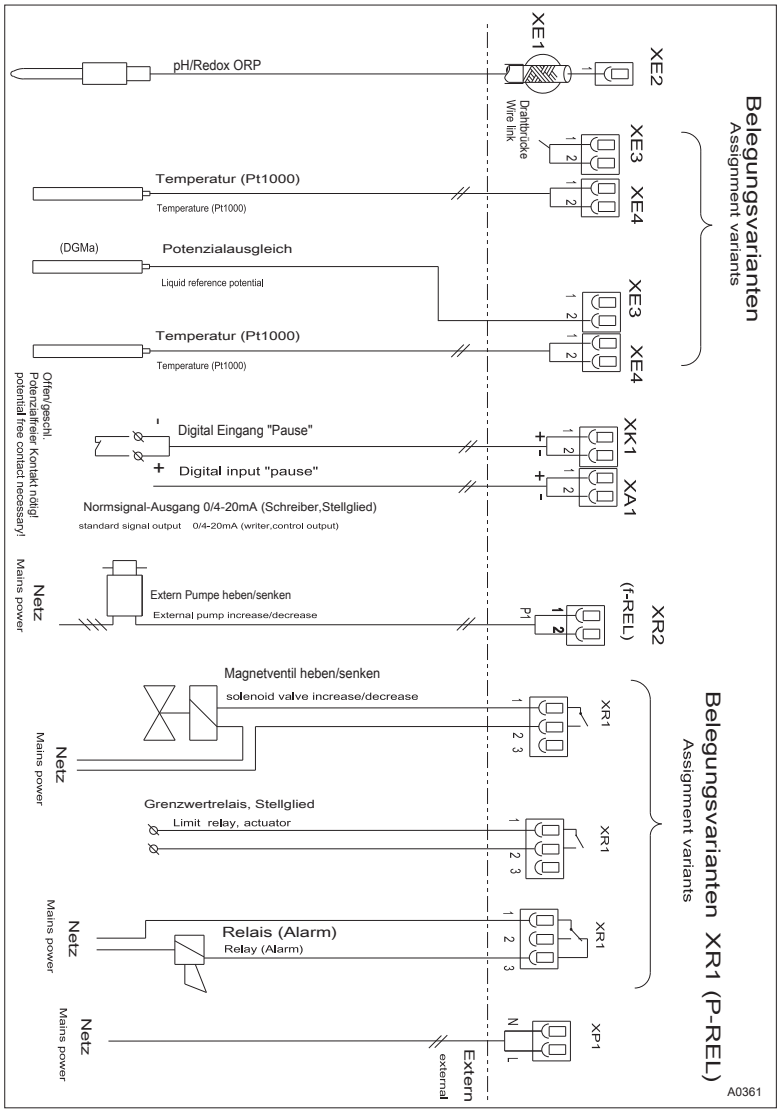

Fig. 15: Terminal diagram

5.3.3 Installation (electrical)

The cable must be routed in a site-provided cable duct to ensure strain relief

1. Undo the four housing screws
2. Slightly lift the controller housing top section forwards and fold it to the left

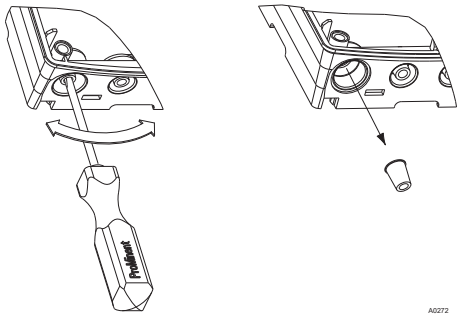

Fig. 16: Punch out threaded holes

3. *Large threaded connection (M 20 x 1.5)*

   Small threaded connection (M 16 x 1.5)

   Punch out as many threaded connections on the bottom side of the controller housing bottom section as required
4. Guide the cable into the respective reducing inserts.
5. Insert the reducing inserts into the threaded connectors
6. Guide the cable into the controller.
7. Connect the cable as indicated in the terminal diagram
8. Screw the required threaded connections in and tighten
9. Tighten the clamping nuts of the threaded connections so that they are properly sealed
10. Click the controller housing top section on to the controller housing bottom section
11. Manually tighten the housing screws
12. Once again check the seating of the seal. Only if the mounting is correct, is protection class IP 67 (wall/pipe mounting) or IP 54 (control panel mounting) achieved

5.4 Switching of inductive loads

If you connect an inductive load, i.e. a consumer which uses a coil (e.g. an alpha motorised pump), then you must protect your controller with a protective circuit. If in doubt, consult an electrical technician for advice.

The RC member protective circuit is a simple, but nevertheless very effective, circuit. This circuit is also referred to as a snubber or Boucherot member. It is primarily used to protect switching contacts.

When switching off, the connection in series of a resistor and capacitor means that the current can be dissipated in a damped oscillation.

Also when switching on, the resistor acts as a current limiter for the capacitor charging process. The RC member protective circuit is highly suitable for AC voltage supplies.

The magnitude of the resistance R of the RC member is determined according to the following equation:

$R=U/I_L$

(Where U= Voltage across the load and I_L = current through the load)

The magnitude of the capacitor is determined using the following equation:

$C=k * I_L$

k=0,1...2 (dependent on the application).

Only use capacitors of class X2.

Units: R = Ohm; U = Volt; I_L = Ampere; C = µF

If consumers are connected which have a high starting current (e.g. plug-in, switched mains power supplies), then a means of limiting the starting current must be provided.

The switching-off process can be investigated and documented using an oscilloscope. The voltage peak at the switch contact depends on the selected RC combination.

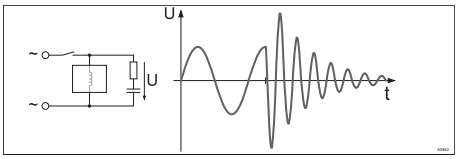

Fig. 17: Switching-off process shown on the oscillogram.

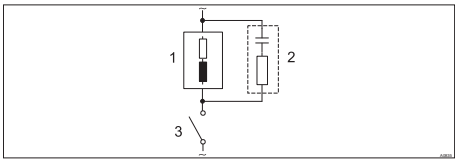

Fig. 18: RC protective circuit for the relay contacts

Typical AC current application with an inductive load:

- 1) Load (e.g. alpha motor-driven pump)
- 2) RC-protective circuit
  - Typical RC protective circuit at 230 V AC:
  - Capacitor *[0.22µF/X2]*
  - Resistance *[100 Ohm / 1 W]* (metal oxide (pulse resistant))
- 3) Relay contact (XR1, XR2, XR3)

6 Commissioning

- **Users' qualification:** trained user, see *Chapter 2.2 'Users' qualifications' on page 10*

WARNING!

Sensor run-in periods

This can result in hazardous incorrect metering

– Correct measuring and metering is only possible if the sensor is working perfectly
– Please read the operating manual for the sensor
– The sensor must be calibrated after commissioning

Following completion of mechanical and electrical assembly, the DULCOMETER® Compact Controller should be integrated into the measuring point.

6.1 Initial commissioning

When first switching on the DULCOMETER® Compact Controller the DULCOMETER® Compact Controller is in a STOP state.

Selection of the measurement variable, controller setting and setting of the various, process-dependent, parameters takes place next. *Chapter 8 'Operating menus for the measured variables pH and ORP' on page 48*.

6.2 Selection of the measured variable

The pH and redox measurement variables are set in the *'INPUT'* menu.

NOTICE!

Reset to factory settings

If you set or switch the measurement variable, all parameters in the controller are reset to the factory settings for the selected measurement variable.

You must then reset all the controller functions.

6.3 Setting the controller during commissioning

NOTICE!

Reset to factory settings

When switching over the metering direction, all actuators in the DULCOMETER® Compact Controller are reset to the factory settings for the selected metering direction.

For safety reasons, all actuators are deactivated. The base load is reset to 0 %. All parameters relating to the actuator, are reset to the factory setting.

Consequently all parameters relating to the actuator, must be reset.

The DULCOMETER® Compact Controller only controls *'one-way'*. Only one position or one negative control variable can be calculated. The direction of the control variable is set in the *'PUMP'* menu. There is no dead zone. In this sense, control cannot be *'switched off'* (except with *'STOP'* or *'PAUSE'*).

The value of the P-proportion of the control (Xp) is specified with the DULCOMETER® Compact Controller in the units of the corresponding measurement variable (e.g. 1.5 pH).

For pure P-control and a separation between the set and actual values, which corresponds to the Xp value, the calculated control variable is +100 % (with the setting *'raise'*) or -100 % (with the setting *'lower'*).

7 Operating diagram

7.1 Overview of equipment/Control elements

- **User qualification:** instructed user, see *Chapter 2.2 'Users' qualifications' on page 10*

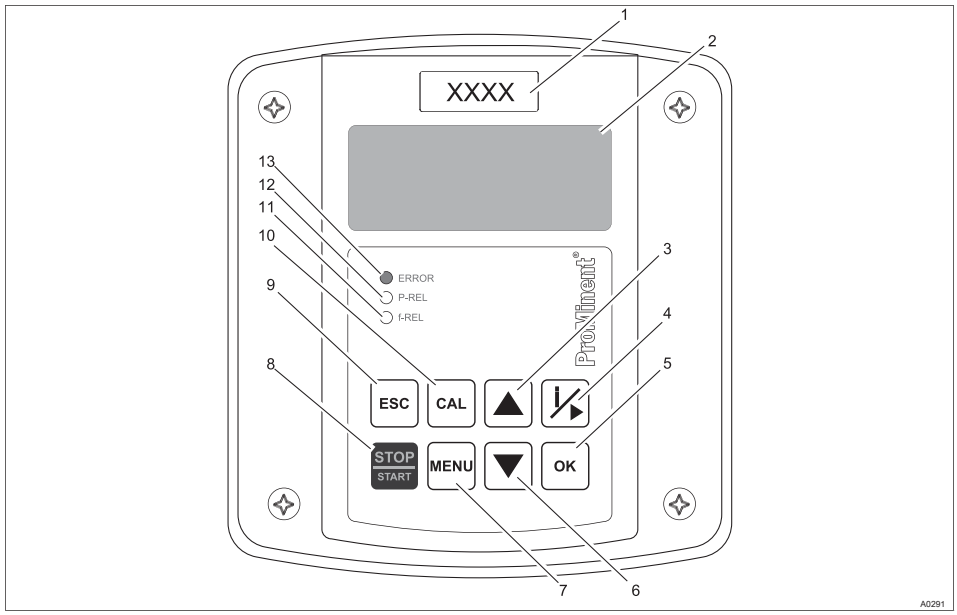

Fig. 19: Overview of equipment/Control elements

Function	Description
1st respective measured variable	Affix the measured variable label here
2. LCD display	
3. UP key	Too increase a displayed number value and to jump upwards in the operating menu
4. INFO/RIGHT key	Opens the info menu or moves the cursor one place to the right

Function	Description
5. OK key	To apply, confirm or save a displayed value or status or to acknowledge an alarm
6. DOWN key	Too decrease a displayed number value and to jump down in the operating menu
7. MENU key	Accesses the controller operating menu
8. STOP/START key	Starts and stops control and metering function
9. ESC key	Jumps a level back in the operating menu, without storage or changing entries or values
10. CAL key	For accessing the calibration menu and navigating within the calibration menu.
11. f-REL LED	Shows the activated state of the f-relay
12. P-REL LED	Shows the activated state of the P-relay
13. ERROR LED	Indicates a controller error state. A text message is displayed simultaneously in the LCD continuous display

7.2 Adjusting display contrast

If the DULCOMETER® Compact Controller is set to *'continuous display'* , you can set the contrast of the LCD-display. By pressing the ▲ key you can adjust the LCD display contrast so it is darker. By pressing the ▼ key you can adjust the LCD display contrast so it is lighter. Here each key press represents a contrast level. I.e. the key must be pressed once for each contrast level.

7.3 Continuous display

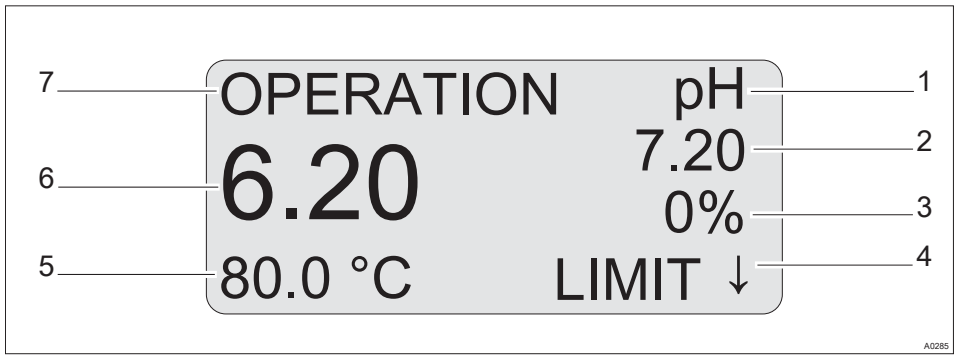

Fig. 20: Continuous display

1 Measured variable
2 Setpoint
3 Control variable
4 Possible error text: e.g. "Limit↓" (Direction of the limit value transgression, e.g. here lower limit value transgression)
5 Temperature (Correction variable)
6 Measured value (actual value)
7 Mode

7.4 Info display

In the info display, the most important parameters for each menu item of the first menu level are displayed.

Access to the info display from the continuous display is by pressing the key. Pressing the key again calls the next info display. Pressing the ESC key recalls the continuous display again.

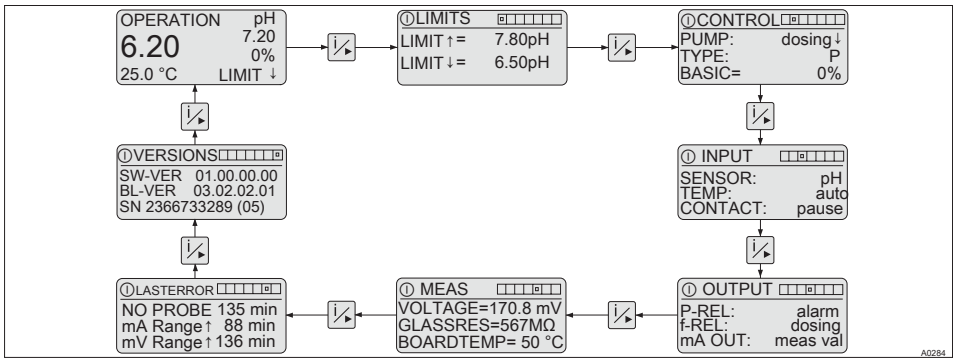

Fig. 21: Info display

Using the OK key you can jump from the currently displayed info display directly to the selection menu of this info display.

Using the ESC key you can jump back to the info display.

Info display "MEAS"

The "MEAS" info display shows the following measured values:

- *[VOLTAGE]: currently measured sensor mV value*
- *[GLASSRES]: measured glass resistance of connected pH sensors for media temperatures of 15 °C to 80 °C. The displayed value is only valid when used with ProMinent pH sensors*
- *[BOARDTEMP]: Current housing interior temperature*

7.5 Password

Access to the setting menu can be limited using a password. The DULCOMETER® Compact Controller is supplied with the password *'5000'*. Using the preset password *'5000'* the DULCOMETER® Compact Controller is setup so that all menus can be accessed without any limitations.

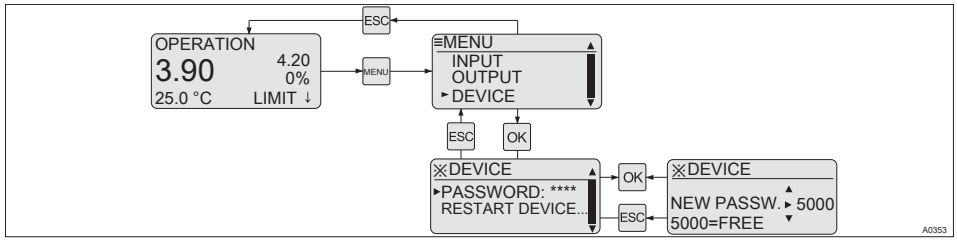

Fig. 22: Password setting

Password	Possible values			
Factory setting	Increment	Lower value	Upper value	Remarks
5000	1	0000	9999	5000 = *[FREE]*

8 Operating menus for the measured variables pH and ORP

- **User qualification:** instructed user, see *Chapter 2.2 'Users' qualifications' on page 10*

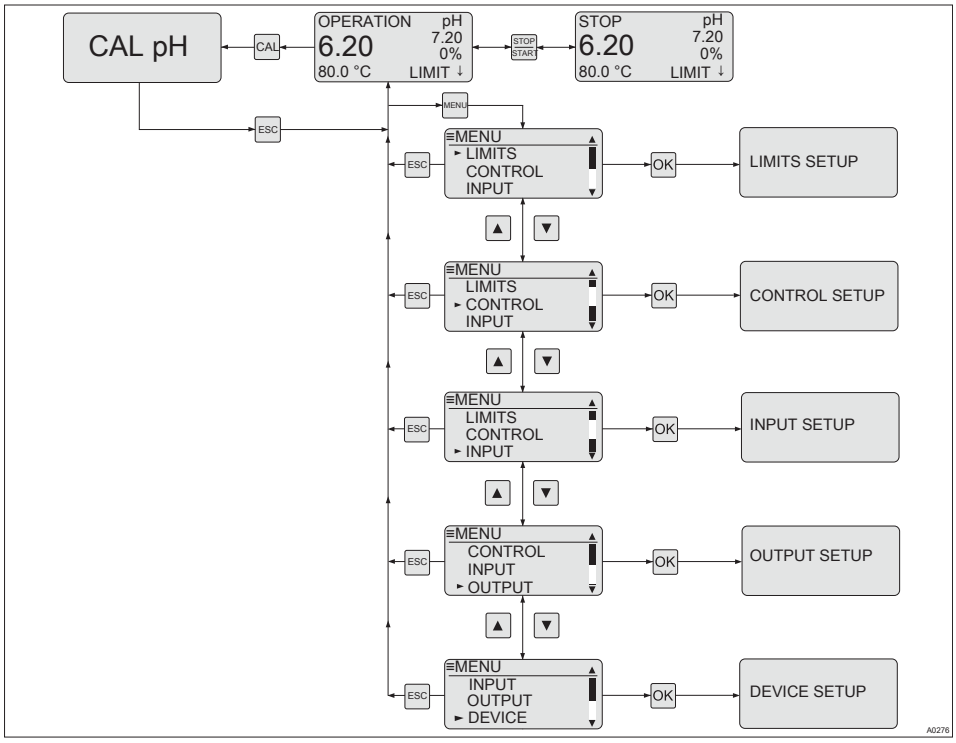

Fig. 23: Operating menu overview

8.1 pH sensor calibration (CAL)

Correct sensor operation

- *Correct measuring and metering is only possible if the sensor is working perfectly*
- *Observe the sensor operating instructions*
- *The carrying out of a 2-point calibration is strongly recommended and is to be preferred to a single point calibration*

During calibration, the DULCOMETER® Compact Controller sets the control outputs to *'0'*. Exception to this: a basic load or a manual control variable has been set. This remains active. The mA standard signal output is frozen.

When calibration/testing has been completed successfully, all of the error checks relating to the reading are restarted. The DULCOMETER® Compact Controller saves all the determined data for zero point and slope when the calibration is successful.

Used buffer

Dispose of the used buffer solution. Related info: see buffer solution safety data sheet.

Setting		Possible values			
	Starting value	Increment	Lower value	Upper value	Remarks
Buffer temperature	Measured value	0.1 °C	0 °C	120 °C	The temperature can only be adjusted under *'TEMP'* *'auto'* or *'manual'*
Buffer values	Start value = 7.00 pH (ZERO) 4.00 pH (SLOPE)	0.01 pH	0.00 pH	14.00 pH	Limit value ZERO = 6..8 pH Limit value SLOPE = < 6 pH; > 8 pH

2-Point Calibration

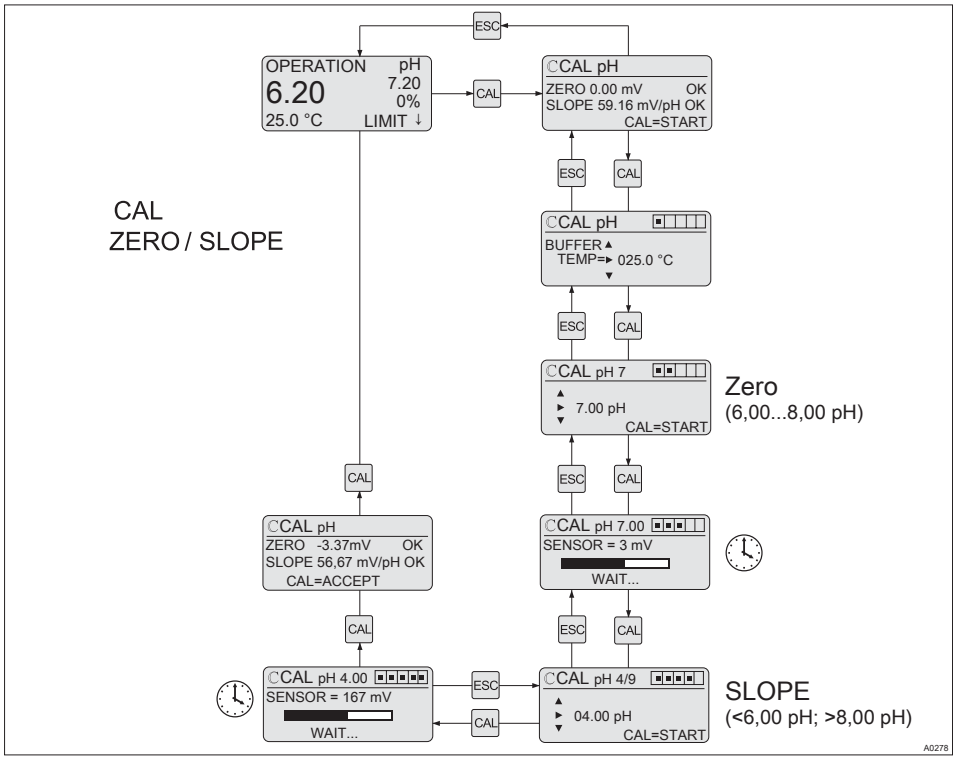

Fig. 24: 2-Point calibration pH sensor

Valid calibration values

Valid calibration:

- *Zero point -60 mV…+60 mV*
- *Slope 40 mV/pH…65 mV/pH*

Two test containers with a buffer solution are required for calibration. The pH value of the buffer solutions should be at least 1.5 pH units apart. Thoroughly rinse the sensor with water when changing the buffer solution.

1. Select the calibration menu CAL
2. Start the calibration CAL
3. If temperature has been selected (only if *'TEMP'* is set to *'auto'* or *'manual'*), then set the buffer temperature with the keys ▲, ▼ and 1/x
4. Confirm the entry by pressing the OK key
5. Set the pH-value of the buffer *'ZERO'* using the keys ▲, ▼ and 1/x
6. Immerse sensor in the buffer solution containing test container 1 (e.g. pH 7). In so doing, slightly move the sensor
7. Then press CAL
   ⇨ Calibration is running 🕘.
8. Then press CAL to accept the value
   ⇨ if CAL=ACCEPT is shown in the display and the displayed mV value is stable.
9. Remove the sensor from the buffer solution, rinse thoroughly in water and then dry with a cloth (pad dry, don't rub!)
10. Set the pH-value of the buffer *'SLOPE'* using the keys ▲, ▼ and 1/x
11. Immerse sensor in the buffer solution containing test container 2 (e.g. pH 4). In so doing, slightly move the sensor
12. Then press CAL
    ⇨ Calibration is running 🕘.
13. Then press CAL to accept the value
    ⇨ if CAL=ACCEPT is shown in the display and the displayed mV value is stable.
14. The determined values for the zero point and slope are displayed

⇨ The calibration is now saved as successful if the values for *'ZERO'* and *'SLOPE'* are both *'OK'*.

Incorrect calibration

Should the result of the calibration lie outside the specified tolerance limits, an error message appears 'ERR'. In this case the current calibration will not be applied.

Check the prerequisites for the calibration and clear the error. Then repeat the calibration

15. Then press CAL to confirm the result or to terminate the calibration (if necessary, as unsuccessful)

1-Point slope calibration

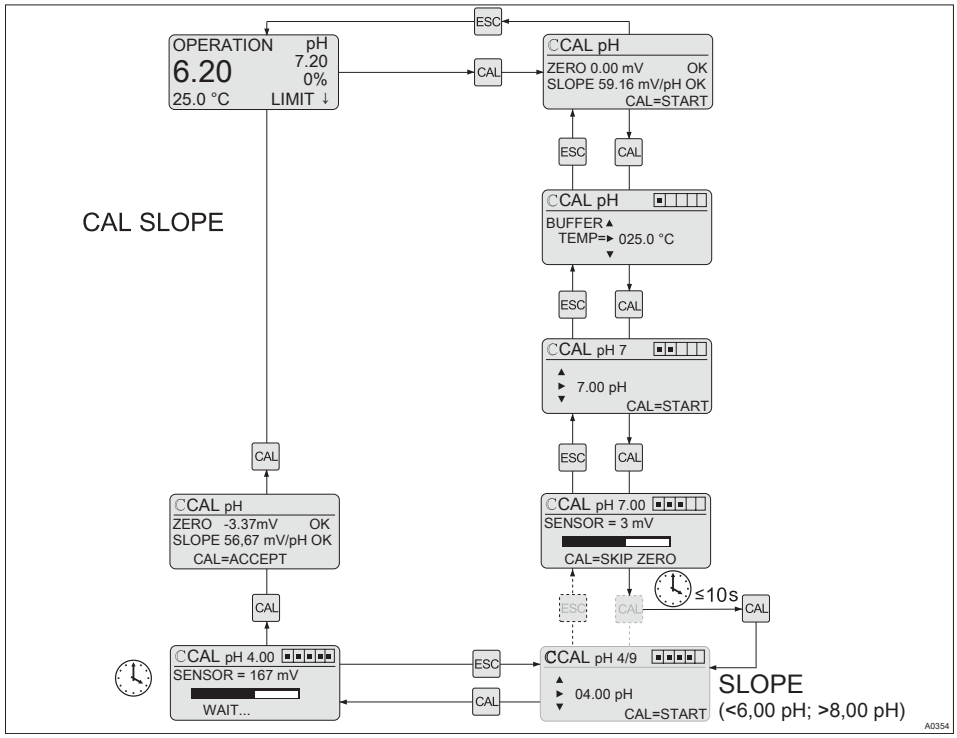

Fig. 25: Single point slope calibration

Valid calibration values

Valid calibration:

– *Slope 40 mV/pH…65 mV/pH*

One test container with a buffer solution is required for calibration. Again with the single point calibration the buffer values for *'ZERO'* and *'SLOPE'* must be at least 1.5 pH units apart. If these buffer values are not recognised, then you must carry out a 2-point calibration.

1. Select the calibration menu CAL
2. Start the calibration CAL

3. If temperature has been selected (only if *'TEMP'* is set to *'auto'* or *'manual'*), then set the buffer temperature with the keys ▲, ▼ and 1/x

4. Confirm the entry by pressing the OK key or CAL key

5. Do not set the pH-value of the buffer *'ZERO'* . Press the CAL key to confirm and if *'CAL=SKIP ZERO'* appears (within no more than 10 s), press the CAL key again

   ⇨ You have skipped the zero point calibration and are now in the slope calibration screen

6. Set the pH-value of the buffer *'SLOPE'* using the keys ▲, ▼ and 1/x

7. Immerse sensor in the buffer solution containing test container (e.g. pH 4). In so doing, slightly move the sensor

8. Then press CAL

   ⇨ Calibration is running 🕘.

9. Then press CAL to accept the value

10. The determined values for the zero point and slope are displayed

    ⇨ The calibration is now saved as successful if the values for *'ZERO'* and *'SLOPE'* are both *'OK'*.

> ***Incorrect calibration***
>
> *Should the result of the calibration lie outside the specified tolerance limits, an error message appears 'ERR'. In this case the current calibration will not be applied.*
>
> *Check the prerequisites for the calibration and clear the error. Then repeat the calibration*

11. Then press CAL to confirm the result or to terminate the calibration (if necessary, as unsuccessful)

Single point zero point calibration

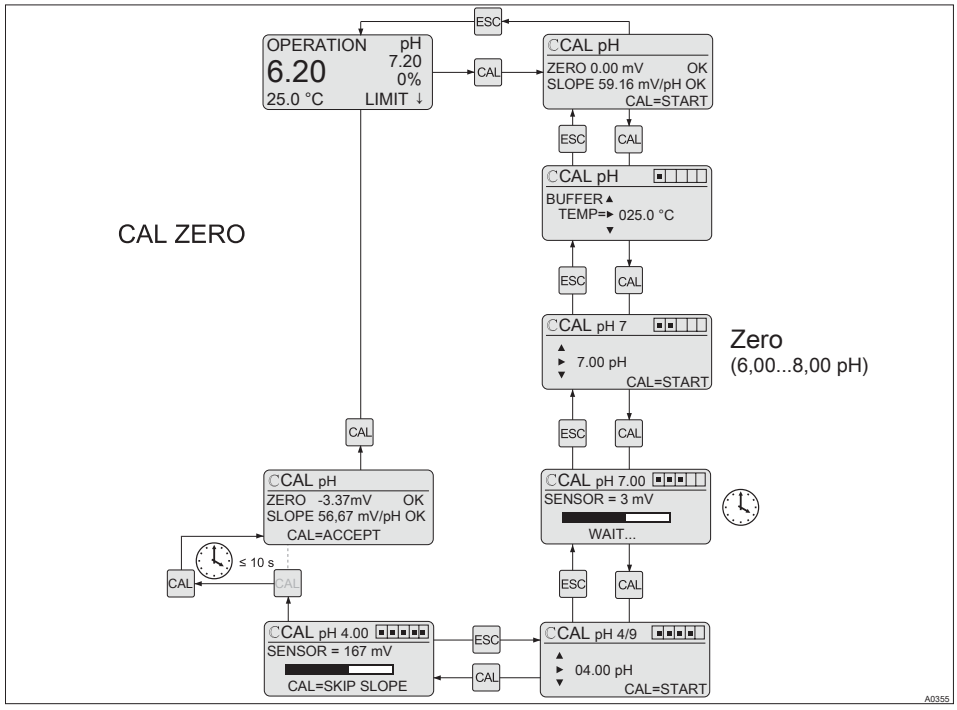

Fig. 26: Single point zero point calibration

Valid calibration values

Valid calibration:

– *Zero point -60 mV…+60 mV*

One test container with a buffer solution is required for calibration. Again with the single point calibration the buffer values for *'ZERO'* and *'SLOPE'* must be at least 1.5 pH units apart. If these buffer values are not recognised, then you must carry out a 2-point calibration.

1. Select the calibration menu CAL
2. Start the calibration CAL

3. If temperature has been selected (only if *'TEMP'* is set to *'auto'* or *'manual'*), then set the buffer temperature with the keys ▲, ▼ and 1/x
4. Confirm the entry by pressing the OK key again
5. Set the pH-value of the buffer *'ZERO'* using the keys ▲, ▼ and 1/x
6. Immerse sensor in the buffer solution containing test container (e.g. pH 7). In so doing, slightly move the sensor
7. Then press CAL
   ⇨ Calibration is running.
8. Then press CAL to accept the value
9. Do not set the pH-value of the buffer *'SLOPE'*. Press the CAL key to confirm and if *'CAL=SKIP SLOPE'* appears (within no more than 10 s), press the CAL key again
   ⇨ The calibration is now saved as successful if the values for *'ZERO'* and *'SLOPE'* are both *'OK'*.

Incorrect calibration

Should the result of the calibration lie outside the specified tolerance limits, an error message appears 'ERR'. In this case the current calibration will not be applied.

Check the prerequisites for the calibration and clear the error. Then repeat the calibration

10. Then press CAL to confirm the result or to terminate the calibration (if necessary, as unsuccessful)

8.2 Redox sensor calibration (CAL)

Redox sensor calibration

The redox sensor cannot be calibrated. It is only possible to set an 'OFFSET' of the order of ± 40 mV and then make a comparison using this value. Should the redox sensor differ by more than ± 40 mV from the reference value, then it must be checked in accordance with the requirements of the sensor operating instructions.

Correct sensor operation

– *Correct measuring and metering is only possible if the sensor is working perfectly*
– *Observe the sensor operating instructions*

During the calibration: the DULCOMETER® Compact Controller sets the control outputs to *'0'*. Exception to this: a basic load or a manual control variable has been set. This remains active. The mA standard signal output is frozen.

Used buffer

Dispose of the used buffer solution. Related info: see buffer solution safety data sheet.

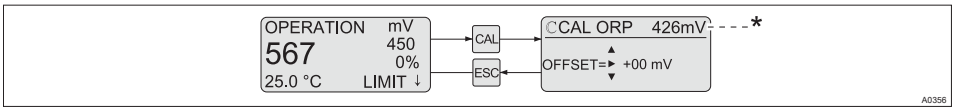

*Fig. 27: Redox sensor calibration (CAL) * corrected value*

A container with a redox buffer solution (e.g. 465 mV) is needed for testing.

1. Select the Test menu CAL
2. Immerse redox sensor in the redox buffer solution containing test container (e.g. 465 mV)
3. Wait until the mV value has stabilised
4. Adjust the displayed mV values using the keys ▲, ▼ and ↵ to the mV value of the redox buffer solution in the test container. Confirm the value by pressing CAL . The OFFSET value is transferred into the measuring parameters

   ⇨ ESC quits the test menu without transferring the OFFSET value into the measuring parameters.
5. If the redox sensor is unclean or defective, it must be cleaned as described in the redox sensor operating instructions, or alternatively replaced

8.3 Setting limit values *[LIMITS]*

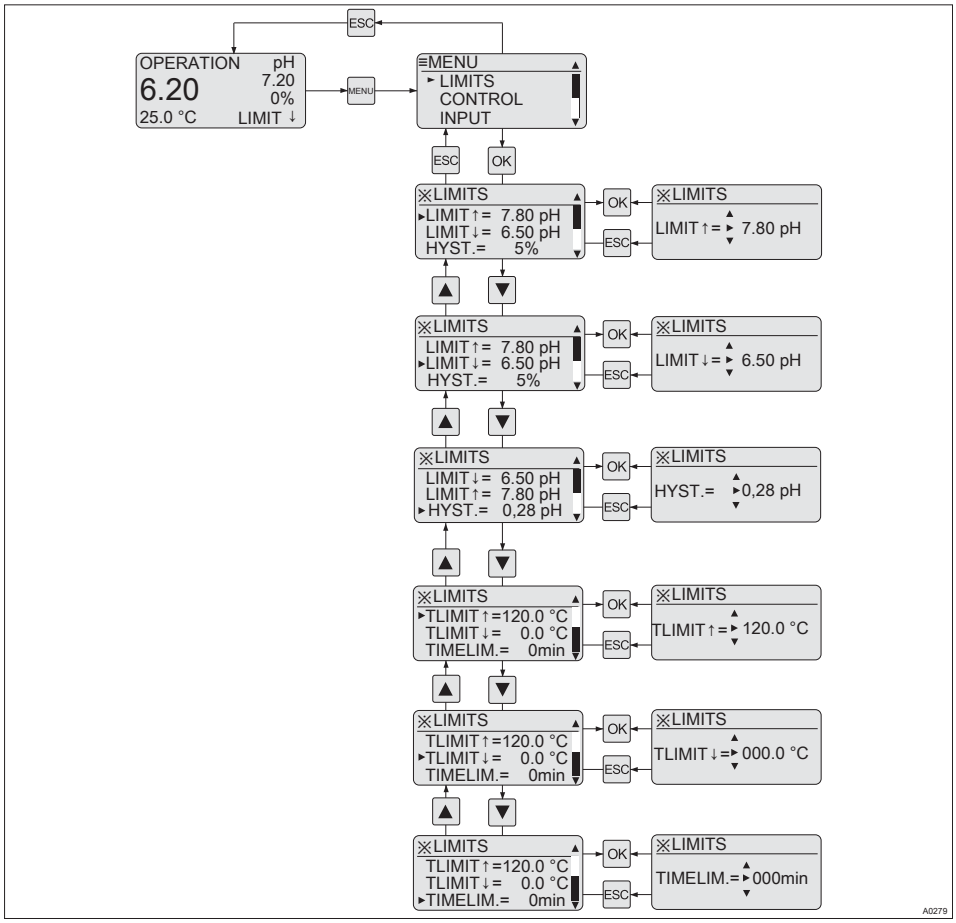

Fig. 28: Setting limit values [LIMITS]

Setting		Possible values			
Display	Starting value	Increment	Lower value	Upper value	Remark
[LIMIT ↑ pH]	8.50 pH	0.01 pH	0.00	14.00	upper pH limit value
[LIMIT ↓ pH]	6.50 pH	0.01 pH	0.00	14.00	lower pH limit value
[LIMIT ↑ ORP]	800	1 mV	-1000 mV	1000 mV	upper ORP limit value
[LIMIT ↑ ORP]	600	1 mV	-1000 mV	1000 mV	lower ORP limit value
[HYST.]	0.28 pH	0.01 pH	0.00	14.00	hysteresis for pH
	20 mV	1 mV	-1000 mV	1000 mV	hysteresis for ORP
[TLIMIT ↑ °C]	120.0 °C	0.1 °C	0.0 °C	120.0 °C	upper limit correction value °C
[TLIMIT ↓ °C]	0.0 °C	0.1 °C	0.0 °C	120.0 °C	lower limit correction value °C
[TLIMIT ↑ °F]	248.0 °F	0.1 °F	32.0 °F	248.0 °F	upper limit correction value °F
[TLIMIT ↓ °F]	32.0 °F	0.1 °F	32.0 °F	248.0 °F	lower limit correction value °F
[TIMELIM.]	0 min = OFF	1 minute	0	999	Checktime after a limit value has been exceeded or undershot pH / ORP

Hysteresis = *[HYST.]*

If the value has fallen below a limit value, then the limit value criteria are reset when the measured value has reached the value of the limit value plus hysteresis.

If the value has fallen below a limit value, then the limit value criteria are reset when the measured value has reached the value of the limit value minus hysteresis.

If the limit value criteria no longer exist on expiry of *[TIMELIM]* , then the control is automatically reactivated.

8.4 Setting the control *[CONTROL]*

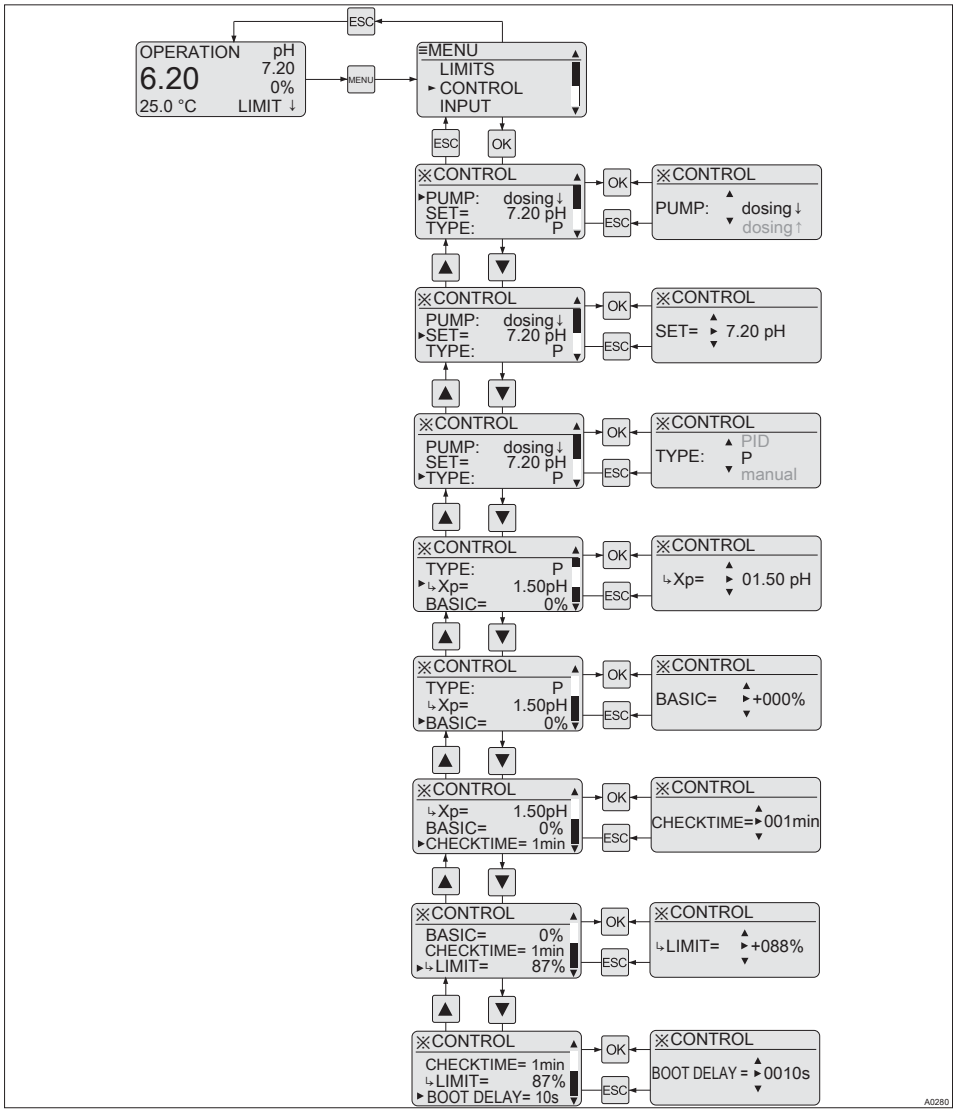

Fig. 29: Setting the control [CONTROL]

Setting		Possible values			
	Starting value	Increment	Lower value	Upper value	Remark
[PUMP]	dosing ↓	dosing ↓ dosing ↑			Mono-directional control direction [2]
[SET]	7.20 pH	0.01 pH	0.00 pH	14.00 pH	pH setpoint
[SET]	750 mV	1 mV	-1000 mV	1000 mV	ORP voltage set-point
[TYPE]	P	P Manual PID			Controller type
[↳Xp]	1.50 pH	0.01 pH	0.01 pH	70.00 pH	P-proportion of the pH control variable
[↳Xp]	100 mV	1 mV	1 mV	3000 mV	P-proportion of the ORP control variable
[↳Ti]	0 s	1 s	0 s	9999 s	PID control integral action time (0 seconds = no I-proportion)
[↳Td]	0 s	1 s	0 s	2500 s	PID control derivative action time (0 seconds = no D-proportion)
[BASIC] [1]	0%	1%	- 100%	100%	Basic load
[↳MANUAL] [1]	0%	1%	- 100%	100%	Manual control value
[CHECK-TIME]	0 min	1 min	0 min	999 min	Control checktime 0 minutes = off

Setting		Possible values			
	Starting value	Increment	Lower value	Upper value	Remark
[↳LIMIT][1]	0%	1%	- 100%	100%	Checktime limit. No basic load, only PID control value
[BOOT DELAY]	0 s	1 s	0 s	9999 s	Control delay period after the start of the meas-uring point. After it is switched on, the unit only meas-ures but does not control during this period.

1 = in an upwards direction with mono-directional control: 0 .. +100% (setting with PUMP: dosing↑), in a downwards direction: -100..0% (setting with PUMP: dosing↓).

2 = When switching over the metering direction, all actuators in the DULCOMETER® Compact Controller are reset to the factory settings for the selected metering direction.

8.5 Input setting (INPUT)

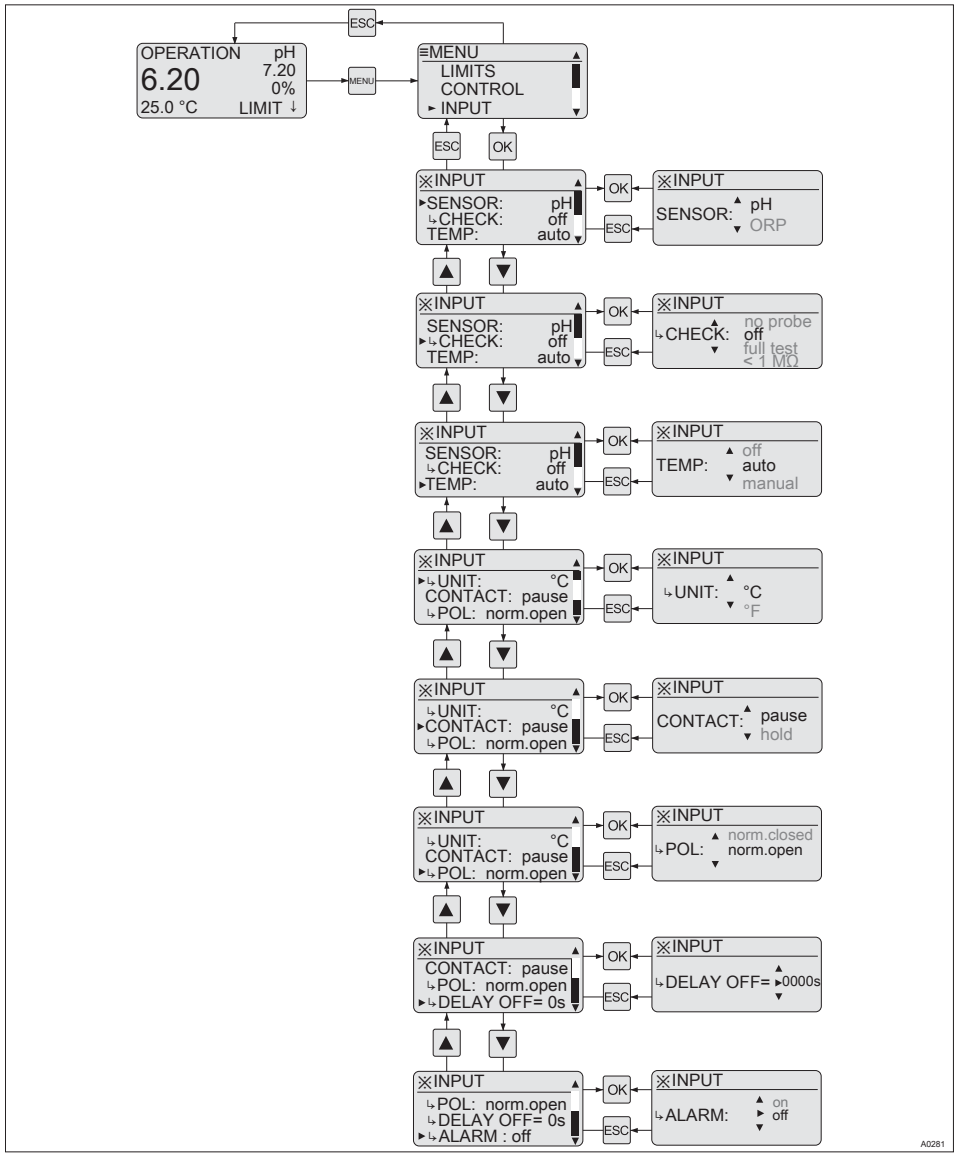

Fig. 30: Input setting (INPUT)

Setting		Possible values			
Display	Starting value	Increment	Lower value	Upper value	Remarks
Sensor	pH	pH			Process variables switchover pH <--> redox [1.]
		ORP			
↳CHECK	off	off			Sensor monitoring *'off'*
		< 1 MΩ			Sensor break check (glass break)
		no probe			Check for presence
		full test			Check for sensor break and presence
TEMP	off	auto			Pt 1000
		manual			manual
		off			Correction off
↳UNIT	°C	°C			Correction variable unit
		°F			
↳VALUE	25.0 °C	0.1 °C	0.0 °C	120.0 °C	Manual correction variable °C
↳VALUE	77.0 °F	0.1 °F	32 °F	248 °F	Manual correction variable °F
CONTACT	pause	pause			Configuration digital contact input
		hold			
↳POL	norm.open	norm.open			Polarity of the contact input
		norm.closed			

[1.] Attention: If this setting is changed, all parameters are reset to the corresponding factory settings

Setting		Possible values			
Display	Starting value	Increment	Lower value	Upper value	Remarks
↳DELAY OFF	0 s	1 s	0 s	1000 s	Contact input switch-off delay. Switching off of the contact input is delayed by this period.
↳ALARM	OFF	ON			Switch on and off use of the alarm relay *'PAUSE/ HOLD'*
		OFF			
1. Attention: If this setting is changed, all parameters are reset to the corresponding factory settings					

↳CHECK = With configured pH measured variables, it is possible to monitor a sensor connected to the potentiometric input for fault states. This check is disabled as standard.

Monitoring for sensor breakage: The sensor breakage check (glass breakage) identifies a defective sensor due to its low internal resistance. Correctly functioning pH sensors have very high resistances with internal resistances in the high MΩ range. The DULCOMETER® Compact Controller is capable of recognising broken sensors from their internal resistance. This function should be deactivated if very low resistance sensors are used.

Check for presence: The "Presence check" identifies a disconnected sensor or a broken cable. This function should be disabled if pH sensors are used which have a high internal resistance across their entire operating range.

8.6 Output setting (OUTPUT)

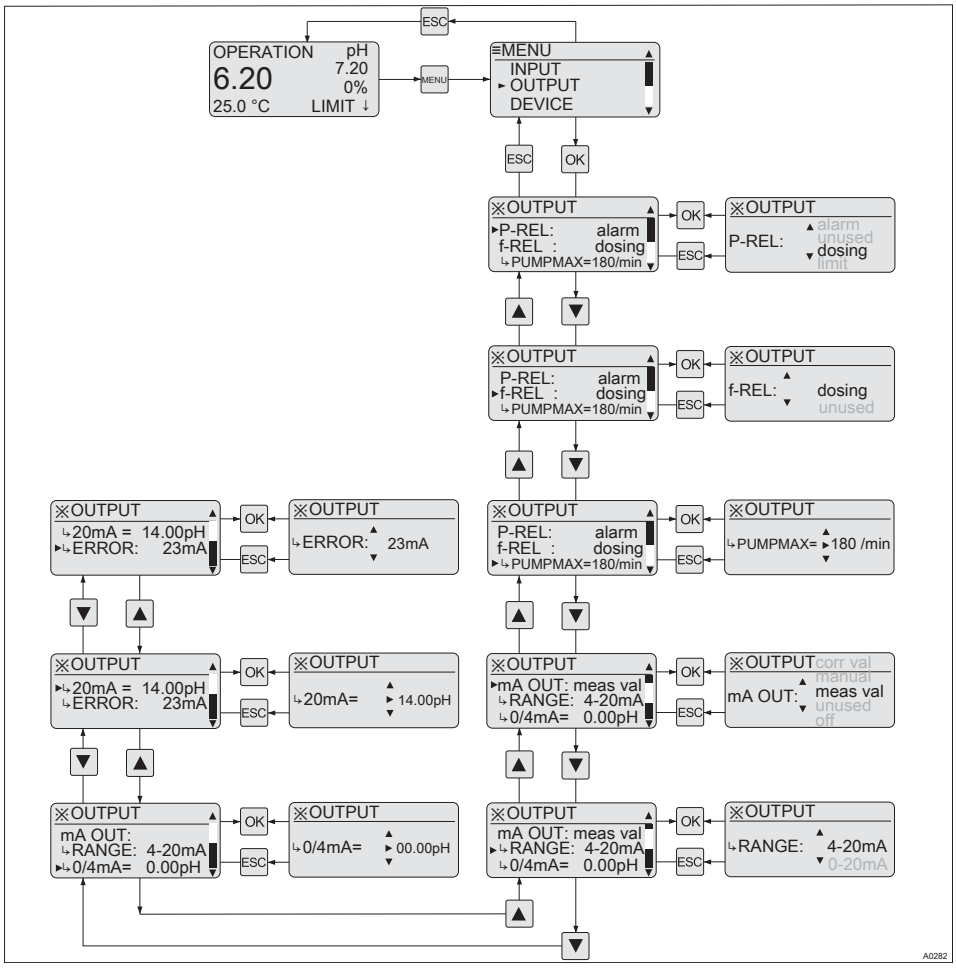

Fig. 31: Output setting (OUTPUT)

Setting		Possible values			
	Starting value	Increment	Lower value	Upper value	Remarks
P-REL (Power relay)	alarm	alarm			Alarm relay
		unused			off
		dosing			PWM relay
		limit			Limit relay
↳PERIOD	60 s	1 s	30 s	6000 s	Cycle time of the PWM control (P-REL = dosing)
↳MIN ON [1]	10 s	1 s	5 s	PERIOD/4 or 999	Minimum switch on period using PWM control (P-REL = dosing)
↳DELAY ON	0 s	1 s	0 s	9999 s	Switch-on delay limit value relay (P-REL = limit)
↳DELAY OFF	0 s	1 s	0 s	9999 s	Switch-off delay limit value relay (P-REL = limit)
f-REL	dosing	dosing			Activation of the low power relay (frequency relay)
		unused			

Setting		Possible values			
	Starting value	Increment	Lower value	Upper value	Remarks
↳PUMPMAX	1 rpm	1	1	500	Maximum stroke rate of the low power relay (frequency relay)
mA OUT (Output value of the mA standard signal output)	meas val	off			off
		meas val			meas val
		corr val			corr val
		dosing			dosing = control value
		manual			manual
↳RANGE	4 - 20 mA	0 - 20 mA			Range of the mA standard signal output
		4 - 20 mA			
↳0/4 mA	2.00 pH	0.01 pH	0.00 pH	14.00 pH	pH value assigned 0/4 mA
↳20 mA	12.00 pH	0.01 pH	0.00 pH	14.00 pH	pH value assigned 20 mA
↳0/4 mA	0 mV	1 mV	-1000 mV	1000 mV	Redox value assigned 0/4 mA
↳20 mA	1000 mV	1 mV	-1000 mV	1000 mV	Redox value assigned 20 mA
↳0/4 mA	0.0 °C	0.1 °C	0.0 °C	120.0 °C	Temp. value assigned 0/4 mA
↳20 mA	100.0 °C	0.1 °C	0.0 °C	120.0 °C	Temp value assigned 20 mA

Setting		Possible values			
	Starting value	Increment	Lower value	Upper value	Remarks
↳0/4 mA	32.0 °F	0.1 °F	32.0 °F	248.0 °F	Temp. value assigned 0/4 mA
↳20 mA	212.0 °F	0.1 °F	32.0 °F	248.0 °F	Temp value assigned 20 mA
↳20 mA [2]	- 100 %	1 %	10 %/ - 10 %	100 % / - 100 %	Control value assigned 20 mA (0/4 mA is fixed as 0%)
↳VALUE	4.00 mA	0.01 mA	0.00 mA	25.00 mA	Manual output current value
↳ERROR	off	23 mA			Output current value upon fault, 23 mA
		0/3.6 mA			Output current value upon fault, 0/3.6 mA
		off			off = no fault current is output

1 = The parameter maximum occurs at PERIOD/4 or 999, whichever is smaller

2 = dependent on metering direction, the limits are either -10% and -100% or +10% and +100%

8.7 DEVICE setting

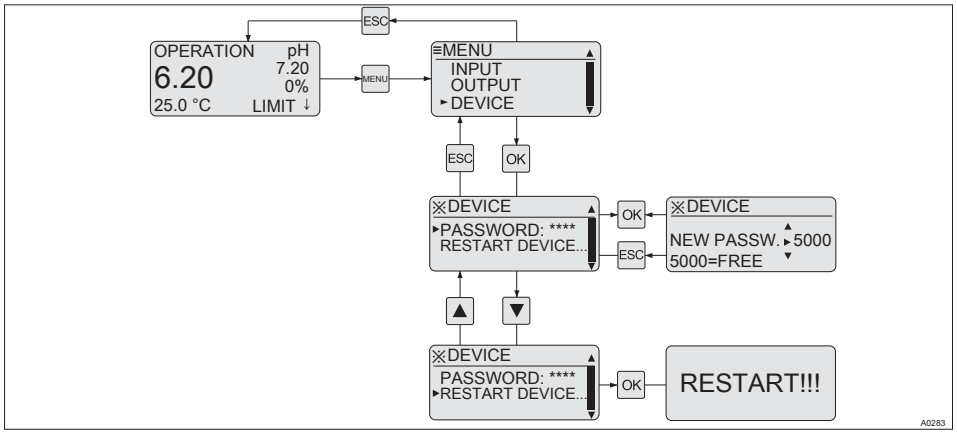

Fig. 32: Device setting

Setting		Possible values			
	Starting value	Increment	Lower value	Upper value	Remarks
Password	5000	1	0000	9999	5000 = no password protection
Restart device					Controller is restarted

9 Control parameters and functions

- **User qualification:** trained user, see ↳ *Chapter 2.2 'Users' qualifications' on page 10*

9.1 DULCOMETER® Compact Controller function states

DULCOMETER® Compact Controller function states have the following priority:

- 1. *'STOP'*
- 2. *'PAUSE/HOLD'*
- 3. *'CAL'* (calibration)
- 4. *'OPERATION'* (normal mode)

"CAL" (calibration) peculiarities

- Control goes to basic load, mA measurement outputs are frozen
- New faults are detected, however they have no effect on the alarm relay or the mA output
- Detection of measurement variable relevant faults during *'CAL'* (calibration process) are suppressed (e.g. LIMIT↑)

"PAUSE" peculiarities

- Control is switched to 0% control variable. The I-proportion is saved
- New faults are detected, however they have no effect on the alarm relay or the mA output
- Special case alarm relay in *'PAUSE'*: If activated the output relay switches to *'PAUSE'* (error message CONTACTIN)

"HOLD" peculiarities

- Control and all other outputs are frozen
- New faults are detected, however they have no effect on the alarm relay or the mA output. However the effect of already existing faults (e.g. fault current) remains
- Special case alarm relay: Activation of the frozen alarm relay is permitted (= no alarm), if all faults have been acknowledged or have disappeared
- Special case alarm relay in *'HOLD'*: If activated the output relay switches to *'HOLD'* (error message CONTACTIN)

"STOP" peculiarities

- Control OFF
- New faults are detected, however they have no effect on the alarm relay or the mA output
- The alarm relay is switched off in *'STOP'*

Peculiarities of the "START" event, i.e. switching from "STOP" to "OPERATION" (normal mode)

- Fault detection starts afresh, all existing faults are deleted

Generally applicable information

- If the cause of a fault disappears, then the fault message in the LCD footer disappears.
- A previously existing *'PAUSE/HOLD'* state is not influenced by starting a *'CAL'* (calibration) process. If during *'CAL'* (calibration) the functional state *'PAUSE/HOLD'* is released, then all states will remain frozen until the end of the *'CAL'* (calibration) process.

- If *'CAL'* (calibration) is started while functional state *'OPERATION'* (normal mode) is active, then the functional state *'PAUSE/HOLD'* is ignored until *'CAL'* (calibration) completes. However STOP/START is possible at any time
- An alarm can be acknowledged or removed as follows: By clearing all faults by pressing the STOP START key and the OK key while the continuous display is visible

9.2 STOP/START key

The control function is started / stopped by pressing the STOP START key. The STOP START key can be pressed independently of the currently displayed menu. However, the [STOP]state is only shown in the continuous display.

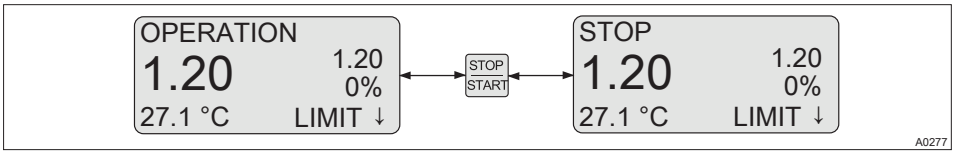

Fig. 33: STOP START-Key

When the controller is first switched on, the controller is in *[STOP]*status.

Upon certain defined fault conditions, the controller switches to the *[STOP]*status. The control is then off (= 0 % control variable).

To differentiate between the fault-related *[STOP]* and the operating status *[STOP]* by pressing the STOP START key, instead of *[STOP]*the identifier *[ERROR STOP]* is displayed.

Pressing the STOP START key causes operating status *[ERROR STOP]* to change to operating status *[STOP]* . Pressing STOP START once more causes the controller to be started again.

In *[STOP]*state, the controller must be started manually by pressing the STOP START key.

[STOP] of the controller causes the following:

- Control is stopped
- The P-relay functioning as a limit value relay and a PWM relay are switched to the de-energised state
- The P-relay acting as an alarm relay activates (no alarm)

Restarting of the controller causes the following:

- If a *[STOP]*state existed, then the controller must be manually started after being switched back on.
- Fault detection starts afresh, all existing faults are deleted

9.3 Priming (PRIME)

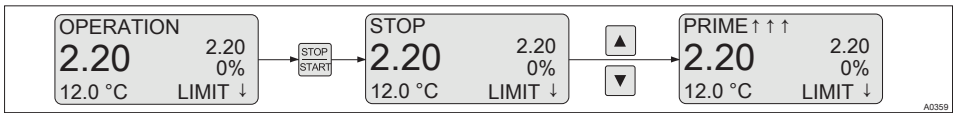

Fig. 34: Priming, e.g. to vent a pump

While the continuous display is visible and the states *'STOP'* or *'OPERATION'* are active, simultaneously pressing ▲ and ▼ causes the priming function *'PRIME'* to be started.

At the same time, dependent on the configuration of the controller, the output relay (P-REL) is actuated at 100 %, the frequency relay (f-REL) is actuated at 80 % of "PUMPMAX" and 16 mA is output at the mA output. However this is only the case if these outputs are set as actuator *'dosing'*.

The power relay (P-REL) starts after priming in an activated state.

You can use this function, for example, to transport the feed chemical up to the pump to vent the metering line.

9.4 Hysteresis limit

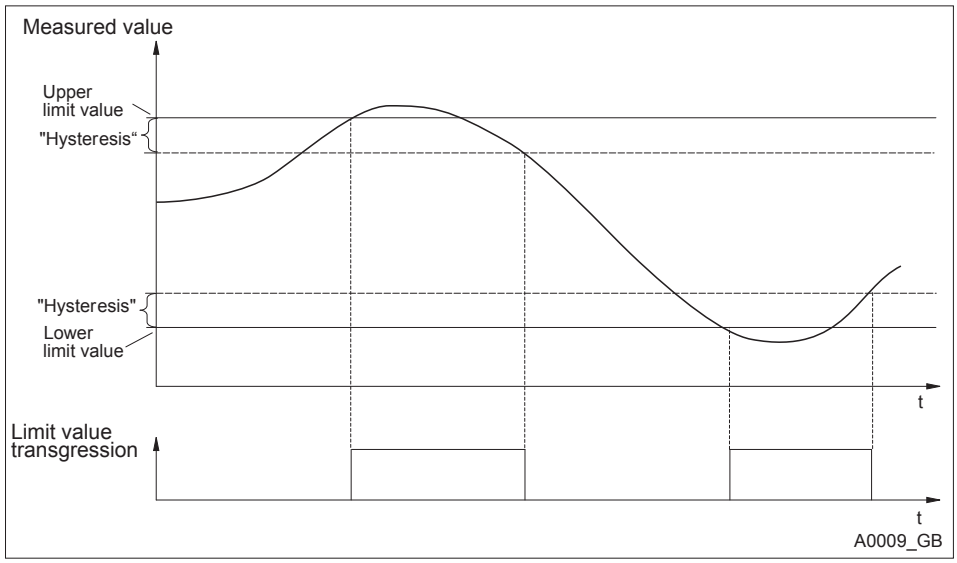

Fig. 35: Hysteresis

Upper limit value = LIMIT↑ Lower limit value = LIMIT↓

The range between LIMIT↑ and LIMIT↓ is the **valid measuring range.**

The DULCOMETER® Compact Controller has fixed *'hysteresis'*.

Measured variable	Hysteresis
pH	0.28 pH
Redox	20 mV

The *'Hysteresis'* acts to cause an increase in the limit value transgression, i.e. if the *'Limit↑'* of e.g. pH 7.5 was exceeded, then the criterion for a limit value transgression is only removed again when the value falls below pH 7.22. The hysteresis behaviour for a *'Limit↓'* functions in an analogue way (the hysteresis value is here added to the Limit↓), for example *'Limit ↓'* pH 4.00, hysteresis pH 0.28, then the limit value transgression criterion is only removed again when the pH exceeds 4.28.

9.5 Temperature correction variable for pH

The correction variable compensates for the effect of the temperature of the medium on the measured value. The correction variable is the temperature of the medium to be measured. The temperature of the medium affects the pH value to be measured.

Operating modes

- *[off]*: No temperature compensation takes place
  - For measurements which do not require temperature compensation
- *[auto]*: The DULCOMETER® Compact Controller evaluates the temperature signal of the connected temperature sensor
  - For measurements using a temperature sensor (Pt1000) (0 -120 °C)
- *[manual]*: The temperature of the medium to be measured has to be measured by the user. The measured value is then entered using the keys ▼ and ▲ in the parameter *'VALUE'* in the DULCOMETER® Compact Controller and saved using the key OK
  - For measurements where the medium to be measured has a constant temperature, which has to be taken into account in the control process

9.6 Checkout time for measured variable and correction variable

Error text	Description
LIMIT ERR	Checkout time of the measured variable
TLIMITERR	Checkout time of the correction variable

If upon the expiry of the checkout time, the valid measuring range is not reached, then the DULCOMETER® Compact Controller exhibits the following behaviour:

- **LIMIT ERR:** The control is switched off. An error current is emitted, provided the output is configured as a measured variable output
- **TLIMITERR:** The control is switched off. An error current is emitted, provided the output is configured as a correction variable output or a measured variable output

Initially the transgression of a limit is only a limit value transgression. This leads to a *'WARNING'*. Switching on the control time *'TIMELIM'* (> 0 minutes), creates an alarm from the limit value transgression. In the event of a *[TLIMITERR]* a, the control switches to *[STOP]*.

9.7 Checkout time control

Monitoring of the control path

The checkout time monitors the control path. The checkout time mechanism permits detection of possible defective sensors.

Dead time determination

Each control path has a dead time. The dead time is the time, which the control path requires to detect a change or addition of metered chemicals using its own instrumentation.

You must select the checkout time so that it is greater than the dead time. You can determine the dead time, by operating the metering pump in manual mode and, for example, dosing acid.

NOTICE!

Dead time determination

You should only determine the dead time if the current process cannot be negatively influenced by the manual metering.

You must determine the time, which the control path (i.e. the entirety of controllers, sensors, measurement water, flow gauges, etc.) requires to detect a first change in the measured value starting from the beginning of dosing. This time is the *'dead time'*. A safety margin, e.g. 25%, must be added to this dead time. You must allocate an appropriate safety margin for your own particular process.

The parameter *'LIMIT'* can be used to set a limit for the control variable. If the control variable exceeds this limit value, the CHECKTIME fault is triggered (checkout time of the control has elapsed). The control is switched to basic load and a fault current output.

9.8 Power relay "P-REL" as limit value relay

The power relay *'P-REL'* can be configured as a limit value relay. It always act only on the measurement variable, whereby the limits are set in *'LIMITS'* . The relay is activated upon infringement of either the top or lower limit values.

Constant checking is carried out to determine whether a limit has been infringed and if this is interrupted with the power relay configured *'P-REL= limit'* for at least *'DELAY ON'* seconds, then the relay is activated. If the limit value transgression disappears for at least *'DELAY OFF'* seconds, then the limit value relay is again deactivated.

The limit value relay is deactivated immediately upon: *'STOP'*, user calibration, *'PAUSE'* and *'HOLD'*.

9.9 Setting and functional description of "Relay Used as a Solenoid Valve"

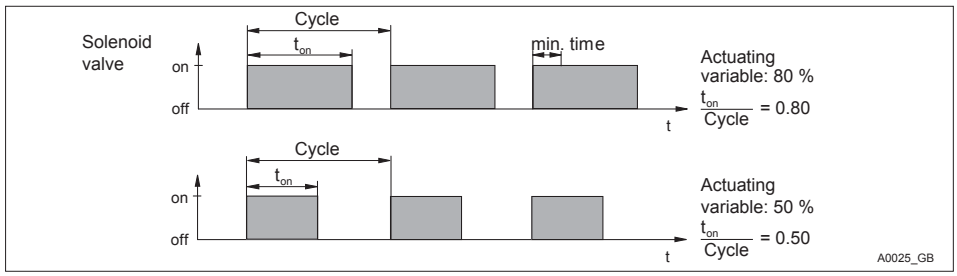

Fig. 36: Solenoid valve (= P-REL: dosing)

min. time *[MIN ON]* Cycle = *[PERIOD]* (in seconds)

Solenoid valve switching times

The switching times of the relay (solenoid valve) depend on the cycle time, the control variable and the 'min. time' (smallest permissible switch-on time for the connected device). The actuating variable determines the ratio t_{on}/cycle and thus also the switching times.

The 'min. time' affects the switching times in two situations:

1. Theoretical switching time < min. time

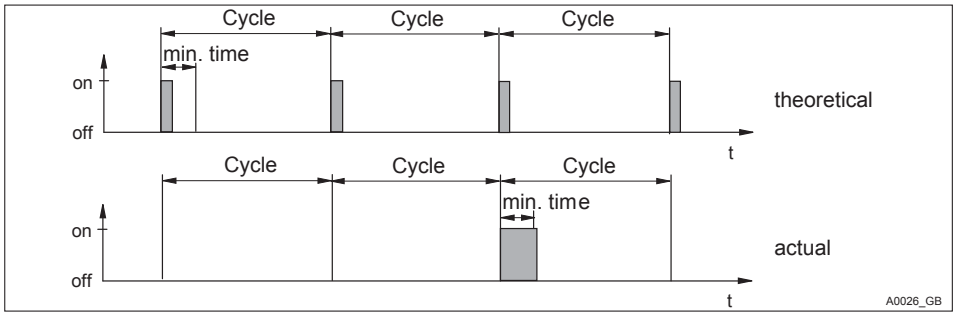

Fig. 37: Theoretical switching time < min. time

min. time *[MIN ON]*
Cycle = *[PERIOD]* (in seconds)

The DULCOMETER® Compact Controller does not switch on for a certain number of cycles until the sum of the theoretical switching times exceeds *'min. time'* . Then it switches for the duration of this total time.

2. Theoretical switching time > (cycle - min. time)

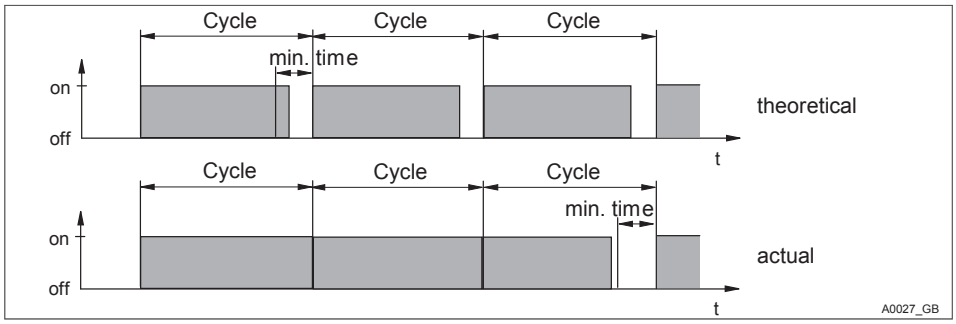

Fig. 38: Theoretical switching time > (cycle - min. time) and calculated switching time < cycle

min. time *[MIN ON]*
Cycle = *[PERIOD]* (in seconds)

The DULCOMETER® Compact Controller does not switch off for a certain number of cycles until the differences between the cycle and the theoretical switching time exceed *'min. time'* .

9.10 Alarm relay

The alarm relay triggers in *'OPERATION'* (normal mode) if an error occurs which has been defined as *'ERROR'* and not just as *'WARNING'*.

The error message *'ALARM'* in the continuous display is marked with a ✻ (star) and can be acknowledged with the OK key. The alarm and the ✻ will then disappear.

9.11 "Error logger" operating mode

The last three errors are displayed. Also displayed is how long ago (in minutes) they occurred. When a new fault occurs, the oldest fault is deleted.

Faults are only shown which occur in operating status *'OPERATION'*, i.e. not in operating status *'STOP'*, *'CAL'* (user calibration), *'HOLD'* or *'PAUSE'*.

Only *'ERRORs'* are shown, not *'WARNINGS'*, e.g. a *'LIMIT ERR'* is shown, but not *'LIMIT↑'*.

A fault, whose display has lasted for 999 minutes is automatically deleted from the *'Error Logger'*. The *'Error Logger'* is neither saved nor backed up in the event of power loss.

10 Maintenance

- **Users' qualification:** trained user, see *Chapter 2.2 'Users' qualifications' on page 10*

The DULCOMETER® Compact Controller is maintenance free.

10.1 Changing the fuse, DULCOMETER® Compact Controller

WARNING!

Danger from electrical voltage

Possible consequence: Fatal or very serious injuries.

- The DULCOMETER® Compact Controller does not have a mains switch
- When working inside the control unit, disconnect the control unit from the mains power via an external switch or by removing the external fuse

NOTICE!

Use only 5 x 20 mm micro-fuses

Possible consequence: Damage to the product or its surroundings

- 5x20 T 0.315 A
- Part number 732404

Fuse change

The mains fuse is located in a sealed fuse holder in the inside of the device.

1. Disconnect the controller from the mains power
2. Open the controller and fold the controller housing top section to the left
3. Remove the PCB cover
4. Remove the micro-fuse using a suitable tool
5. Fit the micro-fuse using a suitable tool
6. Refit the PCB cover
7. Replace controller housing top section and close the controller

10.2 Fault reporting and troubleshooting

- **Users' qualification for diagnostics:** trained user, see *Chapter 2.2 'Users' qualifications' on page 10*. Further measures depend on the type and scope of possible troubleshooting measures to be carried out.

Fault reporting and troubleshooting

Display	Description / cause	Status[1]	Mode[2]	Measured variable output[3]	Correction variable output[4]
pH/mV RANGE ↓	Input voltage too low	Error	Basic load	Fault current	-
pH/mV RANGE↑	Input voltage too high	Error	Basic load	Fault current	-
T RANGE ↓	Measured temperature beneath measuring range	Error	Basic load	Fault current	Fault current
T RANGE ↑	Measured temperature above measuring range	Error	Basic load	Fault current	Fault current
CAL ERROR	No valid user calibration exists	Error	-	-	-
NO PROBE	If activated: pH sensor monitoring outputs: no sensor	Error	Basic load	Fault current	-
PROBE ERR	If activated: pH sensor monitoring outputs: sensor break	Error	Basic load	Fault current	-
CHECK-TIME	Control checkout time elapsed	Error	Basic load	Fault current	-
mA RANGE ↑	mA output current has an upper limit	Error	-	-	-

Display	Description / cause	Status[1]	Mode[2]	Measured variable output[3]	Correction variable output[4]
mA RANGE ↓	mA output current has a lower limit	Error	-	-	-
LIMIT ↑	Measured variable exceeds upper set limit	Warning	-	-	-
LIMIT ↓	Measured variable falls below lower set limit	Warning	-	-	-
T LIMIT ↑	Correction variable exceeds upper set limit	Warning	-	-	-
T LIMIT ↓	Correction variable falls below lower set limit	Warning	-	-	-
LIMIT ERR	Set checkout time for monitoring the measurement variable limits has elapsed	Error	Stop	Fault current	-
TLIMITERR	Set checkout time for monitoring the correction variable limits has elapsed	Error	Stop	Fault current	Fault current
NO CAL	No valid user calibration exists	Warning	-	-	-
CONTACTIN	If activated: Power relay is activated in *'PAUSE/HOLD'*	Error	-	-	-

1 = *[Status]* Error status after occurrence of the fault (error means: alarm relay deactivates, *'*'* is displayed before the error message, can be acknowledged with OK)

2 = *[Mode]* Resulting controller mode (relates to control variable and thus, as necessary, mA output)

3 = *[Measured variable output]* Consequence for the current output, if this is set as *'a measured variable output'*

4 = *[Correction variable output]* Consequence for the current output, if this is set as *'a correction variable output'*

11 Technical data DULCOMETER® Compact Controller

11.1 Permissible ambient conditions

Degree of protection (IP)

The controller fulfils the IP 67 degree of protection requirements (wall/pipe mounting) or IP 54 (control panel mounting). This degree of protection is only achieved if all seals and threaded connectors are correctly fitted.

Permissible ambient operating conditions

Temperature	-10 °C ... 60 °C
Air humidity	< 95 % relative air humidity (non-condensing)

Permissible ambient storage conditions

Temperature	-20 °C ... 70 °C
Air humidity	< 95 % relative air humidity (non-condensing)

11.2 Sound Pressure Level

No noise generation measurable

11.3 Material data

Part	Material
Housing lower and upper section	PC-GF10
Bracket rear side housing bottom section	PPE-GF20
Operating film	Polyester PET membrane
Seal	Expanded PUR
Cover screws	Stainless steel A2
Profile seal (control panel mounting)	Silicone

11.4 Chemical Resistance

The device is resistant to normal atmospheres in plant rooms

11.5 Dimensions and weights

Complete device:	128 x 137 x 76 mm (W x H x D)
Packaging:	220 x 180 x 100 mm (W x H x D)
Weight of device without packaging:	approx. 0.5 kg
Gross weight of device with packaging:	approx. 0.8 kg

12 Electrical data

Mains connection	
Nominal voltage range	100 – 230 VAC ±10 %
Frequency	50 – 60 Hz
Current consumption	50 – 100 mA

The mains connection is isolated from other switching parts by reinforced insulation. The device has no mains switch; a fuse is fitted.

Power relay (P-relay)	
Loading of switching contacts	5 A; no inductive loads

Outputs galvanically isolated from other switching parts by reinforced insulation.

Digital input	
Open circuit voltage	15 V DC max.
Short circuit current	approx. 6 mA
Max.switching frequency	Static For switching processes such as *'PAUSE'*, *'HOLD'*, etc.

NOTICE!

Do not supply with voltage

For the connection of an external semi-conductor or mechanical switch.

mA Output	0 - 20 mA	4 - 20 mA	manual
Current range	0 – 20.5 mA	3.8 – 20.5 mA	0 - 25 mA
In the event of a fault	0 or 23 mA	3.6 or 23 mA	
Max. load	480 Ω at 20.5 mA		
Max. output voltage	19 V DC		
Overvoltage-resistant up to:	±30 V		
Output accuracy	0.2 mA		

Galvanically isolated from all other connections (500 V)

mV input	
Measuring range	-1 V ... + 1 V 0 pH ... 14 pH
Measurement accuracy	±0.25 % of the measuring range
Sensor monitoring of input (low resistance threshold) (can be switched off)	< 500 kΩ ... 1 MΩ (short circuit)
Sensor monitoring of input (high resistance threshold) (can be switched off)	no pH sensor connected
Display glass sensor resistance of ProMinent pH sensor	0 ... 5000 MΩ
Overvoltage-resistant up to:	±5 V

Pump control (f-relay)	
Max. switching voltage:	50 V (protective low voltage)
Max. switching current:	50 mA
Max. residual current (open):	10 µA
Max. resistance (closed):	60 Ω
Max. switching frequency (HW) at 50% filling factor	100 Hz

Digital output galvanically isolated from all other connections via OptoMos relay.

Temperature input	
Temperature measuring range:	0...120 °C
Measuring flow:	approx. 1.3 mA
Measuring accuracy:	±0.8 % of measuring range
Overvoltage-resistant up to:	±5 V
Short circuit-resistant	Yes

For connection of a Pt1000 temperature sensor using a 2-wire system. Not galvanically isolated from the mV input

13 Spare parts and accessories

Spare parts	Part number
Fine fuse 5x20 T 0.315 A	732404
Wall/tube retaining bracket	1002502
Guard terminal top part (knurled nut)	733389
Measured variable labels	1002503
DMT fixing strap	1002498
Cable connection set DMTa/DXMa (metric)	1022312
Controller housing lower part (processor/PCB), fully assembled	Identity code DCCA_E_E1 ...
Controller housing top part (display/operating part), fully assembled	Identity code DCCA_E_E2 ...

Accessories	Part number
Mounting kit for control panel installation	1037273
Check strap	1035918

14 Replacing spare part units

- **User qualification, mechanical installation:** trained qualified personnel, see ↳ *Chapter 2.2 'Users' qualifications' on page 10*
- **User qualification, electrical installation:** Electrical technician, see ↳ *Chapter 2.2 'Users' qualifications' on page 10*

⚠ CAUTION!

Check strap for strain relief

Possible consequence: Material damage.

The ribbon cable and its base cannot be mechanically stressed. Hence it is essential when mounting the controller in the control panel, that the check strap (part number 1035918) is fitted for strain relief and mechanical fixing. Without the check strap, the ribbon cable or its base could be damaged if they were to fall out of the top part of the controller housing.

14.1 Replacing the top part of the housing

! NOTICE!

Ribbon cable base

The base of the ribbon cable is firmly soldered onto the PCB. The base cannot be removed. Open the base lock (3) to loosen the ribbon cable, see Fig. 39

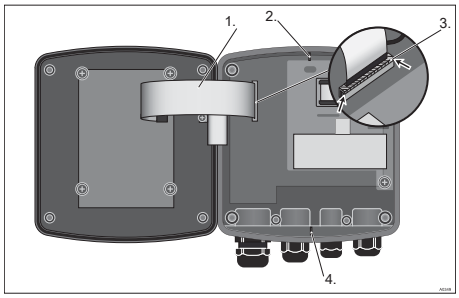

Fig. 39: Loosening the ribbon cable

1. Undo four screws and open the DULCOMETER® Compact Controller
2. Open the right and left lock (3) (arrows) on the base and pull the ribbon cable (1) out of the socket
3. The catches (2 and 4) are not needed with units for control panel installation.

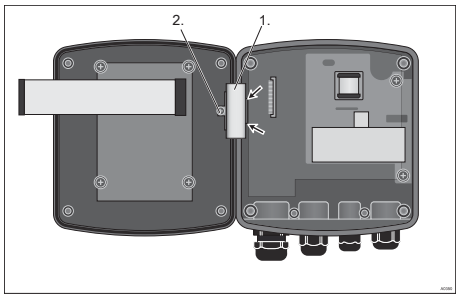

Fig. 40: Dismantling the hinge

4. Remove the screw (2), unclip the hinge (1) on the lower part of the controller housing (arrows) and remove the hinge

5. With control panel installation: Remove the two screws and remove the strain relief

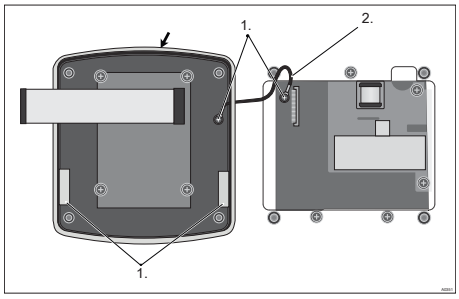

Fig. 41: With control panel installation: Fit the profile seal onto the top part of the controller housing

6. With control panel installation: Position the profile seal (arrow) evenly into the groove in the top part of the DULCOMETER® Compact Controller housing. Arrange the flaps (3) as shown in the figure

7. With control panel installation: Secure the strain relief (2) using two screws (1)

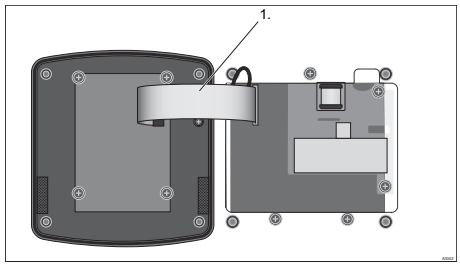

Fig. 42: Pushing and locking the ribbon cable in its base

8. Push and lock the ribbon cable (1) in its base

9. Fit the hinge

10. Screw the top part of the controller housing onto the lower part of the DULCOMETER® Compact Controller housing

11. With control panel installation: Re-check that the profile seals are fitted properly

    ⇨ Re-check that the seal is seated properly. Only if the mounting is correct, can IP 67 (wall/pipe mounting) or IP 54 (control panel mounting) degree of protection be achieved

14.2 Replacing the lower part of the housing (wall/tube retaining bracket)

Complete commissioning of the controller

Once the lower part of the housing has been replaced, it is necessary to fully commission the measuring and control point, as the new lower part of the housing does not have specific settings, only factory settings.

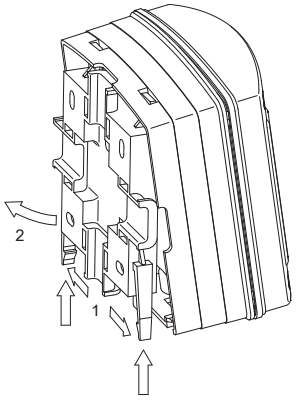

Fig. 43: Removing the wall/tube retaining bracket

1. Remove the wall/tube retaining bracket. Pull the two snap-hooks (1) outwards and push upwards

NOTICE!

Ribbon cable base

The base of the ribbon cable is firmly soldered onto the PCB. The base cannot be removed. Open the base lock (3) to loosen the ribbon cable, see Fig. 39

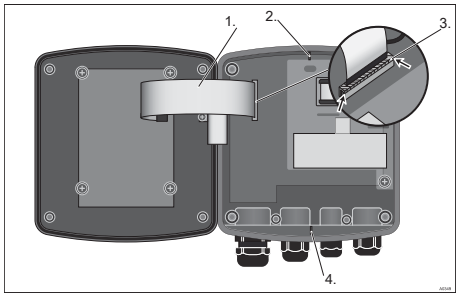

Fig. 44: Loosening the ribbon cable

2. Undo four screws and open the DULCOMETER® Compact Controller

3. Open the right and left lock (3) (arrows) on the base and pull the ribbon cable (1) out of the base. The catches (2 and 4) are used to aligned the two halves of the housing.

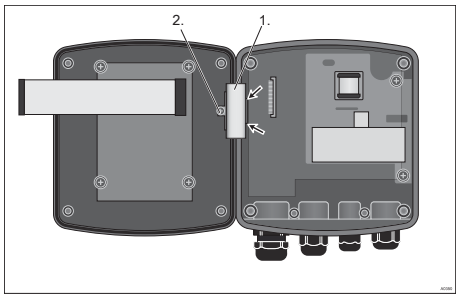

Fig. 45: Dismantling the hinge

4. Remove the screw (2), unclip the hinge (1) on the lower part of the controller housing (arrows) and remove the hinge

5. Label the cable connectors fitted to distinguish them and remove the cables from the lower part of the controller

Preparing the new lower part of the controller housing

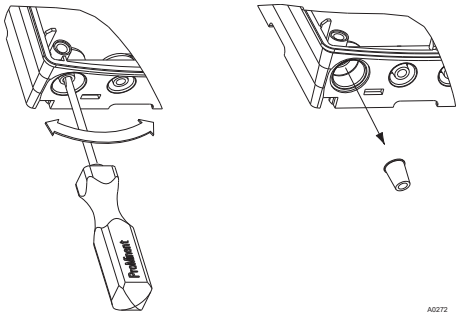

Fig. 46: Punching out the threaded holes

6.

Large threaded connection (M 20 x 1.5)

Small threaded connection (M 16 x 1.5)

Punch out as many threaded holes on the bottom of the lower part of the controller housing as required

Fit the cable and threaded connectors

7. Guide the cable into the respective reducing inserts

8. Insert the reducing inserts into the threaded connectors

9. Guide the cable into the controller

10. Connect the cable as indicated in the terminal diagram

11. Screw in the required threaded connectors and tighten

12. Tighten the threaded connector clamping nuts so that they are properly sealed

Refit the controller

13. Fit the hinge

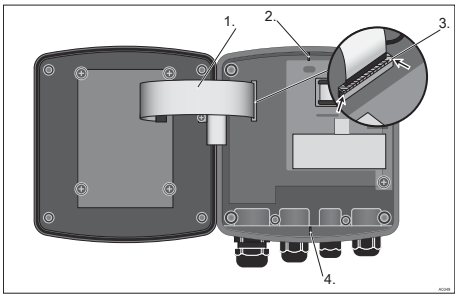

Fig. 47: Fix the ribbon cable

14. Push and lock the ribbon cable (1) in its base. The catches (2 and 4) are used to aligned the two halves of the housing.

15. Screw the top part of the controller housing onto the lower part of the DULCOMETER® Compact Controller housing

16. Re-check that the seal is seated properly. IP 67 degree of protection (wall/pipe-mounting) can only be provided if the installation is correct

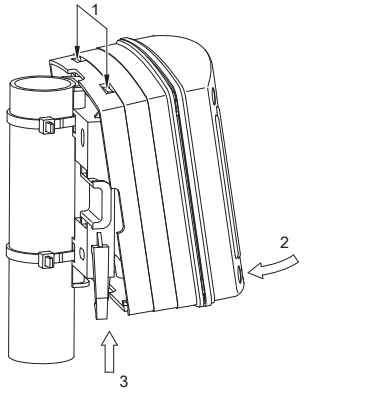

Fig. 48: Suspend and secure the DULCOMETER® Compact Controller

17. Suspend the DULCOMETER® Compact Controller at the top (1) in the wall/tube retaining bracket and push using light pressure at the bottom (2) against the wall/pipe retaining bracket. Then press upwards (3) until the DULCOMETER® Compact Controller audibly snaps into position

14.3 Replacing the lower part of the housing (control panel installation)

Complete commissioning of the controller

Once the lower part of the housing has been replaced, it is necessary to fully commission the measuring and control point, as the new lower part of the housing does not have specific settings, only factory settings.

NOTICE!

Ribbon cable base

The base of the ribbon cable is firmly soldered onto the PCB. The base cannot be removed. Open the base lock (3) to loosen the ribbon cable, see Fig. 39

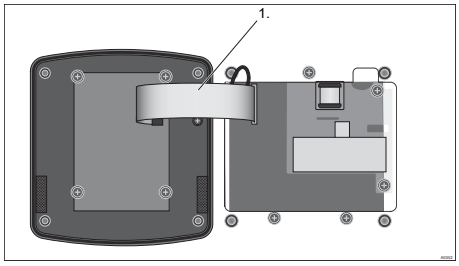

Fig. 49: Loosen the ribbon cable from the base

1. Undo four screws and open the DULCOMETER® Compact Controller

2. Open the right and left lock on the base and pull the ribbon cable (1) out of the base.

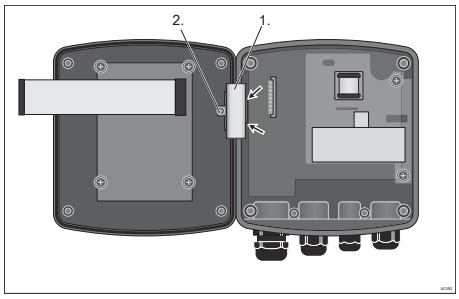

Fig. 50: Dismantling the hinge

3. Remove the screw (2), unclip the hinge (1) on the lower part of the controller housing (arrows) and remove the hinge

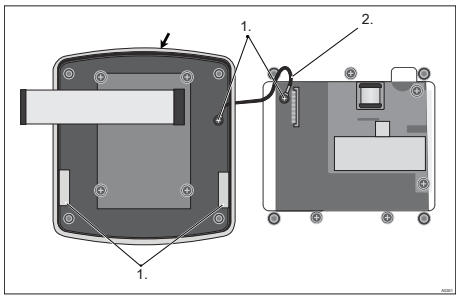

Fig. 51: Removing the strain relief

4. Remove the strain relief (2). Remove the screws (1) to do so.

5. Check the profile seal (arrow), then position the profile seal evenly into the groove in the top part of the DULCOMETER® Compact Controller housing. Arrange the flaps (3) as shown in the figure

6. Remove the top part of the controller housing (3 fixing bolts)

7. Label the cable connectors fitted to distinguish them and remove the cables from the lower part of the controller

Preparing the new lower part of the controller housing

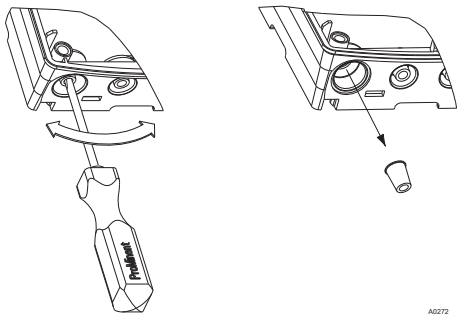

Fig. 52: Punching out the threaded holes

8.

Large threaded connection (M 20 x 1.5)

Small threaded connection (M 16 x 1.5)

Punch out as many threaded holes on the bottom of the lower part of the controller housing as required

Fit the cable and threaded connectors

9. Guide the cable into the respective reducing inserts

10. Insert the reducing inserts into the threaded connectors

11. Guide the cable into the controller

12. Connect the cable as indicated in the terminal diagram

13. Screw in the required threaded connectors and tighten

14. Tighten the threaded connector clamping nuts so that they are properly sealed

Refit the controller

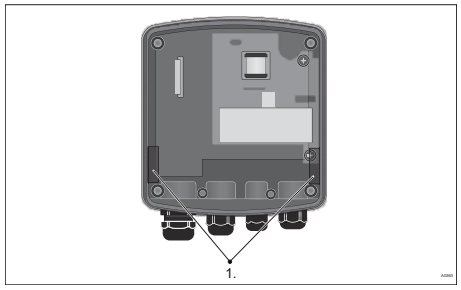

Fig. 53: Fitting the profile seal on the lower part of the controller housing

15. Use pliers to break off the catches. They are not needed for control panel installation

    Position the profile seal evenly around the top edge of the lower part of the DULCOMETER® Compact Controller housing. Arrange the flaps (1) as shown in the figure

    ⇨ Ensure that the profile seal evenly surrounds the top edge of the housing.

16. Insert the lower part of the DULCOMETER® Compact Controller housing with the profile seal from behind into the cut-out and use three screws to secure it in place

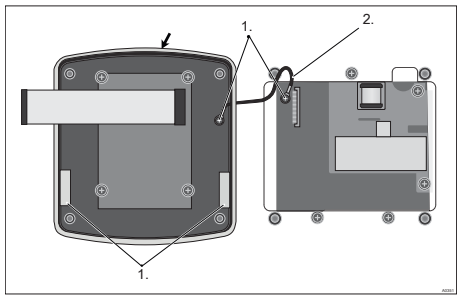

Fig. 54: Fit the profile seal onto the top part of the controller housing

17. Position the profile seal (arrow) evenly into the groove in the top part of the DULCOMETER® Compact Controller housing. Arrange the flaps (3) as shown in the figure

18. Secure the strain relief (2) using two screws (1)

19. Fit the hinge

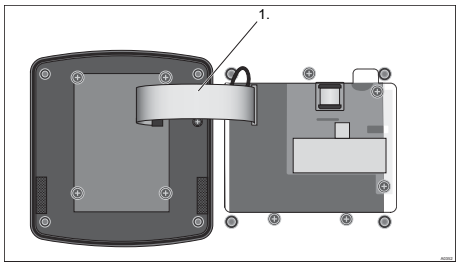

Fig. 55: Pushing and locking the ribbon cable in its base

20. Push and lock the ribbon cable (1) in its base

21. Screw the top part of the controller housing onto the lower part of the DULCOMETER® Compact Controller housing

22. Re-check that the profile seals are fitted properly

    ⇨ IP 54 degree of protection can only be provided if the control panel is mounted correctly

15 Standards complied with and Declaration of Conformity

The EC Declaration of Conformity for the controller is available to download on our homepage.

EN 60529 Specification for degrees of protection provided by housings (IP code)

EN 61000 Electromagnetic Compatibility (EMC)

EN 61010 Safety requirements for electrical equipment for measurement, control and laboratory use - Part 1: General requirements

EN 61326 Electrical equipment for measuring, control and laboratory use - EMC requirements (for class A and B devices)

16 Disposal of Used Parts

- **User qualification:** instructed user, see *Chapter 2.2 'Users' qualifications' on page 10*

NOTICE!

Regulations governing the disposal of used parts

– Note the current national regulations and legal standards which apply in your country

The manufacturer will take back decontaminated used units providing they are covered by adequate postage.

Decontaminate the unit before returning it for repair. To do so, remove all traces of hazardous substances. Refer to the Material Safety Data Sheet for your feed chemical.

A current Declaration of Decontamination is available to download on the ProMinent website.

17 Index

1, 2, 3 ...

1-Point slope calibration 53
2-Point Calibration 50

A

Access 19
Accessibility 20
Accessories 92
Action, step by step 2
Ambient conditions 86

B

Basic functions 15
Bottom section of the control housing . 28

C

Cable connection set 22
Cable ties 24
Calibration 50
Check strap 92
Check strap for strain relief 93
Chemical Resistance 87
Coaxial cable 10 m 34
Configuration 15
Contrast setting 44
Control elements 43
Control panel cut-out 26, 28

D

Deburr the edges 26
Declaration of Conformity 100
Degree of protection IP 54 . . . . . 28, 39
Degree of protection IP 67 . . . . . 20, 39
Dimensions 88
Drill 26
Drill holes 23
Drilling template 26

E

Error Logger 81

F

Fine fuse 5x20 T 0.315 A 92

G

General non-discriminatory approach . . 2
Guard terminal XE 1 34

H

Hinge 20
Hysteresis 59

I

Identity code 6
Incorrect metering 41
Interference-prone cables 33

L

Large threaded connection (M 20 x 1.5) 39
LEDs 15
Legend to the "Wiring" table 37
Links to elements or sections of these instructions or other applicable documents 2

M

Material thickness of control panel . . . 25
Max. switching current: 91
Max. switching voltage: 91
Measured variables 15
More symbols 2
Mounting (mechanical) 22
Mounting kit 25
Mounting materials 22
Mounting position 21

N

Noise generation 86
Non-discriminatory approach 2

O

Operating position 21

Original Prominent cable 37
Overview of equipment 43

P

Pipe bracket 23
Pipe diameter 24
plant rooms 87
Preparing the control panel 26
Profile seal 28
Punch out threaded holes 39
PWM control output 15

Q

Question: Are the ribbon cable or its attaching parts mechanically loadable? 20
Question: What degree of protection (IP) does the device meet? 20
Question: What is the purpose of the check strap (part number 1035918)? . 20
Question: Where can I find the Declaration of Conformity? 100
Question: Which standards are complied with? 100

R

Reading position 21
Recycling 21
Reducing inserts 39
Replacing spare part units 93
Replacing the lower part of the housing (control panel installation) . . . 97
Replacing the lower part of the housing (wall/tube retaining bracket) . . 95
Replacing the top part of the housing . 93
Reset 41

S

Safety information 8
Selectable control direction 15
Sensor monitoring 91
Single point zero point calibration 55
Small threaded connection (M 16 x 1.5) 39
Snap-hooks 23
Sound Pressure Level 86
Spare parts 92
Standard scope of delivery 22
Standards complied with 100
Strain relief 28, 39
Swimming pool water treatment 15

T

Temperature compensation 15, 76
Terminal diagram 38
Threaded connector number 35
Top section of the control housing . . . 28
Treatment of drinking water 15

U

Users' qualifications 10

V

Venting 74

W

Wall/pipe bracket 23
Washer 22
Waste water treatment 15
Weights 88
Wiring 37



ProMinent GmbH
Im Schuhmachergewann 5 - 11
69123 Heidelberg, Germany
Telephone: +49 6221 842-0
Fax: +49 6221 842-419
Email: info@prominent.com
Internet: www.prominent.com

986214, 4, en_GB

© 2015

INDUMART Canada
www.indumart.com

Fillable Standard Pressure Gauges

PI-201/2 - Gauge, Pressure, 0-30psi, Indumart, P16T2-FG-30
PI-301 - Gauge, Pressure, 0-15psi, Indumart, P16T2-FG-15
PI-301/2 - Gauge, Pressure, 0-30psi, Indumart, P16T2-FG-30
PI-401/2 - Gauge, Pressure, 0-30psi, Indumart, P16T2-FG-30
PI-501/2 - Gauge, Pressure, 0-30psi, Indumart, P16T2-FG-30
PI-551/2 - Gauge, Pressure, 0-30psi, Indumart, P16T2-FG-30
PI-553/554 - Gauge, Pressure, 0-60psi, Indumart, P16T2-FG-60
PI-703/704 - Gauge, Pressure, 0-60psi, Indumart, P16T2-FG-60
PI-601/602 - Gauge, Pressure, 0-15psi, Indumart, P16K2-FG-15

SERIES: P16

Dial: 1½", 2", 2½", 4"
Accuracy: 1.6%, 2.5%

DESCRIPTION

Indumart *P16 Series* Fillable Standard Pressure Gauges are used at measuring points with high dynamic alternating loads and strong vibrations and pulses. The glycerin filling of the case provides lubrication of the moving parts which protects the measuring system against wear and at the same time ensures smooth pointer movement and thus good readability.

Indumart *P16 Series* pressure gauges have a high level of functional safety and long service lives. These gauges are suitable for applications in hydraulics, compressors and pumps.

Various types of wall or panel mounting configurations are available.



SPECIFICATIONS

Accuracy	1.6% (2½" & 4" dials); 2.5% (1½" & 2" dials)
Dial Sizes	1½" (40 mm), 2" (50 mm), 2½" (63 mm), 4" (100 mm)
Case	St. steel (standard)
Bezel	St. steel; crimped bezel
Connection	Centre back or bottom
Thread	⅛" NPT (1½" dial only), ¼" NPT (2", 2½", 4" dials) ½" NPT (option for 4" dial), BSP thread (option)
Window	Plexiglas
Bourdon Tube	Brass (std.), st. steel (option)
Max. Temperature	60°C
Range	0...10 to 0...8000 psi; 0...60 to 0...60000 kPa; 0...0.6 to 0...600 bar Vacuum and compound ranges are available; see the Range Table

ORDER CODES

Model P16 ☐ ☐ – ☐

CONNECTION
Back — K
Bottom — T

DIAL SIZE
40 mm (1½") — 0
50 mm (2") — 1
63 mm (2½") — 2
100 mm (4") — 4

OPTIONS (more than one option may be selected)

Glycerine Filling	FG
Silicon Filling	FS
St. Steel Internal	IT
½" Process Connection (100 mm dial only)	TH
BSP Thread	TB
Back Flange for Wall Mounting (not for 40 mm dial)	MK
Front Flange for Panel Mounting (not for 40 mm dial)	MF
Clamp with 2 Screws (63 mm dial only)	MS

Example: P16T2-FG,IT

DIMENSIONS (mm) & WEIGHT

	Ø40 mm	Ø50 mm	Ø63 mm	Ø100 mm
D1	45	55	68	111
D2	41	51	63	100
H1	70	75	84	145
H2	47	52	57	74
L	29	30	30	35
Weight (g)	100	100	150	400

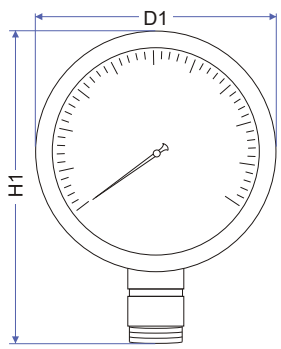

Bottom connection

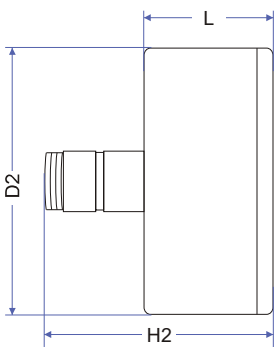

Centre back connection

Specifications may change without prior notice.

Series 1800 Low Differential Pressure Switches for General Industrial Service

Specifications — Installation and Operating Instructions

PSL-301 - Switch, Pressure, 1823-2
PSL501 - Switch, Pressure, 1823-40
PSL-601/2 - Switch, Pressure, 1823-40
PSL-7911 - Switch, Pressure, 1823-2



Model 1823 pressure switch. UL and CSA Listed, FM and CENELEC approved.

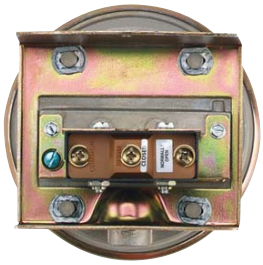

Series 1823 pressure switch. Conduit enclosure removed to show electric switch.

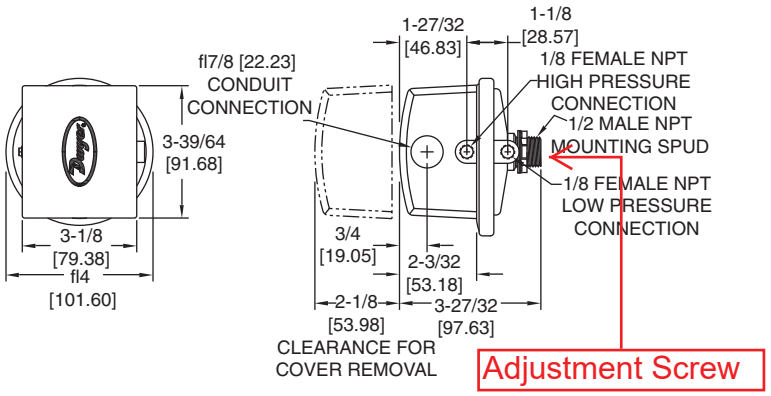

Construction and dimensions. Series 1823 pressure switches.

One of our most popular pressure switches. Combines small size and low price with 2% repeatability for enough accuracy for all but the most demanding applications. Set point adjustment inside the mounting switch on one side of a wall or panel with adjustment easily accessible on the opposite side.

***Model 1823 shown; (1823 replaces 1820, 1821 and 1822 which are similar).**

Environmental (MIL) Switch

Unlisted Model 1820 can be furnished with special snap switch sealed against the environment for high humidity and/or for government applications. Similar to standard Model 1823 except dead band is slightly greater. Specify Model 1820 (Range No.) "MIL" in ordering.

SERIES 1823 SWITCHES — OPERATING RANGES & DEADBANDS

Model Number	Operating Range, Inches W.C.	Approximate Dead Band	
		At Min. Set Point	At Max. Set Point
1823-00	0.07 to 0.22	0.05	0.05
1823-0	0.15 to 0.5	0.06	0.06
1823-1	0.3 to 1.0	0.08	0.08
1823-2	0.5 to 2.0	0.10	0.12
1823-5	1.5 to 5.0	0.14	0.28
1823-10	2.0 to10	0.18	0.45
1823-20	3 to 22	0.35	0.70
1823-40	5 to 44	0.56	1.10
1823-80	9 to 85	1.30	3.0

SPECIFICATIONS

Service: Air and non-combustible, compatible gases.

Wetted Materials: Consult Factory.

Temperature Limits: -30 to 180°F (-34 to 82.2°C). 1823-00, -20 to 180°F (-28.9 to 82.2°C).

Pressure Limits: 10 psig (68.95 kPa) continuous, 25 psig (172.4 kPa) surge.

Switch Type: Single-pole double-throw (SPDT).

Repeatability: ±2%.

Electrical Rating: 15 A @ 120-480 VAC, 60 Hz. Resistive 1/8 HP @125 VAC, 1/4 HP @ 250 VAC, 60 Hz. De-rate to 10 A for operation at high cycle rates.

Electrical Connections: 3 screw type, common, normally open and normally closed.

Process Connections: 1/8″ female NPT.

Mounting Orientation: Diaphragm in vertical position. Consult factory for other position orientations.

Set Point Adjustment: Screw type inside mounting spud.

Weight: 1 lb, 5 oz (595 g).

Agency Approvals: CE, UL, CSA, FM.

DWYER INSTRUMENTS, INC.
P.O. BOX 373 • MICHIGAN CITY, INDIANA 46361, U.S.A.
Phone: 219/879-8000 www.dwyer-inst.com
Fax: 219/872-9057 e-mail: info@dwyer-inst.com

INSTALLATION

1. Select a location free form excessive vibration and where oil or water will not drip upon the switch. See special housings for unusual conditions.
2. **While not required, positioning the pressure connections down is recommended.** Mount the switch with the diaphragm in a vertical plane. Switch with the diaphragm in a vertical plane. Switch must be recalibrated for each change in operating position.
3. Connect switch to source of pressure differential. Metal tubing with 1/4" O.D. is recommended but any tubing system which will not restrict the air flow is satisfactory. Note that the low pressure connection may be made to the 1/2" spud at the back of the switch if desired. If so connected, drill 1/16" diameter holes in the Spring Retainer flange and the head of Adjustment Screw to provide opening to the switch interior and plug the other low pressure connection.
4. Electrical connections to the standard single pole, double throw snap switch are provided by means of screw terminals marked "common", "norm open", and "norm closed". The normally open contacts close and the normally closed contact open when pressure increases beyond the set point.
5. Switch loads should not exceed the maximum specified current rating of 15 amps resistive. Switch capabilities decrease with high load inductance or rapid cycle rates. whenever and application involves one or more of these factors, the user may find it desirable to limit the switched current to 10 amps or less in the interest of prolonged switch life.

ADJUSTMENT

1. If the switch has been factory preset, check the set-point before placing in service to assure it has not shifted in transit.
2. If switching has not been preset or it is desired to change the point, observe the following procedure:
   a. To adjust the set point turn the slotted Adjustment Screw clockwise to increase the set point and counterclockwise to decrease the set point.
   b. The following is a recommended procedure for calibrating or checking calibration: Use a "T" assembly with three rubber tubing leads, all as short as possible and the entire assembly offering minimum flow restriction. Run one lead to the pressure switch, another to a manometer of known accuracy and appropriate range, and apply pressure through the third tube. Make final approach to the set point slowly. Note the manometer and pressure switch will have different response characteristics due to different internal volumes, lengths of tubing, oil drainage, etc. Be certain switch is checked in position it will assume in use, i.e. vertical, horizontal, etc.

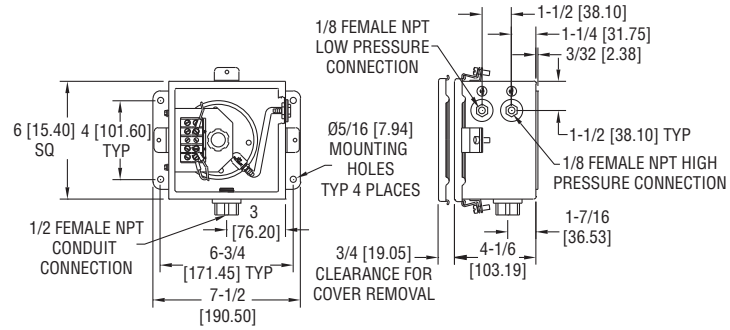

Weatherproof Enclosure

16 ga. steel enclosure for unusually wet or oily conditions. Withstands 200 hour salt spray test. Gasketed cover. Weight 5-1/2 lb (2.5 kg). Switch must be installed at factory. Specify "WP" in addition to switch catalog number.

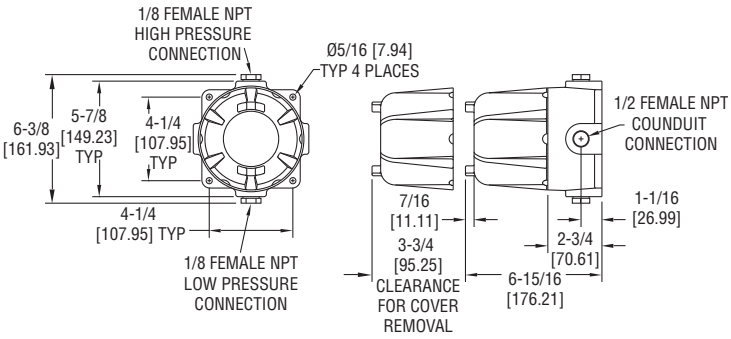

Explosion-Proof Housing

Cast iron base and aluminum dome cover. Approximate weight 7-1/2 lb (3.4 kg). Specify "EXPL" in addition to switch catalog number.

DWYER INSTRUMENTS, INC.
P.O. BOX 373 • MICHIGAN CITY, INDIANA 46361, U.S.A.
Phone: 219/879-8000 www.dwyer-inst.com
Fax: 219/872-9057 e-mail: info@dwyer-inst.com

SERIE 1800 Interruptor Para Baja Presión Diferencial



Model 1823 pressure switch. UL and CSA Listed, FM approved.

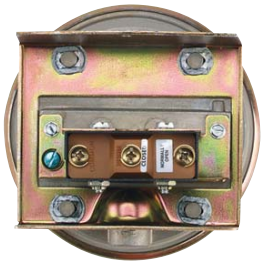

Series 1823 pressure switch. Conduit enclosure removed to show electric switch.

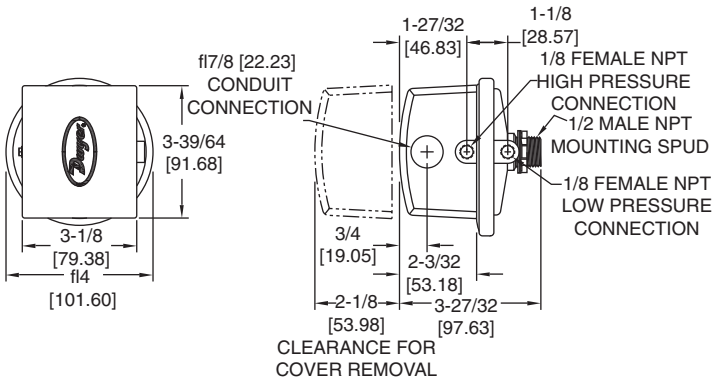

Construction and dimensions. Series 1823 pressure switches.

Uno de nuestros mas populares interruptores de presión. Combina un pequeño tamaño y bajo precio, con una repetibilidad del 2%, exactitud suficiente para las aplicaciones con mas demanda. El ajuste del punto de operación en un extremo, permite instalar el interruptor de un lado en las pared o tablero, permitiendo acceso al tornillo de ajuste.

Interruptor para Ambiente Húmedo (MIL)

El modelo 1820 puede ser fabricado son un sello especial a prueba de intemperie, o para aplicaciones con alta humedad. Similar al modelo 1823, excepto que la banda de operación es mayor.

Especifique el modelo 1820 (Rango No.) “Mil” en su orden.

Model Number	Operating Range, Inches W.C.	Approximate Dead Band	
		At Min. Set Point	At Max. Set Point
1823-00	0.07 to 0.22	0.05	0.05
1823-0	0.15 to 0.5	0.06	0.06
1823-1	0.3 to 1.0	0.08	0.08
1823-2	0.5 to 2.0	0.10	0.12
1823-5	1.5 to 5.0	0.14	0.28
1823-10	2.0 to10	0.18	0.45
1823-20	3 to 22	0.35	0.70
1823-40	5 to 44	0.56	1.10
1823-80	9 to 85	1.30	3.0

Especificaciones:
Interruptor de presión diferencial operado por diafragma de 4”, para activar un interruptor de presión tipo simple polo doble tiro. El diafragma esta controlado por un resorte calibrado que se puede ajustar para fijar la presión diferencial exacta a la cual el interruptor actuara. El movimiento del diagragma es transmitido al botón del interruptor por un medio mecánico. Interruptor Dwyer Instruments, Inc. Catalogo No. 1823-__ __ para el rango de operación requerido.

SPECIFICATIONS

Service: Air and non-combustible, compatible gases.

Wetted Materials: Consult Factory.

Temperature Limits: -30 to 180°F (-34 to 82.2°C). 1823-00, -20 to 180°F (-28.9 to 82.2°C).

Pressure Limits: 10 psig (68.95 kPa) continuous, 25 psig (172.4 kPa) surge.

Switch Type: Single-pole double-throw (SPDT).

Repeatability: ±2%.

Electrical Rating: 15 A @ 120-480 VAC, 60 Hz. Resistive 1/8 HP @125 VAC, 1/4 HP @ 250 VAC, 60 Hz. De-rate to 10 A for operation at high cycle rates.

Electrical Connections: 3 screw type, common, normally open and normally closed.

Process Connections: 1/8″ female NPT.

Mounting Orientation: Diaphragm in vertical position. Consult factory for other position orientations.

Set Point Adjustment: Screw type inside mounting spud.

Weight: 1 lb, 5 oz (595 g).

Agency Approvals: CE, UL, CSA, FM.

DWYER INSTRUMENTS, INC.
P.O. BOX 373 • MICHIGAN CITY, INDIANA 46361, U.S.A.
Phone: 219/879-8000 **www.dwyer-inst.com**
Fax: 219/872-9057 **e-mail: info@dwyer-inst.com**

INSTALACIÓN:

1. Seleccione una ubicación libre de vibración excesiva, en donde el agua o aceite no entre al interruptor. Revise encapsulados especiales para aplicaciones especiales.
2. Mientras no se requiera otra, las conexión de presión inferior es recomendada. Monte el interruptor con el diafragma en posición vertical, el interruptor debe recalibrarse para cada cambio de posición.
3. Conecte el interruptor a la fuente de presión diferencial. Tubo metálico con diámetro de 1/4" es recomendado, pero cualquier sistema de tubería que no restrinja el flujo de aire es bueno.
4. Conexiones eléctricas estándar de los interruptores SPDT, común, NA y NC. Los contactos cambian cuando se incrementa la presión del punto de operación.
5. La carga del interruptor no debe exceder los 15 Amp. Especificados. Las capacidades decrecen con altas cargas inductivas y ciclos rápidos de actuación, por lo que en estos casos los limites de corriente deben ser 10 Amp. 0 menores para incrementar la vida del interruptor.

AJUSTES:

1. Si el interruptor ha sido calibrado en fabrica, revise el punto de operación antes de ponerlo en servico.
2. De lo contrario, siga los siguientes pasos:
   A. Para ajustar el punto de operación, gire el tornillo de calibración en sentido de las manecillas del reloj para aumentar el valor y en contra de las manecillas del reloj para dis minuir el valor del punto de operación.
   B. Lo siguiente se recomienda para calibrar o revisar la calibración: Use una T con tres mangueras plásticas, tan pequeñas como sean posible. Conecte una manguera al interruptor de presión, otra al manómetro y por la tercera aplique la presión de esta forma podrá ajustar el interruptor a la presión requerida lo mas exacto posible.

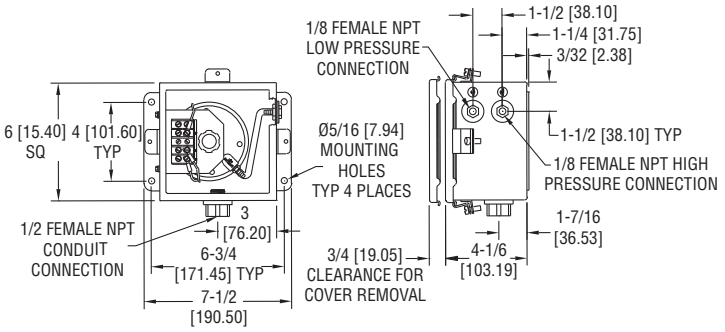

Encapsulado a Prueba de Intemperie
Encapsulado de acero para condiciones húmedas y/o aceitosas, soporta pruebas de 200 horas de spray salino, pesa 5-1/2 libras. El interruptor debe ser instalado en la planta al momento de su fabricación. Especifique "WP" mas el modelo del interruptor en catalogo.

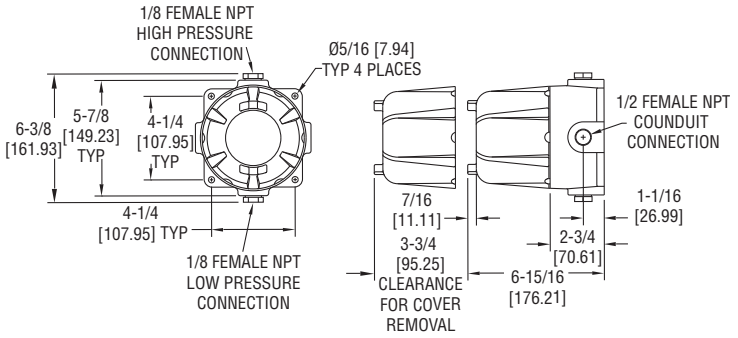

Encapsulado a Prueba de Explosión
Encapsulado a base de Hierro y Aluminio, pesa aproximadamente 7-1/2 libras. Especifique "EXPL" mas modelo del interruptor en catalogo.

©Copyright 2003 Dwyer Instruments, Inc.
Printed in U.S.A. 7/03

FR# 24-440256-00 Rev. 1

DWYER INSTRUMENTS, INC.
P.O. BOX 373 • MICHIGAN CITY, INDIANA 46361, U.S.A.

Phone: 219/879-8000 www.dwyer-inst.com
Fax: 219/872-9057 e-mail: info@dwyer-inst.com

PSL-7911 - Meter, Flow, Pitot Tube, 4"

newterra™
smart technology. sustainable solutions.℠

PITOT TUBE AIR FLOW METERS
PFLOW SERIES

Application:

newterra Pitot Tube Air Flow Meters are designed to be a cost effective, accurate flow meters that are calibrated for your site-specific conditions. The unique self draining design allows the meter to function in process lines with high humidity and moisture content as well as dry air lines. The PFLOW meter takes two pressure readings in your process line, one at a high-pressure, zero velocity and one at a low-pressure, full velocity. The pressure differential is used to calibrate the meter for a desired flow and operating conditions. When ordering the flow meter, it is critical to supply: operating temperature, pressure or vacuum in psia, and the pipe ID. The PFLOW meter can be supplied with any scale range required in scfm (25deg C, 14.7psia) or acfm at your listed operating conditions.

Construction:

The high, static pressure is measured using a 304 Stainless Steel probe inserted into the process line. The probe is designed with 4 measurement ports that provide an average reading for flow through your process pipe. Multiple ports on the static pressure line ensure that you can maintain an accurate reading while the tube is self-draining. The low pressure point is measured by tapping a 1/4" hole in the process line ahead of the high-pressure port. This tapping is completed on the top of the pipe to minimize moisture collection in the pressure communication lines. The differential pressure gauge is connected to the pressure ports using 3/8" Buna-N and the brass connections are capable of handling temperatures as high as 250 deg F. The Dwyer Magnehelic ® gauge provides a large, clear and accurate display of your airflow reading.

Standard Features:

- 304SS static pressure probe
- Brass compression fittings and Buna-N pressure communication tubing
- Direct read display can be calibrated for your specific operating conditions. Display can read ACFM or SCFM but SCFM is recommended as there is less error when the meter is operating above or below the calibrated pressure. Other units are available on request.
- Large 4" display for accurate reading
- Standard gauges are shipped loose for installation in an existing pipeline. The gauges can be wall mounted in site-specific locations. A pipe bracket can be purchased.

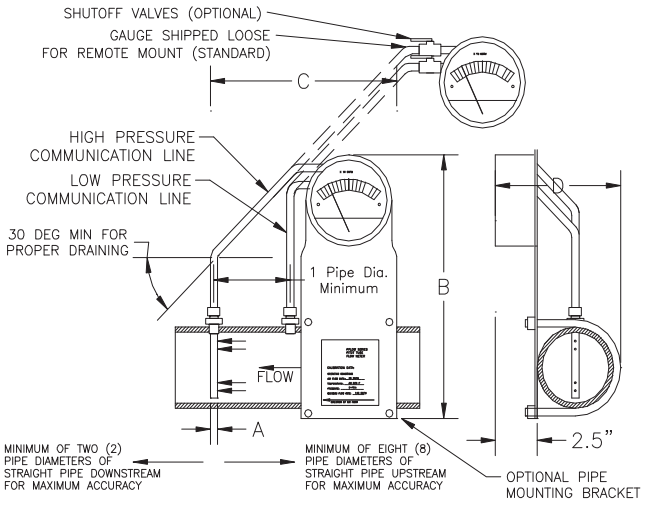

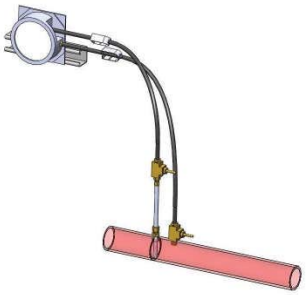

Dimensions Chart:

Part Number	A	B	C	D	Pipe
1" PFLOW	1/4"	12"	12"	4.75"	1"
1-1/2" PFLOW	3/8"	12"	12"	5.25"	1.5"
2" PFLOW	3/8"	12"	12"	5.75"	2"
3"PFLOW	1/2"	12"	12"	6.75"	3"
4"PFLOW	1/2"	14"	14"	7.75"	4"
6"PFLOW	1/2"	14"	14"	9.75"	6"
8"PFLOW	1/2"	14"	14"	12"	8"

Larger pitot tubes can be supplied as required.

newterra
smart technology. sustainable solutions.™

PITOT TUBE AIR FLOW METERS
PFLOW SERIES

Specifications:

Maximum Air Temperature:	250 °F (standard) 300 °F (high temp version)	Accuracy:	2.5 % of scale at calibration point
Max. Operating Pressure	15 psig (standard unit) 35 psig (medium pressure unit) 80 psig (high pressure unit)	Pressure Drop:	Less than 2" WC pressure drop in high flow applications
Repeatability:	1% of scale at calibration point		

The following table provides recommended flow rates for each meter at a given operating pressure range. These values are suitable for temperatures between 70-100 deg F. For meter applications outside this temperature range and outside of the operating pressure ranges listed below please contact our sales department for help in choosing a suitable meter.

Operating pressure	Recommended Operating Flow rates (SCFM)				
	0-5 psi	5-10 psi	0-10" Hg	10-20" Hg	20-26" Hg
PFLOW 1"	15-40	17-50	12-35	8-25	6-20
PFLOW 1-1/2"	35-90	40-115	25-75	20-60	15-50
PFLOW 2"	60-160	70-200	50-150	30-100	25-80
PFLOW 3"	135-360	150-450	100-300	75-250	50-180
PFLOW 4"	250-650	275-800	200-550	120-450	100-320
PFLOW 6"	550-1500	600-1800	450-1200	275-1000	200-750
PFLOW 8"	1000-2500	1100-3200	750-2250	500-1750	350-1250

Calibration and Correction Factors:

Each PFLOW pitot tube is calibrated for a specific operating temperature and pressure. If the pitot tube operates at a different pressure or temperature than the original design, the flow measurement can be adjusted with the following equation: (Units of $Flow_1$ and $Flow_2$ will be the same)

$Flow_1 = Flow_2 \times (P_2/P_1 \times ((T_1+460) / (T_2+460))^{1/2}$

Pressure units: psia, Temperature units: °F

Options Table:

Option	Description
Orientation:	The flow meter gauge can be oriented for flows from Left to Right, Right to Left, Up or Down as required for your specific application.
Site Specific Calibration and Gauge Range:	The following information is required to calibrate the flow meter for your specific application: Operating Pressure (psia): Operating Temperature (°F or °C): Operating Flow Rate (acfm or scfm or other scales as required): Maximum Flow rate (better accuracy is achieved when the operating flow rate is approximately ¾ of the scale range of the flow meter)
4-20ma Option	Flow meters can be ordered with 4-20ma outputs for control systems. Three versions are available: Nema 7 (Class 1 Div 1) FM or CSA approved Two Wire Connection: 24VDC+, Signal Output Power Consumption: 20mA 316SS Wetted parts Nema 4 (Weatherproof) or Nema 1 (General Purpose) Three Wire Connection: 24VDC+, 24VDC-, Signal Output Accuracy on all 4-20ma outputs: 2.5% of full scale for meter Aluminum with Silicon diaphragm
Shutoff Valves	The pressure gauges are not designed to operate with water collecting within the internal components. If you will be operating with hot wet air or condensing air streams, then it is recommended that we install shutoff valves in the pressure communication lines to isolate the gauge from the process lines when the operator is not taking a flow reading.
Pre Installed Section of Pipe	The flow meters can be preinstalled in a section of pipe with any configuration of material and fittings on the end. This will allow the PFLOW meter to be factory installed and tested in this section of pipe before leaving our facility.
Pipe Mounting Bracket	A pipe-mounting bracket can be supplied to allow the gauge to mount directly on the pipe as shown in the above picture.

newterra
smart technology. sustainable solutions.

PITOT TUBE AIR FLOW METERS
PFLOW SERIES

Company Name: _____ Purchase Order Number: _____

Contact Name: _____ Contact Number (PH/FAX):_____/_____

(Note: Please include relevant credit information to set up an account if required.
Ship to Address: _____

Billing Address: _____

Credit Card Orders (Please check card type)

❑ VISA ❑ MASTERCARD

Credit Card Number: _____ Expiry Date (m/y): _____ / _____

Meter Size: (please check box)

❑ 1” ❑ 2” ❑ 4” ❑ 8”

❑ 1-1/2” ❑ 3” ❑ 6”

Process Pipe Material and Schedule: (please check box)

❑ Schedule 40 PVC ❑ Schedule 40 Steel

❑ Schedule 80 PVC ❑ Schedule 80 Steel

For other Materials and Schedule Specify Inner Diameter of Pipe: _____

Orientation: (please check box)

❑ Flow from Left to Right ❑ Flow Up

❑ Flow from Right to Left ❑ Flow Down

4-20mA Output (please check box)

❑ Nema 7, Class 1 Div 1, 316SS, with flow gauge ❑ Nema 7, Class 1 Div 1, 316SS, no direct read display

❑ Nema 4, Weatherproof, with flow gauge ❑ Nema 4, Weatherproof, no direct read display

❑ Nema 1, General Purpose, with flow gauge ❑ Nema 1, General Purpose, no direct read display

❑ None

Calibration Information (Required Information):

Operating Pressure: _____ **Operating Temperature:** _____

Elevation or Atmospheric Pressure: _____

Operating Flow Rate: _____ **Maximum Flow Rate*:** _____

Scfm units are preferred but any flow units can be provided. The operating flow rate should be approximately ¾ of full scale to allow for an accurate reading at that flow rate. Note Lowest accurate reading is at ¼ of full scale.
*Options for Maximum Flow Rates include:1, 2, 3, 4, 5, 6, 7, 8, 9, 10, 11, 12, 13, 15, 20, 25, 30, 35, 40, 45, 50, 55, 60, 65, 70, 75, 80, 85, 90, 95, 100 and any scale can be multiplied by 10, 100, 1000, 10000

Switch-Tek

Powered Level Switch

LZ12, LU10, LP15 and LO10 Series Manual



Flowline Inc.
10500 Humbolt Street
Los Alamitos, CA 90720
Tel: (562) 598-3015
Fax: (562) 431-8507
www.flowline.com

About Switch-Pak™ Powered Level Switches: This manual contains information on all four series of powered level switches; Vibration (LZ12 series), Ultrasonic (LU10 series), Optic Leak (LO10 series) and SuperGuard Capacitance (LP15 series). The switches all feature two outputs: 1) a 4 or 20 mA current switch and 2) a 60VA SPST dry contact relay. All four series are manufactured with thermoplastics, including the cable, making them submersible in design and ideal for corrosive applications. Package the switches with either Flowline controllers (LC10 or LC40 series) or interface directly to another controller or PLC.

Table of Contents

Specifications: 3
Sensor Information: 4
Vibration Switch (LZ12 Series): 4
Maintenance Alarm: 5
Ultrasonic Switch (LU10 Series): 6
Optic Leak Detection (LO10 Series): 7
SuperGuard RD Capacitance Switch (LP15 Series): 8
Safety Precautions: 9
Make a Fail-Safe System:: 10
Installation: 11
Through Wall Installation: 11
Top Wall Installation: 11
Electrical: 12
Wiring: 13
Wiring to a Flowline Controller: 13
Switching Inductive Loads: 13
Wiring the Relay Output: 14
Intrinsically Safe Control Drawings (LU10 series only): 15-16
Wiring as a P-Channel or N-Channel Output: 17
Maintenance: 18
Cleaning procedure: 18
LZ12 Maintenance Alarm: 18
Testing the Installation: 19
Warranty, Returns & Limitations: 20

Common Specifications:

Orientation:	Universal	Pressure:	150 psi (10 bar) @ 25 °C., derated @ 1.667 psi (.113 bar) per °C. above 25° C.
Accuracy:	± 1 mm in water		
Repeatability:	± 0.5 mm in water		
Supply voltage:	12-36 VDC	Sensor rating:	NEMA 6 (IP68)
	12-30 VDC (LZ12 Only)	Cable type:	4-conductor, #22 AWG (shielded)
Consumption:	25 mA maximum	Cable length:	10' (3m) - Standard
Contact type:	(1) SPST relay		25' (7.6m) or 50' (15.2m) - Special
Contact rating:	60VA (125 VAC max / 1A max)	Process mount:	3/4" NPT (3/4" G / R)
Contact output:	Selectable NO/NC	Mount. gasket:	Viton® (G / R version only)
Process temp.:	F: -40° to 176°	Classification:	General purpose
	C: -40° to 80°	CE compliance:	EN 61326 EMC / EN 61010-1 safety

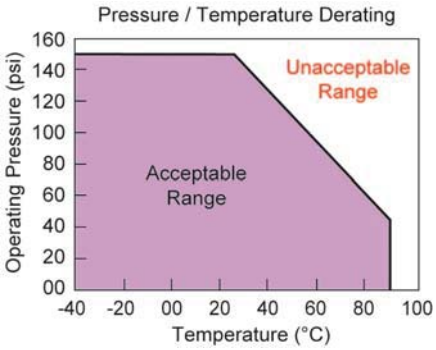

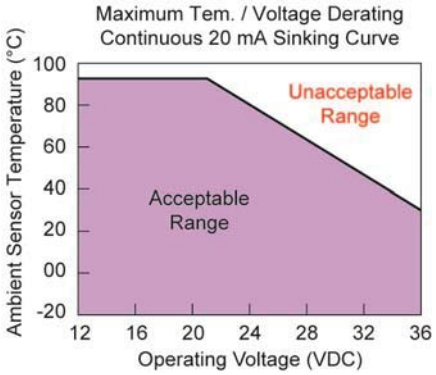

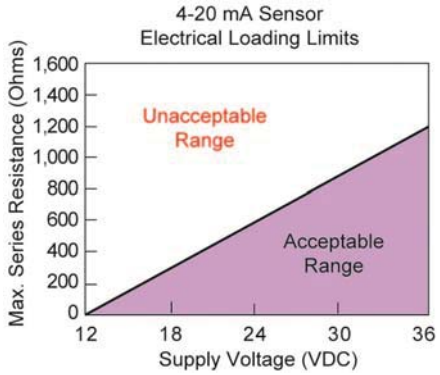

Vibration Switch (LZ12 Series): The Tuning Fork vibration switch operates at a nominal frequency of 400 Hz. As the switch becomes immersed in a liquid or slurry, a corresponding frequency shift occurs. When the measured frequency shift reaches the set point value, the switch changes state indicating the presence of a liquid or slurry medium. For optimum performance and proactive maintenance, the sensor automatically adjusts for coating, and if necessary, outputs a preventative maintenance alarm.

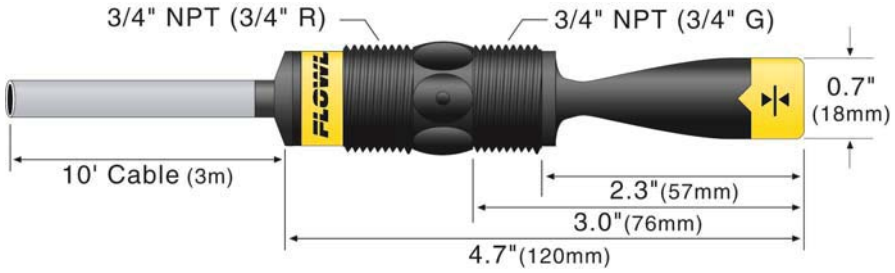

⚠ ***Do not squeeze the forks together. Doing so could damage or break the sensor and void the warranty.***

When powering up the LZ12, the start-up procedure requires the switch to cycle through a wet condition for 1/2 second in order to determine an initial resonance.

LZ12 Specifications:

Sensor material:	Ryton® (glass fill) Viton® cable grommet	Maint. alarm: Cable jacket mat'l:	NPN transistor, 10 mA max. PP
Process Temp.:	F: -40° to 176° C: -40° to 80°	Cable type:	5-conductor, #24 AWG (shielded)

Configurations:

Part Number	Material (body)	Material (cable)	Thread (inside x outside)
LZ12-1405	Ryton	Polypropylene	¾" NPT x ¾" NPT
LZ12-1425	Ryton	Polypropylene	¾" R x ¾"G

Maintenance Alarm (LZ12 Vibration only): For optimum performance and proactive maintenance, the sensor automatically adjusts for coating, and if necessary, outputs a preventative maintenance alarm. The Yellow wire is a NPN transistor designed to switch when a build-up of material prevents the vibration switch from operating at its operational frequency. Use the Yellow wire to identify when the Vibration switch requires cleaning. To wire the maintenance output wire to an LED, follow the wiring diagram below. The Yellow wire is connected to the LED and a 2.2kΩ resistor in series and referenced back to the (+) of the power supply.

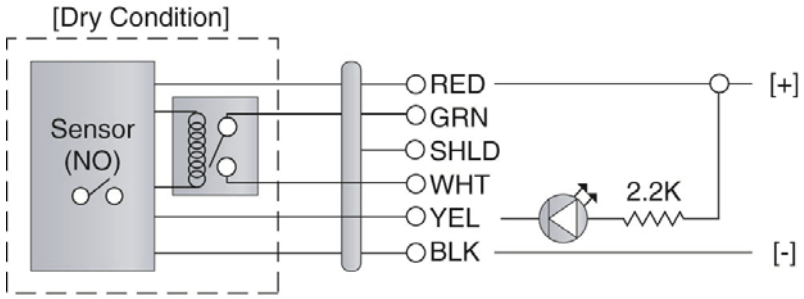

Sensor Power
[RED & BLK wires] / 36 VDC Max.
5 ±1mA Dry / 22 ±1mA Wet
Relay Rating
[GRN & WHT wires] / 60 VA
Maintenance Alarm
[YEL wire] / NPN Transistor / 10mA Max.

To wire the maintenance output wire to a PLC, follow the wiring diagram below. The Yellow wire is connected to the PLC input with a 10 kΩ resistor parallel to the PLC input and the (+) of the power supply.

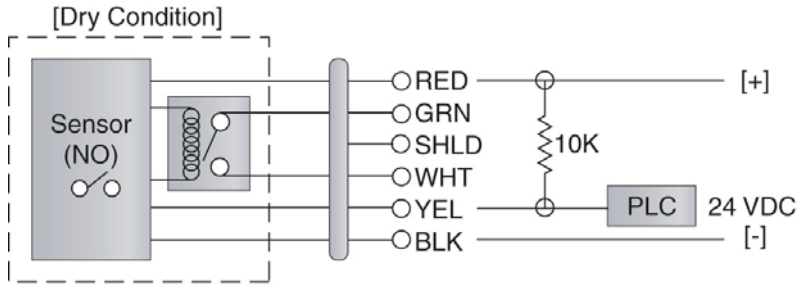

Sensor Power
[RED & BLK wires] / 36 VDC Max.
5 ±1mA Dry / 22 ±1mA Wet
Relay Rating
[GRN & WHT wires] / 60 VA
Maintenance Alarm
[YEL wire] / NPN Transistor / 10mA Max.

Ultrasonic Switch (LU10 Series): The Ultrasonic level switch generates a 1.5 MHz ultrasonic wave from a miniature piezoelectric transducer located on one side of the gap within it's sensing tip. Another piezo transducer, located on the other side of the gap, acts as a microphone, picking up the sound wave. When liquid enters the gap, there is a change in the speed the wave crosses the gap. This change in the speed of sound identifies whether the sensor is in liquid or in air.

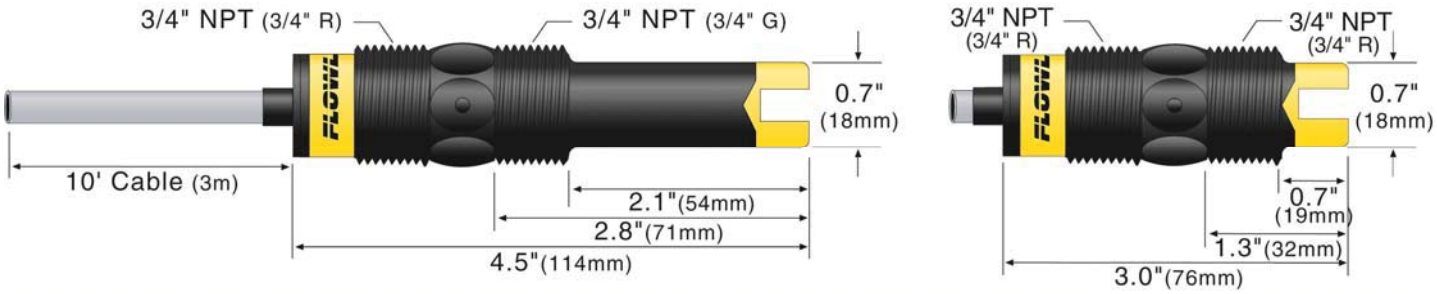

⚠ ***The sensor should be installed so that the liquid will drip out of the gap when the sensor becomes dry.***

LU10 Specifications:

Sensor material:	1_ _5: PP 2_ _5: PFA	Cable jacket mat'l:	1_ _5: PP 2_ _5: PFA
Classification:	Intrinsically safe	Parameters:	CSA: Vmax = 32V, Imax = 300 mA, Pmax = 1.3 W; Ci = 0 µF, Li = 0 µH EEx: Ui = 32V; Ii = 300 mA; Pi = 1.3 W; Ci = 0 µF; Li = 0 µH
Approvals:	CSA: Class I, Groups A, B, C & D; Class II, Groups E, F and G; Class III EEx: Class 1, Division 1, Groups A, B, C, D; EEx ib IIC T6	Certificates:	CSA: LR 79326 EEx: LCIE 01.E6048 X

Configurations:

Part Number	Length	Material (body)	Material (cable)	Thread cable side x sensor side
LU10-1305	Short (3")	Polypropylene	Polypropylene	(¾" NPT) x (¾" NPT)
LU10-1325	Short (3")	Polypropylene	Polypropylene	(¾" R) x (¾"R)
LU10-1405	Long (4.5")	Polypropylene	Polypropylene	(¾" NPT) x (¾" NPT)
LU10-1425	Long (4.5")	Polypropylene	Polypropylene	(¾" R) x (¾"G)
LU10-2305	Short (3")	PFA	PFA	(¾" NPT) x (¾" NPT)
LU10-2325	Short (3")	PFA	PFA	(¾" R) x (¾"R)
LU10-2405	Long (4.5")	PFA	PFA	(¾" NPT) x (¾" NPT)
LU10-2425	Long (4.5")	PFA	PFA	(¾" R) x (¾"G)

Optic Leak Detection Switch (LO10 Series): The Optic Leak Detector use principles of optical refraction to detect the presence or absence of fluid. A pulsed infrared light beam is internally generated by a light emitting diode and aimed at the slanted optical tip of the sensor. If the tip is dry, the light beam bounces at a 90 degree angle to a receiving photo transistor, indicating a dry condition. If the tip is immersed in liquid, the light beam will refract out into the liquid instead of being reflected to the photo transistor, indicating a wet condition.

⚠ **The LO10 series is designed as a leak detection switch. The switch should be installed in applications where under normal conditions, it remains away from the liquid and will only come into contact during a leak.**

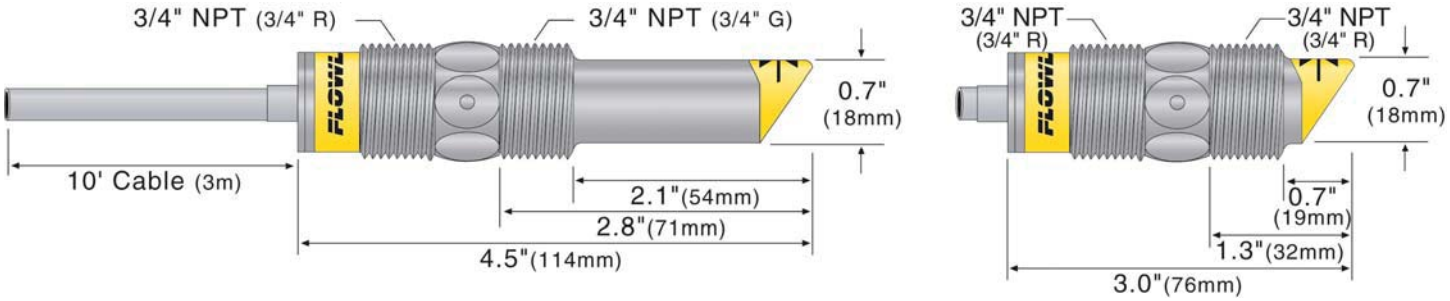

⚠ ***The Optic Leak Detector cannot detect the presence or absence of specular application liquids that reflect light (such as milk), or viscous liquids (such as paint) that form a coating on the sensor tip.***

LO10 Specifications:

Sensor material: 1_ _5: PP 2_ _5: PFA	Cable jacket mat'l: 1_ _5: PP 2_ _5: PFA

Configurations:

Part Number	Length	Material (body)	Material (cable)	Thread cable side X sensor side
LO10-1305	Short (3")	Polypropylene	Polypropylene	(¾" NPT) x (¾" NPT)
LO10-1325	Short (3")	Polypropylene	Polypropylene	(¾" R) x (¾"R)
LO10-1405	Long (4.5")	Polypropylene	Polypropylene	(¾" NPT) x (¾" NPT)
LO10-1425	Long (4.5")	Polypropylene	Polypropylene	(¾" R) x (¾"G)
LO10-2305	Short (3")	PFA	PFA	(¾" NPT) x (¾" NPT)
LO10-2325	Short (3")	PFA	PFA	(¾" R) x (¾"R)
LO10-2405	Long (4.5")	PFA	PFA	(¾" NPT) x (¾" NPT)
LO10-2425	Long (4.5")	PFA	PFA	(¾" R) x (¾"G)

SuperGuard Capacitance Switch (LP15 Series): The SuperGuard level switch generates a pulse-wave radio frequency signal from the capacitance electrode located in the sensing tip of each sensor. When liquid comes into contact with the sensing tip, the capacitance as measured by the sensor changes based on the dielectric constant of the liquid. The guard circuit rejects the negative effects of coating buildup on the probe by eliminating the coating signal path between the active and reference electrodes.

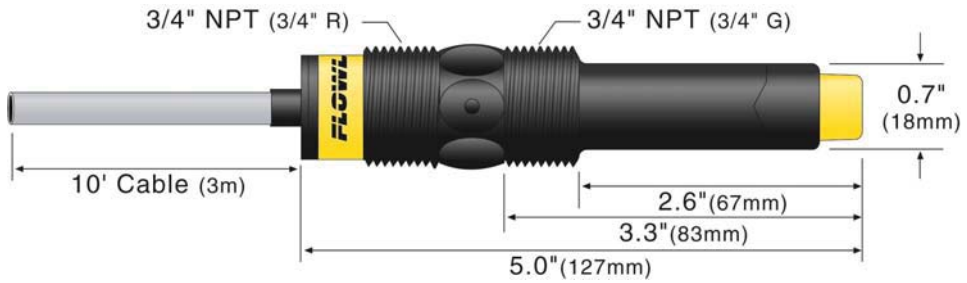

⚠ ***The sensor's operation may vary based on the dielectric properties of various application liquids. The LP15 series sensor is factory-calibrated to be used with liquids with a dielectric value between 20 and 80. Liquids with a dielectric constant less than 20 will not be detected by an LP15 series sensor.***

Table of Common Dielectric Constants: NOTE: Liquids with a dielectric constant less than 20 will not be detected by an LP15 series level switch.

Acetone 21	Chlorotoluene 4.7	Ethylene chloride .. 10.5	Isobutyl methyl ketone 13	Nitrotoluene 25	Trichloroethylene 3.4
Acetoaldehyde 22.2	Chloroform ....4.5 to 5.0	Ethyl acetate 6.4	Jet fuel 1.7	Naphthalene ..2.3 to 2.5	Trichloroacetic acid 4.5
Acetyl methyl hexyl ketone 28	Chlorine, liquid 2.0	Ethyl salicylate 8.6	Lead carbonate 18	Oils, vegetable 2.5 to 3.5	Terephthalic acid ..... 1.5 to 1.7
Alcohol ..... 16 to 31	Carbon tetrachloride 2.2	Ethyl stearate 2.9	Lead nitrate 38	Oils, mineral ..2.3 to 2.4	Thinner 3.7
Ammonia ..... 15 to 25	Cyan 2.6	Ethyl silicote 4.1	Methyl salicylate 9.0	Oils, petroleum .....1.8 to 2.2	Urea 3.5
Acetic acid .... 4.1 to 6.2	Cyclohexane methanol 3.7	Formic acid 59	Methanol 33	Oleic acid 2.5	Vinyl chloride .. 2.8 to 6
Butyl chloride 9.6	D.I. Water 20	Ferric oleate 2.6	Methyl alcohol .33 to 38	Propane, liquid .....1.8 to 1.9	Vinyl alcohol 1.8 to 2.0
Barium chloride 9 to 11	Ethyl toluene 2.2	Freon 2.2	Margarine, liquid .....2.8 to 3.2	Potassium nitrate .....5.0 to 5.9	Water, 20°C 80
Benzene 2.3	Ethyl alcohol 23	Glycerine 47	Methyl acetate 7.3	Potassium chloride .. 5.0	Water, 100°C 48
Benzine 2.3	Ethylene glycol 37	Glycol 30	N-butyl formate 2.4	Stearic acid 2.3	
Barium nitrate 5.6	Ethylene oxide 14	Glycol nitrite 27	Nitrobenzene ...26 to 35	Toluene 2.4	
Bromine 3.1	Ethylene dichloride .....11 to 17	Gasoline ..... 2 to 2.2			
Chlorobenzene . 4.7 to 6		Hydrochloric acid ... 4.6			
		Isobutyric acid 2.7			

LP15 Specifications:

Dielectric range:	>20 constants	Sensor material:	PP
Conductive range:	>100 miromhos	Cable jacket mat'l:	PP

Configurations:

Part Number	Material (body)	Material (cable)	Thread cable side x sensor side
LP15-1405	Polypropylene	Polypropylene	(¾" NPT) x (¾" NPT)
LP15-1425	Polypropylene	Polypropylene	(¾" R) x (¾"G)

About Manual: PLEASE READ THE ENTIRE MANUAL PRIOR TO INSTALLING OR USING THIS PRODUCT. This manual includes information on all models of Flowline Switch-Tek™ Powered Level Switches: LZ12, LU10, LP15 and LO10 series. Please refer to the part number located on the sensor label to verify the exact model which you have purchased.

User's Responsibility for Safety: FLOWLINE manufactures a wide range of liquid level switches and technologies. While each of the these switches are designed to operate in a wide variety of applications, it is the user's responsibility to select a switch model that is appropriate for the application, install it properly, perform tests of the installed system, and maintain all components. The failure to do so could result in property damage or serious injury.

Proper Installation and Handling: Because this is an electrically operated device, only properly trained staff should install and/or repair this product. Use a proper sealant with all installations. *Note: Always install the 3/4" Viton gasket with all versions of Switch-Tek™ with metric threads. The G threaded version will not seal unless the gasket is properly installed.* Never over tighten the sensor within the fitting, beyond a maximum of 80 inch-pounds torque. Always check for leaks prior to system start-up.

Material Compatibility: The LU10 and LO10 series sensors are available in two different wetted materials. Models L_10-1__5 are made of Polypropylene (PP). Models L_10-2__5 are made of Perfluoroalkoxy (PFA). The LZ12 series is made of made of Ryton® (40% glass filled) and the LP15 series is made of PP. Make sure that the model you have selected is compatible with the application liquid. To determine the chemical compatibility between the sensor and its application liquids, refer to an industry reference such as the Compass Corrosion Guide (available from Compass Publications, phone 858-589-9636).

Wiring and Electrical: The supply voltage used to power the sensor should never exceed a maximum of 36 volts DC *(30 VDC for LZ12 series)*. Electrical wiring of the sensor should be performed in accordance with all applicable national, state, and local codes.

Flammable, Explosive and Hazardous Applications: Only the LU10-___5 series switch is rated for use in hazardous locations. Refer to the Certificate of Compliance for all applicable intrinsically safe ratings and entity parameters. Refer to the National Electric Code (NEC) for all applicable installation requirements in hazardous locations. **DO NOT USE THE LZ12, LP15 OR LO10 SERIES GENERAL PURPOSE SWITCH IN HAZARDOUS LOCATIONS.**

Warning

The rating for the relay is 60 VA (125 VAC max / 1A max).

Flowline's Switch-Tek™ level switches are not recommended for use with electrically charged application liquids. For most reliable operation, the liquid being measured may need to be electrically grounded.

Always install the 3/4" Viton gasket with all versions of the powered sensors with metric threads. The G threaded version will not seal unless the gasket is installed properly.

Make a Fail-Safe System: Design a fail-safe system that accommodates the possibility of switch and/or power failure. FLOWLINE recommends the use of redundant backup systems and alarms in addition to the primary system. Adding a redundant high level float switch to the system is a cost effective means to prevent costly tank overflows.

All of the Switch-Tek™ Powered Level Sensors have a single internal relay. The normally open (NO) or normally closed (NC) operation is user selected based on the desired system control. Always design a fail-safe system that accommodates for the possibility of functional and/or power failure to the instrument. The "normal" relay state is where the relay coil is de-energized and the relay indicator is OFF. Therefore, if power is cut OFF to the switch it will de-energize the relay. Make sure that the de-energized state is the safe state in your system design. As such, if switch power is lost, a pump will turn OFF if it is connected to the normally open side of the relay.

Through Wall Installation: Flowline's Switch-Tek™ level switches may be installed through the top, side or bottom of a tank wall. The sensor has male 3/4" NPT threads on either side of a 15/16" wrench flat. This enables the user to select the sensor's mounting orientation, installed outside of the tank in, or inside of the tank out.

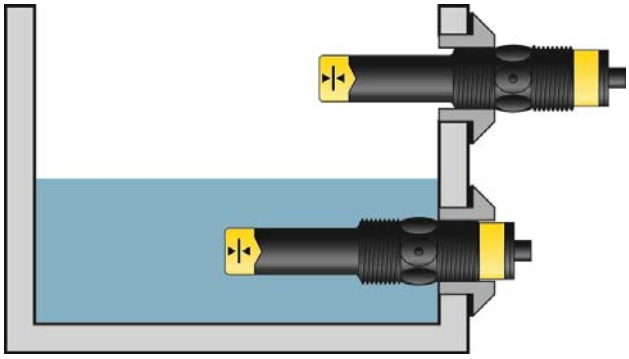

⚠ ***Always install the 3/4" Viton gasket with the metric (long sensor length) versions of the L_ _ _-_ _2_. The G threaded version of the Switch-Tek™ will not seal unless the gasket is installed properly.***

Top Wall Installation: The powered level switches may be installed through the top wall of a tank. Flowline's Smart Trak LM10 series mounting system is an in-tank fitting which enables users to install up to four FLOWLINE sensors of any technology, to any depth, along the entire length of track. Smart Trak may be installed through the top wall of any tank using a standard 2" NPT tank adapter. If no tank top installation is available, Flowline's side mount bracket, LM50-1001, enables Smart Trak to be installed directly to the side wall of a tank. *Do not use PFA Teflon sensors with Smart-Trak.*

Flowline's Switch Pak LM45 series mounting system is an in-tank fitting which enables users to install one FLOWLINE sensor, of any technology, to a specific depth. The Flowline sensor may be installed onto the 3/4" NPT adapter at the end of the Switch Pak. Switch Pak may be installed through the top wall of any tank using a standard 2" NPT tank adapter. Flowline's side mount bracket, model LM50-1001, may also be used if top wall installation is not available.

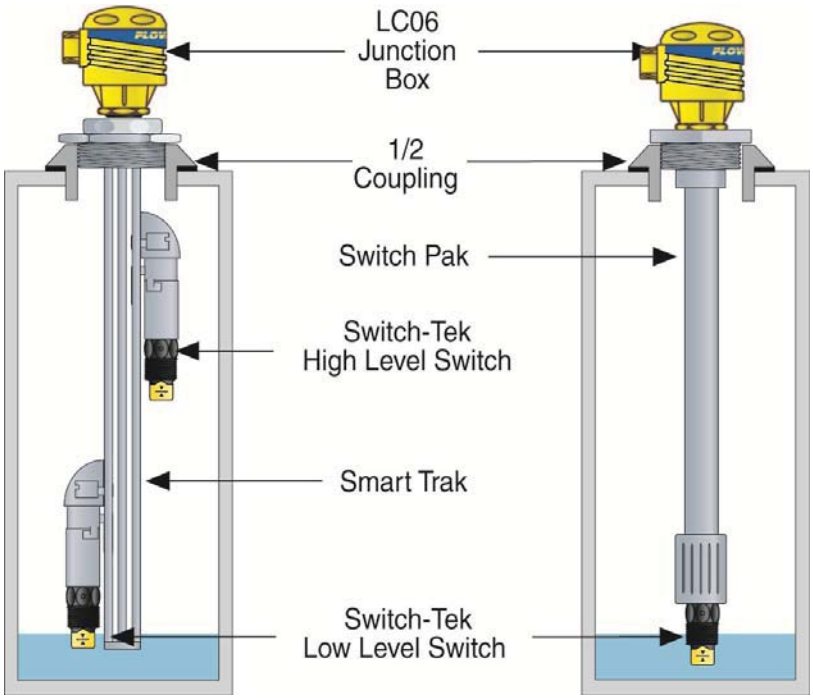

Supply Voltage: The supply voltage to the Switch-Tek™ level switch should never exceed a maximum of 36 VDC. Flowline controllers have a built-in 13.5 VDC power supply which provides power to all of Flowline's electrically powered sensors. Alternative controllers and power supplies, with a minimum output of 12 VDC up to a maximum output of 36 VDC (30 VDC with LZ12 series), may also be used with the Switch-Tek™ level switch.

Required Cable Length: Determine the length of cable required between the Switch-Tek™ level switch and its point of termination. Allow enough slack to ensure the easy installation, removal and/or maintenance of the sensor. The cable length may be extended up to a maximum of 1000 feet, using a well-insulated, 14 to 20 gauge shielded four conductor cable.

Wire Stripping: Using a 10 gauge wire stripper, carefully remove the outer layer of insulation from the last 1-1/4" of the sensor's cable. Unwrap and discard the exposed foil shield from around the signal wires, leaving the drain wire attached if desired. With a 20 gauge wire stripper, remove the last 1/4" of the colored insulation from the signal wires.

Signal Outputs (Current sensing): The standard method used by Flowline controllers; this technology uses only two wires (Red and Black). The sensor draws 5 mA when it is dry, and 22 mA when wet. NC/NO status must be set by the controller. The White and Green wires are not used.

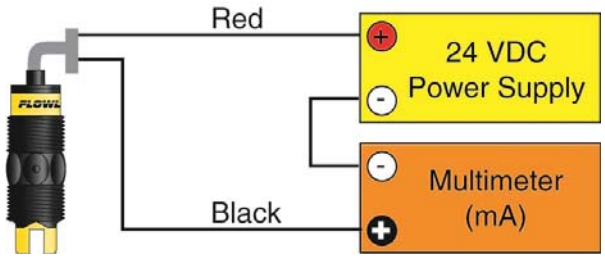

Signal Output (Relay switching): Allows the sensor to switch a small load on or off directly, using an internal 1A relay (60 VAC/60 VDC). Only model LU10-___5 uses the relay and features 4 wires (red, black, white and green) and a shield wire. The NO/NC status is set by the polarity of the voltage feeding the red and black wires. The green wire is the common for the relay and the white wire is the NO or NC, depending on the polarity of red and black.

Normally Open Wiring:



Normally Closed Wiring:

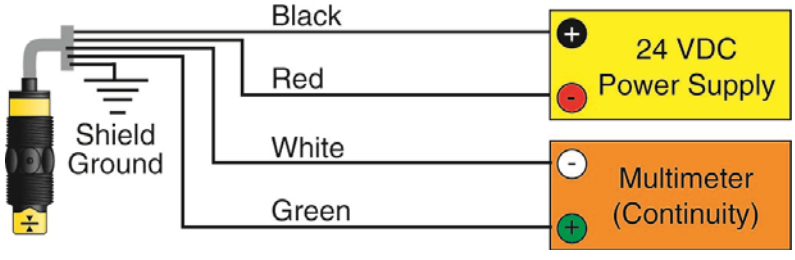

Wiring to a FLOWLINE Controller

LC40 Series Controller (4 or 20 mA output)**:**
LC42-1001 Shown

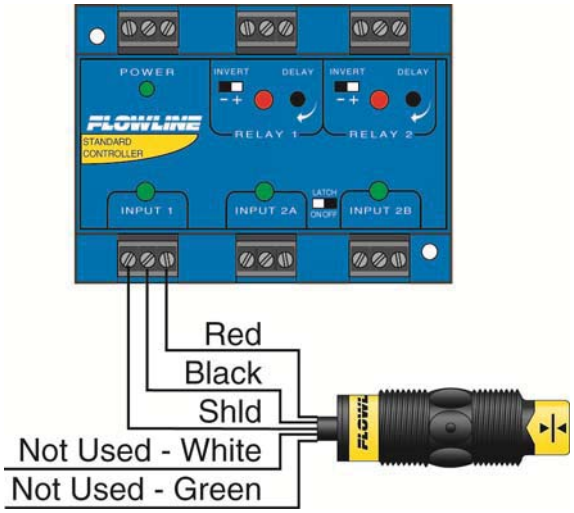

LC10/LC11 Series Controller (4 or 20 mA output)**:**
LC11-1001 shown

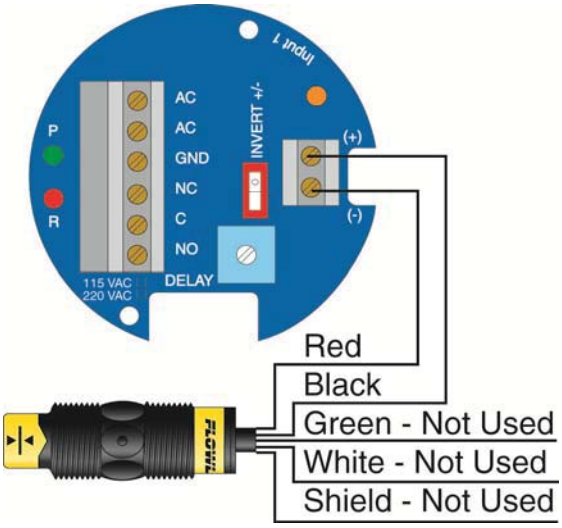

Switching Inductive Loads: The use of suppressors (snubbers) is strongly recommended when switching inductive loads to prevent disrupting the microprocessor's operation. The suppressors also prolong the life of the relay contacts. Suppression can be obtained with a catch diode for DC circuits and a resistor-capacitor (RC) for AC circuits.

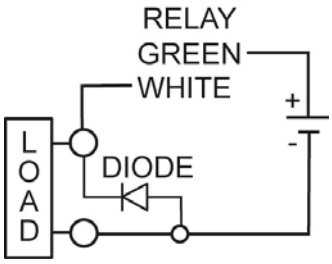

Catch Diode

- Always use stepper relays between the sensor and external loads. For DC circuits use a catch diode such as 1N4148, shown on left.

Refer to the following circuits for RC network assembly and installation:

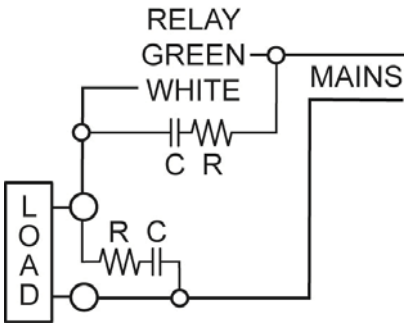

Choose R and C as follows:

- R: 0.5 to 1 Ohms for each volt across the contacts
- C: 0.5 to 1 µF for each amp through closed contacts

Notes:

1. Use capacitors rated for 250 VAC.
2. RC networks may affect load release time of solenoid loads. Check to confirm proper operation.
3. Install the RC network at the meters relay screw terminals. An RC network may also be installed across the load. Experiment for best results.

Wiring the Relay Output: Switch-Tek™ requires 12 - 36 VDC (30 VDC max. for LZ12 series) power to operate the sensor and switch the relay. All illustrations below identify a Dry switch state as the normal position of the relay.

Switching a Normally Open DC Load:
The Red wire connects to Positive (+) of the power supply and the Black wire connects to Negative (-). The LOAD can be attached to either the Green or White wires. Complete the circuit by connecting the Green to (+) VDC power or White to (-) VDC power (see illustration below).

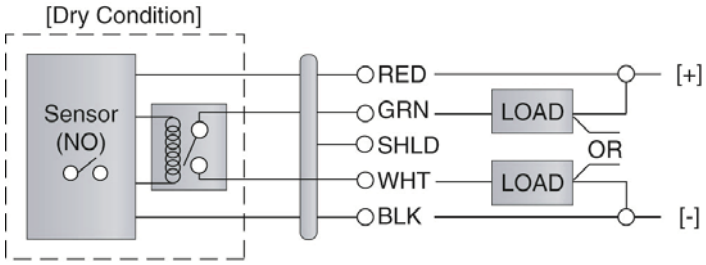

Switching a Normally Closed DC Load:
The Black wire connects to Positive (+) of the power supply and the Red wire connects to Negative (-). The LOAD can be attached to either the Green or White wires. Complete the circuit by connecting the Green to (+) VDC power or White to (-) VDC power (see illustration below).

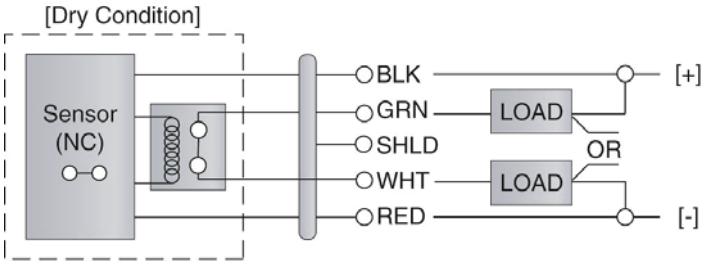

Sensor Power	*Relay Rating*
[RED & BLK wires] / 36 VDC Max. 5 ±1mA Dry / 22 ±1mA Wet	[GRN & WHT wires] / 60 VA

Switching a Normally Open AC Load:
The Red wire connects to Positive (+) of the DC power supply and the Black wire connects to Negative (-). The LOAD can be attached to the Green wire and the Hot of the VAC power. Connect the White to the Neutral of the VAC power (see illustration below).

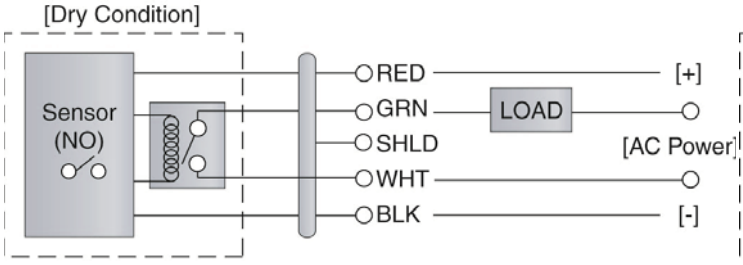

Switching a Normally Closed AC Load:
The Black wire connects to Positive (+) of the DC power supply and the Red wire connects to Negative (-). The LOAD can be attached to the Green wire and the Hot of the VAC power. Connect the White to the Neutral of the VAC power (see illustration below).

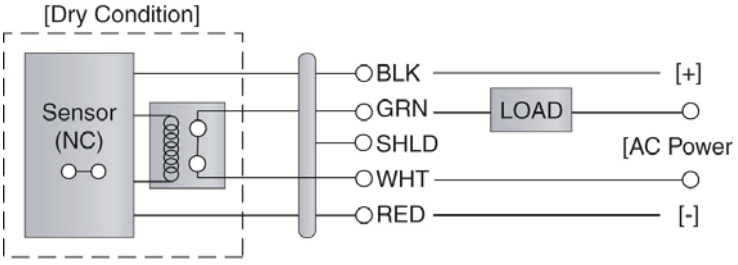

Sensor Power	*Relay Rating*
[RED & BLK wires] / 36 VDC Max. 5 ±1mA Dry / 22 ±1mA Wet	[GRN & WHT wires] / 60 VA

Models LU10-___5 Only: The LU10-___5 level switch has been approved for use in Class I, Groups A, B, C & D; UNDER CERTIFICATE NUMBER LR 79326-4. DO NOT USE THE LZ12, LP15 or LO10 SERIES IN INTRINSICALLY SAFE APPLICATIONS. The Entity parameter for the LU10-_ _ _5 are:

Vmax = 32 VDC / Imax = 0.5 A / Ci = 0 µF / Li = 0 mH

Intrinsically Safe Control Drawing:

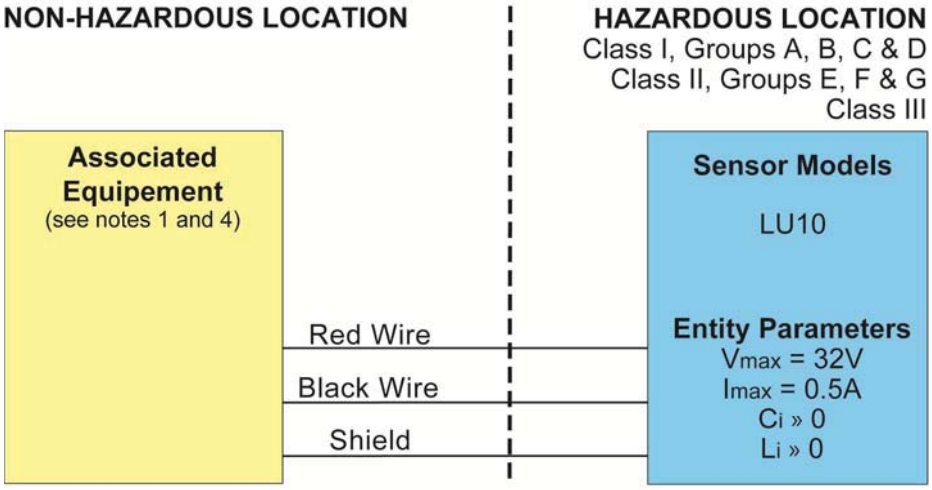

Notes:
1. CSA certified associated equipment with entity parameters.
2. $V_{max} \geq V_{oc}$, $I_{max} \geq I_{sc}$, $C_i + C_{cable} \leq C_a$., $L_i + L_{cable} \leq L_a$.
3. Installation should be in accordance with CEC Part I, or NFPA 70.
4. Associated equipment must be installed per manufacturers instructions

Sensor Drawing: LSD1
Rev. B 10-01-02

Wiring to a Flowline Controller: LC90 Series Controller (4 or 20 mA Signal Output)

LC90 Series
Entity Parameter
Voc = 17.47 VDC
Isc = 0.4597 A
Ca = 0.494 µF
La = 0.119 µH

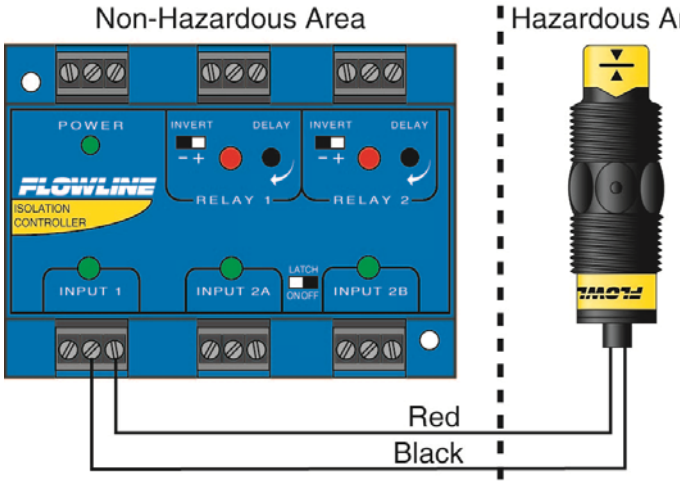

LU10 series
Entity Parameter
Vmax = 32 VDC
Imax = 0.5 A
Ci = 0 µF
Li = 0 µH

Models LU10-___5 Only: The LU10-___5 level switch has been approved for use in Class I, Division 1, Groups A, B, C & D; EEx ib IIC T6; UNDER CERTIFICATE NUMBER LCIE 01.E6048X. DO NOT USE THE LZ12, LP15 or LO10 SERIES IN INTRINSICALLY SAFE APPLICATIONS. The Entity parameter for the LU10-___5 are:

North America - Vmax = 32 VDC / Imax = 0.5 A / Pmax = 1.3 W / Ci = 0 µF / Li = 0 µH
Europe - Ui = 32 VDC / Ii = 0.5 A / Pi = 1.3 W / Ci = 0 µF / Li = 0 µH

Intrinsically Safe Control Drawing:

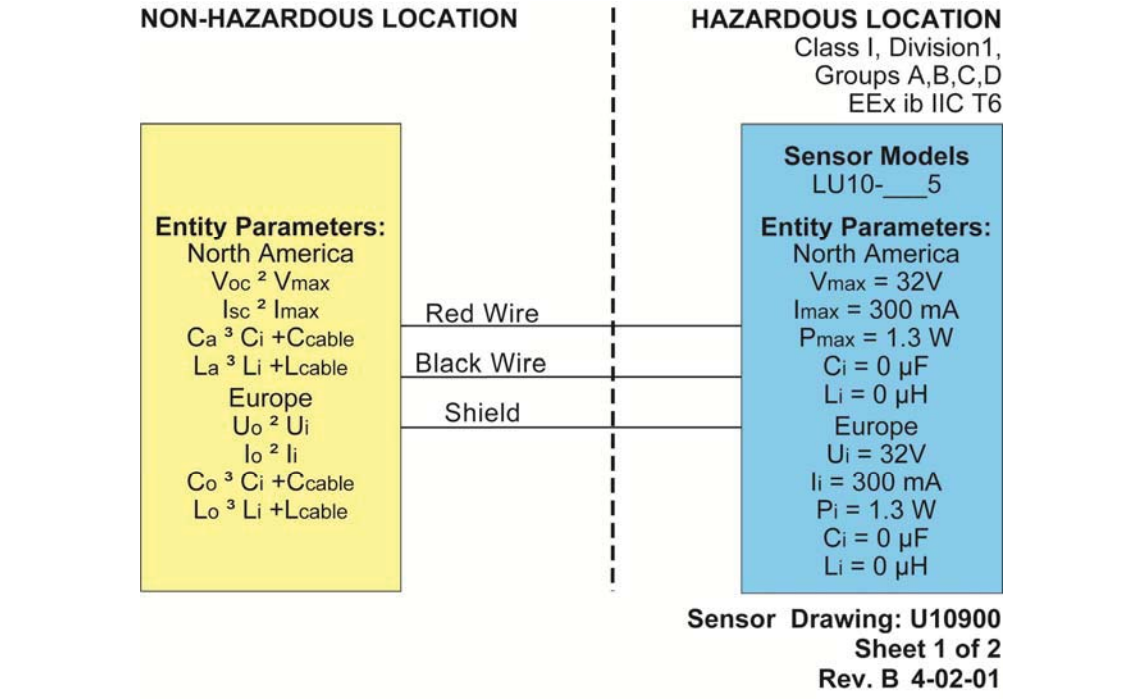

Sensor Drawing: U10900
Sheet 1 of 2
Rev. B 4-02-01

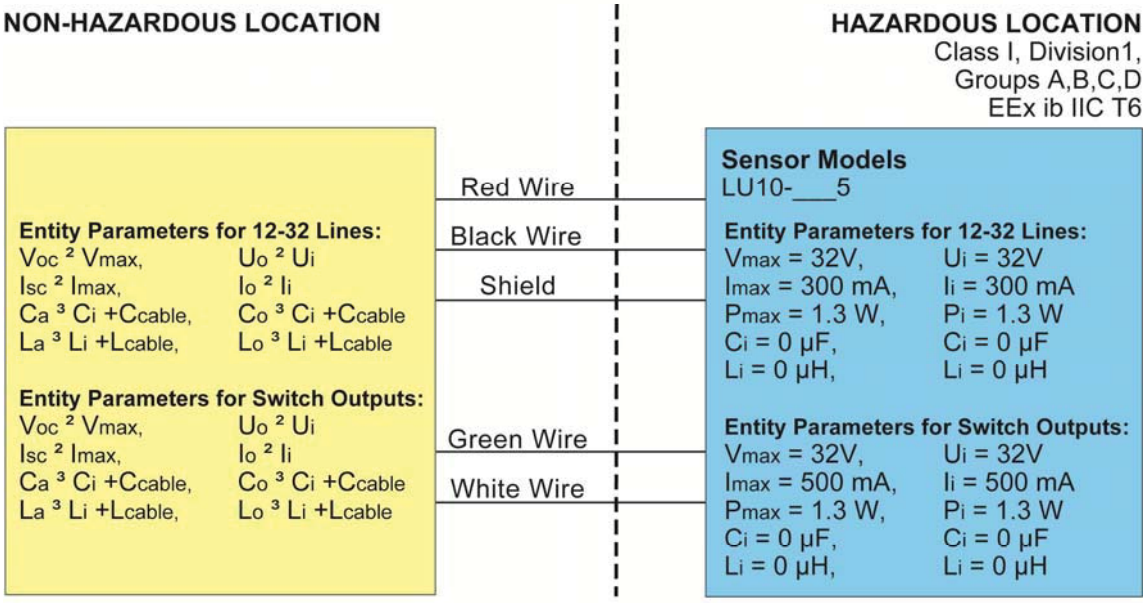

Notes: PARAMETERS DEPEND ON OUTPUT TYPE
1. Installation should be in accordance with CEC Part 1, or NFPA 70.
2. Associated Equipment shall be CSA certified with entity parameters connected in accordance with manufacturers instructions.

Sensor Drawing: U10900
Sheet 2 of 2
Rev. B 4-02-01

Wiring as a P-Channel or N-Channel output: The Switch-Tek™ can be substituted for either a P-Channel (PNP, sourcing) output or an N-Channel (NPN, sinking) output.

Normally Open DC Load as a P-Channel Output:
The Red wire connects to Positive (+) of the power supply and the Black wire connects to Negative (-). The Green wire is jumped to the Red wire while the White wire is connected to the LOAD. Jumper the LOAD to the Negative (-) to complete the circuit.

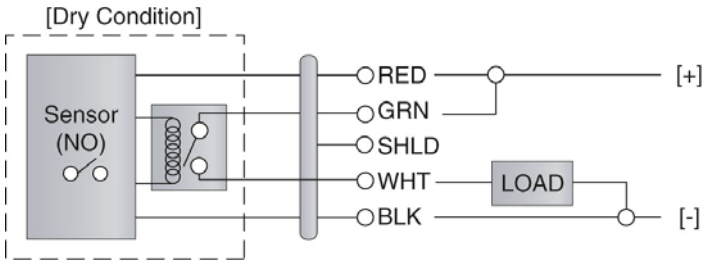

Normally Closed DC Load as a P-Channel Output:
The Black wire connects to Positive (+) of the power supply and the Red wire connects to Negative (-). The Green wire is jumped to the Black wire while the White wire is connected to the LOAD. Jumper the LOAD to the Negative (-) to complete the circuit.

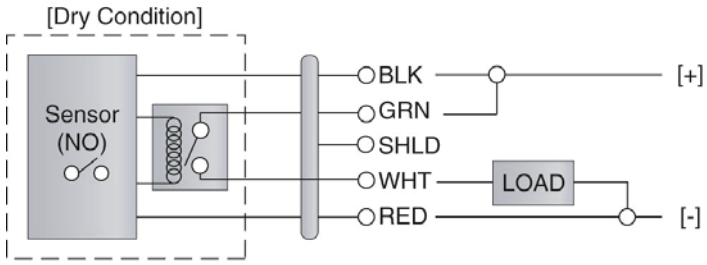

Sensor Power	*Relay Rating*
[RED & BLK wires] / 36 VDC Max. 5 ±1mA Dry / 22 ±1mA Wet	[GRN & WHT wires] / 60 VA

Normally Open DC Load as a N-Channel Output:
The Red wire connects to Positive (+) of the power supply and the Black wire connects to Negative (-). The White wire is jumped to the Black wire while the Green wire is connected to the LOAD. Jumper the LOAD to the Positive (+) to complete the circuit.

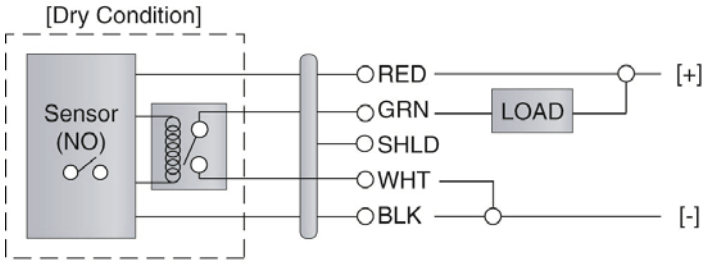

Normally Closed DC Load as a N-Channel Output:
The Black wire connects to Positive (+) of the power supply and the Red wire connects to Negative (-). The White wire is jumped to the Red wire while the White wire is connected to the LOAD. Jumper the LOAD to the Positive (+) to complete the circuit.

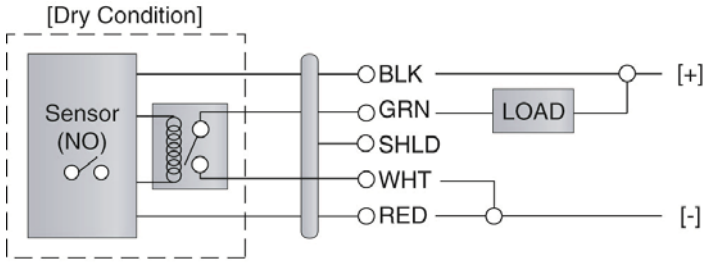

Sensor Power	*Relay Rating*
[RED & BLK wires] / 36 VDC Max. 5 ±1mA Dry / 22 ±1mA Wet	[GRN & WHT wires] / 60 VA

General: The Switch-Tek™ level switch requires no periodic maintenance except cleaning as required. It is the responsibility of the user to determine the appropriate maintenance schedule, based on the specific characteristics of the application liquids.

Cleaning procedure:

1. **Power:** Make sure that all power to the switch, controller and/or power supply is completely disconnected.
2. **Switch removal:** In all through-wall installations, make sure that the tank is drained well below the sensor prior to removal. Carefully, remove the sensor from the installation.
3. **Cleaning the switch:** Use a soft bristle brush and mild detergent, carefully wash the Switch-Tek™ level switch. Do not use harsh abrasives such as steel wool or sandpaper, which might damage the surface sensor. Do not use incompatible solvents which may damage the sensor's PP, PFA, PVDF or Ryton plastic body.
4. **Sensor installation:** Follow the appropriate steps of installation as outlined in the Installation section of this manual.

Maintenance Output to LED (LZ12 Only):
To wire the maintenance output wire to an LED, follow the wiring diagram below. The Yellow wire is connected to the LED and a 2.2kΩ resistor in series and referenced back to the (+) of the power supply.

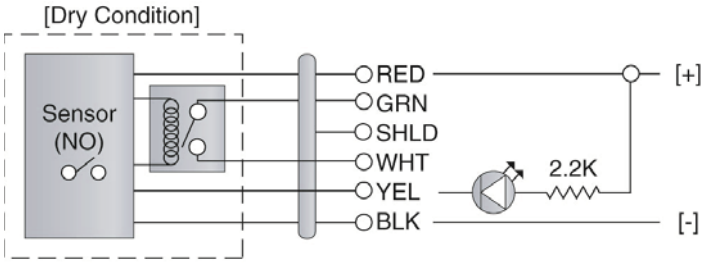

Maintenance Output to PLC (LZ12 Only):
To wire the maintenance output wire to a PLC, follow the wiring diagram below. The Yellow wire is connected to the PLC input with a 10 kΩ resistor parallel to the PLC input and the (+) of the power supply.

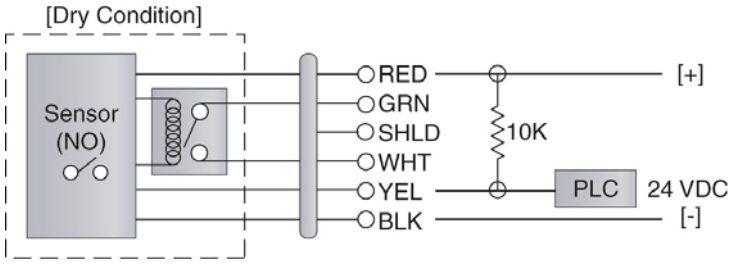

Sensor Power	*Relay Rating*	*Maintenance Alarm*
[RED & BLK wires] / 36 VDC Max. 5 ±1mA Dry / 22 ±1mA Wet	[GRN & WHT wires] / 60 VA	[YEL wire] / NPN Transistor / 10mA Max.

Testing the installation:

1. **Power:** Turn on power to the controller and/or power supply.
2. **Immersing the switch:** Immerse the sensing tip in its application liquid, by filling the tank up to the switches point of actuation. An alternate method of immersing the switch during preliminary testing is to hold a cup filled with application liquid up to the switch's tip.
3. **Test:** With the switch being fluctuated between wet and dry states, the switch indicator light in the controller should turn on and off. If the controller doesn't have an input indicator, use a voltmeter or ammeter to ensure that the switch produces the correct signal (see below).
4. **Point of actuation:** Observe the point at which the rising or falling fluid level causes the switch to change state, and adjust the installation of the switch if necessary.

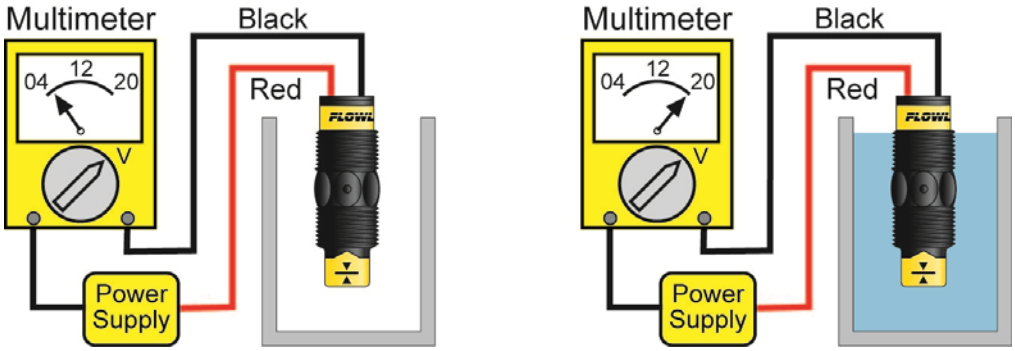

Example: Testing the LU10 series with a Multimeter set to read current (mA). When wired NO [Red to (+)], the meter will read 5mA, ±1mA when dry and will read 20mA, ±1mA when wet.

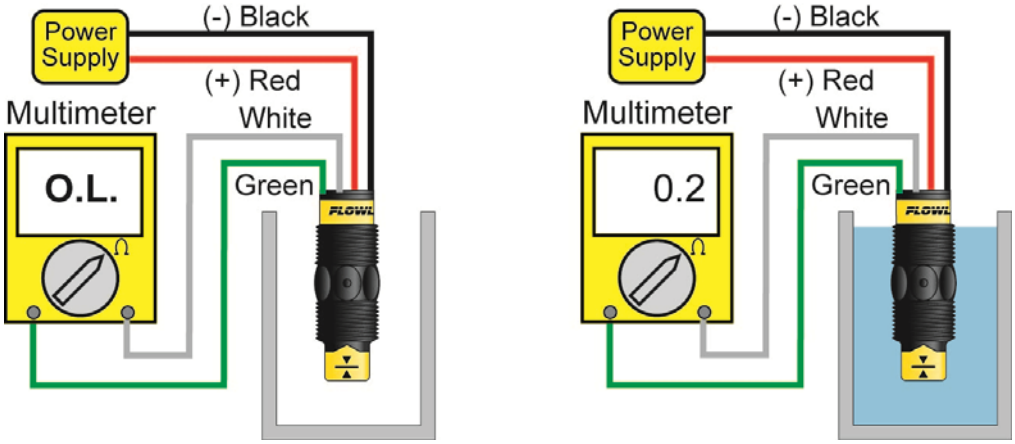

Example: Testing the LU10 series with a multimeter set to read resistance (ohms). When wired NO [Red to (+)], the meter will read O.L when dry and will read some small amount of resistance (ex. 0.2 Ohms) when wet.

Warranty

Flowline warrants to the original purchaser of its products that such products will be free from defects in material and workmanship under normal use and service in accordance with instructions furnished by Flowline for a period of two years from the date of manufacture of such products. Flowline's obligation under this warranty is solely and exclusively limited to the repair or replacement, at Flowline's option, of the products or components, which Flowline's examination determines to its satisfaction to be defective in material or workmanship within the warranty period. Flowline must be notified pursuant to the instructions below of any claim under this warranty within thirty (30) days of any claimed lack of conformity of the product. Any product repaired under this warranty will be warranted only for the remainder of the original warranty period. Any product provided as a replacement under this warranty will be warranted for the full two years from the date of manufacture.

Returns

Products cannot be returned to Flowline without Flowline's prior authorization. To return a product that is thought to be defective, go to www.flowline.com, and submit a customer return (MRA) request form and follow the instructions therein. All warranty and non-warranty product returns to Flowline must be shipped prepaid and insured. Flowline will not be responsible for any products lost or damaged in shipment.

Limitations

This warranty does not apply to products which: 1) are beyond the warranty period or are products for which the original purchaser does not follow the warranty procedures outlined above; 2) have been subjected to electrical, mechanical or chemical damage due to improper, accidental or negligent use; 3) have been modified or altered; 4) anyone other than service personnel authorized by Flowline have attempted to repair; 5) have been involved in accidents or natural disasters; or 6) are damaged during return shipment to Flowline. Flowline reserves the right to unilaterally waive this warranty and dispose of any product returned to Flowline where: 1) there is evidence of a potentially hazardous material present with the product; or 2) the product has remained unclaimed at Flowline for more than 30 days after Flowline has dutifully requested disposition. This warranty contains the sole express warranty made by Flowline in connection with its products. ALL IMPLIED WARRANTIES, INCLUDING WITHOUT LIMITATION, THE WARRANTIES OF MERCHANTABILITY AND FITNESS FOR A PARTICULAR PURPOSE, ARE EXPRESSLY DISCLAIMED. The remedies of repair or replacement as stated above are the exclusive remedies for the breach of this warranty. IN NO EVENT SHALL FLOWLINE BE LIABLE FOR ANY INCIDENTAL OR CONSEQUENTIAL DAMAGES OF ANY KIND INCLUDING PERSONAL OR REAL PROPERTY OR FOR INJURY TO ANY PERSON. THIS WARRANTY CONSTITUTES THE FINAL, COMPLETE AND EXCLUSIVE STATEMENT OF WARRANTY TERMS AND NO PERSON IS AUTHORIZED TO MAKE ANY OTHER WARRANTIES OR REPRESENTATIONS ON BEHALF OF FLOWLINE. This warranty will be interpreted pursuant to the laws of the State of California. If any portion of this warranty is held to be invalid or unenforceable for any reason, such finding will not invalidate any other provision of this warranty.

For complete product documentation, video training, and technical support, go to www.flowline.com.

For phone support, call 562-598-3015 from 8am to 5pm PST, Mon - Fri.

(Please make sure you have the Part and Serial number available.)

SCR-201/2 - Filter, Rotary screen, Newterra 17" wide SCR-50

newterra
smart technology. sustainable solutions.

Waste Water Inlet Screens – SCR SERIES

newterra Inlet Screens are specifically designed to protect newterra MicroClear™ flat sheet membranes from fouling due to excessive debris from waste water plant influent. The SCR series is designed to complement the newterra small to medium size wastewater MBR plants. Typically the screens would be used at the inlet to the Equalization Basin or the Aeration Basin. The SCR units are rotating brush design with 0.5mm crossflow wedgewire screens, and are designed to minimize complexity while achieving superior performance.

Standard Features:

- 304 SS construction
- 1/4 HP Gearbox/motor (waterproof aluminum)
- Easily replaceable heavy duty brushes
- Standard inlet on Top,Sides,Back
- Internal inlet baffling to provide full screen contact no matter which inlet is chosen
- Bag support
- High Level Switch Coupling
- Gravity Outlet
- Simple, reliable shear pin shaft/motor protection
- Can ship knocked down, easily assembled on site

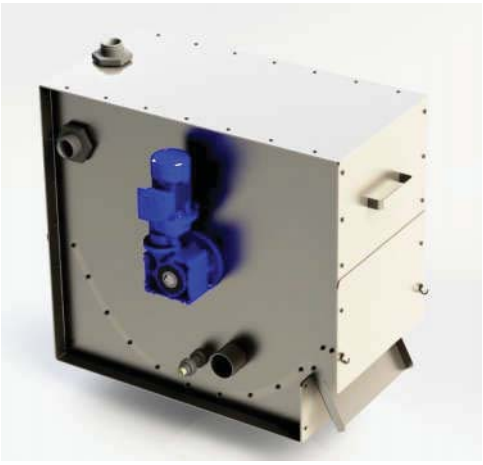

Options:

- Stands
- Discharge Pump Tank
- Complete Packages c/w pumps and controls

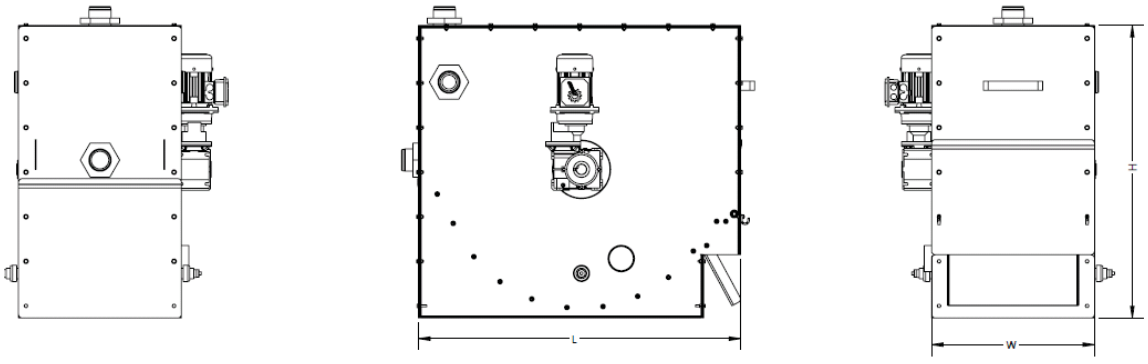

Dimension Chart:

Part Number	Width "W"	Standard Height "H"	Standard Overall Length "L"	Shipping Weight [lbs]	Inlet Size	Outlet Size	Nominal Flowrate gpm	Nominal Flowrate lps	Nominal Flowrate gpd	Nominal Flowrate m3/day
SCR-50	23"	39"	43"	150	2"	Open Bottom	50	3.2	72,000	273
SCR-100	41"	39"	43"	200	3"	Open Bottom	100	6.4	144,000	547

Nominal flowrates based on typical municipal characteristics

Intelligent Drivesystems, Worldwide Services

SCR-201/2 - Gear Motor, 230/460V 50/60 3P, 60/50hz 1/4hp
SK1SI63/H10-56C-63L/4 FRD DIV2 NSD+ 400:1
Nord Gear, 4.3 RPM, CSA CL1 DIV2"

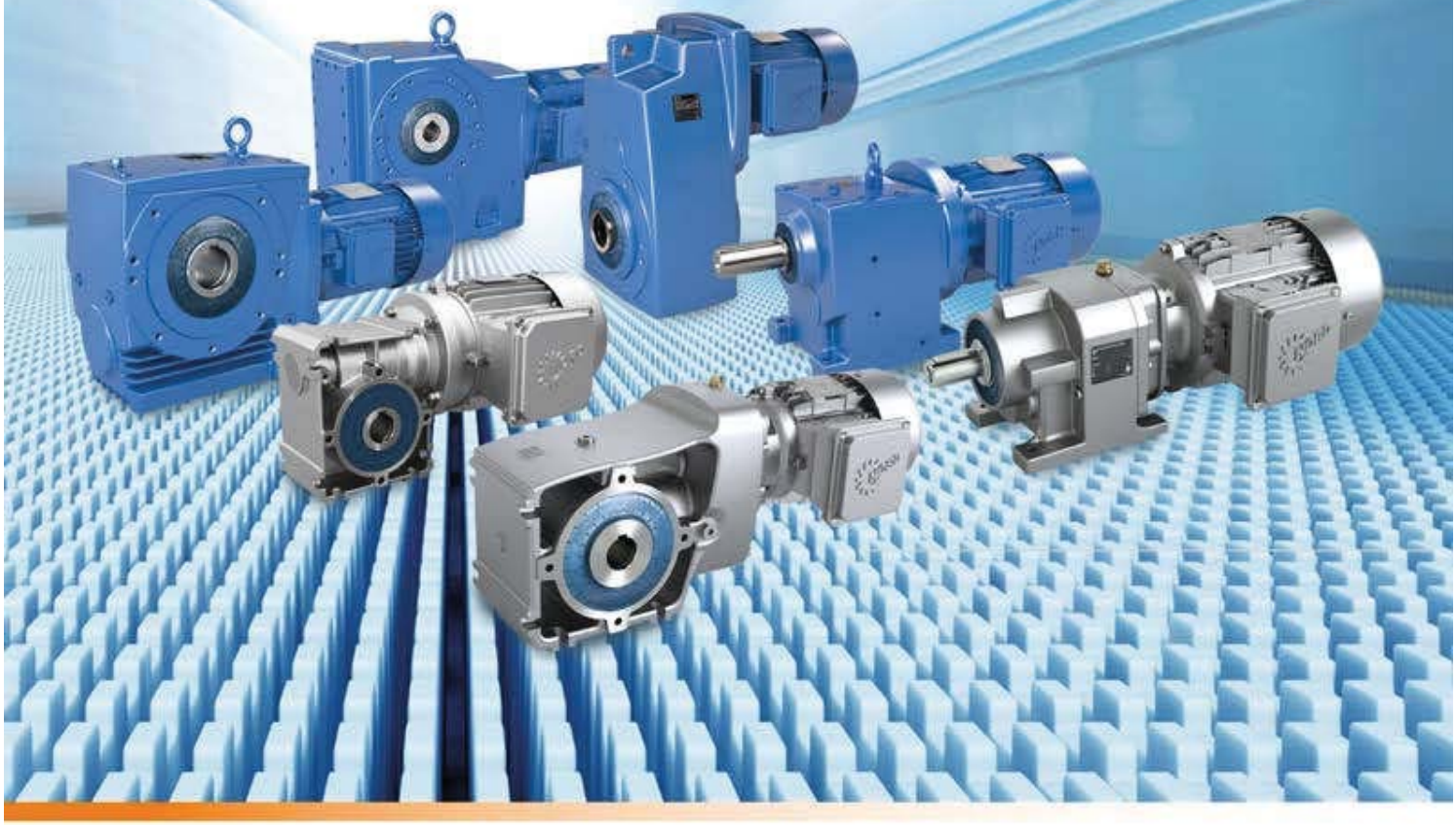

EN

B 1000

Gear units

Operating and Assembly Instructions

NORD DRIVESYSTEMS

E-1278



General safety and operating instructions

1. General

Depending on its protection class, the device may have live, bare, moving or rotating parts or hot surfaces during operation,.

Unauthorised removal of covers, improper use, incorrect installation or operation causes a risk of serious personal injury or material damage.

All transport, installation, commissioning and maintenance work must be carried out by qualified specialist personnel (national accident prevention regulations must be observed).

Within the meaning of this basic safety information, qualified specialist personnel are persons who are familiar with the installation, assembly, commissioning and operation of the product and who have the training and experience to recognise and avoid any hazards and risks.

2. Correct use

NORD products may only be used according to the information in the catalogue and the associated technical documentation.

Compliance with the operating and installation instructions is a **prerequisite for fault-free operation** and for the fulfilment of any warranty claims. **These operating and installation instructions must be read** before working with the device!

These operating and installation instructions contain important information about **servicing**. They must therefore be kept **close to the device**.

All details regarding technical data and permissible conditions at the installation site must be complied with.

3. Transport, storage

Information regarding transport, storage and correct handling must be complied with.

4. Installation

The device must be protected against impermissible loads. In particular, during transport and handling, components must not be deformed or changed. Touching of electronic components and contacts must be avoided.

5. Electrical Connection

When working on live three-phase motors, the applicable national accident prevention regulations must be complied with (e.g. BGV A3, formerly VBG 4).

The electrical installation must be implemented according to the applicable regulations (e.g. cable cross-section, fuses, earth lead connections).

Information regarding EMC-compliant installation – such as shielding, earthing and installation of cables – can be found in the three-phase motor documentation. Compliance with the limiting values specified in the EMC regulations is the responsibility of the manufacturer of the system or machine.

6. Operation

Appropriate safety measures must be taken for applications where failure of the device may result in injury.

Where necessary, systems in which NORD devices are installed must be equipped with additional monitoring and protective equipment according to the applicable safety requirements, e.g. legislation concerning technical equipment, accident prevention regulations, etc.

All covers and guards must be kept closed during operation.

7. Maintenance and repairs

After the device has been disconnected from the power supply, live equipment components and power connections should not be touched immediately, because of possible charged capacitors.

Further information can be found in this documentation.

These safety instructions must be kept in a safe place!

Documentation

Name:	B 1000
Part No.:	6052802
Series:	Gear units and geared motors
Type series:	
Gear unit types:	**Helical gear unit** **NORDBLOC helical gear units** **Standard helical gear units** **Parallel shaft gear units** **Bevel gear units** **Helical worm gear units** **MINIBLOC worm gear units** **UNIVERSAL worm gear units**

Version list

Title, Date	Order number	Comments
B 1000, February 2013	6052802 / 0713	-
B 1000, September 2014	6052802 / 3814	General corrections
B 1000, April 2015	6052802 / 1915	New gear unit types SK 10382.1 + SK 11382.1
B 1000, March 2016	6052802 / 0916	General corrections New bevel gear units SK 920072.1 + SK 930072.1
B 1000, September 2016	6052802 / 3816	General corrections New SK 071.1 helical gear unit, SK 171.1, SK 371.1, SK 571.1, SK 771.1;

Table 1: Version list B 1000

Copyright notice

As an integral component of the device described here, this document must be provided to all users in a suitable form.
Any editing or amendment or other utilisation of the document is prohibited.

Publisher

Getriebebau NORD GmbH & Co. KG
Getriebebau-Nord-Straße 1 • 22941 Bargteheide, Germany • http://www.nord.com/
Fon +49 (0) 45 32 / 289-0 • Fax +49 (0) 45 32 / 289-2253

Table of Contents

1 Notes 8
1.1 General information 8
1.2 Safety and information symbols 8
1.2.1 Explanation of labels used 8
1.3 Correct use 9
1.4 Safety information 10
1.5 Other documents 11
1.6 Disposal 11

2 Description of gear unit 12
2.1 Type designations and gear unit types 12
2.2 Type plate 14

3 Assembly instructions, storage, preparation, installation 15
3.1 Transporting the gear unit 15
3.2 Storage 16
3.3 Long-term storage 16
3.4 Preparing for installation 18
3.5 Installing the gear unit 20
3.6 Fitting hubs on the gear shafts 21
3.7 Fitting push-on gear units 22
3.8 Fitting shrink discs 25
3.9 Fitting the covers 27
3.10 Fitting the covers 27
3.11 Fitting a standard motor 28
3.12 Installation of a servo motor (Option SEP / SEK) 30
3.13 Fitting the cooling coil to the cooling system 31
3.14 Installation of an oil expansion tank, Option OA 32
3.15 Subsequent paintwork 32

4 Commissioning 33
4.1 Check the oil level 33
4.2 Activating the automatic lubricant dispenser 33
4.3 Operation with lubricant cooling 34
4.4 Running-in time for the worm gear unit 35
4.5 Checklist 35

5 Service and maintenance 36
5.1 Service and Maintenance Intervals 36
5.2 Service and Maintenance Work 37

6 Appendix 42
6.1 Configurations and maintenance 42
6.2 Lubricants 55
6.3 Lubricant quantities 57
6.4 Helical gear unit 58
6.5 Torque values 65
6.6 Troubleshooting 66
6.7 Leaks and seals 67
6.8 Repair information 68
6.8.1 Repairs 68
6.8.2 Internet information 68
6.9 Abbreviations 68

List of illustrations

Fig. 1: Type plate (example) with explanation of the type plate fields 14
Figure 2: Activating the vent plug 19
Figure 3: Activating the vent plug 19
Figure 4: Removing the vent plug and fitting the special pressure vent 19
Figure 5: Example of a simple pulling device 21
Figure 6: Correct assembly of drive elements 21
Figure 7: Applying lubricant to the shaft and the hub 22
Figure 8: Removing the factory-fitted closing cap 23
Figure 9: Gear unit mounted to shaft with a shoulder using the fastening element 23
Figure 10: Gear unit mounted to shaft without a shoulder using the fastening element 23
Figure 11: Dismantling using dismantling device 23
Figure 12: Mounting the rubber buffer (Option G or VG) on parallel shaft gear units 24
Fig. 13: Attaching the torque support on bevel gear and worm gear units 24
Figure 14: Hollow shaft with shrink disc 25
Figure 15: Fitting the covers, Option SH, Option H, and Option H66 27
Fig. 16: Removal and fitting of the cover cap 27
Figure 17: Fitting the coupling onto the motor shaft - various types of coupling 29
Figure 18: Cooling cover 31
Figure 19: Installing the expansion tank 32
Figure 20: Activating the automatic lubricant dispenser with standard motor mounting 33
Figure 21: Adhesive label 34
Figure 22: Checking the oil level with a dipstick 39
Figure 23: Replacing the automatic lubricant dispenser with standard motor mounting 39
Figure 24: Oil level check with oil level tank 43

List of tables

Table 1: Version list B 1000 3
Table 2: Disposal of materials 11
Table 3: Type designations and gear unit types 13
Table 4: Allocation of cylinder types to coupling sizes 30
Table 5: Roller bearing greases 55
Table 6: Lubricant table 57
Table 7: Lubricant quantities for helical gear units 58
Table 8: Lubricant quantities for NORDBLOC 59
Table 9: Lubricant quantities for NORDBLOC helical gear units 60
Table 10: Lubricant quantities for standard helical gear units 61
Table 11: Lubricant quantities for parallel shaft gear units 62
Table 12: Lubricant quantities for bevel gear units 63
Table 13: Lubricant quantities for Helical worm gear units 64
Table 14: Torque values 65
Table 15: Overview of malfunctions 66
Table 16: Definition of leaks according to DIN 3761 67

1 Notes

1.1 General information

Read the Operating Manual carefully prior to performing any work on or putting the gear unit into operation. Strict compliance with the instructions in this Operating Manual is essential. This Operating Manual and all associated special documentation must be kept in the immediate vicinity of the gear unit.

Getriebebau NORD accepts no liability for damage to persons, materials or assets as a result of the non-observance of this Operating Manual, operating errors or incorrect use. General wearing parts, e.g. radial seals are excluded from the warranty.

If additional components are attached to or installed on or in the gear unit (e.g. motor, cooling system, pressure sensor etc.) or components (e.g. cooling system) are supplied with the order, the operating instructions for these components must be observed.

If geared motors are used, compliance with the Motor Operating Manual is also necessary.

If you do not understand the contents of this Operating Manual or additional operating instructions, please consult Getriebebau NORD!

1.2 Safety and information symbols

1.2.1 Explanation of labels used

DANGER	Indicates an immediate danger, which may result in death or serious injury.
WARNING	Indicates a possibly dangerous situation, which may result in death or serious injury.
CAUTION	Indicates a possibly dangerous situation, which may result in slight or minor injuries.
NOTICE	Indicates a possibly harmful situation, which may cause damage to the product or the environment.
Note	Indicates hints for use and useful information.

1.3 Correct use

These gear units generate a rotational movement and are intended for use in commercial systems. The gear unit must only be used according to the information in the technical documentation from Getriebebau NORD.

Commissioning (start of proper operation) is prohibited until it has been established that the machine complies with the local laws and directives. The EMC Directive 2004/108/EC and the Machinery Directive 2006/42/EC in their currently valid scope of application must be complied with in particular.

DANGER! — **Explosion hazard**

Serious injury and material damage due to explosion are possible.

Use in explosion hazard areas is prohibited.

WARNING — **Injury to persons**

Appropriate safety measures must be taken for applications where failure of a gear unit or geared motor may result in injury.

Safeguard a wide area around the hazard zone.

WARNING — **Material damage and personal injury**

If the gear unit is not used as designed, this may cause damage to the gear unit or the premature failure of components. Personal injury as a result of this cannot be ruled out.

Strict compliance with the technical data on the type plate is essential. The documentation must be observed.

1.4 Safety information

Observe all safety information, including that provided in the individual sections of this Operating Manual. All national and other regulations on safety and accident prevention must also be observed.

DANGER! **Severe personal injury**

Serious physical and property damage may result from inappropriate installation, non-designated use, incorrect operation, non-compliance with safety information, unauthorised removal of housing components or safety covers and structural modifications to the gear unit.

- All work, e.g. transportation, storage, installation, electrical connection, commissioning, servicing, maintenance and repair must only be performed by qualified specialist personnel.
- Observe the Operating Manual
- Observe the safety information
- Observe the safety and accident prevention regulations.
- Tighten the drive elements or secure the parallel key before switching on.
- Do not make any structural modifications.
- Do not remove any safety devices.
- If necessary, wear hearing protection when working in the immediate vicinity of the gear unit.
- All rotating components must be provided with guards. In standard cases, covers are fitted by NORD . The covers must always be used if contact protection is not provided by other methods.

DANGER! **Injury to persons**

The surfaces of gear units or geared motors may become hot during or shortly after operation. Danger of burns!

- Installation and maintenance work must only be performed when gear unit is at a standstill and has cooled down. The drive must be isolated and secured to prevent accidental start-up.
- Wear protective gloves.
- Shield hot surfaces with contact guards.
- Do not store inflammable objects or substances in the immediate vicinity of the gear unit.

WARNING **Injury to persons**

Serious injury and material damage due to improper transport are possible.

- No additional loads may be attached.
- Transportation aids and lifting gear must have an adequate load-bearing capacity.
- Pipes and hoses must be protected from damage.

⚠ CAUTION **Injury to persons**

Danger of cuts from exterior edges of attachment adapters, flanges and covers.

Contact freezing with metallic components in case of low temperatures.

In addition to personal protective equipment, wear suitable protective gloves and suitable goggles during assembly, commissioning, inspection and maintenance, in order to prevent injuries.

It is recommended that repairs to NORD Products are carried out by the NORD Service department.

1.5 Other documents

Further information may be obtained from the following documents:

- Gear unit catalogues (G1000, G1012, G1014, G1035, G1050, G2000),
- Operating and maintenance instructions for the electric motor,
- if applicable, the Operating Manuals for attached or supplied options

1.6 Disposal

Observe the current local regulations. In particular, lubricants must be collected and disposed of correctly.

Gear unit components	Material
Gear wheels, shafts, rolling bearings, parallel keys, locking rings, …	Steel
Gear unit housing, housing components, …	Grey cast iron
Light alloy gear unit housing, light alloy gear unit housing components, …	Aluminium
Worm gears, bushes, ...	Bronze
Radial seals, sealing caps, rubber components,…	Elastomers with steel
Coupling components	Plastic with steel
Flat seals	Asbestos-free sealing material
Gear oil	Additive mineral oil
Synthetic gear oil (type plate code: CLP PG)	Polyglycol-based lubricants
Cooling spiral, embedding material of the cooling spiral, screw fittings	Copper, epoxy, yellow brass

Table 2: Disposal of materials

2 Description of gear unit

2.1 Type designations and gear unit types

Gear unit types / Type designations
Helical gear units
SK 11E, SK 21E, SK 31E,SK 41E, SK 51E (1-stage)
SK 02, SK 12, SK 22, SK 32, SK 42, SK 52, SK 62N (2-stage)
SK 03, SK 13, SK 23, SK 33N, SK 43, SK 53 (3-stage)
SK 62, SK 72, SK 82, SK 92, SK 102 (2-stage)
SK 63, SK 73, SK 83, SK 93, SK 103 (3-stage)
NORDBLOC helical gear units
SK 320, SK 172, SK 272, SK 372, SK 472, SK 572, SK 672, SK 772, SK 872, SK 972 (2-stage)
SK 273, SK 373, SK 473, SK 573, SK 673, SK 773, SK 873, SK 973 (3-stage)
SK 071.1, SK 371.1, SK 571.1, SK 771.1 (1-stage)
SK 072.1, SK 172.1, SK 372.1, SK 572.1, SK 672.1, SK 772.1, SK 872.1, SK 972.1 (2-stage)
SK 373.1, SK 573.1, SK 673.1, SK 773.1, SK 873.1, SK 973.1 (3-stage)
Standard helical gear units
SK 0, SK 01, SK 20, SK 25, SK 30, SK 33 (2-stage)
SK 10, SK 200, SK 250, SK 300, SK 330 (3-stage)
Parallel shaft gear unit
SK 0182NB, SK 0282NB, SK 1282, SK 2282, SK 3282, SK 4282, SK 5282, SK 6282, SK 7282, SK 8282, SK 9282, SK 10282, SK 11282 (2-stage)
SK 1382NB, SK 2382, SK 3382, SK 4382, SK 5382, SK 6382, SK 7382, SK 8382, SK 9382, SK 10382, SK 10382.1, SK 11382, SK 11382.1, SK 12382 (3-stage)
Bevel gear units
SK 92072, SK 92172, SK 92372, SK 92672, SK 92772; SK 920072.1, SK 92072.1, SK 92172.1, SK 92372.1, SK 92672.1, SK 92772.1, SK 93072.1, SK 93172.1, SK 930072.1, SK 93372.1, SK 93672.1, SK 93772.1 (2-stage)
SK 9012.1, SK 9016.1, SK 9022.1, SK 9032.1, SK 9042.1, SK 9052.1, SK 9062.1, SK 9072.1, SK 9082.1, SK 9086.1, SK 9092.1, SK 9096.1 (3-stage)
SK 9013.1, SK 9017.1, SK 9023.1, SK 9033.1, SK 9043.1, SK 9053.1 (4-stage)
Helical worm gear units
SK 02040, SK 02050, SK 12063, SK 12080, SK 32100, SK 42125 (2-stage)
SK 13050, SK 13063, SK 13080, SK 33100, SK 43125 (3-stage)
MINIBLOC worm gear units
SK1 S32, SK1 S40, SK 1S50, SK 1S63, SK 1SU..., SK 1SM31, SK 1SM40, SK 1SM50, SK 1SM63 (1-stage)
SK 2S32NB, SK 2S40NB, SK 2S50NB, SK 2S63NB, SK 2SU…, SK 2SM40, SK 2SM50, SK 2SM63 (2-stage)

Gear unit types / Type designations					
UNIVERSAL worm gear units SK 1SI31, SK 1SI40, SK 1SI50, SK 1SI63, SK 1SI75, SK 1SIS31, …, SK 1SIS75, SK 1SID31, …, SK 1SID63, SK 1SMI31, …, SK 1SMI75, SK 1SMID31, …, SK 1SMID63, SK 1SIS-D31, …, SK 1SIS-D63 (1-stage), SK 2SMID40, SK 2SMID50, SK 2SMID63, SK 2SID40, …, SK 2SID63 (2-stage)					
Versions / Options					
-	Foot mounting with solid shaft	D	Torque support	IEC	Standard IEC motor mounting
A	Hollow shaft version	K	Torque bracket	NEMA	Standard NEMA motor attachment
V	Solid shaft version	S	Shrink disc	W	With free drive shaft
L	Solid shaft both sides	VS	Reinforced shrink disc	VI	Viton radial seals
Z	Output flange B14	EA	Hollow shaft with internal spline	OA	Oil expansion tank
F	Output flange B5	G	Rubber buffer	OT	Oil level tank
X	Foot mounting	VG	Reinforced rubber buffer	SO1	Synthetic oil ISO VG 220
XZ	Base and output flange B14	R	Back stop	CC	Casing cover with cooling spiral
XF	Base and output flange B5	B	Fastening element	DR	Pressure venting
AL	Reinforced axial output bearings	H	Covering cap as contact guard	H10	Modular contrate pre-stage
5	Reinforced output shaft (Standard helical gear units)	H66	Covering cap IP66	/31	Worm pre-stage
V	Reinforced drive shaft (Standard helical gear units)	VL	Reinforced bearings	/40	Worm pre-stage
		VL2	Agitator version		
		VL3	Drywell agitator version		

Table 3: Type designations and gear unit types

Double gear units consist of two single gear units. They are to be treated as per the instructions in this Manual, i.e. as two individual gear units.

Type designation for double gear units: e.g. SK 73 /22 (consisting of single gear units SK 73 and SK 22)

2.2 Type plate

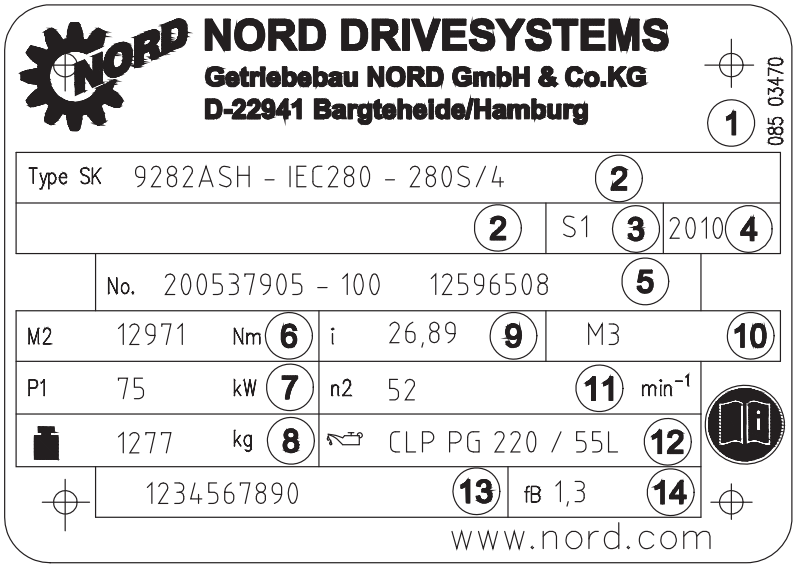

	Explanation
1	Matrix or bar code
2	NORD gear unit type
3	Operating mode
4	Year of manufacture
5	Serial number
6	Rated torque of gear unit output shaft
7	Drive power
8	Weight according to ordered version
9	Overall gear unit ratio
10	Installation orientation
11	Rated speed of gear unit output shaft
12	Lubricant type, viscosity and quantity
13	Customer's part number
14	Operating factor

Fig. 1: Type plate (example) with explanation of the type plate fields

3 Assembly instructions, storage, preparation, installation

Please observe all general safety instructions (please see chapter 1.4 "Safety information"), the safety information in the individual sections and the proper use (please see chapter 1.3 "Correct use")bestimmungsgemäße Verwendung</dg_ref_source_inline>.

3.1 Transporting the gear unit

WARNING — **Hazard due to heavy loads**

Severe injuries and material damage due to falling or tipping heavy loads are possible.

- Standing under the gear unit during transport is **extremely dangerous**.
- To prevent injury, **the danger area must be generously cordoned off.**
- Only transport using the eyebolts attached to the gear unit.
- No additional loads may be attached.
- If geared motors have an additional eyebolt attached to the motor, this must also be used.
- The thread of the eyebolt must be fully screwed in.
- Avoid pulling the eyebolts at an angle.

NOTICE — **Gear unit damage**

Damage to the gear unit due to improper use is possible.

- Prevent damage to the gear unit. Impacts to the free ends of the shafts may cause internal damage to the gear unit.
- Use adequately dimensioned and **suitable means of transportation**. Lifting tackle must be designed for the weight of the gear unit. The weight of the gear unit can be obtained from the dispatch documents.

3.2 Storage

For short-term storage before commissioning, please observe the following:

Store in the installation position (please see chapter 6.1 "Configurations and maintenance") and secure the gear unit against falling,

- Lightly oil bare metal housing surfaces and shafts
- Store in a dry place.
- Temperature in the range from – 5 °C to + 50 °C without large fluctuations,
- Relative humidity less than 60 %,
- No direct exposure to sunlight or UV light,
- No aggressive, corrosive substances (contaminated air, ozone, gases, solvents, acids, alkalis, salts, radioactivity etc.) in the immediate vicinity,
- No vibration or oscillation

3.3 Long-term storage

CAUTION — **Injury to persons**

Incorrect, or excessively long storage may result in malfunctions of the gear unit.

Perform an inspection of the gear unit prior to commissioning if the permissible storage time has been exceeded.

Information — **Long-term storage**

For storage or standstill periods in excess of 9 months, Getriebebau NORD recommends the long-term storage option.

With the long-term storage option and the use of the measures listed below, storage for up to 2 years is possible. As the actual influences on the unit greatly depend on the local conditions, these times should only be regarded as guide values.

Conditions of the gear unit and storage area for long-term storage prior to commissioning:

- Store in the installation position (please see chapter 6.1 "Configurations and maintenance") and secure the gear unit against falling.
- Transportation damage to the external paint must be repaired. Check that a suitable rust inhibitor is applied to the flange bearing surfaces. If necessary apply a suitable rust inhibitor to the surfaces.
- Gear units with the long-term storage option are completely filled with lubricant or have VCI corrosion protection agent mixed with the gear oil (see adhesive label on the gear unit, or are not filled with oil, but rather with small quantities of VCI concentrate.
- The sealing band in the vent plug must not be removed during storage. The gear unit must remain sealed tight.
- Store in a dry place.
- In tropical regions, the gear unit must be protected against damage by insects
- Temperature in the range from – 5 °C to + 40 °C without large fluctuations,
- Relative humidity less than 60 %,
- No direct exposure to sunlight or UV light,
- No aggressive, corrosive substances (contaminated air, ozone, gases, solvents, acids, alkalis, salts, radioactivity etc.) in the immediate vicinity,
- No vibration or oscillation

Measures during storage or standstill periods

- If the relative humidity is <50 % the gear unit can be stored for up to 3 years.

Measures before commissioning

- If the storage or standstill period exceeds 2 years or the temperature during short-term storage has greatly deviated from the standard range, the lubricant in the gear unit must be replaced before commissioning.
- If the gear unit is completely filled, the oil level must be reduced before commissioning.
- For gear units without oil filling, the oil level for the version must be filled before commissioning. The VCI concentrate may remain in the gear unit. Lubricant quantities and types must be filled according to the details on the type plate.

3.4 Preparing for installation

⚠ CAUTION — **Injury to persons**

Transport damage may cause malfunctions of the gear unit, which may cause material damage or personal injury.

Please inspect the delivery for transport and packaging damage immediately on receipt. Report any damage to the carrier immediately. Gear units with transport damage must not be commissioned.

The drive unit must be inspected and may only be installed if no damage is apparent. In particular the radial seals and the sealing caps must be inspected for damage.

Pay attention to leaked lubricants, they may cause slips.

All bare metal surfaces and shafts of the gear unit are protected against corrosion with oil, grease or corrosion protection agents before shipping.

Thoroughly remove all oil, grease or corrosion protection agents and any dirt from the shafts and flange surfaces before assembly.

In applications where an incorrect rotational direction may result in damage or potential risk, the correct rotational direction of the output shaft is to be established by test running the drive when uncoupled and guaranteeing such for subsequent operation.

Gears with integrated return stops are marked with arrows on the drive/driven sides. The arrows point in the rotation direction of the gear unit. When connecting the motor and during motor control, it must be ensured that the gear unit can only operate in the direction of rotation. (For further explanations see catalogue G1000 and WN 0-000 40)

NOTICE — **Gear unit damage**

For gear units with an integrated back stop, switching the drive motor to the blocked direction of rotation, i.e. incorrect direction of rotation, may result in damage to the gear unit.

Take care that the direction of rotation is correct.

Ensure that no aggressive or corrosive substances are present in the area surrounding the installation site or are subsequently expected during operation, which attack metal, lubricants or elastomers. In case of doubt, please contact Getriebebau NORD and take the recommended action.

Oil expansion tanks (Option OA) must be fitted in accordance with works standard WN 0-530 04. For gear units with an M10x1 vent plug, works standard WN 0-52135 must be also be observed during installation.

Oil level tanks (Option OT) must be fitted in accordance with works standard WN 0-521 30.

If venting of the gear unit is provided, the vent or the pressure vent must be activated before commissioning. To activate, remove the transport securing device (sealing cord). Position of the vent plug (please see chapter 6.1 "Configurations and maintenance").

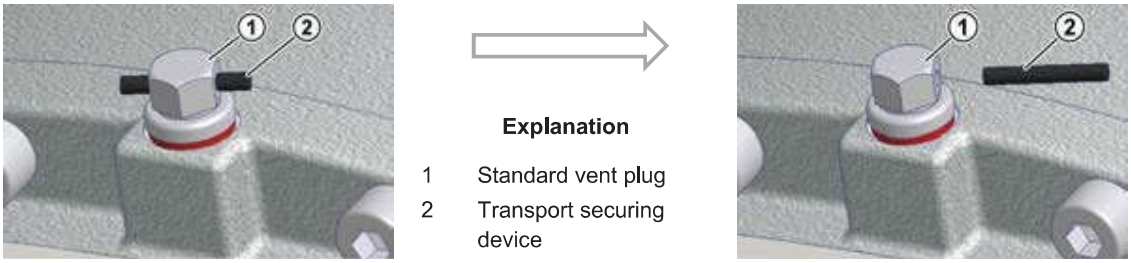

Figure 2: Activating the vent plug

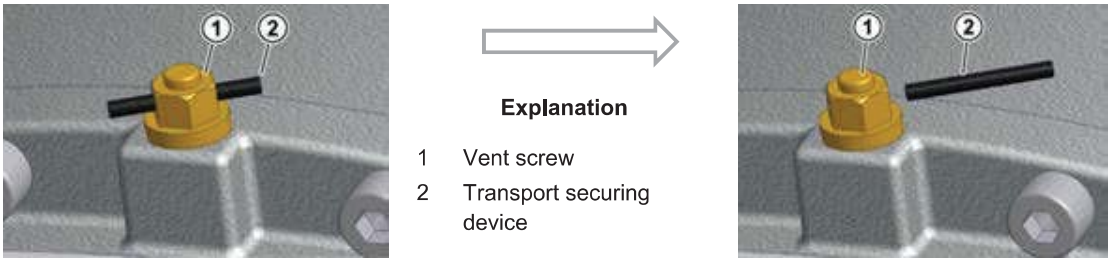

Figure 3: Activating the vent plug

Before commissioning, the vent plug must be replaced with the special pressure vent which is supplied as a loose part.

This is done by unscrewing the vent fitting and replacing it with the special pressure vent and seal (refer to Section 6.1 "Configurations and maintenance"). Double gear units consist of two single units and are equipped with 2 oil chambers and 2 pressure vents.



Figure 4: Removing the vent plug and fitting the special pressure vent

(please see chapter 6.5 "Torque values")

3.5 Installing the gear unit

⚠ WARNING — **Danger of burns**

The surfaces of gear units or geared motors may become hot during or shortly after operation.

Hot surfaces which can be touched directly must be protected with a contact guard.

⚠ WARNING — **Danger to persons**

If the foundation or the fastening of the gear unit is not adequately dimensioned, the gear unit may detach, fall down or rotate in an uncontrolled manner.

The foundation and the gear unit fastening must be appropriately designed for the weight and the torque. All bolts must be used to fasten the gear unit

NOTICE — **Damage to the gear unit due to overheating**

The gear unit may be damaged by overheating.

When installing, check that the cooling air from the motor fan can circulate around the geared motor and the gear unit without obstruction.

The eyebolts screwed into the gear units must be used during installation. No additional load may be attached to the gear unit.

If geared motors have an additional eyebolt attached to the motor, this must also be used. Avoid pulling the eyebolts at an angle. Observe the safety information (please see chapter 1.4 "Safety information").

The base and/or flange to which the gear unit is fitted should be vibration-free, torsionally strong and flat. The smoothness of the mating surface on the base or flange must be according to tolerance class K according to DIN ISO 2768-2. All contamination to the bolting surfaces of gear unit and base and/or flange must be thoroughly removed.

The gear housing must always be earthed. With geared motors, earthing via the motor connection must be ensured.

The gear unit must be precisely aligned with the drive shaft of the machine in order to prevent additional forces from being imposed on the gear unit due to distortion.

Welding of the gear unit is prohibited. The gear unit must not be used as the earth connection for welding work, as this may cause damage to the bearings and gear wheels.

The gear unit must be installed in the correct orientation(please see chapter 6.1 "Configurations and maintenance"). (UNIVERSAL SI and SM gear unit types do not depend on the configuration). Changes to the installation position after delivery require adjustment of the quantity of oil, and often other measures such as e.g. the installation of encapsulated roller bearings. **Damage may result if the stated installation position is not observed.**

All gear unit feet and/or all flange bolts on each side must be used. Bolts must have a minimum quality of 8.8. The bolts must be tightened to the correct torques (please see chapter 6.5 "Torque values"). Tension-free bolting must be ensured, particularly for gear units with a foot and flange.

The oil inspection screws, oil drain screws and the vent valves must be accessible.

3.6 Fitting hubs on the gear shafts

NOTICE — **Gear unit damage**

The gear unit may be damaged by axial forces.

Do not subject the gear unit to harmful axial forces when fitting the hubs. In particular, do not hit the hubs with a hammer.

Drive and driven elements, e.g. coupling and chain-wheel hubs must be mounted onto the drive and driven shaft of the gear unit using suitable pullers that will not apply damaging axial forces onto the gear unit.

Information — **Installation**

Use the end thread of the shafts for pulling. Fitting can be aided by coating the hub with lubricant or heating it up to approx. 100 °C beforehand.

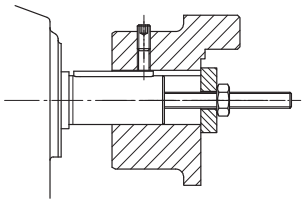

Figure 5: Example of a simple pulling device

DANGER — **Severe personal injury**

There is a danger of injury due to rapidly rotating drive and driven elements.

Drive and driven elements, such as belt drives, chain drives, shrink disks, fans and couplings must be fitted with contact protection.

Drive and driven elements may only subject the drive unit to the maximum radial forces F_R and axial forces F_A which are specified in the catalogue. Observe the correct tension, particularly on belts and chains.

Additional loads due to unbalanced hubs are not permitted.

The transverse force must be applied to the gear unit as closely as possible.

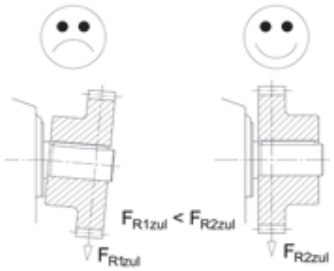

Figure 6: Correct assembly of drive elements

3.7 Fitting push-on gear units

NOTICE — **Gear unit damage**

The bearings, gear wheels, shafts and housing may be damaged by incorrect fitting.

- Observe the assembly instructions.
- The push-on gear unit must be fitted onto the shaft using a suitable puller, which will not exert damaging axial forces on the gear unit. In particular, do not hit the gear unit with a hammer.

Assembly and subsequent dismantling is aided by applying an anti-corrosive lubricant to the shaft before fitting (e.g. NORD Anti-Corrosion Part No. 089 00099). Excess grease or anti-corrosion agent may escape after assembly and may drip off. Clean these points on the output shaft after a running-in time of approx. 24 hours. This escape of grease is not due to a leak in the gear unit.

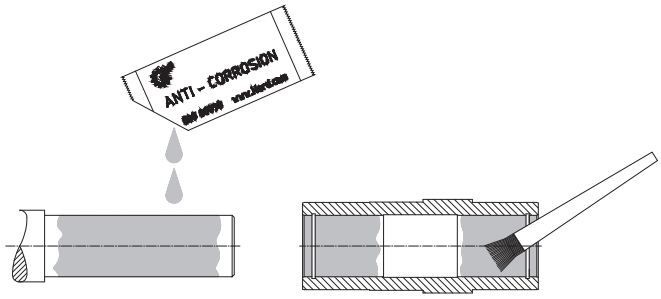

Figure 7: Applying lubricant to the shaft and the hub

Information — **Fastening element**

The gear unit can be fitted to shafts with and without a shoulder using the fastening element (Option B). Tighten the bolt of the fastening element to the correct torque (please see chapter 6.5 "Torque values"). For gear units with option H66, the factory-fitted closing cap must be removed before assembly.

For push-on gear units with option H66 and fastening element (Option B) the pressed-in closing cap must be pushed out before fitting the gear unit. The pressed-in closing cap may be destroyed during dismantling. As standard a second closing cap is supplied as a loose spare part. After fitting the gear unit, fit the new / new condition closing cap as described in Section 3.9 "Fitting the covers".

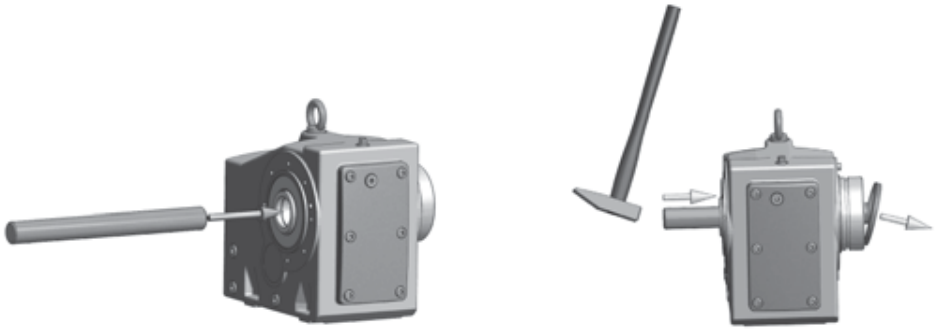

Figure 8: Removing the factory-fitted closing cap

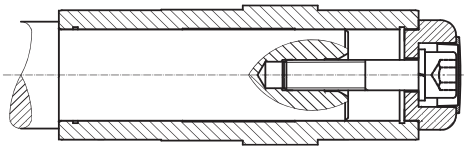

Figure 9: Gear unit mounted to shaft with a shoulder using the fastening element

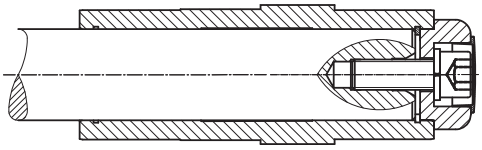

Figure 10: Gear unit mounted to shaft without a shoulder using the fastening element

A gear unit can be dismantled from a shaft with a shoulder using the following device, for example.

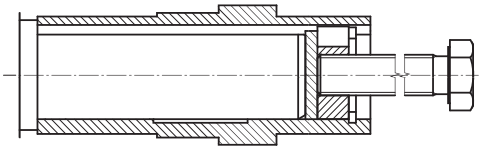

Figure 11: Dismantling using dismantling device

When assembling push-on gears with torque supports, the support must not be distorted. Tension-free mounting is aided by the rubber buffer (Option G or VG).

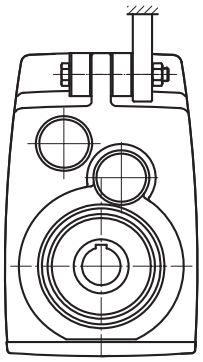

Figure 12: Mounting the rubber buffer (Option G or VG) on parallel shaft gear units

To fit the rubber buffer, tighten the screw fastening until there is no play between the contact surfaces when there is no load.

Then turn the fastening nut half a turn in order to pre-tension the rubber buffer (only applies for screw fastenings with adjusting threads). Greater pre-tension is not permissible

WARNING — **Risk of injury**

The gear unit may suddenly rotate around the shaft if the bolts are loosened.

Secure the screw fastening against loosening, e.g. with Loctite 242 or a second nut.

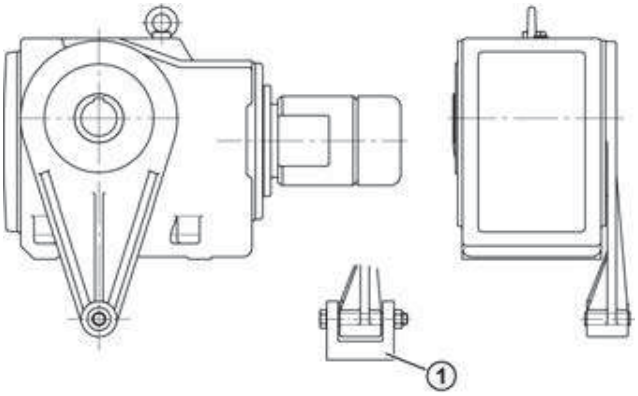

	Explanation
1	Always support torque support on both sides

Fig. 13: Attaching the torque support on bevel gear and worm gear units

Tighten the fastenings of the torque support with the correct tightening torques (please see chapter 6.5 "Torque values") and secure against loosening (e.g. Loctite 242, Loxeal 54-03).

3.8 Fitting shrink discs

⚠ CAUTION — **Risk of injury**

Risk of injury from incorrect mounting and dismantling of the shrink disc.

Observe the instructions.

NOTICE — **Gear unit damage**

If the tensioning bolts are tightened without the solid shaft inserted, the hollow shaft may be permanently deformed.

Do not tighten bolts if the solid shaft is not inserted!

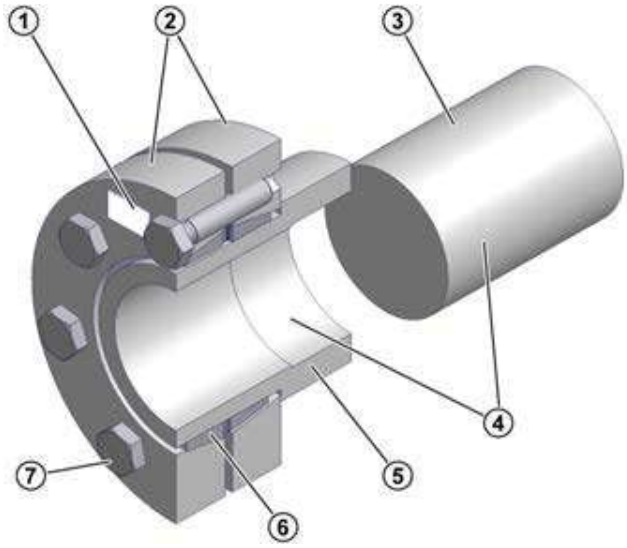

	Explanation
1	Shrink disc, type, part no. and torque details for tensioning screws
2	Tensioning flanges
3	Solid shaft of machine
4	Shaft and hollow shaft bore **FREE OF GREASE**
5	Hollow shaft of gear unit
6	Double half-slotted inner ring
7	Tensioning screws DIN 931 (933) -10.9

Figure 14: Hollow shaft with shrink disc

The shrink discs are supplied by the manufacturer ready for fitting. They must not be dismantled prior to fitting.

The solid shaft of the machine runs **free of grease** in the hollow shaft of the gear unit.

Assembly sequence

1. Remove any transport securing devices.
2. Loosen but do not remove tightening bolt and tighten gently by hand until there is no play between the flanges and the inner ring.
3. Slide the shrink disc onto the hollow shaft until the outer clamping flange is flush with the hollow shaft. The shrink disc is easier to slide on if the bore of the inner ring is lightly greased.
4. Prior to mounting, grease the solid shaft only in the area which will later come into contact with the bronze bush in the hollow shaft of the gear unit. Do not grease the bronze bush, in order to prevent grease penetrating the area around the shrink connection.
5. The hollow shaft of the gear unit must be completely de-greased and **completely free of grease.**
6. In the area of the shrink connection the solid shaft of the machine must be degreased and **completely free** of grease.
7. Insert the solid shaft of the machine into the hollow shaft so as to completely fill the area around the shrink connection.
8. Position the clamping flange by gently tightening the bolts.
9. Tighten the tensioning bolts successively in a clockwise direction by several turns – not crosswise – with approx. ¼ rotation per turn. Tighten the bolts with a torque wrench to the torque indicated on the shrink disc.
10. When the tensioning bolts have been tightened, there must be an even gap between the clamping flanges. If this is not the case, the gear unit must be dismantled and the shrink disc connection checked for correct fit.

Dismantling sequence:

1. Loosen the tensioning bolts successively in a clockwise direction by several turns with approx. ¼ rotation per turn. Do not remove the bolts from their thread.
2. Loosen the clamping flanges from the cone of the inner ring.
3. Remove the gear unit from the solid shaft of the machine.

If a shrink disk has been in use for a long period or is dirty, it must be dismantled, cleaned and the conical surfaces coated with Molykote G Rapid Plus or a similar lubricant before it is refitted. The threads and head surfaces of the screws must be treated with grease without Molykote. Any damaged or corroded elements must be replaced.

3.9 Fitting the covers

WARNING — **Risk of injury**

There is a danger of injury due to shrink discs and freely rotating shaft journals.

- Use a cover (Option H and Option H66) as a guard.
- If this does not achieve sufficient protection against contact according to the required protection type, the machinery and plant constructor must ensure this by means of special attached components.

All fixing screws must be used and tightened to the correct torque (please see chapter 6.5 "Torque values"). For covers with Option H66, press in the new / new condition closing cap by tapping it lightly with a hammer.



Figure 15: Fitting the covers, Option SH, Option H, and Option H66

3.10 Fitting the covers

WARNING — **Risk of injury**

There is a danger of injury due to freely rotating shaft journals.

- Use a cover cap as a guard
- If this does not achieve sufficient protection against contact according to the required protection type, the machinery and plant constructor must ensure this by means of special attached components.

Many versions of the universal worm gear unit are supplied with plastic cover caps as standard. These cover caps protect the shaft sealing ring against the entry of dust and other possible contamination. The cover caps can be removed by hand without the use of tools and pushed onto the A or B side.

The cover cap must be removed before installing the universal worm gear unit. After installation is complete, the cover cap must be pushed into the threaded holes on the output flange on the corresponding side. Care must be taken that the cover cap is removed and pushed on vertically, in order not to damage the expansion elements of the cover cap.



Fig. 16: Removal and fitting of the cover cap

3.11 Fitting a standard motor

The maximum permitted motor weights indicated in the table below must not be exceeded when attaching the motor to an IEC/NEMA adapter:

Maximum permitted motor weights														
IEC motor size	63	71	80	90	100	112	132	160	180	200	225	250	280	315
NEMA motor size		56C	143T	145T	182T	184T	210T	250T	280T	324T	326T	365T		
Max. motor weight [kg]	25	30	40	50	60	80	100	200	250	350	500	700	1000	1500

WARNING **Risk of injury**

Severe injuries may be caused by rapidly rotating parts when installing and servicing couplings.

Secure the drive unit against accidental switch-on.

Assembly procedure to attach a standard motor to the IEC adapter (Option IEC/NEMA adapter)

1. Clean the motor shaft and flange surfaces of the motor and the IEC /NEMA adapter and check for damage. The mounting dimensions and tolerances of the motor must conform to DIN EN 50347/NEMA MG1 Part 4.
2. Push the coupling sleeve onto the motor shaft so that the motor parallel key engages into the groove in the sleeve on tightening.
3. Tighten the coupling sleeve on the motor shaft in accordance with the motor manufacturer's instructions until it touches the collar. With motor sizes 90, 160, 180 and 225, any spacer bushes must be positioned between the coupling sleeve and the collar. With standard helical gear units, dimension B between the coupling sleeve and the collar must be observed (see Figure 17). Certain NEMA adapters require adjustment of the coupling in accordance with the specifications indicated on the adhesive plate.
4. If the coupling half contains a threaded pin, the coupling must be secured axially on the shaft. The threaded pin must be coated prior to use with a securing lubricant e.g. Loctite 242, Loxeal 54-03 and tightened to the correct torque (please see chapter 6.5 "Torque values").

.

5. Sealing of the flange surfaces of the motor and the IEC/NEMA adapter is recommended if the motor is installed outdoors or in a humid environment. Before the motor is installed, the flange surfaces must be completely coated with surface sealant Loctite 574 or Loxeal 58-14 so that the flange seals after mounting.
6. Mount the motor on the IEC/NEMA adapter. Do not forget to fit the gear rim or the splined sleeve provided (see illustration below).
7. Tighten the bolts of the IEC/NEMA adapter with the correct torque (please see chapter 6.5 "Torque values").

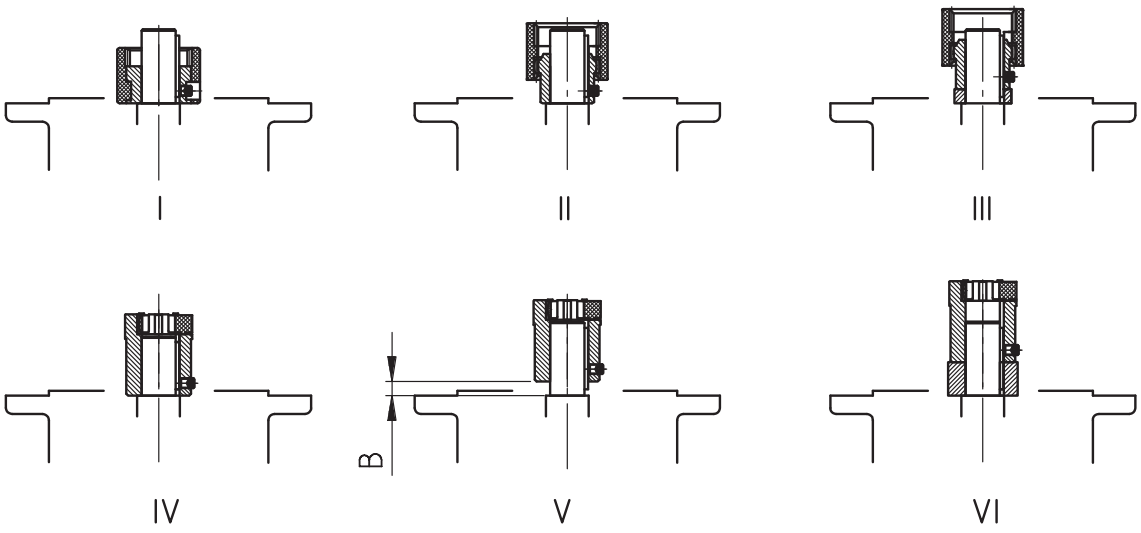

Figure 17: Fitting the coupling onto the motor shaft - various types of coupling

I Curved tooth coupling

II Curved tooth coupling, two-part

III Curved tooth coupling, two-part with spacer bush

IV Claw coupling, two-part

V Claw coupling, two-part, observe dimension B:

Standard helical gear unit: SK 0, SK 01, SK 20, SK 25, SK 30, SK 33 (2-stage) SK 010, SK 200, SK 250, SK 300, SK 330 (3-stage)		
	IEC size 63	IEC size 71
Dimension B (Fig. V)	B = 4.5 mm	B = 11.5 mm

VI Claw coupling two-part with spacer bush

3.12 Installation of a servo motor (Option SEP / SEK)

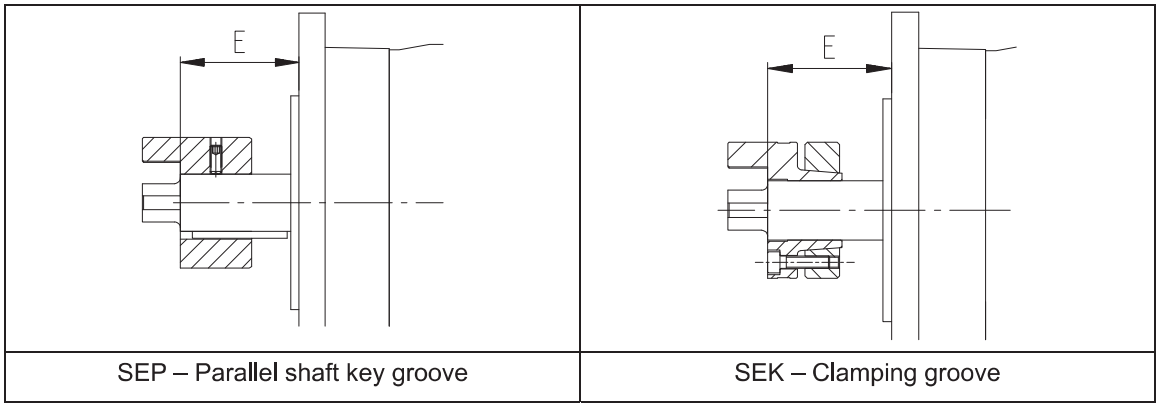

SEP – Parallel shaft key groove	SEK – Clamping groove

E = Coupling installation size of flange system

Cylinder type	Coupling size*	Installation size E [mm]
SE. 100	GS 19	40
SE. 130	GS 24	50
SE. 165	GS 28	58
SE. 215	GS 28	80
	GS 48	80
SE. 300	GS 48	82
*) All coupling sizes are available as SEP or SEK versions, the ring gear has a hardness of (Shore) 98 Sh-A-GS, colour red		

Table 4: Allocation of cylinder types to coupling sizes

To prevent damage to the coupling, the dimension E which is stated in Table 12 must be complied with!

Assembly sequence for the connection of a servo motor to the servo adapter (Option SEP / SEK)

Please refer to the coupling manufacturer's operating/installation instructions for the assembly of the two halves of the coupling.

3.13 Fitting the cooling coil to the cooling system

WARNING — **Risk of injury**

Possibility of injury due to pressure discharge.

Ensure that the pressure is released from the cooling circuit before carrying out any work on the gear unit.

The cooling coil is installed in the casing cover. Cutting ring screw threads according to DIN 2353 are located at the casing cover for the connection of a pipe with an external diameter of 10 mm.

Remove the closing cap from the screw neck prior to assembly to avoid any contamination of the cooling system. The screw necks should be connected with the coolant circuit, which must be provided by the operator. The flow direction of the coolant is irrelevant.

Make sure not to twist the screw necks during or after assembly as the cooling coil may be damaged. It must be ensured that no external forces act on the cooling coil.

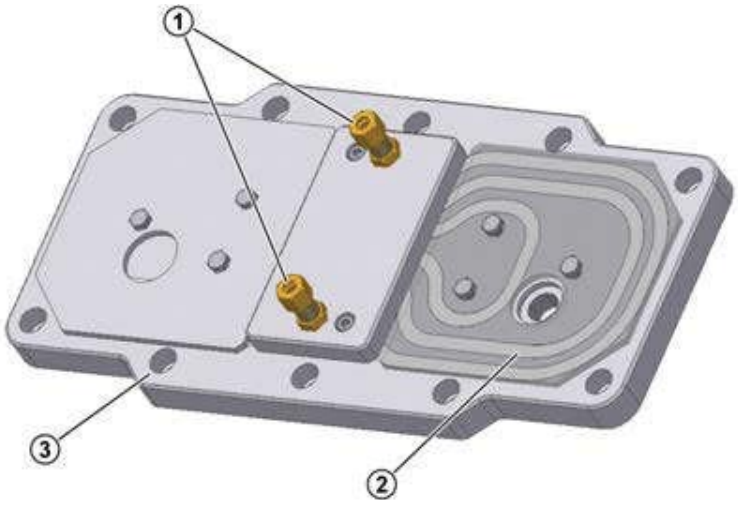

	Explanation
1	Cutting ring screw threads
2	Cooling coil
3	Housing cover

Figure 18: Cooling cover

3.14 Installation of an oil expansion tank, Option OA

The expansion tank must be installed vertically with the hose connection facing downwards and the vent plug upwards. Please note the attached factory standard 0-530-04 for the installation.

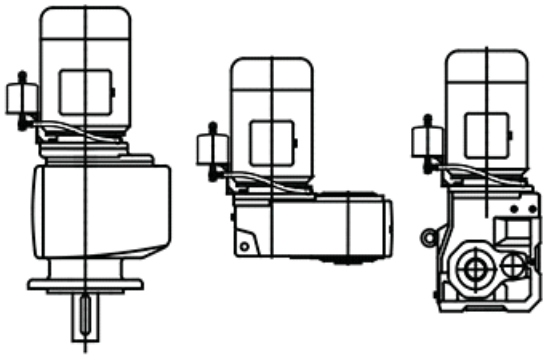

Figure 19: Installing the expansion tank

3.15 Subsequent paintwork

NOTICE	Damage to the device

For retrospective painting of the gear unit, the radial seals, rubber elements, pressure venting valves, hoses, type plates, adhesive labels and motor coupling components must not come into contact with paints, lacquers or solvents, as otherwise components may be damaged or made illegible.

4 Commissioning

4.1 Check the oil level

The oil level must be checked prior to commissioning (please see chapter 5.2 "Service and Maintenance Work").

4.2 Activating the automatic lubricant dispenser

Some gear unit types with standard motor (Option IEC/NEMA) have an automatic lubricant dispenser for the roller bearings. This dispenser must be activated prior to commissioning. The cartridge case cover of the adapter for attaching an IEC/NEMA standard motor has a red information sign for the activation of the lubricant dispenser. A grease escape opening which is closed with a G1/4 cap screw is located opposite to the lubricant dispenser. After activation of the lubricant dispenser, the cap screw can be removed and replaced with the grease collection container (Part No. 28301210) which is supplied separately with the delivery.

Activating the automatic lubricant dispenser:

1. Loosen and remove the cylindrical screws.
2. Remove the cartridge cover.
3. Screw the activation screw into the lubricant dispenser until the lug breaks off at the defined fracture point
4. Re-fit the cartridge cover and fasten it with the cylindrical screw (please see chapter 6.5 "Torque values").
5. Mark activation date on the adhesive label indicating the month/year

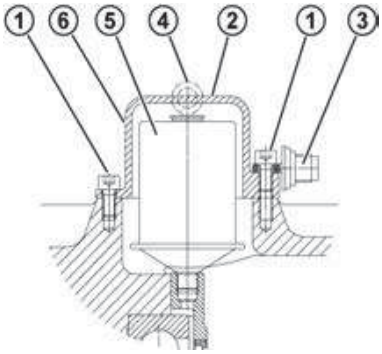

Explanation	
1	Cylindrical screw M8 x 16
2	Cartridge cover
3	Activation screw
4	Lug
5	Lubricant sensor
6	Position of adhesive label

Figure 20: Activating the automatic lubricant dispenser with standard motor mounting

Adhesive label:

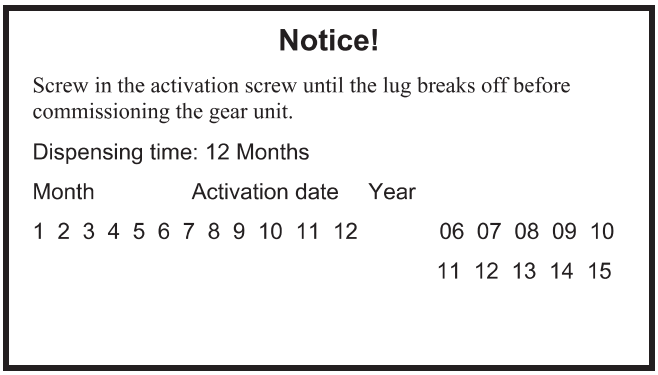

Figure 21: Adhesive label

4.3 Operation with lubricant cooling

Water cooling

NOTICE	Gear unit damage

The gear unit may be damaged by overheating.

The drive may only be commissioned after the cooling spiral has been connected to the cooling circuit, and the cooling circuit has been put into operation.

The coolant must have a similar thermal capacity as water (specific thermal capacity at 20°C c=4.18 kJ/kgK). Industrial water without any air bubbles or sediments is recommended as a coolant. The hardness of the water must be between 1 dH and 15 dH; the pH value must be between pH 7.4 and pH 9.5. No aggressive liquids may be added to the coolant!

The **coolant pressure** must not exceed **8 bar**. The required **quantity of coolant** is **10 litres/minute**, and the **coolant inlet temperature** must not exceed 40°C; we recommend **10°C.**

We also recommend fitting a pressure reducer or similar at the coolant inlet to avoid damage due to excessive pressure.

If there is a danger of frost the operator should add a suitable anti-freeze solution to the cooling water.

The **temperature of the cooling water** and the **cooling water flow rate** must be supervised and ensured by the operator.

Air/Oil cooler

The version and all important data for the air/oil cooler can be obtained from Catalogue G1000, or contact the manufacturer of the cooling unit.

4.4 Running-in time for the worm gear unit

Information **Running-in time**

In order to achieve maximum efficiency of the worm gear unit, the gear unit must be subjected to a running-in period of approx. 25 h – 48 h under maximum load.

There may be a reduction in efficiency before the running-in period is complete.

4.5 Checklist

Checklist		
Subject of check	**Date checked:**	**Information see Section**
Is the vent plug activated or the pressure vent screwed in?		3.4
Does the required configuration conform with the actual installation?		6.1
Are the external gear shaft forces within permitted limits (chain tension)?		3.6
Is the torque support correctly fitted?		3.7
Are contact guards fitted to rotating components?		3.9
Is the automatic lubricant dispenser activated?		4.2
Is the cooling cover connected to the cooling circuit?		3.13 4.3

5 Service and maintenance

WARNING **Danger of burns**

The surfaces of gear units or geared motors may become hot during or shortly after operation.

- Installation and maintenance work must only be performed when gear unit is at a standstill and has cooled down. The drive must be isolated and secured to prevent accidental start-up.
- Wear protective gloves.
- Shield hot surfaces with contact guards.

5.1 Service and Maintenance Intervals

Service and Maintenance Intervals	Service and Maintenance Work	Information see Section
At least every six months	• Visual inspection • Check for running noises • Check the oil level • Re-grease / remove excess grease (only applicable for free drive shaft / Option W and for agitator bearings / Option VL2 / VL3) • Replace the automatic lubricator / remove excess grease (for operating times < 8 h / day): (A replacement interval of 1 year is permissible for the lubricant dispenser) (Only for IEC / NEMA standard motor mounting). Empty or replace the lubricant collection container with every second replacement of the lubricant dispenser.	5.2
For operating temperatures up to 80 °C every 10000 operating hours, at least every 2 years	• Change the oil (The interval is doubled if filled with synthetic products) • Cleaning or replacing the vent plug • Replace shaft sealing rings if worn	5.2
Every 20000 operating hours, at least every 4 years	• Re-lubrication of the bearings in the gear unit	5.2
At least every 10 years	• General overhaul	5.2

Information — **Oil change intervals**

The oil change intervals apply for normal operating conditions and operating temperatures up to 80 °C. The oil change intervals are reduced in the case of extreme conditions (operating temperatures higher than 80 °C, high humidity, aggressive environment and frequent fluctuations in the operating temperature).

5.2 Service and Maintenance Work

WARNING — **Severe personal injury**

Severe injury and material damage may be caused by incorrect servicing and maintenance work.

Servicing and maintenance work must only be performed by qualified specialist personnel. Wear the necessary protective clothing for servicing and maintenance work (e.g. industrial footwear, protective gloves, goggles, etc.)

WARNING — **Severe personal injury**

Risk of injury due to rapidly rotating and hot machine components.

Installation and maintenance work must only be performed when gear units are at a standstill and have cooled down. The drive must be isolated and secured to prevent accidental start-up.

WARNING — **Severe personal injury**

Particles or liquids thrown up during servicing and maintenance can cause injuries.

- Observe the safety information when cleaning with compressed air or a pressure washer.

WARNING — **Danger of burns**

Danger of burns due to hot oil.

- Allow the gear unit to cool down before carrying out maintenance or repair work.
- Wear protective gloves.

NOTICE — **Leaks**

Take care that no dirt or water enters the shaft sealing rings or the vents when cleaning

Dirt or water in the shaft sealing rings may cause leaks.

Visual inspection

The gear unit must be checked for leaks. In addition, the gear unit must be inspected for external damage and cracks in the hoses, hose connections and rubber buffers. Have the gear unit repaired in case of leaks, e.g. dripping gear oil or cooling water, damage or cracks. Please contact the NORD service department.

Information — **Shaft sealing rings**

Shaft sealing rings are rubbing seals and have sealing lips made from an elastomer material. These sealing lips are lubricated with a special grease at the factory. This reduces the wear due to their function and ensures a long service life. An oil film in the region of the rubbing sealing lip is therefore normal and is not due to leakage.(please see chapter 6.7 "Leaks and seals")

Check for running noises

If the gear unit produces unusual running noises and/or vibrations, this could indicate damage to the gear unit. In this case the gear should be shut down and a general overhaul carried out.

Check the oil level

Section 6.1 "Configurations and maintenance" describes the versions and the corresponding oil level screws. With double gear units, the oil level must be checked on both units. The pressure vent must be at the position marked in Section 6.1 "Configurations and maintenance"Bauformen und Wartung</dg_ref_source_inline>.

The oil level does not need to be checked on gear units without oil level screw (please see chapter 6.1 "Configurations and maintenance").

Gear unit types that are not supplied full of oil must be filled before the oil level is checked.

Check the oil level with an oil temperature of between 20 °C to 40 °C.

1. The oil level may only be checked when the gear unit is at a standstill and has cooled down. The gear unit must be secured to prevent accidental switch-on.
2. The oil level screw corresponding to the version must be screwed out (please see chapter 6.1 "Configurations and maintenance").

Information — **Checking the oil level**

At the first oil level check a small amount of oil may escape, as the oil level may be below the lower edge of the oil level hole.

3. **Gear units with oil level screw:** The correct oil level is at the lower edge of the oil level hole. If the oil level is too low, this must be corrected using the correct type of oil. An oil level glass is available instead of the oil level screw
4. **Gear units with an oil level tank:** The oil level must be checked in the oil level tank with the aid of the dipstick plug (thread G1 1/4). The oil level must be between the upper and lower marking when the dipstick is fully screwed in (see Figure 22). Top up the oil level with the relevant type of oil as necessary. These gearboxes may only be operated in the configuration stated in Section 6.1 "Configurations and maintenance".
5. The oil level screw or the cap screw with dipstick and all other loosened screws must be correctly re-tightened.

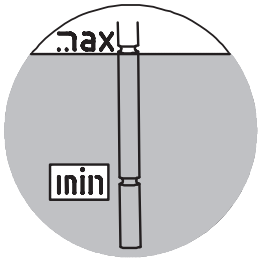

Figure 22: Checking the oil level with a dipstick

Re-greasing

Some gear unit designs (free drive shaft, Option W, agitator designs VL2 and VL3) are equipped with a re-greasing device.

For agitator versions VL2 and VL3, the vent screw located opposite to the grease nipple must be unscrewed before re-greasing. Grease should be injected until a quantity of 20 - 25 g escapes from the vent hole. After this, the vent plug must be reinserted and tightened.

For Option W and some IEC adapters, the outer roller bearing must be re-greased with approx. 20 - 25 g of grease via the grease nipple provided. Remove any excess grease from the adapter.

Recommended grease: Petamo GHY 133N (please see chapter 6.2 "Lubricants") (Fa. Klüber Lubrication).

Replacing the automatic lubricant dispenser

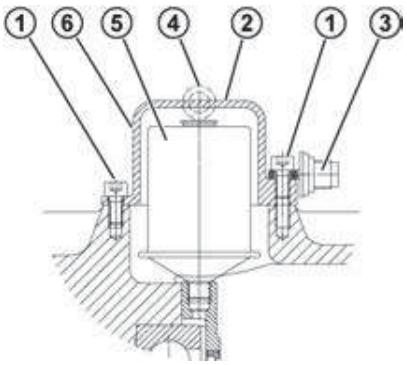

	Explanation
1	Cylindrical screws M8 x 16
2	Cartridge cover
3	Activation screw
4	Lug
5	Lubricant sensor
6	Position of adhesive label

Figure 23: Replacing the automatic lubricant dispenser with standard motor mounting

The cartridge cover must be unscrewed. The lubrication dispenser is screwed out and replaced with a new component (Part No. 283 0100). Remove any excess grease from the adapter. Then activate (please see chapter 4.2 "Activating the automatic lubricant dispenser").

Empty or replace the grease collection container (Part No. 28301210) with every second replacement of the lubricant container. To empty the container, unscrew it from the screw fitting. The container has an internal piston, which can be pressed back with a rod with a maximum diameter of 10 mm. Collect the grease which is pressed out and dispose of it correctly. Due to the shape of the container, a residual quantity of grease remains in the container. After emptying and cleaning the container, it can be screwed back into the drain hole in the IEC adapter. Replace the container with a new one if it is damaged.

Change the oil

The figures in Section 6.1 "Configurations and maintenance" show the oil drain screw, the oil level screw and the pressure vent screw for various designs.

Procedure:

1. Place a catchment vessel under the oil drain screw or the oil drain cock.
2. Completely remove the oil level screw or screwed sealing plug with dipstick if an oil level tank is being used and unscrew oil drain screw.

WARNING — **Danger of burns**

Danger of burns due to hot oil.

- Allow the gear unit to cool down before carrying out maintenance or repair work.
- Wear protective gloves.

3. Drain all the oil from the gear unit.
4. If the sealing ring of the oil drain screw or oil level screw is damaged in the thread, a new oil level screw must be used or the thread must be cleaned and coated with securing lubricant, e.g. Loctite 242, Loxeal 54-03 prior to insertion.
5. Screw the oil drain screw into the hole and tighten to the correct torque (please see chapter 6.5 "Torque values").
6. Using a suitable filling device, refill with oil of the same type through the oil level hole until oil emerges from the oil level hole. (The oil can also be filled through the pressure vent screw or a sealing plug located higher than the oil level). If an oil level tank is used, fill the oil through the upper inlet (thread G1¼) until the oil level is set as described in Section 5.2 "Service and Maintenance Work".
7. Wait at least 15 minutes, or at least 30 minutes if an oil level tank is used, and then check the oil level. Proceed as described in Section 5.2 "Service and Maintenance Work".

Information — **Oil level**

The oil does not need to be changed on gear units without oil level screw (please see chapter 6.1 "Configurations and maintenance"). These gear units are lubricated for life.

Standard helical gear units have no oil level screw. Here, the oil is topped up through the pressure vent bolt using the quantities listed in the table in Section 6.4 "Helical gear unit".

Cleaning or replacing the vent plug

Unscrew the vent screw and thoroughly clean it (e.g. with compressed air) and fit the vent screw in the same place, If necessary, use a new vent screw with a new sealing ring.

Replace the shaft sealing ring

Once the shaft sealing ring has reached the end of its service life, the oil film in the region of the sealing lip increases and a measurable leakage with dripping oil occurs. **The shaft sealing ring must then be replaced.** The space between the sealing lip and the protective lip must be filled approximately 50 % with grease on fitting (recommended grease: PETAMO GHY 133N). Take care that after fitting, the new shaft sealing ring does not run in the old wear track.

Re-lubricating bearings

For bearings which are not oil-lubricated and whose holes are completely above the oil level, replace the roller bearing grease (recommended grease: PETAMO GHY 133N). Please contact the NORD service department.

General overhaul

For this, the gear unit must be completely dismantled. The following work must be carried out:

- Clean all gear unit components
- Examine all gear unit components for damage
- All damaged components must be replaced
- All roller bearings must be replaced
- Replace back stops if fitted
- Replace all seals, radial seals and Nilos rings
- Replace plastic and elastomer components of the motor coupling

The general overhaul must be carried out by qualified personnel in a specialist workshop with appropriate equipment in observance of national regulations and laws. We recommend that the general overhaul is carried out by the NORD Service department.

6 Appendix

6.1 Configurations and maintenance

Explanation of symbols for the following version illustrations:



Venting



Oil level



Oil drain

Information **Gear unit - Lubrication**

SK 320, SK 172, SK 272, SK 372 as well as SK 273 and SK 373, SK 01282 NB, SK 0282 NB, SK 1382 NB and UNIVERSAL / MINIBLOC gear units are lubricated for life. These gear units do not have an oil filler screw.

UNIVERSAL / MINIBLOC worm gear units

NORD UNIVERSAL / MINIBLOC worm gear units are suitable for all installation positions. They have an oil filler which is independent of the configuration.

As an option, types SI and SMI can be equipped with a vent screw. Gear units with vents must be installed in the stated position.

Types SI, SMI, S, SM and SU as 2-stage gear unit types and types SI, SMI as worm gear units for direct motor mounting have an oil filler which depends on the configuration and must be installed in the stated position.

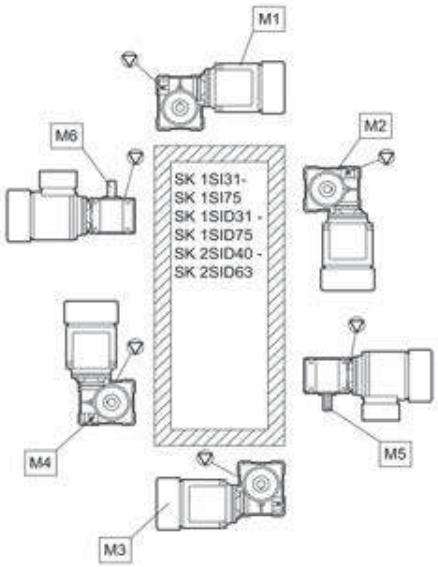

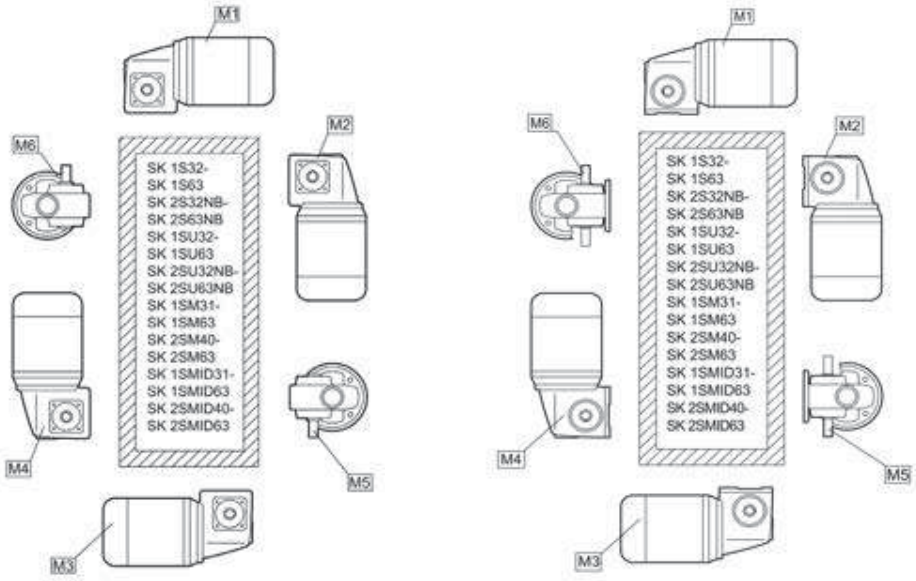

Parallel shaft gear units with oil level tank

The following applies for SK 9282, SK 9382, SK 10282, SK 10382, SK 10382.1, SK 11282, SK 11382, SK 11382.1 and SK 12382 in the M4 configuration with oil level tank:

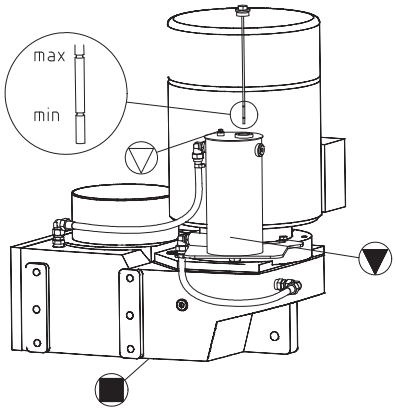

Figure 24: Oil level check with oil level tank

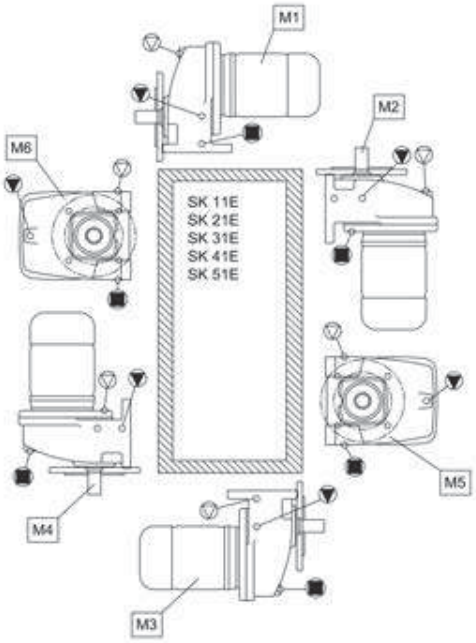
M1
M2
M6
SK 11E
SK 21E
SK 31E
SK 41E
SK 51E
M5
M4
M3

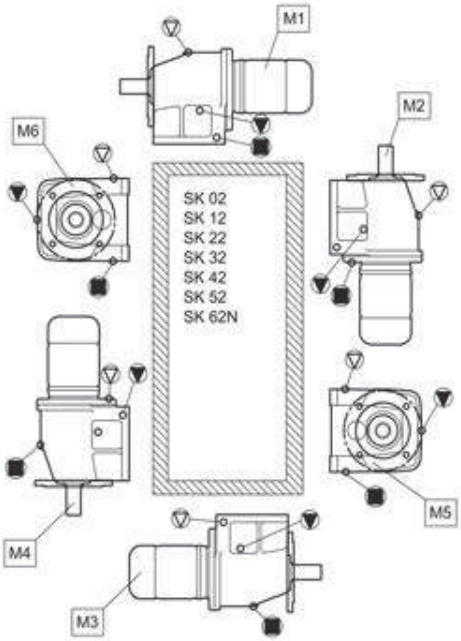
M1
M2
M6
SK 02
SK 12
SK 22
SK 32
SK 42
SK 52
SK 62N
M5
M4
M3

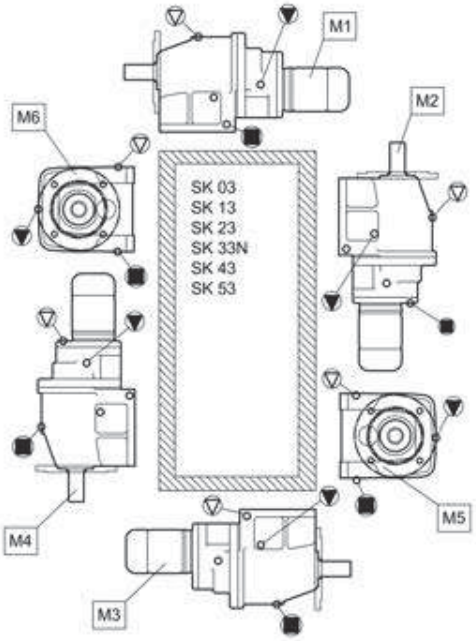
M1
M2
M6
SK 03
SK 13
SK 23
SK 33N
SK 43
SK 53
M5
M4
M3

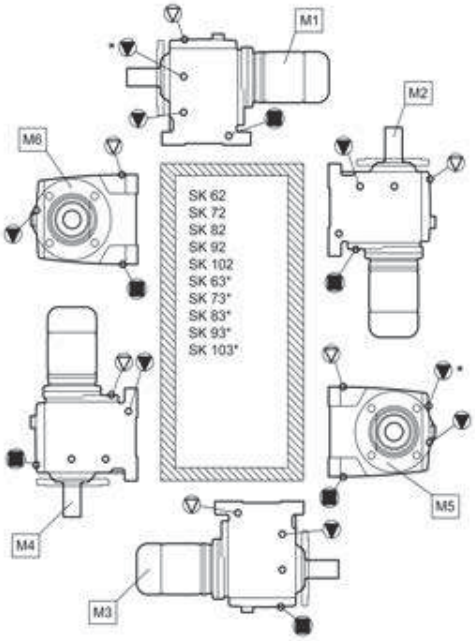
M1
M2
M6
SK 62
SK 72
SK 82
SK 92
SK 102
SK 63*
SK 73*
SK 83*
SK 93*
SK 103*
M5
M4
M3

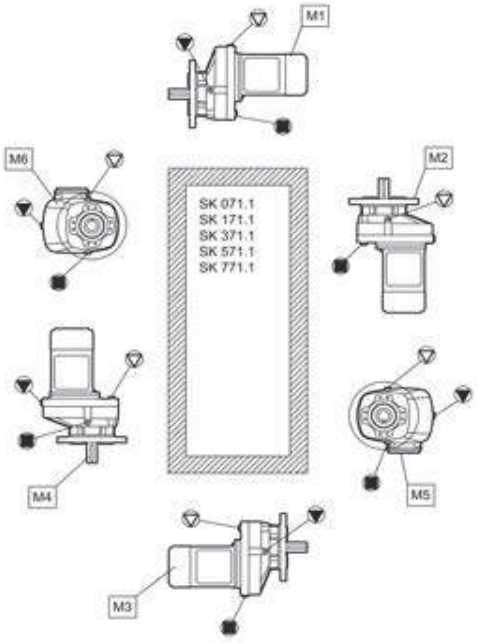
M1
M6
M2
SK 071.1
SK 171.1
SK 371.1
SK 571.1
SK 771.1
M4
M5
M3

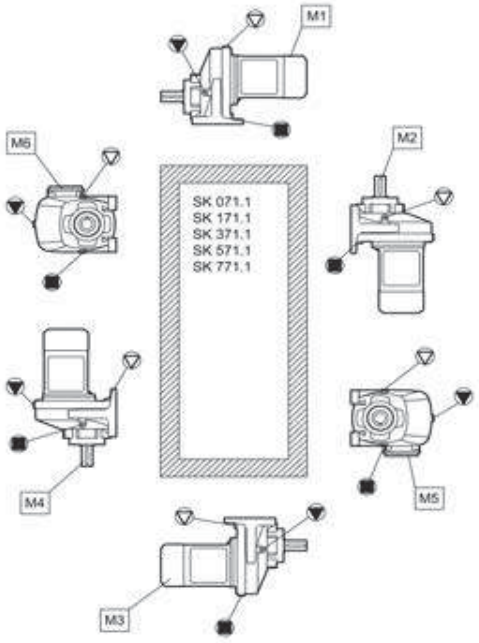
M1
M6
M2
SK 071.1
SK 171.1
SK 371.1
SK 571.1
SK 771.1
M4
M5
M3

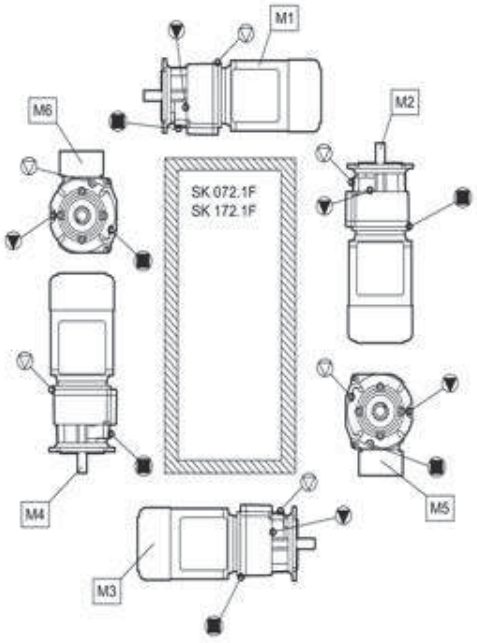
M1
M6
M2
SK 072.1F
SK 172.1F
M4
M5
M3

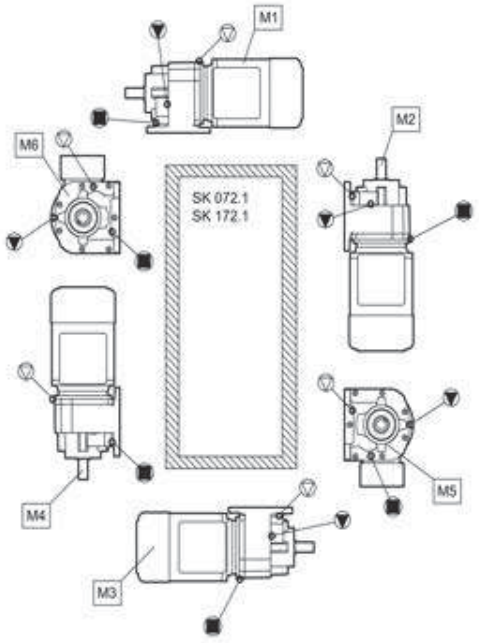
M1
M6
M2
SK 072.1
SK 172.1
M4
M5
M3

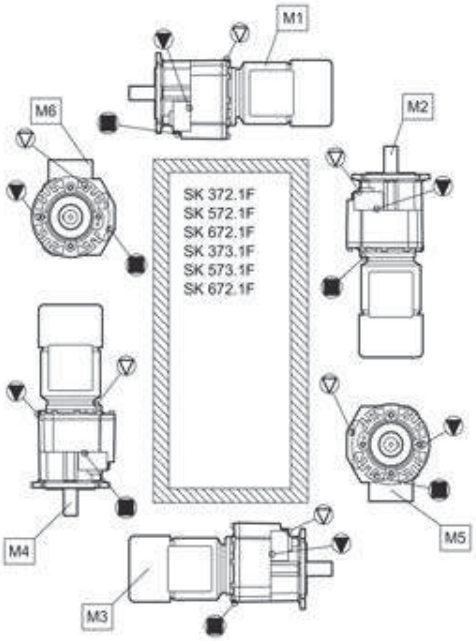
M1
M2
M3
M4
M5
M6
SK 372.1F
SK 572.1F
SK 672.1F
SK 373.1F
SK 573.1F
SK 672.1F

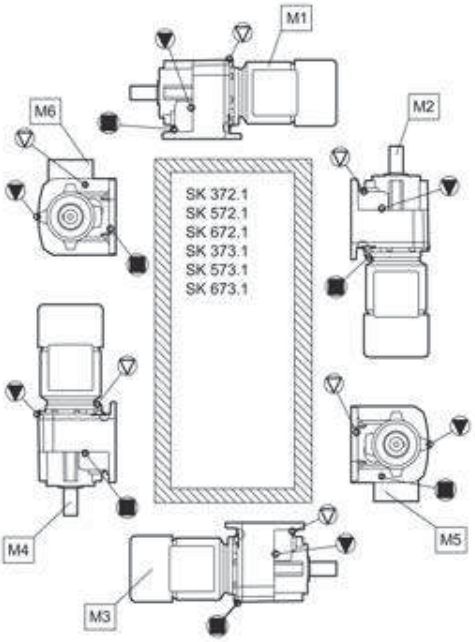
M1
M2
M3
M4
M5
M6
SK 372.1
SK 572.1
SK 672.1
SK 373.1
SK 573.1
SK 673.1

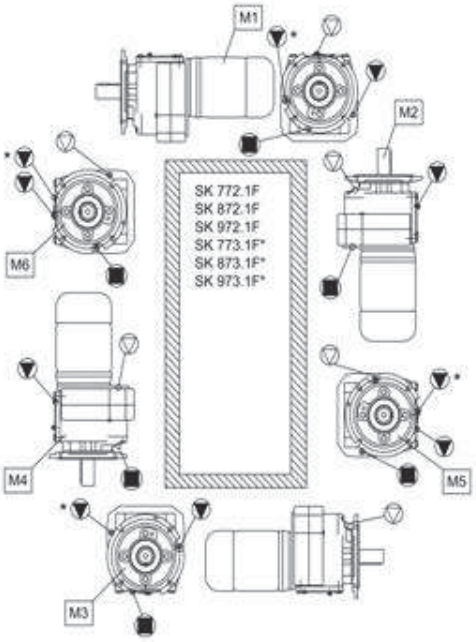
M1
M2
M3
M4
M5
M6
SK 772.1F
SK 872.1F
SK 972.1F
SK 773.1F*
SK 873.1F*
SK 973.1F*

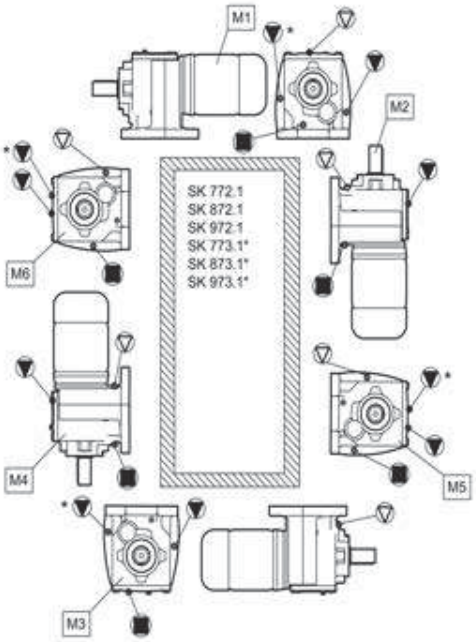
M1
M2
M3
M4
M5
M6
SK 772.1
SK 872.1
SK 972.1
SK 773.1*
SK 873.1*
SK 973.1*

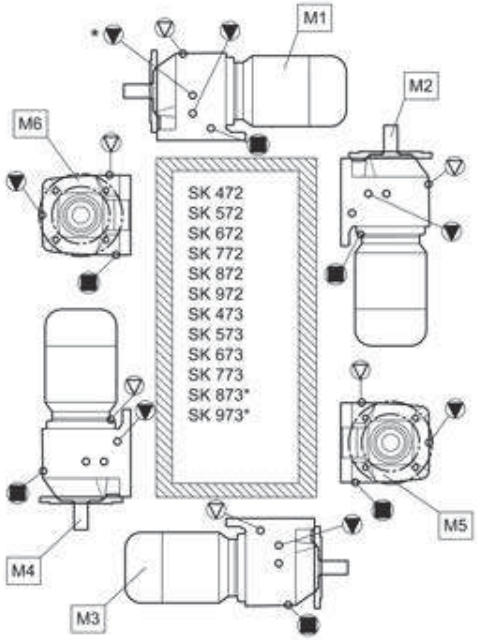
M1
M2
M6
SK 472
SK 572
SK 672
SK 772
SK 872
SK 972
SK 473
SK 573
SK 673
SK 773
SK 873*
SK 973*
M5
M4
M3

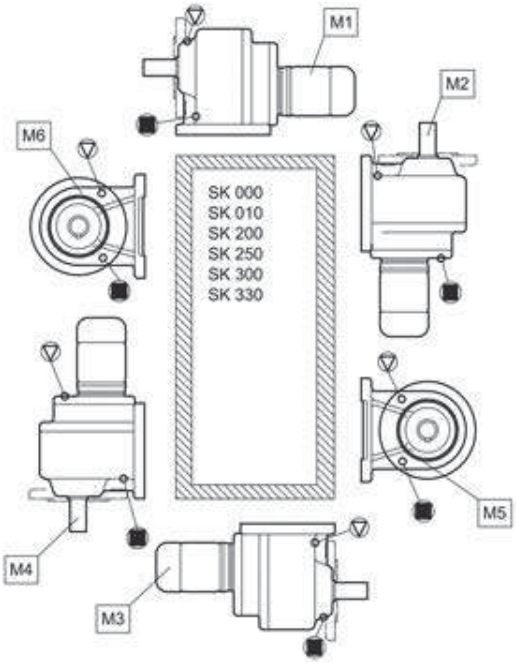
M1
M2
M6
SK 000
SK 010
SK 200
SK 250
SK 300
SK 330
M5
M4
M3

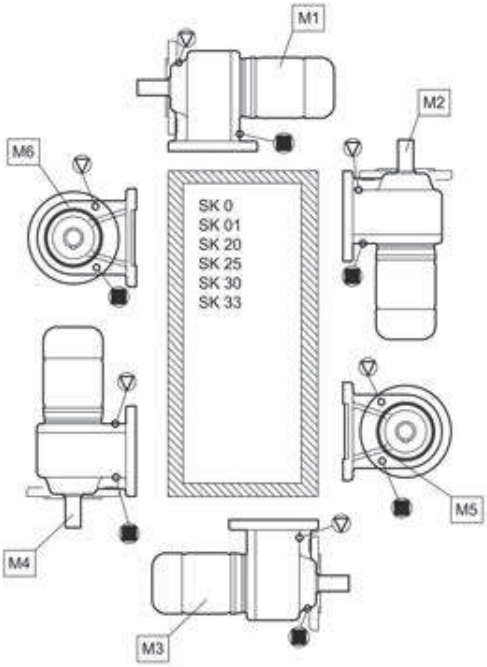
M1
M2
M6
SK 0
SK 01
SK 20
SK 25
SK 30
SK 33
M5
M4
M3

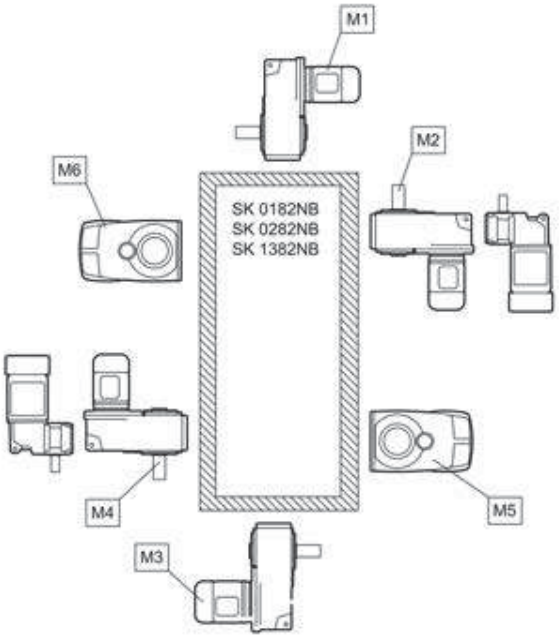
M1
M2
M6
SK 0182NB
SK 0282NB
SK 1382NB
M4
M5
M3

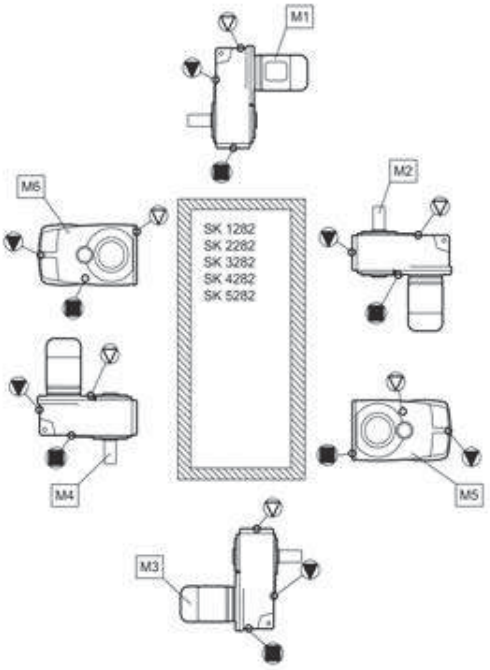
M1
M6
M2
SK 1282
SK 2282
SK 3282
SK 4282
SK 5282
M4
M5
M3

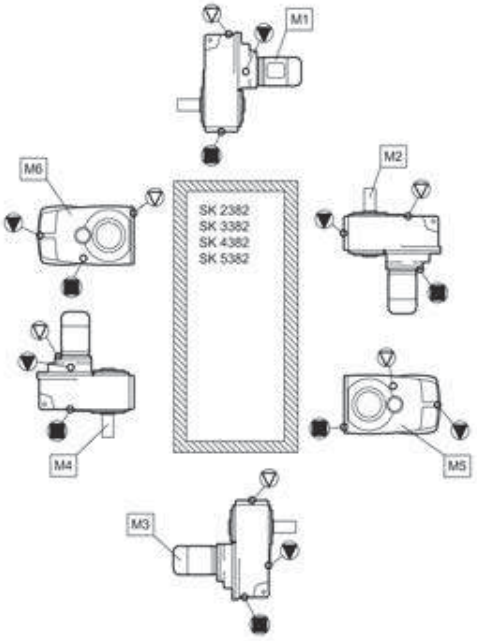
M1
M6
M2
SK 2382
SK 3382
SK 4382
SK 5382
M4
M5
M3

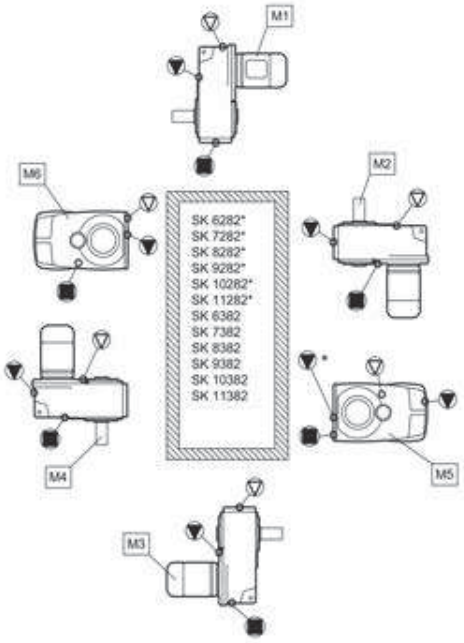
M1
M6
M2
SK 6282*
SK 7282*
SK 8282*
SK 9282*
SK 10282*
SK 11282*
SK 6382
SK 7382
SK 8382
SK 9382
SK 10382
SK 11382
M4
M5
M3

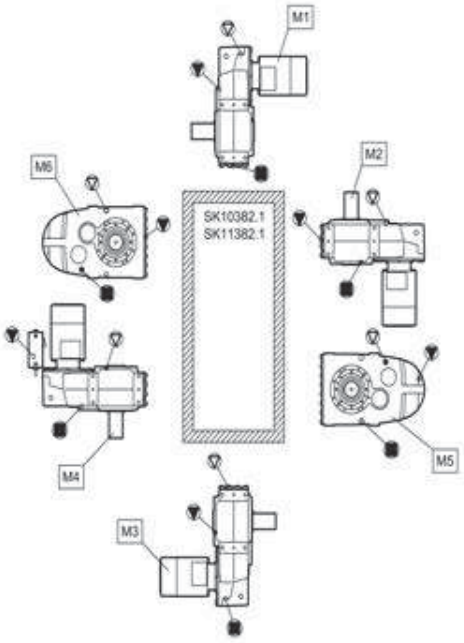
M1
M6
M2
SK10382.1
SK11382.1
M4
M5
M3

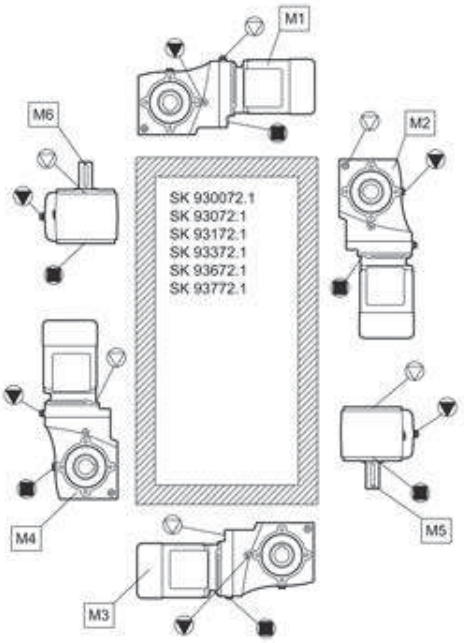
M1
M6
M2
SK 930072.1
SK 93072.1
SK 93172.1
SK 93372.1
SK 93672.1
SK 93772.1
M4
M5
M3

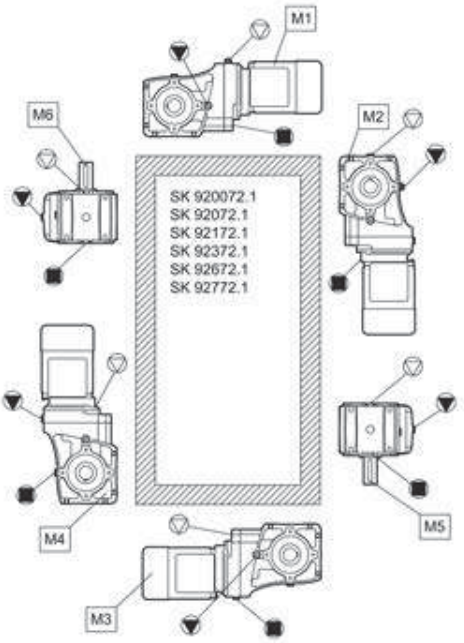
M1
M6
M2
SK 920072.1
SK 92072.1
SK 92172.1
SK 92372.1
SK 92672.1
SK 92772.1
M4
M5
M3

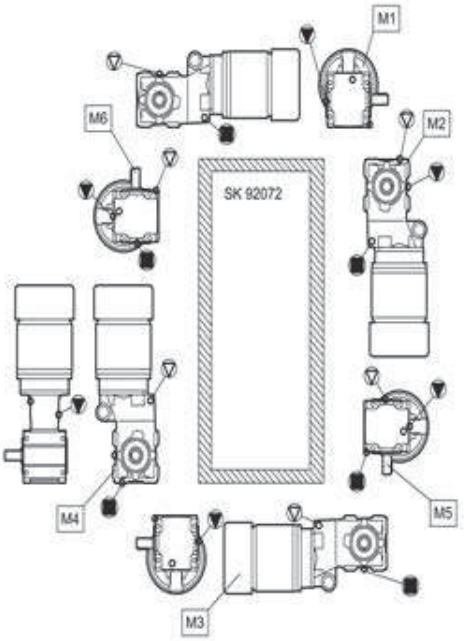
M1
M6
M2
SK 92072
M4
M5
M3

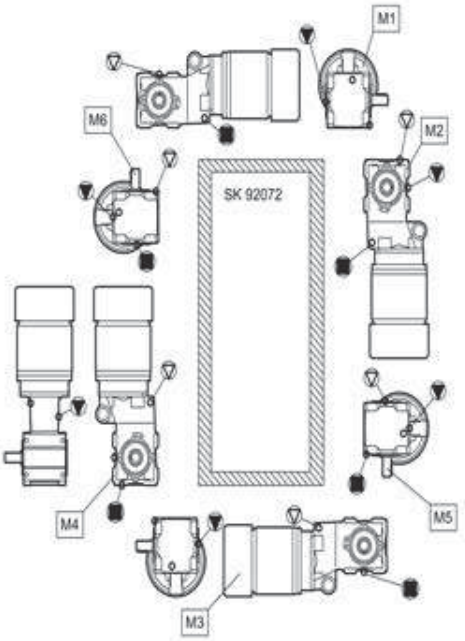
M1
M6
M2
SK 92072
M4
M5
M3

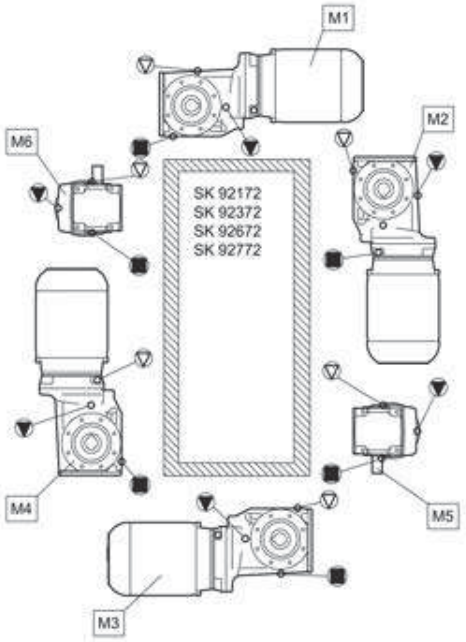
M1
M2
M6
SK 92172
SK 92372
SK 92672
SK 92772
M4
M5
M3

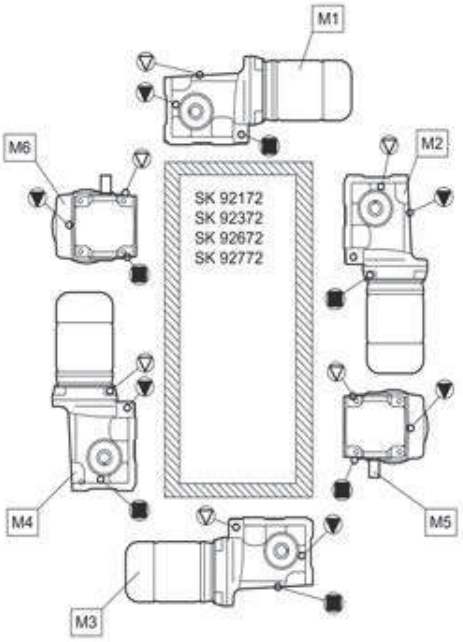
M1
M2
M6
SK 92172
SK 92372
SK 92672
SK 92772
M4
M5
M3

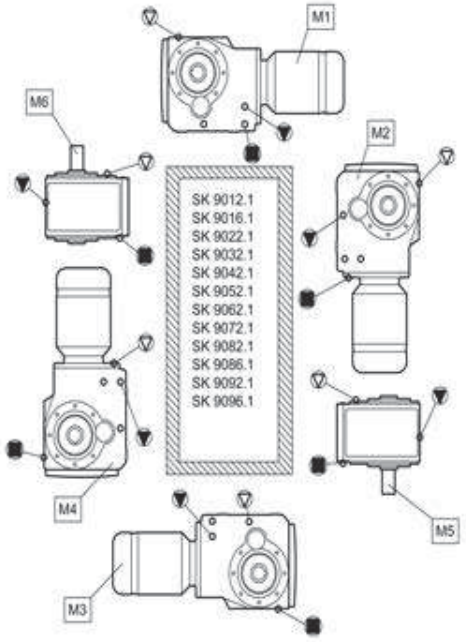
M1
M6
M2
SK 9012.1
SK 9016.1
SK 9022.1
SK 9032.1
SK 9042.1
SK 9052.1
SK 9062.1
SK 9072.1
SK 9082.1
SK 9086.1
SK 9092.1
SK 9096.1
M4
M5
M3

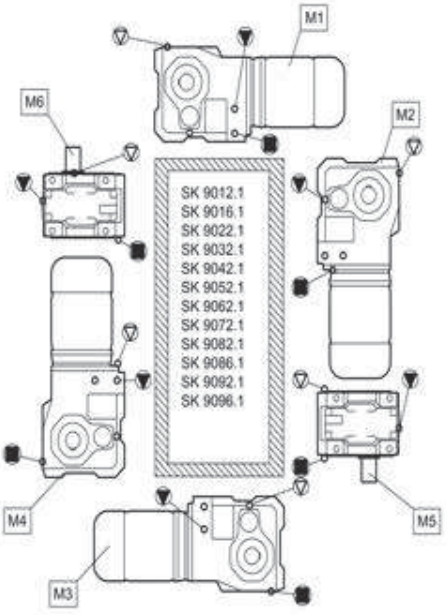
M1
M6
M2
SK 9012.1
SK 9016.1
SK 9022.1
SK 9032.1
SK 9042.1
SK 9052.1
SK 9062.1
SK 9072.1
SK 9082.1
SK 9086.1
SK 9092.1
SK 9096.1
M4
M5
M3

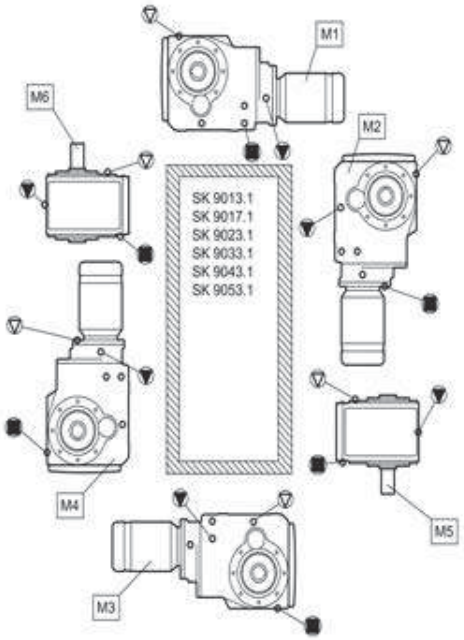
M1
M6
M2
SK 9013.1
SK 9017.1
SK 9023.1
SK 9033.1
SK 9043.1
SK 9053.1
M4
M5
M3

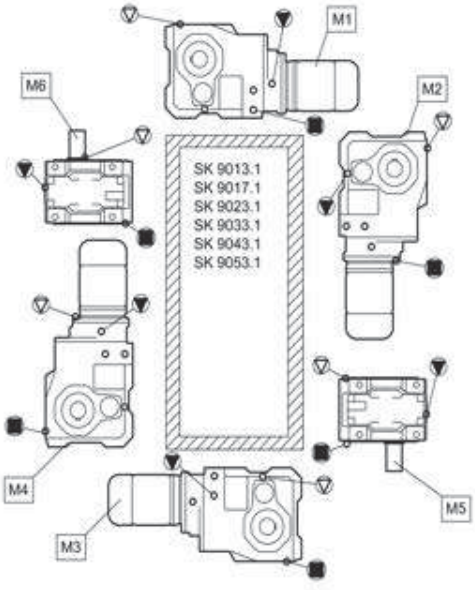
M1
M6
M2
SK 9013.1
SK 9017.1
SK 9023.1
SK 9033.1
SK 9043.1
SK 9053.1
M4
M5
M3

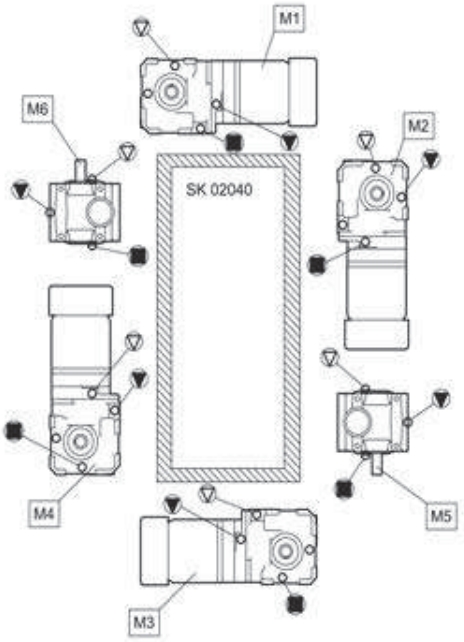
M1
M6
M2
SK 02040
M4
M5
M3

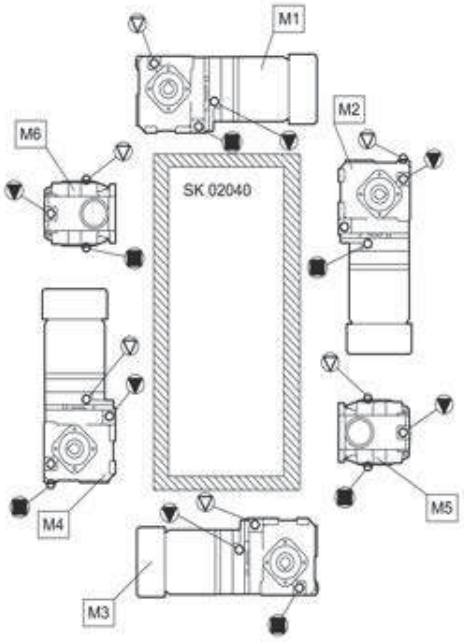
M1
M6
M2
SK 02040
M4
M5
M3

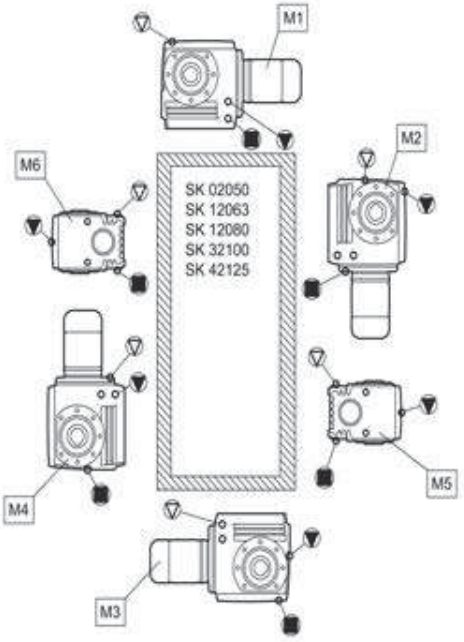
M1
M6
M2
SK 02050
SK 12063
SK 12080
SK 32100
SK 42125
M4
M5
M3

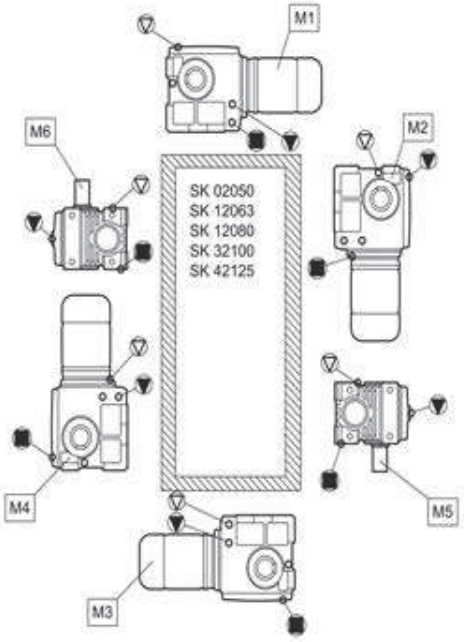
M1
M6
M2
SK 02050
SK 12063
SK 12080
SK 32100
SK 42125
M4
M5
M3

Remote Bulb Control (Continued)

Selection Charts (Continued)

Replacement Parts

Code Number	Description
CVR28A-617R	Concealed adjustment cover
CVR28A-618R	Visible scale cover
KNB20A-602R	Replacement Knob Kit

Accessories

A packing nut is available for closed tank application.
Specify the part number **FTG13A-600R**.

Bulb wells (WEL14A Series) are available for liquid immersion applications.
Refer to the selection chart or to *Bulb Wells Catalog Page, LIT-1922135*.

Technical Specifications

Electrical Ratings

Motor Ratings VAC	120	208	240
Wide Range – Adjustable Differential			
AC Full Load A	16.0	9.2	8.0
AC Locked Rotor A	96.0	55.2	48.0
Non-Inductive A [1]	22 A, 120 to 277 VAC		
Pilot Duty – 125 VA, 24 to 600 VAC			
Fixed Differential and Close Differential			
AC Full Load A	6.0	3.4	3.0
AC Locked Rotor A	36.0	20.4	18.0
Non-Inductive A	10 A, 24 to 277 VAC		
Pilot Duty – 125 VA, 24 to 277 VAC			
Case Compensated – Fixed Differential A19AAC-4			
AC Full Load A	16.0	9.2	8.0
AC Locked Rotor A	96.0	55.2	48.0
Non-Inductive A [1]	22 A, 120 to 277 VAC		
Pilot Duty – 125 VA, 24 to 600 VAC			
A19AAD-12			
AC Full Load A	6.0	3.4	3.0
AC Locked Rotor A	36.0	20.4	18.0
Non-Inductive A	10 A, 24 to 277 VAC		
Pilot Duty – 125 VA, 24 to 277 VAC			
Manual Reset			
AC Full Load A	16.0	9.2	8.0
AC Locked Rotor A	96.0	55.2	48.0
Non-Inductive A	16.0	9.2	8.0
Pilot Duty – 125 VA, 24 to 600 VAC			

1. SPST and N.O. contact of SPDT control;
   SPDT N.C. contact- 16 amps 120 to 277 VAC

The performance specifications are nominal and conform to acceptable industry standards. For applications at conditions beyond these specifications, consult the local Johnson Controls office. Johnson Controls, Inc. shall not be liable for damages resulting from misapplication or misuse of its products. © 2009 Johnson Controls, Inc.

TSLL/TSH - Switch, Temperature Thermostat, CN TF115-001
TSLL7911 - Switch, Temperature Thermostat, CN TF115-001
TSLL-7941 - Switch, Temperature Thermostat, CN TF115-001

PECO
AUTOMATION AND CONTROLS

NEMA 4X RAINTIGHT THERMOSTAT INSTALLATION AND OPERATING INSTRUCTIONS

INSTRUCCIONES DE INSTALACION Y OPERACION DEL THERMOSTATO A PRUEBA DE LLUVIA NEMA 4X

THERMOSTAT NEMA 4X ÉTANCHE AUX INTEMPÉRIES INSTRUCTION D'INSTALLATION ET D'UTILISATION

⚠ WARNING

To prevent overheating or fire, use this control as an operating or regulating thermostat. ALWAYS USE A BACKUP CONTROL OR ALARM if a control failure could cause the controlled appliance to overheat or could cause a fire

Where thermostat is capable of cycling directly between heating and cooling loads, failure to provide a load transfer switch will result in thermostat failure.

Do not install, use or operate if product appears damaged, the enclosure is cracked or broken or if the sensor has been bent, crimped or is dirty.

APPROPRIATE APPLICATION

This thermostat has been tested by CSA and Underwriters Laboratories Inc. (UL), meets the requirements for NEMA 4X equipment and is suitable for use under the National Electrical Code (NEC), Article 547-7, when used with appropriate watertight connectors (not included).

INSTALLATION

⚠ WARNING

To avoid electrical shock or damage to equipment, disconnect all power before installing or servicing.

To avoid potential fire and/or explosion, do not use in potentially flammable or explosive atmospheres.

Installation must be made by a trained, qualified service person in accordance with the National Electrical Code (NEC) and all applicable local codes and ordinances. Installation should meet all applicable national, state and local codes. Refer to the appropriate wiring diagram included. Locate the thermostat (local sensing models) or sensing bulb (remote sensing models) for optimum temperature sensing of the controlled space. Thermostat operation will be affected by unusual heat or cold, such as direct sunlight, near windows or doors or on outside walls.

All fittings and materials used for the installation should be approved, suitable and installed properly for the intended application. For water tightness, the cord seal or conduit hub should be UL listed and marked 4X. The conduit hub is to be tightened onto the conduit before installing in the enclosure.

Where applicable, remove knockout(s) by impacting near the inside edge of the knockout to be removed. **IMPORTANT: Do not impact, dent or use the sensor for support. This will cause calibration and/or thermostat failure.**

⚠ WARNING

READ INSTRUCTION CAREFULLY BEFORE ATTEMPTING TO INSTALL, OPERATE OR SERVICE THIS THERMOSTAT. Failure to observe safety information and comply with instructions could result in PERSONAL INJURY, DEATH AND/OR PROPERTY DAMAGE.
Retain these instructions for future reference. This product, when installed, will be part of an engineered system whose specifications and performance characteristics are not designed or controlled by PECO. You must review your application and national and local codes to assure that your installation will be functional and safe.

Even though this thermostat is sealed, water or dust could enter through improperly sealed wiring. A drip loop should be provided to prevent water and other liquids from entering the thermostat housing. The cord or conduit connections to the enclosure must be water and dust tight. The cover must be tightened securely to compress the gasket and provide a watertight seal. Use only screws provided. Do not over-tighten.

Maximum sensing element withstand temperature is 35°F (20°C) above the highest temperature setting. Maximum temperature for the plastic enclosure is 140°F 60°C.

⚠ CAUTION

For use in wet or humid environments or where water tightness is required, failure to use suitable watertight connections and suitable drip loop could allow water to enter the enclosure resulting in thermostat failure.

Use copper wire only. Insulate or wire-nut all unused leads.

Use the grounding provisions provided for connection to the line ground and equipment ground wire.

OPERATION AND CHECK-OUT

Allow one hour or necessary amount of time for the thermostat and system to stabilize for normal operation. This thermostat is factory calibrated and requires no correction on site.

TO CHECK OPERATION OF HEATING SYSTEMS:

1. Disconnect power.
2. Place the heat/cool selector switch, if applicable, in the heat position.
3. Adjust the thermostat set point to at least 10°F (5°C) below the temperature of the controlled space.
4. Restore power.
5. Slowly adjust the thermostat knob to raise the set point. When the set point reaches the approximate temperature of the controlled space, the heating equipment should start.

TO CHECK OPERATION OF COOLING SYSTEMS:

1. Disconnect power.
2. Place the heat/cool selector switch, if applicable, in the cool position.
3. Adjust the thermostat set point to at least 10°F (5°C) above the temperature of the controlled space.
4. Restore power.
5. Slowly adjust the thermostat knob to lower the set point. When the set point reaches the approximate temperature of the controlled space, the cooling equipment should start.

LIMITED WARRANTY

1. WARRANTY COVERAGE. PECO warrants to the original user of its products that the products will. at the date of initial purchase, meet the applicable specification for such products and will be free from any defects in materials or manufacture under normal use for 18 months after date of manufacture.
2. DISCLAIMER OF WARRANTY OF PRODUCT SUITABILITY. PECO makes no warranty to the purchaser or any third party that its products are suitable for a particular application or design. Many states and localities have differing codes or regulations governing the installation and/or use of PECO products. PECO cannot guarantee compliance with such regulations; purchaser is solely responsible for safe and correct installation and use of the product and for compliance with applicable codes and regulations.
3. EXCLUSION OF IMPLIED WARRANTIES. This warranty is the only warranty applicable to this product and excludes all other warranties, including any WARRANTY OF MERCHANTABILITY, any warranty of fitness for a particular purpose, and any implied warranties otherwise arising from course of dealing or usage of trade, except where the product purchased is subject to consumer product warranty laws, in which case ANY APPLICABLE IMPLIED WARRANTIES ARE LIMITED TO 18 MONTHS, or such shorter period as permitted or required under applicable law.
Some States do not allow limitations on how long an implied warranty lasts, so the above limitations may not apply to you.
4. REMEDIES FOR NONCONFORMITY. If the product purchased does not conform to the applicable warranty, PECO will provide, at its option and in accordance with the procedures in the following section, one of the following remedies: (1) repair of the nonconforming product, (2) replacement with a conforming product, (3) refund of the original purchase price, THESE REMEDIES SHALL BE THE EXCLUSIVE AND SOLE REMEDY for any breach of warranty.
5. TO OBTAIN WARRANTY SERVICE. For any product believed to be defective within the limited warranty period, first write or call dealer from whom product was purchased. Dealer will give additional directions. If unable to resolve satisfactorily, write to PECO at the address below, giving dealer's name, address, date and number of dealer's invoice, and describe the nature of the defect.
6. LIMITATION OF LIABILITY. PECO WILL NOT BE LIABLE FOR ANY INCIDENTAL, SPECIAL, INDIRECT OR CONSEQUENTIAL DAMAGES resulting from any defect in the product purchased. Some States do not allow the exclusion or limitation of incidental or consequential damages, so the above limitation or exclusion may not apply to you.

This warranty gives you specific legal rights, and you may also have other rights which vary from State to State.
Manufactured by PECO, Inc.
4709 SE 18th Avenue - Portland, OR 97202 - USA
P.O. Box 82189 - Portland, OR 97282 - USA

⚠ ADVERTENCIA

LEALAS INSTRUCCIONES CUIDADOSAMENTEANTES DE TRATAR DE INSTALAR, OPERAR O HACER EL SERVICIO EN ESTE TERMOSTATO.
Si no se observa la información de seguridad y si no se siguen las instrucciones se pueden producir LESIONES PERSONALES, LAMUERTE Y/O DAÑO A LA PROPIEDAD. Guarde estas instrucciones para referencia en el futuro.Cuando este producto se instale, formará parte de un sistema de ingeniería cuyas especificaciones y características de rendimiento no han sido diseñadas ni son controladas por PECO. Es necesario que estudie su aplicación y los códigos lacales y nacionales para asegurarse que su instalación funcionará bien y es segura.

APLICACION CORRECTA

Este termostato ha sido probado por CSA y por Underwriters Laboratories Inc. (UL), cumple con los requisitos del equipo NEMA 4X y es adecuado para usarse según el Artículo 547-4 del National Electrical Code (NEC), cuando se usacon los conectores impermeablescorrectos (novienen incluidos).

INSTALACION

⚠ ADVERTENCIA

Para evitar el choque eléctrico o el daño en el equipo, desconecte toda la energía antes de instalarlo o de hacerle el servicio. Para evitar incendios potenciales y/o la explosión, no lo use en atmósferas potencialmente inflamables o explosivas.

Una persona calificada y capacitada en el servicio tiene que hacer la instalación, según el National Electrical Code (NEC) y según todos los códigos y regulaciones locales. La instalación tiene que cumplir con todos los códigos nacionales, estatales y locales aplicables. Refiérase al diagrama del cableado apropiado que viene incluido.

Ubique el termostato (modelos sensores locales) o la bombilla sensora (modelos sensores remotos) para lograr una percepción óptima de la temperatura del espacio controlado. La operación del termostato se verá afectada por el calor o el frío fuera de lo común, tal como la luz directa del sol, cerca delas ventanas o puertas o en las paredes exteriores.

Todos los accesorios y los materiales que se usan para la instalación tienen que ser aprobados, adecuados y ser instalados correctamente para la aplicación que se les va a dar. El sello del cordón o el cubo del conductor deben estar en la lista de UL y tienen que estar marcados 4X para lograr que sean impermeables. El cubo del conductor tiene que estar apretado en éste antes de instalarlo en la caja.

Cuando sea aplicable, remueva el(los) disco(s) removible(s) golpeando cerca del borde interior del disco removible que se removerá. **IMPORTANTE: no golpee, ni abolle, ni doble, ni use el sensor como soporte. Esto hara fallar la calibracion y/o el termostato.**

⚠ ADVERTENCIA

Para prevenir el sobrecalentamiento o los incendios, use este control solamente como un termostato de operación o regulador. SIEMPRE USE UN CONTROL DE REFUERZO O UNA ALARMA en los casos cuando el artefacto controlado se puede sobrecalentar o se puede producir un incendio si el control falla, Cuando el termostato puede pasar por el ciclo directamente entre las cargas de calefacción y las de enfriamiento, si no se proporciona un interruptor de transferencia de carga, el termostato puede fallar. No instale, ni use, ni opere el producto si parece dañado, si la caja eatá partida o rota o si el sensorse ha doblado, plegado o esta sucio.

A pesar de que termostato está sellado, el agua o el polvo podrían enrtar a través del cableado mal sellado. Se tiene que proporcionar un ojal de goteo para impedir que el agua u otros líquidos entren en la caja del termostato. Las conexiones del cordón o del conductor que van a la caja tienen que ser impermeables y a prueba de polvo. La cubierta tiene que estar apretada en forma segura para comprimir la empaquetadura y proporcionar el sello impermeable. Use solamente los tornillos que vienen incluidos. No los apriete demasiado.

La temperatura máxima que puede soportarel elemento sensor es 20°C (35°F) sobre el ajuste de temperatura más alto. La temperatura máxima para la caja de plástico es 60°C (140°F).

⚠ PRECAUCION

Para usarlo en ambientes mojados o húmedos o en donde se necesita que sea impermeable, si no se usan las conexiones impermeables correctas y el ojal de goteo correcto, el agua podría entrar en la caja haciendo que el termostato falle. Use cables de cobre solamente, aisle o ponga tuercas de cables en todos los conductores que no están en uso. Use las estipulaciones para la conexión a tierra que vienen incluidas para la conexión a tierra de la línea y con el cable de conexión a tierra del equipo.

OPERACION Y REVISION

Permita una hora o el tiempo necesario para que el termostato y el sistema se estabilicen para la operación normal. Este termostato ha sido calibrado en la fábrica y no necesita corregirse en el lugar en donde se va a usar.

COMO REVISAR LA OPERACION DE LOS SISTEMAS DE CALEFACCION:

1. Desconecte la energía.
2. Ponga el interruptor selector de calefacción/enfriamiento, si es aplicable, en la posición de calefacción.
3. Ajuste el punto de control del termostato a por lo menos 5°C (10°F) por debajo de la temperatura del espacio controlado.
4. Vuelva a conectar la energía.
5. Lentamente ajusté la manilla del termostato para elevar el punto de control. Cuando el punto de control alcance la temperatura aproximada del espacio controlado, el equipo de calefacción debería arrancar.

COMO REVISAR LA OPERACION DE LOS SISTEMAS DE ENFRIAMIENTO:

1. Desconecte la energía.
2. Ponga el interruptor de calefacción/enfriamiento, si es aplicable en la posición de enfriamiento.
3. Ajuste el punto de control del termostato a por lo menos 5°C (10°F) sobre la temperatura del espacio controlado.
4. Vuelva a conectar la energía.
5. Ajuste lentamente la manilla del termostato para bajar el punto de control. Cuando el punto de control alcance la temperatura aproximada del espacio controlado, el equipo de enfriamiento debería arrancar.

GARANTIA LIMITADA

1. COBERTURA DE LA GARANTIA. PECO le garantiza al usuario original de sus productos, que en la fecha de la compra inicial, cumplen con las especificaciones aplicables y no tendrán defectos ni en los materiales ni en la fabricación, si se someten al uso normal, por 18 meses después de la fecha de fabricación.
2. DECLINACION DE RESPONSABILIDAD DE LA GARANTIA POR LA ADAPTACION DEL PRODUCTO. PECO no le garantiza al comprador, ni a terceros, que sus productos se adaptan a una aplicación o diseño en particular. Muchos estados y jurisdicciones cuentan con códigos o regulaciones diferentes que gobiernan la instalación y/o el uso de los productos de PECO. PECO no puede garantizarque se cumplan dichas regulaciones; el comprador es el único responsable por la instalación segura y correcta, por el uso del producto y por el cumplimiento con los códigos y regulaciones aplicables.
3. EXCLUSION DE LAS GARANTIAS IMPLICITAS. Esta garantía es la única que se aplica a este producto y se excluyen todas las demás garantías. incluyéndpse toda GARANTIA DE COMERCIALIZACION, cualquier garantía de adecuación para un propósito en particular y cualquier garantía implícita que de alguna otra forma se presente en el curso de las transac-ciones o uso comercial, excepto en el caso cuando el producto comprado esté sujeto a las leyes de las garantías del producto, en cuyo caso TODA GARANTIA IMPLICITA APLICABLE QUEDA LIMITADA A 18 MESES, o a un período de tiempo más corto, según lo permita o lo exija la ley aplicable.
Algunos estados no permiten limitaciones en cuanto a la duración de las garantías implícitas, de modo que las limitaciones anteriores puede que no se apliquenen su caso.
4. RECURSOS EN EL CASO DE DISCONFORMIDAD. Si el productocomprado no está de acuerdo con la garantía aplicada, PECO proporcionará, a su discreción, y según los procedimientos de la sección siguiente, uno de los recursos siguientes: (1) reparación del producto en disconformidad, (2) lo cambiará por uno conforme, (3) reembolsará el precio de compra original. ESTOS RECURSOS SERAN LOS UNICOS Y EXCLUSIVOS en el caso de cualquier violación de la garantía.
5. COMO OBTENER SERVICIO DEBIDO A LA GARANTIA. En elcaso de que se crea que cualquier poducto tenga defectos, dentro del período cubierto por la garantía limitada, primero escriba o llame al distribuidor a quien se le compró el producto. El distribuidor le dará las instrucciones adicionales. Si no se puede resolver la situación en forma satisfactoria, escriba a PECO a la dirección a continuación, dando el nombre y la dirección del distribuidor, la fecha y el número de la factura del distribuidor y describa la naturaleza del defecto.
6. LIMITACION DE RESONSABILIDAD. PECO NO SERA RESPONSIBLE POR DAÑOS CONCOMITANTES. ESPECIALES, INDIRECTOS O EMERGENTES que surjan por cualquier defecto del producto comprado. Algunos estados no permiten la exclu-sión o la limitación de los daños concomitantes o emergentes, de modo que la limitación o exclusión anteriores puede que no se apliquen en su caso.

Esta garantía le otorga derechos legales específicos y puede que también tenga otros derechos que varían de Estado a Estado.

Fabricado por PECO, Inc.
4709 SE 18th Avenue - Portland, OR 97202 - USA
P.O. Box 82189 - Portland, OR 97282 - USA

© COPYRIGHT 2002 PECO, Inc. ALL RIGHTS RESERVED

⚠ AVERTISSEMENT

LIRE ATTENTIVEMENT LES INSTRUCTIONS AVANT DE COMMENCER À INSTALLER, UTILISER OU FAIRE LE SERVICE DE CE THERMOSTAT. Négliger d'observer les conseils de sécurité et d'appliquer les instructions peut être la cause de BLESSURES CORPORELLES, MORT ET/OU DOMMAGES MATÉRIELS. Conserver ces instructions pour références ultérieures. Quand il est installé, cet appareil fera partie d'un système indutriel dont les spécifications et les caractéristiques de rendement ne sont pas concues ou contrôlées par PECO. L'application et les codes nationaux et locaux doivent être revus pour assurer que l'installation sera fonctionnelle et sans danger.

APPLICATION APPROPRIÉE

Ce thermostat qui a été soumis aux tests de CSA et de Underwriters Laboratory, Inc, (UL) est en accord avec les conditions requises pour les équipements NEMA 4X et est acceptable pour usage sous les normes National Electrical Code (NEC), Article 547-4, quand utilisé avec les connecteurs étanches appropriés (pas inclus).

INSTALLATION

⚠ AVERTISSEMENT

Pour éviter les chocs électriques ou les dommages matériels, débrancher l'alimentation électrique avant d'installer ou de faire le service.
Pour éviter un incendie et/ou une explosion possible, ne pas utiliser dans un environnement potentiellement inflammable ou explosif.

L'installation doit être faite par un technicien de service qualifié et être en accord avec le National Electrical Code (NEC) et tous les codes nationaux et locaux applicables. Se reporter au diagramme de câblage approprié inclus.

Situer le thermostat (modèles à détection sur place) ou la sonde (modèles à détection éloignée) pour obtenir une détection optimum de la température de l'espace contrôlé. Le fonctionnement du thermostat est affecté par une chaleur ou un froid inhabituel, tel que l'exposition directe au soleil, près d'une fenêtre, un porte ou un mur extérieur.

Tous les raccords et matériaux utilisés pour l'installation doivent être approuvés, adaptés et correcternent installés en fonction de l'application prévue. Pour l'étanchéité, le joint du câble ou raccord de conduit doit être classé UL et être marqué 4X. Le raccord de conduit doit être fixé sur le conduit avant de l'installer dans le boîtier.

Si applicable, les parties éjectables doivent être retirées par impact près du bord intérieur de la partie éjectable qui doit être retirée. IMPORTANT: NE PAS TAPER, ÉBRÉCHER, TORDRE OU UTILISER LA SONDE COMME SUPPORT. CECI CAUSERAIT LA DÉFAILLANCE DU CALIBRAGE ET/OU DU THERMOSTAT.
SONDE COMME SUPPORT. CECI CAUSERAIT LA DÉFAILLANCE DU CALIBRAGE ET/OU DU THERMOSTAT.

⚠ AVERTISSEMENT

Pour éviter la surchauffe ou le feu, utiliser ce contrôle uniquement comme un thermostat de fonctionnement ou de réglage. TOUJOURS UTILISER UN CONTRÔLE OU UNE ALARME DE REDONDANCE si une défaillance du contrôle pourrait causer la surchauffe de l'appareil contrôlé ou pourrait causer un incendie. Si le thermostat est capable d'entrer en cycle directement entre des charges de chauffage et de refroidissement, négliger d'installer un commutateur de transfert de charge résultera en défaillance du thermostat. Ne pas installer, utiliser ou faire fonctionner si l'appareil semble endommagé, si le boîtier est fendu ou cassé, ou si la sonde a été tordue, pilée ou est sale.

Bien que ce thermostat soit scellé, l'eau ou la poussière peuvent y entrer par un câblage mal étanchéifié. Une boucle d'égouttage doit être prévue pour empêcher l'eau ou tout autre liquide d'entrer dans le boîtier du thermostat. La connexion de câble ou de conduit avec le boîtier doit être hermétique à l'eau et à la poussière. Le couvercle doit être solidement fixé pour compresser le joint et créer l'étanchéité. Utiliser uniquement les vis fournies. Ne pas surserrer.

L'élément de sonde maximum peut supporter une température de 20°C (35°F) au-dessus du réglage de la plus haute température. La température maximum pour le boîtier plastique est de 60°C (140°F).

⚠ ATTENTION

Pour usage dans un environnement mouillé ou humide ou si l'étanchéité est requise, négliger d'utiliser des connexions adaptées pour l'étanchéité et une boucle d'égouttage appropriée pourrait permettre la pénétration d'eau dans le boîtier et causer la défaillance du thermostat.

Utiliser uniquement des fils de cuivre, isoler ou placer sous cônes d'isolation tous les conducteurs inutilisés. Utiliser les bornes de mise à la terre prévues pour connexion sur la ligne de prise de terre et le fil de terre de l'équipement.

FONCTIONNEMENT ET VÉRIFICATION

Attendre une heure ou la période de temps nécessaire pour que le systéme et le thermostat se stabilisent sur un fonctionnement normal. Ce thermostat a été calibré à l'usine et il ne nécessite aucun ajustement sur place.

POUR VÉRIFIER LE FONCTIONNEMENT DES SYSTÈMES DE CHAUFFAGE:

1. Débrancher l'alimentation électrique
2. Si applicable, place le sélecteur chaud/froid sur la position "chaud".
3. Ajuster le réglage du thermostat sur un point au moins 5°C (10°F) au-dessous de la température de l'espace contrôlé.
4. Rebrancher l'alimentation életrique.
5. Ajuster lentement la molette du thermostat pour monter le point de réglage. Quand le oint de réglage atteint le température approximative de l'espace contrôlé, l'équipement de chauffage doit se mettre en marche.

POUR VÉRIFIER LE FONCTIONNEMENT DES SYSTÈMES DE REFROIDISSEMENT:

1. Débrancher l'alimentation électrique.
2. Si applicable, placer le sélecteur chaud/froid sur la position "froid".
3. Ajuster le réglage du thermostat sur un point au moins 5°C (10°F) au-dessos de la température de l'espace contrôlé.
4. Rebrancher l'alimentation électrique.
5. Ajuster lentement la molette du thermostat pour descendre le point de réglage. Quand le point de réglage atteint le température approximative de l'espace contrôlé, l'équipement de climatisation doit se mettre en marche.

GARANTIE LIMITÉE

1. COUVERTURE GARANTIE. PECO garantit au premier utilisateur de ses produits, que les produits sont, à la date de l'achat initial, en accord avec les spécifications applicables pour ces productions et seront, sous usage normal, sans défauts de matières premières ou de main d'oeuvre pendant 18 mois à partir de la date de fabrication.
2. DÉSISTEMENT DE GARANTIE D'APTITUDE DU PRODUIT. PECO ne donne aucune garantie à l'acheteur ou à toute autre tierce personne concernant l'adaptabilité de ses prodeits poue une application ou une conception particulière. De nombreuses juridictions ont des codes différents ou des règlements gouvernant l'installation et/ou l'usage des produits de PECO. PECO ne peut pas garantir l'observance de ces règlements, l'acheteur est seul responsable de installation et de l'usage correct et sans danger de ce produit ainsi que de l'observance des codes et règlements applicables.
3. EXCLUSION DE GARANTIES IMPLIQUÉES. Cette garantie est la seule applicable à ce produit, et elle exclue toutes autres garanties, compris toute GARANTIE DE COMMERCIALISATION, toute garantie d'adaptabilité à un usage particulier, et toutes garanties impliquées au cours de transactions commerciales, sauf là où le produit acheté est soumis aux lois de garantie de produit aux consommateurs, dans tous les cas TOUTES GARANTIES IMPLIQUÉES APPLICABLES SONT LIMITÉES À 18 MOIS, ou à une période Plus courte si permise ou requise par la loi applicable.
Certaines juridictions ne permettent de limitations de la durée de la garantie, donc les limitations ci-dessus peuvent ne pas s'appliquer dans le cas présent.
4. REMÈDES CONTRE LA NON-CONFORMITÉ. Si le produit acheté n'est pas conforme à la garantie applicable, PECO fournira, à son choix et en accord avec le processus de la section suivante, l'un des remèdes suivants : (1) réparation du produit non-conforme. (2) remplacement par un produit conforme. (3) remboursement du prix d'achat d'origine. CES REMÈDES SERONT LES REMÈDES SEULS ET EXCLUSIFS pour toute infraction à la garantie.
5. POUR OBTENIR LE SERVICE SOUS GARANTIE. Pour tout produit considéré défectueux au cours de la période couverte par la garantie, commencer par écrire ou appeler le concessionnaire chez qui le produit a été acheté. Le concessionnaire doit donner des directions additionnelles. Si un accord satisfaisant ne peut pas être obtenu, écrire à PECO à l'adresse ci-dessous, en donnant le nom et l'adresse du concessionnaire, la date et le numéro de la facture du concessionnaire et en décrivant la nature du défaut.
6. LIMITATION DE RESPONSABILITÉ. PECO NE SERA PAS RESPONSABLE DE TOUS DOMMAGES IMPRÉVUS, SPÉCIAUX, INDIRECTS OU FORTUITS résultant d'un produit acheté défectuex. Certaines juridictions ne permettent pas l'exclusion ou la limitation des dommages indirects ou fortuits, donc la limitation ou exclusion ci-dessus peut ne pas s'appliquer dans le cas présent.

Cette garantie donne des droits légaux spécifiques, et il peut y avoir d'autres droits variants de juridiction à juridiction.

Fabriqué par PECO, Inc.
4709 SE 18th Avenue - Portland, OR 97202 - USA
P.O. Box 82189 - Portland, OR 97282 - USA

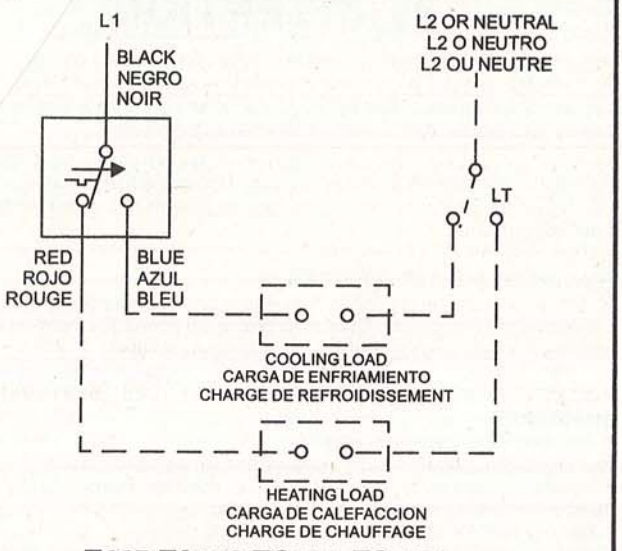

T115 TA119 TC109 TC119

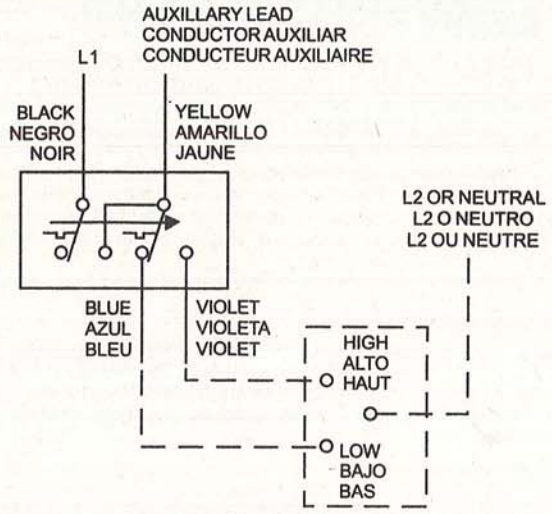

TJ109 MODELS

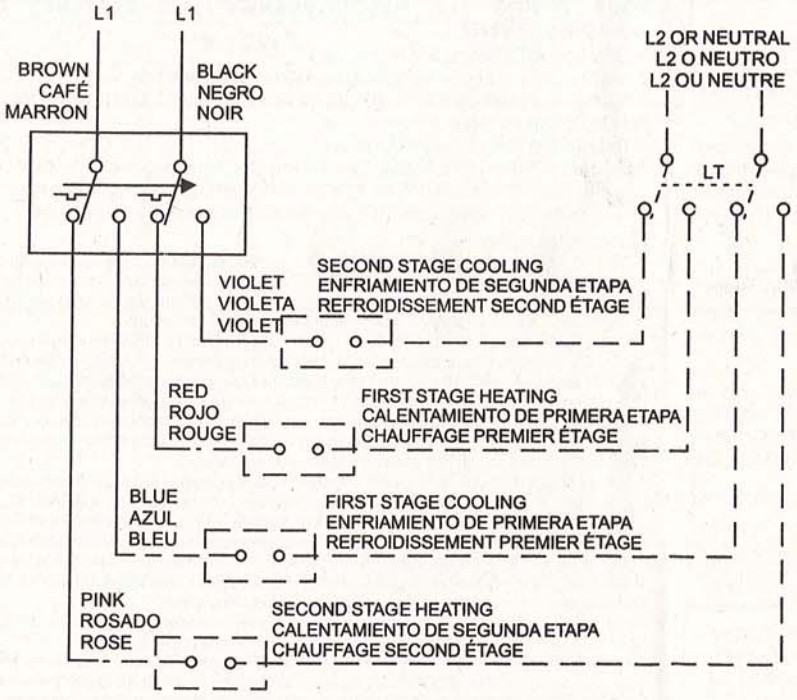

TH109

LEGEND
LEYENDA
LÉGENDE

THERMOSTAT WIRING
CABLEADO DEL TERMOSTATO
CABLAGE DU THERMOSTAT

FIELD WIRING
CABLEADO EN EL TERRENO
CABLAGE SUR PLACE

INDICATES SEQUENCE ON TEMPERATURE RISE
INDICA LA SECUENCIA CUANDO LA TEMPERATURA SE
INDIQUE LA SE SÉQUENCE DE LA MONTÉE DE TEMPÉRATURE

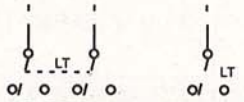

LOAD TRANSFER SWITCH
INTERRUPTOR DE TRANSFERENCIA DE CARGA
INTERRUPTEUR DE TRANDFERT DE CHARGE

⚠ WARNING
ADVERTENCIA
AVERTISSEMENT

-TO INSURE WATER TIGHTNESS, THE ENCLOSED GASKET MUST BE INSTALLED UNDER THE WIRING CAP.

-PARA ASEGURAR LA ESTANQUIDAD AL AGUA, LA JUNTA SUMINISTRADA DEBERÁ INSTALARSE DEBAJO DEL CASQUETE DEL ALAMBRADO.

-POUR ASSURER L'ÉTANCHÉITÉ À L'EAU, LE JOINT STATIQUE (FOURNI) DOIT ÊTRE INSTALLÉ SOUS LE CULOT POUR CÂBLAGE.

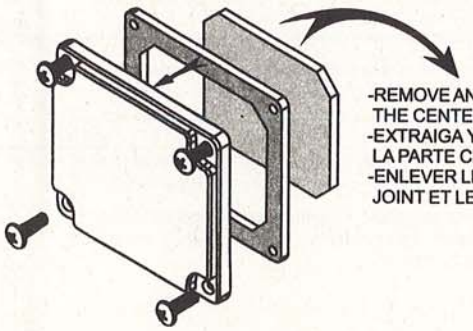

-REMOVE AND DISCARD THE CENTER OF THE GASKET
-EXTRAIGA Y DESCARTE LA PARTE CENTRAL DE LA JUNTA
-ENLEVER LE CENTRE DU JOINT ET LE METTRE AU REBUT

© COPYRIGHT 2002 PECO, Inc. ALL RIGHTS RESERVED

ifm electronic

VT-701/ 702 - Transmitter, Pressure/ Vacuum, IFM efector, PG2409 Scale -14.5- 14.5 PSI 4-20mA

CE

Operating instructions
Electronic manometer

efectorsoo®

PG24xx

UK

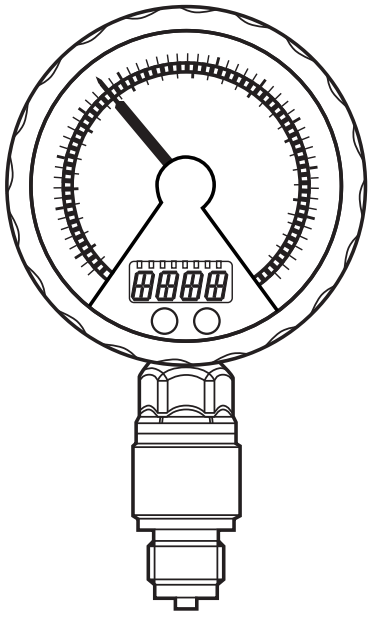

706086/00 08/2011

E-1375

Contents

1 Preliminary note 3
1.1 Symbols used 3

2 Safety instructions 3

3 Functions and features 4
3.1 Applications 4

4 Function 5
4.1 Processing of the measured signals 5
4.2 Pressure monitoring / switching function 6
4.3 Pressure monitoring / analogue function 7
4.4 Customer-specific calibration 8

5 Installation 9

6 Electrical connection 10

7 Operating and display elements 11

8 Menu 12
8.1 Menu structure: main menu 12
8.2 Explanation of the main menu 13
8.3 Menu structure: level 2 (extended functions) 14
8.4 Explanation of the menu level 2 15

9 Parameter setting 16
9.1 General parameter setting 16
9.2 Configuration of the digital display (optional) 18
9.3 Set output signals 19
9.3.1 Set output functions 19
9.3.2 Set switching limits 19
9.3.3 Scale analogue value for OUT2 19
9.4 User settings (optional) 20
9.4.1 Carry out zero point calibration 20
9.4.2 Set delay time for OUT1 20
9.4.3 Set switching logic for OUT1 20
9.4.4 Set damping for the switching signal 20
9.4.5 Set damping for the analogue signal 21
9.4.6 Calibrate curve of measured values 21

9.5 Service functions 22
9.5.1 Read min/max values for system pressure 22
9.5.2 Reset all parameters to factory setting 22
10 Operation 22
10.1 Read set parameters 22
10.2 Error indications 22
11 Scale drawing 23
12 Technical data 24
13 Setting ranges 25
14 Factory setting 27

1 Preliminary note

1.1 Symbols used

▶ Instruction

> Reaction, result

[…] Designation of pushbuttons, buttons or indications

→ Cross-reference

Important note
Non-compliance can result in malfunctions or interference.

Information
Supplementary note.

2 Safety instructions

- Please read this document prior to set-up of the unit. Ensure that the product is suitable for your application without any restrictions.
- If the operating instructions or the technical data are not adhered to, personal injury and/or damage to property can occur.
- Check the compatibility of the product materials (→ 12 Technical data) with the media to be measured in all applications.
- Use in gases at pressures > 25 bar only after contacting the manufacturer ifm.

- High-pressure units (250 bar, 400 bar) are supplied with an integrated damping device to comply with the regulations for UL approval and to avoid any risk of injury in case of bursting when bursting pressure is exceeded.

  Any manipulation of the damping device is not permissible.
  When the damping device is removed, there is no damping function any more. ATTENTION: risk of injury!
  For units with cULus approval this approval becomes invalid when the damping device is removed.

For the scope of validity cULus:
The Sensor shall be connected only by using any R/C (CYJV2) cord, having suitable ratings.

The device shall be supplied from an isolating transformer having a secondary Listed fuse rated either
a) max 5 amps for voltages 0~20 Vrms (0~28.3 Vp) or
b) 100/Vp for voltages of 20~30 Vrms (28.3~42.4 Vp).

3 Functions and features

The unit monitors the system pressure in a plant.

3.1 Applications

Type of pressure: relative pressure

Order no.	Measuring range (in brackets: extended display range)		Permissible overpressure		Bursting pressure	
	bar	PSI	bar	PSI	bar	PSI
PG2409	-1...1 (1.6)	-14.52...14.52 (23.22)	10	145	30	435
PG2450	0...400 (600)	0...5800 (8700)	800	11600	1200	17400
PG2451	0...250 (400)	0...3625 (5800)	600	8700	1000	14500
PG2452	0...100 (160)	0...1449 (2322)	300	4350	700	9400
PG2453	-1...25 (40)	-14.5...362.5 (580.0)	100	1450	350	5070
PG2454	-1...10 (16)	-14.4...145 (232)	50	725	150	2175
PG2455	-1...4 (6.4)	-14.5...58 (92.8)	30	435	100	1450
PG2456	-0.125...2.5 (4)	-1.8...36.25 (58.00)	20	290	50	725
PG2457	-0.05...1 (1.6)	-0.72...14.5 (23.20)	10	145	30	435

Order no.	Measuring range (in brackets: extended display range)		Permissible overpressure		Bursting pressure	
	mbar	inH2O	bar	inH2O	bar	inH2O
PG2458	-12.5...250 (400)	-5.0..100.4 (160.6)	10	4015	30	12044
PG2489	-5...100 (160)	-2.00...40.16 (64.24)	4	1606	30	12044

Avoid static and dynamic overpressure exceeding the given overload pressure by taking appropriate measures.
The indicated bursting pressure must not be exceeded.
Even if the bursting pressure is exceeded only for a short time, the unit may be destroyed. ATTENTION: risk of injury!
Use in gases at pressures > 25 bar only after contacting the manufacturer ifm.

4 Function

4.1 Processing of the measured signals

- The unit generates 2 output signals according to the parameter settings.

OUT1	• Switching signal for system pressure limit value.
OUT2	• Analogue signal (4...20 mA, 20...4 mA).

- The unit displays the current system pressure.

Analogue display: circular scale with pointer.
Digital display (alphanumeric display, 4 digits).

- In addition, an LED ring with one of the following display options is available:

Display of set point and reset point.
Trend display (rising pressure / falling pressure).
Lag indicator function for maximum value or minimum value.
Display of pulsating signals and pressure peaks.

4.2 Pressure monitoring / switching function

OUT1 changes its switching state if it is above or below the set switching limits (SP1, rP1). The following switching functions can be selected:

- Hysteresis function / normally open: [OU1] = [Hno] (→ fig. 1).
- Hysteresis function / normally closed: [OU1] = [Hnc] (→ fig. 1).
  First the set point (SP1) is set, then the reset point (rP1) with the requested difference.
- Window function / normally open: [OU1] = [Fno] (→ fig. 2).
- Window function / normally closed: [OU1] = [Fnc] (→ fig. 2).
  The width of the window can be set by means of the difference between SP1 and rP1. SP1 = upper value, rP1 = lower value.

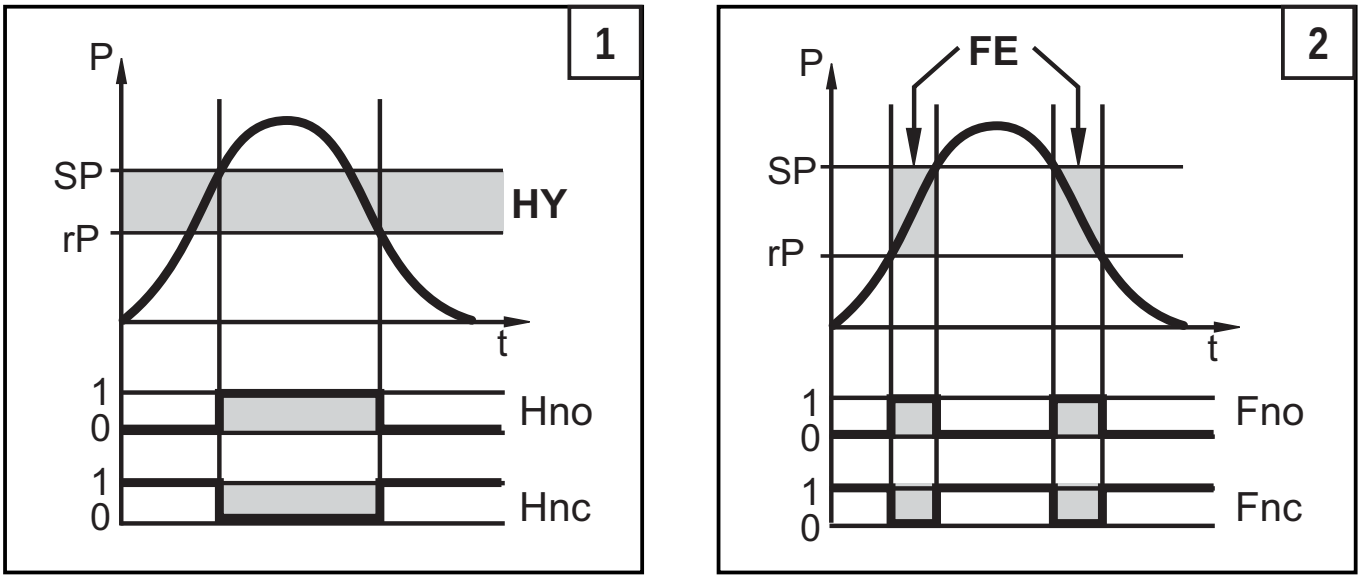

P = system pressure; HY = hysteresis; FE = window

4.3 Pressure monitoring / analogue function

The analogue output can be configured.

- [OU2] defines whether the set measuring range is provided as 4...20 mA ([OU2] = [I]) or as 20...4 mA ([OU2] = [InEG]).

Scaling can be set by means of the teaching process or by entering a value for the ASP and AEP parameters.

- Teaching the analogue start point [tASP] or setting the parameter [ASP] defines at which measured value the analogue signal is 4 mA (20 mA at [InEG]).
- Teaching the analogue end point [tAEP] or setting the parameter [AEP] defines at which measured value the output signal is 20 mA (4 mA at [InEG]).

UK

Minimum distance between [ASP] and [AEP] = 25 % of the final value of the measuring range.

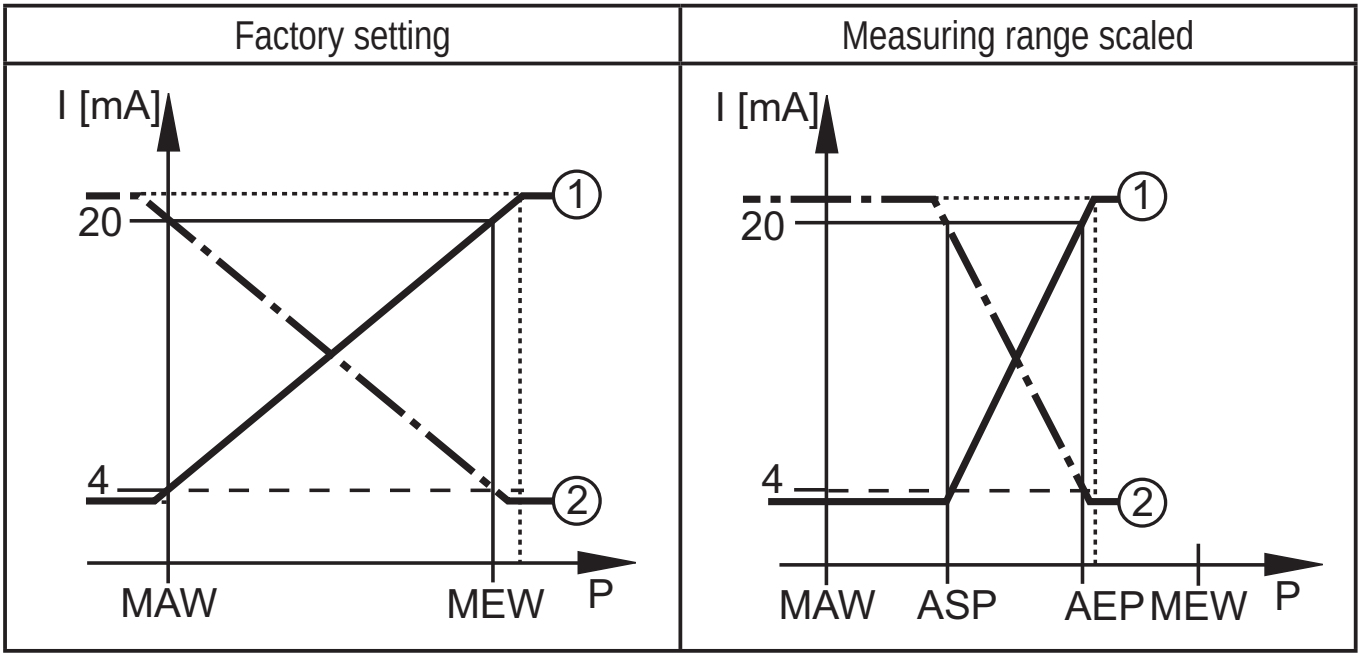

P = system pressure , MAW = initial value of the measuring range, MEW = final value of the measuring range

①: [OU2] = [I]; ②: [OU2] = [InEG]

In the set measuring range the output signal is between 4 and 20 mA ([OU2] = [I]) or between 20 and 4 mA ([OU2] = [InEG]).

It is also indicated:

- System pressure above the measuring range:
  - Output signal 20 to 20.5 mA at [OU2] = [I].
  - Output signal 4 to 3.8 mA at [OU2] = [InEG].
- System pressure below the measuring range:
  - Output signal 4 to 3.8 mA at [OU2] = [I].
  - Output signal 20 to 20.5 mA at [OU2] = [InEG].

4.4 Customer-specific calibration

The customer-specific calibration changes the curve of measured values compared to the real measured values (shifting / change of the gradient; → 9.4.6 [CAL]).

- Two calibration points can be defined (CP1, CP2). The two points are independent of each other. They must be within the measuring range and not in the extended display range.
- The zero point calibration [COF] influences the calibration of the curve of measured values. Recommendation: set [COF] to 0 (→ 9.4.1 [COF]), then calibrate the curve of measured values.

After a change the calibration can be reset to factory setting (→ 9.5.2 [rES]).

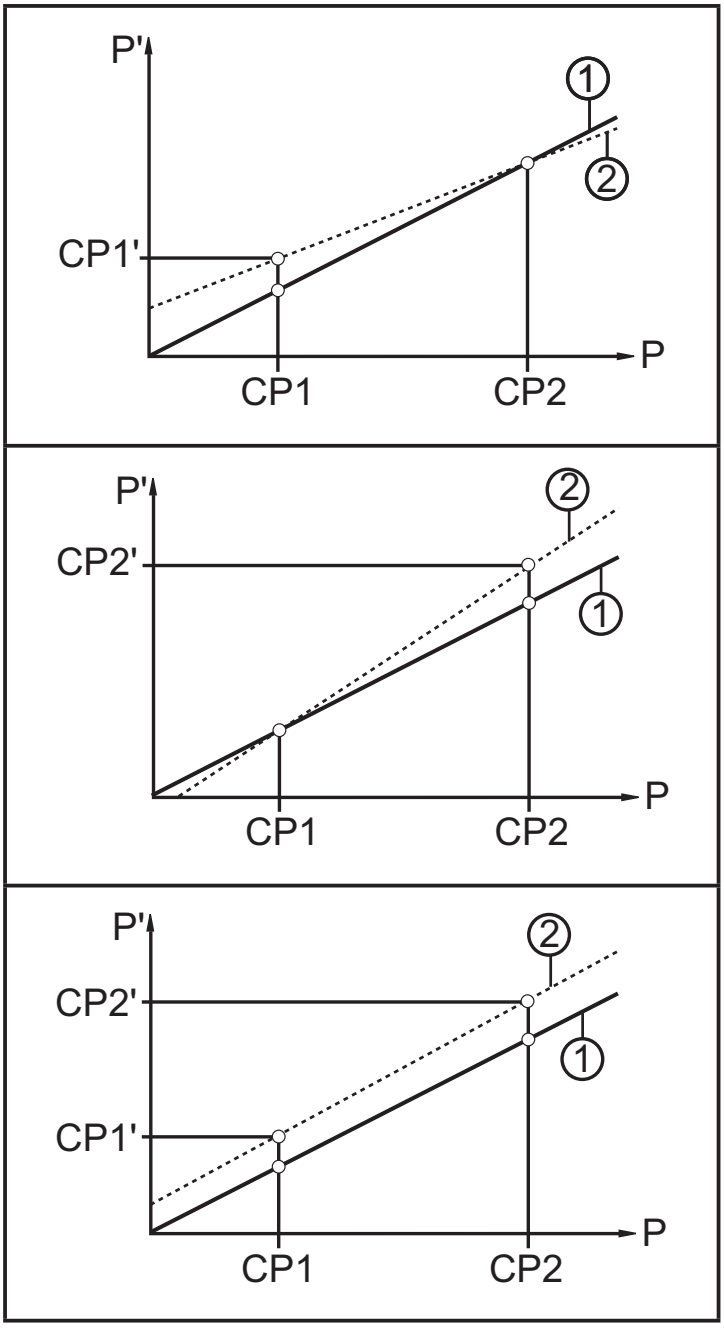

- P = measured pressure;
  P‘ = modified measured value
- CP1 = calibration point 1;
  CP1‘ = modified measured value for CP1
- CP2 = calibration point 2;
  CP2‘ = modified measured value for CP2
- 1 = curve of measured values at factory setting
- 2 = curve of measured values after calibration

5 Installation

Before installing and removing the unit: make sure that no pressure is applied to the system. Note: If 0% is displayed and no pointer is visible, this does not mean that no pressure is applied to the system !

We recommend horizontal installation for high medium temperatures.

The unit can be fixed to different process connections. Options are as follows:

1	**Installation with seals to DIN EN 837-1**
	▶ Insert the unit and the seal into the process connection with cylindrical pipe thread G½ and tighten. All seals to DIN EN 837-1 can be used if they are suitable for process connections with cylindrical pipe thread, e.g. flat seals or double-edge sealing rings.
2	**Installation with sealing tape**
	▶ Insert the unit and the sealing tape into the process connection with G½ internal thread (e.g. welding adapter) and tighten.
3	**Installation at flange G½ (based on DIN 3852-11)**
	The sealing ring on the sensor is used as process seal. The upper sealing area on the process connection must be flush with the tapped hole and have a surface characteristic of min. Rz 6.3. ▶ Grease the sensor thread with a suitable paste. ▶ Insert the unit into the process connection. ▶ Tighten it using a spanner. Tightening torque: 35 Nm.

After installation the analogue display can be rotated / adapted to the installation position (to do so wear protective gloves).

6 Electrical connection

The unit must be connected by a qualified electrician.
The national and international regulations for the installation of electrical equipment must be adhered to.
Voltage supply according to EN 50178, SELV, PELV.

▶ Disconnect power.
▶ Connect the unit as follows:

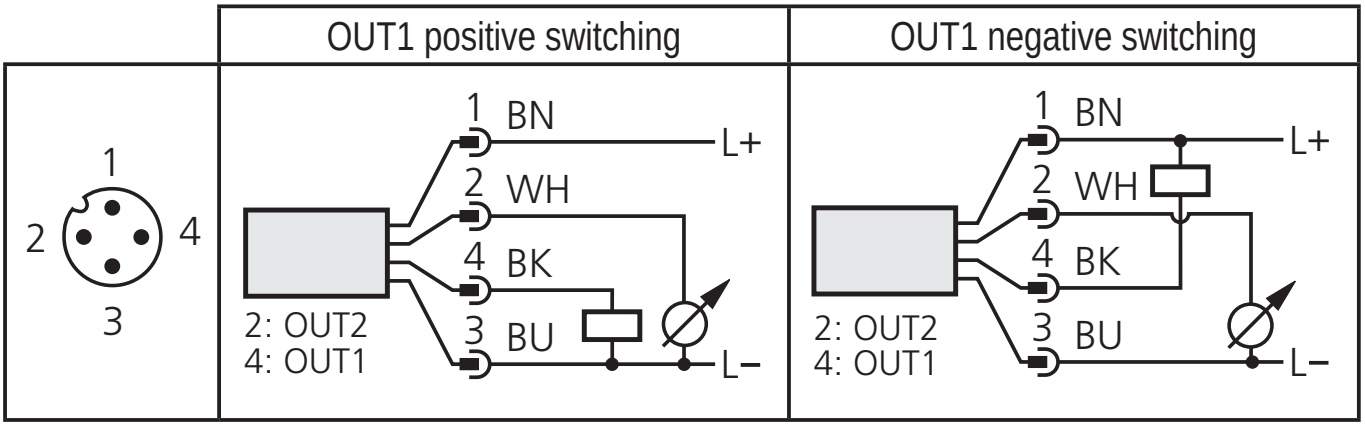

Pin 1	Ub+
Pin 3	Ub-
Pin 4 (OUT1)	• Binary switching output pressure monitoring
Pin 2 (OUT2)	• Analogue output for system pressure

Core colours of ifm sockets:
1 = BN (brown), 2 = WH (white), 3 = BU (blue), 4 = BK (black)

7 Operating and display elements

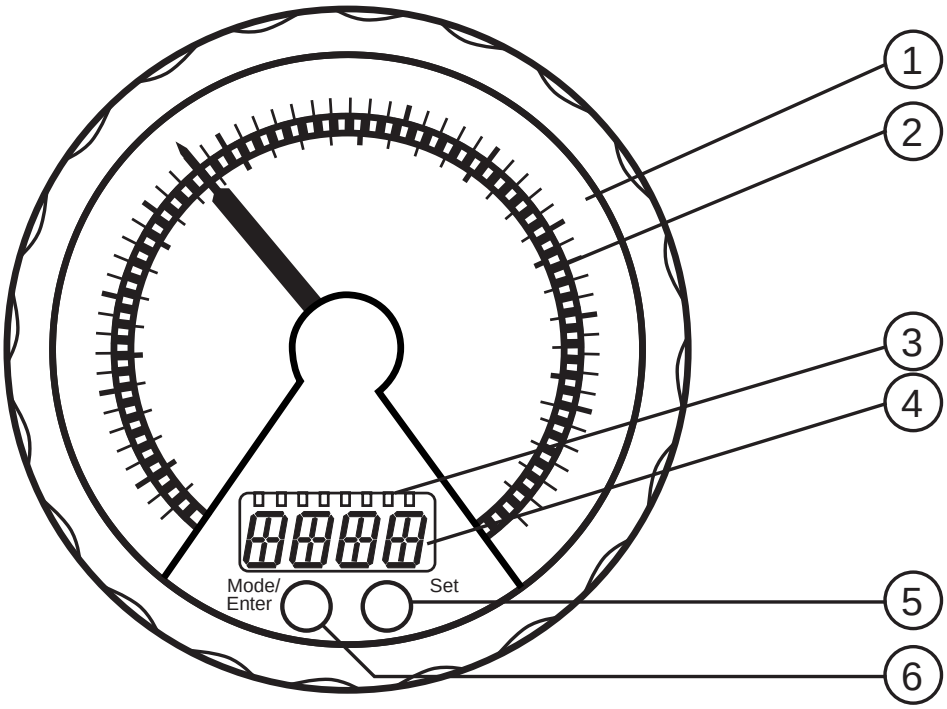

UK

1: Analogue display

- Display of the current system pressure in bar and PSI or mbar and inH2O.

2: LED ring

According to the setting of parameter [LED] (→ 9.2):
- Display of set point and reset point.
- Lag indicator function for maximum value or minimum value.
- Display of pulsating signals and pressure peaks.
- Trend display: rising pressure or falling pressure.

3: Indicator LEDs

- LED 1 = system pressure of the digital display in bar.
- LED 2 = system pressure of the digital display in mbar.
- LED 3 = system pressure of the digital display in PSI.
- LED 4 = system pressure of the digital display in inH2O.
- LED 6 = system pressure in % of the scaling (range ASP to AEP) or COF value in %.
- LEDs 5, 7 = not used.
- LED 8 = switching status OUT1 (lights if output 1 is switched)

4: Alphanumeric display, 4 digits

- Display of the current system pressure.
- Display of the parameters and parameter values.

5: Touch button Set*

- Setting of the parameter values (continuously by touching permanently; step by step by touching briefly several times).

6: Touch button Mode/Enter*
- Selection of the parameters and acknowledgement of the parameter values.

* The two touch buttons are activated simply by touching / deactivated by releasing the touch button.
The touch button must be completely covered to be activated.
Slow covering (e.g. liquid flows over the display) does not activate the touch button.

8 Menu

8.1 Menu structure: main menu

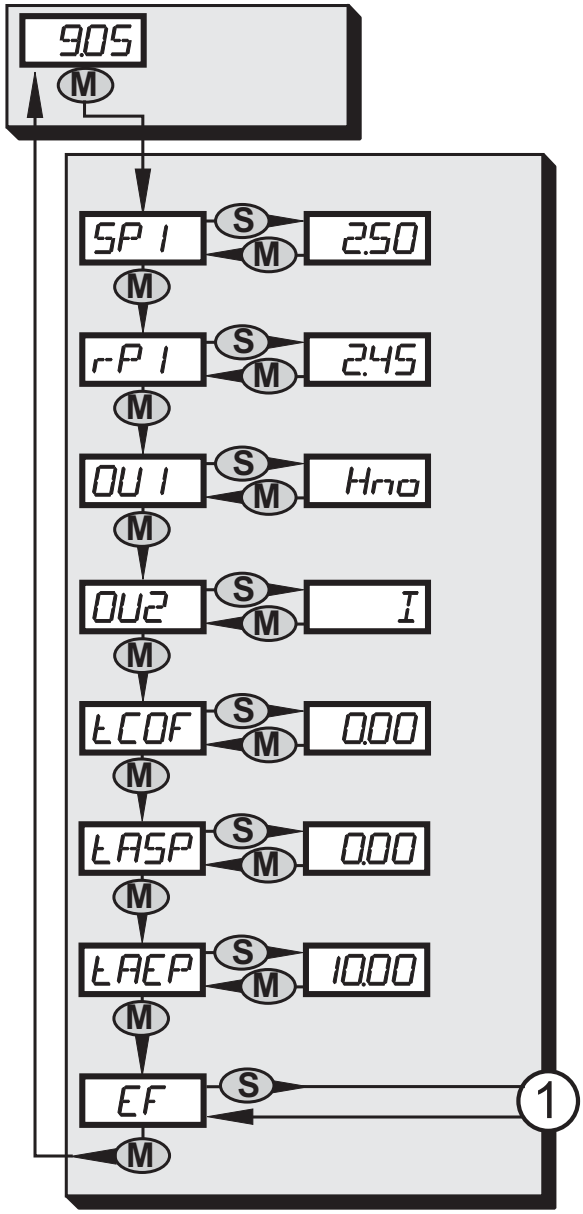

1: Change to menu level 2 (extended functions)

8.2 Explanation of the main menu

SP1/rP1	Upper / lower limit value for system pressure at which OUT1 switches.
OU1	Output function for OUT1: • Switching signal for the pressure limit values: hysteresis function [H ..] or window function [F ..], either normally open [. no] or normally closed [. nc].
OU2	Output function for OUT2: • Analogue signal for the current system pressure: 4...20 mA [I], 20...4 mA [InEG].
tCOF	Teach zero-point calibration.
tASP	Teach analogue start point for system pressure: set measured value at which 4 mA is provided (20 mA if [OU2] = [InEG]).
tAEP	Teach analogue end point for system pressure: set measured value at which 20 mA is provided (4 mA if [OU2] = [InEG]).
EF	Extended functions / opening of menu level 2.

8.3 Menu structure: level 2 (extended functions)

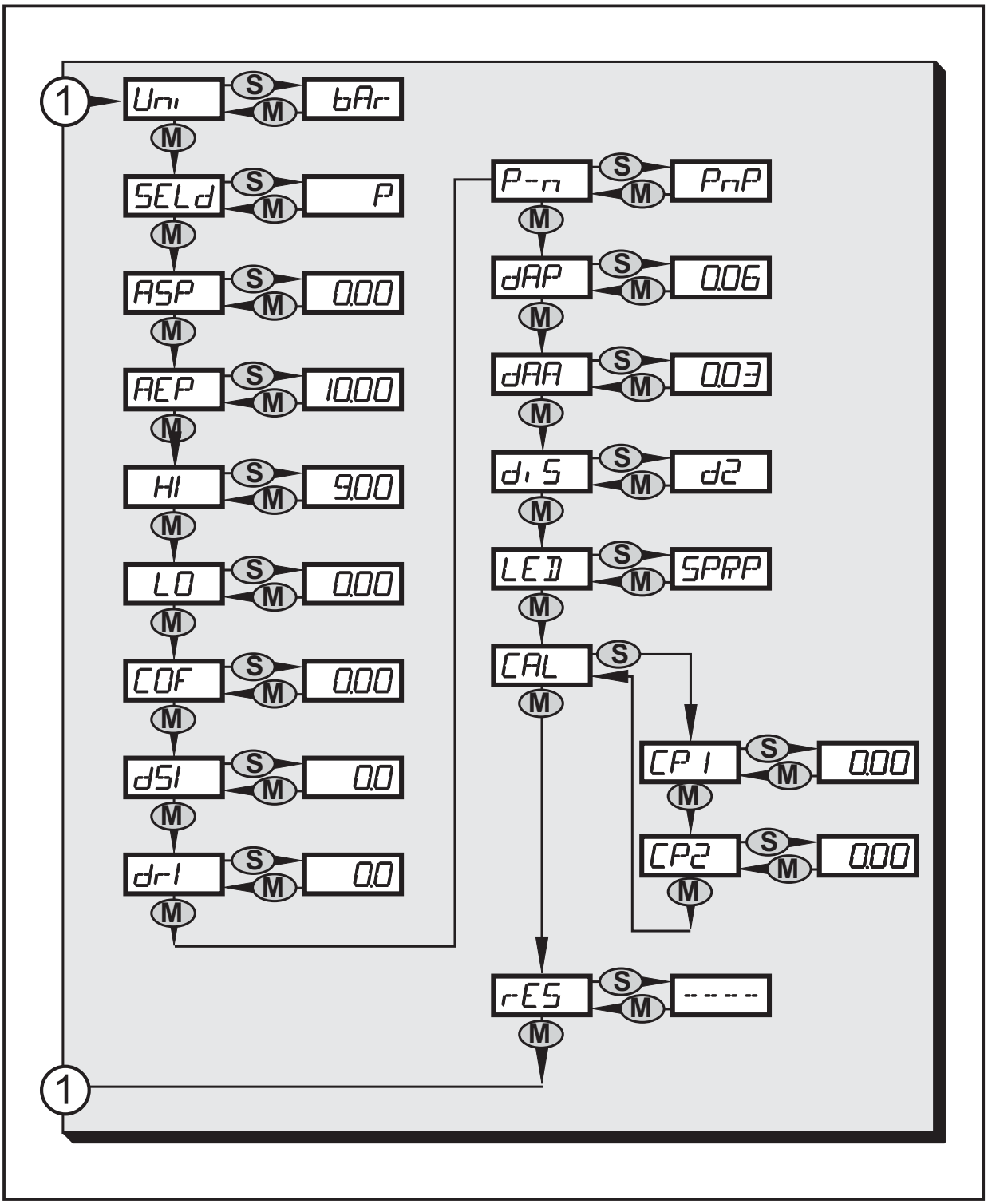

1: Change to the main menu

8.4 Explanation of the menu level 2

Uni	Standard unit of measurement for system pressure (bar or PSI).
SELd	Display mode: • Pressure in the unit set in [Uni]. • Pressure in % of the set scaling of the analogue output.
ASP	Analogue start point for system pressure: measured value at which 4 mA is provided (20 mA if [OU2] = [InEG]).
AEP	Analogue end point for system pressure: measured value at which 20 mA is provided (4 mA if [OU2] = [InEG]).
HI	Maximum value memory for system pressure.
LO	Minimum value memory for system pressure.
COF	Zero-point calibration.
dS1	Switch-on delay for OUT1.
dr1	Switch-off delay for OUT1.
P-n	Switching logic for OUT1: pnp or npn.
dAP	Damping for switching outputs and display.
dAA	Damping for analogue output (OUT2).
diS	Update rate and orientation of the display.
LED	Setting for the LED ring.
CAL	Calibration function (setting the curve of measured values).
CP1	Calibration point 1
CP2	Calibration point 2
rES	Restore factory settings.

9 Parameter setting

During parameter setting the unit remains in the operating mode. It continues its monitoring function with the existing parameters until the parameter setting has been completed.

Exceptions: changes to the parameters COF (→ 9.4.1), CP1 and CP2 (→ 9.4.6) take effect immediately.

9.1 General parameter setting

3 steps must be taken for each parameter setting:

1	**Select parameter** ▶ Touch [Mode/Enter] until the requested parameter is displayed.	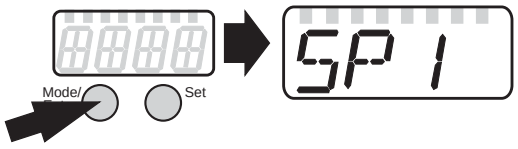
2	**Set parameter value** ▶ Touch [Set] and keep it touched. > Current setting value of the parameter flashes for 5 s. > After 5 s: setting value is changed: step by step by touching briefly several times or continuously by touching permanently.	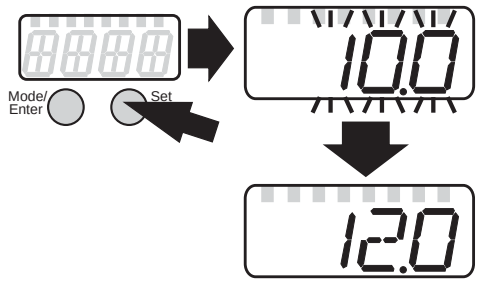
	Numerical values are incremented continuously. To reduce the value: let the display move to the maximum setting value. Then the cycle starts again at the minimum setting value.	
3	**Acknowledge parameter value** ▶ Touch [Mode/Enter] briefly. > The parameter is displayed again. The new setting value is saved.	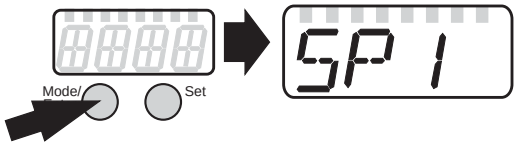
Set other parameters ▶ Start again with step 1.		
Finish parameter setting ▶ Touch [Mode/Enter] several times until the current measured value is displayed or wait for 15 s. > The unit returns to the operating mode.		

- Timeout:

  If no touch button is activated for 15 s during parameter setting, the unit returns to the operating mode with unchanged values.

- Change from menu level 1 to menu level 2:

▶ Touch [Mode/Enter] until [EF] is displayed.	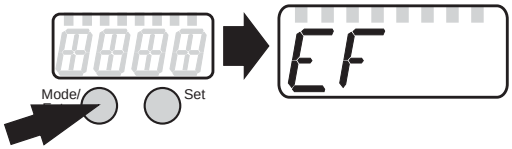
▶ Touch [Set] briefly. > The first parameter of the submenu is displayed (here: [Uni]). If the menu level 2 is protected by an access code, "Cod1" flashes in the display. ▶ Touch [Set] and keep it touched until the valid code no. appears. ▶ Touch [Mode/Enter] briefly. On delivery by ifm electronic: no access restriction.	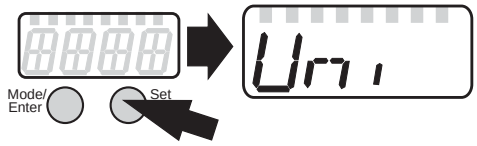

- Locking / unlocking

  The unit can be locked electronically to prevent an unintentional operation.

▶ Make sure that the unit is in the normal operating mode. ▶ Touch [Set], ▶ additionally touch [Mode/Enter] and keep both buttons touched for 10 s. > The LED for the current unit of measurement flashes, the current system pressure continues to be displayed. After 10 s the display goes out for approx. 1 s. ▶ Release [Mode/Enter] and [Set] again. Both buttons must be released within 4 s. If this does not happen, the unit remains unlocked. > [Loc] is displayed, the unit is locked. . During operation the indicator LED for the display unit (→ chapter 7) is flashing if you try to open the menu.
For unlocking: ▶ Make sure that the unit is in the normal operating mode. ▶ TTouch [Set], ▶ additionally touch [Mode/Enter] and keep both buttons touched for 10 s. > The LED for the current unit of measurement flashes, the current system pressure continues to be displayed. After 10 s the display goes out for approx. 1 s. ▶ Release [Mode/Enter] and [Set] again. Both buttons must be released within 4 s. If this does not happen, the unit remains unlocked. > [uLoc] is displayed, the unit is unlocked.

On delivery: unlocked.

UK

9.2 Configuration of the digital display (optional)

▶ Select [Uni] and set the unit of measurement: - [bAr] / [mbAr]. - [PSI] / [inHO].	
▶ Select [SELd] and set type of indication: - [P]: system pressure in the unit set in Uni. - [P%]: system pressure in % of the set scaling of the analogue output; the following applies: 0 % = ASP value / 100 % = AEP value. Note: display “0 %” does not mean that no pressure is applied to the system.	
▶ Select [diS] and set the update rate of the display: - [d1]: update of the measured values every 50 ms. - [d2]: update of the measured values every 200 ms. - [d3]: update of the measured values every 600 ms. - [OFF] = The measured value display is deactivated in the Run mode. Touching one of the buttons indicates the current measured value for 15 s. Touching the [Mode/Enter] button again activates the display mode. The indicator LEDs remain active even if the display is deactivated.	
▶ Select [LED] and set the display function for the digital display and LED ring: - [SPRP]: One LED on the LED ring indicates the set point and a second LED the reset point. - [HInd]: 2 adjacent LEDs on the LED ring mark the lag indicator for maximum value ([HInd], high indication). - [LInd]: 2 adjacent LEDs on the LED ring mark the lag indicator for minimum value ([LInd], low indication). To reset: ▶ Touch [Set] for 1 second. > The two LEDs jump to the current position of the pointer. - [Ph]: Display of pulsating signals and pressure peaks: - In case of quick pressure changes (quickly pulsating signals) the digital display and LED ring indicate the minimum value and the maximum value. - In case of one-time short pressure peaks the digital display and LED ring show the indication for a longer time. - [Pdir]: The LED ring indicates the trend of the pressure changes (5 LEDs below the pointer for rising pressure; 5 LEDs above the pointer for falling pressure). A damping set with dAP or dAA also has an effect on this display.	

9.3 Set output signals

9.3.1 Set output functions

▶ Select [OU1] and set the switching function: - [Hno] = hysteresis function/NO. - [Hnc] = hysteresis function/NC. - [Fno] = window function/NO. - [Fnc] = window function/NC.	
▶ Select [OU2] and set the analogue function: - [I] = current signal proportional to pressure 4…20 mA. - [InEG] = current signal proportional to pressure 20…4 mA.	

UK

9.3.2 Set switching limits

▶ Select [SP1] and set the value at which the output switches.	
▶ Select [rP1] and set the value at which OUT1 switches off. rP1 is always smaller than SP1. The unit only accepts values which are lower than SP1.	

9.3.3 Scale analogue value for OUT2

▶ Set the minimum pressure requested in the system. ▶ Touch [Mode/Enter] until [tASP] appears. ▶ Touch [Set] and keep it touched. > Current setting value flashes. ▶ Release [Set] when the display stops flashing. > New setting value is displayed. ▶ Touch [Mode/Enter] briefly. > The current system pressure is defined as start value for the analogue signal.	
▶ Set the maximum pressure requested in the system. ▶ Touch [Mode/Enter] until [tAEP] appears. ▶ Touch [Set] and keep it touched. > Current setting value flashes. ▶ Release [Set] when the display stops flashing. > New setting value is displayed. ▶ Touch [Mode/Enter] briefly. > The current system pressure is defined as end value for the analogue signal.	
ASP / AEP can only be set automatically within defined limits (→ 12.1 Setting ranges). If automatic setting is carried out at an invalid pressure value, [UL] or [OL] is displayed. After acknowledgement by [Mode/Enter] [Err] flashes, the ASP value / AEP value is not changed.	

As an alternative: ▶ Select [ASP] and set the measured value at which 4 mA is provided (20 mA at [OU2] = [InEG]). ▶ Select [AEP] and set the measured value at which 20 mA is provided (4 mA at [OU2] = [InEG]). Minimum distance between ASP and AEP = 25 % of the final value of the measuring range (turn-down 1:4).	

9.4 User settings (optional)

9.4.1 Carry out zero point calibration

▶ Select [COF] and set a value between -5 % and 5 % of the final value of the measuring range. The internal measured value "0" is shifted by this value.	
As an alternative: automatic adjustment of the offset in the range 0 bar ± 5 %. ▶ Make sure that no pressure is applied to the system. ▶ Touch [Mode/Enter] until [tCOF] appears. ▶ Touch [Set] and keep it touched. > The current offset value (in %) flashes briefly. > The current system pressure is displayed. ▶ Release [Set]. ▶ Touch [Mode/Enter] briefly (= to confirm the new offset value).	

9.4.2 Set delay time for OUT1

[dS1] = switch-on delay / [dr1] = switch-off delay. ▶ Select [dS1] or [dr1] and set a value between 0.1 and 50 s (at 0.0 the delay time is not active).	

9.4.3 Set switching logic for OUT1

▶ Select [P-n] and set [PnP] or [nPn].	

9.4.4 Set damping for the switching signal

▶ Select [dAP] and set a value between 0.01 and 30 s. dAP value = response time between pressure change and change of the switching status in seconds. [dAP] influences the switching frequency: f_{max} = 1 ÷ 2dAP. [dAP] also has an effect on the display.	

9.4.5 Set damping for the analogue signal

▶ Select [dAA] and set a value between 0.01 and 30 s. dAA value = response time between pressure change and change of the analogue signal in seconds.	

9.4.6 Calibrate curve of measured values

If the unit is to adopt the settings for the calibration points, the following conditions must be adhered to:

- CP1 and CP2 must be within the measuring range (i.e. between ASP and AEP).
- CP1 and CP2 must not be in the extended display range.
- Minimum distance between the calibration points CP1 and CP2 = 5 % of the final value of the measuring range.
- Maximum correction value = ± 2 % of the final value of the measuring range.

UK

▶ Set a defined reference pressure between ASP and AEP in the system. ▶ Select [CAL]. ▶ Touch [Set] briefly. > [CP1] is displayed. ▶ Touch [Set] for 5 s. > The pressure measured by the unit is displayed. ▶ Touch [Set] until the set reference pressure is indicated (measured pressure = reference pressure) or the corresponding analogue signal is provided to OUT2. ▶ Touch [Mode/Enter] briefly. > [CP1] is displayed. ▶ Touch [Mode/Enter] briefly. > [CP2] is displayed. Continue with a) or b).	
a) Finish calibration: ▶ Touch [Mode/Enter] briefly. > [CAL] is displayed. b) Change a 2nd point on the curve of measured values: ▶ Set a second defined reference pressure in the system. ▶ Touch [Set] for 5 s. > The pressure measured by the unit is displayed. ▶ Touch [Set] until the set reference pressure is indicated (measured pressure = reference pressure) or the corresponding analogue signal is provided to OUT2. ▶ Touch [Mode/Enter] briefly. > [CP2] is displayed. ▶ Touch [Mode/Enter] briefly. > [CAL] is displayed, the process is finished.	

9.5 Service functions

9.5.1 Read min/max values for system pressure

▶ Select [HI] or [LO] and touch [Set] briefly. [HI] = maximum value, [LO] = minimum value. Delete memory: ▶ Select [HI] or [LO]. ▶ Touch [Set] and keep it touched until [----] is displayed. ▶ Touch [Mode/Enter] briefly.	

9.5.2 Reset all parameters to factory setting

▶ Select [rES]. ▶ Touch [Set] and keep it touched until [----] is displayed. ▶ Touch [Mode/Enter] briefly. It is recommended to take down your own settings in the table before carrying out a reset (→13 Factory setting).	

10 Operation

After power on, the unit is in the Run mode (= normal operating mode). It carries out its measurement and evaluation functions and provides output signals according to the set parameters.

Operating indicators → 7 Operating and display elements.

Reset the lag indicator (if [LED] = [HInd] or [LInd]):

▶ Touch [Set] for 1 second.

> The two lag indicator LEDs jump to the current position of the pointer.

10.1 Read set parameters

▶ Touch [Mode/Enter] until the requested parameter is displayed.

▶ Touch [Set] briefly.

> The unit displays the corresponding parameter value for about 15 s. After another 15 s it returns to the Run mode.

10.2 Error indications

[OL]	Overload pressure (measuring range exceeded).
[UL]	Underload pressure (below measuring range).
[SC1]	Short circuit in OUT1. The output is switched off as long as the short circuit persists.
[Err]	Flashing: internal error, invalid entry.

The messages SC1 and Err are displayed even if the display is switched off.

11 Scale drawing

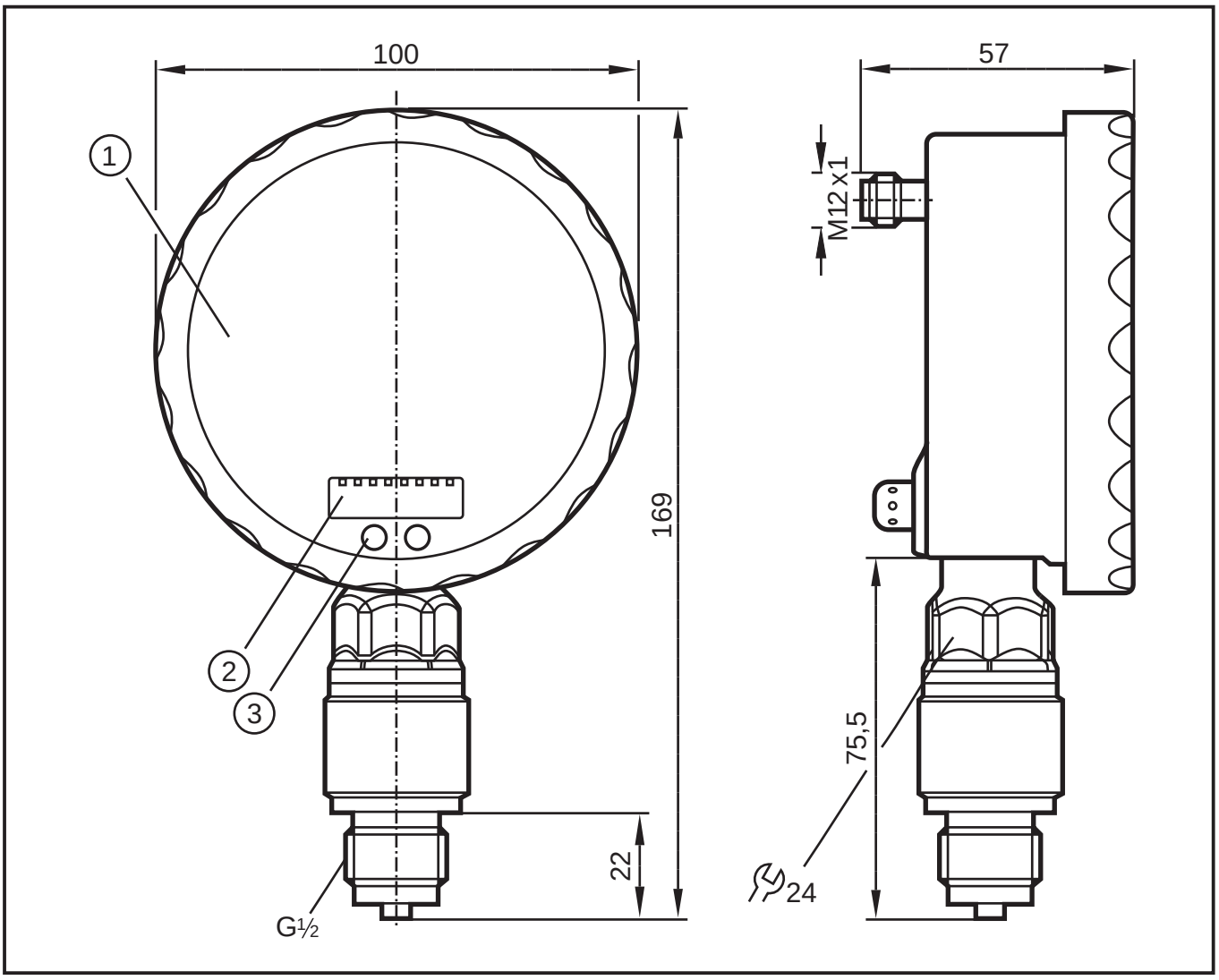

Dimensions in mm
1: analogue display
2: digital display
3: touch button (programming button)

12 Technical data

Operating voltage [V] ..... 18...32 DC
Current consumption [mA] ..... < 70 (24 V)
Current rating [mA] 250
Short-circuit protection; reverse polarity protection / overload protection, integrated watchdog
Voltage drop [V] ..... < 2
Power-on delay time [s] 6
Min. response time switching output [ms] 9
Switching frequency [Hz] 75
Analogue output ..... 4...20 mA / 20...4 mA
Max. load [Ω] ..... (Ub - 10) x 50
Step response time analogue output [ms] 28

Accuracy / deviations (in % of the span)[1)]

	PG2409 PG2452 ... PG2458	PG2450 PG2451 PG2489
Switch point accuracy	< ± 0.5	< ± 0.6
Switch point accuracy in the extended display range	< ± 1.5	< ± 1.5
Characteristics deviation	< ± 0.25 (BFSL) < ± 0.5 (LS)	< ± 0.35 (BFSL) < ± 0.6 (LS)
Hysteresis	< 0.25	< 0.5
Repeatability (in case of temperature fluctuations < 10 K)	< ± 0.1	< ± 0.1
Long-term stability (in % of the span / 6 months)	< ± 0.1	< ± 0.1

Temperature coefficients (TEMPCO) in the compensated temperature range 0 ...70°C (in % of the span per 10 K)

	PG2409 PG2452 ... PG2458	PG2450 PG2451 PG2489
Greatest TEMPCO of the zero point	< ± 0.2	< ± 0.3
Greatest TEMPCO of the span	< ± 0.2	< ± 0.3

Materials (wetted parts)	stainless steel 316L / 1.4404 ceramics (Al2O3); FPM
Housing materials	stainless steel 316L / 1.4404; PA; FPM (Viton); PTFE; viewing glass: laminated safety glass 4 mm
Protection rating	IP 67 / IP 69K
Protection class	III
Insulation resistance [MΩ]	> 100 (500 V DC)
Shock resistance [g]	50 (DIN IEC 68-2-27, 11 ms)
Vibration resistance [g]	20 (DIN IEC 68-2-6, 10 - 2000 Hz)
Switching cycles min.	100 million
Ambient temperature [°C]	-20 ... 80
Medium temperature [°C]	-25...80
Storage temperature [°C]	-40...100
EMC EN 61000-4-2 ESD:	4 / 8 kV
EN 61000-4-3 HF radiated:	10 V/m
EN 61000-4-4 Burst:	2 kV
EN 61000-4-5 Surge:	0.5 / 1 kV
EN 61000-4-6 HF conducted:	10 V

UK

[1] 1) All indications are referred to a turn-down of 1:1

13 Setting ranges

		SP1		rP1		ASP		AEP		ΔP
		min	max	min	max	min	max	min	max	
PG2409	bar	-0.992	1.600	-1.000	1.592	-1.000	1.100	-0.500	1.600	0.004
	PSI	-14.40	23.22	-14.52	23.10	-14.52	15.96	-7.26	23.22	0.06
PG2450	bar	2	600	0	598	0	500	100	600	1
	PSI	30	8700	0	8670	0	7250	1450	8700	10
PG2451	bar	1.0	400.0	0.0	399.0	0.0	350.0	50.0	400.0	0.5
	PSI	15	5800	0	5785	0	5075	725	5800	5
PG2452	bar	0.4	160.0	0.0	159.6	0.0	135.0	25.0	160.0	0.2
	PSI	6	2322	0	2316	0	1959	363	2322	3

ΔP = step increment

		SP1		rP1		ASP		AEP		ΔP
		min	max	min	max	min	max	min	max	
PG2453	bar	-0.90	40.00	-1.00	39.90	-1.00	33.75	5.25	40.00	0.05
	PSI	-13.0	580.0	-14.5	578.5	-14.5	489.5	76.0	580.0	0.5
PG2454	bar	-0.96	16.00	-1.00	15.96	-1.00	13.50	1.50	16.00	0.02
	PSI	-14.0	232.0	-14.4	231.6	-14.4	195.8	21.8	232.0	0.2
PG2455	bar	-0.98	6.40	-1.00	6.38	-1.00	5.40	0.00	6.40	0.01
	PSI	-14.2	92.8	-14.5	92.5	-14.5	78.3	0.0	92.8	0.1
PG2456	bar	-0.115	4.000	-0.125	3.990	-0.125	3.350	0.525	4.000	0.005
	PSI	-1.65	58.00	-1.80	57.85	-1.80	48.60	7.60	58.00	0.05
PG2457	bar	-0.046	1.600	-0.050	1.596	-0.050	1.340	0.200	1.600	0.002
	PSI	-0.66	23.20	-0.72	23.14	-0.72	19.58	2.90	23.20	0.02
PG2458	mbar	-11.5	400.0	-12.5	399.0	-12.5	337.5	50.0	400.0	0.5
	inH2O	-4.6	160.6	-5.0	160.2	-5.0	135.6	20.0	160.6	0.2
PG2489	mbar	-4.6	160.0	-5.0	159.6	-5.0	135.0	20.0	160.0	0.2
	inH2O	-1.84	64.24	-2.00	64.08	-2.00	54.24	8.00	64.24	0.08

ΔP = step increment

14 Factory setting

	Factory setting	User setting
SP1	25.0 % VMR*	
rP1	24.9 % VMR*	
OU1	Hno	
OU2	I	
COF / tCOF	0.0	
ASP / tASP	0 % VMR*	
AEP / tAEP	100 % VMR*	
Uni	bAr / mbAr	
SELd	P	
dS1	0.0	
dr1	0.0	
P-n	pnp	
dAP	0.06	
dAA	0.03	
dis	d2	
LED	SPRP	
CP1	0.00	
CP2	0.00	

* = the indicated percentage of the final value of the measuring range (VMR) of the corresponding sensor is set.

More information at www.ifm.com

newterra ltd.
1291 California Avenue, Brockville, ON K6V 5W3
(800) 420-4056 / www.newterra.com

APPENDIX F

Material Safety Data Sheets

© 2017 by **newterra**, ltd.
All rights reserved. No part of this document may be reproduced or transmitted in any form or by any means, electronic, mechanical, photocopying, recording, or otherwise, without prior written permission of **newterra** ltd.

MATERIAL SAFETY DATA SHEET

Aluminium Sulphate Solution

Section 01 - Chemical And Product And Company Information

Product Identifier ..... Aluminium sulphate solution

Product Use ..... Coagulating agent in municipal and industrial water and wastewater treatment, additive in papermaking.

Supplier Name..... ClearTech Industries Inc.
2302 Hanselman Avenue
Saskatoon, SK. S7L 5Z3
Canada

Prepared By..... ClearTech Industries Inc. Technical Department
Phone: (306)664-2522

Preparation Date..... November 26, 2009

24-Hour Emergency Phone..... 306-664-2522



Section 02 - Composition / Information on Ingredients

Hazardous Ingredients.....	Aluminum sulphate hydrate	45-55%
CAS Number.....	Aluminum sulphate hydrate	16828-12-9

Synonym (s).....Liquid alum; aluminum sulfate solution; papermaker's alum; sulphuric acid, aluminum salt.

Section 03 - Hazard Identification

Inhalation..... Inhalation of mists can be irritating to the respiratory tract and lungs.

Skin Contact / Absorption…….... Mild to moderate irritation can occur. Aluminum is very poorly absorbed through the skin and toxic effects would not be expected following short-term skin contact.

Eye Contact.....…….. May result in mild to moderate irritation to eyes.

Ingestion.....……. Amounts ingested incidental to industrial handling are not likely to cause injury. Large amounts may cause abdominal pain, nausea, vomiting. Can cause burns of the mouth, bleeding stomach, incoordination, muscle spasms, and kidney injury.

Exposure Limits…….. ACGIH/TLV-TWA= 2mg/m^3(Soluble Aluminum Salts)
OSHA/PEL-TWA= 2mg/m^3(Soluble Aluminum Salts)

Section 04 - First Aid Measures

Inhalation.....…….. Remove victim to fresh air. Give artificial respiration only if breathing has stopped. If breathing is difficult, give oxygen. Seek immediate medical attention.

Skin Contact / Absorption…….. Remove contaminated clothing. Wash affected area with soap and water. Seek medical attention if irritation occurs or persists.

Eye Contact.....…….... Flush immediately with water for at least 20 minutes. Forcibly hold eyelids apart to ensure complete irrigation of eye tissue. Seek immediate medical attention.

Ingestion.....……. Do not induce vomiting. If vomiting occurs, lean victim forward to prevent breathing in vomitus. Give large amounts of water. Do not give anything by mouth to an unconscious or convulsing person. Seek immediate medical attention.

Additional Information.....…….... Not available

Section 05 - Fire Fighting

Conditions of Flammability…….... Non-flammable

Means of Extinction.....…….... Product itself does not burn. However, decomposition product sulfur trioxide will react with water to form sulfuric acid. Use appropriate extinguishing agent.

Flash Point.....……. Not applicable

Auto-ignition Temperature……. Not applicable

Upper Flammable Limit …….. Not applicable

Lower Flammable Limit..…….…. Not applicable

Hazardous Combustible Products... Under fire conditions (or at temperatures greater than 650°C), product decomposes to give off sulfur trioxide, an oxidizing agent which will support combustion.

Special Fire Fighting Procedures..... Wear NIOSH-approved self-contained breathing apparatus and protective clothing.

Explosion Hazards…….... Liquid alum may react with some metals, to give flammable, potentially explosive hydrogen gas. Hydrogen gas can accumulate to explosive concentrations inside confined spaces. Follow appropriate NFPA codes.

Section 06 - Accidental Release Measures

Leak / Spill.....……. Wear appropriate personal protective equipment. Ventilate area. Stop or reduce leak if safe to do so. Prevent material from entering sewers. Cover spill with dry earth, sand or other non-combustible material.

Deactivating Materials..……... Lime, limestone, soda ash, sodium bicarbonate, dilute sodium hydroxide or dilute aqua ammonia.

Section 07 - Handling and Storage

Handling Procedures.....……. Use proper equipment for lifting and transporting all containers. Use sensible industrial hygiene and housekeeping practices. Wash thoroughly after handling. Avoid all situations that could lead to harmful exposure.

Storage Requirements.....……..…. Store in a cool, dry, well-ventilated place. Keep container tightly closed, and away from incompatible materials. Store at temperatures below 40°C and above 0°C.

Section 08 - Personal Protection and Exposure Controls

Protective Equipment

Eyes..…….... Chemical goggles, full-face shield, or a full-face respirator is to be worn at all times when product is handled. Contact lenses should not be worn; they may contribute to severe eye injury.

Respiratory..... A NIOSH/MSHA approved air-purifying respirator equipped with acid gas/fume, mist cartridges for concentrations up to 20 mg/m^3. An air-supplied respirator if concentrations are higher or unknown.

Gloves..... Impervious gloves of chemically resistant material (rubber or PVC) should be worn at all times. Wash contaminated clothing and dry thoroughly before reuse.

Clothing..... Body suits, aprons, and/or coveralls of chemical resistant material should be worn at all times. Wash contaminated clothing and dry thoroughly before reuse.

Footwear..... Impervious boots of chemically resistant material should be worn at all times.

Engineering Controls

Ventilation Requirements..... Mechanical ventilation (dilution or local exhaust), process or personnel enclosure and control of process conditions should be provided. Supply sufficient replacement air to make up for air removed by exhaust systems.

Other..... Emergency shower and eyewash should be in close proximity.

Section 09 - Physical and Chemical Properties

Physical State..... Liquid

Odor and Appearance..... Pale straw coloured, clear odourless liquid.

Odor Threshold..... Not available

Specific Gravity (Water=1)..... 1.335

Vapor Pressure (mm Hg, 20C)..... Not available

Vapor Density (Air=1)..... Not available

Evaporation Rate..... Not available

Boiling Point..... 101°C

Freeze/Melting Point..... -16°C

pH..... 1.9-2.3

Water/Oil Distribution Coefficient.... Not available

Bulk Density..... Not available

% Volatiles by Volume..... Not available

Solubility in Water..... Completely miscible

Molecular Formula..... $Al_2(SO_4)_3$ $14H_2O$

Molecular Weight..... 594.14

Section 10 - Stability and Reactivity

Stability..... Stable under normal conditions.

Incompatibility..... Corrosive to carbon steel, aluminum, and zinc. Reacts with strong bases to form aluminum hydroxide.

Hazardous Products of Decomposition.. May react with many metals including carbon steel and aluminum to form flammable gases including sulphur oxides and hydrogen. Liquid alum is stable below 60°C.

Polymerization..... Will not occur

Section 11 - Toxicological Information

Irritancy..... Corrosive

Sensitization..... Not available

Chronic/Acute Effects..... Skin irritation may be aggravated in individuals with existing skin lesions. Breathing of vapors or sprays (mists) may aggravate acute or chronic asthma and chronic pulmonary disease such as emphysema and bronchitis.

Synergistic Materials..... Not available

Animal Toxicity Data..... LD_{50}(mouse,oral)= >9000 mg/kg
LD_{50}(rat,oral)= >9000 mg/kg

Carcinogenicity..... Sulfuric acid mist: Classified 1 (Proven for humans) by IARC, 1 (Known to be human carcinogens) by NTP

Sulfuric acid mist: Classified A2 (Suspected for humans) by ACGIH

Reproductive Toxicity..…..…….. Not available

Teratogenicity.....…...…….. Not available

Mutagenicity.....…….....……. Not available

Section 12 - Ecological Information

Fish Toxicity.....…….. LD_{50}(72 hrs, goldfish)= 100mg/L

Biodegradability.....…….... The products of biodegradation are more toxic than the original product.

Environmental Effects……. May be harmful to aquatic life. Toxicity is primarily associated with the acidic pH. Acidic soil conditions develop where contamination with this material occurs.

Section 13 - Disposal Consideration

Waste Disposal.....…...…….. Dispose in accordance with all federal, provincial, and/or local regulations including the Canadian Environmental Protection Act.

Section 14 - Transportation Information

TDG Classification

Class……..……..…... 8

Group.....…….....…….. III

PIN Number.....…….…….. UN 3264

Other……..... Secure containers (full and/or empty) with suitable hold down devises during shipment.

Section 15 - Regulatory Information

WHMIS Classification.....……...E

NOTE: THE PRODUCT LISTED ON THIS MSDS HAS BEEN CLASSIFIED IN ACCORDANCE WITH THE HAZARD CRITERIA OF THE CANADIAN CONTROLLED PRODUCTS REGULATIONS. THIS MSDS CONTAINS ALL INFORMATION REQUIRED BY THOSE REGULATIONS.

NSF Certification.....Product is certified under NSF/ANSI Standard 60 for coagulation and flocculation at a maximum dosage of 330mg/L.

Section 16 - Other Information

Note: The responsibility to provide a safe workplace remains with the user. The user should consider the health hazards and safety information contained herein as a guide and should take those precautions required in an individual operation to instruct employees and develop work practice procedures for a safe work environment. The information contained herein is, to the best of our knowledge and belief, accurate. However, since the conditions of handling and use are beyond our control, we make no guarantee of results, and assume no liability for damages incurred by the use of this material. It is the responsibility of the user to comply with all applicable laws and regulations.

Attention: Receiver of the chemical goods / MSDS coordinator

As part of our commitment to the Canadian Association of Chemical Distributors (CACD) Responsible Distribution® initiative, ClearTech Industries Inc. and its associated companies require, as a condition of sale, that you forward the attached Material Safety Data Sheet(s) to all affected employees, customers, and end-users. ClearTech will send any available supplementary handling, health, and safety information to you at your request.

If you have any questions or concerns please call our customer service or technical service department.

ClearTech Industries Inc. - Locations

Corporate Head Office: 2302 Hanselman Avenue, Saskatoon, SK, S7L 5Z3
Phone: 306-664-2522
Fax: 306-665-6216

www.ClearTech.ca

Location	Address	Postal Code	Phone Number	Fax Number
Richmond, B.C.	12431 Horseshoe Way	V7A 4X6	604-272-4000	604-272-4596
Calgary, AB.	5516E - 40th St. S.E.	T2C 2A1	403-279-1096	403-236-0989
Edmonton, AB.	11750 - 180th Street	T5S 1N7	780-452-6000	780-452-4600
Saskatoon, SK.	2302 Hanselman Avenue	S7L 5Z3	306-933-0177	306-933-3282
Regina, SK.	555 Henderson Drive	S42 5X2	306-721-7737	306-721-8611
Winnipeg, MB.	340 Saulteaux Crescent	R3J 3T2	204-987-9777	204-987-9770
Mississauga, ON.	7480 Bath Road	L4T 1L2	905-612-0566	905-612-0575

24 Hour Emergency Number - All Locations - 306-664-2522



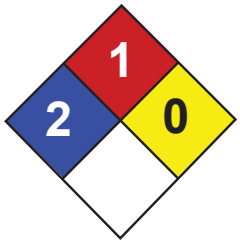

Health	2
Fire	1
Reactivity	0
Personal Protection	E

Material Safety Data Sheet
Citric acid MSDS

Section 1: Chemical Product and Company Identification

Product Name: Citric acid

Catalog Codes: SLC5449, SLC2665, SLC4453, SLC1660, SLC3451

CAS#: 77-92-9

RTECS: GE7350000

TSCA: TSCA 8(b) inventory: Citric acid

CI#: Not available.

Synonym: 2-Hydroxy-1,2,3-propanetricarboxylic acid

Chemical Name: Citric Acid

Chemical Formula: C6H8O7

Contact Information:

Sciencelab.com, Inc.
14025 Smith Rd.
Houston, Texas 77396

US Sales: **1-800-901-7247**
International Sales: **1-281-441-4400**

Order Online: ScienceLab.com

CHEMTREC (24HR Emergency Telephone), call: 1-800-424-9300

International CHEMTREC, call: 1-703-527-3887

For non-emergency assistance, call: 1-281-441-4400

Section 2: Composition and Information on Ingredients

Composition:

Name	CAS #	% by Weight
Citric acid	77-92-9	100

Toxicological Data on Ingredients: Citric acid: ORAL (LD50): Acute: 5040 mg/kg [Mouse]. 3000 mg/kg [Rat].

Section 3: Hazards Identification

Potential Acute Health Effects:
Hazardous in case of eye contact (irritant), of inhalation (lung irritant). Slightly hazardous in case of skin contact (irritant, sensitizer), of ingestion. The amount of tissue damage depends on length of contact. Eye contact can result in corneal damage or blindness. Skin contact can produce inflammation and blistering. Severe over-exposure can produce lung damage, choking, unconsciousness or death.

Potential Chronic Health Effects:
Slightly hazardous in case of skin contact (sensitizer). CARCINOGENIC EFFECTS: Not available. MUTAGENIC EFFECTS: Not available. TERATOGENIC EFFECTS: Not available. DEVELOPMENTAL TOXICITY: Not available. The substance may be toxic to teeth. Repeated or prolonged exposure to the substance can produce target organs damage. Repeated exposure of the eyes to a low level of dust can produce eye irritation. Repeated skin exposure can produce local skin destruction, or dermatitis. Repeated inhalation of dust can produce varying degree of respiratory irritation or lung damage.

Section 4: First Aid Measures

Eye Contact:
Check for and remove any contact lenses. In case of contact, immediately flush eyes with plenty of water for at least 15 minutes. Cold water may be used. Get medical attention.

Skin Contact:
In case of contact, immediately flush skin with plenty of water. Cover the irritated skin with an emollient. Remove contaminated clothing and shoes. Cold water may be used.Wash clothing before reuse. Thoroughly clean shoes before reuse. Get medical attention.

Serious Skin Contact:
Wash with a disinfectant soap and cover the contaminated skin with an anti-bacterial cream. Seek medical attention.

Inhalation:
If inhaled, remove to fresh air. If not breathing, give artificial respiration. If breathing is difficult, give oxygen. Get medical attention.

Serious Inhalation: Not available.

Ingestion:
Do NOT induce vomiting unless directed to do so by medical personnel. Never give anything by mouth to an unconscious person. Loosen tight clothing such as a collar, tie, belt or waistband. Get medical attention if symptoms appear.

Serious Ingestion: Not available.

Section 5: Fire and Explosion Data

Flammability of the Product: May be combustible at high temperature.

Auto-Ignition Temperature: 1010°C (1850°F)

Flash Points: Not available.

Flammable Limits: LOWER: 0.28 Kg/M3 (Dust) UPPER: 2.29 Kg/M3 (Dust)

Products of Combustion: These products are carbon oxides (CO, CO2).

Fire Hazards in Presence of Various Substances:
Slightly flammable to flammable in presence of heat. Non-flammable in presence of shocks.

Explosion Hazards in Presence of Various Substances:
Slightly explosive in presence of open flames and sparks. Non-explosive in presence of shocks.

Fire Fighting Media and Instructions:
SMALL FIRE: Use DRY chemical powder. LARGE FIRE: Use water spray, fog or foam. Do not use water jet.

Special Remarks on Fire Hazards: As with most organic solids, fire is possible at elevated temperatures

Special Remarks on Explosion Hazards:
Fine dust dispersed in air in sufficient concentrations, and in the presences of an ignition source is a potential dust explosion hazard.

Section 6: Accidental Release Measures

Small Spill:
Use appropriate tools to put the spilled solid in a convenient waste disposal container. Finish cleaning by spreading water on the contaminated surface and dispose of according to local and regional authority requirements.

Large Spill:
Stop leak if without risk. Do not get water inside container. Do not touch spilled material. Use water spray to reduce vapors. Prevent entry into sewers, basements or confined areas; dike if needed. Eliminate all ignition sources. Call for assistance on disposal. Finish cleaning by spreading water on the contaminated surface and allow to evacuate through the sanitary system.

Section 7: Handling and Storage

Precautions:
Keep away from heat. Keep away from sources of ignition. Ground all equipment containing material. Do not ingest. Do not breathe dust. Avoid contact with eyes. Wear suitable protective clothing. In case of insufficient ventilation, wear suitable respiratory equipment. If ingested, seek medical advice immediately and show the container or the label. Keep away from incompatibles such as oxidizing agents, reducing agents, metals, alkalis.

Storage: Keep container tightly closed. Keep container in a cool, well-ventilated area.

Section 8: Exposure Controls/Personal Protection

Engineering Controls:
Use process enclosures, local exhaust ventilation, or other engineering controls to keep airborne levels below recommended exposure limits. If user operations generate dust, fume or mist, use ventilation to keep exposure to airborne contaminants below the exposure limit.

Personal Protection:
Safety glasses. Lab coat. Gloves (impervious). Dust respirator. Be sure to use an approved/certified respirator or equivalent. The dust respirator should be used for conditions where exposure has exceeded recommended exposure limits, dust is apparent, and engineering controls(adequate ventilation) are not feasible.

Personal Protection in Case of a Large Spill:
Splash goggles. Full suit. Dust respirator. Boots. Gloves. A self contained breathing apparatus should be used to avoid inhalation of the product. Suggested protective clothing might not be sufficient; consult a specialist BEFORE handling this product.

Exposure Limits:
No exposure guidelines have been established. ACGIH, NIOSH and OSHA have not developed exposure limits for this product. The exposure limits given below are for particulates not otherwise classified: ACGIH: 10 mg/m3 TWA (Total Inhalable fraction); 3 mg/m3 TWA (Respirable fraction) OSHA: 15 mg/m3 TWA (Total dust); 5 mg/m3 TWA (Respirable Fraction)

Section 9: Physical and Chemical Properties

Physical state and appearance: Solid. (Crystalline powde)

Odor: Odorless.

Taste: Acid. (Strong.)

Molecular Weight: 192.13 g/mole

Color: Not available.

pH (1% soln/water): Not available.

Boiling Point: Decomposes.

Melting Point: 153°C (307.4°F)

Critical Temperature: Not available.

Specific Gravity: 1.665 (Water = 1)

Vapor Pressure: Not applicable.

Vapor Density: Not available.

Volatility: Not available.

Odor Threshold: Not available.

Water/Oil Dist. Coeff.: The product is more soluble in water; log(oil/water) = -1.7

Ionicity (in Water): Not available.

Dispersion Properties: See solubility in water, diethyl ether.

Solubility:
Soluble in cold water, hot water, diethyl ether. Insoluble in benzene.

Section 10: Stability and Reactivity Data

Stability: The product is stable.

Instability Temperature: Not available.

Conditions of Instability: Excess heat, incompatible materials

Incompatibility with various substances: Reactive with oxidizing agents, reducing agents, metals, alkalis.

Corrosivity:
Corrosive in presence of aluminum, of zinc, of copper. Non-corrosive in presence of glass.

Special Remarks on Reactivity:
Incompatible with oxidizing agents, potassium tartrate, alkali, alkaline earth carbonates and bicarbonates, acetates, and sulfides, metal nitrates

Special Remarks on Corrosivity: Will corrode copper, zinc, aluminum and their alloys.

Polymerization: Will not occur.

Section 11: Toxicological Information

Routes of Entry: Inhalation. Ingestion.

Toxicity to Animals: Acute oral toxicity (LD50): 3000 mg/kg [Rat].

Chronic Effects on Humans: May cause damage to the following organs: teeth.

Other Toxic Effects on Humans:
Hazardous in case of inhalation (lung irritant). Slightly hazardous in case of skin contact (irritant, sensitizer), of ingestion.

Special Remarks on Toxicity to Animals: LDL[Rabbit] - Route: oral; Dose: 7000mg/kg

Special Remarks on Chronic Effects on Humans: Not available.

Special Remarks on other Toxic Effects on Humans:
Acute Potential Health Effects: Skin: Causes mild to moderate skin irritation. May cause skin sensitization, an allergic reaction, which becomes evident upon re-exposure to this material. Eyes: Causes moderate to severe eye irritation and possible injury. Ingestion: May cause gastrointestinal (digestive) tract irritation with nausea, vomiting, diarrhea. Excessive intake may cause erosion of teeth and hypocalcemia (calcium deficiency in blood). May affect behavior/central nervous system (tremor, convulsions, muscle contraction or spasticity). Inhalation: Causes moderate respiratory tract and mucous membrane irritation. Chronic Potential Health Effects: Frequent intake of citrated beverages may cause erosion of dental enamel and irritation of mucous membranes.

Section 12: Ecological Information

Ecotoxicity: Not available.

BOD5 and COD: Not available.

Products of Biodegradation:
Possibly hazardous short term degradation products are not likely. However, long term degradation products may arise.

Toxicity of the Products of Biodegradation: The product itself and its products of degradation are not toxic.

Special Remarks on the Products of Biodegradation: Not available.

Section 13: Disposal Considerations

Waste Disposal:
Waste must be disposed of in accordance with federal, state and local environmental control regulations.

Section 14: Transport Information

DOT Classification: Not a DOT controlled material (United States).

Identification: Not applicable.

Special Provisions for Transport: Not applicable.

Section 15: Other Regulatory Information

Federal and State Regulations: TSCA 8(b) inventory: Citric acid

Other Regulations: EINECS: This product is on the European Inventory of Existing Commercial Chemical Substances.

Other Classifications:

WHMIS (Canada): CLASS E: Corrosive solid.

DSCL (EEC):
R36/37/38- Irritating to eyes, respiratory system and skin. S26- In case of contact with eyes, rinse immediately with plenty of water and seek medical advice. S37/39- Wear suitable gloves and eye/face protection.

HMIS (U.S.A.):

Health Hazard: 2

Fire Hazard: 1

Reactivity: 0

Personal Protection: e

National Fire Protection Association (U.S.A.):

Health: 2

Flammability: 1

Reactivity: 0

Specific hazard:

Protective Equipment:
Gloves (impervious). Lab coat. Dust respirator. Be sure to use an approved/certified respirator or equivalent. Wear appropriate respirator when ventilation is inadequate. Safety glasses.

Section 16: Other Information

References: Not available.

Other Special Considerations: Not available.

Created: 10/09/2005 04:56 PM

Last Updated: 05/21/2013 12:00 PM

The information above is believed to be accurate and represents the best information currently available to us. However, we make no warranty of merchantability or any other warranty, express or implied, with respect to such information, and we assume no liability resulting from its use. Users should make their own investigations to determine the suitability of the information for their particular purposes. In no event shall ScienceLab.com be liable for any claims, losses, or damages of any third party or for lost profits or any special, indirect, incidental, consequential or exemplary damages, howsoever arising, even if ScienceLab.com has been advised of the possibility of such damages.







Material Safety Data Sheet
Sodium Hypochlorite, 5% MSDS

Section 1: Chemical Product and Company Identification

Product Name: Sodium Hypochlorite, 5%

Catalog Codes: SLS1654

CAS#: Mixture.

RTECS: Not applicable.

TSCA: TSCA 8(b) inventory: Sodium hypochlorite; Sodium hydroxide; Water

CI#: Not applicable.

Synonym: Chlorine Bleach, Bleach, Soda Bleach, Chlorox; Sodium Hypochlorite, Solution, 5% Available Chlorine

Chemical Name: Hypochlorous acid, sodium salt, solution

Chemical Formula: Not applicable.

Contact Information:

Sciencelab.com, Inc.
14025 Smith Rd.
Houston, Texas 77396

US Sales: **1-800-901-7247**
International Sales: **1-281-441-4400**

Order Online: ScienceLab.com

CHEMTREC (24HR Emergency Telephone), call: 1-800-424-9300

International CHEMTREC, call: 1-703-527-3887

For non-emergency assistance, call: 1-281-441-4400

Section 2: Composition and Information on Ingredients

Composition:

Name	CAS #	% by Weight
Sodium hypochlorite	7681-52-9	4-7
Sodium hydroxide	1310-73-2	<1
Water	7732-18-5	>92

Toxicological Data on Ingredients: Sodium hypochlorite: ORAL (LD50): Acute: 5800 mg/kg [Mouse]. 8910 mg/kg [Rat].

Section 3: Hazards Identification

Potential Acute Health Effects:
Very hazardous in case of skin contact (irritant), of eye contact (irritant), of ingestion, . Hazardous in case of skin contact (corrosive), of eye contact (corrosive). Slightly hazardous in case of inhalation (lung sensitizer). Non-corrosive for lungs. Liquid or spray mist may produce tissue damage particularly on mucous membranes of eyes, mouth and respiratory tract. Skin contact may produce burns. Inhalation of the spray mist may produce severe irritation of respiratory tract, characterized by coughing, choking, or shortness of breath. Prolonged exposure may result in skin burns and ulcerations. Over-exposure by inhalation may cause respiratory irritation. Inflammation of the eye is characterized by redness, watering, and itching. Skin inflammation is characterized by itching, scaling, reddening, or, occasionally, blistering.

Potential Chronic Health Effects:
Slightly hazardous in case of skin contact (sensitizer). CARCINOGENIC EFFECTS: Classified 3 (Not classifiable for human.) by IARC [Sodium hypochlorite]. MUTAGENIC EFFECTS: Mutagenic for bacteria and/or yeast. [Sodium hypochlorite]. Mutagenic for mammalian somatic cells. [Sodium hydroxide]. TERATOGENIC EFFECTS: Not available. DEVELOPMENTAL TOXICITY: Not available. The substance may be toxic to lungs, mucous membranes, skin, eyes. Repeated or prolonged exposure to the substance can produce target organs damage. Repeated or prolonged contact with spray mist may produce chronic eye irritation and severe skin irritation. Repeated or prolonged exposure to spray mist may produce respiratory tract irritation leading to frequent attacks of bronchial infection.

Section 4: First Aid Measures

Eye Contact:
Check for and remove any contact lenses. In case of contact, immediately flush eyes with plenty of water for at least 15 minutes. Cold water may be used. Get medical attention immediately.

Skin Contact:
In case of contact, immediately flush skin with plenty of water for at least 15 minutes while removing contaminated clothing and shoes. Cover the irritated skin with an emollient. Cold water may be used.Wash clothing before reuse. Thoroughly clean shoes before reuse. Get medical attention immediately.

Serious Skin Contact:
Wash with a disinfectant soap and cover the contaminated skin with an anti-bacterial cream. Seek medical attention.

Inhalation:
If inhaled, remove to fresh air. If not breathing, give artificial respiration. If breathing is difficult, give oxygen. Get medical attention immediately.

Serious Inhalation:
Evacuate the victim to a safe area as soon as possible. Loosen tight clothing such as a collar, tie, belt or waistband. If breathing is difficult, administer oxygen. If the victim is not breathing, perform mouth-to-mouth resuscitation. Seek medical attention.

Ingestion:
Do NOT induce vomiting unless directed to do so by medical personnel. Never give anything by mouth to an unconscious person. Loosen tight clothing such as a collar, tie, belt or waistband. Get medical attention if symptoms appear.

Serious Ingestion: Not available.

Section 5: Fire and Explosion Data

Flammability of the Product: Non-flammable.

Auto-Ignition Temperature: Not applicable.

Flash Points: Not applicable.

Flammable Limits: Not applicable.

Products of Combustion: Not available.

Fire Hazards in Presence of Various Substances: combustible materials, metals, organic materials

Explosion Hazards in Presence of Various Substances:
Slightly explosive in presence of open flames and sparks. Non-explosive in presence of shocks.

Fire Fighting Media and Instructions: Not applicable.

Special Remarks on Fire Hazards:
Releases chlorine when heated above 35 deg. C. The substance itself is non-combustible and does not burn. However, when heated to decomposition it emits corrosive and/or toxic fumes. May ignite combustibles. Fire risk in contact with organic materials. Contact with metals may evolve flammable hydrogen gas.

Special Remarks on Explosion Hazards:
Anydrous Sodium Hypochlorite is very explosive. Primary amines and calcium hypochlorite or sodium hypochlorite react to form normal chloroamines, which are explosive. Interaction of ethyleneimine with sodium (or other) hypochlorite gives the explosive N-chloro cmpd. Removal of formic acid from industrial waste streams with sodium hypochlorite soln becomes explosive at 55 deg C. Several explosions involving methanol and sodium hypochlorite were attributed to formation of methyl hypochlorite, especially in presence of acid or other esterification catalyst. Use of sodium hypochlorite soln to destroy acidified benzyl cyanide residues caused a violent explosion, thought to have been due to formation of nitrogen trichloride. (Sodium hypochlorite)

Section 6: Accidental Release Measures

Small Spill:
Dilute with water and mop up, or absorb with an inert dry material and place in an appropriate waste disposal container.

Large Spill:
Corrosive liquid. Oxidizing material. Stop leak if without risk. Absorb with DRY earth, sand or other non-combustible material. Do not get water inside container. Avoid contact with a combustible material (wood, paper, oil, clothing...). Keep substance damp using water spray. Do not touch spilled material. Use water spray curtain to divert vapor drift. Prevent entry into sewers, basements or confined areas; dike if needed. Call for assistance on disposal. Be careful that the product is not present at a concentration level above TLV. Check TLV on the MSDS and with local authorities.

Section 7: Handling and Storage

Precautions:
Keep locked up.. Keep container dry. Keep away from heat. Keep away from sources of ignition. Keep away from combustible material.. Do not ingest. Do not breathe gas/fumes/ vapor/spray. Never add water to this product. In case of insufficient ventilation, wear suitable respiratory equipment. If ingested, seek medical advice immediately and show the container or the label. Avoid contact with skin and eyes. Keep away from incompatibles such as reducing agents, combustible materials, organic materials, metals, acids.

Storage:
Keep container tightly closed. Keep container in a cool, well-ventilated area. Separate from acids, alkalies, reducing agents and combustibles. See NFPA 43A, Code for the Storage of Liquid and Solid Oxidizers. Air Sensitive Sensitive to light. Store in light-resistant containers.

Section 8: Exposure Controls/Personal Protection

Engineering Controls:
Provide exhaust ventilation or other engineering controls to keep the airborne concentrations of vapors below their respective threshold limit value.

Personal Protection:
Face shield. Full suit. Vapor respirator. Be sure to use an approved/certified respirator or equivalent. Gloves. Boots.

Personal Protection in Case of a Large Spill:
Splash goggles. Full suit. Vapor respirator. Boots. Gloves. A self contained breathing apparatus should be used to avoid inhalation of the product. Suggested protective clothing might not be sufficient; consult a specialist BEFORE handling this product.

Exposure Limits:
Sodium hypochlorite TWA: 1 CEIL: 1 (ppm as Cl2) STEL: 1 (ppm as Cl2) from ACGIH (TLV) [United States] Sodium hydroxide STEL: 2 (mg/m3) from ACGIH (TLV) [United States] TWA: 2 CEIL: 2 (mg/m3) from OSHA (PEL) [United States] CEIL: 2 (mg/m3) from NIOSH Consult local authorities for acceptable exposure limits.

Section 9: Physical and Chemical Properties

Physical state and appearance: Liquid.

Odor: Characteristic. Chlorine-like (Slight.)

Taste: Not available.

Molecular Weight: Not applicable.

Color: Colorless to light greenish yellow

pH (1% soln/water): Neutral.

Boiling Point: Decomposition temperature: 40°C (104°F)

Melting Point: Not available.

Critical Temperature: Not available.

Specific Gravity: 1.07 - 1.093 (Water = 1)

Vapor Pressure: 2.3 kPa (@ 20°C)

Vapor Density: The highest known value is 0.62 (Air = 1) (Water).

Volatility: Not available.

Odor Threshold: Not available.

Water/Oil Dist. Coeff.: Not available.

Ionicity (in Water): Not available.

Dispersion Properties: See solubility in water.

Solubility: Easily soluble in cold water.

Section 10: Stability and Reactivity Data

Stability: The product is stable.

Instability Temperature: Not available.

Conditions of Instability: Incompatible materials. light, air, heat

Incompatibility with various substances: Reactive with reducing agents, combustible materials, organic materials, metals, acids.

Corrosivity:
Extremely corrosive in presence of aluminum. Corrosive in presence of stainless steel(304), of stainless steel(316). Non-corrosive in presence of glass.

Special Remarks on Reactivity:
Decomposed by carbon dioxide from air. Slowly decomposes on contact with air. Unstable in air unless mixed with sodium hydroxide. Incompatible with ammonium acetate, ammonium carbonate, ammonium nitrate, ammonium oxalate, and ammonium phosphate. Decompostion of sodium hypochlorite takes place within a few seconds with these salts. Also incompatible with primary amines, phenyl acetonitrile, ethyleneimine, methanol, acidified benzyl cyanide, formic acid, urea, nitro compounds, methylscellulose, celloluse, aziridine, ether, ammonia. Mixing this product with chemicals (e.g. ammonia, acids, detergents, etc.) or organic matter (e.g. urine, feces, etc.) will release chlorine gas. Chloramine gas may be evolved when ammonia and bleach are mixed. Decomposed by hot water. Sensitive to light. Exposure to light accelerates decompositon.

Special Remarks on Corrosivity:
Sodium Hypochlorite is extremely corrosive to brass, and moderately corrosive to bronze. There is no corrosivity information for copper.

Polymerization: Will not occur.

Section 11: Toxicological Information

Routes of Entry: Absorbed through skin. Eye contact. Inhalation. Ingestion.

Toxicity to Animals: Acute oral toxicity (LD50): 5800 mg/kg [Mouse]. (Sodium hypochlorite).

Chronic Effects on Humans:
CARCINOGENIC EFFECTS: Classified 3 (Not classifiable for human.) by IARC [Sodium hypochlorite]. MUTAGENIC EFFECTS: Mutagenic for bacteria and/or yeast. [Sodium hypochlorite]. Mutagenic for mammalian somatic cells. [Sodium hydroxide]. Contains material which may cause damage to the following organs: lungs, mucous membranes, skin, eyes.

Other Toxic Effects on Humans:
Very hazardous in case of skin contact (irritant), of ingestion, . Hazardous in case of skin contact (corrosive), of eye contact (corrosive). Slightly hazardous in case of inhalation (lung sensitizer, lung corrosive).

Special Remarks on Toxicity to Animals: Not available.

Special Remarks on Chronic Effects on Humans: May affect genetic material (mutagenic) (Sodium hypochlorite)

Special Remarks on other Toxic Effects on Humans:
Potential Health Effects: Can cause severe irritation and possible burns to skin and eyes. Eye contact may also cause corneal and conjunctival edema, conjunctival hemorrhages. Contact with skin may also cause vesicular eruptions and eczematoid dermatitis which becomes evident upon re-exposure. Prolonged or repeated eye contact may cause conjunctivitis. Ingestion can cause burns to the digestive tract. Symptoms may include: 1. pain and inflammation of the mouth, pharynx, esophagus, and stomach, 2. erosion of the mucous membranes (chiefly of the stomach), nausea, vomiting, choking, coughing, hemorrhage, 3. circulatory collapse with cold and clammy skin (due to methemoglobinemia), cyanosis, and shallow respirations, 4. confusion, delirium, coma, 5. edema of the pharynx, glottis, larynx with stridor and obstruction, 6. perforation of the esophagus, or stomach, with mediastinitis or peritonitis. Inhalation causes slight to severe respiratory tract irritation and delayed pulmonary edema. Prolonged or repeated inhalation may cause allergic respiratory reaction (asthma).

Section 12: Ecological Information

Ecotoxicity: Not available.

BOD5 and COD: Not available.

Products of Biodegradation:
Possibly hazardous short term degradation products are not likely. However, long term degradation products may arise.

Toxicity of the Products of Biodegradation: The product itself and its products of degradation are not toxic.

Special Remarks on the Products of Biodegradation: Not available.

Section 13: Disposal Considerations

Waste Disposal:
Dilute with water and flush to sewer of local ordinances allow, otherwise, whatever cannot be saved for recovery or recycling should be managed in an appropriate and approved waste disposal facility. Waste must be disposed of in accordance with federal, state and local environmental control regulations.

Section 14: Transport Information

DOT Classification: Class 8: Corrosive material

Identification: : Hypochlorite solution UNNA: 1791 PG: III

Special Provisions for Transport: Not available.

Section 15: Other Regulatory Information

Federal and State Regulations:
Illinois toxic substances disclosure to employee act: Sodium hydroxide Illinois chemical safety act: Sodium hydroxide New York release reporting list: Sodium hydroxide Rhode Island RTK hazardous substances: Sodium hydroxide Pennsylvania RTK: Sodium hypochlorite; Sodium hydroxide Florida: Sodium hypochlorite Minnesota: Sodium hypochlorite; Sodium hydroxide Massachusetts RTK: Sodium hypochlorite; Sodium hydroxide New Jersey: Sodium hypochlorite; Sodium hydroxide Louisiana spill reporting: Sodium hydroxide TSCA 8(b) inventory: Sodium hypochlorite; Sodium hydroxide; Water CERCLA: Hazardous substances.: Sodium hypochlorite: 100 lbs. (45.36 kg); Sodium hydroxide: 1000 lbs. (453.6 kg);

Other Regulations: OSHA: Hazardous by definition of Hazard Communication Standard (29 CFR 1910.1200).

Other Classifications:

WHMIS (Canada): CLASS E: Corrosive liquid.

DSCL (EEC):
R8- Contact with combustible material may cause fire. R31- Contact with acids liberates toxic gas. R36/38- Irritating to eyes and skin. S28- After contact with skin, wash immediately with plenty of water. S36/37/39- Wear suitable protective clothing, gloves and eye/face protection. S45- In case of accident or if you feel unwell, seek medical advice immediately (show the label where possible).

HMIS (U.S.A.):

Health Hazard: 3

Fire Hazard: 0

Reactivity: 0

Personal Protection:

National Fire Protection Association (U.S.A.):

Health: 1

Flammability: 0

Reactivity: 0

Specific hazard:

Protective Equipment:
Gloves. Full suit. Vapor respirator. Be sure to use an approved/certified respirator or equivalent. Wear appropriate respirator when ventilation is inadequate. Face shield.

Section 16: Other Information

References: Not available.

Other Special Considerations: Not available.

Created: 10/09/2005 06:32 PM

Last Updated: 05/21/2013 12:00 PM

The information above is believed to be accurate and represents the best information currently available to us. However, we make no warranty of merchantability or any other warranty, express or implied, with respect to such information, and we assume no liability resulting from its use. Users should make their own investigations to determine the suitability of the information for their particular purposes. In no event shall ScienceLab.com be liable for any claims, losses, or damages of any third party or for lost profits or any special, indirect, incidental, consequential or exemplary damages, howsoever arising, even if ScienceLab.com has been advised of the possibility of such damages.

Gardner Denver

H.M.I.S.	
Health:	0
Flammability:	1
Reactivity:	0

These ratings should be used only as a part of a fully implemented H.M.I.S. program.

Material Safety Data Sheet

Section I - Product Identification

Trade Name and Synonyms	Part Numbers:	
AEON-PD	**28G23; 28G24; 28G25; 28G28; 28G40; 28G41**	Health Emergency Phone Number **(217) 222-5400** **Safety Department**
Manufacturer's Name Gardner Denver, Inc.		
Address 1800 Gardner Expressway - Quincy, IL 62305		Transport Emergency Phone Number **(800) 424-9300 (CHEMTREC)**
Product Identification Positive Displacement Blower Lubricant		
Chemical Names and Synonyms Polyalphaolefin	**Use or Description** Gear Oil	

Section II - Composition/Information on Ingredients

Chemical Family:	Synthetic Hydrocarbon	**CAS Number**	Proprietary
Formula:	$C_{10n}H_{20n+2}$		

Section III - Chemical and Physical Properties

Appearance:	Blue Liquid	**Specific Gravity:**	(water=1):0.84-0.89
Odor:	None	**Vapor Pressure:**	<0.01mmHg@20°C
Volatile, Percent by Volume:	0%	**Solubility in Water:**	Insoluble
Boiling Point:	>600°F	**Evaporation Rate (butyl acetate=1):**	Nil

Section IV - Hazards Identification

Threshold Limit Value:	5mg/m^3 ACGIH
Situations to Avoid	Avoid breathing oil mists.

This product is non-hazardous. The product contains no known carcinogens. No special warning labels are required under OSHA 29 CFR 1910. 1200.

Section V - First Aid Measures

Eye Contact:	Flush eyes with water for 15 minutes and consult physician.
Skin Contact:	Upon contact with skin, wash with soap and water.
Inhalation:	Product is not toxic by inhalation. If oil mist is inhaled, remove to fresh air and consult physician.
Ingestion:	Consult physician at once. **DO NOT INDUCE VOMITING.** May cause nausea and diarrhea.

To the best of our knowledge the toxicity of this product has not been fully investigated. Analogous compounds are considered to be essentially non-toxic.

Section VI - Fire Fighting Measures

Flash Point: 405-495℉	**Method:** Cleveland Open Cup - COC
Flammable Limits:	Not established
Autoignition Temperature:	No data
Extinguishing Media:	Dry chemical; CO_2 foam; water spray (fog)
Fire Fighting Instructions:	Burning fluid may evolve irritating/noxious fumes. Firefighters should use NIOSH/MNSA Approved self-contained breathing apparatus. Use water to cool fire-exposed containers. Use water carefully near exponed liquid to avoid frothing and splashing of hot liquid.
NFPA Classification:	Not established

Section VII - Stability and Reactivity

Chemical Stability	Stable
Conditions to Avoid:	Excessive heat
Incompatibility with other Materials:	Strong oxidizers
Hazardous Decomposition Products:	Analogous compounds evolve carbon monoxide, carbon dioxide, and other unidentified fragments when burned.
Hazardous Polymerization:	Will not occur.

Section VIII - Accidental Release Measures

Safeguards (Personnel):	Wear suitable protective equipment, especially goggles.
Initial Containment:	Stop source of spill. Dike spill area. Use absorbent materials to soak up fluid (i.e. sand, sawdust, and commercially available materials.)
Spill Clean-Up:	Wash spill area with large amount of water. Properly dispose of all materials

Section IX - Handling and Storage

Handling (Personnel):	Do not take internally. Avoid contact with skin, eyes, and clothing. Upon contact with skin, wash with soap and water. Flush eyes with water for 15 minutes and consult physician. Wash contaminated clothing before reuse.
Handling (Physical Aspects):	
Storage:	Keep container tightly sealed when not in use.

Section X - Exposure Controls/Personal Protection

ENGINEERING CONTROLS:	
Ventilation:	Local exhaust
PERSONAL PROTECTIVE EQUIPMENT:	
Respiratory Protection:	Use in well ventilated area
Protective Gloves:	Not required, but recommended, especially for prolonged exposure.
Eye Protection:	Goggles
Other Protective Equipment:	
EXPOSURE GUIDELINES:	
Applicable Exposure Limits:	

Section XI - Toxicological Information

Animal Data:	No specific animal toxicological data available for this product.

Section XII - Ecological Information

Ecotoxicological Information:	No specific aquatic data available for this product.

Section XIII - Disposal Considerations

Waste Disposal:	Incinerate this product and all associated wastes in a licensed facility in accordance with Federal, state, and local regulations.
Container Disposal:	

Section XIV - Transportation Information

Shipping Information:	DOT - Not regulated. ICAO/IMO - Not restricted.

Section XV - Regulatory Information

U.S. FEDERAL REGULATIONS:	
OSHA Hazard Determination:	Under normal conditions of use, this material is not known to be hazardous as defined by OSHA's Hazard Communication Standard, 29 CFR 1910.1200.
CERCLA/Superfund:	This material is not known to contain hazardous substances in sufficient quantity to make it subject to CERCLA regulations.
SARA, Title III, 302/304:	This material is not known to contain extremely hazardous substances.
Title III Hazard Classifications Sections 311, 312:	Acute: No Chronic: No Reactivity: No Pressure: No Fire: No
SARA Title III, 313:	This material is not known to contain any chemical(s) at a level of 1.0% or greater (0.1% for carcinogens) on the list of Toxic Chemicals and subject to release reporting requirements.
TSCA:	Material and/or components are listed in the TSCA Inventory of Chemical Substances (40 CFR 710).
RCRA:	This material has been evaluated for RCRA characteristics and does not meet hazardous waste criteria if discarded in its purchased form. Because of product use, transformation, mixing, processing, etc., which may render the resulting material hazardous, it is the product user's responsibility to determine at the time of disposal whether the material meets RCRA hazardous waste criteria.
Clean Water Act:	This material is not known to contain any ingredient(s) subject to the Act.
STATE REGULATIONS (U.S.):	
California "Prop 65":	Product may contain ingredient(s) known to the State of California to cause cancer, birth defects, or other reproductive harm, but the degree of exposure poses a health risk that is below the Prop 65 No Significant Risk Level for the listed chemical(s).
Pennsylvania Worker & Community Right to Know Act:	This material is not known to contain any ingredient(s) subject to the Act.
CANADIAN REGULATIONS:	This is not a WHMIS controlled product. Transport/Medical Emergency Phone Number: 613-348-3616.

Section XVI - Other Information

NFPA, NPCA-HMIS:		
NFPA Rating:		
Health	0	Personal Protection B
Flammability	1	
Reactivity	0	
NPCA-HMIS Rating:		
Health		Personal Protection B
Flammability		
Reactivity		

This information in this material safety data sheet should be provided to all who use, handle, store, transport, or are otherwise exposed to this product.

NOVOZYMES BIOLOGICALS, INC.
111 Kessler Mill Road
Salem, VA 24153

Telephone number: 540-389-9361 Fax: 540-389-9364

Emergency Contact: 540-389-9361 CHEMTREC: 1-800-424-9300

Material Safety Data Sheet **Date: 03/31/2006**

SECTION I—PRODUCT IDENTIFICATION

NAME: –BI-CHEM ® DC CWT Blend CAN	PRODUCT CODE - 7009848

DOT CLASS: Not Regulated.
UN NUMBER: NA
PROPER SHIPPING NAME: NA

HMIS RATING & CANADIAN WHMIS CLASSIFICATION

HEALTH	1	CANADIAN WHMIS CLASSIFICATION:	D 2 B
FIRE	0		
REACTIVITY	0		

SECTION II - INGREDIENTS

ALL COMPONENTS APPEAR ON THE TSCA INVENTORY AND CANADIAN DSL LIST. COMPONENTS NOT LISTED ARE EITHER NON HAZARDOUS OR IN CONCENTRATIONS OF LESS THAN 1%.

Ingredient Name	CAS Number	OSHA PEL	ACGIH TLV/TWA
Viable Bacterial Cultures	NA	NA	NA

SECTION III – PHYSICAL CHARACTERISTICS

Boiling Point	No Data	**Appearance and Odor**	Tan free flowing grain like substance, earthly odor.
Bulk Density	Approximately 0.66-0.77 gm/cm3	**Melting Point**	No Data
NA	6.5 - 8.5	**Vapor Density**	No Data
Vapor Pressure	No Data	**Solubility**	Minimal

NOVOZYMES BIOLOGICALS, INC.
111 Kessler Mill Road
Salem, VA 24153

Telephone number: 540-389-9361 Fax: 540-389-9364

Emergency Contact: 540-389-9361 CHEMTREC: 1-800-424-9300

SECTION IV – FIRE/EXPLOSION

Flash Point:	No data
Flash Point Method Used:	NA
LEL:	Not know
UEL:	Not known

Extinguishing Media: Water spray, carbon dioxide or dry chemical.

Special Fire Fighting Procedures: None

Unusual Fire and Explosion Hazards: None known.

SECTION V – REACTIVITY DATA

Stable: X **Unstable:**

Incompatibility: Strong acids or alkali compounds may inactivate biological cultures.

Hazardous Decomposition or By Products: Not Known.

Hazardous Polymerization: Will not occur.

SECTION VI – HEALTH HAZARD DATA

Acute Health Affects

Routes of Entry:	**Inhalation:** yes	**Absorption:** no	**Ingestion:** yes	**Eyes:** yes

Eyes: This product may cause eye irritation.

Skin Contact: Could cause mild skin irritation after prolonged contact.

Inhalation: Inhaling dust from this product could cause irritation to the lungs and mucus membranes.

Ingestion: Ingestion of this product could cause irritation to the mouth and throat or cause choking.

Signs and Symptoms of Over Exposure: None Known

NOVOZYMES BIOLOGICALS, INC.
111 Kessler Mill Road
Salem, VA 24153

Telephone number: 540-389-9361 Fax: 540-389-9364

Emergency Contact: 540-389-9361 CHEMTREC: 1-800-424-9300

Aggravated Medical Conditions: None known, however persons with respiratory problems should avoid breathing dust from this product.

Supplemental Health Information: None

Emergency First Aid Procedures

Eye Contact: Rinse eyes with water for fifteen minutes, if irritation persists, see a physician.

Inhalation: Move person to fresh air and avoid breathing dust from product. If breathing problems develop, seek the care of a physician.

Skin Contact: Wash the product off the skin with soap and water; if irritation develops seek the care of a physician.

Ingestion: Do not induce vomiting, if victim is choking clear airway and seek medical attention.

SECTION VII – SPILL OR LEAK PROCEDURE

Steps to be taken in case material is spilled or leaked:

Waste Disposal Method: Contain and collect material, place in proper container for reuse or disposal.
Dispose of materials in accordance with all federal, state and local laws.

Precautions To Be Taken In Handling and Storage: Store in a location away from children, food items and potable water.
Store in an area out of the direct sunlight, keep container closed when not in use, avoid storing in a damp environment.
Always wash hands with soap and water before handling food or smoking.
Use good chemical hygiene practices when working with any chemical.

Other Precautions: None

SECTION VIII – CONTROL MEASURES (PPE)

Respiratory Protection: Use a NIOSH approved dust mask to control nuisance dust.

Protective Gloves: Recommended. Disposable nitrite exam gloves are suitable for preventing prolonged contact with the skin.

Eye Protection: Safety glasses with side shields are recommended.

Other Protective Clothing: None required, however, avoid prolonged contact with the skin from soiled clothing.

Ventilation: Local exhaust should be sufficient. Avoid creating dust from the product. If used in a manner that creates dust, mechanical ventilation may be necessary.

NOVOZYMES BIOLOGICALS, INC.
111 Kessler Mill Road
Salem, VA 24153

Telephone number:	540-389-9361	Fax:	540-389-9364	
Emergency Contact:	540-389-9361		CHEMTREC:	1-800-424-9300

The information and recommendations contained in this Material Safety Data Sheet have been compiled from sources believed to be reliable and to represent current opinion on the subject when the MSDS was prepared. No warranty, guaranty or representation is made as to the correctness or sufficiency of the information. The user of this product must decide what safety measures are necessary to safely use this product, either alone or in combination with other products, and determine its environmental regulatory compliance obligations under any applicable federal, state and local laws.

Safety Data Sheet

MicroC® 2000

1. PRODUCT AND COMPANY IDENTIFICATION

Product Name:	MicroC® 2000	**Publication Date:**	May 31, 2015
Product Code:	NA	**Replaces:**	February 26, 2015
Product Use:	A reducing agent for biological processes		

Supplier Information:

Environmental Operating Solutions, Inc	Phone:	508-743-8440
160 MacArthur Blvd., Unit 6	Fax:	508-743-8443
Bourne, MA 02532	Website:	www.microc.com

EMERGENCY TELEPHONE NUMBER: **CHEMTREC** **800-424-9300**

2. HAZARDS IDENTIFICATION

OSHA Regulatory Status:
This product when used as intended is not hazardous according to 29 CFR 1910.1200

Note: When vaporized, glycerin mist may cause irritation of the respiratory tract.

Potential Health Effects

Routes of Exposure	Ingestion, inhalation, skin contact, eye contact
Eyes	May cause slight irritation
Skin	May cause slight irritation
Inhalation	High mist concentrations may cause irritation of respiratory tract.
Ingestion	May be harmful if swallowed in large quantities

3. COMPOSITION / INFORMATION ON INGREDIENTS

Chemical Name	CAS #	% by Weight
Glycerin; glycerol	56-81-5	70-74%
Water	7732-18-5	22-26%
Sodium Chloride	7647-14-5	4-6%
Methanol	67-56-1	< 1%

4. FIRST AID MEASURES

Eye Contact	Immediately flush eyes thoroughly with plenty of water for 15 minutes and consult a physician immediately.
Skin Contact	Remove contaminated clothing and wash affected area with water and soap. Consult physician if irritation develops
Inhalation	Remove individual to fresh air. Seek medical attention if breathing problems persist
Ingestion	Do not induce vomiting. Rinse mouth thoroughly. Seek medical attention.
General Advice	If individual feels unwell following the exposure to the product consult a physician immediately. Present this Safety Data Sheet to the doctor in attendance
Note to physician	Treat patient symptomatically

5. FIRE FIGHTING MEASURES

Flammability Summary (OSHA and NFPA)	Non-flammable Material
Protection of Firefighters:	Wear suitable protective equipment. Wear self contained breathing apparatus if necessary
Extinguishing Media	Use equipment appropriate to the main source of the fire. Water spray, alcohol foam, dry chemical or CO2. Water or alcohol foam may cause frothing
Specific hazards arising from the chemical	Carbon oxides

6. ACCIDENTAL RELEASE MEASURES

Personal Protection for Spills	Keep unnecessary personnel away from spill. Use personal protective equipment. Ventilate area of leak or spill. Avoid breathing vapors and mist.
Methods for Containment	Eliminate all sources of ignition. Stop flow of material if safe to do so. Dike spilled material. Absorb spill with inert absorbent material. Sand, earth and vermiculite are suitable absorbent materials.
Environmental Precautions	Prevent further leakage. Contain spill if safe to do so. Do not let product enter storm drains if possible.

7. HANDLING AND STORAGE

Precautions for Safe Handling	See other relevant sections of this SDS. Avoid contact with skin and eyes. Avoid breathing mist. Use with adequate ventilation. Do not handle and store near open flames, high heat or sources of ignition.
Storage	Keep containers closed when not in use. Minimize evaporative losses. Keep away from ignition sources.
Incompatible Materials for Storage	None known

8. EXPOSURE CONTROLS / PERSONAL PROTECTION

INSUFFICIENT DATA ON MIXTURE. DATA ON INDIVIDUAL COMPONENTS PROVIDED BELOW

Component	Concentration in Product	ACGIH TLV	OSHA TABLE Z-1 Limits for Air Contaminants	NIOSH
Glycerin CAS No: 56-81-5	70-74% w/w	Form: Glycerin Mist TWA: 10 mg/m3	Form: Total Dust PEL: 15 mg/m3 Form: Respirable Fraction PEL: 5 mg/m3	Insufficient Data on Glycerin Mist
Methanol CAS No: 67-56-1	< 1 % w/w	TWA: 260 mg/m3	PEL: 260 mg/m3	TWA: 260 mg/m3

Engineering Controls — Use proper equipment and storage conditions to control airborne levels below recommended exposure limits.

Personal Protective Equipment

Eye Protection: — Use normal eye protection practices such as safety glasses with side shields. Use chemical goggles if risk of splashing is high.

Skin Protection — Handle with chemical resistant gloves. Dispose of contaminated gloves after use. Nitrile gloves recommended.

Respiratory Protection — If workers could be exposed to concentrations above the exposure limits in Section 8, use a full face respirator with multipurpose combination cartridges.

9. PHYSICAL AND CHEMICAL PROPERTIES

Physical State	Liquid	**Flash Point**	None to Boil (ASTM D93)
Color	Light brown	**Boiling Point**	Not determined
Odor	Musty – Sweet Odor	**Evaporation Rate**	Not determined
Odor Threshold	Not determined	**UEL/LEL**	Not determined
		Flammability (solid, gas)	Not determined
pH	4.00-11.00	**Vapor Pressure**	Not determined
Solubility in Water	Highly soluble in water	**Vapor Density**	Not determined
		Relative Density	Not Determined
Bulk Density	10.22 lbs/gal	**Partition Coefficient**	Not determined
Specific gravity	1.225@ 20°C	**Autoignition Temperatures**	
		Decomposition Temperature	Not determined
Viscosity	45 cPs @ 20C		

10. STABILITY AND REACTIVITY

Reactivity	Avoid contact with oxidizing agents (e.g. nitric acid, peroxides, chromates)
Chemical Stability	Stable under normal storage conditions
Possibility of hazardous reactions	None known
Conditions to Avoid	Heat, flames, sparks. Contact with oxidizing agents
Incompatible Materials	None known
Hazardous Decomposition Products	Oxides of carbon under high heat

11. TOXICOLOGY

INSUFFICIENT DATA ON MIXTURE. DATA ON INDIVIDUAL COMPONENTS PROVIDED BELOW

Eye Contact	The components in this product may result in mild eye irritation from contact with liquid or vapors. Symptoms include redness, swelling, watering.
Skin Contact	The components in this product may result in mild skin irritation. Symptoms include redness, itching, burning, dermatitis.
Inhalation	Breathing high mist concentrations may be harmful. Inhalation can cause irritation of the throat and lungs.
Ingestion	Ingestion of this product may result in nausea, vomiting and diarrhea. Aspiration into the lungs can cause damage and inflammation to the lungs.
Target Organs	Lungs, Kidneys
Prolonged Exposure	Symptoms include nausea, headache, vomiting

Glycerin; Glycerol CAS No. 56-81-5

Acute Toxicity	Dermal LD50 = > 10,000 mg/kg (Rabbit) Inhalation LC50 = > 570 mg/m^3 1 hr (Rat) Oral LD50 = 12,600 mg/kg (Rat)
Carcinogenicity	Not listed by ACGIH, IARC, NIOSH, NTP or OSHA
Mutagenicity	No data available
Reproductive Toxicity	No data available

Methanol 67-56-1

Acute Toxicity	Dermal LD50 = 15,800 mg/kg (Rabbit) Inhalation LC50 = 64,000 mg/m^3 4 hr (Rat) Oral LD50 = 5,600 mg/kg (Rat)
Carcinogenicity	Not listed by ACGIH, IARC, NIOSH, NTP or OSHA
Mutagenicity	No data available
Reproductive Toxicity	No data available

12. ECOLOGICAL INFORMATION

Ecotoxicity	Glycerin: 96 hr LC50: 51,000-57,000 mg/L (Rainbow Trout), > 5000 mg/L Goldfish Methanol: 96 hr LC50: > 15,400-29,400 mg/L (Fish)
Persistence and degradability	No data available
Bioaccumulative potential	No data available
Mobility in soil	No data available
Other adverse effects	No data available

13. DISPOSAL CONSIDERATIONS

This product as supplied is not classified as a RCRA hazardous waste according to 40 CFR 261. However it should be fully characterized prior to disposal as contamination with other materials may subject it to hazardous waste regulations. RCRA requires the user of the product to determine whether the product meets RCRA criteria for hazardous waste. Always consult with local, state and federal regulations prior to disposal.

14. TRANSPORTATION INFORMATION

US Domestic DOT	Not Regulated
Shipping Name	Glycerin; Glycerol
IMDG	Not dangerous goods
IATA	Not dangerous goods
Marine pollutant	No

15. REGULATORY INFORMATION

United States

Toxic Substances Control Act

The components of this product are listed on the TSCA Inventory of Existing Chemical Substances

Section 302 (EHS) TPQ	Not applicable
Section 304 (EHS) TPQ	Not applicable

SARA Section 311/312 Hazard Categories

Acute - NO
Chronic – NO
Physical - None
Pressure Hazard - NO
Fire Hazard - NO

SARA Section 313

This product may contain trace amounts of a chemical that is subject to reporting requirements of SARA

Methanol CAS # 67-56-1 Typical % Weight in Product 0.0-0.10%

CERCLA

This product may contain trace amounts of a chemical that is subject to reporting requirements of CERCLA
Methanol RQ # 5,000. Typical % Weight in Product 0.0-0.10%

Clean Water Act Section 311 Hazardous Substances (40 CFR 117.3): None

State Right to Know Regulations

Chemical Name: Glycerin	
California – Proposition 65	Not applicable
Massachusetts Right to Know	Glycerin
Minnesota Hazardous Substances List	Glycerin mist
New Jersey Right to Know	None
Pennsylvania Right to Know	Glycerin
Rhode Island Right to Know	Glycerin

16. ADDITIONAL INFORMATION

MSDS REVISION STATUS: May 31, 2015| Replaces February 26, 2015

THIS MATERIAL SAFETY DATA SHEET (MSDS) HAS BEEN PREPARED IN COMPLIANCE WITH THE FEDERAL OSHA HAZARD COMMUNICATION STANDARD, 29 CFR 1910.1200. THE INFORMATION IN THIS MSDS SHOULD BE PROVIDED TO ALL WHO WILL USE, HANDLE, STORE, TRANSPORT, OR OTHERWISE BE EXPOSED TO THIS PRODUCT. WE BELIEVE THIS INFORMATION TO BE RELIABLE AND UP TO DATE AS OF ITS PUBLICATION DATE, BUT MAKE NO WARRANTY THAT IT IS. IF THIS MSDS IS MORE THAN THREE YEARS OLD YOU SHOULD CONTACT THE SUPPLIER TO MAKE CERTAIN THAT THE INFORMATION IS CURRENT.





Health	2
Fire	0
Reactivity	1
Personal Protection	E

Material Safety Data Sheet
Sodium carbonate MSDS

Section 1: Chemical Product and Company Identification

Product Name: Sodium carbonate

Catalog Codes: SLS3481, SLS1264, SLS4105, SLS1894, SLS3316

CAS#: 497-19-8

RTECS: VZ4050000

TSCA: TSCA 8(b) inventory: Sodium carbonate

CI#: Not available.

Synonym: Crystal Carbonate, Disodium Carbonate, Sal Soda, Soda Asha, Washing Soda

Chemical Name: Sodium Carbonate, Anhydrous

Chemical Formula: Na2-C-O3

Contact Information:

Sciencelab.com, Inc.
14025 Smith Rd.
Houston, Texas 77396

US Sales: **1-800-901-7247**
International Sales: **1-281-441-4400**

Order Online: ScienceLab.com

CHEMTREC (24HR Emergency Telephone), call: 1-800-424-9300

International CHEMTREC, call: 1-703-527-3887

For non-emergency assistance, call: 1-281-441-4400

Section 2: Composition and Information on Ingredients

Composition:

Name	CAS #	% by Weight
Sodium carbonate	497-19-8	100

Toxicological Data on Ingredients: Sodium carbonate: ORAL (LD50): Acute: 4090 mg/kg [Rat]. 6600 mg/kg [Mouse]. DUST (LC50): Acute: 2300 mg/m 2 hours [Rat]. 1200 mg/m 2 hours [Mouse].

Section 3: Hazards Identification

Potential Acute Health Effects: Hazardous in case of skin contact (irritant), of eye contact (irritant), of ingestion, of inhalation (lung irritant).

Potential Chronic Health Effects:
Slightly hazardous in case of skin contact (sensitizer). CARCINOGENIC EFFECTS: Not available. MUTAGENIC EFFECTS: Not available. TERATOGENIC EFFECTS: Not available. DEVELOPMENTAL TOXICITY: Not available. The substance may be toxic to upper respiratory tract, skin, eyes. Repeated or prolonged exposure to the substance can produce target organs damage.

Section 4: First Aid Measures

Eye Contact:
Check for and remove any contact lenses. In case of contact, immediately flush eyes with plenty of water for at least 15 minutes. Cold water may be used. Get medical attention.

Skin Contact:
In case of contact, immediately flush skin with plenty of water. Cover the irritated skin with an emollient. Remove contaminated clothing and shoes. Cold water may be used.Wash clothing before reuse. Thoroughly clean shoes before reuse. Get medical attention.

Serious Skin Contact:
Wash with a disinfectant soap and cover the contaminated skin with an anti-bacterial cream. Seek immediate medical attention.

Inhalation:
If inhaled, remove to fresh air. If not breathing, give artificial respiration. If breathing is difficult, give oxygen. Get medical attention.

Serious Inhalation: Not available.

Ingestion:
Do NOT induce vomiting unless directed to do so by medical personnel. Never give anything by mouth to an unconscious person. Loosen tight clothing such as a collar, tie, belt or waistband. Get medical attention if symptoms appear.

Serious Ingestion: Not available.

Section 5: Fire and Explosion Data

Flammability of the Product: Non-flammable.

Auto-Ignition Temperature: Not applicable.

Flash Points: Not applicable.

Flammable Limits: Not applicable.

Products of Combustion: Emits Na2O fumes when heated to decompositon.

Fire Hazards in Presence of Various Substances: Not applicable.

Explosion Hazards in Presence of Various Substances:
Risks of explosion of the product in presence of mechanical impact: Not available. Risks of explosion of the product in presence of static discharge: Not available.

Fire Fighting Media and Instructions: Not applicable.

Special Remarks on Fire Hazards:
Sodium carbonate can ignite and burn fiercely in contact with fluoride. Sodium Carbonate in contact with fluorine decomposed at ordinary temperature with incandescence.

Special Remarks on Explosion Hazards:
Reacts explosively with red-hot aluminum metal. Sodium carbonate + ammonia in arabic gum solution will explode.

Section 6: Accidental Release Measures

Small Spill:
Use appropriate tools to put the spilled solid in a convenient waste disposal container. If necessary: Neutralize the residue with a dilute solution of acetic acid. Finish cleaning by spreading water on the contaminated surface and dispose of according to local and regional authority requirements.

Large Spill:
Use a shovel to put the material into a convenient waste disposal container. Neutralize the residue with a dilute solution of acetic acid. Finish cleaning by spreading water on the contaminated surface and allow to evacuate through the sanitary system.

Section 7: Handling and Storage

Precautions:
Do not ingest. Do not breathe dust. Wear suitable protective clothing. In case of insufficient ventilation, wear suitable respiratory equipment. If ingested, seek medical advice immediately and show the container or the label. Avoid contact with skin and eyes. Keep away from incompatibles such as acids.

Storage:
Hygroscopic. Keep container tightly closed. Keep container in a cool, well-ventilated area. Do not store above 24°C (75.2°F). Hygroscopic

Section 8: Exposure Controls/Personal Protection

Engineering Controls:
Use process enclosures, local exhaust ventilation, or other engineering controls to keep airborne levels below recommended exposure limits. If user operations generate dust, fume or mist, use ventilation to keep exposure to airborne contaminants below the exposure limit.

Personal Protection:
Splash goggles. Lab coat. Dust respirator. Be sure to use an approved/certified respirator or equivalent. Gloves.

Personal Protection in Case of a Large Spill:
Splash goggles. Full suit. Dust respirator. Boots. Gloves. A self contained breathing apparatus should be used to avoid inhalation of the product. Suggested protective clothing might not be sufficient; consult a specialist BEFORE handling this product.

Exposure Limits: Not available.

Section 9: Physical and Chemical Properties

Physical state and appearance: Solid. (Solid powder.)

Odor: Odorless.

Taste: Alkaline.

Molecular Weight: 105.99 g/mole

Color: White.

pH (1% soln/water): 11.5 [Basic.]

Boiling Point: Not available.

Melting Point: 851°C (1563.8°F)

Critical Temperature: Not available.

Specific Gravity: Density: 2.532 (Water = 1)

Vapor Pressure: Not applicable.

Vapor Density: Not available.

Volatility: Not available.

Odor Threshold: Not available.

Water/Oil Dist. Coeff.: Not available.

Ionicity (in Water): Not available.

Dispersion Properties: See solubility in water.

Solubility:

Soluble in hot water, glycerol. Partially soluble in cold water. Insoluble in acetone, alcohol.

Section 10: Stability and Reactivity Data

Stability: The product is stable.

Instability Temperature: Not available.

Conditions of Instability: Incompatible materials, moisture

Incompatibility with various substances:
Reactive with acids. Slightly reactive to reactive with moisture.

Corrosivity: Non-corrosive in presence of glass.

Special Remarks on Reactivity:
Hygroscopic. Combines with water with evolution of heat. Incompatible with phosphorus pentoxide, lithium, fluorine, fluoride, ammonia + silver nitrate, 2,4,6-trinitrotoluene, ammonia, acids, sodium sulfide + water, hydrogen peroxide, red hot alumium metal, sodium sulfide, zinc, calcium hydroxide. Sodium Carbonate is decomposed by acids with effervescence. Reacts violently with F2, Lithium, and 2,4,6-trinitrotoluene. Sodium begins to decompose at 400 C to evolve CO2.

Special Remarks on Corrosivity: Hot concentrated solutions of sodium carbonate are mildly corrosive to steel.

Polymerization: Will not occur.

Section 11: Toxicological Information

Routes of Entry: Inhalation. Ingestion.

Toxicity to Animals:
WARNING: THE LC50 VALUES HEREUNDER ARE ESTIMATED ON THE BASIS OF A 4-HOUR EXPOSURE. Acute oral toxicity (LD50): 4090 mg/kg [Rat]. Acute toxicity of the dust (LC50): 1200 mg/m3 2 hours [Mouse].

Chronic Effects on Humans: May cause damage to the following organs: upper respiratory tract, skin, eyes.

Other Toxic Effects on Humans: Hazardous in case of skin contact (irritant), of ingestion, of inhalation (lung irritant).

Special Remarks on Toxicity to Animals: LDL (Lowest Published Lethal Dose) [Man] - Route: Oral; Dose: 714 mg/kg

Special Remarks on Chronic Effects on Humans: May cause adverse reproductive effects based on animal test data

Special Remarks on other Toxic Effects on Humans:
Acute Potential Health Effects: Skin: Causes skin irritation with possible burns depending on the concentration, site (abraded or intact skin), and duration of exposure. Eyes: Causes eye irritation and possible burns. Concentrated solutions may cause permanent corneal injury (permanent corneal opacity). Ingestion: Sodium carbonate ingestion may cause irritation of the digestive tract resulting in nausea, vomiting, diarrhea, thirst, abdominal pain depending on concentration and amount ingested. May also affect the cardiovascular system . Inhalation: Dust may cause respiratory tract and mucous membrane irritation with coughing and shortness of breath (dyspnea), pulmonary edema. Chronic Potential Health Effects: Chronic inhalation may result in decreased pulmonary function, nasal congestion, nosebleeds, perforation of the nasal septum. Other effects of chronic exposure are skin (dermatitis and ulceration), and gastrointestinal complaints. However, the effects of chronic exposure seem to be reversible if exposure is decreased.

Section 12: Ecological Information

Ecotoxicity: Not available.

BOD5 and COD: Not available.

Products of Biodegradation:
Possibly hazardous short term degradation products are not likely. However, long term degradation products may arise.

Toxicity of the Products of Biodegradation: The products of degradation are less toxic than the product itself.

Special Remarks on the Products of Biodegradation: Not available.

Section 13: Disposal Considerations

Waste Disposal:
Waste must be disposed of in accordance with federal, state and local environmental control regulations.

Section 14: Transport Information

DOT Classification: Not a DOT controlled material (United States).

Identification: Not applicable.

Special Provisions for Transport: Not applicable.

Section 15: Other Regulatory Information

Federal and State Regulations: TSCA 8(b) inventory: Sodium carbonate

Other Regulations: EINECS: This product is on the European Inventory of Existing Commercial Chemical Substances.

Other Classifications:

WHMIS (Canada): CLASS D-2B: Material causing other toxic effects (TOXIC).

DSCL (EEC):
R36/37/38- Irritating to eyes, respiratory system and skin. S22- Do not breathe dust. S26- In case of contact with eyes, rinse immediately with plenty of water and seek medical advice.

HMIS (U.S.A.):

Health Hazard: 2

Fire Hazard: 0

Reactivity: 1

Personal Protection: E

National Fire Protection Association (U.S.A.):

Health: 2

Flammability: 0

Reactivity: 1

Specific hazard:

Protective Equipment:
Gloves. Lab coat. Dust respirator. Be sure to use an approved/certified respirator or equivalent. Wear appropriate respirator when ventilation is inadequate. Splash goggles.

Section 16: Other Information

References: Not available.

Other Special Considerations: Not available.

Created: 10/10/2005 08:26 PM

Last Updated: 05/21/2013 12:00 PM

The information above is believed to be accurate and represents the best information currently available to us. However, we make no warranty of merchantability or any other warranty, express or implied, with respect to such information, and we assume no liability resulting from its use. Users should make their own investigations to determine the suitability of the information for their particular purposes. In no event shall ScienceLab.com be liable for any claims, losses, or damages of any third party or for lost profits or any special, indirect, incidental, consequential or exemplary damages, howsoever arising, even if ScienceLab.com has been advised of the possibility of such damages.

newterra ltd.
1291 California Avenue, Brockville, ON K6V 5W3
(800) 420-4056 / www.newterra.com

APPENDIX G

GLOSSARY & TERMS

© 2016 by **newterra**, ltd.
All rights reserved. No part of this document may be reproduced or transmitted in any form or by any means, electronic, mechanical, photocopying, recording, or otherwise, without prior written permission of **newterra** ltd.

newterra ltd.
1291 California Avenue, Brockville, ON K6V 5W3
(800) 420-4056 / www.newterra.com

Glossary & Terms

The following section defines abbreviations and technical terms used within this manual and the wastewater treatment industry in general.

1. ACRONYMS & ABBREVIATIONS

ACRONYM	DEFINITION
AT	Aeration Tank
BOD	Biological Chemical Oxygen Demand
cBOD	Carbonaceous Biological Oxygen Demand
CaCO3	Calcium Carbonate
CIP	Clean In Place
COD	Chemical Oxygen Demand
DO	Dissolved Oxygen
E-Coli	Escherichia coli - Gram-negative, rod-shaped bacterium
EQ	Equalization Tank
FOG	Fat, Oil and Grease
kPa	Kilo Pascal
L	Liter
LMH	Liters / m^2 of Membrane Area per Hour (Flux)
MBR	Membrane Bioreactor
MLSS	Mixed Liquor Suspended Solids
MLVSS	Mixed Liquor Volatile Suspended Solids
MT	Membrane Tank
NaOCl	Sodium Hypochlorite
NaOH	Sodium Hydroxide
NH_3 -N	Ammonia as Nitrogen (unionized)
NH_4 -N	Ammonium as Nitrogen (ionized)
NO_3 -N	Nitrate Nitrogen

© 2016 by **newterra**, ltd.
All rights reserved. No part of this document may be reproduced or transmitted in any form or by any means, electronic, mechanical, photocopying, recording, or otherwise, without prior written permission of **newterra** ltd.

ACRONYM	DEFINITION
NO_2 -N	Nitrite Nitrogen
NTU	Nephelometric Turbidity Unit
O_2	Molecular Oxygen
OUR	Oxygen Uptake Rate
PC	Primary Clarifier
P&ID	Process and Instrumentation Diagram
pH	Measure of Acidity & Alkalinity
PLC	Programmable Logic Controller
ppb	parts per billion
ppm	parts per million
psi	pounds per square inch
PSL	Pressure Switch Low
RAS	Return Activated Sludge
SDI	Silt Density Index
TP	Total Phosphorus
TMP	Transmembrane Pressure
TKN	Total Kjeldahl Nitrogen
TN	Total Nitrogen
TDS	Total Dissolved Solids
TS	Total Solids
TSS	Total Suspended Solids
VFD	Variable Frequency Drive
VSS	Volatile Suspended Solids
UF	Ultrafiltration
UV	Ultraviolet
WAS	Waste Activated Sludge
WWTP	Waste Water Treatment Plant

© 2016 by **newterra**, ltd.
All rights reserved. No part of this document may be reproduced or transmitted in any form or by any means, electronic, mechanical, photocopying, recording, or otherwise, without prior written permission of **newterra** ltd.

2. TECHNICAL TERMS DEFINITION

ACID	Substance which solution has a pH below 7.0, sour taste, releases hydroxyl ions in water and reacts with bases.
ACTIVATED SLUDGE	The floc produced in wastewater due to the growth of bacteria and other organisms in the presence of dissolved oxygen.
ACTIVATED SLUDGE PROCESS	Activated sludge is a process for treating sewage and industrial wastewaters using air and a biological floc composed of bacteria and protozoa.
ACTUATED VALVE	Valve with an actuator that is controlled by an external command.
ADVANCED WASTEWATER TREATMENT	Process designed to produce an effluent of higher quality than normally achieved by secondary treatment processes.
AEROBIC	Life or processes that require, or are not destroyed by, the presence of free elemental oxygen.
AEROBIC BACTERIA	Bacteria that require the presence of oxygen to live and grow.
AEROBIC DIGESTION	The aerobic digestion process is a treatment process that utilizes aerobic microbes to stabilize the solids. The microbes digest solids from primary sedimentation processes, and those from secondary treatment processes. Due to the length of time that the solids remain under aeration, the long solids retention time allows for the microbes to feed off of the cell contents of other dying/decaying microbes under digestion. This is referred to as "endogenous respiration" or "endogenous stabilization." There will be an "inert faction" between 20 and 25% by weight, in the resulting stabilized solids. This inert faction will consist of fine inorganic solids, organic solids, and cell components that will not be degradable by

© 2016 by **newterra**, ltd.
All rights reserved. No part of this document may be reproduced or transmitted in any form or by any means, electronic, mechanical, photocopying, recording, or otherwise, without prior written permission of **newterra** ltd.

the process.

AEROBIC ZONE

An environment where there is dissolved air or free oxygen.

AIR DIAPHRAGM METERING PUMP

Air diaphragm metering pump provides chemical dosing at measured rates. The dosing is set manually and it is regulated either by the amount of compressed air driving the pump or by setting the backpressure of the pumps.

AIR FLOW SWITCH (PSL)

Located on the supplemental aeration piping, used to indicate when a specific flow rate has been reached for a blower. This flow rate identifies low aeration to the aeration or membrane tank, triggering an alarm or alert.

AIR SCOURING

Diffusers placed below the membrane modules generate air bubbles in water that scour (rub) the membrane surface and keep it clean.

ALARM

A visible or audible indication of abnormal situation. An alarm may be an operator interface screen message, a light, a buzzer or another form of communication to the operator.

ALKALINE

A solution having an excess of hydroxyl (OH) ions - with pH greater than 7.0.

ALKALINITY

The capacity of water or wastewater for neutralizing an acid. Alkalinity in wastewater results from the presence of carbonate, bicarbonate, and hydroxide. Alkalinity in water helps to resist changes in pH caused by addition of acids. Generally expressed as an amount of $CaCO_3$ equivalent.

ANAEROBIC

Life or processes that require, or are not destroyed by, the absence of free elemental oxygen.

ANAEROBIC BACTERIA

Any bacteria that can survive in partial or complete absence of oxygen by using molecular oxygen found in

© 2016 by **newterra**, ltd.
All rights reserved. No part of this document may be reproduced or transmitted in any form or by any means, electronic, mechanical, photocopying, recording, or otherwise, without prior written permission of **newterra** ltd.

newterra ltd.
1291 California Avenue, Brockville, ON K6V 5W3
(800) 420-4056 / www.newterra.com

nitrates and sulfates.

ANAEROBIC BIOLOGICAL REACTOR	Anaerobic (in the absence of oxygen) decomposition breaks down large molecules into small molecules increasing the rate of methane generation, which can be used for energy recovery.
ANALOG	An electrical signal that is proportional to the size of the variable being monitored or controlled.
ANOXIC	Conditions where some species other than oxygen acts as the electron donor for biochemical reactions.
AUTOMATIC FLOW VALVE	This valve is used when regular changes are required in the state of the valve (fully open or fully closed only). It is controlled by the PLC.
BACKPULSE / BACKFLUSH / BACKWASH	A mode of operation in which the flow of permeate is reversed through the membrane. During backwash, accumulated solids go away from the membrane surface due to the combined effects of the membrane air scouring and backwash of permeate.
BIOCHEMICAL (BIOLOGICAL) OXYGEN DEMAND	A measure of the amount of oxygen consumed in the biological process breaking down organic matter in water – the greater the BOD, the greater the degree of pollution.
BIOCIDE	A chemical for preventing biological growth.
BIOLOGICAL TREATMENT (or BIOTREATMENT)	Process whereby dissolved organic chemical constituents are removed through biodegradation.
BIOMASS	The mixture of biodegradable material, bacteria, and biosolids present in a biological wastewater treatment system.
BIOSOLIDS	Material from sludge treatment, which contains organic matter and plant nutrient; unlike excess waste activated sludge, biosolids have undergone a treatment to decrease or eliminate pathogenic organisms. Biosolids

© 2016 by **newterra**, ltd.
All rights reserved. No part of this document may be reproduced or transmitted in any form or by any means, electronic, mechanical, photocopying, recording, or otherwise, without prior written permission of **newterra** ltd.

can be beneficially recycled.

BLOWER	Blowers are used to introduce air in order to create an aerobic environment for BOD removal and for scouring the membranes to prevent membrane fouling.
MODULE (for newterra MicroClear® MBR)	Membrane filtration unit; it is a group of interlocked MicroClear® cassettes, fastened together to act as a single unit.
CHEMICAL OXYGEN DEMAND	A test used to estimate the amount of organic matter within a sample using a strong chemical oxidizing agent. The COD is generally higher than the BOD (for sewage BOD / COD ratio varies from 0.4 to 0.8).
COAGULANT	An agent that causes fine or suspended impurities to group together (coagulate).
COMBINED SEWER	A sewer system that carries both sanitary sewage and stormwater (SW) runoff.
CONDITIONING FOULING	First stage of membrane fouling through adsorption of material.
CONTAMINANT	A source of contamination, an impurity and any substance in water which is not H_2O.
CRITICAL FLUX	Flux below which permeability decline is considered negligible.
DENITRIFICATION	Biochemical reduction of nitrate to nitrogen gas.
EFFLUENT	Wastewater – treated or untreated – that flows out of a treatment plant, sewer, or industrial outfall.
ELECTRON DONOR	Species capable of donating an electron to a suitable

© 2016 by **newterra**, ltd.
All rights reserved. No part of this document may be reproduced or transmitted in any form or by any means, electronic, mechanical, photocopying, recording, or otherwise, without prior written permission of **newterra** ltd.

newterra ltd.
1291 California Avenue, Brockville, ON K6V 5W3
(800) 420-4056 / www.newterra.com

	acceptor and is oxidized as a result.
EQUALIZATION TANK	Used for equalization of flow and composition of wastewater.
F/M (RATIO)	Food-to-microorganism ratio (F/M) – rate at which substrate is fed to the biomass compared to the mass of biomass solids.
FEED	Feed is the term use to define fluid entering a membrane module or wastewater treatment plant.
FILTER CAKE	Accumulated particles on a filter surface.
FILTRATE	Portion of the feed stream which has passed through a filter; also known as “permeate” in membrane system.
FLOC	Aggregated solid (biomass) particle.
FLUX (or PERMEATE VELOCITY)	Quantity of material (water) passing through an area of membrane per unit time – usually expresses LMH ($L/m^2.h$), or gfd ($gal/ft^2.d$).
FOULING	Processes leading to deterioration of flux due to surface or internal blockage of the membrane.
GLYCERIN	Glycerin is the commercial form of glycerol. It is used for membrane long term preservation to avoid membrane drying.
HOUSING	Vessel which holds a membrane module.
HYDRAULIC LOADING RATE	Rate at which water enters the reactor.

© 2016 by **newterra**, ltd.
All rights reserved. No part of this document may be reproduced or transmitted in any form or by any means, electronic, mechanical, photocopying, recording, or otherwise, without prior written permission of **newterra** ltd.

newterra ltd.
1291 California Avenue, Brockville, ON K6V 5W3
(800) 420-4056 / www.newterra.com

HYDRAULIC RETENTION TIME (HRT)	The time required to displace the working volume of a bioreactor. HRT (d) = Bioreactor volume (L) / Feed flow rate (L/d).
INFILTRATION	Entry of water into a sewer system from sources other than infiltration – such as defective pipes, pipe joints, connections, or manhole walls.
INFLOW	Entry of water into a sewer system through such sources as defective pipes, pipe joints, connections, or manhole walls.
INPUTS / OUTPUTS	Inputs / Outputs refer to the direction of the electronic signal in reference to the PLC. They can be either digital or analog signals.
INTENSIVE / RECOVERY CLEAN	Cleaning with aggressive chemicals to recover membrane permeability.
IRREVERSIBLE / PERMANENT FOULING	Not removed by physical cleaning but removed by chemical cleaning.
LAND APPLICATION	Treatment or disposal of wastewater or wastewater solids by spending it on land under controlled conditions.
LEVEL SWITCH	Level switches are placed in tanks to indicate water level.
MICROORGANISMS	Microscopic organisms, either plant or animal, invisible or barely visible to the naked eye. Examples: algae, bacteria, fungi, protozoa, and viruses.
MAINTENANCE CLEANING	Cleaning with less aggressive chemicals to maintain membrane permeability.
MEMBRANE	A porous synthetic material which acts as a highly efficient barrier or filter in the range of molecular dimensions – allowing passage of ions, water and other solvents, and very small molecules – but most impermeable to macromolecules. Membrane classes include – MF (microfiltration), UF (ultrafiltration), NF (nanofiltration), RO (reverse osmosis).

© 2016 by **newterra**, ltd.
All rights reserved. No part of this document may be reproduced or transmitted in any form or by any means, electronic, mechanical, photocopying, recording, or otherwise, without prior written permission of **newterra** ltd.

MEMBRANE BIOREACTOR	A biological wastewater treatment system that uses a membrane to separate water from biomass.
MEMBRANE CONFIGURATION	In membrane separation technology, configuration of a membrane product describes its construction or membrane spatial arrangement. Basic membrane configurations include hollow fiber, spiral, tubular, and flat-sheet.
MEMBRANE PACKING DENSITY	Membrane area per unit volume.
MEMBRANE TANK / BASIN	Tank/basin wherein membrane cassettes are placed.
MESOPHILIC	Thriving at intermediate temperatures: 20 to 45 ^{0}C (15 ^{0}C optimum).
MESOPORE	Pore with diameter between 2 and 50 µm.
METHANOGENS	Microorganisms producing methane as a metabolic byproduct.
MICROFILTRATION (MF)	A process using a membrane class to separate relatively large particles – 0.1 to 3 µm in diameter, with relatively low applied pressures. In crossflow microfiltration system, feed solution flows perpendicular to the filter surface.
MIXED LIQUOR SUSPENDED SOLIDS (MLSS, mg/L))	A measure of the quantity of suspended solids in the aeration tank of an activated sludge treatment system.
MIXED LIQUOR VOLATILE SUSPENDED SOLIDS (MLVSS, mg/L)	The portion of MLSS that vaporizes when heated to 550°C (1022° F).
MODULE (membrane)	Smallest practical unit containing one or more membranes and supporting structures.

© 2016 by **newterra**, ltd.
All rights reserved. No part of this document may be reproduced or transmitted in any form or by any means, electronic, mechanical, photocopying, recording, or otherwise, without prior written permission of **newterra** ltd.

newterra ltd.
1291 California Avenue, Brockville, ON K6V 5W3
(800) 420-4056 / www.newterra.com

NITRIFICATION	Biochemical oxidation of ammonia to nitrate.
NUTRIENTS	Any substance that is assimilated by organisms and promotes growth; generally applied to nitrogen and phosphorus in wastewater, but also applied to other essential and trace elements.
OPERATION AND MAINTENANCE (O&M)	Organized procedure for causing a piece of equipment or a treatment plant to perform its intended functions and for keeping the equipment or plant in such a condition that it is able to continually and reliably perform its intended function.
(ORGANIC) LOADING RATE	Rate at which (organic) matter is introduced into the reactor.
PERMEABLE	Porous to the passage or penetration by fluids.
PERMEABILITY	The ratio of the flux and transmembrane pressure at that flux (L/m^2 / h/ kPa or gfd/psi).
PERMEATE	Water or fluid which has passed through the membrane; also referred to as “filtrate”.
PERMEATE PUMP	Vacuum pump which draws permeate through the membrane, as in MBR.
PERMIT	A legal document issued by the government agency. In wastewater treatment, a discharge permit requires that the plant operator achieve specific water quality standards and discharge limits by a certain date, and also establishes monitoring and reporting requirements.
PLATE-AND-FRAME	Synonymous with “flat-sheet”.
PLUG FLOW	Flow in which no back-mixing or dispersion occurs along the length of the pipe or reactor.

© 2016 by **newterra**, ltd.
All rights reserved. No part of this document may be reproduced or transmitted in any form or by any means, electronic, mechanical, photocopying, recording, or otherwise, without prior written permission of **newterra** ltd.

POLLUTANT	A contaminant at high enough concentration to endanger the aquatic environment or public health.
PORE	An opening in a membrane or filter matrix.
POROUS	Ability of certain substances to pass fluids due to an open physical structure.
POROUS PLUGGING	Type of membrane fouling – due to pore blockage.
POROUS MEMBRANE	Membrane of low selectivity operating by physical straining alone.
PRETREATMENT	In membrane wastewater treatment systems, pretreatment is the initial processing of wastewater to prolong the life of a membrane system and to optimize membrane performance. Pretreatment includes screening, equalization, oil & grease removal, primary clarification, aeration to oxidize colloidal and dissolved organics in wastewater.
RECEIVING STREAM	A river, lake, ocean, or other water course into which wastewater or treated effluent is discharged.
RELAXATION	Ceasing permeation whilst continuing to scour the membrane with air bubbles.
RESISTANCE	Resistance to flow – proportional to flow rate-to-pressure ratio.
RETENTATE	Water or fluid which is rejected by the membrane – portion of the feed solution in UF and RO that does not pass through the membrane; also called “concentrate” or “reject”.
REVERSIBLE OR TEMPORARY FOULING	Gross solids attached to the membrane surface and which can be removed by physical cleaning relatively easily – such as backflushing or relaxation.

© 2016 by **newterra**, ltd.
All rights reserved. No part of this document may be reproduced or transmitted in any form or by any means, electronic, mechanical, photocopying, recording, or otherwise, without prior written permission of **newterra** ltd.

SANITARY SEWER	A sewerage system that carries only household and commercial wastewater / sewage.
SCALING	Buildup of precipitated salts on a surface – such as pipes, tanks, boiler tubes, membrane surface (in RO, UF) resulting in a physical or chemical change.
SECONDARY TREATMENT - CONVENTIONAL	Generally, a level of treatment that produces removal efficiencies of 85 percent for BOD and suspended solids – sometimes used interchangeably with the concept of biological wastewater treatment, where wastewater is mixed with air or oxygen and sludge to encourage the growth of bacteria that “eat” organic pollutants.
SEWER	An artificial, usually subterranean conduit, used to carry off sewage or wastewater.
SILT DENSITY INDEX (SDI)	A test used to measure the level of suspended solids in feed water (especially for RO). It is a measure of the tendency of water to foul a membrane, based on a timed flow through a membrane filter (0.45 µm), at a constant pressure, also known as “fouling index”.
SHEAR (STRESS)	Force applied to a body which tends to produce a change in its shape, but not its volume.
SIDE-STREAM	Stream outside the bioreactor.
STACK	Smallest practical unit containing one or more membranes and supporting structures.
SUBSTRATE	Surface or medium on which an organism grows or is attached.
SUPERNATANT	Liquid clarified by sedimentation.

© 2016 by **newterra**, ltd.
All rights reserved. No part of this document may be reproduced or transmitted in any form or by any means, electronic, mechanical, photocopying, recording, or otherwise, without prior written permission of **newterra** ltd.

SURFACE POROSITY	Percentage of the surface area occupied by the pores.
SUSPENDED SOLIDS	Solid pollutants that either float on the surface of, or are suspended in, wastewater.
SUSTAINABLE FLUX	Flux for which the TMP (transmembrane pressure) increases gradually at an acceptable rate, such that chemical cleaning is not necessary.
THERMOPHILIC	Thriving at relatively high temperatures (49- 57 ^{0}C (45 ^{0}C optimum).
TOTAL SOLIDS	Total dissolved and undissolved solids in water or wastewater.
TRANSMEMBRANE PRESSURE	Pressure difference from the feed side of the membrane to the permeate side.
TURBIDITY	A suspension of fine particles in water that obscure the light rays and cause cloudiness and will not readily settle due to small particle size. Measure of the clarity of an otherwise clean liquid – cloudy or hazy appearance in a naturally clear liquid. Typically, turbidity of the MBR permeate is less than 1 N.T.U.
TURBIDITY UNITS	Measurement of relative ability of a solution to allow a light beam to pass through it; usual units are N.T.U. (Nephelometric Turbidity Units).
ULTRAFILTER	A mechanical unit used in the membrane separation process.
ULTRAFILTRATE	A synonym for UF “permeate”.

© 2016 by **newterra**, ltd.
All rights reserved. No part of this document may be reproduced or transmitted in any form or by any means, electronic, mechanical, photocopying, recording, or otherwise, without prior written permission of **newterra** ltd.

ULTRAFILTRATION (UF)	Membrane separation process based on size exclusion. UF operates in the molecular weight cut-off (MWCO) range from 1,000 MWCO to 200,000 MWCO, or 0.002 µm to 0.1 µm. Emulsified oils, suspended solids, bacteria, and large molecules are rejected by UF membranes. Water and small molecules – dyes, surfactants, dissolved salts, and solvents pass through in the permeate.
VOLUMETRIC MASS TRANSFER COEFFICIENT	A combination of the overall liquid mass transfer coefficient and the specific area for mass transfer .The term measures the mass transfer of oxygen into the liquid via air bubbles.
WASTEWATER	Spent or used water from a community or industry that contains dissolved and/or suspended matter.
α or β FACTOR	Factors applied to correct biological aeration demand for dissolved and suspended solids content of biomass.

© 2016 by **newterra**, ltd.
All rights reserved. No part of this document may be reproduced or transmitted in any form or by any means, electronic, mechanical, photocopying, recording, or otherwise, without prior written permission of **newterra** ltd.

newterra ltd.
1291 California Avenue, Brockville, ON K6V 5W3
(800) 420-4056 / www.newterra.com

APPENDIX H

Biological Treatment & Monitoring Parameters

© 2016 by **newterra**, ltd.
All rights reserved. No part of this document may be reproduced or transmitted in any form or by any means, electronic, mechanical, photocopying, recording, or otherwise, without prior written permission of **newterra** ltd.

newterra ltd.
1291 California Avenue, Brockville, ON K6V 5W3
(800) 420-4056 / www.newterra.com

Biological Treatment and Monitoring Parameters

This section offers the introduction of some key terms for biological control and wastewater quality description. It is important that the operators become familiar with how these parameters are obtained and what each of these terms mean and how each relates to the MBR wastewater treatment process operation.

1. Removal of substrates in wastewater

Carbonaceous pollutants removal

The concept of carbonaceous pollutants treatment is very simple. The bacteria remove small organic carbon molecules by 'eating' them. As a result, the bacteria grow, and the wastewater is cleaned. Although there are many thousands of chemical reactions involved in the metabolism of a bacterium, three major processes that are relevant to the biological treatment of sewage are ingestion, respiration, and growth and division.

Some of organic carbons go along the pathway of catabolism or respiration and end up as carbon dioxide, and they are lost to the system. The remaining organic carbons follow the anabolism or growth pathway and end up in new biomass, and these carbons are therefore retained in the system. The purpose of respiration is also to provide the energy that is required for growth and for the maintenance of the bacterium.

These three processes of ingestion, respiration and growth are very highly coupled or meshed. No one process can go faster than the other. One implication of this is that, for instance, if you measure the respiration rate, you are indirectly also measuring the rate of growth and the rate of carbon ingestion.

Growth is the driver and rate-limiting step. Every bacterium has a genetically programmed maximum rate of growth that will be achieved under ideal conditions. As it grows, it withdraws carbon compounds from the internal pool in its cytoplasm. Carbon flows in from the mixed liquor in order to keep this pool topped up. At the same time, energy is used for biosynthesis and growth, and hence the catabolism pathways of respiration also withdraw carbon from the internal pool, and this also results in carbon being drawn in by ingestion.

The three processes correspond to the major processes that we shall see when we examine the operation of the treatment works in aeration basin. Ingestion, respiration and growth and division correspond to biodegradation, aeration requirement and biomass production respectively.

© 2016 by **newterra**, ltd.
All rights reserved. No part of this document may be reproduced or transmitted in any form or by any means, electronic, mechanical, photocopying, recording, or otherwise, without prior written permission of **newterra** ltd.

newterra ltd.
1291 California Avenue, Brockville, ON K6V 5W3
(800) 420-4056 / www.newterra.com

Whilst the concept is very simple, the control of the treatment process is very complex, because of the large number of variables that can affect it. Whilst the major substrate requirement is for carbon growth is also dependent on the intake of nitrogen and phosphorus. The optimum ratio of C:N:P in the mixed liquor is generally thought to be 100:5:1. Trace components, which include S, Na, Ca, Mg, K, and Fe are also required, and are available in abundance in domestic sewage. By contrast, the wastewater from brewing, pulp and paper, and food-processing industries can be deficient in nitrogen and phosphorus. Nutrients therefore need to be added to the mixed liquor to obtain maximum bacterial growth and to optimise carbonaceous treatment. From an operational point of view, lack or an insufficiency of a critical nutrient may result in incomplete treatment, because the bacteria are unable to grow optimally.

Growth can be inhibited, if oxygen concentration falls to very low levels in the aeration tank. This is because oxygen becomes limiting for respiration. Dissolved Oxygen (DO) is not limiting above concentrations of about 1.0 – 2.0 mg/L for bacteria in flocs and about 0.6 mg/L for dispersed bacteria. Below these critical concentrations, the respiration rate falls rapidly due to the unavailability of oxygen. Filamentous bacteria have a greater tolerance of low oxygen levels than floc bacteria. At DO concentrations below the critical concentration, filamentous bulking can occur, as their relative biomass increases.

Bacteria have a genetically determined viable temperature range. For most carbonaceous bacteria of the activated sludge, this is from about 0 to 35°C. However thermophyllic bacteria survive and grow between about 35°C and 60°C. In general, growth rate follows the rule of Arrhenius that chemical reactions double in rate for a 10°C increase in temperature. Thus as the temperature increases, the rate of growth, and hence requirement of oxygen for respiration, increases.

Toxic chemicals in the wastewater can enter the bacteria and inhibit one or more enzymes of the pathways involved in either anabolism or catabolism. If the catabolic reactions of respiration are affected, the rate of respiration and energy production is reduced and the rate of growth is therefore reduced. On the other hand, if the anabolic pathways of biosynthesis are inhibited, the rate of growth is reduced, and this is accompanied by a fall in the rate of respiration, as the requirement for energy is reduced. In the aeration tank, toxicity has the effect of reducing the rate at which organic carbon is degraded. This can be easily monitored by observing changes in the rate of respiration of the activated sludge.

Ammonia removal by nitrification

© 2016 by **newterra**, ltd.
All rights reserved. No part of this document may be reproduced or transmitted in any form or by any means, electronic, mechanical, photocopying, recording, or otherwise, without prior written permission of **newterra** ltd.

newterra ltd.
1291 California Avenue, Brockville, ON K6V 5W3
(800) 420-4056 / www.newterra.com

The ammonia (NH_4-N) removal is achieved by biological nitrification process. Biological nitrification is an aerobic process of conversion of ammonia to nitrite (NO_2-N) and then to nitrate (NO_3-N). Because of the low growth rate and poor cell yield of nitrifying bacteria, nitrification is generally a rate-limiting step in biological nitrogen removal process. The key requirement for nitrification to occur is that the net rate of accumulation of biomass (and hence the net rate of withdrawal of biomass from the system) is less than the growth rate of nitrifying bacteria. Long sludge retention time (SRT) used in MBR system ensures near complete nitrification with an effluent NH_4-N concentration of less than 1 mg/L (as long as influent wastewater characteristics stays within the design range).

Nitrification is affected by a number of environmental factors including pH, temperature, DO concentration, and toxicity. Nitrification is pH sensitive. A pH of 7.0 to 7.2 is normally used to maintain reasonable nitrification rates, with optimal rate occur at pH of 7.5 to 8.0. Alkalinity addition is required, if deficient, to maintain the proper operating pH range. Nitrifiers are much more sensitive to temperature than heterotrophic bacteria. To ensure sufficient nitrification, it is recommended that the MBR unit is operated at a temperature of greater than 15°C. Nitrification rate is also affected by DO level. Nitrifiers are strict aerobes, and thus the reaction rate is susceptible to inhibition at very low DO levels. A DO of 1 mg/L is considered as a minimum requirement to prevent any rate inhibition caused by insufficient DO level. No impact on nitrifiers growth rate is evident when the DO level is greater than 2 mg/L. Toxicity is typically not of concern for camp type wastewater, unless quat ammonia is being used as a disinfectant agent in the camp. Nitrification can easily be restored if non quat based disinfectant is being used.

Total nitrogen removal by nitrification/denitrification

Biological nitrification/denitrification is a two-step process. The first step is nitrification, which is conversion of NH_4-N to NO_3-N through the action of nitrifying bacteria. The second step is nitrate conversion (denitrification), which is carried out by facultative heterotrophic bacteria under anoxic conditions. In denitrification, nitrate serves as the electron acceptor in energy metabolism and is converted to various gaseous end products but principally molecular nitrogen, N_2, which is then stripped from the liquid stream.

Denitrification or reduction of nitrate to nitrogen gas under anoxic conditions depends on nitrate being produced in the nitrification process under aerobic conditions. For total nitrogen removal, first nitrification and then denitrification should occur efficiently to achieve the desired effluent quality. Denitrification releases nitrogen which escapes as an inert gas to the atmosphere while oxygen released stays dissolved in the liquid and thus reduces the overall oxygen requirement of the process. Denitrification also returns part of the alkalinity consumed during nitrification. Thus where feasible, denitrification can be incorporated to reduce energy cost and external alkalinity addition.

© 2016 by **newterra**, ltd.
All rights reserved. No part of this document may be reproduced or transmitted in any form or by any means, electronic, mechanical, photocopying, recording, or otherwise, without prior written permission of **newterra** ltd.

newterra ltd.
1291 California Avenue, Brockville, ON K6V 5W3
(800) 420-4056 / www.newterra.com

The heterotrophic bacteria that perform denitrification are typically less sensitive to inhibition from toxic chemicals compared to nitrifiers. However, toxicity is still a concern. Oxygen has been found to inhibit nitrate reduction by repressing the nitrate reduction enzyme, slowing the rate of nitrite reduction. A carbon source is also essential as electron donor for denitrification to take place. This source may be in the form of carbon internally available in sewage or artificially added (eg. as methanol). Typically, if influent BOD/TKN or COD/TKN is higher than 5 or 10, assuming COD/BOD ratio of 2, MBR treatment can meet stringent effluent total nitrogen requirement (i.e., < 5mg/L) without providing supplemental carbon.

Temperature has a significant influence on maximum growth rate of denitrifying population, and the maximum growth rate of denitrification roughly doubles for every 10°C increase in temperature between 5 and 25°C. The denitrification rate is strongly affected by the kinetic regime of the reactor. Plug-flow reactors and reactors in series will produce higher denitrification rates. This typically will happen when the availability of substrate limits the denitrification reaction. In contrast to nitrifying organisms, there has been less concern about pH influences on denitrification rates. Also, no significant effect on the denitrification rate has been reported for pH from 7.0 to 8.0.

Phosphorus removal

Phosphorus removal from wastewater can take place by biological or chemical methods. For each treatment method, the plant-layout and operation will be different and the consumption of energy and chemicals may be quite different.

The chemical phosphorus (P) removal relies on the transformation of soluble phosphorus to a particle form, which is then by solid-liquid separation processes, such as membrane separation. This reaction is deceptively simple and must be considered in light of the many competing reactions and their associated equilibrium constants and the effects of alkalinity, pH, trace elements found in wastewater. The overall chemical (usually lime, alum, iron and PAC) dose requirement for phosphorus removal depends on the phosphorus limit required in the permit and the design features of the treatment plant. An important operation parameter is the observed added chemical dose to the removed orthophosphate molar ratio for a plant. This parameter varies depending on the type of processes used for removing orthophosphate and particulate phosphate and the total phosphorus (TP) and orthophosphate residual required to attain permit limit. Dosages are generally established on the basis of bench-scale tests and occasionally by full-scale tests, especially if polymers are used. Typically, as the orthophosphate residuals decreased, the molar ratio of coagulant added to phosphorus removed increases.

In the biological phosphorus removal, the main actors are the polyphosphate accumulating organisms (PAOs) who take up large amounts of phosphorus from phosphates by exposing

© 2016 by **newterra**, ltd.
All rights reserved. No part of this document may be reproduced or transmitted in any form or by any means, electronic, mechanical, photocopying, recording, or otherwise, without prior written permission of **newterra** ltd.

newterra ltd.
1291 California Avenue, Brockville, ON K6V 5W3
(800) 420-4056 / www.newterra.com

them to alternating anaerobic and anoxic/aerobic conditions, and phosphorus is subsequently removed from the process as a result of sludge wasting.

2. Monitoring parameters

Biochemical Oxygen Demand (BOD)

One of the most commonly measured constituents of wastewater is the biochemical oxygen demand, or BOD. Wastewater is composed of a variety of inorganic and organic substances. Organic substances refer to molecules that are based on carbon and include fecal matter as well as detergents, soaps, fats, greases and food particles. These large organic molecules are easily decomposed by bacteria. However, oxygen is required for this process of breaking large molecules into smaller molecules and eventually into carbon dioxide and water. The amount of oxygen required for this process is known as the BOD. The Five-day BOD or BOD_5 is determined by incubating a sealed sample of wastewater for five days and measuring the loss of oxygen from the beginning to the end of the test.

The main focus of wastewater treatment plants is to reduce the BOD in the effluent discharged to natural waters. If effluent with high BOD levels is discharged into a stream or river, it will accelerate bacterial growth and consume the oxygen levels in the river. The oxygen may diminish to levels that are lethal for most fish and many aquatic insects.

Chemical Oxygen Demand (COD)

COD is the oxygen equivalent of organic material in wastewater that can be chemically oxidized using dichromate in an acid solution. COD does not differentiate between biologically available and inert organic matter, and it is a measure of the total quantity of oxygen required to oxidize all organic material into carbon dioxide and water. And, some inorganic substances that are oxidized by the dichromate will increase the apparent organic content of the wastewater sample. COD values are always greater than BOD values and overestimate the carbon that can be removed by the activated sludge, but COD measurements can be made in a few hours while BOD_5 measurements take five days.

Total Suspended Solids (TSS)

Wastewater usually contains large quantities of suspended solids that are organic and inorganic in nature. TSS is a laboratory measurement of the quantity of suspended solids present in wastewater, and it is determined by filtering a well-mixed sample through a weighed standard glass-fiber filter and the residue retained on the filter is dried to a constant weight at 103 to 105°C. The increase in weight of the filter represents the total suspended solids. TSS includes

© 2016 by **newterra**, ltd.
All rights reserved. No part of this document may be reproduced or transmitted in any form or by any means, electronic, mechanical, photocopying, recording, or otherwise, without prior written permission of **newterra** ltd.

the total suspended particulate matter, both inert and volatile, but does not include dissolved solids.

TSS is one of the two universally used effluent standards (along with BOD) by which the performance of treatment plants is judged for regulatory control purposes. As levels of TSS increase, a water body begins to lose its ability to support a diversity of aquatic life, because suspended solids can cause the increase of water temperature and decrease of dissolved oxygen and photosynthesis, and it also harm fish directly by clogging gills, reducing growth rates, and lowering resistance to disease.

Volatile Suspended Solids (VSS)

VSS is a measure of the volatile portion of the TSS (the volatile portion which burns off at 550°C). VSS is usually interpreted as an accurate estimate of the microbial or organic portion of TSS. VSS is determined from laboratory analysis of TSS samples.

Total Dissolved Solids (TDS)

TDS is a measurement of the total solids in the filtrate after filtering a wastewater sample.

Mixed Liquor Suspended Solids (MLSS)

MLSS is a measurement of the solids particulate matter (i.e., the TSS concentration) in a sample collected from the aeration or membrane tanks. The MLSS concentration result is used to determine when and how much sludge is to be wasted from the system. The initial target MLSS concentration is 10,000 mg/L.

Mixed Liquor Volatile Suspended Solids (MLVSS)

MLVSS is a measurement of the concentration of the volatile portion of the MLSS. MLVSS is interpreted as an approximate estimate of the microbial or organic portion of MLSS.

Turbidity

Turbidity is another indicator of the amount of material suspended in water, and it measures the amount of light that is scattered or absorbed. Photoelectric turbidimeters measure turbidity in nephelometric turbidity units (NTUs). Turbidity units are supposed to correspond to TSS concentrations, but this correlation is only approximate.

Nitrogen

© 2016 by **newterra**, ltd.
All rights reserved. No part of this document may be reproduced or transmitted in any form or by any means, electronic, mechanical, photocopying, recording, or otherwise, without prior written permission of **newterra** ltd.

newterra ltd.
1291 California Avenue, Brockville, ON K6V 5W3
(800) 420-4056 / www.newterra.com

Nitrogen compounds are of interest to wastewater treatment plant operators because of the importance of nitrogen in the life cycles of plants and animals. Nitrogen is a nutrient and occurs in many forms including ammonia, organic, nitrate and nitrite each of which may be tested for in a variety of ways. Raw domestic wastewater nitrogen is normally present in the organic nitrogen and ammonia forms, with small quantities of the nitrite and nitrate forms. Depending on the amount of nitrification which occurs within the plant, the effluent may contain either ammonia or nitrate nitrogen. Under normal circumstances, the nitrite form of nitrogen will not be present in large quantities due to its rapid oxidation or conversion to nitrate.

Ammonia nitrogen (NH_4-N) occurs partly in the form of ammonium ions (NH_4^+) and partly as ammonia (NH_3). Ammonia and organic forms of nitrogen are often measured as Total Kjeldahl Nitrogen (TKN). TKN is the sum of organic nitrogen, NH_3, and NH_4^+ in the chemical analysis of wastewater. Today, TKN or NH_4-N (NH_3 and NH_4^+) is a required parameter for regulatory reporting at many treatment plants, and as a means of monitoring plant operations, because the presence of large concentrations of ammonia in a stream or lake can create a large oxygen demand. This demand is caused by the conversion of ammonia to nitrate.

Nitrate can have serious health effects when it enters drinking water wells and is consumed. Nitrate and other forms of nitrogen can also have deleterious effects on the environment, especially in coastal areas where excess nitrogen stimulates the process known as eutrophication. For this reason, many alternative technologies have been designed to remove total nitrogen (TN), nitrate nitrogen (NO_3-N), nitrite nitrogen (NO_2-N) and TKN. These technologies use bacteria to convert ammonia and nitrate to gaseous nitrogen, N_2. In this form, nitrogen is inert and is released to the air.

Phosphorus

Both phosphorus and nitrogen are essential nutrients for the plants and animals that make up the aquatic food web. Since phosphorus is the nutrient in short supply in most fresh waters, even a modest increase in phosphorus can, under the right conditions, set off a whole chain of undesirable events in a stream including accelerated plant growth, algae blooms, low dissolved oxygen, and the death of certain fish, invertebrates, and other aquatic animals. Thus, there is presently much interest in controlling the amount of phosphorus compounds that enter surface waters from wastewater treatment plants.

The principal forms of phosphorus in wastewater are organically bound phosphorus, polyphosphates, and orthophosphates. Organically bound phosphorus originates from body and food waste and, upon biological decomposition of these solids, is converted to orthophosphates. Polyphosphates, which can be hydrolyzed to orthophosphates, are used in synthetic detergents, and used to contribute as much as one-half of the total phosphates in wastewater. Most household phosphate inputs now come from human waste and automatic dishwasher detergent.

© 2016 by **newterra**, ltd.
All rights reserved. No part of this document may be reproduced or transmitted in any form or by any means, electronic, mechanical, photocopying, recording, or otherwise, without prior written permission of **newterra** ltd.

newterra ltd.
1291 California Avenue, Brockville, ON K6V 5W3
(800) 420-4056 / www.newterra.com

Thus, the principal form of phosphorus in domestic wastewater is assumed to be orthophosphates, although the other forms may exist. Orthophosphates consist of the negative ions PO_4^{3-}, HPO_4^{2-}, and $H_2PO_4^{-}$. These may form chemical combinations with cations (positively charged ions).

The total phosphorus (TP) test measures all the forms of phosphorus in the wastewater sample. This is accomplished by first "digesting" (heating and acidifying) the sample to convert all the other forms to orthophosphate. Then the orthophosphate is measured by the ascorbic acid method. Because the sample is not filtered, the procedure measures both dissolved and suspended orthophosphate.

pH/Alkalinity

pH is a measure of the amount of free hydrogen ions in wastewater. Because pH is measured on a logarithmic scale, an increase of one unit indicates an increase of ten times the amount of hydrogen ions. The wastewater treatment bacteria operate most efficiently at a pH of 6.8-7.2 (somewhere around neutral). When the pH drops below 6.0 or rises above 8.5, activity drops off dramatically. As a result, under normal operating conditions, pH of the MBR contents should be in the range of 6.0 to 8.5. If the pH drifts too far out of this range then corrective action is required. A low pH must be increased as soon as possible by the addition of alkaline chemical. Extended aeration at low pH will cause severe membrane fouling as a result of poor biological activity. Measurements of pH can be obtained either in the field with a portable pH meter, or in the laboratory from samples collected by the operator.

Alkalinity is the capacity to neutralize acids, and the alkalinity in wastewater results from the presence of the hydroxides, carbonates and bicarbonates of elements such as calcium, magnesium, sodium, potassium, and ammonia. The alkalinity in wastewater helps to resist change in PH change. Sufficient alkalinity is very essential to the nitrification of wastewater.

Temperature

The biological activity within the MBR system is directly affected by the influent wastewater temperature and ambient temperature. Biological activity (i.e., the rate of removal of organic matter, nitrogen and phosphorus) decreases as the biomass temperature decreases. Membrane flux rate is also affected by temperature. In general, a warmer temperature improves system performance in terms of biological activity rate, and membrane flux rate up to a maximum at approximately 35˚C.

Dissolved Oxygen (DO)

© 2016 by **newterra**, ltd.
All rights reserved. No part of this document may be reproduced or transmitted in any form or by any means, electronic, mechanical, photocopying, recording, or otherwise, without prior written permission of **newterra** ltd.

newterra ltd.
1291 California Avenue, Brockville, ON K6V 5W3
(800) 420-4056 / www.newterra.com

The DO concentration in the aeration basin is measured with a DO meter/probe. The objective is to maintain a DO concentration of 1.0 – 2.0 mg/l at all times in the aeration tank.

Viscosity

The sludge viscosity is one parameter used to track the condition of the MBR sludge with system performance. Monitoring of viscosity testing may be required when treating certain type of industrial wastewaters.

Sludge Filterability

Sludge filterability is a key monitoring test to determine the condition of the MBR mixed liquor. Method for determining the sludge filterability is provided in Section 6.2.2.

Fats, Oil and Grease (FOG)

FOG includes the fats, oils, waxes and other related constituents found in wastewater, and is contributed to wastewater in butter, lard, margarine and vegetable fats and oils. FOG can coat and kill bacteria, causing the microorganisms to float out of the system, interfere with oxygen-transfer efficiency, and cause membrane fouling. If FOG is not removed from wastewater, it can interfere with the biological life in the surface waters and create unsightly films.

Bacterial Indicators

Another issue that must be addressed in wastewater treatment is the removal of pathogenic bacteria that can cause water-borne diseases. Wastewater operators need to be mindful of the potential contact with organisms that are responsible for typhoid, cholera, dysentery, and hepatitis.

Coliform bacteria are enteric bacteria. This means that they are found in the intestinal tract of warm-blooded animals, including humans. These bacteria, known as *E. coli* in humans, do not cause disease but are necessary for the digestion of food. The waterborne pathogens are also enteric bacteria and are part of the coliform family. Therefore, if coliform bacteria are present in the water, pathogens may also be present. The coliform bacteria live longer in water and are easier to detect by laboratory testing. This is the reason the coliform group has been chosen as the indicator organism for waterborne pathogens. If coliform bacteria are not present it is assumed there are no pathogens present either. The following are specific organisms that have been used as indicators of fecal contamination of wastewater.

Total Coliform: species of gram-negative rods that may ferment lactose with gas production at 35±0.5°C. The total coliform group includes four genera in the Enterobacteriaceae family. These are *Escherichia*, *Citrobacter, Enterobacter*, and *Klebsialla*. Of the group, the *Escherichia* genus (*E. coli* species) appears to be the most representative of fecal contamination.

© 2016 by **newterra**, ltd.
All rights reserved. No part of this document may be reproduced or transmitted in any form or by any means, electronic, mechanical, photocopying, recording, or otherwise, without prior written permission of **newterra** ltd.

newterra ltd.
1291 California Avenue, Brockville, ON K6V 5W3
(800) 420-4056 / www.newterra.com

Fecal Coliform: A fecal coliform bacteria group was established based on the ability to produce gas at an elevated incubation temperature (44.5±0.2°C for 24±2 h).

E. coli: The *E. coli* is one of the coliform bacteria populations and is more representative of fecal sources than other coliform genera.

Food to Microorganism Ratio (F:M)

Another important design parameter, the F:M ratio represents a ratio between the mass of food provided and the mass of microorganisms in the wastewater treatment system. The amount of food applied is estimated from the results of the BOD and COD tests. These oxygen demand tests provide a reliable approximation of the actual amount of food available to the microorganisms. The MLSS/MLVSS is a good approximation of the microorganism concentration in the sludge. The F:M ratio is, therefore, expressed in terms of kg BOD/(kg MLSS.d)/kg BOD/(kg MLVSS.d) or kg COD/(kg MLSS.d)/kg COD/(kg MLVSS.d).

© 2016 by **newterra**, ltd.
All rights reserved. No part of this document may be reproduced or transmitted in any form or by any means, electronic, mechanical, photocopying, recording, or otherwise, without prior written permission of **newterra** ltd.

newterra ltd.
1291 California Avenue, Brockville, ON K6V 5W3
(800) 420-4056 / www.newterra.com

APPENDIX I

Process and Chemicals Dosage Calculations

© 2016 by **newterra**, ltd.
All rights reserved. No part of this document may be reproduced or transmitted in any form or by any means, electronic, mechanical, photocopying, recording, or otherwise, without prior written permission of **newterra** ltd.

newterra ltd.
1291 California Avenue, Brockville, ON K6V 5W3
(800) 420-4056 / www.newterra.com

Process and Chemical Dosage Calculations

This section offers calculations for the membrane permeability, chemical dosing, monitoring parameters and excess sludge wasting.

Membrane Permeability

To check the effectiveness of a cleaning procedure, calculate the permeability of the membranes before / after the membrane cleaning.

Please refer to the example below:

Example: The permeate flowrate per module was recorded at 4,200 L/h at a membrane pressure of 0.06 bar. Membrane surface area per module (in case of MB3-3 module) is 315 m^2 . The membranes are operated on a 10 minute cycle, where permeate is withdrawn for 9 minutes followed by 1 minute of relaxation (no permeation). The temperature of the mixed liquor is 15 ºC.

1) Calculate instantaneous (gross) Flux (**J**), the quantity of wastewater passing through a unit area of membrane module per unit time (LMH or L/(m^2.h)). Flux is occasionally referred to as the permeate production or filtration velocity.

   a. Instantaneous (Gross) Flux:

$$J_{Inst} = \frac{\text{Flowrate}}{\text{Membrane Area}} = \frac{4200 L/h}{315 m^2} = 13.3 LMH$$

   b. Net Flux:

$$J_{Net} = \frac{\text{Flowrate}}{\text{Membrane Area}} \frac{PermeationTime}{CycleTime} = \frac{4200 L/h}{315 m^2} \frac{9\,\text{min}}{10\,\text{min}} = 12.0 LMH$$

   c. Temperature Corrected Flux:

$$J_{20^oC} = J_{Inst@15^oC} e^{\theta(20-T)} = 13.3 LMH * (2.718)^{0.0239*(20-15)} = 15.0 LMH$$

2) Calculate membrane permeability (**K**), the ratio of the flux and transmembrane pressure (TMP).

$$\text{K} = \frac{J_{20^oC}}{TMP} = \frac{15.0 LMH}{0.06 bar} = 250 LMH/bar$$

Note: this parameter has been incorporated on the touch screen and is being monitored via PLC on a continous basis

2016 by **newterra**, ltd.
All rights reserved. No part of this document may be reproduced or transmitted in any form or by any means, electronic, mechanical, photocopying, recording, or otherwise, without prior written permission of **newterra** ltd.

newterra ltd.
1291 California Avenue, Brockville, ON K6V 5W3
(800) 420-4056 / www.newterra.com

Chemical Dosing

To determine the quantity of a chemical required for dosing into the system, refer to the following calculation example.

Example: The aeration tank influent (domestic wastwater) flow rate is 5,000 L/h. The influent total phosphorus (TP) concentration is 10 mg/L, and effluent TP limit is 1 mg/L. The TP uptake through sludge production is 2.5 mg/L. The alum stock solution concentration is 48% by weight, and its density is 1310 kg/m^3. Calculate the alum dosage to aeration tank, Q_{Al}, for TP removal.

1) Determine the alum concentration needed for phosphorus removal in the aeration tank.

Table C.1: Molar ratio of Al (III) dose to phosphorus removed as a function of effluent TP concentration limit for domestic wastewater

Effluent TP limit (mg/L)	**Alum:Phosphorous** (mol/mol)
>= 1	1.0
0.1 - 1	2.0
0.05 – 0.1	2.5
< 0.05	3.5

- Select Al: P ratio = 1.0 mol/mol, because the effluent TP limit is 1 mg/L (See Table C.1)
- Determine the weight of Al required per unit weight of P:

$$\frac{Al}{P} = \frac{1.0 molAl/molP}{2 \times 26.98 g/mol / 666.5 g/mol} = 12.4 gAl/gP$$

- Calculate phosphorus required to be removed: 10 – 1 – 2.5 = 6.5 mg/L
- Determine the concentration of alum required, [Al], in the aeration tank:

$$[Al] = 12.4 gAl/gP \times 6.5 mg/L = 80.6 mg/L$$

2) Determine the amount of alum solution required per hour, Q_{Al}, which is the alum dosing pump flow rate:

$$Q_{Al} = \frac{5{,}000 L/h \times 80.6 mg/L}{48\% \times 1310 kg/m^3 \times 1{,}000 mg/g} = 0.64 L/h$$

2016 by **newterra**, ltd.
All rights reserved. No part of this document may be reproduced or transmitted in any form or by any means, electronic, mechanical, photocopying, recording, or otherwise, without prior written permission of **newterra** ltd.

newterra ltd.
1291 California Avenue, Brockville, ON K6V 5W3
(800) 420-4056 / www.newterra.com

Chemical Dosing with Dry Chemicals

To determine the quantity of dry chemical and water to use to make-up a chemical solution refer to the following two calculation examples:

Example: The alkalinity and pH in the system are to be maintained using soda ash (sodium carbonate). The solubility of soda ash is 22 %wt at 20 °C, and has a density of 2.54 g/cm^3. The chemical make-up tank can hold 300 L of solution. The soda ash is shipped in 25 kg bags. The influent flow rate is 100 m^3/d

1) Determine the amount of dry soda ash need to make-up a batch of soda ash solution:

- Use 20 %wt solution in order to more readily dissolve the soda ash
- Determine the density of the final solution:

$$\rho_{solution} = 0.2 * 2.54 g/cm^3 + (1-0.2) * 1.0 g/cm^3 = 1.31 g/cm^3$$

- Determine the mass of soda ash in 300 L of solution:

$$m_{Na_2CO_3} = 300L * 1.31 g/cm^3 * \frac{1000 cm^3/L}{1000 g/kg} * 0.2 kg_{Na2CO3}/kg_{Solution} = 78.6 kg$$

- Therefore 78.6 kg of soda ash are needed, or approximately 75 kg which is 3 X 25 kg bags.

2) Determine the amount of water to use to make-up the soda ash solution

- Determine the volume displaced by the soda ash:

$$V_{Na_2CO_3} = \frac{75kg}{2.54 g/cm^3} * \frac{1000 g/kg}{1000 cm^3/L} = 29.5L \text{ of elements}$$

- Determine the volume of water required:

$$V_{H_2O} = 300L - 29.5L = 270.5L$$

3) Determine the dosing rate to add 100 mg/L of alkalinity as $CaCO_3$ to the system.

- Determine the equivalent concentration as soda ash (Na_2CO_3):

$$[Alk]_{Na_2CO_3} = [Alk]_{CaCO_3} \frac{MM_{Na_2CO_3}}{MM_{CaCO_3}} = 100 mg/L \frac{106 mg/mmol}{100 mg/mmol} = 106 mg/L$$

2016 by **newterra**, ltd.
All rights reserved. No part of this document may be reproduced or transmitted in any form or by any means, electronic, mechanical, photocopying, recording, or otherwise, without prior written permission of **newterra** ltd.

newterra ltd.
1291 California Avenue, Brockville, ON K6V 5W3
(800) 420-4056 / www.newterra.com

- Determine the dosing rate of soda ash on a mass basis:

$$\dot{m}_{Na_2CO_3} = [Alk]_{Na_2CO_3} * Q_{\inf} = 106mg/L * 100m^3/d * \frac{1000L/m^3}{1000mg/g} = 10{,}600g/d$$

- Determine the dosing rate of soda ash solution on a volume basis:

$$Q_{Na_2CO_3} = \frac{\dot{m}_{Na_2CO_3}}{[Na_2CO_3]} = \frac{10{,}600g/d}{250g/L} = 42.4L/d$$

Example: A filter press is to be used to dewater sludge, and a polymer is to be used to flocculate the sludge. The polymer make-up concentration is to be 0.2% (2 g/L) and to be made up using dry polymer with a density of 0.8 g/mL. The polymer make-up tank has a capacity of 300 L. The flocculation tank has a capacity of 900 L. The wasted sludge has an MLSS concentration of 1% (10 g/L). The ratio of polymer to sludge should be 10 g/kg on a dry basis.

1) Determine the amount of dry polymer required to make up a batch of 0.2% polymer solution:

- Determine mass of dry polymer required

$$m_{DryPolymer} = [Polymer] * V_{PolymerSolution} = (2g/L) * (300L) = 600g$$

- Determine volume of dry polymer required

$$V_{DryPolymer} = \frac{m_{DryPolymer}}{\rho_{DryPolymer}} = \frac{600g}{0.8g/mL} = 750mL$$

- Therefore 750 mL of dry polymer, or 3 cups, are required to make-up a batch of 0.2% polymer solution.

2) Determine the dose of polymer solution required to flocculate a batch of sludge:

- Determine mass of solids to be flocculated on a dry basis

$$m_{DrySolids} = [MLSS] * V_{Sludge} = (10g/L) * (900L) = 9000g = 9kg$$

- Determine mass of polymer required to flocculate sludge on a dry basis

$$m_{DryPolymer} = Polymer:SolidsRatio * m_{DrySolids} = (10g/kg) * (9kg) = 90g$$

- Determine volume of polymer solution required to flocculate sludge

2016 by **newterra**, ltd.
All rights reserved. No part of this document may be reproduced or transmitted in any form or by any means, electronic, mechanical, photocopying, recording, or otherwise, without prior written permission of **newterra** ltd.

newterra ltd.
1291 California Avenue, Brockville, ON K6V 5W3
(800) 420-4056 / www.newterra.com

$$V_{PolymerSolution} = \frac{m_{DryPolymer}}{[Polymer]} = \frac{90g}{2g/L} = 45L$$

- Therefore 45 L of 0.2% polymer solution are required per batch to flocculate the 900 L of 1% sludge.

Monitoring Parameters

To determine the food to microorganism (F/M) ratio, BOD loading rate and solids retention time (SRT) refer to the following examples.

Example: The influent flow rate is 100 m^3/d with a BOD concentration of 400 mg/L (g/m3). The volume of the reactor (aeration tank and membrane tank) is 100 m^3 and contains mixed liquor with a suspended solids concentration of 10,000 mg/L and a MLVSS/MLSS ratio of 0.70. Excess sludge is wasted at a rate of 5 m^3/d

1) Determine the BOD loading:

$$BOD_{Loading} = \frac{[BOD]*Q_{\inf}}{V_{Reactor}} = \frac{(400g/m^3)*100m^3/d}{100m^3}$$

$$BOD_{Loading} = 400\frac{g}{m^3*d} = 0.4\frac{kg}{m^3*d}$$

2) Determine F/M ratio:

$$F/M = \frac{[BOD]*Q_{\inf}}{MLSS*\frac{MLVSS}{MLSS}V_{Reactor}} = \frac{(400g/m^3)*100m^3/d}{(10{,}000g/m^3)*(0.70)*(100m^3)}$$

$$F/M = 0.057\frac{kgBOD}{kgMLVSS*d}$$

3) Determine SRT:

$$SRT = \frac{V_{Reactor}}{Q_{WAS}} = \frac{100m^3}{5m^3/d}$$

$$SRT = 20d$$

2016 by **newterra**, ltd.
All rights reserved. No part of this document may be reproduced or transmitted in any form or by any means, electronic, mechanical, photocopying, recording, or otherwise, without prior written permission of **newterra** ltd.

Excess Sludge Wasting

Excess activated sludge is wasted periodically during the MBR operation. To determine the amount of excess sludge wasted, refer to the following calculation example.

Example: The measured MLSS concentration of activated sludge in aeration tank is 15,000 mg/L. Excess sludge has to be drained to keep its design concentration of 10,000 mg/L.The volume of aeration tank is 100 m^3. Calculate the volume of excess sludge (Vs) to be wasted.

$$V_s = \frac{(15{,}000 - 10{,}000)mg/L \times 100m^3 \times 1{,}000L/m^3}{15{,}000mg/L} = 33{,}333L$$

The operator can set the sludge wasting pump flowrate according to the above calculated volume.

2016 by **newterra**, ltd.
All rights reserved. No part of this document may be reproduced or transmitted in any form or by any means, electronic, mechanical, photocopying, recording, or otherwise, without prior written permission of **newterra** ltd.

newterra ltd.
1291 California Avenue, Brockville, ON K6V 5W3
(800) 420-4056 / www.newterra.com

Soda Ash Make-Up Instructions

1. Fill soda ash make-up tank approximately ¾ full of 20 °C water
    - MBR permeate may be used
2. Turn on mixer M-6101
3. Slowly add sodium carbonate to make up a 20%wt solution(Rule of thumb: 1 X 25 kg bag per 100 L)
    - This is based on 20 °C water. If water temperature is colder, the solubility will be lower.
    - Check between additions of each bag to ensure sodium carbonate is dissolving. If sodium carbonate is not dissolving, do not add any more.
4. Once fully dissolve, turn off mixer M-6101

Caution: This soda ash make-up process is exothermic (generates heat), and personal protective equipment for chemicals handling must be worn.

2016 by **newterra**, ltd.
All rights reserved. No part of this document may be reproduced or transmitted in any form or by any means, electronic, mechanical, photocopying, recording, or otherwise, without prior written permission of **newterra** ltd.

newterra ltd.
1291 California Avenue, Brockville, ON K6V 5W3
(800) 420-4056 / www.newterra.com

APPENDIX J

newterra MicroClear™ Membrane Clean Water Testing Sheet & Cleaning Log Sheet

© 2016 by **newterra**, ltd.
All rights reserved. No part of this document may be reproduced or transmitted in any form or by any means, electronic, mechanical, photocopying, recording, or otherwise, without prior written permission of **newterra** ltd.

newterra ltd.
1291 California Avenue, Brockville, ON K6V 5W3
(800) 420-4056 / www.newterra.com

newterra MicroClear™ MEMBRANE CLEAN WATER TESTING SHEET – MBR HYDRAULICS

Clean Water Test Information	
Date	
Performed By	
Observed By	

Plant Conditions	
Ambient Temperature	
Water Temperature	
Normal Operating Level	
Static Pressure at Normal Operating Level	

MEMBRANE TANK HYDRAULICS

Flux (LMH)	Flow Rate (Lpm)	TMP during steady flow (bar)	Permeability (LMH/bar)

© 2016 by **newterra**, ltd.
All rights reserved. No part of this document may be reproduced or transmitted in any form or by any means, electronic, mechanical, photocopying, recording, or otherwise, without prior written permission of **newterra** ltd.

newterra ltd.
1291 California Avenue, Brockville, ON K6V 5W3
(800) 420-4056 / www.newterra.com

newterra MicroClear™ MEMBRANE CLEANING LOG SHEET

Precautions have to be taken to handle membrane chemical cleaning.



Chemical cleaning is only to be carried out by qualified and trained personnel! Chemicals can lead to serious injuries. Always wear personal protective equipment (PPE) when handling chemicals! Obey the chemical safety handling procedure, as listed in the Material Safety Data Sheets.

Date	Type of Cleaning		Start time	Finish time	Sodium Hypochlorite (NaOCl)		Citric Acid ($C_6H_8O_7$)		Permeability * (LMH/bar)
	Maintenance (CEB)	Recovery (R)			Volume (L)	Conc. (mg/L)	Volume (L)	Conc. (mg/L)	

**Normal permeability after cleaning: 150 to 300 LMH/bar. Repeat the cleaning procedures if the normal permeability value is not attained.*

© 2016 by **newterra**, ltd.
All rights reserved. No part of this document may be reproduced or transmitted in any form or by any means, electronic, mechanical, photocopying, recording, or otherwise, without prior written permission of **newterra** ltd.

newterra ltd.
1291 California Avenue, Brockville, ON K6V 5W3
(800) 420-4056 / www.newterra.com

APPENDIX K

Control Narrative

© 2017 by **newterra**, ltd.
All rights reserved. No part of this document may be reproduced or transmitted in any form or by any means, electronic, mechanical, photocopying, recording, or otherwise, without prior written permission of **newterra** ltd.

1704432 - Agnico Eagle
System Control Narrative - Test Protocol

Revision	YYYY-MM-DD	Description	By
A	2017-05-25	Submittal	JJK
C	2017-05-11	As-Built	JJK

System Inputs

Module	Tag	Description	Input Type	HMI Display Units	Device Range and Units	Device Span/PLC Scale	Datalog (Y)	Trending (Y)	Notes	Input Verification
100	FIT-101	Flow Indicating Transmitter	Analog	GPM	0-760lpm	0-760lpm	Y	Y		
100	FQI-101	Flow Totalizer	Discrete N.O.	Pulse/Gal	1 liter/ Pulse					
100	LSHH-101	Level Switch High High	Discrete N.C.							
100	LSHH-102	Level Switch High High	Discrete N.C.							
100	LSHH-103	Level Switch High High	Discrete N.C.							
200	FIT-201	Flow Indicating Transmitter	Analog	GPM	0-760lpm	0-760lpm	Y	Y		
200	FQI-201	Flow Totalizer	Discrete N.O.	Pulse/Gal	1 liter/ Pulse					
200	LSHH-201	Level Switch High High	Discrete N.C.							
200	LSHH-202	Level Switch High High	Discrete N.C.							

System Inputs

Module	Tag	Description	Input Type	HMI Display Units	Device Range and Units	Device Span/PLC Scale	Datalog (Y)	Trending (Y)	Notes	Input Verification
200	LSHH-203	Level Switch High High	Discrete N.C.							
200	LSH-203	Level Switch High	Discrete N.C.							
200	LSL-203	Level Switch Low Low	Discrete N.O.							
300	LSHH-301	Level Switch High High	Discrete N.C.							
300	LT-301	Level Transmitter	Analog	%	0-10 ftWC	0-10 ftWC	Y	Y		
300	TT-301	Temperature Transmitter	Analog	°C	0-100c	0-100c	n	n	Added to System	
300	LSLL-301	Level Switch Low Low	Discrete N.O.						Must be above all immersion heaters in Tank	
300	PSL-301	Pressure Switch Low	Discrete N.C.		9-85"WC					

System Inputs

Module	Tag	Description	Input Type	HMI Display Units	Device Range and Units	Device Span/PLC Scale	Datalog (Y)	Trending (Y)	Notes	Input Verification
400	LSHH-401	Level Switch High High	Discrete N.C.							
400	TSL-401	Temperature Switch Low	Discrete N.C.							
400	LSLL-401	Level Switch Low Low	Discrete N.O.							
500	LSHH-501	Level Switch High High	Discrete N.C.							
500	LSLL-501	Level Switch Low Low	Discrete N.O.						Must be above all immersion heaters in Tank	
500	PH-501	pH Transmitter	Analog		0-14 pH		Y	Y		
500	DO-501	Dissolved Oxygen Transmitter	Modbus	ppm	0-10		Y	Y		
500	TT-501	Temperature Transmitter	Modbus	°C	0-100					
500	LT-501	Level Transmitter	Analog	%	0-10 ft		Y	Y		

System Inputs

Module	Tag	Description	Input Type	HMI Display Units	Device Range and Units	Device Span/PLC Scale	Datalog (Y)	Trending (Y)	Notes	Input Verification
500	PSL-501	Pressure Switch Low	Discrete N.C.		9-85"WC					
500	LSHH-502	Level Switch High High	Discrete N.C.							
500	LSLL-502	Level Switch Low Low	Discrete N.O.						Must be above all immersion heaters in Tank	
500	TSL-502	Temperature Switch Low	Discrete N.C.							
600	LSHH-601	Level Switch High High	Discrete N.C.							
600	LSH-601	Level Switch High	Discrete N.O.							
600	LSHH-602	Level Switch High High	Discrete N.C.							
600	LSH-602	Level Switch High	Discrete N.O.							
600	PSL-601	Pressure Switch Low	Discrete N.C.		9-85"WC					

System Inputs

Module	Tag	Description	Input Type	HMI Display Units	Device Range and Units	Device Span/PLC Scale	Datalog (Y)	Trending (Y)	Notes	Input Verification
600	PSL-602	Pressure Switch Low	Discrete N.C.		9-85"WC					
700	VT-701	Vacuum Transmitter	Analog	Bar	-1.0 - 1.0 Bar		Y	Y		
700	VT-702	Vacuum Transmitter	Analog	Bar	-1.0 - 1.0 Bar		Y	Y		
700	VFD-701	VFD Status	Communcation							
700	VFD-702	VFD Status	Communcation							
700	FIT-701	Flow Indicating Transmitter	Analog	GPM	0-300lpm		Y	Y		
700	FQI-701	Flow Totalizer	Discrete N.O.	Pulse/Gal	1liter / Pulse					
700	FIT-702	Flow Indicating Transmitter	Analog	GPM	0-300lpm		Y	Y		
700	FQI-702	Flow Totalizer	Discrete N.O.	Pulse/Gal	1liter / Pulse					

System Inputs

Module	Tag	Description	Input Type	HMI Display Units	Device Range and Units	Device Span/PLC Scale	Datalog (Y)	Trending (Y)	Notes	Input Verification
800	LSH-801	Level Switch High	Discrete N.C.							
800	LSL-801	Level Switch Low Low	Discrete N.O.							
900	LSHH-901	Level Switch High High	Discrete N.C.							
7900	PSL-7911	Pressure Switch Low	Discrete N.O.		0.4 - 1.6"WC				Proof of Continuous Ventilation.	
7900	LSHH-7911	Level Switch High High	Discrete N.C.							
7900	TSLL-7911	Temperature Switch Low Low	Discrete N.C.	°F	-30-100 °F					

System Inputs

Module	Tag	Description	Input Type	HMI Display Units	Device Range and Units	Device Span/PLC Scale	Datalog (Y)	Trending (Y)	Notes	Input Verification
7900	TSLL-7914	Temperature Switch Low Low	Discrete N.C.	°F	-30-100 °F					
7900	TSLL-7916	Temperature Switch Low Low	Discrete N.C.	°F	-30-100 °F					
7900	LSHH-7961	Level Switch High High	Discrete N.C.							
7900	LSHH-7962	Level Switch High High	Discrete N.C.							
7900	ES-7911	Emergency Stop - Building	Discrete N.C.							
7900	ES-7941	Emergency Stop - Building	Discrete N.C.							
7900	ES-7961	Emergency Stop - Building	Discrete N.C.							
500	VFD-501 Status									
500	VFD-502 Status									
500	VFD-501 Alarm									
500	VFD-502 Alarm									
700	VFD701 Alarm									
700	VFD702 Alarm									

System Inputs

Module	Tag	Description	Input Type	HMI Display Units	Device Range and Units	Device Span/PLC Scale	Datalog (Y)	Trending (Y)	Notes	Input Verification

System Setpoints

Module	Tag	Description	Factory Setpoint	Setpoint Range and Units	Setpoint Change Control	Alarm setpoint (Y/N)	Notes	Setoint Verification
100	FTAH-101-SP	Flow Transmitter Alarm High Setpoint	75	0-200 GPM	Open	Y		
200	FTAH-201-SP	Flow Transmitter Alarm High Setpoint	75	0-200 GPM	Open	Y		
300	LTL-301-SP	Level Transmitter Low Setpoint	10%	0-100%	Open			
300	LTHFLUX-301-SP	High Flux Level Setting	50%	0-100%			Puts the MBR Permeate pumps into High Flux Mode	
300	LTH-301-SP	Level Transmitter High Setpoint	80%	50-100%	Open			
500	LTL-501-SP	Level Transmitter Low Setpoint	70%	0-100%	Open			
500	LTH-501-SP	Level Transmitter High Setpoint	80%	0-100%	Open			

System Setpoints

Module	Tag	Description	Factory Setpoint	Setpoint Range and Units	Setpoint Change Control	Alarm setpoint (Y/N)	Notes	Setoint Verification
500	LT501-SLUDGE-SP	Waste Level for P-503	75%	0-100%	Open			
500	LT501-PERM-SP	Level Control for Permeate Pumps	75%	0-100%	Open		If Level drops below, permeate pumps will stop	
500	P503 WASTE HOUR	When P-503 will waste	12pm	0-23				
500	P503 WASTE SP	Time that P-503 wastes for	10min	0-99				
500	PH-501-SP	pH Normal Setpoint	7 pH	6-8pH	Open			
500	PHAH-501-SP	pH Alarm High Setpoint	8 pH	7 - 14 pH	Open	Y		
500	PHAL-501-SP	pH Alarm Low Setpoint	6 pH	0-7 pH	Open	Y		
500	DO-501-SP	Dissolved Oxygen Normal Setpoint	2 ppm	0-6 ppm	Open			
500	B500 I SP	Integral Gain setting DO PID Loop	10s	0-99				
500	B500 P SP	Proportional Gain setting DO PID Loop	100%	0-99				

System Setpoints

Module	Tag	Description	Factory Setpoint	Setpoint Range and Units	Setpoint Change Control	Alarm setpoint (Y/N)	Notes	Setoint Verification
500	B501 MAN SP	Manual Speed B-501	50%	0-100				
500	B502 MAN SP	Manual Speed B-502	50%	0-100				
500	DOAL-501-SP	Dissolved Oxygen Alarm Low Setpoint	0.5 ppm	0-6 ppm	Open	Y		
500	ALUM DOSE	Alum Dose setting (xGal per Pulse)	10 Gallons	0-99 Gallons	Open		Setpoint controls a single pulse of Alum P-6101 dosing.	
500	MICROC DOSE	Micro C Dose setting (xGal per Pulse)	10 Gallons	0-99 Gallons	Open		Setpoint controls a single pulse of Alum P-6101 dosing.	
500	TALL-501-SP	Temperature Alarm Low Low	10 deg C	5 - 25 deg C	Password	Y		
500	TTL-501-SP	Temperature Transmitter Low Setpoint	15 deg C	5-25 deg C	Open			
500	PAL-501-SP	Pressure Alarm Low Setpoint	28"WC (1PSIG)		On Device	Y		
500	TALL-502-SP	Temperature Alarm Low Low	10 deg C	5 - 25 deg C	Password	Y		

System Setpoints

Module	Tag	Description	Factory Setpoint	Setpoint Range and Units	Setpoint Change Control	Alarm setpoint (Y/N)	Notes	Setoint Verification
700	VT-701-SP	MBR-1 Vac Mode Permeate Setpoint	-0.1 bar	-0.2 - 0 bar	Open			
700	VT-701-HFSP	MBR-1 Vac Mode Permeate High Flux Setpoint	-0.15 bar	-0.2 - 0 bar	Open			
700	VTAH-701-SP	MBR-1 Vacuum Transmitter Alarm High	-0.3 bar	-0.3 - 0 bar	Open	Y		
700	VT-702-SP	MBR-2 Vac Mode Permeate Setpoint	-0.1 bar	-0.2 - 0 bar	Open			
700	VT-702-HFSP	MBR-2 Vac Mode Permeate High Flux Setpoint	-0.15 bar	-0.2 - 0 bar	Open			
700	VTAH-702-SP	MBR-2 Vacuum Transmitter Alarm High	-0.3 bar	-0.3 - 0 bar	Open	Y		
700	FT-701-SP	MBR-1 Flow Mode Permeate Setpoint	60 GPM	0-200	Open			
700	FT-701-HFSP	MBR-1 Flow Mode Permeate High Flux Setpoint	75%	0-200	Open			
700	FTAH-701-SP	MBR-1 Flow Transmitter Alarm High Setpoint	100	0-200	Open	Y		
700	FTAL-701-SP	MBR-1 Flow Transmitter Alarm Low Setpoint	10	0-200	Open	Y		

System Setpoints

Module	Tag	Description	Factory Setpoint	Setpoint Range and Units	Setpoint Change Control	Alarm setpoint (Y/N)	Notes	Setoint Verification
700	FT-702-SP	MBR-2 Flow Mode Permeate Setpoint	60 GPM	0-200	Open			
700	FT-702-HFSP	MBR-2 Flow Mode Permeate High Flux Setpoint	75GPM	0-200	Open			
700	FTAH-702-SP	MBR-2 Flow Transmitter Alarm High Setpoint	100	0-200	Open	Y		
700	FTAL-702-SP	MBR-2 Flow Transmitter Alarm Low Setpoint	10	0-200	Open	Y		
GLOBAL	BKWSH-TIME-SP	Backwash Time Setpoint	120s	0-999 s	Open			
GLOBAL	RELAX-SP	Number of Relaxes Before Backwash	6	0-999	Open			
GLOBAL	PERM-PULL-TIME	Permeate Pull Time	9m	0-30m	Open			
GLOBAL	RELAX-TIME	Membrane Relax Time	60s	0-999 s	Open			
GLOBAL	FLUX-SP	High Flux Setpoint	75%	50-100%	Open		Reading based on LT-301	

System Setpoints

Module	Tag	Description	Factory Setpoint	Setpoint Range and Units	Setpoint Change Control	Alarm setpoint (Y/N)	Notes	Setoint Verification
GLOBAL	SLUDGE-WASTE-TOD	Time of Day to Start Sludge Wasting	23hr	0-23 hr	Open			
GLOBAL	SLUDGE-WASTE-TIME	Duration of Sludge Wasting	60m	0-1000m	Open			

System Outputs and Modes of Operation

Module	Tag / Mode	Description	Control Logic	Alarm Interactions	Output Type	Hour Meter	Amp Meter	HOA Control	Output Verification	Logic Verification
		Start/Stop	The system will start when the start button is pressed on the HMI.							
		Start/Stop	The system will automatically restart after recovery from a power failure after a 30 second delay, unless the Start button is pressed first .							
		Start/Stop	To stop the system press the stop button on the HMI display.							
		Start/Stop	The system will shut down under some alarm conditions, see the modules below for these specific circumstances.							
		Start/Stop	All equipment will have to be put in “AUTO” in order to operate with the exception of heaters, auto-drain valves, building fans or self-governed equipment (such as screw compressors, air dryers, etc.).							
		Start/Stop	**Note:** when components are put in “HAND” mode the “AUTO” logic described below will be bypassed and the component will run regardless of inputs (unless the emergency stop button is activated). This is done for on-site testing and troubleshooting purposes. When a soft HOA switch (a software based toggle switch present in remote telemetry or HMI based systems) is used, a 2 minute safety timer is used on all components to prevent running them dry or excessive flooding due to operator error. Hand Timers can be Overridden by touching the pressing and holding the newterra watermark on the Control Bar. By enabling the override the user assumes responsibility for operating the system outside the control parameters set by newterra. While override is enabled all Hand timers and interlocks are ignored.							
N/A	N/A	HMI Datalogging	DO and pH will be logged and displayed on the HMI on the same plot.							
N/A	N/A	HMI Datalogging	Flux and Permeability data will be logged and displayed on the HMI on the same plot.							

System Outputs and Modes of Operation

Module	Tag / Mode	Description	Control Logic	Alarm Interactions	Output Type	Hour Meter	Amp Meter	HOA Control	Output Verification	Logic Verification
N/A	N/A	MBR-1 Enable	HMI will contain an MBR-1 Enable button. When selected, MBR-1 is enabled.							
N/A	N/A	MBR-2 Enable	HMI will contain an MBR-2 Enable button. When selected, MBR-2 is enabled.							
N/A	N/A	Flow Mode	HMI will contain a Flow Mode Enable button. When selected the permeate system will operate in Flow Mode.							
N/A	N/A	Vac Mode	HMI will contain a Vac Mode Enable button. When selected the permeate system will operate in Vac Mode.							
100	YC-101	Ready Contact	On when LSHH-101 / 102 / 103 and LSHH-201 / 202 and LSHH-203 are not ON	All LSHH's in the inlet area				HOA		
200	YC-201	Ready Contact	On when LSH-201 / 202 and LSHH-203 are not ON					HOA		
200	SCR-201	Inlet Screen	The inlet screen will be ON when influent flow is detected via flow transmitter FIT-201. The screen will run for 1 minute after influent flow has stopped via flow transmitter FIT-201. If the high high level switch LSHH-201 on the screen is ON then the inlet screen SCR-201 will be ON.		Discrete	Y		HOA		

System Outputs and Modes of Operation

Module	Tag / Mode	Description	Control Logic	Alarm Interactions	Output Type	Hour Meter	Amp Meter	HOA Control	Output Verification	Logic Verification
200	SCR-202	Inlet Screen	Same as SCR-201		Discrete	Y		HOA		
200	P-201	Screen Transfer Pump	The pump will be ON when the LSH-203 turn on as long as LT-301 < LTH-301-sp setpoint the pump will turn off when the LSL-201 turns off	LAHH-301	Discrete	Y		HOA		
200	P-202	Screen Transfer Pump	This pump runs duty standby with P-201 with a 5:1 rato	LAHH-301	Discrete	Y		HOA		
300	H-301	Tank Heater	On when TT-301 < 10C Off when TT-301 >15C	LALL-301	Discrete					
300	H-302	Tank Heater	Same as H-301	LALL-301	Discrete					
300	P-301	EQ Transfer Pump	The EQ pump will be ON when the EQ level transmitter LT-301 > LTL-301-SP and the aeration tank level transmitter LT-501 < LTH-501-SP The EQ pump will be OFF when the EQ level transmitter LT-301 < LTL-301-SP OR LSLL-301 = InActive OR the aeration tank level transmitter LT-501 > LTH-501-SP OR LSHH-401 is active Runs Duty with P-302 as Standby	Turns OFF LAHH-501 LAHH-401 LALL-301	Discrete	Y		HOA		
300	P-302	EQ Transfer Pump	This pump runs duty standby with P-201 with a 5:1 rato		Discrete	Y		HOA		
300	B-301	EQ Blower	The EQ blower will be ON when the System is in Run & LSLL-301 is active.		Discrete	Y		HOA		

System Outputs and Modes of Operation

Module	Tag / Mode	Description	Control Logic	Alarm Interactions	Output Type	Hour Meter	Amp Meter	HOA Control	Output Verification	Logic Verification
300	B-302	EQ Blower	Runs Duty standby with B-301 switching every 120 hours		Discrete	Y		HOA		
400	P-401	Pre-Anox Mixing Pump	The pump will be ON when the System is in Run & LSLL-401 is active.	LALL-401 PUMP IS OFF	Discrete	Y		HOA		
400	P-402	Pre-Anox Mixing Pump	Runs Duty standby with P-401 switching every 120 hours		Discrete	Y		HOA		
400	H-401	Tank Heater	On when TSL-401 is OFF	LALL-401	Discrete					
400	H-402	Tank Heater	On when TSL-401 is OFF	LALL-401	Discrete					
6100	P-6102	Alum Dosing Pump	Alum Dosing Pump P-6102 be ON when FIT-701 has reached a user adjustable volume of permeate via FT-701-DOSE setpoint. P-6102 will be ON for one pulse.		Discrete			HOA		
6100	P-6101	Caustic Dosing Pump	Caustic Dosing Pump P-6101 will be ON when PH-501 < PH-501-SP. The pump will be ON for 30s and OFF for 30s and will operate in pause mode		Discrete			HOA		
500	H-501	Tank Heater	On when TSL-501 is OFF	LALL-501	Discrete					

System Outputs and Modes of Operation

Module	Tag / Mode	Description	Control Logic	Alarm Interactions	Output Type	Hour Meter	Amp Meter	HOA Control	Output Verification	Logic Verification
500	H-502	Tank Heater	On when TSL-501 is OFF	LALL-501	Discrete					
500	P-503	Waste Activated Sludge Pump	The waste activated sludge pump will be ON at time of day setting SLUDGE-WASTE-TOD IF level switch LT501-SLUDGE-SP	LAHH-901: Pump will be OFF	Discrete			HOA		
500	H-503	Tank Heater	On when TSL-502 is OFF	LALL-502	Discrete					
500	H-504	Tank Heater	On when TSL-502 is OFF	LALL-502	Discrete					
500	P-501	Aeration Recirc Pump	The pump will run as long as LSLL-501 is Active	LALL-502: Pump will be OFF	Discrete	Y		HOA		
500	P-502	Aeration Recirc Pump	Runs Duty standby with p-501 switching every 120 hours		Discrete	Y		HOA		
500	B-501	Aeration Tank Aeration Blower	ON - Always Runs via PID loop to maintain DO-501-SP Runs Duty/Standby 120 hours with B-502.		Direct	Y		HOA		
500	B-502	Aeration Tank Aeration Blower	Runs via same logic as B-501. Runs Duty/Standby every 120 hours with B-501.		Direct	Y		HOA		

System Outputs and Modes of Operation

Module	Tag / Mode	Description	Control Logic	Alarm Interactions	Output Type	Hour Meter	Amp Meter	HOA Control	Output Verification	Logic Verification
550	P-553	Post Anox Mix Pump	The pump will run as long as LSLL-501 is Active	LALL-501: Pump will be OFF	Discrete	Y		HOA		
550	P-554	Post Anox Mix Pump	Runs Duty standby with p-501 switching every 120 hours		Discrete	Y		HOA		
6100	P-6103	Micro C Dosing Pump	Dosing Pump will be ON when FIT-701 or FT-702 has reached a user adjustable volume of permeate via DOSE setpoint.		Discrete			HOA		
550	P-551	Aeration Transfer Pump Feed to MBR-1	The aeration pump will feed MBR tank T-601. The pump will be ON when level transmitter LT-501 > LTL-501-SP and LSLL-501 = Active and LSLL-502 = Active and MBR-1 is Enabled. The aeration pump will be cycle ON/OFF when LT-501 < LTL-501-SP and be OFF if LSLL-501 = InActive OR LSLL-502 = InActive	LAHH-601: Pump will be OFF MBR-1 Disabled	Discrete	Y		HOA		
550	P-552	Aeration Transfer Pump Feed to MBR-2	The aeration pump will feed MBR tank T-602. The pump will be ON when level transmitter LT-501 > LTL-501-SP and LSLL-501 = Active and LSLL-502 = Active and MBR-2 is Enabled. The aeration pump will cycle ON/OFF when LT-501 < LTL-501-SP and be OFF if LSLL-501 = InActive OR LSLL-502 = InActive	LAHH-602: Pump will be OFF MBR-2 Disabled	Discrete	Y		HOA		
600	B-601	MBR Tank Blower	The membrane tank blower will be ON when the System is in Run. And the MBR 1 is enabled	MBR-1 Disabled	Discrete	Y		HOA		
600	B-602	MBR Tank Blower	The membrane tank blower will be ON when the System is in Run. And the MBR 2 is enabled	MBR-2 Disabled	Discrete	Y		HOA		

System Outputs and Modes of Operation

Module	Tag / Mode	Description	Control Logic	Alarm Interactions	Output Type	Hour Meter	Amp Meter	HOA Control	Output Verification	Logic Verification
700	P-701	Permeate Transfer Pump	The permeate pump will be ON when MBR-1 is Enabled & level switch LSH-601 = Active & LT-501 > LT501-PERM-SP The Pump will perform a PULL/RELAX Cycle. The pump will be ON for the duration specified by the PERM-PULL-TIME setpoint and then be OFF for the duration of the RELAX-TIME setpoint. This will generate one PULL/RELAX Cycle. The VFD Speed of the pump will operate based on the following: In FLOW MODE: The VFD Speed will operate based on a PID loop to maintain the flowrate setpoint FT-701-SP. IF the vacuum transmitter VT-701 > -0.25 bar then the pump will switch to VAC MODE. IF the level transmitter LT-301 > FLUX-SP, the pump will run via PID loop to maintain a high flow setpoint FT-701-HFSP In VAC MODE: The VFD Speed will operate based on a PID loop to maintain the vacuum setpoint VT-701-SP. IF the level transmitter LT-301 > FLUX-SP, the pump will run via PID loop to maintain a high flow setpoint VT-701-HFSP P-701 will be OFF if P-501 is OFF.	A-701: Pump Will b	Communication	Y		HOA		
700	P-702	Permeate Transfer Pump	The permeate pump will be ON when MBR-2 is Enabled & level switch LSH-602 = Active & & LT-501 > LT501-PERM-SP The Pump will perform a PULL/RELAX Cycle. The pump will be ON for the duration specified by the PERM-PULL-TIME setpoint and then be OFF for the duration of the RELAX-TIME setpoint. This will generate one PULL/RELAX Cycle. The VFD Speed of the pump will operate based on the following: In FLOW MODE: The VFD Speed will operate based on a PID loop to maintain the flowrate setpoint FT-702-SP. IF the vacuum transmitter VT-702 > -0.25 bar then the pump will switch to VAC MODE. IF the level transmitter LT-301 > FLUX-SP, the pump will run via PID loop to maintain a high flow setpoint FT-702-HFSP In VAC MODE: The VFD Speed will operate based on a PID loop to maintain the vacuum setpoint VT-702-SP. IF the level transmitter LT-301 > FLUX-SP, the pump will run via PID loop to maintain a high flow setpoint VT-702-HFSP P-702 will be OFF if P-502 is OFF.	A-703: Pump Will b	Communication	Y		HOA		
800	SV-801	Clean In Place Tank Fill Solenoid Valve	The Solenoid Valve SV-801 will be Open (Energized) when level switch LSH-801 is InActive and MBR-1 OR MBR-2 are not in Backwash. The Solenoid Valve SV-801will be Closed (De-Engergized) when LSH-801 is Active or IF MBR-1 OR MBR-2 are in Backwash.		Discrete			HOA		
700	MV-701	Backwash Actuated Valve	A Backwash is enabled once the permeate pumps for MBR-1 reach the number of PULL/RELAX cycles designated by the RELAX-SP on the HMI. the The actuated valve will be OPEN when MBR-1 is in Backwash and level switch LSH-801 is Active. If MBR-2 is already in backwash, MBR-1 will complete 1 additional PULL/RELAX Cycle before starting a Backwash Cycle.		Discrete			HOA		
700	MV-702	Backwash Actuated Valve	A Backwash is enabled once the permeate pumps for MBR-2 reach the number of PULL/RELAX cycles designated by the RELAX-SP on the HMI. the The actuated valve will be OPEN when MBR-2 is in Backwash and level switch LSH-801 is Active. If MBR-2 is already in backwash, MBR-1 will complete 1 additional PULL/RELAX Cycle before starting a Backwash Cycle.		Discrete			HOA		

System Outputs and Modes of Operation

Module	Tag / Mode	Description	Control Logic	Alarm Interactions	Output Type	Hour Meter	Amp Meter	HOA Control	Output Verification	Logic Verification
800	P-801	Backwash Transfer Pump	The backwash transfer pump will be ON when MBR-1 OR MBR-2 are in Backwash and level switch LSH-801 is Active The backwash transfer pump will be OFF after the duration of BKWSH-TIME-SP OR level switch LSL-801 becomes InActive.		Discrete			HOA		
7911	B-7911	Ventilation Blower	The continuous ventilation blower will always be ON. This blower is used as means to de-rate the screen building to a Class 1 Division 2 area. Air exchanges must be a minimum of 12 per hour,		Direct (not PLC controled)					
7901	HT-7911	Heat Trace	Always on internally controlled		Direct (not PLC controled)					
7901	HT-7912	Heat Trace	Always on internally controlled		Direct (not PLC controled)					
7901	HT-7913	Heat Trace	Always on internally controlled		Direct (not PLC controled)					
7901	H-7911	Building Heater	Always on internally controlled		Direct (not PLC controled)					
7901	H-7912	Building Heater	Always on internally controlled		Direct (not PLC controled)					
7904	B-7941	Aeration Exhaust Blower	On when B-501/502 is on OR B-601/602 is on		Discrete			Auto		
7904	H-7941	Building Heater	Always on internally controlled		Direct (not PLC controled)					
7906	H-7961	Building Heater	Always on internally controlled		Direct (not PLC controled)					

System Outputs and Modes of Operation

Module	Tag / Mode	Description	Control Logic	Alarm Interactions	Output Type	Hour Meter	Amp Meter	HOA Control	Output Verification	Logic Verification
7906	H-7962	Building Heater	Always on internally controlled		Direct (not PLC controled)					
7906	H-7963	Building Heater	Always on internally controlled		Direct (not PLC controled)					
7906	F-7963	Building Fan	Always on controlled by Wall Mount Termostat		Direct (not PLC controled)					

System Alarms

Module	Alarm	Alarm Description	Actuation Control	Delay	Email Notification (Y)	Self Resetting (Y)	System Shutdown (Y)	Notes	Alarm Verification
100	FTAH-101	Flow Transmitter Alarm High	FIT-101 > FTAH-101-SP	60s					
100	LAHH-101	Level Alarm High High	LSHH-101 = Active	5s		Y			
100	LAHH-102	Level Alarm High High	LSHH-102 = Active	5s		Y			
100	LAHH-103	Level Alarm High High	LSHH-103 = Active	5s		Y			
200	FTAH-201	Flow Transmitter Alarm High	FIT-201 > FTAL-201-SP	60s					
200	LAHH-201	Level Alarm High High	LSHH-201 = Active	5s		Y			
200	LAHH-202	Level Alarm High High	LSHH-202 = Active	5s		Y			
200	LAHH-203	Level Alarm High High	LSHH-203 = Active	5s		Y			

System Alarms

Module	Alarm	Alarm Description	Actuation Control	Delay	Email Notification (Y)	Self Resetting (Y)	System Shutdown (Y)	Notes	Alarm Verification
300	LAHH-301	Level Alarm High High	LSHH-301 = Active	5s		Y			
300	LALL-301	Level Alarm Low Low	LSLL-301 = Off	5s		Y			
400	LAHH-401	Level Alarm High High	LSHH-401 = Active	5s		Y			
400	LALL-401	Level Alarm Low Low	LSLL-401 = OFF	5s		Y			
500	LAHH-501	Level Alarm High High	LSHH-501 = Active	5s		Y			
500	LAHH-502	Level Alarm High High	LSHH-501 = Active	5s		Y			
500	PHAH-501	pH Alarm High	pH-501 > PHAH-501-SP	60s					
5800	PHAL-501	pH Alarm Low	pH-501 < PHAL-501-SP	60s					
500	DOAL-501	Dissolved Oxygen Alarm Low	DO-501 < DOAL-501-SP	15m					
500	DOALL-501	Dissolved Oxygen Alarm Low Low	DO-501 < DOAL-501-SP	4hrs					

System Alarms

Module	Alarm	Alarm Description	Actuation Control	Delay	Email Notification (Y)	Self Resetting (Y)	System Shutdown (Y)	Notes	Alarm Verification
500	TTAL-501	Low Temp TNK-501	TT-501<TTAL-501-SP						
500	PAL-501	Pressure Alarm Low	PSL-501 = InActive	5s		Y			
500	VFDA-501	VFD Fault							
500	VFDA-502	VFD Fault							
500	LALL-501	Low Low Level TNK-501	LSLL-501 = OFF						
500	LALL-502	Low Low Level TNK-502	LSLL-502 = OFF						
600	LAHH-601	Level Alarm High High	LSHH-601 = Active	5s		Y		Membrane Tank	
600	LAHH-602	Level Alarm High High	LSHH-602 = Active	5s		Y		Membrane Tank	
600	PAL-601	Pressure Alarm Low	PSL-601 = InActive	5s		Y		Membrane Blowers	

System Alarms

Module	Alarm	Alarm Description	Actuation Control	Delay	Email Notification (Y)	Self Resetting (Y)	System Shutdown (Y)	Notes	Alarm Verification
600	PAL-602	Pressure Alarm Low	PSL-602 = InActive	5s		Y		Membrane Blowers	
700	VTAH-701	Vacuum Transmitter Alarm High	VT-701 < VTAH-701-SP	5s		Y			
700	VTAH-702	Vacuum Transmitter Alarm High	VT-702 < VTAH-702-SP	5s		Y			
700	VFDA-701	VFD Fault							
700	VFDA-702	VFD Fault							
700	FTAH-701	Flow Transmitter Alarm High	FIT-701 > FTAH-701-SP	60s					
700	FTAL-701	Flow Transmitter Alarm Low	FIT-701 < FTAL-701-SP	60s					
700	FTAH-702	Flow Transmitter Alarm High	FIT-702 > FTAH-702-SP	60s					

System Alarms

Module	Alarm	Alarm Description	Actuation Control	Delay	Email Notification (Y)	Self Resetting (Y)	System Shutdown (Y)	Notes	Alarm Verification
700	FTAL-702	Flow Transmitter Alarm Low	FIT-702 < FTAL-702-SP	60s					
900	LAHH-901	Level Alarm High High	LSHH-901 = Active	5s		Y		Aerobic Digester Tank	
7910	PAL-7911	Pressure Alarm Low	PSL-7911 = InActive	5s		Y		Alarm indicates possible continuous ventilation failure, indicating risk that the room may become Class 1 Division 1 rated.	
7910	TALL-7911	Temperature Alarm Low Low	TSLL-7911 = Active	5s		Y			
7910	LAHH-7911	Level Alarm High High	LSHH-7911 = Active	Immediate					
7940	TALL-7941	Temperature Alarm Low Low	TSLL-7941 = Active	5s		Y			
7961	LAHH-7961	Level Alarm High High Sump	LSHH-7961 - OFF						
7960	TALL-7961	Low Low Temp Aalrm	LSLL-7961 = Active						

System Alarms

Module	Alarm	Alarm Description	Actuation Control	Delay	Email Notification (Y)	Self Resetting (Y)	System Shutdown (Y)	Notes	Alarm Verification
8200	ESA-8201	Emergency Stop Alarm	ESA-8201 = Active	Immediate		Y			
8200	PWR-FAIL	Power Failure		Immediate		Y			
8200	PLC FLT	PLC Fault Detected		Immediate		Y			
8200	PWR FLT	Phase Monitor Fault	JA-8201 = Active	Immediate		Y			

CONTAINER ENCLOSURES – CNTR SERIES

Application:

newterra Container Enclosures are a popular choice for housing large stationary systems. Containers are secure, cost effective and offer a wide range of options to customize appearance or functionality to suit customer requirements.

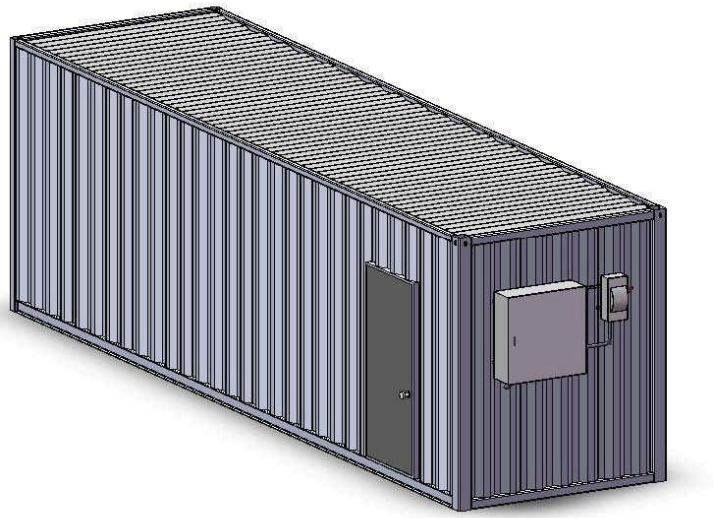

Constructions:

Heavy corrugated steel shell and steel beam structure with wood-plank flooring. Heavy steel double doors on one end are standard. Twenty-foot and forty-foot are standard length, but a custom length can be obtained by cutting one of the standard length units.

Standard Features:

- Painted exterior, plywood interior
- Waterproof sealed floor
- Double cargo doors on end (opening 89” H x 92” W); side door (32”)
- Lifting lugs at roof for crane lifting; lifting lugs at base for boom/crane lifting fork holes in base (20ft only)

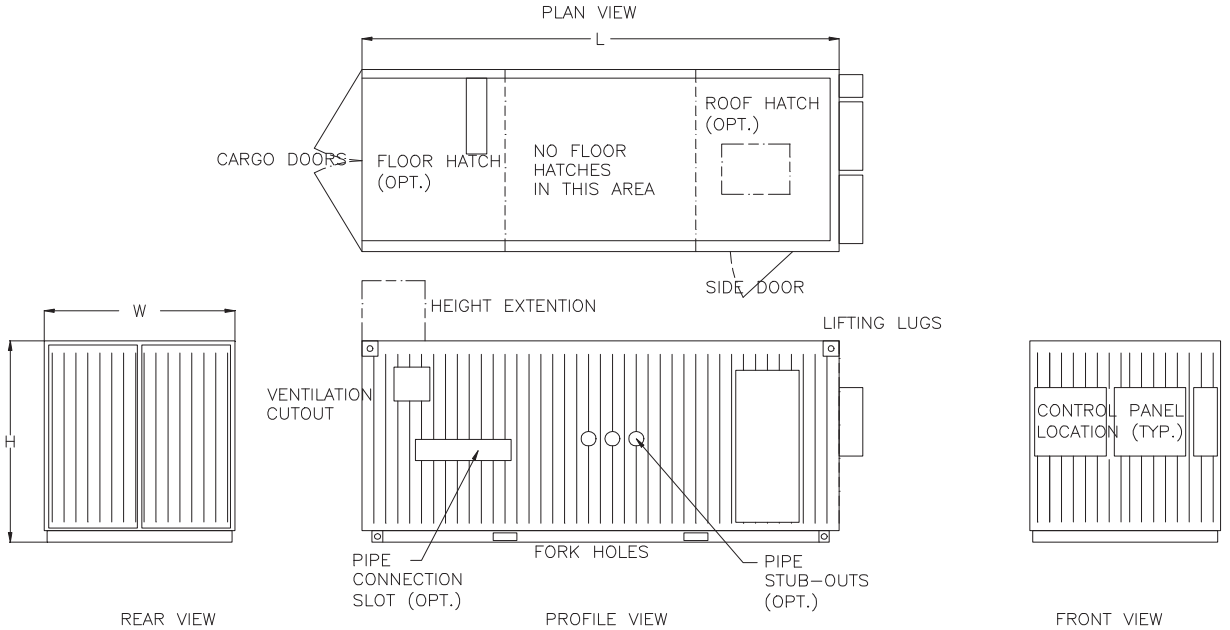

1325 California Avenue • P.O. Box 1517 • Brockville, ON • K6V 5Y6 • T: 800.420.4056 • F: 613.345.7633

Toronto • Brockville • Calgary • Montreal • Boston • Tampa • Macon • Seattle • Frankfurt newterra.com

newterra
smart technology. sustainable solutions.™

CONTAINER ENCLOSURES – CNTR SERIES

Dimension and Specification chart:

Part Number	Length	Width	Height	Weight Empty (lbs)	Std Cap. (lbs)	Interior Dimensions		
						Length	Width	Height
CNTR10	10’	8’	8’ 6”	3,000	9,000	9’ 8”	7’ 8”	7’ 10”
CNTR12	12’	8’	8’ 6”	3,800	10,800	11’ 8”	7’ 8”	7’ 10”
CNTR16	16’	8’	8’ 6”	4,500	14,400	15’ 5”	7’ 8”	7’ 10”
CNTR20	20’	8’	8’ 6”	5,000	18,000	19’ 4”	7’ 8”	7’ 10”
CNTR24	24’	8’	8’ 6”	5,800	21,600	22’ 4”	7’ 8”	7’ 10”
CNTR28	28’	8’	8’ 6”	6,400	25,200	27’ 4”	7’ 8”	7’ 10”
CNTR32	32’	8’	8’ 6”	7,200	28,800	31’ 4”	7’ 8”	7’ 10”
CNTR36	36’	8’	8’ 6”	8,000	32,400	35’ 4”	7’ 8”	7’ 10”
CNTR40	40’	8’	8’ 6”	8,800	36,000	39’ 4”	7’ 8”	7’ 10”

Options Table:

Option	Description
PE approval of structural drawings	Professional Engineer-stamped, wind-load hold-down documentation in compliance with local building code
Exterior Steel Siding	Industrial steel siding exterior
EPDM Roof	High-quality EPDM membrane roof
Process heat exchanger exhaust	Exhaust hatches can be inserted in wall to diffuse heat outside of building
Extra louver for added ventilation	For added ventilation and air circulation a louver can be installed into building wall
Sound Insulation	Layer of sound-insulation material built into walls blocks out operational noise
Rubber flooring	¾” thick rubber floor mats
Sump	2” sump in floor to detect flooding
Floor cutout	Floor hatch can be cutout to allow pipe entrance from underground
Roof extension or hatch	For tall equipment, roof extensions or hatches can be built into roof
Pipe stub outs	Pipe stub outs can be mounted on side of building
Pipe connection slot	Pipe-connection slot can be mounted on side of building
Ventilation Fan	Properly sized ventilation fan with thermostat
Heater	Properly sized heater with thermostat
Lighting	Proper lighting to allow for acceptable amount of light for work inside of the container
Thermal insulation	R7.2 insulation in walls and ceiling

MicroClear®

Technical Data Sheet **CASSETTE FILTER MCXL2** Article-No. 80200072

Completely welded filter cassette for the filtration of water. Typical applications:
Waste Water in membrane bioreactors, surface water. The cassette consists of:

- housing and header made of polypropylene (FDA approved)
- 23 active filter plates made of polypropylene (FDA approved)
- 2 protective plates made of polypropylene (FDA approved)
- laser welded membrane made of Polyethersulfone (KTW approved)

Parameter	Unit	Value
dimension of filter housing (incl. flange for aeration)	L x W x H cm	209 x 418 x 490
outlet diameter	mm	25
protective plates		2
number of active plates		23
total membrane surface area	m^2	8
possible flow[1] 2 chemical cleanings/year 1 chemical cleaning/year	l/m^2h	 30 15
max. flow	l/m^2h	50
membrane material[2]		PES/PVDF
pore size nom.[2]	µm	0.04-0.3
filtration pressure	bar	0.1-0.25
backflush pressure	bar	0.07-0.1
filter housing material		PP
weight	kg	approx. 11.5

[1] depending on wastewater characteristics
[2] membrane material selectable for specified applications or customers



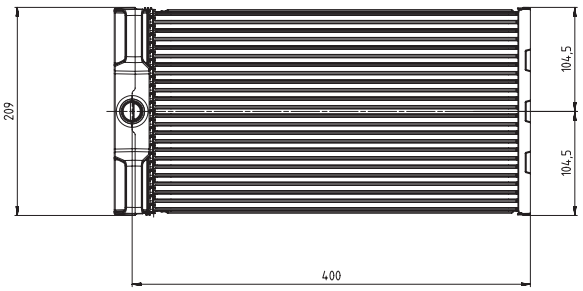

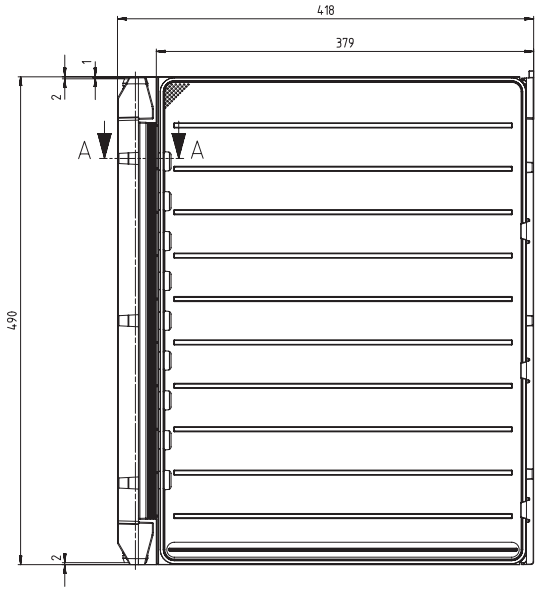

Revised: 13.01.2014
Design and specifications are subject to change without notice.

newterra gmbh
Steinbruchstrasse 8
35428 Langgoens
Germany

Tel +49 (0) 64 47 8 86 05 - 0
Fax +49 (0) 64 47 8 86 05 - 10
E-Mail info@microclear.de
Web www.microclear.de

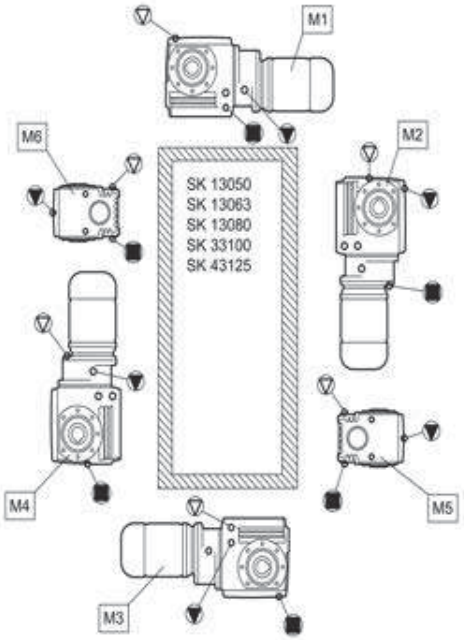
M1
M6
M2
SK 13050
SK 13063
SK 13080
SK 33100
SK 43125
M4
M5
M3

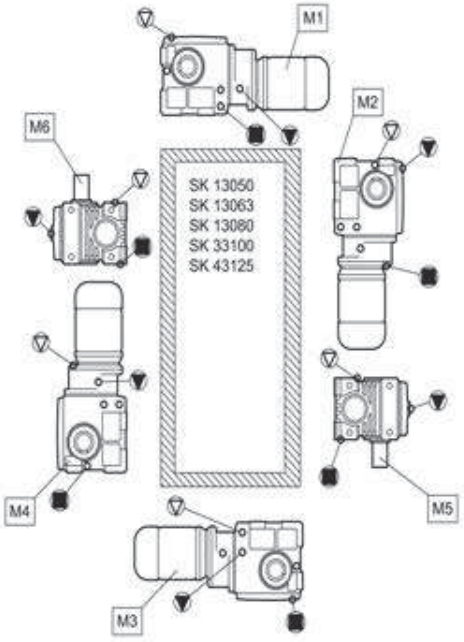
M1
M6
M2
SK 13050
SK 13063
SK 13080
SK 33100
SK 43125
M4
M5
M3

6.2 Lubricants

With the exception of type SK 11282, SK 11382, SK 12382 and SK 9096.1 gear units, all gear units are filled with lubricant ready for operation in the required installation position when delivered. This initial filling corresponds to a lubricant from the column for the ambient temperatures (normal version) in the lubricant table.

Roller bearing greases

This table shows comparable roller bearing greases from various manufacturers. The manufacturer can be changed for a given grease type. Getriebebau NORD must be contacted in case of change of grease type or ambient temperature range, as otherwise no warranty for the functionality of our gear units can be accepted.

Lubricant type	Ambient temperature	Castrol	FUCHS	KLÜBER LUBRICATION	Mobil	Shell
Mineral oil-based grease	-30 … 60 C	Tribol GR 100-2 PD	Renolit GP 2 Renolit LZR 2 H	-	Mobilux EP 2	Gadus S2 V100 2
	-50 … 40 C	Optitemp LG 2	Renolit WTF 2	-	-	-
Synthetic grease	-25 … 80 °C	Tribol GR 4747/220-2 HAT	Renolit HLT 2 Renolit LST 2	PETAMO GHY 133 N Klüberplex BEM 41-132	Mobiltemp SHC 32	
Biodegradable grease	-25 … 40 °C	-	Plantogel 2 S	Klüberbio M 72-82	Mobil SHC Grease 102 EAL	Naturelle Grease EP2

Table 5: Roller bearing greases

Lubricant table

This table shows comparable lubricants from various manufacturers. The manufacturer can be changed within a particular viscosity or lubricant type. Getriebebau NORD must be contacted in case of change of viscosity or lubricant type, as otherwise no warranty for the functionality of our gearboxes can be accepted.

Lubricant type	Details on type plate	DIN (ISO) / Ambient temperature	Castrol	FUCHS	KLÜBER	Mobil	Shell	TOTAL
Mineral oil	CLP 680	ISO VG 680 0...40 °C	Alpha EP 680 Alpha SP 680 Optigear BM 680 Optigear Synthetic 1100/680	Renolin CLP 680 Renolin CLP 680 Plus	Klüberoil GEM 1-680 N	Mobilgear 600 XP 680	Omala S2 G 680	Carter EP 680 Carter XEP 680
	CLP 220	ISO VG 220 -10…40 °C	Alpha EP 220 Alpha SP 220 Optigear BM 220 Optigear Synthetic 1100/220	Renolin CLP 220 Renolin CLP 220 Plus Renolin Gear 220 VCI	Klüberoil GEM 1-220 N	Mobilgear 600 XP 220	Omala S2 G 220	Carter EP 220 Carter XEP 220
	CLP 100	ISO VG 100 -15…25 °C	Alpha EP 100 Alpha SP 100 Optigear BM 100 Optigear Synthetic 1100/100	Renolin CLP 100 Renolin CLP 100 Plus	Klüberoil GEM 1-100 N	Mobilgear 600 XP 100	Omala S2 G 100	Carter EP 100
Synthetic oil (Polyglycol)	CLP PG 680	ISO VG 680 -20...40 °C	Alphasyn GS 680 Optigear Synthetic 800/680	Renolin PG 680	Klübersynth GH 6-680	Mobil Glygoyle 680	Omala S4 WE 680	Carter SY 680 Carter SG 680
	CLP PG 220	ISO VG 220 -25…80 °C	Alphasyn GS 220 Alphasyn PG 220 Optigear Synthetic 800/220	Renolin PG 220	Klübersynth GH 6-220	Mobil Glygoyle 220	Omala S4 WE 220	-
Synthetic oil (hydrocarbon)	CLP HC 460	ISO VG 460 -30…80 °C	Alphasyn EP 460 Optigear Synthetic PD 460	Renolin Unisyn CLP 460	Klübersynth GEM 4-460 N	Mobil SHC 634	Omala S4 GX 460	Carter SH 460
	CLP HC 220	ISO VG 220 -40…80 °C	Alphasyn EP 220 Optigear Synthetic PD 220	Renolin Unisyn CLP 220 Renolin Unisyn Gear VCI	Klübersynth GEM 4-220 N	Mobil SHC 630	Omala S4 GX 220	Carter SH 220
Bio-degradable oil	CLP E 680	ISO VG 680 -5…40 °C	-	Plantogear 680 S	-	-	-	-
	CLP E 220	ISO VG 220 -5…40 °C	Performance Bio GE 220 ESS Performance Bio GE 220 ESU	Plantogear 220 S	Klübersynth GEM 2-220	-	Naturelle Gear Fluid EP 220	-

Lubricant type	Details on type plate	DIN (ISO) / Ambient temperature	Castrol	FUCHS	KLÜBER LUBRICATION	Mobil	Shell	TOTAL
Food grade oil	CLP PG H1 680	ISO VG 680 -5…40 °C	Optileb GT 1800/680	Cassida Fluid WG 680	Klübersynth UH1 6-680	Mobil Glygoyle 680		-
	CLP PG H1 220	ISO VG 220 -25…40 °C	Optileb GT 1800/200	Cassida Fluid WG 220	Klübersynth UH1 6-220	Mobil Glygoyle 220		Nevastane SY 220
	CLP HC H1 680	ISO VG 680 -5…40 °C	Optileb GT 680	Cassida Fluid GL 680	Klüberoil 4 UH1-680 N	-		-
	CLP PG H1 220	ISO VG 220 -25…40 °C	Optileb GT 220	Cassida Fluid GL 220	Klüberoil 4 UH1-220 N	Mobil SHC Cibus 220		Nevastane XSH 220
Gear unit fluid grease		-25 … 60 °C	Tribol GR 100-00 PD Tribol GR 3020/1000-00 PD Spheerol EPL 00	Renolit Duraplex EP 00 Renolit LST 00	MICROLUBE GB 00 Klübersynth GE 46-1200	Mobil Chassis Grease LBZ Mobil Glygoyle Grease 00	Alvania EP(LF)2 -	Multis EP 00 Marson SY 00

Table 6: Lubricant table

6.3 Lubricant quantities

Information **Lubricants**

After changing the lubricant, and in particular after the initial filling, the oil level may change during the first few hours of operation, as the oil galleries and the hollow spaces only fill gradually during operation.

The oil level is still within the permissible tolerance.

If at the express request of the customer, an oil inspection glass is installed at an additional charge, we recommend that the customer corrects the oil level after an operating period of approx. 2 hours, so that when the gear unit is at a standstill and has cooled down, the oil level is visible in the inspection glass. Only then, is it possible to check the oil level by means of the inspection glass.

The filling quantities stated in the following tables are for guidance only. The precise quantities vary depending on the exact gear ratio. When filling, always observe the oil level screw hole as an indicator of the precise quantity of oil.

* Gear unit types SK 11282, SK 11382, SK 11382.1, SK 12382 and SK 9096.1 are normally supplied without oil.

6.4 Helical gear unit

[L]							[L]						
⇨ 6.1	M1	M2	M3	M4	M5	M6	⇨ 6.1	M1	M2	M3	M4	M5	M6
SK11E	0,25	0,50	0,65	0,50	0,40	0,40	SK11E F	0,30	0,50	0,50	0,45	0,40	0,40
SK21E	0,60	1,20	1,30	1,00	1,00	1,00	SK21E F	0,50	1,20	1,30	0,60	0,90	0,90
SK31E	1,10	2,00	2,20	1,70	1,50	1,50	SK31E F	0,90	1,80	1,65	1,30	1,25	1,25
SK41E	1,60	2,60	3,30	2,80	2,30	2,30	SK41E F	1,20	2,30	2,70	2,00	1,90	1,90
SK51E	1,80	3,50	4,10	4,00	3,80	3,80	SK51E F	1,80	3,50	4,10	3,00	3,80	3,80
[L]							[L]						
SK02	0,20	0,75	0,75	0,65	0,60	0,60	SK02 F	0,25	0,70	0,70	0,70	0,50	0,50
SK12	0,25	0,80	0,85	0,75	0,55	0,55	SK12 F	0,35	0,85	0,90	0,90	0,70	0,70
SK22	0,50	1,90	2,10	1,80	1,40	1,40	SK22 F	0,70	1,80	1,80	1,80	1,40	1,40
SK32	0,90	2,50	3,10	3,10	2,00	2,00	SK32 F	1,20	2,80	3,10	3,10	2,20	2,20
SK42	1,40	4,50	4,50	4,30	3,20	3,20	SK42 F	1,80	4,40	4,50	4,00	3,70	3,70
SK52	2,50	7,00	6,80	6,80	5,10	5,10	SK52 F	3,00	6,80	6,20	7,40	5,60	5,60
[L]							[L]						
SK62	6,50	15,00	13,00	16,00	15,00	15,00	SK62 F	7,00	15,00	14,00	18,50	16,00	16,00
SK72	10,00	23,00	18,00	26,00	23,00	23,00	SK72 F	10,00	23,00	18,50	28,00	23,00	23,00
SK82	14,00	35,00	27,00	44,00	32,00	32,00	SK82 F	15,00	37,00	29,00	45,00	34,50	34,50
SK92	25,00	73,00	47,00	76,00	52,00	52,00	SK92 F	26,00	73,00	47,00	78,00	52,00	52,00
SK102	36,00	79,00	66,00	102,00	71,00	71,00	SK102 F	40,00	81,00	66,00	104,00	72,00	72,00
[L]							[L]						
SK03	0,35	1,20	0,80	1,00	0,70	0,70	SK03 F	0,55	0,95	0,90	1,20	0,90	0,90
SK13	0,75	1,30	1,30	1,20	0,75	0,75	SK13 F	1,00	1,30	1,30	1,20	1,00	1,00
SK23	1,20	2,00	1,90	2,40	1,60	1,60	SK23 F	1,40	2,60	2,30	2,80	2,80	2,80
SK33N	1,75	3,00	3,40	4,00	2,30	2,30	SK33N F	2,20	3,00	3,40	4,20	2,30	2,30
SK43	3,00	5,60	5,20	6,60	3,60	3,60	SK43 F	3,50	5,70	5,00	6,10	4,10	4,10
SK53	4,50	8,70	7,70	8,70	6,00	6,00	SK53 F	5,20	8,40	7,00	8,90	6,70	6,70
[L]							[L]						
SK63	13,00	14,50	14,50	16,00	13,00	13,00	SK63 F	13,50	14,00	15,50	18,00	14,00	14,00
SK73	20,50	20,00	22,50	27,00	20,00	20,00	SK73 F	22,00	22,50	23,00	27,50	20,00	20,00
SK83	30,00	31,00	34,00	37,00	33,00	33,00	SK83 F	31,00	34,00	35,00	40,00	34,00	34,00
SK93	53,00	70,00	59,00	72,00	49,00	49,00	SK93 F	53,00	70,00	59,00	74,00	49,00	49,00
SK103	74,00	71,00	74,00	97,00	67,00	67,00	SK103 F	69,00	78,00	78,00	99,00	67,00	67,00

Table 7: Lubricant quantities for helical gear units

NORDBLOC

[L]							[L]						
⇨ 6.1	M1	M2	M3	M4	M5	M6	⇨ 6.1	M1	M2	M3	M4	M5	M6
SK072.1	0,16	0,32	0,21	0,23	0,18	0,20	SK072.1 F	0,16	0,32	0,21	0,23	0,18	0,20
SK172.1	0,27	0,59	0,42	0,45	0,32	0,39	SK172.1 F	0,27	0,59	0,42	0,45	0,32	0,39
SK372.1	0,45	1,05	0,75	1,00	0,60	0,65	SK372.1 F	0,45	1,05	0,75	1,00	0,60	0,65
SK572.1	0,75	1,90	1,50	2,00	1,10	1,15	SK572.1 F	0,75	1,90	1,50	2,00	1,10	1,15
SK672.1	1,10	2,60	2,15	2,70	1,55	1,65	SK672.1 F	1,10	2,60	2,15	2,70	1,55	1,65
SK772.1	1,30	3,80	2,40	3,20	1,60	2,50	SK772.1 F	1,30	3,80	2,40	3,30	1,70	2,40
SK872.1	2,90	7,80	4,60	6,40	2,50	4,00	SK872.1 F	3,20	7,50	5,10	6,70	2,60	4,30
SK972.1	4,50	12,00	7,50	11,50	4,20	7,50	SK972.1 F	4,50	12,50	8,00	12,50	4,50	7,70
SK772.1VL	2,00	3,80	2,40	3,20	1,60	2,50	SK772.1VL F	2,00	3,80	2,40	3,30	1,70	2,40
SK872.1VL	5,00	7,80	4,60	6,40	2,50	4,00	SK872.1VL F	5,00	7,50	5,10	6,70	2,60	4,30
SK972.1VL	8,50	12,00	7,50	11,50	4,20	7,50	SK972.1VL F	8,50	12,50	8,00	12,50	4,50	7,70
[L]							[L]						
SK373.1	0,45	1,05	0,75	1,00	0,60	0,65	SK373.1 F	0,45	1,05	0,75	1,00	0,60	0,65
SK573.1	0,75	1,90	1,50	2,00	1,10	1,15	SK573.1 F	0,75	1,90	1,50	2,00	1,10	1,15
SK673.1	1,10	2,60	2,15	2,70	1,55	1,65	SK673.1 F	1,10	2,60	2,15	2,70	1,55	1,65
SK773.1	2,30	3,80	3,30	3,20	2,40	3,10	SK773.1 F	2,00	3,50	3,20	2,90	2,30	3,00
SK873.1	4,20	7,80	5,90	6,40	4,10	5,90	SK873.1 F	4,10	7,60	6,90	6,60	5,00	6,60
SK973.1	7,50	12,00	10,50	11,50	7,50	10,50	SK973.1 F	7,40	12,20	11,10	11,60	8,00	10,90
SK773.1VL	2,30	3,80	3,30	3,20	2,40	3,10	SK773.1VL F	2,00	3,50	3,20	2,90	2,30	3,00
SK873.1VL	4,20	7,80	5,90	6,40	4,10	5,90	SK873.1VL F	4,10	7,60	6,90	6,60	5,00	6,60
SK973.1VL	7,50	12,00	10,50	11,50	7,50	10,50	SK973.1VL F	7,40	12,20	11,10	11,60	8,00	10,90
[L]													
SK071.1/071.1F	0,18	0,40	0,38	0,40	0,30	0,30							
SK171.1/171.1F	0,22	0,40	0,36	0,40	0,33	0,33							
SK371.1/371.1F	0,35	0,58	0,55	0,58	0,49	0,49							
SK571.1/571.1F	0,48	0,86	0,80	0,92	0,68	0,68							
SK771.1/771.1F	0,90	1,50	1,20	1,70	1,16	1,16							

Table 8: Lubricant quantities for NORDBLOC

NORDBLOC helical gear units

	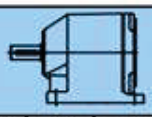							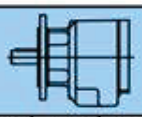					
[L]							[L]						
⇨ 6.1	M1	M2	M3	M4	M5	M6	⇨ 6.1	M1	M2	M3	M4	M5	M6
SK172	0,35	0,50	0,50	0,50	0,50	0,50	SK172 F	0,35	0,50	0,50	0,50	0,50	0,50
SK272	0,60	1,00	1,00	1,00	1,00	1,00	SK272 F	0,60	1,00	1,00	1,00	1,00	1,00
SK372	0,60	1,00	1,00	1,00	1,00	1,00	SK372 F	0,60	1,00	1,00	1,00	1,00	1,00
SK472	1,00	1,90	1,90	2,00	1,80	1,80	SK472 F	1,00	1,90	1,90	1,90	1,90	1,50
SK572	1,00	1,90	1,90	2,00	1,80	1,80	SK572 F	1,00	1,90	1,90	1,90	1,90	1,50
SK672	1,40	3,40	3,10	3,15	1,45	3,15	SK672 F	1,15	3,40	2,70	2,80	1,25	2,70
SK772	2,00	3,30	3,50	4,20	2,70	3,30	SK772 F	1,60	3,30	3,50	3,30	3,10	3,10
SK872	3,70	9,60	9,10	7,30	4,70	8,00	SK872 F	3,50	9,00	7,90	7,70	3,90	7,20
SK972	6,50	16,00	15,70	14,70	8,50	14,00	SK972 F	6,50	15,00	13,00	13,50	6,50	12,00
	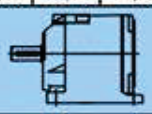							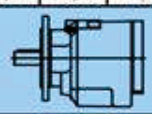					
[L]							[L]						
SK273	0,62	1,10	1,10	1,10	1,10	1,10	SK273 F	0,62	1,10	1,10	1,10	1,10	1,10
SK373	0,55	1,10	1,10	1,10	1,10	1,10	SK373 F	0,55	1,10	1,10	1,10	1,10	1,10
SK473	1,30	2,50	2,10	2,40	2,10	2,10	SK473 F	1,25	2,40	2,10	2,50	2,10	2,10
SK573	1,30	2,50	2,10	2,40	2,10	2,10	SK573 F	1,25	2,40	2,10	2,50	2,10	2,10
SK673	1,80	3,80	3,20	3,40	2,90	3,00	SK673 F	1,70	3,80	3,00	3,20	3,00	3,00
SK773	2,50	4,50	3,70	4,60	3,30	3,30	SK773 F	2,30	5,00	3,60	4,50	3,90	3,90
SK873	6,20	8,40	7,50	9,10	7,50	7,50	SK873 F	5,00	8,80	7,60	8,00	8,00	8,00
SK973	11,00	15,80	13,00	16,00	13,30	13,00	SK973 F	10,30	16,50	13,00	16,00	14,00	14,00

Table 9: Lubricant quantities for NORDBLOC helical gear units

Standard helical gear units

[L]							[L]						
⇨ 6.1	M1	M2	M3	M4	M5	M6	⇨ 6.1	M1	M2	M3	M4	M5	M6
SK20	0,55	1,00	0,55	1,00	0,55	0,55	SK20 F	0,35	0,60	0,35	0,60	0,35	0,35
SK0	0,13	0,22	0,13	0,22	0,13	0,13	SK0 F	0,13	0,22	0,13	0,22	0,13	0,13
SK01	0,22	0,38	0,22	0,38	0,22	0,22	SK01 F	0,22	0,38	0,22	0,38	0,22	0,22
SK25	0,50	1,00	0,50	1,00	0,50	0,50	SK25 F	0,50	1,00	0,50	1,00	0,50	0,50
SK33	1,00	1,60	1,00	1,60	1,00	1,00	SK33 F	1,00	1,50	1,00	1,50	1,00	1,00
SK30	0,90	1,30	0,90	1,30	0,90	0,90	SK30 F	0,70	1,10	0,70	1,10	0,70	0,70
SK300	1,20	2,00	1,20	2,00	1,20	1,20	SK300 F	1,25	1,50	1,20	1,80	1,30	0,95
SK330	1,80	2,80	1,80	2,80	1,80	1,80	SK330 F	1,60	2,50	1,60	2,90	1,90	1,40
SK200	0,80	1,30	0,80	1,30	0,80	0,80	SK200 F	0,65	0,95	0,70	1,10	0,80	0,50
SK010	0,38	0,60	0,38	0,60	0,38	0,38	SK010 F	0,35	0,65	0,40	0,74	0,50	0,30
SK250	1,20	1,50	1,20	1,50	1,20	1,20	SK250 F	0,90	1,40	1,00	1,60	1,30	0,80
SK000	0,24	0,40	0,24	0,41	0,24	0,24	SK000 F	0,24	0,41	0,24	0,41	0,24	0,24

Table 10: Lubricant quantities for standard helical gear units

Parallel shaft gear units

[L]							[L]						
⇨ 6.1	M1	M2	M3	M4	M5	M6	⇨ 6.1	M1	M2	M3	M4	M5	M6
SK0182NB A	0,40	0,55	0,55	0,40	0,40	0,40							
SK0282NB A	0,70	1,10	0,80	1,10	0,90	0,90							
							SK1382NB A	1,40	2,30	2,20	2,20	2,00	2,00
[L]							[L]						
SK1282 A	0,95	1,30	0,90	1,30	1,00	1,00	SK2382 A	2,30	2,70	2,10	3,20	2,00	2,00
SK2282 A	1,70	2,30	1,70	2,20	1,90	1,90	SK3382 A	3,80	4,30	3,00	5,50	3,00	3,00
SK3282 A	2,80	4,00	3,30	3,80	3,00	3,00	SK4382 A	6,10	6,90	4,90	8,40	5,00	5,00
SK4282 A	4,20	5,40	4,40	5,00	4,20	4,20	SK5382 A	12,50	12,00	6,70	14,00	8,30	8,30
SK5282 A	7,50	8,80	7,50	8,80	7,20	7,20	SK1382 A	1,45	1,60	1,15	1,70	1,10	1,10
[L]							[L]						
SK6282 A	17,00	15,50	12,50	17,50	11,00	14,00	SK6382 A	16,00	13,00	10,00	18,00	14,00	12,50
SK7282 A	25,50	21,00	20,50	27,00	16,00	21,00	SK7382 A	22,00	21,00	16,00	25,00	23,00	22,00
SK8282 A	37,50	33,00	30,50	44,00	31,00	31,00	SK8382 A	34,50	32,50	25,00	38,00	35,00	30,00
SK9282 A	74,50	70,00	56,00	80,00	65,00	59,00	SK9382 A	73,50	70,00	43,00	74,50	65,00	60,00
[L]							[L]						
SK10282 A	90	90	40	90	60	82	SK10382 A	85	90	73	100	80	80
SK11282 A	165	160	145	195	100	140	SK11382 A	160	155	140	210	155	135
							SK12382 A	160	155	140	210	155	135
							SK10382.1 A	76,0	80,0	71,0	92,5	71,5	66,5
							SK11382.1 A	127	133	118	194	124	112

* For further information see page 58

Table 11: Lubricant quantities for parallel shaft gear units

Bevel gear units

[L]							[L]						
⇨ 6.1	M1	M2	M3	M4	M5	M6	⇨ 6.1	M1	M2	M3	M4	M5	M6
SK92072	0,40	0,60	0,50	0,55	0,40	0,40	SK92072 A	0,40	0,60	0,55	0,55	0,40	0,40
SK92172	0,60	0,90	1,00	1,10	1,10	0,80	SK92172 A	0,50	1,00	0,90	1,05	0,90	0,60
SK92372	0,90	1,60	1,50	1,90	1,50	0,90	SK92372 A	1,20	1,60	1,50	1,90	1,30	1,30
SK92672	1,80	3,50	3,60	3,40	2,60	2,60	SK92672 A	1,60	2,80	2,50	3,30	2,40	2,40
SK92772	2,30	4,50	4,60	5,30	4,10	4,10	SK92772 A	2,80	4,40	4,50	5,50	3,50	3,50
[L]							[L]						
SK92072.1	0,26	0,49	0,42	0,54	0,29	0,31	SK93072.1	0,39	0,93	0,79	1,02	0,49	0,62
SK92172.1	0,34	0,61	0,52	0,67	0,42	0,48	SK93172.1	0,60	1,17	0,94	1,22	0,65	0,85
SK92372.1	0,43	0,92	0,73	0,83	0,55	0,61	SK93372.1	1,00	1,97	1,65	2,14	1,12	1,34
SK92672.1	0,85	1,60	1,20	1,50	1,02	1,02	SK93672.1	1,80	3,23	2,71	3,80	2,02	2,45
SK92772.1	1,30	2,65	1,86	2,45	1,60	1,60	SK93772.1	2,72	4,63	3,70	5,40	2,93	3,25
SK920072.1	0,21	0,47	0,36	0,34	0,28	0,28	SK930072.1	0,28	0,65	0,56	0,54	0,39	0,39
[L]							[L]						
SK9012.1	0,70	1,70	1,90	2,10	1,10	1,50	SK9012.1 A	1,00	1,90	1,90	2,20	1,20	1,70
SK9016.1	0,70	1,70	1,90	2,10	1,10	1,50	SK9016.1 A	1,00	1,90	1,90	2,20	1,20	1,70
SK9022.1	1,30	2,90	3,30	3,80	1,70	2,80	SK9022.1 A	1,60	3,50	3,50	4,20	2,30	2,80
SK9032.1	1,80	5,40	6,10	6,80	3,00	4,60	SK9032.1 A	2,10	4,80	6,40	7,10	3,30	5,10
SK9042.1	4,40	9,00	10,00	10,70	5,20	7,70	SK9042.1 A	4,50	10,00	10,00	11,50	6,50	8,20
SK9052.1	6,50	16,00	19,00	21,50	11,00	15,50	SK9052.1 A	7,50	16,50	20,00	23,50	11,50	18,00
SK9062.1	10,00	27,50	32,00	36,00	18,00	24,00	SK9062.1 A	12,00	27,50	33,00	38,50	19,00	26,00
SK9072.1	10,00	27,50	32,00	36,00	18,00	24,00	SK9072.1 A	12,00	27,50	33,00	38,50	19,00	26,00
SK9082.1	17,00	51,50	62,50	71,50	33,00	46,50	SK9082.1 A	21,00	54,00	66,00	80,00	38,00	52,00
SK9086.1	29,00	73,00	85,00	102,00	48,00	62,00	SK9086.1 A	36,00	78,00	91,00	107,00	53,00	76,00
SK9092.1	41,00	157,00	170,00	172,00	80,00	90,00	SK9092.1 A	40,00	130,00	154,00	175,00	82,00	91,00
SK9096.1	70,00	187,00	194,00	254,00	109,00	152,00	SK9096.1 A	80,00	187,00	193,00	257,00	113,00	156,00
[L]							[L]						
SK9013.1	1,35	2,10	2,15	2,75	1,00	1,80	SK9013.1 A	1,45	2,30	2,10	2,80	1,05	1,80
SK9017.1	1,30	2,00	2,10	2,70	1,00	1,70	SK9017.1 A	1,45	2,30	2,10	2,80	1,05	1,80
SK9023.1	2,20	3,20	3,60	4,70	2,20	2,90	SK9023.1 A	2,30	3,50	3,80	5,30	2,20	3,40
SK9033.1	3,10	5,70	6,30	8,00	3,40	4,80	SK9033.1 A	3,70	5,70	6,70	8,60	3,60	5,30
SK9043.1	5,00	10,10	11,00	13,30	5,70	8,10	SK9043.1 A	6,50	10,50	11,90	14,70	6,70	9,30
SK9053.1	10,00	17,00	20,00	24,50	11,50	16,50	SK9053.1 A	13,00	18,00	21,50	26,50	13,00	17,00

* For further information see page 58

Table 12: Lubricant quantities for bevel gear units

Helical worm gear units

[L]							[L]	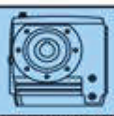					
⇨ 6.1	M1	M2	M3	M4	M5	M6		M1	M2	M3	M4	M5	M6
SK02040	0,40	0,80	0,75	0,65	0,50	0,50	SK02040 A	0,40	0,70	0,65	0,65	0,55	0,55
SK02050	0,40	1,40	1,10	1,30	0,70	0,70	SK02050 A	0,45	1,40	1,15	1,10	0,75	0,75
SK12063	0,60	1,80	1,20	1,60	1,00	1,00	SK12063 A	0,55	1,45	1,60	1,60	1,10	1,10
SK12080	0,90	3,10	2,40	3,00	1,80	1,80	SK12080 A	0,80	3,10	3,20	2,80	1,80	1,80
SK32100	1,50	6,30	5,60	5,50	3,60	3,60	SK32100 A	1,50	5,60	5,60	5,30	4,00	4,00
SK42125	2,80	11,80	10,20	10,00	6,20	6,20	SK42125 A	3,00	12,50	10,80	10,80	6,50	6,50
[L]	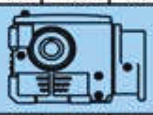						[L]	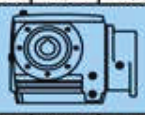					
SK13050	0,75	1,75	1,30	1,75	0,75	0,75	SK13050 A	0,90	1,80	1,30	1,65	1,30	1,30
SK13063	1,00	2,30	1,50	2,20	1,10	1,10	SK13063 A	1,05	2,10	1,80	2,10	1,40	1,40
SK13080	1,70	3,50	3,50	3,50	2,00	2,00	SK13080 A	1,60	3,60	2,90	3,75	2,00	2,00
SK33100	2,40	6,40	5,40	6,50	3,40	3,40	SK33100 A	2,60	6,00	5,80	6,00	3,50	3,50
SK43125	4,25	13,00	10,50	13,50	7,20	7,20	SK43125 A	4,60	13,60	11,40	14,30	7,60	7,60
[L]							[L]	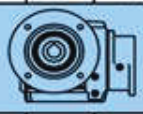					
SK02040 F	0,40	0,70	0,65	0,65	0,55	0,55							
SK02050 F	0,40	1,50	1,25	1,20	0,90	0,75	SK13050 F	0,75	1,80	1,50	1,70	1,05	0,90
SK12063 F	0,50	1,95	1,70	1,75	1,20	0,95	SK13063 F	1,00	2,30	1,90	2,20	1,35	1,10
SK12080 F	0,90	3,70	3,20	3,40	2,50	2,30	SK13080 F	1,60	3,80	3,50	3,90	2,70	2,50
SK32100 F	1,40	6,30	6,10	6,10	4,00	3,60	SK33100 F	2,65	7,20	6,40	7,60	4,30	3,80
SK42125 F	3,00	11,50	11,50	11,00	8,40	7,30	SK43125 F	4,70	15,00	13,00	16,00	9,00	7,70

Table 13: Lubricant quantities for Helical worm gear units

6.5 Torque values

Dimensions	Bolt Torques [Nm]					
	Screw connections in the strength classes			Cover screws	Threaded pin on coupling	Screw connections on protective covers
	8.8	10.9	12.9			
M4	3.2	5	6	-	-	-
M5	6.4	9	11	-	2	-
M6	11	16	19	-	-	6.4
M8	27	39	46	11	10	11
M10	53	78	91	11	17	27
M12	92	135	155	27	40	53
M16	230	335	390	35	-	92
M20	460	660	770	-	-	230
M24	790	1150	1300	80	-	460
M30	1600	2250	2650	170	-	-
M36	2780	3910	4710	-	-	1600
M42	4470	6290	7540	-	-	-
M48	6140	8640	16610	-	-	-
M56	9840	13850	24130	-	-	-
G½	-	-	-	75	-	-
G¾	-	-	-	110	-	-
G1	-	-	-	190	-	-
G1¼	-	-	-	240	-	-
G1½				300		-

Table 14: Torque values

Assembling the hose fittings

Oil the thread of the union nut, the cutting ring and the screw neck. Tighten the union nut with the wrench until the point where the union nut can only be turned with considerably more force. Turn the union nut of the screw fitting approx. 30° to 60° further but not more than 90°. For this the screw neck must be held with a wrench. Remove excess oil from the screw fitting

6.6 Troubleshooting

⚠ WARNING — **Injury to persons**

There is a slipping hazard in case of leaks.

Clean the soiled floor and machine components before starting troubleshooting.

⚠ WARNING — **Injury to persons**

Risk of injury due to rapidly rotating and hot machine components.

Troubleshooting must only be performed when gear units are at a standstill and have cooled down. The drive must be isolated and secured to prevent accidental start-up.

NOTICE — **Gear unit damage**

Damage to the gear unit is possible in case of faults.

Shut down the drive unit immediately in case of any faults in the gear unit.

Gear unit malfunctions		
Fault	**Possible cause**	**Remedy**
Unusual running noises, vibrations	Oil too low or bearing damage or gear wheel damage	Consult NORD Service
Oil escaping from the gear unit or motor	Defective seal	Consult NORD Service
Oil escaping from pressure vent	Incorrect oil level or incorrect, contaminated oil or unfavourable operating conditions	Oil change, use oil expansion tank (Option OA)
Gear unit becomes too hot	Unfavourable installation conditions or gear unit damage	Consult NORD Service
Shock when switching on, vibrations	Defective motor coupling or loose gear unit mounting or defective rubber element	Replace elastomer gear rim, tighten motor and gear unit fastening bolts, replace rubber element
Output shaft does not rotate although motor is running	Fracture in gear unit or defective motor coupling or shrink disc slippage	Consult NORD Service

Table 15: Overview of malfunctions

6.7 Leaks and seals

Gear units are filled with oil or grease to lubricate the moving parts. Seals prevent the escape of lubricants. A complete seal is not technically possible, as a certain film of moisture, for example on the radial shaft sealing rings is normal and advantageous for a long-term seal. In the region of vents, moisture due to oil may be visible due to the escape of oil mist because of the function. In the case of grease-lubricated labyrinth seals, e.g. Taconite sealing systems, used grease emerges from the sealing gap due to the principle of operation. This apparent leak is not a fault.

According to the test conditions as per DIN 3761, the leak is determined by the medium which is to be sealed, which in test bench tests exceeds the function-related moisture in a defined test period and which results in dripping of the medium which is to be sealed. The measured quantity which is then collected is designated as leakage.

Definition of leakage according to DIN 3761 and its appropriate use					
		Location of leak			
Term	**Explanation**	**Shaft sealing ring**	**in IEC adapter**	**Housing joint**	**Venting**
Sealed	No moisture apparent	No reason for complaint	No reason for complaint	No reason for complaint	No reason for complaint
Damp	Moisture film locally restricted (not an area)	No reason for complaint	No reason for complaint	No reason for complaint	No reason for complaint
Wet	Moisture film beyond the extent of the component	No reason for complaint	No reason for complaint	Repair if necessary	No reason for complaint
Measurable leakage	Recognisable stream, dripping	Repair recommended	Repair recommended	Repair recommended	Repair recommended
Temporary leakage	Temporary malfunction of the sealing system or oil leak due to transport *)	No reason for complaint	No reason for complaint	Repair if necessary	No reason for complaint
Apparent leakage	Apparent leakage, e.g. due to soiling, sealing systems which can be re-lubricated	No reason for complaint	No reason for complaint	No reason for complaint	No reason for complaint

Table 16: Definition of leaks according to DIN 3761

*) Previous experience has shown that moist or wet radial shaft sealing rings stop leaking later. Therefore, under no circumstances can replacement be recommended at this stage. The reason for momentary moisture may be e.g. small particles under the sealing lip.

6.8 Repair information

For enquiries to our technical and mechanical service departments, please have the precise gear unit type (type plate) and if necessary the order number (type plate) to hand.

6.8.1 Repairs

The device must be sent to the following address if it needs repairing:

Getriebebau NORD GmbH & Co. KG

Service Department

Getriebebau-Nord-Straße 1

22941 Bargteheide

No guarantee can be given for any attachments, such as encoders or external fans, if a gear unit or geared motor is sent for repair.

Please remove all non-original parts from the gear unit or geared motor.

Information **Reason for return**

If possible, the reason for returning the component or device should be stated. If necessary, at least one contact should be stated in case of queries.

This is important in order to keep repair times as short and efficient as possible.

6.8.2 Internet information

In addition, the country-specific operating and installation instructions in the available languages can be found on our Internet site: www.nord.com

6.9 Abbreviations

2D	Dust explosion protected gear units zone 21
2G	Explosion protected gear units with ignition protection class "c"
3D	Dust explosion protected gear units zone 22
ATEX	**AT**mospheres **EX**plosibles
B5	Flange fastening with through holes
B14	Flange fastening with threaded holes
CW	Clockwise, right-hand direction of rotation
CCW	Counter-clockwise, left-hand direction of rotation
°dH	Water hardness in German hardness degrees: 1°dH = 0.1783 mmol/l
DIN	German standards institute
EC	European Community
EN	European standard
FR	Radial transverse force
FA	Axial force
IE1	Motors with standard efficiency
IE2	Motors with high efficiency
IEC	International Electrotechnical Commission
NEMA	National Electrical Manufacturers Association
IP55	International Protection
ISO	International Standardisation Organisation
pH	pH value
PPE	Personal Protective Equipment
RL	Directive
VCI	Volatile Corrosion Inhibitor
WN	Getriebebau NORD factory standard

Key word index

A

Activating the vent 18
Address 68
Assembly 18

C

Coolant 34
Cooling cover 31
Correct use 9
Covers 27

D

Danger labels 8
Disposal of materials 11

F

Faults 66

G

Gear unit types 12
General overhaul 41
General safety information 10

H

Hose fitting 65

I

Inspection intervals 36
Installing the gear unit 20
Internet 68

L

Leakage 67
Long-term storage 16
Lubricant sensor 33
Lubricants 56

M

Maintenance 68
Maintenance intervals 36
Maintenance work
- Changing the oil 40
- Check for running noises 38
- Check the oil level 38
- Lubricant sensor 39
- Radial packing ring 41
- Re-greasing VL2, VL3 and IEC 39
- Standard vent plug 41
- Visual inspection 37

Motor weights for IEC adapters 28

O

Option H66 22

P

Painting the gear unit 32
Pulling devices 21
Push-on gear unit 22

R

Repairs 68
Roller bearing greases 55
Running-in time 35

S

Safety information 2
Service 68
Shrink disc 25
Standard motor 28
Storage 16

T

Tightening torques 65
Transport 15
Type plate 14



NORD DRIVESYSTEMS Group

Headquarters and Technology Center
in Bargteheide close to Hamburg, Germany

Innovative drive solutions
for more than 100 branches of industries

Mechanical products
Parallel shaft-, helical gear-, bevel gear- and worm gear units

Electrical products
IE2/IE3/IE4-Motors

Electronic products
Centralized and decentralized frequency inverters
and motor starters

7 state-of-the-art production plants
for all drive components

Subsidiaries in 36 countries on 5 continents
providing local stock, assembly, production,
technical support and customer service.

More than 3,200 employees around the world
providing application-specific solutions for our customers.

www.nord.com/locator

Headquarters:

Getriebebau NORD GmbH & Co. KG
Getriebebau-Nord-Straße 1
22941 Bargteheide, Germany
Fon +49 (0) 4532 / 289-0
Fax +49 (0) 4532 / 289-2253
info@nord.com, www.nord.com

Member of the NORD DRIVESYSTEMS Group

NORD
DRIVESYSTEMS

6052802 / 3816

TNK-101/2 - Tank, Closed Top, Cylindrical, 2100 gal, Norwesco - no drain, PN 40241
TNK-901 - Tank, Closed Top, Cylindrical, 2100 gal, Norwesco - no drain, PN 40241

NORWESCO®



Liquid Storage Tanks

Think Tanks. Think Norwesco.

2004 Edition

E-1348

NORWESCO

NORWESCO tanks are manufactured to strict quality guidelines to ensure years of high-performance use. Rugged, impact-resistant, one-piece seamless polyethylene construction makes our tanks suitable for the storage and/or transport of most liquid fertilizers, herbicides, insecticides and fungicides as well as a wide range of industrial chemicals. NORWESCO tanks are manufactured using resins that meet FDA specifications to ensure safe storage of potable water.

Quality, price, product line and leading edge technology make NORWESCO North America's largest manufacturer of rotationally molded tanks. Standard NORWESCO tanks will be delivered to you with a fitting installed when applicable. NORWESCO tanks may be ordered without a fitting as well.

Vertical Storage Tanks 2
Horizontal Leg Tanks 3
Drainable Leg Tanks 3
Elliptical Leg Tanks 3
Steel Supports & Accessories for Leg Tanks 4
Mini Bulk Tanks 5
Pickup Truck Tanks 5
PCO Tanks 5
Elliptical Tanks 6
Elliptical Tank Skids 6
Applicator Tanks 7
Inductor Tanks 7
Spot Sprayers 7
Applicator Saddle Assemblies 8
Inductor Stands 8
Cone Bottom Tanks 9
Polyethylene Cone Bottom Stands 10
Heavy Duty Cone Bottom Stands 10
Horizontal Box Tank 11
Sphere 11
Specialty Water Tanks 11
High Density Polyethylene Lids 12
Hinged Lid 12
Polyethylene Tank Repair Kits 12
Polypropylene Bulkhead Fittings 13
Polypropylene Bolted Fittings 14
Stainless Steel Bolted Fittings 14



Vertical Storage Tanks

Vertical storage tanks are most frequently used for bulk storage and mobile nursing applications. NORWESCO vertical tanks feature tie-down slots, built-in graduated gallon indicators, an offset fill-well and a self-vented, slosh-proof lid.

All NORWESCO vertical tanks are equipped with an outlet fitting and siphon tube.

Gallon Capacity	Diameter	Height	Fill Opening	Outlet/Drain Specification	Premium Weight Part No. White	Heavy Weight Part No. Blue
25 ∞	18"	29"	5"	¾"	41867	—
50 ∞	18"	53"	5"	¾"	41865	—
65 ∞	23"	42"	8"	1¼"	45192	—
75	23"	50"	8"	1¼"	41863	—
100	28"	43"	8"	1¼"	41861	
105	23"	63"	8"	2"	40803	—
150	30"	56"	8"	1¼"	41859	—
165	31"	55"	16"	2"	40281	—
200	30"	72"	8"	2"	41856	—
210	31"	69"	16"	2"	47401	—
250	30"	89"	8"	2"	41854	—
300	36"	78"	16"	2"	40213	—
305	46"	49"	16"	2"	40302	—
500	48"	72"	16"	2"	40148	40150
550	67"	42"	16"	2"	40023	—
750	48"	102"	16"	2"	40606	—
1000	64"	79"	16"	2"	40152	40154
1100	87"	51"	16"	2"	40070	40081
1350	71"	87"	16"	2"	40861	—
1500	64"	115"	16"	2"	40144	40146
1550	87"	65"	16"	2"	40235	40236
1700	87"	72"	16"	2"	40010	40012
2100	87"	87"	16"	2"	40178	40241
2100	102"	69"	16"	2"	41399	—
2500	95"	89"	16"	2"	40051	40052
3000	95"	107"	16"	2"	40754	40755
4000	102"	125"	16"	3"/2"	40312	—
4200	102"	131"	16"	2"	41403	—
5000	102"	152"	16"	3"/2"	40164	40166
5800	141"	97"	16"	3"/2"	40071	—
6000	102"	182"	16"	3"/2"	40226	40233
6100	120"	139"	16"	3"/2"	40659	40661
6500	120"	150"	16"	3"/2"	40224	40232
7800	120"	176"	16"	3"/2"	40663	40665
9000	141"	146"	16"	3"/2"	40543	40231
10000	141"	160"	16"	3"/2"	40545	40353
12000	141"	192"	16"	3" *	40539	40541
15000	141"	244"	16"	3" *	41334	41336

∞ Within UPS dimensional limits *316 Stainless Steel Bolted Fitting

PLEASE NOTE: Tank availability may vary according to manufacturing location. Please contact NORWESCO Customer Service or your NORWESCO distributor for specific details.
Tank dimensions and capacities may vary slightly and are subject to change without notice.

Horizontal Leg Tanks

With the broadest leg tank line available, NORWESCO manufactures a size that will fit your needs. Used primarily for transport and nursing applications, NORWESCO'S leg tanks feature molded-in legs that act as "baffles" to reduce sloshing. Please refer to page 4 for support bands.

Gallon Capacity	Diameter	Length	Fill Opening	Outlet/Drain Specification	No. of Bands	Premium Weight Part No. White	Heavy Weight Part No. Blue
35 ∞	20"	29"	5"	¾"	2 optional	45223	—
55 ∞	23"	33"	5"	¾"	2 optional	41873	—
65 ∞	23"	43"	5"	¾"	2 optional	45191	—
125	32"	41"	8"	2"	2 optional	40298	—
225	38"	49"	8"	2"	2 optional	40299	—
325	38"	68"	16"	2"	2 optional	40217	—
525	49"	71"	16"	2"	2 optional	40181	40193
725 *	49"	101"	16"	2"	3 required	40180	40194
1025 *	49"	139"	16"	2"	4 required	40089	40131
1325 *	66"	99"	16"	2"	4 required	41875	41877
5025 *	92"	190"	16" **	3"/2"	4 required	41879	41881

∞ Within UPS dimensional limits *Require full length support and bands **16" hinged lid



325 Gallon Horizontal Leg



1025 Gallon Horizontal Leg



Sloped For Complete Drainage **1010 Gallon Drainable Leg**

Drainable Leg Tanks

When complete drainage is necessary, these are the tanks of choice. They are designed primarily for use on fertilizer and chemical nurse trailers. All NORWESCO drainable tanks require full length bottom support as well as support bands. Please refer to page 4 for support bands.

Gallon Capacity	Width	Height	Length	Fill Opening	Outlet/Drain Specification	No. of Bands	Premium Weight Part No. White	Heavy Weight Part No. Blue
710 (horizontal)	47"	47"	104"	16"	2"	3 required	40655	40657
1010 (horizontal)	47"	47"	140"	16"	2"	4 required	40393	40395
1310 (horizontal)	66"	76"	99"	16"	—	4 required	41871	41872
1610 (elliptical)	69"	63"	140"	16"	—	4 required	40806	40808
2610 (elliptical)	90"	70"	140"	16"*	—	4 required	41382	41383
3210 (elliptical)	92"	74"	178"	16"*	—	4 required	40822	40824

*16" hinged lid

Elliptical Leg Tanks

This elliptical tank style is designed to provide the greatest capacity with the lowest center of gravity, making it the best design available for transporting larger volumes. NORWESCO elliptical tanks feature molded-in legs and flow-through baffles which work together to reduce sloshing and provide increased stability during transport. All NORWESCO elliptical leg tanks require full length bottom support as well as support bands. Please refer to page 4 for support bands.

Gallon Capacity	Width	Height	Length	Fill Opening	Outlet/Drain Specification	Premium Weight Part No. White	Heavy Weight Part No. Blue
1035	79"	53"	89"	16"	2"	40191	—
1235	65"	52"	128"	16"	2"	40239	—
1635	71"	57"	142"	16"	2"	40387	40388
2035	84"	55"	142"	16"	2"	40618	40623
2635	90"	71"	140"	16"	3"/2"	40547	40283
3135	88"	76"	151"	16"	3"/2"	40686	40688
4035	92"	77"	192"	16" *	3"/2"	41267	41269

*16" hinged lid



2035 Gallon Elliptical Leg

PLEASE NOTE: Tank availability may vary according to manufacturing location. Please contact NORWESCO Customer Service or your NORWESCO distributor for specific details.
Tank dimensions and capacities may vary slightly and are subject to change without notice.

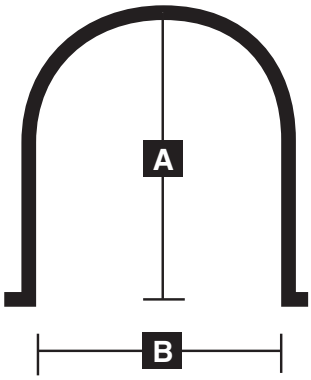

Steel Supports and Accessories

NORWESCO bands are custom fabricated to support the NORWESCO tanks and are galvanized or powder coated for added corrosion protection. Whether using the tank in a stationary position or for transport, bands are necessary to ensure that the tank retains its shape and integrity.

Horizontal Leg Tank Bands

Tank Size (Gallon)	A	B	No. of Bands	Part No.
35 ∞	18½"	18½"	2 optional	60520
55 ∞	22"	22"	2 optional	61745
65 ∞	22"	22"	2 optional	61745
125 ∞	30¾"	30½"	2 optional	61744
225 ∞	36¾"	36½"	2 optional	60478
325 ∞	36¾"	36½"	2 optional	60478
525	47¾"	47½"	2 optional	60057
725	47¾"	47½"	3 required	60057
1025	47¾"	47½"	4 required	60057
1325	64"	64"	3 required	63282
5025	90"	89½"	4 required	63284

∞ Within UPS dimensional limits

Drainable Leg Tank Bands

Tank Size (Gallon)	A	B	No. of Bands	Part No.
710	46¼"	45”	3 required	60584 short
1010 *	46¼"	45”	2 required	60584 short
1010 *	48”	45”	2 required	60585 long
1310	64”	64”	3 required	63282
1610	49”	66”	4 required	62434
2610 *	58”	87½"	2 required	63044 short
2610 *	62”	87½"	2 required	63045 long
3210 *	56”	89½"	2 required	62347 short
3210 *	60”	89½"	2 required	62348 long

* 2 short and 2 long bands are required for 1 tank

Elliptical Leg Tank Bands

Tank Size (Gallon)	A	B	No. of Bands	Part No.
1035	47¼"	77"	3 required	60325
1235	47¾"	64¾"	4 required	60477
1635	51”	68"	4 required	60586
2035	51¼"	81½"	4 required	62079
2635	65¼"	87½"	4 required	60353
3135	75¼"	85½"	4 required	62097
4035	70¼"	89½"	4 required	62832

Skid

Description	Part No.
Skid for 2610	63217
Skid for 3210 drainable leg tank	62906
Bolt Kit for 3210 (optional)	63024

Ladders

Description	Tank Size (Gallon)	Part No.
Ladder (optional)	2635 & 3135	60354
Ladder (optional)	2610 & 3210	63047
Ladder (optional)	4035	63033
Adaptor kit for ladder Δ	3135	62301

Δ This kit is required when using the ladder on the 3135 gallon tank

PLEASE NOTE: Tank availability may vary according to manufacturing location. Please contact NORWESCO Customer Service or your NORWESCO distributor for specific details.
Tank dimensions and capacities may vary slightly and are subject to change without notice.



Mini Bulk Tanks

NORWESCO mini bulk tanks are available in two sizes and are most frequently used for chemical dispensing. The tanks can be mounted on forklift accessible pads for ease of movement. A 2" polypropylene fitting is installed directly across from the manway.

Gallon Capacity	Diameter	Height	Fill Opening	Fitting	Premium Weight Part No. White
120	38"	29"	5"	2"	40318
220	42"	42"	5"	2"	40320

Pickup Truck Tanks

Designed to fit full-size, American-made pickups, the 325 and 425 sizes have low profiles for better rear vision. They feature fill openings offset to the side of the tank for safety and easy access. A tough circular design adds strength. The 210 gallon tank fits both "mini" pickups and full-size models.

Gallon Capacity	Top Width or Diameter	Bottom Width or Diameter	Overall Height	Fill Opening	Outlet/Drain Specification	Premium Weight Part No. White
210	60"/51"	48"/39"	28"	8"	2"	40300
325	62"	49"	32"	8"	2"	40160
425	65"	49"	37"	8"	2"	40102



PCO Tanks

A multi-purpose tank, the PCO is well suited for nursery, agricultural and lawn care applications. These tanks feature self-supporting legs and do not require any saddles or steel supports. Flat spots are molded into both ends to provide mounting areas for agitation equipment.



Gallon Capacity	Width	Height	Length	Fill Opening	Premium Weight Part No. White
30 ∞	19"	22"	25"	5"	41254
50 ∞	19"	20"	38"	8"	40664
100	30"	26"	38"	8"	40668
150	36"	26"	48"	8"	40669
200	36"	35"	48"	8"	41413
300	36"	37"	69"	16"	41381

∞ Within UPS dimensional limits

PLEASE NOTE: Tank availability may vary according to manufacturing location. Please contact NORWESCO Customer Service or your NORWESCO distributor for specific details. Tank dimensions and capacities may vary slightly and are subject to change without notice.

Elliptical Tanks

Designed for larger volume applicator needs, the NORWESCO elliptical tanks feature a low profile design and a low center of gravity for excellent visibility in the field and increased stability when towed. A deep sump permits complete drainage and the tanks feature an 8"or 16" fill-well. Please refer to information below for steel supports.



750 Gallon Elliptical

Gallon Capacity	Width	Height	Length	Fill Opening	Outlet/Drain Specification	Premium Weight Part No. White
200	40"	28"	66"	8"	1¼" & 1¼"	41252
300	48"	32"	70"	16"	1¼" & 1¼"	40327
500	57"	38"	82"	16"	1¼" & 1¼"	40328
750	69"	44"	88"	16"	2"	40329
1000	78"	51"	90"	16"	2"	40330
1600 *	78"	49"	138"	16"	2"	47111
2550 **	88"	69"	142"	16"	3"	47677

* Includes 1 stainless steel baffle ** The 2550 requires support bands

Elliptical Tank Skids (See dimensional drawings below.)

Tank Size (Gallon)	Tank Part No.	A	B	C	D	E	F	Part No.
200	41252	4"	24"	52"	57"	2" x 68"	8"	63015
300	40327	4"	34"	46¼"	54¼"	2" x 76"	8"	63016
500	40328	4"	34"	60"	68"	2" x 94"	8"	63018
750	40329	4"	38"	69½"	78"	2" x 112"	8"	60371
1000	40330	4"	46"	60"	72"	2" x 130"	8"	60372
1600	47111	10½"	40"	114½"	118¼"	3½" x 126"	6½"	67428
2550 *	47677	—	—	—	—	—	—	67456

* Band only, no skid. The 2550 requires 4 support bands, part #67456.

Replacement bands and hardware are available. Please contact NORWESCO Customer Service for details.

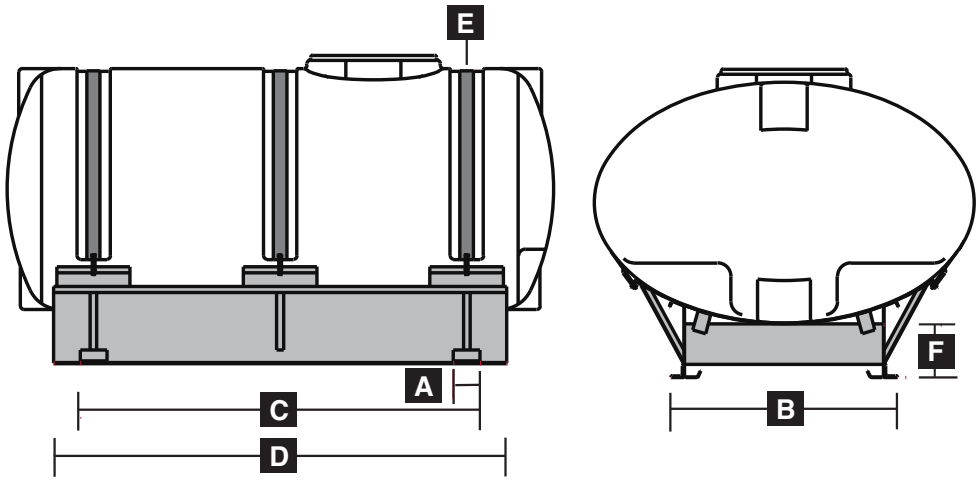

PLEASE NOTE: Tank availability may vary according to manufacturing location. Please contact NORWESCO Customer Service or your NORWESCO distributor for specific details.
Tank dimensions and capacities may vary slightly and are subject to change without notice.

Applicator Tanks, Inductor Tanks and Spot Sprayers

Whether you're looking for a new or replacement tank, you'll find it in the NORWESCO line. All NORWESCO applicator tanks feature a lid which threads directly into the fill-well of the tank to prevent the sloshing or leaking of tank contents during transport or application. The inductor tanks are suitable for mixing chemicals when filling a tank and are available in three sizes. The spot sprayers feature threaded inserts on the bottom of the tank for mounting purposes, on one side for wand/gun placement and on the top for a 12 volt pump. Please refer to page 8 for steel supports.



12 Gallon Applicator



150 Gallon x 32" Applicator



200 Gallon x 32" Applicator



500 Gallon Applicator

Applicator Tanks

Gallon Capacity	Diameter	Height/Length	Fill Opening	Outlet/Drain Specification	Premium Weight Part No. White
12 ∞	14" wide	12"/18"	5"	¾"	60521
20 ∞	15"	31"	5"	¾"	61737
30 ∞	23"	21"	5"	¾"	41799
55 ∞	23"	34"	5"	¾"	45193
85	23"	52"	5"	¾"	45105
110	30"	41"	8"	1¼" & 1¼"	45053
150	30"	58"	8"	1¼" & 1¼"	40648
150	32"	46"	8"	1¼" & 1¼"	45117
200	32"	62"	8"	1¼" & 1¼"	45059
200	38"	47"	8"	1¼" & 1¼"	45061
300	38"	68"	8"	1¼" & 1¼"	40135
400	42"	74"	8"	1¼" & 1¼"	40137
500	48"	75"	8"	1¼" & 1¼"	40274
150 Slim Line	28"	40"/50"	8"	1¼" & 1¼"	40777
200 Slim Line	24"	46"/61"	8"	1¼" & 1¼"	41305
200 Slim Line	31"	44"/48"	8"	1¼" & 1¼"	40780

∞ Within UPS dimensional limits

Inductor Tanks

Gallon Capacity	Diameter	Height/Length	Fill Opening	Outlet/Drain Specification	Premium Weight Part No. White
15 ∞	19"	23"	8"	2"	60214
35 ∞	23"	27"	8"	2"	45098
60	31"	31"	16"	2"	62205

∞ Within UPS dimensional limits



35 Gallon Inductor



14 and 25 Gallon Spot Sprayer

Spot Sprayers

Gallon Capacity	Width	Height/Length	Fill Opening	Outlet/Drain Specification	Premium Weight Part No. White
14 ∞	14"	11"/31"	5"	—	45115
25 ∞	18"	16"/36"	5"	—	62080

∞ Within UPS dimensional limits

PLEASE NOTE: Tank availability may vary according to manufacturing location. Please contact NORWESCO Customer Service or your NORWESCO distributor for specific details. Tank dimensions and capacities may vary slightly and are subject to change without notice.

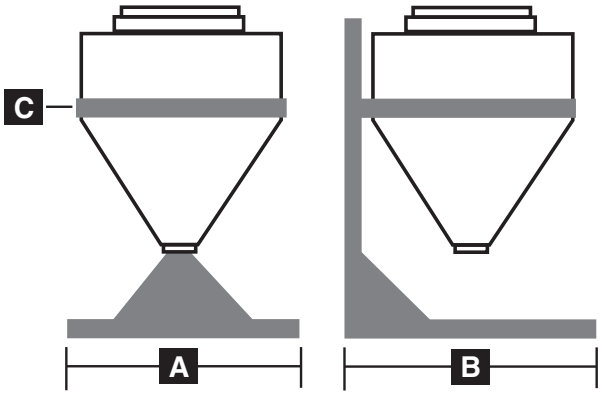

Applicator Saddle Assemblies and Inductor Stands

Designed to provide necessary support for the applicator/inductor tank during use. NORWESCO saddles include polyester straps, buckles and bolts to secure tanks, and inductor stands are supplied with all necessary hardware.

Inductor Tank Stands (See dimensional drawings above.)

Tank Size (Gallon)	Tank Part No.	A	B	C	Part No.
15 ∞	60214	26"	15"	2" x 56"	60313
35 ∞	45098	25"	18"	1½" x 35" (2)	65517
60 ∞	62205	33"	24"	1½" x 46" (2)	62204

∞ Within UPS dimensional limits

Applicator Tank Saddle Assemblies (See dimensional drawings below.)

Tank Size (Gallon)	Tank Part No.	A	B	C	D	E	F	G	Part No.
30 ∞	41799	3"	19"	13½"	13½"	2" x 54"	8"	7¾"	60321
55 ∞	45193	6"	18⅛"	24"	24"	2" x 48"	—	12"	60303
110 ∞	45053	6"	23¾"	28¾"	34¾"	2" x 72"	—	10¾"	60315
150 - 32" ∞	45117	6"	23¾"	28¾"	34¾"	2" x 72"	—	10¾"	60315
200 - 32"	45059	6"	24⅞"	36"	60"	2" x 96"	8"	13¼"	63019
200 - 38""	45061	6"	24¾"	34"	42"	2" x 96"	—	13¼"	63020
300 - 38"	40135	6"	24¾"	34"	60"	3" x 96"	8"	12"	63021
400 - 42"	40137	6"	30⅛"	42½"	60"	3" x 96"	8"	12"	63022
500 - 48"	40274	6"	30⅛"	42½"	60"	3" x 132"	8"	12"	63023

∞ Within UPS dimensional limits

Replacement bands and hardware are available.
Please contact NORWESCO Customer Service for details.

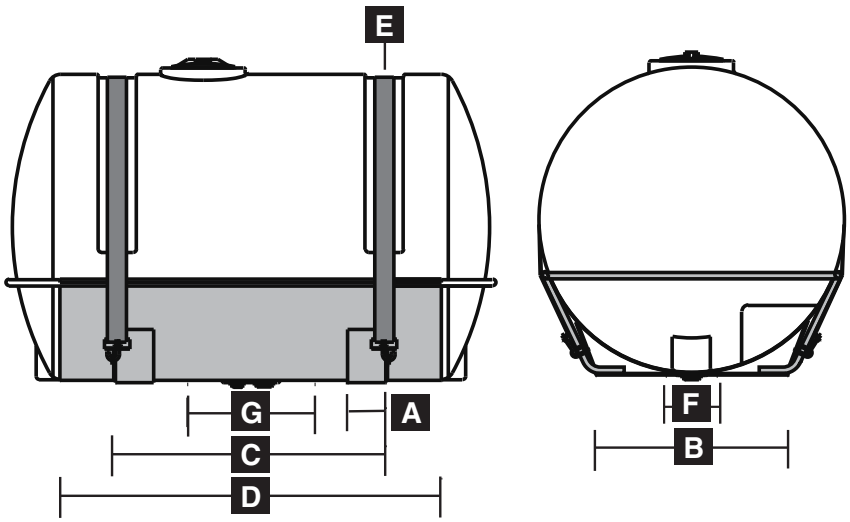

PLEASE NOTE: Tank availability may vary according to manufacturing location. Please contact NORWESCO Customer Service or your NORWESCO distributor for specific details.
Tank dimensions and capacities may vary slightly and are subject to change without notice.

Cone Bottom Tanks

NORWESCO offers a full range of cone bottom tanks designed for a variety of applications. The conical bottoms enable quick and complete drainage. As with all NORWESCO tanks, the cone bottom tanks are molded of rugged, high density polyethylene and are both impact and chemical resistant. Please refer to page 10 for polyethylene or steel stands.

Gallon Capacity	Diameter	Height	Slope	Fill Opening	Outlet/Drain Specification	Premium Weight Part No. White	Heavy Weight Part No. Blue
175 w/stand*	42"	49"/10"†	30˚	16"	2"	60113	—
300 w/stand*	48"	60"/9"†	30˚	16"	2"	62343	—
310 w/stand*	42"	71"/10"†	30˚	8"	2"	62441	—
500 w/stand*	48"	85"/9"†	30˚	16"	2"	40289	—
750	72"	55"	20˚	16"	2"	40811	—
750 w/stand*	72"	65"/10"†	20˚	16"	2"	40809	—
1050	72"	74"	20˚	16"	2"	40356	—
1050 w/stand*	72"	85"/11"†	20˚	16"	2"	40359	—
1600	88"	83"	30˚	16"	2"	40817	40819
1600 w/stand*	88"	94"/11"†	30˚	16"	2"	40813	40815
2500	95"	104"	30˚	16"	2"	40066	40129
2500 w/stand*	95"	114"/10"†	30˚	16"	2"	40672	40674
3000	95"	121"	30˚	16"	2"	40170	40172
3000 w/stand*	95"	131"/10"†	30˚	16"	2"	40797	40799
3000 15˚ slope**	91"	119"	15˚	16"	3"/2"	45141	—
5500	118"	146"	30˚	16"	3"/2"	40549	40316
6000	102"	195"	15˚	16"	3"/2"	40931	40933
7500	141"	149"	30˚	16"	3"/2"	40551	40409

*Polyethylene stand **Stand not available for this tank †Distance from bottom of cone to ground



500 Gallon Cone Bottom with Polyethylene Stand



1600 Gallon Cone Bottom with Polyethylene Stand



3000 Gallon Cone Bottom with Heavy Duty Stand

PLEASE NOTE: Tank availability may vary according to manufacturing location. Please contact NORWESCO Customer Service or your NORWESCO distributor for specific details. Tank dimensions and capacities may vary slightly and are subject to change without notice.

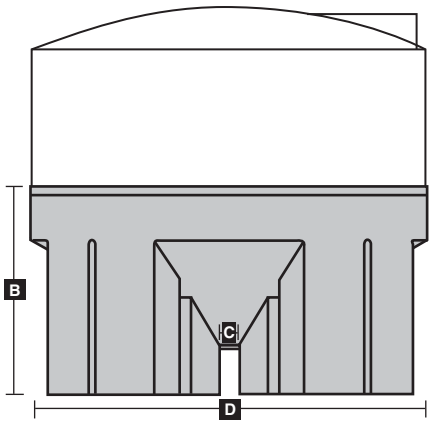

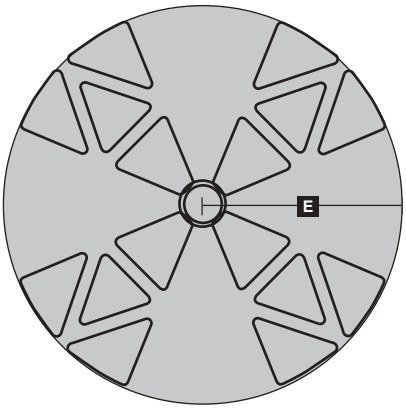

Polyethylene Cone Bottom Stands

Maintenance free, lightweight NORWESCO polyethylene stands offer unequaled corrosion resistance.

Tank Size (Gallon)	A	B	C	D	E
175	—	31½"	8"	42"	21"
300	—	32"	8"	48"	24 5/16"
310	—	31½"	8"	42"	21"
500	—	32"	8"	48 5/8"	24 5/16"
750	—	34"	10"	72 5/8"	36 5/16"
1050	—	34"	10"	72 5/8"	36 5/16"
1600	—	46"	10"	88"	44"
2500/3000 (30˚)	—	47"	10"	96 1/8"	48 1/16"

Heavy Duty Cone Bottom Stands

NORWESCO heavy duty cone bottom stands are manufactured from structural steel and offer a full dish for uniform support. An optional top band is available for the 2500/3000 steel stand when additional support is needed.

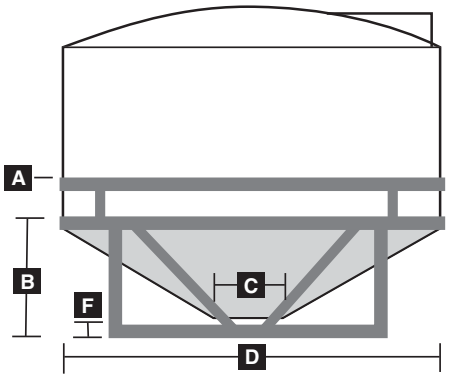

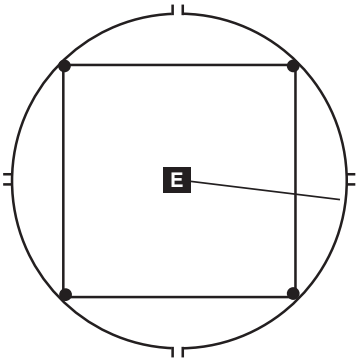

Tank Size (Gallon)	A	B	C	D	E	F	Part No.
2500/3000 (30˚)	—	36"	11"	96"	48"	11"	60059
5500	—	45"	11"	119"	59½"	12½"	60358
6000	—	25"	13"	102"	51"	12⅛"	62473
7500	—	49"	11"	140"	70"	10¾"	61860
2500/3000 (30˚)	Optional Top Band Assembly	—	—	—	—	—	60359

PLEASE NOTE: Tank availability may vary according to manufacturing location. Please contact NORWESCO Customer Service or your NORWESCO distributor for specific details. Tank dimensions and capacities may vary slightly and are subject to change without notice.

Specialty Tanks



Horizontal Box Tanks

The low profile design of this tank makes it ideal for use on trailers or in the back of a truck. The slosh reduction ribs provide excellent structural support. It can also be used as a stationary water storage tank.

Gallon Capacity	Width	Height	Length	Fill Opening	Outlet/Drain Specification	Premium Weight Part No. White
2400	90"	50"	150"	16"	2"	40912

Sphere

The 1000 gallon sphere is one of our more specialized tanks that is used on trailers/ nurse trailers. The advantage of using this type of tank and trailer combination is that is has a shorter wheel-base which means less sloshing and the design of the tank allows for easy mixing of product.

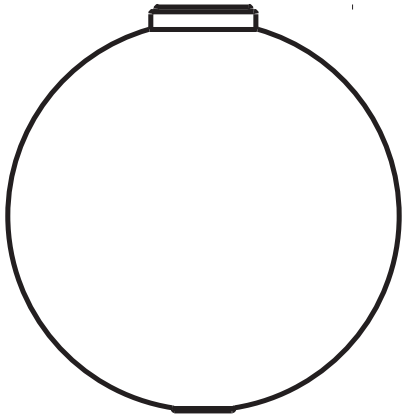

Gallon Capacity	Diameter	Height	Fill Opening	Outlet/Drain Specification	Premium Weight Part No.
1000	78"	82"	16"	—	41277

Specialty Water Tanks

These tanks have been specifically designed with residential and commercial applications in mind. The dimensions of the 375 or 400 gallon allow it to fit through a conventional doorway. The design of the 400 gallon tank allows it to be freestanding/self-supporting and eliminates the need for a steel support frame. The 375 comes standard with a steel support frame. The 1250 and 1500 gallon low profile tanks may be used for storage or transport. They are an excellent choice when height limitations are a factor and are the perfect height for putting under your cottage or cabin.



375 Gallon Tank with Frame



300 and 400 Gallon Freestanding Tank

Gallon Capacity	Width	Height	Length	Fill Opening	Outlet/Drain Specification	Premium Weight Part No. White

Free Standing Water Tank

300	29"	49"	62"	16"	1¼"	41869
400	29"	65"	62"	16"	1¼"	41247

Water Tank With Frame

375	30"	60"	62"	16"	1¼"	40480

Low Profile Water Tank

1250	80"	35"	132"	16"	2”	40756
1500	81"	41"	130"	16"	2”	41392



1250 and 1500 Gallon Low Profile Tank

PLEASE NOTE: Tank availability may vary according to manufacturing location. Please contact NORWESCO Customer Service or your NORWESCO distributor for specific details. Tank dimensions and capacities may vary slightly and are subject to change without notice.


A


B


C


D


E

High Density Polyethylene Lids

Description	Item Code	Part No.
16" Lid and ring with 4" center lid/air vent		60038
16" Lid with 4" center lid/air vent	A	60011
16" Ring only		60012
16" Lid, ventless with ring		60367
16" Lid, ventless	B	60365
Gasket for 16" non-hinged lid		62941
4" Lid (air vent assembly for 16" lid)		60019
8" Lid, ring and air vent		60032
8" Lid with air vent	C	60002
8" Ring only		60003
Air vent for 8"" lid only (snap on)		61727
5" Lid with ball check air vent (for tanks manufactured after 2/1/00)	D	62801
5" Lid with ball check air vent (for tanks manufactured prior to 2/1/00)	D	60322
5" Lid (for tanks manufactured after 2/1/00)	E	62476
5" Lid with 2" FPT		63264
Gasket for 5" lid, 60322, 62801 and 63264		60366
2" MPT vent cap with poly screen		63266
18" lanyard for 8" lid and 16" non-hinged lid (tethers lid to tank)		62531
Stainless steel screws for 8" and 16" rings		60081

Hinged Lid

This lid is manufactured from a co-polymer material for strength, durability and excellent chemical resistance. Our unique locking tab allows you to easily slip a padlock through it and secure your lid from theft or spills. The lid is interchangeable with a standard 16" lid and ring assembly if you choose to replace your existing lid.

- Easy open/close – opens a full 180 degrees
- Comes complete with a baffle vent assembly, allowing for adequate venting when bottom filling your tank.
- Unique locking tab
- All parts of lid may be ordered as repair parts

Description	Part No.
Complete lid assembly	62532



Hinged Lid Repair Parts

16" hinged lid with vent assembly, without ring	62826
Vent assembly	62827
Ring assembly	62828
Hinge assembly	62829
EPDM O-ring for lid	62830
Neoprene O-ring for ring	62831

Polyethylene Tank Repair Kits

The tank repair kit (welding gun and rod) includes a specially formulated welding wire containing copolymers and adhesives. Wire may be used to effectively repair linear polyethylene. Easy to use and requires only 110 volt power. The poly patch kit is ideal for repairing pinholes, hairline cracks and holes up to ½" in diameter. For best results, surface to be repaired should be above 32° F. The kit consists of epoxy, a small brush to apply the epoxy, a small piece of sandpaper to "roughen" the area to be patched, a piece of mastic to temporarily fill the hole/crack and a piece of fiberglass.

	Part No.
Poly welding gun & rod	60221
Poly welding rod 30'	61879
Poly patch kit	67412

PLEASE NOTE: Tank availability may vary according to manufacturing location. Please contact NORWESCO Customer Service or your NORWESCO distributor for specific details.
Tank dimensions and capacities may vary slightly and are subject to change without notice.

Polypropylene Bulkhead Fittings / EPDM Or Viton Gaskets

NORWESCO'S polypropylene fittings come standard with an EPDM gasket.
Viton gaskets are available as an option when EPDM may not be suitable for your application.



A

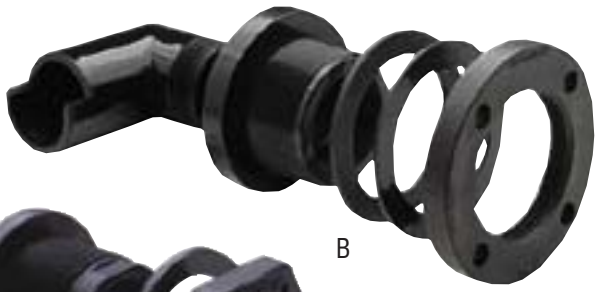

B



C

Description	Hole Size Required in Tank for Installation	Part No.	Item Code
½" Heavy duty double threaded polypropylene fitting	1⅜"	62834	A
¾" Double threaded polypropylene fitting	1⅜"	60401	A
EPDM gasket for ½" and ¾" (60401)		60402	
Viton gasket for ½" and ¾" (60401)		60360	
¾" Heavy duty double threaded polypropylene fitting	1⅝"	62798	A
EPDM gasket ¾" (62798)		62799	
Viton gasket for ¾" (62798)		62800	
1" Double threaded polypropylene fitting	2¼"	60427	A
1¼" Double threaded polypropylene fitting	2¼"	60403	A
1¼" Anti-vortex polypropylene fitting		63065	
EPDM gasket for 1" and 1¼"		60404	
Viton gasket for 1" and 1¼"		60361	
Anti-vortex adapter for 1¼"		62398	
1½" Double threaded polypropylene fitting	3"	60124	A
Siphon tube, 1½" x 12" long		63279	
2" Double threaded polypropylene fitting	3"	60405	A
2" Double threaded 316 stainless steel fitting, less gasket	3"	61767	
EPDM gasket for 1½" and 2" (60405 and 61767)		60406	
Type B Viton gasket for 1½" and 2" (60405 and 61767)		60523	
2" Heavy duty double threaded polypropylene fitting with siphon tube	3¼"	60337	B
EPDM gasket for 2" (60337)		60336	
Type B Viton gasket for 2" (60337)		60008	
Siphon tube, 2" short		60335	
Siphon tube, 2" x 12" long		63262	
2" MPT vent cap, anti-vortex, with poly screen		63266	
2" MPT vent cap, anti-vortex, without screen		63316	
Anti-vortex adapter for 2" Bulkhead fitting		62399	
2" Polypropylene dust plug		60021	
3" Double threaded polypropylene fitting (hex nut as shown in photo C)	4⅝" *	62299	
3" Double threaded polypropylene fitting with 2" reducer and siphon tube	4⅝" *	60339	C
EPDM gasket for 3"		60331	
Type B Viton gasket for 3"		60351	
2" Polypropylene reducer for 3"		60330	
Siphon tube, 3" short		60327	
Siphon tube, 3" x 12" long		63263	
4" Double threaded polypropylene fitting (hex nut as shown in photo C)	5¾"	62171	
EPDM gasket for 4"		62785	
Viton gasket for 4"		62786	
Siphon tube for 4"		62714	

*When installing fitting, use 4½" hole saw if tank is cold.

Bolted Fittings

Polypropylene Bolted Fittings / EPDM or Viton Gaskets (Require two gaskets.)

Bolted polypropylene fittings are equipped with 316 stainless steel bolts and come standard with EPDM gaskets. Viton gaskets are available as an option for the fittings.

Description	Part No.	Item Code
¾" Polypropylene bolted fitting with ss bolts and EPDM gaskets	60502	A
1" Polypropylene bolted fitting with ss bolts and EPDM gaskets	60505	A
EPDM gasket for ¾" and 1"	60498	
Type B Viton gasket for ¾" and 1"	60355	
1½" Polypropylene bolted fitting with ss bolts and EPDM gaskets	60513	A
2" Polypropylene bolted fitting with ss bolts and EPDM gaskets	60516	A
EPDM gasket for 1½" and 2"	60497	
Type B Viton gasket for 1½" and 2"	60356	
3" Polypropylene bolted fitting with ss bolts and EPDM gaskets	62471	
EPDM gasket for 3"	62048	
Type B Viton gasket for 3"	60602	


A

Stainless Steel Double Threaded Bolted Fittings

Bolts are threaded into the back plate of the fitting so there are no welds or bolt holes that can be potential points of leakage. These fittings come standard without a gasket (with the exception of the 4") and require a single gasket that is installed on the inside of the tank. Available gaskets are cross-linked polyethylene, EPDM or Viton (4" fitting comes standard with a cross-linked polyethylene gasket).

Description	Part No.	Item Code
½" 316 Stainless steel double threaded bolted fitting less gasket	63216	B
¾" 316 Stainless steel double threaded bolted fitting less gasket	63035	B
1" 316 Stainless steel double threaded bolted fitting less gasket	62948	B
EPDM gasket for ½", ¾" & 1" (1 required)	63205	
Type B Viton gasket for ½", ¾" & 1" (1 required)	63224	
Cross-linked polyethylene gasket for ½", ¾" & 1" (1 required)	62950	
1¼" 316 Stainless steel double threaded bolted fitting less gasket	63036	B
Cross-linked polyethylene gasket for 1¼" (1 required)	63041	
1½" 316 Stainless steel double threaded bolted fitting less gasket	63037	B
Cross-linked polyethylene gasket for 1½" (1 required)	63042	
2" 316 Stainless steel double threaded bolted fitting less gasket	63038	B
EPDM gasket for 1¼", 1½" and 2" (1 required)	63206	
Type B Viton gasket for 1¼", 1½" and 2" (1 required)	63225	
Cross-linked polyethylene gasket for 2" (1 required)	62848	
3" 316 Stainless steel double threaded bolted fitting less gasket	63039	C
EPDM gasket for 3" (1 required)	63223	
Type B Viton gasket for 3" (1 required)	63226	
Cross-linked polyethylene gasket for 3" (1 required)	63043	
4" 316 Stainless steel 8-bolt double threaded bolted fitting with gasket	63069	
Cross-linked polyethylene gasket for 4" (1 required)	63070	


B


C

Stainless Steel Single Threaded Bolted Fittings

Description	Part No.
2" 316 Stainless steel single threaded bolted fitting less gasket	62847
EPDM gasket for 1¼", 1½" and 2" (1 required)	63206
Type B Viton gasket for 1¼", 1½" and 2" (1 required)	63225
Cross-linked polyethylene gasket for 2" (1 required)	62848
3" 316 Stainless steel single threaded bolted fitting less gasket	63233
EPDM gasket for 3" (1 required)	63223
Type B Viton gasket for 3" (1 required)	63226
Cross-linked polyethylene gasket for 3" (1 required)	63043

NORWESCO

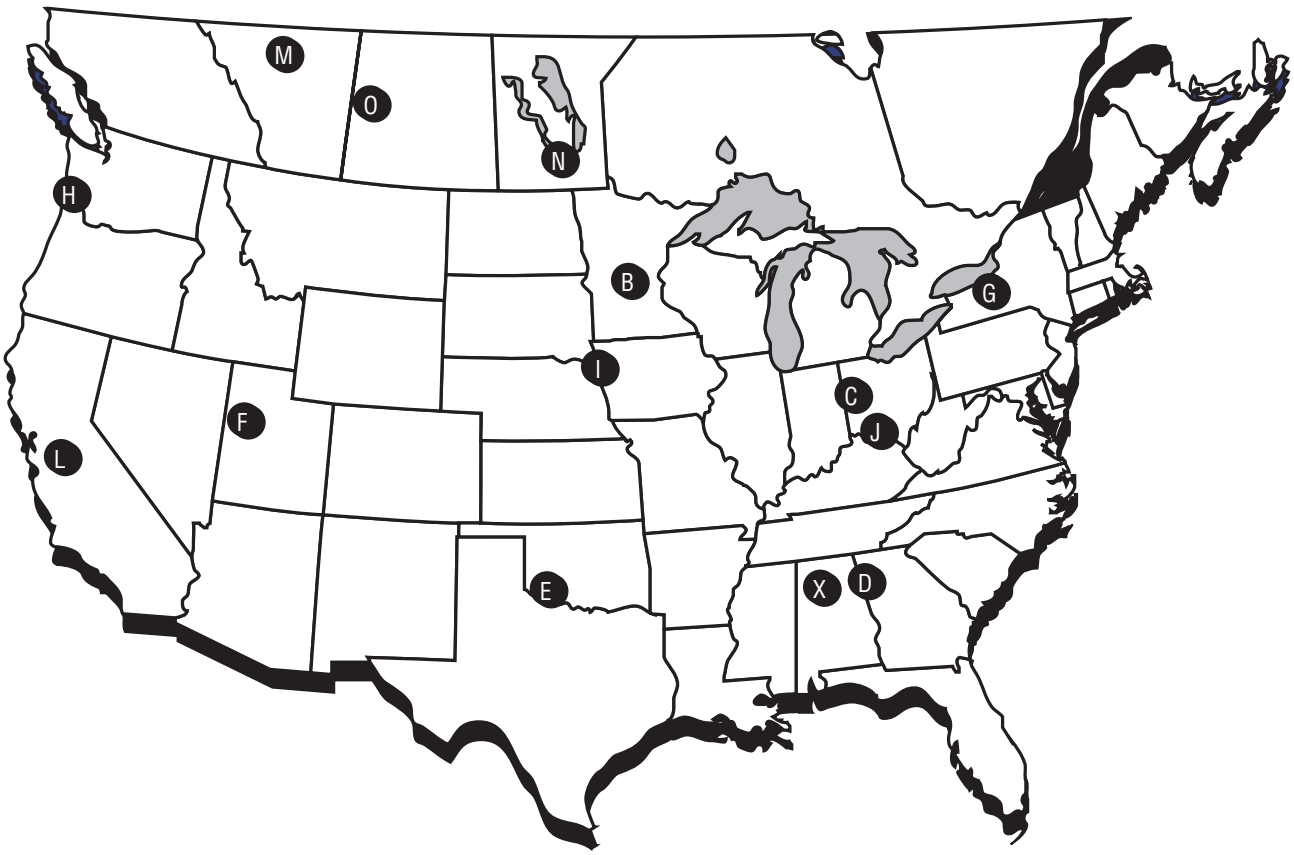

Manufacturing and Distribution

B. St. Bonifacius, Minnesota
C. Lancaster, Ohio
D. Griffin, Georgia
E. Shawnee, Oklahoma
F. Tooele, Utah
G. Owego, New York
H. Washougal, Washington
I. Sheldon, Iowa
L. Hanford, California
M. Edmonton, Alberta-Canada
N. Winnipeg, Manitoba-Canada
X. Albertville, Alabama
O. Saskatoon, Saskatchewan-Canada

Tank dimensions and capacities may vary slightly and are subject to change without notice.

Warranty

NORWESCO offers a three year warranty from date of manufacture on all premium weight tanks and a five year warranty on all heavy weight tanks. Should a defect appear within the warranty period NORWESCO will supply a new, equivalent tank in replacement thereof. NORWESCO'S liability is limited to the value of the tank itself and specifically excludes the cost of installation and/or removal or consequential damages. Please contact your chemical supplier or NORWESCO Customer Service for chemical resistance information.

NORWESCO
Norwesco, INC.

4365 Steiner Street
P.O. Box 439
St. Bonifacius, MN 55375-0439
Tel (952) 446-1945
Fax (800) 874-2371

www.norwesco.com

E-1363

©2004 NORWESCO, INC. LST20M0204

TNK-103 - Tank, closed top, cylindrical, ACO CT-450-DT

NOTES:

1. TANK IS MANUFACTURED TO ASTM-D-1998 STANDARD.
2. ALL DIMENSIONS ARE APPROXIMATE.

MATERIALS LIST		
ITEMS	DESCRIPTION	NOTES
A	CT-450-DT TANK	
B	16" LID WITH LOCKING STRAP	

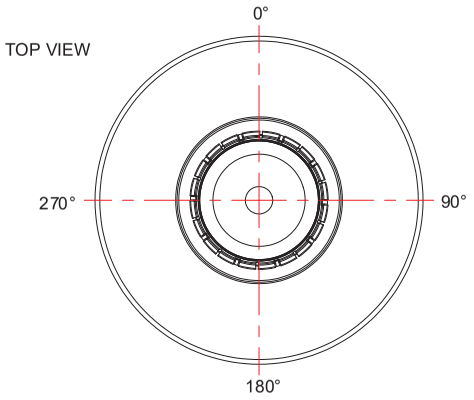

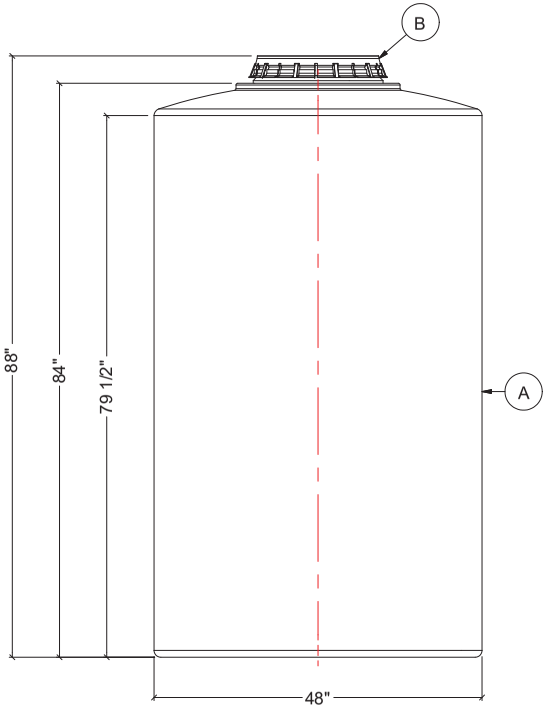

FRONT VIEW

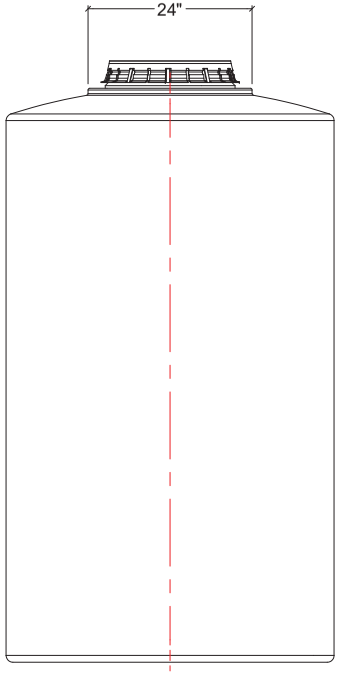

SIDE VIEW

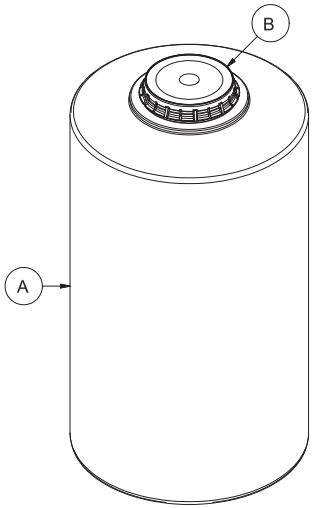

REV	DATE	DESCRIPTION	BY	APPD	REVD

REVISIONS

CUSTOMER

TITLE: 450 I.G. CLOSED TOP TANK

ACO JOB NO:

PURCHASE ORDER NO:

PURCHASER'S EQUIP. NO:

THIS DRAWING IS THE PROPERTY OF ACO CONTAINER SYSTEMS LTD. AND SHALL NOT BE COPIED OR TRANSFERRED WITHOUT THE WRITTEN CONSENT OF ACO CONTAINER SYSTEMS LTD.

ENGINEERS SEAL

ACO CONTAINER SYSTEMS LTD.

PICKERING - ONTARIO - CANADA

ACO CONTAINER SYSTEMS LTD.
794 MCKAY RD.
PICKERING, ONTARIO, CANADA
L1W 2Y4
TEL. 905-683-8222
FAX 905-683-2969

DESIGNED	
DRAWN	WM
CHECKED	
APPROVED	
SCALE	N.T.S.
DATE	10-12-09

DWG No CT-450-DT-1364 REV 0

TNK-201 - Tank, Open Top, Rectangular, 192 gal, 540 US Gal 72x36x48

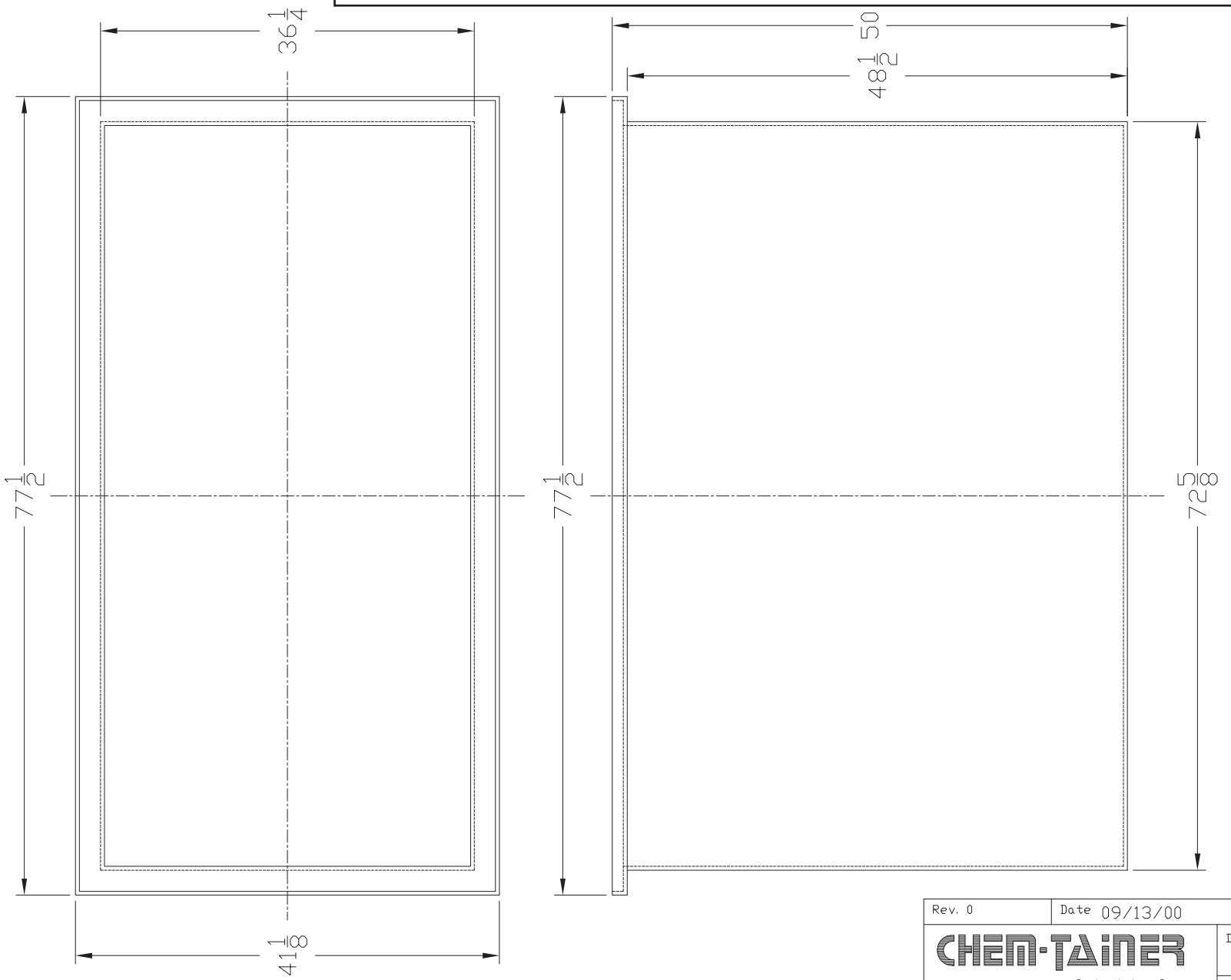

Rev. 0	Date 09/13/00	File Name 367248-5

CHEM-TAINER Industries Inc.
361 Neptune Ave. W.Babylon, NY 11704
(631) 661-8300 Fax: (631) 661-8209

Date 09/13/00	Mold Location CA
Drawn By: IIA	Cust. Rep.

TITLE
540 GAL. RECTANGULAR TANK

Part # R367248AB/CD	Dwg. # C-367248-15

THIS DRAWING & DESIGN IS
THE PROPERTY OF CHEM-TAINER INDUSTRIES INC.
IT MAY NOT BE USED FOR ANY PURPOSE
OTHER THAN BY THE OWNER. CHEM-TAINER DOES NOT
AUTHORIZE THE REPRODUCTION OR CONVEYANCE
OF ANY INFORMATION CONTAINED HEREIN.

ALL DIMENSIONS SHOWN ARE OUTSIDE PART DIMENSIONS IN INCHES, AND VARY BY THE STANDARD ROTATIONAL MOLDING TOLERANCE OF +2;-3%.

E31365

ELMRIDGE® Liqui-Jet® Mixing Eductors — ME Series

KEEPING SOLIDS IN SUSPENSION / DISPERSING CHEMICALS / MAINTAINING TANK CONCENTRATIONS / ELIMINATING THERMAL GRADIENTS

ELMRIDGE 'ME Series' Liqui-Jet Mixing Eductors vigorously and efficiently circulate the liquid contents of tanks without powered impellers or other insertion-type rotating mechanical devices. ELMRIDGE 'ME Series' Liqui-Jet Mixing Eductors operate on the same principle as our standard line of liquid-powered Jet-Apparatus. Liquid is pumped through the Eductor nozzle, emerging at a relatively high velocity, creating a localized zone of lower pressure. Tank contents are drawn to this lower pressure zone, where the momentum of the motive liquid is transferred to the tank liquid, causing the tank liquid to be 'pumped' and circulated. For every gallon of liquid pumped through the Eductor nozzle, up to five gallons of liquid is circulated. Note that Eductors can actually be 'aimed' at specific areas in the vessel. Operating characteristics (Water Motive / Water Suction), for standard models are shown below, and special units are also available to meet your specifications. Standard materials of construction are Glass Reinforced Polypropylene, PVDF, PVC, CPVC, Teflon®, Cast Iron, 316 Stainless Steel, Alloy 20, and Hastelloy C®. Other materials are available upon request. Threaded, flanged, or socket weld connections (except Cast Iron).



TANK MIXING

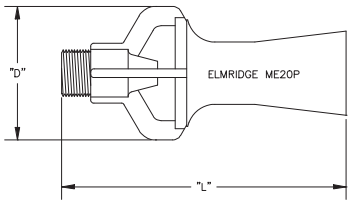

Dimensions

Model Number	Pressure Connection	D (inches)	L (inches)
ME05P	1/4" Male*	1-1/2"	3-1/8"
ME10P	3/8" Male*	2-1/8"	4-1/2"
ME20P	3/4" Male*	3"	6-3/8"
ME30P	1" Male*	3-13/16"	8-1/16"
ME40P	1-1/2" Male*	4-5/8"	9-7/8"
ME10M	3/8" Male*	1-3/4"	4-1/2"
ME20M	3/4" Male*	2-3/8"	6-3/4"
ME30M	1" Male*	2-7/8"	7-5/8"
ME40M	1-1/2" Male*	4-5/8"	9-7/8"
ME40	1-1/2" Female*	3-3/4"	9-1/2"
ME50	2" **	5-5/8"	12-1/4"
ME60	3" **	8-1/2"	17-5/8"
ME70	4" **	12-1/2"	26-1/4"
ME80	6" ***	17-1/4"	36-1/2"
ME90	8" ***	22"	48-5/8"

* NPT or BSPT

** NPT or BSPT Female or 150# ANSI FF Flange

*** 150# ANSI FF Flange only

Table 1 — Nozzle and Circulated Flow (usgpm) for ME Series Liqui-Jet Tank Mixing Eductors using 70 deg. F Water

Model Number	Flow Type	Operating Water Pressure (psi)								
		10	15	20	25	30	35	40	50	60
ME05P	Nozzle Flow	3.2	3.9	4.5	5.0	5.5	5.9	6.3	7.1	7.8
	Circ. Flow	16	20	23	25	28	30	32	36	39
ME10P	Nozzle Flow	7.5	9.2	10.6	11.9	13.0	14.0	15	17	18
	Circ. Flow	38	46	53	59	65	70	75	84	92
ME20P	Nozzle Flow	13.5	17	19	21	23	25	27	30	33
	Circ. Flow	68	83	95	107	117	126	135	151	165
ME30P	Nozzle Flow	20	24	28	32	35	37	40	45	49
	Circ. Flow	100	122	141	158	173	187	200	224	245
ME40P	Nozzle Flow	33	40	47	52	57	62	66	74	81
	Circ. Flow	165	202	233	261	286	309	330	369	404
ME10	Nozzle Flow	8.2	10	12	13	14	15	16	18	20
	Circ. Flow	33	40	46	52	57	61	66	73	80
ME20	Nozzle Flow	12	15	17	19	21	22	24	27	29
	Circ. Flow	48	59	68	76	83	90	96	107	118
ME30	Nozzle Flow	21	26	30	33	36	39	42	47	51
	Circ. Flow	84	103	119	133	145	157	168	188	206
ME40	Nozzle Flow	35	43	49	55	61	65	70	78	86
	Circ. Flow	140	171	198	221	242	262	280	313	343
ME50	Nozzle Flow	55	67	78	87	95	103	110	123	135
	Circ. Flow	275	337	389	435	476	514	550	615	674
ME60	Nozzle Flow	126	154	178	199	218	236	252	282	309
	Circ. Flow	630	772	891	996	1091	1179	1260	1409	1543
ME70	Nozzle Flow	285	349	403	451	494	533	570	637	698
	Circ. Flow	1425	1745	2015	2253	2468	2666	2850	3186	3491
ME80	Nozzle Flow	590	723	834	933	1022	1104	1180	1319	1445
	Circ. Flow	2950	3613	4172	4664	5110	5519	5900	6596	7226
ME90	Nozzle Flow	1062	1301	1502	1679	1839	1987	2124	2375	2601
	Circ. Flow	5310	6503	7509	8396	9197	9934	10620	11874	13007

Dimensions and Specifications are subject to change without notice

APPLICATION EXAMPLES

EXAMPLE 1:

The volume of a rectangular process tank is 5,000 US gallons (approximately 10'W x 15'L x 4.5'H). In order that the contents of the tank remain in homogenous solution, it is necessary that the tank volume be completely turned over (ie. completely recirculated), in a period of approx. 8 minutes. It has further been determined that eductor spacing not exceed 3' in order to utilize the eductor outlet plume to further agitate the bottom corners of the tank. There is an existing single header of sufficient capacity centered longitudinally along the bottom of the tank, and a pump that will supply sufficient volume at 30 psig.

1. Four eductors spaced on 3' centers on each side of the header pipe will meet the necessary spacing requirements.

2. The number of eductors required is:

   4 x 2 sides = 8 eductors

3. Total required recirculation flowrate is:

   5000 / 8 min. = 625 usgpm

4. Required recirculation flowrate per eductor is:

   625 / 8 eductors = 78.1 usgpm

5. An ME20 eductor has a circulated flowrate of 83 usgpm at 30 psig., therefore a quantity of (8) ME20 eductors could be used.

6. The nozzle flow of an ME20 eductor at 30 psig is 21 usgpm, therefore, the pump must be able to supply:

   8 x 21 = 168 usgpm at 30 psig

EXAMPLE 2:

A steam-jacketed hot oil (S.G. = 1.21), preheat tank is 20' high and 10' in diameter (approx. 11750 usgal). It is desired that a single eductor using a portion of the total oil inflow turn over the contents of the tank in approx. 12 minutes in order to reduce temperature gradients within the tank. Pump pressure must also be approximated; assume inflow rate is sufficient.

1. The static discharge pressure that the pump must overcome is:

   20 x 1.21 = 24.2 feet of water
   = 10.5 psig

2. Total required recirculation flowrate is:

   11750 / 12 = 979 usgpm

4 An ME60 eductor has a circulated flowrate of 1091 usgpm at 30 psig, however, the pump must be sized to supply the ME60 nozzle flowrate of 218 x SQRT(1/1.21) = 198 usgpm at:

   30 + 10.5 = 40.5 psig

TNK-801 - Tank, Open Top, Cylindrical, 60 Imp gal, OT-60

NOTES:

1. TANK IS MANUFACTURED TO ASTM-D-1998 STANDARD.
2. ALL DIMENSIONS ARE APPROXIMATE.

MATERIALS LIST		
ITEMS	DESCRIPTION	NOTES
A	OT-60 OPEN TOP TANK	
B	LID FOR OT-60	

TOP VIEW

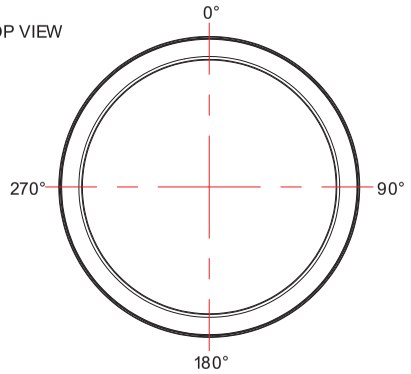

LID TOP VIEW

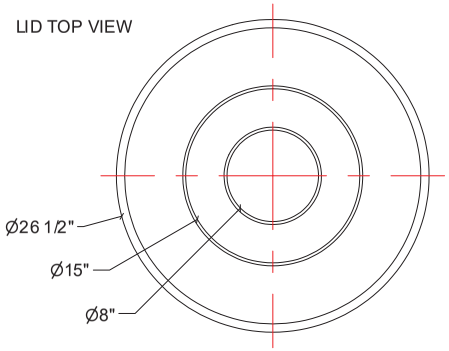

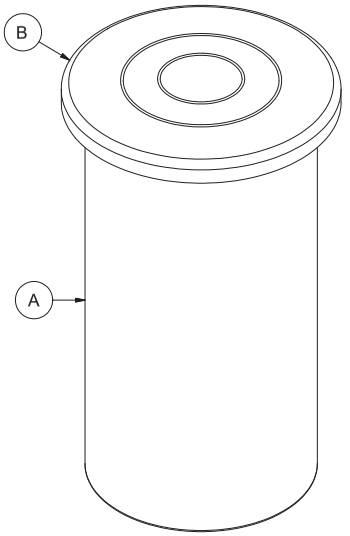

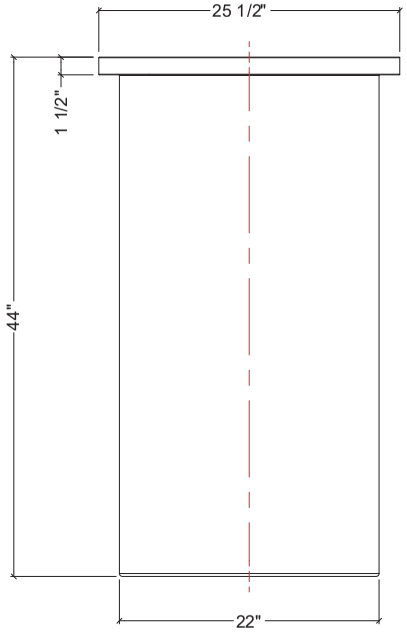

FRONT VIEW

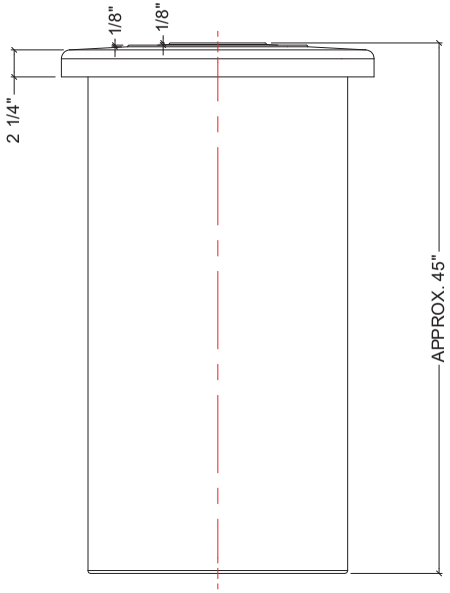

SIDE VIEW WITH LID

REV	DATE	DESCRIPTION	BY	APPD	REVD

REVISIONS

CUSTOMER

TITLE
60 I.G. OPEN TOP TANK WITH LID

ACO JOB NO:
PURCHASE ORDER NO:
PURCHASER'S EQUIP. NO:

THIS DRAWING IS THE PROPERTY OF ACO CONTAINER SYSTEMS LTD. AND SHALL NOT BE COPIED OR TRANSFERRED WITHOUT THE WRITTEN CONSENT OF ACO CONTAINER SYSTEMS LTD.

ENGINEERS SEAL

ACO CONTAINER SYSTEMS LTD.

PICKERING - ONTARIO - CANADA

ACO CONTAINER SYSTEMS LTD.
794 MCKAY RD.
PICKERING, ONTARIO, CANADA
L1W 2Y4
TEL. 905-683-8222
FAX 905-683-2969

DESIGNED	
DRAWN	WM
CHECKED	
APPROVED	
SCALE	N.T.S.
DATE	27-05-09

DWG No OT-60-L E1368 REV 0

A19 Series

Remote Bulb Control

Description

The A19 Series are single-stage temperature controls that incorporate environmentally friendly liquid-filled sensing elements.

Features

- wide temperature ranges available
- constant differential throughout the entire range
- compact enclosure
- fixed or adjustable differential available
- variety of sensing element styles
- unaffected by cross-ambient conditions

Applications

The A19 is suitable for temperature control in heating, ventilating, air conditioning, and refrigeration.

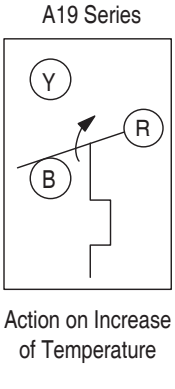

A19 Series
Terminal Arrangement for SPDT



A19ABC-24

Selection Charts

A19 Series Remote Bulb Control[1]

Code Number	Switch Action	Range °F (°C)	Diff F° (C°)	Bulb and Capillary	Bulb Well No. (order separately)	Range Adjuster	Max. Bulb Temp. °F (°C)
Adjustable Differential (Wide Range)							
A19ABA-40C [2]	SPST Open Low	-30 to 100 (-34 to 38)	3 to 12 (1.7 to 6.7)	3/8 in. x 4 in., 6 ft. Cap.	WEL14A-602R	Screwdriver Slot	140 (60)
A19ABC-4C	SPDT	50 to 130 (10 to 55)	3 1/2 to 14 (1.9 to 8)	3/8 in. x 5 in., 8 ft. Cap.	WEL14A-603R	Knob	170 (77)
A19ABC-24C [3]	SPDT	-30 to 100 (-34 to 38)	3 to 12 (1.7 to 6.7)	3/8 in. x 4 in., 8 ft. Cap.	WEL14A-602R	Convertible	140 (60)
A19ABC-36C	SPDT	-30 to 100 (-34 to 38)	3 to 12 (1.7 to 6.7)	3/8 in. x 4 in., 20 ft. Cap.	WEL14A-602R	Convertible	140 (60)
A19ABC-37C	SPDT	-30 to 100 (-34 to 38)	3 to 12 (1.7 to 6.7)	3/8 in. x 4 in., 10 ft. Cap.	WEL14A-602R	Screwdriver slot	140 (60)
A19ABC-74C	SPDT	-30 to 100 (-34 to 38)	3 to 12 (1.7 to 6.7)	3/8 in. x 4 in., 6 ft. Cap.	WEL14A-602R	Screwdriver slot	140 (60)
Fixed Differential							
A19AAF-12C	SPDT	25 to 225 (-4 to 107)	3 1/2 (1.9)	3/8 in. x 3 in., 10 ft. Cap.	WEL14A-602R	Screwdriver slot	275 (135)
Fixed Differential (Case Compensated)							
A19AAC-4C	SPDT	0 to 80 (-18 to 27)	5 (2.8)	3/8 in. x 4 in., 6 ft. Cap.	WEL14A-602R	Screwdriver slot	140 (60)
A19AAD-12C	SPST Open Low	-30 to 50 (-34 to 10)	2 1/2 (1.4)	3/8 in. x 4 in., 7 ft. Cap.	WEL14A-602R	Screwdriver slot	140 (60)
Fixed Differential (Close)							
A19AAD-5C [4]	SPST Open Low	30 to 50 (-1 to 10) (**Bulk Milk Cooler**)	2 1/2 (1.4)	3/8 in. x 2 5/8 in., 6 ft. Cap.	WEL16A-601R	Screwdriver slot	190 (88)
A19AAF-20C	SPDT	-30 to 100 (-34 to 38)	2 1/2 (1.4)	3/8 in. x 4 in., 6 ft. Cap.	WEL14A-602R	Screwdriver slot	140 (60)
A19AAF-21C	SPDT	40 to 90 (4 to 32)	1 1/2 (0.8)	3/8 in. x 5 3/4 in., 6 ft. Cap.	WEL14A-603R	Screwdriver slot	140 (60)
Manual Reset							
A19ACA-14C	SPST Open Low	-30 to 100 (-34 to 38)	Manual Reset	3/8 in. x 4 in. 6 ft .Cap.	WEL14A-602R	Screwdriver slot	140 (60)
A19ACA-15C	SPST Open Low	-30 to 100 (-34 to 38)	Manual Reset	3/8 in. x 4 in. 10 ft. Cap.	WEL14A-602R	Screwdriver slot	140 (60)
A19ADB-1C	SPST Open High	100 to 240 (38 to 116)	Manual Reset	3/8 in. x 3 1/2 in. 6 ft. Cap.	WEL14A-602R	Knob	290 (143)
A19ADN-1C	SPST Open High	100 to 240 (38 to 116)	Manual Reset	3/8 in. x 4 in. 6 ft. Cap.	WEL14A-602R	Screwdriver slot	290 (143)

1. Specify the control model code number, packing nut code number (if required), and bulb well code number (if required).
2. Replaces White-Rodgers 1609-101
3. Replaces White-Rodgers 1609-12, -13; Ranco 010-1408, -1409, - 1410, -1490, 060-110; Honeywell L6018C-1006, L6021A-1005, T675A-1011, -1508, -1516, -1821, T4301A-1008, T6031A-1011, T6031A-1029
4. Case-Compensated

The performance specifications are nominal and conform to acceptable industry standards. For applications at conditions beyond these specifications, consult the local Johnson Controls office. Johnson Controls, Inc. shall not be liable for damages resulting from misapplication or misuse of its products. © 2009 Johnson Controls, Inc.

Operation and Maintenance Manuel – Construction Water Treatment Plant, Version 1

Operation & Maintenance Manual
Construction Water Treatment Plant

Prepared by:
Agnico Eagle Mines Limited – Meadowbank/Amaruq Division

EXECUTIVE SUMMARY

Agnico Eagle has prepared the following document which summarizes the operational and maintenance procedures to be followed at the Construction Water Treatment Plant (CWTP).

This report documents the stand alone Operation & Maintenance Manual – Construction Water Treatment Plant, includes the following requirements:

- The manual was prepared in accordance with the "Guidelines for the Preparation of an Operation and Maintenance Manual for Sewage and Solid Waste Disposal Facilities in the Northwest Territories, 1996", and adapted for the use of a mechanical contact water treatment facility;
- The manual includes contingency measures in the event of a plant malfunction; and
- The manual includes sludge management procedures.

IMPLEMENTATION SCHEDULE

This Plan will be implemented upon Board approval and subject to any modifications proposed by the NWB as a result of the review and approval process.

DISTRIBUTION LIST

Agnico Eagle Internal:

- Process Plant Superintendent
- Process Plant General Foreman
- Energy&Infrastructures Services Superintendent
- Energy&Infrastructures Services General Foreman
- Environmental Superintendent
- Senior Environmental Coordinator
- Environmental Compliance Counselor
- Water Treatment Plant Operator

DOCUMENT CONTROL

Version	Date (YMD)	Section	Page	Revision
1	18/06/2018			Operation and Maintenance Manual

Prepared By: _____
Blandine Arseneault
Project Manager, Environment

_____
Thomas Genty
Water treatment Specialist

_____
Israel Gagnon
Mechanical Eng.

Approved by: _____
Julie Bélanger
Project Superintendent

TABLE OF CONTENTS

1 INTRODUCTION 7

1.1 Purpose 7
1.2 Brief Description of the Project 7
1.3 Contact Information 10

2 DESCRIPTION 11

2.1 Construction water Treatment Plant (CWTP) 11
2.1.1 Process summary 11
2.1.2 Actiflo® 13
2.1.3 Service Water System 13
2.1.4 Reagents 13
2.1.5 Controls 13

3 OPERATION AND MAINTENANCE 15

3.1 Pumping 15
3.2 Reagent mixing 15
3.3 Effluent Quality control 15
3.4 Troubleshooting and Maintenance Procedures 16
3.5 Record Keeping 16
3.6 Safety Procedures For Operators 16
3.7 Controlling Access to the CWTP 17

4 EMERGENCY RESPONSE 18

4.1 Fire 18
4.2 Spill 18
4.3 Plant Malfunction 18

LIST OF FIGURES

Figure 1 – Location of CWTP 8
Figure 2 – General Arrangement of CWTP 9
Figure 3 – Flowsheet of CWTP (adapted from Meadowbank water treatment plant) 12

LIST OF APPENDICES

Appendix A: MSDS Sheets
Appendix B: Veolia Operations Manual

1 INTRODUCTION

1.1 PURPOSE

This Construction Water Treatment Plant (CWTP) Operation and Maintenance Manual (OMM) for the Whale Tail Gold Project (the Project) has been prepared based on the "*Guidelines for the Preparation of an Operation and Maintenance Manual for Sewage and Solid Waste Disposal Facilities in the Northwest Territories, 1996, prepared by the Department of Municipal and Community Affairs, NWT*". The OMM has been adapted for the use of a mechanical contact water treatment facility.

This manual is a component of the Whale Tail Environmental Management System. The objectives of this plan are summarized as follows:

1. To define the location, design and operating procedures to be used in the treatment of contact water generated at the Project; and
2. To provide monitoring requirements for the CWTP.

The CWTP purpose is to treat water during the dike construction of the Whale Tail Lake in summer 2018.

1.2 BRIEF DESCRIPTION OF THE PROJECT

Agnico Eagle Mines Limited – Meadowbank Division (Agnico Eagle) is developing Whale Tail Pit and Haul Road Project, a satellite deposit located on the Amaruq property, to extend mine operations and milling at Meadowbank Mine. The proposed open pit mine, mined by truck-and-shovel operation and will produce an ore grading at approximately 3.68 g/t from 2019 to 2025.

The Amaruq Mineral Deposit is considered to be an extension of the currently operating Meadowbank mine and most positions will be filled by Meadowbank employees. A conventional open pit mining operation is forecasted on the Whale Tail deposit. Access to the site is via a 64-kilometre road from Meadowbank mine. On-site facilities will include a power plant, maintenance facilities, tank farm for fuel storage, Construction water treatment plant (CWTP), sewage treatment plant, drinking water treatment plant, as well as accommodation and kitchen facilities for approximately 400 people.

In order to start the open pit development, a dike is required to be built in the Whale Tail Lake and water pumped from the north section of the lake to the south section of the lake.

During dike construction, lake sediment will likely be re-suspended. In order to contain the re-suspended sediments within the work area, before initiating construction, two rows of turbidity barriers will be installed on each side of the dewatering dike. Turbidity barriers are floating devices used in lakes or rivers. They are made of geotextile preventing sediment migration in water.

According to the Water Quality Monitoring and Management Plan for Dike Construction Dewatering, (Version 1 January 2017 Prepared by Agnico-Eagle Mines Limited – Meadowbank Division), during dike construction on Whale Tail Lake, contact water originating from affected areas in the lake will be pumped and treated by the Construction water treatment plant (CWTP) prior to discharge to the receiving environment. Figures 1 and 2 illustrate the location and general arrangement of the CWTP.

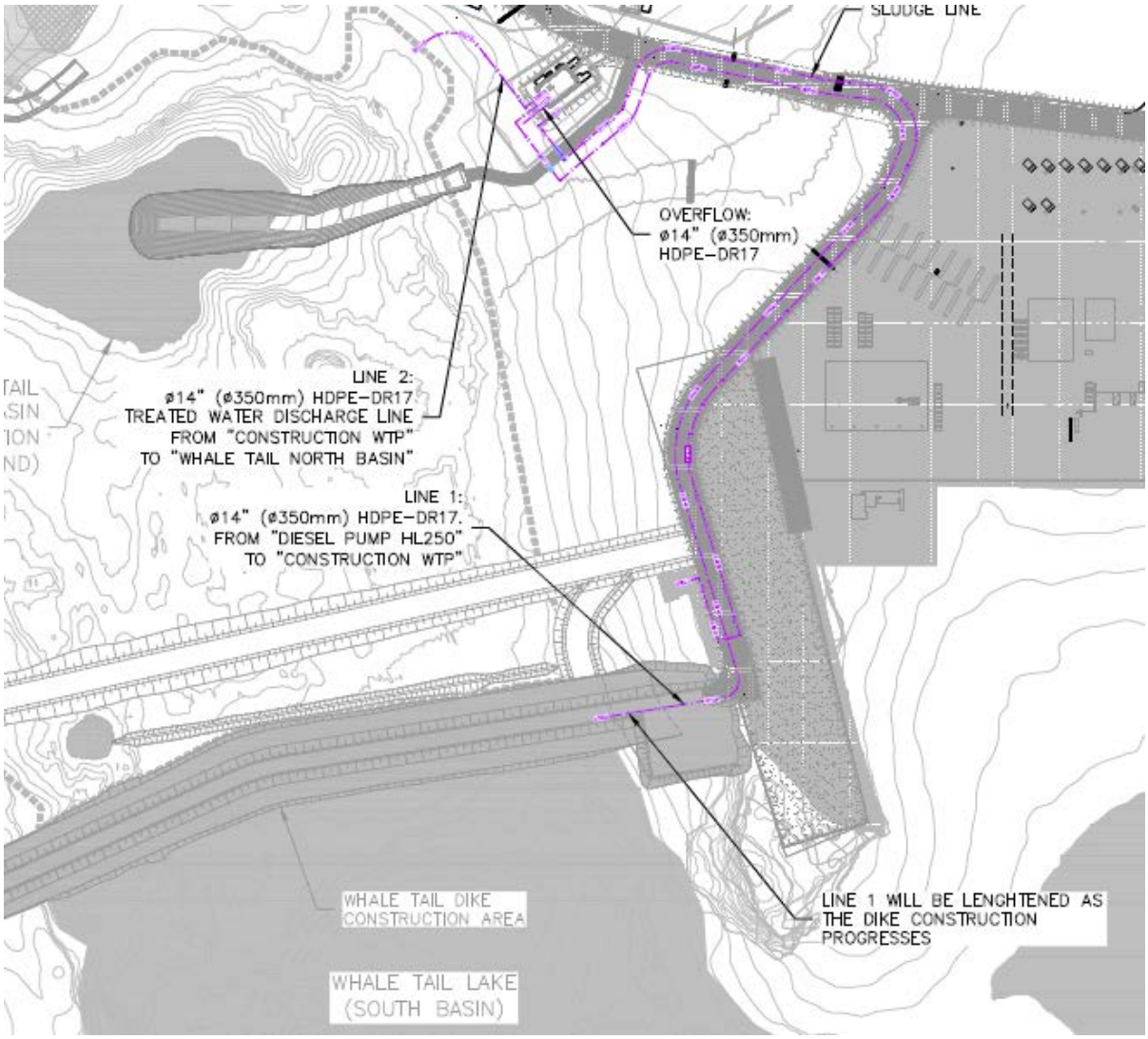

Figure 1 – Location of CWTP

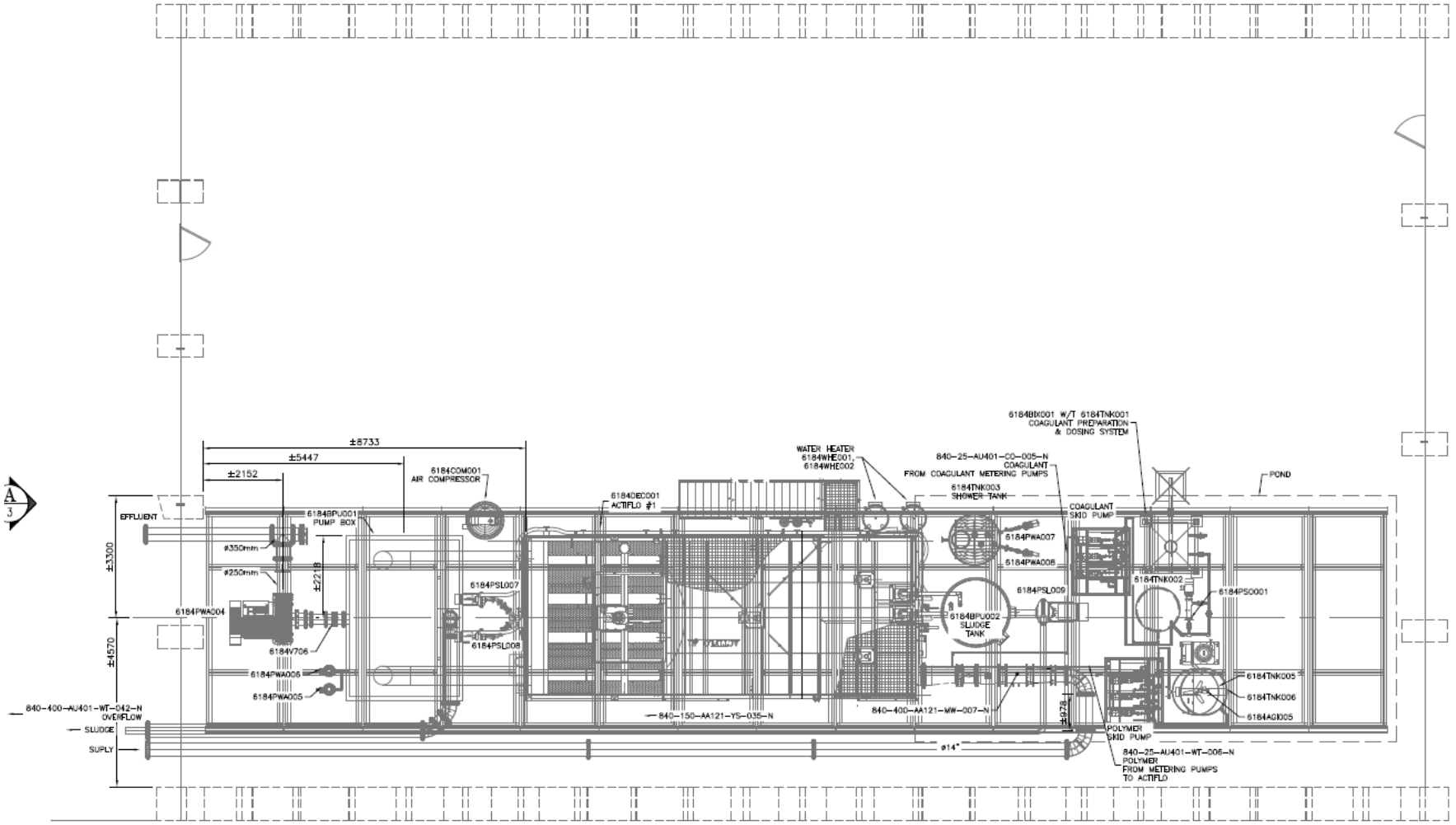

Figure 2 – General Arrangement of CWTP

1.3 CONTACT INFORMATION

The individuals responsible for the operation of the construction water treatment plant for the Project are the following:

Mill Superintendent	819-759-3555
Site Services Superintendent	819-759-3555
Site Services General Foreman	819-759-3555

2 DESCRIPTION

2.1 CONSTRUCTION WATER TREATMENT PLANT (CWTP)

2.1.1 Process summary

The purpose of the CWTP (ACP-700R) is to remove Total Suspended Solids (TSS) from the influent water pumped from Whale Tail Lake, close to the dike construction. The equipment has an operational range of 6,250 to 28,000 m^3/d. It is expected that the CWTP will be in use only during the dike construction, approximately two (2) months in 2018 (July and August).

The equipment chosen for the CWTP was the current Actiflo® used in the past at Meadowbank mine. The plant was disassembled and would be reassembled at Amaruq site. The Actiflo® ACP 700 R as an operational range in the same order of magnitude than what is required for this project (max capacity of approximately 800 m^3/h).

The main treatment component consists of one Actiflo® clarifier with two (2) recirculation lines and two (2) hydrocyclones. The Actiflo® can be operated with one (1) or two (2) lines, depending on the influent flow rate and TSS content. The hydrocyclone overflow is sent into the rock fill structure located in the energy dispenser at a minimum 31 m of the Whale Tail Lake shore. The TSS is passively removed from the water by percolating onto the rock fill structure located in the energy dispenser and water will flow by gravity back into Whale Tail Lake. The Actiflo® overflow is designed to meet the Type A License final effluent discharge criteria for TSS concentrations. The final effluent will be monitored on a continuous basis for pH and turbidity. Flow rate is measured continuously in the feed pipe of the Actiflo®.

The CWTP general flow diagram is illustrated in Figure 3. The following sections describe the CWTP components. Note that the flowsheet represents the water treatment plant that had been installed in the past at Vault open pit, close to Meadowbank mine. This plant will be transported to Amaruq project and will be built according to the plan from Meadowbank.

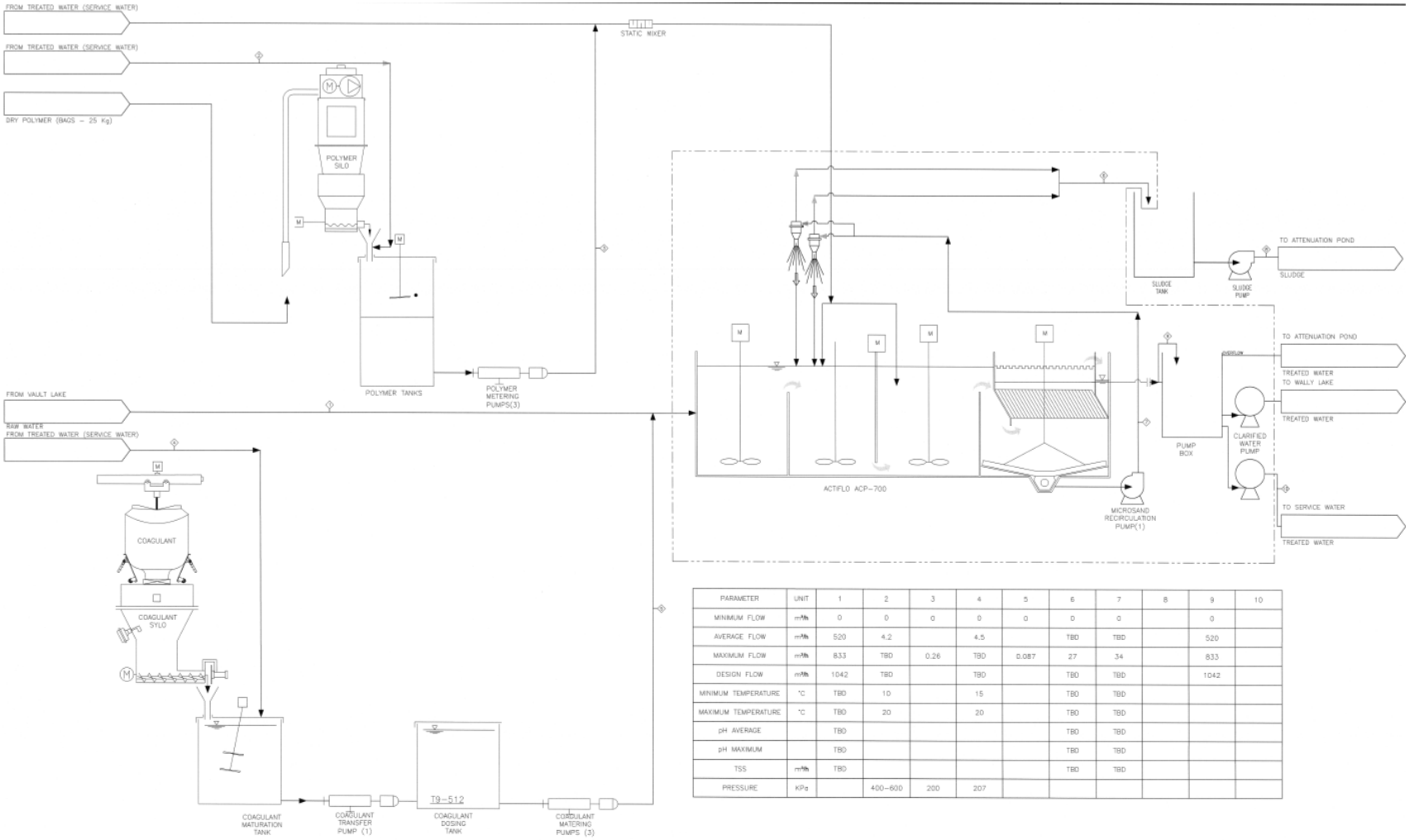

PARAMETER	UNIT	1	2	3	4	5	6	7	8	9	10
MINIMUM FLOW	m³/h	0	0	0	0	0	0	0		0	
AVERAGE FLOW	m³/h	520	4.2		4.5		TBD	TBD		520	
MAXIMUM FLOW	m³/h	833	TBD	0.26	TBD	0.087	27	34		833	
DESIGN FLOW	m³/h	1042	TBD		TBD		TBD	TBD		1042	
MINIMUM TEMPERATURE	°C	TBD	10		15		TBD	TBD			
MAXIMUM TEMPERATURE	°C	TBD	20		20		TBD	TBD			
pH AVERAGE		TBD					TBD	TBD			
pH MAXIMUM		TBD					TBD	TBD			
TSS	m³/h	TBD					TBD	TBD			
PRESSURE	KPa		400-600	200	207						

Figure 3 – Flowsheet of CWTP (adapted from Meadowbank water treatment plant)

2.1.2 Actiflo®

The Actiflo® clarifier uses sand ballasted settling, a high rate coagulation-flocculation-sedimentation process. In the coagulation basin, TSS are destabilized under the action of the coagulant and start to form small aggregates (also called flocs). The coagulant is a trivalent soluble metal compound, usually iron or aluminum, which will cause coagulation when it reaches a certain concentration. Once the coagulant has performed the destabilizing effect, it will precipitate as a metal hydroxide and will participate in the formation of the aggregates. Water then flows into a second tank called the injection tank. There, micro-sand and polymer are added. The polymer acts as a flocculant aid, binding the destabilized solids together with the micro-sand particles by forming polymer bridges. The micro-sand provides a large contact area for floc attachment and acts as a ballast, thereby accelerating the settling of the flocs. From the injection tank, water flows into the maturation tank where flocs formed in the previous stage agglomerate and grow into high density flocs known as micro-sand ballasted flocs. Water then overflows to the settling section of the tank, and with the help of the lamella system, a solid-liquid separation is achieved resulting in clarified water exiting from the system via a collection trough or weirs. The clarified water is monitored for pH and turbidity prior to final discharge. The flow rate signal is also connected to a flow totalizer.

The flocs settle in a portion of the system where they are collected by a rake mechanism. A proportion of the unit's design raw water flow is continuously withdrawn from the clarifier and pumped to a hydrocyclone system which separates the micro-sand from the sludge. The recovered micro-sand is reused in the process. A small quantity of the micro-sand is not recovered by the hydrocyclones and remains within the sludge. The lost micro-sand needs to be replaced periodically by adding more to the process. After micro-sand separation, the sludge is sent to the rock fill structure located in the energy dispenser (expected solid at 0.5% solid depending on TSS feed water quality at a rate of approximately 54m^3/h).

2.1.3 Service Water System

The service water system consists of two (2) multimedia filters, two (2) heaters, one (1) filtered water tank and two (2) service water pumps. Service water is used in the preparation of dry chemicals and for polymer makeup systems. Coagulant and polymer require filtered heated water. Treated water from the Actiflo® is used to produce service water.

2.1.4 Reagents

One (1) polymers as well as a coagulant are used to treat the water that flows through the Actiflo®, each is supplied by a dosing system that is adjusted according to the influent flow rate. Treated water from the Actiflo® is used for the mixing of the reagents. The MSDS sheets are provided at Appendix A.

2.1.5 Controls

The Actiflo® Feed Pump a diesel pump working on an ON/OFF mode that allows the flow to be constant during ON mode at 444 m^3/h. The flow is monitored on the feed pipe of Actiflo®

The raw water TSS analyzer (turbidity sensor) is used to monitor the water quality. An alarm is triggered when a high-high turbidity is reached. The high-high turbidity alarm value is a setting that will be determined during the commissioning phase and will depend on the quality of the water to be treated.

The effluent water TSS concentration (turbidity) and pH values are monitored continuously with in-line instrumentation. If effluent concentrations reach a set point indicating that final effluent discharge criteria may be exceeded, an alarm is sent to the Operator, who will manage the system to meet effluent criteria. A second alarm is sent to the Operator if effluent concentrations reach a second set point that is just below the final effluent discharge criteria.

Addition of the two (2) required reagents is proportional to the influent water flow. Since this flow is constantly maintained, no manual adjustment is required. If the operator has to modify the influent water flow, adjustment of the reagent dosing system will be required to maintain the target dosage rate. The reagent dosing systems are equipped with pumps that maintain a constant flow rate when running at a constant frequency. The flow can be modified by changing the electric motor frequency.

The reagent dosing system is equipped with valves and graduated cylinders allowing the Operator to measure the addition rate of the reagent using a stop watch. The Operator will determine the required flow of a specific reagent by a formula based on influent flow rate. Based on this calculation, a manual adjustment to the reagent pump will be done in order to obtain the required dosage. Initially, the formula will be based on laboratory testing and will be adjusted accordingly to the treatment plant performance. With time and experience, operation performance may be improved based on the results obtained and sharing practices with other sites such as at Meliadine.

3 OPERATION AND MAINTENANCE

3.1 PUMPING

The system includes mainly pumps for the operation of the CWTP. Some of these pumps are equipped with a VFD that could be adjusted by the Operator or by an automatic system. In all cases the pumps can only be started by the Operator.

All pumps are regularly inspected by the Operator who will ensure the pumps continue to operate efficiently and will address any deficiencies. If the pumps require maintenance, the Operator will report the situation and take appropriate action. Some of the pumps are installed with a standby unit that allows the Operator to switch from one pump to the other if necessary. In some situations, it may be necessary to temporarily shutdown the CWTP for servicing of the equipment.

A preventative maintenance program, as recommended by the pump supplier, will be followed by the Maintenance Crew to ensure the pumps are always kept in good working order.

3.2 REAGENT MIXING

The reagent mixing system is fully automated system. The only requirement is to change the reagent bag when it is empty. Since one bag will last for many days, daily verification of the dry reagent level is sufficient to ensure stable operation of the process.

During the daily inspection, the Operator will monitor the different reagent systems and prepare additional reagent, as required, according to the reagent preparation procedures in place. The water levels in the mixing and distribution tanks are connected to the control system, which will ensure sufficient water is supplied to the reagent preparation systems. In the event of a lack of water supply, a low level alarm will occur to notify the Operator.

Preventive maintenance of the mechanical equipment will be performed according to the supplier operating manual specifications. With time and experience, the maintenance program may be improved based on results obtained and sharing practices with Meliadine.

3.3 EFFLUENT QUALITY CONTROL

The Operator will conduct regular inspections of the entire operating system to ensure it operates as intended. Any upset condition will be reported and corrective actions will be applied accordingly. The operator will also record process key values that will allow the process to be optimized and any discrepancies between the process and expected performances to be detected.

The quality of the final effluent is monitored on a continuous basis by pH and turbidity (Nephelometric Turbidity Unit (NTU)) probes. The turbidity measurement is an indirect indication of the TSS in the water, and will be used to infer the effluent TSS. The output of these instruments will send an alarm indicating that the levels are higher than the set point, but lower than the maximum discharge criteria. This allows the operator to act on the process before the limit is exceeded. In the event that the discharge limit is about to be reached, a second alarm will send a signal to the operator. The system will be equipped with an uninterruptable power supply for instrumentation and controls.

The final effluent will be sampled for water quality following the frequency and parameters stipulated in the MDMER and sent to a certified laboratory for analysis. The results generated by the laboratory will be compared with those obtained with the plant instrumentation to detect any deviations. All the probes and instrumentation within the plant will be calibrated and serviced as per the preventative maintenance program.

As stipulated in the Type A License and the Metal Mining Effluent Regulations (MMER), the final effluent discharged shall not exceed a pH range between 6.0 and 9.5 or a maximum average concentration for TSS of 15 mg/L, and a maximum of 30 mg/L for a grab sample.

3.4 TROUBLESHOOTING AND MAINTENANCE PROCEDURES

The sections below outline the general operational and maintenance procedures at the plant; further details are available in the manufacturer' operating manuals in Appendix B.

The operation of the Actiflo® process is relatively simple and a visual inspection will determine whether the process is performing as expected. A critical component of the process for monitoring is the maturation tank. The agitator of this tank is equipped with a VFD and the speed is adjusted to obtain a gentle mixing in this tank. When the process is operated correctly, big flocs of about 5 mm are visible in the tank and moving slowly. The agitation must be adjusted in a way that the flocs are maintained in suspension and not broken down. The water between the flocs should look clear. If flocs are visible but the water is cloudy, it is an indication that the coagulant dosage is insufficient. If the water is clear but the flocs are small, it is an indication that the flocculant addition is insufficient.

The system must also contain enough micro-sand to obtain flocs that are heavy enough to sink in the clarifier section. If large flocs are visible but are present at the top of the clarifier, this is an indication of insufficient micro-sand. Usually, the micro-sand load is maintained by adding one bag at a time. The frequency of the addition of micro-sand is determined by trial and error. There is no environmental issue with an excessive addition since it would be compensated by an increased loss within the sludge.

The hydrocyclone is also an important part of the system since it allows the micro-sand to be recycled in the system. The underflow of the cyclone should never be blocked and the flow should have an umbrella shape.

3.5 RECORD KEEPING

Records of the operational and maintenance and sampling procedures will be accessible to assist in the evaluation of the CWTP performance. Details of any maintenance undertaken at the CWTP will also be recorded.

The volume, pH, turbidity and temperature of effluent discharged to environment will be recorded on a continuous basis. The data will be saved on a network data base.

3.6 SAFETY PROCEDURES FOR OPERATORS

Operators working in the CWTP facility must be trained prior to work so that they are aware of the health and safety risks as well as the operational procedures associated with the CWTP. The following are important safety considerations:

- Working within the plant, especially with chemicals, requires adequate personal protective equipment (PPE) for Operators. This includes wearing steel toed boots, hard hat, rubber aprons, safety glasses with side shields and gloves.
- Operators are required to conduct good housekeeping of the working area to minimize the risk of incidents.

- Lock-out/tag-out procedures must applied when servicing equipment.
- The MSDS for reagents used in the CWTP will be readily available for the Operator at all times.
- Eyewash stations are located within proximity of reagent systems in the CWTP.

3.7 CONTROLLING ACCESS TO THE CWTP

Access to the CWTP will be restricted to authorized personnel only. Signs will be posted at the CWTP entrance.

4 EMERGENCY RESPONSE

4.1 FIRE

In case of fire at the CWTP, the on-site emergency response team (ERT) will be notified as per Agnico Eagle's protocol. Instructions from the on-site emergency response team will be followed by all personnel at the CWTP. Further details of fire response are provided in the "*Risk Management & Emergency Response Plan*". The CWTP will include the necessary fire safety protection measures in accordance with the Nunavut and North West Territories Mine Act.

4.2 SPILL

Spill kits and the necessary secondary containment will be provided within the building of the CWTP. In the event of a spill at the CWTP, the Environment Department will be notified immediately and provide support, as required. In the event of a large spill, the on-site ERT will be notified as per Agnico Eagle's protocol. Instructions from the ERT will be followed by all personnel at the CWTP. A spill kit will be available at the CWTP. In accordance with the "*Spill Contingency Plan",* all spills into a waterbody or onto ice are reported immediately to the Nunavut Spill Line among others. For spills occurring away from a waterbody, a report is provided to the Nunavut Spill Line if quantities are above the threshold as specified in the "Nunavut Environmental Protection Act. Consolidation of Spill Contingency Planning and Reporting Regulations R-068-93*".* Further details regarding the site spill response procedure are provided in the "*Spill Contingency Plan"*.

4.3 PLANT MALFUNCTION

If there is a major problem or failure in the CWTP, it will be likely due to a problem with the reagent addition systems caused by the malfunction of the pump or due to a cyclone blockage on the sludge reclaim system.

In the case of an operational upset, the most likely consequence will be an increase of TSS in the effluent. This would be managed by adjusting the feed flow rate, dosage of chemical. Once the problem is resolved and the water quality returns to concentrations within discharge criteria, the valves will be re-opened to allow discharge to environment.

In the case of a cyclone underflow blockage, the micro-sand will be completely lost to the rejected sludge. New sand will then need to be added.

Appendix A: Reagent MSDS Sheets

SAFETY DATA SHEET

1. Identification

Product identifier **HYDREX 3267**

Other means of identification None.

Recommended use Potable Water Treatment

Recommended restrictions PROFESSIONAL USE ONLY

Manufacturer/Importer/Supplier/Distributor information

Supplier Veolia Water Technologies Canada Inc.

Address 2000 Argentia Road, Plaza IV, Suite 430
Mississauga, ON L5N 1W1
Canada

Contact Person Hydrex Product Specialist

Telephone (905) 286-4846

Fax (905) 286-0488

e-mail vwtcanada-hydrex@veolia.com

24-Hour Emergency telephone +1-760-476-3962 (Code:333239)

Supplier Not available.

2. Hazard(s) identification

Physical hazards Not classified.

Health hazards Not classified.

Environmental hazards Hazardous to the aquatic environment, acute hazard Category 3

Label elements

Hazard symbol None.

Signal word None.

Hazard statement Harmful to aquatic life.

Precautionary statement

Prevention Avoid release to the environment.

Response Wash hands after handling.

Storage Store in cool place. Protect from sunlight. Store away from incompatible materials.

Disposal Dispose of contents/container to an appropriate treatment and disposal facility in accordance with applicable laws and regulations, and product characteristics at time of disposal.

Other hazards None known.

Supplemental information None.

3. Composition/information on ingredients

Mixtures

Chemical name	Common name and synonyms	CAS number	%
ALUMINUM, WATER SOLUBLE SALTS, N.O.S.		39290-78-3	95
Other components below reportable levels			5

All concentrations are in percent by weight unless ingredient is a gas. Gas concentrations are in percent by volume.

4. First-aid measures

Inhalation Move to fresh air. Call a physician if symptoms develop or persist.

Skin contact Wash off with soap and water. Get medical attention if irritation develops and persists.

Eye contact Do not rub eyes. Rinse with water. Get medical attention if irritation develops and persists.

Ingestion	Rinse mouth. Get medical attention if symptoms occur.
Most important symptoms/effects, acute and delayed	Dusts may irritate the respiratory tract, skin and eyes.
Indication of immediate medical attention and special treatment needed	Treat symptomatically.
General information	Ensure that medical personnel are aware of the material(s) involved, and take precautions to protect themselves.

5. Fire-fighting measures

Suitable extinguishing media	Water fog. Foam. Dry chemical powder. Carbon dioxide (CO2).
Unsuitable extinguishing media	Not available.
Specific hazards arising from the chemical	During fire, gases hazardous to health may be formed.
Special protective equipment and precautions for firefighters	Self-contained breathing apparatus and full protective clothing must be worn in case of fire.
Fire fighting equipment/instructions	Use water spray to cool unopened containers.
Specific methods	Use standard firefighting procedures and consider the hazards of other involved materials.
General fire hazards	No unusual fire or explosion hazards noted.

6. Accidental release measures

Personal precautions, protective equipment and emergency procedures	Keep unnecessary personnel away. Keep people away from and upwind of spill/leak. Wear appropriate protective equipment and clothing during clean-up. Ensure adequate ventilation. Local authorities should be advised if significant spillages cannot be contained. For personal protection, see section 8 of the SDS.
Methods and materials for containment and cleaning up	Avoid the generation of dusts during clean-up. Collect dust using a vacuum cleaner equipped with HEPA filter. Prevent product from entering drains. Large Spills: Stop the flow of material, if this is without risk. Shovel the material into waste container. Following product recovery, flush area with water. Small Spills: Sweep up or vacuum up spillage and collect in suitable container for disposal. For waste disposal, see section 13 of the SDS.
Environmental precautions	Avoid release to the environment. Inform appropriate managerial or supervisory personnel of all environmental releases. Prevent further leakage or spillage if safe to do so. Avoid discharge into drains, water courses or onto the ground.

7. Handling and storage

Precautions for safe handling	Minimize dust generation and accumulation. Provide appropriate exhaust ventilation at places where dust is formed. Wear appropriate personal protective equipment. Avoid release to the environment. Observe good industrial hygiene practices.
Conditions for safe storage, including any incompatibilities	Store in original tightly closed container. Store in a well-ventilated place. Store away from incompatible materials (see Section 10 of the SDS).

8. Exposure controls/personal protection

Occupational exposure limits

US. ACGIH Threshold Limit Values

Material	Type	Value	Form
HYDREX 3267	TWA	1 mg/m3	Respirable fraction.

Canada. Alberta OELs (Occupational Health & Safety Code, Schedule 1, Table 2)

Material	Type	Value
HYDREX 3267	TWA	2 mg/m3

Canada. British Columbia OELs. (Occupational Exposure Limits for Chemical Substances, Occupational Health and Safety Regulation 296/97, as amended)

Material	Type	Value	Form
HYDREX 3267	TWA	1 mg/m3	Respirable.

Canada. Ontario OELs. (Control of Exposure to Biological or Chemical Agents)

Material	Type	Value	Form
HYDREX 3267	TWA	1 mg/m3	Respirable fraction.

Canada. Quebec OELs. (Ministry of Labor - Regulation Respecting the Quality of the Work Environment)

Material	Type	Value
HYDREX 3267	TWA	2 mg/m3

Biological limit values No biological exposure limits noted for the ingredient(s).

Appropriate engineering controls If material is ground, cut, or used in any operation which may generate dusts, use appropriate local exhaust ventilation to keep exposures below the recommended exposure limits.

Individual protection measures, such as personal protective equipment

Eye/face protection Wear safety glasses with side shields (or goggles) and a face shield. Chemical goggles and face shield are recommended. Before any handling, wear protective glasses side-shields complying with the NF EN 166.

Skin protection

Hand protection Chemical resistant gloves.

Other Wear suitable protective clothing. Chemical resistant gloves.

Respiratory protection Wear respirator with dust filter.

Thermal hazards Wear appropriate thermal protective clothing, when necessary.

General hygiene considerations Always observe good personal hygiene measures, such as washing after handling the material and before eating, drinking, and/or smoking. Routinely wash work clothing and protective equipment to remove contaminants.

9. Physical and chemical properties

Appearance Powder.

Physical state Solid.

Form Powder.

Color Pale yellow

Odor Slight

Odor threshold Not available.

pH 3 - 5 (0.3% solution)

Melting point/freezing point 10.4 °F (-12 °C) (33% solution)

Initial boiling point and boiling range Not available.

Flash point Not available.

Evaporation rate Not available.

Flammability (solid, gas) Not available.

Upper/lower flammability or explosive limits

Flammability limit - lower (%) Not available.

Flammability limit - upper (%) Not available.

Explosive limit - lower (%) Not available.

Explosive limit - upper (%) Not available.

Vapor pressure Not available.

Vapor density Not available.

Relative density Not available.

Solubility(ies)

Solubility (water)	Easily soluble in cold water.
Partition coefficient (n-octanol/water)	Not available.
Auto-ignition temperature	Not available.
Decomposition temperature	Not available.
Viscosity	Not available.

Other information

Density	800.00 - 900.00 kg/m3
Explosive properties	Not explosive.
Oxidizing properties	Not oxidizing.
Specific gravity	0.8 - 0.9

10. Stability and reactivity

Reactivity	The product is stable and non-reactive under normal conditions of use, storage and transport.
Chemical stability	Material is stable under normal conditions.
Possibility of hazardous reactions	No dangerous reaction known under conditions of normal use.
Conditions to avoid	Contact with incompatible materials. None under normal conditions.
Incompatible materials	Ammonia. Chlorine. Do not mix with other chemicals. Alkalies.
Hazardous decomposition products	Aluminum and Sulfur oxides.

11. Toxicological information

Information on likely routes of exposure

Inhalation	Dust may irritate respiratory system.
Skin contact	Dust or powder may irritate the skin.
Eye contact	Dust may irritate the eyes.
Ingestion	Expected to be a low ingestion hazard.
Symptoms related to the physical, chemical and toxicological characteristics	Dusts may irritate the respiratory tract, skin and eyes.

Information on toxicological effects

Acute toxicity	Not available.
Skin corrosion/irritation	Prolonged skin contact may cause temporary irritation.
Serious eye damage/eye irritation	Direct contact with eyes may cause temporary irritation.

Respiratory or skin sensitization

Respiratory sensitization	Not a respiratory sensitizer.
Skin sensitization	This product is not expected to cause skin sensitization.
Germ cell mutagenicity	No data available to indicate product or any components present at greater than 0.1% are mutagenic or genotoxic.
Carcinogenicity	Not available.
Reproductive toxicity	This product is not expected to cause reproductive or developmental effects.
Specific target organ toxicity - single exposure	Not classified.
Specific target organ toxicity - repeated exposure	Not classified.
Aspiration hazard	Not an aspiration hazard.

12. Ecological information

Ecotoxicity	Harmful to aquatic life.

Product		Species	Test Results
HYDREX 3267			
Aquatic			
Crustacea	EC50	Daphnia	91.5789 mg/l, 48 hours estimated
Acute			
Algae	EC50	Algae	14 mg/l, 72 hours OCDE TG 201

* Estimates for product may be based on additional component data not shown.

Persistence and degradability

Bioaccumulative potential No data available.

Mobility in soil No data available.

Other adverse effects No other adverse environmental effects (e.g. ozone depletion, photochemical ozone creation potential, endocrine disruption, global warming potential) are expected from this component.

13. Disposal considerations

Disposal instructions Collect and reclaim or dispose in sealed containers at licensed waste disposal site. Do not allow this material to drain into sewers/water supplies. Do not contaminate ponds, waterways or ditches with chemical or used container. Dispose of contents/container in accordance with local/regional/national/international regulations.

Local disposal regulations Dispose in accordance with all applicable regulations.

Hazardous waste code The waste code should be assigned in discussion between the user, the producer and the waste disposal company.

Waste from residues / unused products Dispose of in accordance with local regulations. Empty containers or liners may retain some product residues. This material and its container must be disposed of in a safe manner (see: Disposal instructions).

Contaminated packaging Since emptied containers may retain product residue, follow label warnings even after container is emptied. Empty containers should be taken to an approved waste handling site for recycling or disposal.

14. Transport information

TDG

Not regulated as dangerous goods.

IATA

Not regulated as dangerous goods.

IMDG

Not regulated as dangerous goods.

Transport in bulk according to Annex II of MARPOL 73/78 and the IBC Code Not applicable.

15. Regulatory information

Canadian regulations This product has been classified in accordance with the hazard criteria of the HPR and the SDS contains all the information required by the HPR.

Controlled Drugs and Substances Act

Not regulated.

Export Control List (CEPA 1999, Schedule 3)

Not listed.

Greenhouse Gases

Not listed.

Precursor Control Regulations

Not regulated.

International regulations Additional information is given in the Safety Data Sheet.

Stockholm Convention

Not applicable.

Rotterdam Convention

Not applicable.

Kyoto protocol

Not applicable.

Montreal Protocol

Not applicable.

Basel Convention

Not applicable.

International Inventories

Country(s) or region	Inventory name	On inventory (yes/no)*
Australia	Australian Inventory of Chemical Substances (AICS)	No
Canada	Domestic Substances List (DSL)	Yes
Canada	Non-Domestic Substances List (NDSL)	No
China	Inventory of Existing Chemical Substances in China (IECSC)	Yes
Europe	European Inventory of Existing Commercial Chemical Substances (EINECS)	Yes
Europe	European List of Notified Chemical Substances (ELINCS)	No
Japan	Inventory of Existing and New Chemical Substances (ENCS)	No
Korea	Existing Chemicals List (ECL)	Yes
New Zealand	New Zealand Inventory	No
Philippines	Philippine Inventory of Chemicals and Chemical Substances (PICCS)	No
United States & Puerto Rico	Toxic Substances Control Act (TSCA) Inventory	Yes

*A "Yes" indicates that all components of this product comply with the inventory requirements administered by the governing country(s)
A "No" indicates that one or more components of the product are not listed or exempt from listing on the inventory administered by the governing country(s).

16. Other information

Issue date 04-20-2017

Version # 01

Disclaimer Veolia Water Technologies is not able to anticipate all conditions under which this information and its product, or the products of other manufacturers in combination with its product, may be used. It is the user's responsibility to ensure safe conditions for handling, storage and disposal of the product, and to assume liability for loss, injury, damage or expense due to improper use and or non respect of Veolia Water Technologies' requirement.

Revision information

Product and Company Identification: Product Review
Composition / Information on Ingredients: Ingredients
Physical & Chemical Properties: Multiple Properties
Toxicological Information: Toxicological Data
Ecological Information: Ecotoxicity
Regulatory Information: United States
GHS: Classification

FICHE SIGNALÉTIQUE

1. Identification

Identificateur de produit **HYDREX 3267**

Autres moyens d'identification Aucune.

Usage recommandé Traitement de l'eau potable

Restrictions d'utilisation USAGE PROFESSIONNEL

Renseignements sur le fabricant/importateur/fournisseur/distributeur

Fournisseur Veolia Water Technologies Canada Inc.

Adresse 2000 Argentia Road, Plaza IV, Suite 430
Mississauga, ON L5N 1W1
Canada

Personne à contacter Hydrex Product Specialist

Téléphone (905) 286-4846

Télécopieur (905) 286-0488

courriel vwtcanada-hydrex@veolia.com

24 Hr Numéro de téléphone d'appel d'urgence +1-760-476-3962 (Code:333239)

Fournisseur Non disponible.

2. Identification des dangers

Dangers physiques Non classé.

Dangers pour la santé Non classé.

Dangers environnementaux Dangereux pour le milieu aquatique, danger aigu Catégorie 3

Éléments d'étiquetage

Symbole de danger Aucune.

Mention d'avertissement Aucune.

Mention de danger Nocif pour les organismes aquatiques.

Conseil de prudence

Prévention Éviter le rejet dans l'environnement.

Intervention Se laver les mains après utilisation.

Stockage Stocker dans un endroit frais. Protéger du rayonnement solaire. Conserver à l'écart de matières incompatibles.

Élimination Éliminer le contenu/contenant dans une installation appropriée de traitement et d'élimination conformément aux lois et règlements applicables, ainsi qu'en fonction des caractéristiques du produit au moment de l'élimination.

Autres dangers Aucun(e) connu(e).

Renseignements supplémentaires Aucune.

3. Composition/information sur les ingrédients

Mélanges

Dénomination chimique	Nom commun et synonymes	Numéro d'enregistrement CAS	%
ALUMINIUM , WATER SOLUBLE SALTS, n.s.a.		39290-78-3	95
Autres composant sous les niveaux à déclarer			5

Toutes les concentrations sont en pourcentage en poids, sauf si l'ingrédient est un gaz. Les concentrations des gaz sont er pourcentage en volume.

4. Premiers soins

Inhalation	Transporter à l'extérieur. Appeler un médecin si des symptômes se développent ou persistent
Contact avec la peau	Laver avec de l'eau et du savon. Consulter un médecin si une irritation se développe et persiste.
Contact avec les yeux	Ne pas se frotter les yeux. Rincer avec de l'eau. Consulter un médecin si une irritation se développe et persiste.
Ingestion	Rincer la bouche. Consulter un médecin si des symptômes apparaissent.
Symptômes et effets les plus importants, qu'ils soient aigus ou retardés	La poussière peut irriter les voies respiratoires, la peau et les yeux.
Mention de la nécessité d'une prise en charge médicale immédiate ou d'un traitement spécial, si nécessaire	Traiter de manière symptomatique.
Informations générales	S'assurer que le personnel médical est averti du (des) produits(s) en cause et qu'il prend des mesures pour se protéger.

5. Mesures à prendre en cas d'incendie

Agents extincteurs appropriés	Brouillard d'eau. Mousse. Poudre chimique. Dioxyde de carbone (CO2).
Agents extincteurs inappropriés	Non disponible.
Dangers spécifiques du produit dangereux	Des gaz dangereux pour la santé peuvent se former pendant un incendie.
Équipements de protection spéciaux et précautions spéciales pour les pompiers	Porter un appareil respiratoire autonome et un vêtement de protection complet en cas d'incendie.
Équipement/directives de lutte contre les incendies	Utiliser une pulvérisation d'eau pour refroidir les récipients fermés.
Méthodes particulières d'intervention	Utiliser des procédures standard en cas d'incendie et tenir compte des dangers des autres substances en cause.
Risques d'incendie généraux	Aucun risque inhabituel d'incendie ou d'explosion observé.

6. Mesures à prendre en cas de déversement accidentel

Précautions individuelles, équipements de protection et mesures d'urgence	Tenir à l'écart le personnel non requis. Ternir les gens à l'écart de l'endroit du déversement/de la fuite et en amont du vent. Porter un équipement et des vêtements de protection appropriés durant le nettoyage. S'assurer une ventilation adéquate. Prévenir les autorités locales si des fuites significatives ne peuvent pas être contenues. Pour la protection individuelle, voir la section 8 de la FDS.
Méthodes et matériaux pour le confinement et le nettoyage	Éviter la formation de poussières pendant le nettoyage. Récupérer la poussière en utilisant un aspirateur muni d'un filtre HEPA. Empêcher le produit de pénétrer dans les égouts. Déversements importants : Arrêter l'écoulement de la substance, si cela peut se faire sans risque. Pelleter le matériau dans un conteneur à déchets. Après avoir récupéré le produit, rincer la zone à l'eau. Déversements peu importants : Balayer ou aspirer le déversement et mettre dans un récipient approprié pour élimination. Pour l'élimination des déchets, voir la section 13 de la FDS.
Précautions relatives à l'environnement	Éviter le rejet dans l'environnement. Informer le personnel de direction et de supervision de tous les rejets dans l'environnement. Empêcher d'autres fuites ou déversements lorsqu'il est possible de le faire en toute sécurité. Éviter le rejet dans les égouts, les cours d'eau ou sur le sol.

7. Manutention et stockage

Précautions relatives à la sûreté en matière de manutention	Minimiser la formation et l'accumulation de poussière. Assurer une ventilation aspirante adéquate aux endroits où la poussière se forme. Porter un équipement de protection individuelle approprié. Éviter le rejet dans l'environnement. Observer de bonnes pratiques d'hygiène industrielle.
Conditions de sûreté en matière de stockage, y compris les incompatibilités	Stocker dans des récipients d'origine fermés de manière étanche. Stocker dans un endroit bien ventilé. Stocker à l'écart des matériaux incompatibles (Consulter la section 10 de la FDS).

8. Contrôle de l'exposition/protection individuelle

Limites d'exposition professionnelle

ÉTATS-UNIS. Valeurs limites d'exposition de l'ACGIH

Substance	Type	Valeur	Forme
HYDREX 3267	TWA	1 mg/m3	Fraction respirable.

Canada. LEMT pour l'Alberta (Code de l'hygiène et de la sécurité au travail, Annexe 1, Tableau 2)

Substance	Type	Valeur
HYDREX 3267	TWA	2 mg/m3

Canada. LEMT pour la Colombie-Britannique. (Valeurs limites d'exposition en milieu de travail pour les substances chimiques, Réglementation sur la santé et sécurité au travail 296/97, ainsi modifiée

Substance	Type	Valeur	Forme
HYDREX 3267	TWA	1 mg/m3	Respirable.

Canada. LEMT pour l'Ontario. (Contrôle de l'exposition à des agents biologiques et chimiques)

Substance	Type	Valeur	Forme
HYDREX 3267	TWA	1 mg/m3	Fraction respirable.

Canada. LEMT du Québec, (Ministère du Travail. Règlement sur la qualité du milieu de travail)

Substance	Type	Valeur
HYDREX 3267	TWA	2 mg/m3

Valeurs biologiques limites Aucune limite d'exposition biologique observée pour les ingrédients.

Contrôles d'ingénierie appropriés Si le matériau est moulu, coupé ou utilisé dans toute opération susceptible de créer des poussières, utiliser une ventilation locale par aspiration appropriée pour maintenir les expositions sous les limites d'exposition recommandées.

Mesures de protection individuelle, telles que les équipements de protection individuelle

Protection du visage/des yeux Porter des lunettes de sécurité à écrans latéraux (ou des lunettes à coques) et un écran facial. Il est recommandé de porter des lunettes de protection chimique et un écran facial. Avant toute manipulation, il est nécessaire de porter des lunettes à protection latérale conformes à la norme NF EN 166.

Protection de la peau

Protection des mains Gants résistants aux produits chimiques.

Autre Porter un vêtement de protection approprié. Gants résistants aux produits chimiques.

Protection respiratoire Porter un appareil respiratoire muni de filtres antipoussière.

Dangers thermiques Porter des vêtements de protection thermique appropriés, au besoin.

Considérations d'hygiène générale Toujours adopter de bonnes pratiques d'hygiène personnelle, comme se laver après avoir manipulé la substance et avant de manger, de boire ou de fumer. Laver régulièrement les vêtements de travail et l'équipement de protection pour éliminer les contaminants

9. Propriétés physiques et chimiques

Apparence Poudre.

État physique Solide.

Forme Poudre.

Couleur Jaune pâle

Odeur Léger

Seuil olfactif Non disponible.

pH 3 - 5 (0.3% solution)

Point de fusion et point de congélation -12 °C (10.4 °F) (33% solution)

Point initial d'ébullition et domaine d'ébullition Non disponible.

Point d'éclair Non disponible.

Taux d'évaporation Non disponible.

Inflammabilité (solides et gaz)	Non disponible.
Limites supérieures et inférieures d'inflammabilité ou d'explosibilité	
Limites d'inflammabilité - inférieure (%)	Non disponible.
Limites d'inflammabilité - supérieure (%)	Non disponible.
Limite d'explosibilité - inférieure (%)	Non disponible.
Limite d'explosibilité - supérieure (%)	Non disponible.
Tension de vapeur	Non disponible.
Densité de vapeur	Non disponible.
Densité relative	Non disponible.
Solubilité	
Solubilité (eau)	Facilement soluble dans l'eau froide.
Coefficient de partage n-octanol/eau	Non disponible.
Température d'auto-inflammation	Non disponible.
Température de décomposition	Non disponible.
Viscosité	Non disponible.
Autres informations	
Densité	800.00 - 900.00 kg/m3
Propriétés explosives	Non explosif.
Propriétés comburantes	Non oxydant.
Densité	0.8 - 0.9

10. Stabilité et réactivité

Réactivité	Le produit est stable et non réactif dans des conditions normales d'utilisation, d'entreposage et de transport.
Stabilité chimique	La substance est stable dans des conditions normales.
Risque de réactions dangereuses	Aucune réaction dangereuse connue dans des conditions normales d'utilisation.
Conditions à éviter	Contact avec des matériaux incompatibles. Aucun(e) dans des conditions normales.
Matériaux incompatibles	Ammoniac. Chlore Ne pas mélanger avec d'autres produits chimiques. Alcalis.
Produits de décomposition dangereux	Aluminium et Oxydes de soufre.

11. Données toxicologiques

Renseignements sur les voies d'exposition probables

Inhalation	La poussière peut irriter l'appareil respiratoire.
Contact avec la peau	La poussière ou la poudre peut irriter la peau.
Contact avec les yeux	La poussière peut irriter les yeux.
Ingestion	Faible danger présumé en cas d'ingestion.
Les symptômes correspondant aux caractéristiques physiques, chimiques et toxicologiques	La poussière peut irriter les voies respiratoires, la peau et les yeux.

Renseignements sur les effets toxicologiques

Toxicité aiguë	Non disponible.
Corrosion cutanée/irritation cutanée	Un contact prolongé avec la peau peut causer une irritation temporaire.

Lésions oculaires graves/irritation oculaire Le contact direct avec les yeux peut causer une irritation temporaire.

Sensibilisation respiratoire ou cutanée

Sensibilisation respiratoire Pas un sensibilisant respiratoire.

Sensibilisation cutanée On ne s'attend pas à ce que ce produit provoque une sensibilisation cutanée.

Mutagénicité sur les cellules germinales Il n'existe pas de données qui indiquent que ce produit, ou tout composant présent à des taux de plus de 0,1 %, soit mutagène ou génétoxique.

Cancérogénicité Non disponible.

Toxicité pour la reproduction On ne s'attend pas à ce que ce produit présente des effets sur la reproduction ou le développement.

Toxicité pour certains organes cibles - exposition unique Non classé.

Toxicité pour certains organes cibles - expositions répétées Non classé.

Danger par aspiration Pas un danger par aspiration.

12. Données écologiques

Écotoxicité Nocif pour les organismes aquatiques.

Produit		Espèces	Résultats d'épreuves
HYDREX 3267			
Aquatique			
Crustacés	CE50	Daphnia	91.5789 mg/l, 48 heures estimation
Aiguë			
Algues	CE50	Algues	14 mg/l, 72 heures OCDE TG 201

* Les estimations pour le produit peuvent être basées sur d'autres données de composants non montrées.

Persistance et dégradation

Potentiel de bioaccumulation Aucune donnée disponible.

Mobilité dans le sol Aucune donnée disponible.

Autres effets nocifs On ne s'attend pas à ce que ce composant ait des effets néfastes sur l'environnement (par ex., appauvrissement de la couche d'ozone, potentiel de formation photochimique d'ozone, perturbation endocrinienne, potentiel de réchauffement de la planète).

13. Données sur l'élimination

Instructions pour l'élimination Recueillir et réutiliser ou éliminer dans des récipients scellés dans un site d'élimination des déchets autorisé. Ne pas laisser la substance
s'infiltrer dans les égoûts/les conduits d'alimentation en eau. Ne pas contaminer les étangs, les voies navigables ou les fossés avec le produit ou le récipient utilisés. Éliminer le contenu/récipient conformément à la réglementation locale/régionale/nationale/internationale.

Règlements locaux d'élimination Détruire conformément à
toutes les réglementations applicables.

Code des déchets dangereux Les codes de déchets doivent être attribués dans le cadre d'une consultation entre l'utilisateur, le fabricant et l'entreprise de décharge.

Déchets des résidus / produits non utilisés Éliminer conformément à la réglementation locale. Les récipients ou pochettes vides peuvent conserver certains résidus de produit. Éliminer ce produit et son récipient d'une manière sûre (voir : instructions d'élimination).

Emballages contaminés Comme les récipients vides peuvent contenir un résidu du produit, suivre les avertissements de l'étiquette, même une fois le récipient vide. Les contenants vides doivent être acheminés vers une installation certifiée de traitement des déchets en vue de leur élimination ou recyclage.

14. Informations relatives au transport

TMD

N'entre pas dans la réglementation des marchandises dangereuses.

IATA

N'entre pas dans la réglementation des marchandises dangereuses.

IMDG

N'entre pas dans la réglementation des marchandises dangereuses.

Transport en vrac selon l'Annexe II de MARPOL 73/78 et le recueil IBC Sans objet.

15. Informations sur la réglementation

Réglementation canadienne Ce produit a été classé conformément aux critères de danger énoncés dans le Règlement sur les produits dangereux et la FDS contient tous les renseignements exigés par le Règlement sur les produits dangereux.

Loi réglementant certaines drogues et autres substances

Non réglementé.

Liste des marchandises d'exportation contrôlée (LCPE 1999, Annexe 3)

Non inscrit.

Gaz à effet de serre

Non inscrit.

Règlements sur les précurseurs

Non réglementé.

Règlements internationaux Renseignements supplémentaires fournis sur la fiche de données de sécurité.

Convention de Stockholm

Sans objet.

Convention de Rotterdam

Sans objet.

Protocole de Kyoto

Sans objet.

Protocole de Montréal

Sans objet.

Convention de Bâle

Sans objet.

Inventaires Internationaux

Pays ou région	Nom de l'inventaire	En stock (Oui/Non)*
Australie	Inventaire australien des substances chimiques (AICS)	Non
Canada	Liste intérieure des substances (LIS)	Oui
Canada	Liste extérieure des substances (LES)	Non
Chine	Inventaire des substances chimiques existantes en Chine (IECSC)	Oui
Europe	Inventaire européen des substances chimiques commerciales existantes (EINECS)	Oui
Europe	Liste européenne des substances chimiques notifiées (ELINCS)	Non
Japon	Inventaire des substances chimiques existantes et nouvelles (ENCS)	Non
Corée	Liste des produits chimiques existants (ECL)	Oui
Nouvelle-Zélande	Inventaire de la Nouvelle-Zélande	Non
Philippines	Inventaire philippin des produits et substances chimiques (PICCS)	Non
États-Unis et Porto Rico	Inventaire du TSCA (Toxic Substances Controls Act - Loi réglementant les substances toxiques)	Oui

*La réponse « Oui » indique que tous les composants du produit sont conformes aux exigences d'entreposage du pays ayant compétence Un « Non » indique qu'un ou plusieurs composant(s) du produit n'est/ne sont pas inscrit(s) ou exempt(s) d'une inscription sur l'inventaire administré par le(s) pays ayant compétence.

16. Autres informations

Date de publication 20-Avril-2017

Version n° 01

Avis de non-responsabilité

Veolia Water Solutions & Technologies ne peut prévoir toutes les conditions d'utilisation des présents renseignements et de son produit, ou des produits d'autres fabricants en association avec son produit. L'utilisateur est responsable d'assurer des conditions sécuritaires de manutention, d'entreposage et d'élimination du produit, et il assume toute responsabilité quant à des pertes, des blessures, des dommages ou des dépenses liés à une utilisation incorrecte ou au non-respect des exigences de Veolia Solutions & Technologies.

Informations relatives à la révision

Identification du produit et de l'entreprise : Identification du produit et de l'entreprise
Composition / renseignements sur les ingrédients : Sommaire des composants
Propriétés physiques et chimiques : Propriétés multiples
Données toxicologiques : Données toxicologiques
Données écologiques: Effets écotoxicologiques
Données réglementaires: États-Unis
GHS: Classification

Coagulant
Water Clarification - Polyaluminum Chloride

Description and Use

Hydrex 3267 is a highly effective polyaluminum chloride based coagulant, supplied in solid form. This product provides a most concentrated form of active aluminum and is a cost-efficient approach where bulk delivery of liquid product is not an option.

Advantages

Hydrex 3267 provides the performance well associated with polyaluminum chloride coagulant chemistry in a most concentrated form. Reduced transportation costs, the elimination of bulk storage footprint or the elimination of tote IBC management issues are benefits associated with this form of polyaluminum chloride.

Application Information

Hydrex 3267 is rehydrated to a 33 percent (by weight) solution, prior to dosing to the system. Contact your Hydrex representative to provide verification of the active aluminum concentration of this solution.

Rehydration of Hydrex 3267 to a 33% solution should be performed with th highest quality water available. Dissolution is best acheived through use of warm water to a temperature limit of 70 degrees celsius. While complete dissolution is attainable at lower temperature, additional mixing time may be required. Take care to add the dry Hydrex 3267 in a controlled flow of the powder. Avoid "dumping" large mass of Hydrex 3267 that is disportionately greater to the mass of dilution water.

Hydrex 3267 is to be stored in a cool, dry location. Keep shipping containers unopened until required for use. For best results, Hydrex 3267 should be stored in conditons in which relative humidity does not exceed 30%. Storage temperature should not exceed 30 degrees celsius. Environmental control systems are recommended for optimal product performance.

No binding document, just for information purposes - Created : 11/13 - Modified : 11/13 - Revision : 1

Veolia Water Solutions & Technologies Headquarters
"L'aquarène" 1, Place Montgolfier - 94417 Saint-Maurice Cedex - France
Tél. +33 1 45 11 55 55
Website : www.veoliawaterst.com

Coagulant
Water Clarification - Polyaluminum Chloride

Specifications

Physical Form :	Solid (powder)
Bulk Density :	800 to 900 kg/m3
Specific Gravity (g/cm3) @ 25°C :	1.1 to 1.3 (as 33% solution)
Product pH :	3.0 to 5.0 (as 33% solution)
Color :	Pale Yellow
Freezing Point (°C/°F) :	Not Applicable
Solubility :	Complete (30 minutes in most cases)

Materials Compatibility

Solution tanks, piping and all wetted components should be constructed from a selection including teflon or cross-linked polyethylene. Hydrex 3267 is mildly corrosive. Avoid use of mild steel, copper, aluminum and stainless steel in contact with the solution.

Storage of the the dry Hydrex 3267 in stainless steel is acceptable.

Packaging

Hydrex 3267 is available in 25 kags or 800 kilogram supersacs.

Safety Information

Refer to the product Material Safety Data Sheet before use.

No binding document, just for information purposes - 11/13

VEOLIA WATER
Solutions & Technologies

Veolia Water Solutions & Technologies
Headquarters
"L'aquarène"- 1, Place Montgolfier - 94417
Saint-Maurice Cedex - France
Tél. +33 1 45 11 55 55
Website : www.veoliawaterst.com

Polychlorure d’aluminium en poudre

Applications

L’HYDREX 3267 est un polychlorure d’aluminium parmi les plus performant.

Ce coagulant de haute pureté, partiellement neutralisé et polymérisé, permet d’obtenir d’excellentes performances dans le traitement des eaux potables, usées et industrielles.

Avantages

L’HYDREX 3267 amène une réduction du volume de boues, une diminution des produits correcteurs de pH, une meilleure qualité d’eau finie et des performances accrues en eaux froides.

L’HYDREX 3267 réagit particulièrement bien dans les procédés ou applications de filtration directe, de maturation des filtres, de décantation lestée, ou sur des eaux à très faibles ou très fortes turbidités.

L’utilisation du L’HYDREX 3267 en poudre permet de réduire les coûts de transport et de faciliter l’entreposage dans des conditions froides.

Mise en œuvre

DOSAGE

L’HYDREX 3267 peut être remis en solution. Afin d’obtenir une concentration de 5,3% Al (solution originale), ajouter en rapport massique 1 partie de HYDREX 3267 à 2 parties d’eau. Ajouter graduellement la poudre à l’eau tout en mélangeant.

Document non contractuel, à caractère informatif - 11/09

Veolia Water Solutions & Technologies
Headquarters
"L'aquarène" 1, Place Montgolfier - 94417 Saint-Maurice Cedex - France
Tél. +33 1 45 11 55 55
Website : www.veoliawaterst.com

Polychlorure d'aluminium en poudre

Spécifications

SPÉCIFICATIONS – CANADA

Apparence :	Poudre jaune pâle,hygroscopique
Aluminium (Al) :	>15,9%
Al_2O_3 (%) :	>30%
Basicité :	51 ± 4%
Sulfates (SO_4) :	9,0 ± 0,5%
Densité de vrac :	0, 85 ± 0,05
Humidité (%) :	4,50 ± 2,0%

TYPIQUEMENT pour une solution de 33%

pH (0,3% massique)	4,3 ± 0,7
Basicité (%)	50%
Densité relative	1,23 kg/L
Point de congélation	-12^0 C / 10^0 F

Compatibilité Matériels

Le Kemira STERNPAC DRY devrait être entreposé dans un endroit sec.

Protéger de l'humidité

Conditionnement

Sur demande

Sécurité

La manipulation de tous produits chimiques demande de la précaution.

Quiconque est responsable de l'utilisation et de la manipulation de L'HYDREX 3267 devrait se familiariser avec les consignes de sécurité détaillées dans notre fiche signalétique.

Document non contractuel, à caractère informatif - 11/09

VEOLIA WATER
Solutions & Technologies

Veolia Water Solutions & Technologies
Headquarters
"L'aquarène" 1, Place Montgolfier - 94417
Saint-Maurice Cedex - France
Tél. +33 1 45 11 55 55
Website : www.veoliawaterst.com

SAFETY DATA SHEET

1. Identification

Product identifier	**Hydrex 3613**
Other means of identification	None.
Recommended use	Potable Water Flocculant
Recommended restrictions	PROFESSIONAL USE ONLY

Manufacturer/Importer/Supplier/Distributor information

Supplier	Veolia Water Technologies Canada Inc.
Address	2000 Argentia Road, Plaza IV, Suite 430 Mississauga, ON L5N 1W1 Canada
Contact Person	Hydrex Product Specialist
Telephone	(905) 286-4846
Fax	(905) 286-0488
e-mail	vwtcanada-hydrex@veolia.com
24-Hour Emergency telephone	+1-760-476-3962 (Code:333239)
Supplier	Not available.

2. Hazard(s) identification

Physical hazards	Not classified.
Health hazards	Not classified.
Environmental hazards	Not classified.

Label elements

Hazard symbol	None.
Signal word	None.
Hazard statement	The mixture does not meet the criteria for classification.
Precautionary statement	
Prevention	Observe good industrial hygiene practices.
Response	Wash hands after handling.
Storage	Store in cool place. Protect from sunlight. Store away from incompatible materials.
Disposal	Dispose of contents/container to an appropriate treatment and disposal facility in accordance with applicable laws and regulations, and product characteristics at time of disposal.
Other hazards	None known.
Supplemental information	None.

3. Composition/information on ingredients

Mixtures

Chemical name	Common name and synonyms	CAS number	%
ADIPIC ACID		124-04-9	1 - < 3
Other components below reportable levels			90 - 100

All concentrations are in percent by weight unless ingredient is a gas. Gas concentrations are in percent by volume.

4. First-aid measures

Inhalation	Move to fresh air. Call a physician if symptoms develop or persist.
Skin contact	Wash off with soap and water. Get medical attention if irritation develops and persists.
Eye contact	Do not rub eyes. Rinse with water. Get medical attention if irritation develops and persists.
Ingestion	Rinse mouth. Get medical attention if symptoms occur.

Most important symptoms/effects, acute and delayed	Dusts may irritate the respiratory tract, skin and eyes.
Indication of immediate medical attention and special treatment needed	Treat symptomatically.
General information	Ensure that medical personnel are aware of the material(s) involved, and take precautions to protect themselves.

5. Fire-fighting measures

Suitable extinguishing media	Water fog. Foam. Dry chemical powder. Carbon dioxide (CO2).
Unsuitable extinguishing media	Not available.
Specific hazards arising from the chemical	Material can be slippery when wet. During fire, gases hazardous to health may be formed.
Special protective equipment and precautions for firefighters	Self-contained breathing apparatus and full protective clothing must be worn in case of fire.
Fire fighting equipment/instructions	Use water spray to cool unopened containers.
Specific methods	Use standard firefighting procedures and consider the hazards of other involved materials.
General fire hazards	No unusual fire or explosion hazards noted.

6. Accidental release measures

Personal precautions, protective equipment and emergency procedures	Keep unnecessary personnel away. Wear appropriate protective equipment and clothing during clean-up. For personal protection, see section 8 of the SDS. Slippery when wet.
Methods and materials for containment and cleaning up	Avoid the generation of dusts during clean-up. Collect dust using a vacuum cleaner equipped with HEPA filter. Stop the flow of material, if this is without risk. Large Spills: Wet down with water and dike for later disposal. Shovel the material into waste container. Following product recovery, flush area with water. Small Spills: Sweep up or vacuum up spillage and collect in suitable container for disposal. For waste disposal, see section 13 of the SDS.
Environmental precautions	Avoid discharge into drains, water courses or onto the ground.

7. Handling and storage

Precautions for safe handling	Minimize dust generation and accumulation. Provide appropriate exhaust ventilation at places where dust is formed. Material can be slippery when wet. Practice good housekeeping.
Conditions for safe storage, including any incompatibilities	Store in original tightly closed container. Store in a well-ventilated place. Store away from incompatible materials (see Section 10 of the SDS).

8. Exposure controls/personal protection

Occupational exposure limits	No exposure limits noted for ingredient(s).
Biological limit values	No biological exposure limits noted for the ingredient(s).
Appropriate engineering controls	If material is ground, cut, or used in any operation which may generate dusts, use appropriate local exhaust ventilation to keep exposures below the recommended exposure limits.

Individual protection measures, such as personal protective equipment

Eye/face protection	Wear safety glasses with side shields (or goggles) and a face shield. Chemical goggles and face shield are recommended. Before any handling, wear protective glasses side-shields complying with the NF EN 166.
Skin protection	
Hand protection	Chemical resistant gloves.
Other	Wear suitable protective clothing. Chemical resistant gloves.
Respiratory protection	Wear respirator with dust filter.
Thermal hazards	Wear appropriate thermal protective clothing, when necessary.

General hygiene considerations	Always observe good personal hygiene measures, such as washing after handling the material and before eating, drinking, and/or smoking. Routinely wash work clothing and protective equipment to remove contaminants.

9. Physical and chemical properties

Appearance	Granular or Powder.
Physical state	Solid.
Form	Powder.
Color	Off-white.
Odor	Not available.
Odor threshold	Not available.
pH	Not available.
Melting point/freezing point	Not available.
Initial boiling point and boiling range	Not available.
Flash point	Not available.
Evaporation rate	Not available.
Flammability (solid, gas)	Not available.
Upper/lower flammability or explosive limits	
Flammability limit - lower (%)	Not available.
Flammability limit - upper (%)	Not available.
Explosive limit - lower (%)	Not available.
Explosive limit - upper (%)	Not available.
Vapor pressure	Not available.
Vapor density	Not available.
Relative density	Not available.
Solubility(ies)	
Solubility (water)	Not available.
Partition coefficient (n-octanol/water)	Not available.
Auto-ignition temperature	Not available.
Decomposition temperature	Not available.
Viscosity	Not available.
Other information	
Density	0.70 - 0.80 g/cm3
Explosive properties	Not explosive.
Oxidizing properties	Not oxidizing.
pH of 1% Solution	3 - 5

10. Stability and reactivity

Reactivity	The product is stable and non-reactive under normal conditions of use, storage and transport.
Chemical stability	Material is stable under normal conditions. Material is stable under normal conditions.
Possibility of hazardous reactions	Hazardous polymerization does not occur.
Conditions to avoid	Contact with incompatible materials. None under normal conditions.
Incompatible materials	Oxygen.
Hazardous decomposition products	No dangerous reaction known under conditions of normal use. At thermal decomposition temperatures, carbon monoxide and carbon dioxide. Ammonia. Nitrogen oxides (NOx). Hydrogen chloride.

11. Toxicological information

Information on likely routes of exposure

Inhalation Dust may irritate respiratory system.

Skin contact Dust or powder may irritate the skin.

Eye contact Dust may irritate the eyes.

Ingestion Expected to be a low ingestion hazard.

Symptoms related to the physical, chemical and toxicological characteristics Dusts may irritate the respiratory tract, skin and eyes.

Information on toxicological effects

Acute toxicity Not known.

Product	Species	Test Results
Hydrex 3613		
Acute		
Oral		
LD50	Rat	> 5000 mg/kg

* Estimates for product may be based on additional component data not shown.

Skin corrosion/irritation Prolonged skin contact may cause temporary irritation.

Serious eye damage/eye irritation Direct contact with eyes may cause temporary irritation.

Respiratory or skin sensitization

Respiratory sensitization Not a respiratory sensitizer.

Skin sensitization This product is not expected to cause skin sensitization.

Germ cell mutagenicity No data available to indicate product or any components present at greater than 0.1% are mutagenic or genotoxic.

Carcinogenicity Not available.

Reproductive toxicity This product is not expected to cause reproductive or developmental effects.

Specific target organ toxicity - single exposure Not classified.

Specific target organ toxicity - repeated exposure Not classified.

Aspiration hazard Not an aspiration hazard.

Further information This product has no known adverse effect on human health.

12. Ecological information

Ecotoxicity The product is not classified as environmentally hazardous. However, this does not exclude the possibility that large or frequent spills can have a harmful or damaging effect on the environment.

Product		Species	Test Results
Hydrex 3613			
Aquatic			
Crustacea	EC50	Daphnia	> 10 mg/l, 48 hr
Fish	LC50	Fish	3880 mg/l, 96 hours estimated

* Estimates for product may be based on additional component data not shown.

Persistence and degradability

Bioaccumulative potential

Mobility in soil No data available.

Other adverse effects No other adverse environmental effects (e.g. ozone depletion, photochemical ozone creation potential, endocrine disruption, global warming potential) are expected from this component.

13. Disposal considerations

Disposal instructions	Collect and reclaim or dispose in sealed containers at licensed waste disposal site.
Local disposal regulations	Dispose in accordance with all applicable regulations.
Hazardous waste code	The waste code should be assigned in discussion between the user, the producer and the waste disposal company.
Waste from residues / unused products	Dispose of in accordance with local regulations. Empty containers or liners may retain some product residues. This material and its container must be disposed of in a safe manner (see: Disposal instructions).
Contaminated packaging	Since emptied containers may retain product residue, follow label warnings even after container is emptied. Empty containers should be taken to an approved waste handling site for recycling or disposal.

14. Transport information

TDG

Not regulated as dangerous goods.

IATA

Not regulated as dangerous goods.

IMDG

Not regulated as dangerous goods.

Transport in bulk according to Annex II of MARPOL 73/78 and the IBC Code	Not applicable.

15. Regulatory information

Canadian regulations This product has been classified in accordance with the hazard criteria of the HPR and the SDS contains all the information required by the HPR.

Controlled Drugs and Substances Act

Not regulated.

Export Control List (CEPA 1999, Schedule 3)

Not listed.

Greenhouse Gases

Not listed.

Precursor Control Regulations

Not regulated.

International regulations Additional information is given in the Safety Data Sheet.

Stockholm Convention

Not applicable.

Rotterdam Convention

Not applicable.

Kyoto protocol

Not applicable.

Montreal Protocol

Not applicable.

Basel Convention

Not applicable.

International Inventories

Country(s) or region	Inventory name	On inventory (yes/no)*
Australia	Australian Inventory of Chemical Substances (AICS)	Yes
Canada	Domestic Substances List (DSL)	Yes
Canada	Non-Domestic Substances List (NDSL)	No
China	Inventory of Existing Chemical Substances in China (IECSC)	Yes
Europe	European Inventory of Existing Commercial Chemical Substances (EINECS)	No
Europe	European List of Notified Chemical Substances (ELINCS)	No

Country(s) or region	Inventory name	On inventory (yes/no)*
Japan	Inventory of Existing and New Chemical Substances (ENCS)	Yes
Korea	Existing Chemicals List (ECL)	Yes
New Zealand	New Zealand Inventory	Yes
Philippines	Philippine Inventory of Chemicals and Chemical Substances (PICCS)	Yes
United States & Puerto Rico	Toxic Substances Control Act (TSCA) Inventory	Yes

*A "Yes" indicates that all components of this product comply with the inventory requirements administered by the governing country(s)
A "No" indicates that one or more components of the product are not listed or exempt from listing on the inventory administered by the governing country(s).

16. Other information

Issue date 04-20-2017

Version # 01

Disclaimer Veolia Water Technologies is not able to anticipate all conditions under which this information and its product, or the products of other manufacturers in combination with its product, may be used. It is the user's responsibility to ensure safe conditions for handling, storage and disposal of the product, and to assume liability for loss, injury, damage or expense due to improper use and or non respect of Veolia Water Technologies' requirement.

Revision information Product and Company Identification: Product Review
Hazards Identification: US Hazardous
Composition / Information on Ingredients: Ingredients
Toxicological Information: Toxicological Data
Regulatory Information: United States
GHS: Classification

FICHE SIGNALÉTIQUE

1. Identification

Identificateur de produit **Hydrex 3613**

Autres moyens d'identification Aucune.

Usage recommandé Floculant pour eau potable

Restrictions d'utilisation USAGE PROFESSIONNEL

Renseignements sur le fabricant/importateur/fournisseur/distributeur

Fournisseur Veolia Water Technologies Canada Inc.

Adresse 2000 Argentia Road, Plaza IV, Suite 430
Mississauga, ON L5N 1W1
Canada

Personne à contacter Hydrex Product Specialist

Téléphone (905) 286-4846

Télécopieur (905) 286-0488

courriel vwtcanada-hydrex@veolia.com

24 Hr Numéro de téléphone d'appel d'urgence +1-760-476-3962 (Code:333239)

Fournisseur Non disponible.

2. Identification des dangers

Dangers physiques Non classé.

Dangers pour la santé Non classé.

Dangers environnementaux Non classé.

Éléments d'étiquetage

Symbole de danger Aucune.

Mention d'avertissement Aucune.

Mention de danger Le mélange ne satisfait pas les critères de classification.

Conseil de prudence

Prévention Observer de bonnes pratiques d'hygiène industrielle.

Intervention Se laver les mains après utilisation.

Stockage Stocker dans un endroit frais. Protéger du rayonnement solaire. Conserver à l'écart de matières incompatibles.

Élimination Éliminer le contenu/contenant dans une installation appropriée de traitement et d'élimination conformément aux lois et règlements applicables, ainsi qu'en fonction des caractéristiques du produit au moment de l'élimination.

Autres dangers Aucun(e) connu(e).

Renseignements supplémentaires Aucune.

3. Composition/information sur les ingrédients

Mélanges

Dénomination chimique	Nom commun et synonymes	Numéro d'enregistrement CAS	%
ACIDE ADIPIQUE		124-04-9	1 - < 3
Autres composant sous les niveaux à déclarer			90 - 100

Toutes les concentrations sont en pourcentage en poids, sauf si l'ingrédient est un gaz. Les concentrations des gaz sont er pourcentage en volume.

4. Premiers soins

Inhalation	Transporter à l'extérieur. Appeler un médecin si des symptômes se développent ou persistent
Contact avec la peau	Laver avec de l'eau et du savon. Consulter un médecin si une irritation se développe et persiste.
Contact avec les yeux	Ne pas se frotter les yeux. Rincer avec de l'eau. Consulter un médecin si une irritation se développe et persiste.
Ingestion	Rincer la bouche. Consulter un médecin si des symptômes apparaissent.
Symptômes et effets les plus importants, qu'ils soient aigus ou retardés	La poussière peut irriter les voies respiratoires, la peau et les yeux.
Mention de la nécessité d'une prise en charge médicale immédiate ou d'un traitement spécial, si nécessaire	Traiter de manière symptomatique.
Informations générales	S'assurer que le personnel médical est averti du (des) produits(s) en cause et qu'il prend des mesures pour se protéger.

5. Mesures à prendre en cas d'incendie

Agents extincteurs appropriés	Brouillard d'eau. Mousse. Poudre chimique. Dioxyde de carbone (CO2).
Agents extincteurs inappropriés	Non disponible.
Dangers spécifiques du produit dangereux	Le matériau peut être glissant lorsque mouillé. Des gaz dangereux pour la santé peuvent se former pendant un incendie.
Équipements de protection spéciaux et précautions spéciales pour les pompiers	Porter un appareil respiratoire autonome et un vêtement de protection complet en cas d'incendie.
Équipement/directives de lutte contre les incendies	Utiliser une pulvérisation d'eau pour refroidir les récipients fermés.
Méthodes particulières d'intervention	Utiliser des procédures standard en cas d'incendie et tenir compte des dangers des autres substances en cause.
Risques d'incendie généraux	Aucun risque inhabituel d'incendie ou d'explosion observé.

6. Mesures à prendre en cas de déversement accidentel

Précautions individuelles, équipements de protection et mesures d'urgence	Tenir à l'écart le personnel non requis. Porter un équipement et des vêtements de protectior appropriés durant le nettoyage. Pour la protection individuelle, voir la section 8 de la FDS. Glissant lorsque mouillé.
Méthodes et matériaux pour le confinement et le nettoyage	Éviter la formation de poussières pendant le nettoyage. Récupérer la poussière en utilisant un aspirateur muni d'un filtre HEPA. Arrêter l'écoulement de la substance, si cela peut se faire sans risque. Déversements importants : Mouiller avec de l'eau et endiguer pour une élimination ultérieure. Pelleter le matériau dans un conteneur à déchets. Après avoir récupéré le produit, rincer la zone à l'eau. Déversements peu importants : Balayer ou aspirer le déversement et mettre dans un récipient approprié pour élimination. Pour l'élimination des déchets, voir la section 13 de la FDS.
Précautions relatives à l'environnement	Éviter le rejet dans les égouts, les cours d'eau ou sur le sol.

7. Manutention et stockage

Précautions relatives à la sûreté en matière de manutention	Minimiser la formation et l'accumulation de poussière. Assurer une ventilation aspirante adéquate aux endroits où la poussière se forme. Le matériau peut être glissant lorsque mouillé. Assurer un bon entretien ménager.
Conditions de sûreté en matière de stockage, y compris les incompatibilités	Stocker dans des récipients d'origine fermés de manière étanche. Stocker dans un endroit bien ventilé. Stocker à l'écart des matériaux incompatibles (Consulter la section 10 de la FDS).

8. Contrôle de l'exposition/protection individuelle

Limites d'exposition professionnelle	Il n'y a pas de limites d'exposition pour ce ou ces ingrédients.
Valeurs biologiques limites	Aucune limite d'exposition biologique observée pour les ingrédients.
Contrôles d'ingénierie appropriés	Si le matériau est moulu, coupé ou utilisé dans toute opération susceptible de créer des poussières, utiliser une ventilation locale par aspiration appropriée pour maintenir les expositions sous les limites d'exposition recommandées.

Mesures de protection individuelle, telles que les équipements de protection individuelle

Protection du visage/des yeux	Porter des lunettes de sécurité à écrans latéraux (ou des lunettes à coques) et un écran facial. Il est recommandé de porter des lunettes de protection chimique et un écran facial. Avant toute manipulation, il est nécessaire de porter des lunettes à protection latérale conformes à la norme NF EN 166.
Protection de la peau	
Protection des mains	Gants résistants aux produits chimiques.
Autre	Porter un vêtement de protection approprié. Gants résistants aux produits chimiques.
Protection respiratoire	Porter un appareil respiratoire muni de filtres antipoussière.
Dangers thermiques	Porter des vêtements de protection thermique appropriés, au besoin.
Considérations d'hygiène générale	Toujours adopter de bonnes pratiques d'hygiène personnelle, comme se laver après avoir manipulé la substance et avant de manger, de boire ou de fumer. Laver régulièrement les vêtements de travail et l'équipement de protection pour éliminer les contaminants

9. Propriétés physiques et chimiques

Apparence	Granuleux. ou Poudre.
État physique	Solide.
Forme	Poudre.
Couleur	Blanc cassé.
Odeur	Non disponible.
Seuil olfactif	Non disponible.
pH	Non disponible.
Point de fusion et point de congélation	Non disponible.
Point initial d'ébullition et domaine d'ébullition	Non disponible.
Point d'éclair	Non disponible.
Taux d'évaporation	Non disponible.
Inflammabilité (solides et gaz)	Non disponible.

Limites supérieures et inférieures d'inflammabilité ou d'explosibilité

Limites d'inflammabilité - inférieure (%)	Non disponible.
Limites d'inflammabilité - supérieure (%)	Non disponible.
Limite d'explosibilité - inférieure (%)	Non disponible.
Limite d'explosibilité - supérieure (%)	Non disponible.
Tension de vapeur	Non disponible.
Densité de vapeur	Non disponible.
Densité relative	Non disponible.

Solubilité

Solubilité (eau)	Non disponible.

Coefficient de partage n-octanol/eau	Non disponible.
Température d'auto-inflammation	Non disponible.
Température de décomposition	Non disponible.
Viscosité	Non disponible.
Autres informations	
Densité	0.70 - 0.80 g/cm3
Propriétés explosives	Non explosif.
Propriétés comburantes	Non oxydant.
pH (solution à 1%)	3 - 5

10. Stabilité et réactivité

Réactivité	Le produit est stable et non réactif dans des conditions normales d'utilisation, d'entreposage et de transport.
Stabilité chimique	La substance est stable dans des conditions normales. La substance est stable dans des conditions normales.
Risque de réactions dangereuses	Une polymérisation dangereuse ne se produit pas.
Conditions à éviter	Contact avec des matériaux incompatibles. Aucun(e) dans des conditions normales.
Matériaux incompatibles	Oxygène.
Produits de décomposition dangereux	Aucune réaction dangereuse connue dans des conditions normales d'utilisation. Aux températures de décomposition thermique, du monoxyde et du dioxyde de carbone. Ammoniac. Oxydes d'azote (NOx). Chlorure d'hydrogène.

11. Données toxicologiques

Renseignements sur les voies d'exposition probables

Inhalation	La poussière peut irriter l'appareil respiratoire.
Contact avec la peau	La poussière ou la poudre peut irriter la peau.
Contact avec les yeux	La poussière peut irriter les yeux.
Ingestion	Faible danger présumé en cas d'ingestion.
Les symptômes correspondant aux caractéristiques physiques, chimiques et toxicologiques	La poussière peut irriter les voies respiratoires, la peau et les yeux.

Renseignements sur les effets toxicologiques

Toxicité aiguë	Inconnu(e).

Produit	**Espèces**	**Résultats d'épreuves**
Hydrex 3613		
Aiguë		
Orale		
DL50	Rat	> 5000 mg/kg

* Les estimations pour le produit peuvent être basées sur d'autres données de composants non montrées.

Corrosion cutanée/irritation cutanée	Un contact prolongé avec la peau peut causer une irritation temporaire.
Lésions oculaires graves/irritation oculaire	Le contact direct avec les yeux peut causer une irritation temporaire.

Sensibilisation respiratoire ou cutanée

Sensibilisation respiratoire	Pas un sensibilisant respiratoire.
Sensibilisation cutanée	On ne s'attend pas à ce que ce produit provoque une sensibilisation cutanée.
Mutagénicité sur les cellules germinales	Il n'existe pas de données qui indiquent que ce produit, ou tout composant présent à des taux de plus de 0,1 %, soit mutagène ou génétoxique.

Cancérogénicité	Non disponible.
Toxicité pour la reproduction	On ne s'attend pas à ce que ce produit présente des effets sur la reproduction ou le développement.
Toxicité pour certains organes cibles - exposition unique	Non classé.
Toxicité pour certains organes cibles - expositions répétées	Non classé.
Danger par aspiration	Pas un danger par aspiration.
Autres informations	Ce produit n'est associé à aucun effet néfaste connu pour la santé humaine.

12. Données écologiques

Écotoxicité Le produit n'est pas classé comme dangereux pour l'environnement. Toutefois, ceci n'exclut pas la possibilité que des déversements importants ou fréquents puissent avoir un effet nocif ou nuisible sur l'environnement.

Produit		Espèces	Résultats d'épreuves
Hydrex 3613			
Aquatique			
Crustacés	CE50	Daphnia	> 10 mg/l, 48 hr
Poisson	CL50	Poisson	3880 mg/l, 96 heures estimation

* Les estimations pour le produit peuvent être basées sur d'autres données de composants non montrées.

Persistance et dégradation

Potentiel de bioaccumulation

Mobilité dans le sol	Aucune donnée disponible.
Autres effets nocifs	On ne s'attend pas à ce que ce composant ait des effets néfastes sur l'environnement (par ex., appauvrissement de la couche d'ozone, potentiel de formation photochimique d'ozone, perturbation endocrinienne, potentiel de réchauffement de la planète).

13. Données sur l'élimination

Instructions pour l'élimination	Recueillir et réutiliser ou éliminer dans des récipients scellés dans un site d'élimination des déchets autorisé.
Règlements locaux d'élimination	Détruire conformément à toutes les réglementations applicables.
Code des déchets dangereux	Les codes de déchets doivent être attribués dans le cadre d'une consultation entre l'utilisateur, le fabricant et l'entreprise de décharge.
Déchets des résidus / produits non utilisés	Éliminer conformément à la réglementation locale. Les récipients ou pochettes vides peuvent conserver certains résidus de produit. Éliminer ce produit et son récipient d'une manière sûre (voir : instructions d'élimination).
Emballages contaminés	Comme les récipients vides peuvent contenir un résidu du produit, suivre les avertissements de l'étiquette, même une fois le récipient vide. Les contenants vides doivent être acheminés vers une installation certifiée de traitement des déchets en vue de leur élimination ou recyclage.

14. Informations relatives au transport

TMD

N'entre pas dans la réglementation des marchandises dangereuses.

IATA

N'entre pas dans la réglementation des marchandises dangereuses.

IMDG

N'entre pas dans la réglementation des marchandises dangereuses.

Transport en vrac selon l'Annexe II de MARPOL 73/78 et le recueil IBC	Sans objet.

15. Informations sur la réglementation

Réglementation canadienne Ce produit a été classé conformément aux critères de danger énoncés dans le Règlement sur les produits dangereux et la FDS contient tous les renseignements exigés par le Règlement sur les produits dangereux.

Loi réglementant certaines drogues et autres substances

Non réglementé.

Liste des marchandises d'exportation contrôlée (LCPE 1999, Annexe 3)

Non inscrit.

Gaz à effet de serre

Non inscrit.

Règlements sur les précurseurs

Non réglementé.

Règlements internationaux Renseignements supplémentaires fournis sur la fiche de données de sécurité.

Convention de Stockholm

Sans objet.

Convention de Rotterdam

Sans objet.

Protocole de Kyoto

Sans objet.

Protocole de Montréal

Sans objet.

Convention de Bâle

Sans objet.

Inventaires Internationaux

Pays ou région	Nom de l'inventaire	En stock (Oui/Non)*
Australie	Inventaire australien des substances chimiques (AICS)	Oui
Canada	Liste intérieure des substances (LIS)	Oui
Canada	Liste extérieure des substances (LES)	Non
Chine	Inventaire des substances chimiques existantes en Chine (IECSC)	Oui
Europe	Inventaire européen des substances chimiques commerciales existantes (EINECS)	Non
Europe	Liste européenne des substances chimiques notifiées (ELINCS)	Non
Japon	Inventaire des substances chimiques existantes et nouvelles (ENCS)	Oui
Corée	Liste des produits chimiques existants (ECL)	Oui
Nouvelle-Zélande	Inventaire de la Nouvelle-Zélande	Oui
Philippines	Inventaire philippin des produits et substances chimiques (PICCS)	Oui
États-Unis et Porto Rico	Inventaire du TSCA (Toxic Substances Controls Act - Loi réglementant les substances toxiques)	Oui

*La réponse « Oui » indique que tous les composants du produit sont conformes aux exigences d'entreposage du pays ayant compétence Un « Non » indique qu'un ou plusieurs composant(s) du produit n'est/ne sont pas inscrit(s) ou exempt(s) d'une inscription sur l'inventaire administré par le(s) pays ayant compétence.

16. Autres informations

Date de publication 20-Avril-2017

Version n° 01

Avis de non-responsabilité Veolia Water Solutions & Technologies ne peut prévoir toutes les conditions d'utilisation des présents renseignements et de son produit, ou des produits d'autres fabricants en association avec son produit. L'utilisateur est responsable d'assurer des conditions sécuritaires de manutention, d'entreposage et d'élimination du produit, et il assume toute responsabilité quant à des pertes, des blessures, des dommages ou des dépenses liés à une utilisation incorrecte ou au non-respect des exigences de Veolia Solutions & Technologies.

Informations relatives à la révision	Identification du produit et de l'entreprise : Identification du produit et de l'entreprise Identification des dangers : Danger aux États-Unis Composition / renseignements sur les ingrédients : Ingrédients Données toxicologiques : Données toxicologiques Données réglementaires: États-Unis GHS: Classification

Solids conditioning for dewatering operations and water clarification aid in various industries

Description and Use

HYDREX 3613 is a highly effective cationic flocculant of high molecular weight.

HYDREX 3613 conditions solids for dewatering operations and aids water clarification processes in various industries.

HYDREX 3613 shows exceptional performance in liquid-solid separations in a wide range of shear conditions.

HYDREX 3613 may be beneficial in any liquid-solid separation process. It is especially recommended for:

- Belt filter, centrifuge and screw press dewatering
- Dissolved air floatation
- Filtration
- Thickening
- Water clarification

Advantages

- Dry product minimizes storage requirements
- Economical to use – effective at low dosage levels
- Effective high solids removal
- Effective over a wide pH range; does not alter the system pH
- Improves production and cake solids

Application Information

Stock solutions can be prepared up to 0.5 % concentration via an automated make down unit or on a batch basis. Solutions should be aged 30-60 minutes for maximum effectiveness. High quality make up water should be used. Secondary dilution water should be added to the stock solution prior to the addition point at a ratio of at least 10:1.

Centrifugal pumps should be avoided for polymer transfer.

No binding document, just for information purposes - 02/09

More information on the back

Veolia Water Solutions & Technologies
Headquarters
"L'aquarène" 1, Place Montgolfier - 94417 Saint-Maurice Cedex - France
Tél. +33 1 45 11 55 55
Website : www.veoliawaterst.com

VEOLIA WATER
Solutions & Technologies

Solids conditioning for dewatering operations and water clarification aid in various industries

Specifications

Appearance:	Off White, granular powder
Degree of Charge :	Low
Relative Molecular Weight:	High
Bulk Density, kg/m^3:	750 +/- 50
pH of 0.5 % solution, at 25°C:	3.0 - 5.0
Standard Viscosity, cps :	3.0 - 3.8
Viscosity at 25°C, Cps:	
0.10 %:	80
0.25 %:	200
0.50 %:	400
1.00 %:	800

Product Sales Specification:	
Insolubles, % w/w :	0.5 max
Residual Acrylamide, %:	0.020 max

The shelf life of HYDREX 3613 is 24 months when stored in unopened packages in a dry atmosphere at temperatures no higher than 40°C.

Materials Compatibility

Solutions are no more corrosive than water and recommended materials of construction include stainless steel, fiber glass, plastic, and glass or epoxy-lined vessels. Do not use iron, copper or aluminium.

Packaging

Supplied in bags. Other packaging : please consult us.

Safety Information

Spilled polymer is very slippery and should be collected prior to flushing with water. Whoever is responsible for the use and the manipulation of HYDREX 3613 should be familiar with the safety detailed in our MSDS.

Regulatory Approvals : see MSDS

No binding document, just for information purposes - 02/09

VEOLIA WATER
Solutions & Technologies

Veolia Water Solutions & Technologies
Headquarters
"L'aquarène" 1, Place Montgolfier - 94417
Saint-Maurice Cedex - France
Tél. +33 1 45 11 55 55
Website : www.veoliawaterst.com

Conditionnement de solides pour la déshydratation et les opérations de clarification de l'eau

Applications

HYDREX 3613 est un floculant cationique très efficace, de haut poids moléculaire.

HYDREX 3613 montre des performances exceptionnelles en séparation solide/liquide sur un large éventail de conditions.

HYDREX 3613 est bénéfique à tout processus de séparation solide liquide-. Il est particulièrement recommandé pour:

• Les deshydratation surfiltres à bande, centrifugeuses et filtres presses
• Les opérations de flottation à air dissous
• La filtration
• L'épaississement
• La clarification de l'eau.

Avantages

• Produit sec : minimise les besoins en stockage
• Économique à l'utilisation : efficace à faible doses
• Efficace, même sur effluents fortement chargés en solides
• Efficace sur une large gamme de pH : ne modifie pas le pH
• Améliore la production et la qualité des gâteaux de filtration.

Mise en oeuvre

HYDREX 3613 ne peut être utilisé tel quel. Il faut au préalable préparer une solution stock.
Utiliser pour ce faire une installation de dispersion et de maturation de la poudre prévue à cet effet.

Concentration maxi de la solution stock (g/l) : 5
Utiliser pour ce faire une eau de bonne qualité
Temps de maturation nécessaire : de 30-60 minutes

Une dilution secondaire est préférable avant le point d'injection à un ratio d'au moins 10:1.
Les Pompes centrifuges sont à proscrire pour le transfert des polymères

Document non contractuel, à caractère informatif - 11/09

Veolia Water Solutions & Technologies
Headquarters
"L'aquarène" 1, Place Montgolfier - 94417 Saint-Maurice Cedex - France
Tél. +33 1 45 11 55 55
Website : www.veoliawaterst.com

VEOLIA WATER
Solutions & Technologies

HYDREX 3613
Fiche Produit

Conditionnement de solides pour la déshydratation et les opérations de clarification de l'eau

Spécifications

Aspect :	Blanc cassé, sous forme de poudre granuleuse
Degré de Charge:	Basse
Masse moléculaire relative:	Haute
Densité:	750+ / - 50
pH de solution à 0,5%, à 25°C:	3.0 - 5.0
Viscosité standard, Cps:	3.0-3.8
Viscosité à 25°C, Cps:	
@0,10%:	80
@0,25%:	200
@0,50%:	400
@1.00 %:	800

Spécifications de ventes du produit :

Insolubles,% w / w:	0.5 max
Acrylamide résiduel,%:	0,020 max.

HYDREX 3613 se conserve jusqu'à 24 mois dans son emballage d'origine non entamé, au sec et à une température ne dépassant pas 40°C.

Compatibilité Matériels

Les solutions ne sont plus corrosives que l'eau. Les matériaux recommandés sont : l'acier inoxydable, la fibre de verre, le plastique et de verre ou matériaux enduits époxy ou fibre de verre.
Ne pas utiliser de fer, cuivre ou aluminium.

Conditionnement

Livraison par sacs. Pour toute autre demande d'emballage : veuillez nous consulter.

Sécurité

Le déversement de polymère rend les surfaces très glissantes.
La manipulation de tous produits chimiques demande de la précaution. Quiconque est responsable de l'utilisation et de la manipulation de l'hydrex 3613 devrait se familiariser avec les consignes de sécurité détaillées dans notre MSDS.

Agréments: voir la msds

Document non contractuel, à caractère informatif - 11/09

VEOLIA WATER
Solutions & Technologies

Veolia Water Solutions & Technologies
Headquarters
"L'aquarène" 1, Place Montgolfier - 94417
Saint-Maurice Cedex - France
Tél. +33 1 45 11 55 55
Website : www.veoliawaterst.com

SAFETY DATA SHEET

1. Identification

Product identifier **VEOLIA ACTISAND**

Other means of identification None.

Recommended use Wastewater Treatment

Recommended restrictions Workers (and your customers or users in the case of resale) should be informed of the potential presence of respirable dust and respirable crystalline silica as well as their potential hazards. Appropriate training in the proper use and handling of this material should be provided as required under applicable regulations. PROFESSIONAL USE ONLY

Manufacturer/Importer/Supplier/Distributor information

Manufacturer

Supplier Veolia Water Technologies Canada Inc.

Address 2000 Argentia Road, Plaza IV, Suite 430
Mississauga, ON L5N 1W1
Canada

Contact Person Hydrex Product Specialist

Telephone (905) 286-4846

Fax (905) 286-0488

e-mail vwtcanada-hydrex@veolia.com

24-Hour Emergency telephone +1-760-476-3962 (Code:333239)

Supplier Not available.

2. Hazard(s) identification

Physical hazards Not classified.

Health hazards Carcinogenicity Category 1A

Environmental hazards Not classified.

Label elements



Signal word Danger

Hazard statement May cause cancer.

Precautionary statement

Prevention Obtain special instructions before use. Do not handle until all safety precautions have been read and understood. Wear protective gloves/protective clothing/eye protection/face protection.

Response IF exposed or concerned: Get medical advice/attention.

Storage Not available.

Disposal Dispose of contents/container in accordance with local/regional/national/international regulations.

Other hazards None known.

Supplemental information None.

3. Composition/information on ingredients

Mixtures

Chemical name	Common name and synonyms	CAS number	%
Crystalline sillica		14808-60-7	100

All concentrations are in percent by weight unless ingredient is a gas. Gas concentrations are in percent by volume.

4. First-aid measures

Inhalation	Move to fresh air. Call a physician if symptoms develop or persist.
Skin contact	Wash off with soap and water. Get medical attention if irritation develops and persists.
Eye contact	Rinse with water. Get medical attention if irritation develops and persists.
Ingestion	Rinse mouth. Get medical attention if symptoms occur.
Most important symptoms/effects, acute and delayed	Coughing.
Indication of immediate medical attention and special treatment needed	Provide general supportive measures and treat symptomatically. Keep victim under observation. Symptoms may be delayed.
General information	IF exposed or concerned: Get medical advice/attention. Ensure that medical personnel are aware of the material(s) involved, and take precautions to protect themselves.

5. Fire-fighting measures

Suitable extinguishing media	Water fog. Foam. Dry chemical powder. Carbon dioxide (CO2).
Unsuitable extinguishing media	Not available.
Specific hazards arising from the chemical	During fire, gases hazardous to health may be formed.
Special protective equipment and precautions for firefighters	Self-contained breathing apparatus and full protective clothing must be worn in case of fire.
Fire fighting equipment/instructions	Use water spray to cool unopened containers.
Specific methods	Use standard firefighting procedures and consider the hazards of other involved materials.
General fire hazards	No unusual fire or explosion hazards noted.

6. Accidental release measures

Personal precautions, protective equipment and emergency procedures	Keep unnecessary personnel away. Keep people away from and upwind of spill/leak. Wear appropriate protective equipment and clothing during clean-up. Ensure adequate ventilation. Local authorities should be advised if significant spillages cannot be contained. For personal protection, see section 8 of the SDS.
Methods and materials for containment and cleaning up	The product is immiscible with water and will spread on the water surface. Stop the flow of material, if this is without risk. Following product recovery, flush area with water. For waste disposal, see section 13 of the SDS.
Environmental precautions	Avoid discharge into drains, water courses or onto the ground.

7. Handling and storage

Precautions for safe handling	Obtain special instructions before use. Do not handle until all safety precautions have been read and understood. Keep formation of airborne dusts to a minimum. Provide appropriate exhaust ventilation at places where dust is formed. Do not breathe dust. Avoid prolonged exposure. Should be handled in closed systems, if possible. Wear appropriate personal protective equipment. Observe good industrial hygiene practices.
Conditions for safe storage, including any incompatibilities	Protect from sunlight. Store in original tightly closed container. Store away from incompatible materials (see Section 10 of the SDS). Store in cool, dry place.

8. Exposure controls/personal protection

Occupational exposure limits

US. ACGIH Threshold Limit Values

Material	Type	Value	Form
VEOLIA ACTISAND	TWA	0.025 mg/m3	Respirable fraction.

Components	Type	Value	Form
Crystalline sillica (CAS 14808-60-7)	TWA	0.025 mg/m3	Respirable fraction.

Canada. Alberta OELs (Occupational Health & Safety Code, Schedule 1, Table 2)

Material	Type	Value	Form
VEOLIA ACTISAND	TWA	0.025 mg/m3	Respirable particles.

Components	Type	Value	Form
Crystalline sillica (CAS 14808-60-7)	TWA	0.025 mg/m3	Respirable particles.

Canada. British Columbia OELs. (Occupational Exposure Limits for Chemical Substances, Occupational Health and Safety Regulation 296/97, as amended)

Material	Type	Value	Form
VEOLIA ACTISAND	TWA	0.025 mg/m3	Respirable fraction.

Components	Type	Value	Form
Crystalline sillica (CAS 14808-60-7)	TWA	0.025 mg/m3	Respirable fraction.

Canada. Manitoba OELs (Reg. 217/2006, The Workplace Safety And Health Act)

Components	Type	Value	Form
Crystalline sillica (CAS 14808-60-7)	TWA	0.025 mg/m3	Respirable fraction.

Canada. Ontario OELs. (Control of Exposure to Biological or Chemical Agents)

Material	Type	Value	Form
VEOLIA ACTISAND	TWA	0.1 mg/m3	Respirable.

Components	Type	Value	Form
Crystalline sillica (CAS 14808-60-7)	TWA	0.1 mg/m3	Respirable.

Canada. Quebec OELs. (Ministry of Labor - Regulation Respecting the Quality of the Work Environment)

Material	Type	Value	Form
VEOLIA ACTISAND	TWA	0.1 mg/m3	Respirable dust.

Components	Type	Value	Form
Crystalline sillica (CAS 14808-60-7)	TWA	0.1 mg/m3	Respirable dust.

Biological limit values No biological exposure limits noted for the ingredient(s).

Exposure guidelines Occupational exposure to nuisance dust (total and respirable) and respirable crystalline silica should be monitored and controlled.

Appropriate engineering controls Good general ventilation (typically 10 air changes per hour) should be used. Ventilation rates should be matched to conditions. If applicable, use process enclosures, local exhaust ventilation, or other engineering controls to maintain airborne levels below recommended exposure limits. If exposure limits have not been established, maintain airborne levels to an acceptable level.

Individual protection measures, such as personal protective equipment

Eye/face protection Wear safety glasses with side shields (or goggles).

Skin protection

Hand protection Chemical resistant gloves. Suitable gloves can be recommended by the glove supplier.

Other Use of an impervious apron is recommended. Chemical resistant gloves.

Respiratory protection Use a particulate filter respirator for particulate concentrations exceeding the Occupational Exposure Limit.

Thermal hazards Not available.

General hygiene considerations Observe any medical surveillance requirements. Always observe good personal hygiene measures, such as washing after handling the material and before eating, drinking, and/or smoking. Routinely wash work clothing and protective equipment to remove contaminants.

9. Physical and chemical properties

Appearance

Physical state Solid.

Form Solid.

Color Not available.

Odor	Not available.
Odor threshold	Not available.
pH	Not available.
Melting point/freezing point	Not available.
Initial boiling point and boiling range	Not available.
Flash point	Not available.
Evaporation rate	Not available.
Flammability (solid, gas)	Not available.
Upper/lower flammability or explosive limits	
Flammability limit - lower (%)	Not available.
Flammability limit - upper (%)	Not available.
Explosive limit - lower (%)	Not available.
Explosive limit - upper (%)	Not available.
Vapor pressure	< 0.0000001 kPa at 25 °C
Vapor density	Not available.
Relative density	Not available.
Solubility(ies)	
Solubility (water)	Insoluble
Partition coefficient (n-octanol/water)	Not available.
Auto-ignition temperature	Not available.
Decomposition temperature	Not available.
Viscosity	Not available.
Other information	
Explosive properties	Not explosive.
Heat of combustion (NFPA 30B)	0 kJ/g
Molecular formula	O2Si
Oxidizing properties	Not oxidizing.

10. Stability and reactivity

Reactivity	The product is stable and non-reactive under normal conditions of use, storage and transport.
Chemical stability	Material is stable under normal conditions.
Possibility of hazardous reactions	No dangerous reaction known under conditions of normal use.
Conditions to avoid	Contact with incompatible materials.
Incompatible materials	Powerful oxidizers. Chlorine.
Hazardous decomposition products	No hazardous decomposition products are known.

11. Toxicological information

Information on likely routes of exposure

Inhalation	Prolonged inhalation may be harmful.
Skin contact	No adverse effects due to skin contact are expected.
Eye contact	Direct contact with eyes may cause temporary irritation.
Ingestion	Expected to be a low ingestion hazard.

Symptoms related to the physical, chemical and toxicological characteristics Coughing.

Information on toxicological effects

Acute toxicity Not available.

Skin corrosion/irritation Prolonged skin contact may cause temporary irritation.

Serious eye damage/eye irritation Direct contact with eyes may cause temporary irritation.

Respiratory or skin sensitization

Respiratory sensitization Not a respiratory sensitizer.

Skin sensitization This product is not expected to cause skin sensitization.

Germ cell mutagenicity No data available to indicate product or any components present at greater than 0.1% are mutagenic or genotoxic.

Carcinogenicity In 1997, IARC (the International Agency for Research on Cancer) concluded that crystalline silica inhaled from occupational sources can cause lung cancer in humans. However in making the overall evaluation, IARC noted that "carcinogenicity was not detected in all industrial circumstances studied. Carcinogenicity may be dependent on inherent characteristics of the crystalline silica or on external factors affecting its biological activity or distribution of its polymorphs." (IARC Monographs on the evaluation of the carcinogenic risks of chemicals to humans, Silica, silicates dust and organic fibres, 1997, Vol. 68, IARC, Lyon, France.) In June 2003, SCOEL (the EU Scientific Committee on Occupational Exposure Limits) concluded that the main effect in humans of the inhalation of respirable crystalline silica dust is silicosis. "There is sufficient information to conclude that the relative risk of lung cancer is increased in persons with silicosis (and, apparently, not in employees without silicosis exposed to silica dust in quarries and in the ceramic industry). Therefore, preventing the onset of silicosis will also reduce the cancer risk..." (SCOEL SUM Doc 94-final, June 2003) According to the current state of the art, worker protection against silicosis can be consistently assured by respecting the existing regulatory occupational exposure limits. May cause cancer. Occupational exposure to respirable dust and respirable crystalline silica should be monitored and controlled.

ACGIH Carcinogens

Crystalline sillica (CAS 14808-60-7)	A2 Suspected human carcinogen.

Canada - Alberta OELs: Carcinogen category

Crystalline sillica (CAS 14808-60-7)	Suspected human carcinogen.

Canada - Manitoba OELs: carcinogenicity

SILICA, CRYSTALLINE-.ALPHA.-QUARTZ, RESPIRABLE FRACTION (CAS 14808-60-7)	Suspected human carcinogen.

Canada - Quebec OELs: Carcinogen category

Crystalline sillica (CAS 14808-60-7)	Suspected carcinogenic effect in humans.

IARC Monographs. Overall Evaluation of Carcinogenicity

Crystalline sillica (CAS 14808-60-7)	1 Carcinogenic to humans.

Reproductive toxicity This product is not expected to cause reproductive or developmental effects.

Specific target organ toxicity - single exposure Not classified.

Specific target organ toxicity - repeated exposure Not classified.

Aspiration hazard Not an aspiration hazard.

Chronic effects Prolonged inhalation may be harmful. Prolonged exposure may cause chronic effects.

12. Ecological information

Ecotoxicity The product is not classified as environmentally hazardous. However, this does not exclude the possibility that large or frequent spills can have a harmful or damaging effect on the environment.

Persistence and degradability No data is available on the degradability of this product.

Bioaccumulative potential No data available.

Mobility in soil No data available.

Other adverse effects No other adverse environmental effects (e.g. ozone depletion, photochemical ozone creation potential, endocrine disruption, global warming potential) are expected from this component.

13. Disposal considerations

Disposal instructions	Collect and reclaim or dispose in sealed containers at licensed waste disposal site. Dispose of contents/container in accordance with local/regional/national/international regulations.
Local disposal regulations	Dispose in accordance with all applicable regulations.
Hazardous waste code	The waste code should be assigned in discussion between the user, the producer and the waste disposal company.
Waste from residues / unused products	Dispose of in accordance with local regulations. Empty containers or liners may retain some product residues. This material and its container must be disposed of in a safe manner (see: Disposal instructions).
Contaminated packaging	Since emptied containers may retain product residue, follow label warnings even after container is emptied. Empty containers should be taken to an approved waste handling site for recycling or disposal.

14. Transport information

TDG

Not regulated as dangerous goods.

IATA

Not regulated as dangerous goods.

IMDG

Not regulated as dangerous goods.

Transport in bulk according to Annex II of MARPOL 73/78 and the IBC Code Not applicable.

15. Regulatory information

Canadian regulations

Controlled Drugs and Substances Act

Not regulated.

Export Control List (CEPA 1999, Schedule 3)

Not listed.

Greenhouse Gases

Not listed.

Precursor Control Regulations

Not regulated.

International regulations

Stockholm Convention

Not applicable.

Rotterdam Convention

Not applicable.

Kyoto protocol

Not applicable.

Montreal Protocol

Not applicable.

Basel Convention

Not applicable.

International Inventories

Country(s) or region	Inventory name	On inventory (yes/no)*
Australia	Australian Inventory of Chemical Substances (AICS)	Yes
Canada	Domestic Substances List (DSL)	Yes
Canada	Non-Domestic Substances List (NDSL)	No
China	Inventory of Existing Chemical Substances in China (IECSC)	Yes
Europe	European Inventory of Existing Commercial Chemical Substances (EINECS)	Yes
Europe	European List of Notified Chemical Substances (ELINCS)	No

Country(s) or region	Inventory name	On inventory (yes/no)*
Japan	Inventory of Existing and New Chemical Substances (ENCS)	Yes
Korea	Existing Chemicals List (ECL)	Yes
New Zealand	New Zealand Inventory	Yes
Philippines	Philippine Inventory of Chemicals and Chemical Substances (PICCS)	Yes
United States & Puerto Rico	Toxic Substances Control Act (TSCA) Inventory	Yes

*A "Yes" indicates that all components of this product comply with the inventory requirements administered by the governing country(s)
A "No" indicates that one or more components of the product are not listed or exempt from listing on the inventory administered by the governing country(s).

16. Other Information

Issue date 08-16-2016

Version # 01

Disclaimer Veolia Water Technologies is not able to anticipate all conditions under which this information and its product, or the products of other manufacturers in combination with its product, may be used. It is the user's responsibility to ensure safe conditions for handling, storage and disposal of the product, and to assume liability for loss, injury, damage or expense due to improper use and or non respect of Veolia Water Technologies' requirement.

Revision information Product and Company Identification: Product Review

FICHE SIGNALÉTIQUE

1. Identification

Identificateur de produit	**VEOLIA ACTISAND**
Autres moyens d'identification	Aucune.
Usage recommandé	Traitement des eaux usées
Restrictions d'utilisation	Les travailleurs (et vos clients et utilisateurs dans le cas d'une revente) doivent être informés de la présence possible de poussière respirable et de silice cristalline respirable ainsi que de leurs dangers possibles. Une formation appropriée dans la bonne utilisation et la bonne manipulation de cette matière doit être fournie selon la réglementation applicable. USAGE PROFESSIONNEL

Renseignements sur le fabricant/importateur/fournisseur/distributeur

Fabricant	
Fournisseur	Veolia Water Technologies Canada Inc.
Adresse	2000 Argentia Road, Plaza IV, Suite 430 Mississauga, ON L5N 1W1 Canada
Personne à contacter	Hydrex Product Specialist
Téléphone	(905) 286-4846
Télécopieur	(905) 286-0488
courriel	vwtcanada-hydrex@veolia.com
24 Hr Numéro de téléphone d'appel d'urgence	+1-760-476-3962 (Code:333239)
Fournisseur	Non disponible.

2. Identification des dangers

Dangers physiques	Non classé.	
Dangers pour la santé	Cancérogénicité	Catégorie 1A
Dangers environnementaux	Non classé.	

Éléments d'étiquetage



Mention d'avertissement	Danger
Mention de danger	Peut provoquer le cancer.
Conseil de prudence	
Prévention	Se procurer les instructions avant utilisation. Ne pas manipuler avant d'avoir lu et compris toutes les mesures de sécurité. Porter des gants/vêtements de protection/ équipement de protection des yeux/du visage.
Intervention	Si exposé(e) ou préoccupé(e) : Obtenir une consultation médicale ou des soins médicaux.
Stockage	Non disponible.
Élimination	Éliminer le contenu/les conteneurs selon la loi internationale/nationale/régionale/locale.
Autres dangers	Aucuns connus.
Renseignements supplémentaires	Aucune.

3. Composition/information sur les ingrédients

Mélanges

Dénomination chimique	Nom commun et synonymes	Numéro d'enregistrement CAS	%
Crystalline sillica		14808-60-7	100

Toutes les concentrations sont en pourcentage en poids, sauf si l'ingrédient est un gaz. Les concentrations des gaz sont en pourcentage en volume.

4. Premiers soins

Inhalation Sortir au grand air. Appeler un médecin si les symptômes se développent ou s'ils persistent.

Contact avec la peau Laver avec de l'eau et du savon. Consulter un médecin si une irritation se développe et persiste.

Contact avec les yeux Rincer avec de l'eau. Consulter un médecin si une irritation se développe et persiste.

Ingestion Rincer la bouche. Faire appel à une assistance médicale si des symptômes apparaissent.

Symptômes et effets les plus importants, qu'ils soient aigus ou retardés Toux.

Mention de la nécessité d'une prise en charge médicale immédiate ou d'un traitement spécial, si nécessaire Donner des soins généraux et traiter en fonction des symptômes. Garder la victime en observation. Les symptômes peuvent se manifester à retardement.

Informations générales Si exposé(e) ou préoccupé(e) : Obtenir une consultation médicale ou des soins médicaux. S'assurer que le personnel médical est averti des substances impliquées et prend les précautions pour se protéger.

5. Mesures à prendre en cas d'incendie

Agents extincteurs appropriés Brouillard d'eau. Mousse. Poudre chimique sèche. Dioxyde de carbone (CO2).

Agents extincteurs inappropriés Non disponible.

Dangers spécifiques du produit dangereux Des gaz dangereux pour la santé peuvent se former pendant l'incendie.

Équipements de protection spéciaux et précautions spéciales pour les pompiers Porter un appareil respiratoire autonome et un vêtement de protection complet en cas d'incendie.

Équipement/directives de lutte contre les incendies Les récipients fermés peuvent être refroidis par eau pulvérisée.

Méthodes particulières d'intervention Employer des méthodes normales de lutte contre l'incendie et tenir compte des dangers associés aux autres substances présentes.

Risques d'incendie généraux Aucun risque exceptionnel d'incendie et d'explosion.

6. Mesures à prendre en cas de déversement accidentel

Précautions individuelles, équipements de protection et mesures d'urgence Tenir à l'écart le personnel dont la présence sur les lieux n'est pas indispensable. Garder les personnes à l'écart de l'endroit du déversement/de la fuite et en amont du vent. Porter un équipement et des vêtements de protection appropriés durant le nettoyage. S'assurer une ventilation adéquate. Prévenir les autorités locales si des fuites significatives ne peuvent pas être contenues. Pour s'informer sur la protection individuelle, voir la rubrique 8.

Méthodes et matériaux pour le confinement et le nettoyage Le produit n'est pas miscible avec l'eau et se dispersera sur la surface de l'eau. Arrêter l'écoulement de la substance, si cela peut se faire sans risque. Après avoir récupéré le produit, rincer la zone à l'eau. Pour se renseigner sur l'élimination, voir la rubrique 13.

Précautions relatives à l'environnement Éviter le rejet dans les égouts, les cours d'eau ou sur le sol.

7. Manutention et stockage

Précautions relatives à la sûreté en matière de manutention Se procurer les instructions avant utilisation. Ne pas manipuler avant d'avoir lu et compris toutes les mesures de sécurité. Minimiser la formation de poussières en suspension dans l'air. Fournir une ventilation aspirante adéquate aux endroits où la poussière se forme. Ne pas respirer les poussières. Éviter l'exposition prolongée. Si possible, manipuler dans un système clos. Porter un équipement de protection individuelle approprié. Observer de bonnes pratiques d'hygiène industrielle.

Conditions de sûreté en matière de stockage, y compris les incompatibilités

Protéger du rayonnement solaire. Conserver dans l'emballage d'origine à fermeture étanche. Conserver à l'écart de matières incompatibles (voir rubrique 10). Entreposer dans un endroit frais et sec.

8. Contrôle de l'exposition/protection individuelle

Limites d'exposition professionnelle

ÉTATS-UNIS. Valeurs limites d'exposition de l'ACGIH

Substance	Type	Valeur	Forme
VEOLIA ACTISAND	TWA	0.025 mg/m3	Fraction respirable.
Composants	**Type**	**Valeur**	**Forme**
Crystalline sillica (CAS 14808-60-7)	TWA	0.025 mg/m3	Fraction respirable.

Canada. LEMT pour l'Alberta (Code de l'hygiène et de la sécurité au travail, Annexe 1, Tableau 2)

Substance	Type	Valeur	Forme
VEOLIA ACTISAND	TWA	0.025 mg/m3	Particules inhalables.
Composants	**Type**	**Valeur**	**Forme**
Crystalline sillica (CAS 14808-60-7)	TWA	0.025 mg/m3	Particules inhalables.

Canada. LEMT pour la Colombie-Britannique. (Valeurs limites d'exposition en milieu de travail pour les substances chimiques, Réglementation sur la santé et sécurité au travail 296/97, ainsi modifiée

Substance	Type	Valeur	Forme
VEOLIA ACTISAND	TWA	0.025 mg/m3	Fraction respirable.
Composants	**Type**	**Valeur**	**Forme**
Crystalline sillica (CAS 14808-60-7)	TWA	0.025 mg/m3	Fraction respirable.

Canada. LEMT de Manitoba (Règlement 217/2006, Loi sur la sécurité et l'hygiène du travail)

Composants	Type	Valeur	Forme
Crystalline sillica (CAS 14808-60-7)	TWA	0.025 mg/m3	Fraction respirable.

Canada. LEMT pour l'Ontario. (Contrôle de l'exposition à des agents biologiques et chimiques)

Substance	Type	Valeur	Forme
VEOLIA ACTISAND	TWA	0.1 mg/m3	Respirable.
Composants	**Type**	**Valeur**	**Forme**
Crystalline sillica (CAS 14808-60-7)	TWA	0.1 mg/m3	Respirable.

Canada. LEMT du Québec, (Ministère du Travail. Règlement sur la qualité du milieu de travail)

Substance	Type	Valeur	Forme
VEOLIA ACTISAND	TWA	0.1 mg/m3	Poussière respirable.
Composants	**Type**	**Valeur**	**Forme**
Crystalline sillica (CAS 14808-60-7)	TWA	0.1 mg/m3	Poussière respirable.

Valeurs biologiques limites

Aucune limite d'exposition biologique observée pour les ingrédients.

Directives au sujet de l'exposition

Une exposition professionnelle à de la poussière nuisible (totale et respirable) et à de la silice cristalline respirable doit être suivie et contrôlée.

Contrôles d'ingénierie appropriés

Il faut utiliser une bonne ventilation générale (habituellement dix changements d'air l'heure). Les débits de ventilation doivent être adaptés aux conditions. S'il y a lieu, utiliser des enceintes d'isolement, une ventilation locale ou d'autres mesures d'ingénierie pour maintenir les concentrations atmosphériques sous les limites d'exposition recommandées. Si des limites d'exposition n'ont pas été établies, maintenir les concentrations atmosphériques à un niveau acceptable.

Mesures de protection individuelle, telles que les équipements de protection individuelle

Protection du visage/des yeux

Porter des lunettes de sécurité à écrans latéraux (ou des lunettes à coques).

Protection de la peau

Protection des mains Gants résistants aux produits chimiques. Les gants appropriés peuvent être indiqués par le fournisseur de gants.

Autre L'emploi d'un tablier imperméable est recommandé. Gants résistants aux produits chimiques.

Protection respiratoire Utiliser un respirateur avec filtre particulaire lorsque les concentrations particulaires sont supérieures à la limite d'exposition professionnelle.

Dangers thermiques Non disponible.

Considérations d'hygiène générale Suivre toutes les exigences de surveillance médicale. Toujours adopter de bonnes pratiques d'hygiène personnelle, telles que se laver après avoir manipulé la substance et avant de manger, de boire ou de fumer. Nettoyer régulièrement la tenue de travail et l'équipement de protection pour éliminer les contaminants.

9. Propriétés physiques et chimiques

Apparence

État physique Solide.

Forme Solide.

Couleur Non disponible.

Odeur Non disponible.

Seuil olfactif Non disponible.

pH Non disponible.

Point de fusion et point de congélation Non disponible.

Point initial d'ébullition et domaine d'ébullition Non disponible.

Point d'éclair Non disponible.

Taux d'évaporation Non disponible.

Inflammabilité (solides et gaz) Non disponible.

Limites supérieures et inférieures d'inflammabilité ou d'explosibilité

Limites d'inflammabilité - inférieure (%) Non disponible.

Limites d'inflammabilité - supérieure (%) Non disponible.

Limite d'explosibilité - inférieure (%) Non disponible.

Limite d'explosibilité - supérieure (%) Non disponible.

Tension de vapeur < 0.0000001 kPa à 25 °C

Densité de vapeur Non disponible.

Densité relative Non disponible.

Solubilité

Solubilité (eau) Insoluble

Coefficient de partage n-octanol/eau Non disponible.

Température d'auto-inflammation Non disponible.

Température de décomposition Non disponible.

Viscosité Non disponible.

Autres informations

Propriétés explosives Non explosif.

Chaleur de combustion (NFPA 30B)	0 kJ/g
Formule moléculaire	O2Si
Propriétés comburantes	Non oxydant.

10. Stabilité et réactivité

Réactivité	Le produit est stable et non réactif dans des conditions normales d'utilisation, d'entreposage et de transport.
Stabilité chimique	La substance est stable dans des conditions normales.
Risque de réactions dangereuses	Pas de réactions dangereuses connues dans les conditions normales d'utilisation.
Conditions à éviter	Contact avec des matériaux incompatibles.
Matériaux incompatibles	Oxydants puissants. Chlore
Produits de décomposition dangereux	Aucun produit dangereux de décomposition n'est connu.

11. Données toxicologiques

Renseignements sur les voies d'exposition probables

Inhalation	Toute inhalation prolongée peut être nocive.
Contact avec la peau	Aucun effet indésirable par contact avec la peau n'est attendu.
Contact avec les yeux	Le contact direct avec les yeux peut causer une irritation temporaire.
Ingestion	Faible danger présumé en cas d'ingestion.
Les symptômes correspondant aux caractéristiques physiques, chimiques et toxicologiques	Toux.

Renseignements sur les effets toxicologiques

Toxicité aiguë	Non disponible.
Corrosion cutanée/irritation cutanée	Un contact prolongé avec la peau peut entraîner une irritation temporaire.
Lésions oculaires graves/irritation oculaire	Le contact direct avec les yeux peut causer une irritation temporaire.

Sensibilisation respiratoire ou cutanée

Sensibilisation respiratoire	N'est pas un sensibilisant respiratoire.
Sensibilisation cutanée	Ce produit ne devrait pas causer une sensibilisation de la peau.
Mutagénicité sur les cellules germinales	Il n'existe pas de données indiquant que ce produit, ou tout composant présent à des taux de plus de 0,1 %, soit mutagène ou génétoxique.
Cancérogénicité	En 1997, le CIRC (Centre international de recherche sur le cancer) a conclu que la silice cristalline inhalée de sources professionnelles pouvait provoquer un cancer du poumon chez l'homme. Toutefois, lors de son évaluation globale, le CIRC a observé que « le pouvoir cancérogène n'était pas détecté dans toutes les conditions industrielles examinées. Le pouvoir cancérogène peut dépendre de caractéristiques intrinsèques de la silice cristalline ou de facteurs externes qui touchent son activité biologique ou la distribution de ses polymorphes. » (Monographies du CIRC sur l'évaluation des risques cancérogènes de substances chimiques pour l'être humain, Silice, poussière de silicates et fibres organiques, 1997, vol. 68, CIRC, Lyon, France.) En juin 2003, le CSLEP (Comité scientifique en matière de limites d'exposition professionnelle à des agents chimiques) a conclu que le principal effet chez l'être humain de l'inhalation de la poussière de silice cristalline respirable est la silicose. « Les données disponibles sont suffisantes pour conclure que le risque de cancer du poumon est accru chez les personnes atteintes de silicose (et non, semble-t-il, chez les employés exempts de silicose exposés à la poussière de silice dans les carrières et dans le secteur industriel des céramiques). Dès lors, la prévention de l'apparition de la silicose réduira également le risque de cancer... » (SCOEL SUM Doc 94-final, juin 2003) Selon l'état de la technique actuel, la protection des travailleurs contre la silicose peut être assurée de manière systématique en respectant les limites d'exposition professionnelle réglementaires existantes. Peut provoquer le cancer. Une exposition professionnelle à de la poussière respirable et à de la silice cristalline respirable doit être suivie et contrôlée.

Carcinogènes selon l'ACGIH

Crystalline sillica (CAS 14808-60-7)	A2 Probablement cancérogène pour l'homme.

Canada - LEMT pour l'Alberta : Catégorie de carcinogène

Crystalline sillica (CAS 14808-60-7)	Probablement cancérogène pour l'homme.

Canada - LEMT pour le Manitoba : cancérogénicité

SILICE, CRISTALLINE-.ALPHA.-QUARTZ, FRACTION RESPIRABLE (CAS 14808-60-7)	Probablement cancérogène pour l'homme.

Canada - LEMT pour le Québec : Catégorie de carcinogène

Crystalline sillica (CAS 14808-60-7)	Effet cancérogène suspecté chez les humains.

Monographies du CIRC. Évaluation globale de la cancérogénicité

Crystalline sillica (CAS 14808-60-7)	1 Cancérogène pour l'homme.

Toxicité pour la reproduction	On ne s'attend pas à ce que ce produit présente des effets sur la reproduction ou le développement.
Toxicité pour certains organes cibles - exposition unique	Non classé.
Toxicité pour certains organes cibles - expositions répétées	Non classé.
Danger par aspiration	N'est pas un danger d'aspiration.
Effets chroniques	Toute inhalation prolongée peut être nocive. Une exposition prolongée peut causer des effets chroniques.

12. Données écologiques

Écotoxicité	Le produit n'est pas classé comme dangereux pour l'environnement. Toutefois, ceci n'exclut pas la possibilité que des déversements importants ou fréquents puissent avoir un effet nocif ou nuisible sur l'environnement.
Persistance et dégradation	Aucune donnée n'est disponible sur la biodégradabilité du produit.
Potentiel de bioaccumulation	Aucune donnée disponible.
Mobilité dans le sol	Aucune donnée disponible.
Autres effets nocifs	On ne prévoit aucun autre effet environnemental négatif (par ex., appauvrissement de la couche d'ozone, potentiel de formation photochimique d'ozone, perturbation endocrinienne, potentiel de réchauffement de la planète) causé par ce composant.

13. Données sur l'élimination

Instructions pour l'élimination	Recueillir et réutiliser ou éliminer dans des récipients scellés dans un site d'élimination des déchets autorisé. Éliminer le contenu/les conteneurs selon la loi internationale/nationale/régionale/locale.
Règlements locaux d'élimination	Détruire conformément à toutes les réglementations applicables.
Code des déchets dangereux	Les codes de déchets doivent être attribués dans le cadre d'une consultation entre l'utilisateur, le fabricant et l'entreprise de décharge.
Déchets des résidus / produits non utilisés	Éliminer le produit conformément avec la réglementation locale en vigueur. Des résidus de produit peuvent demeurer dans les contenants vides et sur les toiles d'emballage. Ce produit et son contenant doivent être éliminés de façon sécuritaire (voir les instructions d'élimination).
Emballages contaminés	Comme les récipients vides peuvent contenir des résidus de produit, respecter les avertissements sur l'étiquette même après avoir vidé le récipient. Les contenants vides doivent être acheminés vers une installation certifiée de traitement des déchets en vue de leur élimination ou recyclage.

14. Informations relatives au transport

TMD

N'entre pas dans la réglementation des marchandises dangereuses.

IATA

N'entre pas dans la réglementation des marchandises dangereuses.

IMDG

N'entre pas dans la réglementation des marchandises dangereuses.

Transport en vrac selon l'Annexe II de MARPOL 73/78 et le recueil IBC Sans objet.

15. Informations sur la réglementation

Réglementation canadienne

Loi réglementant certaines drogues et autres substances

Non réglementé.

Liste des marchandises d'exportation contrôlée (LCPE 1999, Annexe 3)

Non inscrit.

Gaz à effet de serre

Non inscrit.

Règlements sur les précurseurs

Non réglementé.

Règlements internationaux

Convention de Stockholm

Sans objet.

Convention de Rotterdam

Sans objet.

Protocole de Kyoto

Sans objet.

Montreal Protocol

Sans objet.

Convention de Bâle

Sans objet.

Inventaires Internationaux

Pays ou région	Nom de l'inventaire	En stock (Oui/Non)*
Australie	Inventaire australien des substances chimiques (AICS)	Oui
Canada	Liste intérieure des substances (LIS)	Oui
Canada	Liste extérieure des substances (LES)	Non
Chine	Inventaire des substances chimiques existantes en Chine (IECSC)	Oui
Europe	Inventaire européen des substances chimiques commerciales existantes (EINECS)	Oui
Europe	Liste européenne des substances chimiques notifiées (ELINCS)	Non
Japon	Inventaire des substances chimiques existantes et nouvelles (ENCS)	Oui
Corée	Liste des produits chimiques existants (ECL)	Oui
Nouvelle-Zélande	Inventaire de la Nouvelle-Zélande	Oui
Philippines	Inventaire philippin des produits et substances chimiques (PICCS)	Oui
États-Unis et Porto Rico	Inventaire du TSCA (Toxic Substances Controls Act - Loi réglementant les substances toxiques)	Oui

*La réponse « Oui » indique que tous les composants du produit sont conformes aux exigences d'entreposage du pays ayant compétence Un « Non » indique qu'un ou plusieurs composant(s) du produit n'est/ne sont pas inscrit(s) ou exempt(s) d'une inscription sur l'inventaire administré par le(s) pays ayant compétence.

16. Renseignements divers

Date de publication 16-Août-2016

Version n° 01

Avis de non-responsabilité Veolia Water Solutions & Technologies ne peut prévoir toutes les conditions d'utilisation des présents renseignements et de son produit, ou des produits d'autres fabricants en association avec son produit. L'utilisateur est responsable d'assurer des conditions sécuritaires de manutention, d'entreposage et d'élimination du produit, et il assume toute responsabilité quant à des pertes, des blessures, des dommages ou des dépenses liés à une utilisation incorrecte ou au non-respect des exigences de Veolia Solutions & Technologies.

Informations relatives à la révision	Identification du produit et de l'entreprise : Identification du produit et de l'entreprise

FIELD INSTALLATION / PAINT PROTECTION

IMPORTANT NOTE TO MECHANICAL CONTRACTORS

You are about to install **ACTIFLO®** or **DUSENFLO®** Package Plant units and their related skids and equipment. **John Meunier Inc.** wants to warn you about potential problems related to installation of large steel units protected against corrosion by paint.

John Meunier Inc. maintains a comprehensive quality program to prevent equipment from being affected by corrosion. Our fabrication methods are specially adapted to manufacturing of painted equipment. Every step of our fabrication and assembly process is checked to reduce corrosion issues. Each unit is also delivered under strict measures, meant to reduce potential corrosion problems and long product life.

However, we have identified that handling unit at job site is a key element of corrosion protection process. This operation completely escapes our control and is your responsibility. Consequently, we invite you to perform a thorough review of your installation procedures before handling John Meunier products. Protecting units during and after installation is paramount to maintain corrosion risks to a bare minimum.

Likewise, after installation of units, you must insure complete equipment protection from working environment before unit is put into service. This will prevent damages caused by work not related to John Meunier products taking place on site. Contractor is responsible for installation of any additional protection necessary at job site.

In order to maintain quality products free of defects, **John Meunier Inc.** requests from Contractor, that he takes all necessary measures to reduce risks of paint or equipment damage leading to steel corrosion. Among most important protection measures of paint protection, here are the principal ones:

- Making all men, working close to units, conscious of paint fragility and potential corrosion problems. Please encourage them to act with extreme care while working around installation.
- Protecting units from weld projection or falling debris, by covering unit with adequate plastic or cardboard hoods and padding.
- Protecting unit's tank bottom when installing mixers or other equipment inside unit.
- Keeping area and unit clean at all times.

All measures taken by contractor to insure paint protection will assure transfer to client of a quality product and will benefit to all.

Thanks for your help and understanding

John Meunier Inc.

LEFT BLANK

JOHN MEUNIER

IMPORTANT NOTICE CONCERNING MODIFICATIONS DONE BY THE CLIENT

Please note that it is mandatory to contact John Meunier Inc. before undertaking any modification work to the equipment supplied in this project. In fact, any alteration made to any equipment (mechanical, control, computers, etc.) without prior notification and consent by John Meunier Inc. voids the warranty of the mentioned equipment. Furthermore, the client is responsible for any additional cost necessary to restore the equipment to its original state.

VEOLIA WATER
Solutions & Technologies

LEFT BLANK

WARRANTY

All equipment manufactured by **JOHN MEUNIER INC.** is guaranteed to be free from defects in material and workmanship for a period of twelve (12) months from the date at which unit is placed in service, eighteen (18) months from the date of shipment, whichever occurs first. All equipment found with defects during this period will be replaced at no extra charge when shipped prepaid FOB to the manufacturer's shop. All parts sold by **JOHN MEUNIER INC**. are warranted the same way for a period of three (3) months from date of shipment.

If the customer promptly notifies **JOHN MEUNIER INC.** in writing of a claimed defect in the equipment and said equipment is found not to be in conformity with this warranty, **JOHN MEUNIER INC.** will, at its option and expenses, repair or replace such defective part, prepaid FOB to the manufacturer's shop.

JOHN MEUNIER INC. must be given notice of such defect, and, where requested, such material must be returned to the manufacturer's shop, transportation charges prepaid, with written approval for the shipment by **JOHN MEUNIER INC.**

This warranty shall be void if start-up of equipment is not authorized by **JOHN MEUNIER INC**, or if repairs and/or alterations are made without a written authorization by **JOHN MEUNIER INC**. If the equipment or parts supplied by **JOHN MEUNIER INC.** are altered in any way without **JOHN MEUNIER INC.** consent, the present warranty will not be valid and have no effect.

The customer will use only **JOHN MEUNIER INC**. parts for all labour covered by this warranty.

The foregoing warranty excludes responsibility or liability for :

(a) Failures not reported promptly within the warranty period , above specified.

(b) Damage due to accident, abuse, shipment, improper installation or operation, or abnormal operation condition.

(c) Damage caused by client's replacement, repair or inspection of parts.

(d) Lesion or personal accidents, material damage or any direct or indirect expenses or loss of profit related to this warranty.

(e) Damage, loss, expenses, lesion or personal accidents directly or indirectly related to the installation, the operation or the failure of the equipment supplied by **JOHN MEUNIER INC**.

The foregoing warranty is exclusive and replaces all other warranties, expressed or implied, including but not limited to any warranty of bargaining or modification for a particular purpose.

This warranty does not cover the following :

(a) Costs of repair, modification or other work done or requested by the customer or the management and all indirect costs.

(b) All expenses related to regular maintenance of parts as prescribed in the operation and maintenance manuals supplied by **JOHN MEUNIER INC.**

(c) Costs of dismantling, installation, transportation and insurance.

(d) Travelling and living expenses for the personnel carrying out the repair under such warranty.

(e) This warranty is not a performance or production warranty.

JOHN MEUNIER INC. has the right to examine or to ask for details about defects before empowering the present warranty.

Installation Manual

ACP-700R
Actiflo® Package Plant

Project :
MEADOWBANK MINING CORP, NWT

Reference number:
NC01

Table of Contents

APPENDICES **3**
1 RECEIVING **4**
2 GENERAL INSTALLATION **4**
2.1 ACTIFLO® UNITS LOCATION 5
2.1.1 Leveling 5
2.1.2 Anchoring to concrete floor 5
2.1.3 Unwrapping 5
3 ACTIFLO® UNITS MECHANICAL INSTALLATION **6**
3.1 Grating 6
3.2 Handrail 6
3.3 Settling section 6
3.4 Trough 6
3.5 Scraper drive installation 6
3.6 Hydrocyclone Support 7
3.7 Injection / Coagulation / Maturation Tank Mixer 7
4 PERIPHERAL EQUIPMENT INSTALLATION **10**
4.1 Microsand recirculation pump system 10
4.2 Raw water turbidimeter 10
4.3 Coagulation pH meter 10
4.4 Clarified water turbidimeter 10
5 PIPING CONNECTION **11**
6 ELECTRICAL INSTALLATION **13**

APPENDICES

DRAWING N°	DESCRIPTION
RC01 - FI100	ACTIFLO ACP-700R / FIELD INSTALLATION
RC01 - FI101	ACTIFLO ACP-700R / Ph PROBE INSTALLATION
RC01 - FI102	ACTIFLO ACP-700R / MIXERS INSTALLATION
ELECTRICAL	ELECTRICAL DRAWINGS IN REFERENCE WITH FIELD CONNECTION

1 RECEIVING

Preliminary field-testing, inspection, and checkout of the unit, following installation, shall be performed by a qualified representative of both the Supplier and the General Contractor. Tests shall be conducted to demonstrate to the Engineer that all system components furnished by the equipment supplier are fully operational, that all connecting piping is leak proof and properly anchored, and that the entire system furnished by the Supplier is ready for continuous and safe operation. The purpose of the checkout shall be to ensure that each individual system component has been correctly installed, shall operate fully in the manner intended, and is ready to perform its function as part of an integrated system when placed in continuous operation.

2 GENERAL INSTALLATION

The ACTIFLO® Package Plant is pre-mounted. However, for freight purpose and practical reasons, the installation of some items needs to be completed on site by the contractor. Please find below the list of tasks that need to be performed by the contractor at job site:

- Installation should be performed by qualified contractors.
- The contractor must ensure that the necessary lifting and handling equipment is available on site to carry out the installation.
- All nuts & bolts need to be verified and accounted for.

WARNING: ***Settling tubes are shipped pre-installed in the settling tank zone of each Actiflo® package unit. These settling tubes are very flammable. Do not use any open flames near them and do not allow any welding work in the nearby area unless safety precautions have been taken. Once the settling tubes are in water (normal use), this warning is no longer applicable.***

- Refer to all field installation drawings for the installation of each Actiflo® unit.
- If any paint touch-ups are required, refer to Steel Tanks Technical Sheet ST-103 for Recommended Paint Preparation and Application Instructions.
- After installation is completed, clean and rid the tanks section of all debris & objects

that could damage the rotating mechanisms or clog the recirculation line.

- Microsand is supplied in 50-lbs bags in quantities required for first fill. Sand will be added to the injection tank during process start up.

2.1 ACTIFLO® UNITS LOCATION

- Install each unit at the designated location at site. Lifting lugs (4) are provided on top of each unit to facilitate handling and shall be removed after proper installation of the Actiflo unit in order to install the handrails.

WARNING ***: Do not use the side welded lugs on the Actiflo® package plant to lift the unit. These are for transportation purpose only.***

2.1.1 Leveling

- Unit base frame must be perfectly leveled within proper tolerance.

2.1.2 Anchoring to concrete floor

- Refer to field installation drawing for tank anchors location.

- Drill appropriate holes in concrete support piers and align with the anchoring holes of the Actiflo® base and fasten the tank structure with anchors (supplied by others).

2.1.3 Unwrapping

- Unwrap the equipment and remove any temporary supports and plywood protections from the unit. Be cautious when unwrapping instrumentation protection.

- Add leveling/finishing grout under the base frame where required.

3 ACTIFLO® UNITS MECHANICAL INSTALLATION

3.1 Grating

- Grating is already installed on each unit.

3.2 Handrail

- Install hand railing on each unit at the site. Please refer to the field installation drawings.

3.3 Settling section

- Lamella packs are already installed in settling section.
- If required, be very cautious when manipulating the lamella packs in cold temperatures. They become very brittle and may brake easily.

WARNING **:** ***Lamella pack is highly flammable. Submerge with water as soon as possible.***

3.4 Trough

- The troughs already installed in the settling section should be leveled using the adjustment nuts. All troughs must be at the same elevation.

3.5 Scraper drive installation

- Remove the transportation plate from the rake assembly;
- Lower the shaft of the rake using the eyebolt;
- Replace the transportation plate by the rake drive;
- Connect the rake drive to the shaft:
- Remove the eyebolt from the rake shaft:
- Add the lubricant in the planetary gear housing. Use Chevron lubricating oils FM Grade ISO 460 or equivalent FDA approved. Please be careful about the amount of oil that is put in the scraper drive assembly as too much oil may overflow into the tank. The oil level should correspond to about ½ of the height of the gear;
- Rectify alignment if necessary;
- All electrical connections must be completed;
- Rotation of the rake must be C.W.;
- Ensure that there is no contact in between the rake arm and the bottom of the hopper;
- Clean the tanks section of all debris & objects that could damage the rotating

mechanisms.

- Inspect the recirculation inlet pipe. It should be free of any debris.

3.6 Hydrocyclone Support

- Refer to the field installation drawings for proper hydrocyclone installation.
- Install the hydrocyclone assembly support on the injection tank with supplied bolts, nuts and washers at the site.
- Install the piping connections.

3.7 Injection / Coagulation / Maturation Tank Mixer

- Refer to field installation drawings for proper mixers installation.
- The mixers are delivered separately. The shafts are already assembled to the gear box. The contractor must assemble the impellers on the shafts at job site.
- Install the motor on the appropriate tank mixer following instructions given in the supplier's Equipment Manual.
- Verify the mixer blade installation and orientation.
- Verify that set screws are well tightened to secure the hub onto the shaft.
- Follow manufacturer recommendations for oil check and fill up procedure (manual).

MIXERS

Standard Actiflo

WARNING :

- ✓ Ensure the use of a **right hub** (\ ) in the three tanks.
- ✓ The leading edge of the blade shall be at 15° and not at 75°.
- ✓ The bolts and nuts must be installed on the wing but on the opposite side of the blade.

Two possible choices

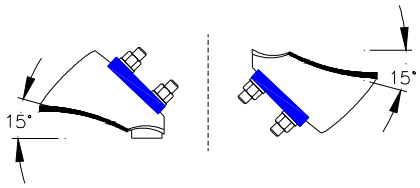

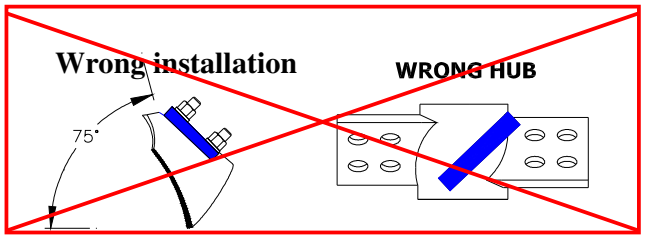

LEGEND	
CW-UP	: Clockwise – Up
CW-DWN	: Clockwise – Down
CCW-UP	: Counterclockwise – Up
CCW-DWN	: Counterclockwise - Down

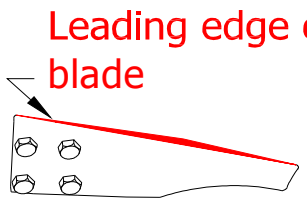

Possible mixer installation:

- **Refer to the drawing FI102 for your particular application.**

For coagulation and maturation:

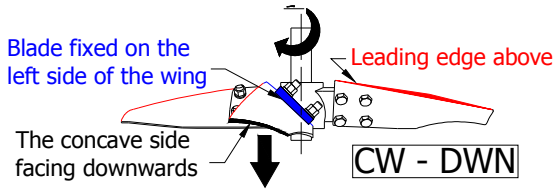

For injection:

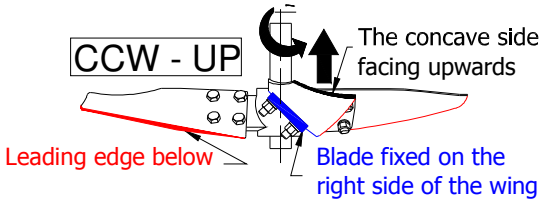

4 PERIPHERAL EQUIPMENT INSTALLATION

4.1 Microsand recirculation pump system

- Refer to field installation drawings for proper microsand recirculation pump system location and installation.
- Pump base frame must be leveled within proper tolerance.
- Drill appropriate holes in concrete floor and fasten the pump and flexible pipe supports with anchors.

4.2 Raw water turbidimeter

- Refer to field installation drawings for proper location.
- Pre-wired, pre-connected and pre-mounted on a support.
- The connection to the sample port is by others.

4.3 Coagulation pH meter

- Refer to field installation drawings for proper coagulation pH meter installation.
- Pre-wired, pre-connected and pre-mounted on a support.
- Install the coagulation pH meter with probe on handrail on the settling tank side with supplied bolts, nuts and washers.

4.4 Clarified water turbidimeter

- Pre-wired, pre-connected and pre-mounted on a support on the effluent side of the tanks.
- Refer to field installation drawings for proper clarified water turbidimeter installation.

5 PIPING CONNECTION

- Grease, protecting the flanges, must be removed prior to the installation of the valves & pipes.

Water collector: Pipe from the Actiflo® unit effluent flange to the clarified water collector.

Tanks drain:
- Pipe from the tank drain valves to the trench drain.

Settled water tank partial drain: Pipe from the pre-installed partial drain valve, located on Actiflo® effluent side, to the trench drain.

Clarified water turbidimeter:
- Pipe the clarified water turbidimeter located on Actiflo® unit effluent side, to an appropriate drain.
- Complete piping, if necessary, from the coupling located on the Actiflo® effluent side to the turbidimeter sampling inlet.

Important: Provide sufficient slope to ensure correct draining.
If connected to another drain line, ensure to prevent any backflow to the instrument.

Important: To avoid turbidimeter clogging, sample water piping must be connected prior to any coagulant or other viscous chemical product addition.

Hydrocyclone sludge outlet: Pipe from the hydrocyclone sludge outlet flange to the trench drain.

Important: Provide sufficient pipe slope and size to prevent any backflow to the hydrocyclone.

Recirculation pipe:

- Refer to field installation drawings for proper recirculation pipe installation.
- Verify the recirculation inlet pipe. It should be free of any debris.
- Connect the flexible pipe section using the quick coupling connections provided.
- Pipe-straps are supplied on the unit to secure the pipe along the tank wall.

Polymer feeding:

- Connect the supplied polymer injection tubing from the Actiflo® maturation and injection reservoirs to the appropriate hydrocyclone assembly support polymer distributor outlet.
- Supply polymer feeding pipe from the polymer metering pump skid outlet to the hydrocyclone assembly support polymer distributor inlet for the Actiflo® unit.

6 ELECTRICAL INSTALLATION

- Electrical work should be performed by a qualified contractor.
- Refer to Actiflo® Control Panel & Electrical diagram for proper wiring installation.

Control panel:
- Supply wiring between the Actiflo® unit junction box and the control panel.
- Supply power (460V/ 3 ph/ 60 Hz) to the Actiflo® control panel.
- Before permanently wiring the control panel, verify the rotation of each motor (Clockwise or Counter Clockwise).

Tank mixers:
- Rewire each mixer motor to junction box near each mixer.

WARNING: ***Never run a mixer without the tank being completely filled with water.***

Scraper:
- Rewire scraper motor to junction box near scraper.

Raw water turbidimeter
- One (1) raw water turbidimeter is supplied pre-wired on influent side of Actiflo® #1.
- Recommended supplier's wiring instructions are given in the supplier's manual.

Clarified Water Turbidimeter:
- One (1) clarified water turbidimeter is supplied pre-wired on effluent side of each Actiflo®.
- Recommended supplier's wiring instructions are given in the supplier's manual.

WARNING: ***Never cut the original cable between turbidimeter unit and its power supply unit. This cable must remain at full length.***

Coagulation pH meter:

- One (1) pH meters with probe is supplied pre-wired on top of each Actiflo® settling tank.
- Complete connection if any.
- Recommended supplier's wiring instructions are given in the supplier's manual.

Water level switch:

- One (1) water level switch is supplied pre-wired inside each Actiflo® settling tank.
- Complete connection if any.
- Recommended supplier's wiring instructions are given in the supplier's manual.

Operation & Maintenance Manual

ACP-700R
Actiflo® Package Plant

Project :
Meadowbank Mining CORP
Reference number:
NC01

Table of Contents

1.0 LIST OF EQUIPMENT 4
2.0 INTRODUCTION 7
2.1 GENERAL INFORMATION 7
2.2 OBJECTIVES OF THIS MANUAL 7
2.3 SAFETY 8
2.4 STANDARDS 9
2.5 WARRANTY & PROCESS GUARANTEE 9
2.6 ACTIFLO® CLARIFICATION PROCESS 9
2.6.1 General information 9
2.6.2 Operation principles 10
2.6.3 Characteristics and performances 11
3.0 DESCRIPTION OF COMPONENTS 12
3.1 *Actiflo®* clarifiers 12
3.1.1 General description 12
3.1.2 Coagulation tank 12
3.1.3 Injection tank 12
3.1.4 Maturation tank 13
3.1.5 Settling tank 13
3.1.5.1 Lamella pack 14
3.1.5.2 Sludge collection hopper 14
3.1.5.3 Circular scraper 14
3.1.5.4 Clarified water troughs 14
3.1.5.5 Partial drainage 14
3.1.5.6 Complete drainage 15
3.1.6 Microsand recirculation piping 15
3.1.6.1 Collection of sludge and microsand 15
3.1.6.2 Microsand recirculation pumps 15
3.1.6.3 Hydrocyclones 15
3.1.7 Microsand 16
3.1.8 Coagulant 16
3.1.9 Flocculant (polyelectrolyte) 16
3.1.10 Control panel 17
4.0 START-UP & OPERATION 18
4.1 START-UP 18
4.1.1 Preliminary verification 18
4.1.2 Initial microsand loading 18
4.1.3 Automatic start-up 19
4.2 NORMAL OPERATION 19
4.2.1 *Actiflo®* clarifiers 19
4.2.1.1 Microsand monitoring 19
4.2.1.2 Microsand recirculation pumps 22
4.2.1.3 Hydrocyclones 22
4.2.1.4 Mixers 23
4.2.1.5 Circular Scraper 23
4.2.2 Dosage of chemicals 24
4.2.2.1 Coagulant 24
4.2.2.2 Flocculant (polyelectrolyte) 24
4.2.2.3 Alkali, pH adjustment 25

5.0 SURVEY OF OPERATIONS 26
5.1 AUTOMATION 27
5.2 SHUT DOWN 27
5.3 TROUBLESHOOTING 27
5.3.1 Increase in clarified water turbidity 27
5.3.2 Increase in clarified water colour 28
5.3.3 Stopping of microsand recirculation pump 28
5.3.4 Power failure 28
6.0 JAR TEST PROCEDURE 29
6.1 Introduction 29
6.2 Material required 29
6.3 Laboratory Procedures 30
6.4 Analysis 30
7.0 MAINTENANCE 31
7.1 *Actiflo®* clarifier 31
7.1.1 Lamella pack 31
7.1.2 Mixers 31
7.1.3 Microsand recirculation pumps 31
7.1.4 Hydrocyclones 31
7.2 Control panel 32
7.3 Instrumentation 32
7.4 Valves 32
7.4.1 Manual valves 32
7.4.2 Automatic valves 32
7.5 Peripheral equipment 32

1.0 LIST OF EQUIPMENT

NC01 -Meadowbank minning corp				
List of appendices				
			EQUIPMENT	TAG
	A		ST-001 PROJECT SUMMARY	
	B		ST-002 CONTROL AND AUTOMATION	
		001	Functional description	
		002	Input/Output list	
		003	Electrical drawings	
		004	P&ID	
	C		ST-003 VALVES	
		005	Bray, 31-119, Butterfly valve	V2-011/021, V6-013/023
		a	Bray, Series 92, Pneumatic actuator	
		b	Bray, Series 01, Manual operator	
		006	Milliken, 601E, Eccentric manual plug valve	V6-011/012/021/022, V2-012/013/022/023
		007	CFF, SS-1, Ball valve	
		008	Watts, 25-AUB-Z3-CG, Presure reducing valve	V7-010/011/012
		009	Asco, 8210G54, Solenoid valve	V9-521/522
		010	Chemline, VGA-010T, Globe valve	V9-523/524
	D		ST-004 PROCESS INSTRUMENTATION	
		011	Dwyer, F7-SS, Level switch	LSHH 2-011/2-021
		012	Basco, Model 761, Pressure gauge	PI 2-011/PI 2-012/2-021/PI 2-022
		013	Hach, SS7, Turbidimeter	AIT1-011
		a	Hach, 46680-00, Bubble trap	
		014	Khrone, Enviromag, Electromagnetic flowmeter	FIT-2-011, FIT-2-021
		a	Khrone, IFC100CD, Converter	
		015	Hach/GLI, PRO-P3A1N, pH-meter	pHIT 2-011/021
		a	Hach/GLI, PD1R1, pH sensor	pHE 2-011/021
		016	Hach, 1720E, Turbidimeter	AIT 2-011
		a	Hach, 60101-01, Sensor (for 1720E turbidimeter)	AE-2-011/2-021
		017	Chemline, FSA01500, Rotameter	FI9-521/522
	E		ST-010 SCRAPER	

		018	SEW Eurodrive, RF97/FA47, Scraper Gearbox	S2-011 / S2-021
		a	SEW Eurodrive, DT71D4/C, Motor	
		b	SEW Eurodrive, BLH, Load cell arrangement	
	F		**ST-011 MICROSAND**	
		019	Microsand, 135 microns	
	G		**ST-051 COAGULANT DOSING**	
		020	Hapman, Coagulant automatic preparation system	DF9-511
			c/w bulk bag unloader, hoist and trolley	
			c/w automatic bag agitator assembly	
			c/w Hapman U-Trough feeder	
			c/w mix tank and use tank	
			c/w tank level transmitter	
			c/w mix tank mixer	
		021	Seepex, BW 10 / A4-A7-A7-F0-GA-X, Progessive cavity pump	P9-515
		022	Seepex, MD 012-12 / A6-A7-A7-F0-GA-X, Progressive cavity pump	P9-511/512/513
		023	Primary Fluid, TVPR50-PVC-G, Safety relief valve	V9-515/516/517
		024	Primary Fluid, PV#2-100ml, Calibration tube	
		025	Primary Fluid, CCS-56-PVC, Corporation stops	
	H		**ST-052 POLYMER DOSING**	
		026	Tomal, Polyrex 2.0, Automatic polymer preparation system	DF9-521
		027	Seepex, MD 025-6L / A6-A7-A7-F0-GA-X, Progressive cavity pump	P9-521/522/523
		028	Primary Fluid, TVPR50-PVC-G, Safety relief valve	V9-525/526/527
		029	Primary Fluid, PV#2-4000ml, Calibration tube	
	I		**ST-054 CAUSTIC SODA DOSING**	
		030	Aco, OT-15 & OT-75, Tank and accessories	T9-541/542
		031	Lightnin, EV5Q-50, Mixer	M9-541
		032	Seepex, MD 006-12 / A6-A7-A7-R0-GA-X, Progressive cavity pump	P9-541/542/543
		033	Primary Fluid, TVPR50-PVC-G, Safety relief valve	V9-545/546/547
		034	Primary Fluid, PV#2-500ml, Calibration tube	
		035	Primary Fluid, CCS-56-PVC, Corporation stops	
	J		**ST-099 SERVICE WATER PUMP**	
		036	Aurora, PVMI8-60, Vertical multi-stage pump	P7-011/021
	K		**ST-100 MIXERS**	

		037	Envirequip, Mix-Tech EVG Series, Mixers	
			Envirequip, Mix-Tech EVG 4-3.0, Coagulation tank	M2-011/021
			Envirequip, Mix-Tech EVG 4-3.0, Injection tank	M2-012/022
			Envirequip, Mix-Tech EVG 6-5.0, Maturation tank	M2-013/023
		a	Nord, SK4282 AHZ/VL - SK6282 AHZ/VL , Gear reducer	
		b	Nord, 100LH/4-112MH/4, Motor	
	L		**ST-101 MICROSAND RECIRCULATION PUMP**	
		038	Linatex, Linapump Series IIIr 50x50, Microsand recirculation pump	P2-011/P2-012/P2-021/P2-022
	M		**ST-103 STEEL TANKS**	
		039	John Meunier Inc., ACP-700R, Actiflo tank	
	N		**ST-150 HYDROCYCLONE**	
		040	Krebs, U6-10-1758, Hydrocyclone	C2-011/012/C2-021/022
	O		**ST-151 LAMELLA**	
		041	Nova Chemicals, Type Impact PS 6200 , Settling lamella	
	P		**ST-999 SLUDGE TANK**	
		042	Aco, OT-750, Tank	T4-011
	Q		**DRAWINGS**	
		043	General arrangement drawings	
		044	Field installation drawings	
		045	Electrical field wiring drawings	

Rev. September 2009

2.0 INTRODUCTION

2.1 GENERAL INFORMATION

The components of the Actiflo® dynamic clarifier are supplied by ***John Meunier Inc*** Products. This equipment of superior quality and proven design will insure years of operation without problems. However, in order to maintain peak efficiency and performance of the system, it is imperative to take into consideration the preventive measures and procedures described in this manual. These measures include the operation and maintenance of its components.

To obtain any additional information regarding characteristics, operation or maintenance of this equipment, or if a problem persists, please do not hesitate to contact us.

The ***Actiflo®*** system was manufactured in Canada by:

John Meunier Inc
4105, Sartelon
Saint-Laurent, Qc.
Canada H4S 2B3
Phone: (514) 334-7230
Fax: (514) 334-5070

2.2 OBJECTIVES OF THIS MANUAL

- Describe and explain the functions of the various components of the Actiflo® clarifier.
- Describe the procedures for the start-up and standard operation of the system.
- Plan preventive maintenance measures and describe procedures for the regular maintenance of the equipments.

2.3 SAFETY

Operation of the ***Actiflo***® system should be done by qualified personnel only.

It is imperious to insure the security of all operators during the operation and maintenance of all mechanical equipment. In order to avoid accidents, it is important to determine the correct way to proceed and conveniently select appropriate clothing for the job. All workers having access to the equipment must scrupulously respect all the standard rules of safety as well as the precautions described in this manual.

Workers, which are directly responsible for the operation and maintenance of the equipment, must be aware of standard rules of safety.

The following safety rules should be followed:

- Safety devices such as handrail and belt guards should be installed and inspected regularly.
- Access to the building should be limited to authorize personnel only.
- Non-authorized personnel must never in any case approach rotating shafts, connections, roller bearings, etc., in order to avoid accidents.
- The owner should implement a safety program and provide training for operation staff.
- Material Safety Data Sheets (MSDS) should be available for each chemical product.
- Appropriate protective gear including safety glasses, helmet, boots, garment, gloves, and ear protection should be worn at all times.

Protection systems, or any other type of safety device supplied by the manufacturer, must be carefully installed. If these are not supplied by the manufacturer, the user must himself supply and install the safety devices necessary for the protection of employees responsible for the operation of the equipment.

WARNING: The lamella pack is pre-installed in the settling tank section of the Actiflo® clarifier. It is made of a very flammable material. Do not expose it to open flames or sparks. Do not allow any welding works nearby unless special precautions have been taken.

WARNING: The operation staff should be aware that coagulant is highly corrosive and polymer solution can be very slippery. Spills should be cleaned immediately according to the MSDS instructions.

2.4 STANDARDS

Unless specified otherwise, the equipments described in this manual are consistent with the most recent construction standards that are applicable, including:

American Society of Mechanical Engineers	(ASME)
Canadian Standards Association	(CSA)
Canadian Electrical Manufacturers Association	(CEMA)
National Electrical Manufacturers Association	(NEMA)
American Society for Testing and Materials	(ASTM)
American National Standard Institute	(ANSI)

2.5 WARRANTY & PROCESS GUARANTEE

See Purchase Order terms.

2.6 ACTIFLO® CLARIFICATION PROCESS

2.6.1 General information

The Actiflo® process is a compact system that will provide quality water by a flocculation and a high rate settling process.

Suspended particles and dissolved solids, previously destabilized with the injection of a coagulant in the raw water, are fixed to the microsand with the help of a flocculant (polyelectrolyte) added to water. The floc being formed is subsequently separated from the water by counter-current lamellar settling with an ascending hydraulic flux.
Excellent efficiency of the Actiflo® process is reached using two proven techniques:

- injection of microsand serves as support to the ballasted flocs and works as weight in order to create a very dense floc, thus providing a very high rate of sedimentation.

- lamellar settling allows increased settling surface in a reduced tank volume by using a set of inclined parallel plates.

2.6.2 Operation principles

Raw water goes through four successive steps that are part of the Actiflo's® treatment process.

1) Coagulation:

Raw water is mixed with a coagulant using a rotating mixer in a rectangular-shaped tank. This insures a homogeneous diffusion of the coagulant in the water. The standard hydraulic retention time for this step is approximately two (2) minute at nominal flow rate.

2) Injection:

A precise amount of microsand and flocculant (polyelectrolyte) are added and mixed in the water using a rotating mixer in a rectangular-shaped tank. The energy induced by the mixer accelerates the contact between the flocs, the polyelectrolyte and microsand, thereby insuring the formation of ballasted flocs. The standard hydraulic retention time for this step is approximately two (2) minutes at nominal flow rate.

3) Maturation:

The flocs previously formed are then maintained in suspension for a certain time in a large rectangular tank with the help of a rotating mechanical mixer. The smooth agitation of the water insures a gradual increase in floc size, reaching floc maturation. The standard hydraulic retention time for this step is approximately six (6) minutes at nominal flow rate.

4) Counter-current lamellar settling:

Ballasted flocs precipitate to the bottom of a hopper and the clarified water is collected at the surface using troughs. The sludge is drawn out of the hopper by a pump and is directed toward a series of hydrocyclones. The hydrocyclones located above the injection tank separates the microsand from the sludge. The microsand gets recirculated into the system via the underflow of the hydrocyclones while the sludge is evacuated through the overflow. The hydraulic retention time for the settling step is about three (3) minutes at nominal flow rate.

2.6.3 Characteristics and performances

By combining ballasted flocculation with lamellar settling, the Actiflo® process allows the water to reach rise rates in the clarifier. Therefore this technique provides excellent control and stability in spite of variations in flow rate, temperature, pH or turbidity of the raw water.

The Actiflo® process also accepts activated carbon dosages aimed at reducing taste and odours.

When the flow rate is set at its maximum value, the needed time to complete all three (3) stages of treatment, i.e. coagulation/flocculation/maturation, is only 10 minutes. This very short hydraulic retention time enables the process to respond quickly to adjustments in chemicals dosage. Ballasted flocculation produces high quality clarified water, even when operating under difficult conditions, such as very cold and/or very coloured waters or waters with a high turbidity.

Actiflo® pilot plant tests have demonstrated the efficiency of this process as well as its ability to rapidly respond to important changes in raw water flow rate and/or characteristics.

3.0 DESCRIPTION OF COMPONENTS

3.1 *ACTIFLO*® CLARIFIERS

3.1.1 General description

An Actiflo® clarifier is composed of coagulation, injection and maturation tanks, a lamellar settling tank with a hopper, a series of lamellar plates, troughs for the collection of clarified water, a microsand recirculation circuit, piping and a control panel.

3.1.2 Coagulation tank

Raw water enters the ***Actiflo***® at the bottom of the coagulation tank through a pipe with a coagulant previously injected upstream to improve contact time.

The coagulation tank is usually equipped with a mechanical mixer composed of a shaft and a three-bladed propeller made of stainless steel. The mixer is vertically mounted and the induced water flow direction is downward.

The mixer is driven by a motor and a helical gear speed reducer. It is a Totally Enclosed Fan Cooled motor (TEFC) and operates at a constant speed. In case of thermo-mechanical overload, the motor stops automatically and an alarm warns the operator.

A manual drainage valve located in the coagulation tank allows draining this tank through the existing draining network.

3.1.3 Injection tank

Coagulated water enters the top portion of the injection tank by going over a flooded overflow, which communicates directly with the coagulation tank. An accurate amount of microsand and polymer is added at the tank water surface. The polymer may also be directly added in the bottom injection or maturation tanks.

The injection tank is equipped with a mechanical mixer composed of a shaft and a three-bladed propeller made of stainless steel. The mixer is vertically mounted and the induced water flow direction is upward.

The mixer is driven by a motor and a helical gear speed reducer. It is a Totally Enclosed Fan Cooled motor (TEFC) and operates at a constant speed. In case of thermo-mechanical overload, the motor stops automatically and an alarm warns the operator.

A manual drainage valve located in the injection tank allows draining this tank and the maturation tank through the existing draining network.

3.1.4 Maturation tank

Water and flocculated solids originating from the injection tank enter at the bottom of the maturation tank through a common opening.

The maturation tank is equipped with a mechanical mixer composed of a shaft and a three-bladed propeller made of stainless steel. The mixer is vertically mounted and the induced water flow direction is downward. The maturation tank is equipped with baffles to insure better mixing.

The mixer is driven by a motor and a helical gear speed reducer. It is a Totally Enclosed Fan Cooled motor (TEFC) and may operate at a constant or variable speed. An adjustment to the rotating speed can be proven necessary when the incoming water flow rate is greatly reduced. In this case, it might be advantageous to compensate for losses in hydraulic energy by increasing the speed of rotation of the maturation mixer. In case of thermo-mechanical overload, the motor stops automatically and an alarm warns the operator. The unit automatic shutdown sequence is also initiated.

A manual drainage allows draining the maturation tank through the existing draining network.

3.1.5 Settling tank

The settling tank is composed of a set of lamellas, a sludge collection system and a clarified water collector.

The water coming from the maturation tank contains a suspension of microsand-ballasted flocs and enters the settling tank bottom by going through a vertical baffle. Most of the solids settle in the hopper while clarified water flows through the lamella pack to the clarified water troughs.

3.1.5.1 Lamella pack

The lamella pack consists of several polystyrene plates positioned at an angle of 60° with respect to the horizontal axis. They are disposed in such a way that they form hexagonal-shaped cells (honeycomb).

Smaller solids that did not settle directly in the hopper will deposit on the lamella pack surface during the water ascension into it and go down to the sludge collection hopper by its own weight. Clarified water flows upwards to the collection troughs and out of the clarifier.

***WARNING*: The lamella pack is installed in the settling tank section of the Actiflo® clarifier. It is made of a very flammable material. Do not expose it to open flames or sparks. Do not allow any welding works nearby unless special precautions have been taken.**

3.1.5.2 Sludge collection hopper

The collection of sludge takes place within a pyramidal hopper located in the settling tank under the lamella pack where the settling solids are pumped to the hydrocyclones.

3.1.5.3 Circular scraper

The settling tank has a circular scraper equipped with a galvanized steel drive shaft and steel scrapers. Rubber scrapers are fitted on to the metal support. The scraper is mounted vertically.

The scraper moves the microsand that has settled at the bottom of the hopper to its center where a basin captures the accumulated sludge.
The scraper is powered by a speed/ratio reducer motor. This motor is Totally Enclosed Fan Cooled (TEFC).

3.1.5.4 Clarified water troughs

Clarified water is collected above the lamellas modules by stainless steel troughs. The dimension and position of the square-edged notches are calibrated in order to obtain an optimal hydraulic distribution of the flow rate inside the settling tank.

3.1.5.5 Partial drainage

A manual valve, installed below the settling lamellas, allows for partial draining of the settling tank to facilitate the preventive maintenance of the lamellar plates.

3.1.5.6 Complete drainage

There is two ways to achieve a complete drainage of the clarifier:

1) By opening the coagulation, injection and hopper drain manual valves.
2) By opening the coagulation and injection manual drainage valves and let the recirculation pump on.

3.1.6 Microsand recirculation piping

3.1.6.1 Collection of sludge and microsand

Sludge containing microsand is collected in the hopper and pumped to the hydrocyclones through galvanized steel pipes and flexible non-abrasive pipes that can withstand highly abrasive conditions.

In case of clogging, a clean-out assembly is provided to backwash and flush the suction line by connecting a pressurized service water hose.

3.1.6.2 Microsand recirculation pumps

The clarifier is provided with a centrifugal pump equipped with a pulley and drive belt arrangement. A backup pump is also supplied. The backup pump will be used in supplement of the first pump when high turbidity Spring runoff is reached. The impeller and the inside of the volute are coated with a material (usually natural rubber) resistant to microsand abrasion. The motor is Totally Enclosed Fan Cooled (TEFC). In case of a thermo-mechanical overload, the motor will automatically shut down and an alarm will warn the operator.

The recirculation pump operates at a constant pressure. An increase in pressure may be caused by an obstruction of the discharge pipe, and a decrease in pressure may be caused by unpriming of the pump or an obstruction of the inlet pipe.

3.1.6.3 Hydrocyclones

The sludge and microsand are pumped by the recirculation pump to a hydrocyclone in which the microsand gets separated from the sludge particles. This process allows the recycling of clean microsand back into the system. Sludge-microsand separation is accomplished by a vortex effect exerting a centrifugal force on the mixture of particles. The microsand grains, more dense than sludge particles, descend along the internal surface of the hydrocyclone, while the sludge particles ascend. The microsand is returned to the injection tank whereas the sludge is evacuated out of the system.

3.1.7 Microsand

The dosage of microsand into the injection tank along with the polyelectrolyte (polymer) solution, serves as support for the flocs growing. The floc, ballasted with the microsand grain, becomes considerably heavier and therefore can settle more rapidly. The microsand has the following characteristics:

- Effective size: 85 μm
- Uniformity coefficient: < 1.6
- It is available in bags of 22.7 kg (50 lb)

A small portion of the microsand is lost in the process; therefore periodic addition of microsand in the system is required. Microsand is available from JMI.

3.1.8 Coagulant

The coagulant to be used can either be alum $(Al_2SO_4)_3 \bullet 14H_20$, PASS (Poly Aluminum Silicate Sulphate) or PAC (Poly Aluminum Chloride). It is injected at the head of the process directly into the pipe leading to the tank.

By reacting with the alkaline components of the water, the coagulant forms a precipitate, which sticks to the colloidal particles in suspension and organic components in the raw water, thereby producing a floc. In some cases, an alkali (ex. caustic soda) must be added to the water upstream of the clarifier, prior to the addition of coagulant.

The coagulant gets rapidly dispersed in the water when it is introduced into the coagulation tank.

WARNING: The operation staff should be aware that coagulant is highly corrosive. Spills should be cleaned immediately according to the MSDS instructions.

3.1.9 Flocculant (polyelectrolyte)

The polyelectrolyte is a white powder generally sold in big bags. The powder is naturally hygroscopic so it must be stored in a dry environment.

Polyelectrolyte is pumped into the injection and maturation tank along with the microsand. It forms a coating on the microsand particles in order to activate them and facilitate fixing of the floc onto the sand particle surface. Other injection points of polymer can also be used, that is, at the inlet of the maturation tank and at various locations inside the maturation tank.

WARNING: The operation staff should be aware that polymer solution could be very slippery. Spills should be cleaned immediately according to the MSDS instructions.

3.1.10 Control panel

The ***Actiflo***® clarifier operation is fully automated but manual control is possible from the control panel interface. The control panel normally includes but is not limited to components such as fuses, starters, selectors, warning lights, PLC (Programmable Logic Controller) and operator interface.

The electrical circuit of the control panel performs the necessary functions for a fully automatic operation and equipment protection of the ***Actiflo***® unit. The control panel gives the operator access to every mechanical component of the system. In addition, all the alarms are channelled through the control panel, which in turn warns the operator in the event of equipment malfunction.

Refer to document ST-002 «Functional description of control system» of Appendix «Control & Automation» for a control panel detailed description.

4.0 START-UP & OPERATION

4.1 START-UP

4.1.1 Preliminary verification

Before starting the ***Actiflo***®, the following points must be checked:

- Remove any debris from the settling tank to prevent hydrocyclone clogging;
- Every section of the ***Actiflo***® must be filled with water;
- Valves configuration on the microsand recirculation lines is adequate;
- Chemical metering systems must be ready to operate;
- Chemical storage tanks must be full;
- Chemical metering pumps must be calibrated and set for the desired dosage. These can however be adjusted once that the system is operational;
- All the field instruments must be calibrated (flowmeter, pressure transmitter);
- Verify the oil level in the mixers reducers and the recirculation pumps;
- Verify the rotation of each mixer;
- Verify the rotation of each recirculation pump; remove the belt to prevent impeller unscrewing if the rotation is the wrong way;
- Verify the proper installation of the mixer's impellers, specially the height above tank floor (see Technical Sheet);
- Adjust motor overload protection to the proper value as indicated on each motor's nameplate;
- Record the pressure at the hydrocyclone inlet; the gauge should indicate 15 PSI (103.4 kPa).

Once all these conditions have been checked, the system can be put into operation.

4.1.2 Initial microsand loading

The standard microsand load in an Actiflo® clarifier usually ranges from 2 to 3 kg per m^3/h of clarified water produced.

The addition of microsand is done by pouring it directly in the injection tank until the required concentration is reached. It is preferable to begin by adding a small quantity of microsand and measure the resulting microsand concentration in the hydrocyclone underflow after a whole recirculation cycle has been completed (15-20 minutes). The quantity of microsand should be increased until the optimal concentration in the underflow is reached (typically 80 to 200 ml/litre).

4.1.3 Automatic start-up

Refer to document ST-002 «Functional description of control system» of Appendix «Control & Automation» to start the ***Actiflo***® system in automatic mode.

4.2 NORMAL OPERATION

Note: In the case of a discrepancy between this section of the Manual and the Functional description of control system, the later shall prevail.

4.2.1 *Actiflo*® clarifiers

4.2.1.1 Microsand monitoring

Although a minor amount of microsand is constantly discharged out of the process and a sand concentration as low as 2 g/l is sufficient for satisfactory operation of the ACTIFLO process, the microsand concentration should always be maintained at recommended levels (3-6 g/l). This insures that the system is always prepared to treat the worst possible raw water conditions. Therefore, the operators should monitor the microsand concentration 2-3 times per day. The concentration can easily be estimated using the following method.

Sampling (system concentration from hydrocyclone underflow)

a. Verify that each operating hydrocyclone has an uninterrupted conical discharge. If you have a splashguard covering the apex tip, place it in the up position to verify this. After verification the splashguard should be returned to the down position prior to sampling.

b. Obtain a 1000-2000 ml graduated cylinder to take the hydrocyclone underflow sample. Samples can be taken from a portion of the underflow discharge. However, it is important to be consistent and obtain the sample from the identical section of the underflow discharge every time a grab is taken. If the underflow discharge is constantly or periodically roping, the underflow discharge should be sampled with a swirling motion that catches the outer and center portions of the underflow in each sample.

c. Fill the cylinder as close to the 1000 ml or 2000 ml mark as possible without over spilling. Caution: The 1000 ml cylinder may fill quickly and with force.

d. Allow the sample to settle for 3 minutes.
e. Record the volume of the settled sand (Vs) in ml along with the total sample volume (V) in ml. See figure below.

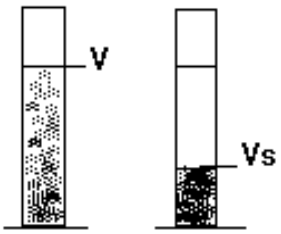

f. Repeat steps c through e on the same hydrocyclone two more times.

g. Use the same sampling procedure as you did on the first hydrocyclone and repeat steps c through f for all hydrocyclones in operation on the system. For example if you have two hydrocyclones operating on a given system you should have six values for Vs and six values for V.

h. To determine the concentration of sand in the entire system you must next average all collected values of Vs. Also, average all collected values of V. Now you can use the following two equations provided in section 3 and 4 below to first determine Cs (the microsand concentration in the hydrocyclone underflow) and lastly Cm (the microsand concentration in the ACTIFLO system).

Note: For the most accurate determination of microsand in any given system the sampling procedure above should be performed three times throughout a 24-hour period. Three separate values of Cm should be averaged to determine one final microsand concentration for the day. It is also important to record and trend the final daily value of Cm to give indication of microsand loss over an extended period of time.

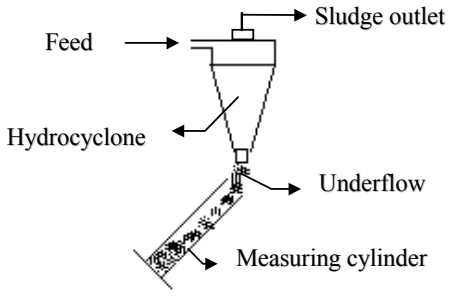

<u>Sand Concentration of Hydrocyclone Underflow</u>

The microsand concentration of the hydrocyclone underflow is calculated with the following formula:

$$Cs = \frac{1000}{V} \times Vs \times 1.7$$

Where:

Cs: Microsand concentration in the hydrocyclone underflow (g/l)
V: Sample volume taken in a graduated cylinder (mL)
Vs: Volume of the settled microsand after settling for 3 minutes
1.7: Density of the settled microsand

System Sand Concentration

Knowing the flow rate of the hydrocyclone underflow (gpm) and the microsand concentration (g/l) of the hydrocyclone underflow, the microsand concentration (g/l) in the ACTIFLO system is determined using the following formula:

$$C_m = \frac{\mathrm{UF} \times N \times C_S}{Q_{\mathrm{influent}}}$$

Where:

C_m: Microsand concentration in the ACTIFLO system, g/l
C_s: Microsand concentration in the hydrocyclone underflow, g/l
UF: Hydrocyclone underflow flowrate, 3.5 gpm
N: No. of hydrocyclones in operation
$Q_{influent}$: Influent flow rate, gpm

Microsand addition

Some microsand is lost at the hydrocyclones overflow and at the ***Actiflo®*** effluent. Periodical microsand addition is required to compensate for these losses. The addition of microsand is done directly in the injection tank. Since microsand contains a small proportion of very fine particles, the turbidity of the clarified water could increase slightly for a short period following the addition of microsand.

In standard operation mode, if a sustained increase of the raw water turbidity happens, it may be necessary to increase the concentration of microsand in the system to maintain the removal efficiency.

4.2.1.2 Microsand recirculation pumps

Each ***Actiflo***® has two recirculation pumps and associated piping. The pumps are each protected by a pressure transmitter. Alarms will be issued in any of the following situations:

- Thermo-mechanical overload of the pump: this is normally a sign of overheating of the pump motor and can be caused by a mechanical breakdown or a pressure surge. The operator must correct this problem by verifying the pump and motor as well as the outlet piping, and then reactivate the overload relay located inside the control panel.

When an alarms is activated, the pump stops automatically and the alarm light blinks on the control panel. The operator must acknowledge the alarm by pressing the ALARM ACKNOWLEDGE button located on the control panel, fix the problem and then reset the system by pressing the ALARM RESET button. The pump will restart automatically.
It is essential that the recirculation pump be in operation continuously. When the pump stops, sludge and microsand accumulate in the hopper; this may clog the recirculation line. When the recirculation pump need to be stopped, the mixer in the maturation tank must be stopped first, followed by a 30 minute delay before stopping the pump. This allows the hopper to be emptied before stopping the pump. The 30-minute delay is pre-programmed and can be adjusted by the operator on the control panel.

4.2.1.3 Hydrocyclones

The operator must make sure that the hydrocyclone outlets are free of obstruction at all times. Debris as small as 13 mm (1/2") can clog the underflow.

Waste sludge is evacuated from the ***Actiflo***® at the hydrocyclone overflow (70% to 90% of the hydrocyclone flow rate). A small amount of microsand is lost at the overflow. It is important to check on a daily basis if the loss is higher than normal. This can be verified by collecting a 1-liter sample of the overflow into an Imhoff cone and measuring the volume of settled microsand after 2 or 3 minutes. Record the value and compare it with past measurements. See troubleshooting section.

The same procedure is used to measure the concentration of sand at the hydrocyclone underflow (10% to 30% of the hydrocyclone flow rate):

- Collect a 1-liter sample from the underflow (mixture of microsand and water).
- Allow the sample to settle for 2 or 3 minutes and then measure the volume of settled microsand.
- The volume of microsand should range between 80 and 200 ml per litre of water (typical).

4.2.1.4 Mixers

The mixers all have specific rotation direction and speed. In the event of a mixer motor overload, the mixer automatically stops and an alarm warns the operator. The operator must press the ALARM ACKNOWLEDGE button, correct the problem, and then reset the system by pressing ALARM RESET button. If the operator cannot correct the problem, the ***Actiflo***® should be shut down, as it is impossible to produce clarified water with a mixer out of service.

4.2.1.5 Circular Scraper

When an overload occurs to the scraper's motor or when a very high torque is detected, the motor shuts down automatically and an alarm warns the operator and the **Actiflo** will stop as per the stop sequence.

4.2.2 Dosage of chemicals

4.2.2.1 Coagulant

The coagulant is injected into the raw water feed line.

The concentration of coagulant at the inlet of the system depends on the type of coagulant used.

In either case, the dosage to be used varies according to the characteristics of the raw water. An increase in turbidity of the raw water must signify an increase in product dosage. The proper dosage is determined by a jar test.

The concentration of coagulant at the inlet of the system is calculated from the flow rate of the raw water and metering pumps:

$$\text{Coagulant concentration (mg/L)} = \frac{\text{metering pump rate (mg/h)}}{\text{raw water flow rate (L/h)}}$$

4.2.2.2 Flocculant (polyelectrolyte)

The polyelectrolyte is used in solution with a concentration ranging from 0,5 to 2.5 grams per litre; the produced solution is viscous. In order to obtain a high-quality polymer, it is recommended to use non-chlorinated filtered water for its preparation and transport. The concentration of polyelectrolyte in the clarifier should be between 0.40 to 0.90 mg/L. Depending on the quality of the raw water, this concentration can be increased or decreased. The polyelectrolyte concentration in the system is calculated from the flow rate of the raw water and metering pumps:

$$\text{Polyelectrolyte concentration (mg/L)} = \frac{\text{metering pump rate (mg/h)}}{\text{raw water flow rate (L/h)}}$$

The ideal dosage of polyelectrolyte can be determined with a jar test (See jar test procedure in this manual).

Insufficient polymer dosage will cause free flocs to appear that are not ballasted by the microsand and which will not be correctly eliminated in the settling tank. The clarified water might have a higher turbidity and/or color, and an important aluminum concentration.

However, excess in polyelectrolyte dosage can produce very sticky sludge, which is difficult to recycle.

4.2.2.3 Alkali, pH adjustment

The water's pH is the most important factor to consider in a coagulation process. When using alum, maximum coagulation efficiency is reached when pH readings are between 5,5 and 7,0. If the raw water has a low pH, it is important to increase it by adding an alkaline product (ex. caustic soda, etc.) to the water upstream of the coagulation step.

Upstream of the coagulation step, the hydraulic residence time of the alkali must be long enough, allowing time for it to completely dissolve in the water, increasing the precision in the adjustment of the water's pH.

5.0 SURVEY OF OPERATIONS

In order to insure a reliable survey of the Actiflo® system operation, and to provide the operators with a useful data bank, we suggest to the operators to record the following parameters:

on a hourly basis:

- turbidity, raw water;
- color, raw water;
- pH, raw water;
- turbidity, clarified water;
- color, clarified water;
- pH, clarified water;

every eight hours:

- flow rate, raw water;
- flow rate, coagulant metering pump, and calculated concentration;
- flow rate, polyelectrolyte metering pump, and calculated concentration;
- flow rate, alkali metering pump, and calculated concentration;
- alkalinity, clarified water;
- pressure at the recirculation pump outlet;
- pressure at the hydrocyclones inlet;
- microsand concentration at the hydrocyclone underflow.

on a daily basis:

- total quantity of clarified water;
- mixers speed;
- electric current drawn by the mixers;
- other parameters of interest: dissolved iron and manganese, total organic carbon...
- alkalinity, raw water
- average raw water flow

on a weekly basis:

- flow rate of the hydrocyclone underflow;
- flow rate of the hydrocyclone overflow.

5.1 AUTOMATION

Refer to document ST-002 «Functional description of control system» of Appendix «Control & Automation».

5.2 SHUT DOWN

In manual mode, when the microsand recirculation pump needs to be stopped, the following procedure must be followed in order to prevent possible clogging problems.

- Stop the mixer in the maturation tank. This allows the microsand to settle in the maturation tank instead of in the hopper.
- After approximately 30 minutes, verify that the underflow of the hydrocyclone does not contain any microsand.
- The microsand recirculation pump can then be stopped without any risk of clogging the recirculation line.

5.3 TROUBLESHOOTING

5.3.1 Increase in clarified water turbidity

The turbidity of the clarified water should normally be between 0.4 and 1.0 NTU. If the turbidity exceeds 1,0 NTU, verify:

- the flow rate of raw water: if it is greatly increased or diminished, dosage flow rate of coagulant and polyelectrolyte should be adjusted in consequence;

- the flow rate of coagulant and polyelectrolyte: the metering pumps must inject an accurate dosage of these chemicals, such that the desired concentrations in the system can be obtained;

- the quality of raw water: if the turbidity, colour and/or the alkalinity of the raw water are increased or decreased, it is normally necessary to adjust the concentration of coagulant in the system. This dosage can be predetermined with the help of a jar test. However, a change in the quality of the raw water does not usually require an adjustment in polyelectrolyte concentration.

- the concentration of microsand in the underflow of the hydrocyclone: this must approach a value between 80 and 200 ml/L. Deterioration in the raw water quality can necessitate an increase in the quantity of microsand in the system.

- sludge-sand recirculation rates: these flow rate generated by the recirculation pump must be kept constant.

- rotation speeds of the injection and maturation mixers: these speeds can be read directly on the display of the corresponding variable frequency drive.

5.3.2 Increase in clarified water colour

See section 5.3.1.

5.3.3 Stopping of microsand recirculation pump

In manual mode, when the microsand recirculation pump needs to be stopped, one must, in order to prevent possible clogging problems, proceed as follow:

- stop the mixer in the maturation tank. This allows the microsand to settle in this tank instead of in the hopper;

- after approximately 30 minutes, verify that the underflow of the hydrocyclone does not contain anymore sand;

- afterwards, one can stop the pumping of sand without any risks of clogging the microsand recirculation circuit.

5.3.4 Power failure

Refer to the section « Power Failure » of the ST-002 «Functional description of control system» of Appendix «Control & Automation».

6.0 JAR TEST PROCEDURE

6.1 INTRODUCTION

In order to simulate the ACTIFLO® process, a modified Jar test procedure was developed. The procedure can be used to find the adequate coagulant and polymer dosages and the optimum pH of coagulation to obtain settled water low in turbidity and with a high filterability index. Furthermore, the modified Jar test procedure has the capability to evaluate or predict process performances of an existing ACTIFLO® unit and bring accurate diagnosis on operating troubleshooting.

6.2 MATERIAL REQUIRED

- Phipps & Bird Jar Test apparatus or equivalent lab stirrer allowing up to 300 RPM rotational speed.
- Circular beakers (1litre)
- Microsand
- Polymer (Allied Colloids, serial LT or equivalence)
- Coagulant (Alum, ferric chloride, PAC, PASS 100 or equivalence)
- Acid or base for pH and alkalinity adjustment (NaOH, aluminates, HCl, H_2SO_4, lime, carbonate, bicarbonate, CO_2, or equivalence)
- Turbidimeter (Hach 2100AN or equivalence)
- pH-meter (serial Hach EC or equivalence) and calibration solutions (pH=4, pH=7 and pH=10)
- Chronometer or stopwatch

6.3 LABORATORY PROCEDURES

1. Note settled and raw water parameters values at the plant (turbidity, colour, dissolved aluminum, etc.) if the purpose of this test is to simulate the full-scale unit.
2. Fill up the 1-liter beakers with raw water.
3. Set the beakers on the bench.
4. Make sure raw water temperature corresponds to the desired temperature.
5. Start mixing
6. Add acid, base or equivalence and adjust at the optimum coagulation pH.
7. Add coagulant simultaneously in all beakers with micro-syringes from 0, 0.5, 1.0, 2.0 or 5 minutes after reaching the right pH in accordance with contact times simulated.
8. Two minutes after adding coagulant, add micro-sand and the polymer (half the dosage) using a pipit.
9. Two minutes after adding micro-sand and polymer.
10. After a maturation contact time of 6 minutes, stop stirring and allow the water to settle for the next 3 minutes.
11. Sample settled water from 5 to 10 cm below the supernatant surface using a 100-ml syringe. Proceed slowly. Make required analysis.

6.4 ANALYSIS

<u>Turbidity, colour and other parameters</u>

1. Measure turbidity (NTU) using a turbidimeter.
2. Measure apparent colour (ACU) using a spectrometer.
3. Measure pH using pH-meter.
4. Measure any other required parameters.

7.0 MAINTENANCE

7.1 *ACTIFLO*® CLARIFIER

7.1.1 Lamella pack

At least once a month or as required, clean the lamella pack. To do so, stop the mixers; partially drain the clarifier such that the lamellas are exposed (use the partial drainage valve located on the ***Actiflo***® hopper). The lamella can then be cleaned using a pressurized water jet. Remove any substance that is stuck to the settling module and which could interfere with the process efficiency.

7.1.2 Mixers

For each mixer:

- Make sure that the gearbox remains clean.
- Check on a regular basis the oil level in the gearbox.
- Change the oil in the gearbox.
- Refer to the mixer supplier manual for more information.

7.1.3 Microsand recirculation pumps

- Check on a regular basis the oil level in the bearing housing chamber.
- Proceed daily to a visual inspection of the packing adjustment.
- Every 1000 hours of service (6 weeks at 24 hr/day), lubricate the bearing housing chamber.
- Once a year, proceed to an inspection of the pump: dry-seal, impeller, rubber coating, bearings, etc.
- Refer to the pump supplier manual for complete inspection and maintenance requirements.

7.1.4 Hydrocyclones

- After the first year, inspect the inside surface. Replace worn down sections, if needed. The first inspections will determine the frequency of replacement.
- Refer to the hydrocyclone supplier manual for complete inspection and maintenance requirements.

7.1.5 Scraper

- Every 8700 hours of continuous operation, change the oil on the reduction motor.

7.2 CONTROL PANEL

For each panel, including junction boxes:

- Replace fuses when needed.
- In case of an electrical problem other than a fuse, contact a certified electrician and verify the circuits.
- Refer to the appropriate drawings.

7.3 INSTRUMENTATION

For each meters equipment:

- Calibrate on a regular basis.
- Refer to the supplier manual for calibration instructions and maintenance requirements.

7.4 VALVES

7.4.1 Manual valves

- No preventive maintenance required.
- Refer to the supplier manual.

7.4.2 Automatic valves

- Refer to the supplier manual.

7.5 PERIPHERAL EQUIPMENT

- Any other peripheral equipment needing maintenance should be inspected on a regular basis.
- Refer to the supplier manual.

JOHN MEUNIER

Meadowbank mining Corp.
ACP-700R
Technical Data Sheet
Reference : NC01

ACTIFLO®

PROJECT SUMMARY

ST-001

VEOLIA WATER
Solutions & Technologies

LEFT BLANK

JOHN MEUNIER

NOMENCLATURE/ BILL OF MATERIALS

TITRE/ TITLE	Rev.	DESCRIPTION	PAR/ BY:	APPR:	DATE:	Affaire / Contract	Meadowbank Mining
Project Summary	0	SUBMITTAL	P.Ste-Marie	P.S.M.	2009-03-26		
	1						
	2					REF. No.	NC01 | 0
	3						
DESSIN /DWG # ST-001	4					Date:	2009-03-26

REV.	ITEM	QTE/QTY. Unit.	QTE/QTY. Total	DESCRIPTION	P&ID I.D./TAG	CAT. ACCPAC	SOURCE	FA/SA FI SITE	P / N
				ACTIFLO PROCESS					
				GENERAL					
				Application:					
				Process water					
				Number of units:					
				2					
				Manufacturer:					
				John Meunier Inc.					
				Model:					
				ACP-700R					
				Nominal capacity of ACP-700:					
				12500 m³/d					
				Nominal flow rise rate of ACP-700:					
				40 m/h					
				Retention time at nominal flow of ACP-700					
				coagulation tank					
				2 min.					
				injection tank					
				2 min.					
				maturation tank					
				6 min.					
				Required capacity:					
				25 000 m³/d					
				Required flow rise rate:					
				80 m/h					
				Retention time at required flow					
				coagulation tank					
				1 min					
				injection tank					
				1 min					
				maturation tank					
				3 min					

JOHN MEUNIER

NOMENCLATURE/ BILL OF MATERIALS

TITRE/ TITLE	Rev.	DESCRIPTION	PAR/ BY:	APPR:	DATE:	Affaire / Contract	Meadowbank Mining
Project Summary	0	SUBMITTAL	P.Ste-Marie	P.S.M.	2009-03-26		
	1						
	2					REF. No.	NC01 | 0
	3						
DESSIN /DWG # ST-001	4					Date:	2009-03-26

REV.	ITEM	QTE/QTY. Unit.	QTE/QTY. Total	DESCRIPTION	P&ID I.D./TAG	CAT. ACCPAC	SOURCE	FA/SA FI SITE	P / N
				SETTLING TANK					
				Height of lamella pack:					
				30" (762 mm) vertical					
				Angle:					
				60 degrees from horizontal					
				Collection troughs:					
				4 per unit					
				RECIRCULATION SYSTEM					
				Quantity of complete recirculation line:					
				2 per unit, 1 duty and 1 stand-by each recirculation line has one pump and one hydrocyclone					
				Recirculation rate:					
				3.3% @ required flow rate capacity with one pump running					
				Recirculation flow:					
				34 m^3/h per recirculation line					
				Sludge production flow:					
				27 m^3/h per recirculation line					

CONTROL AND AUTOMATION

ST-002

LEFT BLANK

Two Actiflo®
Functional Description
TS-002

TABLE OF CONTENTS

1 GENERAL DESCRIPTION 5

1.1 CONTROL LAYOUT 5
1.2 HARDWARE CONNECTION 5
1.3 LIST OF CONTROLLED EQUIPMENTS 5
1.4 CONTROL PANEL COMPONENTS 5
1.5 LOCAL CONTROL 6
1.5.1 Pushbutton and pilot light colors 6
1.5.2 Override module 6
1.5.3 Local station 6
1.5.4 Transmission of signals (outward from panel) 6
1.6 ANALYSER AND DETECTOR 7
1.6.1 Analyser 7
1.6.1.1 Display on operator interface 7
1.6.1.2 Scaling 7
1.6.1.3 Out of range 7
1.6.1.4 Analog alarm delay 7
1.6.1.5 Process alarm 7
1.6.1.6 Deviation alarm 7
1.6.1.7 Activation conditions for alarms 7
1.6.1.8 Totalizer 7
1.6.1.9 Calibration mode 8
1.6.2 Detectors 8
1.6.2.1 General 8
1.6.2.2 Digital alarm delay 8
1.6.2.3 Security logic 8
1.6.2.4 Activation conditions for alarms 8
1.7 VALVES 9
1.7.1 Operational Mode 9
1.7.2 Hand – Off – Auto Selectors 9
1.7.3 4 to 20 mA Modulator 9
1.7.4 Valve alarm delay 9
1.7.5 Limit switch 9
1.7.6 Open Fault Alarm 10
1.7.7 Close Fault Alarm 10
1.8 TYPICAL MOTOR 11
1.8.1 Operational Mode 11
1.8.2 Hand-Off-Auto Selectors 11
1.8.3 Local disconnect switch 11
1.8.4 Wired logic stop 11
1.8.5 Motor alarm delay 11
1.8.6 Start fault alarm 12
1.8.7 Running time 12
1.9 METERING PUMP 13
1.9.1 Operational mode 13
1.9.2 Hand – Off– Auto Selectors 13
1.9.3 Start Control 13
1.9.4 Alarm 13
1.9.5 Running Time 13
1.10 SECURITY LEVEL 14
1.11 EMERGENCY STOP 14
1.12 POWER OUTAGE 15
1.12.1 Power outage 15

1.12.2 Power recovery *15*
1.12.2.1 Actiflo® 15
1.13 PID LOOP 16
1.13.1 Accessible signals from the operator interface *16*
1.13.2 Operational Mode *16*
1.13.3 Volume compensated integral *16*
1.14 MANAGEMENT OF ALARMS 17
1.14.1 Alarm Priorities *17*
1.14.2 Distinguishing between alarm and fault *17*
1.14.3 After an Alarm *17*

2 OPERATOR INTERFACE 18

2.1 LOCAL OPERATOR INTERFACE 18

3 RAW WATER 18

3.1 ANALYSERS 18
3.1.1 Raw water turbidimeter *18*

4 ACTIFLO® 19

4.1 DESCRIPTION 19
4.2 LOCAL CONTROL 19
4.2.1 Pushbuttons and pilot lights *19*
4.2.2 Pushbutton and pilot light colors *19*
4.2.3 Transmitted signals (to others) *20*
4.2.4 Transmitted signals (to others) *20*
4.2.5 Signals to be received (from others) *20*
4.3 AUTOMATISM / AUTO MODE 21
4.3.1 Auto Mode *21*
4.3.2 Activation conditions for auto start sequence *21*
4.3.3 Activation conditions for auto stop sequence *21*
4.3.4 Major faults *21*
4.3.5 Alarm deactivation delay after start of Actiflo® unit *22*
4.3.6 No alarm mode *22*
4.3.7 Actiflo® start sequence *23*
4.3.8 Actiflo® stop sequence *24*
4.3.9 Recirculation pump logic *25*
4.4 PUMPS AND MIXERS 25
4.4.1 Coagulation mixer *25*
4.4.2 Injection mixer *25*
4.4.3 Maturation mixer *26*
4.4.4 Recirculation pump *26*
4.4.5 Scraper *27*
4.5 VALVES 28
4.5.1 Raw water valve *28*
4.6 ANALYSERS 29
4.6.1 Raw water flowmeter *29*
4.6.2 Coagulation pH *30*
4.6.3 Clarified water turbidimeter *31*
4.6.4 Actiflo® high high level switch *32*
4.6.5 Scraper torque detector *32*

5 CHEMICAL DOSING 33

5.1 COAGULANT 33
5.1.1 Coagulant dosing *33*
5.1.2 Coagulant preparation system *35*

5.1.2.1 Preparation system sequence 35
5.1.2.2 Pumps, mixers and motors 36
5.1.2.3 Valve 37
5.1.2.4 Analysers 37
5.2 POLYMER 40
5.2.1 Polymer dosage 40
5.2.2 Water transport valve, polymer 42
5.2.3 TOMAL Automatic polymer preparation system 42
5.3 CAUSTIC SODA (NAOH) 43
5.3.1 Caustic Soda dosage 43
5.3.2 Mixer 44
6 SERVICE WATER 45
6.1 PUMPS 45
7 INDEX OF TAGS 46

1 General description

The Meadowbank Mining Corp. designated John Meunier Inc. as the supplier of two Actiflo® units. The designed rated flow is 50 000 m^3/day.

The following document describes the typical operation of the system. John Meunier Inc may be unable to supply some of the described components.

1.1 Control layout

An Allen Bradley SLC 5/05 16k PLC is installed; it is located within a steel NEMA 12 control panel.

The maturation mixer motor is powered by a VFD. All other motors are powered by DOL starters. All motors are started by a Motor Control Center (MCC) provided by another supplier.

The control panel is equipped with an Allen Bradley PanelView Plus 600 touch-screen communicating with the PLC through an Ethernet network. An Ethernet HUB is installed in the panel, interconnecting the PanelView and PLC.

1.2 Hardware connection

All motors and instruments are controlled and powered by the system's panel. The Actiflo® unit pre-cabling to junction boxes is done at the plant by John Meunier Inc. The cabling between junction boxes and the control panel will be provided by John Meunier. Panel connections will be done by others.

1.3 List of controlled equipments

Refer to panel drawings and build of material for a complete list of devices controlled from the PLC.

1.4 Control panel components

View panel drawings for a complete list of components.

1.5 Local control

On the control panel's door, we find an HMI-type operator interface allowing process and alarm monitoring operations such as acknowledgement and reset of alarms.

We can also find a mushroom-head, "push & pull" pushbutton for emergency stop.

Buttons and pilot lights are installed on the panel's door.
Pilot lights show current operational conditions.

"POWER ON"	Panel is powered
"ALARM" blinking	Activated but unacknowledged alarm signal
"ALARM" steady	Alarm signal is acknowledged
"ALARM" off	No current alarm.

Pushbuttons:

1. Alarm acknowledgement
2. Response to fault (resetting of VFD and scraper torque alarm)
3. Emergency stop (mushroom-head button)

1.5.1 Pushbutton and pilot light colors

Pilot lights:
1. Power on = white
2. Alarm = red

Pushbuttons and selectors:
1. Alarm acknowledgement = black
2. Fault response = black
3. Emergency stop = red

1.5.2 Override module

An override module is a component installed within the control panel that allows the operation of a motor or valve in non automated mode. It is a mode used only when a control system component failure occurs. Only cabling types of protection are active. See the specific description of each component for further details.

1.5.3 Local station

When needed, a local station, which comprises a Hand-Off-Auto selector, is installed in the area of equipments to be controlled.

1.5.4 Transmission of signals (outward from panel)

Here are wired-logic transmitted signals available at system's panel:

- Dry contact, general alarm
- See specific sections for other signals

These signals are planned in a standard way and might be used during start-up and/or troubleshooting; they might also be used to start/stop other related equipments such as a raw water pump, a sampling pump, etc.

1.6 Analyser and detector

1.6.1 Analyser

1.6.1.1 Display on operator interface

Each analog input is displayed in engineering units.

1.6.1.2 Scaling

Each analog input is scaled in engineering units. The full-scale value must be set up on the operator interface to match the range of the instrument.

1.6.1.3 Out of range

The minimum and maximum range of an instrument is defined as the engineering value respectively associated to 4 mA and 20 mA signals. They stand for the limits of the operational scale of the instrument. All instruments mentioned in this document have a programmed “out of range” alarm. If signals exceed 20.5 mA or drop below 3.5 mA for over 60 seconds, an “out of range” alarm is detected and the instrument’s reading is forced to 0. When an out of range alarm happens, all process alarms for the instrument are deactivated.

1.6.1.4 Analog alarm delay

The analog alarm delay is common to all process alarms and for all instruments. If for one instrument the delay is different from the common delay, it is specified in the instrument’s section.

1.6.1.5 Process alarm

A process alarm is activated when the instrument’s reading is over or under setpoint (determined by operator) and when the common analog alarm delay ran out.
Some instruments are programmed with HH, H and/or L, as well as LL alarms. The most common are HH (very high), H (high), L (low) and LL (very low). Process alarms are deactivated when corresponding transmitter is out of range. When an alarm has a different delay than the common analog alarm, it is specified with the description of the instrument’s alarm.

1.6.1.6 Deviation alarm

A deviation alarm is activated when the instrument’s reading deviates from the loop’s setpoint (±10%) and the common analog alarm delay has elapsed. It is a useful alarm for an instrument whose reading is an automatic control value for a control loop in automated mode. Alarm activation condition: the control loop must be in auto mode.

1.6.1.7 Activation conditions for alarms

The activation conditions for process and deviation from setpoint alarms are particular to each instrument and depend on the process phase in which it is required, and its use. Normally, these conditions are common to all instrument process and deviation alarms. When an alarm requires activation conditions that are specified, these are noted along with the instrument’s description.

1.6.1.8 Totalizer

For the specific case of a flowmeter, two totalizers are programmed to compute the water volume:

- one is dedicated to interface display;
- the other one is dedicated to reports.

They are reset to 0 at “99999999”, whatever the unit value is. The one dedicated to display may be edited by the operator.

1.6.1.9 Calibration mode

The calibration mode allows the operator to establish the engineering value of the instrument at its last value, so the calibration of the instrument may be done without activating useless alarms.
When the instrument is in calibration mode the operator is able to modify the engineering value at the interface.

1.6.2 Detectors

1.6.2.1 General

Detectors emit a digital signal. A signal change of state produces an alarm and/or an action. A common alarm delay, adjustable or not, is always programmed to avoid false alarms. Detectors may be high level switches, low level switches, for chlorine leaks, intrusions, etc.

1.6.2.2 Digital alarm delay

The digital alarm delay is common to all detectors. If a detector's delay is different from common delay, it is specified in the instrument's section.

1.6.2.3 Security logic

When a detector's dry contact is used to trigger an alarm, it must be connected in a way that triggers the alarm when there is a circuit opening (power loss).

1.6.2.4 Activation conditions for alarms

Activation conditions for detector alarms are specific to each detector and depend on the process phases in which detectors are required, and their use. Normally, these conditions are common to all detector alarms. When an alarm requires activation conditions that are specified, these are noted with the instrument's description.

1.7 Valves

1.7.1 Operational Mode

Interface manual mode:
A valve may operate in manual mode if the following conditions are met:

1. If manual mode is selected on interface
2. If the local selector or the override module is in “auto” position
3. If there is no detected fault (ALARM)
4. If the emergency stop is not activated

Auto mode:
A valve may operate in auto mode if the following conditions are met:

1. If automatic mode is selected on interface
2. If the local selector or the override module is in “auto” position
3. If there is no detected fault (ALARM)
4. If the emergency stop is not activated
5. If the automatic open/close conditions are met

1.7.2 Hand – Off – Auto Selectors

In some instances, valves may be operated manually with the help of a Hand-Off-Auto selector installed in one of the following way:

- At a local station installed near the equipment;
- On front of control panel;
- An override module installed in the control panel;

Only the emergency stop stays active on manual mode. In the case of pneumatic valves, this function is possible if valve air pressure is adequate.

Selector’s position:

- Hand: the valve opens if there is no prevailing closing condition through wired logic.
- Off: valve closes.
- Auto: valve opens if the open control is activated from automation system, and if there is no closing condition by wired logic.

1.7.3 4 to 20 mA Modulator

Valves with pneumatic actuators or modulator type electric valves are equipped with a Hand-Off-Auto Selector and a 4 to 20 mA simulator (installed in panel) activating them and modulating the opening during control system failures. In the case of pneumatic valves, this function is possible if valve air pressure is adequate.

1.7.4 Valve alarm delay

For each valve alarm, a delay is always programmed as one of the alarm conditions. This delay is common to all valves unless otherwise indicated in valve’s description.

1.7.5 Limit switch

In the case of a valve equipped with a limit switch connected to the automation system, the switch will be mentioned in the valve’s description.

1.7.6 Open Fault Alarm

- For on/off actuator valves equipped with a limit switch in “On” position, if the opening control of the valve is active, but the open state confirmation isn’t and the alarm delay has elapsed, the open fault alarm is activated.
- For on/off actuator valves equipped with a limit switch in “Off” position, if the control of the valve is active but the close state confirmation isn’t and the alarm delay has elapsed, the open fault alarm is activated.
- For modulating actuator valves equipped with a limit switch in “Off” position, if the valve control is active at a degree above 20% but the close state confirmation isn’t and the alarm delay has elapsed, the open fault alarm is activated.
- For modulating actuator valves associated with a flowmeter, if flowmeter is not Out of range, if the opening control of the valve is active at a degree above 20% and the flow rate is below 5% of flowmeter’s range, the open fault alarm is activated.

1.7.7 Close Fault Alarm

- For on/off actuator valves equipped with a limit switch in “Off” position, if neither the valve’s opening control nor the close state confirmation is active, the close fault alarm is activated.
- For on/off actuator valves equipped with a limit switch in “On” position, if the valve’s opening control is not active, the open state confirmation is still active and the alarm delay has elapsed, the close state alarm is activated.
- For valves with modulating actuators equipped with a limit switch in “On” position, if the opening control of the valve is not active, the open state confirmation is still active and the alarm delay has elapsed, the close fault alarm is activated.
- For valves with modulating actuators equipped with a limit switch in “Off” position associated with a flowmeter, if flowmeter is not out of range, and if the opening control of the valve is not active and the flow rate is above 5% of flowmeter’s range, the close fault alarm is activated.

1.8 Typical Motor

1.8.1 Operational Mode

Interface manual mode:
A motor may operate in manual mode if the following conditions are met:

1. If manual mode is selected on interface
2. If local selector or override module is in Auto position
3. If no fault is detected (ALARM)
4. If the emergency stop is not activated

Auto mode:
A motor may operate in auto mode if the following conditions are met:

1. If auto mode is selected on interface
2. If local selector or override module is in Auto position
3. If no fault is detected (ALARM)
4. If the emergency stop is not activated
5. If auto start conditions are met

1.8.2 Hand-Off-Auto Selectors

In some cases, pumps and mixers may be manually operated with the help of a Manual-Off-Auto selector installed in one of three possible ways:

- A local station located near the equipment;
- A selector installed on front of control panel;
- An override module installed in control panel;

Only the emergency stop remains active on manual mode..

Selector position:

- Manual: motor is running if there are no stopping conditions through wired logic. For a VFD starter, speed is manually set on device
- Off: motor is stopped
- Auto: motor starts if start signal from automation system is activated and if there are no stop conditions through wired logic. For a VFD starter, speed is set either manually on device or by an analog signal output from the automation system.

1.8.3 Local disconnect switch

In some cases a local disconnect switch is a lockable device allowing the isolation of the motor to protect staff during maintenance. It is installed near the motor. It contains an auxiliary contact allowing the starter's control circuit opening.
Note: the disconnect switch must never be activated when motor is running. One has to stop motor before activating disconnect and deactivate disconnect before starting motor.

1.8.4 Wired logic stop

Regardless of selector's position and selected mode, wired logic stop conditions protect motor and force its stopping. These conditions, if relevant, are described in sections pertaining to the motor.

1.8.5 Motor alarm delay

For each motor alarm, a delay is always programmed. This delay is common to all motors unless otherwise indicated in motor's description.

1.8.6 Start fault alarm

If the motor starting control is activated but the running state confirmation isn't and the alarm delay ran out, the start fault alarm is activated. Operator must address the situation and reset fault to restart.

This alarm occurs with the presence of one of the following conditions:

- Activated overload relay ;
- Local selector or override module in Off position ;
- Local disconnect open ;

1.8.7 Running time

For each motor, two running time totalizers are programmed:

- The first one in hours and minutes (HHHHHHHH:MM) is dedicated to interface display
- The second, in minutes, is used for reports.

These totalizers are reset to zero at 99999999 and the one dedicated to display may be edited by operator on interface.

1.9 Metering Pump

1.9.1 Operational mode

Interface manual mode:
A metering pump may operate in manual mode if the following conditions are met:

1. If manual mode is selected on interface
2. If selector is in Auto position
3. If no fault is detected (ALARM)
4. If the emergency stop is not activated

Auto mode:
A metering pump may operate in auto mode if the following conditions are met:

1. If auto mode is selected on interface
2. If selector is in Auto position
3. If no fault is detected (ALARM)
4. If the emergency stop is not activated
5. If auto start conditions are met

1.9.2 Hand – Off– Auto Selectors

Metering pumps may be operated manually with the help of a Hand-Off-Auto selector installed as a local station or directly on the pump.

Selector position:

- Hand: pump is running; dosage concentration is manually selected on pump or on VFD if it is equipped with one.
- Off: pump is stopped
- Auto: pump starts if start control at automation unit is activated. Dosage concentration is controlled by an analog output signal from the automation unit.

1.9.3 Start Control

There are two types of start controls:

- Integrated to signal for dosage concentration, which is the most frequent case. The metering system starts if analog signal is above 4 mA, but stops if signal is below or equal to 4 mA. If there are no constraints from the automation system, the signal will be forced to 3,5 mA to ensure pump stopping.
- Start control separated by a digital signal: the closing of the normally open dry contact of a relay activated by a digital output of automation provides the start control of the metering pump. This digital signal is provided when the metering pump is equipped with a VFD requiring a local station.

1.9.4 Alarm

No alarm is programmed for metering pumps. A reaction on treatment may indicate a metering pump problem (pH, turbidity .)

1.9.5 Running Time

For each metering pump two running time totalizers are programmed:

- The first in hours and minutes (HHHHHHHH:MM) is dedicated to interface display
- The second in hours for reports.

These totalizers are reset to zero at “99999999”; the display totalizer may be edited at the interface.

1.10 Security Level

A different security level is configured in the control system. The various levels allow an access management of different data and setpoint change according to the various needs of the project.

Unless otherwise indicated, the following security levels are applied:

Security Level	Description
0	User may view all the project's pages, but no action is possible. (Default level)
1	User may start and stop equipments
2	User may change operational setpoints
3	User has access to password management (Administration level)

The second security level includes the 0 and 1 level. The third level includes the second, first and 0 levels, etc.

If the operator interface doesn't allow multiple security levels, a password is mandatory for all levels.

1.11 Emergency Stop

Emergency stop actions

When an emergency stop button is activated, an alarm is triggered. The fault associated with this alarm will latch.

During emergency stop, many stopping actions are initiated on equipments or process blocks. These actions are presented in sections describing the relevant equipments or process blocks.

Recovery after emergency stop

When all emergency stop buttons are back into normal position, the fault associated with an alarm is maintained until the operator proceeds to deactivate it.

1.12 Power Outage

1.12.1 Power outage

Upon power failure at the control panel, the “power failure mode” is activated. All automation unit outputs are deactivated by the single fact that automation has lost electrical power. Consequently, all equipments having selectors in Auto position become idle.

1.12.2 Power recovery

Upon power recovery and the detection of the automation unit first cycle, a start sequence is initialized before the restarting of various equipments.

1.12.2.1 Actiflo®

If Actiflo® units were running before the power outage, the following delays are applied before their restarting.

Delay #1: Starting of Priority Actiflo®
Delay #2: Starting of Non Priority Actiflo®

Note: If some selectors were in manual position before failure, the starting sequence will go on anyway but equipments in manual mode will restart simultaneously.

1.13 PID Loop

All PID loops are configured with an operator interface page to change the setpoint and parameters. The page includes the following values with their engineering units:

1.13.1 Accessible signals from the operator interface

Description	Format	Transfer direction	Pushbutton	Security Level
Auto/Manual Selection	Bool	Script	X	2
Manual Mode Loop	Bool	Reading		
Local/Distance Selection	Bool	Script	X	2
Distance Mode Loop	Bool	Reading		
Local Mode Setpoint	Real	Script		2
Distance Mode Setpoint	Real	Reading		
Processed Setpoint	Real	Reading		
Output Value	Real	Reading / Script		
Proportional	Real	Script		4
Integral	Real	Script		4
Derived	Real	Script		4

1.13.2 Operational Mode

Three operational modes are available:

- Manual Mode: Loop is not active; the output value is given manually by operator (Output Value).
- Local Auto Mode: Setpoint is given by operator (Setpoint in Local Mode)
- Distance Auto Mode: Setpoint is given by external source or a calculation, according to process

1.13.3 Volume compensated integral

Mainly used for pH and chlorine control loops, the VCI takes into account water flow and water volume between the dosing point and analyser. This calculation gives the necessary time for water to travel between the dosing point and analyser; it is constantly redone to reflect flow changes. The VCI may always be stopped, in which case the loop is only proportional to the flow.

1.14 Management of Alarms

1.14.1 Alarm Priorities

Alarms are grouped according to 2 priority levels for various attention requirements:
Alarms priority 1:

1. Needs immediate operator attention.
2. An equipment component may be stopped.

Alarms priority 2:

1. Does not need immediate operator attention.
2. May precede an alarm priority 1 (warning)

Alarm priorities are presented in the description of each alarm.

1.14.2 Distinguishing between alarm and fault

Alarm:
The alarm is a warning intended for the operator, who may acknowledge it at any moment with the use of the "Acknowledgement of alarms" button. When an alarm occurs, a message describing the alarm is displayed on the operator interface.

Fault:
The fault corresponds to the action generated by the alarm. So, for every fault, there is an associated alarm. The fault is maintained as long as the conditions that generated it remain active. Once the fault conditions are gone, the operator must reset the fault with the "fault reset button".

A "Reset to 0" button for fault timers allows the re-initialization of all faults, including the ones whose conditions remain active. When the condition creating the fault is always active, the alarm is triggered again once the fault delay has run out.

Note: if a fault associated with an equipment component is programmed so it corrects itself automatically, it will be specified in the section describing this equipment.

The common fault of an equipment component groups all faults pertaining to this equipment.

1.14.3 After an Alarm

When an alarm occurs:

1. A message appears on the HMI operator interface
2. The alarm pilot light blinks until there is acknowledgement by the operator
3. The operator must correct the situation and reset fault before restarting the system.

2 Operator Interface

2.1 Local Operator Interface

The operator interface provided with this system is an Allen-Bradley, PanelView Plus 600.

Interface allows the starting-up of the unit, stopping it, alarm acknowledgement, fault reset, initiation of an Actiflo® sequence, display and viewing of trends.
The setting of all adjustable delays inserted in the auto sequence is accessible at the operator's interface, but the access is limited. All data entries are limited in minimum and maximum to avoid faulty entries.

Local operator interface allows:

1. Access to different screens by a main menu.
2. Automatic/Manual mode selection for all valves and motors.
3. Open/Close or Start/Stop selection for manual operation of valves and motors.
4. Visualization of motor and valve status
5. Visualization and acknowledgement/reset of alarms (past and present)
6. Initialization of automatic start/stop Actiflo® sequence.
7. Visualization of analog measurements with engineering values or graphics.
8. Modification of ranges, setpoints and delays.

Pages are accessible with a valid password.

3 Raw Water

3.1 Analysers

3.1.1 Raw water turbidimeter

Tag: AIT1-011

Out of range raw water turbidimeter
Priority 2 alarm
Sequence of events when an alarm occurs:

1. The message " RAW WATER TURBIDIMETER EQUIPMENT FAULT ALARM" is displayed on interface;

High raw water turbidity
Priority 2 alarm
Sequence of events when an alarm occurs:

1. The message " RAW WATER TURBIDIMETER HIGH ALARM" is displayed on interface;

High High raw water turbidity
Priority 2 alarm
Sequence of events when an alarm occurs:

1. The message " RAW WATER TURBIDIMETER HIGH HIGH ALARM" is displayed on interface;

4 Actiflo®

4.1 Description

The coagulation/filtration process is based on two Actiflo® units.

All Actiflo® units may operate simultaneously without a backup unit.
Each Actiflo® unit has two recirculation pumps, one of which is backup (with permutation)

Unless otherwise indicated, the present chapter describes the operation of only one Actiflo® unit. Any description of an equipment or logic common to all units will be clearly identified.

4.2 Local control

4.2.1 Pushbuttons and pilot lights

Buttons and lights are installed on panel door.
The pilot lights identify prevailing operating conditions.

" Actiflo® #1 IN OPERATION" steady	The train is operating normally.
" Actiflo® #1 IN OPERATION" fast blinking	The train is in automatic start mode.
" Actiflo® #1 I N OPERATION" slow blinking	The train is in automatic stop mode.
" Actiflo® #1 IN OPERATION" off	The train is stopped.
" Actiflo® #2 IN OPERATION" steady	The train is operating normally.
" Actiflo® #2 IN OPERATION" fast blinking	The train is in automatic start mode.
" Actiflo® #2 I N OPERATION" slow blinking	The train is in automatic stop mode.
" Actiflo® #2 IN OPERATION" off	The train is stopped.

The push buttons are the following:

- Start/Stop Actiflo® #1
- Start/Stop Actiflo® #2

The "Start/Stop Actiflo® "installed on panel door or on operator interface allows the following actions:
- Activate/deactivate Auto mode
- Stop Actiflo

4.2.2 Pushbutton and pilot light colors

Pilot light:
- Running = Green
- Alarm = Red

Pushbutton and selector:
- Start/Stop = Green
- Other function = Black
- Selector = Black

4.2.3 Transmitted signals (to others)

A local station (Manual/Off/Auto) is installed near each recirculation pump. All mixers are equipped with an override module installed in the PLC panel.

4.2.4 Transmitted signals (to others)

The following "hardwire" signals are available from the Actiflo® system panel:

- Dry contact status of Actiflo® #1
- Dry contact status of Actiflo® #2
- Common general alarm

These standard signals may be used during commissioning and/or troubleshooting. They can also be used to start other related equipments such as raw water pumps, sampling pumps, etc.

4.2.5 Signals to be received (from others)

Here are the "hardwire" signals received at the control panel:

- Remote control command « START/STOP AUTOMATIC SEQUENCE » of Actiflo® #1
- Remote control command « START/STOP AUTOMATIC SEQUENCE » of Actiflo® #2

These standard signals may be used during commissioning and/or troubleshooting. Once stopped, the Actiflo® start sequence is initialized if Actiflo® is in Auto mode; if this contact is not used, a “jumper” must be installed.

4.3 Automatism / Auto Mode

4.3.1 Auto Mode

The Auto mode being originally deactivated, the Actiflo® unit runs in Auto mode by pushing the Start/Stop on panel door or at operator interface, if the following conditions are met:

1. Conditions for auto start sequence
2. No conditions for auto stop sequence

Upon the activation of the Actiflo® automatic start sequence an alarm will be displayed if equipment is not in Auto mode. This alarm indirectly lets you know that some equipment is in manual running or stop mode ("EQUIPMENT ON MANUAL MODE" message).

When the Actiflo® unit is in Auto mode, it can be deactivated by one of the following conditions:

1. Pushing the Start/Stop button on panel door or at operator interface for a second time
2. Actiflo® unit has major fault
3. Activation conditions for the auto stop sequence are present.

If Auto mode is deactivated by a major fault or by stop conditions, the Actiflo® unit can't be put back in Auto mode unless operator addresses the situation, corrects the faults and hits the Stop/Auto button again.

4.3.2 Activation conditions for auto start sequence

When operator pushes Start/Stop button (on panel or at operator interface) the start sequence is activated if following conditions are met:
If delay, when power is back after outage, has expired.
Other conditions:

1. Injection mixer in auto
2. Maturation mixer in auto
3. Scraper in auto
4. At least one recirculation pump in auto
5. Raw water valve in auto
6. No major fault is present

4.3.3 Activation conditions for auto stop sequence

The stop sequence is activated when one of the following conditions is the case:

1. Operator pushes Start/Stop button (on panel or at interface)
2. The remote start's dry contact is deactivated
3. When a major fault is activated

If Actiflo® is stopped by a major fault, it won't restart unless the operator addresses the situation, corrects the faults and hits start button again.

4.3.4 Major faults

List of faults causing Actiflo® stop:

1. Faulty injection mixer
2. Faulty maturation mixer
3. Faulty scraper
4. Both recirculation pump in fault
5. Faulty raw water valve
6. High high clarified water turbidity
7. Low raw water flow
8. High high level Actiflo® switch is activated
9. Emergency stop is activated

4.3.5 Alarm deactivation delay after start of Actiflo® unit

In order to avoid false process alarms following the start of an Actiflo® unit, the operator can set a process alarm deactivation delay at the interface (0 to 60 min.) after the start of an Actiflo®. During this time, all corresponding Actiflo® process alarms, such as turbidity, pH, etc., are deactivated. However, level and flow alarms do remain active.

4.3.6 No alarm mode

The mode without alarm allows the operator to deactivate the process alarms of the corresponding Actiflo® for a non-adjustable, 60-minute period. It is mostly used after treatment loss. Rather than modifying each and every process alarm setpoint, the operator activates this mode so he may focus on treatment recovery. Oversights and mistaken handling of alarm setpoints are thus less likely. As a security feature, this mode is automatically deactivated after 60 minutes. It may be activated or deactivated at any time from the operator interface. Level and flow alarms remain unaffected by this mode.

4.3.7 Actiflo® priority

Both Actiflo® will be following the service water pump priority. The Actiflo® need to be in operation for the associated service water pump to run.
If Actiflo® with the pump priority 1 goes in major fault and is stopped, the priority is swapped to the other pump and the other Actiflo® . Also, the pH meter used for the caustic loop is associated with the pump and Actiflo® that are priority 1.

4.3.8 Actiflo® start sequence

Once the auto start sequence is initiated, the Actiflo® unit starts according to the following sequence:

Step #	Step Name	Actions Step Change Condition	Recirculation Pump	Coagulation Mixer	Injection Mixer	Maturation Mixer	Scraper	Operational Status	Status Light
0	Full Stop	Equipments not running Operational status: deactivated	S	S	S	S	S	D	C
		Initiation of auto start sequence							
1	Start Sequence	Recirculation pump start	R	S	S	S	S	D	RB
		Elapsed time (sequence delay specific to motor)							
2	Start Sequence	Scraper start	R	S	S	S	R	D	RB
		Elapsed time (sequence delay specific to motor)							
3	Start Sequence	Coagulation mixer start	R	R	S	S	R	D	RB
		Elapsed time (sequence delay specific to motor)							
4	Start Sequence	Injection mixer start	R	R	R	S	R	D	RB
		Elapsed time (sequence delay specific to motor)							
5	Start Sequence	Maturation mixer start Activation of running status	R	R	R	R	R	AC	O
		Elapsed time (sequence delay specific to motor)							
6	Actiflo® operating	Actiflo® operating	R	R	R	R	R	AC	O

Legend

Motor
S : Stop
R : Running

Valve
C : Closed
O : Open

Status
AC : Active
D : Deactivated

Light
C : Closed
O : Open
RB : Rapid blink
SB : Slow blink

4.3.9 Actiflo® stop sequence

Once the automatic stop sequence has been initiated, the Actiflo® unit stops according to the following sequence:

Step #	Step Name	Actions Step Change Condition	Recirculation Pump	Coagulation Mixer	Injection Mixer	Maturation Mixer	Scraper	Operational Status	Status Light
		Initiation of auto stop sequence							
7	Stop Sequence	Coagulation mixer stop; Injection mixer stop; Maturation mixer stop; Deactivation of running status	R	S	S	S	R	D	SB
		Elapsed time (stop sequence delay specific to scraper)							
8	Stop Sequence	Scraper stop / No action	R	S	S	S	S	D	SB
		Elapsed time (stop sequence delay specific to recirculation pump)							
9	Stop Sequence	Recirculation pump stop	S	S	S	S	S	D	SB
		Elapsed time (1 sec.)							

Legend

Motor
S : Stop
R : Running

Valve
C : Closed
O : Open

Status
AC : Active
D : Deactivated

Light
C : Closed
O : Open
RB : Rapid blink
SB : Slow blink

4.3.10 Recirculation pump logic

The recirculation pump must be running for Actiflo® operation.

Two pumps are installed for each Actiflo® unit.
When both pumps are faulty, the Actiflo® unit stops due to a major fault.

If one pump is faulty and the Actiflo® unit is running, the second pump will start. The Actiflo® unit won't stop, an alarm will be displayed and a priority 2 fault will be activated. If the second pump should also become faulty or if it's in manual mode, the Actiflo® unit will stop.

Operator may select one of the two pumps as priority or run both at the same time, with the help of a pushbutton on interface.

4.4 Pumps and Mixers

4.4.1 Coagulation mixer

One mixer per Actiflo®
Tag: M2-011, M2-021

Automatic mode

Mixer operates:

1. If sequencer is on step 3, 4, 5 or 6.
2. If E-stop is not activated.

Coagulation mixer fault alarm
Priority 2 alarm
Sequence of events when alarm is triggered:

1. Mixer stops
2. The ACTIFLO #x COAGULATION MIXER EQUIPMENT FAULT ALARM" message is displayed on operator interface

4.4.2 Injection mixer

One mixer per Actiflo®
Tag: M2-012, M2-022

Automatic mode
Mixer operates:

1. If sequencer is on step 4, 5 or 6.
2. If E-stop is not activated.

Injection mixer fault
Priority 1 alarm
Sequence of events when alarm is triggered:

1. Mixer stops
2. The "ACTIFLO #x INJECTION MIXER EQUIPMENT FAULT ALARM" message is displayed on the operator interface
3. The corresponding Actiflo® unit stops according to the automatic stop sequence.

4.4.3 Maturation mixer

One mixer per Actiflo®
Tag: M2-013, M2-023

The maturation mixer speed is directly adjusted on the VFD during system start-up in order to obtain an optimal blend. Once the speed is adjusted, it is stable.

Auto mode

Mixer operates:

1. If sequencer is on step 5 or 6.
2. If E-stop is not activated.

Interlock:
The associated recirculation pump must be running to allow mixer operation.
Interlock is active in auto mode and manual mode.

Maturation mixer fault
Priority 1 alarm
Sequence of events when an alarm occurs:

1. Mixer stops
2. The "ACTIFLO #x MATURATION MIXER EQUIPMENT FAULT ALARM" message is displayed on the operator interface
3. The corresponding Actiflo® unit stops according to the automatic stop sequence.

4.4.4 Recirculation pump

Tag: P2-011, P2-012, P2-021, P2-022

Automatic mode
Pump is operational:

1. If sequencer is on step 2 to 8.
2. If E-stop is not activated.

Recirculation pump fault
Priority 1 alarm
Sequence of events when an alarm occurs:

1. Pump stops
2. The "ACTIFLO #x RECIRCULATION PUMP #x EQUIPMENT FAULT ALARM" message is displayed on the operator interface
3. Refer to section "Automatism / Recirculation pump logic"

4.4.5 Scraper

Tag: S2-011, S2-021

Automatic mode
Scraper is operational:

1. If sequencer is on step 2 to 6
2. If E-stop is not activated

Interlock:
The associated recirculation pump must be running to allow scraper action.
Interlock active in automatic or interface manual mode.

Scraper fault
Priority 1 alarm
Sequence of events when alarm occurs:

1. Scraper stops
2. The "ACTIFLO #x SCRAPER EQUIPMENT FAULT ALARM " message is displayed on the operator interface
3. The corresponding Actiflo® unit stops according to the automatic stop sequence.

4.5 Valves

4.5.1 Raw water valve

One raw water valve per Actiflo® unit
Tag: V2-011, V2-021

The raw water valve is a modulating valve. It is controlled by a PID loop whose setpoint is determined by the operator.

Automatic mode

1. If sequencer is on step 5 or 6
2. If E-stop is not activated.

The valve doesn't have status contact. The fault is programmed with a disparity of the flowmeter reading.

Raw water valve open fault
Priority 1 alarm
Sequence of events when an alarm occurs:

1. Valve opening adjusted to 0%
2. The "OPEN FAULT RAW WATER VALVE ACTIFLO® #x " message is displayed on the operator interface;
3. The corresponding Actiflo® unit stops according to the automatic stop sequence

Raw water valve close fault
Priority 1 alarm
Sequence of events when an alarm occurs:

1. Valve opening adjusted to 0%
2. The " ACTIFLO #x RAW WATER VALVE FAIL TO CLOSE ALARM" message is displayed on the operator interface
3. The corresponding Actiflo® unit stops according to the automatic stop sequence

Raw water valve open fault
Priority 1 alarm
Sequence of events when an alarm occurs:

1. Valve opening adjusted to 100%
2. The " ACTIFLO #x RAW WATER VALVE FAIL TO OPEN ALARM" message is displayed on the operator interface
3. The corresponding Actiflo® unit stops according to the automatic stop sequence

4.6 Analysers

4.6.1 Raw water flowmeter

One raw water flowmeter per Actiflo® unit
Tag: FIT2-011, FIT2-021
Unit: m^3/h

Out of range raw water flowmeter alarm
Priority 1 alarm
Sequence of events when alarm occurs:

1. The message " ACTIFLO #x RAW WATER FLOWMETER EQUIPMENT FAULT ALARM" is displayed on the operator interface
2. The corresponding Actiflo® unit stops according to the automatic stop sequence

Actiflo® unit may be operated manually if raw water flow rate is known and stable and if chemical dosage is manually adjusted.

Low low raw water flow alarm
Priority 1 alarm
Sequence of events when an alarm occurs:

1. The message " ACTIFLO #x RAW WATER FLOWMETER LOW LOW ALARM" is displayed on the operator interface
2. The corresponding Actiflo® unit stops according to the automatic stop sequence

Activation condition for this alarm: raw water valve V2-011 for Actiflo® 1 or V2-012 for Actiflo® 2 valve more than 10% open.

Low raw water flow alarm
Priority 2 alarm
Sequence of events when an alarm occurs:

1. The message " ACTIFLO #x RAW WATER FLOWMETER LOW ALARM" is displayed on the operator interface

Activation condition for this alarm: raw water valve V2-011 for Actiflo® 1 or V2-012 for Actiflo® 2 valve more than 10% open.

High raw water flow alarm
Priority 2 alarm
Sequence of events when an alarm occurs:

1. The message " ACTIFLO #x RAW WATER FLOWMETER HIGH HIGH ALARM" is displayed on the operator interface

High high raw water flow alarm
Priority 2 alarm
Sequence of events when an alarm occurs:

1. The message "HIGH ACTIFLO #x RAW WATER FLOWMETER HIGH ALARM " is displayed on the operator interface

Generally, the high high and low low flow thresholds respectively correspond to the hydraulic capacity, and 10% of the Actiflo® unit hydraulic capacity.

Raw water flow deviation alarm
Priority 2 alarm
Sequence of events when an alarm occurs:

1. The message " ACTIFLO #x RAW WATER FLOWMETER FLOW DEVIATION ALARM" is displayed on the operator interface

4.6.2 Coagulation pH

One pH-meter per Actiflo® unit
Tag: pHIT2-011, pHIT2-021
Unit: pH

Process alarms can only be triggered when all the following activation conditions are met:

1. Actiflo® unit is running
2. Deactivation time of process alarms after Actiflo® start has elapsed
3. The no alarm mode is deactivated for the Actiflo® unit.

Out of range coagulation pH-meter alarm
Priority 2 alarm
Sequence of events when an alarm occurs:

1. The message " ACTIFLO #x CLARIFIED WATER PH METER EQUIPMENT FAULT ALARM" is displayed on operator interface
2. The operation mode changes from VCI to proportional to the flow.

Low low coagulation pH alarm
Priority 1 alarm
Sequence of events when an alarm occurs:

1. The message " ACTIFLO #x CLARIFIED WATER PH METER LOW LOW ALARM" is displayed on operator interface

Low coagulation pH alarm
Priority 2 alarm
Sequence of events when an alarm occurs:

1. The message " ACTIFLO #x CLARIFIED WATER PH METER LOW ALARM" is displayed on operator interface

High coagulation pH alarm
Priority 2 alarm
Sequence of events when an alarm occurs:

1. The message " ACTIFLO #x CLARIFIED WATER PH METER HIGH ALARM " is displayed on operator interface

High high coagulation pH alarm
Priority 1 alarm
Sequence of events when an alarm occurs:

1. The message " ACTIFLO #x CLARIFIED WATER PH METER HIGH HIGH ALARM" is displayed on operator interface

4.6.3 Clarified water turbidimeter

One clarified water turbidimeter per Actiflo® units
Tag: AIT2-011, AIT2-022
Unit: NTU

Process alarms can be triggered only when all the following activation conditions are met:

1. Actiflo® unit is running
2. Deactivation time of process alarms after Actiflo® start has elapsed
3. The no alarm mode is deactivated for the Actiflo® unit

Out of range clarified water turbidimeter
Priority 2 alarm
Sequence of events when an alarm occurs:

1. The message " ACTIFLO #x CLARIFIED WATER TURBIDIMETER EQUIPMENT FAULT ALARM" is displayed on operator interface

High clarified water turbidity alarm
Priority 2 alarm
Sequence of events when an alarm occurs:

1. The message " ACTIFLO #x CLARIFIED WATER TURBIDIMETER HIGH ALARM" is displayed on operator interface

High high clarified water turbidity alarm
Priority 1 alarm
Sequence of events when an alarm occurs:

1. The message " ACTIFLO #x CLARIFIED WATER TURBIDIMETER HIGH HIGH ALARM" is displayed on operator interface
2. A separate timer is started before the corresponding Actiflo® is stopped. This timer is set on the HMI

4.6.4 Actiflo® high high level switch

One switch per Actiflo® unit
Tag : LSHH2-011, LSHH2-021

High high level alarm
Priority 1 alarm
Sequence of events when an alarm occurs:

1. The message " ACTIFLO #x HIGH HIGH WATER LEVEL ALARM" is displayed on operator interface
2. The corresponding Actiflo® unit stops according to the automatic stop sequence

4.6.5 Scraper torque detector

Tag: WT2-011, WT2-021

The torque detector/alarm is independent from the PLC. It is available when scraper is started from a local station or an override module.

High scraper torque
Priority 2 alarm
A high torque alarm is activated when the torque is higher than the adjustable setpoint for more than the adjustable delay. Those adjustable variables are set in the programmable relay (HPL220) installed in the panel.

Sequence of events when an alarm occurs:

1. The message " ACTIFLO #X SCRAPER HIGH TORQUE ALARM" is displayed on operator interface

High high scraper torque
Priority 1 alarm
A high high torque alarm is activated when torque is higher than the adjustable setpoint for more than the adjustable delay. Those adjustable variables are set in the programmable relay (HPL220) installed in the panel.

Sequence of events when an alarm occurs:

1. Scraper stops
2. The message " ACTIFLO #X SCRAPER HIGH HIGH TORQUE ALARM" is displayed on operator interface
3. The corresponding Actiflo® unit stops according to the automatic stop sequence

For cases when the PLC is faulty or when scraper is operated manually, the high high scraper torque alarm will stop scraper. No message will be displayed if PLC is defective. The reset of the programmable relay (HPL220) is done through the PLC or with the fault reset button on panel door.
If programmable relay is faulty, scraper will stop.

5 CHEMICAL DOSING

5.1 Coagulant

5.1.1 Coagulant dosing

Tag: P9-511, P9-512, P9-513

Coagulant is proportionally dosed to the total raw water flow. The dosing point is before each of the Actiflo® unit. Three pumps are installed for coagulant dosing. The pump P9-511 is designed to operate for the Actiflo® 1 and P9-513 for the Actiflo® 2. The pump P9-512 is the backup. Operator must change the positions of some manual valves and locally put the pump in auto to use backup.

Coagulant dosing is calculated with the aid of this formula:

$$Qcoag = \frac{Q \times SP}{C \times SG \times 10}$$

Qcoag. : Chosen coagulant dosage (L/h)
Q: Raw water flow Actiflo (m^3/h)
SP: Dosage setpoint (mg/L)
SG: Density (Kg/L)
C: Concentration (%) (Example: 48%)

Formula below gives reference speed for metering pumps, in percentage. A pump calibration must be done in order to get a linear speed curve, depending on pump capacity.

$$Vpump = 20 + \left[\left(\frac{60}{Q80 - Q20}\right) * \left(Qcoag - Q20\right)\right]$$

Vpump: Pump reference speed;
Qcoag: Dosage (calculated in previous equation) (L/h);
Q20: Dosage flow measured at 20% of pump speed (L/h);
Q8: Dosage flow measured at 80% of pump speed (L/h);

Auto mode

Pump operates if:

1. Maturation mixer works;
2. Coagulant dosing tank is not empty
3. E-stop is not activated.

High temperature

Priority 2 alarm

Sequence of events:

1. The message " COAGULANT DOSING PUMP #X TEMPERATURE ALARM, RESET FAUT AT THE PANEL" is displayed on operator interface;
2. The pump is deactivated

Maximum coagulant flow alarm
Priority 2 alarm
Sequence of events:

1. The message "COAGULANT DOSING PUMP #X HIGH DOSING CAPACITY ALARM, STROKE MUST BE ADJUSTED, REQUIRED DOSAGE CAN'T BE REACHED " is displayed on operator interface;

Minimum coagulant flow alarm
Priority 2 alarm
Sequence of events:

1. The message "COAGULANT DOSING PUMP #X LOW DOSING CAPACITY ALARM, STROKE MUST BE ADJUSTED, REQUIRED DOSAGE CAN'T BE REACHED " is displayed on operator interface;

Coagulant preparation system

The coagulant preparation system consists of two tanks of 1000L. The first one prepares the batch and when done, transfers to the second tank for dosing.

5.1.1.1 Preparation system sequence

Step #	Step Name	Actions Transition conditions	Preparation Water Valve	Coagulant dry feeder	Preparation mixer	Preparation transfer Pump
0	Waiting Time	Preparation system ready Waiting for preparation request	C	S	S	S
		Low level maturation tank AND No low solid level, dry feeder alarm, mixer alarm, transfer pump alarm or level-meter alarm.				
1	Water filling	Open preparation water valve	O	S	S	S
		Initial preparation water level reach				
2	Coagulant feeding start	Start coagulant dry feeder	O	R	S	S
		Minimum mixer level reach OR elapsed feeding time				
3	Feeding and preparation	Start preparation mixer	O	R	R	S
		Elapsed feeding time OR full level preparation tank				
4	Coagulant feeding stop	Stop coagulant dry feeder	O	S	R	S
		Full level preparation tank				
5	Maturation	Close preparation water valve Start of maturation period	C	S	R	S
		Elapsed time (Maturation time)				
6	Coagulant transfer waiting time	Stop preparation mixer Solution ready	C	S	S	S
		Empty level dosing tank				
7	Coagulant transfer	Start transfer pump	C	S	S	R
		Empty level maturation tank				
8	Coagulant transfer end	Stop transfer pump	C	S	S	S

Legend

Motor
S : Stop
R : Running

Valve
C : Closed
O : Open

Parameter	Default value
Low level maturation tank (L)	50
Initial preparation water level (L)	100
Minimum mixer level (L)	250
Full level preparation (L)	950
Feeding time (min)	10
Maturation time (min)	20

5.1.1.2 Pumps, mixers and motors

Preparation mixer
Tag: M9-511

Automatic mode
Mixer operates:
1. If sequencer is on step 3, 4 or 5
2. If E-stop is not activated.

Coagulant mixer fault alarm
Priority 2 alarm
Sequence of events when alarm is triggered:
1. Mixer stops
2. The "COAGULANT MIXER EQUIPMENT FAULT ALARM " message is displayed on operator interface
3. Stop preparation sequence

Transfer pump
Tag: P9-515

Automatic mode
Pump operates:
1. If sequencer is on step 7;
2. If E-stop is not activated;
3. If full level from dosing tank is not activated;
4. If empty level from maturation tank is not activated;

Transfer pump fault alarm
Priority 2 alarm
Sequence of events when alarm is triggered:
1. Pump stops
2. The "COAGULANT TRANSFER PUMP EQUIPMENT FAULT ALARM " message is displayed on operator interface
3. Complete present sequence without transfer, next sequence will not start.

Blower
Tag: B9-513

Automatic mode
Mixer operates for a configurable time:
1. If the unload bag button is activated

Coagulant blower fault alarm
Priority 2 alarm
Sequence of events when alarm is triggered:
1. The "COAGULANT BLOWER EQUIPMENT FAULT ALARM " message is displayed on operator interface

Dry feeder
Tag: DF9-511

Automatic mode
Dry feeder operates:
1. If sequencer is on step 2 or 3
2. If E-stop is not activated.

Dry feeder fault alarm
Priority 2 alarm
Sequence of events when alarm is triggered:
1. Dry feeder stops
2. The "COAGULANT DRY FEEDER EQUIPMENT FAULT ALARM " message is displayed on operator interface
3. Stop the sequence

5.1.1.3 Valve

Preparation water valve
Tag: V9-518

Automatic mode
1. If sequencer is on step 1 to 4
2. If E-stop is not activated.

The valve doesn't have status contact. The open fault is activated after a request to open and without change in the water level after a defined time.

Preparation water valve open fault
Priority 2 alarm
Sequence of events when an alarm occurs:
1. The valve is deactivated
2. The "COAGULANT WATER VALVE FAIL TO OPEN ALARM " message is displayed on the operator interface;
3. Stop the sequence

5.1.1.4 Analysers

Maturation tank level meter
Tag: LIT9-511

Out of range level-meter
Priority 2 alarm
Sequence of events:
1. The message "COAGULANT MATURATION LEVEL TRAMSMITTER EQUIPMENT FAULT ALARM " is displayed on operator interface ;
2. Stop the sequence

Low low level
Priority 1 alarm
Sequence of events:
1. The message "COAGULANT MATURATION LEVEL TRAMSMITTER LOW LOW ALARM " is displayed on operator interface;
2. Stop the transfer pump

Low level
Priority 2 alarm
Sequence of events:
1. The message "COAGULANT MATURATION LEVEL TRAMSMITTER LOW ALARM" is displayed on operator interface;

High level alarm
Priority 2 alarm
1. The message "COAGULANT MATURATION LEVEL TRAMSMITTER HIGH ALARM " is displayed on operator interface.

High high level alarm
Priority 1 alarm
1. The message "COAGULANT MATURATION LEVEL TRAMSMITTER HIGH HIGH ALARM " is displayed on operator interface.
2. Close the water valve

Dosing tank level meter
Tag: LIT9-512

Out of range level-meter
Priority 1 alarm
Sequence of events:
1. The message " COAGULANT DOSING TANK LEVEL TRAMSMITTER EQUIPMENT FAULT ALARM " is displayed on operator interface ;
2. Stop the transfer

Low low level
Priority 1 alarm
Sequence of events:
1. Coagulant pump stops
2. the message "COAGULANT DOSING TANK LEVEL TRAMSMITTER LOW LOW ALARM " is displayed on operator interface;
3. The "ALARM" pilot light goes on.
4. The Actiflo® units stop according to auto stop sequence.

Low level
Priority 2 alarm
Sequence of events:
1. The message "COAGULANT DOSING TANK LEVEL TRAMSMITTER LOW ALARM " is displayed on operator interface;

High level alarm
Priority 2 alarm
1. The message "COAGULANT DOSING TANK LEVEL TRAMSMITTER HIGH ALARM " is displayed on operator interface.

High high level alarm
Priority 2 alarm
1. The message "COAGULANT DOSING TANK LEVEL TRAMSMITTER HIGH HIGH ALARM " is displayed on operator interface.
2. Stop the transfer pump

Low solid coagulant level
Tag: LSL9-513

Low level
Priority 2 alarm
Sequence of events:

1. The message "COAGULANT POWDER LOW LEVEL ALARM " is displayed on operator interface;
2. Dry feeder stop;
3. Stop the sequence.

5.2 Polymer

5.2.1 Polymer dosage

Tag: P9-521, P9-522, P9-523

Polymer is proportionally dosed to the total raw water flow. The dosing point is before each of the Actiflo® unit. Three pumps are installed for polymer dosing. The pump P9-521 is designed to operate for the Actiflo® 1 and P9-523 for the Actiflo® 2. The pump P9-522 is the backup. Operator must change the positions of some manual valves and locally put the pump in auto to use backup.

Polymer dosing calculations

Polymer dosing is calculated with the use of this formula:

$$Qpoly = \frac{Q \times SP}{C}$$

Qpoly: Chosen polymer dosage (L/h)
Q: Actiflo raw water flow (m^3/h)
SP: Dosage setpoint (mg/L)
C: Concentration (g/L)

The formula below determines the reference speed for metering pumps, in percentage. Calibration of pumps must be done in order to get a linear reference speed curve, on the basis of the pump's capacity.

$$Vpump = 20 + \left[\left(\frac{60}{Q80 - Q20} \right) * (Qpoly - Q20) \right]$$

Vpump: Pump's reference speed;
Qpoly: Dosage (calculated in previous equation) (L/h) ;
Q20: Dosage flow measured at 20% of pump speed (L/h);
Q80: Dosage flow measured at 80% of pump speed (L/h);

The SP, Q20, Q80 and C variables are entered at operator interface.

Automatic mode
Pump will operate if:

1. The maturation mixer is running.
2. E-stop is not activated.

High temperature
Priority 2 alarm
Sequence of events:

1. The message "POLYMER DOSING PUMP #x TEMPERATURE ALARM, RESET FAUT AT THE PANEL " is displayed on operator interface;
2. The pump is deactivated

Maximum polymer flow alarm
Priority 2 alarm
Sequence of events:

1. The message "POLYMER DOSING PUMP #x HIGH DOSING CAPACITY ALARM, STROKE MUST BE ADJUSTED, REQUIRED DOSAGE CAN'T BE REACHED" is displayed on operator interface ;

Minimum polymer flow alarm
Priority 2 alarm
Sequence of events:

1. The message "POLYMER DOSING PUMP #x LOW DOSING CAPACITY ALARM, STROKE MUST BE ADJUSTED, REQUIRED DOSAGE CAN'T BE REACHED" is displayed on operator interface.

5.2.2 Water transport valve, polymer

Tag: V9-521, V9-522

One valve per Actiflo®
The solenoid transport valve helps the polymer to reach the Actiflo® unit. The V9-521 is dosing the Actiflo® 1 and the V9-522 is dosing the Actiflo® 2.

Automatic mode
Valve will open if:

1. The maturation mixer is running.
2. E-stop is not activated.

5.2.3 TOMAL Automatic polymer preparation system

Tag: JB9-521

The automatic preparation system is independent from the Actiflo® PLC. It is controlled by a relay panel of which a few signals are transferred to the PLC.

General alarm
Priority 2 alarm
Sequence of events:

1. The message "POLYMER PREPARATION SYSTEM MIXER FEEDER OVERLOAD ALARM " is displayed on operator interface;

Low level dosage tank alarm
Priority 1 alarm
Sequence of events:

1. Pumps stop
2. The message "POLYMER PREPARATION SYSTEM LOW POLYMER LEVEL ALARM " is displayed on operator interface;
3. Both Actiflo® units stop according to the automatic stop sequence.

Low water pressure alarm
Priority 2 alarm
Sequence of events:

1. The message "POLYMER PREPARATION SYSTEM LOW WATER PRESSURE ALARM " is displayed on operator interface;

Low powder level alarm
Priority 2 alarm
Sequence of events:

1. The message "POLYMER PREPARATION SYSTEM LOW POWDER LEVEL ALARM " is displayed on operator interface ;

5.3 Caustic soda (NaOH)

5.3.1 Caustic Soda dosage

Tag: P9-541, P9-542, P9-543

Caustic soda is proportionally dosed to the total raw water flow with a volume compensated integral control loop. The dosing point is before each of the Actiflo® unit. Three pumps are installed for caustic soda dosing. The pump P9-541 is designed to operate for the Actiflo® 1 and P9-543 for the Actiflo® 2. The pump P9-542 is the backup. Operator must change the positions of some manual valves and locally put the pump in auto to use backup.

Automatic mode
Pump operates if:

1. Maturation mixer works;
2. E-stop is not activated.

High temperature
Priority 2 alarm
Sequence of events:

1. The message "NAOH DOSING PUMP #x TEMPERATURE ALARM, RESET FAUT AT THE PANEL " is displayed on operator interface;
2. The pump is deactivated

Maximum Caustic soda flow alarm
Priority 2 alarm
Sequence of events:

1. The message "NAOH DOSING PUMP #x HIGH DOSING CAPACITY ALARM, STROKE MUST BE ADJUSTED, REQUIRED DOSAGE CAN'T BE REACHED " is displayed on operator interface ;

Minimum Caustic soda flow alarm
Priority 2 alarm
Sequence of events:

1. The message "NAOH DOSING PUMP #x LOW DOSING CAPACITY ALARM, STROKE MUST BE ADJUSTED, REQUIRED DOSAGE CAN'T BE REACHED " is displayed on operator interface;

Caustic Soda dosing calculations

Caustic Soda flow in L/h:

$$Qsd = \frac{Q \times SP}{C \times SG \times 10}$$

Qsd: Chosen caustic soda dosage (L/h)
Q: Actiflo raw water flow (m^3/h)
SP: Dosage setpoint (mg/L)
SG: Density (Kg/L) = 1kg/L for water
C: Concentration (%) (Example: 48%)

The formula below gives the reference speed for metering pumps, in percentage. Calibration of pumps must be done in order to get a linear reference speed curve, on the basis of the pump's capacity.

$$Vpump = 20 + \left[\left(\frac{60}{Q80 - Q20} \right) * (Qsd - Q20) \right]$$

Vpump: Pump's reference speed;
Qsd: Dosage (calculated in previous equation) (L/h);
Q20: Dosage flow measured at 20% of pump's speed (L/h);
Q80: Dosage flow measured at 80% of pump's speed (L/h);
Note: if pump's stroke is changed, flow values at 20% and 80% are changed on operator interface.

5.3.2 Mixer

Preparation mixer
Tag: M9-541

Automatic mode
Mixer operates for a configurable time:
1. If the HMI button change to auto.

Caustic soda mixer fault alarm
Priority 2 alarm
Sequence of events when alarm is triggered:
1. Mixer stops
2. The "NAOH MIXER EQUIPMENT FAULT ALARM " message is displayed on operator interface

6 SERVICE WATER

6.1 Pumps

Tag: P7-011, P7-012

The service water pump supply is at each corresponding Actiflo®. One pump will run at a time. The pump priority is set at the HMI. The pump priority will set the Actiflo® priority as well.

The pump priority will be automatically change if:

1. The associated Actiflo® is in major fault
2. The priority pump is in fault
3. The Actiflo® is stoped by the operator with the HMI or the button.

Automatic mode
Pump is operational:

1. If the corresponding Actiflo® is in operation;
2. If, for the backup pump, the primary pump is not running;
3. If E-stop is not activated.

Service water pump fault
Priority 1 alarm
Sequence of events when an alarm occurs:

1. Pump stops
2. The "SERVICE WATER PUMP #x FAULT ALARM " message is displayed on the operator interface
3. Swap the pump priority
4. Start the backup pump

7 Index of tags

Tag: AIT1-011 18
Tag: M2-011, M2-021 25
Tag: M2-012, M2-022 25
Tag: M2-013, M2-023 26
Tag: P2-011, P2-012, P2-021, P2-022 26
Tag: S2-011, S2-021 27
Tag: V2-011, V2-021 28
Tag: FIT2-011, FIT2-021 29
Tag: pHIT2-011, pHIT2-021 30
Tag: AIT2-011, AIT2-022 31
Tag : LSHH2-011, LSHH2-021 32
Tag: WT2-011, WT2-021 32
Tag: P9-511, P9-512, P9-513 33
Tag: M9-511 36
Tag: P9-515 36
Tag: B9-513 36
Tag: DF9-511 37
Tag: V9-518 37
Tag: LIT9-511 37
Tag: LIT9-512 38
Tag: LSL9-513 39
Tag: P9-521, P9-522, P9-523 40
Tag: V9-521, V9-522 42
Tag: JB9-521 42
Tag: P9-541, P9-542, P9-543 43
Tag: M9-541 44
Tag: P7-011, P7-012 45

INPUT / OUPTUT LIST

LEFT BLANK

ENVITECH AUTOMATION INC.
180 BRUNSWICK.
POINTE-CLAIRE, QC H9R 5P9

QTY TO PRODUCE ON WORK ORDER (1)

CUSTOMER BILL OF MATERIEL

NC01, MEADOWBANK - A4765A, LOT: 2

#	DESCRIPTOR	QTY REQD. UNIT	MANUFACTURER	MANUFACTURER PART #	DESCRIPTION
	CONTROL PANEL (QTY: 1)				
10	ENCLOSURE	1.000	HAMMOND	1422F16F	PANEL NEMA 12, 72HX72WX16D C/W BACKPLATE
20	FILTER	1.000	RITTAL	SK 3323.207	EXHAUST FILTER FOR FAN SK 3151/66. (204M
30	FAN	1.000	RITTAL	SK 3323.117	FAN115V, 70CFM
50	ENCLOSURE LIGHT	1.000	LITHONIA	S120120LPF (UL)	24" NEON FIXTURE, SUPPLY 120VAC, 1 TUBE,
60	ENCLOSURE LIGHT	1.000	PHILIPS	F20T12C/W	FLUORESCENT TUBE 24"
70	ENCLOSURE LIGHT	0.500	ELECTRA	ELETG40C	PLASTIC TUBE CLEAR 48" NEON PROTECTION
80	ENCLOSURE LIGHT	2.000	ELECTRA	ELETTGEC12	BLACK END ,PLASTIC TUBE 48", PROTECTION
85	ZS307	1.000	HAMMOND	FLKDS	DOOR SWITCH
100	REC311	1.000	HUBBELL	611	ELECTRICAL BOX.CSA/UL
110	REC311	1.000	HUBBELL	864	DUPLEX PLUG COVER,CSA/UL
120	REC311	1.000	LEVITON	5320-ICP	DUPLEX RECEPTACLE 120V 15A BEIGE
150	DISC106	1.000	ALLEN-BRADLEY	194R-NJ200P3	DISC/SWITCH FUSED 600V 3P 200A CLASS J
160	DISC106	1.000	ALLEN-BRADLEY	194R-R4	DISC/SWITCH 100/200A ROD 15.9"
170	DISC106	1.000	ALLEN-BRADLEY	194R-HM4	DISC/SWITCH OPERATE HANDLE BLK/GRAY N4X
180	DISC106	3.000	ALLEN-BRADLEY	194R-FCD1	DISC/SWITCH 200A FUSE COVER
190	DISC106	1.000	ALLEN-BRADLEY	194R-LNC4	LUG PROTECTION FOR 200A DISC
195	DISC106	1.000	ALLEN-BRADLEY	199-LF1	DISC/SWITCH 194R 200A 3 LUG SET
200	DISC106	3.000	BUSSMANN	LPJ-150SP	TIME DELAY FERRULE FUSE, CLASS J, 600V,
210	T114	1.000	MARCUS	MTC-3000-39	TRANSFO. P:600V, S:120V, 3000VA
220	F114	1.000	ALLEN-BRADLEY	1492-FB2C30	FUSE HOLDER CLASS CC 600V 2P 30A
230	F114	2.000	BUSSMANN	FNQ-R-15	TIME-DELAY REJECTION TYPE CC 10.3X38.1MM
240	F116	1.000	ALLEN-BRADLEY	1492-FB1C30	FUSE HOLDER CLASS CC 600V 1P 30A
250	F116	1.000	BUSSMANN	LP-CC-25	TIME DELAY FERRULE FUSE CLASS CC 600V 25
260	SP109	1.000	ALLEN-BRADLEY	1492-PD31123	SPLITTER BAR 600V 3P 380A 1 LINE 12 LOAD
270	SP109	1.000	ALLEN-BRADLEY	1492-PBC3	POWER BLOCK COVER CLEAR PLEXIGLASS
280	M119,124,144,154,159,174,207,225,247,265, 2A05,2A10,2A15,2A20	14.000	ALLEN-BRADLEY	100-C09D10	CONT 3P 9A COIL 120VAC 60Hz
285	M129,134,164,169	4.000	ALLEN-BRADLEY	100-C12D10	CONT 3P 12A COIL 120VAC 50/60Hz
290	ALL CB...	14.000	ALLEN-BRADLEY	140M-C-AFA10	AUX CONT 1NO FOR THERM0-M BREAKER 140M
291	CB119,124,154,159,2A20	5.000	ALLEN-BRADLEY	140M-C2T-B40	MOTOR PROTECTION CIRCUIT/B 2.5-4.0A
292	CB129,134,164,169	4.000	ALLEN-BRADLEY	140M-C2E-C16	MOTOR PROTECTION CIRCUIT/B 10-16A
293	CB144,174	2.000	ALLEN-BRADLEY	140M-C2E-B10	MOTOR PROTECTION CIRCUIT/B 0.63-1.0A

ENVITECH AUTOMATION INC.
180 BRUNSWICK.
POINTE-CLAIRE, QC H9R 5P9

CUSTOMER BILL OF MATERIEL
NC01, MEADOWBANK - A4765A, LOT: 2

#	DESCRIPTOR	QTY REQD. UNIT	MANUFACTURER	MANUFACTURER PART #	DESCRIPTION
294	CB2A05,CB2A10	2.000	ALLEN-BRADLEY	140M-C2E-C10	MOTOR PROTECTION CIRCUIT/B 6.3-10.0A
295	CB2A15	1.000	ALLEN-BRADLEY	140M-C2E-B25	MOTOR PROTECTION CIRCUIT/B 1.6-2.5A
300	FU207,225,247,265	4.000	ALLEN-BRADLEY	1492-FB3C30	FUSE HOLDER CLASS CC 600V 3P 30A
305	FL207A,225A	2.000	REX MANUFACTURING	3PR-0008C3H	LOAD REACTOR, 3PH, SERIES FOR VARIABLE S
306	LF247A,265A	2.000	REX MANUFACTURING	3PR-0002C3H	LOAD REACTOR, 3PH, SERIES FOR VARIABLE S
310	FU207,FU225	6.000	BUSSMANN	LP-CC-15	TIME DELAY FERRULE FUSE CLASS CC 600V 15
311	FU247,265	6.000	BUSSMANN	LP-CC-6	TIME DELAY FERRULE FUSE CLASS CC 600V 6A
368	MCR343A	1.000	ALLEN-BRADLEY	700-CF400-D	CONTROL RELAY 4NO COIL 120VAC 60HZ.
370	CR503,522,1008,1010,1014,1020,1030,1034,1036,1106,1110,1114,1120,1130,1134	15.000	OMRON	MY2-AC120(S)	PLUG-IN RELAY 2 CONTACT COIL 220/240VAC
371	CR1136,1806,1808,1834,1836	5.000	OMRON	MY2-AC120(S)	PLUG-IN RELAY 2 CONTACT COIL 220/240VAC
380	CR503,522,1008,1010,1014,1020,1030,1034,1036,1106,1110,1114,1120,1130,1134	15.000	OMRON	PYF08A-E	RELAY BASE 8 PIN FOR MY2 RELAY
381	CR1136,1806,1808,1834,1836	5.000	OMRON	PYF08A-E	RELAY BASE 8 PIN FOR MY2 RELAY
390	CR317A,317B	2.000	OMRON	MY4-AC120	PLUG-IN RELAY 4 FORM-C CONTACTS COIL 110
400	CR317A,317B	2.000	OMRON	PYF14A-E	RELAY BASE 14 PIN FOR MY4 RELAY
405	CR...	44.000	OMRON	PYC-A1	HOLD DOWN SPRING FOR RELAY (2 PER PACKAG
410	TR347,351,355,359	4.000	ALLEN-BRADLEY	700-FSA4UU23	TIMER RELAY ON-DELAY DPDT COIL 240VAC
420	MC1016,1018,1020,1024,1032,1116,1118,1120,1124,1132,1810,1812,1814	13.000	ENVITECH	ENVMC3P	MODULE CONTOURNEMENT,3POS,DIGITAL,M-O-A
430	S1428,1528	2.000	ENVITECH	ENVMC2P	MODULE CONTOURNEMENT,2POS,ANALOG,M-A
431	POT1428,1528	2.000	ENVITECH	ENVMCPOT5K	MODULE CONTOURNEMENT,POT 5KOHM,ANALOG
432	CA1428,1528	2.000	WEIDMULLER	990881	POTENTIOMETER TO 4/20MA CONVERTER
433	CA1428,1528	2.000	WEIDMULLER	C9039986	END PLATE FOR TERMINALS.
434	RA1428,1528	2.000	ABB	ISNA610059R1500	RELAY INT/ISOL 2 CONT COIL 24VDC 1LED
460	IL1012,1112	2.000	ALLEN-BRADLEY	800FP-P3	PILOT LIGHT OPERATOR (PLASTIC), GREEN,
462	IL1012,1112	2.000	ALLEN-BRADLEY	800F-N5G	INTEGRATED LED MODLULE, GREEN, 120VAC
464	IL1006	1.000	ALLEN-BRADLEY	800FP-P4	PILOT LIGHT OPERATOR PLASTIC, RED 22.5MM
466	IL1006,ES343	2.000	ALLEN-BRADLEY	800F-N5R	INTEGRATED LED MODLULE, RED, 120VAC
468	IL315	1.000	ALLEN-BRADLEY	800FP-P7	PILOT LIGHT OPERATOR, CLEAR, 22.5MM, TY
470	IL315	1.000	ALLEN-BRADLEY	800F-N5W	INTEGRATED LED MODLULE, WHITE, 120VAC
474	PB317,706	2.000	ALLEN-BRADLEY	800FP-F2	22.5MM FLUSH HEAD PUSH BUTTON BLACK
476	PB806,906	2.000	ALLEN-BRADLEY	800FP-F3	22.5MM FLUSH HEAD PUSH BUTTON GREEN
480	ES343	1.000	ALLEN-BRADLEY	800FP-LMT44	MUSHROOM HEAD PUSH BUTTON, RED HEAD ILLU

#	DESCRIPTOR	QTY REQD. UNIT	MANUFACTURER	MANUFACTURER PART #	DESCRIPTION
481	ALL BUTTON	9.000	ALLEN-BRADLEY	800F-ALM	METAL MOUNTING LATCH, 22.5MM
482	ES343	1.000	ALLEN-BRADLEY	800F-X01	CONTACT BLOCK 1NF, FOR DERIE 800F
484	PB317,ES343,PB706,PB806,PB906	5.000	ALLEN-BRADLEY	800F-X10	CONTACT BLOCK 1NO, FOR DERIE 800F
490	PS542	1.000	PHOENIX	2866310	POWER SUPPLY,TRIO-PS/1AC/24VDC/5A
510	LF602	1.000	CUTLER-HAMMER	AGSHWCH120N05XS	LINE FILTER 120 VAC 5 AMP
520	F..	30.000	ALLEN-BRADLEY	1492-H4	TERMINAL/B 300VAC 12A 1P FUSIBLE NEON
525	F..	2.000	ALLEN-BRADLEY	1492-N37	TERMINAL/B FUSIBLE 1492-H4/5/6 END PLATE
530	F...(3 SPARE)	11.000	BUSSMANN	AGC-0.5	FAST ACTING MINIATURE FUSE 250V 0.5A
535	F...(3 SPARE)	14.000	BUSSMANN	AGC-1	FAST ACTING MINIATURE FUSE 250V 1A
540	F...(3 SPARE)	10.000	BUSSMANN	AGC-2	FAST ACTING MINIATURE FUSE 250V 2A
545	F...(2 SPARE)	6.000	BUSSMANN	AGC-5	FAST ACTING MINIATURE FUSE 250V 5A
560	CB307,311,315,369,371	5.000	WEIDMULLER	9926251005	BRANCH CIRCUIT BREAKER, 1POLE, 5A, CSA.
564	CB373	1.000	WEIDMULLER	992625-1-0-3	BRANCH CIRCUIT BREAKER, 1POLE, 3A, CSA.
580	TB	182.000	WEIDMULLER	102010	TERMINAL BLOCK 600V, 35A, CSA, TYPE WDU
585	TB	83.000	WEIDMULLER	102020	TERMINAL BLOCK 800V 41A TYPE WDU 6
590	TB	20.000	WEIDMULLER	163194	TRANSPARENT COVER FOR MARKER HOLDER SCHT
600	TB	20.000	WEIDMULLER	163193	MARKER HOLDER FOR RAIL TS 32 AND TS 35 T
610	TB	24.000	WEIDMULLER	105000	TERMINAL/B END PLATE WDU 2.5
620	TB	22.000	WEIDMULLER	105010	LARGE END PLATE FOR TERMINALS WDU 4 TO 1
630	TB	37.000	WEIDMULLER	178418	TERMINAL BLOCK TRIPLE 250VAC 23A TYPE DL
640	TB	6.000	WEIDMULLER	178421	END PLATE FOR TERMINALS DLD 2.5
650	TB	20.000	WEIDMULLER	38356	TERMINAL/B END HOLDER EW35 BEIGE
660	PATC CORD	1.000	ORTRONICS	MC5E03-08	PATCH CORD GREY CATEGORY 5E 3 FEET
661	PATCH CORD	1.000	ORTRONICS	MC5E09-08	PATCH CORD GREY CATEGORY 5E 9 FEET
670	NPLATE	10.000	ENVITECH	NAMEPLATE	NAME PLATE AS PER DRAWING
	JUNCTION BOX (QTY: 1)				
10	JB9-510, JB9-520	2.000	HAMMOND	PJ20168H	PANEL IN POLYESTER NEMA 4X , 20HX16WX8D
20	JB9-510, JB9-520	2.000	HAMMOND	P2068	MOUNTING PLATE GAUGE FOR SERIES PJ PANE
30	JB2-011, JB2-021	2.000	HAMMOND	PJ20168	PANEL IN POLYESTER NEMA 4X , 20HX16WX8D
40	JB2-011, JB2-021	2.000	HAMMOND	P2068	MOUNTING PLATE GAUGE FOR SERIES PJ PANE
180	TB	138.000	WEIDMULLER	102010	TERMINAL BLOCK 600V, 35A, CSA, TYPE WDU
190	TB	44.000	WEIDMULLER	102020	TERMINAL BLOCK 800V 41A TYPE WDU 6
200	TB	31.000	WEIDMULLER	105010	LARGE END PLATE FOR TERMINALS WDU 4 TO 1

ENVITECH AUTOMATION INC.
180 BRUNSWICK.
POINTE-CLAIRE, QC H9R 5P9

CUSTOMER BILL OF MATERIEL
NC01, MEADOWBANK - A4765A, LOT: 2

#	DESCRIPTOR	QTY REQD. UNIT	MANUFACTURER	MANUFACTURER PART #	DESCRIPTION
210	TB	6.000	WEIDMULLER	105000	TERMINAL/B END PLATE WDU 2.5
220	TB	4.000	WEIDMULLER	178418	TERMINAL BLOCK TRIPLE 250VAC 23A TYPE DL
230	TB	2.000	WEIDMULLER	178421	END PLATE FOR TERMINALS DLD 2.5
260	TB	12.000	WEIDMULLER	38356	TERMINAL/B END HOLDER EW35 BEIGE
270	PB4A05,PB4A45	2.000	ALLEN-BRADLEY	800FP-F2	22.5MM FLUSH HEAD PUSH BUTTON BLACK
280	PB4A05(4),PB4A45(3),HS2321(3),2361(3),2421(3),2521(3),2561(3),2621(3)	25.000	ALLEN-BRADLEY	800F-X10	CONTACT BLOCK 1NO, FOR DERIE 800F
290	HS2321,2361,2421,2521,2561,2621	6.000	ALLEN-BRADLEY	800FP-SM32	22.5MM 3 POSITION MAINTAINED SELECTOR SW
300	ALL BUTTON	8.000	ALLEN-BRADLEY	800F-ALM	METAL MOUNTING LATCH, 22.5MM
310		12.000	ENVITECH	NAMEPLATE	NAME PLATE AS PER DRAWING
	LOCAL STATIONS (QTY: 1)				
10	HS1022,1026,1028,1122,1126,1128	6.000	HOFFMAN	Q-1PBPCDM	STATION FOR BUTTON, 3.23" X 3.15" X 2.1
15	(HS1806 AND POT257), (HS1808 AND POT275)	2.000	HOFFMAN	Q-2PBPCDM	PUSHBUTTON ENCLOSURE, 4.45" X 2.87" X 3.
20	HS1022,1026,1028,1122,1126,1128,1806,1808	8.000	ALLEN-BRADLEY	800FP-SM32	22.5MM 3 POSITION MAINTAINED SELECTOR SW
30	HS1022(3),1026(3),1028(3),1122(3),1126(3),1128(3),1806(2),1808(2)	22.000	ALLEN-BRADLEY	800F-X10	CONTACT BLOCK 1NO, FOR DERIE 800F
40	HS1022,1026,1028,1122,1126,1128,1806,1808	8.000	ALLEN-BRADLEY	800F-ALM	METAL MOUNTING LATCH, 22.5MM
50	NPLATE	10.000	ENVITECH	NAMEPLATE	NAME PLATE AS PER DRAWING
60	POT257,275	2.000	ALLEN-BRADLEY	800FP-POT5	POTENTIOMETER 5KOHM, 2W
	LOCAL DISCONNECT (QTY: 1)				
10	DS119,124,129,134,144,154,159,164,169,174,207,225,2A05,2A10	14.000	MOELLER	P1-25/I2/SVB-NA	LOCAL DISCONNECT SWITCH 20 AMP. 575VAC
20	DS119,124,129,134,144,154,159,164,169,174,207,225,2A05,2A10	14.000	MOELLER	HI11-P1/P3Z	AUXILIARY CONTACTS FOR P1-XXX, 1 NO, 1 N
30	DS119,124,129,134,144,154,159,164,169,174,207,225,2A05,2A10	14.000	ENVITECH	NAMEPLATE	NAME PLATE AS PER DRAWING
	SUPPLY BY JMI (QTY: 1)				
10	HMI373	1.000			2711P-T6C20A OPERATOR INTERFACE
20	PLC	1.000			1746-L551 PROCESSOR
30	PLC	1.000			1746-A13 PLC RACK
35	PLC	1.000			1746-A4 PLC RACK
37	PLC	1.000			1746-XX EXTENSION CABLE
40	PLC	1.000			1746-P4 POWER SUPPLY
50	PLC	1.000			1746-P2 POWER SUPPLY

ENVITECH AUTOMATION INC.
180 BRUNSWICK.
POINTE-CLAIRE, QC H9R 5P9

CUSTOMER BILL OF MATERIEL
NC01, MEADOWBANK - A4765A, LOT: 2

#	DESCRIPTOR	QTY REQD. UNIT	MANUFACTURER	MANUFACTURER PART #	DESCRIPTION
60	PLC	4.000			1746-IB16 INPUT MODULE
70	PLC	3.000			1746-OW16 RELAY MODULE
80	PLC	2.000			1746-NI8 ANALOG MODULE
90	PLC	3.000			1746-NO4I ANALOG MODULE
100	VFD207,225	2.000			ATV31HU40S6X
105	VFD247,265	2.000			ATV31H075S6X
110	E-SWITCH	1.000			SL-5MS-MDM-1 ETHERNET SWITCH
120	INST503,522	2.000			HPL220
130	INST4A03,4A12,4A21,4A30,4A43,4A52,4A61	7.000			SEEPEX

LEFT BLANK

ELECTRICAL DRAWINGS

LEFT BLANK

MEADOWBANK MINING CORP., NWT

(2) ACTIFLO ACP-700R
COAGULANT, POLYMER, SERVICE
WATER, HCS

Envitech Automation Inc.
CERTIFIÉ ISO9001
ENVITECH Intégrateurs de systèmes / Systems Integrators

ENVITECH DRAWING A4765A

BAR = 1" AT PLOT SCALE

STD: JMI_22x34_D_ANG

REF:

REV	DESCRIPTION	DATE	DWN	CHKD	APVD	ECN
B	AS BUILT	2009/05/29	JR	JCD		
A	FOR APPROVAL	2009/04/16	JR	JCD		

CONFIDENTIALITY AND INTELLECTUAL PROPERTY NOTICE
ALL INFORMATION CONTAINED IN THIS DOCUMENT IS THE SOLE PROPERTY OF JOHN MEUNIER INC. AND IS PROTECTED BY ALL APPLICABLE LAWS, INCLUDING BUT NOT LIMITED TO COPYRIGHT AND OTHER INTELLECTUAL PROPERTY LAWS. THE DESIGN CONCEPTS AND INFORMATION CONTAINED HEREIN ARE PROPRIETARY TO JMI AND ARE SUBMITTED IN CONFIDENCE. THEY ARE NOT TRANSFERABLE. THEY MUST BE USED ONLY FOR THE PURPOSE FOR WHICH THE DOCUMENT IS EXPRESSLY SUBMITTED AND NO IMPLICIT LICENCE IS GRANTED OTHERWISE BY THE SUBMISSION OF THIS DOCUMENT. THEY ARE CONFIDENTIAL AND PRIVILEGED INFORMATION OF JMI AND THEY MUST NOT BE DISCLOSED, REPRODUCED, LOANED, REMITTED OR USED IN ANY OTHER MANNER WITHOUT THE EXPRESS WRITTEN CONSENT OF JMI. JMI ASSUMES NO RESPONSIBILITY OR LIABILITY FOR THE USE OF THIS DOCUMENT OR THE DESIGN CONCEPTS AND INFORMATION CONTAINED HEREIN FOR ANOTHER PURPOSE, OR IN A MANNER THAT DOES NOT RELATE TO THE STATED OR PURPOSE OF THIS DOCUMENT. IN NO EVENT SHALL THIS DOCUMENT OR THE DESIGN CONCEPTS AND INFORMATION CONTAINED HEREIN BE USED IN A MANNER DETRIMENTAL TO THE INTEREST OF JMI. ALL COPYRIGHT, PATENT AND OTHER INTELLECTUAL PROPERTY RIGHTS ARE RESERVED. ACCEPTANCE OF THE DELIVERY OF THIS DOCUMENT CONSTITUTES AGREEMENT TO THESE TERMS AND CONDITIONS.

DESIGNER	DATE
CHECKER	DATE
ENGINEER	DATE
MANAGER	DATE
SCALE:	

TITLE (2) ACTIFLO ACP-700R
TITLE PAGE

CLIENT MEADOWBANK MINING CORP., NWT

JOHN MEUNIER ISO 9001: 2000
4105 Sartorius Street, Saint-Laurent, Qc, Canada H4S 2B3 / Tel: (514) 334-7230 / Fax: (514) 334-5070

PROJECT NC01- DRAWING 001-E00-001 SHEET 1 OF 2 REV B

DESCRIPTION	DRAWING NUMBER
TITLE PAGE	NC01-000-E00-001
DRAWING LIST, LEGENDE	NC01-000-E00-002
PLC ENCLOSURE LAYOUT	NC01-001-E02-001
PLC ENCLOSURE LAYOUT	NC01-001-E02-002
JONCTION BOXES, LOCAL STATIONS AND LOCAL DISCONNECTS	NC01-001-E02-003
JONCTION BOXES, LOCAL STATIONS AND LOCAL DISCONNECTS	NC01-001-E02-004
ELECTRICAL SCHEMATIC	NC01-001-E04-001
ELECTRICAL SCHEMATIC	NC01-001-E04-002
ELECTRICAL SCHEMATIC	NC01-001-E04-002A
ELECTRICAL SCHEMATIC	NC01-001-E04-003
ELECTRICAL SCHEMATIC	NC01-001-E04-004
ELECTRICAL SCHEMATIC	NC01-001-E04-004A
ELECTRICAL SCHEMATIC	NC01-001-E04-004B
ELECTRICAL SCHEMATIC	NC01-001-E04-005
ELECTRICAL SCHEMATIC	NC01-001-E04-006
ELECTRICAL SCHEMATIC	NC01-001-E04-007
ELECTRICAL SCHEMATIC	NC01-001-E04-008
ELECTRICAL SCHEMATIC	NC01-001-E04-009
ELECTRICAL SCHEMATIC	NC01-001-E04-010
ELECTRICAL SCHEMATIC	NC01-001-E04-011
ELECTRICAL SCHEMATIC	NC01-001-E04-012
ELECTRICAL SCHEMATIC	NC01-001-E04-013
ELECTRICAL SCHEMATIC	NC01-001-E04-014
ELECTRICAL SCHEMATIC	NC01-001-E04-015
ELECTRICAL SCHEMATIC	NC01-001-E04-016
ELECTRICAL SCHEMATIC	NC01-001-E04-017
ELECTRICAL SCHEMATIC	NC01-001-E04-018
ELECTRICAL SCHEMATIC	NC01-001-E04-019
ELECTRICAL SCHEMATIC	NC01-001-E04-020
ELECTRICAL SCHEMATIC	NC01-001-E04-021
ELECTRICAL SCHEMATIC	NC01-001-E04-022
ELECTRICAL SCHEMATIC	NC01-001-E04-023
ELECTRICAL SCHEMATIC	NC01-001-E04-024
ELECTRICAL SCHEMATIC	NC01-001-E04-025
ELECTRICAL SCHEMATIC	NC01-001-E04-026
ELECTRICAL SCHEMATIC	NC01-001-E04-027
ELECTRICAL SCHEMATIC	NC01-001-E04-028
FIELD WIRING	NC01-001-E20-001
FIELD WIRING	NC01-001-E20-002
FIELD WIRING	NC01-001-E20-003
FIELD WIRING	NC01-001-E20-004
FIELD WIRING	NC01-001-E20-005A
FIELD WIRING	NC01-001-E20-005B
FIELD WIRING	NC01-001-E20-006
FIELD WIRING	NC01-001-E20-007
FIELD WIRING	NC01-001-E20-008
FIELD WIRING	NC01-001-E20-009
FIELD WIRING	NC01-001-E20-010
FIELD WIRING	NC01-001-E20-011
FIELD WIRING	NC01-001-E20-012
FIELD WIRING	NC01-001-E20-013
FIELD WIRING	NC01-001-E20-014
FIELD WIRING	NC01-001-E20-015
FIELD WIRING	NC01-001-E20-016
FIELD WIRING	NC01-001-E20-017A
FIELD WIRING	NC01-001-E20-017B
FIELD WIRING	NC01-001-E20-017C

LEGEND

- PRESSURE SWITCH
- PRESSURE SWITCH
- LEVEL SWITCH
- LEVEL SWITCH
- LIMIT SWITCH
- LIMIT SWITCH
- FLOW SWITCH
- FLOW SWITCH
- RELAY CONTACT
- RELAY CONTACT
- ON DELAY TIMER
- GROUND
- ISOLATED GROUND
- MAINTAINED TWO SELECTOR SWITCH
- MAINTAINED 3 POSITIONS SELECTOR SWITCH
- SPRING RETURN TO CENTRE 3 POSITIONS SELECTOR SWITCH
- PUSH BUTTON
- PUSH BUTTON
- PUSH BUTTON
- EMERGENCY STOP BUTTON
- POTENTIOMETER
- 1 POLE CIRCUIT BREAKER
- FUSE
- PILOT LIGHT
- PUSH TO TEST PILOT LIGHT
- RELAY COIL
- RELAY COIL WITH SURGE SUPPRESSOR
- CONTACTOR COIL
- CONTACTOR COIL WITH SURGE SUPPRESSOR
- ALARM
- RESISTOR
- SOLENOID
- POWER BLOCK FOR FIELD WIRING
- TERMINAL FOR FIELD WIRING
- 3 POLES THERMAL MAGNETIC CIRCUIT BREAKER
- 3 POLES MAGNETIC CIRCUIT BREAKER
- 3 POLES FUSIBLE DISCONNECT SWITCH
- 3 POLES DISCONNECT SWITCH
- 3 POLES CONTACTOR
- 3 POLES OVERLOAD RELAY
- 1 POLE TRANSFORMER

Envitech Automation Inc. CERTIFIÉ ISO9001
ENVITECH Intégrateurs de systèmes / Systems Integrators

ENVITECH DRAWING A4765A

BAR = 1" AT PLOT SCALE

STD: JMI_22x34_D_ANC

REF:

REV	DESCRIPTION	DATE	DWN	CHKD	APVD	ECN
B	AS BUILT	2009/05/29	JR	JCD		
A	FOR APPROVAL	2009/04/15	JR	JCD		

CONFIDENTIALITY AND INTELLECTUAL PROPERTY NOTICE
ALL INFORMATION CONTAINED IN THIS DOCUMENT IS THE SOLE PROPERTY OF JOHN MEUNIER INC. AND IS PROTECTED BY ALL APPLICABLE LAWS, INCLUDING BUT NOT LIMITED TO COPYRIGHT AND OTHER INTELLECTUAL PROPERTY LAWS. THE DESIGN CONCEPTS AND INFORMATION CONTAINED HEREIN ARE PROPRIETARY TO JM AND ARE CONFIDENTIAL AND PRIVILEGED. THIS DOCUMENT AND ITS CONTENTS MUST BE USED ONLY FOR THE PURPOSE FOR WHICH THIS DOCUMENT IS EXPRESSLY SUBMITTED AND NO IMPLIED LICENCE IS CREATED OTHERWISE BY THE SUBMISSION OF THIS DOCUMENT. THEY ARE CONFIDENTIAL AND PRIVILEGED INFORMATION OF JM AND THEY MUST NOT BE DISCLOSED, REPRODUCED, LOANED, TRANSFERRED OR USED IN ANY WAY WHATSOEVER WITHOUT THE PRIOR WRITTEN CONSENT OF JM. JM ASSUMES NO RESPONSIBILITY OR LIABILITY FOR THE USE OF THIS DOCUMENT OR THE DESIGN CONCEPTS AND INFORMATION CONTAINED HEREIN FOR ANOTHER PURPOSE OR IN A MANNER THAT DOES NOT RELATE TO THE INTENDED PURPOSE OF THIS DOCUMENT. IN NO EVENT SHALL THIS DOCUMENT OR THE DESIGN CONCEPTS AND INFORMATION CONTAINED HEREIN BE USED IN A MANNER DETRIMENTAL TO THE INTEREST OF JM. ALL RIGHTS ARE RESERVED. ACCEPTANCE OF THE DELIVERY OF THIS DOCUMENT CONSTITUTES AGREEMENT TO THESE TERMS AND CONDITIONS.

DESIGNER	DATE
CHECKER	DATE
ENGINEER	DATE
MANAGER	DATE
SCALE:	

TITLE: (2) ACTIFLO ACP-700R
TITLE PAGE

CLIENT: MEADOWBANK MINING CORP., NWT

JOHN MEUNIER ISO 9001: 2000
4155 Sartelon Street, Saint-Laurent, Qc, Canada H4S 2B3 / Tel: (514) 334-7230 / Fax: (514) 334-5070

PROJECT: NC01- 001-E00-002
DRAWING
SHEET: 2 OF 2
REV: B

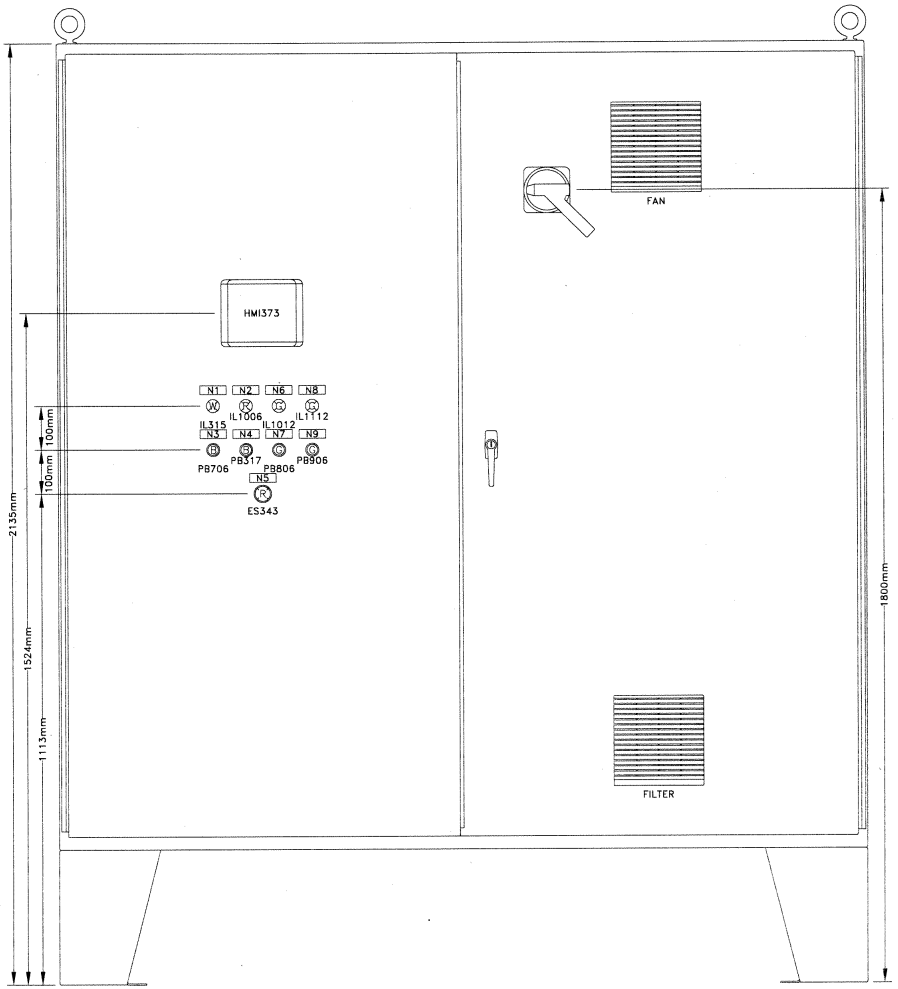

ENCLOSURE 72H X 72L X 18P in. WITH 12 in.
FLOOR STAND, NEMA 12, CSA APPROVAL

NAMEPLATE

N1 = POWER ON
N2 = COMMON ALARM
N3 = ALARM ACKNOWLEDGE
N4 = FAULT ACKNOWLEDGE
N5 = EMERGENCY STOP
N6 = ACTIFLO 1, STATUS
N7 = ACTIFLO 1, START/STOP
N8 = ACTIFLO 2, STATUS
N9 = ACTIFLO 2, START/STOP

Envitech Automation Inc.
CERTIFIÉ ISO9001
ENVITECH Intégrateurs de systèmes / Systems Integrators

ENVITECH DRAWING A4765A

BAR = 1" AT PLOT SCALE

STD: JMI_22x34_D_ANG

REF:

REV	DESCRIPTION	DATE	DWN	CHKD	APVD	ECN
B	AS BUILT	2009/05/29	JR	JCD		
A	FOR APPROVAL	2009/04/16	JR	JCD		

CONFIDENTIALITY AND INTELLECTUAL PROPERTY NOTICE
ALL INFORMATION CONTAINED IN THIS DOCUMENT IS THE SOLE PROPERTY OF JOHN MEUNIER INC. AND IS PROTECTED BY ALL APPLICABLE LAWS, INCLUDING BUT NOT LIMITED TO COPYRIGHT AND OTHER INTELLECTUAL PROPERTY LAWS. THE DESIGN CONCEPTS AND INFORMATION CONTAINED HEREIN ARE PROPRIETARY TO JMI AND ARE SUBMITTED IN CONFIDENCE. THEY ARE NOT TRANSFERABLE. THEY MUST BE USED ONLY FOR THE PURPOSE FOR WHICH THE DOCUMENT IS EXPRESSLY SUBMITTED AND NO IMPLICIT LICENCE IS GRANTED OTHERWISE BY THE SUBMISSION OF THIS DOCUMENT. THEY ARE CONFIDENTIAL AND PRIVILEGED INFORMATION OF JMI AND THEY MUST NOT BE DISCLOSED, REPRODUCED, LOANED, REMITTED OR USED IN ANY OTHER MANNER WITHOUT THE EXPRESS WRITTEN CONSENT OF JMI. JMI ASSUMES NO RESPONSIBILITY OR LIABILITY FOR THE USE OF THIS DOCUMENT OR THE DESIGN CONCEPTS AND INFORMATION CONTAINED HEREIN FOR ANOTHER PROJECT, OR IN A MANNER THAT DOES NOT RELATE TO THE FITNESS OR PURPOSE OF THIS DOCUMENT. IN NO EVENT SHALL THIS DOCUMENT OR THE DESIGN CONCEPTS AND INFORMATION CONTAINED HEREIN BE USED IN A MANNER DETRIMENTAL TO THE INTEREST OF JMI. ALL COPYRIGHT, PATENT AND OTHER INTELLECTUAL PROPERTY RIGHTS ARE RESERVED. ACCEPTANCE OF THE DELIVERY OF THIS DOCUMENT CONSTITUTES AGREEMENT TO THESE TERMS AND CONDITIONS.

DESIGNER	DATE
CHECKER	DATE
ENGINEER	DATE
MANAGER	DATE
SCALE:	

TITLE (2) ACTIFLO ACP-700R
PLC ENCLOSURE LAYOUT

CLIENT MEADOWBANK MINING CORP., NWT

JOHN MEUNIER ISO 9001: 2000
4105 Sartelon Street, Saint-Laurent, Qc, Canada H4S 2B3 / Tel: (514) 334-7230 / Fax: (514) 334-5070

PROJECT DRAWING NC01- 001-E02-001

SHEET 1 OF 4

REV B

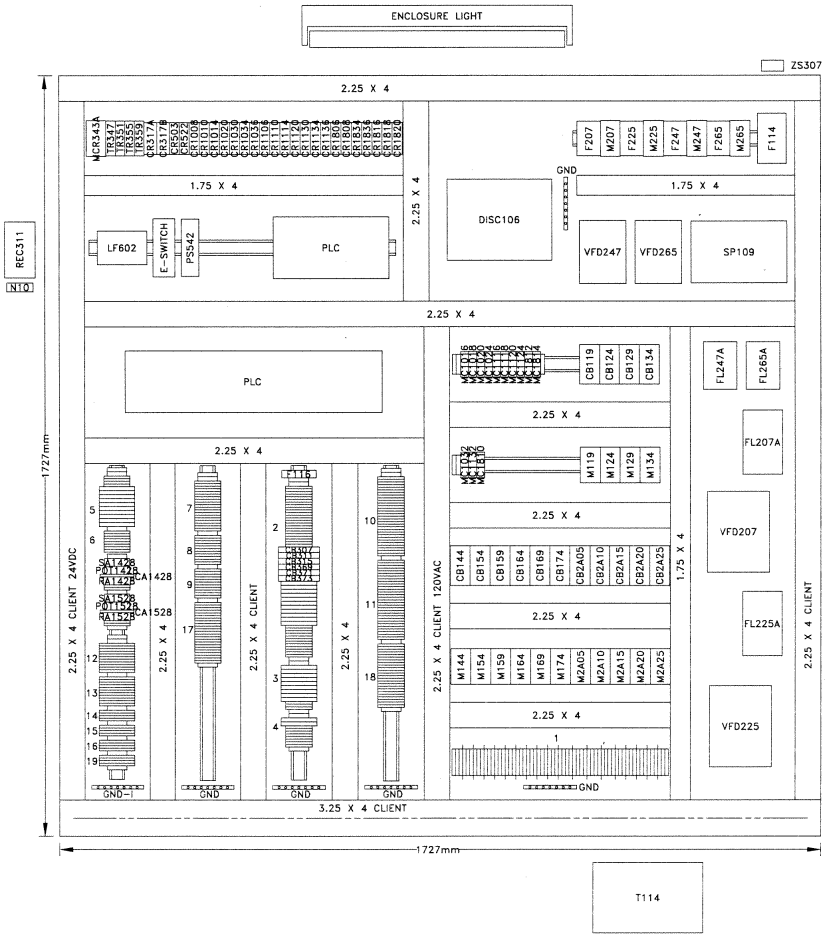

NAMEPLATE

N10= FOR COMPUTER, ONLY, 5 AMPS MAX

TERMINAL DESCRIPTION
1 = MOTORS
2 = 120VAC DIST.
3 = SEEPEX
4 = HPL220
5 = 24VDC DIST.
6 = POTENTIOMETER
7 = RACK 1 SLOT 1
8 = RACK 1 SLOT 2
9 = RACK 1 SLOT 3
10 = RACK 1 SLOT 4
11 = RACK 1 SLOT 5
12 = RACK 1 SLOT 6
13 = RACK 1 SLOT 7
14 = RACK 1 SLOT 8
15 = RACK 1 SLOT 9
16 = RACK 1 SLOT 10
17 = RACK 1 SLOT 11
18 = RACK 1 SLOT 12
19 = RACK 1 SLOT 13

Envitech Automation Inc. CERTIFIÉ ISO9001
ENVITECH Intégrateurs de systèmes / Systems Integrators

ENVITECH DRAWING A4765A

REV	DESCRIPTION	DATE	DWN	CHKD	APVD	ECN
B	AS BUILT	2009/05/29	JR	JCD		
A	FOR APPROVAL	2009/04/16	JR	JCD		

BAR = 1" AT PLOT SCALE

CONFIDENTIALITY AND INTELLECTUAL PROPERTY NOTICE
ALL INFORMATION CONTAINED IN THIS DOCUMENT IS THE SOLE PROPERTY OF JOHN MEUNIER INC. AND IS PROTECTED BY ALL APPLICABLE LAWS, INCLUDING BUT NOT LIMITED TO COPYRIGHT AND TRADE SECRET LAWS. ALL RIGHTS ARE RESERVED. ALL INFORMATION CONTAINED HEREIN ARE PROPRIETARY TO JM AND ARE SUBMITTED IN CONFIDENCE. THEY ARE NOT TRANSFERABLE, THEY MUST BE USED ONLY FOR THE PURPOSE FOR WHICH THE DOCUMENT IS EXPRESSLY SUBMITTED AND NO IMPLICIT LICENCE IS GRANTED TO THE USER. THE USER AGREES TO MAINTAIN ALL SUCH DATA IN CONFIDENCE AND PROTECTED INFORMATION OF JM AND THEY MUST NOT BE DISCLOSED, REPRODUCED, LOANED, ADAPTED OR USED IN ANY OTHER MANNER WITHOUT THE EXPRESS WRITTEN CONSENT OF JM. JM ASSUMES NO RESPONSIBILITY OR LIABILITY FOR THE USE OF THIS DOCUMENT OR THE DESIGN CONCEPTS AND INFORMATION CONTAINED HEREIN FOR ANOTHER PURPOSE, OR IN A MANNER THAT DOES NOT FULLY COMPLY WITH THE INTENT OF THIS DISCLAIMER. IN NO EVENT SHALL THIS DISCLAIMER OF THE DESIGN CONCEPTS AND INFORMATION CONTAINED HEREIN BE USED IN A MANNER DETRIMENTAL TO THE INTEREST OF JM. ALL COPYRIGHT, PATENT AND OTHER INTELLECTUAL PROPERTY RIGHTS ARE RESERVED. ACCEPTANCE OF THE DELIVERY OF THIS DISCLAIMER CONSTITUTES AGREEMENT TO THOSE TERMS AND CONDITIONS.

DESIGNER		DATE
CHECKER		DATE
ENGINEER		DATE
MANAGER		DATE
SCALE:		

TITLE: (2) ACTIFLO ACP-700R PLC ENCLOSURE LAYOUT

CLIENT: MEADOWBANK MINING CORP., NWT

JOHN MEUNIER ISO 9001: 2000
4105 Sartelon Street, Saint-Laurent, Qc, Canada H4S 2B3 / Tel: (514) 334-7230 / Fax: (514) 334-5070

PROJECT: NC01-001-E02-002 | DRAWING | SHEET: 2 OF 4 | REV: B

STD: JMI_22x34_D_ANG | REF:

JUNCTION BOX, NEMA4X, POLYESTER, PJ20168 SCREW COVER
N1= JB2-011, ACTIFLO 1

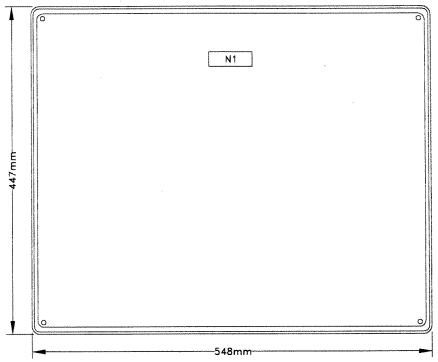

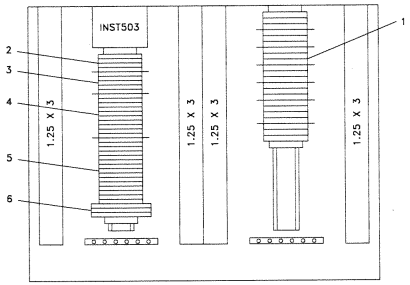

TERMINAL DESCRIPTION
1 = MOTORS
2 = 120VAC DIST.
3 = HPL220
4 = RACK 1 SLOT 2
5 = RACK 1 SLOT 4
6 = RACK 1 SLOT 6

NOTE: RAIL WITH SPACER

LOCAL DISCONNECT, NEMA3R, PLASTIC

N1 = ACTIFLO 1, COAGULATION MIXER
N2 = ACTIFLO 1, INJECTION MIXER
N3 = ACTIFLO 1, RECIRCULATION PUMP #1
N4 = ACTIFLO 1, RECIRCULATION PUMP #2
N5 = ACTIFLO 1, SCRAPER
N6 = ACTIFLO 2, COAGULATION MIXER
N7 = ACTIFLO 2, INJECTION MIXER
N8 = ACTIFLO 2, RECIRCULATION PUMP #1
N9 = ACTIFLO 2, RECIRCULATION PUMP #2
N10= ACTIFLO 2, SCRAPER
N11= ACTIFLO 1, MATURATION MIXER
N12= ACTIFLO 2, MATURATION MIXER
N13= SERVICE WATER PUMP #1
N14= SERVICE WATER PUMP #2
N15 = COAGULATION PREPARATION, SYSTEM #1 FEEDER
N16 = COAGULATION PREPARATION, SYSTEM #1 MIXER
N17 = COAGULATION PREPARATION, SYSTEM #1 BLOWER
N18 = COAGULATION TRANSFERT PUMP
N19 = CAUSTIC SODA MIXER

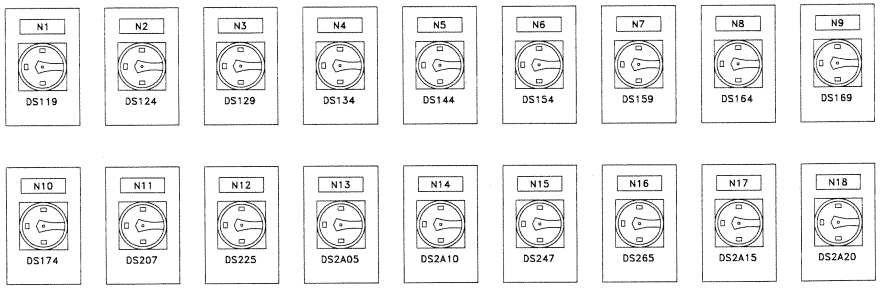

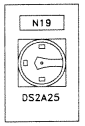

JUNCTION BOX, NEMA4X, POLYESTER, PJ20168 SCREW COVER
N1= JB2-021, ACTIFLO 2

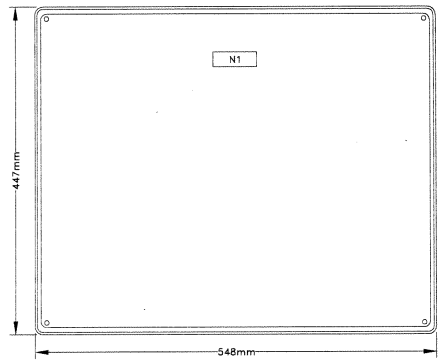

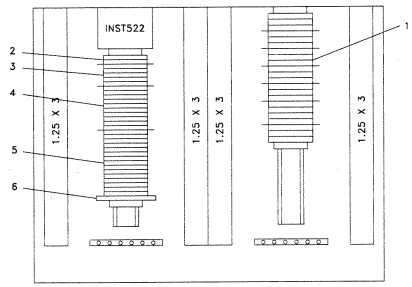

TERMINAL DESCRIPTION
1 = MOTORS
2 = 120VAC DIST.
3 = HPL220
4 = RACK 1 SLOT 3
5 = RACK 1 SLOT 5
6 = RACK 1 SLOT 7

NOTE: RAIL WITH SPACER

LOCAL STATION, NEMA4X, POLYESTER

N1 = ACTIFLO 1, RECIRCULATION PUMP #1, HAND-OFF-AUTO
N2 = SERVICE WATER PUMP #1, HAND-OFF-AUTO
N3 = ACTIFLO 1, RECIRCULATION PUMP #2, HAND-OFF-AUTO
N4 = ACTIFLO 2, RECIRCULATION PUMP #1, HAND-OFF-AUTO
N5 = SERVICE WATER PUMP #2, HAND-OFF-AUTO
N6 = ACTIFLO 2, RECIRCULATION PUMP #2, HAND-OFF-AUTO
N7 = COAG. PREP. FEEDER, HAND-OFF-AUTO SPEED
N8 = COAG. PREP. MIXER, HAND-OFF-AUTO SPEED
N9 = CAUSTIC SODA MIXER, HAND-OFF-AUTO

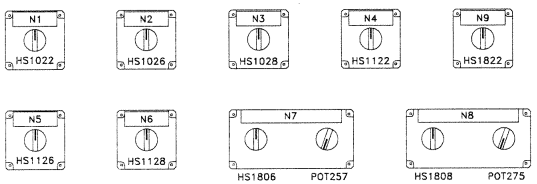

CONFIDENTIALITY AND INTELLECTUAL PROPERTY NOTICE
ALL INFORMATION CONTAINED IN THIS DOCUMENT IS THE SOLE PROPERTY OF JOHN MEUNIER INC. AND IS PROTECTED BY ALL APPLICABLE LAWS, INCLUDING BUT NOT LIMITED TO COPYRIGHT AND OTHER INTELLECTUAL PROPERTY LAWS. ANY DESIGN CONCEPTS AND INFORMATION CONTAINED IN THIS DOCUMENT ARE AND SHALL BE SUBMITTED IN CONFIDENCE. THEY ARE NOT TRANSFERABLE. THEY MUST BE USED ONLY FOR THE PURPOSE FOR WHICH THE DOCUMENT IS EXPRESSLY SUBMITTED AND NO IMPLICIT LICENCE IS GRANTED OTHERWISE BY THE SUBMISSION OF THIS DOCUMENT. THEY ARE CONFIDENTIAL AND PROPRIETARY INFORMATION AND THEY MUST NOT BE DISCLOSED, COPIED, REPRODUCED, TRANSMITTED, STORED IN ANY RETRIEVAL SYSTEM OF ANY KIND OR USED IN ANY OTHER MANNER WITHOUT THE EXPRESS WRITTEN CONSENT OF JMI. JMI ASSUMES NO RESPONSIBILITY OR LIABILITY FOR THE USE OF THIS DOCUMENT OR THE DESIGN CONCEPTS AND INFORMATION CONTAINED HEREIN FOR ANOTHER PROJECT, OR IN A MANNER THAT DOES NOT RELATE TO THE FITNESS OR PURPOSE OF THIS DOCUMENT. IN NO EVENT SHALL JMI BE LIABLE FOR ANY DAMAGES RESULTING FROM SUCH USE OF CONTAINED HEREIN OR USED IN A MANNER EXTRANEOUS TO THE INTENDED OF JMI. ALL COPYRIGHT, PATENT AND OTHER INTELLECTUAL PROPERTY RIGHTS ARE RESERVED. ACCEPTANCE OF THE DELIVERY OF THIS DOCUMENT CONSTITUTES AGREEMENT TO THESE TERMS AND CONDITIONS.

REV	DESCRIPTION	DATE	DWN	CHKD	APVD	ECN
B	AS BUILT	2009/05/29	JR	JCD		
A	FOR APPROVAL	2009/04/16	JR	JCD		

Envitech Automation Inc. *CERTIFIÉ ISO9001*
ENVITECH Intégrateurs de systèmes / Systems Integrators

ENVITECH DRAWING A4765A

BAR = 1" AT PLOT SCALE

STD: JMI_22x34_D_ANG

DESIGNER	DATE
CHECKER	DATE
ENGINEER	DATE
MANAGER	DATE
SCALE:	

TITLE (2) ACTIFLO ACP-700R
JUNCTION BOXES, LOCAL STATIONS
AND LOCAL DISCONNECTS

CLIENT MEADOWBANK MINING CORP., NWT

JOHN MEUNIER ISO 9001: 2000
4105 Sartelon Street, Saint-Laurent, Qc, Canada H4S 2B3 / Tel: (514) 334-7230 / Fax: (514) 334-5070

PROJECT NC01- 001-E02-003
DRAWING 3 OF 4
SHEET
REV B

JUNCTION BOX, NEMA4X, POLYESTER, PJ20168H HINGE COVER
N1= JB9-510, COAGULANT
N2= PUMP #1, HAND OFF AUTO
N3= PUMP #2, HAND OFF AUTO
N4= PUMP #3, HAND OFF AUTO
N5= RESET HIGH TEMPERATURE
N6= UNLOAD BAG

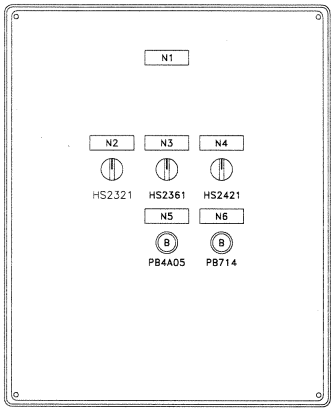

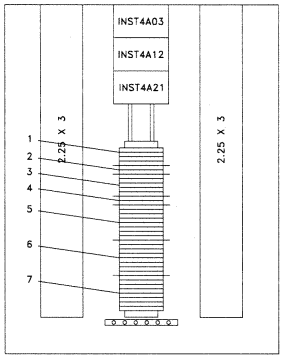

TERMINAL DESCRIPTION
1 = SEEPEX
2 = RACK 1 SLOT 1
3 = RACK 1 SLOT 11
4 = RACK 1 SLOT 12
5 = PUMP #1
6 = PUMP #2
7 = PUMP #3

NOTE: RAIL WITH SPACER

JUNCTION BOX, NEMA4X, POLYESTER, PJ20168 HINGE COVER
N1= JB9-520, POLYMER
N2= PUMP #1, HAND OFF AUTO
N3= PUMP #2, HAND OFF AUTO
N4= PUMP #3, HAND OFF AUTO
N5= RESET HIGH TEMPERATURE

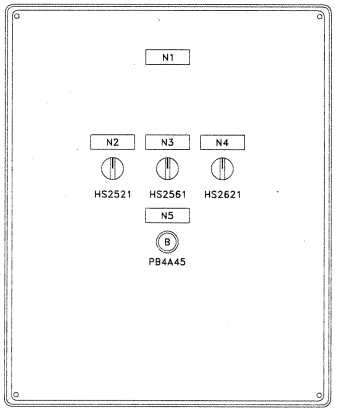

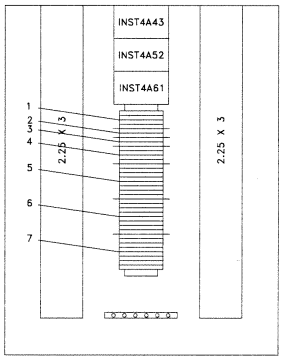

TERMINAL DESCRIPTION
1 = SEEPEX
2 = RACK 1 SLOT 4
3 = RACK 1 SLOT 5
4 = RACK 1 SLOT 11
5 = PUMP #1
6 = PUMP #2
7 = PUMP #3

NOTE: RAIL WITH SPACER

JUNCTION BOX, NEMA4X, POLYESTER, PJ20168 HINGE COVER
N1= JB9-540, CAUSTIC SODA
N2= PUMP #1, HAND OFF AUTO
N3= PUMP #2, HAND OFF AUTO
N4= PUMP #3, HAND OFF AUTO
N5= RESET

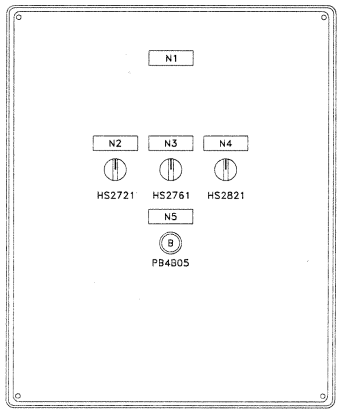

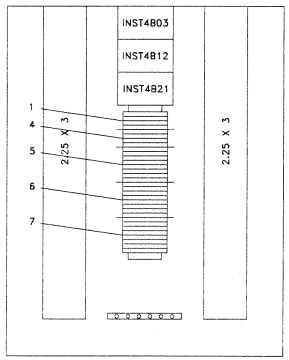

TERMINAL DESCRIPTION
1 = SEEPEX
4 = RACK 1 SLOT 11
5 = PUMP #1
6 = PUMP #2
7 = PUMP #3

NOTE: RAIL WITH SPACER

Envitech Automation Inc. CERTIFIÉ ISO9001
ENVITECH Intégrateurs de systèmes / Systems Integrators

REV	DESCRIPTION	DATE	DWN	CHKD	APVD	ECN
B	AS BUILT	2009/05/29	JR	JCD		
A	FOR APPROVAL	2009/04/16	JR	JCD		

ENVITECH DRAWING A4765A
BAR = 1" AT PLOT SCALE
STD: JM1_22x34_D_ANG
REF:

CONFIDENTIALITY AND INTELLECTUAL PROPERTY NOTICE
ALL INFORMATION CONTAINED IN THIS DOCUMENT IS THE SOLE PROPERTY OF JOHN MEUNIER INC. AND IS PROTECTED BY ALL APPLICABLE LAWS, INCLUDING BUT NOT LIMITED TO COPYRIGHT AND OTHER LAWS. ALL DESIGN CONCEPTS AND INFORMATION CONTAINED HEREIN ARE PROPRIETARY TO JM AND ARE SUBMITTED IN CONFIDENCE. THEY ARE NOT TRANSFERABLE, THEY MUST BE USED ONLY FOR THE PURPOSE FOR WHICH THE DOCUMENT IS EXPRESSLY SUBMITTED AND NO IMPLIED LICENCE IS GRANTED HEREIN. THIS DOCUMENT MUST NOT BE COPIED IN WHOLE OR IN PART, CONTINUOUSLY, AND PARALLELED INFORMATION OF JM AND THEY MUST NOT BE DISCLOSED, REPRODUCED, LOANED, REMITTED OR USED IN ANY OTHER MANNER WITHOUT THE EXPRESS WRITTEN CONSENT OF JM. JM ASSUMES NO RESPONSIBILITY OR LIABILITY FOR THE USE OF THIS DOCUMENT OR THE DESIGN CONCEPTS AND INFORMATION CONTAINED HEREIN FOR ANOTHER PROJECT OR IN A MANNER THAT DOES NOT CONFORM HEREIN. BY ACCEPTING THIS DOCUMENT, THE USER SHALL THE DOCUMENT OR THE DESIGN CONCEPTS AND INFORMATION CONTAINED HEREIN BE USED IN A MANNER DETRIMENTAL TO THE INTEREST OF JM. ALL COPYRIGHT, PATENT AND OTHER INTELLECTUAL PROPERTY RIGHTS ARE RESERVED. ACCEPTANCE OF THE DELIVERY OF THIS DOCUMENT CONSTITUTES AGREEMENT TO THESE TERMS AND CONDITIONS.

		DATE
DESIGNER		
CHECKER		DATE
ENGINEER		DATE
MANAGER		DATE
SCALE:		

TITLE: (2) ACTIFLO ACP-700R
JUNCTION BOXES, LOCAL STATIONS
AND LOCAL DISCONNECTS

CLIENT: MEADOWBANK MINING CORP., NWT

JOHN MEUNIER ISO 9001: 2000
4105 Sartelon Street, Saint-Laurent, Qc, Canada H4S 2B3 / tel: (514) 334-7230 / fax: (514) 334-5070

PROJECT NC01- 001-E02-004
DRAWING
SHEET 4 OF 4
REV B

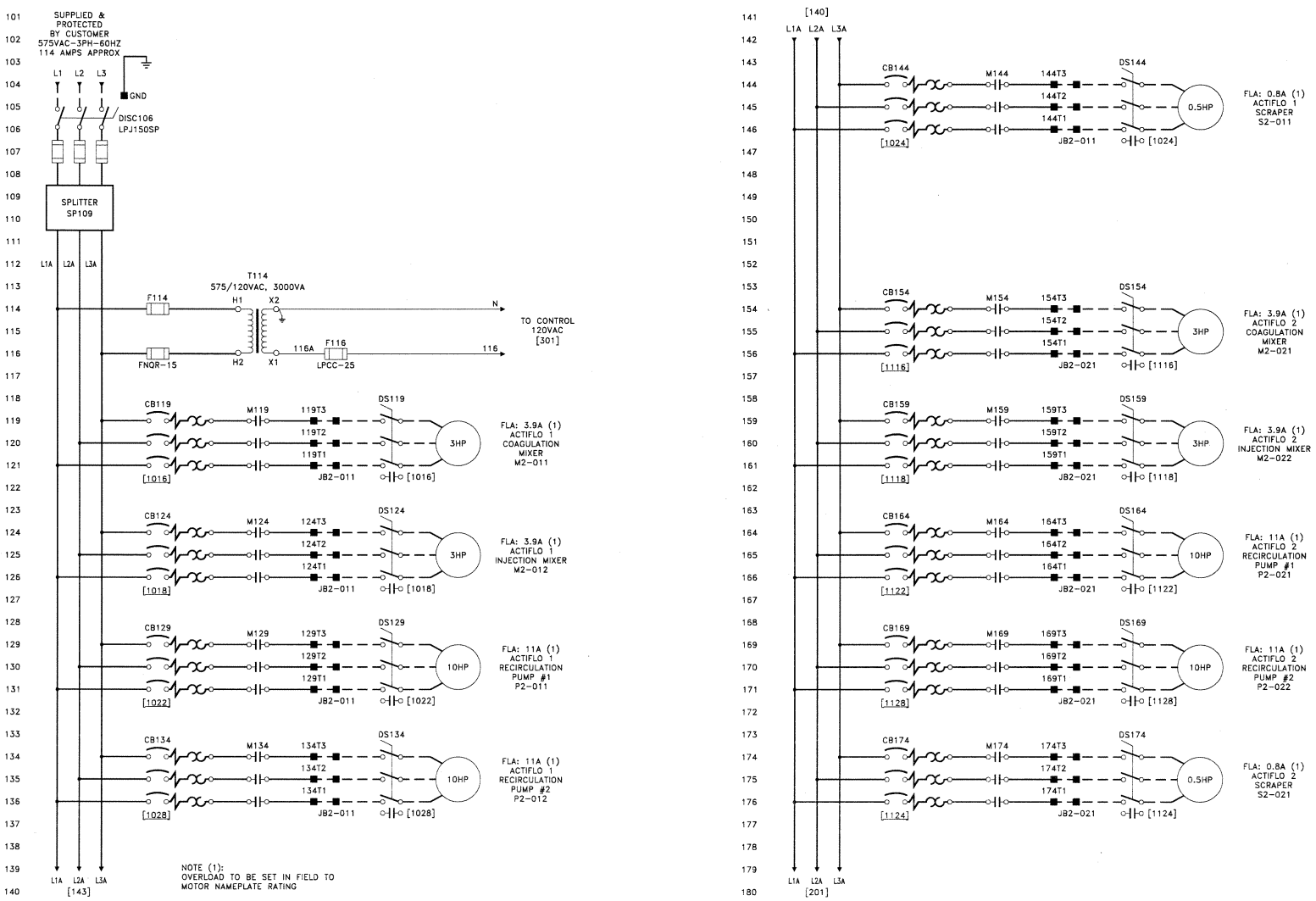

Envitech Automation Inc. CERTIFIÉ ISO9001
ENVITECH Intégrateurs de systèmes / Systems Integrators

ENVITECH DRAWING A4765A

BAR = 1" AT PLOT SCALE

STD: JMI_22x34_D_ANG

REF:

REV	DESCRIPTION	DATE	DWN	CHKD	APVD	ECN
B	AS BUILT	2009/05/29	JR	JCD		
A	FOR APPROVAL	2009/04/16	JR	JCD		

CONFIDENTIALITY AND INTELLECTUAL PROPERTY NOTICE
ALL INFORMATION CONTAINED IN THIS DOCUMENT IS THE SOLE PROPERTY OF JOHN MEUNIER INC. AND IS PROTECTED BY ALL APPLICABLE LAWS, INCLUDING BUT NOT LIMITED TO COPYRIGHT AND OTHER INTELLECTUAL PROPERTY LAWS. THE DESIGN CONCEPTS AND INFORMATION CONTAINED HEREIN ARE PROPRIETARY TO JMI AND ARE SUBMITTED IN CONFIDENCE. THEY ARE NOT TRANSFERABLE. THEY MUST BE USED ONLY FOR THE PURPOSE FOR WHICH THE DOCUMENT IS EXPRESSLY SUBMITTED AND NO IMPLIED LICENCE IS GRANTED OTHERWISE BY THE SUBMISSION OF THIS DOCUMENT. THEY ARE CONFIDENTIAL AND PROPRIETARY INFORMATION OF JMI AND THEY MUST NOT BE DISCLOSED, REPRODUCED, COPIED, REMITTED OR USED IN ANY OTHER MANNER WITHOUT THE EXPRESS WRITTEN CONSENT OF JMI. JMI ASSUMES NO RESPONSIBILITY OR LIABILITY FOR THE USE OF THIS DOCUMENT OR THE DESIGN CONCEPTS AND INFORMATION CONTAINED HEREIN FOR ANOTHER PROJECT, OR IN A MANNER THAT DOES NOT RELATE TO THE STATED OR PURPOSE OF THIS DOCUMENT. IN NO EVENT SHALL THIS DOCUMENT OR THE DESIGN CONCEPTS AND INFORMATION CONTAINED HEREIN BE USED IN A MANNER DETRIMENTAL TO THE INTEREST OF JMI. ALL COPYRIGHT, PATENT AND OTHER INTELLECTUAL PROPERTY RIGHTS ARE RESERVED. ACCEPTANCE OF THE DELIVERY OF THIS DOCUMENT CONSTITUTES AGREEMENT TO THESE TERMS AND CONDITIONS.

DESIGNER	DATE
CHECKER	DATE
ENGINEER	DATE
MANAGER	DATE
SCALE:	

TITLE (2) ACTIFLO ACP-700R ELECTRICAL SCHEMATIC

CLIENT MEADOWBANK MINING CORP., NWT

JOHN MEUNIER ISO 9001: 2000
4105 Sartelon Street, Saint-Laurent, Qc, Canada H4S 2B3 / Tel: (514) 334-7230 / Fax: (514) 334-5070

PROJECT	DRAWING	SHEET	REV
NC01-	001-E04-001	1 OF 28	B

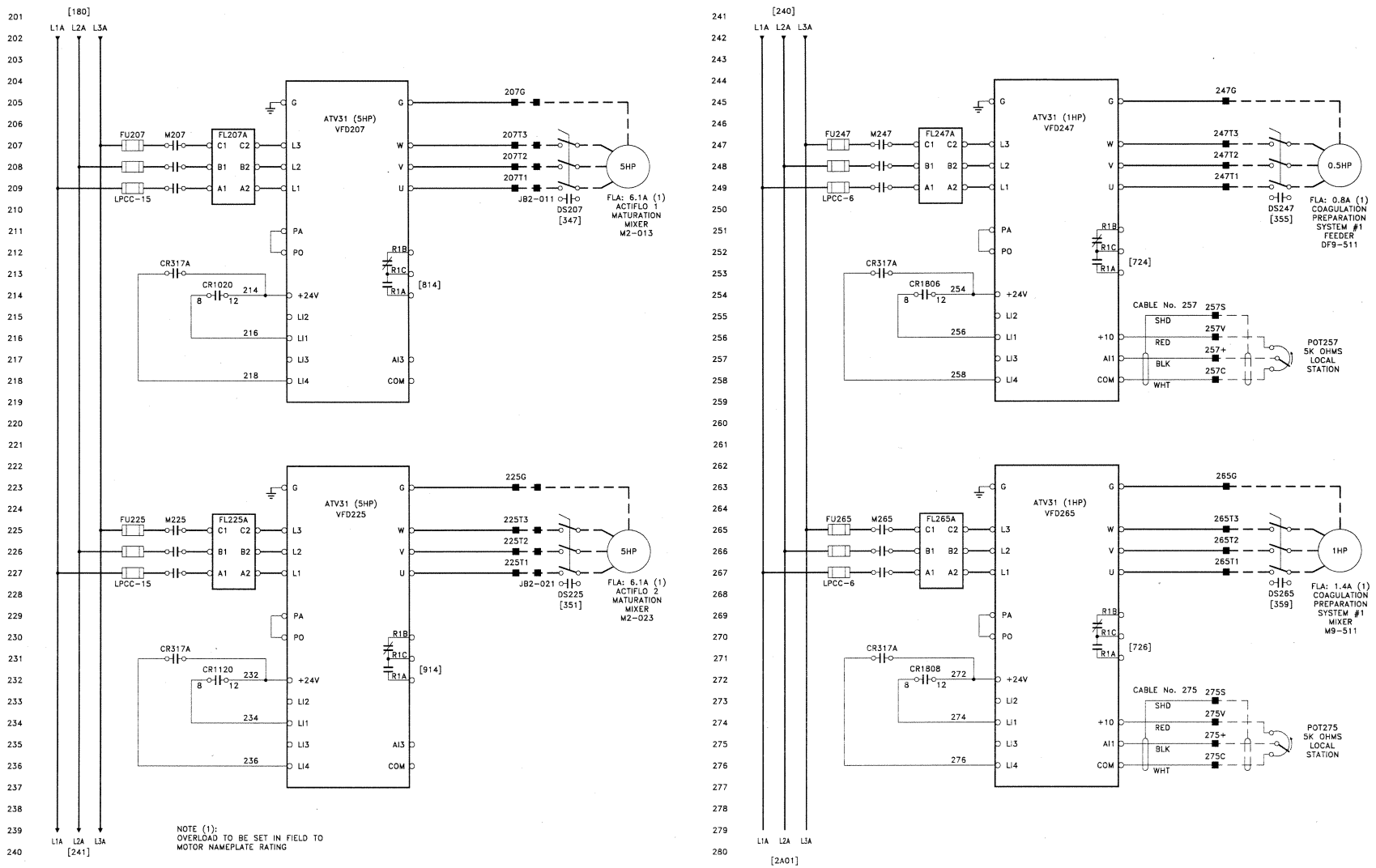
[180]
L1A L2A L3A
ATV31 (5HP)
VFD207
FU207
M207
FL207A
LPCC-15
207G
207T3
207T2
207T1
JB2-011
DS207
[347]
5HP
FLA: 6.1A (1)
ACTIFLO 1
MATURATION
MIXER
M2-013
CR317A
CR1020
[814]
ATV31 (5HP)
VFD225
FU225
M225
FL225A
LPCC-15
225G
225T3
225T2
225T1
JB2-021
DS225
[351]
5HP
FLA: 6.1A (1)
ACTIFLO 2
MATURATION
MIXER
M2-023
CR317A
CR1120
[914]
NOTE (1):
OVERLOAD TO BE SET IN FIELD TO
MOTOR NAMEPLATE RATING
L1A L2A L3A
[241]
[240]
L1A L2A L3A
ATV31 (1HP)
VFD247
FU247
M247
FL247A
LPCC-6
247G
247T3
247T2
247T1
DS247
[355]
0.5HP
FLA: 0.8A (1)
COAGULATION
PREPARATION
SYSTEM #1
FEEDER
DF9-511
CR317A
CR1806
[724]
CABLE No. 257
SHD
RED
BLK
WHT
257S
257V
257+
257C
POT257
5K OHMS
LOCAL
STATION
ATV31 (1HP)
VFD265
FU265
M265
FL265A
LPCC-6
265G
265T3
265T2
265T1
DS265
[359]
1HP
FLA: 1.4A (1)
COAGULATION
PREPARATION
SYSTEM #1
MIXER
M9-511
CR317A
CR1808
[726]
CABLE No. 275
275S
275V
275+
275C
POT275
5K OHMS
LOCAL
STATION
L1A L2A L3A
[2A01]

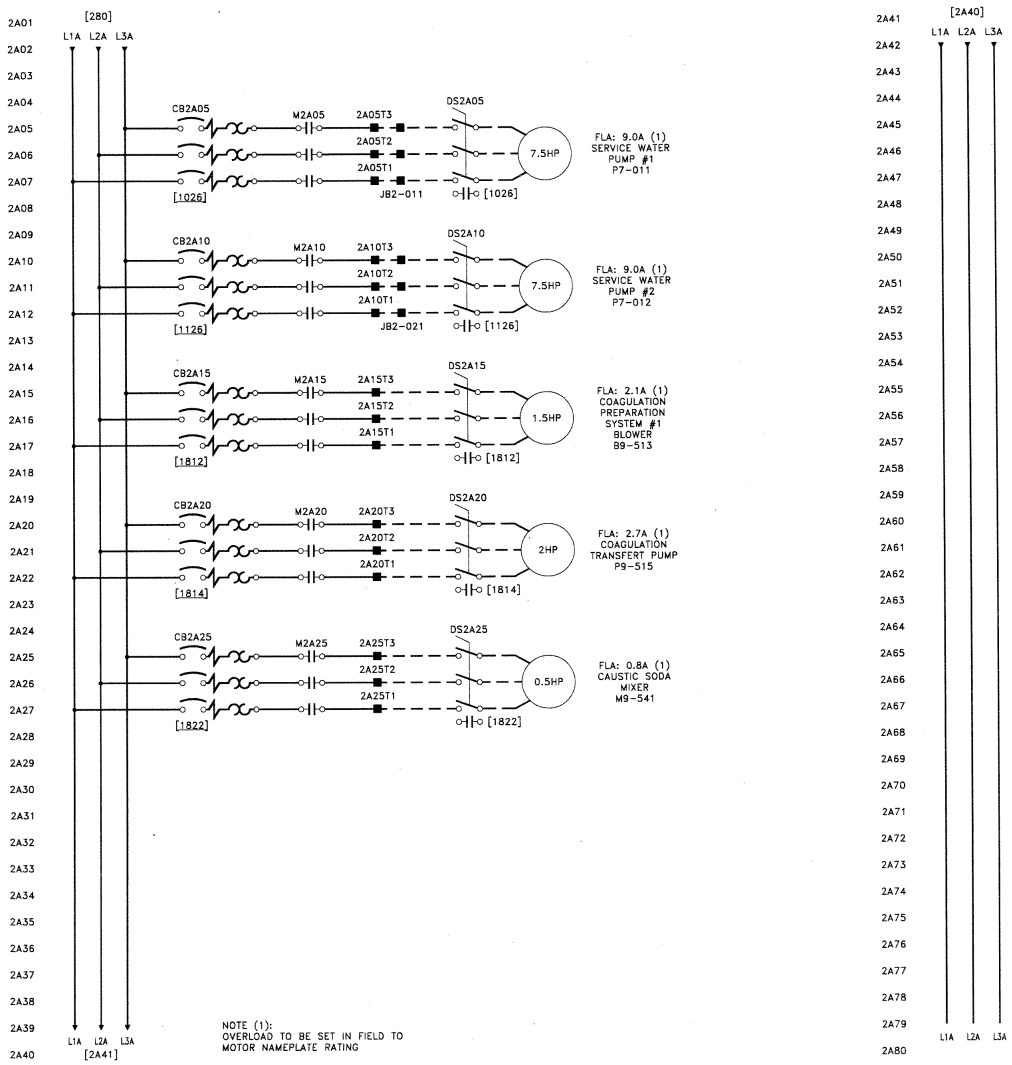

NOTE (1):
OVERLOAD TO BE SET IN FIELD TO
MOTOR NAMEPLATE RATING

Envitech Automation Inc.
CERTIFIÉ ISO9001
ENVITECH Intégrateurs de systèmes / Systems Integrators

REV	DESCRIPTION	DATE	DWN	CHKD	APVD	ECN
B	AS BUILT	2009/05/29	JR	JCD		
A	FOR APPROVAL	2009/04/16	JR	JCD		

CONFIDENTIALITY AND INTELLECTUAL PROPERTY NOTICE
ALL INFORMATION CONTAINED IN THIS DOCUMENT IS THE SOLE PROPERTY OF JOHN MEUNIER INC. AND IS PROTECTED BY ALL APPLICABLE LAWS, INCLUDING BUT NOT LIMITED TO COPYRIGHT AND OTHER INTELLECTUAL PROPERTY LAWS. THE DESIGN CONCEPTS AND INFORMATION CONTAINED HEREIN ARE PROPRIETARY TO JM AND ARE SUBMITTED IN CONFIDENCE. THEY ARE NOT TRANSFERABLE. THEY MUST BE USED ONLY FOR THE PURPOSE FOR WHICH THE DOCUMENT IS EXPRESSLY SUBMITTED AND NO IMPLICIT LICENCE IS GRANTED OTHERWISE BY THE SUBMISSION OF THIS DOCUMENT. THEY ARE CONFIDENTIAL AND PROPERTY INFORMATION OF JM AND THEY MUST NOT BE DISCLOSED, REPRODUCED, COPIED, REMITTED OR USED IN ANY OTHER MANNER WITHOUT THE EXPRESS WRITTEN CONSENT OF JM. JM ASSUMES NO RESPONSIBILITY OR LIABILITY FOR THE USE OF THIS DOCUMENT OR THE DESIGN CONCEPTS AND INFORMATION CONTAINED HEREIN FOR ANOTHER PROJECT, OR IN A MANNER THAT DOES NOT RELATE TO THE PROCESS OR PURPOSE OF THIS DOCUMENT. IN NO EVENT SHALL THIS DOCUMENT OR THE DESIGN CONCEPTS AND INFORMATION CONTAINED HEREIN BE USED IN A MANNER DETRIMENTAL TO THE INTEREST OF JM. ALL COPYRIGHT, PATENT AND OTHER INTELLECTUAL PROPERTY RIGHTS ARE RESERVED. ACCEPTANCE OF THE DELIVERY OF THIS DOCUMENT CONSTITUTES AGREEMENT TO THESE TERMS AND CONDITIONS.

DESIGNER	DATE
CHECKER	DATE
ENGINEER	DATE
MANAGER	DATE
SCALE:	

TITLE: (2) ACTIFLO ACP-700R ELECTRICAL SCHEMATIC

CLIENT: MEADOWBANK MINING CORP., NWT

JOHN MEUNIER ISO 9001: 2000
4105 Sartelon Street, Saint-Laurent, Qc, Canada H4S 2B3 / Tel: (514) 334-7230 / Fax: (514) 334-5070

PROJECT: NC01- DRAWING: 001-E04-002A
SHEET: 2A OF 28
REV: B

ECH DRAWING: A4765A
BAR = 1" AT PLOT SCALE

STD: JMI_22x34_D_ANG
REF:

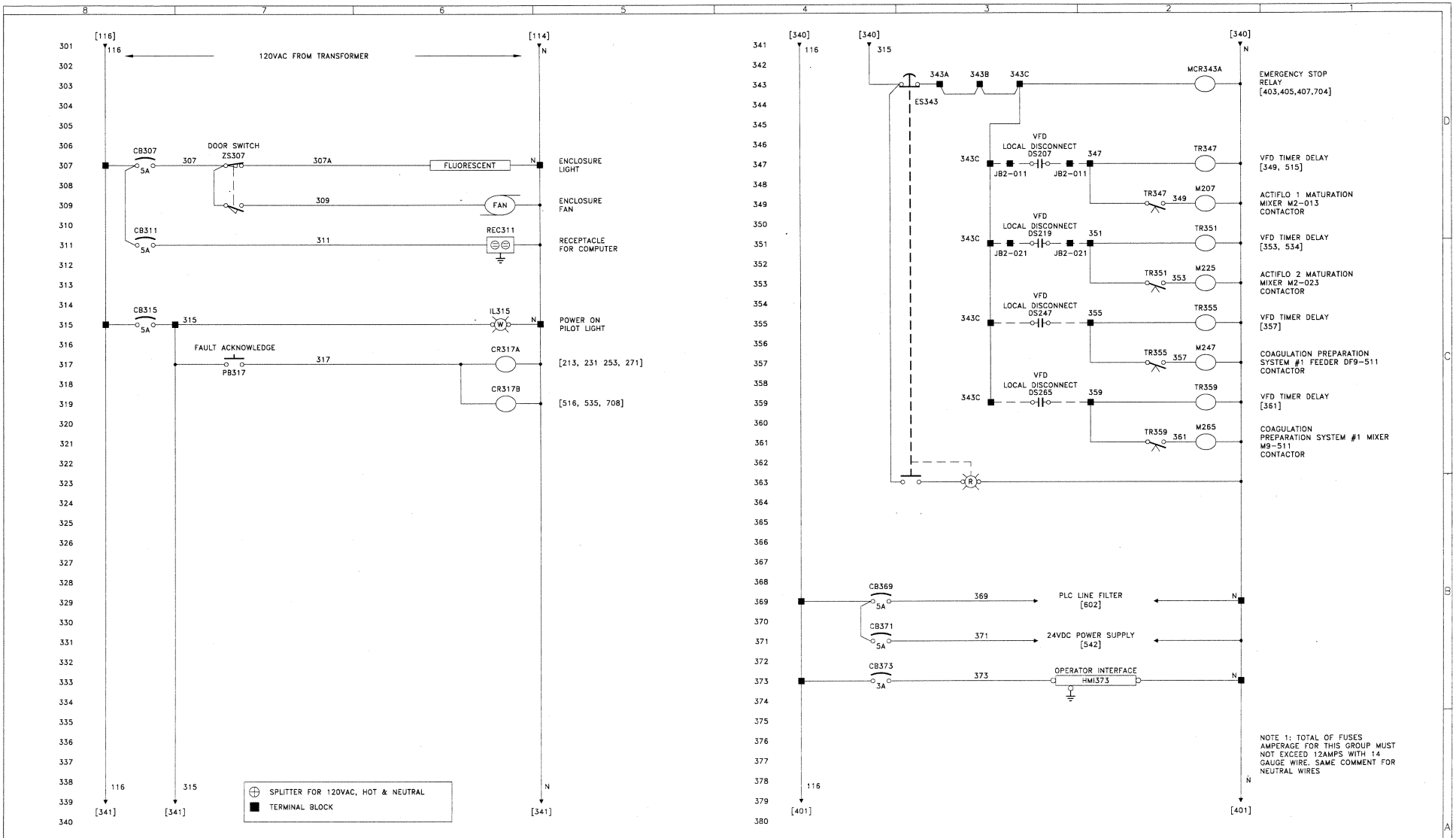

Envitech Automation Inc. CERTIFIÉ ISO9001
ENVITECH Intégrateurs de systèmes / Systems Integrators

ENVITECH DRAWING A4765A

BAR = 1" AT PLOT SCALE

STD: JMI_22x34_D_ANG

REF:

REV	DESCRIPTION	DATE	DWN	CHKD	APVD	ECN
B	AS BUILT	2009/05/29	JR	JCD		
A	FOR APPROVAL	2009/04/16	JR	JCD		

CONFIDENTIALITY AND INTELLECTUAL PROPERTY NOTICE
ALL INFORMATION CONTAINED IN THIS DOCUMENT IS THE SOLE PROPERTY OF JOHN MEUNIER INC. AND IS PROTECTED BY ALL APPLICABLE LAWS, INCLUDING BUT NOT LIMITED TO COPYRIGHT AND OTHER INTELLECTUAL PROPERTY LAWS. THE DESIGN CONCEPTS AND INFORMATION CONTAINED HEREIN ARE PROPRIETARY TO JMI AND ARE SUBMITTED IN CONFIDENCE. THEY ARE NOT TRANSFERABLE. THEY MUST BE USED ONLY FOR THE PURPOSE FOR WHICH THE DOCUMENT IS EXPRESSLY SUBMITTED AND NO IMPLICIT LICENCE IS GRANTED OTHERWISE BY THE SUBMISSION OF THIS DOCUMENT. THEY ARE CONFIDENTIAL AND PRIVILEGED INFORMATION OF JMI AND THEY MUST NOT BE DISCLOSED, REPRODUCED, LOANED, PERMITTED OR USED IN ANY OTHER MANNER WITHOUT THE EXPRESS WRITTEN CONSENT OF JMI. JMI ASSUMES NO RESPONSIBILITY OR LIABILITY FOR THE USE OF THIS DOCUMENT OR THE DESIGN CONCEPTS AND INFORMATION CONTAINED HEREIN FOR ANOTHER PROJECT, OR IN A MANNER THAT DOES NOT RELATE TO THE STATED OR PURPOSE OF THIS DOCUMENT. IN NO EVENT SHALL THIS DOCUMENT OR THE DESIGN CONCEPTS AND INFORMATION CONTAINED HEREIN BE USED IN A MANNER DETRIMENTAL TO THE INTEREST OF JMI. ALL COPYRIGHT, PATENT AND OTHER INTELLECTUAL PROPERTY RIGHTS ARE RESERVED. ACCEPTANCE OF THE DELIVERY OF THIS DOCUMENT CONSTITUTES AGREEMENT TO THESE TERMS AND CONDITIONS.

DESIGNER	DATE
CHECKER	DATE
ENGINEER	DATE
MANAGER	DATE
SCALE:	

TITLE (2) ACTIFLO ACP-700R ELECTRICAL SCHEMATIC

CLIENT MEADOWBANK MINING CORP., NWT

JOHN MEUNIER ISO 9001: 2000
4705 Sartelon Street, Saint-Laurent, Qc, Canada H4S 2B3 / Tel: (514) 334-7230 / Fax: (514) 334-5070

PROJECT NC01- DRAWING 001-E04-003 SHEET 3 OF 28 REV B

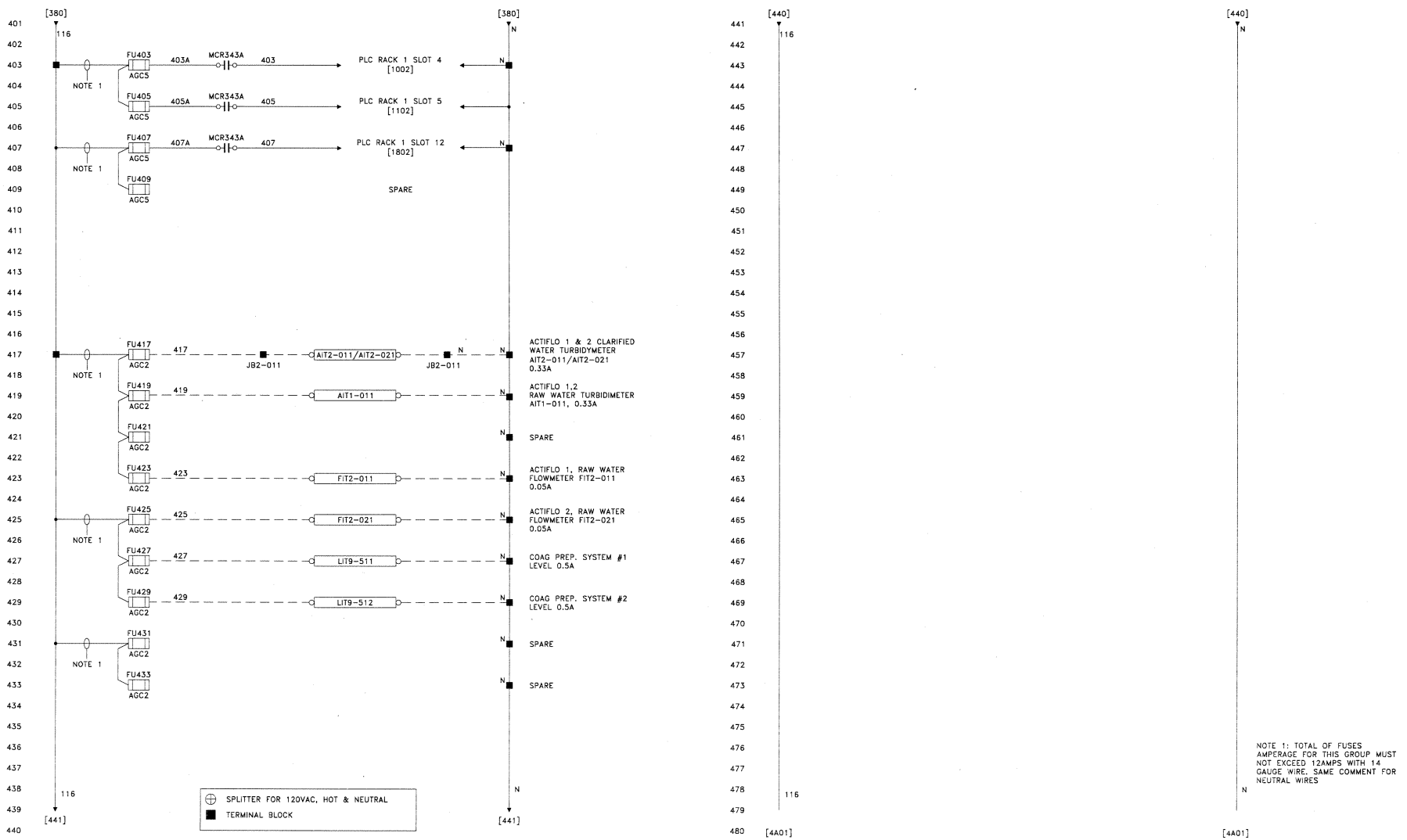

REV	DESCRIPTION	DATE	DWN	CHKD	APVD	ECN
B	AS BUILT	2009/05/29	JR	JCD		
A	FOR APPROVAL	2009/04/16	JR	JCD		

Envitech Automation Inc. CERTIFIÉ ISO9001
ENVITECH Intégrateurs de systèmes / Systems Integrators

ENVITECH DRAWING A4765A

BAR = 1" AT PLOT SCALE

STD: JMI_22x34_D_ANG

REF:

CONFIDENTIALITY AND INTELLECTUAL PROPERTY NOTICE
ALL INFORMATION CONTAINED IN THIS DOCUMENT IS THE SOLE PROPERTY OF JOHN MEUNIER INC. AND IS PROTECTED BY ALL APPLICABLE LAWS, INCLUDING BUT NOT LIMITED TO COPYRIGHT AND OTHER INTELLECTUAL PROPERTY LAWS. THE DESIGN CONCEPTS AND INFORMATION CONTAINED HEREIN ARE PROPRIETARY TO JM AND ARE SUBMITTED IN CONFIDENCE. THIS DOCUMENT AND THE INFORMATION IT MUST BE USED ONLY FOR THE PURPOSE FOR WHICH THE DOCUMENT IS EXPRESSLY SUBMITTED AND NO IMPLIED LICENCE IS GRANTED OTHERWISE BY THE SUBMISSION OF THIS DOCUMENT. THEY ARE CONFIDENTIAL AND PRIVILEGED INFORMATION IF JM AND THEY MUST NOT BE DISCLOSED, REPRODUCED, TRANSMITTED, STORED OR USED IN ANY OTHER MANNER WHATSOEVER EXPRESS WRITTEN CONSENT OF JM. JM ASSUMES NO RESPONSIBILITY OR LIABILITY FOR THE USE OF THIS DOCUMENT OR THE DESIGN CONCEPTS AND INFORMATION CONTAINED HEREIN FOR ANOTHER PROJECT, OR IN A MANNER THAT DOES NOT RELATE TO THE INTENDED OR PURPOSE OF THIS DOCUMENT. IN NO EVENT SHALL THIS DOCUMENT OR THE DESIGN CONCEPTS AND INFORMATION CONTAINED HEREIN BE USED TO THE DETRIMENT OF OR AGAINST THE INTEREST OF JM. ALL COPYRIGHT, PATENT AND OTHER INTELLECTUAL PROPERTY RIGHTS ARE RESERVED. ACCEPTANCE OF THE DELIVERY OF THIS DOCUMENT CONSTITUTES AGREEMENT TO THESE TERMS AND CONDITIONS.

		DATE
DESIGNER		
CHECKER		
ENGINEER		
MANAGER		
SCALE:		

TITLE: (2) ACTIFLO ACP-700R ELECTRICAL SCHEMATIC

CLIENT: MEADOWBANK MINING CORP., NWT

JOHN MEUNIER ISO 9001: 2000
4120 Sartelon Street, Saint-Laurent, QC, Canada H4S 2B3 / Tel: (514) 334-2238 / Fax: (514) 334-5010

PROJECT: NC01-001-E04-004 | DRAWING | SHEET: 4 OF 28 | REV: B

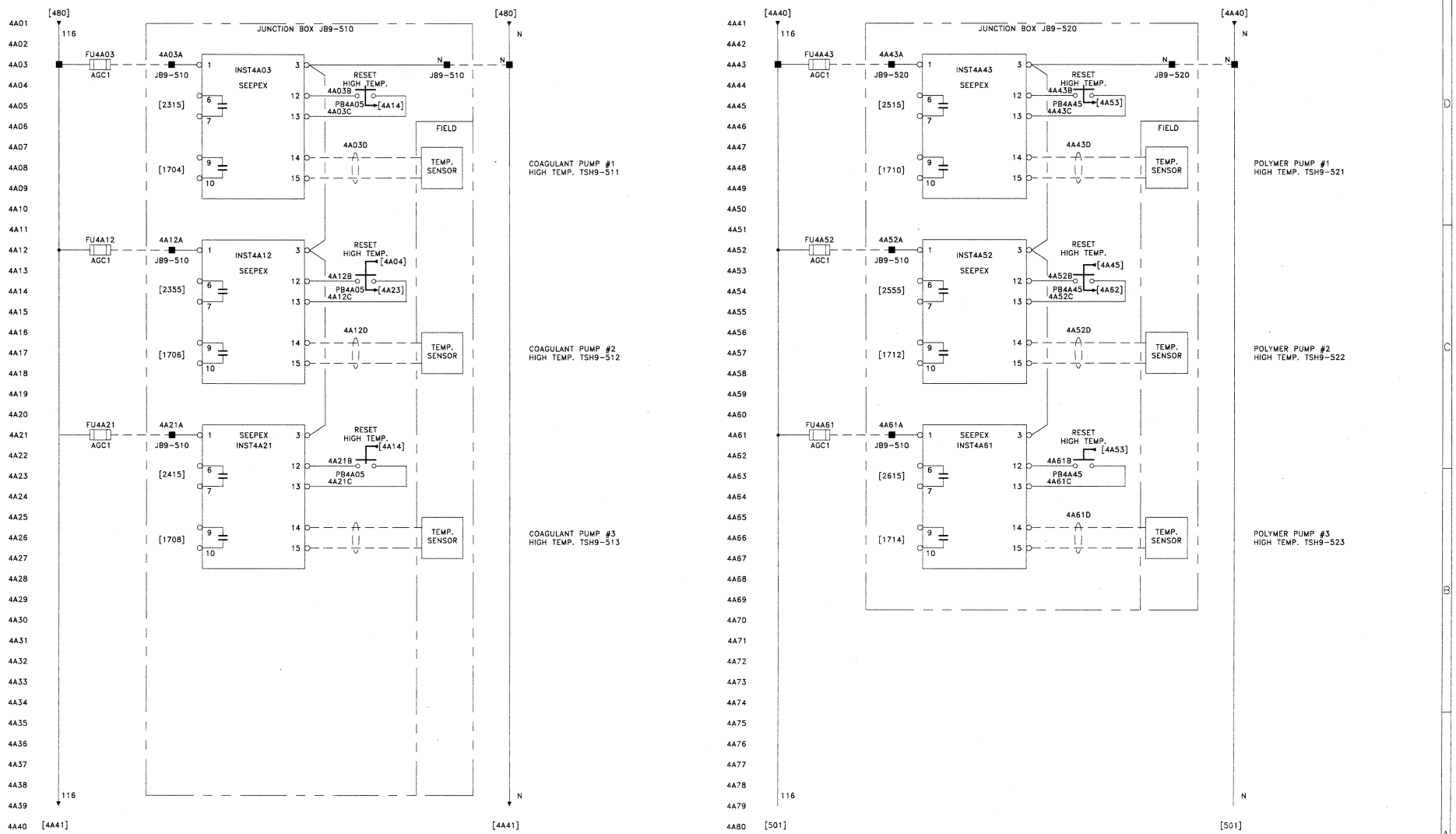

Envitech Automation Inc.
CERTIFIÉ ISO9001
ENVITECH Intégrateurs de systèmes / Systems Integrators

ENVITECH DRAWING A4765A

BAR = 1" AT PLOT SCALE

STD: JMI_22x34_D_ANG

REF:

REV	DESCRIPTION	DATE	DWN	CHKD	APVD	ECN
B	AS BUILT	2009/05/29	JR	JCD		
A	FOR APPROVAL	2009/04/16	JR	JCD		

CONFIDENTIALITY AND INTELLECTUAL PROPERTY NOTICE
ALL INFORMATION CONTAINED IN THIS DOCUMENT IS THE SOLE PROPERTY OF JOHN MEUNIER INC. AND IS PROTECTED BY ALL APPLICABLE LAWS, INCLUDING BUT NOT LIMITED TO COPYRIGHT AND OTHER INTELLECTUAL PROPERTY LAWS. THE DESIGN CONCEPTS AND INFORMATION CONTAINED HEREIN ARE PROPRIETARY TO JMI AND ARE SUBMITTED IN CONFIDENCE. THEY ARE NOT TRANSFERABLE. THEY MUST BE USED ONLY FOR THE PURPOSE FOR WHICH THE DOCUMENT IS EXPRESSLY SUBMITTED AND NO IMPLICIT LICENCE IS GRANTED OTHERWISE BY THE SUBMISSION OF THIS DOCUMENT. THEY ARE CONFIDENTIAL AND PRIVILEGED INFORMATION OF JMI AND THEY MUST NOT BE DISCLOSED, REPRODUCED, LOANED, REMITTED OR USED IN ANY OTHER MANNER WITHOUT THE EXPRESS WRITTEN CONSENT OF JMI. JMI RESERVES NO RESPONSIBILITY OR LIABILITY FOR THE USE OF THIS DOCUMENT OR THE DESIGN CONCEPTS AND INFORMATION CONTAINED HEREIN FOR ANOTHER PROJECT, OR IN A MANNER THAT DOES NOT RELATE TO THE FITNESS OR PURPOSE OF THIS DOCUMENT. IN NO EVENT SHALL THIS DOCUMENT OR THE DESIGN CONCEPTS AND INFORMATION CONTAINED HEREIN BE USED IN A MANNER OTHER THAN TO THE INTEREST OF JMI. ALL COPYRIGHT, PATENT AND OTHER INTELLECTUAL PROPERTY RIGHTS ARE RESERVED. ACCEPTANCE OF THE DELIVERY OF THIS DOCUMENT CONSTITUTES AGREEMENT TO THESE TERMS AND CONDITIONS.

DESIGNER	DATE
CHECKER	DATE
ENGINEER	DATE
MANAGER	DATE
SCALE:	

TITLE (2) ACTIFLO ACP-700R ELECTRICAL SCHEMATIC

CLIENT MEADOWBANK MINING CORP., NWT

JOHN MEUNIER ISO 9001: 2000
4105 Sartorius Street, Saint-Laurent, Qc, Canada H4S 2B3 / Tel: (514) 334-7230 / Fax: (514) 334-5070

PROJECT NC01- DRAWING 001-E04-004A SHEET 4A OF 28 REV B

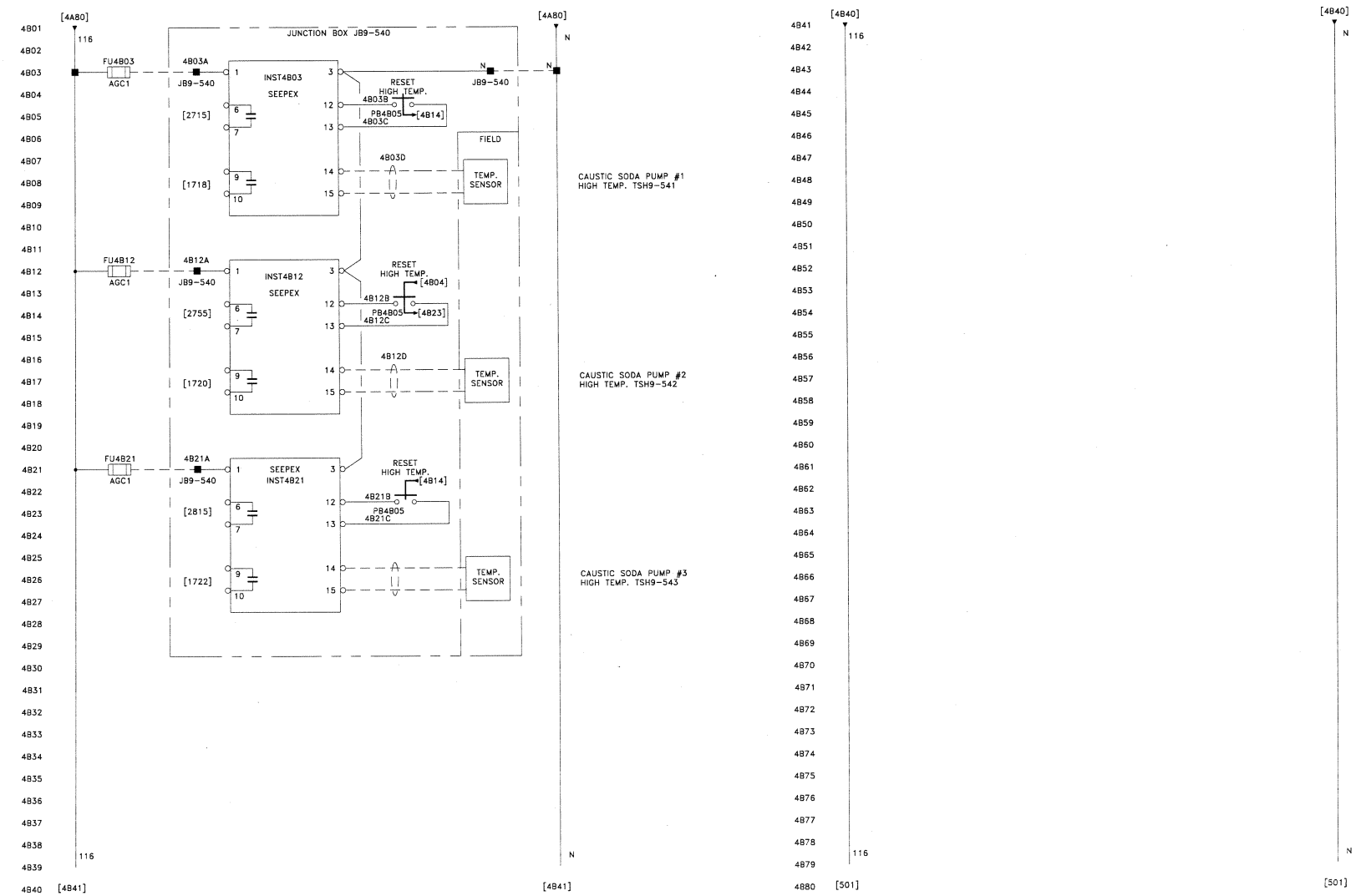

Envitech Automation Inc. CERTIFIÉ ISO9001
ENVITECH Intégrateurs de systèmes / Systems Integrators

ENVITECH DRAWING A4765A

BAR = 1" AT PLOT SCALE

REV	DESCRIPTION	DATE	DWN	CHKD	APVD	ECN
B	AS BUILT	2009/05/29	JR	JCD		
A	FOR APPROVAL	2009/04/16	JR	JCD		

CONFIDENTIALITY AND INTELLECTUAL PROPERTY NOTICE
ALL INFORMATION CONTAINED IN THIS DOCUMENT IS THE SOLE PROPERTY OF JOHN MEUNIER INC. AND IS PROTECTED BY ALL APPLICABLE LAWS, INCLUDING BUT NOT LIMITED TO COPYRIGHT AND OTHER INTELLECTUAL PROPERTY LAWS. THE DESIGN CONCEPTS AND INFORMATION CONTAINED HEREIN ARE PROPRIETARY TO JMI AND ARE SUBMITTED IN CONFIDENCE. THEY ARE NOT TRANSFERABLE. THEY MUST BE USED ONLY FOR THE PURPOSE FOR WHICH THE DOCUMENT IS EXPRESSLY SUBMITTED AND NO IMPLICIT LICENCE IS GRANTED OTHERWISE BY THE SUBMISSION OF THIS DOCUMENT. THEY ARE CONFIDENTIAL AND PROVIDED INFORMATION OF JMI AND THEY MUST NOT BE DISCLOSED, REPRODUCED, LOANED, REMITTED OR USED IN ANY OTHER MANNER WITHOUT THE EXPRESS WRITTEN CONSENT OF JMI. JMI ASSUMES NO RESPONSIBILITY OR LIABILITY FOR THE USE OF THIS DOCUMENT OR THE DESIGN CONCEPTS AND INFORMATION CONTAINED HEREIN FOR ANOTHER PROJECT, OR IN A MANNER THAT DOES NOT RELATE TO THE FITNESS OR PURPOSE OF THIS DOCUMENT. IN NO EVENT SHALL THIS DOCUMENT OR THE DESIGN CONCEPTS AND INFORMATION CONTAINED HEREIN BE USED IN A MANNER DETRIMENTAL TO THE INTEREST OF JMI. ALL COPYRIGHT, PATENT AND OTHER INTELLECTUAL PROPERTY RIGHTS ARE RESERVED. ACCEPTANCE OF THE DELIVERY OF THIS DOCUMENT CONSTITUTES AGREEMENT TO THESE TERMS AND CONDITIONS.

DESIGNER	DATE
CHECKER	DATE
ENGINEER	DATE
MANAGER	DATE
SCALE:	

TITLE (2) ACTIFLO ACP-700R ELECTRICAL SCHEMATIC

CLIENT MEADOWBANK MINING CORP., NWT

JOHN MEUNIER ISO 9001: 2000
4105 Sartoon Street, Saint-Laurent, Qc, Canada H4S 2B3 / Tel: (514) 334-7230 / Fax: (514) 334-5070

PROJECT	DRAWING	SHEET	REV
NC01-	001-E04-004B	48 OF 28	B

STD: JMI_22x34_D_ANG REF:

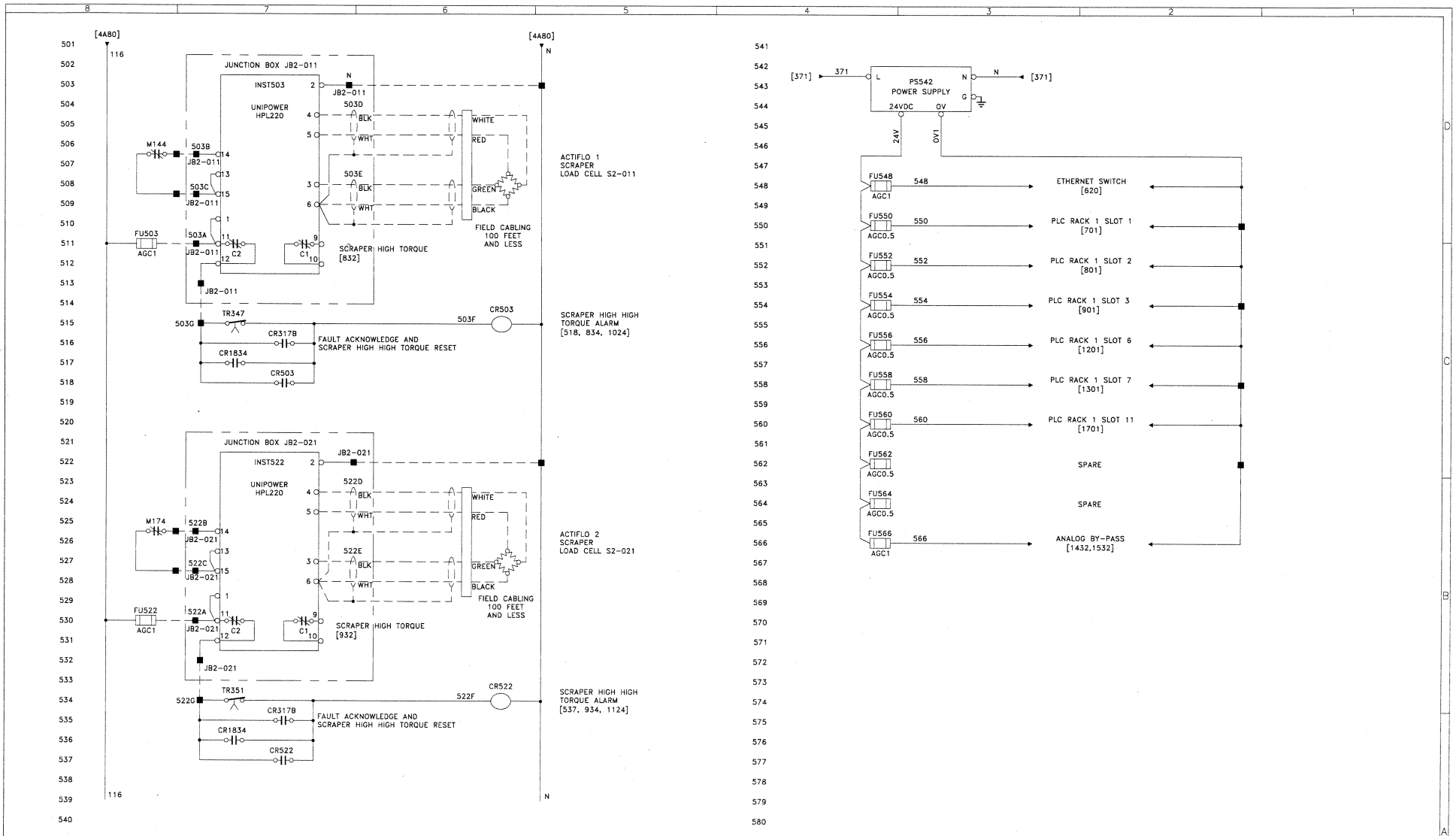

Envitech Automation Inc. CERTIFIÉ ISO9001
ENVITECH Intégrateurs de systèmes / Systems Integrators

REV	DESCRIPTION	DATE	DWN	CHKD	APVD	CON
B	AS BUILT	2009/05/29	JR	JCD		
A	FOR APPROVAL	2009/04/18	JR	JCD		

ENVITECH DRAWING A4765A

BAR = 1" AT PLOT SCALE

STD: JMI_22x34_D_ANG

REF:

CONFIDENTIALITY AND INTELLECTUAL PROPERTY NOTICE
ALL INFORMATION CONTAINED IN THIS DOCUMENT IS THE SOLE PROPERTY OF JOHN MEUNIER INC. AND IS PROTECTED BY ALL OTHER RIGHT LAWS, INCLUDING BUT NOT LIMITED TO COPYRIGHT AND PATENT LAWS. ALL RIGHTS RESERVED. THE DESIGN CONCEPTS AND INFORMATION CONTAINED HEREIN ARE PROPRIETARY TO JM AND ARE SUBMITTED IN CONFIDENCE. THEY ARE NOT TRANSFERABLE. THEY MUST BE USED ONLY FOR THE PURPOSE FOR WHICH THE DOCUMENT IS EXPRESSLY SUBMITTED AND NO IMPLICIT LICENCE IS GRANTED TO ANY PARTY. THE RECIPIENT SHALL NOT REPRODUCE, TRANSMIT, DISCLOSE, AND PARALYSED INFORMATION OF JM AND THEY MUST NOT BE DISCLOSED, REPRODUCED, LOANED, TRANSMITTED OR USED IN ANY OTHER MANNER WITHOUT THE EXPRESS WRITTEN CONSENT OF JM. JM ASSUMES NO RESPONSIBILITY OR LIABILITY FOR THE USE OF THIS DOCUMENT OF THE DESIGN CONCEPTS AND INFORMATION CONTAINED HEREIN FOR ANOTHER PROJECT, OR IN A MANNER THAT DOES NOT FULLY CONFORM TO THE INTENT OF THIS DOCUMENT. THE RECIPIENT SHALL TAKE THIS DOCUMENT OR THE DESIGN CONCEPTS AND INFORMATION CONTAINED HEREIN BE USED IN A MANNER DETRIMENTAL TO THE INTEREST OF JM. ALL COPYRIGHT, PATENT AND OTHER INTELLECTUAL PROPERTY RIGHTS ARE RESERVED. ACCEPTANCE OF THE DELIVERY OF THIS DOCUMENT CONSTITUTES ASSENT TO THESE TERMS AND CONDITIONS.

		DATE
DESIGNER		
CHECKER		
ENGINEER		
MANAGER		
SCALE:		

TITLE: (2) ACTIFLO ACP-700R ELECTRICAL SCHEMATIC

CLIENT: MEADOWBANK MINING CORP., NWT

JOHN MEUNIER ISO 9001: 2000
4120 Sartelon Street, Saint-Laurent, Qc, Canada H4S 2B3 / Tel: (514) 334-2330 / Fax: (514) 334-1070

PROJECT: NC01-001-E04-005

SHEET: 5 OF 28

REV: B

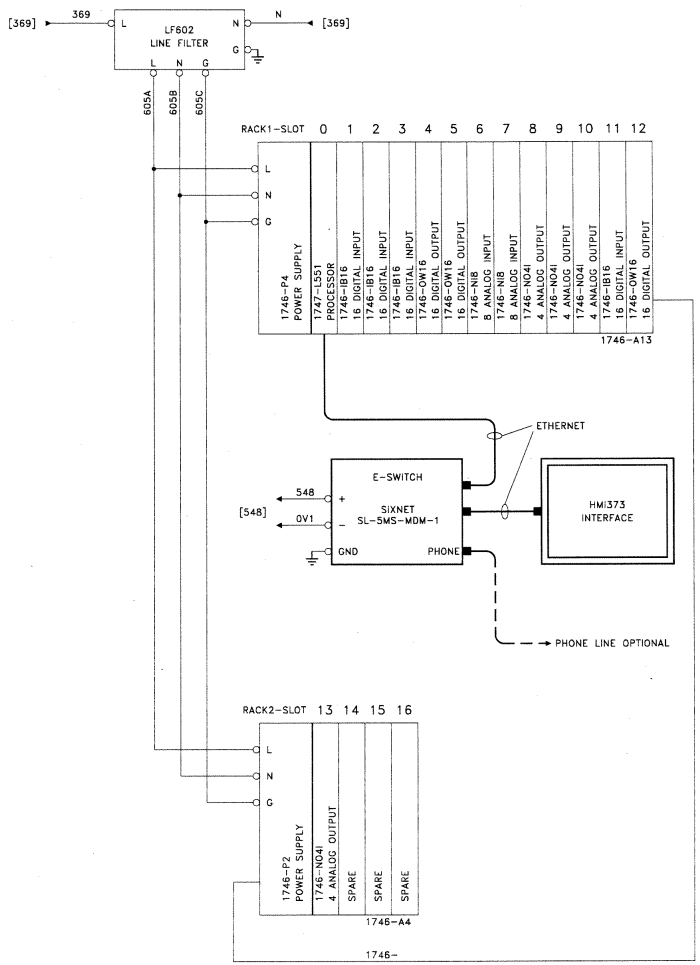

Envitech Automation Inc.
CERTIFIÉ ISO9001
ENVITECH Intégrateurs de systèmes / Systems Integrators

ENVITECH DRAWING A4765A

BAR = 1" AT PLOT SCALE

STD: JMI_22x34_D_ANG

REV	DESCRIPTION	DATE	DWN	CHKD	APVD	ECN
B	AS BUILT	2009/05/29	JR	JCD		
A	FOR APPROVAL	2009/04/16	JR	JCD		

CONFIDENTIALITY AND INTELLECTUAL PROPERTY NOTICE
ALL INFORMATION CONTAINED IN THIS DOCUMENT IS THE SOLE PROPERTY OF JOHN MEUNIER INC. AND IS PROTECTED BY ALL APPLICABLE LAWS, INCLUDING BUT NOT LIMITED TO COPYRIGHT AND OTHER INTELLECTUAL PROPERTY LAWS. THE DESIGN CONCEPTS AND INFORMATION CONTAINED HEREIN ARE PROPRIETARY TO JMI AND ARE SUBMITTED IN CONFIDENCE. THEY ARE NOT TRANSFERABLE. THEY MUST BE USED ONLY FOR THE PURPOSE FOR WHICH THE DOCUMENT IS SUPPLIED. SUBMITTED AND ARE IMPLICIT LICENCE IS CONVEYED OTHERWISE BY THE SUBMISSION OF THIS DOCUMENT. THEY ARE CONFIDENTIAL AND PRIVILEGED INFORMATION OF JMI AND THEY MUST NOT BE DISCLOSED, REPRODUCED, LOANED, REMITTED OR USED IN ANY OTHER MANNER WITHOUT THE EXPRESS WRITTEN CONSENT OF JMI. JMI ASSUMES NO RESPONSIBILITY OR LIABILITY FOR THE USE OF THIS DOCUMENT OR THE DESIGN CONCEPTS AND INFORMATION CONTAINED HEREIN FOR ANOTHER PROJECT, OR IN A MANNER THAT DOES NOT RELATE TO THE TENDER OR PURPOSE OF THIS DOCUMENT. IN NO EVENT SHALL THIS DOCUMENT OR THE DESIGN CONCEPTS AND INFORMATION CONTAINED HEREIN BE USED IN A MANNER DETRIMENTAL TO THE INTEREST OF JMI. ALL COPYRIGHT, PATENT AND OTHER INTELLECTUAL PROPERTY RIGHTS ARE RESERVED. ACCEPTANCE OF THE DELIVERY OF THIS DOCUMENT CONSTITUTES AGREEMENT TO THESE ITEMS AND CONDITIONS.

DESIGNER	DATE
CHECKER	DATE
ENGINEER	DATE
MANAGER	DATE
SCALE:	

TITLE (2) ACTIFLO ACP-700R ELECTRICAL SCHEMATIC

CLIENT MEADOWBANK MINING CORP., NWT

JOHN MEUNIER ISO 9001: 2000
4105 Sartorius Street, Saint-Laurent, Qc, Canada H4S 2B3 / Tel: (514) 334-7230 / Fax: (514) 334-5070

PROJECT NC01- 001-E04-006 | SHEET 6 OF 28 | REV B

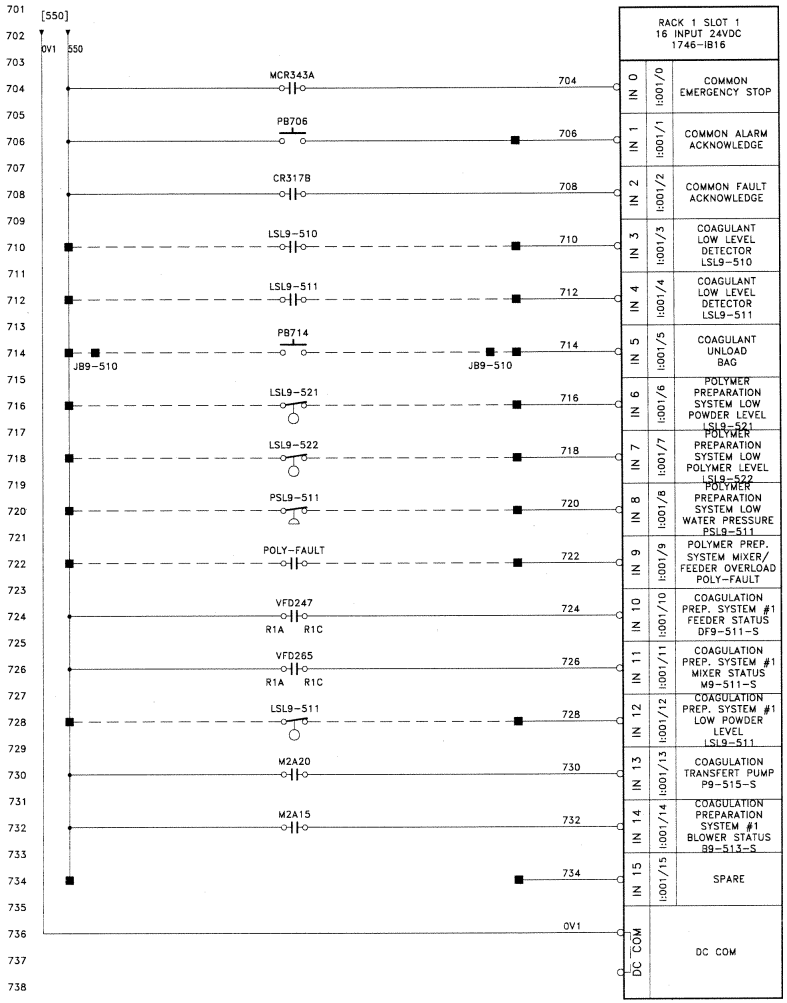

REV	DESCRIPTION	DATE	DWN	CHKD	APVD	ECN
B	AS BUILT	2009/05/29	JR	JCD		
A	FOR APPROVAL	2009/04/16	JR	JCD		

Envitech Automation Inc.
CERTIFIÉ ISO9001
ENVITECH Intégrateurs de systèmes / Systems Integrators

ENV CH DRAWING A4765A

BAR = 1" AT PLOT SCALE

STD: JMI_22x34_D_ANC

REF:

CONFIDENTIALITY AND INTELLECTUAL PROPERTY NOTICE
ALL INFORMATION CONTAINED IN THIS DOCUMENT IS THE SOLE PROPERTY OF JOHN MEUNIER INC. AND IS PROTECTED BY ALL APPLICABLE LAWS, INCLUDING BUT NOT LIMITED TO COPYRIGHT AND OTHER INTELLECTUAL PROPERTY LAWS. THE DESIGN CONCEPTS AND INFORMATION CONTAINED HEREIN ARE PROPRIETARY TO JMI AND ARE SUBMITTED IN CONFIDENCE. THEY ARE NOT TRANSFERABLE. THEY MUST BE USED ONLY FOR THE PURPOSE FOR WHICH THE DOCUMENT IS EXPRESSLY SUBMITTED AND NO IMPLICIT LICENCE IS GRANTED OTHERWISE BY THE SUBMISSION OF THIS DOCUMENT. THEY ARE CONFIDENTIAL AND PRIVILEGED INFORMATION OF JMI AND THEY MUST NOT BE DISCLOSED, REPRODUCED, COPIED, PERMITTED OR USED IN ANY OTHER MANNER WITHOUT THE EXPRESS WRITTEN CONSENT OF JMI. JMI ASSUMES NO RESPONSIBILITY OR LIABILITY FOR THE USE OF THIS DOCUMENT OR THE DESIGN CONCEPTS AND INFORMATION CONTAINED HEREIN FOR ANOTHER PROJECT, OR IN A MANNER THAT DOES NOT RELATE TO THE FINDS OR PURPOSE OF THIS DOCUMENT. IN NO EVENT SHALL THIS DOCUMENT OR THE DESIGN CONCEPTS AND INFORMATION CONTAINED HEREIN BE USED IN A MANNER DETRIMENTAL TO THE INTEREST OF JMI. ALL COPYRIGHT, PATENT AND OTHER INTELLECTUAL PROPERTY RIGHTS ARE RESERVED. ACCEPTANCE OF THE DELIVERY OF THIS DOCUMENT CONSTITUTES AGREEMENT TO THESE TERMS AND CONDITIONS.

DESIGNER	DATE
CHECKER	DATE
ENGINEER	DATE
MANAGER	DATE
SCALE:	

TITLE (2) ACTIFLO ACP-700R ELECTRICAL SCHEMATIC

CLIENT MEADOWBANK MINING CORP., NWT

JOHN MEUNIER ISO 9001: 2000
4105 Sartoris Street, Saint-Laurent, Qc, Canada H4S 2B3 / Tel: (514) 334-7230 / Fax: (514) 334-5070

PROJECT NC01- DRAWING 001-E04-007 SHEET 7 OF 28 REV B

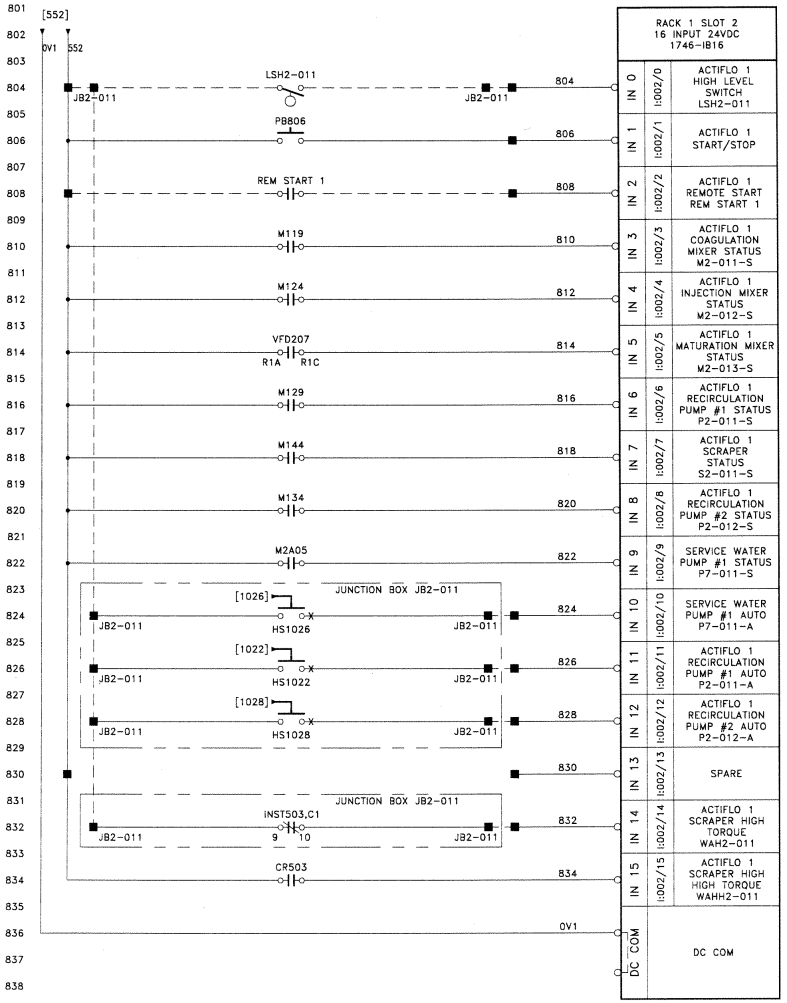

RACK 1 SLOT 2 16 INPUT 24VDC 1746-IB16		
IN 0	I:002/0	ACTIFLO 1 HIGH LEVEL SWITCH LSH2-011
IN 1	I:002/1	ACTIFLO 1 START/STOP
IN 2	I:002/2	ACTIFLO 1 REMOTE START REM START 1
IN 3	I:002/3	ACTIFLO 1 COAGULATION MIXER STATUS M2-011-S
IN 4	I:002/4	ACTIFLO 1 INJECTION MIXER STATUS M2-012-S
IN 5	I:002/5	ACTIFLO 1 MATURATION MIXER STATUS M2-013-S
IN 6	I:002/6	ACTIFLO 1 RECIRCULATION PUMP #1 STATUS P2-011-S
IN 7	I:002/7	ACTIFLO 1 SCRAPER STATUS S2-011-S
IN 8	I:002/8	ACTIFLO 1 RECIRCULATION PUMP #2 STATUS P2-012-S
IN 9	I:002/9	SERVICE WATER PUMP #1 STATUS P7-011-S
IN 10	I:002/10	SERVICE WATER PUMP #1 AUTO P7-011-A
IN 11	I:002/11	ACTIFLO 1 RECIRCULATION PUMP #1 AUTO P2-011-A
IN 12	I:002/12	ACTIFLO 1 RECIRCULATION PUMP #2 AUTO P2-012-A
IN 13	I:002/13	SPARE
IN 14	I:002/14	ACTIFLO 1 SCRAPER HIGH TORQUE WAH2-011
IN 15	I:002/15	ACTIFLO 1 SCRAPER HIGH HIGH TORQUE WAHH2-011
DC COM		DC COM

Envitech Automation Inc. CERTIFIÉ ISO9001
ENVITECH Intégrateurs de systèmes / Systems Integrators

DRAWING A4765A

BAR = 1" AT PLOT SCALE

STD: JMI_22x34_D_ANG

REV	DESCRIPTION	DATE	DWN	CHKD	APVD	ECN
B	AS BUILT	2009/05/29	JR	JCD		
A	FOR APPROVAL	2009/04/16	JR	JCD		

CONFIDENTIALITY AND INTELLECTUAL PROPERTY NOTICE
ALL INFORMATION CONTAINED IN THIS DOCUMENT IS THE SOLE PROPERTY OF JOHN MEUNIER INC. AND IS PROTECTED BY ALL APPLICABLE LAWS, INCLUDING BUT NOT LIMITED TO COPYRIGHT AND OTHER INTELLECTUAL PROPERTY LAWS. THE DESIGN CONCEPTS AND INFORMATION CONTAINED HEREIN ARE PROPRIETARY TO JMI AND ARE SUBMITTED IN CONFIDENCE. THEY ARE NOT TRANSFERABLE. THEY MUST BE USED ONLY FOR THE PURPOSE FOR WHICH THE DOCUMENT IS EXPRESSLY SUBMITTED AND NO IMPLICIT LICENCE IS GRANTED OTHERWISE BY THE SUBMISSION OF THIS DOCUMENT. THEY ARE CONFIDENTIAL AND PRIVILEGED INFORMATION OF JMI AND THEY MUST NOT BE DISCLOSED, REPRODUCED, COPIED, REMITTED OR USED IN ANY OTHER MANNER WITHOUT THE EXPRESS WRITTEN CONSENT OF JMI. ANY ATTEMPT TO REPRODUCE OR COPY OR FOR THE USE OF THIS DOCUMENT OR THE DESIGN CONCEPTS AND INFORMATION CONTAINED HEREIN FOR ANOTHER PROJECT, OR IN A MANNER THAT DOES NOT RELATE TO THE FITNESS OR PURPOSE OF THIS DOCUMENT, IN NO EVENT SHALL THIS DOCUMENT OR THE DESIGN CONCEPTS AND INFORMATION CONTAINED HEREIN BE USED IN A MANNER DETRIMENTAL TO THE INTEREST OF JMI. ALL COPYRIGHT, PATENT AND OTHER INTELLECTUAL PROPERTY RIGHTS ARE RESERVED. ACCEPTANCE OF THE DELIVERY OF THIS DOCUMENT CONSTITUTES AGREEMENT TO THESE TERMS AND CONDITIONS.

DESIGNER	DATE
CHECKER	DATE
ENGINEER	DATE
MANAGER	DATE
SCALE:	

TITLE: (2) ACTIFLO ACP-700R ELECTRICAL SCHEMATIC

CLIENT: MEADOWBANK MINING CORP., NWT

JOHN MEUNIER ISO 9001: 2000
4105 Sorbonne Street, Saint-Laurent, Qc, Canada H4S 2B3 / Tel: (514) 334-7230 / Fax: (514) 334-5070

PROJECT: NC01- 001-E04-008 | DRAWING | SHEET 8 OF 28 | REV B

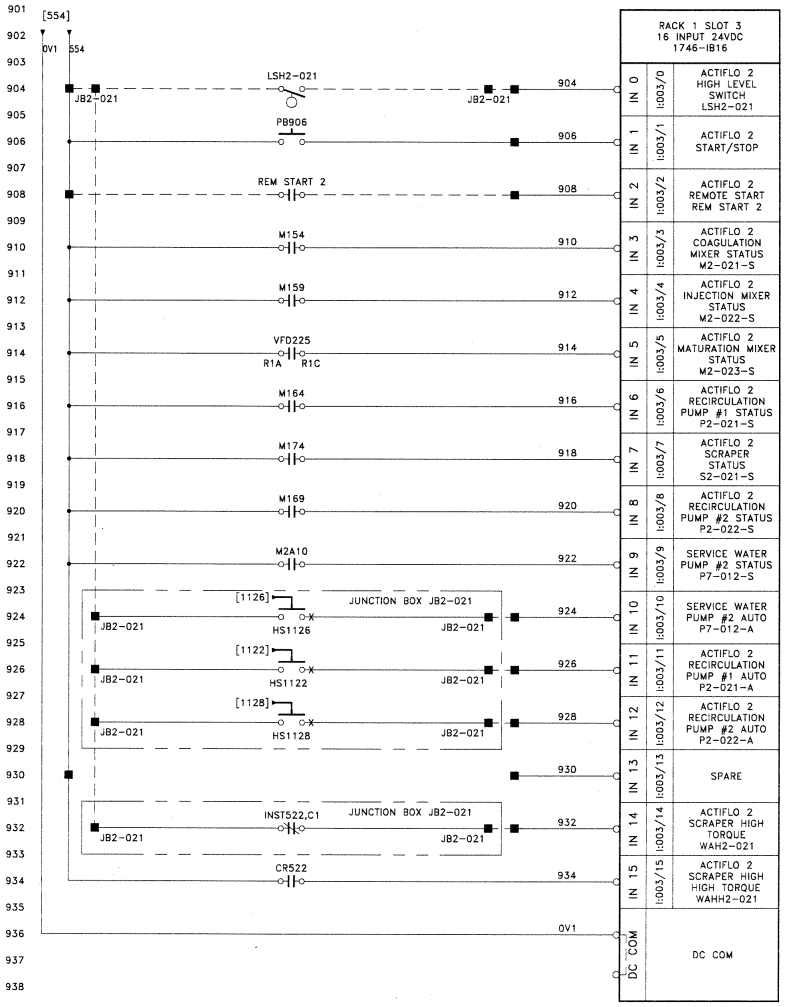

Envitech Automation Inc. CERTIFIÉ ISO9001
ENVITECH Intégrateurs de systèmes / Systems Integrators

REV	DESCRIPTION	DATE	DWN	CHKD	APVD	ECN
B	AS BUILT	2009/05/29	JR	JCD		
A	FOR APPROVAL	2009/04/16	JR	JCD		

ENVITECH DRAWING A4765A
BAR = 1" AT PLOT SCALE
STD: JMI_22x34_D_ANG
REF:

CONFIDENTIALITY AND INTELLECTUAL PROPERTY NOTICE
ALL INFORMATION CONTAINED IN THIS DOCUMENT IS THE SOLE PROPERTY OF JOHN MEUNIER INC. AND IS PROTECTED BY ALL APPLICABLE LAWS, INCLUDING BUT NOT LIMITED TO COPYRIGHT AND OTHER INTELLECTUAL PROPERTY LAWS. THE DESIGN CONCEPTS AND INFORMATION CONTAINED HEREIN ARE PROPRIETARY TO JM AND ARE NOT TO BE USED FOR ANY PURPOSE OTHER THAN THE PURPOSE FOR WHICH THEY MUST BE USED ONLY FOR THE PURPOSE FOR WHICH THE DOCUMENT IS EXPRESSLY SUBMITTED AND NO IMPLIED LICENCE IS GRANTED OTHERWISE BY THE SUBMISSION OF THIS DOCUMENT. THEY ARE CONFIDENTIAL AND PRIVILEGED INFORMATION OF JM AND THEY MUST NOT BE DISCLOSED, REPRODUCED OR USED IN WHOLE OR IN PART IN ANY WAY OTHER WHATSOEVER WITHOUT THE EXPRESS WRITTEN CONSENT OF JM. JM ASSUMES NO RESPONSIBILITY OR LIABILITY FOR THE USE OF THIS DOCUMENT OR THE DESIGN CONCEPTS AND INFORMATION CONTAINED HEREIN FOR ANOTHER PURPOSE, OR IN A MANNER THAT DOES NOT RELATE TO THE INTENDED PURPOSE OF THIS DOCUMENT. IN NO EVENT SHALL THIS DOCUMENT OR THE DESIGN CONCEPTS AND INFORMATION CONTAINED HEREIN BE USED IN ANY WAY WHATSOEVER TO THE DETRIMENT OF JM. ALL COPYRIGHT, PATENT AND OTHER INTELLECTUAL PROPERTY RIGHTS ARE RESERVED. ACCEPTANCE OF THE DELIVERY OF THIS DOCUMENT CONSTITUTES AGREEMENT TO THESE TERMS AND CONDITIONS.

DESIGNER		DATE
CHECKER		DATE
ENGINEER		DATE
MANAGER		DATE
SCALE:		

TITLE: (2) ACTIFLO ACP-70QR ELECTRICAL SCHEMATIC
CLIENT: MEADOWBANK MINING CORP., NWT

JOHN MEUNIER ISO 9001: 2000
4105 Sartelon Street, Saint-Laurent, QC, Canada H4S 2B3 / Tel. (514) 334-2238 / Fax. (514) 334-5070

PROJECT	DRAWING	SHEET	REV
NC01-001-E04-009		9 OF 28	B

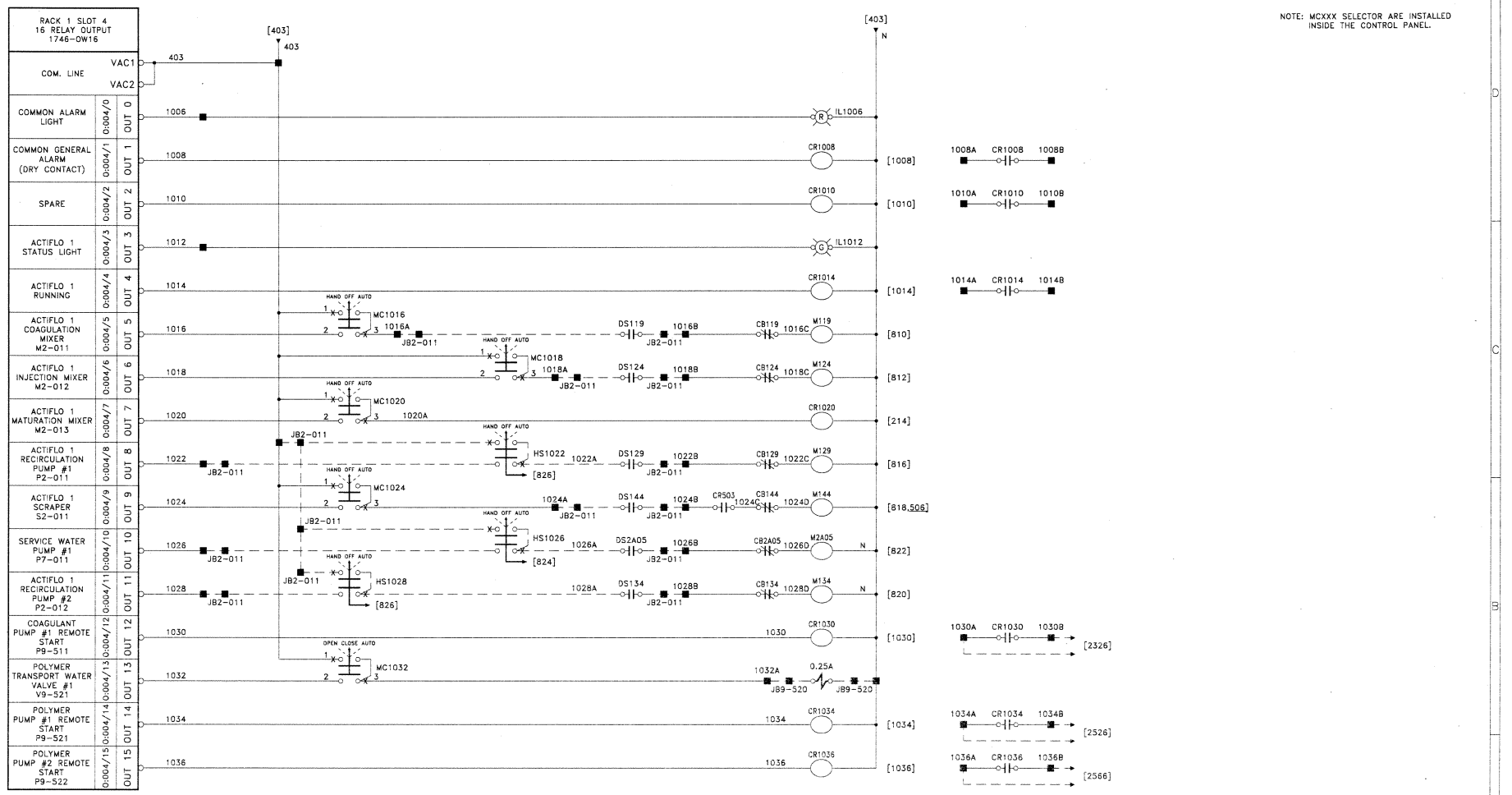

NOTE: MCXXX SELECTOR ARE INSTALLED INSIDE THE CONTROL PANEL.

Envitech Automation Inc. CERTIFIÉ ISO9001
ENVITECH Intégrateurs de systèmes / Systems Integrators

ENVITECH DRAWING A4765A

REV	DESCRIPTION	DATE	DWN	CHKD	APVD	CON
B	AS BUILT	2009/05/29	JR	JCD		
A	FOR APPROVAL	2008/04/16	JR	JCD		

BAR = 1" AT PLOT SCALE

STD: JMI_22x34_D_ANG REF:

CONFIDENTIALITY AND INTELLECTUAL PROPERTY NOTICE
ALL INFORMATION CONTAINED IN THIS DOCUMENT IS THE SOLE PROPERTY OF JOHN MEUNIER INC. AND IS PROTECTED BY ALL APPLICABLE LAWS, INCLUDING BUT NOT LIMITED TO COPYRIGHT AND TRADE SECRET LAWS. THE DESIGN CONCEPTS AND AUTOMATION INFORMATION CONTAINED HEREIN ARE PROPRIETARY TO JMI AND ARE SUBMITTED IN CONFIDENCE. THEY ARE NOT TRANSFERABLE, THEY MUST BE USED ONLY FOR THE PURPOSE FOR WHICH THE DOCUMENT IS EXPRESSLY SUBMITTED AND NO IMPLIED LICENCE IS GRANTED OTHERWISE BY THE SUBMISSION OF THIS DOCUMENT. THEY ARE CONFIDENTIAL AND PRIVILEGED INFORMATION OF JMI AND THEY MUST NOT BE DISCLOSED, COPIED, REPRODUCED OR USED IN ANY WAY OR FOR ANY OTHER MANNER WITHOUT THE EXPRESS WRITTEN CONSENT OF JMI. JMI ASSUMES NO RESPONSIBILITY OR LIABILITY FOR THE USE OF THIS DOCUMENT OR THE DESIGN CONCEPTS AND AUTOMATION CONTAINED HEREIN FOR ANOTHER PROJECT, OR IN A MANNER THAT DOES NOT RELATE TO THE INTENDED OR PURPOSE OF THIS DOCUMENT. IN NO EVENT SHALL JMI BE LIABLE FOR ANY DAMAGES, INCLUDING BUT NOT LIMITED TO DAMAGES ARISING FROM THE USE OF THE DESIGN CONCEPTS AND INFORMATION IN A MANNER OTHER THAN AS EXPRESSLY AUTHORIZED BY JMI. ALL COPYRIGHT, PATENT AND OTHER INTELLECTUAL PROPERTY RIGHTS ARE RESERVED. ACCEPTANCE OF THE DELIVERY OF THIS DOCUMENT CONSTITUTES YOUR ASSENT TO THESE TERMS AND CONDITIONS.

DESIGNER		DATE
CHECKER		DATE
ENGINEER		DATE
MANAGER		DATE
SCALE:		

TITLE: (2) ACTIFLO ACP-700R ELECTRICAL SCHEMATIC

CLIENT: MEADOWBANK MINING CORP., NWT

JOHN MEUNIER ISO 9001: 2000
6105 Sertorius Street, Saint-Laurent, Qc, Canada H4S 2B3 / tel: (514) 334-7330 / fax: (514) 334-3600

PROJECT	DRAWING	SHEET	REV
	NC01-001-E04-010	10 OF 28	B

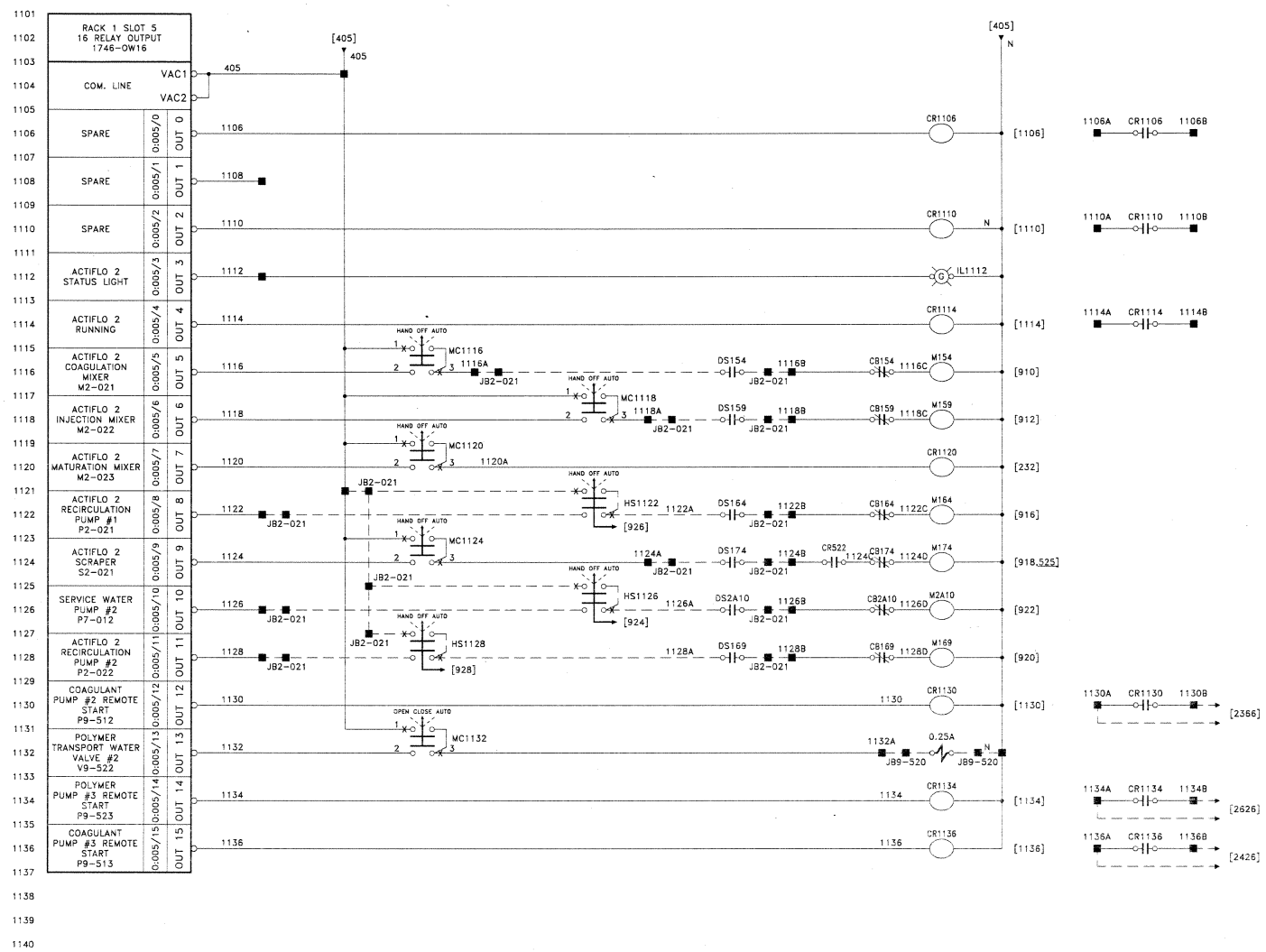

Envitech Automation Inc.
CERTIFIÉ ISO9001
ENVITECH Intégrateurs de systèmes / Systems Integrators

ENVITECH DRAWING A4765A

BAR = 1" AT PLOT SCALE

STD: JMI_22x34_D_ANG

REF:

REV	DESCRIPTION	DATE	DWN	CHKD	APVD	ECN
B	AS BUILT	2009/05/29	JR	JCD		
A	FOR APPROVAL	2009/04/16	JR	JCD		

CONFIDENTIALITY AND INTELLECTUAL PROPERTY NOTICE
ALL INFORMATION CONTAINED IN THIS DOCUMENT IS THE SOLE PROPERTY OF JOHN MEUNIER INC. AND IS PROTECTED BY ALL APPLICABLE LAWS, INCLUDING BUT NOT LIMITED TO COPYRIGHT AND OTHER INTELLECTUAL PROPERTY LAWS. THE DESIGN CONCEPTS AND INFORMATION CONTAINED HEREIN ARE PROPRIETARY TO JMI AND ARE SUBMITTED IN CONFIDENCE. THEY ARE NOT TRANSFERABLE. THEY MUST BE USED ONLY FOR THE PURPOSE FOR WHICH THE DOCUMENT IS EXPRESSLY SUBMITTED AND NO IMPLIED LICENCE IS GRANTED OTHERWISE BY THE SUBMISSION OF THIS DOCUMENT. THEY ARE CONFIDENTIAL AND PRIVILEGED INFORMATION OF JMI AND THEY MUST NOT BE DISCLOSED, REPRODUCED, COPIED, PERMITTED OR USED IN ANY OTHER MANNER WITHOUT THE EXPRESS WRITTEN CONSENT OF JMI. JMI ASSUMES NO RESPONSIBILITY OR LIABILITY FOR THE USE OF THIS DOCUMENT OR THE DESIGN CONCEPTS AND INFORMATION CONTAINED HEREIN FOR WHICHEVER PROJECT, OR IN A MANNER THAT DOES NOT RELATE TO THE FITNESS OR PURPOSE OF THIS DOCUMENT. IN NO EVENT SHALL THIS DOCUMENT OR THE DESIGN CONCEPTS AND INFORMATION CONTAINED HEREIN BE USED IN A MANNER DETRIMENTAL TO THE INTEREST OF JMI. ALL COPYRIGHT, PATENT AND OTHER INTELLECTUAL PROPERTY RIGHTS ARE RESERVED. ACCEPTANCE OF THE DELIVERY OF THIS DOCUMENT CONSTITUTES AGREEMENT TO THESE TERMS AND CONDITIONS.

DESIGNER	DATE
CHECKER	DATE
ENGINEER	DATE
MANAGER	DATE
SCALE:	

TITLE (2) ACTIFLO ACP-700R ELECTRICAL SCHEMATIC

CLIENT MEADOWBANK MINING CORP., NWT

JOHN MEUNIER ISO 9001: 2000
4105 Sartelon Street, Saint-Laurent, Qc. Canada H4S 2B3 / Tel: (514) 334-7230 / Fax: (514) 334-5070

PROJECT	DRAWING	SHEET	REV
NC01-	001-E04-011	11 OF 28	B

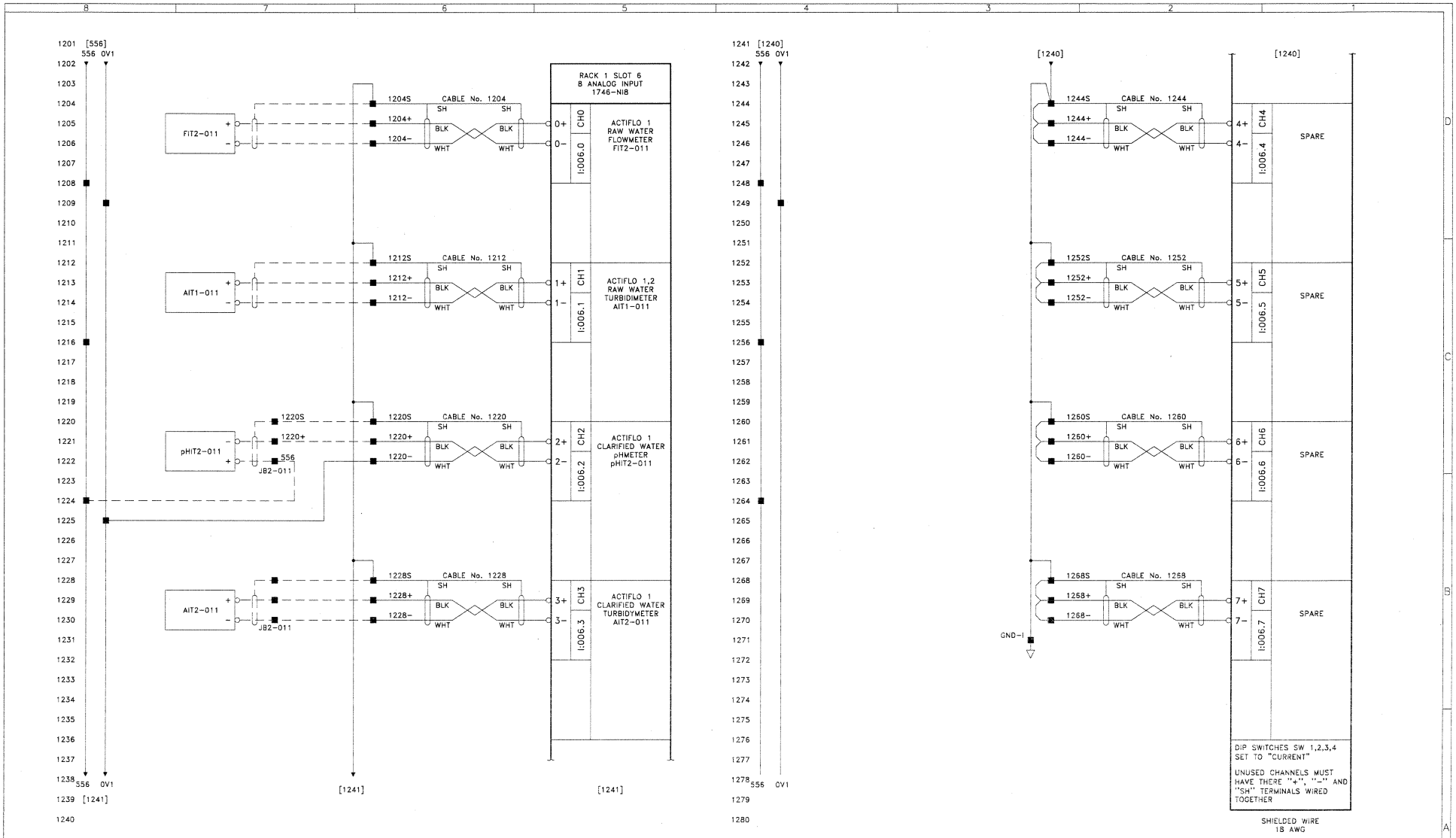

Envitech Automation Inc.
CERTIFIÉ ISO9001
ENVITECH Intégrateurs de systèmes / Systems Integrators

ENVITECH DRAWING A4765A

BAR = 1" AT PLOT SCALE

STD: JMI_22x34_D_ANG

REF:

REV	DESCRIPTION	DATE	DWN	CHKD	APVD	ECN
B	AS BUILT	2009/05/29	JR	JCD		
A	FOR APPROVAL	2009/04/16	JR	JCD		

CONFIDENTIALITY AND INTELLECTUAL PROPERTY NOTICE
ALL INFORMATION CONTAINED IN THIS DOCUMENT IS THE SOLE PROPERTY OF JOHN MEUNIER INC. AND IS PROTECTED BY ALL APPLICABLE LAWS, INCLUDING BUT NOT LIMITED TO COPYRIGHT AND OTHER INTELLECTUAL PROPERTY LAWS. THE DESIGN CONCEPTS AND INFORMATION CONTAINED HEREIN ARE PROPRIETARY TO JMI AND ARE SUBMITTED IN CONFIDENCE. THEY ARE NOT TRANSFERABLE, MUST NOT BE USED ONLY FOR THE PURPOSE FOR WHICH THE DOCUMENT IS EXPRESSLY SUBMITTED AND NO IMPLICIT LICENCE IS GRANTED OTHERWISE BY THE SUBMISSION OF THIS DOCUMENT. THEY ARE CONFIDENTIAL AND PRIVATELY INFORMATION OF JMI AND THEY MUST NOT BE DISCLOSED, REPRODUCED, COPIED, TRANSFERRED OR USED IN ANY OTHER MANNER WITHOUT THE EXPRESS WRITTEN CONSENT OF JMI. JMI DISCLAIMS NO RESPONSIBILITY OR LIABILITY FOR THE USE OF THIS DOCUMENT OR THE DESIGN CONCEPTS AND INFORMATION CONTAINED HEREIN FOR ANOTHER PROJECT, OR IN A MANNER THAT DOES NOT RELATE TO THE PURPOSE OR PURPOSE OF THIS DOCUMENT. IN NO EVENT SHALL THIS DOCUMENT OR THE DESIGN CONCEPTS AND INFORMATION CONTAINED HEREIN BE USED IN A MANNER DETRIMENTAL TO THE INTEREST OF JMI. ALL COPYRIGHT, PATENT AND OTHER INTELLECTUAL PROPERTY RIGHTS ARE RESERVED. ACCEPTANCE OF THE DELIVERY OF THIS DOCUMENT CONSTITUTES AGREEMENT TO THESE TERMS AND CONDITIONS.

DESIGNER	DATE
CHECKER	DATE
ENGINEER	DATE
MANAGER	DATE
SCALE:	

TITLE: (2) ACTIFLO ACP-700R ELECTRICAL SCHEMATIC

CLIENT: MEADOWBANK MINING CORP., NWT

JOHN MEUNIER ISO 9001: 2000
4105 Sanscrit Street, Saint-Laurent, Qc, Canada H4S 2B3 / Tel: (514) 334-7230 / Fax: (514) 334-5070

PROJECT	DRAWING	SHEET	REV
NC01-	001-E04-012	12 OF 28	B

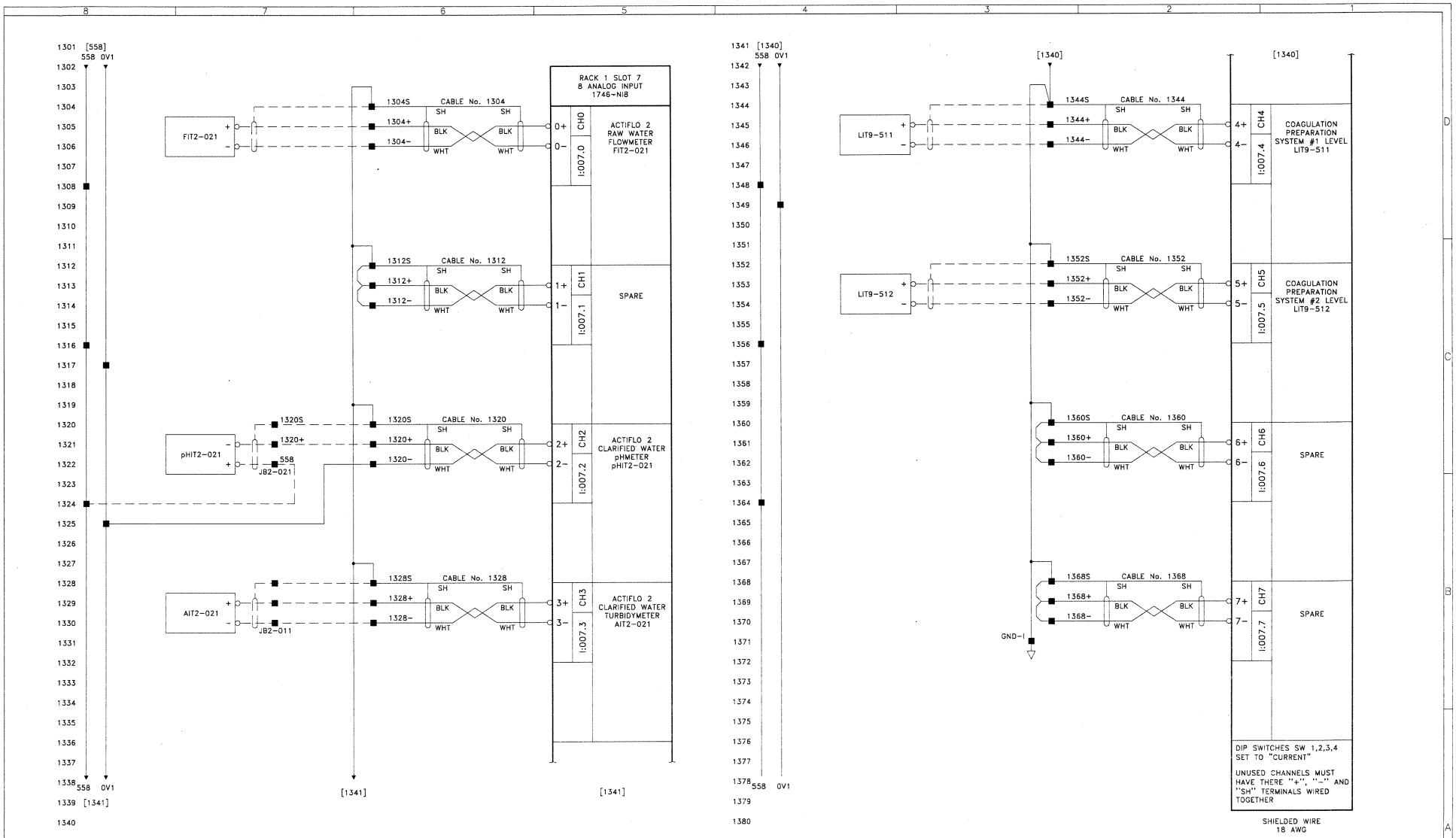

Envitech Automation Inc.
CERTIFIÉ ISO9001
ENVITECH Intégrateurs de systèmes / Systems Integrators

ENVITECH DRAWING A4765A

BAR = 1" AT PLOT SCALE

STD: JMI_22x34_D_ANG

REF:

REV	DESCRIPTION	DATE	DWN	CHKD	APVD	ECN
B	AS BUILT	2009/05/29	JR	JCD		
A	FOR APPROVAL	2009/04/16	JR	JCD		

CONFIDENTIALITY AND INTELLECTUAL PROPERTY NOTICE
ALL INFORMATION CONTAINED IN THIS DOCUMENT IS THE SOLE PROPERTY OF JOHN MEUNIER INC. AND IS PROTECTED BY ALL APPLICABLE LAWS, INCLUDING BUT NOT LIMITED TO COPYRIGHT AND OTHER INTELLECTUAL PROPERTY LAWS. THE DESIGN CONCEPTS AND INFORMATION CONTAINED HEREIN ARE PROPRIETARY TO JMI AND ARE SUBMITTED IN CONFIDENCE. THEY ARE NOT TRANSFERABLE. THEY MUST BE USED ONLY FOR THE PURPOSE FOR WHICH THE DOCUMENT IS EXPRESSLY SUBMITTED AND NO IMPLICIT LICENCE IS GRANTED OTHERWISE BY THE SUBMISSION OF THIS DOCUMENT. THEY ARE CONFIDENTIAL AND PROHIBITED INFORMATION OF JMI AND THEY MUST NOT BE DISCLOSED, REPRODUCED, LOANED, REMITTED OR USED IN ANY OTHER MANNER WITHOUT THE EXPRESS WRITTEN CONSENT OF JMI. JMI ASSUMES NO RESPONSIBILITY OR LIABILITY FOR THE USE OF THIS DOCUMENT OR THE DESIGN CONCEPTS AND INFORMATION CONTAINED HEREIN FOR ANOTHER PROJECT, OR IN A MANNER THAT DOES NOT RELATE TO THE EXPRESS OR PURPOSE OF THIS DOCUMENT. IN NO WAY SHALL THIS DOCUMENT OR THE DESIGN CONCEPTS AND INFORMATION CONTAINED HEREIN BE USED IN A MANNER DETRIMENTAL TO THE INTEREST OF JMI. ALL COPYRIGHT, PATENT AND OTHER INTELLECTUAL PROPERTY RIGHTS ARE RESERVED. ACCEPTANCE OF THE DELIVERY OF THIS DOCUMENT CONSTITUTES AGREEMENT TO THESE TERMS AND CONDITIONS.

DESIGNER	DATE
CHECKER	DATE
ENGINEER	DATE
MANAGER	DATE
SCALE:	

TITLE (2) ACTIFLO ACP-700R ELECTRICAL SCHEMATIC

CLIENT MEADOWBANK MINING CORP., NWT

JOHN MEUNIER ISO 9001: 2000
4105 Sartelon Street, Saint-Laurent, Qc, Canada H4S 2B3 / Tel: (514) 334-7230 / Fax: (514) 334-5070

PROJECT NC01- DRAWING 001-E04-013 SHEET 13 OF 28 REV B

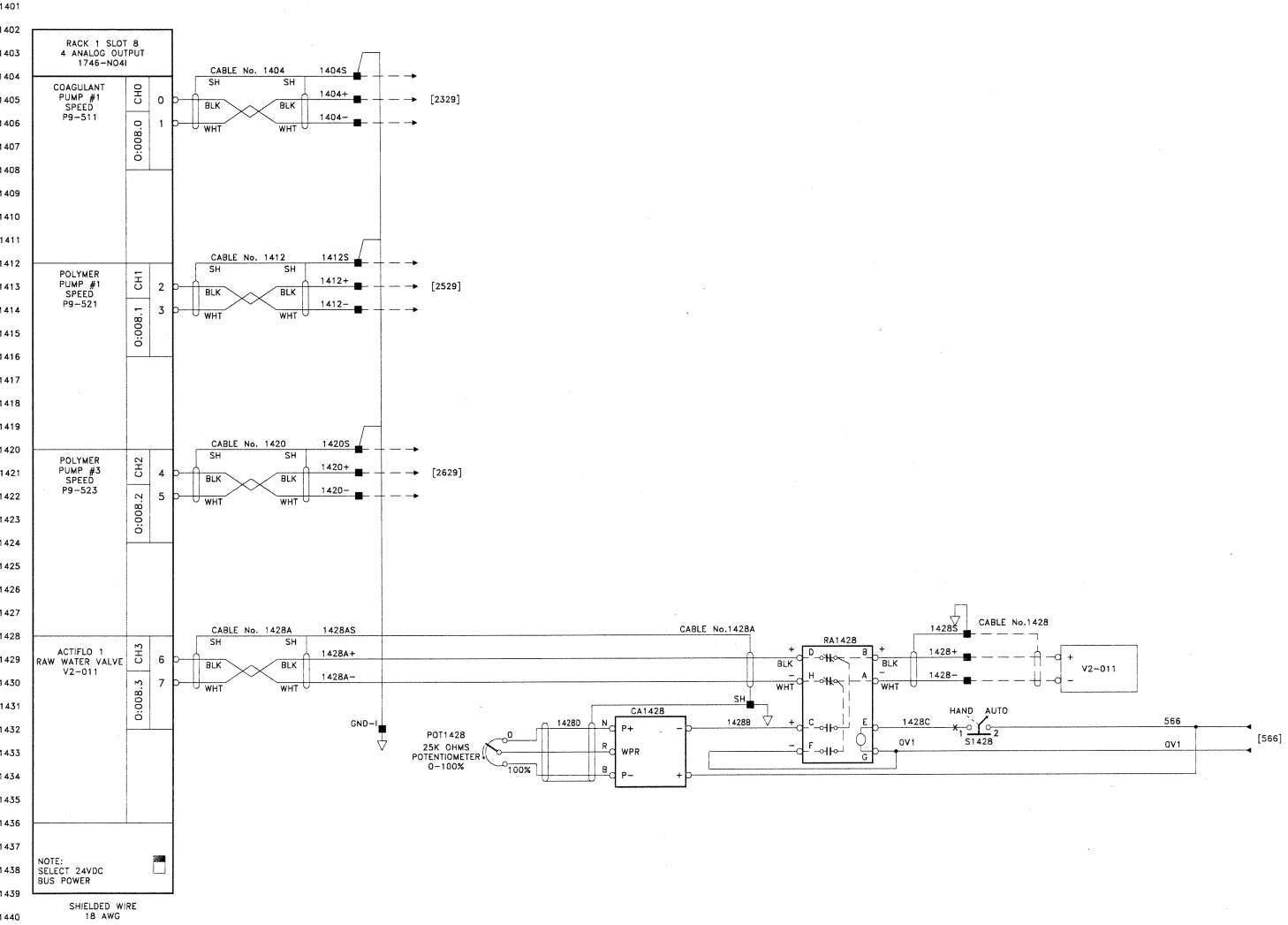

Envitech Automation Inc. CERTIFIÉ ISO9001
ENVITECH Intégrateurs de systèmes / Systems Integrators

REV	DESCRIPTION	DATE	DWN	CHKD	APVD	ECN
B	AS BUILT	2009/05/29	JR	JCD		
A	FOR APPROVAL	2009/04/16	JR	JCD		

ENVITECH DRAWING A4765A
BAR = 1" AT PLOT SCALE
STD: JMI_22x34_D_ANG
REF:

CONFIDENTIALITY AND INTELLECTUAL PROPERTY NOTICE
ALL INFORMATION CONTAINED IN THIS DOCUMENT IS THE SOLE PROPERTY OF ENVITECH AUTOMATION INC. IT IS PROTECTED BY APPLICABLE LAWS, INCLUDING BUT NOT LIMITED TO COPYRIGHT AND OTHER INTELLECTUAL PROPERTY LAWS. THE DESIGN CONCEPTS AND INFORMATION CONTAINED HEREIN ARE PROPRIETARY TO JMI AND ARE SUBMITTED IN CONFIDENCE. THEY ARE NOT TRANSFERABLE, ENVY IS GRANTED A LICENSE TO USE THE INFORMATION CONTAINED HEREIN IN EXPRESSED CONNECTED AND NO IMPLIED LICENCE IS GRANTED OTHERWISE BY THE SUBMISSION OF THIS DOCUMENT. THEY ARE CONFIDENTIAL AND PRIVILEGED INFORMATION OF JMI AND THEY MUST NOT BE DISCLOSED, REPRODUCED, COPIED, REMITTED OR USED IN ANY OTHER MANNER WITHOUT THE EXPRESS WRITTEN CONSENT OF JMI. JMI ASSUMES NO RESPONSIBILITY OR LIABILITY FOR ANY USE OF THIS DOCUMENT OTHER THAN FOR THE PURPOSE FOR WHICH IT WAS PREPARED HEREIN FOR ANOTHER PROJECT, OR IN A MANNER THAT DOES NOT RELATE TO THE FITNESS OR PURPOSE OF THIS DOCUMENT. IN NO CASE SHALL THIS TREATMENT OF THE DESIGN CONCEPTS AND INFORMATION CONTAINED HEREIN BE USED IN A MANNER DETRIMENTAL TO THE INTEREST OF JMI. ALL COPYRIGHT, PATENT AND OTHER INTELLECTUAL PROPERTY RIGHTS ARE RESERVED. ACCEPTANCE OF THIS DOCUMENT CONSTITUTES AGREEMENT TO THESE TERMS AND CONDITIONS.

DESIGNER	DATE	
CHECKER	DATE	
ENGINEER	DATE	
MANAGER	DATE	
SCALE:		

TITLE: (2) ACTIFLO ACP-700R ELECTRICAL SCHEMATIC
CLIENT: MEADOWBANK MINING CORP., NWT

JOHN MEUNIER ISO 9001: 2000
4165 Sartelon Street, Saint-Laurent, Qc, Canada H4S 2B3 / Tel: (514) 334-7230 / Fax: (514) 334-5070

PROJECT DRAWING: NC01 - 001-E04-014
SHEET: 14 OF 28
REV: B

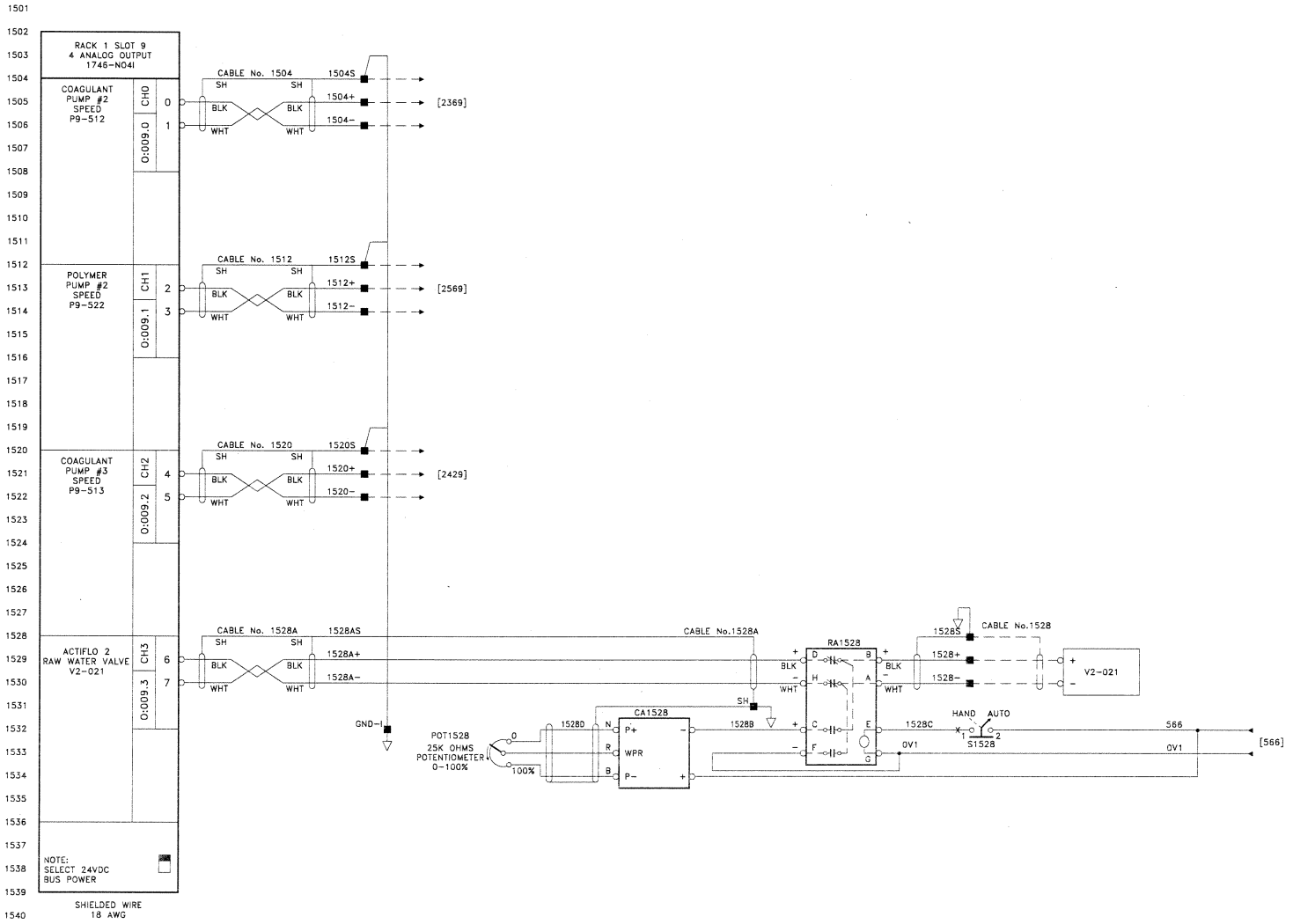

Envitech Automation Inc.
CERTIFIÉ ISO9001
ENVITECH Intégrateurs de systèmes / Systems integrators

ENVITECH DRAWING A4765A

BAR = 1" AT PLOT SCALE

REV	DESCRIPTION	DATE	DWN	CHKD	APVD	ECN
B	AS BUILT	2009/05/29	JR	JCD		
A	FOR APPROVAL	2009/04/16	JR	JCD		

STD: JMI_22x34_D_ANC

REF:

CONFIDENTIALITY AND INTELLECTUAL PROPERTY NOTICE
ALL INFORMATION CONTAINED IN THIS DOCUMENT IS THE SOLE PROPERTY OF JOHN MEUNIER INC. AND IS PROTECTED BY ALL APPLICABLE LAWS, INCLUDING BUT NOT LIMITED TO COPYRIGHT AND OTHER INTELLECTUAL PROPERTY LAWS. THE DESIGN CONCEPTS AND INFORMATION CONTAINED HEREIN ARE PROPRIETARY TO JMI AND ARE SUBMITTED IN CONFIDENCE. THEY ARE NOT TRANSFERABLE. THEY MUST BE USED ONLY FOR THE PURPOSE FOR WHICH THE DOCUMENT IS EXPRESSLY SUBMITTED AND NO IMPLICIT LICENCE IS GRANTED OTHERWISE BY THE SUBMISSION OF THIS DOCUMENT. THEY ARE CONFIDENTIAL AND PRIVATELY INFORMATION OF JMI AND THEY MUST NOT BE DISCLOSED, REPRODUCED, LOANED, PERMITTED OR USED IN ANY OTHER MANNER WITHOUT THE EXPRESS WRITTEN CONSENT OF JMI. JMI ASSUMES NO RESPONSIBILITY OR LIABILITY FOR THE USE OF THIS DOCUMENT OR THE DESIGN CONCEPTS AND INFORMATION CONTAINED HEREIN FOR ANOTHER PROJECT, OR IN A MANNER THAT DOES NOT RELATE TO THE FITNESS OR PURPOSE OF THIS DOCUMENT. IN NO EVENT SHALL THIS DOCUMENT OR THE DESIGN CONCEPTS AND INFORMATION CONTAINED HEREIN BE USED IN A MANNER DETRIMENTAL TO THE INTEREST OF JMI. ALL COPYRIGHT, PATENT AND OTHER INTELLECTUAL PROPERTY RIGHTS ARE RESERVED. ACCEPTANCE OF THE DELIVERY OF THIS DOCUMENT CONSTITUTES AGREEMENT TO THESE TERMS AND CONDITIONS.

DESIGNER	DATE
CHECKER	DATE
ENGINEER	DATE
MANAGER	DATE
SCALE:	

TITLE: (2) ACTIFLO ACP-700R ELECTRICAL SCHEMATIC

CLIENT: MEADOWBANK MINING CORP., NWT

JOHN MEUNIER ISO 9001: 2000
4105 Sartelon Street, Saint-Laurent, Qc, Canada H4S 2B3 / Tel: (514) 334-7230 / Fax: (514) 334-5070

PROJECT DRAWING: NC01- 001-E04-015

SHEET: 15 OF 28

REV: B

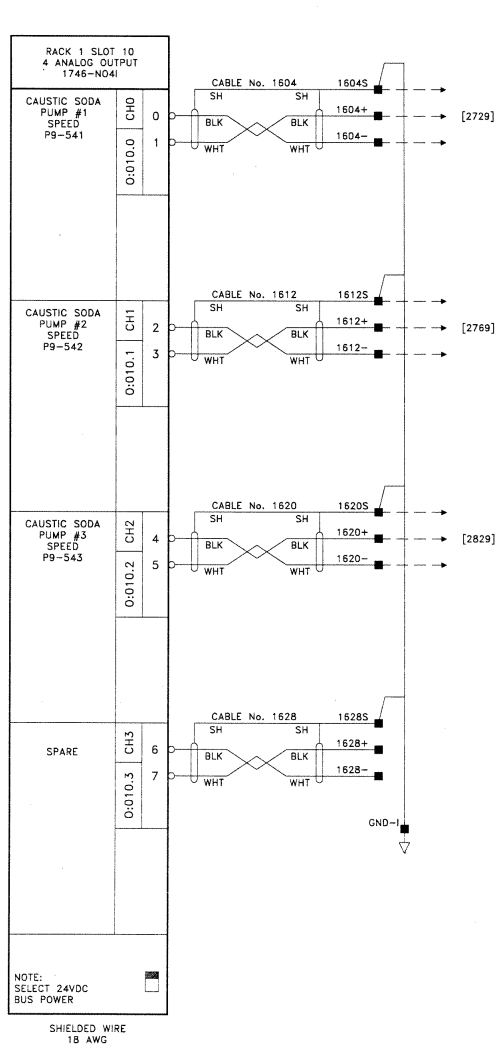

REV	DESCRIPTION	DATE	DWN	CHKD	APVD	ECN
B	AS BUILT	2009/05/29	JR	JCD		
A	FOR APPROVAL	2009/04/16	JR	JCD		

Envitech Automation Inc. CERTIFIÉ ISO9001
ENVITECH Intégrateurs de systèmes / Systems Integrators

ENVITECH DRAWING A4765A

BAR = 1" AT PLOT SCALE

STD: JMI_22x34_D.ANG

REF:

CONFIDENTIALITY AND INTELLECTUAL PROPERTY NOTICE
ALL INFORMATION CONTAINED IN THIS DOCUMENT IS THE SOLE PROPERTY OF JOHN MEUNIER INC. AND IS PROTECTED BY ALL APPLICABLE LAWS, INCLUDING BUT NOT LIMITED TO COPYRIGHT AND TRADE SECRET LAWS. ALL DESIGN CONCEPTS AND INFORMATION CONTAINED HEREIN ARE PROPRIETARY TO JMI AND ARE SUBMITTED IN CONFIDENCE. THEY ARE NOT TRANSFERABLE, THEY MUST BE USED ONLY FOR THE PURPOSE FOR WHICH THE DOCUMENT IS EXPRESSLY SUBMITTED AND NO IMPLICIT LICENCE IS GRANTED OTHERWISE BY THE SUBMISSION OF THIS DOCUMENT. THEY ARE CONFIDENTIAL AND PRIVILEGED INFORMATION OF JMI AND THEY MUST NOT BE DISCLOSED, COPIED, REPRODUCED OR USED IN ANY FORM OR BY ANY OTHER MANNER WITHOUT THE EXPRESS WRITTEN CONSENT OF JMI. JMI ASSUMES NO RESPONSIBILITY OR LIABILITY FOR THE USE OF THIS DOCUMENT OR THE DESIGN CONCEPTS AND INFORMATION CONTAINED HEREIN FOR ANOTHER PROJECT OR IN A MANNER THAT DOES NOT FULLY COMPLY WITH THE INTENT OF THIS DOCUMENT. THE USER SHALL HOLD DISCLOSERS OF HIS DESIGN CONCEPTS AND INFORMATION CONTAINED HEREIN IN USES IN A MANNER DETRIMENTAL TO THE INTEREST OF JMI. ALL COPYRIGHT, PATENT AND OTHER INTELLECTUAL PROPERTY RIGHTS ARE RESERVED. ACCEPTANCE OF THE DELIVERY OF THIS DOCUMENT CONSTITUTES AGREEMENT TO THESE TERMS AND CONDITIONS.

DESIGNER		DATE
CHECKER		DATE
ENGINEER		DATE
MANAGER		DATE
SCALE:		

TITLE: (2) ACTIFLO ACP-700R ELECTRICAL SCHEMATIC

CLIENT: MEADOWBANK MINING CORP., NWT

JOHN MEUNIER ISO 9001: 2000
4105 Sartelon Street, Saint-Laurent, Qc, Canada H4S 2B2 / Tel: (514) 334-7230 / Fax: (514) 334-5070

PROJECT: NC01-001-E04-016 | DRAWING | SHEET: 16 OF 28 | REV: B

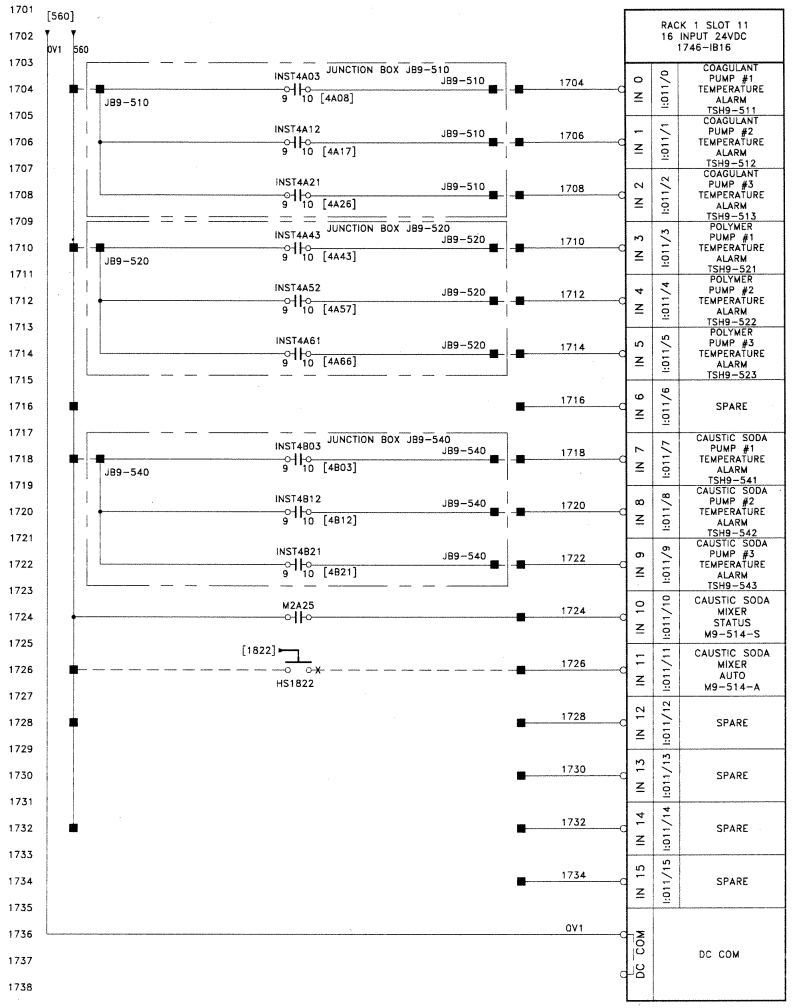

Envitech Automation Inc. CERTIFIÉ ISO9001
ENVITECH Intégrateurs de systèmes / Systems Integrators

ENVITECH DRAWING A4765A

STD: JMI_22x34_D_ANG REF: BAR = 1" AT PLOT SCALE

REV	DESCRIPTION	DATE	DWN	CHKD	APVD	ECN
B	AS BUILT	2009/05/29	JR	JCD		
A	FOR APPROVAL	2009/04/16	JR	JCD		

CONFIDENTIALITY AND INTELLECTUAL PROPERTY NOTICE
ALL INFORMATION CONTAINED IN THIS DOCUMENT IS THE SOLE PROPERTY OF JOHN MEUNIER INC. AND IS PROTECTED BY ALL APPLICABLE LAWS, INCLUDING BUT NOT LIMITED TO COPYRIGHT AND OTHER INTELLECTUAL PROPERTY LAWS. THE DESIGN CONCEPTS AND INFORMATION CONTAINED HEREIN ARE PROPRIETARY TO JMI AND ARE SUBMITTED IN CONFIDENCE. THEY ARE NOT TRANSFERABLE. THEY MUST BE USED ONLY FOR THE PURPOSE FOR WHICH THE DOCUMENT IS EXPRESSLY SUBMITTED AND NO IMPLICIT LICENCE IS GRANTED EXPRESSLY BY THE SUBMISSION OF THIS DOCUMENT. THEY ARE CONFIDENTIAL AND PROVIDED INFORMATION OF JMI AND THEY MUST NOT BE DISCLOSED, REPRODUCED, COPIED, REMITTED OR USED IN ANY OTHER MANNER WITHOUT THE EXPRESS WRITTEN CONSENT OF JMI. JMI ASSUMES NO RESPONSIBILITY OR LIABILITY FOR THE USE OF THIS DOCUMENT OR THE DESIGN CONCEPTS AND INFORMATION CONTAINED HEREIN FOR ANOTHER PROJECT, OR IN A MANNER THAT DOES NOT WEAR TO THE FITNESS OR PURPOSE OF THIS DOCUMENT. IN NO EVENT SHALL THIS DOCUMENT OR THE DESIGN CONCEPTS AND INFORMATION CONTAINED HEREIN BE USED IN A MANNER DETRIMENTAL TO THE INTEREST OF JMI. ALL COPYRIGHT, PATENT AND OTHER INTELLECTUAL PROPERTY RIGHTS ARE RESERVED. ACCEPTANCE OF THE DELIVERY OF THIS DOCUMENT CONSTITUTES AGREEMENT TO THESE TERMS AND CONDITIONS.

DESIGNER	DATE
CHECKER	DATE
ENGINEER	DATE
MANAGER	DATE
SCALE:	

TITLE (2) ACTIFLO ACP-700R ELECTRICAL SCHEMATIC

CLIENT MEADOWBANK MINING CORP., NWT

JOHN MEUNIER ISO 9001: 2000
4105 Sartelon Street, Saint-Laurent, Qc, Canada H4S 2B3 / Tel: (514) 334-7230 / Fax: (514) 334-5070

PROJECT NC01- DRAWING 001-E04-017 SHEET 17 OF 28 REV B

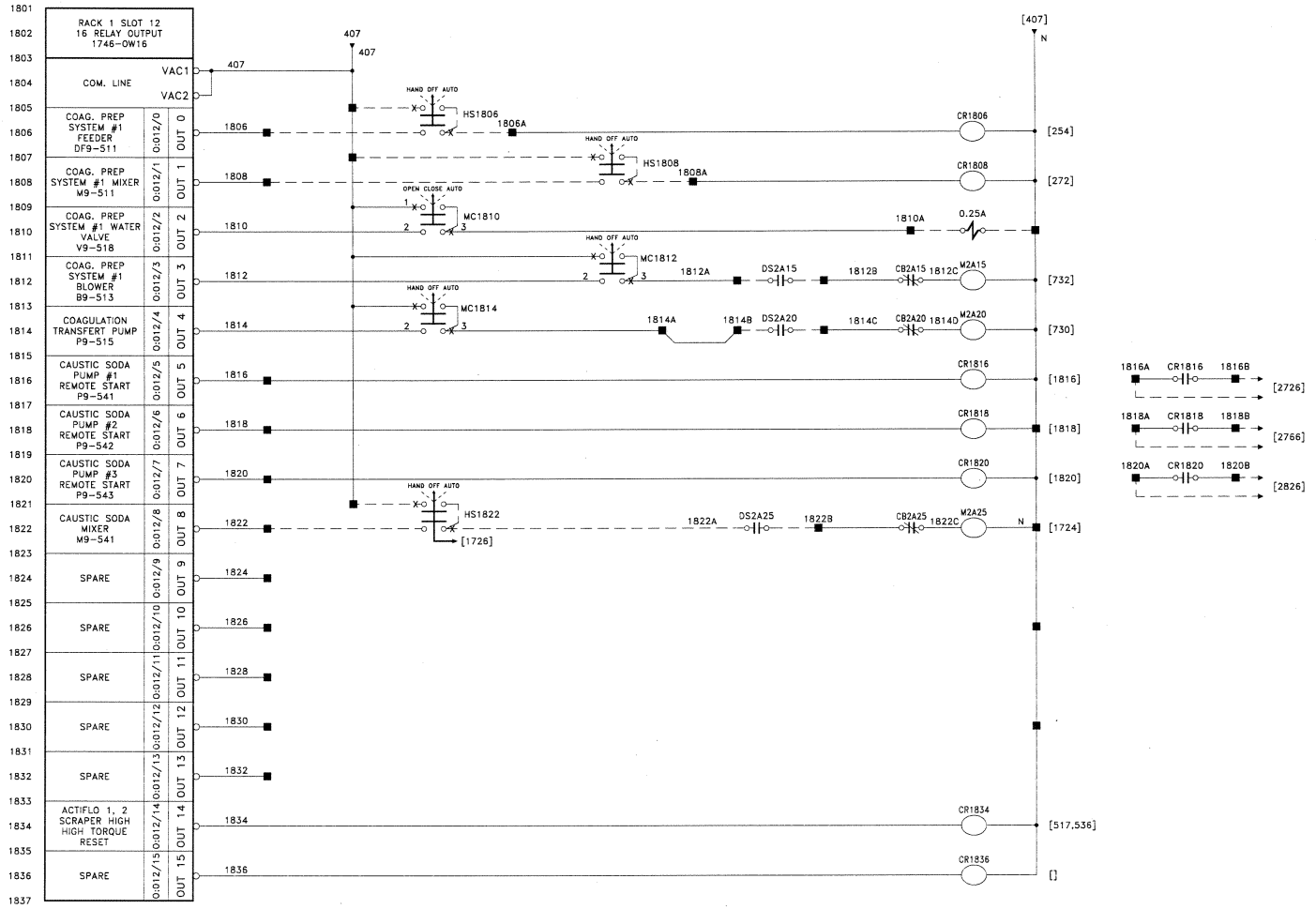

Envitech Automation Inc.
CERTIFIÉ ISO9001
Intégrateurs de systèmes / Systems Integrators

REV	DESCRIPTION	DATE	DWN	CHKD	APVD	ECN
B	AS BUILT	2009/05/29	JR	JCD		
A	FOR APPROVAL	2009/04/16	JR	JCD		

CONFIDENTIALITY AND INTELLECTUAL PROPERTY NOTICE
ALL INFORMATION CONTAINED IN THIS DOCUMENT IS THE SOLE PROPERTY OF JOHN MEUNIER INC. AND IS PROTECTED BY ALL APPLICABLE LAWS, INCLUDING BUT NOT LIMITED TO COPYRIGHT AND OTHER INTELLECTUAL PROPERTY LAWS. THE DESIGN CONCEPTS AND INFORMATION CONTAINED HEREIN ARE PROPRIETARY TO JMI AND ARE SUBMITTED IN CONFIDENCE. THEY ARE NOT TRANSFERABLE. THEY MUST BE USED ONLY FOR THE PURPOSE FOR WHICH THE DOCUMENT IS CONFIDENTLY SUBMITTED AND NO IMPLICIT LICENCE IS GRANTED OTHERWISE BY THE SUBMISSION OF THIS DOCUMENT. THEY ARE CONFIDENTIAL AND PRIVILEGED INFORMATION OF JMI AND THEY MUST NOT BE DISCLOSED, REPRODUCED, LOANED, PERMITTED OR USED IN ANY OTHER MANNER WITHOUT THE EXPRESS WRITTEN CONSENT OF JMI. JMI ASSUMES NO RESPONSIBILITY OR LIABILITY FOR THE USE OF THIS DOCUMENT OR THE DESIGN CONCEPTS AND INFORMATION CONTAINED HEREIN FOR ANOTHER PURPOSE, OR IN A MANNER THAT DOES NOT RELATE TO THE STATED OR PURPOSE OF THIS DOCUMENT. IN NO EVENT SHALL THIS DOCUMENT OR THE DESIGN CONCEPTS AND INFORMATION CONTAINED HEREIN BE USED IN A MANNER DETRIMENTAL TO THE INTEREST OF JMI. ALL COPYRIGHT, PATENT AND OTHER INTELLECTUAL PROPERTY RIGHTS ARE RESERVED. ACCEPTANCE OF THE DELIVERY OF THIS DOCUMENT CONSTITUTES AGREEMENT TO THESE TERMS AND CONDITIONS.

DESIGNER	DATE
CHECKER	DATE
ENGINEER	DATE
MANAGER	DATE
SCALE:	

TITLE: (2) ACTIFLO ACP-700R ELECTRICAL SCHEMATIC

CLIENT: MEADOWBANK MINING CORP., NWT

JOHN MEUNIER ISO 9001: 2000
4105 Sartelon Street, Saint-Laurent, Qc, Canada H4S 2B3 / Tel: (514) 334-2230 / Fax: (514) 334-5020

PROJECT	DRAWING	SHEET	REV
NC01- 001-E04-018		18 OF 28	B

STD: JMI_22x34_D_ANG
REF:
DRAWING A4755A
1" AT PLOT SCALE

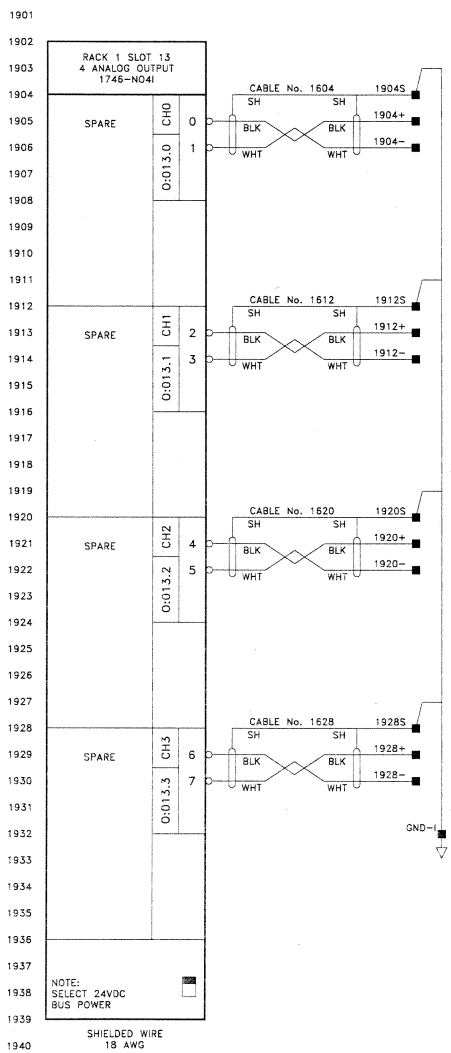

Envitech Automation Inc. *CERTIFIÉ ISO9001*

ENVITECH Intégrateurs de systèmes / Systems Integrators

ENVITECH DRAWING A4765A

BAR = 1" AT PLOT SCALE

STD: JMI_22x34_D_ANG

REF:

REV	DESCRIPTION	DATE	DWN	CHKD	APVD	ECN
B	AS BUILT	2009/05/29	JR	JCD		
A	FOR APPROVAL	2009/04/16	JR	JCD		

CONFIDENTIALITY AND INTELLECTUAL PROPERTY NOTICE
ALL INFORMATION CONTAINED IN THIS DOCUMENT IS THE SOLE PROPERTY OF JOHN MEUNIER INC. AND IS PROTECTED BY ALL APPLICABLE LAWS, INCLUDING BUT NOT LIMITED TO COPYRIGHT AND OTHER INTELLECTUAL PROPERTY LAWS. THE DESIGN CONCEPTS AND INFORMATION CONTAINED HEREIN ARE PROPRIETARY TO JMI AND ARE SUBMITTED IN CONFIDENCE. THEY ARE NOT TRANSFERABLE. THEY MUST BE USED ONLY FOR THE PURPOSE FOR WHICH THE DOCUMENT IS EXPRESSLY SUBMITTED AND NO IMPLIED LICENCE IS GRANTED OTHERWISE BY THE SUBMISSION OF THIS DOCUMENT. THEY ARE CONFIDENTIAL AND PROVIDED INFORMATION OF JMI AND THEY MUST NOT BE DISCLOSED, REPRODUCED, COPIED, SHARED OR USED IN ANY OTHER MANNER WITHOUT THE EXPRESS WRITTEN CONSENT OF JMI. JMI ASSUMES NO RESPONSIBILITY OR LIABILITY FOR THE USE OF THIS DOCUMENT OR THE DESIGN CONCEPTS AND INFORMATION CONTAINED HEREIN FOR ANOTHER PROJECT, OR IN A MANNER THAT DOES NOT RELATE TO THE PURPOSE OF THIS DOCUMENT. IN NO EVENT SHALL THIS DOCUMENT OR THE DESIGN CONCEPTS AND INFORMATION CONTAINED HEREIN BE USED IN A MANNER OTHER THAN TO THE BENEFIT OF JMI. ALL COPYRIGHT, PATENT AND OTHER INTELLECTUAL PROPERTY RIGHTS ARE RESERVED. ACCEPTANCE OF THE DELIVERY OF THIS DOCUMENT CONSTITUTES AGREEMENT TO THESE TERMS AND CONDITIONS.

DESIGNER	DATE
CHECKER	DATE
ENGINEER	DATE
MANAGER	DATE
SCALE:	

TITLE: (2) ACTIFLO ACP-700R ELECTRICAL SCHEMATIC

CLIENT: MEADOWBANK MINING CORP., NWT

JOHN MEUNIER ISO 9001: 2000

4100 Sartelon Street, Saint-Laurent, Qc, Canada H4S 2B3 / Tel: (514) 334-7230 / Fax: (514) 334-5070

PROJECT	DRAWING	SHEET	REV
NC01-	001-E04-019	19 OF 28	B

SPARE PAGE

Envitech Automation Inc.
CERTIFIÉ ISO9001
ENVITECH Intégrateurs de systèmes / Systems Integrators

ENVITECH DRAWING A4765A

BAR = 1" AT PLOT SCALE

STD: JMI_22x34_D_ANG

REF:

REV	DESCRIPTION	DATE	DWN	CHKD	APVD	ECN
B	AS BUILT	2009/05/29	JR	JCD		
A	FOR APPROVAL	2009/04/16	JR	JCD		

CONFIDENTIALITY AND INTELLECTUAL PROPERTY NOTICE
ALL INFORMATION CONTAINED IN THIS DOCUMENT IS THE SOLE PROPERTY OF JOHN MEUNIER INC. AND IS PROTECTED BY ALL APPLICABLE LAWS, INCLUDING BUT NOT LIMITED TO COPYRIGHT AND OTHER INTELLECTUAL PROPERTY LAWS. THE DESIGN CONCEPTS AND INFORMATION CONTAINED HEREIN ARE PROPRIETARY TO JMI AND ARE SUBMITTED IN CONFIDENCE. THEY ARE NOT TRANSFERABLE. THEY MUST BE USED ONLY FOR THE PURPOSE FOR WHICH THE DOCUMENT IS EXPRESSLY SUBMITTED AND NO IMPLIED LICENCE IS GRANTED OTHERWISE ON THE SUBMISSION OF THIS DOCUMENT. THEY ARE CONFIDENTIAL AND PROVIDED INFORMATION OF JMI AND THEY MUST NOT BE DISCLOSED, REPRODUCED, LOANED, PERMITTED OR USED IN ANY OTHER MANNER WITHOUT THE EXPRESS WRITTEN CONSENT OF JMI. JMI ASSUMES NO RESPONSIBILITY OR LIABILITY FOR THE USE OF THIS DOCUMENT OR THE DESIGN CONCEPTS AND INFORMATION CONTAINED HEREIN FOR ANOTHER PROJECT, OR IN A MANNER THAT DOES NOT RELATE TO THE STATUS OR PURPOSE OF THIS DOCUMENT. IN NO EVENT SHALL THE DOCUMENT OR THE DESIGN CONCEPTS AND INFORMATION CONTAINED HEREIN BE USED IN A MANNER DETRIMENTAL TO THE INTEREST OF JMI. ALL COPYRIGHT, PATENT AND OTHER INTELLECTUAL PROPERTY RIGHTS ARE RESERVED. ACCEPTANCE OF THE DELIVERY OF THIS DOCUMENT CONSTITUTES AGREEMENT TO THESE TERMS AND CONDITIONS.

DESIGNER	DATE
CHECKER	DATE
ENGINEER	DATE
MANAGER	DATE
SCALE:	

TITLE (2) ACTIFLO ACP-700R ELECTRICAL SCHEMATIC

CLIENT MEADOWBANK MINING CORP., NWT

JOHN MEUNIER ISO 9001: 2000
4105 Sartelon Street, Saint-Laurent, Qc, Canada H4S 2B3 / Tel: (514) 334-7230 / Fax: (514) 334-3070

PROJECT	DRAWING	SHEET	REV
NC01-	001-E04-020	20 OF 28	B

SPARE PAGE

Envitech Automation Inc. CERTIFIÉ ISO9001
ENVITECH Intégrateurs de systèmes / Systems Integrators

ENVITECH DRAWING A4765A

BAR = 1" AT PLOT SCALE

STD: JMI_22x34_D_ANG

REF:

REV	DESCRIPTION	DATE	DWN	CHKD	APVD	ECN
B	AS BUILT	2009/05/29	JR	JCD		
A	FOR APPROVAL	2009/04/16	JR	JCD		

CONFIDENTIALITY AND INTELLECTUAL PROPERTY NOTICE
ALL INFORMATION CONTAINED IN THIS DOCUMENT IS THE SOLE PROPERTY OF JOHN MEUNIER INC. AND IS PROTECTED BY ALL APPLICABLE LAWS, INCLUDING BUT NOT LIMITED TO COPYRIGHT AND OTHER INTELLECTUAL PROPERTY LAWS. THE DESIGN CONCEPTS AND INFORMATION CONTAINED HEREIN ARE PROPRIETARY TO JMI AND ARE SUBMITTED IN CONFIDENCE. THEY ARE NOT TRANSFERABLE. THEY MUST BE USED ONLY FOR THE PURPOSE FOR WHICH THE DOCUMENT IS EXPRESSLY SUBMITTED AND NO IMPLICIT LICENCE IS GRANTED OTHERWISE BY THE DISCLOSURE OF THIS DOCUMENT. THEY ARE CONFIDENTIAL AND PRIVILEGED INFORMATION OF JMI AND THEY MUST NOT BE DISCLOSED, REPRODUCED, COPIED, PRINTED OR USED IN ANY OTHER MANNER WITHOUT THE EXPRESS WRITTEN CONSENT OF JMI. JMI ASSUMES NO RESPONSIBILITY OR LIABILITY FOR THE USE OF THIS DOCUMENT OR THE DESIGN CONCEPTS AND INFORMATION CONTAINED HEREIN FOR ANOTHER PROJECT OR IN A MANNER THAT DOES NOT RELATE TO THE PRINTED OR PURPOSE OF THIS DOCUMENT. IN NO EVENT SHALL THIS DOCUMENT OR THE DESIGN CONCEPTS AND INFORMATION CONTAINED HEREIN BE USED IN A MANNER DETRIMENTAL TO THE INTEREST OF JMI. ALL COPYRIGHT, PATENT AND OTHER INTELLECTUAL PROPERTY RIGHTS ARE RESERVED. ACCEPTANCE OF THE DELIVERY OF THIS DOCUMENT CONSTITUTES AGREEMENT TO THESE TERMS AND CONDITIONS.

DESIGNER DATE
CHECKER DATE
ENGINEER DATE
MANAGER DATE
SCALE:

TITLE (2) ACTIFLO ACP-700R ELECTRICAL SCHEMATIC

CLIENT MEADOWBANK MINING CORP., NWT

JOHN MEUNIER ISO 9001: 2000
4105 Sartelon Street, Saint-Laurent, Qc, Canada H4S 2B3 / Tel: (514) 334-7230 / Fax: (514) 334-5070

PROJECT NC01- DRAWING 001-E04-021 SHEET 21 OF 28 REV B

SPARE PAGE

Envitech Automation Inc.
CERTIFIÉ ISO9001
ENVITECH Intégrateurs de systèmes / Systems Integrators

ENVITECH DRAWING A4765A

REV	DESCRIPTION	DATE	DWN	CHKD	APVD	ECN
B	AS BUILT	2009/05/29	JR	JCD		
A	FOR APPROVAL	2009/04/16	JR	JCD		

STD: JMI_22x34_D_ANG

REF:

BAR = 1" AT PLOT SCALE

CONFIDENTIALITY AND INTELLECTUAL PROPERTY NOTICE
ALL INFORMATION CONTAINED IN THIS DOCUMENT IS THE SOLE PROPERTY OF JOHN MEUNIER INC. AND IS PROTECTED BY ALL APPLICABLE LAWS, INCLUDING BUT NOT LIMITED TO COPYRIGHT AND OTHER INTELLECTUAL PROPERTY LAWS. THE DESIGN CONCEPTS AND INFORMATION CONTAINED HEREIN ARE PROPRIETARY TO JMI AND ARE SUBMITTED IN CONFIDENCE. THEY ARE NOT TRANSFERABLE. THEY MUST BE USED ONLY FOR THE PURPOSE FOR WHICH THE DOCUMENT IS EXPRESSLY SUBMITTED AND NO IMPLIED LICENCE IS GRANTED OTHERWISE BY THE SUBMISSION OF THIS DOCUMENT. THEY ARE CONFIDENTIAL AND PRIVILEGED INFORMATION OF JMI AND THEY MUST NOT BE DISCLOSED, REPRODUCED, COPIED, REMITTED OR USED IN ANY OTHER MANNER WITHOUT THE EXPRESS WRITTEN CONSENT OF JMI. JMI ASSUMES NO RESPONSIBILITY OR LIABILITY FOR THE USE OF THIS DOCUMENT OR THE DESIGN CONCEPTS AND INFORMATION CONTAINED HEREIN FOR ANOTHER PROJECT OR IN A MANNER THAT DOES NOT RELATE TO THE STATUS OR PURPOSE OF THIS DOCUMENT. IN NO EVENT SHALL THIS DOCUMENT OR THE DESIGN CONCEPTS AND INFORMATION CONTAINED HEREIN BE USED IN A MANNER TO INJURE OR DEFAULT OF JMI. ALL COPYRIGHT, PATENT AND OTHER INTELLECTUAL PROPERTY RIGHTS ARE RESERVED. ACCEPTANCE OF THE DELIVERY OF THIS DOCUMENT CONSTITUTES AGREEMENT TO THESE TERMS AND CONDITIONS.

DESIGNER	DATE
CHECKER	DATE
ENGINEER	DATE
MANAGER	DATE
SCALE:	

TITLE (2) ACTIFLO ACP-700R ELECTRICAL SCHEMATIC

CLIENT MEADOWBANK MINING CORP., NWT

JOHN MEUNIER ISO 9001: 2000
4100 Sartorius Street, Saint-Laurent, Qc, Canada H4S 2B2 / Tel: (514) 334-2230 / Fax: (514) 334-5070

PROJECT	DRAWING	SHEET	REV
NC01-	001-E04-022	22 OF 28	B

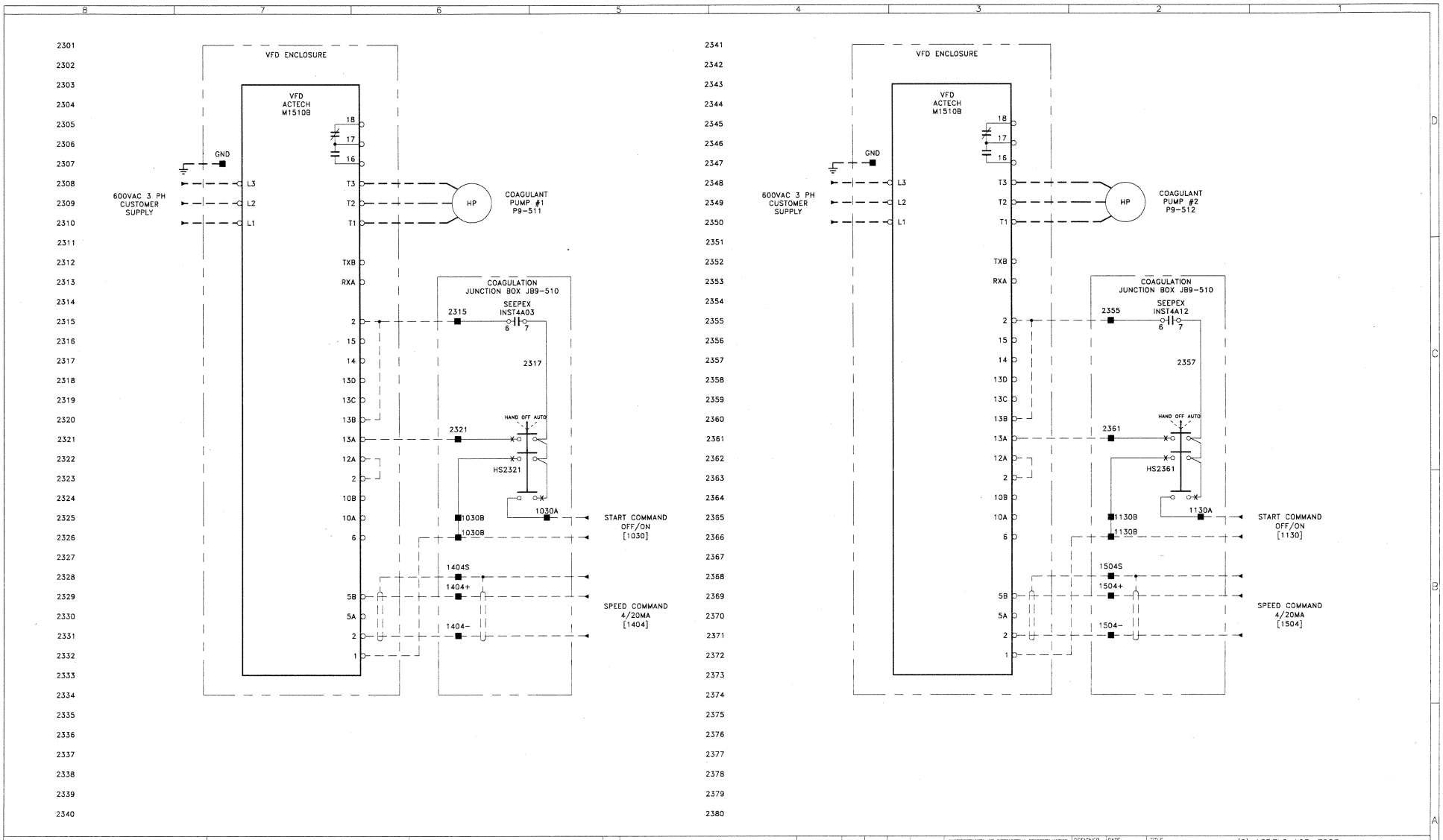

Envitech Automation Inc. CERTIFIÉ ISO9001

ENVITECH Intégrateurs de systèmes / Systems Integrators

ENVITECH DRAWING A4765A

BAR = 1" AT PLOT SCALE

STD: JMI_22x34_D_ANG

REF:

REV	DESCRIPTION	DATE	DWN	CHKD	APVD	ECN
B	AS BUILT	2009/05/29	JR	JCD		
A	FOR APPROVAL	2009/04/16	JR	JCD		

CONFIDENTIALITY AND INTELLECTUAL PROPERTY NOTICE
ALL INFORMATION CONTAINED IN THIS DOCUMENT IS THE SOLE PROPERTY OF JOHN MEUNIER INC. AND IS PROTECTED BY ALL APPLICABLE LAWS, INCLUDING BUT NOT LIMITED TO COPYRIGHT AND OTHER INTELLECTUAL PROPERTY LAWS. THE DESIGN CONCEPTS AND INFORMATION CONTAINED HEREIN ARE PROPRIETARY TO JMI AND ARE SUBMITTED IN CONFIDENCE. THEY ARE NOT TRANSFERABLE. THEY MUST BE USED ONLY FOR THE PURPOSE FOR WHICH THE DOCUMENT IS EXPRESSLY SUBMITTED AND NO IMPLICIT LICENCE IS GRANTED OTHERWISE BY THE SUBMISSION OF THIS DOCUMENT. THEY ARE CONFIDENTIAL AND PRIVILEGED INFORMATION OF JMI AND THEY MUST NOT BE DISCLOSED, REPRODUCED, LOANED, REMITTED OR USED IN ANY OTHER MANNER WITHOUT THE EXPRESS WRITTEN CONSENT OF JMI. JMI ASSUMES NO RESPONSIBILITY OR LIABILITY FOR THE USE OF THIS DOCUMENT OR THE DESIGN CONCEPTS AND INFORMATION CONTAINED HEREIN FOR ANOTHER PROJECT, OR IN A MANNER THAT DOES NOT BEARE TO THE STRESS OR PURPOSE OF THIS DOCUMENT. IN NO EVENT SHALL THIS DOCUMENT OR THE DESIGN CONCEPTS AND INFORMATION CONTAINED HEREIN BE USED IN A MANNER OUTWARDLY TO THE INTEREST OF JMI. ALL COPYRIGHT, PATENT AND OTHER INTELLECTUAL PROPERTY RIGHTS ARE RESERVED. ACCEPTANCE OF THE DELIVERY OF THIS DOCUMENT CONSTITUTES AGREEMENT TO THESE TERMS AND CONDITIONS.

DESIGNER	DATE
CHECKER	DATE
ENGINEER	DATE
MANAGER	DATE
SCALE:	

TITLE (2) ACTIFLO ACP-700R ELECTRICAL SCHEMATIC

CLIENT MEADOWBANK MINING CORP., NWT

JOHN MEUNIER ISO 9001: 2000

4105 Sartelon Street, Saint-Laurent, Qc, Canada H4S 2B3 / Tel: (514) 334-7230 / Fax: (514) 334-5070

PROJECT	DRAWING	SHEET	REV
NC01-	001-E04-023	23 OF 28	B

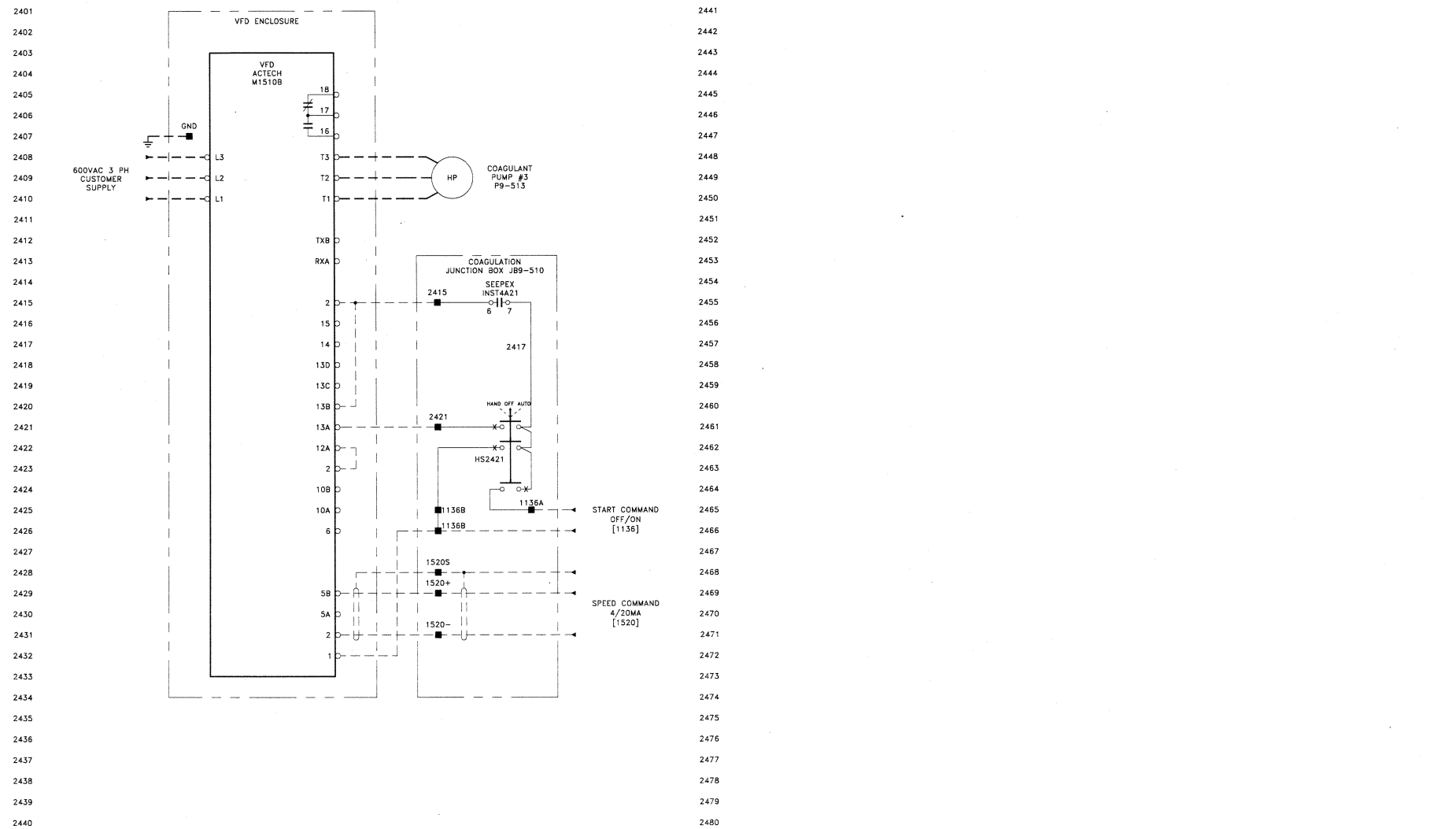

Envitech Automation Inc.
CERTIFIÉ ISO9001
ENVITECH Intégrateurs de systèmes / Systems Integrators

ENVITECH DRAWING A4765A

BAR = 1" AT PLOT SCALE

STD: JMI_22x34_D_ANG

REF:

REV	DESCRIPTION	DATE	DWN	CHKD	APVD	ECN
B	AS BUILT	2009/05/29	JR	JCD		
A	FOR APPROVAL	2009/04/16	JR	JCD		

CONFIDENTIALITY AND INTELLECTUAL PROPERTY NOTICE
ALL INFORMATION CONTAINED IN THIS DOCUMENT IS THE SOLE PROPERTY OF JOHN MEUNIER INC. AND IS PROTECTED BY ALL APPLICABLE LAWS, INCLUDING BUT NOT LIMITED TO COPYRIGHT AND OTHER INTELLECTUAL PROPERTY LAWS. THE DESIGN CONCEPTS AND INFORMATION CONTAINED HEREIN ARE PROPRIETARY TO JMI AND ARE SUBMITTED IN CONFIDENCE. THEY ARE NOT TRANSFERABLE. THEY MUST BE USED ONLY FOR THE PURPOSE FOR WHICH THE DOCUMENT IS EXPRESSLY SUBMITTED AND NO IMPLIED LICENCE IS GRANTED OTHERWISE BY THE SUBMISSION OF THIS DOCUMENT. THEY ARE CONFIDENTIAL AND PRIVILEGED INFORMATION OF JMI AND THEY MUST NOT BE DISCLOSED, REPRODUCED, COPIED, REMITTED OR USED IN ANY OTHER MANNER WITHOUT THE EXPRESS WRITTEN CONSENT OF JMI. JMI ASSUMES NO RESPONSIBILITY OR LIABILITY FOR THE USE OF THIS DOCUMENT OR THE DESIGN CONCEPTS AND INFORMATION CONTAINED HEREIN FOR ANOTHER PROJECT, OR IN A MANNER THAT DOES NOT RELATE TO THE INTENDED PURPOSE OF THIS DOCUMENT. IN NO EVENT SHALL THIS DOCUMENT OR THE DESIGN CONCEPTS AND INFORMATION CONTAINED HEREIN BE USED IN A MANNER DETRIMENTAL TO THE INTEREST OF JMI. ALL COPYRIGHT, PATENT AND OTHER INTELLECTUAL PROPERTY RIGHTS ARE RESERVED. ACCEPTANCE OF THE DELIVERY OF THIS DOCUMENT CONSTITUTES AGREEMENT TO THESE TERMS AND CONDITIONS.

DESIGNER	DATE
CHECKER	DATE
ENGINEER	DATE
MANAGER	DATE
SCALE:	

TITLE (2) ACTIFLO ACP-700R ELECTRICAL SCHEMATIC

CLIENT MEADOWBANK MINING CORP., NWT

JOHN MEUNIER ISO 9001: 2000
4105 Sorbonne Street, Saint-Laurent, Qc, Canada H4S 2B3 / Tel: (514) 334-7230 / Fax: (514) 334-5070

PROJECT	DRAWING	SHEET	REV
NC01-	001-E04-024	24 OF 28	B

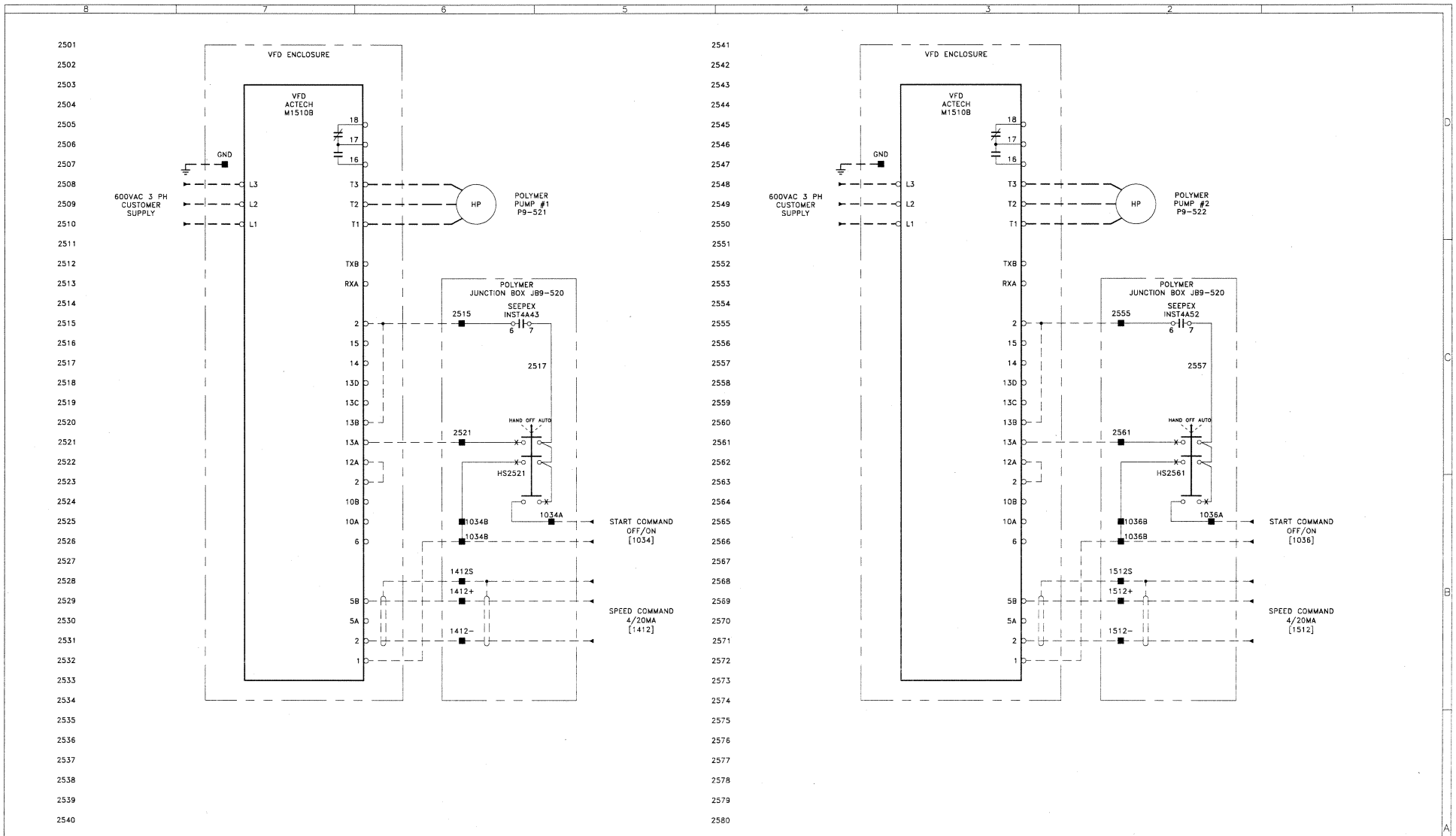

Envitech Automation Inc. CERTIFIÉ ISO9001
ENVITECH Intégrateurs de systèmes / Systems Integrators

ENVITECH DRAWING A4765A

BAR = 1" AT PLOT SCALE

REV	DESCRIPTION	DATE	DWN	CHKD	APVD	ECN
B	AS BUILT	2009/05/29	JR	JCD		
A	FOR APPROVAL	2009/04/16	JR	JCD		

CONFIDENTIALITY AND INTELLECTUAL PROPERTY NOTICE
ALL INFORMATION CONTAINED IN THIS DOCUMENT IS THE SOLE PROPERTY OF JOHN MEUNIER INC. AND IS PROTECTED BY ALL APPLICABLE LAWS, INCLUDING BUT NOT LIMITED TO COPYRIGHT AND OTHER INTELLECTUAL PROPERTY LAWS. THE DESIGN CONCEPTS AND INFORMATION CONTAINED HEREIN ARE PROPRIETARY TO JMI AND ARE SUBMITTED IN CONFIDENCE. THEY ARE NOT TRANSFERABLE. THEY MUST BE USED ONLY FOR THE PURPOSE FOR WHICH THE DOCUMENT IS EXPRESSLY SUBMITTED AND NO IMPLICIT LICENCE IS GRANTED OTHERWISE BY THE SUBMISSION OF THIS DOCUMENT. THEY ARE CONFIDENTIAL AND PRIVILEGED INFORMATION OF JMI AND THEY MUST NOT BE DISCLOSED, REPRODUCED, LOANED, REMITTED OR USED IN ANY OTHER MANNER WITHOUT THE EXPRESS WRITTEN CONSENT OF JMI. JMI ASSUMES NO RESPONSIBILITY OR LIABILITY FOR THE USE OF THIS DOCUMENT OR THE DESIGN CONCEPTS AND INFORMATION CONTAINED HEREIN FOR ANOTHER PROJECT, OR IN A MANNER THAT DOES NOT RELATE TO THE FITNESS OR PURPOSE OF THIS DOCUMENT. IN NO EVENT SHALL THIS DOCUMENT OR THE DESIGN CONCEPTS AND INFORMATION CONTAINED HEREIN BE USED IN A MANNER DETRIMENTAL TO THE INTEREST OF JMI. ALL COPYRIGHT, PATENT AND OTHER INTELLECTUAL PROPERTY RIGHTS ARE RESERVED. ACCEPTANCE OF THE DELIVERY OF THIS DOCUMENT CONSTITUTES AGREEMENT TO THESE TERMS AND CONDITIONS.

DESIGNER	DATE
CHECKER	DATE
ENGINEER	DATE
MANAGER	DATE
SCALE:	

TITLE: (2) ACTIFLO ACP-700R ELECTRICAL SCHEMATIC

CLIENT: MEADOWBANK MINING CORP., NWT

JOHN MEUNIER ISO 9001: 2000
4100 Sartelon Street, Saint-Laurent, Qc, Canada H4S 2B3 / Tel: (514) 334-2230 / Fax: (514) 334-5030

PROJECT	DRAWING	SHEET	REV
NC01-	001-E04-025	25 OF 28	B

STD: JMI_22x34_D_ANG REF:

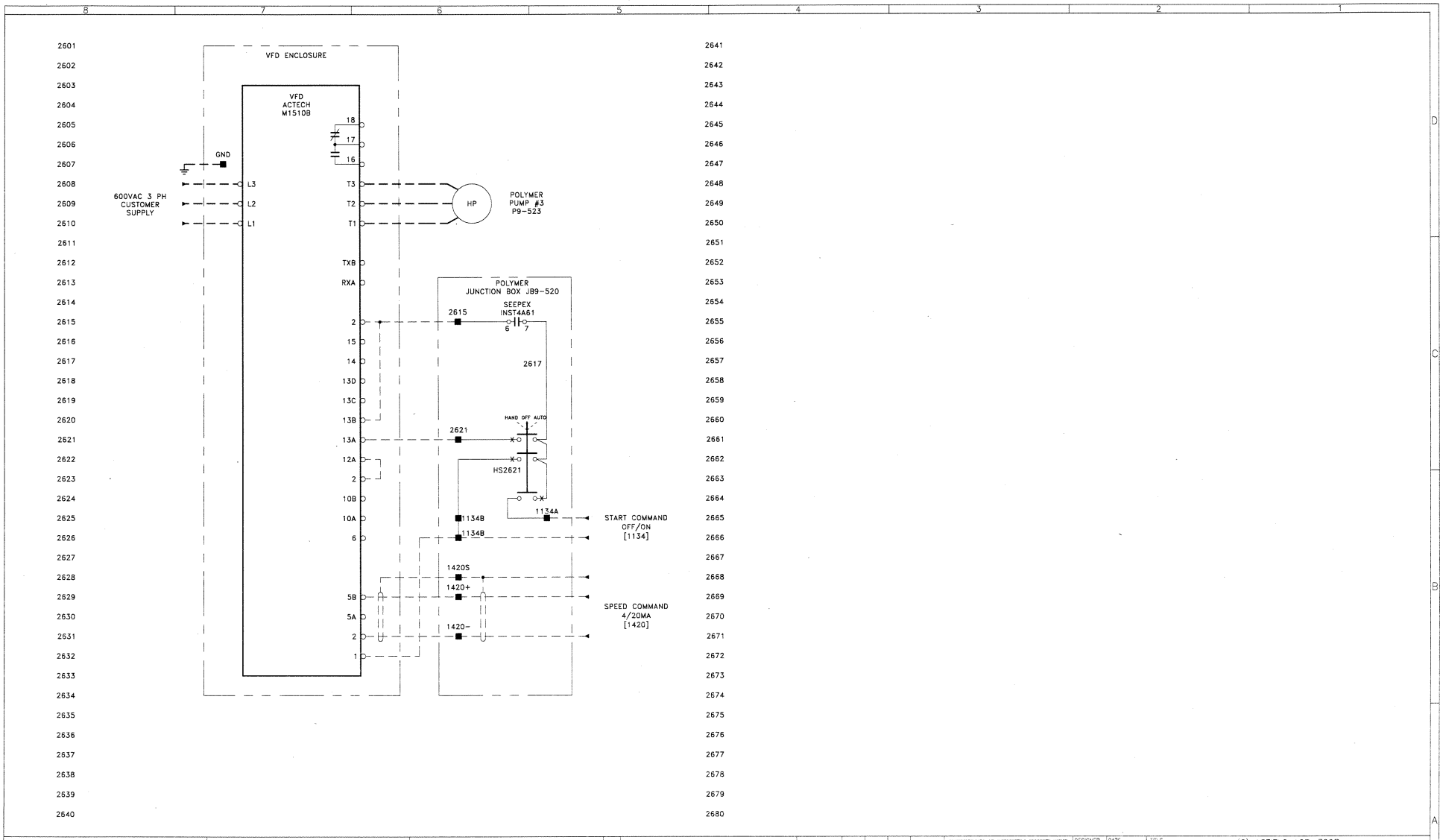

Envitech Automation Inc. CERTIFIÉ ISO9001

ENVITECH Intégrateurs de systèmes / Systems Integrators

ENVITECH DRAWING A4765A

BAR = 1" AT PLOT SCALE

STD: JMI_22x34_D_ANG

REF:

REV	DESCRIPTION	DATE	DWN	CHKD	APVD	ECN
B	AS BUILT	2009/05/29	JR	JCD		
A	FOR APPROVAL	2009/04/16	JR	JCD		

CONFIDENTIALITY AND INTELLECTUAL PROPERTY NOTICE

ALL INFORMATION CONTAINED IN THIS DOCUMENT IS THE SOLE PROPERTY OF JOHN MEUNIER INC. AND IS PROTECTED BY ALL APPLICABLE LAWS, INCLUDING BUT NOT LIMITED TO COPYRIGHT AND OTHER INTELLECTUAL PROPERTY LAWS. THE DESIGN CONCEPTS AND INFORMATION CONTAINED HEREIN ARE PROPRIETARY TO JMI AND ARE SUBMITTED IN CONFIDENCE. THEY ARE NOT TRANSFERABLE. THEY MUST BE USED ONLY FOR THE PURPOSE FOR WHICH THE DOCUMENT IS EXPRESSLY SUBMITTED AND NO IMPLICIT LICENCE IS GRANTED EXPRESSLY OR THE SUBMISSION OF THIS DOCUMENT. THEY ARE CONFIDENTIAL AND PROVIDED INFORMATION OF JMI AND THEY MUST NOT BE DISCLOSED, REPRODUCED, LOANED, ADAPTED OR USED IN ANY OTHER MANNER WITHOUT THE EXPRESS WRITTEN CONSENT OF JMI. JMI ASSUMES NO RESPONSIBILITY OR LIABILITY FOR THE USE OF THIS DOCUMENT OR THE DESIGN CONCEPTS AND INFORMATION CONTAINED HEREIN FOR ANOTHER PROJECT, OR IN A MANNER THAT DOES NOT RELATE TO THE TRACES OR PURPOSE OF THIS DOCUMENT. IN NO EVENT SHALL THIS DOCUMENT OF THE DESIGN CONCEPTS AND INFORMATION CONTAINED HEREIN BE USED IN A MANNER DETRIMENTAL TO THE INTEREST OF JMI. ALL COPYRIGHT, PATENT AND OTHER INTELLECTUAL PROPERTY RIGHTS ARE RESERVED. ACCEPTANCE OF THE DELIVERY OF THIS DOCUMENT CONSTITUTES AGREEMENT TO THESE TERMS AND CONDITIONS.

DESIGNER	DATE
CHECKER	DATE
ENGINEER	DATE
MANAGER	DATE
SCALE:	

TITLE: (2) ACTIFLO ACP-700R ELECTRICAL SCHEMATIC

CLIENT: MEADOWBANK MINING CORP., NWT

JOHN MEUNIER ISO 9001: 2000

4105 Sartelon Street, Saint-Laurent, Qc, Canada H4S 2B3 / Tel: (514) 334-7230 / Fax: (514) 334-5070

PROJECT	DRAWING	SHEET	REV
NC01-	001-E04-026	26 OF 28	B

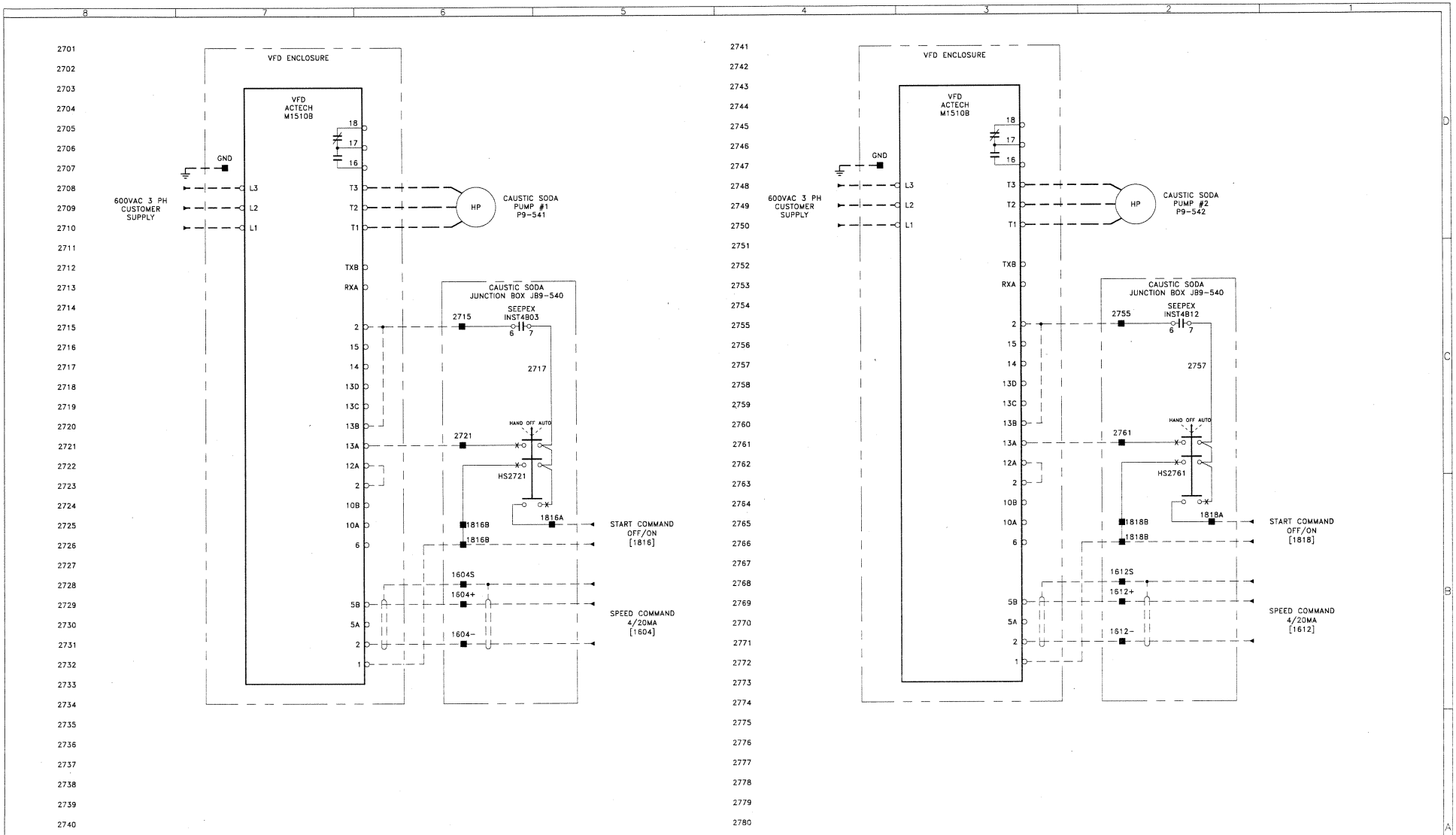

Envitech Automation Inc.
CERTIFIÉ ISO9001
ENVITECH Intégrateurs de systèmes / Systems Integrators

REV	DESCRIPTION	DATE	DWN	CHKD	APVD	ECN
B	AS BUILT	2009/05/29	JR	JCD		
A	FOR APPROVAL	2009/04/18	JR	JCD		

DRAWING A4765A

BAR = 1" AT PLOT SCALE

STD: JMI_22x34_D_ANG

CONFIDENTIALITY AND INTELLECTUAL PROPERTY NOTICE
ALL INFORMATION CONTAINED IN THIS DOCUMENT IS THE SOLE PROPERTY OF JOHN MEUNIER INC. AND IS PROTECTED BY ALL APPLICABLE LAWS, INCLUDING BUT NOT LIMITED TO COPYRIGHT AND OTHER INTELLECTUAL PROPERTY LAWS. THE DESIGN CONCEPTS AND INFORMATION CONTAINED HEREIN ARE PROPRIETARY TO JM AND ARE SUBMITTED IN CONFIDENCE. THEY ARE NOT TRANSFERABLE. THEY MUST BE USED ONLY FOR THE PURPOSE FOR WHICH THE DOCUMENT IS EXPRESSLY SUBMITTED AND NO IMPLICIT LICENCE IS GRANTED OTHERWISE BY THE SUBMISSION OF THIS DOCUMENT. THEY ARE CONFIDENTIAL AND PRIVILEGED INFORMATION OF JM AND THEY MUST NOT BE DISCLOSED, REPRODUCED, LOANED, REMITTED OR USED IN ANY OTHER MANNER WITHOUT THE EXPRESS WRITTEN CONSENT OF JM. JM ASSUMES NO RESPONSIBILITY OR LIABILITY FOR THE USE OF THIS DOCUMENT OR THE DESIGN CONCEPTS AND INFORMATION CONTAINED HEREIN FOR ANOTHER PROJECT, OR IN A MANNER THAT DOES NOT SEEMS TO THE RETAINER OR PURPOSE OF THIS DOCUMENT. IN NO EVENT SHALL THIS DOCUMENT OR THE DESIGN CONCEPTS AND INFORMATION CONTAINED HEREIN BE USED IN A MANNER DETRIMENTAL TO THE INTEREST OF JM. ALL COPYRIGHT, PATENT AND OTHER INTELLECTUAL PROPERTY RIGHTS ARE RESERVED. ACCEPTANCE OF THE DELIVERY OF THIS DOCUMENT CONSTITUTES AGREEMENT TO THESE TERMS AND CONDITIONS.

DESIGNER	DATE
CHECKER	DATE
ENGINEER	DATE
MANAGER	DATE
SCALE:	

TITLE: (2) ACTIFLO ACP-700R ELECTRICAL SCHEMATIC

CLIENT: MEADOWBANK MINING CORP., NWT

JOHN MEUNIER ISO 9001: 2000
4105 Sartoran Street, Saint-Laurent, Qc, Canada H4S 2B3 / Tel: (514) 334-7230 / Fax: (514) 334-5610

PROJECT	DRAWING	SHEET	REV
NC01-	001-E04-027	27 OF 28	B

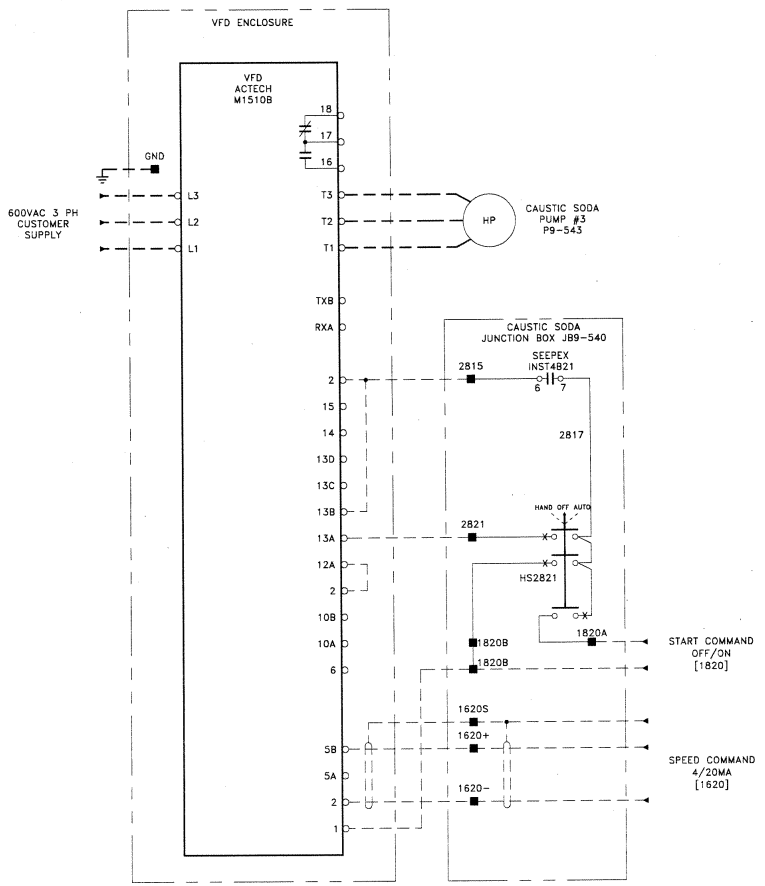

Envitech Automation Inc. *CERTIFIÉ ISO9001*

ENVITECH Intégrateurs de systèmes / Systems Integrators

ENVITECH DRAWING A4765A

BAR = 1" AT PLOT SCALE

STD: JMI_22x34_D_ANG

REF:

REV	DESCRIPTION	DATE	DWN	CHKD	APVD	ECN
B	AS BUILT	2009/05/29	JR	JCD		
A	FOR APPROVAL	2009/04/16	JR	JCD		

CONFIDENTIALITY AND INTELLECTUAL PROPERTY NOTICE

ALL INFORMATION CONTAINED IN THIS DOCUMENT IS THE SOLE PROPERTY OF JOHN MEUNIER INC AND IS PROTECTED BY ALL APPLICABLE LAWS, INCLUDING BUT NOT LIMITED TO COPYRIGHT AND OTHER INTELLECTUAL PROPERTY LAWS. THE DESIGN CONCEPTS AND INFORMATION CONTAINED HEREIN ARE PROPRIETARY TO JM AND ARE SUBMITTED IN CONFIDENCE. THEY ARE NOT TRANSFERABLE. THEY MUST BE USED ONLY FOR THE PURPOSE FOR WHICH THE DOCUMENT IS SUPPLIED, SUBMITTED AND NO IMPLICIT LICENCE IS GRANTED OTHERWISE BY THE SUBMISSION OF THIS DOCUMENT. THEY ARE CONFIDENTIAL AND PRIVILEGED INFORMATION OF JM AND THEY MUST NOT BE DISCLOSED, REPRODUCED, LOANED, REMITTED OR USED IN ANY OTHER MANNER WITHOUT THE EXPRESS WRITTEN CONSENT OF JM. JM ASSUMES NO RESPONSIBILITY OR LIABILITY FOR THE USE OF THIS DOCUMENT OR THE DESIGN CONCEPTS AND INFORMATION CONTAINED HEREIN FOR ANOTHER PROJECT OR IN A MANNER THAT DOES NOT RELATE TO THE FENCES OR PURPOSE OF THIS DOCUMENT. IN NO CASE SHALL THIS DOCUMENT OR THE DESIGN CONCEPTS AND INFORMATION CONTAINED HEREIN BE USED IN A MANNER DETRIMENTAL TO THE INTEREST OF JM. ALL COPYRIGHT, PATENT AND OTHER INTELLECTUAL PROPERTY RIGHTS ARE RESERVED. ACCEPTANCE OF THE DELIVERY OF THIS DOCUMENT CONSTITUTES AGREEMENT TO THESE TERMS AND CONDITIONS.

DESIGNER	DATE
CHECKER	DATE
ENGINEER	DATE
MANAGER	DATE
SCALE:	

TITLE (2) ACTIFLO ACP-700R ELECTRICAL SCHEMATIC

CLIENT MEADOWBANK MINING CORP., NWT

JOHN MEUNIER ISO 9001: 2000

4105 Sartorius Street, Saint-Laurent, Qc, Canada H4S 2B3 / Tel: (514) 334-7230 / Fax: (514) 334-5020

PROJECT	DRAWING	SHEET	REV
NC01-	001-E04-028	28 OF 28	B

LEFT BLANK

PROCESS AND INSTRUMENTATION DRAWINGS

LEFT BLANK

FLOWS AND LINES

- NEW MAIN FLOW
- EXISTING MAIN FLOW
- FUTURE MAIN FLOW
- NEW SECONDARY FLOW
- EXISTING SECONDARY FLOW
- FUTURE SECONDARY FLOW
- CHEMICALS
- BY OTHERS
- MATERIAL SPECIFICATION CHANGE
- CS SS
- ( ) AVERAGE FLOW
- [ ] PEAK FLOW

ABBREVIATIONS

A TO C	AIR TO CLOSE
A TO O	AIR TO OPEN
AVG	AVERAGE
B/EL	BOTTOM ELEVATION
CL	CENTER LINE
CFM	CUBIC FEET PER MINUTE
CW	CITY WATER (POTABLE)
DIA	DIAMETER
DWG	DRAWING
EL	ELEVATION
F.C.	FAIL CLOSED
F.O.	FAIL OPEN
FRL	FILTER\REGULATOR\LUBRICATOR
GAL	GALLONS
GPD	GALLONS PER DAY
GPH	GALLONS PER HOUR
GPM	GALLONS PER MINUTE
HB	HOSE BIB
HG	INCHES OF MERCURY
HI	HIGH
HOA	HAND/OFF/AUTO
HP	HORSEPOWER
IA	INSTRUMENT AIR
ID	INSIDE DIAMETER
INV	INVERT
O	LOW
MH	MANHOLE
MW	MANWAY
N.C.	NORMALLY CLOSED
N.O.	NORMALLY OPEN
OAL	OVERALL LENGTH
O.D.	OUTSIDE DIAMETER
OF	OVERFLOW
PA	PLANT AIR
PSIG	POUNDS PER SQUARE INCH – GAUGE
PW	PLANT WATER
RED	REDUCER
RPM	REVOLUTIONS PER MINUTE
SCFM	STANDARD CUBIC FEET PER MINUTE
SCH	SCHEDULE
SG	SPECIFIC GRAVITY
SP	SETPOINT
SSH	STRAIGHT SIDE HEIGHT
STD	STANDARD
SW	SEAL WATER
SWD	SIDE WATER DEPTH
TDH	TOTAL DYNAMIC HEAD(FT OF FLUID)
T/EL	TOP ELEVATION
TYP	TYPICAL
VAC	VACUUM
VSD	VARIABLE SPEED DRIVE
WC	WATER COLUMN
WD	WATER DEPTH
WL	WATER LEVEL
WV	WORKING VOLUME (DOES NOT INCLUDE FREEBOARD OR HEEL)

VALVE SYMBOLS

- ANGLE
- BALL
- BUTTERFLY
- CHECK VALVE
- CHECK
- DIAPHRAGM
- VALVE NOT SPECIFIED
- GLOBE
- KNIFE
- NEEDLE
- PINCH
- PLUG
- PRESSURE REDUCING
- RELIEF ON LINE
- RELIEF
- SQUEEZE
- THREE WAY
- FOUR WAY
- VACUUM BREAKER
- AIR RELEASE
- HOSE BIBB
- INTEGRAL BLOCK & BLEED
- PENSTOCK
- WASTE PLUG
- MULTI–FONCTION VALVE
- CALIBRATION COLUMN
- VENT – EVENT
- AIR TRAP

ACTUATORS

- CYLINDER
- DIAPHRAGM–SPRING
- ELECTRO HYDRAULIC
- I/P – ELECTRO PNEUMATIC
- MOTOR
- SOLENOID
- POSITIONER
  * – TYPE

PIPING AND TUBING MATERIALS

ABS	ACRYLONTRILE BUTADIENE STYRENE TRUSS PIPE
ALM	ALUMINUM PIPE OR TUBING
ARP	ALUMINUM REINFORCED PLASTIC PIPE
BL	BLACK IRON PIPE
BPT	BRAIDED PLASTIC TUBING–PVC
CI	CAST IRON PIPE
CISP	CAST IRON SOIL PIPE
CMCP	CORRUGATED METAL CULVERT PIPE
CMH	CHEMICAL HOSE
CMP	CORRUGATED METAL PIPE
COP	COPPER PIPE
CPVC	CHLORINATED POLYVINYL CHLORIDE PIPE
CS	CARBON STEEL PIPE
DI	DUCTILE CAST IRON PIPE
ERP	EPOXY RESIN PIPE
FRP	FIBERGLASS REINFORCED PLASTIC PIPE
GS	GALVANIZED STEEL PIPE
HOSE	FLEXIBLE HOSE
HSI	HIGH SILICON IRON PIPE
KLS	PVDF LINED STEEL PIPE (KYNAR ® LINED TYPICAL)
KYN	PVDF (KYNAR ® TYPICAL)
MI	CARBON STEEL PIPE W/MALLEABLE IRON FITTINGS
NEO	NEOPRENE HOSE
NI	NICKEL ALLOY PIPE
NLS	NEOPRENE LINED STEEL PIPE
PEP	POLYETHYLENE PIPE
PETB	POLYETHYLENE TUBING
PLS	POLYPROPYLENE LINED STEEL PIPE
POP	POLYPROPYLENE PIPE
PRP	PHENOLIC RESIN PIPE
PVC	POLYVINYL CHLORIDE PIPE
PVC HOSE	POLYVINYL CHLORIDE HOSE
PVDF	POLYVINYLIDENE FLUORIDE PIPE
RBR	RUBBER HOSE
RCCP	REINFORCED CONCRETE CULVERT PIPE
RCP	REINFORCED CONCRETE PIPE
SAR	SARAN TUBING
SLH	SLUDGE HOSE
SLS	SARAN LINED STEEL PIPE
SS	STAINLESS STEEL PIPE OR TUBING
TEF	TEFLON TUBING
TI	TITANIUM ALLOY PIPE
TLS	TEFLON LINED STEEL PIPE
TYB	TYGON ® TUBING–BRAIDED
TYG	TYGON ® TUBING–UNBRAIDED

INSTRUMENTATION AND RELATED ITEMS

- CAPILLARY TUBING
- ELECTRICAL
- HYDRAULIC
- PNEUMATIC
- DATA LINK
- FLUME
- MAGNETIC FLOW METER
- SONIC FLOW METER
- TURBINE FLOW METER
- VENTURI
- WEIR
- VORTEX SENSOR
- ROTAMETER

INSTRUMENT SYMBOLS

	PRIMARY LOCATION ***NORMALLY ACCESSIBLE TO OPERATOR	FIELD MOUNTED	AUXILIARY LOCATION ***NORMALLY ACCESSIBLE TO OPERATOR
DISCRETE INSTRUMENTS	1 * IP1**	2	3
SHARED DISPLAY, SHARED CONTROL	4	5	6
COMPUTER FUNCTION	7	8	9
PROGRAMMABLE LOGIC CONTROL	10	11	12

* SYMBOL SIZE MAY VARY ACCORDING TO THE USER'S NEEDS AND THE TYPE OF DOCUMENT. A SUGGESTED SQUARE AND CIRCLE SIZE FOR LARGE DIAGRAMS IS SHOWN ABOVE. CONSISTENCY IS RECOMMENDED.

** ABBREVIATIONS OF THE USER'S CHOICE SUCH AS IP1 (INSTRUMENT PANEL #1), IC2 (INSTRUMENT CONSOLE #2), CC3 (COMPUTER CONSOLE #3), ETC., MAY BE USED WHEN IT IS NECESSARY TO SPECIFY INSTRUMENT OR FUNCTION LOCATION.

*** NORMALLY INACCESSIBLE OR BEHIND–THE–PANEL DEVICES OR FUNCTIONS MAY BE DEPICTED BY USING THE SAME SYMBOL BUT WITH DASHED HORIZONTAL BARS, I.E.

PIPING ACCESSORIES

- FUNNEL
- DIAPHRAGM SEAL
- DRESSER COUPLING
- EJECTOR/EDUCTOR
- EXPANSION JOINT
- FLANGED CONNECTION
- FLEXIBLE HOSE
- HOSE CONNECTION
- PIPE TO TUBING ADAPTER
- INSULATION
- INSULATED PIPE WITH ELECTRIC HEAT TRACE
- INSULATED PIPE WITH STEAM HEAT TRACE
- VACUUM BREAKER
- PULSATION DAMPENER
- END CAP DISCONNECT
- QUICK DISCONNECT
- CONCENTRIC REDUCER
- ECCENTRIC REDUCER
- RUPTURE DISK
- BASKET FILTER
- MIXING VALVE
- SIGHT FLOW INDICATOR
- STRAINER
- UNION
- STEAM TRAP
- AIR FILTER
- AIR LUBRICATOR
- AIR REGULATOR
- COMB. AIR FILTER/ REGULATOR W/GAUGE
- FLOW ORIFICE
- SIGHT FLOW STRAINER
- OPEN – SPECTACLE BLIND
- CLOSE – SPECTACLE BLIND
- PIGTAIL SIPHON
- STATIC MIXER
- INJECTION QUILL
- STOP LOG

ISA INSTRUMENT IDENTIFICATION TABLE

	FIRST LETTER		SUCCEEDING LETTERS	
	PROCESS VARIABLE	MODIFIER (IF NEEDED)	READOUT OR COMPUTER FUNCTION	MODIFIER (IF NEEDED)
A	ANALYSIS		ALARM	
B	BURNER, COMBUSTION		USER'S CHOICE	USER'S CHOICE
C	USER'S CHOICE		CONTROL	
D	USER'S CHOICE	DIFFERENTIAL		
E	VOLTAGE		SENSOR (PRIMARY ELEMENT)	
F	FLOW RATE	RATIO (FRACTION)		
G	USER'S CHOICE		GLASS, VIEWING DEVICE	
H	HAND			HIGH
I	CURRENT (ELECTRICAL)		INDICATE	
J	POWER	SCAN		
K	TIME, TIME SCHEDULE	TIME RATE OF CHANGE	CONTROL STATION	
L	LEVEL		LIGHT	LOW
M	USER'S CHOICE	MOMENTARY		MIDDLE, INTERMEDIATE
N	USER'S CHOICE		USER'S CHOICE	USER'S CHOICE
O	USER'S CHOICE		ORIFICE (RESTRICTION)	
P	PRESSURE, VACUUM		POINT (TEST CONNECTION)	
Q	QUANTITY	INTEGRATE, TOTALIZE		
R	RADIATION		RECORD	
S	SPEED, FREQUENCY	SAFETY	SWITCH	
T	TEMPERATURE		TRANSMIT	
U	MULTIVARIABLE		MULTIFUNCTION	MULTIFUNCTION
V	VIBRATION, MECH. ANALYSIS		VALVE, DAMPER, LOUVER	
W	WEIGHT, FORCE		WELL	
X	UNCLASSIFIED	X–AXIS	UNCLASSIFIED	UNCLASSIFIED
Y	EVENT, STATE OR PRESENCE	Y–AXIS	RELAY, COMPUTE, CONVERT	
Z	POSITION, DIMENSION	Z–AXIS	DRIVER, ACTUATOR, UNCLASSIFIED FINAL CONTROL ELEMENT	

LEGEND BASED ON ISA STANDARD S 5.1

INSTRUMENT TAG NUMBERS

TIC 103 – INSTRUMENTATION IDENTIFICATION OR TAG NUMBER
103 – LOOP NUMBER
TIC – FUNCTIONAL IDENTIFICATION
NOTE: HYPHENS ARE OPTIONAL AS SEPARATORS

ELECTRICAL AND RELATED ITEMS

- S – SELECTOR SWITCHES
- VFD – VARIABLE FREQUENCY DRIVE
- EM – EMERGENCY POWER
- I – INTERLOCK
- PILOT LIGHT

LINE NUMBER IDENTIFICATION

1"–P–110–CS–I

- INSULATION
- MATERIAL CLASS
- LINE NUMBER
- FLUID SERVICE DESIGNATION
- LINE SIZE

LINE CONTINUATIONS

- INDICATES A LINE GOING TO OR COMING FROM BATTERY LIMITS (CONTRACT LIMITS)
- 5 A 2 – INDICATES CONTINUATION OF LINE IS ON SHEET NUMBER 5 (SAME DRAWING NUMBER) IN ZONE A 2
- SHT 5 – INDICATES CONTINUATION OF A SIGNAL IS ON SHEET NUMBER 5

EQUIPMENT TAG NUMBERS

MXXXX	AGITATORS, AERATORS
BXXXX	AIR HANDLING–BLOWERS, COMPRESSORS, DRYERS
RXXXX	CLARIFIERS, THICKENERS, SEPARATORS
FXXXX	FILTERS–VACUUM, PRESSURE, CENTRIFUGES
PXXXX	PUMPS
TXXXX	TANKS
EXXXX	HEAT EXCHANGER
IXXXXX	SOFTENERS, DEMINERALIZERS
ROXXXX	REVERSE OSMOSIS UNITS
SGXXXX	STEAM GENERATORS

VALVE & ACCESSORY TAG

VXXXX	VALVE
EJXXXX	EXPANSION JOINT
HXXXX	HOSE
FXXXX	FILTER
SXXXX	STRAINER
SBXXXX	SPECTACLE BLIND
STXXXX	STEAM TRAP

REV	DESCRIPTION	DATE	DWN	CHKD	APVD	ECN
1	UPDATES	2009–06–26			J.T.	
0	FOR INFORMATION	2009–03–23	SA			

DESIGNER A.V. DATE 2007–11–27
CHECKER P.S. DATE 2007–11–27
ENGINEER M.S. DATE 2007–12–03
MANAGER DATE

TITLE: WATER TREATMENT SYSTEM PROCESS AND INSTRUMENTATION DIAGRAM LEGEND

CLIENT: MEADOWBANK MINING

JOHN MEUNIER ISO 9001: 2000
4105 Sartelon Street, Saint-Laurent, Qc, Canada H4S 2B3 / Tel: (514) 334-7230 / Fax: (514) 334-5070

SCALE: NONE
PROJECT DRAWING: NC01– PI001
SHEET: 1 OF 8
REV: 1

STD: JMI_22x34_D_ANG
REF: RA16
BAR = 1" AT PLOT SCALE

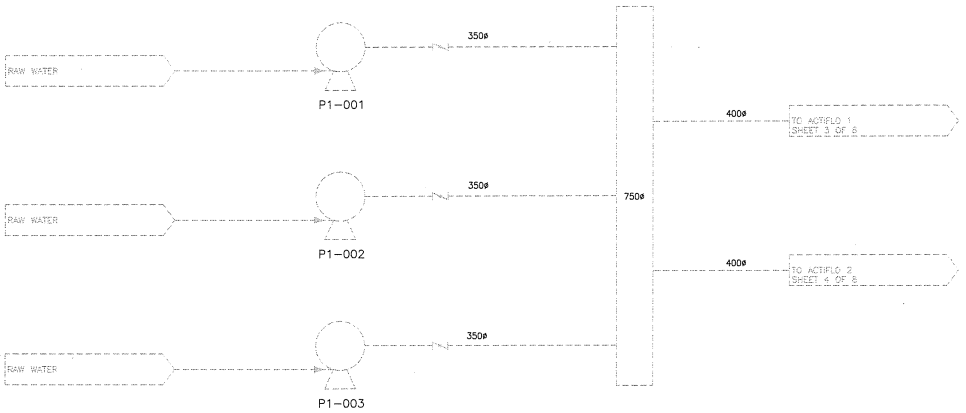

P1-001/P1-002/P1-003
DIESEL RAW WATER PUMP
DESIGN: 20000 m³/d
(BY OTHERS)

*	SUPPLIED BY JMI
———	SUPPLIED BY JMI
———	SUPPLIED BY JMI
- - - - - -	CHEMICALS SUPPLIED BY JMI
- - - - - -	BY OTHERS OR EXISTANT
═══	SKID LIMITS

########	PNEUMATIC
- - - - - - -	ELECTRICITY OR CONTROL
~~	DATA LINK

AI SCADA (OPTIONAL)

LOCAL HMI

ON LOCAL PLC

DI,DO,AI,AO : PLC I/O

BAR = 1" AT PLOT SCALE

REV	DESCRIPTION	DATE	DWN	CHKD	APVD	ECN
1	UPDATES	2009-06-26			J.T.	
0	FOR INFORMATION	2009-03-23	SA			

CONFIDENTIALITY AND PROPRIETARY RIGHTS NOTICE
ALL INFORMATION CONTAINED IN THIS DOCUMENT IS THE SOLE PROPERTY OF JOHN MEUNIER INC. AND IS PROTECTED BY ANY APPLICABLE LAWS, INCLUDING BUT NOT LIMITED TO COPYRIGHTS AND OTHER INTELLECTUAL PROPERTY LAWS. THE DESIGN CONCEPTS AND INFORMATION CONTAINED HEREIN ARE PROPRIETARY TO JM AND ARE CONFIDENTIAL IN NATURE. THEY ARE NOT TRANSFERABLE. THEY MUST BE USED ONLY FOR THE PURPOSE FOR WHICH THEY WERE DISCLOSED BY DULY AUTHORIZED JM REPRESENTATIVES AND MUST NOT BE DISCLOSED TO UNAUTHORIZED PERSONS WITHOUT THE PRIOR WRITTEN CONSENT OF JM. THE CONFIDENTIAL AND PROPRIETARY INFORMATION OF JM AND THIRD PARTIES MAY BE DISCLOSED, REPRODUCED, USED, POSTED OR STORED IN ANY OTHER MANNER ONLY TO THE EXTENT WRITTEN CONSENT OF JM, AND ANYONE WHO RECEIVES INFORMATION OR COPIES FROM THE USE OF THIS DOCUMENT BY THE PERSONS RECEIVING ANY INFORMATION CONTAINED HEREIN FOR FURTHER PURPOSES, OR TO A PERSON NOT BOUND BY THE TERMS OF THIS NOTICE, SHALL BE LIABLE FOR ANY LOSS OR DAMAGE SUFFERED BY JM. THE RECIPIENT OF THE DESIGN CONCEPTS AND INFORMATION CONTAINED HEREIN BY USES IN A MANNER DETRIMENTAL TO THE INTEREST OF JM, ALL COPYRIGHT, PATENT AND OTHER INTELLECTUAL PROPERTY RIGHTS ARE RESERVED. ACCEPTANCE OF THIS DELIVERY OF THIS DOCUMENT EXPRESSLY SUBJECTED TO THESE TERMS AND CONDITIONS.

DESIGNER	DATE
A.V.	2007-11-27
CHECKER	DATE
P.S.	2007-11-27
ENGINEER	DATE
MANAGER	DATE
M.S.	2007-12-03
SCALE: NONE	

TITLE: WATER TREATMENT SYSTEM
PROCESS AND INSTRUMENTATION DIAGRAM
RAW WATER

CLIENT: MEADOWBANK MINING

JOHN MEUNIER ISO 9001: 2000
4105 Sartelon Street, Saint-Laurent, Qc, Canada H4S 2B3 / Tel: (514) 334-7230 / Fax: (514) 334-5070

PROJECT	DRAWING	SHEET	REV
NC01-	PI001	2 OF 8	1

STD: JMI_22x34_D_ANG
REF: RA16

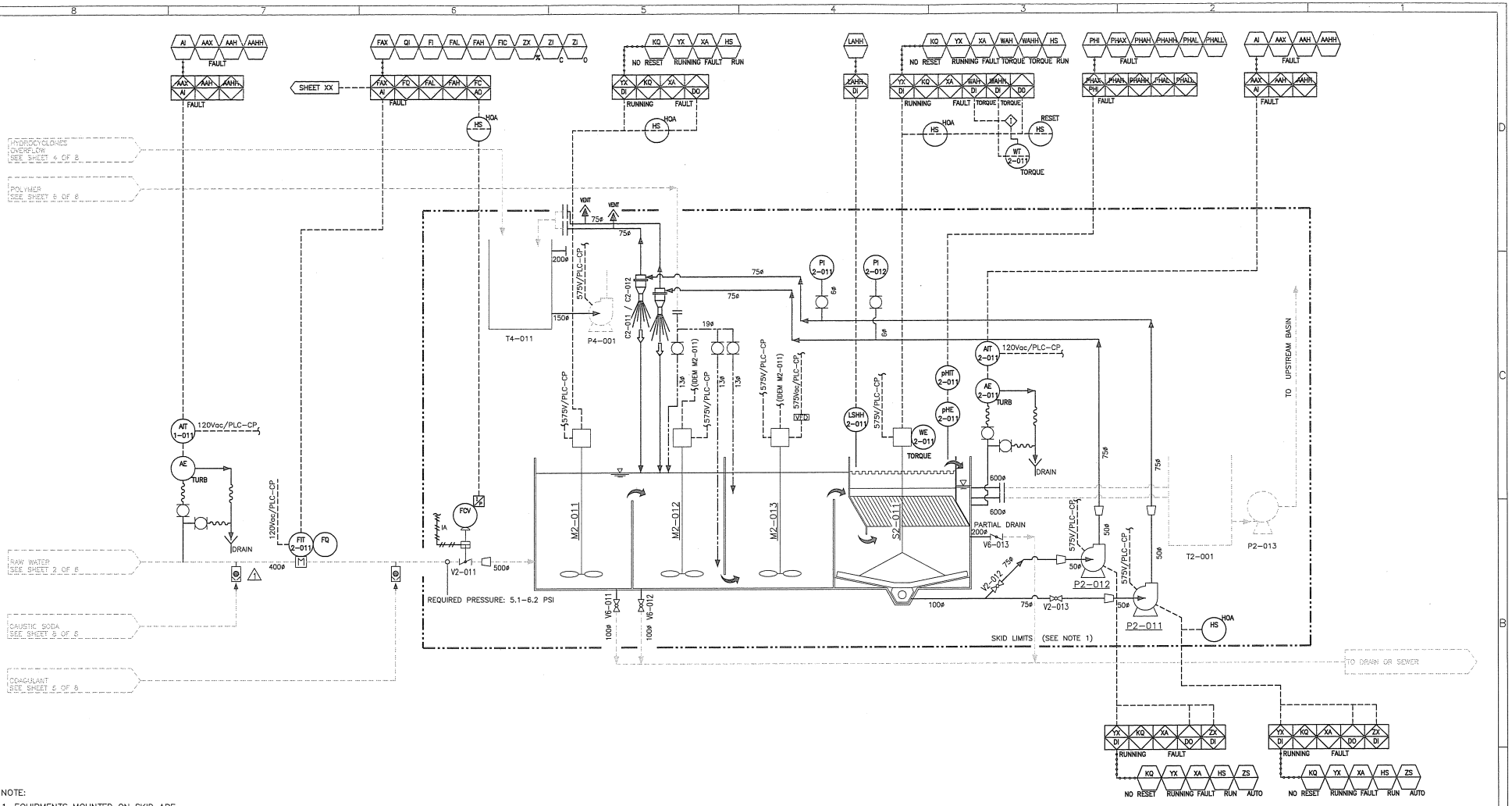

NOTE:

1. EQUIPMENTS MOUNTED ON SKID ARE PRE WIRED (POWER AND CONTROL) TO A JUNCTION BOX
2. THE CAUSTIC SODA INJECTION POINT MUST BE UPSTREAM THE COAGULANT INJECTION POINT AND AS FAR AS POSSIBLE.

T4-011
SLUDGE TANK
CAPACITY: 3400L

M2-011
COAGULATION TANK
MIXER: EVGX 4-3
DRIVER: 3 HP
575V/3Ph/60Hz

M2-012
INJECTION TANK
MIXER: EVGX 4-3
DRIVER: 3 HP
575V/3Ph/60Hz

M2-013
MATURATION TANK
MIXER: EVGX 6-5
DRIVER: 5 HP
575V/3Ph/60Hz

S2-011
SCRAPER
DRIVER: 0.5 HP
575V/3Ph/60Hz

P2-011/P2-012
MICROSAND RECIRCULATION PUMP
DESIGN: 34 m^3/h @ 17 m TDH
DRIVER: 10 HP
575V/3Ph/60Hz

P4-001
SLUDGE PUMP
(BY OTHERS)

P2-013
CLARIFIED WATER PUMP
(BY OTHERS)

T2-001
PUMP BOX
(BY OTHERS)

SUPPLIED BY JMI
SUPPLIED BY JMI
SUPPLIED BY JMI
CHEMICALS SUPPLIED BY JMI
BY OTHERS OR EXISTANT
SKID LIMITS

PNEUMATIC
ELECTRICITY OR CONTROL
DATA LINK

SCADA (OPTIONAL)
LOCAL HMI
ON LOCAL PLC
DI,DO,AI,AO : PLC I/O

REV	DESCRIPTION	DATE	DWN	CHKD	APVD	ECN
1	UPDATES	2009-06-26			J.T.	
0	FOR INFORMATION	2009-03-23	SA			

CONFIDENTIALITY AND INTELLECTUAL PROPERTY NOTICE
ALL INFORMATION CONTAINED IN THIS DOCUMENT IS SPE SAILE PROPERTY. ALL RIGHTS ARE RESERVED UNDER THE LAWS OF APPLICABLE LAWS, INCLUDING BUT NOT LIMITED TO COPYRIGHT AND OTHER INTELLECTUAL PROPERTY LAWS. THE DESIGN CONCEPTS AND INFORMATION CONTAINED HEREIN ARE PROPRIETARY TO JMI AND ARE SUBMITTED IN CONFIDENCE. THEY ARE NOT TRANSFERABLE, THEY SHALL BE USED ONLY FOR THE PURPOSE FOR WHICH THEY ARE SUBMITTED AND MAY NOT BE REPRODUCED, DISCLOSED, MODIFIED OR USED IN ANY OTHER MANNER WITHOUT THE EXPRESS WRITTEN CONSENT OF JMI. JMI ASSUMES NO RESPONSIBILITY OR LIABILITY FOR THE USE OF THIS DOCUMENT BY THE PERSON RECEIVING AND INFORMATION CONTAINED HEREIN FOR ANOTHER PURPOSE, OR FOR ANY DAMAGES THAT RESULT FROM SUCH USE. BY ACCEPTING THIS DOCUMENT, THE RECIPIENT AGREES TO INDEMNIFY AND HOLD JMI HARMLESS FROM ANY CLAIMS OR LOSSES RESULTING FROM UNAUTHORIZED USE. NOTHING CONTAINED HEREIN SHALL BE CONSTRUED AS GRANTING, BY IMPLICATION, ESTOPPEL, OR OTHERWISE, ANY LICENSE OR RIGHT TO JMI'S INTELLECTUAL PROPERTY. ACCEPTANCE OF THIS DOCUMENT CONSTITUTES AGREEMENT TO THESE TERMS AND CONDITIONS.

DESIGNER	A.V.	DATE 2007-11-27
CHECKER	P.S.	DATE 2007-11-27
ENGINEER		DATE
MANAGER	M.S.	DATE 2007-12-03
SCALE: NONE		

TITLE: WATER TREATMENT SYSTEM
PROCESS AND INSTRUMENTATION DIAGRAM
ACP-700R

CLIENT: MEADOWBANK MINING

JOHN MEUNIER ISO 9001: 2000
4105 Sartelon Street, Saint-Laurent, Qc, Canada H4S 2B3 / Tel: (514) 334-7330 / Fax: (514) 334-5070

PROJECT DRAWING: NC01- PI001
SHEET: 3 OF 8
REV: 1

STD: JMI_22x34_D_ANG
REF: RA16
BAR = 1" AT PLOT SCALE

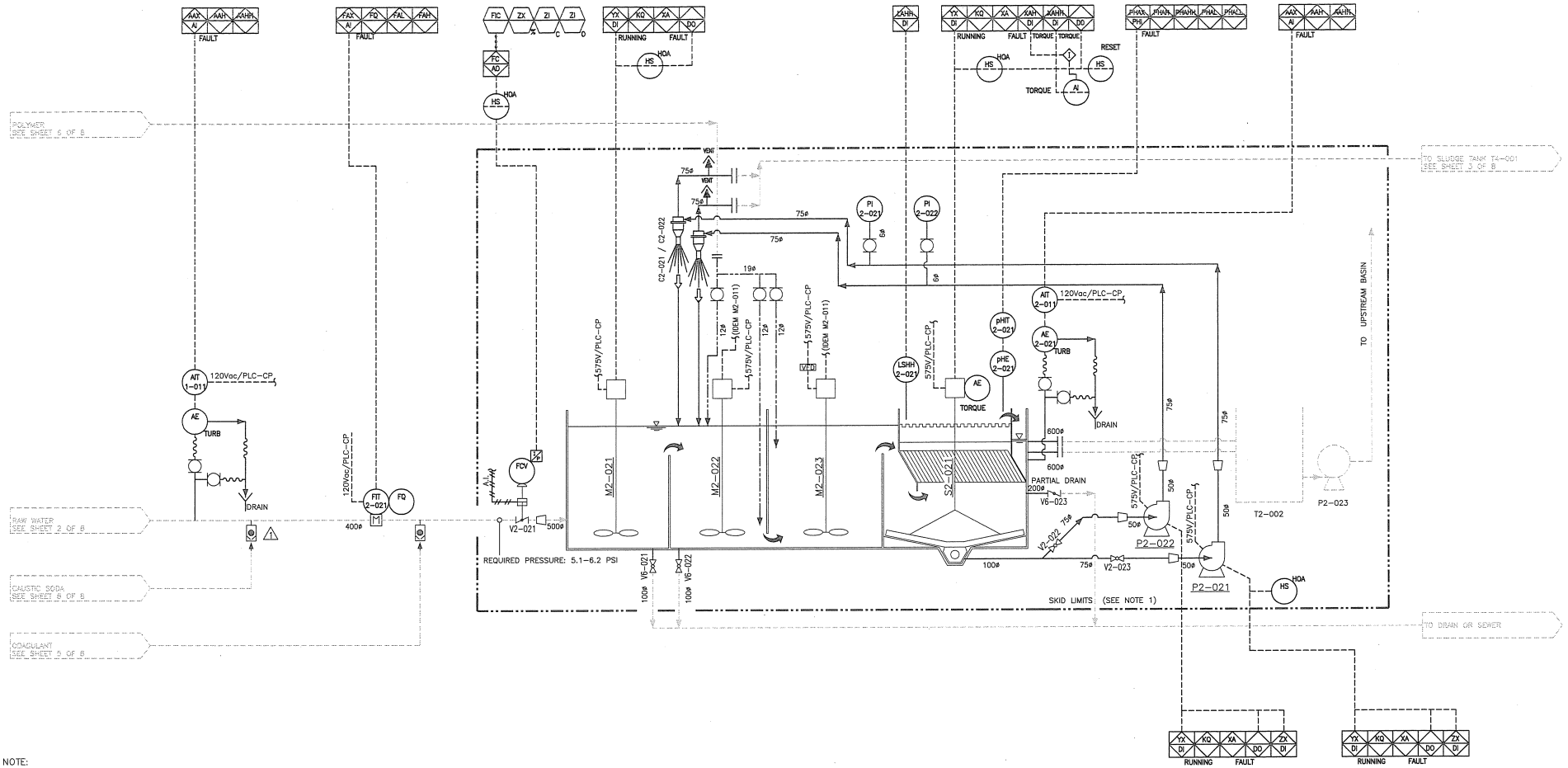

NOTE:

1. EQUIPMENTS MOUNTED ON SKID ARE PRE WIRED (POWER AND CONTROL) TO A JUNCTION BOX
2. THE CAUSTIC SODA INJECTION POINT MUST BE UPSTREAM THE COAGULANT INJECTION POINT AND AS FAR AS POSSIBLE.

M2-021
COAGULATION TANK
MIXER: EVGX 4-3
DRIVER: 3 HP
575V/3Ph/60Hz

M2-022
INJECTION TANK
MIXER: EVGX 4-3
DRIVER: 3 HP
575V/3Ph/60Hz

M2-023
MATURATION TANK
MIXER: EVGX 6-5
DRIVER: 5 HP
575V/3Ph/60Hz

S2-011
SCRAPER
DRIVER: 0.5 HP
575V/3Ph/60Hz

P2-021/P2-022
MICROSAND RECIRCULATION PUMP
DESIGN: 34 m^3/h @ 17 m TDH
DRIVER: 10 HP
575V/3Ph/60Hz

P2-023
CLARIFIED WATER PUMP
(BY OTHERS)

T2-002
PUMP BOX
(BY OTHERS)

* SUPPLIED BY JMI
SUPPLIED BY JMI
SUPPLIED BY JMI
CHEMICALS SUPPLIED BY JMI
BY OTHERS OR EXISTANT
SKID LIMITS

PNEUMATIC
ELECTRICITY OR CONTROL
DATA LINK

SCADA (OPTIONAL)
LOCAL HMI
ON LOCAL PLC
DI,DO,AI,AO : PLC I/O

STD: JMI_22x34_D_ANG
REF: RA16
BAR = 1" AT PLOT SCALE

REV	DESCRIPTION	DATE	DWN	CHKD	APVD	ECN
1	UPDATES	2009-06-26			J.T.	
0	FOR INFORMATION	2009-03-23	SA			

CONFIDENTIALITY AND INTERNATIONAL PROPERTY NOTICE
ALL REPRODUCTION CONTAINED IN THIS DOCUMENT BY THE SOLE PROPRIETARY OF ALL INFORMATION CONTAINED HEREIN IS THE PROPERTY OF JMI. ANY REPRODUCTION OF ANY KIND IS STRICTLY PROHIBITED WITHOUT PRIOR WRITTEN PERMISSION FROM JMI. USE BY COMPETITORS AND UNAUTHORIZED PERSONS IS STRICTLY PROHIBITED. USE BY CUSTOMERS AND AUTHORIZED PERSONS IS SUBJECT TO LIMITATIONS AS TO USE AND DISCLOSURE AS CONTAINED HEREIN AND PURSUANT TO JMI AND ANY EXECUTED AGREEMENTS IN EFFECT. THESE ARE NOT REPRESENTATIVES. THEY MUST BE USED ONLY FOR THIS PURPOSE FOR WHICH THEY ARE SUPPLIED IN CONFIDENCE AND NOT REPRODUCED. USE BY CUSTOMERS AND AUTHORIZED PERSONS IS SUBJECT TO LIMITATIONS AS TO USE AND DISCLOSURE AS CONTAINED HEREIN AND PURSUANT TO JMI AND ANY EXECUTED AGREEMENTS IN EFFECT. THESE ARE NOT REPRESENTATIVES. THEY MUST BE USED ONLY FOR THIS PURPOSE FOR WHICH THEY ARE SUPPLIED IN CONFIDENCE AND NOT REPRODUCED. USE BY CUSTOMERS AND AUTHORIZED PERSONS IS SUBJECT TO LIMITATIONS AS TO USE AND DISCLOSURE AS CONTAINED HEREIN AND PURSUANT TO JMI AND ANY EXECUTED AGREEMENTS IN EFFECT. THESE ARE NOT REPRESENTATIVES. THEY MUST BE USED ONLY FOR THIS PURPOSE FOR WHICH THEY ARE SUPPLIED IN CONFIDENCE AND NOT REPRODUCED. USE BY CUSTOMERS AND AUTHORIZED PERSONS IS SUBJECT TO LIMITATIONS AS TO USE AND DISCLOSURE AS CONTAINED HEREIN AND PURSUANT TO JMI AND ANY EXECUTED AGREEMENTS IN EFFECT. ALL RIGHTS RESERVED. ACCEPTANCE OF THE RECEIPT OF THIS DOCUMENT CONSTITUTES AGREEMENT TO THESE TERMS AND CONDITIONS.

DESIGNER	DATE
A.V.	2007-11-27
CHECKER	DATE
P.S.	2007-11-27
ENGINEER	DATE
MANAGER	DATE
M.S.	2007-12-03
SCALE:	NONE

TITLE: WATER TREATMENT SYSTEM
PROCESS AND INSTRUMENTATION DIAGRAM
ACP-700R

CLIENT: MEADOWBANK MINING

JOHN MEUNIER ISO 9001: 2000
4105 Sartelon Street, Saint-Laurent, Qc. Canada H4S 2B3 / Tel: (514) 334-7230 / Fax: (514) 334-5020

PROJECT	DRAWING	SHEET	REV
NC01-	PI001	4 OF 8	1

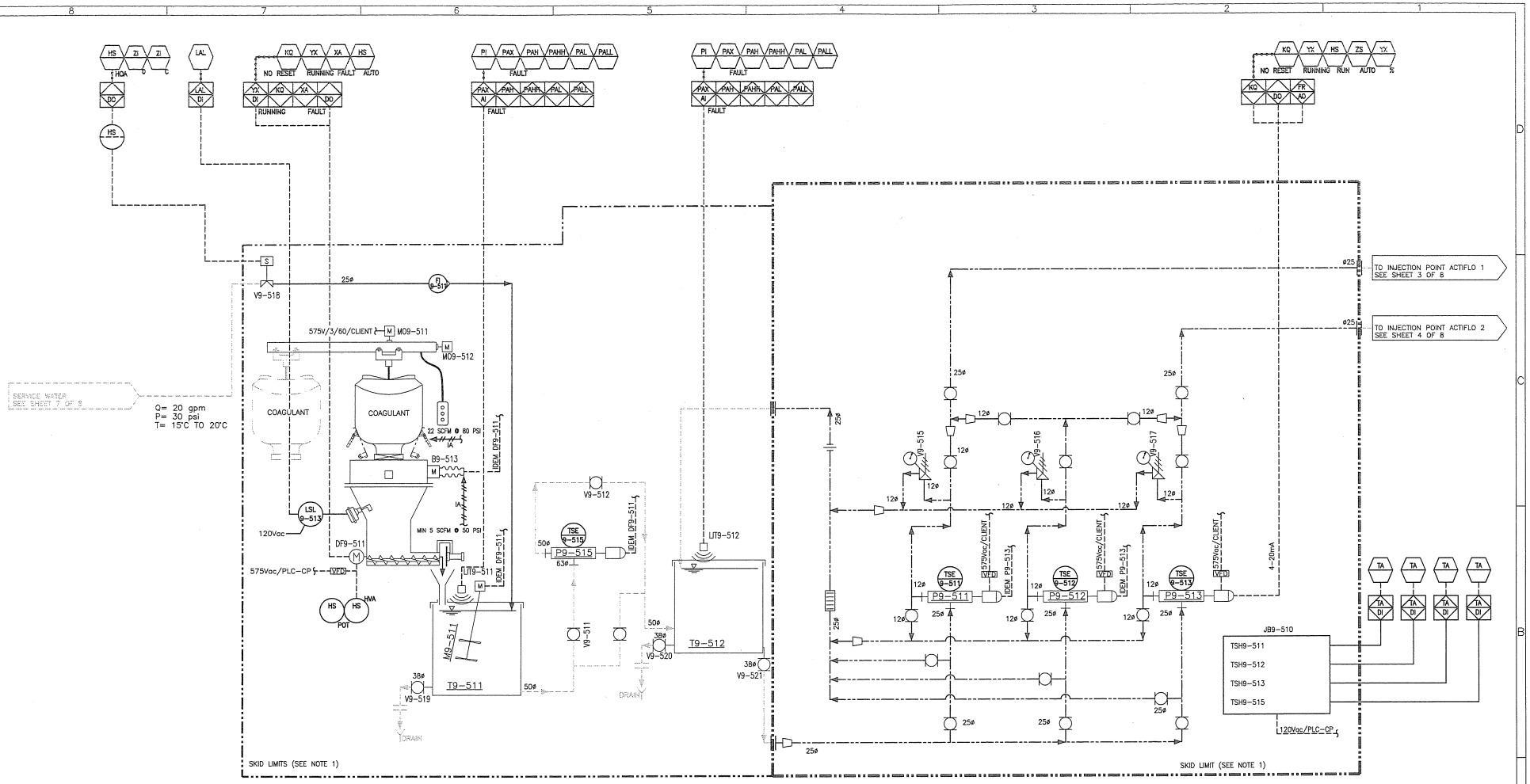

NOTES:

1. EQUIPMENTS MOUNTED ON SKID ARE PRE WIRED (POWER AND CONTROL)

P9-515
COAGULANT TRANSFER PUMPS
CAPACITY: 5000 L/H @ 30 psi
MOTOR: 5HP, 1150 rpm
POWER SUPPLY: 575V/3Ph/60Hz

DF9-511
DRY FEEDER
CAPACITY: 200 KG/H
DRIVER: 0.75HP
POWER SUPPLY: 575V/3Ph/60Hz

T9-511
COAGULANT MATURATION TANK
CAP.TOTAL: 1000 L

M9-511/M9-512
COAGULANT MIXER
DRIVER: 1HP
POWER SUPPLY: 575V/3Ph/60Hz

T9-512
COAGULANT DOSING TANK
CAP: 1000L

P9-511/P9-512/P9-513
COAGULANT METERING PUMP
DESIGN: 9-87 L/H @ 2 BARS
MOTOR: 0.5HP, 1750 RPM, 56C
POWER SUPPLY: 575V/3Ph/60Hz

M09-511
TROLLEY
DRIVER: 0.5 HP
POWER SUPPLY: 575V/3Ph/60Hz

M09-512
HOIST
DRIVER: 2.4 HP
POWER SUPPLY: 575V/3Ph/60Hz

B9-513
BLOWER
DRIVER: 1.5 HP
POWER SUPPLY: 575V/3Ph/60Hz

* SUPPLIED BY JMI
SUPPLIED BY JMI
SUPPLIED BY JMI
CHEMICALS SUPPLIED BY JMI
BY OTHERS OR EXISTANT
SKID LIMITS

PNEUMATIC
ELECTRICITY OR CONTROL
DATA LINK

SCADA
LOCAL HMI (OPTIONAL)
ON LOCAL PLC
DI,DO,AI,AO : PLC I/O

STD: JMI_22x34_D_ANG
REF:
BAR = 1" AT PLOT SCALE

REV	DESCRIPTION	DATE	DWN	CHKD	APVD	ECN
1	UPDATES	2009-06-26			J.T.	
0	FOR INFORMATION	2009-03-23	SA			

CONFIDENTIALITY AND INTELLECTUAL PROPERTY NOTICE
ALL INFORMATION CONTAINED IN THIS DOCUMENT IS THE SOLE PROPERTY OF JEAN MEUNIER INC. AND IS PROTECTED BY ALL APPLICABLE LAWS, INCLUDING BUT NOT LIMITED TO COPYRIGHT AND TRADE SECRET LAWS. THIS DOCUMENT IS PROVIDED IN CONFIDENCE AND SHALL NOT BE DISCLOSED, COPIED OR USED FOR ANY PURPOSE EXCEPT AS EXPRESSLY AUTHORIZED IN WRITING BY JEAN MEUNIER INC. THEY ARE NOT TRANSFERABLE. THEY MUST AT ALL TIMES BE KEPT AT THE PREMISES OF THE RECIPIENT AND MUST NOT BE REPRODUCED OR DISCLOSED TO ANY THIRD PARTY WITHOUT THE PRIOR WRITTEN CONSENT OF JEAN MEUNIER INC. ALL RIGHTS RESERVED. THIS DOCUMENT AND ANY INFORMATION CONTAINED HEREIN ARE PROVIDED "AS IS" AND JEAN MEUNIER INC. MAKES NO REPRESENTATIONS OR WARRANTIES, EXPRESS OR IMPLIED, INCLUDING BUT NOT LIMITED TO WARRANTIES OF MERCHANTABILITY, FITNESS FOR A PARTICULAR PURPOSE, OR THAT THE USE OF THE INFORMATION WILL NOT INFRINGE ANY PATENT, COPYRIGHT, TRADEMARK, OR OTHER RIGHTS. IN NO EVENT SHALL JEAN MEUNIER INC. BE LIABLE FOR ANY DIRECT, INDIRECT, SPECIAL, INCIDENTAL, OR CONSEQUENTIAL DAMAGES ARISING OUT OF OR IN CONNECTION WITH THE USE OF THIS DOCUMENT OR THE INFORMATION CONTAINED HEREIN, EVEN IF JEAN MEUNIER INC. HAS BEEN ADVISED OF THE POSSIBILITY OF SUCH DAMAGES. THE USER OF THIS DOCUMENT AGREES TO INDEMNIFY AND HOLD JEAN MEUNIER INC. HARMLESS FROM ANY CLAIMS, LOSSES, OR EXPENSES ARISING OUT OF OR RELATED TO THE USE OF THIS DOCUMENT. BY ACCEPTING THIS DOCUMENT, THE RECIPIENT AGREES TO BE BOUND BY THE TERMS AND CONDITIONS SET FORTH IN THIS NOTICE. IF THE RECIPIENT DOES NOT AGREE TO THESE TERMS, THEY MUST IMMEDIATELY RETURN THE DOCUMENT TO JEAN MEUNIER INC. AND DESTROY ALL COPIES IN THEIR POSSESSION.

DESIGNER	DATE
M.M.	2008-12-15
CHECKER	DATE
N/A	N/A
ENGINEER	DATE
J.T.	
MANAGER	DATE
N/A	N/A
SCALE:	N.T.S.

TITLE: WATER TREATMENT SYSTEM
PROCESS AND INSTRUMENTATION DIAGRAM
COAGULANT PREPARARTION AND DOSING SYSTEM

CLIENT: MEADOWBANK MINING

JOHN MEUNIER ISO 9001: 2000
4105 Sartelon Street, Saint-Laurent, Qc, Canada H4S 2B3 / Tel: (514) 334-7230 / Fax: (514) 334-1070

PROJECT	DRAWING	SHEET	REV
	NC01- PI001	5 OF 8	1

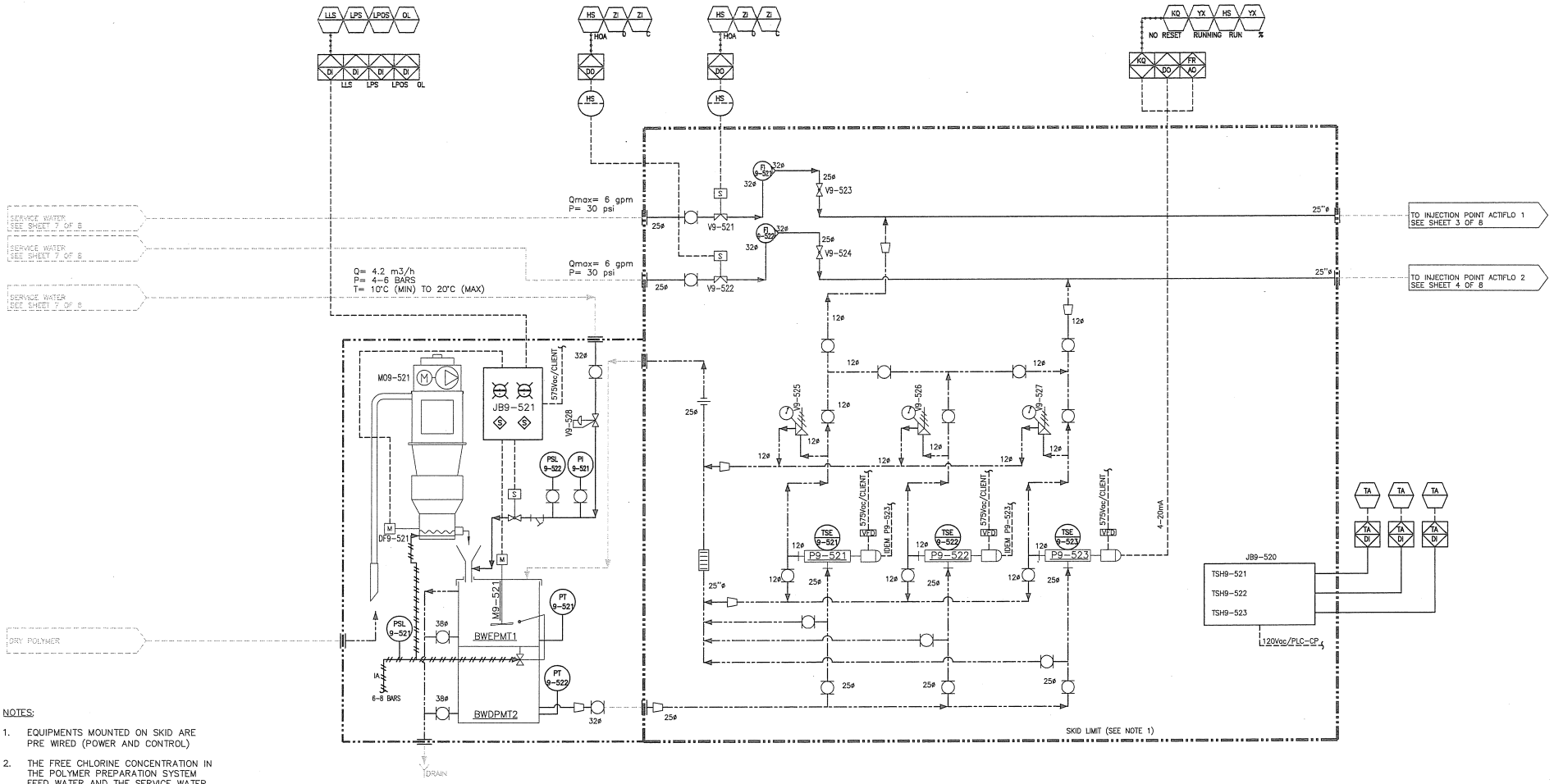

NOTES:

1. EQUIPMENTS MOUNTED ON SKID ARE PRE WIRED (POWER AND CONTROL)
2. THE FREE CHLORINE CONCENTRATION IN THE POLYMER PREPARATION SYSTEM FEED WATER AND THE SERVICE WATER SHALL NOT EXCEED 1.0 mg/L.

BWEPMT1
POLYMER TANK
CAP: 1000L

BWDPMT2
POLYMER TANK
CAP: 1000L

DF9-521
DRY FEEDER
CAPACITY: 55 Kg/d
DRIVE : 0.25HP
POWER SUPPLY: 575V/3PH/60Hz

M9-521
POLYMER TANK MIXER
DRIVE: 1.0HP
POWER SUPPLY: 575V/3PH/60Hz

M09-521
VACUUM CONVEYOR
DRIVE : 1.75 HP
POWER SUPPLY: 575V/3PH/60Hz

P9-521/P9-522/P9-523
POLYMER METERING PUMP
DESIGN: 26-260 L/H @ 2 BARS
MOTOR: 0.5HP, 1750 RPM, 56C
POWER SUPPLY: 575V/3PH/60Hz

* SUPPLIED BY JMI
SUPPLIED BY JMI
SUPPLIED BY JMI
CHEMICALS SUPPLIED BY JMI
BY OTHERS OR EXISTANT
SKID LIMITS

PNEUMATIC
ELECTRICITY OR CONTROL
DATA LINK

AI SCADA
LOCAL HMI (OPTIONAL)
ON LOCAL PLC
DI,DO,AI,AO : PLC I/O

STD: JMI_22x34_D_ANG
REF:
BAR = 1" AT PLOT SCALE

REV	DESCRIPTION	DATE	DWN	CHKD	APVD	ECN
1	UPDATES	2009-06-26			J.T.	
0	FOR INFORMATION	2009-03-23	SA			

CONFIDENTIALITY AND INTELLECTUAL PROPERTY NOTICE
ALL INFORMATION CONTAINED IN THIS DOCUMENT IS THE SOLE PROPERTY OF JOHN MEUNIER INC. AND IS PROTECTED BY ALL APPLICABLE LAWS, INCLUDING BUT NOT LIMITED TO COPYRIGHT AND TRADE SECRET LAWS. THIS DOCUMENT IS PROVIDED ON A CONFIDENTIAL BASIS AND MAY NOT BE REPRODUCED OR USED FOR ANY PURPOSE OTHER THAN THAT FOR WHICH IT IS EXPRESSLY PROVIDED AND ITS RECEIPT CONSTITUTES AN AGREEMENT TO RETURN IT ON DEMAND AND NOT TO DISCLOSE ITS CONTENTS, DIRECTLY OR INDIRECTLY, TO ANY PERSON WHO IS NOT AUTHORIZED BY JOHN MEUNIER INC. TO RECEIVE IT. ANY REPRODUCTION OF THIS DOCUMENT, IN WHOLE OR IN PART, MUST BEAR THIS NOTICE. THIS DOCUMENT AND THE INFORMATION CONTAINED IN IT ARE PROVIDED "AS IS" AND JOHN MEUNIER INC. MAKES NO REPRESENTATIONS OR WARRANTIES OF ANY KIND WHATSOEVER, EXPRESS OR IMPLIED, AND DISCLAIMS ALL WARRANTIES, INCLUDING WITHOUT LIMITATION ANY IMPLIED WARRANTIES OF MERCHANTABILITY, FITNESS FOR A PARTICULAR PURPOSE, NON-INFRINGEMENT, OR ANY WARRANTIES ARISING FROM COURSE OF DEALING OR USAGE OF TRADE. JOHN MEUNIER INC. DOES NOT WARRANT, GUARANTEE, OR MAKE ANY REPRESENTATIONS REGARDING THE USE OR THE RESULTS OF THE USE OF THE INFORMATION CONTAINED HEREIN IN TERMS OF ITS CORRECTNESS, ACCURACY, RELIABILITY, OR OTHERWISE. IN NO EVENT SHALL JOHN MEUNIER INC. BE LIABLE FOR ANY DIRECT, INDIRECT, SPECIAL, INCIDENTAL, OR CONSEQUENTIAL DAMAGES ARISING OUT OF OR IN CONNECTION WITH THE USE OF THIS DOCUMENT OR THE INFORMATION CONTAINED IN IT, EVEN IF JOHN MEUNIER INC. HAS BEEN ADVISED OF THE POSSIBILITY OF SUCH DAMAGES. ACCESS TO AND USE OF THIS DOCUMENT ARE SUBJECT TO THE TERMS AND CONDITIONS OF ANY WRITTEN AGREEMENT BETWEEN YOU AND JOHN MEUNIER INC. GOVERNING SUCH ACCESS AND USE. IF NO SUCH AGREEMENT EXISTS, BY USING THIS DOCUMENT YOU AGREE TO BE BOUND BY THE TERMS OF THIS NOTICE. IF YOU DO NOT AGREE TO THESE TERMS, YOU MUST IMMEDIATELY RETURN THIS DOCUMENT AND DESTROY ANY COPIES YOU HAVE MADE.

DESIGNER	DATE
M.M.	2008-12-15
CHECKER	DATE
N/A	N/A
ENGINEER	DATE
J.T.	
MANAGER	DATE
N/A	N/A
SCALE:	N.T.S.

TITLE: WATER TREATMENT SYSTEM
PROCESS AND INSTRUMENTATION DIAGRAM
POLYMER PREPARATION AND DOSING SYSTEM

CLIENT: MEADOWBANK MINING

JOHN MEUNIER ISO 9001: 2000
4105 Sartelon Street, Saint-Laurent, Qc, Canada H4S 2B3 / Tel: (514) 334-7239 / Fax: (514) 334-3310

PROJECT	DRAWING	SHEET	REV
NC01-	PI001	6 OF 8	1

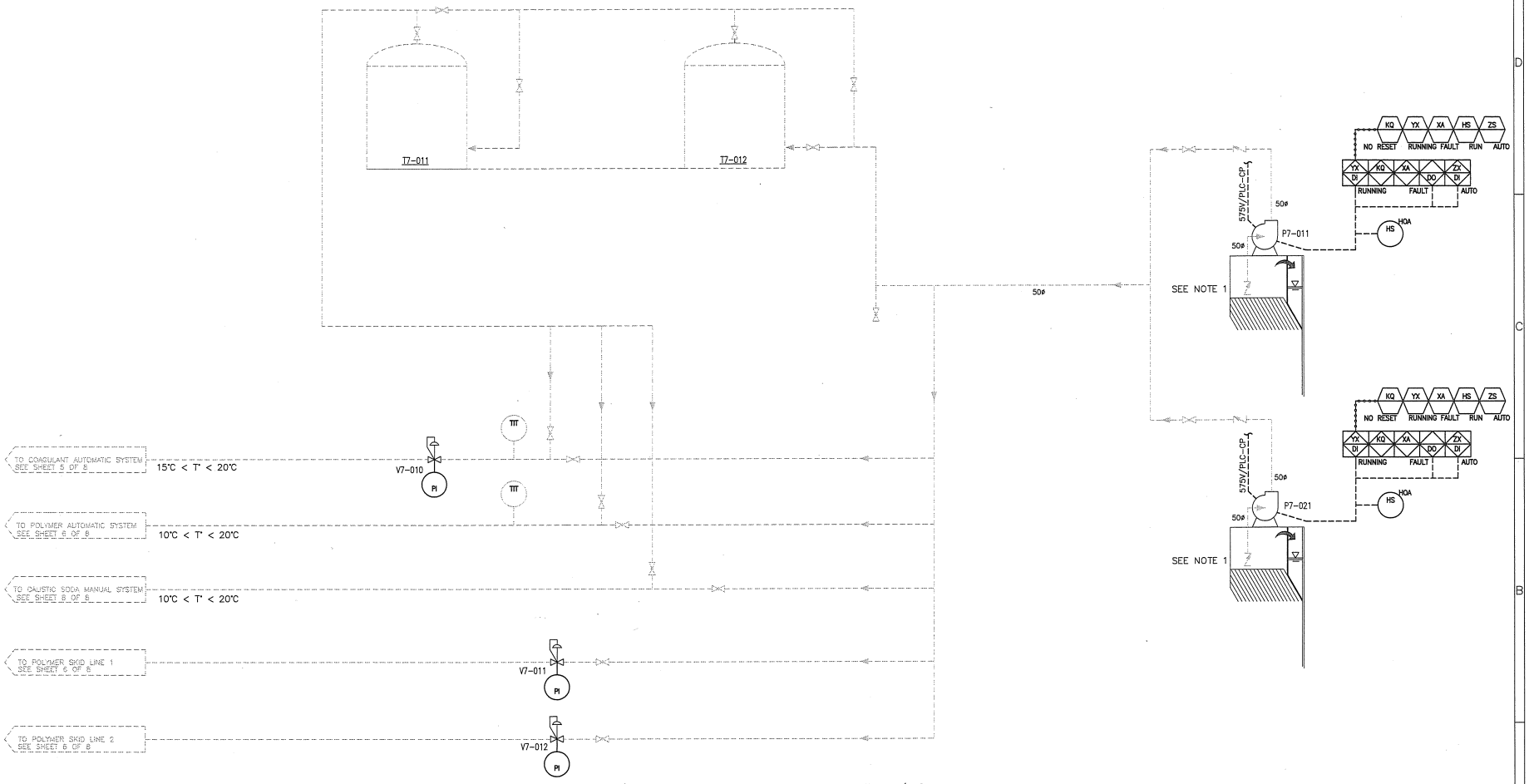

NOTE:

1. A FOOT CHECK VALVE IS REQUIRED. (BY OTHERS)

P7-011/P7-021
SERVICE WATER PUMP
CAPACITY: 52 gpm @ 97 psi
DRIVER: 5 Hp, 3500 rpm, TEFC, 184TC
POWER: 575V/3PH/60Hz

T7-011/012
WATER HEATER
575V/3PH/60Hz
(BY OTHERS)

✲	SUPPLIED BY JMI
———	SUPPLIED BY JMI
———	SUPPLIED BY JMI
- - - - - -	CHEMICALS SUPPLIED BY JMI
- - - - - -	BY OTHERS OR EXISTANT
—·—·—	SKID LIMITS
STD: JMI_22x34_D_ANG	

#####	PNEUMATIC
———	ELECTRICITY OR CONTROL
~~	DATA LINK
REF: RA16	

AI	SCADA (OPTIONAL)
	LOCAL HMI
	ON LOCAL PLC
DI,DO,AI,AO : PLC I/O	
BAR = 1" AT PLOT SCALE	

REV	DESCRIPTION	DATE	DWN	CHKD	APVD	ECN
1	UPDATES	2009-06-26			J.T.	
0	FOR INFORMATION	2009-03-23	SA			

CONFIDENTIALITY AND INTELLECTUAL PROPERTY NOTICE
ALL INFORMATION CONTAINED IN THIS DOCUMENT IS THE SOLE PROPERTY OF JOHN MEUNIER INC. AND IS PROTECTED BY ALL APPLICABLE LAWS, INCLUDING BUT NOT LIMITED TO COPYRIGHT AND INTELLECTUAL PROPERTY LAWS. THE RECIPIENT AGREES THAT ALL INFORMATION CONTAINED HEREIN ARE CONFIDENTIAL IN ANY AND ALL CIRCUMSTANCES WHATSOEVER. THEY ARE NOT REPRODUCIBLE, THEY MUST BE USED ONLY FOR THE PURPOSES FOR WHICH THEY EXPRESSLY IS CONSENT GUARANTEED AND NO RECIPIENT LICENCE IS GRANTED CONSENSUS BY THE SUBMISSION OF THIS DOCUMENT. THEY ARE CONFIDENTIAL AND PROVIDED INFORMATION OF AN AND THAT MUST NOT BE DISCLOSED TO ANY THIRD PARTY. THIS DOCUMENT MAY NOT BE COPIED IN WHOLE OR IN PART, NOR MAY ANY OF ITS CONTENTS BE DISCLOSED, NOR MAY ANY OTHER USE BE MADE OF IT, WITHOUT THE PRIOR EXPRESS WRITTEN CONSENT OF JOHN MEUNIER INC. ALL ASSISTANCE NO RESPONSIBILITY OR LIABILITY FOR THE USE OF THIS DOCUMENT BY THE SUBMISSION OF THIS DOCUMENT, THAT ANY CONFIDENTIAL AND PROPRIETARY INFORMATION CONTAINED HEREIN FOR ANYONE PURPOSE, OR IN A MANNER THAT DOES NOT RELATE TO THE INTENDED PURPOSE OF THIS DOCUMENT. IN NO WAY SHALL THIS DOCUMENT OR THE INFORMATION CONTAINED HEREIN BE USED FOR THE BENEFIT OF THE RECIPIENT OR ANY THIRD PARTY WITHOUT THE PRIOR EXPRESS WRITTEN CONSENT OF JOHN MEUNIER INC. ALL COPYRIGHT, PATENT AND OTHER INTELLECTUAL PROPERTY RIGHTS ARE RESERVED. ACCEPTANCE OF THE DELIVERY OF THIS DRAWING CONSTITUTES AGREEMENT TO THESE TERMS AND CONDITIONS.

DESIGNER	J.T. 2009-03-20
CHECKER	DATE
ENGINEER	DATE
MANAGER	DATE
SCALE:	NONE

TITLE: WATER TREATMENT SYSTEM
PROCESS AND INSTRUMENTATION DIAGRAM
SERVICE WATER

CLIENT: MEADOWBANK MINING

JOHN MEUNIER ISO 9001: 2000
4105 Sartelon Street, Saint-Laurent, Qc, Canada H4S 2B3 / Tel: (514) 334-7330 / Fax: (514) 334-5070

PROJECT	DRAWING	SHEET	REV
NC01- PI001		7 OF 8	1

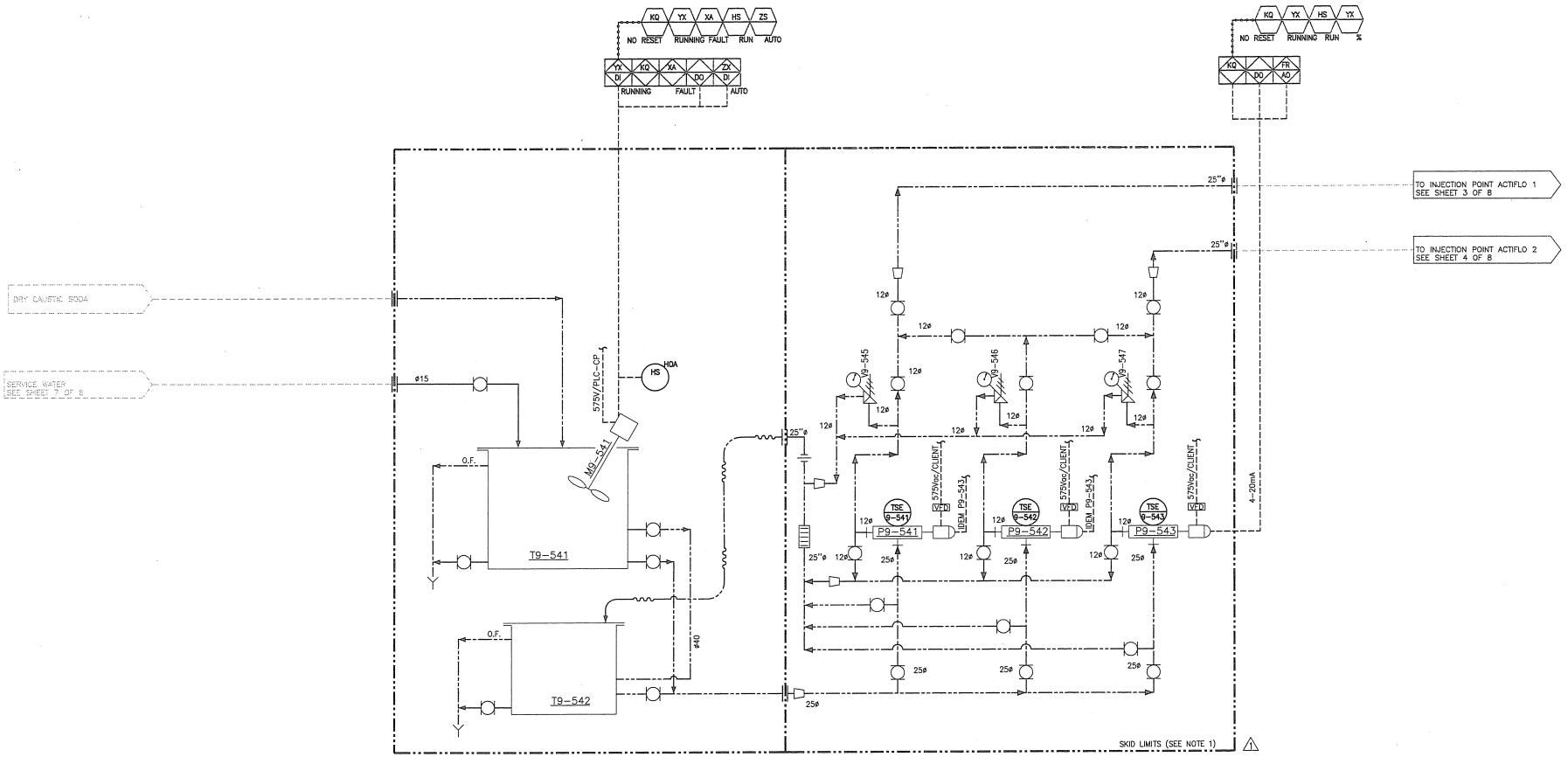

NOTES:

1. EQUIPMENTS MOUNTED ON SKID ARE PRE WIRED (POWER AND CONTROL)

T9-541
CAUSTIC SODA PREPARATION
TOTAL CAP: 340 L
MATL: POLYETHYLENE

T9-542
CAUSTIC SODA PREPARATION
TOTAL CAP: 70 L
MATL: POLYETHYLENE

M9-541
CAUSTIC SODA MIXER
DRIVER: 0.5 HP
575V/3Ph/60Hz

P9-541/P9-542/P9-543
CAUSTIC SODA METERING PUMP
DESIGN: 3.3-50 L/h @7 BARS
MOTOR: 0.5HP
POWER SUPPLY: 575V/3PH/60Hz

REV	DESCRIPTION	DATE	DWN	CHKD	APVD	ECN
1	UPDATES	2009-06-26			J.T.	
0	FOR INFORMATION	2009-05-15	O.F.			

STD: JMI_22x34_D_ANG | REF: RA16 | BAR = 1" AT PLOT SCALE

CONFIDENTIALITY AND INTELLECTUAL PROPERTY NOTICE: ALL INFORMATION CONTAINED IN THIS DOCUMENT IS THE SOLE PROPERTY OF JOHN MEUNIER INC. AND IS PROTECTED BY ALL APPLICABLE LAWS, INCLUDING BUT NOT LIMITED TO COPYRIGHT AND TRADE SECRET LAWS. ANY UNAUTHORIZED USE, DISCLOSURE, REPRODUCTION OR DISTRIBUTION OF THIS DOCUMENT OR ANY PORTION OF IT IS STRICTLY PROHIBITED AND MAY RESULT IN SERIOUS LEGAL CONSEQUENCES. THIS DOCUMENT IS CONFIDENTIAL AND IS INTENDED SOLELY FOR THE USE OF THE INDIVIDUAL OR ENTITY TO WHOM IT IS ADDRESSED. IF YOU ARE NOT THE INTENDED RECIPIENT, YOU ARE HEREBY NOTIFIED THAT ANY DISCLOSURE, COPYING, DISTRIBUTION, OR TAKING OF ANY ACTION IN RELIANCE ON THE CONTENTS OF THIS DOCUMENT IS STRICTLY PROHIBITED. IF YOU HAVE RECEIVED THIS DOCUMENT IN ERROR, PLEASE NOTIFY THE SENDER IMMEDIATELY AND DELETE ALL COPIES FROM YOUR SYSTEM. JOHN MEUNIER MAKES NO WARRANTIES, EXPRESS OR IMPLIED, REGARDING THE ACCURACY, COMPLETENESS, OR RELIABILITY OF THE INFORMATION CONTAINED IN THIS DOCUMENT. JOHN MEUNIER SHALL NOT BE LIABLE FOR ANY DAMAGES ARISING FROM THE USE OF OR RELIANCE ON THE INFORMATION CONTAINED IN THIS DOCUMENT, INCLUDING BUT NOT LIMITED TO DIRECT, INDIRECT, INCIDENTAL, CONSEQUENTIAL, OR PUNITIVE DAMAGES. BY ACCESSING OR USING THIS DOCUMENT, YOU AGREE TO THE TERMS AND CONDITIONS SET FORTH IN THIS NOTICE. ANY UNAUTHORIZED USE OF THIS DOCUMENT MAY VIOLATE APPLICABLE LAWS AND SUBJECT YOU TO CIVIL AND CRIMINAL PENALTIES. THIS NOTICE IS GOVERNED BY THE LAWS OF THE PROVINCE OF QUEBEC, CANADA, AND ANY DISPUTES ARISING FROM OR RELATED TO THIS NOTICE SHALL BE SUBJECT TO THE EXCLUSIVE JURISDICTION OF THE COURTS LOCATED IN THAT JURISDICTION. IF ANY PROVISION OF THIS NOTICE IS FOUND TO BE UNENFORCEABLE OR INVALID, THAT PROVISION SHALL BE LIMITED OR ELIMINATED TO THE MINIMUM EXTENT NECESSARY SO THAT THE REMAINING PROVISIONS SHALL REMAIN IN FULL FORCE AND EFFECT. ACKNOWLEDGMENT OF THE RECEIPT OF THIS CONFIDENTIALITY AGREEMENT TO DISCLOSE TERMS AND CONDITIONS.

	DATE
DESIGNER	
O.F.	2009-05-15
CHECKER	DATE
ENGINEER	DATE
MANAGER	DATE
SCALE: NONE	

TITLE: WATER TREATMENT SYSTEM
PROCESS AND INSTRUMENTATION DIAGRAM
CAUSTIC SODA PREPARATION AND DOSING SYSTEM

CLIENT: MEADOWBANK MINING

JOHN MEUNIER ISO 9001: 2000
4105 Sartelon Street, Saint-Laurent, Qc, Canada H4S 2B3 / Tel: (514) 334-7230 / Fax: (514) 334-5070

PROJECT	DRAWING	SHEET	REV
NC01- PI001		8 OF 8	1

VALVES

ST-003

LEFT BLANK

JOHN MEUNIER

NOMENCLATURE/ BILL OF MATERIALS

TITRE/ TITLE	Rev.	DESCRIPTION	PAR/ BY:	APPR:	DATE:	Affaire / Contract	Meadowbank Mining
Valves	0	SUBMITTAL	Julie Trudel / P.Ste-Marie	P.S.M.	2009-03-26		
	1						
	2					REF. No.	NC01 | | 0
	3						
DESSIN /DWG # ST-003	4					Date:	2009-03-26

REV.	ITEM	QTE/QTY. Unit.	QTE/QTY. Total	DESCRIPTION	P&ID I.D./TAG	CAT. ACCPAC	SOURCE	FA/SA FI SITE	P / N
	NC01ST-003-1	1	2	**RAW WATER VALVE**	V2-011	B36		SA	
				Manufacturer: Bray	V2-021				
				Type: Butterfly valve					
				Model: 31-119 UC (maiximum pressure allowed 50 psig)					
				Connection: lugged flange 125/150 ANSI					
				Body: cast iron					
				Disk: Cast iron nylon coated undercut					
				Stem: Stainless steel 416					
				Seat: EPDM					
				dia: 400 mm (16 in)					
				Actuator:					
				Type: Pneumatic					
				Model: Bray 92-2100					
				c/a positionner 4-20 mA					
	NC01ST-003-2	1	2	**PARTIAL DRAIN VALVE**	V6-013	B40		SA	
				Manufacturer: Bray	V6-023				
				Type: Butterfly valve					
				Model: 31-119 UC (maiximum pressure allowed 50 psig)					
				Connection: lugged flange 125/150 ANSI					
				Body: cast iron					
				Disk: Cast iron nylon coated					
				Stem: Stainless steel 416					
				Seat: EPDM					
				dia: 200 mm (8 in)					
				Actuator: manual					
				Model: 01					
				manual lever operator					
				visual indicator on valve					

JOHN MEUNIER

NOMENCLATURE/ BILL OF MATERIALS

TITRE/ TITLE	Rev.	DESCRIPTION	PAR/ BY:	APPR:	DATE:	Affaire / Contract	Meadowbank Mining
Valves	0	SUBMITTAL	Julie Trudel / P.Ste-Marie	P.S.M.	2009-03-26		
	1						
	2					REF. No.	NC01 | | 0
	3						
DESSIN /DWG # ST-003	4					Date:	2009-03-26

REV.	ITEM	QTE/QTY. Unit.	QTE/QTY. Total	DESCRIPTION	P&ID I.D./TAG	CAT. ACCPAC	SOURCE	FA/SA FI SITE	P / N
	NC01ST-003-3	1	2	**COAGULATION TANK DRAIN VALVE**	V6-011	B40		SA	
				Manufacturer: Milliken	V6-021				
				type: eccentric plug valve					
				Model: 601E Millcentric					
				Connection: flange ANSI B16.1 class 125					
				Body: Cast iron					
				Plug : Cast iron					
				Plug facing: Nitrile (BUNA-N)					
				dia: 100 mm (4 in)					
				Actuator: manual lever					
	NC01ST-003-4	1	2	**INJECTION / MATURATION TANK DRAIN VALVE**	V6-012	B40		SA	
				Manufacturer: Milliken	V6-022				
				type: eccentric plug valve					
				Model: 601E Millcentric					
				Connection: flange ANSI B16.1 class 125					
				Body: Cast iron					
				Plug : Cast iron					
				Plug facing: Nitrile (BUNA-N)					
				dia: 100 mm (4 in)					
				Actuator: manual lever					
	NC01ST-003-5	2	4	**RECIRCULATION PUMP INLET VALVE**	V2-012	B56		SA	
				Manufacturer: Milliken	V2-013				
				type: eccentric plug valve	V2-022				
				Model: 601E Millcentric	V2-023				
				Connection: flange ANSI B16.1 class 125					
				Body: Cast iron					
				Plug : Cast iron					
				Plug facing: Nitrile (BUNA-N)					
				dia: 80 mm (3 in)					
				Actuator: manual lever					

JOHN MEUNIER

NOMENCLATURE/ BILL OF MATERIALS

TITRE/ TITLE	Rev.	DESCRIPTION	PAR/ BY:	APPR:	DATE:	Affaire / Contract	Meadowbank Mining
Valves	0	SUBMITTAL	Julie Trudel / P.Ste-Marie	P.S.M.	2009-03-26		
	1						
	2					REF. No.	NC01 0
	3						
DESSIN /DWG # ST-003	4					Date:	2009-03-26

REV.	ITEM	QTE/QTY. Unit.	QTE/QTY. Total	DESCRIPTION	P&ID I.D./TAG	CAT. ACCPAC	SOURCE	FA/SA FI SITE	P / N
	NC01ST-003-6	2	4	**MANUAL VALVE - ISOLATION PRESSURE**		B56		SA	
				Type: Ball					
				Size : 1/4 "					
				Connection : NPT					
				Make: CFF					
				Model: SS-1					
				Body: Stainless steel 304					
				Seat: PTFE					
				Stem : Stainless steel 316					
	NC01ST-003-7	1	3	**PRESSURE REDUCING VALVE**	V7-010	140		FI	
				Manufacturer: Watts	V7-011				
				Model: 25-AUB-Z3-GG	V7-012				
				Diameter : 1/2"					
				Connection: NPT threaded female union inlet x NPT female outlet					
				Body: Bronze					
				Integral Strainer: Stainless steel					
				Diaphragm: Reinforced EPDM					
				Valve Disc: EPDM					
				Adjustable Reduced Pressure Range: 25–75psi					
				c/w Gauge tapping and 160psi (11 bar) gauge					
	NC01ST-003-8	1	2	**POLYMER SERVICE WATER SOLENOID VALVE**	V9-521	D48		SA	
				Diameter :	V9-522				
				25 mm (1 in.)					
				Manufacturer:					
				ASCO					
				Body :					
				Brass					
				Connection:					
				FNPT					
				Model:					
				8210G54 Normally closed					
				120 vac 60 Hz, NEMA 4, Pression diff. 0					

JOHN MEUNIER

NOMENCLATURE/ BILL OF MATERIALS

TITRE/ TITLE		Rev.	DESCRIPTION	PAR/ BY:	APPR:	DATE:	Affaire / Contract	Meadowbank Mining
Valves		0	SUBMITTAL	Julie Trudel / P.Ste-Marie	P.S.M.	2009-03-26		
		1						
		2					REF. No.	NC01 | | 0
		3						
DESSIN /DWG #	ST-003	4					Date:	2009-03-26

REV.	ITEM	QTE/QTY. Unit.	QTE/QTY. Total	DESCRIPTION	P&ID I.D./TAG	CAT. ACCPAC	SOURCE	FA/SA FI SITE	P / N
	NC01ST-003-9	1	2	**GLOBE VALVE ON POLYMER TRANSPORT WATER**	V9-523	D48		SA	
				Diameter :	V9-524				
				25 mm (1 in.)					
				Supplier:					
				Chemline					
				Material:					
				PVC					
				Connection:					
				Threaded					
				Model:					
				GVA-010T					

BUTTERFLY VALVE

LEFT BLANK

PROCEDURES - SERIES 20/21 BUTTERFLY VALVES

I. Shipment & Storage

A. The seat, disc, stem, and bushing of the butterfly valve should be coated with silicone lubricant as recommended by Bray Technical Bulletin 1028.

B. The disc should be positioned at 10% open.

C. The faces of each valve should be covered with cardboard, plywood, plastic plates, etc. to prevent damage to the seat face, disc edge, or butterfly valve interior.

D. Valves should be stored indoors with face protectors intact. Temperature should preferably be 40 degrees F to 85 degrees F.

E. When valves are stored for a long time, open and close the valves once every 3 months.

F. Ship and store valves so that no heavy loads are applied to the bodies.

II. Installation Considerations - Piping and Valve Orientation and Placement

A. **Piping and Flange Compatibilities** - The Series 20/21 butterfly valves have been designed to be suitable for all types of ANSI 125/150 flanges, whether flat-faced, raised-face, slip-on, weld-neck, etc. (Type C stub-end flanges conform to no standard for the flange face and are not recommended for use with resilient-seated butterfly valves.)These valves have been engineered so that the critical disc chord dimension at the full open position will clear the adjacent inside diameter of most types of piping, including Schedule 40, lined pipe, heavy wall, etc. If in question, one should compare the minimum pipe I.D. with the published disc cord dimension at full open.

B. **Valve Location and Orientation in Piping.**

1. **Valve Location** - Butterfly valves should be installed if possible a minimum of 6 pipe diameters from other line elements, i.e., elbows, pumps, valves, etc. Of course, 6 pipe diameters is not always practical, but it is important to achieve as much distance as possible. Where the butterfly valve is connected to a check valve or pump, use an expansion joint between them to ensure the disc does not interfere with the adjacent equipment.

2. **Valve Orientation**

a. In general, Bray recommends the valve be installed with the stem in the vertical position and the actuator mounted vertically directly above the valve,; however there are those applications as discussed below where the stem should be horizontal. The valve should not be installed upside down.

b. For slurries, sludge, mine tailings, pulp stock, dry cement, and any media with sediment or particles, Bray recommends the valve be installed with the stem in the horizontal position with the lower disc edge opening in the downstream direction.

c. For valve orientation downstream of pump, bend, etc., see Bray Technical Bulletin 1025.

III. Installation Procedure

A. **General Installation**

1. Make sure the pipeline and pipe flange faces are clean. Any foreign material such as pipe scale, metal chips, welding slag, welding rods, etc., can obstruct disc movement or damage the disc or seat.

All information herein is proprietary and confidential and may not be copied or reproduced without the expressed written consent of BRAY INTERNATIONAL, Inc.

2. The Bray elastomer seat has molded o-rings on the face of the seat. As a result, no gaskets are required as these o-rings serve the function of a gasket.
3. Align the piping and then spread the pipe flanges a distance apart so as to permit the valve body to be easily dropped between the flanges without contacting the pipe flanges.
4. Check to see that the valve disc has been positioned to a partially open position, with the disc edge about 1/2" to 3/8" from the face of the seat (approximately 10 degrees open.)
5. Insert the valve between the flanges, taking care not to damage the seat faces. Always pick the valve up by the locating holes or by using a nylon sling on the neck of the body. Never pick up the valve by the actuator or operator mounted on top of the valve
6. Place the valve between the flanges, center it, and then span the valve body with all flange bolts, but do not tighten the bolts. Carefully open the disc to the full open position, making sure the disc does not hit the adjacent pipe I.D. Now systematically remove jack bolts on the other flange spreaders, and hand-tighten the flange bolts. Very slowly close the valve disc to ensure disc edge clearance from the adjacent pipe flange I.D. Now open the disc to full open and tighten all flange bolts per specification. Finally repeat a full close to full open rotation of the disc to ensure proper clearances.

B. **Installation with Flange Welding** - When butterfly valves are to be installed between ANSI welding type flanges, care should be taken to abide by the following procedure to ensure no damage will occur to the seat:

1. Place the valve between the flanges with the flange bores and valve body bore aligned properly. The discs should be in the 10 degrees open position
2. Span the body with the bolts.
3. Take this assembly of flange-body-flange and align it properly to the pipe.
4. Tack weld the flanges to the pipe.
5. When tack welding is complete, remove the bolts and the valve from the pipe flanges and complete the welding of the flanges. Be sure to let the pipe and flanges cool before installing the valve.
   NOTE: Never complete the welding process (after tacking) with the valve between pipe flanges. This causes severe seat damage due to heat transfer.

IV. Maintenance and Repair

The many Bray features minimize wear and maintenance requirements. No routine lubrication is required. All components - stem, disc, seat, bushing, stem seal, etc., are field replaceable, no adjustment is required. If components require replacement, the valve may be removed from the line by placing the disc near the closed position, then supporting the valve and removing the flange bolts. No valve maintenance, including removal of manual or power actuators, should be performed until the piping system is completely de-pressurized.

V. Disassembly and Assembly

A. **Disassembly** - Remove handle, manual gear box of actuator from actuator mounting flange. Remove the body bolts and pull the lower body half away from the seat. Pull the seat and disc stem from the upper body half. Remove bushing and seal from the upper body. Push the seat into an oval shape and remove the disc stem by withdrawing the short stem end first.

All information herein is proprietary and confidential and may not be copied or reproduced without the expressed written consent of BRAY INTERNATIONAL, Inc.

B. **Assembly** - Push the long stem end of the disc stem into the seat, then push the seat over the disc stem short stem. Place the disc stem and seat into the upper body half. Align the lower body bolt lugs with the upper body lugs and position lower body in the seat. Replace the body bolts and tighten. Install the stem seal, then the stem bushing. Replace handle, manual gear box or actuator on the actuator mounting flange. Note: The body halves have a matching casting node on one side only to ensure correct assembly of body halves.

PROCEDURES - SERIES 30/31/34 BUTTERFLY VALVES

I. Shipment & Storage

A. The seat, disc, stem, and bushing of the butterfly valve should be coated with silicone lubricant as recommended by Bray Technical Bulleting 1028.

B. The disc should be positioned at 10% open.

C. The faces of each valve should be covered with cardboard, plywood, plastic plates, etc to prevent damage to the seat face, disc edge, or butterfly valve interior.

D. Valves should be stored indoors with face protectors intact. Temperature should preferably be 40°F to 85°F.

E. When valves are stored for a long time, open and close the valves once every 3 months.

F. Ship and store valves so that no heavy loads are applied to the bodies.

II. Installation Considerations - Piping and Valve Orientation and Placement

A. **Piping and Flange Compatibilities** - The Series 20/21 butterfly valves have been designed to be suitable for all types of ANSI 125/150 flanges, whether flat-faced, raised-face, slip-on, weld-neck, etc. (Type C stub-end flanges conform to no standard for the flange face and are not recommended for use with resilient-seated butterfly valves.)These valves have been engineered so that the critical disc chord dimension at the full open position will clear the adjacent inside diameter of most types of piping, including Schedule 40, lined pipe, heavy wall, etc. If in question, one should compare the minimum pipe I.D. with the published disc cord dimension at full open.

B. **Valve Location and Orientation in Piping.**

1. **Valve Location** - Butterfly valves should be installed if possible a minimum of 6 pipe diameters from other line elements, i.e., elbows, pumps, valves, etc. Of course, 6 pipe diameters is not always practical, but it is important to achieve as much distance as possible. Where the butterfly valve is connected to a check valve or pump, use an expansion joint between them to ensure the disc does not interfere with the adjacent equipment.

2. **Valve Orientation**

   a. In general, Bray recommends the valve be installed with the stem in the vertical position and the actuator mounted vertically directly above the valve,; however there are those applications as discussed below where the stem should be horizontal. The valve should not be installed upside down.

   b. For slurries, sludge, mine tailings, pulp stock, dry cement, and any media with sediment or particles, Bray recommends the valve be installed with the stem in the horizontal position with the lower disc edge opening in the downstream direction.

   c. For valve orientation downstream of pump, bend, etc., see Bray Technical Bulletin

All information herein is proprietary and confidential and may not be copied or reproduced without the expressed written consent of BRAY INTERNATIONAL, Inc

1025.

III. Installation Procedure

A. General Installation

1. Make sure the pipeline and pipe flange faces are clean. Any foreign material such as pipe scale, metal chips, welding slag, welding rods, etc., can obstruct disc movement or damage the disc or seat.
2. The Bray elastomer seat has molded o-rings on the face of the seat. As a result, no gaskets are required as these o-rings serve the function of a gasket.
3. Align the piping and then spread the pipe flanges a distance apart so as to permit the valve body to be easily dropped between the flanges without contacting the pipe flanges.
4. Check to see that the valve disc has been positioned to a partially open position, with the disc edge about 1/2" to 3/8" from the face of the seat (approximately 10 degrees open.)
5. Insert the valve between the flanges, taking care not to damage the seat faces. Always pick the valve up by the locating holes or by using a nylon sling on the neck of the body. Never pick up the valve by the actuator or operator mounted on top of the valve.
6. Place the valve between the flanges, center it, and then span the valve body with all flange bolts, but do not tighten the bolts. Carefully open the disc to the full open position, making sure the disc does not hit the adjacent pipe I.D. Now systematically remove jack bolts on the other flange spreaders, and hand-tighten the flange bolts. Very slowly close the valve disc to ensure disc edge clearance from the adjacent pipe flange I.D. Now open the disc to full open and tighten all flange bolts per specification. Finally repeat a full close to full open rotation of the disc to ensure proper clearances.

B. Installation with Flange Welding - When butterfly valves are to be installed between ANSI welding type flanges, care should be taken to abide by the following procedure to ensure no damage will occur to the seat:

1. Place the valve between the flanges with the flange bores and valve body bore aligned properly. The discs should be in the 10 degrees open position.
2. Span the body with the bolts.
3. Take this assembly of flange-body-flange and align it properly to the pipe.
4. Tack weld the flanges to the pipe.
5. When tack welding is complete, remove the bolts and the valve from the pipe flanges and complete the welding of the flanges. Be sure to let the pipe and flanges cool before installing the valve.
   NOTE: Never complete the welding process (after tacking) with the valve between pipe flanges. This causes severe seat damage due to heat transfer.

IV. Maintenance and Repair

The many Bray features minimize wear and maintenance requirements. No routine lubrication is required. All components - stem, disc, seat, bushing, stem seal, etc., are field replaceable, no adjustment is required. If components require replacement, the valve may be removed from the line by placing the disc near the closed position, then supporting the valve and removing the flange bolts. No valve maintenance, including removal of manual or power actuators, should be performed until the piping system is completely de-pressurized.

All information herein is proprietary and confidential and may not be copied or reproduced without the expressed written consent of BRAY INTERNATIONAL, Inc

V. Disassembly and Assembly

A. Disassembly - Remove handle, gear operator, or actuator from actuator mounting flange. Remove the "Spirolox" retaining ring and the two C-ring stem retainers from the stem hole, then remove the stem, bushing and seal. Remove the disc from the seat, protecting disc edge at all times. Push the seat into an oval shape, then remove the seat from the body.

B. **Assembly** - Push the valve seat into an oval and push it into the body with seat stem holes aligned to body stem holes. Insert stem seal and bushing. Push stem into the stem hole of body until the bottom of the stem is flush with the inner top edge of the seat. Install a light coating of silicone or grease on the I.D. of seat. Insert the disc into the seat by lining up the disc hole with the stem hole of the seat. NOTE: the broached double "D" flats in the disc must be toward the bottom of the valve body. With a downward pressure and rotating the stem back and forth, push the stem until the stem touches the bottom of the body stem hole. Make certain that when pushing stem through disc bottom, the broached flats of stem and disc are aligned. Replace the stem bushing and two stem retainers, then replace the "Spirolox" retaining ring back into position.

All information herein is proprietary and confidential and may not be copied or reproduced without the expressed written consent of BRAY INTERNATIONAL, Inc.

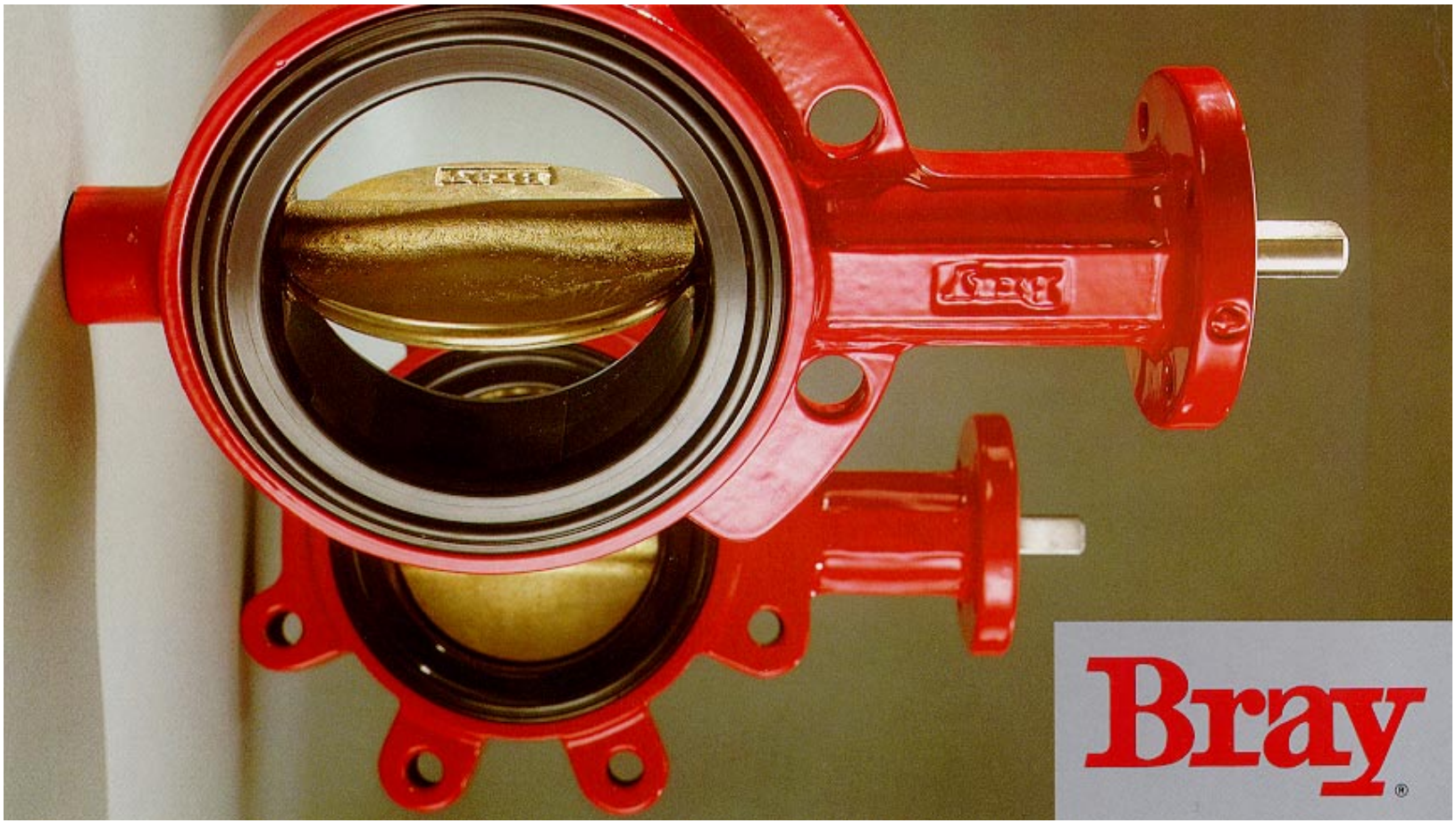

The High Performance Company

BUTTERFLY VALVES
RESILIENT SEATED

SERIES 30/31 Wafer/Lug
2”-20” (50mm-500mm)

SERIES 30/31

2”-20” (50mm-500mm)
Bray® Controls is proud to offer a high quality line of butterfly valves to meet the requirements of today’s market. Combining years of field experience, research and development, Bray has designed many unique features in the Series 30/31 not previously available. The results are longer service life, greater reliability, ease of parts replacement and interchangeability of components.

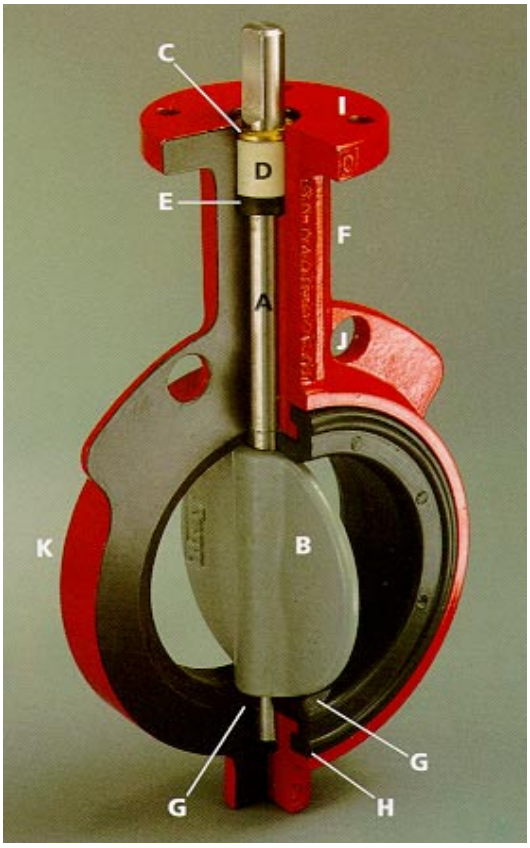

DISC AND STEM CONNECTION (A)
Features a high-strength through stem design. The close tolerance, double "D" connection that drives the valve disc is an exclusive feature of the Bray valve. It eliminates stem retention components being exposed to the line media, such as disc screws

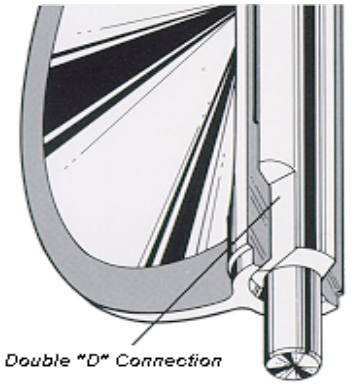

and taper pins, which commonly result in leak paths, corrosion, and vibration failures. Disc screws or taper pins, due to wear and corrosion, often require difficult machining for disassembly. Disassembly of the Bray stem is just a matter of pulling the stem out of the disc. Without fasteners obstructing the line flow, the Series 30/31 Cv values are higher than many other valves, turbulence is reduced, and pressure recovery is increased. The stem ends and top mounting flange are standardized for interchangeability with Bray actuators.

DISC (B)
Casting is spherically machined, hand polished to provide a bubble-tight shut off, minimum torque, and longer seat life. The disc O.D. clearance is designed to work with all standard piping.

"SPIROLOX*" RETAINING RING (C)
The stem is retained in the body by means of a unique Stainless Steel “Spirolox®” retaining ring, a thrust washer and two C-rings, manufactured from brass as standard, stainless steel upon request. The retaining ring may be easily removed with a standard hand tool. The stem retaining assembly prevents unintentional removal of the stem during field service.

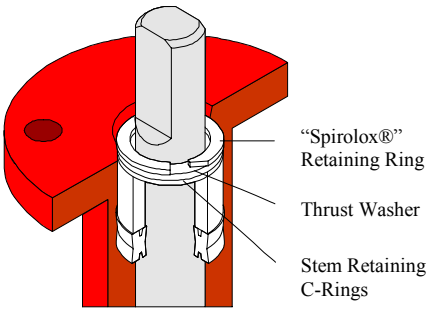

*"Spirolox®" designation is a registered trademark of TRW, Inc.

STEM BUSHING (D)
Non-Corrosive, heavy duty acetal bushing absorbs actuator side thrusts.

STEM SEAL (E)
Double "U" cup seal design is self-adjusting and gives positive sealing in both directions. Prevents external substances from entering stem bore.

NECK (F)
Extended neck length allows for 2" of piping insulation and is easily accessible for mounting actuators.

PRIMARY AND SECONDARY SEALS (G)
The Primary Seal is achieved by an interference fit of the molded seat flat with the disc hub. The Secondary Seal is created because the stem diameter is greater than the diameter of the seat stem hole. These seals prevent line media from coming in contact with the stem or body.

BRAY UNIQUE SEAT DESIGN (H)
One of the valve's key elements is Bray's unique "*Tongue-and-Groove*" seat design. This resilient seat features lower torque than many valves on the market today and provides complete isolation of flowing media from the body. The tongue-and-groove seat to body retention method is superior to traditional designs, making field replacement simple and fast. The seat is specifically designed to seal with slip-on or weld-neck flanges. The seat features a molded O-ring which eliminates the use of flange gaskets. An important maintenance feature is that all resilient seats for Bray butterfly valves Series 20, 21, 30, 31, 34 are completely interchangeable.

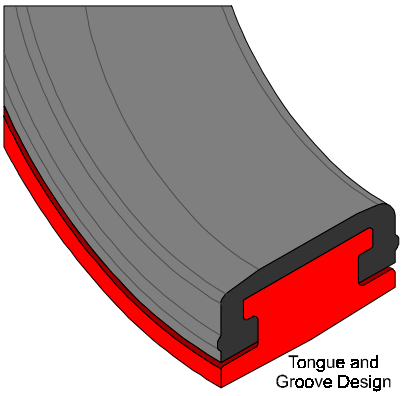

SERIES 30/31

ACTUATOR MOUNTING FLANGE AND STEM CONNECTION (I)

Universally designed to ISO 5211 for direct mounting of Bray® power actuators and manual operators.

FLANGE LOCATING HOLES (J)

Provides quick and proper alignment during installation.

BODY (K)

One-piece wafer or lug style. Epoxy coating for excellent corrosion resistance. Bray valve bodies meet ANSI 150 pressure ratings for hydrostatic shell test requirements.



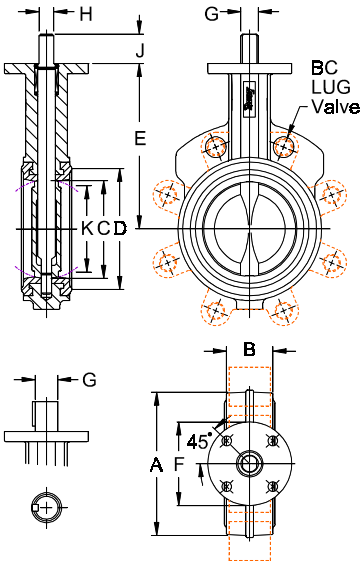

DESIGN FEATURES

Bray's Series 30 valve is a wafer version with flange locating holes, and the Series 31 is the companion lug version for dead-end service and other flange requirements. All Bray valves are tested to 110% of full pressure rating before shipment.
A major design advantage of Bray valve product lines is international compatibility. The same valve is compatible with most world flange standards - ANSI Class 125/150, BS 10 Tables D&E, BS4504 NP 10/16, DIN ND10/16, AS 2129 and JIS 10. In addition, the valves are designed to comply with ISO 5752 face-to-face and ISO 5211 actuator mounting flanges. Therefore, one valve design can be used in many different world markets. Due to a modular concept of design, all Bray® handles, manual gear operators and pneumatic and electric actuators mount directly to Bray valves. No brackets or adapters are required. Bray interchangeability and compatibility offers you the best in uniformity of product line and low-cost performance in the industry today.

EPOXY COATING CORROSION PROTECTION

Bray's standard product offers valve bodies with an epoxy coating, providing excellent corrosion and wear resistance to the valve's surface. The Bray epoxy coating is a hard, high gloss red finish.

• Chemical Resistance - resists a broad range of chemicals including: dilute aqueous acids and alkalies, petroleum solvents, alcohols, greases and oils. Offers outstanding resistance to humidity and water.
• Weatherability - outdoor tested resistant to ultra-violet radiation.
• Abrasion Resistance - excellent resistance to abrasion.
• Impact Resistance - withstands impact without chipping or cracking.

NYLON 11 COATING

Optionally available for valve bodies where outstanding protection and performance is needed. A thermoplastic produced from a vegetable base, this coating is inert to fungus growth and molds. Nylon 11 is *USDA Approved*, as well as certified to ANSI/NSF 61 for water service.

• Corrosion Resistance - superior resistance to a broad range of chemical environments. Salt spray tested in excess of 2,000 hours and seawater immersion tested for over 10 years without corrosion to metal substrates. Nylon 11 features a very low coefficient of friction and excellent resistance to impact and ultra-violet radiation.

DIMENSIONS SERIES 30 WAFER

Valve Size									Mtg Flange Drilling						
ins	mm	A	B	C	D	E	F	BC	No. Holes	Hole Dia.	G	H	J	K
2	50	3.69	1.62	2.00	2.84	5.50	3.54	2.76	4	.39	.55	.39	1.25	1.32
2½	65	4.19	1.75	2.50	3.34	6.00	3.54	2.76	4	.39	.55	.39	1.25	1.91
3	80	4.88	1.75	3.00	4.03	6.25	3.54	2.76	4	.39	.55	.39	1.25	2.55
4	100	6.06	2.00	4.00	5.16	7.00	3.54	2.76	4	.39	.63	.43	1.25	3.57
5	125	7.12	2.12	5.00	6.16	7.50	3.54	2.76	4	.39	.75	.51	1.25	4.63
6	150	8.12	2.12	5.75	7.02	8.00	3.54	2.76	4	.39	.75	.51	1.25	5.45
8	200	10.50	2.50	7.75	9.47	9.50	5.91	4.92	4	.57	.87	.63	1.25	7.45
10	250	12.75	2.50	9.75	11.47	10.75	5.91	4.92	4	.57	1.18	.87	2.00	9.53
12	300	14.88	3.00	11.75	13.47	12.25	5.91	4.92	4	.57	1.18	.87	2.00	11.47

SERIES 31 LUG

Lug Bolting Data		
BC	No. Holes	Thrds UNC-2B
4.75	4	5/8-11
5.50	4	5/8-11
6.00	4	5/8-11
7.50	8	5/8-11
8.50	8	3/4-10
9.50	8	3/4-10
11.75	8	3/4-10
14.25	12	7/8-9
17.00	12	7/8-9

Valve Size									Mtg Flange Drilling						
ins	mm	A	B	C	D	E	F	BC	No. Holes	Hole Dia.	G	J	KEY SIZE	K
14	350	17.05	3.00	13.25	15.28	13.62	5.91	4.92	4	.57	1.38	2.00	.39x.39	13.04
16	400	19.21	4.00	15.25	17.41	14.75	5.91	4.92	4	.57	1.38	2.00	.39x.39	14.85
18	450	21.12	4.25	17.25	19.47	16.00	8.27	6.50	4	.81	1.97	2.50	.39x.47	16.85
20	500	23.25	5.00	19.25	21.59	17.25	8.27	6.50	4	.81	1.97	2.50	.39x.47	18.73

Lug Bolting Data		
BC	No. Holes	Thrds UNC-2B
18.75	12	1-8
21.25	16	1-8
22.75	16	11/8-7
25.00	20	11/8-7

SELECTION DATA

FLANGE REQUIREMENTS

Bray valves are designed for installation between ANSI Class 125/150 lb. weld-neck or slip-on flanges, BS 10 Tables D&E, BS 4504 NP 10/16, DIN ND 10/16, AS 2129 and JIS 10, either flat faced or raised faced. While weld-neck flanges are recommended, Bray has specifically designed its valve seat to work with slip-on flanges, thus eliminating common failures of other butterfly valve designs. When using raised face flanges be sure to properly align valve and flange. Type C stub-end flanges are not recommended.

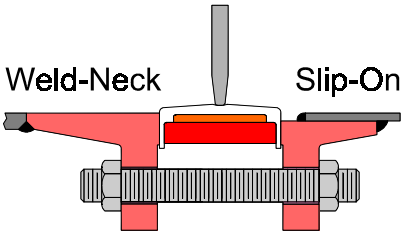

Note: Flanges on both sides of installed valve must be the same type

PRESSURE RATINGS*

For bi-directional bubble-tight shut off, disc in closed position:

Inches	mm	psig	bar
2-12	50-300	175	12
14-20	350-500	150	10

For Dead-end Service Applications:
With *downstream flanges installed* or with *vulcanized seats,* the dead-end pressure ratings are equal to valve bi-directional ratings as stated above. With no downstream flanges or with seats that are not vulcanized, the dead-end pressure rating for 2"-12" valves is 75 psi (5 bar) for 14"-20" valves, 50 psi (3.5 bar.)

* Pressure Ratings are based on standard disc diameters. For low pressure application, Bray offers a standard reduced disc diameter to decrease seating torques and to extend seat life, thus increasing the valve's performance and reducing actuator costs for the customer.

VELOCITY LIMITS

For On/Off Services
Fluids - 30 ft/sec (9m/s)
Gases - 175 ft/sec (54m/s)

Cv VALUES-VALVE SIZING COEFFICIENT

Valve Size		Disc Position (degrees)								
ins	mm	90°	80°	70°	60°	50°	40°	30°	20°	10°
2	50	144	114	84	61	43	27	16	7	1
21/2	65	282	223	163	107	67	43	24	11	1.5
3	80	461	364	267	154	96	61	35	15	2
4	100	841	701	496	274	171	109	62	27	3
5	125	1376	1146	775	428	268	170	98	43	5
6	150	1850	1542	1025	567	354	225	129	56	6
8	200	3316	2842	1862	1081	680	421	241	102	12
10	250	5430	4525	2948	1710	1076	667	382	162	19
12	300	8077	6731	4393	2563	1594	1005	555	235	27
14	350	10538	8874	5939	3384	2149	1320	756	299	34
16	400	13966	11761	7867	4483	2847	1749	1001	397	45
18	450	17214	14496	10065	5736	3643	2237	1281	507	58
20	500	22339	18812	12535	7144	4536	2786	1595	632	72

Cv is defined as the volume of water in U.S.G.P.M. that will flow through a given restriction or valve opening with a pressure drop of one (1) p.s.i. at room temperature. Recommended control angles are between 25°-70° open. Preferred

EXPECTED SEATING/UNSEATING TORQUES (Lb.-Ins.)

		Full-Rated Pressure Valve				Reduced Disc
Valve Size		rP (PSI)				rP (PSI)
ins	mm	50	100	150	175	50
2	50	125	130	135	140	125
21/2	65	195	205	215	220	195
3	80	260	275	290	297	260
4	100	400	425	450	462	267
5	125	615	670	725	755	410
6	150	783	871	953	1003	537
8	200	1475	1650	1825	1915	983
10	250	2240	2520	2800	2940	1493
12	300	3420	3870	4320	4545	2280
14	350	4950	5700	6450	-	3300
16	400	6400	7700	9000	-	4267
18	450	7850	9850	11850	-	5267
20	500	10300	12900	15500	-	6867

Valve Torque Rating - Bray has classified valve torque ratings according to 3 types: non-corrosive lubricating service, general service, and severe service. Torques listed above are for general services.Consult Bray for torque information corresponding to specific application.

TO USE TORQUE CHART, NOTE THE FOLLOWING:
1) For Bray valves, Series 20, 21, 30, 31 and 34.
2) Review Technical Bulletin No. 1001, Expected Seating/Unseating Torque's, for explanation of the 3 service classes and their related seating/unseating torque values for given pressure differentials of Full-Rated and Reduced Disc Diameter valves.
3) Dynamic Torque values are not considered. See Technical Bulletin No. 1002 for evaluation of Dynamic Torque values vs. Seating/Unseating Torque values.
4) Do not apply a safety factor to above torque values when determining actuator output torque requirement.
5) For 3 way assemblies where on valve is opening and other is closing, multiply torque by 1.5 factor.

SELECTION DATA

RECOMMENDED SPECIFICATIONS FOR BRAY SERIES 30/31 SHALL BE:

• Epoxy coated, cast iron, wafer or lug bodies.
• With flange locating holes that meet ANSI 125/150 (or BS 10 tables D&E, BS 4504 NP 10/16, DIN ND 10/16, AS 2129 and JIS 10) drillings.
• Through-stem direct drive double "D" design requiring no disc screws or pins to connect stem to disc with no possible leak paths in disc/stem connection.
• Stem mechanically retained in body neck and no part of stem or body exposed to line media.
• Tongue-and-groove seat design with primary hub seal and a molded o-ring suitable for weld-neck and slip-on flanges. Seat totally encapsulates the body with no flange gaskets required.
• Spherically machined, hand polished disc edge and hub for minimum torque and maximum sealing capability.
• Equipped with non-corrosive bushing and self-adjusting stem seal.
• Bi-directional and tested to 110% of full rating.
• Bi-directional pressure ratings:
2"-12" valves: 175 PSI
14"-20" valves: 150 PSI
Lug bodies for dead end service
With downstream flanges or vulcanized seats, pressure ratings are equal to bi-directional ratings as stated above.
With no downstream flanges or non-vulcanized seats:
2”-12” valves: 75 psi.
14”-20” valves: 50 psi.
• No field adjustment necessary to maintain optimum field performance
• The valve shall be Bray Series 30 wafer / 31 lug or equal.

TEMP. RANGE OF SEATS

Type	Maximum	Minimum
EPDM	+250°F(121°C)	-40°F(-40°C)
Buna-N	+212°F(100°C)	0°F(-18°C)
FKM*	+400°F(204°C)	0°F(-18°C)

MATERIALS SELECTION

2”-20” (50mm-500mm)

BODY:
• Cast Iron ASTM A126 Class B
• Ductile Iron ASTM A536
• Cast Steel ASTM A216 WCB
• Aluminum ASTM B26

SEAT:
• Buna-N - Food Grade
• EPDM - Food Grade
• FKM*
• White Buna-N - Food Grade

STEM:
• Coated Carbon Steel
• 416 SS ASTM A582 Type 416
• 304 SS ASTM A276 Type 304
• 316 SS ASTM A276 Type 316
• Monel

DISC:
• Aluminum Bronze ASTM B148-954
• Coated Ductile Iron ASTM A536 Gr. 65-45-12
• Ductile Iron,Nylon 11 Coated, ASTM A536 Gr. 65-45-12
• Ductile Iron, Halar® Coated, ASTM A536 Gr. 65-45-12
• 316 SS ASTM A351 CF8M
• Hastelloy® C-276 ASTM B575 Alloy N10276

WEIGHTS

Valve Size		Series	Series
ins	mm	30	31
2	50	5.5	7.0
2 1/2	65	7.0	8.0
3	80	7.5	9.0
4	100	11.5	15.0
5	125	14.0	20.0
6	150	17.0	23.0
8	200	34.0	42.0
10	250	49.0	66.0
12	300	67.0	88.0
14	350	95.0	114.0
16	400	135.0	166.0
18	450	200.0	226.0
20	500	260.0	305.0

Weights are in lbs.

COMPONENTS

No.	Qty.	Description
1	1	Body
2	1	Seat
3	1	Disc
4	1	Stem
5	1	Stem Seal
6	1	Stem Bushing
7	2	Stem Retainer
8	1	Thrust Washer
9	1	Retaining Ring

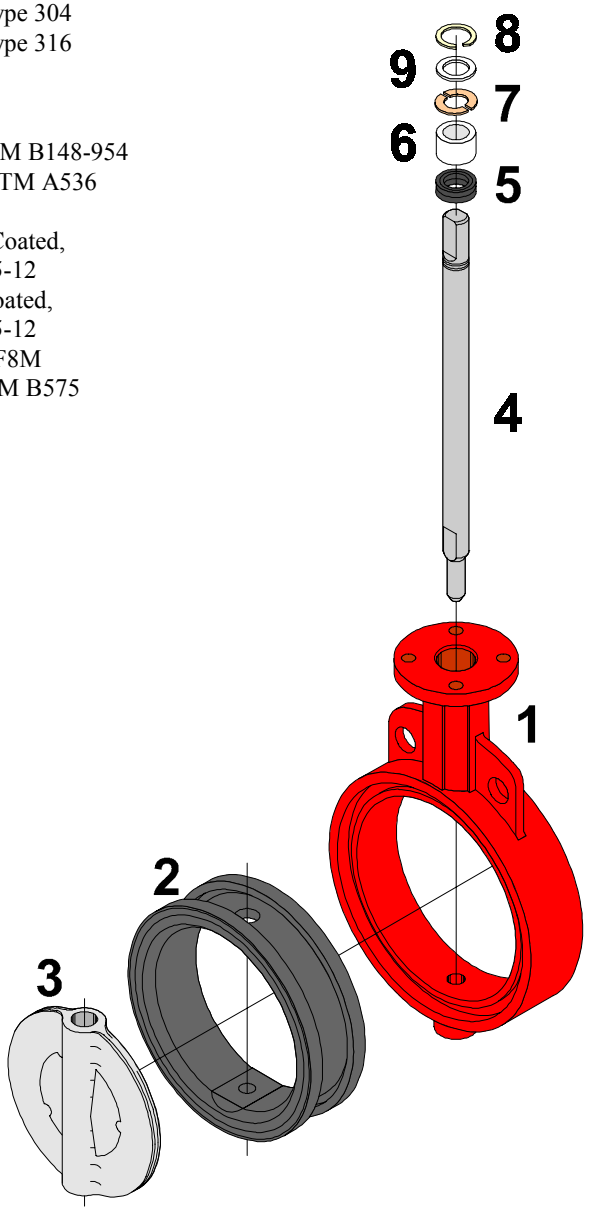

*FKM is the ASTM D1418 designation for Fluorinated Hydrocarbon Elastomers (also called Fluoroelastomers.)
Hastelloy® is a registered trademark of Haynes International, Inc.
Halar® is a registered trademark of Ausimont U.S.A., Inc.

INSTALLATION

Position the disc in the partially open position, maintaining the disc within body face-to-face. Place the body between flanges and install flange bolts. *Do not use flange gaskets.*
Before tightening flange bolts, carefully open the disc to the full open position to ensure proper alignment and clearance of the disc O.D. with the adjacent pipe I.D. Leave disc in the full open position and tighten flange bolts per required specification. Once bolts are tightened, carefully rotate disc to closed position to ensure disc O.D. clearance.

MAINTENANCE AND REPAIR

The many Bray features minimize wear and maintenance requirements. No routine lubrication is required. All components-stem, disc, seat, bushing, stem seal, etc., are field replaceable, no adjustment is needed. If components require replacement, remove the valve from the line by placing the disc near the closed position, spread the flanges, support the valve, then remove the flange bolts. No valve maintenance, including removal of manual or power actuators, should be performed until the piping system is completely depressurized.

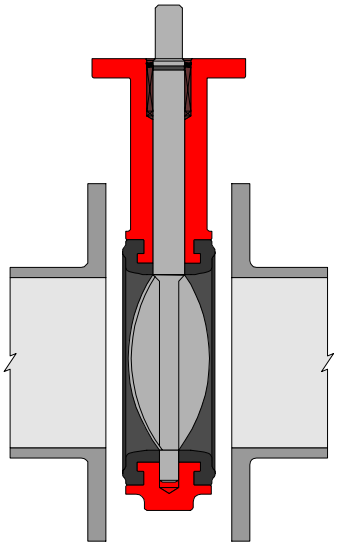

Disc in the Near Closed Position

DISASSEMBLY

Remove handle, gear operator , or actuator from actuator mounting flange. Remove "Spirolox®" retaining ring. Remove stem with its thrust washer and two C-ring stem retainers. Remove bushing and seal. Remove the disc from the seat, protecting disc edge at all times. Push the seat into an oval shape, then remove the seat from the body.

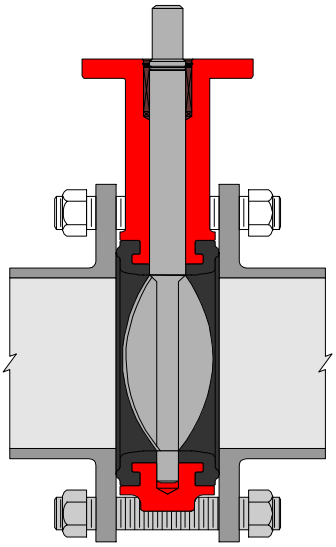

Disc in the Partially Open Position

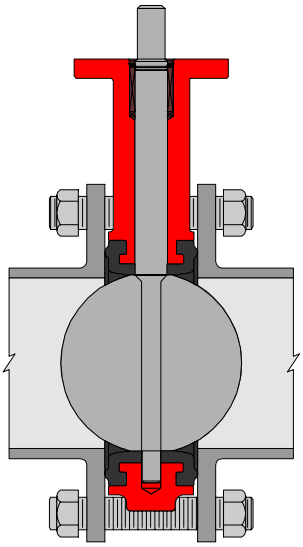

Disc in the Full Open Position

Assembly

Push the valve seat into an oval and push it into the body with seat stem holes aligned to body stem holes. Push stem into the stem hole of body. For aid in inserting disc, slightly protrude stem beyond the I.D. of the top of the seat. Install a light coating of food grade silicone oil (for silicone free applications use soap and water) on the I.D. of seat. Insert the disc into the seat by lining up the disc hole with the stem hole of the seat. Note: the broached double "D" flats in the disc must be toward the bottom of valve body. (Take special care when lining disc up with stem.) With a downward pressure and rotating the stem back and forth, push the stem until the stem touches the bottom of the body stem hole. Make certain that when pushing the stem through disc bottom, the broached flats of stem and disc are aligned. After the stem has engaged the disc, but before the stem is firmly seated in the body, replace the stem seal and bushing. Install the two C-ring stem retainers in the groove in the stem and thrust washer on top of the C-ring. Seat the stem firmly in the body and install the "Spirolox®" retaining ring back into position.

Bray® CONTROLS

All statements, technical information, and recommendations in this bulletin are for general use only. Consult Bray representatives or factory for the specific requirements and material selection for your intended application. The right to change or modify product design or product without prior notice is reserved. Patents applied for in u.S. and foreign countries.
Bray® is a registered trademark of BRAY INTERNATIONAL., Inc.

A Subsidiary of BRAY INTERNATIONAL, INC.
13333 Westland East Blvd., Houston, Texas 77041
Phone: 281. 894.5454 Fax: 281.894.9499
©1995 Bray International. All rights reserved

LEFT BLANK

ACTUATOR

LEFT BLANK

Description of Operation

The Bray Series 92 and 93 Pneumatic Actuators feature a double piston, rack and pinion mechanism designed to automate quarter-turn valves. In the Series 92 Double-Acting Actuator, pressure introduced through Port A (the left port when facing the ports) forces the pistons away from each other and causes the pinion to rotate in a counterclockwise direction. Pressure introduced through Port B (the right port when facing the ports) is directed through an internal passage to the opposite side of the pistons, which forces the pistons together and rotates the pinion in a clockwise direction. Normally, the clockwise rotation (pistons moving together) closes the attached valve, and the counterclockwise rotation (pistons moving apart) opens the attached valve.

In the Series 93 Spring-Return Actuators, spring cartridges have been added to push the pistons together by spring force in the event the compressed air pressure is lost. This spring force normally closes the attached valve. However, in the event that the valve is required to open under spring force, refer to the *fail open* portion of the **installation** section below.

Operating Fluid

The recommended operating medium is clean dry air at 40 - 140 psig (3 - 10 bar). An air line lubricator is suggested for fast cycling applications, i.e. more than 10 cycles per minute. Other media such as hydraulic oil, water, or certain other gases may also be used in some instances, but the factory should be consulted for specific applications.

Operating Temperature

The recommended operating temperature range is -15°F to 200°F (-25°C to 95°C). Below 32°F (0°C) care must be taken to prevent condensed moisture from freezing in the air supply lines. Consider the use of an air dryer if the actuator is installed in cold climates. The air dryer must be capable of lowering the dew point of the air to a temperature lower than that of the surrounding environment.

Installation

Bray Series 92/93 Actuators are designed to mount directly on the top plate of Bray Valves. Before the actuator is mounted on a valve, it is a good practice to lubricate the output bore of the actuator with a thick grease. The grease will make it easier to remove the actuator from the valve stem, even after years of service.

Normally, the actuator is mounted with its long side parallel to the pipe line. A double acting actuator will normally rotate the valve stem clockwise to close, and counterclockwise to open. Spring return actuators will normally rotate the valve stem clockwise to close with the spring stroke, and counterclockwise to open with the air stroke. The normal operation of the spring cartridges is therefore *fail closed.*

Direction of operation may be changed to *fail open* by any one of several different methods. Refer to the Assembly Instructions and Exploded View in Figure 4 on page 7 for more details.

Method 1 - Note: This method works only with concentric disc valves such as the Bray Series 20/21, 22/23 and 30/31 or other valves that allow the disc to be swung through the seat. Turn the actuator so the long side is perpendicular to the pipeline. This will allow the spring cartridges to rotate the valve stem clockwise to open, and the air stroke to rotate the valve stem counterclockwise to close. This is the easiest method if there is sufficient room to mount the actuator.

Method 2 - Note: This method works only with concentric disc valves such as the Bray Series 20/21, 22/23 and 30/31 or other valves that allow the disc to be swung through the seat. See **Assembly** below for detailed instructions on reinstalling the travel stop cam on the pinion. Remove the end caps, spring cartridges and pistons from the actuator. Remove the pinion, rotate it 90°, and reinstall the pinion in the actuator. This will also allow the spring cartridges to rotate the valve stem clockwise to open, and the air stroke to rotate the valve stem counter-

All information herein is proprietary and confidential and may not be copied or reproduced without the expressed written consent of BRAY INTERNATIONAL, Inc.

The technical data herein is for general information only. Product suitability should be based solely upon customer's detailed knowledge and experience with their application.

The High Performance Company

clockwise to close. This is the second easiest method, and allows the actuator to be mounted with its long side parallel to the pipeline.

Method 3 - Note: This method works for all valves but must be used for offset disc valves such as the Bray Series 40/41, 42/43 and 44/45 or other offset disc valves where the disc may only turn clockwise to close. See **Assembly** below for detailed instructions on reinstalling the travel stop cam on the pinion. Remove the end caps, spring cartridges and pistons from the actuator. Rotate the pistons so that the racks turn the pinion counterclockwise as the pistons move toward each other. (With the air input ports of the actuator body facing you, the left hand piston rack should be on the side with the air ports.) This is the third easiest method, and allows the actuator to be mounted with its long side parallel to the pipeline, and clockwise to close rotation to be maintained.

The actuator is attached to the valve by means of the studs and nuts furnished in the mounting kit. Thread the studs into the proper holes before installing the actuator on the valve. The studs should be snug in the bottom of the tapped holes; there is no need to torque them. Install the actuator on the valve making sure that the base of the actuator fits flat against the valve mounting flange. Use the nuts and washers from the kit to complete the installation. Torque the nuts in a diagonal pattern to assure equal loading of the studs.

The final step in the installation process is to check the travel stop settings. The travel stops are set for 90° of travel at the factory, however, each installation is different so they should be checked before putting the valve in service. The actuators are designed with a minimum of 5° over or under travel at each end of rotation. A screwdriver, an open end or box end wrench and a hex wrench, all of the appropriate size, are the only tools required to make the necessary adjustments. Refer to Figure 1 below.

Remove the black position pointer to expose the wrench flats on the top of the pinion.

Rotate the valve to the desired position. If the air supply is available, it may be used to stroke the actuator. If no air is available and the actuator has no springs, a wrench may be used.
CAUTION: Remove the air pressure before making the adjustments.

Loosen the lock nut on the travel stop screw. It is not necessary to remove the nut completely. Using the hex wrench, turn the screw in or out until the desired travel stop position is reached. While holding the screw with the hex wrench, tighten the lock nut with the wrench.

Replace the position indicator making certain the pointer is aligned with the position of the valve, open or closed.



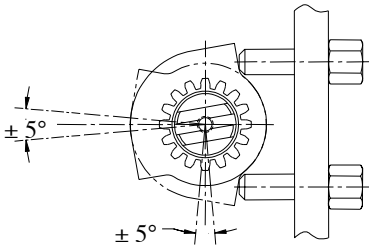

Figure 1

Some valves or operating conditions dictate that the actuator have more that 5° of travel adjustment. For these conditions, the Series 92/93 actuator can be fitted with extended travel stops in the end caps. (See Drawing ES11A-0460 in Figure 3 on page 6) Consult the Bray distributor in your area for this option.

Spring return actuators may be operated with only one air supply connected to Port A, since the spring cartridges will move the pistons when the air pressure in removed. This operation, however, will draw the surrounding atmosphere into the spring chambers through Port B. To prevent contamination from entering the spring chamber, a filter with a 40 micron (or finer) element should be installed in Port B.

Even better service may be obtained on spring return actuators by installing a four-way solenoid, covering both Port A and Port B. A four-way solenoid will fill the spring chambers with compressed air from the

All information herein is proprietary and confidential and may not be copied or reproduced without the expressed written consent of BRAY INTERNATIONAL, Inc.

The technical data herein is for general information only. Product suitability should be based solely upon customer's detailed knowledge and experience with their application.

The High Performance Company

plant air supply with each stroke. The plant air supply is often cleaner than the surrounding atmosphere, especially in heavy industrial or chemical areas.

Maintenance

The rugged components and factory lubrication combine to ensure a long and trouble-free service life for Series 92/93 actuators. Dirt and rust are the most common cause for shortened service life, and they typically enter the actuator through the air supply line. Therefore, it is strongly recommended that an adequately sized filter with a 40 micron (or finer) element be installed adjacent to the inlet of the directional control valve. Air line lubricators are recommended for rapid cycling applications (10 cycles or more per hour.)

Routine maintenance of Series 92/93 actuators consists primarily of maintaining the air supply system by changing filter elements before they start by-passing and adding oil to lubricators before they run dry.

The second most common cause of shortened service life is misalignment between the valve and the actuator. This can cause premature failure due to excessive side loads on the bearings and gear teeth.

Troubleshooting

Table 1 shows several common symptoms and their remedies.

Symptom	Probable Cause	Check	Remedy
Loss of Power	Low air supply pressure, or damaged O-rings	Air supply pressure at actuator, leakage across O-rings	Boost air supply pressure, repair air supply line leaks, replace O-rings
Binding between valve and actuator	Misalignment of coupling	Alignment	Realign coupling
Valve "pops" out of seat and slams open	Valve torque too high, actuator sized too small, or insufficient air supply flow	Valve torque, actuator sizing calculations, size of air supply lines and/or solenoid valve	Repair valve, use proper size actuator, use larger air supply lines and/or solenoid valve with higher flow

Assembly

To identify component names and shapes, refer to the Exploded View of the actuator shown in Figure 4. The numbers in parentheses ( ) refer to the numbered bubbles in Fig. 4 on page 7. Easiest assembly will result from lubricating all bearings and seals as they are installed. The lubricant should be a high pressure or extreme pressure petroleum grease with a lithium based thickener which meets the NLGI[1] grade 2. Grease which meets this specification should be available from any automotive supply store.

Pinion (3) - Install bearing rings (6 &7) and o-rings (18&19) in their appropriate grooves. Insert the pinion through the large hole in the center of the body (1). With the pinion part of the way into the body, slide the cam (23) over the pinion being careful to align the punch mark on the cam with the punch mark(s) on the pinion. For normal installation and rotation, align the single marks. For *fail open* operation described in *Method 2* above, align the single mark on the cam with the two marks on the pinion. For *fail open* operation described in *Method 3* above, align the single marks. Next, install the spacer (24) above the cam. Then insert the pinion through the hole at the top of the body and secure it with the washer (9) and retaining ring (8).

Travel Stop Screws (13) - Slip the o-ring (14) over the flat end of the screw until it is 5-7 threads from the end. Thread the screw into the hole, flat end first. Repeat these steps for the second screw. Thread the lock nuts (12) onto the screws and tighten the nuts against the body. This will seal the

[1] National Lubricating Grease Institute

All information herein is proprietary and confidential and may not be copied or reproduced without the expressed written consent of BRAY INTERNATIONAL, Inc.

The technical data herein is for general information only. Product suitability should be based solely upon customer's detailed knowledge and experience with their application.

The High Performance Company

threads for testing. It is not necessary to set the travel stops at this time as they may have to be re-set when the actuator is installed on the valve.

Pistons (2) - Install the bearing pad (10) on the back of the rack and the o-ring (16) and guide ring (11) in their appropriate piston grooves. The o-ring goes in the groove nearest the rack. With the ports on the actuator body toward you, turn the pinion so that the slot is approximately 45° to the right of perpendicular with the long side of the body. Grasp the pistons in the spring pockets so that the piston in the right hand has the bearing pad toward you and the piston in the left hand has the bearing pad away from you. Slide the pistons into the body so that they both engage the teeth on the pinion at the same time. Apply enough steady force to compress the o-ring into the body bore. At this point, you may continue pushing or use a wrench on the top of the pinion to pull the pistons into the body. Check three things now. Did the pinion turn clockwise as the pistons moved toward the center of the body? Is the slot in the top of the pinion within a few degrees of perpendicular to the long side of the body? Are the pistons the same distance in from the end of the body? (Check this carefully because it is very critical.) If the answer to all three questions is yes, proceed to install the end caps. If the answer to any one question is no, use a wrench on the pinion to drive the pistons out of the body and repeat the insertion process. It is not necessary to remove the pistons from the body unless the answer to the first question is no. It is only necessary to disengage the piston rack from the pinion.

NOTE: The procedure described here is the "standard" method. For fail open actuators, refer to the *Method 2* or *Method 3* above.

End Caps(4) - Install the o-ring (17) in the groove. Attach the end cap to the body with the 4 bolts (15) and washers (20) making certain that the straight part of the o-ring groove is toward the bottom of the body. The air pressure will not flow to the outboard side of the pistons if the straight part of the o-ring groove is at the top.

Position Indicator (21) - Install the position indicator pointer on the top of the pinion and secure it with the flat head screw (22). Normally, the long axis of the pointer will be parallel to the groove in the pinion. If the actuator is installed across the pipe line, as described in Method 1 above, the indicator should be turned so that it is in line with the butterfly valve disc or port in the ball or plug valve.

Final Assembly and Testing

Connect the compressed air supply to the actuator input ports. Cycle the actuator fully open and fully closed to check for proper travel and absence of air leaks. If compressed air is applied to Port A and the actuator reaches the end of travel, there should be no air flow out of Port B, and vice versa. There should be no air flow between the end caps and the body, through the travel stops, or out the top or the bottom of the pinion. A solution of soap and water applied to the sealing points can indicate leaks that are too small to be audible.

Disassembly

Disconnect the compressed air from the actuator. If the actuator is installed on a valve, remove it and take it to a clean work area, if possible. Remove the indicator pointer. Remove both end caps by loosening the hex head end cap bolts. Remove both pistons by rotating the pinion counterclockwise until the piston heads are protruding from the body. Pull the pistons out. Take off the pinion retaining ring and acetal washer, then remove the pinion from the body. The pinion bearings, o-rings, cam and spacer may then be removed.

Adding Spring Cartridges

Move the pinion to the fully closed (0°) position. Remove the end caps and insert the desired number of spring cartridges into the end cap pockets, up to a maximum of six cartridges per end cap. See preferred placement of the spring cartridges below.

All information herein is proprietary and confidential and may not be copied or reproduced without the expressed written consent of BRAY INTERNATIONAL, Inc.

The technical data herein is for general information only. Product suitability should be based solely upon customer's detailed knowledge and experience with their application.

The High Performance Company

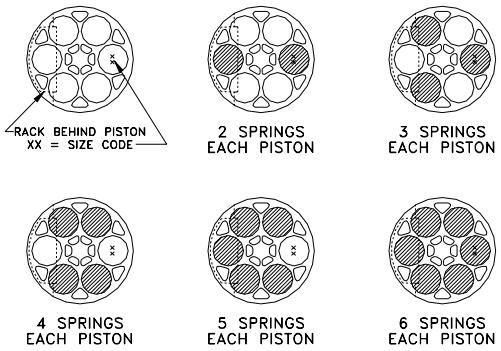

Figure 2

Align the end cap with the body so the spring cartridges fit into the piston pockets. Attach the end caps to the body with the hex head end cap bolts. Tighten the bolts gradually in a diagonal sequence.

Proceed to Final Assembly and Testing.

Removing Spring Cartridges

Disconnect the compressed air from the actuator. An actuator with spring cartridges installed and no compressed air connected will move to the spring fail position. This may be either fully closed (0°) or fully open (90°). In either case, when the spring fail position is reached, remove the end caps by gradually loosening the hex head end cap bolts in a diagonal sequence. Remove the spring cartridges. Replace the end caps and tighten the bolts gradually in a diagonal sequence. CAUTION: Do Not Allow a Single Bolt to Hold the Fully Compressed Springs.

Proceed to Final Assembly and Testing.

General Pneumatic System Recommendations

To maintain maximum efficiency with the Series 92/93 actuator, as well as many other pneumatic devices, the following suggestions are offered:

- Air supply lines should be run in accordance with a Standard Piping Practice, and should not have exaggerated loops which may trap condensate.
- All pipe ends should be thoroughly cleaned and deburred after cutting to ensure that the pipeline is clear of cuttings.
- Where air pipelines are subjected to extremes of temperature, the system should be fitted with air drying equipment.
- If pipelines are hydraulically tested, the lines should be "blown down" with high pressure air to clear all water prior to connecting the lines to the actuator.
- Where a system is dependent on air filter equipment, the air filters should be in positions that allow easy access for maintenance and/or draining.
- Where pneumatic valve positioners or pneumatic controllers are installed in a valve actuator assembly, oil mist lubricated air should not be used unless the manufacturer states specifically that the positioner or controller is compatible with lubricated air. In general, lubricated air is not recommended for a positioner.
- Where pipe fitting sealants or tapes are used, they should be applied to the male threads only. When applied to female threads, excess compound or tape can be transmitted into the actuator control lines and cause malfunctions in downstream equipment.

All information herein is proprietary and confidential and may not be copied or reproduced without the expressed written consent of BRAY INTERNATIONAL, Inc.

The technical data herein is for general information only. Product suitability should be based solely upon customer's detailed knowledge and experience with their application.

The High Performance Company

Act Size	AIR	A	B	C	D	E	F	G	H	J	K	L	M	N	P
63	1/4	1.97	2.76	.55	.40	4.53	5.58	1/4–20UNC	5/16–18UNC	.38	–	1.38	3.46	1.72	1.38
83	1/4	1.97	2.76	.75	.51	5.43	7.40	1/4–20UNC	5/16–18UNC	.50	–	1.46	4.27	2.02	1.79
92	1/4	1.97	2.76	.75	.51	5.78	8.59	1/4–20UNC	5/16–18UNC	.50	–	1.46	4.61	2.18	1.97
118	1/4	2.76	4.92	1.18	.87	7.28	11.90	5/16–18UNC	1/2–13UNC	1.12	–	2.20	5.52	2.53	2.37
127	1/4	2.76	4.92	1.18	.87	8.09	12.31	5/16–18UNC	1/2–13UNC	1.12	–	2.20	6.32	2.72	2.70
160A	1/4	–	4.92	1.18	.87	9.36	15.54	–	1/2–13UNC	1.12	–	2.20	7.80	3.07	3.39
160B	1/4	–	4.92	1.38	.39	9.36	15.54	–	1/2–13UNC	1.12	2.00	2.38	7.80	3.07	3.39

Act Size	Q	S	T	U	V
63	1.58	.89	.79	.47	7.58
83	1.58	.89	.79	.47	8.06
92	1.58	.94	.79	.47	9.91
118	1.58	1.36	.79	.47	15.50
127	1.58	1.36	.79	.47	16.71
160A	2.56	1.39	1.18	.75	18.08
160B	2.56	1.39	1.18	.75	18.08

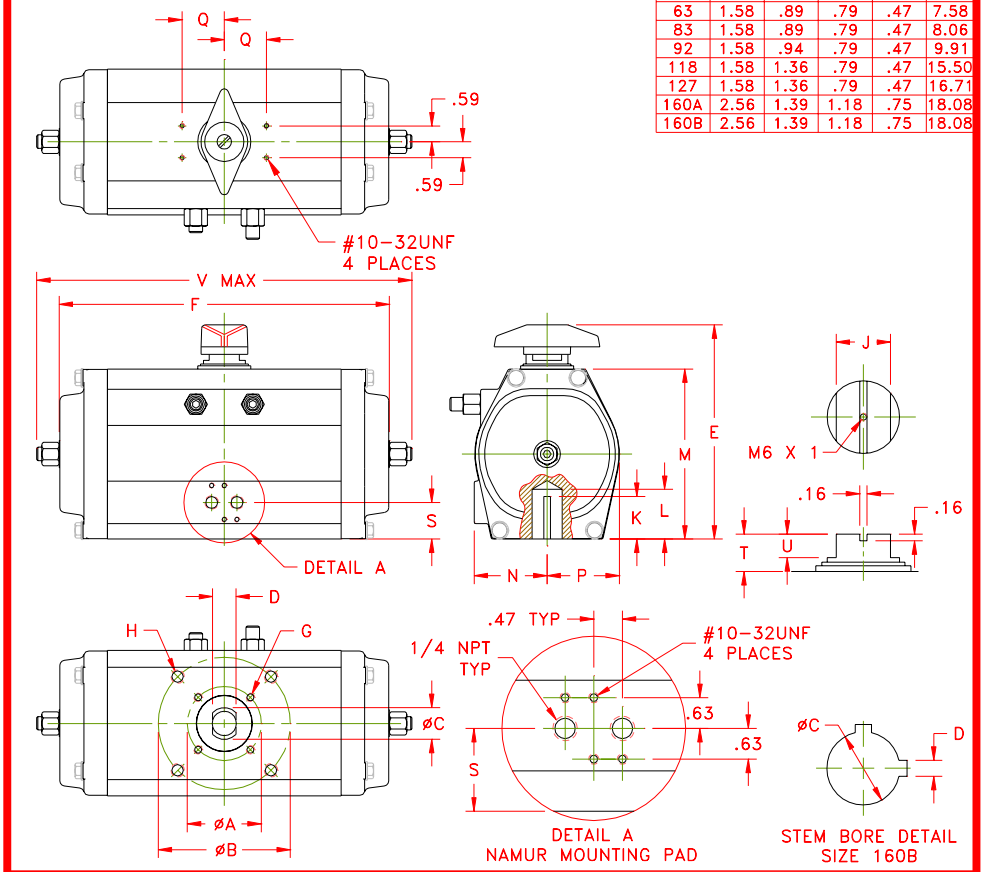

NOTES: SERIES 92 ACTUATORS (DOUBLE ACTING) AND SERIES 93 (SINGLE ACTING) ARE DIMENSIONALLY THE SAME.

Customer/Project _____

Inq./P.O. No. _____

Bray Order No. _____

Certified Correct By _____ Date _____

DIMENSIONS (Inches)
PNEUMATIC ACTUATOR, SERIES 92/93, SIZES 63 – 160,
WITH INTERNAL BI-DIRECTIONAL TRAVEL STOP
& EXTERNAL TRAVEL STOPS

Bray CONTROLS
A Division of BRAY INTERNATIONAL, Inc.

SHEET 1 OF 1 | REV. 1
DRAWING NO. ES11A-0460

ERN 7456

Figure 3

All information herein is proprietary and confidential and may not be copied or reproduced without the expressed written consent of BRAY INTERNATIONAL, Inc.

The technical data herein is for general information only. Product suitability should be based solely upon customer's detailed knowledge and experience with their application.

The High Performance Company

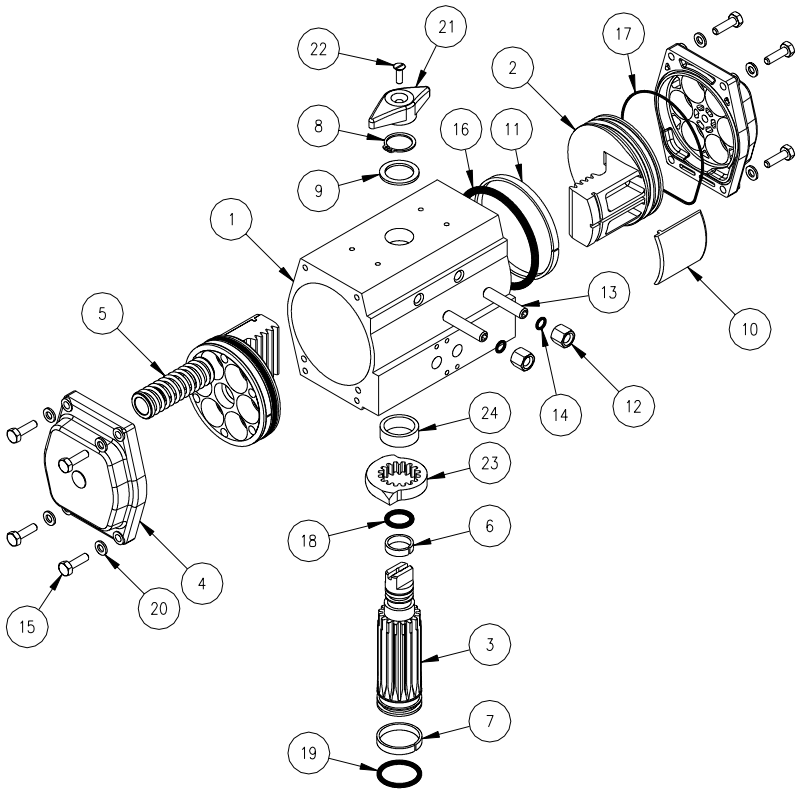

Figure 4
Series 92/93 Exploded-view

Item No	Qty.	Description
1	1	Body
2	2	Piston
3	1	Pinion
4	2	End Cap
5	12 max.	Spring Cartridge
6	1	Upper Pinion Bearing
7	1	Lower Pinion Bearing
8	1	Retaining Ring
9	1	Washer, Acetal
10	2	Bearing Pad, Acetal
11	2	Guide Ring, Acetal
12	2	Lock Nut

Item No	Qty.	Description
13	2	Travel Stop Screw
14	2	O-ring, Travel Stop
15	8	Hex Head Cap Screw
16	2	O-ring, Piston
17	2	O-ring, End Cap
18	1	O-ring, Upper Pinion
19	1	O-ring, Lower Pinion
20	8	Washer, Stainless Steel
21	1	Position Indicator Pointer
22	1	Flat Head Screw
23	1	Cam, Internal Travel Stop
24	1	Spacer, Int. Travel Stop

All information herein is proprietary and confidential and may not be copied or reproduced without the expressed written consent of BRAY INTERNATIONAL, Inc.

The technical data herein is for general information only. Product suitability should be based solely upon customer's detailed knowledge and experience with their application.

The High Performance Company



Bray®

PNEUMATIC ACTUATOR

SERIES 92/93 Rack & Pinion
Double Acting & Spring Return

The
High
Performance
Company

SERIES 92/93

Styling, strength, compactness, and simplicity of design have been combined to produce the best rotary actuator on the market today. Bray Controls introduces this newest line of high performance, highest quality pneumatic actuators, the Series 92/93.

Engineering excellence and precision manufacturing has produced a modular product line with reduced overall size requirements and economic savings. In addition all Brayline Accessories are fully modular and directly mount to the actuator – providing flexibility and efficiency at reduced cost.

Bray Series 92/93 actuators are rack and pinion, opposed-piston actuators available in two versions: double acting for rotation of 90°, 135° and 180°, and spring return for 90° rotation. Their ideal use is actuating butterfly, ball or plug valves, but they can be applied anywhere a rotation of 90°, 135° or 180° is needed. Rotated on low friction acetal bearings, Bray units are well suited to handle offset loads to the gear and output shaft assembly.

The Series 92/93 actuators were designed primarily for pneumatic operation up to a maximum pressure of 140 psig (10 Bar) and for temperature ranges of -40°F (-40°C) to +200°F (+95°C). For higher and lower temperature applications, consult factory.

All double acting and spring return units are suitable for both on-off and throttling applications. Actuators which can be actuated with other media such as hydraulic oil or water are also available as an option.

The Series 92/93 is completely enclosed and self contained. The many features minimize maintenance and provide safe, simple disassembly and assembly.

The INTEGRAL PORTING (**A**) reduces the cost of external tubing that is also easily damaged. The unique, lubricated ACETAL PISTON GUIDES (**B**) and RINGS (**C**). Both have a very low coefficient of friction and absorb the side thrusts of the pistons. The piston cylinder walls in the body are honed to a very fine finish thus reducing the overall coefficient of friction. These features extend the life of the actuator and make the Series 92/93 one of the most efficient actuators on the market.

The OUTPUT SHAFT BEARINGS (**D**) on the top and bottom of the pinion are made of low-friction acetal.

The OUTPUT SHAFT and PINION GEAR (**E**) are one-piece, manufactured from hardened alloy steel and zinc-plated for corrosion protection.

The SHAFT POSITION INDICATOR (**F**) clearly shows open or closed position and is easily removable for MANUAL OVERRIDE FUNCTION of the actuator.

The BODY (**G**) is extruded aluminum with anodized corrosion protective coating. The END CAPS (**H**) are polyester coated for chemical resistance. This coating is resistant to dilute aqueous acids, salts, aliphatic hydrocarbons, detergents, petroleum solvents, alcohols, greases and oils.

The TRAVEL STOP (**I**) adjusting screws limit the travel of the actuator to specific degrees of rotation in both open and closed directions. The PISTONS (**J**) are die-cast aluminum.

The two PNEUMATIC SUPPLY PORTS (**K**) are 1/8" NPT on size 48 actuators. The other sizes have 1/4" NPT ports. NAMUR interface is standard on all actuator sizes.

All Bray Series 92/93 actuators have permanently lubricated factory packed bearings and guides. No further lubrication is necessary under normal operating conditions. All seals, including PISTON SEALS (**L**), are permanently lubricated Buna-N O-rings.

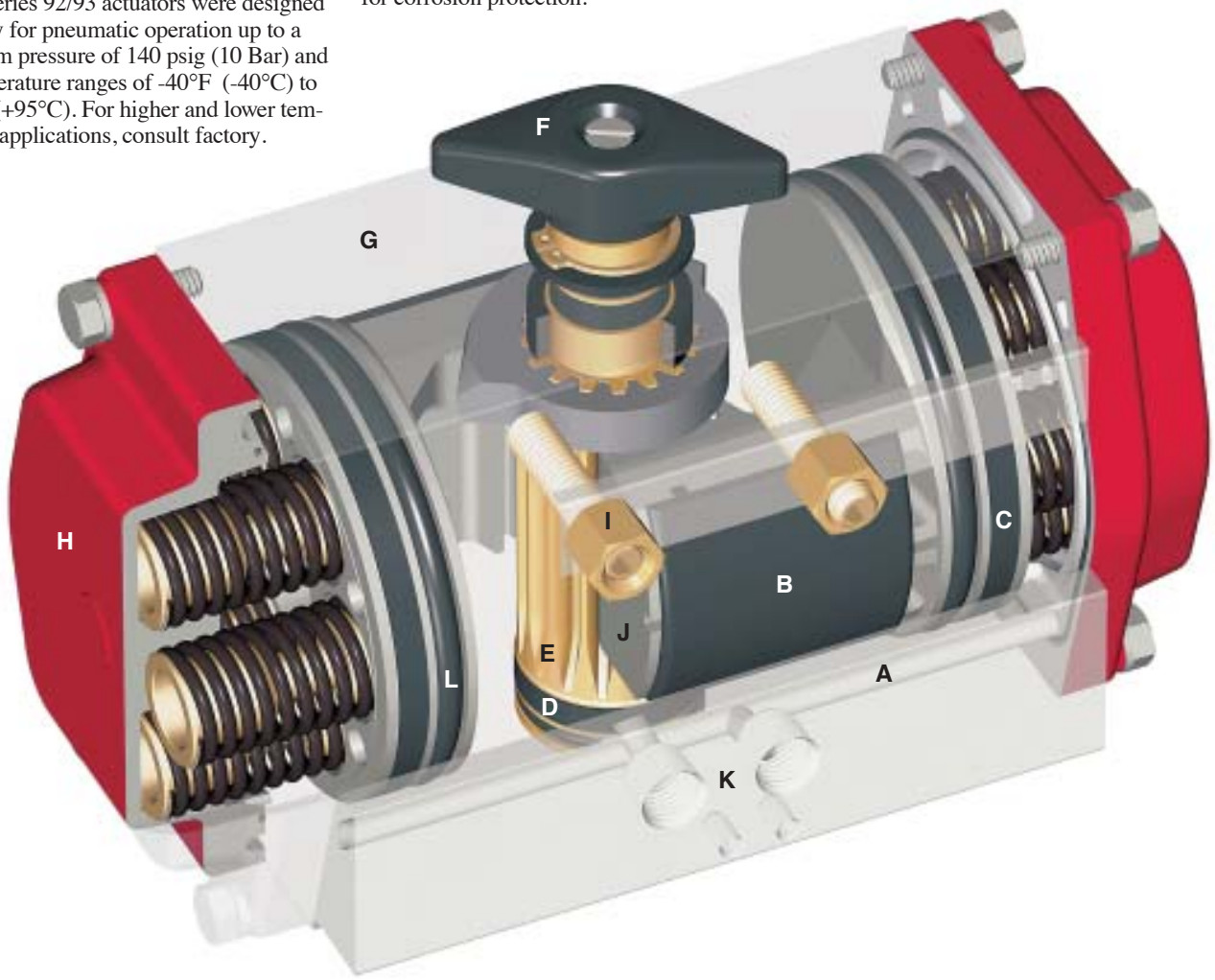



TRAVEL STOP Two independent adjusting screws are located on the center of the output shaft to precisely limit the travel of the actuator to specific degrees of rotation. The travel stops permit bidirectional adjustment of actuator movement in both the open and closed positions.



SPRING RETURN Bray's Series 93 spring return models employ a unique cartridge system. The actuator was designed to save both space and cost. The housing length of the spring return unit is the same as the double acting unit. Converting from double acting to spring return actuation is just a matter of removing the end caps and adding the unique spring cartridges. The actuator can be disassembled and assembled without cumbersome equipment or danger to the installer due to springs releasing. 40, 60, 80, and 100 psi services are standard, optional ratings are available.



DIRECT MOUNTING Bray actuators comply with ISO 5211 dimensions and mount directly to Bray valves without using external linkages. Field installation is simple, misalignment is minimized and contamination buildup between valve and actuator is reduced. Bray can provide linkage for mounting actuators to other devices requiring 90° to 180° rotation.

BrayLINE ACCESSORIES

SERIES 63 3-WAY AND 4-WAY SOLENOID VALVE
For electrical operation of pneumatic actuator on-off functions, Bray Series 63 solenoids are direct-mounted to the actuator by NAMUR interface. The pilot operated spool control valve is convertible from 3-Way (3/2) to 4-Way (5/2). Both watertight (NEMA 4,4X) and explosion proof (NEMA 4,4X,7,9) housings are standard. NPT and IP65 DIN connections are offered with both single and dual coils. The air supply connection is 1/4" NPT and the electrical connection is 1/2" NPT. A manual override screw is located on the top of the valve body. Stainless Steel housings, digital Bus solenoids and a Series 55 speed control that allows independent control in both directions of travel are also available.



VALVE STATUS MONITOR SERIES 50 The Series 50 signals actuator and valve position to local and remote stations. The compact valve status monitor mounts directly to the top of the actuator. Features include finger-touch control cams, captive cover bolts, local position indicator and two conduit entries for easy wiring. Rated for 15 amps at 125 or 250 volts AC, the Series 50 is provided with internal travel switches that are prewired to a terminal block. Standard switches are two single pole double throw (SPDT) micro switches. Available switch options are 4 micro switches, 2 proximity switches, 2 pneumatic switches or potentiometer for continuous read out. The housing is available in waterproof (NEMA 4,4X) or explosion proof (NEMA 4,4X,7,9).





SERIES 52 VALVE STATUS MONITOR
The Bray 2N1 ProxSensor provides 2 inductive proximity sensors in 1 self-contained, fully sealed, compact enclosure. The 2 sensors are completely encapsulated with epoxy resin in a nylon enclosure for superior moisture, chemical and corrosion protection. Features include LED indicators, high visibility pointer for local position indication, non-magnetic target and multi-pin electrical cable connector. The Series 52 mounts directly to Bray actuators or can be mounted to signal valve position of manually operated valves. AC, DC and NAMUR intrinsically safe versions are available. AC Sensor units operate on 20-250 VAC with a maximum load current of 500mA. DC Sensor units operate on 10-65VDC with a maximum load current of 200mA.



SERIES 67 ELECTRO-PNEUMATIC & PNEUMATIC POSITIONERS
The Bray Series 67 positioners feature a modular design that allows the units and accessories to be freely combined. For use with either double or single acting actuators, they provide direct or reverse operating modes and zero and range adjustments can be set separately. The electro-pneumatic analog positioner accepts either a 0-20 mADC or 4-20 mADC input signal. Advanced microprocessor controlled Digital Analog and *Bus*Smart Intelligent electro-pneumatic positioners are offered for digital control.

Brayline Accessories and Bray Actuators both comply with VDI/VDE 3845 (NAMUR recommendations).

ENGINEERING

Double Acting/ Spring Return

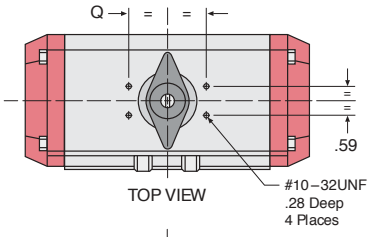

TOP VIEW

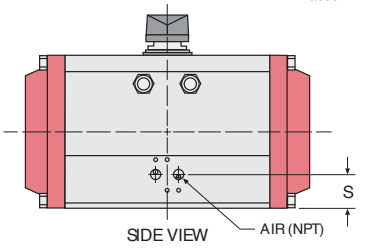

SIDE VIEW

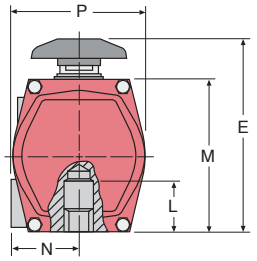

END VIEW

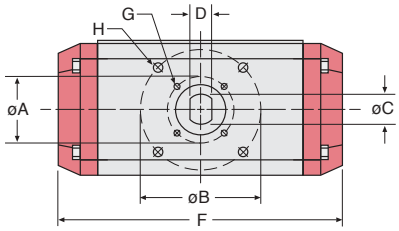

BOTTOM VIEW
ISO 5211 ACTUATOR
MOUNTING PATTERN

NAMUR OUTPUT
SHAFT TOP

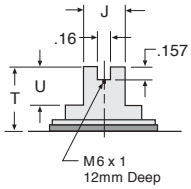

NAMUR SOLENOID
MOUNTING

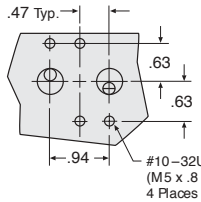

SERIES 92/93 DIMENSIONS

SIZE	48	63	83	92	118	127	160*	210	255‡
AIR NPT	1/8	1/4	1/4	1/4	1/4	1/4	1/4	1/4	1/4
A ISO "F"†	1.42 F 03	1.97 F 05	1.97 F 05	1.97 F 05	2.76 F 07	2.76 F 07	—	4.92 F 12	6.50 F 16
B ISO "F"†	1.97 F 05	2.76 F 07	2.76 F 07	2.76 F 07	4.92 F 12	4.92 F 12	4.92 F 12	6.50 F 16	7.87x4.72 Rect.
C	.55	.55	.75	.75	1.18	1.18	1.18	1.97	2.50
D	.40	.40	.51	.51	.87	.87	.87	.47	.62
E	3.88	4.53	5.43	5.78	7.28	8.09	9.36	11.45	13.35
F	4.00	5.58	7.40	8.59	11.90	12.31	15.54	17.80	26.70
G (UNC)	10-32 x .23	1/4-20 x .32	1/4-20 x .32	1/4-20 x .32	5/16-18 x .46	5/16-18 x .46	—	1/2-13 x .78	M16x2 x 28mm
H (UNC)	1/4-20 x .25	5/16-18 x .40	5/16-18 x .40	5/16-18 x .40	1/2-13 x .69	1/2-13 x .69	1/2-13 x .75	5/8-11 x 1.11	M16x2 x 28mm
J	.38	.38	.50	.50	1.12	1.12	1.12	1.12	1.12
L	1.30	1.38	1.46	1.46	2.20	2.20	2.20	2.76	4.25
M	2.50	3.46	4.27	4.61	5.52	6.32	7.80	10.04	11.89
N	1.60	1.72	2.02	2.18	2.53	2.72	3.07	4.25	4.75
P	2.19	3.11	3.83	4.17	4.91	5.44	6.82	8.83	10.75
Q	1.58	1.58	1.58	1.58	1.58	1.58	2.56	2.56	2.56
S	1.25	.89	.89	.94	1.36	1.36	1.39	1.44	1.50
T	1.10**	.79	.79	.79	.79	.79	1.18	1.18	1.18
U	.47	.47	.47	.47	.47	.47	.75	.75	.75

Note: Double Acting and Spring Return actuators have the same overall dimensions.
† ISO "F" means mounting flange-drilling pattern.
* Dimensions for Size 160A in table. Size 160B (keyed stem version) has C dimension of 1.38 and D dimension of .39.
‡ Dimensions for Size 255A in table. Size 255B actuator has a C dimension of 3.00 and D dimension of .75.
** Size 48 has a T dimension of .79 with use of NAMUR top plate.

Actuator Speeds

SIZE	48	63	83	92	118	127	160	210	255
Open Stroke/ Close Stroke	1/4	1/4	1/4	1/4	1/2	1/2	1	2	2 3/4

Times are in seconds, at 80 PSIG with 6ft. tubing, internal diameter approximately 1/4".

Actuator Weights

SIZE	48	63	83	92	118	127	160	210	255
Double Acting	1.8	3.4	6.1	8.4	16.4	20.9	38.1	65.0	144.0
Spring Return	2.4	4.1	7.9	10.8	21.7	27.3	52.6	95.3	192.6

Weights are in lbs. Spring Return unit weights are with full set of springs per piston.

Actuator Volumes (ins^3)

SIZE	48	63	83	92	118	127	160	210	255
Counter-clockwise	5.7	9.6	24.8	34.8	73.8	96.7	187.5	360.0	750.0
Clockwise	4.8	13.4	32.6	45.9	95.5	130.8	259.6	450.0	900.0

Counter-clockwise: Air volume in cubic inches required to push pistons apart, full travel.
Clockwise: Air volume in cubic inches required to push pistons together, full travel.

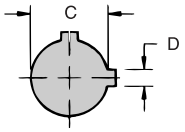

STEM BORE DETAIL
SIZES 210 & 255

TORQUE

DOUBLE ACTING TORQUE CURVE

Series 92 – (Air to Air)

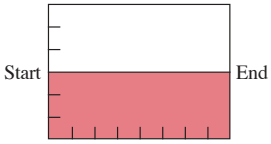

The Series 92 Actuator has a constant output torque throughout travel from start to end, clockwise or counterclockwise rotation.

SERIES 92 ACTUATOR TORQUE DATA

Double Acting Pneumatic Operated
Torque Output (Lb.-Ins.)

Actuator Size	Air Supply Pressure (PSIG)				
	40	60	80	100	120
48	75	113	150	188	225
63	145	221	297	373	449
83	351	536	721	906	1091
92	493	753	1013	1272	1532
118	1058	1615	2171	2728	3285
127	1410	2152	2894	3636	4378
160	2797	4270	5742	7214	8687
210	5783	8826	11870	14914	17957
255	14211	21691	29171	36650	44130

SINGLE ACTING TORQUE CURVES

Series 93 – (Spring Return)

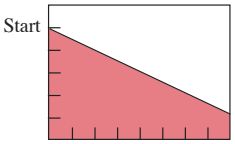

Counterclockwise (Air Stroke)

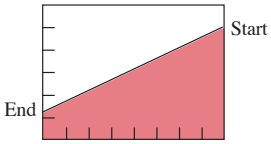

Clockwise (Spring Stroke)

SERIES 93 ACTUATOR TORQUE DATA

Air Operated, With Spring Return, Torque Output (Lb.-Ins.)

Actuator Size	No. Springs per Piston	Air Supply Pressure (PSIG)										Spring Stroke	
		40		60		80		100		120			
		Start	End	Start	End	Start	End	Start	End	Start	End	Start	End
48	1	51	32	89	70	126	107	164	145	201	182	43	24
	2/1	39	10	77	48	114	85	152	123	189	160	65	36
	2			64	27	101	64	139	102	176	139	86	49
	3/2			52	5	89	42	127	80	164	117	108	61
	3					77	21	115	59	152	96	129	73
63	2	91	65	167	141	243	217	319	293	395	369	80	54
	3	64	27	140	103	216	179	292	255	368	331	118	81
	4			113	65	189	141	265	217	341	293	156	108
	5			86	27	162	103	238	179	314	255	194	135
	6					135	65	211	141	287	217	232	162
83	2	210	167	395	352	580	537	765	722	950	907	184	141
	3	156	76	341	261	526	446	711	631	896	816	275	195
	4			281	176	466	361	651	546	836	731	360	255
	5			220	97	405	282	590	467	775	652	439	316
	6					369	185	554	370	739	555	536	352
92	2	310	232	570	492	830	752	1089	1011	1349	1271	261	183
	3	218	101	478	361	738	621	997	880	1257	1140	392	275
	4			386	231	646	491	905	750	1165	1010	522	367
	5			294	94	554	354	813	613	1073	873	659	459
	6					462	229	721	488	981	748	784	551
118	2	692	469	1249	1026	1805	1582	2362	2139	2919	2696	589	366
	3	509	174	1066	731	1622	1287	2179	1844	2736	2401	884	549
	4			883	437	1439	993	1996	1550	2553	2107	1178	732
	5			700	142	1256	698	1813	1255	2370	1812	1473	915
	6					1073	404	1630	961	2187	1518	1767	1098
127	2	880	465	1622	1207	2364	1949	3106	2691	3848	3433	945	530
	3			1357	733	2099	1475	2841	2217	3583	2959	1419	795
	4			1094	261	1836	1003	2578	1745	3320	2487	1891	1058
	5					1568	529	2310	1271	3052	2013	2365	1326
	6					1302	57	2044	799	2786	1541	2837	1592
160	2	1819	1118	3292	2591	4764	4063	6236	5535	7709	7008	1679	978
	3	1399	349	2872	1822	4344	3294	5816	4766	7289	6239	2448	1398
	4			2452	1123	3924	2595	5396	4067	6869	5540	3147	1818
	5			2030	353	3502	1825	4974	3297	6447	4770	3917	2240
	6					3154	1196	4626	2668	6099	4141	4546	2588
210	2	3833	2508	6876	5551	9920	8595	12964	11639	16007	14682	3275	1950
	3	2859	868	5902	3911	8946	6955	11990	9999	15033	13042	4915	2924
	4			4930	2275	7974	5319	11018	8363	14061	11406	6551	3896
	5			3949	638	6993	3682	10037	6726	13080	9769	8188	4877
	6					6022	2031	9066	5075	12109	8118	9839	5848
255	2	9487	6747	16967	14227	24447	21707	31926	29186	39406	36666	7464	4724
	3	7125	3015	14605	10495	22085	17975	29564	25454	37044	32934	11196	7086
	4			12243	6762	19723	14242	27202	21721	34682	29201	14929	9448
	5			9880	3030	17360	10510	24839	17989	32319	25469	18661	11811
	6					14998	6778	22477	14257	29957	21737	22393	14173

SPECIFICATIONS

SPACE SAVING MODULAR PRODUCT LINE

The actuator shall be pneumatically operated and must travel a minimum of 90° in each direction and must be able to overtravel at 3% in each direction past 90°. The actuator shall be totally enclosed and contained in a single enclosure, with no external moving parts. All pneumatic passage ways must be integral to the actuator housing so as to eliminate the need for external tubing. Actuator shall be rack and pinion design, and the output torque shall be linear throughout travel. Actuator shall be provided with pistons that have acetal piston guides and rings thus greatly extending the life of the actuator and reducing friction to the minimum. Actuator must be supplied with two independent travel stop adjustments, the 0° and 90° travel positions have travel adjustments of +5° to –5° (see Diagram A below). The actuator shall be provided with mechanical visual position indicator, and the indicator must be able to be removed easily thus exposing the output shaft for use of manually overriding the actuator when needed. The output shaft and pinion must be of one piece and must be manufactured out of hardened alloy steel and zinc plated for corrosion protection. Actuator shall be able to mount in any position without loss of performance. The actuator shall bolt directly to Bray valve mounting flange without need for any brackets.

Actuator housing shall be anodized aluminum and all external fasteners shall be carbon steel, zinc plated. Springs shall be spring steel, coated for corrosion protection. All seals shall be Buna-N and bearings made of lubricated acetal resin.

The actuator shall be factory lubricated. Actuator design must have smooth housing lines so it will self-drain. The actuator shall be factory tested to ensure proper operation.

STANDARD MATERIALS

Body:	Extruded aluminum alloy, anodized
End Caps:	Die cast aluminum alloy with corrosion resistant polyester coating
Pistons:	Die cast aluminum alloy
Output Shaft/Pinion:	Carbon Steel, zinc plated
Travel Stop:	Alloy Steel
Shaft Bearings:	Acetal
Piston Guides:	Acetal
Fasteners:	Stainless Steel
Springs:	Spring Steel, protective coating
O-Ring Seals:	Buna-N
Options:	Polyester coated body exterior Electroless Nickel plated body exterior Hard Anodized body exterior Stainless Steel pinion

SPRING RETURN – MODULAR DESIGN

The Spring Return System for fail-safe services must be installed in the same housing as the double acting actuator, with no additional housing extensions required, therefore saving weight and space. The spring system must be supplied as a self-contained spring cartridge system. This is a safety feature that ensures disassembly of the actuator without danger of spring release when end caps are removed. Actuator shall be Bray Series 92 or 93 or approved equal.

SERVICE DATA:

Actuators shall be designed for pneumatic operation up to a maximum pressure of 140 PSIG (10 Bar) and for temperature ranges of -40°F (-40°C) to +200°F (+95°C). Filtered air is recommended but not required. All double acting and spring return units shall be suitable for both on-off and throttling applications. Optional units shall be able to operate with other media such as hydraulic oil or water, consult factory for further information.

OPTIONAL EQUIPMENT

See Bray brochure #1030 for Solenoid, brochures #1011 and #1029 for Pneumatic and Electro-Pneumatic Positioners and brochures #1012 and #1015 for Valve Status Monitors.

Diagram A Travel Stop Adjustments

The 0° and 90° travel positions have travel adjustments of +5° max. to –5° min.

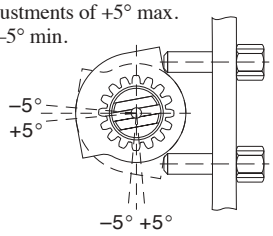

Caution: Care should be taken not to over adjust the travel stops in too far or out too far.

ACTUATOR COMPONENTS

Item No.	Qty.	Description
1	1	Body
2	2	Piston
3	1	Pinion
4	2	End Cap
5*	12 max.	Spring Cartridge Assembly
6	1	Upper Bearing
7	1	Lower Bearing
8	1	Retaining Ring
9	1	Nylon Washer
10	2	Acetal-Bearing Pad
11	2	Acetal-Guide Ring
12	2	Stop Nut
13	2	Travel Adjusting Screw Stop
14	2	O-Ring–Travel Stop
15	1	Acetal Spacer
16	1	Travel Stop
17	8	Hex Head Cap Screw
18	8	Washer
19	2	O-Ring–Piston
20	2	O-Ring–End Cap
21	1	O-Ring–Shaft-Top
22	1	O-Ring–Shaft-Bottom
23	1	Indicator Pointer
24	1	Indicator Pointer Screw

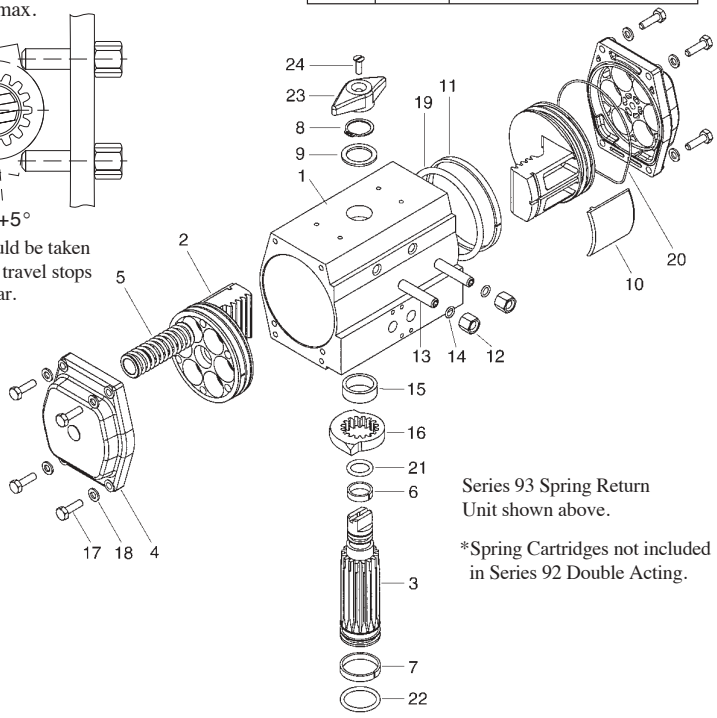

Series 93 Spring Return Unit shown above.

*Spring Cartridges not included in Series 92 Double Acting.

ISO 9001
Certificate Number: 31938

DISTRIBUTOR

All statements, technical information, and recommendations in this bulletin are for general use only. Consult Bray representatives or factory for the specific requirements and material selection for your intended application. The right to change or modify product design or product without prior notice is reserved.

Patented and patents applied for all over the world.
Bray® is a registered trademark of BRAY INTERNATIONAL, Inc.

Bray® CONTROLS
A Division of BRAY INTERNATIONAL, Inc.
13333 Westland East Blvd. Houston, Texas 77041
281.894.5454 FAX 281.894.9499 www.bray.com

© 2003 Bray International. All rights reserved.

LEFT BLANK

MANUAL OPERATOR

LEFT BLANK

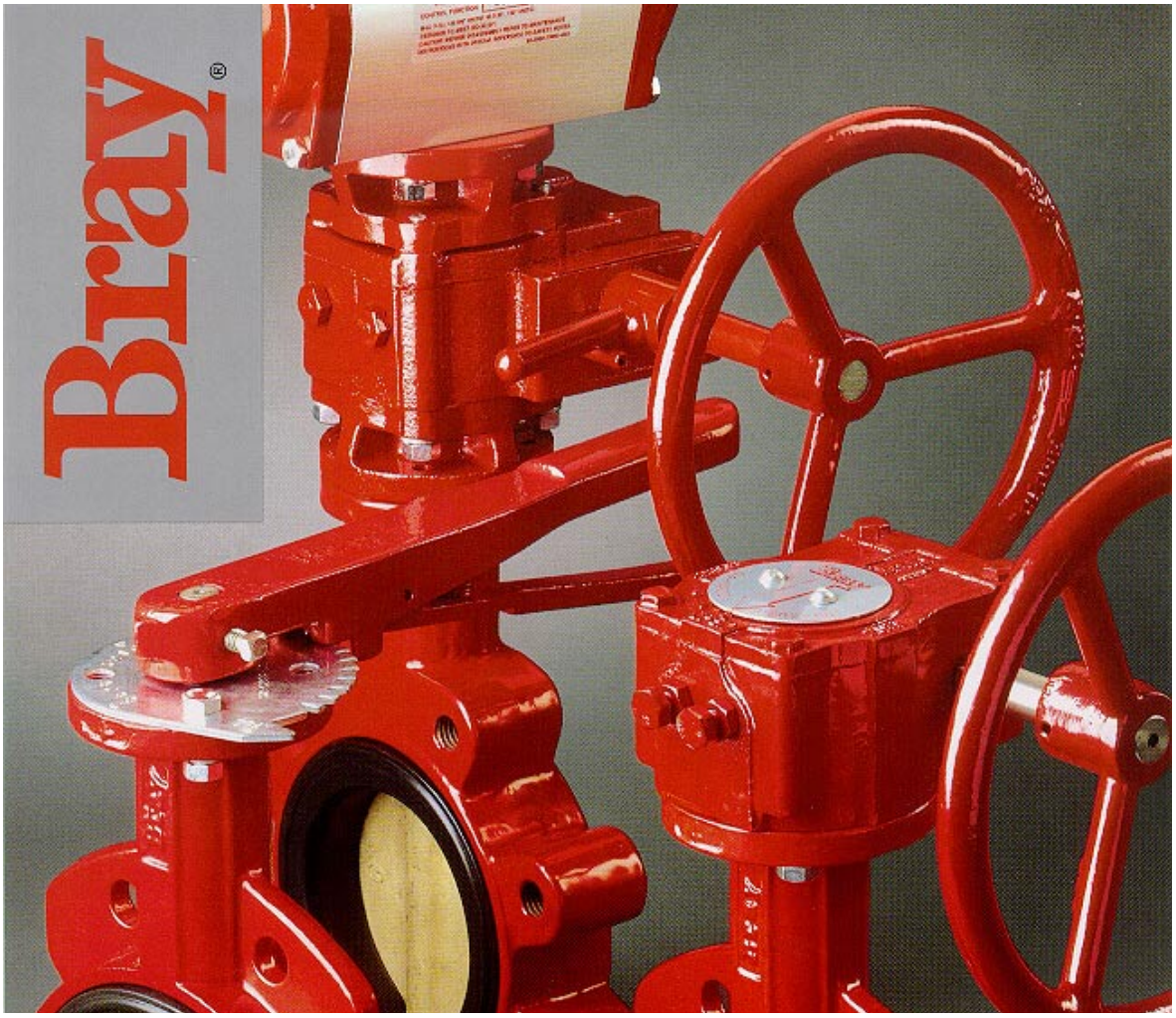

Manual Operators

Handle / Gear Operator / S.S. Gear Operator / Declutchable Gear Operator

Series 1: 1"-12" (25mm-300mm)
Series 4: 2"-54" (50mm-1400mm)
Series 4 Stainless Steel: 1"-16" (25mm-400mm)
Series 5: 2"-36" (50mm-900mm)

Bray Controls proudly offers four operators for manual control of valve position. All manual operators mount directly to Bray valves, and all are epoxy coated for excellent corrosion, abrasion and impact resistance.

SERIES 1 HANDLE & NOTCH PLATE
Bray offers two handles for on-off and throttling service - one for resilient seated valves from 1”-12" (25mm-300mm), and a high torque handle for high pressure valves from 2 ½”-8” (65mm-200mm). These quarter turn handles have a locking spring and a directional pointer for valve disc position indication. Bolted notch plates are offered. For resilient seated valves a 10 position plate is standard. For high pressure valves an 8 position plate is standard. Both contain on-off stops to prevent over rotation of the valve. Optionally available are an infinite position plate, a 180° notch plate, a memory stop, a padlock kit, and a 2” square nut version.

SERIES 4 GEAR OPERATOR
For heavy duty on-off and throttling service of 2”-54” (50mm-1400mm) valves, the Series 4 is self lubricated for smooth, trouble-free operation. The rugged, cast iron body with O-ring body seals is weatherproof to IP65. A self-locking worm and worm gear drive holds the valve in the desired position. Features include a readily accessible handwheel, a valve position indicator and mechanical travel stops which permit field adjustment of valve movement to specific degrees of rotation. Optionally available are chainwheel accessories, padlock kits and 2” square nut versions. A Gear Operator with a Stainless Steel housing is also available for valve sizes 1”-16”.

SERIES 4 STAINLESS STEEL GEAR OPERATOR
Bray Controls is proud to introduce the Series 4 quarter-turn stainless steel gear operator for manual control of valve position. The weatherproof stainless steel housing is ideal for applications in highly corrosive environments as well as in breweries, pharmaceutical and sanitary industries.

SERIES 5 DECLUTCHABLE GEAR OPERATOR
Available for 2”-36” (50mm-900mm) valves, the Series 5 offers the same superior features as the Series 4 gear operator with the added ability to manually override pneumatic actuators or rotate the valve when air pressure is not available. This operator is excellent for the safe handling of spring return actuators. During pneumatic operation, the worm of the gear unit is disengaged. Should the valve require opening or closing in the event of power loss, manual rotation of the declutch lever will provide a camming action and engage the worm to the segmented worm gear, allowing rotation of the valve using the handwheel. The Series 5 can be installed in the filed with existing Bray pneumatic actuators.

The High Performance Company



Standard 10 Position Notch Plate
has been designed to lock the handle securely in place, preventing position change of disc due to line pressure, vibration or shock. *Standard 8 Position Plate for high pressure valves is not shown*.



Infinite Position Notch Plate
for throttling applications, allows for very precise adjustments of valve disc positioning anywhere from 0° to 90°. Positioning is simply a matter of loosening the set knob, moving the handle, then retightening the knob. *For resilient seated valves only.*



Handle and 180° Notch Plate
allows the operator to switch the handle to either side without removing the notch plate from the valve.



Memory Stop
allows the operator to set the maximum amount the valve can open. When set, this limit will remain fixed until the stop is reset.



Padlock Kit
allows the customer to lock the valve in the full open or closed position, tamper proofing the valve. By drilling a new hole in the top plate, the handle can be locked in mid travel.



2" Square nut
is used where the valve is buried under the surface. To rotate valve disc position, the nut is reached with a T handle wrench.



Chainwheel for remote access to valve positioning when the handwheel is not accessible, such as valves positioned high out of reach.
A **Padlock Kit** and a **2" Square Nut** version for buried service are also available with the Series 4 *(not shown)*.



Operation Any residual air pressure in the pneumatic actuator must be vented before operation of the Declutchable Gear Operator. Bray recommends the use of a vent valve to block the incoming air supply and vent residual air. Then engage the declutching lever and rotate the valve using the handwheel. When returning to automatic operation, disengage the manual override by rotating the declutching lever, turning the vent valve to off, then restoring air pressure to the actuator.



SERIES 04 STAINLESS STEEL
FEATURES
For on-off and throttling service of 1"-16" (25mm-400mm) butterfly valves. Torque range is 1,100 to 8,800 lb-in. The self-locking worm and worm gear drive holds the valve in the desired position. Features include an aluminum or stainless steel handwheel, a valve position indicator and mechanical travel stops that permit field adjustment of valve movement to specific degrees of rotation. Offered with a double "D" connection for 1"-12" valves and keyway for 14"-16" valves. Additionally, the Series 4 mounts directly to Bray valves, no brackets or adapters are required.

Bray® CONTROLS

A Subsidiary of BRAY INTERNATIONAL, INC.
13333 Westland East Blvd.,Houston, Texas 77041
Phone: 281.894.5454 Fax: 281.894.9499
©1995 Bray International. All rights reserved

ECCENTRIC MANUAL PLUG VALVE

LEFT BLANK

MILLIKEN
VALVE COMPANY

Millcentric Operation & Maintenance Manual

Series 600

Milliken Valve Company
2625 Brodhead Avenue, Suite 100
Bethlehem, PA 18020
Phone: (610) 861-8803
Fax: (610) 861-8094
Website: www.millikenvalve.com

WRENCH OPERATED MILLCENTRIC

Wrench operated Millcentric valves close by turning the valve 90 degrees clockwise.

Torque Collar

All wrench operated Millcentric valves are equipped with a multifunction device referred to here as a torque collar. This device serves as:

1. Wrench Adapter-2" square
2. Position Indicator
3. Open Memory Stop
4. Closed Memory Stop
5. Running Torque Adjustment

Position Indicator

The top of the plug has an indicator plate to show the approximate plug position. Cast onto the torque collar is an indicator mark which corresponds to a graduated scale cast on the bonnet of the valve. This scale is divided into 15 degree lines and indicates the exact valve opening from full open to full closed.

Open Memory Stop

The torque collar also incorporates an open memory stop feature. The plug can be set by tightening the open memory stop adjustment bolt after the correct flow is achieved. The valve can then be closed for maintenance and reopened to the proper position without resetting the flow.

Closed Memory Stop

The closed memory stop is provided to allow for adjustment to compensate for wear of either the plug coating or the seat. The closed stop is pre-set at the factory and should not require readjustment unless wear occurs.

To adjust the plug for excess plug or seat wear simply rotate the closed stop two turns counter-clockwise then rotate the plug (clockwise) further into the seat and check the flow. Should this movement fail to shut off the flow repeat the above step. Afterward re-set the lock nut to prevent the position from being altered.

Running Torque Adjustment

The nature off eccentric plug valves “camming” action eliminates the majority of the torque prior to seating. To prevent the plug from creeping open or slamming closed, the torque collar maintains a constant drag on the shoulder of the valve bonnet. This component is factory adjusted. However, once the valve has been installed, it is recommended that the torque adjustment nut be further tightened to assure proper friction exists to prevent unwanted closure.

To prevent the plug from unnecessary movement rotate the hex head bolt clockwise until there is a substantial drag on the plug but not so much as to prevent the movement of the plug with the supplied wrench.

Wrench Operated Valve with Torque Collar

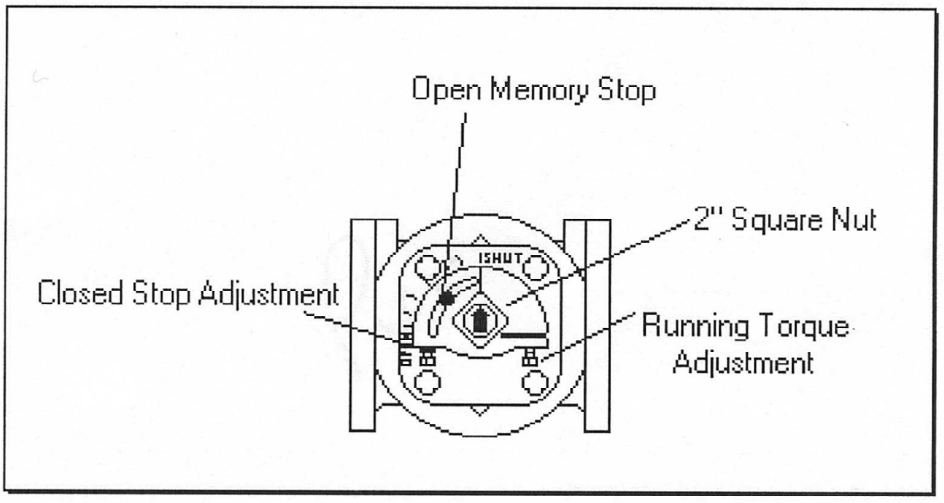

GEAR OPERATED MILLCENTRIC

Gear operated Millcentric valves close by turning the gear input shaft clockwise until closed. Please see specific valve drawing for the exact number of turns to close.

Position Indicator
(Above ground units only)

The top of the gear operator has an indicator plate to show the plug position. This scale, cast on to the gear housing, is divided into 15 degree lines and indicates the exact valve opening from full open to full closed. Buried service units are totally enclosed and sealed for use below grade.

Open and Closed Memory Stops

The closed memory stop is provided to allow for adjustment to compensate for wear of either the plug coating or the seat. The closed stop is pre-set at the factory and should not require readjustment unless wear occurs.

To adjust the plug for excess plug or seat wear simply rotate the closed stop two turns counterclockwise the rotate the handwheel or nut (clockwise) to move the plug further into the seat and check the flow. Should this movement fail to shut off the flow repeat the above step. Afterward re-set the lock nut to prevent the position from being altered.

Gear Operated Valve

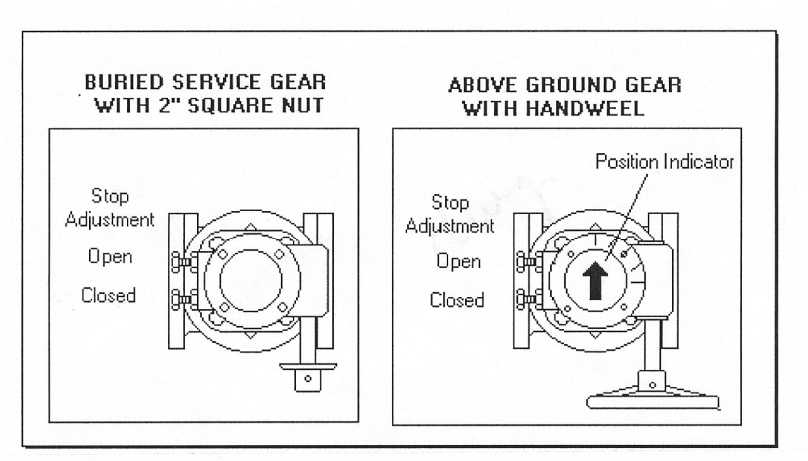

GEAR OPERATED VALVE

The Millcentric is designed and manufactured to be a long life valve under normal circumstances. It does not require any routine maintenance. Cycling the valve from full open to full closed on an annual basis will increase the life of the valve and operator components.

However if maintenance is required, due to unusual wear or service conditions the following procedure should be followed:

DISASSEMBLY PROCEDURE

BODY

The Millcentric is a top entry valve; therefore the body can remain in line during this operation. Remove the bolts holding the gear operator cap in place. Remove cap and remove the internal bolts fastening the gear operator to the valve body. Remove the gear operator and set aside. With the valve de-pressurized, remove the hexagonal head cap screws the hold the bonnet to the valve body. Remove the bonnet, leaving the plug in the body. At this point the plug, PTFE thrust washers, journal bearings and bonnet “O” ring are accessible and can be removed and replaced.

Care should be taken not to damage the plug elastomer or bonnet “O” rings upon reassembly.

Reverse the above process for reassembling the Millcentric.

STEM SEALS

Remove the bolts holding the gear operator cap in place. Remove the cap and remove the internal bolts fastening the gear operator to the valve body. Remove the gear operator and set aside.

With the valve de-pressurized, using internal snap ring pliers, remove the snap ring and thrust washer. The “U” cup seals can now be pried out of the seal cavity. To replace reverse the above process.

WRENCH OPERATED VALVE

The Millcentric is designed and manufactured to be a long life valve under normal circumstances. It does not require any routine maintenance.

However if maintenance is required, due to unusual wear or service conditions the following procedure should be followed:

DISASSEMBLY PROCEDURE

BODY

The Millcentric is a top entry valve; therefore the body can remain in line during this operation. Remove the star washer fastening the torque collar to the plug stem. Remove the torque collar and set aside. With the valve depressurized, remove the hexagonal head cap screws that hold the bonnet to the valve body. Remove the bonnet, leaving the plug in the body. At this point the plug, PTFE thrust washers, journal bearings and bonnet “O” ring are accessible and can be removed and replaced.

Care should be taken not to damage the plug elastomer or bonnet “O” rings upon reassembly.

Reverse the above process for reassembling the Millcentric.

STEM SEALS

Remove the star washer fastening the torque collar to the plug stem. Remove the torque collar and set aside.

With the valve depressurized, using internal snap ring pliers, remove the snap ring and thrust washer. The “U” cup seals can now be pried out of the seal cavity. To replace reverse the above process.

THREADED WRENCH OPERATED VALVE
½"-2"

The Millcentric is designed and manufactured to be a long life valve under normal circumstances. It does not require any routine maintenance...

However if maintenance is required, due to unusual wear or service conditions the following procedure should be followed:

DISASSEMBLY PROCEDURE

BODY
The Millcentric is a top entry valve; therefore the body can remain in line during this operation. Remove the spring pin fastening the torque collar to the plug stem. Remove the torque collar and set aside. With the valve de-pressurized, rotate the bonnet counterclockwise to loosen the bonnet from the valve body. Remove bonnet leaving the plug in the body. At this point the plug, journal bearings and bonnet "O" ring are accessible and can be removed and replaced.

Care should be taken not to damage the plug elastomer or bonnet "O" rings upon reassembly.

Reverse the above process for reassembling the Millcentric.

STEM SEALS
Remove the spring pin fastening the torque collar to plug stem. Remove the torque collar and set aside. With the valve depressurized, rotate the bonnet counterclockwise to loosen the bonnet from the valve body. Remove the bonnet, leaving the plug in the body. At this point the stem "O" rings are accessible and can be removed and replaced.

Reverse the above process for reassembling the Millcentric

ACTUATED VALVES

The Millcentric is designed and manufactured to be a long life valve under normal circumstances. It does not require any routine maintenance. Cycling the valve from full open to full closed on and annual basis will increase the life of the valve and operator components.

However, if maintenance is required, due to unusual wear or service conditions, the following procedure should be followed:

DISASSEMBLY PROCEDURE

BODY

The Millcentric is a top entry valve; therefore, the body can remain in line during this operation. Remove the bolts holding the actuator bracket to the valve cap. You can then remove the actuator from the valve. With the valve de-pressurized, remove the hexagonal head cap screws that hold the bonnet to the valve body. Remove the bonnet, leaving the plug in the body. At this point the plug, PTFE thrust washers, journal bearings, and bonnet “O” ring are accessible and can be removed and replaced.

Care should be taken not to damage the plug elastomer or bonnet “O” rings upon reassembly.

Reverse the above process for reassembling the Millcentric

STEM SEALS

With the valve de-pressurized, using internal snap pliers, remove the snap ring and thrust washer. The “U” cup seals can now be pried out of the seal cavity. To replace, reverse the above process.

FUNCTION

The Millcentric valve is a non-lubicated eccentric plug valve designed for use in water and waste water applications, and HVAC systems.

TEMPERATURE LIMITS

The operating temperature is controlled by the elastomer specified and are as follows:

Elastomer	***High Temp***	***Low Temp***
Buna N	225 F	-20 F
EPDM	250 F	-35 F
Neoprene	225 F	-20 F
Viton	400 F	-10 F

Pressure Limits

The operating pressure differs with the valve size range and configuration, and are as follows:

FIGURE 600/601-ANSI Class 125

Size Range	***Rated Pressure****	***Shell Hydro***	***Seat Test***
½”-12”	175 psi	350 psi	210 psi
14”-36”	150 psi	300 psi	180 psi
42”-54”	125 psi	250 psi	150 psi

*Pressure Ratings are given at ambient temperatures.

LUBRICATION SCHEDULE

The Millcentric is a low maintenance non-lubricated eccentric plug valve. As such there is no required lubrication of the valve itself.

The manual gear operators, where applicable are also sealed greased lubricated units and should not require any type of periodic lubrication. Should the unit need to have lubricant replaced use **Shell "Alvania" #2**

SAFETY

When the gear actuators have the cover removed, extra caution should be taken to make sure hands or fingers are away from moving parts. Close fitting clothing should be worn so as to avoid getting caught in the moving gears.

STORAGE PROCEDURE

Milliken valves are shipped with the plugs in the open position. Care should be taken to maintain this position while the valves are in storage prior to installation in the pipeline.

Flanged valve end protectors (if supplied) should be kept on the valves until they are ready for installation. Special care should be given to mechanical joint valves to prevent damage to the internal pipe seating area.

Valves should be stored where internal contamination due to sand and mud can be kept to a minimum. Care should be taken to avoid direct sunlight on the plug elastomer during storage.

Electric, hydraulic and pneumatic valve actuators should be cared for in accordance with the storage instructions of the actuator manufacturer.

TROUBLE SHOOTING

WRENCH OPERATED VALVES

SYMPTOM	POSSIBLE CAUSE	ACTION
Valve Will Not Open	Broken or Misadjusted Torque Collar	Adjust or Replace Torque Collar
	Obstruction in Line	Remove Obstruction
	Excessive Line Pressure	Reduce Pressure
	Elastomer Damage	Replace Plug
Valve Will Not Close	Broken or Misadjusted Torque Collar	Adjust or Replace Torque Collar
	Obstruction in Line	Remove Obstruction
	Excessive Line Pressure	Reduce Pressure
	Elastomer Damage	Replace Plug
Valve Will Not Shutoff Flow.	Improper Stop Adjustment	Adjust Closed Stop
	Obstruction in Line	Remove Obstruction
	Excessive Line Pressure	Reduce Pressure
	Elastomer Damage	Replace Plug
Valve Leaks at Plug Stem	Damaged “U” Cup Seal	Replace “U” Cups

SPARE PARTS LIST

COMPONENT	NUMBER PER VALVE
Journal Bearings	2
PTFE Thrust Washers	2
“U” Cup Seals	2
Elastomer Coated Plug	1
Bonnet “O” Ring Seal	1

If required these parts can be ordered from:

Milliken Valve Company, Inc.
Tele: (610) 861-8803
Fax: (610) 861-8094

When ordering please furnish the size, figure number and component name:
For example: 6” Figure 601N1AG-Journal Bearing

TROUBLE SHOOTING

GEAR OPERATED VALVES

SYMPTOM	POSSIBLE CAUSE	ACTION
Valve Will Not Open	Bent input Shaft	Replace Worm Shaft
	Obstruction in Line	Remove Obstruction
	Excessive Line Pressure	Reduce Pressure
	Elastomer Damage	Replace Plug
Valve Will Not Close	Bent Input Shaft	Replace Worm Shaft
	Obstruction in Line	Remove Obstruction
	Excessive Line Pressure	Reduce Pressure
	Elastomer Damage	Replace Plug
Valve Will Not Shutoff Flow	Improper Stop Adjustment	Adjust Closed Stop
	Obstruction in Line	Remove Obstruction
	Excessive Line Pressure	Reduce Pressure
	Elastomer Damage	Replace Plug
Valve Leaks at Plug Stem	Damaged “U” Cup Seal	Replace “U” Cups

INSTALLATION

When installing the valves, the seat end should be noted. The seat end of the valve is cast in raised letters on the appropriate flange of the valve. Generally, straightway valves should be installed with the highest pressure applied from the opposite end from the seat. This will tend to push the plug into the seat. On pump discharge installation the seat end should be towards the pump.

In case where shut-off is required in both directions, the valve should be installed so that the highest differential pressure at shut-off is opposite the seat end.

When the service of a clogging type, with suspended solids likely to build up in the valve body, it is recommended that the valve be installed with the media entering the seat end first. In extreme cases, the valve should be installed with the plug horizontal and rotating upward into to the top portion of the valve body cavity to open.

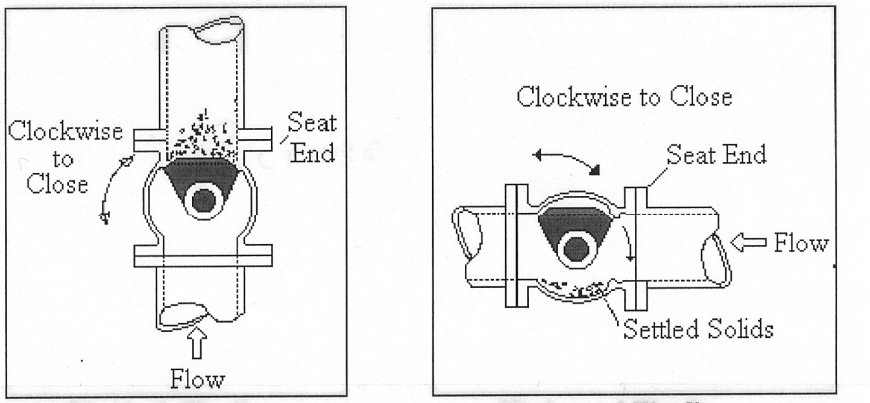

Class 125 flanged end valves have ANSI B16.1 flat faced 125/150 flanges. Standard ANSI B16.21 flanges and gaskets should be used to install the valves in the pipeline. Certain size valves utilize tapped holes on the top and bottom for the flange where a backing nut is not possible. Please check specific drawings for detailed information on sizes and quantities of hexagon head screws required on these valves.

Prior to installing valve, especially ones that are buried, they should be cycled open and closed several times to ensure they are in good working order and have not been damaged during shipment or storage.

ACTUATED VALVES TO REPLACE "U" CUP SEALS

The Millcentric is designed and manufactured to be a long life valve under normal operating conditions. It does not require any routine maintenance. Cycling the valve from full open to full closed on an annual basis will increase the life of the valve and actuator components.

However, if maintenance is required, due to unusual wear or service conditions, the following procedure should be followed:

To replace "U" cup seals on actuated Millcentric valves, remove actuator, remove the internal bolts fastening the actuator to the valve body. Remove the actuator and set aside. Remove the external snap ring and support collar.

Remove the internal snap ring using snap ring pliers. Remove thrust washer. The "U" cup seals are now visible. Using a screwdriver, pry out the old seals.

Apply a small amount of silicone or grease to the new "U" cup seals. This will help them slide in the packing cavity. Put a piece of shim stock into the cavity and put the "U" cup over it. Slide the "U" cup over the stem with shim stock against the stem. This will let any trapped air out of the packing cavity. Now, using two screwdrivers, coax the outer lip of the "U" cup into the cavity while pressing down on the top of the "U" cup with the other screwdriver (see attachment). Continue to do this all the way around until the "U" cup is at the bottom of the packing cavity.

Repeat the procedure with the second "U" cup, and replace the thrust washer and snap ring. Now you can remount the actuator on the valve.

To Replace “U” Cup Seals

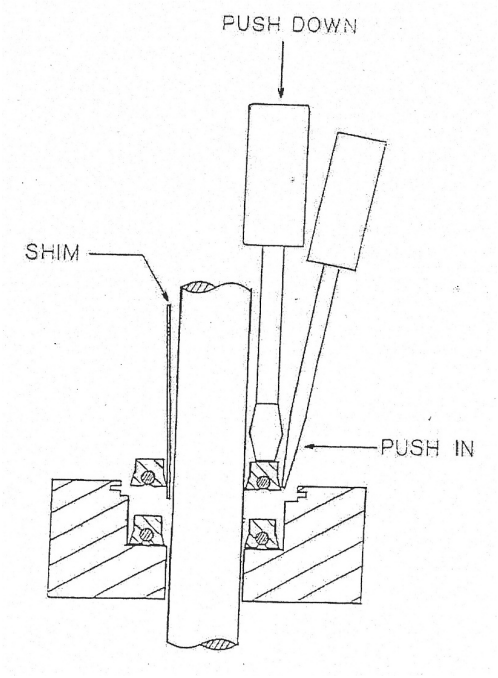

JULY 1999

MILLIKEN

MILLCENTRIC

ECCENTRIC PLUG VALVE



MILLIKEN

MILLCENTRIC

ECCENTRIC PLUG VALVE

The Milliken criteria of quality, reliability, safety and value are embodied in the MILLCENTRIC Eccentric valve, setting higher standards for dependable performance with excellent features achieved by the utilization of the very latest design and manufacturing techniques.

BODY

Conforming to AWWA C504 wall thickness, the Millcentric valve body casting is in ASTM A126 CL B cast iron using high pressure molding techniques. Alternative flanged, grooved or mechanical joint ends are available.
Flange diameter, thickness and drilling conform to ANSI B16.1 Class 125 or 250.
Grooved ends meet AWWA C-606 for ductile or steel pipe. Mechanical joints to AWWA C111 (ANSI A21.11).

SEAT

The Millcentric valve incorporates as standard, on 3" and larger, a welded nickel seat for corrosion and erosion resistance specially profiled for low torque and extended seat life.
An alternative corrosion resistant epoxy seat is available for general service duties.

STEM SEAL

High integrity sealing by combining the advantages of a resilient and abrasion resistant U-Cup seal. From vacuum to high pressure, the self-adjusting sealing system (per AWWA C504) gives positive, trouble-free service and is retained independently of the plug stem or external torque device.

BEARINGS

The plug rotates in permanently lubricated 316 grade stainless steel bearings located in the body and bonnet, along with upper and lower PTFE thrust washers, which ensure consistently low operating torque.

- Computer Aided Design
- High integrity casting
- CNC manufacturing delivers consistent sizes on all components

All complemented by rigorous Quality Control System

PLUG

Supported on integral trunnions, the plug face is covered with a elastomer that is molded 2 1/2" - 12" and vulcanized on 14" and larger to the casting providing tight shut off even under vacuum conditions. High integrity corrosion-free sealing is achieved by a variety of abrasion resistant elastomers which protect the plug right up to the trunnions. When assembled, the light compression of the elastomers onto PTFE thrust washers, prevents entry of abrasive materials into the bearings.

BONNET SEAL

Superior "O" ring sealing with metal/metal contact means lower bolting stresses compared with compression gaskets.

FLOW

The port design (round on 2 1/2" - 12" and rectangular on 14" and larger) with streamlined internal contours gives high capacity straight through flow in the full open position, reducing turbulence and pressure drop and the effect of erosive media. Handling of sludges and slurries is therefore enhanced.

INTERCHANGEABLE

Because of common face to face dimensions with wedge gate valves (3" - 12"), fitting the tight shut-off rotary MILLCENTRIC valve into existing systems is accomplished without pipeline modifications.

TRAVEL STOPS

Adjustable open and closed travel stops are fitted as standard on both wrench and gear operated Millcentric valves.

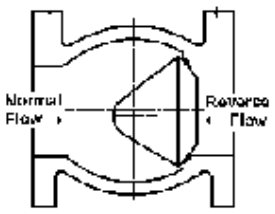

- Valve in closed position for bubble tight shut-off.
- Normal flow direction gives pressure assisted sealing.
- Torques are low even in reverse flow.

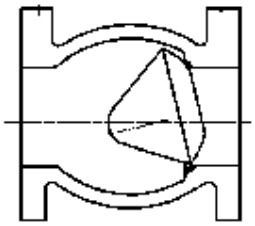

- Plug rotates away from the seat for instant opening.
- Seat wear and operating torque reduced.
- No further seat contact until valve is closed again.

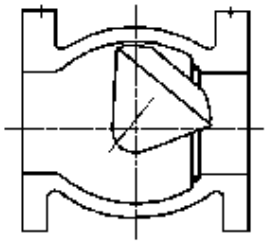

- Design of MILLCENTRIC valve allows modulating control over the full 90° travel.
- Ideally suited for balancing service.
- Standard MILLCENTRIC rotary valve provides control and tight shut-off in one valve.

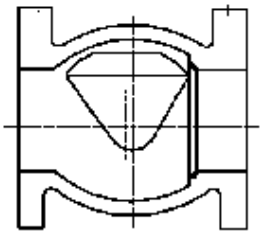

- Plug is out of the flow path when fully open.
- Straight through, uninterrupted smooth flow.
- Round port reduces turbulence and erosion, lowers pumping costs and can be "pigged" to clean the pipeline.

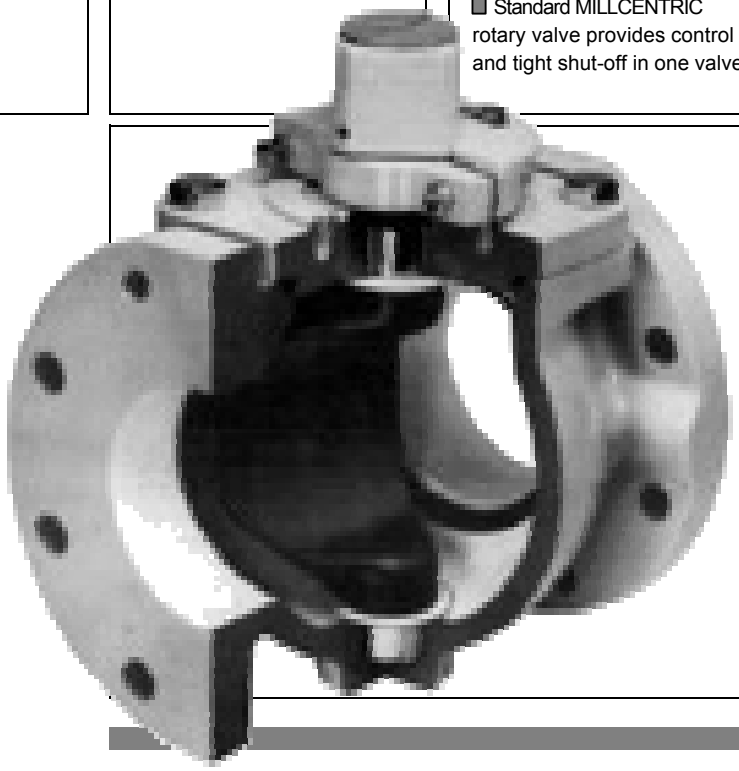

INSTALLATION

The Millcentric valve is suitable for flow and shut -off in either direction. Seat end downstream is the preferred orientation and any reverse flow requirement should be stated at time of order. For use on fluids with suspended solids, installation with the seat upstream and the valve stem horizontal may be preferable; plug rotation to the top of the valve will ensure smooth operation.

IN-LINE MAINTENANCE

In the unlikely event of gland leakage, the stem seals can be easily replaced without removing the bonnet. Access to the body for cleaning or inspection does not require removal from the line.

MODULAR CONSTRUCTION

Design of the bonnet and stem allows for on-site adaptation of gear operators, power actuators, or extension devices on to standard valves. Conversion can be easily undertaken without removing the valve bonnet, thereby minimizing downtime.

POWER OPERATION

Pneumatic, electric or hydraulic operation is available, complete with accessories such as limit switches, solenoid valves and positioners when required.

MATERIALS OF CONSTRUCTION

Item	Component	Material	Specification	Item	Component	Material	Specification
1	Indicator Cap	Plastic		12	Snap Ring	Spring Steel	
2	Star Nut	Steel		13	Washer	Brass	ASTM B-138-675
3	Open Stop	Steel		14	U-Cup Seal	Elastomer	Same as Plug
4	Washer	Steel		15	Capscrew	Steel	
5	Nut	Steel		16	Bonnet	Cast Iron	ASTM A-126 Class B
6	Torque Collar	Ductile Iron	ASTM A-536	17	"O" Ring	Elastomer	Same as Plug
7	Lock Nut	Steel		18	Journal Bearing	Stainless Steel	ANSI 316
8	Torque Bolt	Steel		19	Thrust Washer	PTFE	
9	Lock Nut	Steel		20	Plug	Ductile Iron	ASTM A-536 Grade 65-45-12
10	Closed Stop	Steel		21	Plug Coating	Elastomer	As Specified
11	Travel Stop	Steel		22	Body	Cast Iron	ASTM A-126 Class B

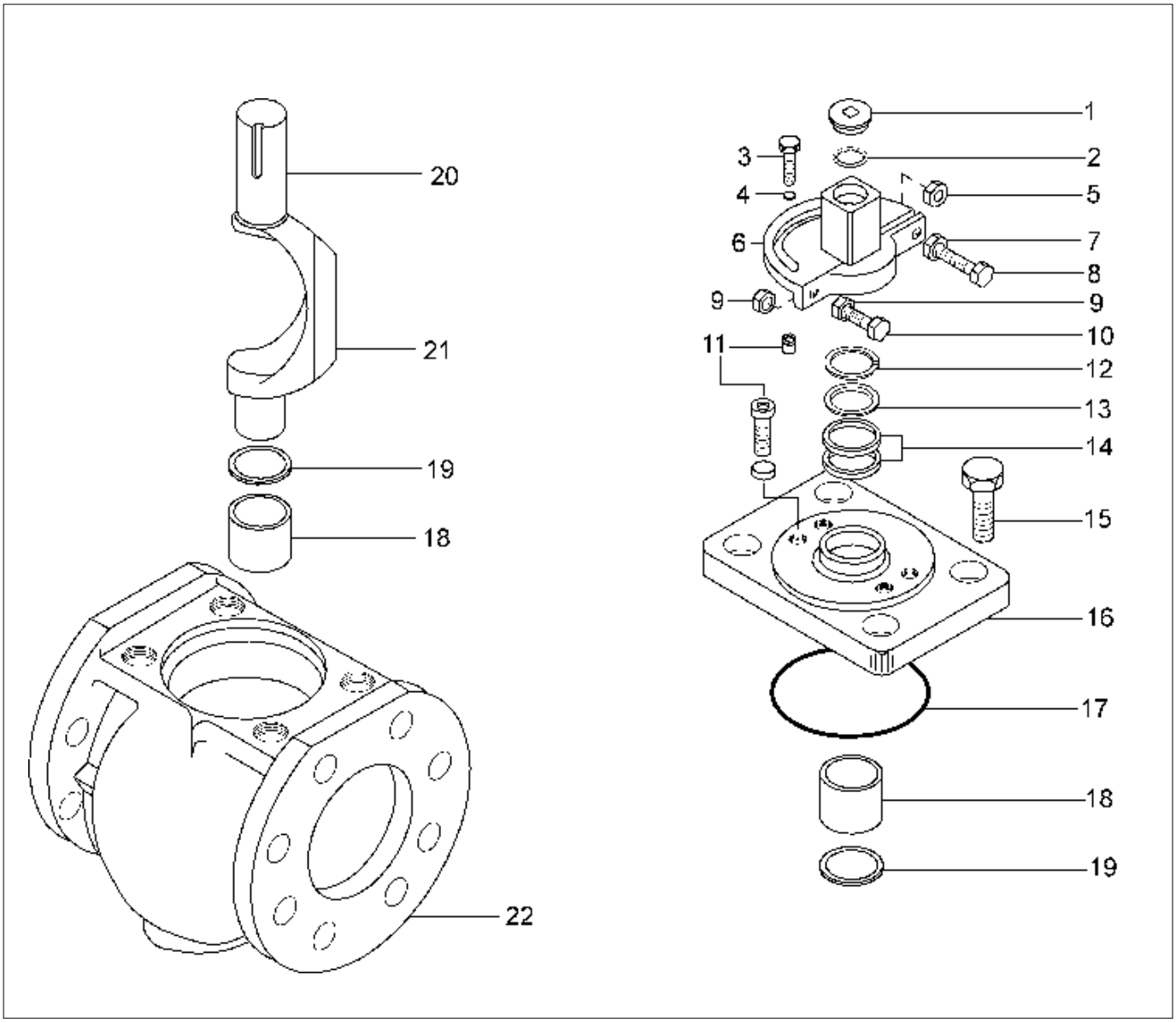

ELASTOMERS AVAILABLE FOR MILLCENTRIC VALVE
Natural rubber is also available.

Nitrile

A general purpose material sometimes referred to as BUNA-N or HYCAR with a -20°F to 225°F temperature range. Used on sewage, water, hydrocarbon and mineral oils.

EPDM

An excellent polymer for use on chilled water through to LP steam applications having a temperature range of -35°F to 250°F. Resistance to many acids, alkalies, detergents, phosphate esters, alcohols and glychols is an added benefit.

Neoprene

This versatile material shows outstanding resistance to abrasion and ozone. Chemical resistance to a wide range of petroleum based products and dilute acids and alkalies. Temperature range -20°F to 225°F.

Viton

Retention of mechanical properties at high temperature is an important feature of this elastomer- temperature range is -10°F to 400°F. It also has excellent resistance to oils, fuels, lubricants and most mineral acids and aromatic hydrocarbons.

PRESSURE RATING

12" and smaller	ANSI 125	175 psi
14"-36"	ANSI 125	150 psi
42" and larger	ANSI 125	125 psi
12" and smaller	ANSI 250	400 psi
14"-36"	ANSI 250	300 psi

Body Hydrotest = 200% of rated pressure
Seat Test = 120% of rated pressure

MILLCENTRIC VALVE - SERIES 600

ORDERING INFORMATION

Valve Types	**Designation**
Mechanical Joint	600
ANSI 125 Flanged	601
ANSI 250 Flanged	602
ANSI 125 Grooved End for Steel Pipe	606S
ANSI 125 Grooved End for Ductile Iron Pipe	606D
Seat	
Nickel	N
Epoxy	E
ElastomerTrim	
EPDM	0
Nitrile (Buna)	1
Viton	2
Neoprene	3
Natural	4
Gear Operators	
Buried Gear with 2" nut	BG
Above Ground Gear with Indicator and Handwheel	AG
Memory Stop Gearbox with Handwheel	MG

Example: 4" 601 N3AG
4" ANSI 125 Flanged with Nickel Seat, Neoprene Elastomer and Above Ground Gear with Indicator and Handwheel

VALVES ARE ONLY SUPPLIED FOR BI-DIRECTIONAL SHUT-OFF IF SPECIFIED AT TIME OF ORDER.

ELASTOMER SELECTION CHART

The chart below is to assist in the selection of elastomers for some common fluids. It doesn't mean other elastomers are not suitable within varying limits. Temperature, concentration, and mixture all affect chemical attack. If there is any doubt regarding compatibility, specific conditions should be referred to engineering for recommendations. The chart below is to serve as a guide only.

Service	Elastomer	Average Uselul Temp. Range
Acetone	EPDM	-35˚F to 250˚F
Air	EPDM	-35˚F to 250˚F
Air w/oil	Nitrile	0˚F to 212˚F
Alcohol, Amyl	EPDM	-35˚F to 250˚F
Alcohol, Aromatic	Viton	10˚F to 250˚F
Alcohol, Butyl	Neoprene	-20˚F to 225˚F
Alcohol, Denatured	Nitrile	0˚F to 212˚F
Alcohol, Ethyl	EPDM	-35˚F to 250˚F
Alcohol, Grain	Nitrile	0˚F to 212˚F
Alcohol, Isosproply	Neoprene	-20˚F to 225˚F
Alcohol, Methyl	EPDM	-35˚F to 250˚F
Ammonia, Anhydrous	Neoprene	-20˚F to 225˚F
Arnmonium Nitrate	EPDM	-35˚F to 250˚F
Ammonia, Water	EPDM	-35˚F to 250˚F
Animal Fats	Nitrile	0˚F to 212˚F
Black Liquor	EPDM	-35˚F to 250˚F
Blast Furnace Gas	Neoprene	-20˚F to 225˚F
Butane	Nitrile	0˚F to 212˚F
Bunker Oil "C"	Nitrile	0˚F to 212˚F
Calcium Chloride	EPDM	-35˚F to 250˚F
Carbon Dioxide.	EPDM	-35˚F to 250˚F
Carbon Monoxide (Cold)	Neoprene	-20˚F to 225˚F
Carbon Monoxide (Hot)	Viton	10˚F to 250˚F
Carbon Tetrachloride	Viton	10˚F to 250˚F
Caustic Soda	EPDM	-35˚F to 250˚F
Cement Sluriy	EPDM	-35˚F to 250˚F
Copper Sulphate	EPDM	-35˚F to 250˚F
Creasote (Coal)	Nitrile	0˚F to 212˚F
Coal Slurry	Nitrile	0˚F to 212˚F
Diesel Fuel No 1	Nitrile	0˚F to 212˚F
Diethylene Glycol	EPDM	-35˚F to 250˚F
Ethylene Glycol	EPDM	-35˚F to 250˚F
Fatty Acid	Nitrile	0˚F to 212˚F
Fuel Oil No 2	Nitrile	0˚F to 212˚F
Fertilizer Liquid ($H_4N_2O_2$)	EPDM	-35˚F to 250˚F
Gasoline, Keg	Nitrile	0˚F to 212˚F
Gas, Natural	Nitrile	0˚F to 212˚F
Glue, Animal	Nitrile	0˚F to 212˚F
Green Liquor	EPDM	-35˚F to 250˚F
Hydraulic Oil (Petro)	Nitrile	0˚F to 212˚F
Hydrogen	Nitrile	0˚F to 212˚F
JP4, JP5	Viton	10˚F to 250˚F
Kerosene	Nitrile	0˚F to 212˚F
Ketone	EPDM	-35˚F to 250˚F
Lime Slurry	EPDM	-35˚F to 250˚F
Methane	Nitrile	0˚F to 212˚F
Methyl Ethy Ketone	EPDM	-35˚F to 250˚F
Naptha (Berzin)	Nitrile	0˚F to 212˚F
Oil, Animal	Nitrile	0˚F to 212˚F
Oil, Mobil Therm Light	Viton	10˚F to 250˚F
Oil, Mobil Therm 600	Viton	10˚F to 250˚F
Oil, Mobil Therm 603	Nitrile	0˚F to 212˚F
Oil, Lubricating	Nitrile	0˚F to 212˚F
Oil, Vegetable	Nitrile	0˚F to 212˚F
Paint, Latex	Nitrile	0˚F to 212˚F
Phosphate Ester	EPDM	-35˚F to 250˚F
Propane	Nitrile	0˚F to 212˚F
Rape Seed Oil	EPDM	-35˚F to 250˚F
Sewage (w/oils)	Nitrile	0˚F to 212˚F
Sodium Hydroxide 20%	EPDM	-35˚F to 250˚F
Starch	EPDM	-35˚F to 250˚F
Steam to 300˚F	EPDM	-35˚F to 250˚F
Sloddard Solvent	Nitrile	0˚F to 212˚F
Sulphuric Acid 10%-50%	Neoprene	-20˚F to 225˚F
Sulphuric Acid 100%	Viton	10˚F to 250˚F
Trichloroethylene Dry	Viton	10˚F to 250˚F
Triethanol Amine	EPDM	-35˚F to 250˚F
Varnish	Viton	10˚F to 250˚F
Water, Fresh	EPDM	-35˚F to 250˚F
Water, Salt	EPDM	-35˚F to 250˚F
Xylene	Viton	10˚F to 250˚F

FLANGED END *FIG.601* *175 PSI*

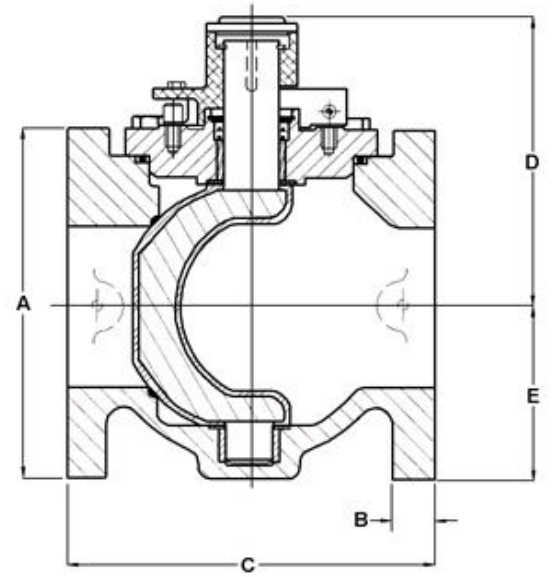

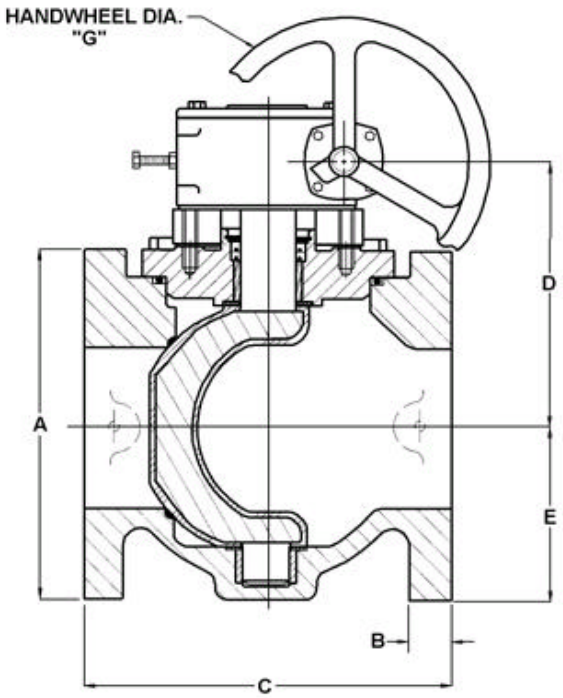

FLANGED END - ANSI 125									
Size	2.5	3	4	5	6	8	10	12	14
A	7	7.5	9	10	11	13.5	16	19	21
B	0.68	0.75	0.93	0.93	1	1.12	1.18	1.25	1.38
C	7.5	8	9	10	10.5	11.5	13	14	17
D	6.18	6.18	7.25	8.38	8.38	10.68	- -	- -	- -
E	3..5	3.75	4.5	5.75	5.75	7.62	8.88	10	13
F	5.38	5.59	6.31	7.56	7.56	9.63	11.63	13.31	13.31
G	6	6	6	6	6	12	12	12	12
Weight (approx.)	*30*	*40*	*70*	*105*	*115*	*190*	*345* **	*440* **	*510* **

*10" & above have gear operators as standard

** Weight includes gear operator

NOTE: Drawings are for information purposes only; please request certified drawings before preparing piping diagrams

MECHANICAL JOINT END FIG.600 175 PSI

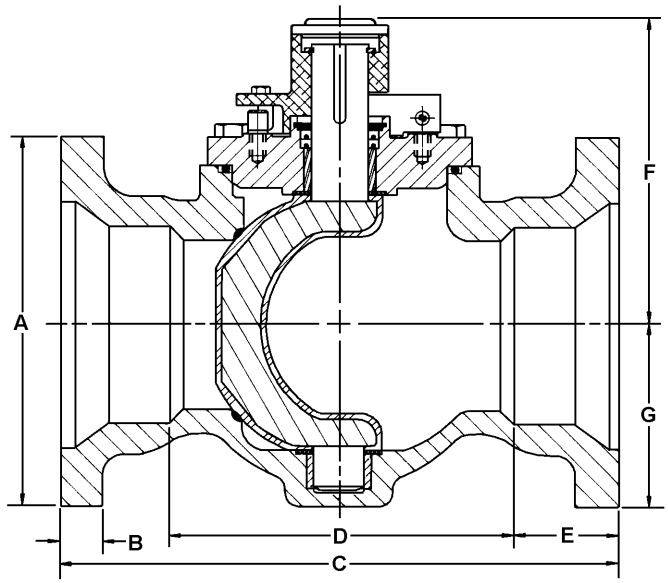

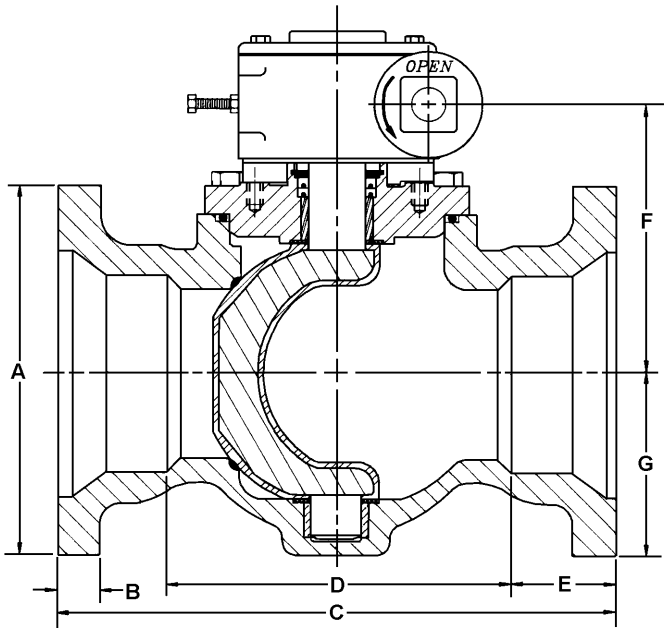

MECHANICAL JOINT END							
Size	**3**	**4**	**6**	**8**	**10***	**12***	**14***
A	7.68	9.0	11.12	13.38	15.62	17.93	20.31
B	0.93	1.0	1.06	1.12	1.18	1.38	1.31
C	11.5	14.25	15.75	17.38	19.38	20.75	24.50
D	6.5	9.25	10.75	12.38	14.38	15.75	17.50
E	2.5	2.5	2.5	2.5	2.5	2.5	3.5
F	6.18	7.25	8.38	10.68	- -	- -	- -
G	3.84	4.5	5.75	7.62	8.88	10.0	13.00
H	5.62	6.31	7.56	10.12	11.62	13.31	13.31
WT (approx.)	50	80	125	200	** 360	** 480	** 575

*10” & above have gear operators as standard
** Weight includes gear operator

NOTE: Drawings are for information purposes only; please request certified drawings before preparing piping diagrams

FLANGED END

FIG. 601

14" - 36" 150PSI
42" and larger 125 PSI

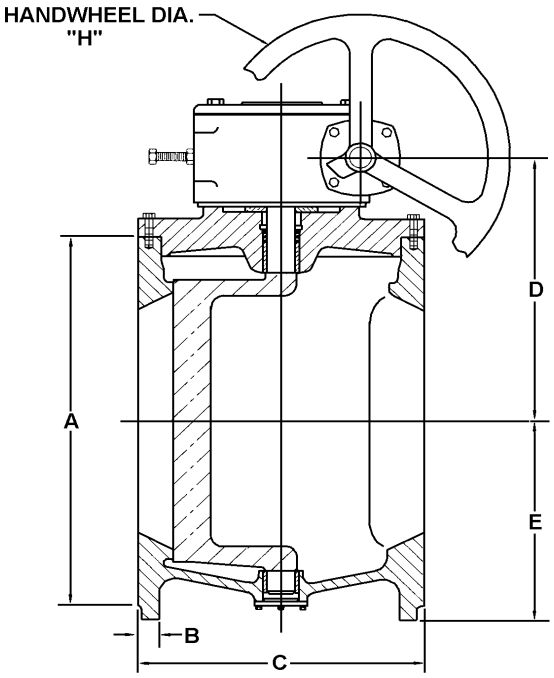

MECHANICAL JOINT END

FIG. 600

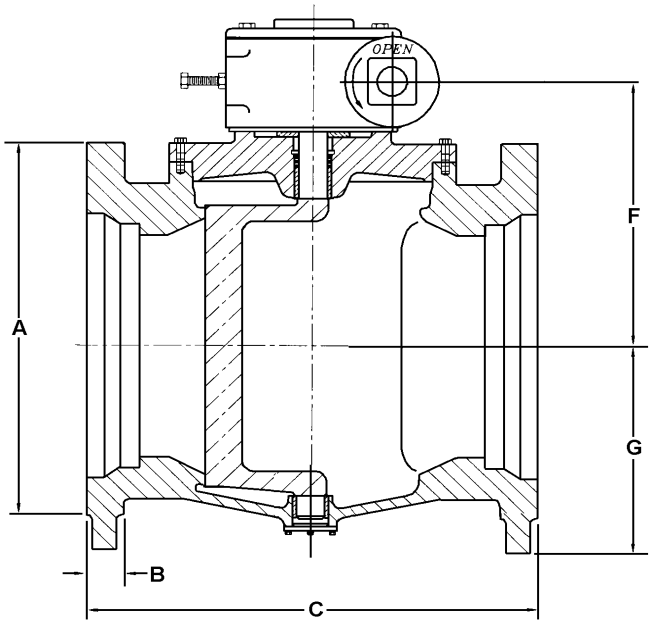

FLANGED END - ANSI 125 / 150										
Size	14	16	18	20	24	30	36	42	48	54
A	21.0	23.25	25.0	27.5	32.0	38.75	46.0	53.0	59.5	66.25
B	1.38	1.43	1.56	1.68	1.88	2.12	2.38	2.62	2.75	3.0
C	17.0	17.75	21.5	23.5	42.0	51.0	60.0	72.0	84.0	96.0
D	15.06	15.81	17.0	20.43	22.88	27.59	33.0	37.62	37.62	37.62
E	13.0	14.0	15.0	16.0	21.62	24.75	29.0	29.0	36.0	36.0
H	18.0	18.0	18.0	18.0	24.0	24.0	24.0	30.0	30.0	30.0
Weight (approx.)	905	1030	1355	1880	3800	5200	6950	10160	13350	15100

Flanged valves meet ANSI B16.1

MECHANICAL JOINT END									
Size	14	16	18	20	24	30	36	42	48
A	20.31	22.56	24.84	27.0	31.5	39.12	46.0	53.0	60.0
B	1.31	1.38	1.43	1.50	1.62	1.68	2.0	2.0	2.0
C	24.5	27.25	29.25	31.0	42.0	51.0	60.0	72.0	84.0
F	15.06	15.81	17.0	20.43	22.88	26.93	33.0	37.62	37.62
G	13.0	14.0	15.0	16.0	21.62	24.75	29.0	29.0	36.0
Weight (approx.)	905	1030	1355	1880	3800	5200	6950	10160	13350

M.J. valves meet ANSI 21.11 & AWWA C-111

Weight includes gear operator
NOTE: Drawings are for information purposes only; please request certified drawings before preparing piping diagrams

NOTE: Dimensions on 60" and larger available upon request.

FLANGED END *FIG.602* *2 1/2" -12" 400 PSI*
14" -16" 300 PSI

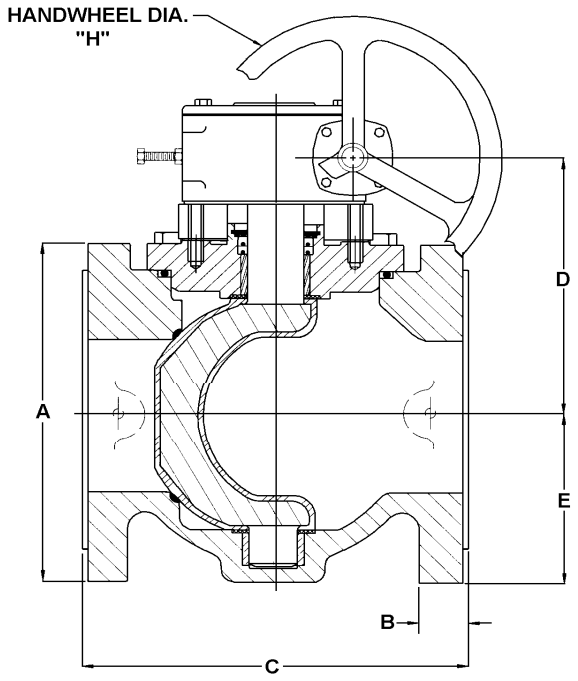

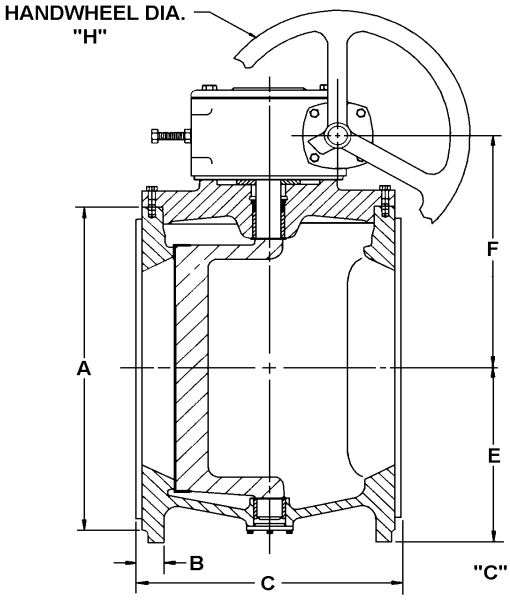

"C" Dimen. includes 1/16" raised face

FLANGED END - CLASS 250															
Size	2.5	3	4	5	6	8	10	12	14	16	18	20	24	30	36
A	7.50	8.25	10.00	11.00	12.50	15.00	17.50	20.50	23.00	25.50	28.00	30.50	36.00	43.00	50.00
B	1.06	1.12	1.25	1.38	1.43	1.62	1.88	2.00	2.12	2.25	2.38	2.50	2.75	3.00	3.38
C	9.50	11.12	12.00	15.00	15.88	16.50	18.00	19.75	18.50	19.38	23.12	25.00	42.88	51.88	61.00
E	3.50	3.75	4.50	5.75	5.75	8.25	8.88	10.00	13.00	14.00	15.00	16.00	21.62	24.75	29.00
F	6.00	6.09	7.06	8.31	8.31	10.13	13.88	14.75	15.60	15.81	17.00	20.43	22.88	27.59	33.00
H	6.00	6.00	6.00	6.00	6.00	12.00	12.00	12.00	18.00	18.00	18.00	18.00	24.00	24.00	24.00
Weight (approx.)	40	80	120	162	170	275	398	590	980	1125	1830	2060	4160	5700	7670

All above have gear operators as standard
Weight includes gear operator

NOTE: Drawings are for information purposes only; please request certified drawings before preparing piping diagrams

FLANGED END *FIG.601RL*

2 1/2" -12" 175 PSI
14" -16" 150 PSI
42" and larger 125 PSI

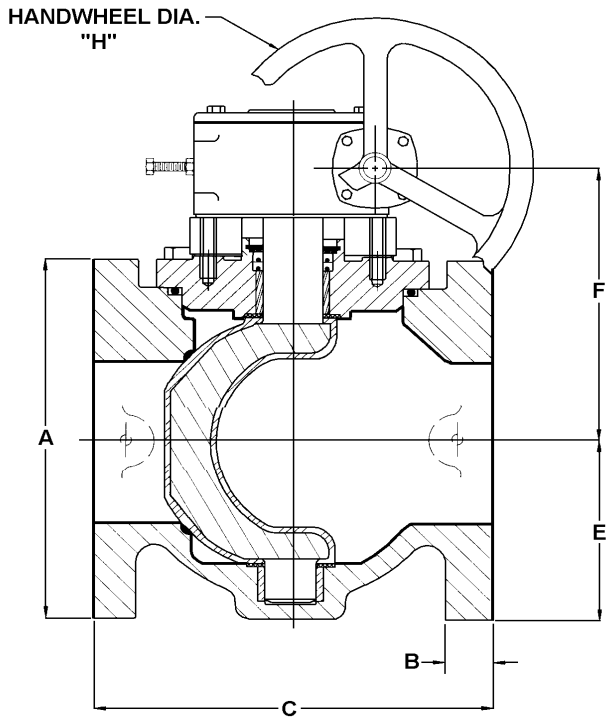

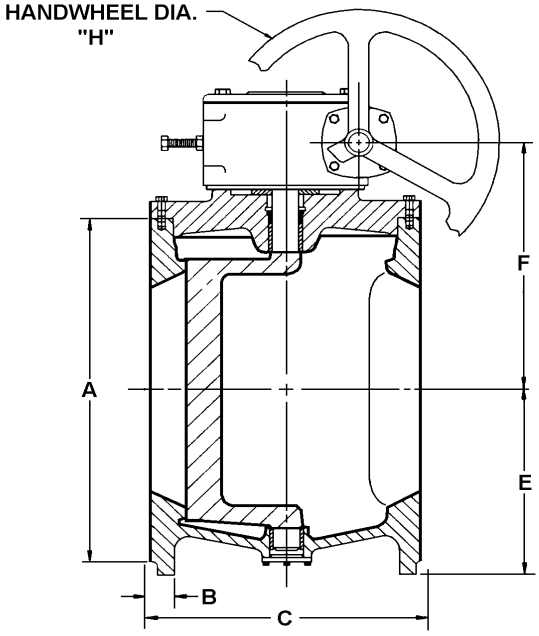

FLANGED END - ANSI 125 RUBBER LINED

Size	2.5	3	4	5	6	8	10	12	14	16	18	20	24	30	36	42
A	7.00	7.50	9.00	10.00	11.00	13.50	16.00	19.00	21.00	23.25	25.00	27.50	32.00	38.75	46.00	53.00
B	0.80	0.88	1.05	1.05	1.12	1.25	1.30	1.38	1.50	1.55	1.68	1.80	2.00	2.25	2.50	2.93
C	7.75	8.25	9.25	10.25	10.75	11.75	13.25	14.25	17.25	18.00	21.75	23.75	42.25	51.25	60.25	72.25
E	3.50	3.75	4.50	5.75	5.75	7.62	8.88	10.00	13.00	14.00	15.00	16.00	21.62	24.75	29.00	31.25
F	6.00	6.09	7.06	8.31	8.31	10.13	15.50	17.19	15.06	15.81	17.00	20.43	22.88	27.59	33.00	37.62
H	6.00	6.00	6.00	6.00	6.00	12.00	12.00	12.00	18.00	18.00	18.00	18.00	24.00	24.00	30.00	30.00
Weight (approx.)	30	70	100	135	145	240	345	440	905	1030	1355	1880	3800	5200	6950	10160

All above have gear operators as standard
Weight includes gear operator
NOTE: Drawings are for information purposes only; please request certified drawings before preparing piping diagrams

GROOVED END *FIG.606* *175 PSI*

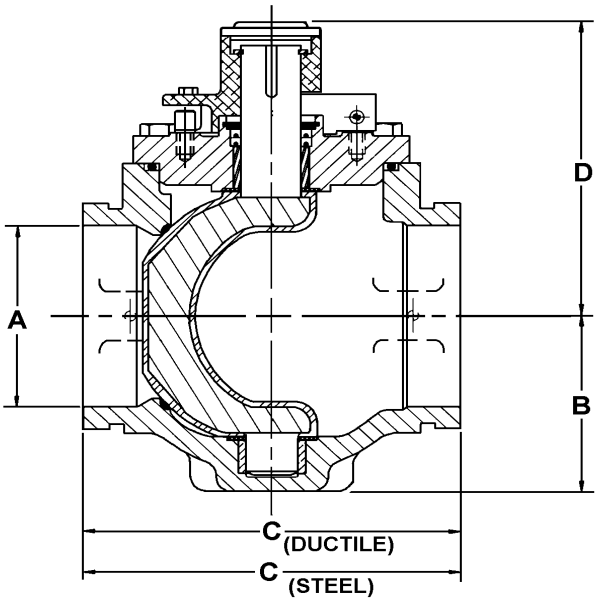

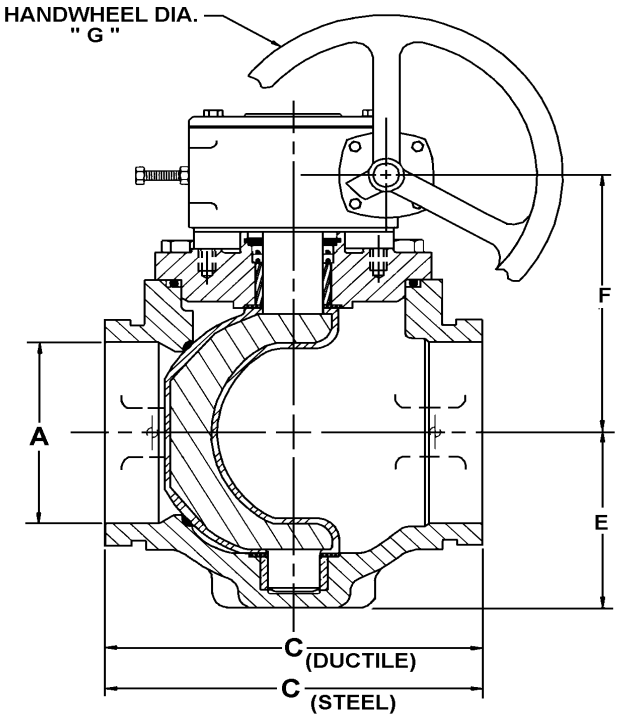

GROOVED END - AWWA 606									
Size	2.5	3	4	5	6	8	10*	12*	14*
A	2.50	3.00	4.00	5.00	6.00	8.00	10.00	12.00	14.00
C - DUCT.	N/A	N/A	10.25	N/A	12.50	14.00	16.56	18.00	21.63
C - STEEL	8.50	8.50	10.13	12.38	12.38	13.88	16.44	18.00	21.50
D	6.18	6.18	7.25	8.38	8.38	10.68	- -	- -	- -
E	3.50	3.75	4.50	5.75	5.75	7.62	8.88	10.00	10.00
F	5.38	5.59	6.31	7.56	7.56	9.63	11.63	13.31	13.31
G	6.00	6.00	6.00	6.00	6.00	12.00	12.00	12.00	18.00
Weight (approx.)	20	30	50	70	80	145	** 325	** 420	** 460

* 10" & above have gear operators as standard

** Weight includes gear operator

NOTE: Drawings are for information purposes only; please request certified drawings before preparing piping diagrams

ADAPTATION

A range of extended stems & floor mounted stands for remote operation, particularly in buried service, are available.

Chainwheel operation & locking devices are redily incorporated onto the MILLCENTRIC valve.

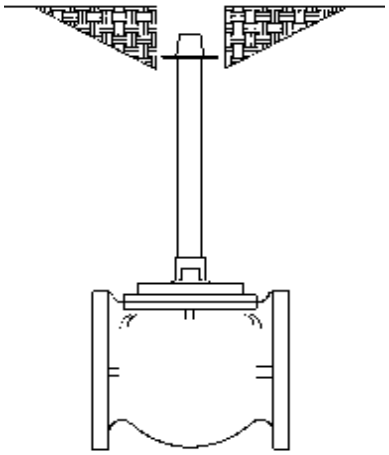

Valve with Extended Stem

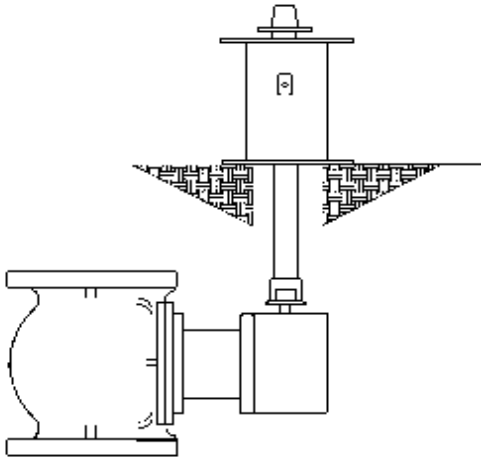

Valve with indicating floorstand

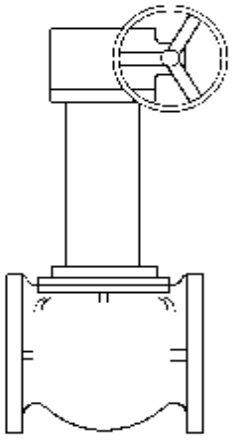

Valve with extended bonnet

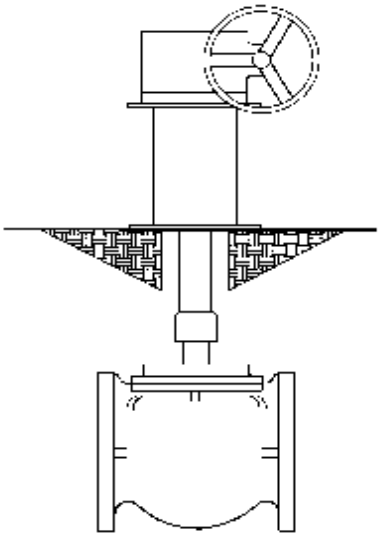

Valve with non-indicating floorstand

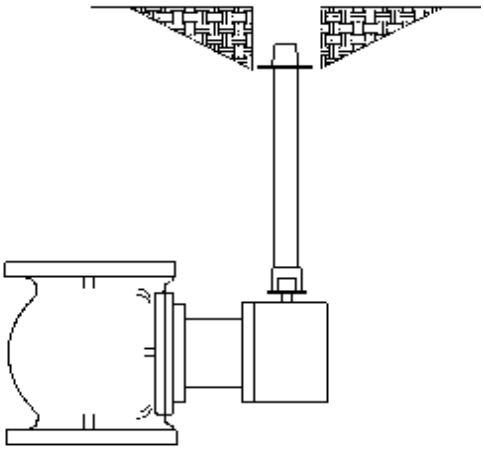

Valve with extended stem & buried gear

PROPOSED
TECHNICAL SPECIFICATION
Eccentric Plug Valves 3"- 72"

Valves shall be of the non-lubricated, eccentric type. Flanged valves shall be manufactured in accordance with **ANSI B16.1, Class 125/150**, *including* flange thickness as required by **AWWA C504-00, Table 2** and comply with MSS-SP-108 (Eccentric Plug Valves) in all respects. Mechanical joint ends shall be in compliance with **AWWA/ANSI C-111-92.**

Valves shall be designed and manufactured to have a minimum wall thickness compliant to **AWWA C504-00.** Plug shall be round thru 12" and rectangular for sizes 14" and larger. Lay lengths shall be compliant to MSS-SP-108 for all valve sizes.

Valve bodies shall be of **ASTM A-126, Class B** cast iron in accordance with **AWWA C-504-00, Sec. 4.4.2.1. or ASTM A-536 ductile iron**. Valves 3" and larger shall he furnished with a welded-in overlay seat of not less than 90% nickel in accordance with **AWWA C-507-85, Sec. 3.2.3.5.** Nickel thickness shall be not less than .125". Sprayed, plated screwed-in seats are not acceptable.

Plugs shall be of **ASTM A-536, Grade 65-45-12** high strength ductile iron in conformance with **AWWA C-504-00, Sec. 4.4.2.2.** or solid one piece cast iron. Two piece plugs or plugs with internal cavities are not acceptable. The plug shall be of one piece solid construction with PTFE thrust bearings on the upper and lower bearing journals to reduce torque and prevent dirt and grit from entering the bearing and seal area. Valves that do not isolate the bearing area from debris are not acceptable. Valves shall be furnished with replaceable sleeve type bearings conforming to **AWWA C-504-00, Sec. 4.5.6.4** and **AWWA C507-85, Sec. 3.2.4.** Bearings shall be of sintered, oil impregnated type 316 stainless steel **ASTM A-743, Grade CF8M**.

Part areas shall provide for the following minimum flow coefficients or be a minimum of 100% port.

Valve Size	Cv(GPM)	Valve Size	Cv(GPM)
3"	500	14"	6,000
4"	1,000	16"	9,000
5"	2,000	18"	11,000
6"	2,000	20"	13,000
8"	3,000	24"	21,000
10"	6,000	30"	36,000
12"	7,000	36"	47,000

All plug valves, for whatever service, shall he capable of passing "pigging" cleaning equipment in either direction and manufacturer shall so certify that this may he done without the use of special equipment.
Valve Shaft seals shall be of the dual "U" cup type in accordance with **AWWA C-504-00, Sec. 4.5.7.1.** Seals shall be self adjusting and repackable without removing the bonnet from the valve. Packing adjustment shall not result in an increase in plug friction or resulting torque. Packing replacement shall be achieved without need to cut packing during reinstallation and not require cap removal. Single piece packing arrangements are not acceptable.

Wrench operated valves 2 ½"- 8" shall be capable of being converted to worm gear or automated operation without removal of the bonnet or plug from the valve. All wrench operated valves shall be equipped with a 2" square nut for use with removable levers or extended "T" handles. Worm gear operators, where required, shall be of heavy-duty ductile iron construction with ductile iron quadrant supported on top and bottom by oil impregnated bronze bearings. The worm gear and shaft shall be manufactured of hardened steel and run on high efficiency roller bearings. Gear shall have both open and closed stops, shall he flush-mounted to the valve exposing no portion of the plug stem and shall be rated for the valves design pressure rating for bi-directional shut off. Buried service gears shall be designed and certified to withstand input loads of up to 300 ft. lbs. minimum without damage.

Valves shall be designed and manufactured to shut off bubble tight at 175 psi for valves 2 ½" through 12" and at 150 psi for valves 14" through 36". Valves 42" and larger shall be certified bubble tight at 125 psi. Each valve shall be given a bi-directional hydrostatic seat test with the test results being certified by the manufacturer when required. All actuation shall he supplied and full warranted by the plug valve manufacturer.

Certified copies of Proof-of-Design test reports shall be furnished as outlined in **AWWA C-504-00, Section 5,2.4.**

Plug valves shall be **Millcentric Series 601 / 600** as manufactured by **Milliken Valve Company of Bethlehem, PA.**

MILLIKEN
VALVE COMPANY, INC.
1995 Highland Ave. Suite 500, Bethlehem, PA 18020-9081
Phone: 610-861-8803 FAX: 610-861-8094

LEFT BLANK

PRESSURE GAUGE ISOLATION VALVE

LEFT BLANK

C.F.F. Stainless Steels Inc.

Your North American Stainless Steel Partner

SS-1 316 BALL VALVE



- One Piece Body
- Reduced Port
- Screwed Ends
- Blowout Proof Stem
- Lock Out Handle
- Floating Ball
- 800 P.S.I. W.O.G. (see chart)
- Threads to ANSI B2.1
- Temperature Range -20° to 450° F
- Size Range 1/4" to 2"

PRESSURE/TEMP. RATING

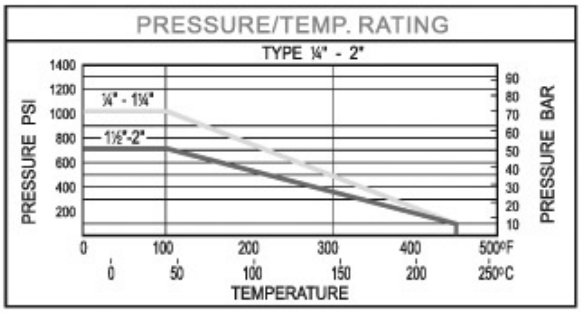

FLOW COEFFICIENT CV

Size (in.)	¼	⅜	½	¾	1	1¼	1½	2
Cv G.P.M.	2.5	4.5	7	9.0	16	24	37	68

DIMENSIONS

	Nominal Size	(mm/in) A	(mm/in) B	(mm/in) C	(mm/in) D	(mm/in) E	(kg/lb) WT
8	¼	5	19.5	39	31	78	0.06
		0.197	0.768	1.535	1.220	3.071	0.13
10	⅜	7	22	44	36	80	0.1
		0.276	0.866	1.732	1.417	3.150	0.22
15	½	9.2	28	56.5	41	99	0.17
		0.362	1.102	2.224	1.614	3.898	0.37
20	¾	12.5	29.5	59	44	99	0.26
		0.492	1.161	2.323	1.732	3.898	0.57
25	1	16	35.5	71	48	112	0.42
		0.630	1.398	2.795	1.890	4.409	0.92
32	1¼	20	39	78	54	112	0.71
		0.787	1.535	3.071	2.126	4.409	1.56
40	1½	24.5	41.5	83	65	140	0.82
		0.965	1.634	3.268	2.559	5.512	1.80
50	2	32	50	100	72	140	1.97
		1.260	1.969	3.937	2.835	5.512	4.33

Design and materials are subject to change without notice.

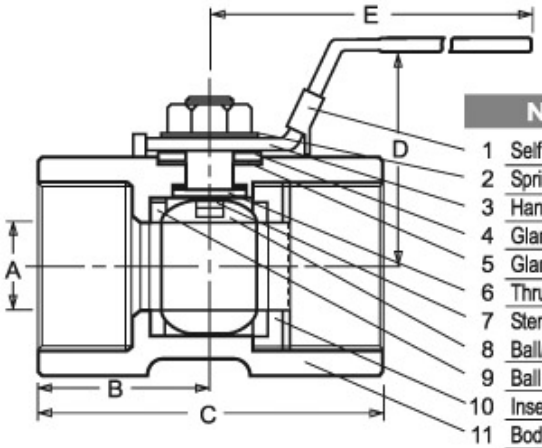

NAME/MATERIAL

1	Self Locking Nut/ Stainless Steel 304
2	Spring Washer/ Stainless Steel 304
3	Handle/ Stainless Steel 316
4	Gland/ Stainless Steel 316
5	Gland Packing/ GF- PTFE
6	Thrust Gland Washer/ 15% GF- PTFE
7	Stem/ Stainless Steel 316
8	Ball/ Stainless Steel 316
9	Ball Seat/ PTFE + 15% GF- PTFE
10	Insert/ Stainless Steel 316
11	Body/ Stainless Steel 316

Hamilton, Ontario
1840 Burlington St. E.
Hamilton, ON L8H 3L4
Telephone: 905-549-2603
Toll Free: 1-800-263-4511
Fax: 905-549-2994

Kingston, Ontario
11 Harvey St.
Kingston, ON K7K 5C1
Telephone: 613-549-4442
Toll Free: 866-549-4442
Fax: 613-549-4462

Montreal, Quebec
4900 Chemin du Bois Franc
St. Laurent, Quebec
H4S 1A7
Telephone: 514-337-7700
Toll Free: 1-800-361-3379
Fax: 514-337-1595

LEFT BLANK

PRESSURE REDUCING VALVE

LEFT BLANK

For Residential and Commercial Applications

Job Name _____ Contractor _____

Job Location _____ Approval _____

Engineer _____ Contractor's P.O. No. _____

Approval _____ Representative _____

Series 25AUB-Z3

Water Pressure Reducing Valves*

Sizes: ½" – 2" (15 – 50mm)

Series 25AUB-Z3 Water Pressure Reducing Valves are designed to reduce incoming water pressure to a sensible level to protect plumbing system components and reduce water consumption. This series is suitable for water supply pressures up to 300psi (20.7 bar) and may be adjusted from 25 – 75psi (172 – 517 kPa). The standard setting is 50psi (345 kPa). All parts are quickly and easily serviceable without removing the valve from the line. The standard bypass feature permits the flow of water back through the valve into the main when pressures, due to thermal expansion on the outlet side of the valve, exceed the pressure in the main supply.

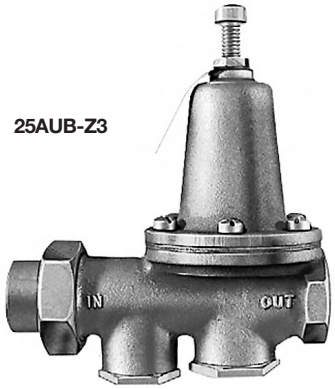

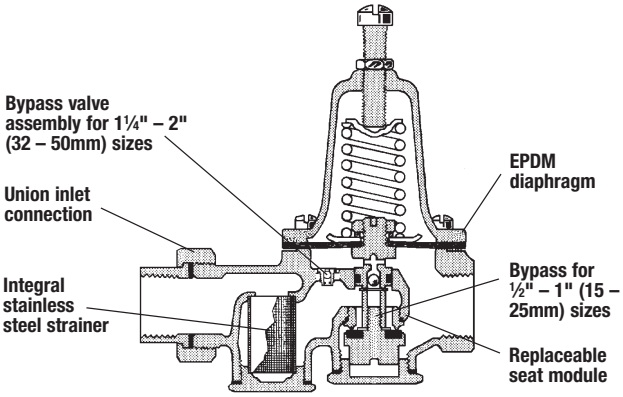

Features

- Standard construction includes Z3 sealed spring cage and corrosion resistant adjusting & cage screws for accessible outdoor or pit installations
- Union inlet connection
- Integral stainless steel strainer
- Replaceable seat module
- Bronze body construction
- Serviceable in line
- Bypass feature controls thermal expansion pressure**
- High temperature resistant reinforced diaphragm for hot water

Models

25AUB-Z3	NPT threaded female union inlet x NPT female outlet
25AUB-S-Z3	Solder union inlet x NPT female outlet
25AUB-DU-Z3	Double Union – NPT threaded union female inlet and outlet
25AUB-S-DU-Z3	Double Union – Solder union inlet and outlet
25AUB-DU-THDxPEX-Z3	Double Union – NPT threaded female inlet and PEX union outlet
25AUB-DU-CPVC-Z3	Double Union – CPVC union inlet and outlet
25AUB-DU-LF-Z3	Double union body less fittings (¾", 1", 1¼")
25AUB-QC-Z3	Single Union – Quick-Connect union inlet (½", ¾", 1")
25AUB-DU-QC-Z3	Double Union – Quick-Connect inlet and outlet (½", ¾", 1")

Specifications

Standard Specifications: A Water Pressure Reducing Valve with integral strainer shall be installed in the water service pipe near its entrance to the building where supply main pressure exceeds 60psi (413 kPa) to reduce it to 50psi (345 kPa) or lower. The valve shall feature a bronze body suitable for water supply pressures up to 300psi (20.7 bar). Provision shall be made to permit the bypass flow of water back through the valve into the main when pressures, due to thermal expansion on the outlet side of the valve, exceed the pressure in the main supply. Water Pressure Reducing Valve with built-in bypass check valves will be acceptable. Approved valve shall be listed to ASSE 1003 and IAPMO and certified to CSA B356. Valve shall be a Watts Regulator Company Series 25AUB-Z3.*

***A water saving test program concluded that reducing the supply pressure from 80-50psi (551-345 kPa) resulted in a water savings of 30%.**

****The bypass feature will not prevent the pressure relief valve from opening on the hot water supply system with pressure above 150psi (10.3 bar).**

Lead Free Specifications: A Water Pressure Reducing Valve with integral strainer shall be installed in the water service pipe near its entrance to the building where supply main pressure exceeds 60psi (413 kPa) to reduce it to 50psi (345 kPa) or lower. The valve shall feature a bronze body where suitable for water supply pressures up to 300psi (20.7 bar). The combined metal components of the valve contacted by potable water shall contain less than one half of one percent (0.5%) lead by weight. Provision shall be made to permit the bypass flow of water back through the valve into the main when pressures, due to thermal expansion on the outlet side of the valve, exceed the pressure in the main supply. Water Pressure Reducing Valve with built-in bypass check valves will be acceptable. Approved valve shall be listed to ASSE 1003 and IAPMO and certified to CSA B356. Valve shall be a Watts Regulator Company Series LF 25AUB-Z3.

Watts product specifications in U.S. customary units and metric are approximate and are provided for reference only. For precise measurements, please contact Watts Technical Service. Watts reserves the right to change or modify product design, construction, specifications, or materials without prior notice and without incurring any obligation to make such changes and modifications on Watts products previously or subsequently sold.

WATTS®

Materials

Body:	Bronze
Seat:	½"–1" (15–25mm) Replaceable engineered polymer (10% glass filled Noryl®) 1¼"–2" (32–50mm) Replaceable stainless steel
Integral Strainer:	Stainless steel
Diaphragm:	Reinforced EPDM
Valve Disc:	EPDM

Note: for LP models where application temperatures exceed 160°F (71°C), but not over 180°F (82°C), a Teflon® protector should be added to sizes 1¼"–2" (32-50mm).

Pressure – Temperature

Temperature Range: 33°F – 160°F (0.5°C – 71°C)
Maximum Working Pressure: 300psi (20.7 bar)
Adjustable Reduced Pressure Range: 25–75psi (172 – 517 kPa)
Standard Reduced Pressure Setting: 50psi (345 kPa)

Options

Add Suffix

G	Gauge tapping, ⅛" (3mm)
GG	Gauge tapping and 160psi (11 bar) gauge
HP	High pressure range 75–125psi (5.2 – 8.6 bar)
LP	Low pressure range 10–35psi (69 – 241 kPa)
Z7	400psi (27.6 bar) initial pressure, ½" (20mm) models only

Add Prefix

LF	Lead Free† construction

†The combined metal components of this product contacted by potable water contain less than one half of one percent (0.5%) of lead by weight.

Noryl® is a registered trademark of General Electric Company.
Teflon® is a registered trademark of E.I. Dupont de Nemours & Company.

Dimensions — Weights

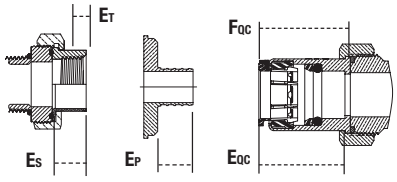

A - 25AUB-Z3
A1 - 25AUB-S-Z3
A2 - 25AUB-DU-LF-Z3
B - 25AUB-DU-Z3
B1 - 25AUB-S-DU-Z3
B2 - 25AUB-DU-THDxPEX-Z3
B3 - 25AUB-DU-QC-Z3
ET - NPT Engagement for tight joint
ES - Female sweat socket depth
EP - PEX end connection
EQC - Quick-Connect union

Standards

Meets requirements of ASSE Standard 1003: (ANSI A112.26.2: CSA Standard B356; Southern Standard Plumbing Code and listed by IAPMO.
Military Standard MIL-V-18146B Type I.

Capacity

Sizes: ½", ¾", 1", 1¼", 1½", 2" (15, 20, 25, 32, 40, 50mm)

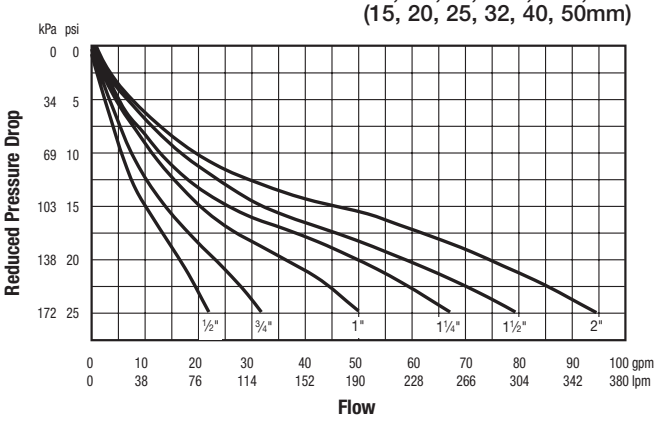

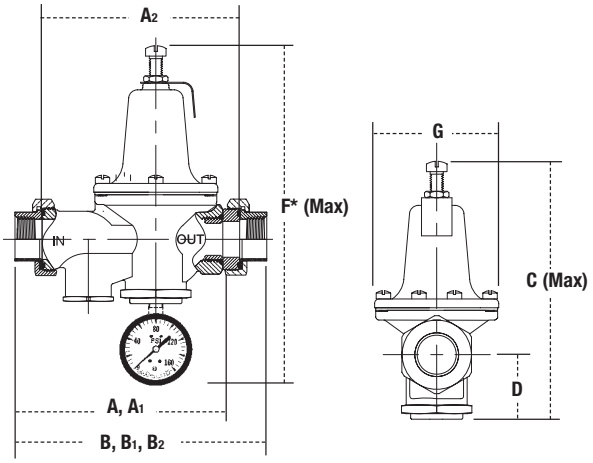

SIZE (DN)		DIMENSIONS													
		A		A1		A2		B		B1		B2		C	
in.	mm	in.	mm	in.	mm	in.	mm	in.	mm	in.	mm	in.	mm	in.	mm
½	15	5⅜	137	5⁵⁄₁₆	135	5⅜	132	6⁷⁄₁₆	164	6⅜	162	–	–	7	178
¾	20	5⁵⁄₁₆	135	5½	140	5¼	133	6½	165	6⅞	175	6¾	171	7	178
1	25	6	152	6¼	159	5⅞	149	7⅜	187	7¹³⁄₁₆	198	7¹¹⁄₁₆	195	8	203
1¼	32	8¾	222	8¹⁵⁄₁₆	227	8¼	210	10¾	273	11	279	–	–	9	229
1½	40	8¾	222	9	229	8¼	210	10¾	273	11³⁄₁₆	284	–	–	9½	241
2	50	9¾	235	10	254	8¾	222	11⁵⁄₁₆	287	12¹¹⁄₁₆	322	–	–	11¼	286

DIMENSIONS														WEIGHT	
D		F *		G		ET		ES		EP		EQC		FQC			
in.	mm	in.	mm	in.	mm	in.	mm	in.	mm	in.	mm	in.	mm	in.	mm	lbs.	kgs.
1½	38	9⁷⁄₁₆	240	3⅛	79	½	13	½	13	–	–	1⅞	36	1½	38	3.5	1.6
1½	38	9⁷⁄₁₆	240	3⅛	79	½	13	¾	19	⅝	16	1⁹⁄₁₆	40	1¹¹⁄₁₆	42	3.5	1.6
1¾	44	10⁷⁄₁₆	266	3⅝	92	⅝	16	¹⁵⁄₁₆	23	¹³⁄₁₆	21	1¹¹⁄₁₆	43	1¾	45	6.5	3.0
2⅛	54	11⁷⁄₁₆	291	3⅝	92	⅝	16	1	25	–	–	–	–	–	–	10	4.5
2⅜	60	11¹⁵⁄₁₆	304	4¹⁄₁₆	103	⅝	16	1¹⁄₁₆	28	–	–	–	–	–	–	10	4.5
3¼	83	13¹¹⁄₁₆	348	4¾	121	⅝	16	1⁵⁄₁₆	34	–	–	–	–	–	–	15	6.8

* Dimension includes optional gauge

WATTS®
Water Safety & Flow Control Products

ISO 9001-2000 CERTIFIED

USA: 815 Chestnut St., No. Andover, MA 01845-6098; www.watts.com
Canada: 5435 North Service Rd., Burlington, ONT. L7L 5H7; www.wattscanada.ca

© Watts, 2008

POLYMER SERVICE WATER SOLENOID VALVE

LEFT BLANK

ASCO® Red-Hat®

Pilot Operated

General Service Solenoid Valves

Brass or Stainless Steel Bodies

3/8" to 2 1/2" NPT

NC 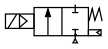

NO 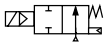

2/2
SERIES
8210

Features

- Wide range of pressure ratings, sizes, and resilient materials provide long service life and low internal leakage.
- High Flow Valves for liquid, corrosive, and air/inert gas service.
- Industrial applications include:
  - Car wash
  - Laundry equipment
  - Air compressors
  - Industrial water control
  - Pumps

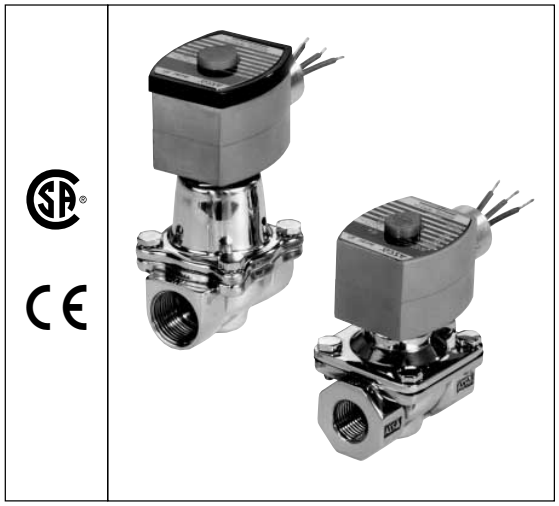

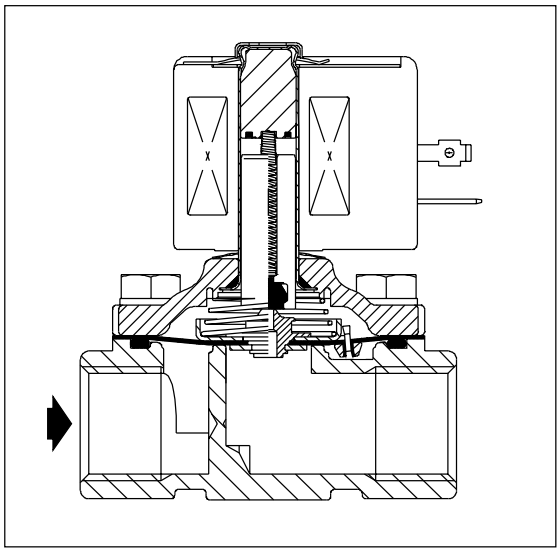

Construction

Valve Parts in Contact with Fluids		
Body	Brass	304 Stainless Steel
Seals and Discs	NBR or PTFE	
Disc-Holder	PA	
Core Tube	305 Stainless Steel	
Core and Plugnut	430F Stainless Steel	
Springs	302 Stainless Steel	
Shading Coil	Copper	Silver

Electrical

Standard Coil and Class of Insulation	Watt Rating and Power Consumption				Spare Coil Part Number			
		AC			General Purpose		Explosionproof	
	DC Watts	Watts	VA Holding	VA Inrush	AC	DC	AC	DC
F	-	6.1	16	40	238210	-	238214	-
F	11.6	10.1	25	70	238610	238710	238614	238714
F	16.8	16.1	35	180	272610	97617	272614	97617
F	-	17.1	40	93	238610	-	238614	-
F	-	20	43	240	99257	-	99257	-
F	-	20.1	48	240	272610	-	272614	-
H	30.6	-	-	-	-	74073	-	74073
F	40.6	-	-	-	-	238910		238914

Standard Voltages: 24, 120, 240, 480 volts AC, 60 Hz (or 110, 220 volts AC, 50 Hz). 6, 12, 24, 120, 240 volts DC. Must be specified when ordering. Other voltages available when required.

Solenoid Enclosures

Standard: Red-Hat II - Watertight, Types 1, 2, 3, 3S, 4, and 4X; Red-Hat - Type I.
Optional: Red-Hat II - Explosionproof and Watertight, Types 3, 3S, 4, 4X, 6, 6P, 7, and 9; Red-Hat - Explosionproof and Watertight, Types 3, 4, 4X, 7, and 9.
(To order, add prefix "EF" to catalog number, except Catalog Numbers 8210B57, 8210B58, and 8210B59. Valves not available with Explosionproof enclosures.)
See Optional Features Section for other available options.

Nominal Ambient Temperature Ranges:

Red-Hat II/
Red-Hat AC: 32˚F to 125˚F (0˚C to 52˚C)
Red-Hat II DC: 32˚F to 104˚F (0˚C to 40˚C)
Red-Hat DC: 32˚F to 77˚F (0˚C to 25˚C)
(104˚F/40˚C occasionally)
Refer to Engineering Section for details.

Approvals:

CSA certified. Red-Hat II meets applicable CE directives.
Refer to Engineering Section for details.

Specifications (English units)

Pipe Size (ins.)	Orifice Size (ins.)	Cv Flow Factor	Operating Pressure Differential (psi) Min.	Max. AC Air-Inert Gas	Max. AC Water	Max. AC Light Oil @ 300 SSU	Max. DC Air-Inert Gas	Max. DC Water	Max. DC Light Oil @ 300 SSU	Max. Fluid Temp. °F AC	Max. Fluid Temp. °F DC	Brass Body Catalog Number	Brass Body Constr. Ref. No. ④	Brass Body UL ⑤ Listing	Stainless Steel Body Catalog Number	Stainless Steel Body Constr. Ref. No. ④	Stainless Steel Body UL ⑤ Listing	Watt Rating/ Class of Coil Insulation ⑦ AC	Watt Rating/ Class of Coil Insulation ⑦ DC
NORMALLY CLOSED (Closed when de-energized), NBR or PTFE ② Seating																			
3/8	3/8	1.5	①	150	125	-	40	40	-	180	150	8210G73 ③	1P	●	8210G36 ③	1P	●	6.1/F	11.6/F
3/8	5/8	3	0	150	150	-	40	40	-	180	150	8210G93	5D	❍	-	-	-	10.1/F	11.6/F
3/8	5/8	3	5	200	150	135	125	100	100	180	150	8210G1	6D	❍	-	-	-	6.1/F	11.6/F
3/8	5/8	3	5	300	300	300	-	-	-	175	-	8210G6	5D	❍	-	-	-	17.1/F	-
1/2	7/16	2.2	①	150	125	-	40	40	-	180	150	8210G15 ③	2P	●	8210G37 ③	2P	●	6.1/F	11.6/F
1/2	5/8	4	0	150	150	-	40	40	-	180	150	8210G94	5D	❍	-	-	-	10.1/F	11.6/F
1/2	5/8	4	0	150	150	125	40	40	-	175	150	-	-	-	8210G87	7D	●	17.1/F	11.6/F
1/2	5/8	4	5	200	150	135	125	100	100	180	150	8210G2	6D	❍	-	-	-	6.1/F	11.6/F
1/2	5/8	4	5	300	300	300	-	-	-	175	-	8210G7	5D	❍	-	-	-	17.1/F	-
1/2	5/8	4	5	300	300	-	300	300	-	180	125	8210G227	5D	❍	-	-	-	17.1/F	40.6/H
3/4	5/8	4.5	0	150	150	125	40	40	-	175	150	-	-	-	8210G88	7D	●	17.1/F	11.6/F
3/4	3/4	5	5	125	125	125	100	90	75	180	150	8210G9	9D	❍	-	-	-	6.1/F	11.6/F
3/4	3/4	5	0	150	150	-	40	40	-	180	150	8210G95	8D	❍	-	-	-	10.1/F	11.6/F
3/4	3/4	6.5	5	250	150	100	125	125	125	180	150	8210G3	11D	❍	-	-	-	6.1/F	11.6/F
3/4	3/4	6	0	-	-	-	200	180	180	-	77	8210B26 ② ‡	10P	-	-	-	-	-	30.6/H
3/4	3/4	6	0	350	300	200	-	-	-	200	-	8210G26 ② ‡	40P	●	-	-	-	16.1F	-
1	1	13	0	-	-	-	100	100	80	-	77	8210B54 ‡	31D	-	8210D89	15D	-	-	30.6/H
1	1	13	0	150	125	125	-	-	-	180	-	8210G54	41D	●	8210G89	45D	●	16.1/F	-
1	1	13	5	150	150	100	125	125	125	180	150	8210G4	12D	❍	-	-	-	6.1/F	11.6/F
1	1	13.5	0	300	225	115	-	-	-	200	-	8210G27 ‡	42P	●	-	-	-	20.1/F	-
1	1	13.5	10	300	300	300	-	-	-	175	-	8210G78 ②	13P	-	-	-	-	17.1/F	-
1 1/4	1 1/8	15	0	-	-	-	100	100	80	-	77	8210B55 ‡	32D	-	-	-	-	-	30.6/H
1 1/4	1 1/8	15	0	150	125	125	-	-	-	180	-	8210G55	43D	●	-	-	-	16.1/F	-
1 1/4	1 1/8	15	5	150	150	100	125	125	125	180	150	8210G8	16D	❍	-	-	-	6.1/F	11.6/F
1 1/2	1 1/4	22.5	0	-	-	-	100	100	80	-	77	8210B56 ‡	33D	-	-	-	-	-	30.6/H
1 1/2	1 1/4	22.5	0	150	125	125	-	-	-	180	-	8210G56 ‡	44D	●	-	-	-	16.1/F	-
1 1/2	1 1/4	22.5	5	150	150	100	125	125	125	180	150	8210G22	18D	●	-	-	-	6.1/F	11.6/F
2	1 3/4	43	5	150	125	90	50	50	50	180	150	8210G100	20P	●	-	-	-	6.1/F	11.6/F
2 1/2	1 3/4	45	5	150	125	90	50	50	50	180	150	8210G101	21P	●	-	-	-	6.1/F	11.6/F
NORMALLY OPEN (Open when de-energized), NBR Seating (PA Disc-Holder, except as noted)																			
3/8	5/8	3	0	150	150	125	125	125	80	180	150	8210G33	23D	●	-	-	-	10.1/F	11.6/F
3/8	5/8	3	5	250	200	200	250	200	200	180	180	8210G11 ⑧ ⑨	39D	●	-	-	-	10.1/F	11.6/F
1/2	5/8	4	0	150	150	125	125	125	80	180	150	8210G34	23D	●	-	-	-	10.1/F	11.6/F
1/2	5/8	3	0	150	150	100	125	125	80	180	150	-	-	-	8210G30	37D	●	10.1/F	11.6/F
1/2	5/8	4	5	250	200	200	250	200	200	180	180	8210G12 ⑧ ⑨	39D	●	-	-	-	10.1/F	11.6/F
3/4	3/4	5.5	0	150	150	125	125	125	80	180	150	8210G35	25D	●	-	-	-	10.1/F	11.6/F
3/4	5/8	3	0	150	150	100	125	125	80	180	150	-	-	-	8210G38	38D	●	10.1/F	11.6/F
3/4	3/4	6.5	5	-	-	-	250	200	200	-	180	8210C13	24D	●	-	-	-	-	16.8/F
3/4	3/4	6.5	5	250	200	200	-	-	-	180	-	8210G13	46D	●	-	-	-	16.1/F	-
1	1	13	0	125	125	125	-	-	-	180	-	8210B57 ⑥ ⑩	34D	●	-	-	-	20/F	-
1	1	13	5	-	-	-	125	125	125	-	180	8210D14	26D	●	-	-	-	-	16.8/F
1	1	13	5	150	150	125	-	-	-	180	-	8210G14	47D	●	-	-	-	16.1/F	-
1 1/4	1 1/8	15	0	125	125	125	-	-	-	180	-	8210B58 ⑥ ⑩	35D	●	-	-	-	20/F	-
1 1/4	1 1/8	15	5	-	-	-	125	125	125	-	180	8210D18	28D	●	-	-	-	-	16.8/F
1 1/4	1 1/8	15	5	150	150	125	-	-	-	180	-	8210G18	48D	●	-	-	-	16.1/F	-
1 1/2	1 1/4	22.5	0	125	125	125	-	-	-	180	-	8210B59 ⑥ ⑩	36D	●	-	-	-	20/F	-
1 1/2	1 1/4	22.5	5	-	-	-	125	125	125	-	180	8210D32	29D	●	-	-	-	-	16.8/F
1 1/2	1 1/4	22.5	5	150	150	125	-	-	-	180	-	8210G32	49D	●	-	-	-	16.1/F	-
2	1 3/4	43	5	-	-	-	125	125	125	-	150	8210103	30P	●	-	-	-	-	16.8/F
2	1 3/4	43	5	125	125	125	-	-	-	180	-	8210G103	50P	●	-	-	-	16.1/F	-
2 1/2	1 3/4	45	5	-	-	-	125	125	125	-	150	8210104	27P	●	-	-	-	-	16.8/F
2 1/2	1 3/4	45	5	125	125	125	-	-	-	180	-	8210G104	51P	●	-			16.1/F	-

Notes: ① 5 psi on Air; 1 psi on Water.
② Valve provided with PTFE main disc.
③ Valve includes UItem (G.E. trademark) piston.
④ Letter "D" denotes diaphragm construction; "P" denotes piston construction.
⑤ ❍ Safety Shutoff Valve; ● General Purpose Valve.
Refer to Engineering Section (Approvals) for details.
⑥ Valves not available with Explosionproof enclosures.
⑦ On 50 hertz service, the watt rating for the 6.1/F solenoid is 8.1 watts.
⑧ AC construction also has PA seating.
⑨ No disc-holder.
⑩ Stainless Steel disc-holder.
‡ Must have solenoid mounted vertical and upright.

Dimensions: inches (mm)

Constr. Ref. No.		H	K	L	P	W
30	**ins.**	8.22	X	5.06	5.47	4.87
	mm	209	X	129	139	124
31	**ins.**	5.25	X	3.75	4.44	3.25
	mm	133	X	95	113	83
32	**ins.**	5.69	X	3.66	4.69	3.25
	mm	145	X	93	119	83
33	**ins.**	6.06	X	4.38	4.94	3.91
	mm	154	X	111	125	99
34	**ins.**	6.91	X	3.75	6.09	3.25
	mm	176	X	95	155	83
35	**ins.**	7.34	X	3.66	6.34	3.25
	mm	186	X	93	161	83
36	**ins.**	7.66	X	4.38	6.56	3.91
	mm	1.95	X	111	167	99
37	**ins.**	4.61	2.75	2.81	3.89	2.39
	mm	117	70	71	99	61
38	**ins.**	4.61	2.75	2.81	3.89	2.39
	mm	117	70	71	99	61
39	**ins.**	5.42	2.31	2.75	4.86	3.80
	mm	138	59	70	123	97
40	**ins.**	5.20	3.29	2.81	4.50	2.28
	mm	132	83	71	114	58
41	**ins.**	5.13	3.10	3.75	4.32	3.25
	mm	130	79	95	110	83
42	**ins.**	6.43	4.40	3.93	5.62	3.25
	mm	163	112	100	143	83
43	**ins.**	5.57	3.35	3.66	4.57	3.25
	mm	142	85	93	116	83
44	**ins.**	5.90	3.57	4.38	4.79	3.91
	mm	150	91	111	122	99
45	**ins.**	5.26	3.17	3.75	4.38	3.84
	mm	134	81	95	111	98
46	**ins.**	4.95	3.10	3.84	4.31	2.75
	mm	126	79	98	110	70
47	**ins.**	6.43	3.59	3.75	4.81	3.52
	mm	163	91	95	122	90
48	**ins.**	6.43	3.59	3.66	4.81	3.73
	mm	163	91	93	122	95
49	**ins.**	6.91	3.75	4.38	4.96	4.40
	mm	176	95	111	126	112
50	**ins.**	8.13	4.15	5.06	5.37	4.87
	mm	207	105	129	136	124
51	**ins.**	8.13	4.15	5.50	5.37	5.18
	mm	207	105	140	136	132

IMPORTANT: Valves may be mounted in any position, except as noted in specifications table.

Constr. Refs. 10, 15, 24, 26-36

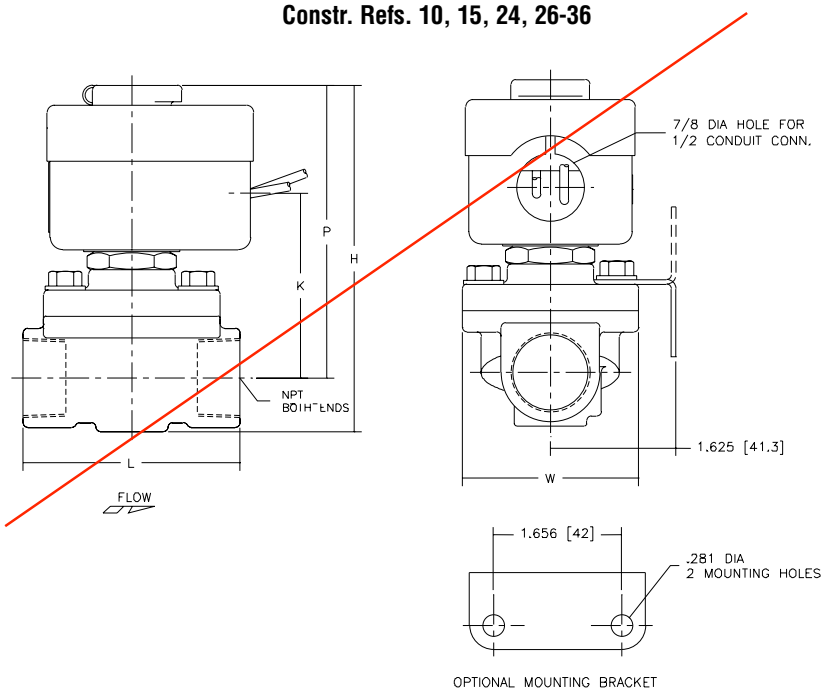

Constr. Refs. 12, 16, 18

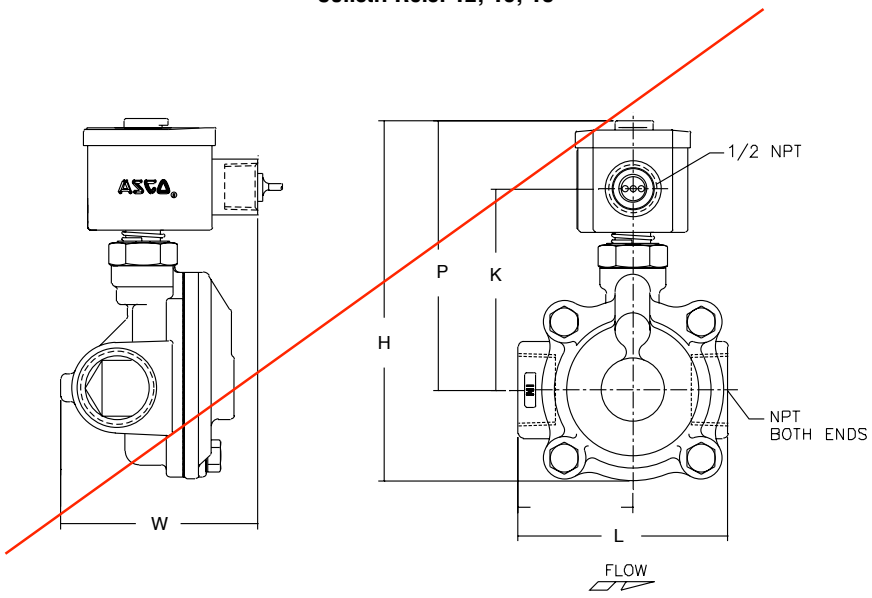

Note: Valve must be mounted with solenoid vertical and upright.

Dimensions: inches (mm)

Constr. Refs. 39

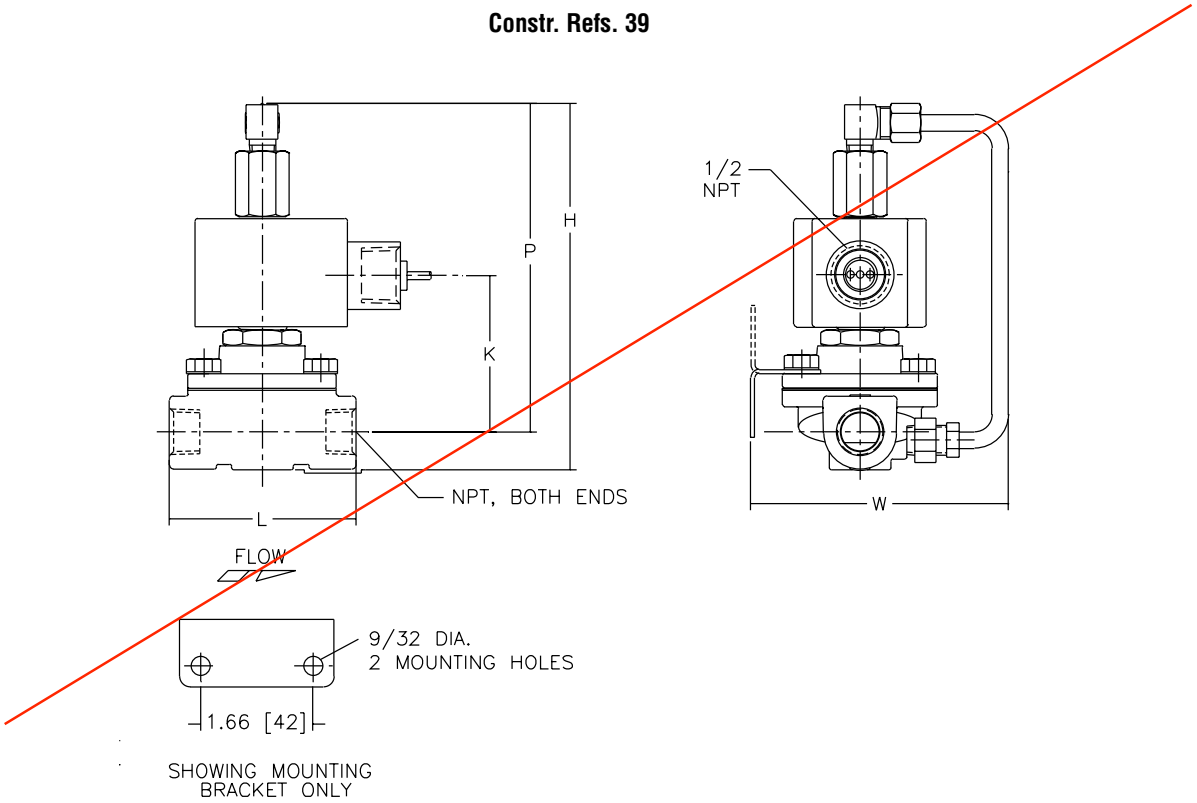

Constr. Refs. 40-51

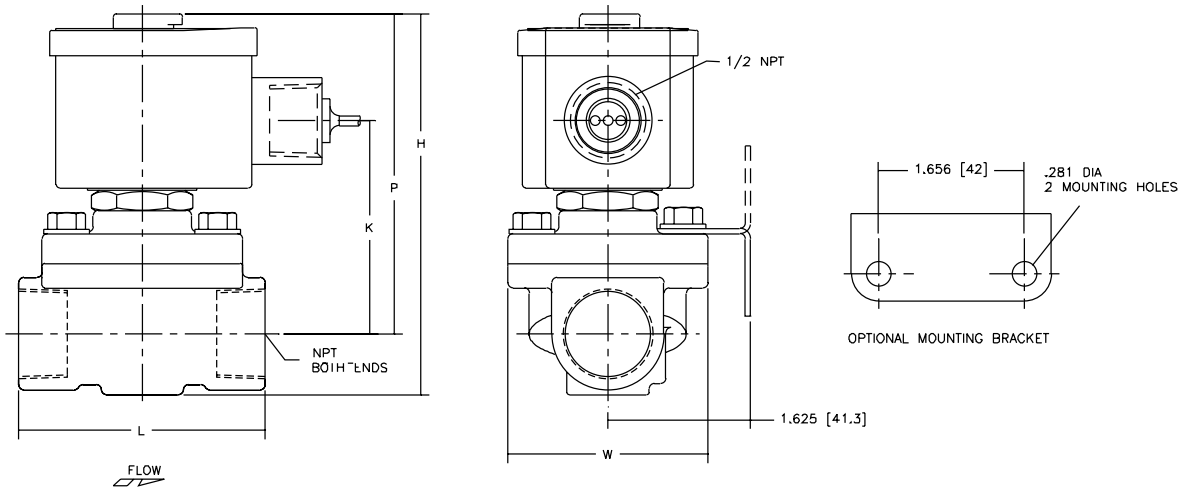

GLOBE VALVE

LEFT BLANK

PDF Published January 22, 2004

Globe Valves

The Chemline Globe Valve is an economical throttling valve. Its heavy duty design provides for long service life. The in-line globe design causes relatively high pressure drops, however this is a desirable valve due to its economy and reliability.

CHEMLINE Plastics Limited
Your Pipeline To Quality

PVC, PP

SERIES: GV

ENDS: Threaded*, Flanged

SEALS: EPDM†

Slow Closing

An Economical Throttling Valve

Features

- **Slow closing – Prevents water hammer in PVC piping**
- **Heavy Duty Construction**
  Long service life



Union Bonnet Design 1/2" – 2"

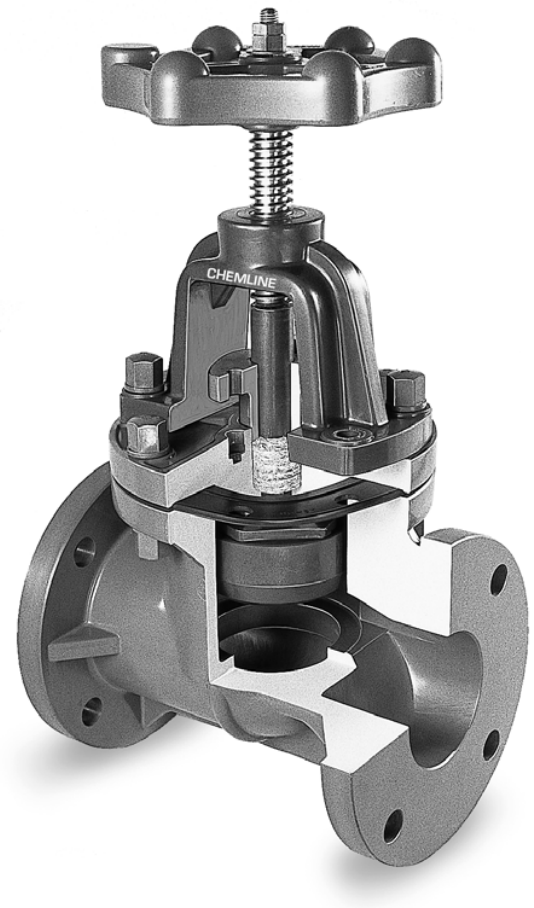

2-1/2" – 4" Outside Spindle and Yolk Type

* Socket ends are available custom basis.
† Other seal materials are available special order.

©Chemline Plastics Limited 2004

Globe Valves

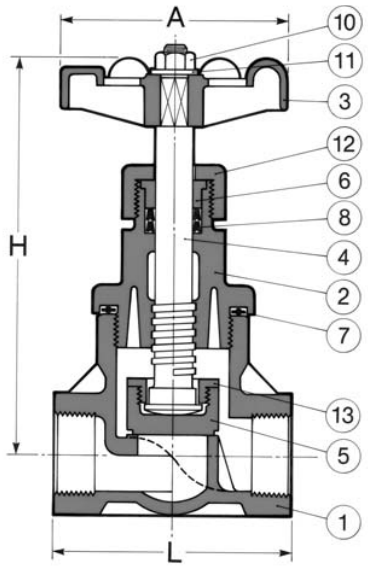

1/2" – 2"

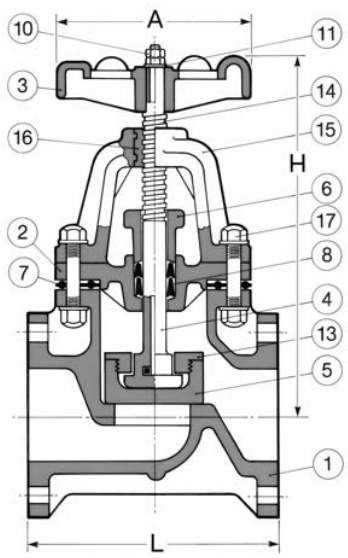

2-1/2" – 4"

PARTS

▲Recommended Spare Parts

No.	Part	Pcs.	Materials
1	Body	1	PVC, PP
2	Bonnet	1	PVC, PP
3	Handwheel	1	PP
4	Stem	1	PVC, PP
5	Disc	1	PP
6	Gland	1	PVC, PP
7▲	Bonnet Seal	1	EPDM
8▲	Stem Packing	2	EPDM
10	Nut	1	PVC
11	Washer	1	PVC
12	Gland Nut	1	PVC, PP
13	Disc Retainer	1	PP
14	Stem Top	1	Brass
15	Yolk	1	PP
16	Yolk Sleeve	1	Bronze
17	Bolt & Nut	8 sets	304 SS
18	Stem & Nut	2 sets	304 SS

DIMENSIONS INCHES

C_V VALUES VS % OPEN

WEIGHTS LB.

Size	A	L† Threaded	L* Flanged	H Open	Valve Opening (%) 20	40	60	80	100	No. Turns to Open	PVC Threaded	PVC Flanged	PP Threaded	PP Flanged
1/2"	2.6	3.35	5.3	5.3	2.6	3.5	3.9	4.0	4.1	2.75	.64	1.0	.37	.66
3/4"	2.6	3.74	6.0	5.5	4.0	5.5	6.1	6.3	6.4	3.25	1.1	1.3	.55	.84
1"	3.6	4.33	6.8	6.4	6.1	8.4	9.2	9.5	9.7	3.25	1.1	2.2	.77	1.3
1-1/4"	3.6	5.32	8.2	6.6	11.3	15.5	17.1	17.7	18.	2.5	1.3	2.9	–	–
1-1/2"	5.3	5.51	8.4	9.1	13.8	19.0	20.9	21.6	22.	3.75	2.6	4.6	–	2.9
2"	5.3	7.09	11.0	9.9	18.2	25.0	27.5	28.5	29.	3.25	3.5	5.7	–	3.5
2-1/2"	7.3	–	8.7	13.6	35.7	49.2	54.1	56.1	57.	7.5	–	13.	–	11.
3"	7.3	–	9.5	14.1	48.9	67.3	74.1	76.7	78.	7.5	–	15.	–	11.
4"	7.3	–	11.4	16.5	72.1	99.2	109.	113.	115.	8.5	–	22.	–	18.

WORKING PRESSURES PSI

Size	PVC 0 - 20°C 32 - 68°F	PVC 40°C 104°F	PVC 50°C 122°F	Polypropylene –20 - 20°C –4 - 68°F	Polypropylene 60°C 140°F	Polypropylene 80°C 176°F
1/2"-1-1/2"	150	105	105	105	90	65
2"	150	105	90	105	70	40
2-1/2"-3"	150	105	90	105	60	35
4"	150	80	65	105	60	35

Temperature Ranges: PVC 0 to 60°C (32 to 140°F), **PP** –20 to 90°C (–4 to 194°F).

Note: 1-1/4" size is not available in PP.

†**Threaded** ends are available in PVC 1/2" to 2" and PP 1/2" to 1".

***L Flanged** is for fabricated flanged valves normally supplied 1/2" to 2". Solid flanged (special order) 1/2" to 2" valves have shorter dimensions. Consult Chemline.

ORDERING EXAMPLE

Chemline Globe Valves GV	A	015	T
Body Material **A** - PVC **B** - Polypropylene			
Size **005** - 1/2" **007** - 3/4" **010** - 1" **012** - 1-1/4" **015** - 1-1/2" **020** - 2" **025** - 2-1/2" **030** - 3" **040** - 4"			
Ends **T** - Threaded **S** - Socket **F** - Flanged			

Example: Chemline Globe Valve, PVC, 1-1/2", threaded ends.

VACUUM RATING

- 29.9 inches mercury

ACCESSORY

- Handwheel lockout

CHEMLINE Plastics Limited

55 Guardsman Road, Thornhill, Ontario, Canada, L3T 6L2
Tel: 905-889-7890 info@chemline.com
Fax: 905-889-8553 www.chemline.com

Your Pipeline To Quality Valves, Piping, Flow Meters and Controls

CHEMLINE Established in 1968

PROCESS INSTRUMENTATION

ST-004

LEFT BLANK

JOHN MEUNIER

NOMENCLATURE/ BILL OF MATERIALS

TITRE/ TITLE	Rev.	DESCRIPTION	PAR/ BY:	APPR:	DATE:	Affaire / Contract	Meadowbank Mining
Process instrumentation	0	SUBMITTAL	Julie Trudel / P.Ste-Marie	P.S.M.	2009-03-26		
	1						
	2					REF. No.	NC01 0
	3						
DESSIN /DWG # ST-004	4					Date:	2009-03-26

REV.	ITEM	QTE/QTY. Unit.	QTE/QTY. Total	DESCRIPTION	P&ID I.D./TAG	CAT. ACCPAC	SOURCE	FA/SA FI SITE	P / N
	NC01ST-004- 1	1	2	**LEVEL SWITCH**	LSHH-2-011	B24		SA	
				Model #	LSHH-2-021				
				F7-PP					
				Supplier					
				Dwyer					
				Description					
				material: polypropylene and epoxy (float)					
				polypropylene (stem)					
				max. 220 degrees F (105 degrees C)					
				max. 100 psi (7 bar)					
				application: high level in Actiflo					
	NC01ST-004- 2	2	4	**PRESSURE GAUGE**	PI-2-011	B56		SA	
				Model #	PI-2-012				
				761-422	PI-2-021				
				Supplier	PI-2-022				
				Basco					
				Description					
				Pressure gauge lower mount					
				range 0-60 psi (0-400 kPa)					
				diameter 2,5" (63 mm)					
				connection 1/4" MNPT					
				application: Hydrocyclone inlet					
	NC01ST-004- 3	1	1	**RAW WATER TURBIDIMETER**	AIT-1-011	A24		FI	
				Model #					
				71210-00					
				Supplier					
				Hach					
				Description					
				Turbidimeter SS7sc, 0-9999 NTU, NEMA 4X enclosure, c/w SC100 interface, 2 x 4-20 mA digital outputs, 115 Vac / 60 Hz, formazine 4000 NTU solution.					

JOHN MEUNIER

NOMENCLATURE/ BILL OF MATERIALS

TITRE/ TITLE	Rev.	DESCRIPTION	PAR/ BY:	APPR:	DATE:	Affaire / Contract	Meadowbank Mining
Process instrumentation	0	SUBMITTAL	Julie Trudel / P.Ste-Marie	P.S.M.	2009-03-26		
	1						
	2					REF. No.	NC01 | 0
	3						
DESSIN /DWG # ST-004	4					Date:	2009-03-26

REV.	ITEM	QTE/QTY. Unit.	QTE/QTY. Total	DESCRIPTION	P&ID I.D./TAG	CAT. ACCPAC	SOURCE	FA/SA FI SITE	P / N
	NC01ST-004-4	1	1	**Model #**		A24		FI	
				46680-00					
				Supplier					
				Hach					
				Description					
				Bubble trap					
	NC01ST-004-5	1	1	**Model #**		A24		FI	
				23513-00					
				Supplier					
				Hach					
				Description					
				Standardization plates (2)					
	NC01ST-004-6	1	2	**RAW WATER FLOWMETER**	FIT-2-011	A24		FI	
				No de cat.	FIT-2-021				
				VB154KAA1303210000000					
				Fournisseur/Marque					
				Krohne					
				Description					
				Krohne Enviromag electromagnetic flowmeter. 16" diameter, 150 lbs flange, Hard rubber casing, IP67, Hastelloy C-4 electrodes.					
	NC01ST-004-7	1	2	**No de cat.**		A24		FI	
				VN3144A0460010100000					
				Fournisseur/Marque					
				Krohne					
				Description					
				Krohne IFC100CD converter, tube mounted, total volume and current flow digital display, NEMA 4X/IP65, 115/120 VAC, 0/4-20 mA Hart, 1 output pulse, 2 alarm status contacts, including zero stabilization option for empty pipe condition					

JOHN MEUNIER

NOMENCLATURE/ BILL OF MATERIALS

TITRE/ TITLE	Rev.	DESCRIPTION	PAR/ BY:	APPR:	DATE:	Affaire / Contract	Meadowbank Mining
Process instrumentation	0	SUBMITTAL	Julie Trudel / P.Ste-Marie	P.S.M.	2009-03-26		
	1						
	2					REF. No.	NC01 0
	3						
DESSIN /DWG # ST-004	4					Date:	2009-03-26

REV.	ITEM	QTE/QTY. Unit.	QTE/QTY. Total	DESCRIPTION	P&ID I.D./TAG	CAT. ACCPAC	SOURCE	FA/SA FI SITE	P / N
	NC01ST-004-8	1	2	**COAGULATION PH-METER**	PHIT-2-011	B24		SA	
				Model #	PHIT-2-021				
				PRO-P3A1N					
				Supplier					
				Hach / GLI					
				Description					
				pH-meter, 24 VDC, digital display, 4-20 mA output, precision +/-0,01pH					
	NC01ST-004-9	1	2	**Model #**	pHE-2-011	B24		SA	
				PD1R1	pHE-2-021				
				Supplier					
				Hach / GLI					
				Description					
				Combined pH sensors (for immersion or in-line mounting), Ryton body, glass electrode for general purpose, automatic temperature compensator, 1" MNPT connection, 15' cable.					
	NC01ST-004-10	1	1	**CLARIFIED WATER TURBIDIMETER**	AIT-2-011	B24		SA	
				Model #	AE-2-011				
				60101-00					
				Supplier					
				Hach					
				Description					
				Turbidimeter 1720E, 0-100 NTU, 0,0001 NTU, c/w SC100 interface, 2 0/4-20mA outlets, 3 alarm dry contacts, NEMA4X / IP66, 120-230 VAC, 50/60 Hz, 40 VA, 6' cable between SC100 and 1720E, 1 liter of stabilized formazine 20 NTU.					

JOHN MEUNIER

NOMENCLATURE/ BILL OF MATERIALS

TITRE/ TITLE	Rev.	DESCRIPTION	PAR/ BY:	APPR:	DATE:	Affaire / Contract	Meadowbank Mining
Process instrumentation	0	SUBMITTAL	Julie Trudel / P.Ste-Marie	P.S.M.	2009-03-26		
	1						
	2					REF. No.	NC01 | | 0
	3						
DESSIN /DWG # ST-004	4					Date:	2009-03-26

REV.	ITEM	QTE/QTY. Unit.	QTE/QTY. Total	DESCRIPTION	P&ID I.D./TAG	CAT. ACCPAC	SOURCE	FA/SA FI SITE	P / N
	NC01ST-004-11	1	1	**Model #**	AE-2-021	B24		SA	
				60101-01					
				Supplier					
				Hach					
				Description					
				Turbidimeter 1720E sensor only, 1 liter of stabilized formazine 20 NTU.					
	NC01ST-004-12	1	1	**Model #**		B24		FI	
				57960-00					
				Supplier					
				Hach					
				Description					
				Extension cable between SC100 and 1720E, 7.7 m (only one extension possible for each 1720E)					
	NC01ST-004-13	1	1	**Model #**		B24		SITE	
				44156-00					
				Supplier					
				Hach					
				Description					
				Calibration kit: calibration cylinder, TenSette pipet and 4000 NTU Formazin (500 mL)					
	NC01ST-004-14	1	1	**Model #**		B24		SITE	
				14060-53					
				Supplier					
				Hach					
				Description					
				Volumetric Flask 1000 mL PP					

JOHN MEUNIER

NOMENCLATURE/ BILL OF MATERIALS

TITRE/ TITLE	Rev.	DESCRIPTION	PAR/ BY:	APPR:	DATE:	Affaire / Contract	Meadowbank Mining
Process instrumentation	0	SUBMITTAL	Julie Trudel / P.Ste-Marie	P.S.M.	2009-03-26		
	1						
	2					REF. No.	NC01 | | 0
	3						
DESSIN /DWG # ST-004	4					Date:	2009-03-26

REV.	ITEM	QTE/QTY. Unit.	QTE/QTY. Total	DESCRIPTION	P&ID I.D./TAG	CAT. ACCPAC	SOURCE	FA/SA FI SITE	P / N
	NC01ST-004-15	1	2	**ROTAMETER (POLYMER DOSING SKID)**	FI9-521	D48		SA	
				Model #	FI9-522				
				FSA01500					
				Supplier					
				Chemline Plastics Ltd.					
				Description					
				Rotameter in PVC 1 1/4"NPT connections with range 150-1500 l/h					
				Application: polymer carry water					
	NC01ST-004-16	1	2	**Model #**		B24		SITE	
				2283449					
				Supplier					
				Hach					
				Description					
				pH 4 buffer , 500 ml					
	NC01ST-004-17	1	2	**Model #**		B24		SITE	
				2283549					
				Supplier					
				Hach					
				Description					
				pH 7 buffer , 500 ml					
	NC01ST-004-18	1	2	**Model #**		B24		SITE	
				2283649					
				Supplier					
				Hach					
				Description					
				pH 10 buffer, 500 ml					

LEFT BLANK

LEVEL SWITCH

LEFT BLANK

Series F7 Liquid Level Switches

Specifications - Installation and Operating Instructions



(Model F7-SB Shown)

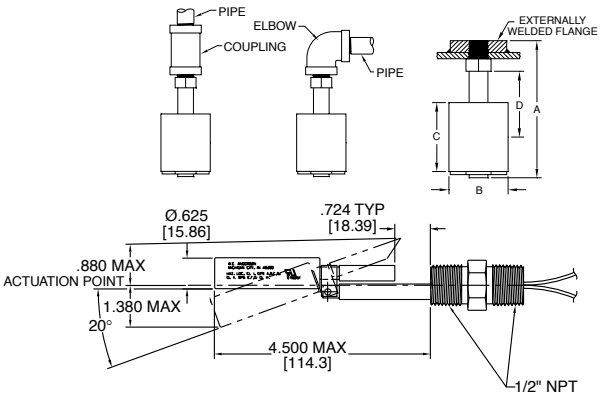

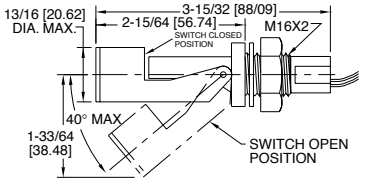

F7-HPS-2, INTERNAL HORIZONTAL MOUNT

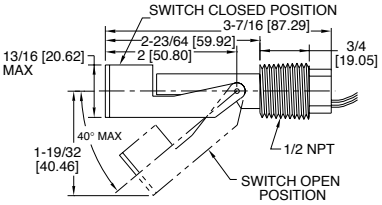

F7-HPS-2, EXTERNAL HORIZONTAL MOUNT

Series F7 Level Switches provide simple, inexpensive control of liquid level within tanks or similar vessels. Switch ratings are suitable for many solid state control systems and monitors or alarms. Simple relay interfaces can be used for higher current applications. Two basic styles offer a choice of vertical or horizontal mounting. Hermetically sealed reed switches are actuated by magnets permanently bonded inside the float and can be easily adapted to open or close a circuit on rising or falling levels.

SWITCH ACTION (Normally open/Normally closed)

Vertical Models

Vertical mount models are shipped with normally open switch contacts which close as the float rises toward the mounting threads. Reverse switch action by removing the float, rotating it end-for-end and replacing it on the stem.

Horizontal Models

Contacts in horizontal models F7-HPS-1 (internal mount) and F7-HPS-2 (external mount), are normally open when the float is down and normally closed when the float is up. Models F7-HPS-1 and -2 also have indicating arrows on the stem end to confirm float alignment. See installation notes on reverse. Horizontal model F7-HSS is in the normally open position when the indicating arrow points up, and normally closed when the arrow points down.

INSTALLATION

Choose a location away from fill pipes, drains, or other areas where turbulence or wave motion might occur. Turbulence will cause false actuations and shorten contact life. Excess contaminants in fluid may inhibit float operation and occasional wipe-down may be necessary. Care should be taken that switches are always operated within electrical ratings. Read and understand all safety precautions on back of this sheet before installing.

MOUNTING

Install vertical mount models in an appropriate 1/8″ NPT fitting. Vertical models mount internally, oriented within 30° of vertical, or select optional fittings for external mounting. Model F7-HPS-1 must be mounted internally, which means the switch must be secured to the wall of the tank or vessel from the inside. Install horizontal model F7-HPS-1 in a 5/8″ (16 mm) hole and secure with nut provided. Tank wall should not exceed 1/8″ (3 mm). Model F7-HPS-2 requires a horizontal 1/2″ NPT(F) fitting and can be fitted to the tank or vessel from the outside. Model F7-HSS requires a horizontal 1/2″ NPT(F) fitting and can be mounting from the inside or outside (internally or externally) of the tank or vessel.

PHYSICAL DATA

Electrical Rating (Maximum):

F7-SB, -SS2 AC: 25VA, 1.0A, 200V DC: 10W, 1.0A, 200V.
F7-PP, -BT, -HSS AC: 30W, 0.14A, 220V DC: 0.28A, 24V; 0.07A, 120V.
F7-HPS-1, -2 AC/DC: 15VA, 220V, 1.0A max.
(F7-HSS is rated explosion-proof for Class I, Groups A, B, C, D; Class II, Groups E, F, G; Class III).

Mounting Connections: 1/8″ NPT(M) (all vertical mount), 1/2″ NPT(M) (F7-HPS-2, F7-HSS), M16 x 2 (F7-HPS-1).

Wire Leads: 22 AWG x 18″ (46 cm), vertical mount models, 22 AWG x 39″ (1 m), models F-7-HPS-1, -2, 22 AWG x 24″ (61 cm) model F7-HSS.

Magnet: Alnico® (F7-SB, -PP, -BT, -HPS), ceramic (F7-SS2, -HSS).

Weight: F7-SB, 2 oz. (58 g); F7-SS2, 1.2 oz. (34 g); F7-PP, 0.8 oz. (23 g); F7-BT, 0.7 oz. (20 g); F7-HPS-1, 1.5 oz. (43 g); F7-HPS-2, 2 oz. (57 g); F7-HSS, 3 oz. (94 g).

DIMENSIONS,INCHES (mm)

Model Number	(A) Stem Length	(B) Float Diameter	(C) Float Height	(D) Actuation from HEX
F7-SB	2.75 (70)	1.38 (35)	1.13 (29)	1.2 (31)
F7-SS2	2.06 (52)	1.0 (25)	1.0 (25)	0.73 (19)
F7-PP	2.18 (55)	1.18 (30)	1.0 (25)	0.69 (18)
F7-BT	2.18 (55)	1.18 (30)	1.0 (25)	0.69 (18)

PHYSICAL DATA

Model No.	Material Float/Stem	Max Temp.	Max Press.	Min S.G.	Approx. Deadband
Vertical Mount					
F7-SB	Buna-N & Epoxy/316SS	220°F 105°C	150 PSIG 10 Bar	0.60	1/16″ 2 mm
F7-SS2	316SS (CYC)/316SS	300°F 149°C	450 PSIG 31 Bar	0.75	1/16″ 2 mm
F7-PP	Polypropylene & Epoxy/Polypropylene	220°F 105°C	100 PSIG 6.89 Bar	0.60	1/8″ 4 mm
F7-BT	Buna-N & Epoxy/PBT*	220°F 105°C	150 PSIG 10 Bar	0.45	1/8″ 4 mm
Horizontal Mount					
F7-HPS -1, -2	Polysulfone/ Polysulfone	185°F 85°C	150 PSIG 10 Bar	0.85	3/16″ 5 mm
F7-HSS	316SS/316SS	392°F 200°C	300 PSIG 20.7 Bar	0.60	1/8″ 4 mm

*PBT - Polybutylene Terephthalate

Optional Fittings (for Exterior Mounting of Vertical Models)

A-347, 1/8″ x 1 1/4″ NPT C.S. Adapter.
A-347-SS, 1/8″ x 1 1/4″ NPT 316SS Adapter.
A-348, 1/8″ x 1 1/2″ NPT C.S. Adapter.
A-348-SS, 1/8″ x 1 1/2″ NPT 316SS Adapter.

DWYER INSTRUMENTS, INC.
P.O. BOX 373 • MICHIGAN CITY, INDIANA 46361, U.S.A.
Phone: 219/879-8000
Fax: 219/872-9057
Lit-By Fax: 888/891-4963
www.dwyer-inst.com
e-mail: info@dwyer-inst.com

Installation Notes - Do not subject reed switch controls to excessive shock or vibration or any of the following:

- Bending or placing force loads on reed switch housing.
- Over-torquing fittings on reed switch housing.
- Placing pull-out force on lead wires.

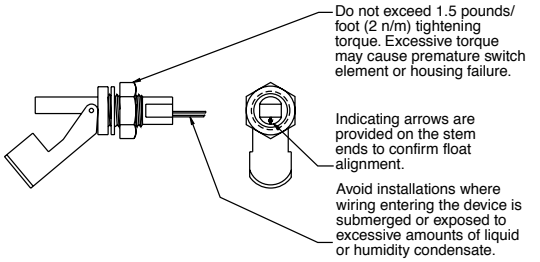

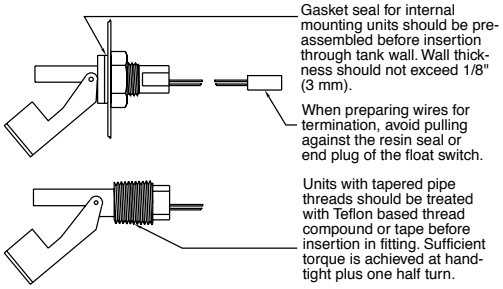

CIRCUIT INFORMATION FOR REED SWITCH PROTECTION

Read information below before installing your new reed switch control!

Exceeding the current capacity of this Reed Switch control may cause FAULTY OPERATION! Be aware of the inductive and capacitive or lamp loads you may be placing on you Reed Switch Control. The circuits below outline possible solutions to preventing overloads due to inrush or surge currents exceeding maximum or when the switch current and product of the inductive back EMF exceed the switch's power rating. Also the circuit for prevention of overload when switching filament lamps (low "cold" resistance) is outlined below. Failure to follow these measures to protect Reed Switch Contacts may cause the contacts to weld together or result in premature wear.

Possible Circuit Solutions Indicated by Dashed Lines

Inductive Loads

Possible causes -
An electromagnetic relay, electromagnetic solenoid, electromagnetic counter with inductive component as circuit load.

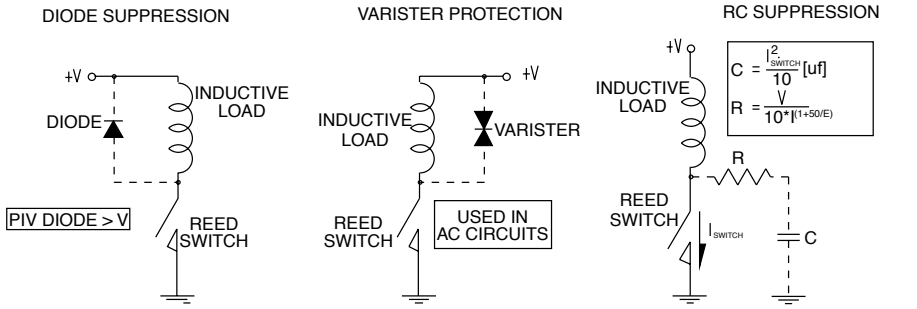

Capacitive Loads

Possible causes -
A capacitor connected in series or parallel with Reed Switch control. In a closed circuit, a cable length (usually greater than 50m [162.5 ft.]) used to connect reed switch may also introduce static capacitance.

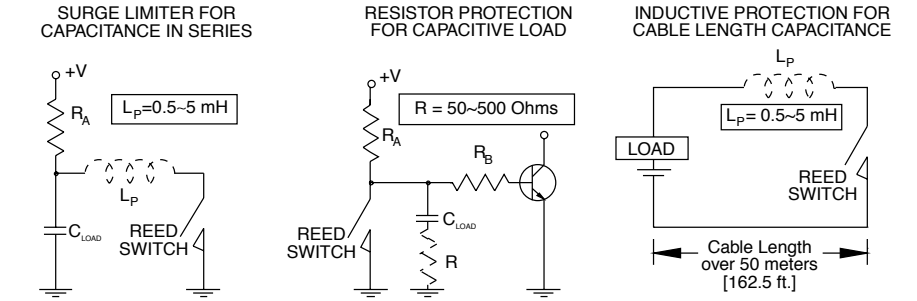

Lamp Loads

Possible causes -
A tungsten filament lamp load.

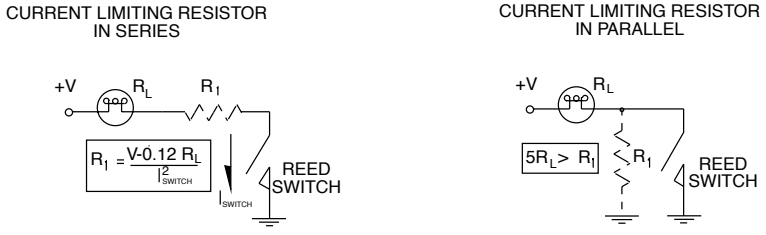

©Copyright 2002 Dwyer Instruments, Inc.

Printed in U.S.A. 6/02

FR# 82-440677-00 Rev. 2

DWYER INSTRUMENTS, INC.
P.O. BOX 373 • MICHIGAN CITY, INDIANA 46361, U.S.A.
Phone: 219/879-8000
Fax: 219/872-9057
Lit-By Fax: 888/891-4963
www.dwyer-inst.com
e-mail: info@dwyer-inst.com

PRESSURE GAUGE

LEFT BLANK

BASCO® Gauges



For general use - 63mm (2½")

760 Series, 2% Full scale accuracy, Grade B (3-2-3)

Glycerine filled, acrylic lens

- Case : IP50, stainless steel
- Ring : stainless steel
- Dial : aluminum, white background, black (psi) and blue (kPa) graduations
- Dial : double, lb/in² (psi) and kPa
- Resolution : ½ division
- Bourdon Tube : brass (less than 600 psi), bronze (over 800 psi)
- Fitting : brass, ¼" NPT
- Working and process temperature : -10 to 50°C, less than 80% RH

Model	Dia mm	Dia inches	Fitting
761	63 mm	2½"	lower mount (lm)
764	63 mm	2½"	center back mount (cbm)
766	model 764 with front flange (cbm)		
767	model 764 with clamp ring (cbm)		

OPTIONS	
019039	front flange
019091	clamp-ring



Front flange



Clamp-ring

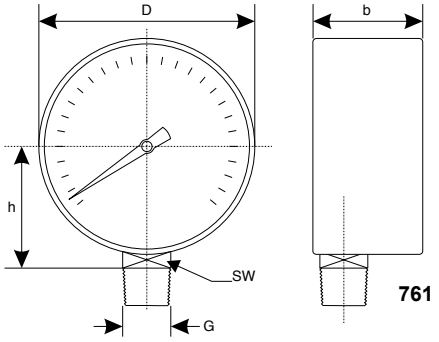

761

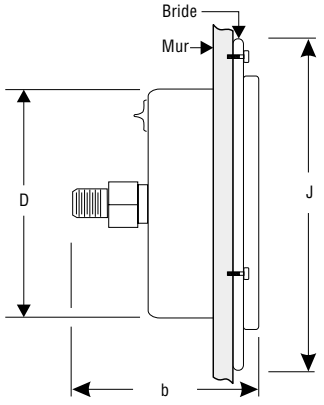

764 +019039
= 766

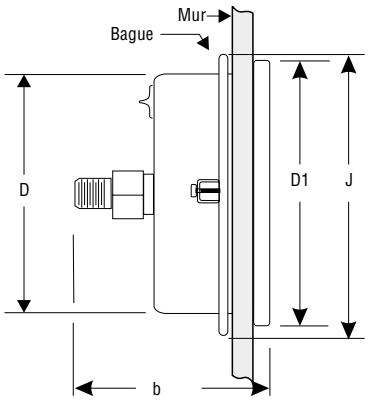

764 + 019091
= 767

How to order

☐ – ☐

Model — Range Code

Example : 761 – 423 = 63mm, 1/4"NPT, 0/100 psi 0/700 kPa

Range Code	"Hg and psi Range	kPa Range	"Hg Divisions	psi Divisions	kPa Divisions
401	-30/0"Hg	-100/0	0,5		2
417	0/15	0/100		0,25	2
420	0/30	0/200		0,5	5
422	0/60	0/400		1	10
423	0/100	0/700		2	20
425	0/160	0/1100		2	20
426	0/200	0/1400		5	50
427	0/300	0/2100		5	50
429	0/500	0/3400		10	100
430	0/600	0/4200		10	100
432	0/1000	0/7000		20	200
436	0/3000	0/21000		50	500
438	0/5000	0/34000		100	1000
439	0/6000	0/40000		100	1000
441	0/10000	0/70000		200	2000

Options

- ABS case
- U-Clamp (from factory only)
- Your logo on the dial (minimum quantity required)

	D	D1	b	h	G	SW	J
761	63			38	1/4"NPT	14	
764	63	66,8	55		1/4"NPT	14	
766	63	66,8	55		1/4"NPT	14	88,9
767	63	66,8	55		1/4"NPT	14	68,8

dimensions in millimeters

Other models, styles and fittings available on request

Fax : (514) 327-0604

LEFT BLANK

RAW WATER TURBIDIMETER

LEFT BLANK

Surface Scatter® 7 sc Turbidimeter



Use the Hach Surface Scatter 7 sc Turbidimeter to monitor high range turbidity with greater accuracy and reliability than ever before. The optics never touch the sample in the Hach Surface Scatter 7 Turbidimeter so it's virtually maintenance free.

Features and Benefits

Less Fouling for Easy Maintenance

The Hach Surface Scatter 7 sc Turbidimeter (SS7) is uniquely designed so that the light source and photocell never come in contact with the sample. In fluids with high loads of suspended solids this makes sample cell cleaning and replacement unnecessary.

Built to Last

All wetted parts of the Hach SS7 turbidimeter are made with corrosion-resistant materials for extended life. The photo-detector and light source assemblies are protected from the effects of corrosive vapors. The SS7 turbidimeter is warranted against defects in materials or workmanship for two years from the date of shipment.

Two Models for Different Applications

Surface Scatter 7 sc Turbidimeter—Use the SS7 to establish and maintain optimum process control and for reliable monitoring.

- *Drinking water influent*
- *Wastewater effluent*
- *Flocculation and sedimentation*
- *Industrial process water*
- *Food processing waste containing starch, fat, or oil*

Surface Scatter 7 sc High Sample Temperature (HST) Turbidimeter—This is an SS7 turbidimeter designed to monitor samples with temperatures of up to 70°C. An innovative moist air removal system is useful where a difference between the sample temperature and the ambient temperature causes condensation and fogging. For use in applications such as:

- *Fluids ranging from raw water influent to corrosive white liquor*
- *High temperature samples—up to 70°C*
- *Corrosive white, black, and green liquor in paper mills*
- *Produced water in oil fields containing oil and hydrogen sulfide*
- *Wherever temperature differences cause condensation and fogging*

Wide Measurement Range

The SS7 turbidimeter can reliably measure turbidity from 0 to 9999 NTU in samples that vary from clear water to corrosive and high temperature paper mill and oil field samples.

Backed by a 2-year Warranty

Consistent with its long-standing reputation for quality and customer service, Hach Company warrants all SS7 turbidimeters against defects in materials or workmanship for two years from the date of shipment.

Specifications*

Range
0 to 9999 Nephelometric Turbidity Units (NTU)

Accuracy
±5% of reading or ±0.1 NTU (whichever is greater) from 0 to 2000 NTU; ± 10% of reading from 2000 to 9999 NTU

Resolution
0.01 NTU below 100 NTU

0.1 NTU between 100 to 9999.9 NTU

Repeatability
1.0% or ±0.04 NTU, whichever is greater

Response Time
Initial response in 45 seconds

Sample Flow Required
1.0 to 2.0 L/min (15 to 30 gal/hr)

Sample Temperature
SS7: 0 to 50°C (32 to 122°F)

SS7/HST: 0 to 70°C (32 to 158°F), intermittent 70 to 80°C (158 to 176°F) (an optional heat exchanger is available to reduce sample temperature)

Ambient Temperature
0 to 50°C

Humidity
5 to 95% non-condensing

Power Requirements
100/230 VAC, 50/60 Hz, auto selecting; 40 VA

Installation Category
Category II

Sample Inlet Fitting
3/4-inch NPT female

Overflow Drain Fitting
1-inch NPT female

Body Drain Fitting
3/4-inch NPT female

Air Purge Fitting
3/4-inch compression fitting; 0-50 SCFH airflow clean instrument air

Enclosure
Sample unit: NEMA-12 plastic instrument enclosure suitable for indoor installation

Mounting
Wall mount

Dimensions
64.2 x 67.5 x 19.0 cm (25.3 x 26.6 x 7.5 in.)

Weight
SS7: 15.8 kg (35 lbs.)

SS7/HST: 18 kg (40 lbs.)

**Specifications subject to change without notice.*

Principle of Operation

The sample is introduced into the center sample tube of an inclined turbidimeter body at a flow rate of 1 to 2 liters per minute (1/4 to 1/2 gallon per minute). As the fluid spills over the top of the turbidimeter body, a stable, flat surface of liquid forms and becomes the measuring surface.

A high-intensity light source is directed at the surface of the liquid at an acute angle. Light is scattered by particles in the sample and is detected by a photocell positioned directly over the point where the light enters the liquid. The light is scattered at or near the surface and very little is absorbed by the liquid. The amount of light scattered changes in direct proportion to turbidity.

Most of the light directed at the surface of the sample is reflected up into the instrument cabinet and absorbed, or refracted down into the turbidimeter body. A small amount of the light is scattered by the particles suspended in the fluid. The photocell assembly detects light scattered at 90° from the incident beam. The electronic signal generated by the photocell is directly related to the concentration of particles suspended in the sample.

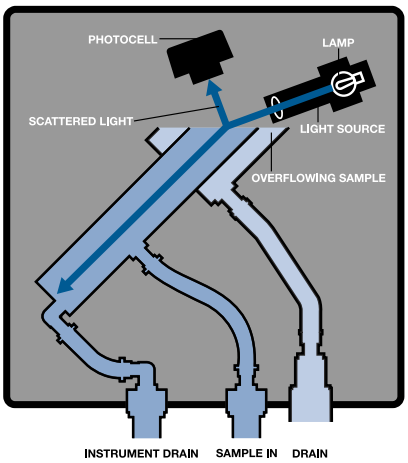

Engineering Specifications

1. The turbidimeter shall be a continuous-reading, on-line instrument using the nephelometric method of measurement.
2. The turbidimeter shall consist of two main components: a sample unit and a control unit.
3. The turbidimeter shall utilize a single silicon photodiode to detect 90 degree scattered light.
4. The turbidimeter shall be equipped with a digital display with automatic decimal point placement reading from 0-9999 NTU.
5. The accuracy of the turbidimeter shall be better than ±0.1 NTU or ±5% from 0 to 2000 NTU which ever is greater; ±10% from 2000 to 9999 NTU.
6. The resolution of the turbidimeter shall be 0.01 NTU.
7. Calibration of the turbidimeter shall be based on formazin.
8. The turbidimeter shall be sold with a warranty against defects in materials and workmanship for two years from date of shipment.
9. All optical and hydraulic components shall be housed in the sample unit.
10. The optics of the turbidimeter shall never touch the sample.
11. The light source shall be directed to the surface of the water source, eliminating the use of a glass window or flow cell.
12. The sampling unit shall be constructed of corrosion-resistant structural plastic.
13. The sampling unit shall be powered from the control unit and require no separate power source.
14. The sampling unit shall be housed in a NEMA-12 industrial plastic enclosure suitable for indoor installation.

Engineering Specifications *continued*

15. The control unit shall be equipped with linear output signal that can be programmed to span all or any portion of the 0-9999 NTU range.
16. The control unit shall be equipped with two turbidity alarm set points adjustable over the entire range of the instrument with a SPDT relay with unpowered contacts rated for 6 A.
17. A bubble rejection algorithm shall be provided to eliminate spikes in measurement due to transient sample conditions.
18. The control unit shall be housed in a NEMA-4X industrial enclosure suitable for indoor installation
19. The turbidimeter shall be the Model Surface Scatter 7 sc Turbidimeter manufactured by Hach Company.

Dimensions

The Hach Surface Scatter 7 sc Turbidimeter should be located as close to the sampling point as possible. The control unit and sample unit can be bench- or wall-mounted indoors and away from direct sunlight. Best performance will result if the ambient temperature does not change rapidly. Equipped with an 4-conductor 6-foot (2 m) sensor cable expandable up to 30 feet (10m).

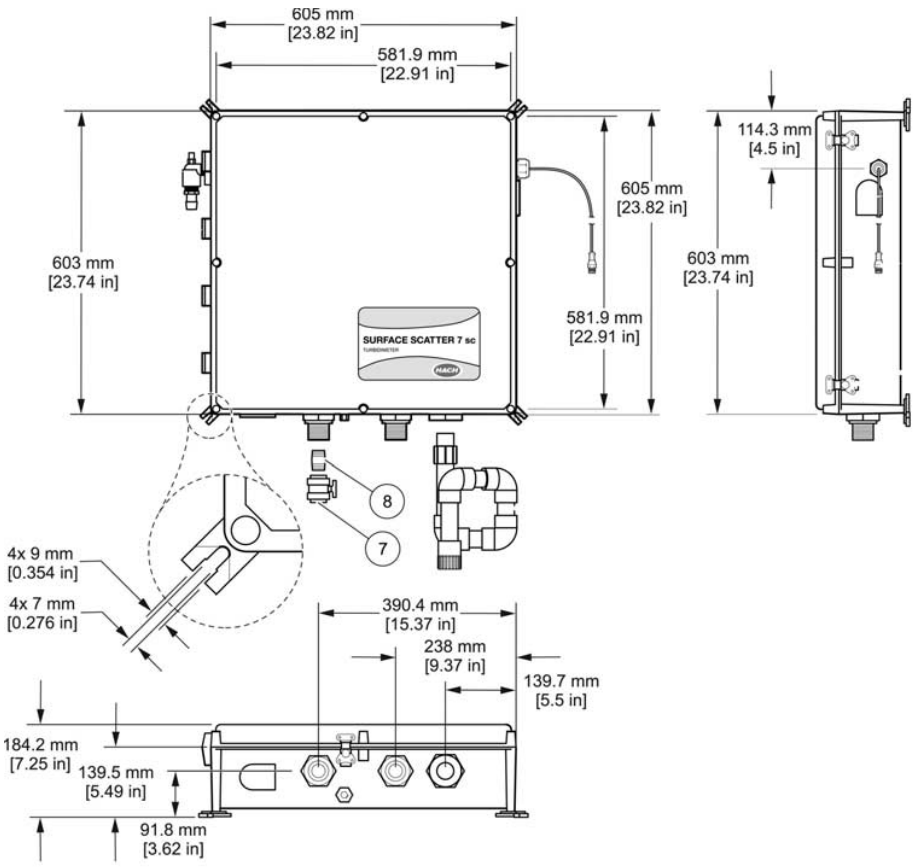

Installation

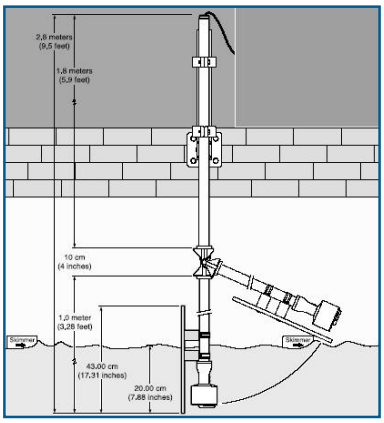

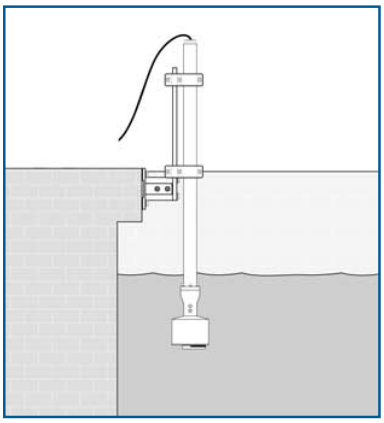

Ordering Information

All Surface Scatter 7 Turbidimeters are shipped with calibration cup, 4000 NTU Formazin calibration standard, installation accessories, and instruction manual (power cords must be ordered separately).

71210-00	Surface Scatter 7 sc Turbidimeter; with Hach sc100 Controller*
71215-00	Surface Scatter 7 sc High Sample Temperature (HST) Turbidimeter; with Hach sc100 Controller*

**Refer to Hach lit #2463 for more information about the sc100 Controller.*

Sensor Only

LPV431.52.00002	Surface Scatter 7 sc Turbidimeter
LPV432.52.00002	Surface Scatter 7 sc High Sample Temperature (HST) Turbidimeter

Sample Conditioning Options

466912-12	Auto Flush Kit; 120 Vac
466912-22	Auto Flush Kit; 240 Vac
46680-00	Bubble Trap, Head Regulator
40284-00	Flow Meter; 100 to 1600 mL/minute

Calibration Standards

71216-49	400 NTU StablCal; 500 mL
2461-49	4000 NTU Formazin; 500 mL

Cables

57960-00	Sensor Cable Extension; 7.6 m (25 ft.)
46306-00	Power Cord; 125 Vac, 10 A, 1.83 m (6 ft.)
46308-00	Power Cord; 250 Vac, 10 A, 1.83 m (6 ft.)

Optional Accessories

687-00	Cylinder Brush; size 2
45021-00	Calibration Cup
23513-00	Verification Plates
58690-00	Sun Shield, sc100 controller
23513-00	Standardization Plate Kit, uncalibrated

Lit. No. 2509
F62.5 Printed in U.S.A.
©Hach Company, 2006. All rights reserved.
In the interest of improving and updating its equipment, Hach Company reserves the right to alter specifications to equipment at any time.

At Hach, it's about learning from our customers and providing the right answers. It's more than ensuring the quality of water—it's about ensuring the quality of life. When it comes to the things that touch our lives...

Keep it pure.

Make it simple.

Be right.

For current price information, technical support, and ordering assistance, contact the Hach office or distributor serving your area.

In the United States, contact:

HACH COMPANY World Headquarters
P.O. Box 389
Loveland, Colorado 80539-0389
U.S.A.
Telephone: 800-227-4224
Fax: 970-669-2932
E-mail: orders@hach.com
www.hach.com

U.S. exporters and customers in Canada, Latin America, sub-Saharan Africa, Asia, and Australia/New Zealand, contact:

HACH COMPANY World Headquarters
P.O. Box 389
Loveland, Colorado 80539-0389
U.S.A.
Telephone: 970-669-3050
Fax: 970-461-3939
E-mail: intl@hach.com
www.hach.com

In Europe, the Middle East, and Mediterranean Africa, contact:

HACH LANGE GmbH
Willstätterstraße 11
D-40549 Düsseldorf
GERMANY
Tel: +49 (0) 211 5288-0
Fax: +49 (0) 211 5288-143
E-mail: info@hach-lange.de
www.hach-lange.com

HACH®

Be Right™

sc100 Controller



The Model sc100 Controller receives data from one or two sensors. Its plug-and-play, mix-and-match operation lets it fit into any facility or workflow. Digital communication with any Hach digital sensor or probe is simple and reliable.

Features and Benefits

One Controller for One or Two Sensors

The Hach sc100 Controller receives data from up to two sensors. Use any of Hach's line of digital sensors for pH/ORP, conductivity, dissolved oxygen, or turbidity.

One Controller for One or Two Parameters

Not only can the sc100 controller be used for up to two sensors, but the sensors need not be the same. Mix and match any combination of parameters.

One Controller for Many Options

Communications using RS485/MODBUS® or RS232/MODBUS® protocols or the wireless infrared port are available. (Contact your Hach representative for other communication protocols.) Multiple control functions include built-in PID, control contacts, and alarm functions.



"Plug and Play" Operation

There's no complicated wiring or set up procedures with the sc100 controller. Just plug the sensor in and it's ready for use without special ordering or software configuration.

Simple, Reliable Data Collection

A built-in data logger collects measurement at user selectable intervals (1 to 15 minutes), together with calibration and verification points, alarm history, and instrument setup changes for up to 6 months. With a two-year warranty, the Hach sc100 Controller is built to last.

DW = drinking water WW = wastewater municipal PW = pure water / power
IW = industrial water E = environmental C = collections FB = food and beverage

HACH®

Be Right™

Specifications*

Ambient Conditions

Operation
With less than 7 W sensor load:
-20 to 60° C (-4 to 140° F); 0 to 95% relative humidity, non-condensing

With less than 25 W sensor load:
-20 to 40° C (-4 to 104° F); 0 to 95% relative humidity, non-condensing

Storage
-20 to 70° C (-4 to 158° F); 0 to 95% relative humidity, non-condensing

Power Requirements

100 to 230 Vac, 50/60 Hz; Power: 11W with 7W sensor load; 35W with 25W sensor load

Display

Graphic dot matrix LCD, 128 x 64 pixels with LED backlighting

Relays

Three SPDT, user-configurable contacts rated 100 to 230 Vac, 5 Amp resistive maximum

Outputs

Two analog 4-20 mA, maximum impedance 500 Ohms, optional digital network connection

Control

PID, High/low phasing, setpoint, deadband, overfeed timer, off delay, and on delay

Alarms

Low alarm point, low alarm point deadband, high alarm point, high alarm point deadband, off delay, and on delay

Communication (Optional)

RS-232 (MODBUS®): Configure and retrieve measured data for one analyzer using IBM-compatible PC

RS-485 (MODBUS®): Advanced communications/networking with PLC or SCADA system directly from analyzer.

Memory Backup

All user settings are retained indefinitely in memory (non-volatile) (EEPROM)

Mounting Configurations

Surface, panel, and pipe (horizontal and vertical)

Enclosure

NEMA 4X/IP66; metal enclosure with corrosion-resistant finish

Dimensions

1/2 DIN; 144 x 144 x 150 mm (5.7 x 5.7 x 5.9 in.)

Weight

1.6 kg (3.5 lbs.)

Certifications

ETL to UL 61010A-1 and CSA C22.2 No. 1010.1

**Specifications subject to change without notice.*

Engineering Specifications

1. The controller shall be a microprocessor-based instrument.
2. Connections between the sensors and the controller shall be “plug and play.”
3. The controller shall have the option for RS232/MODBUS® or RS485/MODBUS® serial input/output capability for two-way communication to a computer and have wireless downloading capability through an IR Port located on the interface unit to download and print realtime data, calibration history, and current set points in a CSV format.
4. The Interface unit shall allow operators to control sensor and interface functions with menu-driven software.
5. The interface unit shall have a built-in data logger with the capacity to store data on 15-minute intervals for up to 6 months with two sensors per controller.
5. The interface unit shall include two analog 4-20 mA outputs and 3 unpowered SPDT form ‘C’ alarm contacts.
7. The interface unit shall include two independent PID control functions.
8. The interface unit shall be housed in a NEMA-4X/IP66 metal enclosure with corrosion-resistant finish.
9. The controller shall be mounted horizontal or vertical on surface, panel, or pipe.
10. The AC power supply shall be housed in the interface unit and automatically accept input in the range of 100 to 230 Vac, 50/60 Hz.
11. All system components shall be certified by ETL to UL 61010A-1, CSA C22.2 No. 1010.1.
12. The controller shall be warranted for two full years against defects in material and workmanship.
13. The controller shall be Hach Company Model sc100 Controller.

Dimensions

The sc100 controller unit can be installed on a surface, panel, or pipe (horizontally or vertically). No tools are needed to connect the controller unit to any Hach digital sensor.

Front and Side Views

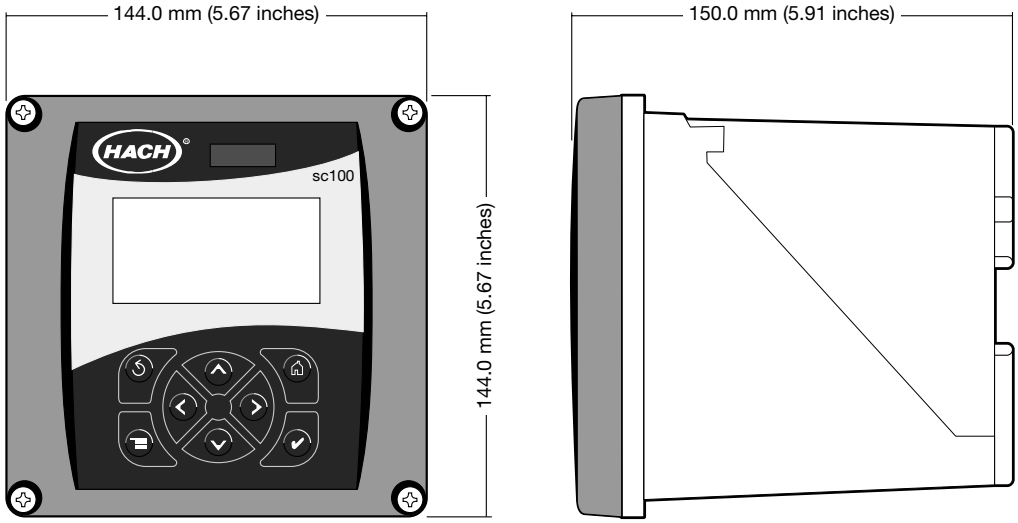

Back View

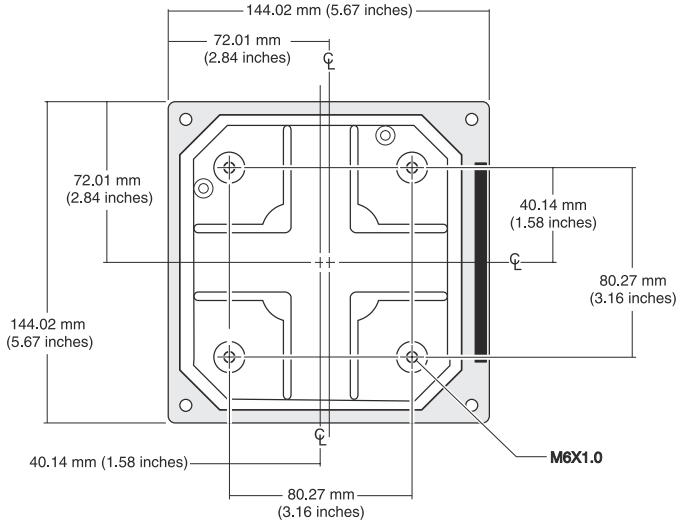

Panel Mount Cut-Out Dimensions

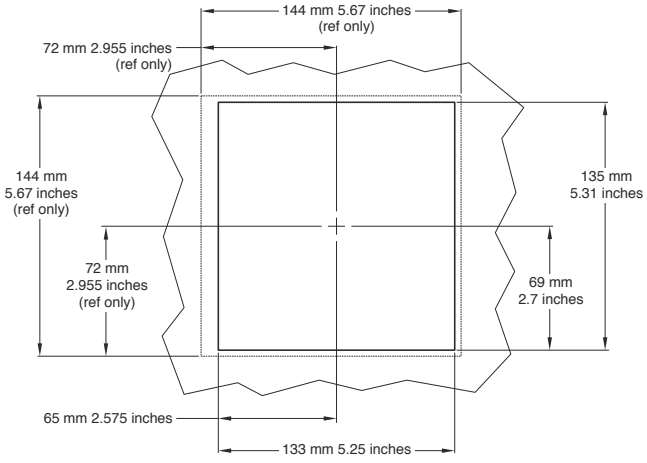

Conduit Hole Dimensions

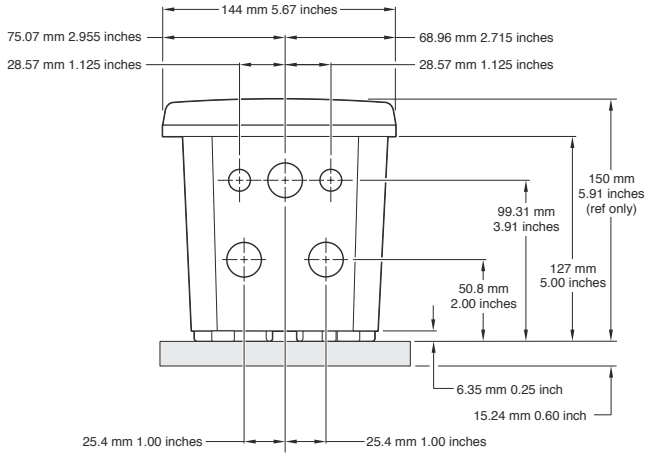

Ordering Information

LXV401.52.00002 sc100 Controller Standard

LXV401.52.01002 sc100 Controller with RS-232 (MODBUS®)

LXV401.52.02002 sc100 Controller with RS-485 (MODBUS®)

Note: Power cords must be ordered separately.

Note: Other communication options are available. Please contact Hach Technical Support or your Hach representative.

Power Cords

54488-00	Power Cord with strain relief, 125 Vac
54489-00	Power Cord with strain relief, 230 Vac, European-style plug

Accessories

58690-00	Sun Shield, for controller

To complete your measurement system, choose from Hach's family of digital sensors...



Lit. No. 2463
XXXX Printed in U.S.A.
©Hach Company, 2004. All rights reserved.
In the interest of improving and updating its equipment, Hach Company reserves the right to alter specifications to equipment at any time.

At Hach, it's about learning from our customers and providing the right answers. It's more than ensuring the quality of water—it's about ensuring the quality of life. When it comes to the things that touch our lives...

Keep it pure.

Make it simple.

Be right.

For current price information, technical support, and ordering assistance, contact the Hach office or distributor serving your area.

In the United States, contact:

HACH COMPANY World Headquarters
P.O. Box 389
Loveland, Colorado 80539-0389
U.S.A.
Telephone: 800-227-4224
Fax: 970-669-2932
E-mail: orders@hach.com
www.hach.com

U.S. exporters and customers in Canada, Latin America, sub-Saharan Africa, Asia, and Australia/New Zealand, contact:

HACH COMPANY World Headquarters
P.O. Box 389
Loveland, Colorado 80539-0389
U.S.A.
Telephone: 970-669-3050
Fax: 970-461-3939
E-mail: intl@hach.com
www.hach.com

In Europe, the Middle East, and Mediterranean Africa, contact:

HACH + LANGE Europe
Dr. Bruno Lange GmbH & Co. KG
Willstätterstraße 11
D-40549 Düsseldorf
GERMANY
Tel: +49 (0) 211 5288-0
Fax: +49 (0) 211 5288-143
E-mail: kundenservice@drlange.de
www.drlange.com

HACH®

Be Right™

Catalog Number DOC026.53.00769

Surface Scatter® 7 sc Turbidimeter

USER MANUAL

Edition 1 May 2006

© Hach Company, 2006. All rights reserved. Printed in the U.S.A.

te/kt

Table of Contents

Section 1 Specifications 5

Section 2 General information 7

2.1 Safety information 7

2.1.1 Use of hazard information 7

2.1.2 Precautionary labels 7

2.2 General product information 8

2.2.1 Instrument description 8

2.2.2 Surface Scatter 7 sc High Sample Temperature 11

Section 3 Installation 13

3.1 Basic installation overview 13

3.2 Unpacking the instrument 13

3.3 Mechanical installation 15

3.3.1 Environmental requirements 15

3.3.2 Selecting the installation location 15

3.3.3 Mounting the SS7 sc or SS7 sc-HST 15

3.3.4 Installing the optional heat exchanger 17

3.3.5 Installing the 3-way ball valves 18

3.4 Installing a sample line 18

3.5 Connecting hydraulics 19

3.6 Connecting the air purge fitting 22

3.7 Electrical installation 22

3.7.1 Wiring safety information 22

3.7.2 Connecting/wiring the SS7 sc or SS7 sc-HST to the sc100 controller 22

Section 4 System startup 25

4.1 General operation 25

4.2 Starting sample flow 25

Section 5 Operation 27

5.1 Sensor setup 27

5.1.1 Configuring the bubble reject 27

5.1.2 Configuring the signal average 27

5.2 Sensor data logging 28

5.3 Sensor diagnostics menu 28

5.4 Sensor setup menu 28

5.5 Sensor calibration and verification 29

5.5.1 Standardization and calibration 29

5.5.2 Calibration 29

5.5.3 Setting the verification baseline 32

5.5.4 Instrument verification 33

5.6 Calibration and verification history 34

5.7 Operating the SS7 sc-HST 36

Section 6 Maintenance 37

6.1 Scheduled maintenance 37

6.2 Removing a sensor from the system 37

6.3 Installing a sensor on the system 37

6.3.1 Cleaning 38

6.4 Unscheduled maintenance 38

6.4.1 Lamp replacement 38

6.4.2 Light source assembly maintenance 41

6.4.3 Detector assembly replacement 42

Section 7 Troubleshooting 45
7.1 Error Codes 45
7.2 Warnings 45
7.3 Event codes 47
7.4 Data log 48
Section 8 Replacement parts and accessories 49
8.1 Replacement parts 49
8.2 Accessories 49
Section 9 How to order 51
Section 10 Repair service 52
Section 11 Limited warranty 53
Section 12 Certification 55

Section 1 Specifications

Specifications are subject to change without notice

Range	0.01–9999.9 nephelometric turbidity units (NTU)
Accuracy	± 5% of reading or ± 0.1 NTU (whichever is greater) from 0.01 to 2000 NTU; ± 10% of reading from 2000 to 9999 NTU
Resolution (displayed)	0.01 NTU up to 999.99 NTU; 0.1 NTU from 1000.0 to 9999.9 NTU
Repeatability	Better than ± 1.0% of reading or ± 0.04 NTU, whichever is greater for each range.
Response time	Initial response in 45 seconds
Sample flow required	1.0 to 2.0 L/min (0.3 to 0.5 gal/min) (15 to 30 gal/hr)
Sensor storage temperature	–20 to 80 °C (–4 to 140 °F); 95% relative humidity, non-condensing.
Operating temperature	0 to 50 °C (32 to 122 °F) for one SS7 sc on an sc100; 0 to 40 °C (32 to 104 ° F) for one SS7 sc and another smart sensor that consumes less than 5 watts on a single sc100. See Figure 1 on page 6.
Sample temperature range	0 to 50 °C (32–122 °F); HST model—0 to 70 °C, intermittent 70 to 80 °C. (An approved heat exchanger is available to reduce sample temperature.)
Operating humidity	5 to 95% non-condensing
Power requirements	12 VDC ±5%, 20 watts maximum (provides by sc100)
Sample inlet fitting	¾-in. NPT female
Overflow drain fitting	1-in. NPT female
Body drain fitting	¾-in. NPT female
Alr purge fitting	¼-in. quick-connect compression fitting; 0–50SCFH airflow of clean instrument air
Signal average (filter) time	No averaging, 6, 30, 60 and 90 seconds, user selectable. Default is 30 seconds.
Sensor dimensions	64.2 x 67.5 x 19.0 cm (25.3 x 26.6 x 7.5 in.)
Sensor cable length	2 m (6.6 ft); Optional 7.62 m (25 ft) extension cable. Maximum cable length is 9.62 m (31.6 ft).
Sensor cable rating	Cable: 105 °C, 300 V, PVC jacket Wires: 22 AWG, PVC jacket
Mounting options	Wall
Shipping weight	SS7 sc—15.8 kg (34.8 lb); SS7 sc-HST—18 kg (39.6 lb)
Calibration method	Formazin – user-prepared primary or wet calibration of the instrument
Verification (dry) method	Standardization plates with approximate values of 100 or 1000 NTU. Unique value is assigned when dry verification is done immediately after calibration and is used with pass/fail criteria for subsequent verifications.
Recommended cleaning intervals	Mandatory before calibration Optional before verification Mandatory upon verification failure
Languages	English (default), German, French, Spanish, Italian, Swedish, Polish, Korean, Chinese, Japanese
Installation environment	Indoor
Primary compliance method	USEPA 180.1; Hach Method 8195; ASTM D 6698; Standard Methods 2130B

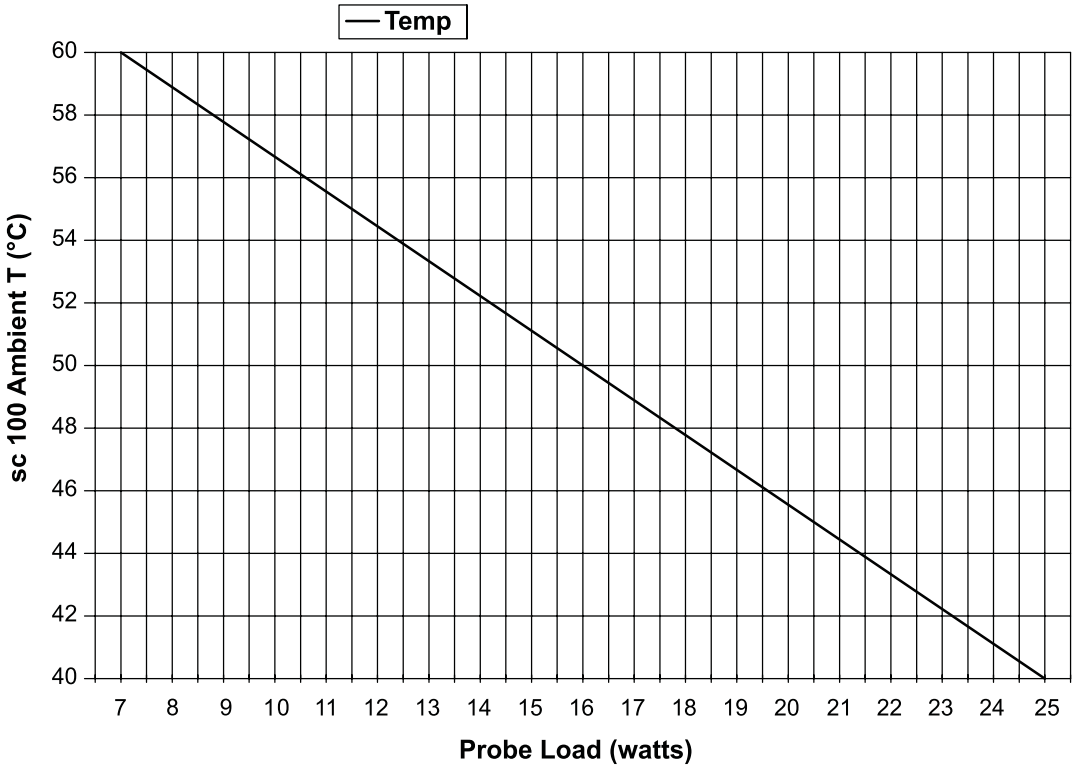

Figure 1 Maximum ambient temperature vs. probe load

Section 2 General information

2.1 Safety information

Please read this entire manual before unpacking, setting up or operating this equipment. Pay attention to all danger and caution statements. Failure to do so could result in serious injury to the operator or damage to the equipment.

To ensure that the protection provided by this equipment is not impaired, do not use or install this equipment in any manner other than that specified in this manual.

2.1.1 Use of hazard information

DANGER
Indicates a potentially or imminently hazardous situation which, if not avoided, could result in death or serious injury.

CAUTION
Indicates a potentially hazardous situation that may result in minor or moderate injury.

Important Note: *Information that requires special emphasis.*

Note: *Information that supplements points in the main text.*

2.1.2 Precautionary labels

Read all labels and tags attached to the instrument. Personal injury or damage to the instrument could occur if not observed. A symbol, if noted on the instrument, will be included with a danger or caution statement in the manual.

	This symbol, if noted on the instrument, references the instruction manual for operation and/or safety information.
	Electrical equipment marked with this symbol may not be disposed of in European public disposal systems after 12 August of 2005. In conformity with European local and national regulations (EU Directive 2002/96/EC), European electrical equipment users must now return old or end-of life equipment to the Producer for disposal at no charge to the user. ***Note:*** *For return for recycling, please contact the equipment producer or supplier for instructions on how to return end-of-life equipment, producer-supplied electrical accessories and all auxiliary items for proper disposal.*
	This symbol, when noted on a product enclosure or barrier, indicates that a risk of electrical shock and/or electrocution exists.
	This symbol, if noted on the product, indicates the need for protective eye wear.
	This symbol, when noted on the product, identifies the location of the connection for Protective Earth (ground).
	This symbol, when noted on the product, identifies the location of a fuse or current limiting device.
	This symbol, when noted on the product, identifies a risk of chemical harm and indicates that only individuals qualified and trained to work with chemicals should handle chemicals or perform maintenance on chemical delivery systems associated with the equipment.
	This symbol, when noted on the product, indicated the presence of devices sensitive to Electro-static Discharge (ESD) and indicated that care must be taken to prevent damage with the equipment.

2.2 General product information

2.2.1 Instrument description

The Surface Scatter® 7 sc (SS7 sc) Turbidimeter is a sensitive, continuous-monitoring instrument designed for measuring turbidity in fluids. The instrument design is based on the nephelometric principle, where light scattered by particles suspended in the fluid is measured to determine the relative amount of particulate matter in the fluid. It meets all U.S. Environmental Protection Agency (USEPA) design criteria, features an automatic-ranging digital display and is capable of measuring turbidities from 0–9999 NTU. Calibration is based on formazin, the primary turbidity reference standard adopted by the APHA Standard Methods for the Examination of Water and Wastewater and the USEPA. The instrument consists of a control unit and a sample unit (Figure 2).

DANGER
The SS7 sc and SS7 sc-HST Turbidimeters are not designed for use with samples that are flammable or explosive in nature. If any sample solution other than water is used in this product, test the sample/product compatibility to assure user safety and proper product performance.

DANGER
The SS7 sc/sc100 product configuration is not intended for installation in hazardous locations. See the sc100 installation control drawing 58600-78 for approved hazardous location sensors.

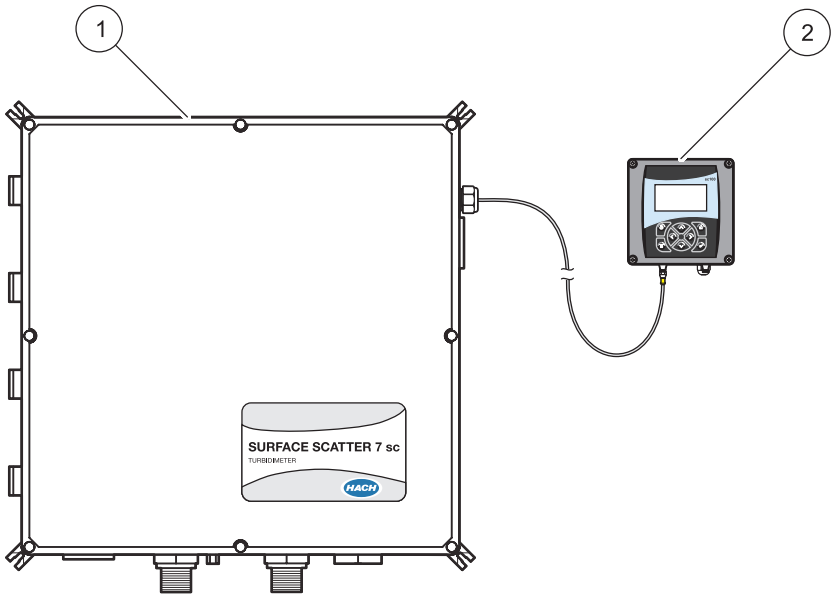

Figure 2 SS7 sc Turbidimeter

1	Sample unit	**2**	Control unit

2.2.1.1 Controller

The SS7 sc and SS7 sc-HST operate in conjunction with an sc100 controller. The controller enclosure houses the keypad, display, microprocessor board and power supply components.

Operating controls and indicators are on the controller. The controller is used to program the instrument for turbidity level alarm set points and to perform diagnostic self-tests and programming operations.

Sample turbidity is displayed continually by the digital display during normal operation. Because of the automatic decimal point positioning, no range selection is needed. Indicators of turbidity level alarm conditions, certain critical system malfunctions or other possible malfunctions are also on the controller.

Programmable alarm circuits provide three relay closures, both normally open and normally closed, for selectable turbidity alarm level set points. Set points can be programmed by the operator anywhere within the overall range. The alarm circuits can be programmed for Alarm, Feeder Control, Event Control, PWM Control, Frequency Control and Warning. Refer to the sc100 manual for setup and use of these different settings. An alarm relay can be programmed in the sc100 to control the optional Auto Flush Kit.

The sc100 controller is designed to meet NEMA 4X water-tight requirements. It is constructed of corrosion-proof materials. It is suitable for indoor installation. Mounting hardware is included with the sc100 to provide the capability to wall mount, pipe mount and panel mount the controller without affecting the environmental integrity of the case. Electrical access holes are sized for ½-in. conduit.

2.2.1.2 Sample unit

Sample flows through the sample unit (Figure 3) where sample turbidity is measured. The sample unit enclosure contains all the electronics for measuring the turbidity. A NEMA 12, corrosion-proof case protects the optical components and hydraulics from industrial environments and supplies the measurement signal to the control unit. The case is designed for wall mounting with external mounting blocks.

Hydraulic connections to the sample unit are at the bottom of the enclosure. An air purge fitting is installed in the enclosure bottom. Air purge is suggested to control condensation inside the enclosure.

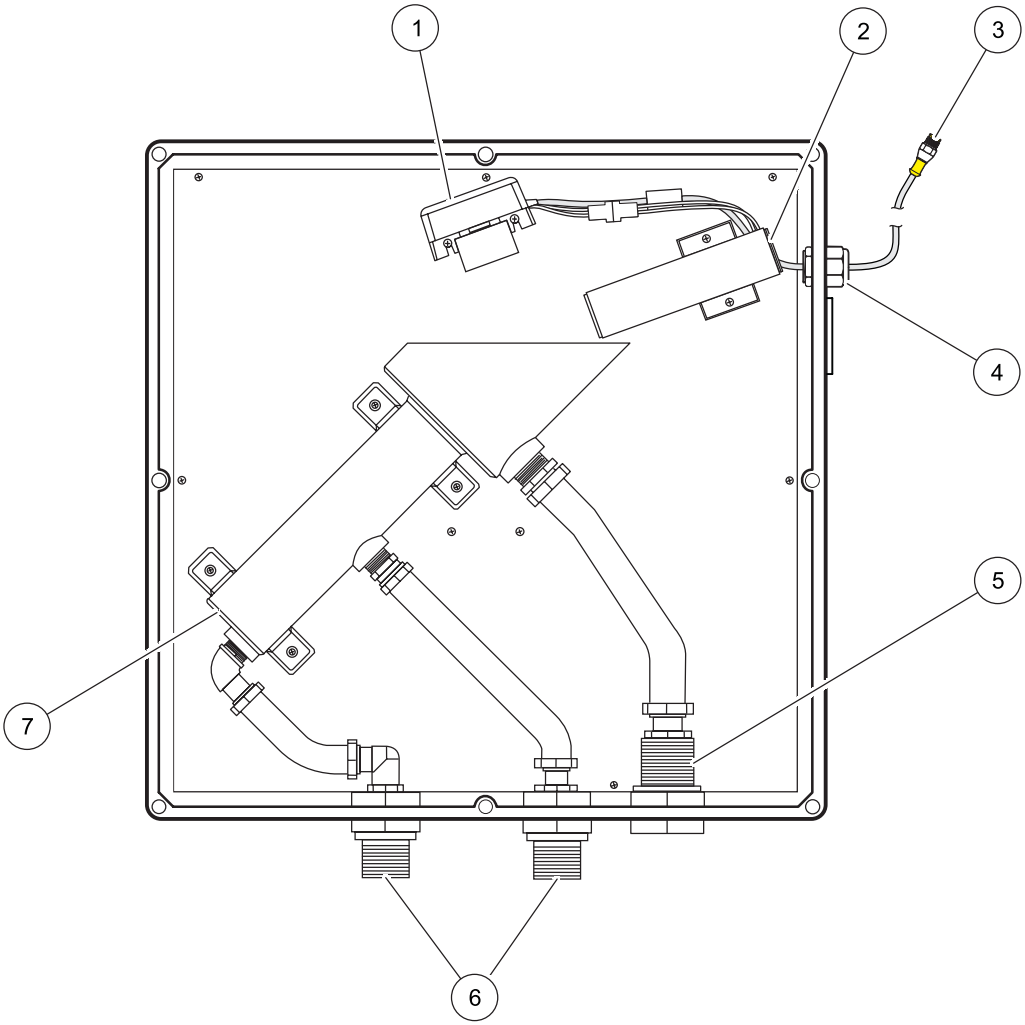

Figure 3 SS7 sc components

1	Detector assembly (Cat. No. 71221-00)	**5**	Bulkhead fitting, 1-in. NPT (Cat. No. 40355-00)
2	Light source assembly (Cat. No. 45004-00)	**6**	Bulkhead fittings, ¾-in. NPT (Cat. No. 40311-00)
3	To sc100	**7**	Turbidimeter body (Cat. No. 45002-00)
4	Cord grip (Cat. No. 61287-01)		

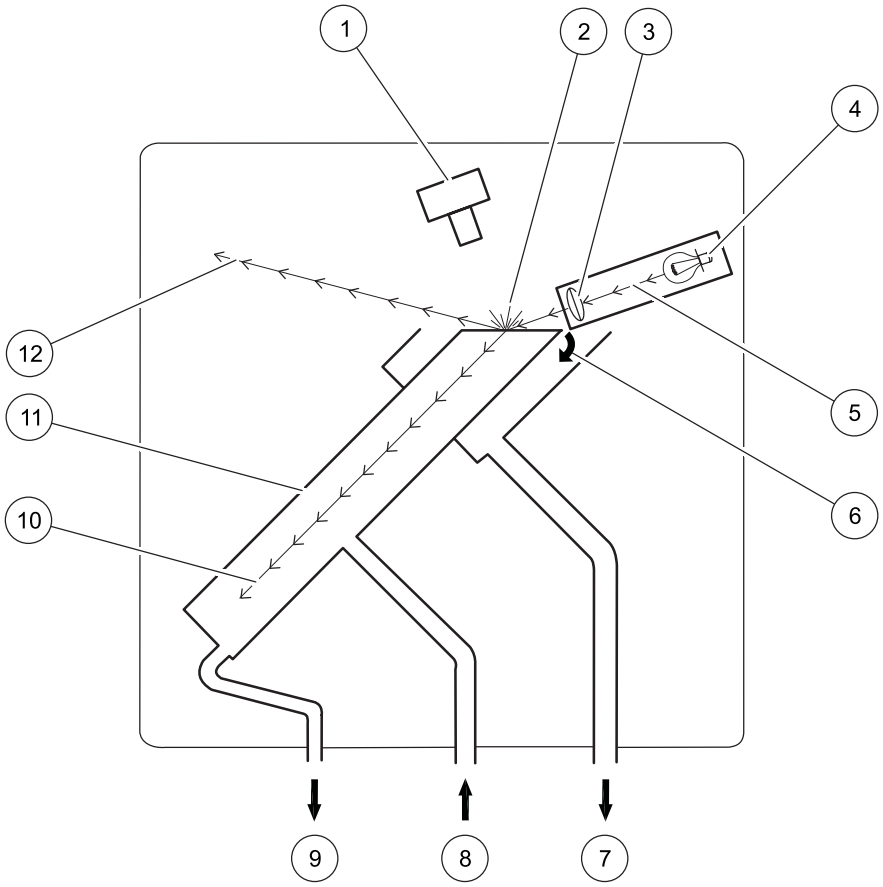

Figure 4 Optical diagram

1	Detector assembly	**5**	Light beam	**9**	Instrument drain
2	Scattered light	**6**	Over-flowing sample	**10**	Refracted light
3	Lens	**7**	Overflow drain	**11**	Turbidimeter body
4	Lamp	**8**	Sample in	**12**	Reflected light

2.2.2 Surface Scatter 7 sc High Sample Temperature

The Surface Scatter 7 sc High Sample Temperature Turbidimeter (SS7 sc-HST) has been designed for high sample temperature. The basic design and principle of operation are the same as the standard SS7 sc model. Differences between the standard and HST models will be noted in this manual where appropriate.

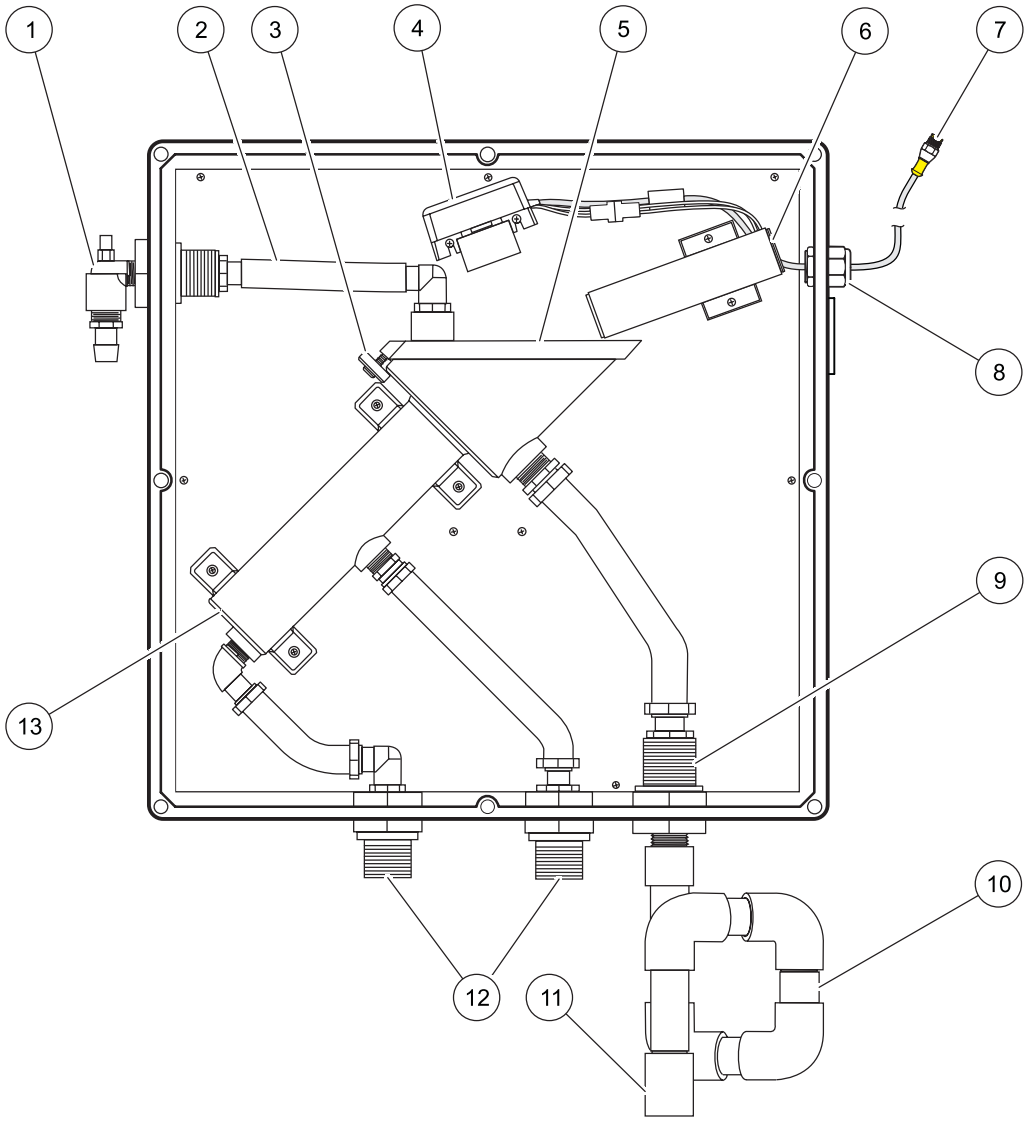

Figure 5 SS7 sc-HST components

1	Flow multiplier	**8**	Cord grip (Cat. No. 61287-01)
2	¾-in. hose	**9**	Bulkhead fitting, 1-in. NPT (Cat. No. 40355-00)
3	Threaded disk (Cat. No. 40299-00) with ¼-in. screw (Cat. No. 7858-11)	**10**	Drain trap
4	Detector assembly (Cat. No. 71221-00)	**11**	1-in. NPT gravity drain
5	Vent cover (Cat. No. 40294-00)	**12**	Bulkhead fittings, ¾-in. NPT (Cat. No. 40311-00)
6	Light source assembly (Cat. No. 45004-00)	**13**	Turbidimeter body (Cat. No. 45002-00)
7	To sc100		

Section 3 Installation

DANGER
Only qualified personnel should conduct the tasks described in this section of the manual. The SS7 sc/sc controller product configuration is not intended for installation in hazardous locations.

The tasks described in this section requires individuals to be technically knowledgeable of the associated dangers. Burns, shock, eye damage, fire and chemical exposure may occur if this work is not done by qualified personnel. Always review appropriate Material Safety Data Sheets (MSDS) before working with chemicals.

3.1 Basic installation overview

1. Unpack the SS7 sc or SS7 sc-HST Turbidimeter (section 3.2).
2. Review the environmental requirements and select the mounting location (section 3.3.2 on page 15).
3. Mount the sample unit (section 3.3.3 on page 15).
4. Install the optional heat exchanger, if required (section 3.3.4 on page 17).
5. Install the 3-way ball valve, if required (section 3.3.5 on page 18).
6. Connect the sample in, body drain and overflow drain (section 3.5 on page 19).
7. Connect the air purge valve (section 3.6 on page 22).
8. Connect the sample unit to the controller to supply power to the system (section 3.7.2 on page 22).

3.2 Unpacking the instrument

1. Remove the instrument from the shipping carton.
2. Verify that no visible damage has occurred during shipment. Be sure the following items are included in the carton:
   - Sample unit
   - Instruction manual
   - Installation kit items (Figure 6)

Contact the manufacturer immediately to report missing or damaged items.

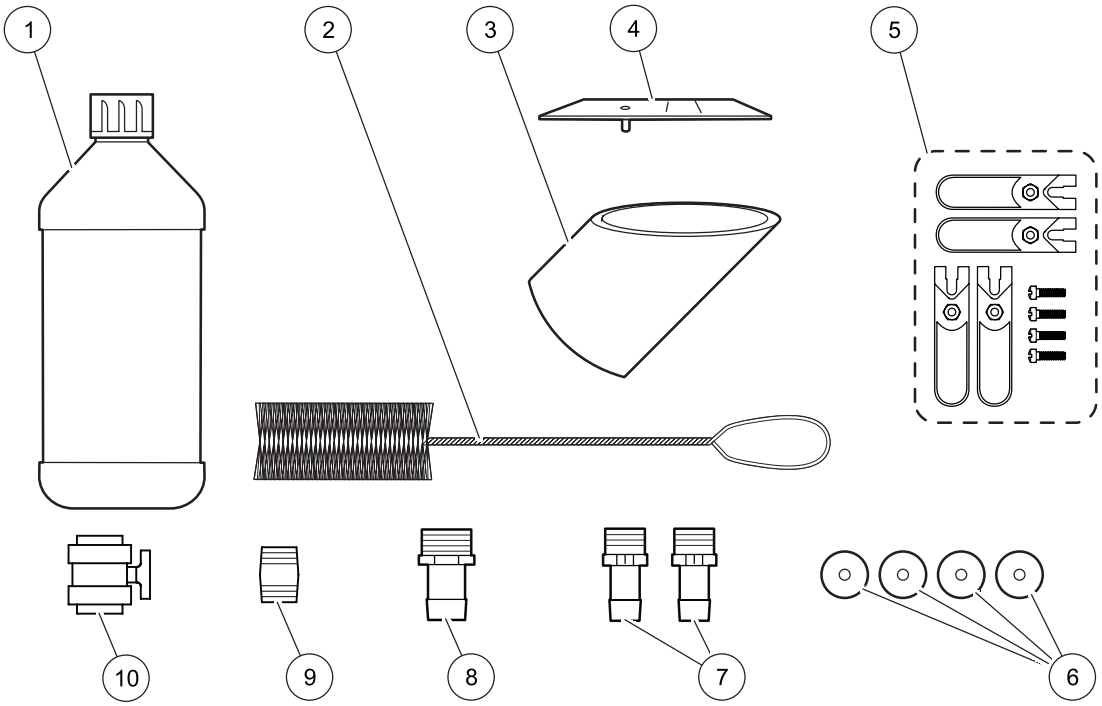

Figure 6 Installation kit items[1]

1	Formazin stock solution, 4000 NTU, 500 mL	**6**	Washer, ¼ ID x 1.00 OD (4x)
2	Brush, cylinder, size 2	**7**	Adapter, barb fitting, ¾" NPT to ¾" ID hose barb (2x)
3	Calibration cup, SS7 sc	**8**	Adapter, barb fitting, 1" NPT to 1" ID hose
4	Light source alignment plate	**9**	Nipple, ¾" NPT
5	Wall mounting kit	**10**	Drain valve

[1] See Section 8 Replacement parts and accessories on page 49.

3.3 Mechanical installation

3.3.1 Environmental requirements

The SS7 sc and SS7 sc-HST enclosures are designed for general-duty, indoor installation. Ambient temperatures within specifications are allowed, but best performance will result if temperature does not change rapidly. Do not mount in direct sunlight. Shield from dripping water.

The controller enclosure is designed to protect the electronics from typical conditions in water treatment and industrial facilities.

3.3.2 Selecting the installation location

Turbidimeters should always be located as close to the sampling point as possible. The shorter the distance traveled by the sample to the turbidimeter, the faster the turbidimeter can respond and indicate changes in sample turbidity.

Dimensions and other installation information are shown in Figure 7 on page 16, Figure 8 on page 17 and Figure 9 on page 18. The control and sample unit are designed for wall mounting. The turbidimeter sensor must be mounted within six feet of the controller unless an extension cable is used. Maximum cable length is 9.6 m (31.5 ft).

3.3.3 Mounting the SS7 sc or SS7 sc-HST

1. To ensure proper performance, the sample unit must be level (Figure 8 on page 17). Use a small level across the top opening of the turbidimeter body to verify that the instrument does not slope left-to-right or front-to-back.
2. Use one rubber washer (supplied) at each wall mounting block between the block and the wall. Mounting blocks are secured to the four corners of the sample unit to facilitate wall mounting without affecting the integrity of the enclosure protection.
3. Attach the sample unit to the wall with four customer-supplied mounting bolts.

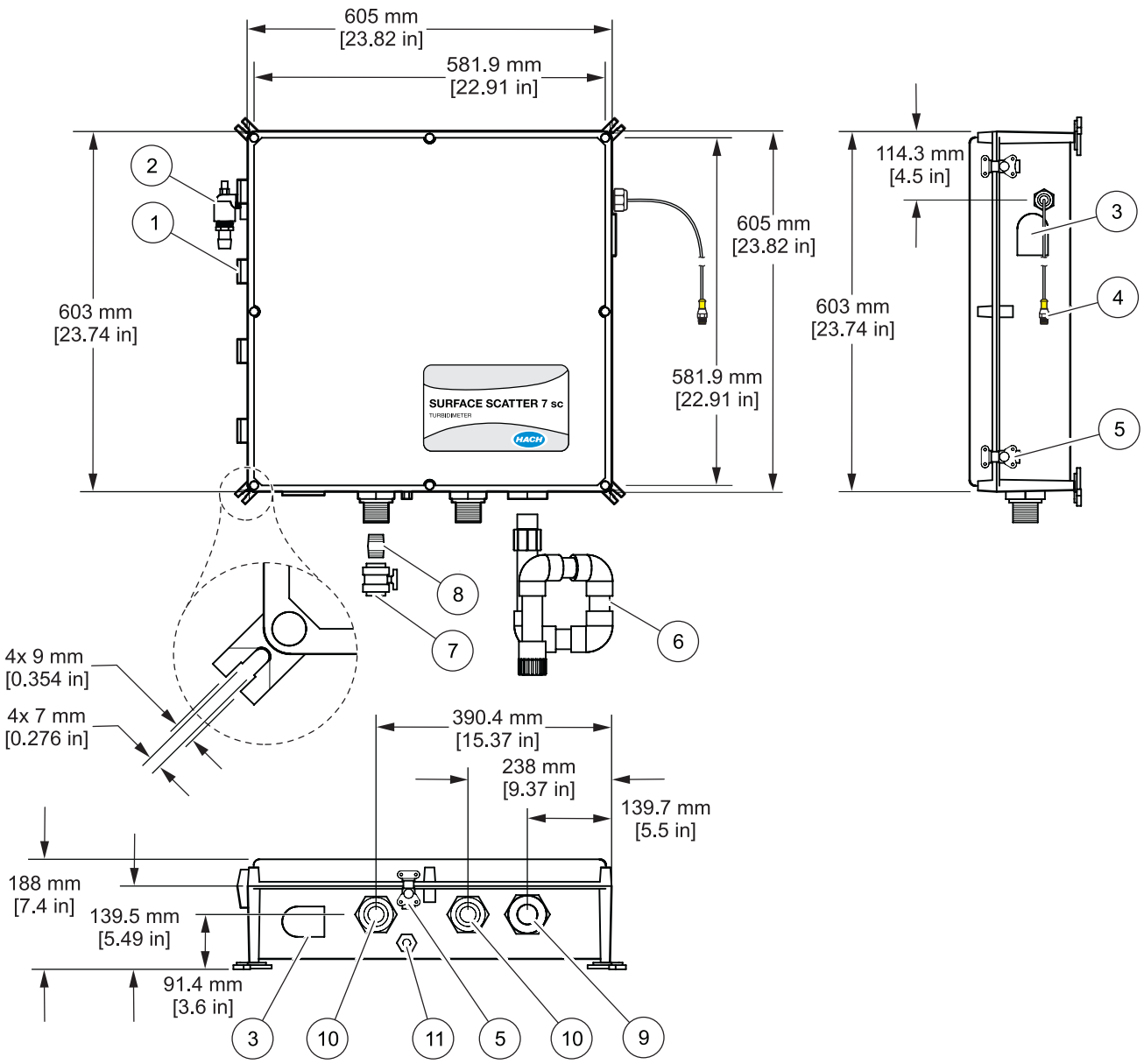

Figure 7 SS7 sc and SS7 sc-HST installation drawing

1	Door hinges (4x)	**7**	Ball valve
2	Flow multiplier (SS7 sc-HST only)	**8**	¾-in. NPT nipple
3	Ventilator (2x)	**9**	1-in. NPTF bulkhead fitting
4	Cable assembly	**10**	¾-in. NPTF bulkhead fitting
5	Enclosure door latch (4x)	**11**	Air purge fitting
6	Drain trap (SS7 sc-HST only)		

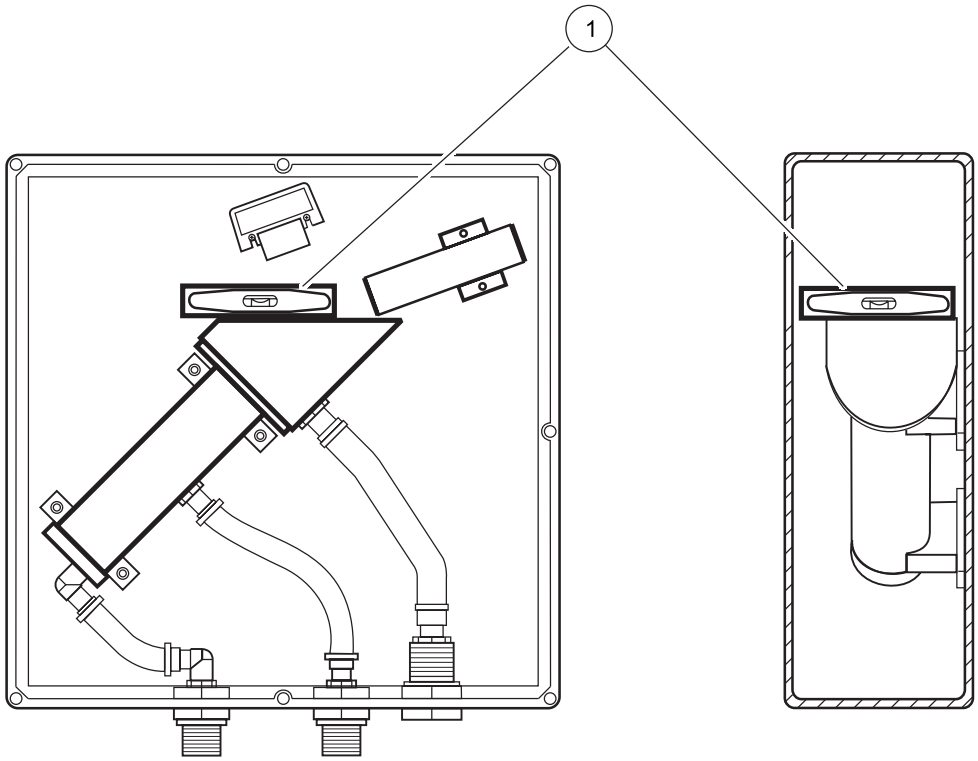

Figure 8 Instrument leveling

1	Level

3.3.4 Installing the optional heat exchanger

An optional heat exchanger (Cat. No. 48551-00) is available for the SS7 sc-HST (Figure 9 on page 18). The heat exchanger reduces sample temperatures that exceed the temperature requirements of the instrument. It can reduce sample temperatures of up to 100 °C but is not suitable for steam or super-heated water. A source of cooling water is required. The heat exchanger is made of 316 stainless steel and has ¾" MNPT pipe connections. The large plumbing connections help eliminate clogging.

- Allow adequate space below and to the right (latch) side of the sample unit to make hydraulic connections.
- See Figure 9 on page 18 for installation dimensions.
- See Figure 11 on page 20 for heat exchanger connections.

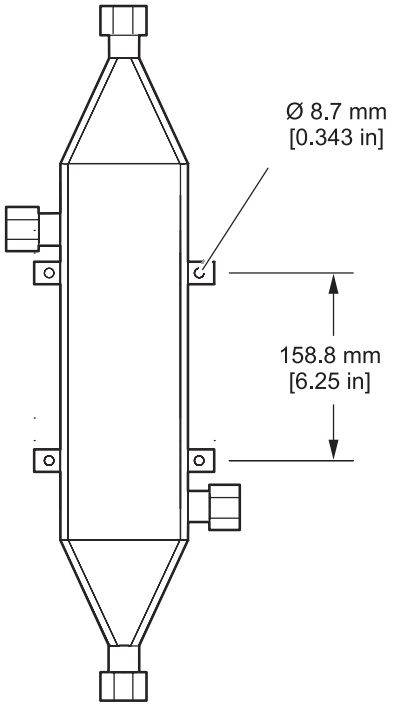

Figure 9 Heat exchanger dimensions

3.3.5 Installing the 3-way ball valves

CAUTION
Installation should be performed by qualified technical personnel to ensure adherence to all applicable electrical and plumbing codes.

Refer to the Auto Flush Kit Instruction Sheet (Cat. No. 46692-88) for complete installation instructions.

3.4 Installing a sample line

Sample lines diameter must be appropriate for the sample type. Choose a line size that minimizes lag time, but also minimizes plugging with solids.

- Route the sample line as directly as possible.
- Using long or large diameter sample lines will result in a significant lag time between actual process conditions and instrument measurements.
- When larger diameter sample lines or long distances are unavoidable, increase flow to the instrument and bypass excess flow to the drain or back to process.
- Install sample line taps into larger process pipes to minimize the chances of ingesting sediment from the pipe-line bottom or air bubbles from the top. A tap projecting into the center of the pipe is ideal. Figure 10 shows both good and poor methods of installing a sample tap.

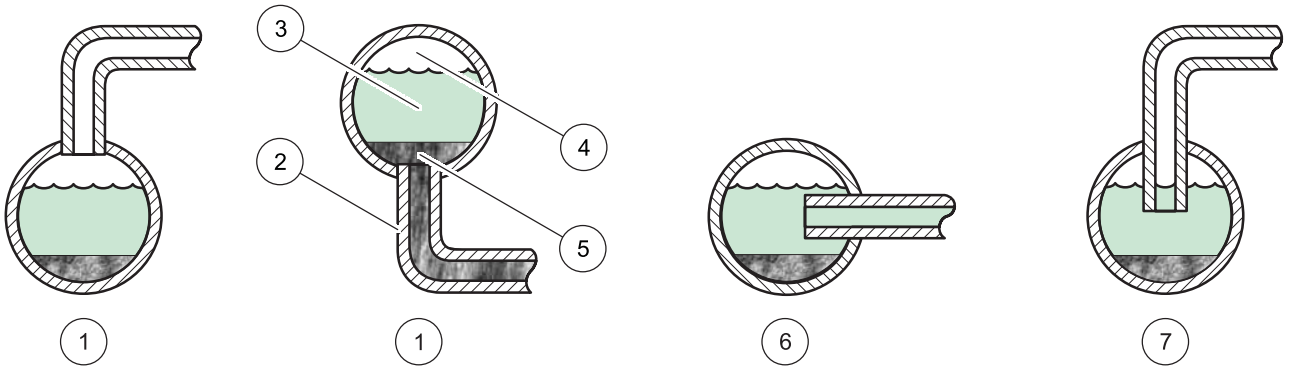

Figure 10 Sampling techniques

1	Poor	**5**	Sediment (typical)
2	Sampling line to sample unit	**6**	Good
3	Sample flow	**7**	Best
4	Air (typical)		

3.5 Connecting hydraulics

Note: *When connecting the hydraulics to the bottom of the unit, hold the ¾-in. bulkhead adapters on the inside of the enclosure with the door open.*

The sample in, body drain and overflow drain are connected to the instrument as shown in Figure 4 on page 11. The sample inlet port is fitted with a ¾" NPT female fitting with ¾" ID hose barb adapter fitting. A ball valve is supplied with the instrument to drain the turbidimeter body. Hose barb adapter fittings for sample in and both drain fittings are also supplied.

A Bubble Trap/Head Regulator (Cat. No. 46680-00) is recommended if the sample cannot be delivered bubble-free to the analyzer. The device may also be used as to dampen fluctuations in flow due to pulses from a pump and/or sample pressure.

Using the Bubble Trap/Head Regulator will increase response time to changes in sample concentration. The increase in response time may vary from 1–2 minutes at 2 L/min. For fastest response time, use the highest flow practical for sample conditions. Higher flows decrease the effectiveness of bubble removal. The need for fast response time and bubble removal must be balanced for optimum performance.

Install the Bubble Trap/Head Regulator so the overflow is at least five inches above the top of the sample unit enclosure (Figure 11 on page 20). However, installation height can vary based on local sample conditions and flow requirements. See the installation instructions supplied with the Bubble Trap/Head Regulator for more information.

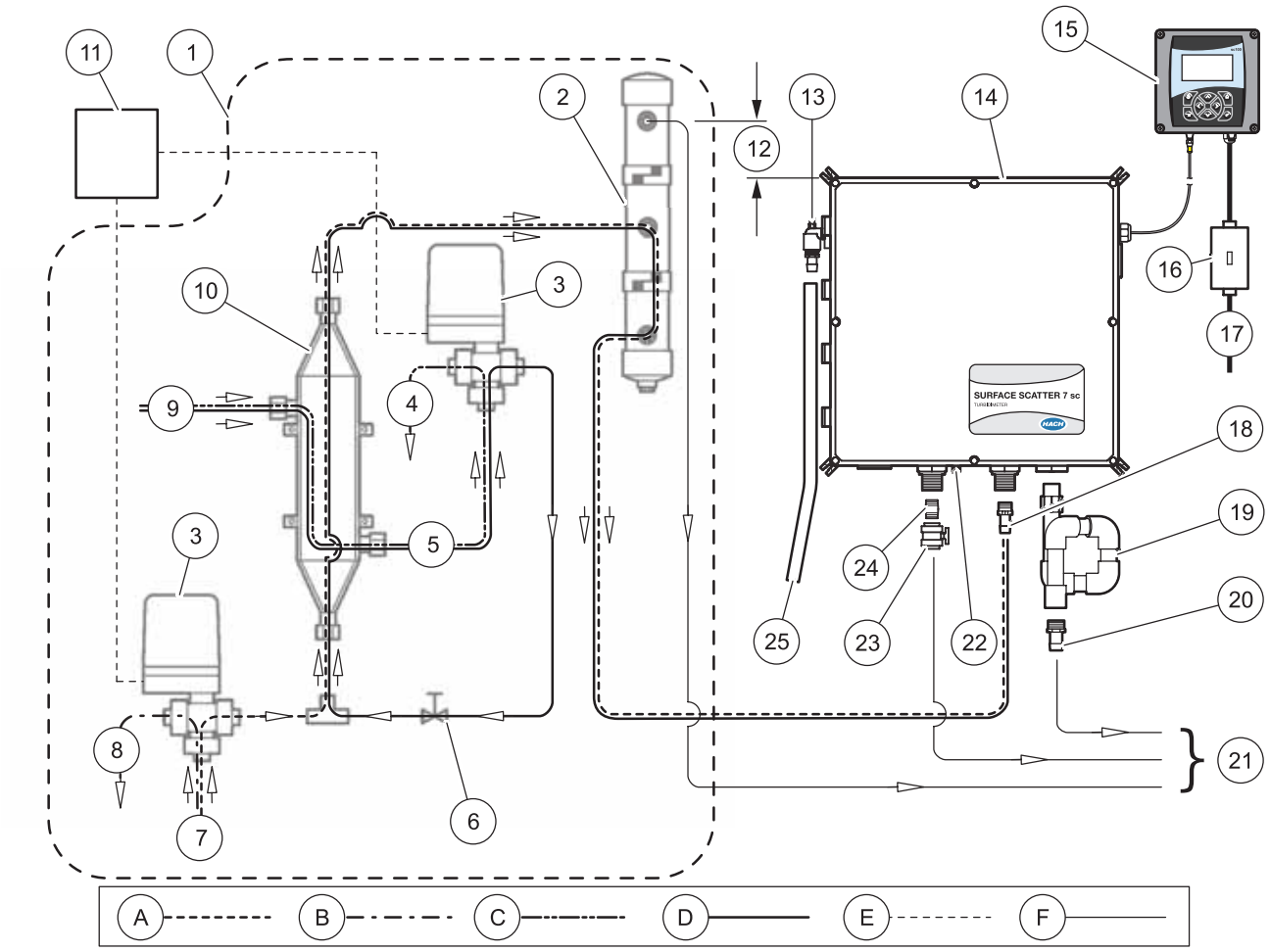

Figure 11 SS7 sc-HST plumbing diagram

1	Optional items	**14**	Sample unit
2	Bubble trap	**15**	sc100
3	3-way ball valve (Auto Flush Kit)	**16**	Customer supplied power on/off switch box (NEMA 4X) required for agency compliance
4	Cooling water to drain	**17**	Power in for sc100
5	Cooling water out	**18**	¾-in. NPT adapter (supplied)
6	Flow control valve	**19**	Drain Trap (Customer-supplied)
7	Sample in	**20**	1-in. NPT adapter (supplied)
8	Sample bypass during flush cycle	**21**	To drain
9	Cooling water in	**22**	¼-in. air purge fitting (50 SCFH instrument air max)
10	Heat exchanger	**23**	Ball valve (supplied)
11	Electrical box connection	**24**	¾-in. NPT nipple (supplied)
12	127 mm (5 in.) minimum	**25**	Customer supplied hose to drain
13	Customer supplied air for flow multiplier		

A	Sample during normal operation	**D**	Cooling water during auto flush
B	Sample bypass during auto flush	**E**	Electrical
C	Cooling water in normal operation	**F**	Drain

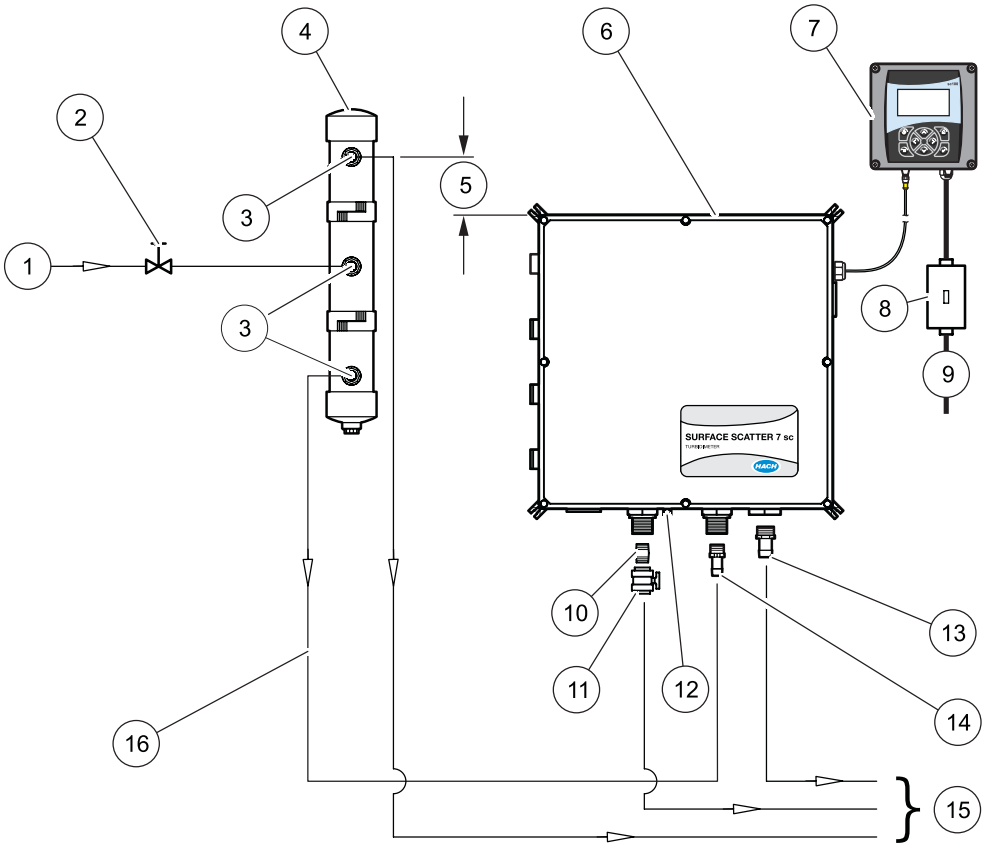

Figure 12 SS7 sc plumbing diagram

1	Sample in	**9**	Power in for sc100
2	Flow control valve (recommended)	**10**	¾-in. NPT nipple (supplied)
3	¾-in.NPT x ¾-in. ID Hose Adapter (supplied with bubble trap)	**11**	Ball valve (supplied)
4	Bubble trap (optional)	**12**	¼-in. air purge fitting (50 SCFH instrument air max)
5	127 mm (5 in.) minimum	**13**	1-in. NPT nipple (supplied)
6	Sample unit	**14**	¾-in. NPT nipple (supplied)
7	sc100	**15**	To drain
8	Customer supplied power on/off switch box (NEMA 4X) required for agency compliance	**16**	¾-in. ID hose (customer supplied)

3.6 Connecting the air purge fitting

Air purge helps control condensation and corrosive vapors within the sample unit and is recommended. Use dry instrument air only. See Figure 11 and Figure 12 for installation details.

3.7 Electrical installation

3.7.1 Wiring safety information

When making any wiring connections to the instrument, the following warnings and notes must be adhered to, as well as, any warnings and notes found throughout the individual installation sections. For more safety information refer to section 2.1 on page 7.

DANGER
Always disconnect power to the sc controller when making electrical connections.

3.7.1.1  Electrostatic discharge (ESD) considerations

Important Note: *To minimize hazards and ESD risks, maintenance procedures not requiring power to the analyzer should be performed with power removed.*

Delicate internal electronic components can be damaged by static electricity, resulting in degraded instrument performance or eventual failure.

The manufacturer recommends taking the following steps to prevent ESD damage to your instrument:

- Before touching any instrument electronic components (such as printed circuit cards and the components on them) discharge static electricity by touching an earth-grounded metal surface such as the chassis of an instrument or a metal conduit or pipe.
- To avoid static electricity buildup and to keep it discharged, wear a wrist strap connected by a wire to earth ground.
- To reduce static build-up, avoid excessive movement. Transport static-sensitive components in anti-static containers or packaging.
    - Handle all static-sensitive components in a static-safe area. If possible, use anti-static floor pads and work bench pads.

3.7.2 Connecting/wiring the SS7 sc or SS7 sc-HST to the sc100 controller

3.7.2.1 Attaching the SS7 sc with a quick-connect fitting

The SS7 sc/SS7 sc-HST cable is supplied with a keyed quick-connect fitting for easy attachment to the controller (Figure 13). Retain the connector cap to seal the connector opening in case the cable must be removed. The original six-foot cable may be extended by a maximum of 9.6 m (31.2 ft), see Replacement parts and accessories on page 49.

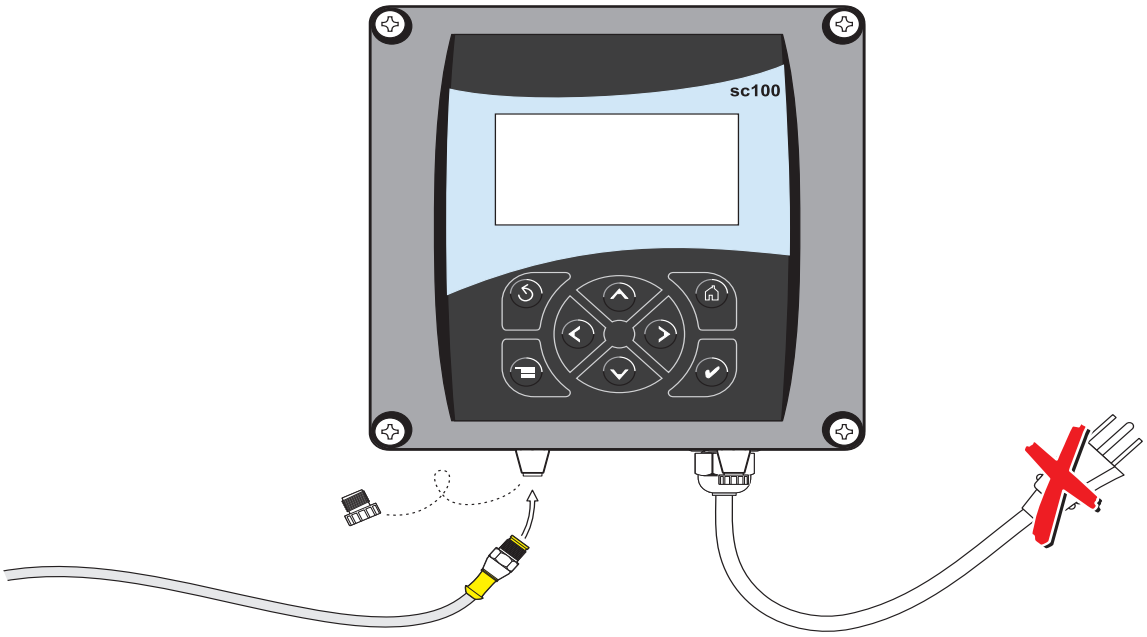

Figure 13 Attaching the SS7 sc/SS7 sc-HST using the quick-connect fitting

3.7.2.2 Hard-wiring the SS7 sc to the sc100 controller

1. Disconnect power to the controller if powered.
2. Open the controller cover.
3. Disconnect and remove the existing wires between the quick-connect and terminal strip J5 (Figure 14).
4. Remove the quick-connect fitting and wires and install the threaded plug on the opening to maintain the environmental rating.
5. Cut the connector from the SS7 sc cable.
6. Strip the insulation on the cable back 1-inch. Strip ¼-in. of each individual wire end.
7. Pass the cable through conduit and a conduit hub or a strain relief fitting (Cat. No. 16664-00) and an available access hole in the controller enclosure. Tighten the fitting.
8. Use of strain relief fitting other than Cat. No. 16664-00 may result in a hazard. Use only the recommended strain relief fitting to assure the continued NEMA 4X enclosure rating.
9. Reinstall the plug on the sensor access opening to maintain the environmental rating.
10. Wire as shown in Table 1 and Figure 14.
11. Close and secure the cover.

Table 1 Wiring the SS7 sc at terminal block J5

Terminal number	Terminal designation	Wire color
1	Data (+)	Blue
2	Data (–)	White
3	Service request	No connection
4	+12 V dc	Brown
5	Circuit common	Black
6	Shield	Shield (gray wire in existing quick disconnect fitting)

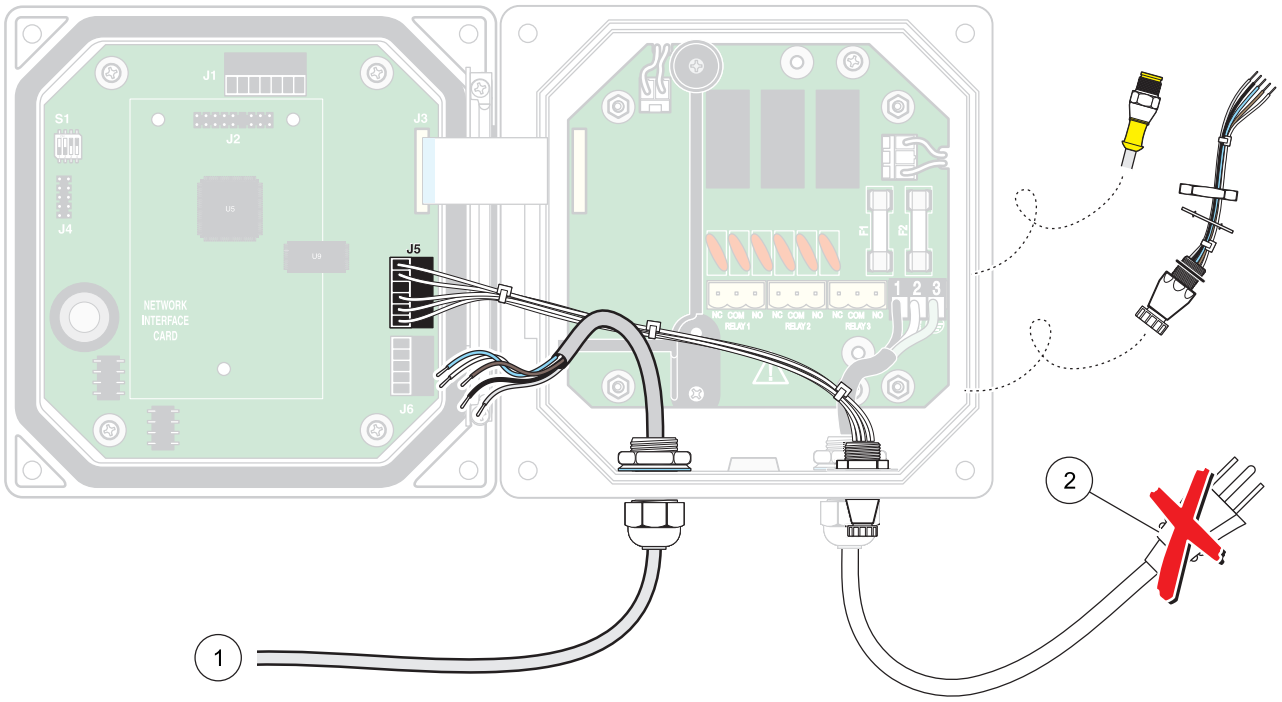

Figure 14 Hard-wiring the SS7 sc

1	From SS7 sc	**2**	Disconnect power

Section 4 System startup

4.1 General operation

1. Plug the SS7 sc/SS7 sc-HST into the unpowered controller by aligning the orientation tab on the cable connector with the channel in the controller connector.
2. Push in and turn the threaded collar to secure the connection. Tug gently to check the connection.
3. After all plumbing and electrical connections have been completed and checked, supply power to the system.
4. Ensure the sample unit door is securely latched when power is applied, since dark readings are measured at this time. If power is applied while the door is open, cycle the power with the door closed. The dark readings are measured again one hour after the power-up.
5. The first time a controller is powered up, a language selection menu will appear. Select the correct language from the displayed options.
6. Following language selection and upon power-up, the controller will search for connected sensors. The display will show the main measurement screen.

4.2 Starting sample flow

1. Start sample flow through the instrument by opening the sample supply valve.
2. Allow the turbidimeter to run long enough for the tubing and body to become completely wetted and the reading on the display to stabilize. One to two hours or longer may be required initially for complete stabilization.
3. Allow measurements to become stable through adequate conditioning before completing instrument settings or performing calibrations.

Section 5 Operation

5.1 Sensor setup

When a sensor is initially installed, the sensor name will be displayed. To change the sensor name refer to the following instructions:

1. From the Main Menu, select SENSOR SETUP and confirm.
2. If multiple sensors are attached to the controller, choose SELECT SENSOR>SS7 SETUP and confirm.
3. Select CONFIGURE and confirm.
4. Select EDIT NAME and edit the name. Confirm or cancel to return to the Sensor Setup menu

5.1.1 Configuring the bubble reject

Bubble Reject eliminates high measurements that are likely due to air trapped in the sample.

1. From the Main Menu, select SENSOR SETUP and confirm.
2. Highlight the appropriate sensor if more than one sensor is attached and confirm.
3. Select CONFIGURE and confirm.
4. Select BUBBLE REJECT and confirm.
5. Select YES or NO and confirm.
   - When NO is selected, all measurements within the Signal Average window will be averaged to determine the measured value.
   - Choosing YES eliminates a percentage of the high values and averages the remaining values to determine the measured value.

5.1.2 Configuring the signal average

The Signal Average function creates a running average of the previous 6, 30, 60 or 90 seconds or no averaging, depending on the selected signal average.

1. From the Main Menu, select SENSOR SETUP and confirm.
2. Highlight the appropriate sensor if more than one sensor is attached and confirm.
3. Select CONFIGURE and confirm.
4. Select SIGNAL AVG and confirm.
5. Select the signal average time interval and confirm.

5.2 Sensor data logging

The controller provides two data logs (one for each sensor) and two event logs (one for each sensor). The data logs store the measurement data at selected intervals. The event log stores a variety of events that occur on the devices such as configuration changes, alarms and warning conditions. The data logs are stored in a packed binary format and the event logs are stored in a CSV format. The logs can be downloaded through the digital network port, service port or the IrDA port. DataCom (Cat. No. 59256-00 or download from www.hach.com) is needed for downloading logs to a computer. If the datalogging frequency is set to 15 minute intervals, the instrument can continue to store data for approximately six months.

1. From the Main Menu, select SENSOR SETUP and confirm.
2. Highlight the appropriate sensor if more than one sensor is attached and confirm.
3. Select CONFIGURE and confirm.
4. Select the datalog interval (5 seconds, 30 seconds, 1 minute, 2 minutes, 5 minutes, 10 minutes, 15 minutes, 30 minutes, 60 minutes or 4 hours). Confirm.

5.3 Sensor diagnostics menu

SELECT SENSOR	
ERROR LIST	See section 7.1 on page 45.
WARNING LIST	See section 7.2 on page 45.

5.4 Sensor setup menu

SELECT SENSOR (if more than one sensor is attached)	
CALIBRATE	
PERFORM CAL	Calibration using 4000 NTU stock solution
VERIFICATION	Perform a verification, set the pass/fail criteria and view the verification history.
0 ELECTRONICS	Zero electronics
CAL HISTORY	View the last 12 entered calibrations. Confirm to move to the next history entry. See section 5.6 on page 34 for more information.
CONFIGURE	
BUBBLE REJECT	Choose Yes or No to enable/disable bubble reject. Default: Yes
SIGNAL AVG	Choose no averaging or specify the amount of time for signal averaging. Available options are: no averaging, 6 sec., 30 sec., 60 sec. or 90 sec. Default is 30 seconds.
MEAS UNITS	Select the appropriate measurement units to display. Choose from mg/L, NTU, FTU and NO UNITS. Default: NTU
EDIT NAME	Enter up to a 12-digit name in any combination of symbols and alpha or numeric characters. Confirm when the entry is complete. The name will be displayed on the status line above the measurement value on the main display. Default is SS7.
SET RESOLUTION	Set the number of significant digits to display. Default is one significant digit.
DATALOG INTRVL	Choose the amount of time between saving data points to the data log. Default: 15 min.; Options: 5 seconds, 30 seconds, 1 minute, 2 minutes, 5 minutes, 10 minutes, 15 minutes, 30 minutes, 60 minutes or 4 hours.

5.4 Sensor setup menu (continued)

DIAG/TEST	
INST STATUS	Displays the software and hardware versions.
SERIAL NUMBER	Displays the serial number of the sensor.
INT TEMP	Displays the internal temperature of the sensor electronics in °C.
DEFAULT SETUP	Restores the sensor factory default settings. Calibration is not affected.
POWER CHECK	Displays the electrical statistics for the sensor.
SERVICE MODE	Allows SS7 sc to be run in normal or service mode. Analog outputs can be in ACTIVE, HOLD or TRANSFER mode. Data logging is disabled. Protected by MAINTENANCE password.
SERVICE DIAG	Accessible with service password only.

5.5 Sensor calibration and verification

5.5.1 Standardization and calibration

DANGER
To become familiar with handling precautions, dangers and emergency procedures, always review the Material Safety Data Sheets prior to handling containers, reservoirs and delivery systems that contain chemical reagents and standards. Protective eye wear is always recommended when contact with chemicals is possible.

Note: *Due to the ease with which the calibration cylinder method calibration can be performed, better accuracy can be maintained by performing a calibration at monthly intervals instead of the standardization check. Periodic calibration with a formazin primary standard is recommended for best absolute accuracy.*

5.5.2 Calibration

The manufacturer recommends calibrating the Surface Scatter 7 sc instrument at least every three months or any time the light source is replaced or adjusted. If calibration is performed with a formazin standard, refer to section 5.5.2.1 on page 30.

1. From the Main Menu, select SENSOR SETUP and confirm.
2. If multiple sensors are attached to the controller, choose SELECT SENSOR>SS7 SETUP and confirm.
3. Select CALIBRATE and confirm.
4. Select PERFORM CAL and confirm. Select the available Output Mode (Active, Hold or Transfer) and confirm.
5. Enter the STD VALUE and confirm. Confirm to continue.
6. Follow the display prompt and place standard into the calibration cup. Close the sensor door and confirm to continue.
7. The TURB value displayed is the standard value determined using the gain from the previous calibration. Confirm to accept and continue with the calibration.

8. If no selection is made for a set period of time, the screen will prompt to remix the standard to avoid a change in the value of the standard.
   a. Open the SS7 sc and remix the standard.
   b. Close the door and confirm to continue.
9. Confirm to calibrate. When the calibration is completed successfully, confirm to accept the calibration.
10. Enter the initials of the user performing the calibration and confirm.

Note: *After confirmation of return to measurement mode, the instrument will equilibrate for 2 minutes before the output mode changes. Instrument measurements will show on the display, but the value will flash and a "OUT MODE WARN" warning will display until the 2-minute equilibration period is complete.*

5.5.2.1 Calibration cylinder method

A calibration cylinder and a 500-mL bottle of 4000 NTU formazin primary standard solution are included for convenient calibration of the SS7 sc. After the formazin standard is added to the cylinder, the instrument is set to the value of the standard.

1. Prepare the formazin standard solution at the desired NTU value. The 4000-NTU standard supplied with the instrument can be used at full strength and only requires mixing (by inverting the bottle repeatedly). If a dilution of the 4000-NTU standard is desired, the manufacturer recommends it be no lower than 300 NTU. Dilutions must be made just prior to use. Dilute formazin solutions are unstable and should be discarded when calibration is complete. Use filtered sample or demineralized water for dilution.
2. Turn off sample flow to the instrument and drain the turbidimeter body. Insert the calibration cylinder into the top of the body (Figure 15 on page 31).
   a. Select the PERFORM CAL menu entry and confirm.
   b. Select the Active, Hold or Transfer output mode and confirm.
   c. Edit the standard value and confirm.
3. Follow the display prompts and pour the formazin standard solution into the cylinder, allowing it to overflow. Only allow the solution to stand long enough to allow bubbles on or near the surface to dissipate.
4. Close the sample unit door tightly. Confirm to continue.
5. The TURB value displayed is the standard value determined using the gain from the previous calibration. Confirm to accept and continue with the calibration.
6. If no selection is made for a set period of time, the screen will prompt to remix the standard to avoid a change in the value of the standard.
   a. Open the SS7 sc and remix the standard.
   b. Close the door and confirm to continue.

7. Confirm to calibrate. When the calibration is completed successfully, the display will show GOOD CAL! and the new calibration gain value. Confirm to accept the calibration.
8. Follow the prompt and enter the initials of the user performing the calibration. Confirm.
9. The controller will prompt for NEW BASELINE. Confirm to establish a new baseline or press **BACK** to exit.
10. Remove the calibration cylinder from the body. The instrument is now calibrated.
11. Close the drain valve and restore the sample flow. If no verification is done, the display will prompt to return to measurement mode. Confirm to continue measurements.

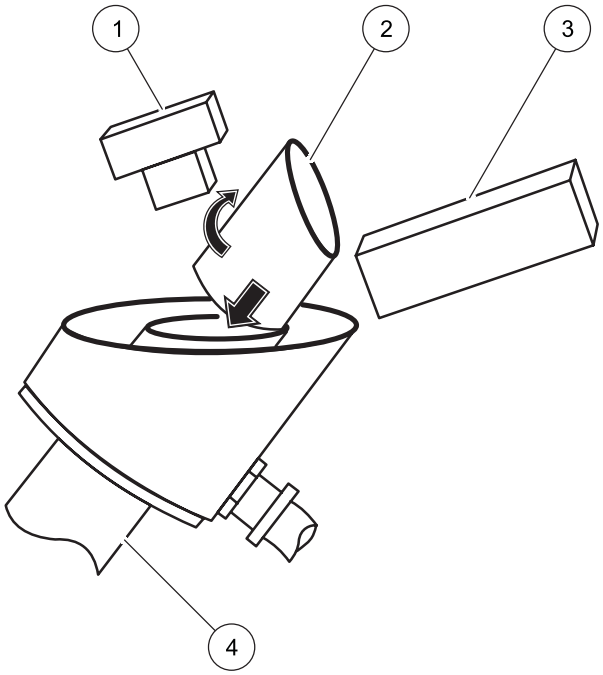

Figure 15 Installing the calibration cylinder

1	Detector assembly	**3**	Light source assembly
2	Calibration cylinder	**4**	Turbidimeter body

5.5.2.2 Comparison method

The comparison method transfers the calibration of a laboratory instrument to the on-line instrument and the practice is approved by the EPA and Standard Methods for the Examination of Water and Wastewater. Calibration by comparison should not be used if sample turbidity is less than 2 NTU.

Before performing this method, make sure the laboratory turbidimeter used is calibrated properly with primary turbidity standards according to manufacturer directions. Sample cells for the laboratory instrument must be free from dirt, fingerprints and scratches. For greater convenience, the laboratory instrument should be moved to a location close to the on-line unit(s) to be

calibrated. Take a grab sample from the on-line instrument drain or sample inlet line and immediately measure its turbidity in the laboratory instrument. If the on-line instrument reading is off by more than 5%, use the calibration procedure detailed in section 5.5.2 on page 29 to input the new standard value. If this calibration method is used, it is not necessary to use the calibration cylinder.

5.5.2.3 Calibration failure

If gain criteria for the calibration are not met, the screen will display BAD CAL! Confirm to repeat the calibration.

5.5.3 Setting the verification baseline

When the SS7 sc has been successfully calibrated, a baseline can be determined using standardization plates. The standardization plates are composed of opaque backing, a plate glass covering and a center filling of Gelex, a stable secondary turbidity standard. The standardization plates are not calibrated when shipped from the factory. The value of the plate is determined after calibration and stored internally in the SS7 sc. The calibration can be verified later by reading the plate value and comparing it to the value following calibration.

Important Note: *Always verify calibration with the same standardization plate that was used to establish the baseline. The manufacturer recommends assigning a serial number (up to 4 characters) to each plate. The serial number can be marked on the back of the plate.*

1. Perform a calibration (section 5.5.2).
2. Confirm to perform a baseline using a standardization plate.
3. The serial number for the last standardization plate used will appear on the display. Confirm to accept or enter the serial number of the plate to be used and confirm.
4. Follow the controller prompts:
   a. Remove the calibration cylinder and wipe off the top of the sample cylinder.
   b. Place the standardization plate on top of the sample cylinder so that the light beam strikes the center of the plate. Note the orientation of the plate and always place it in the same position when using it to check standardization.
   c. Close the door to eliminate stray light. Confirm to continue.
5. When the measured value becomes stable, confirm to establish an expected value for the plate.

   Note: *Future measured values will be compared to the stored expected value. If the established PASS criteria are not met, a new calibration should be performed.*

6. Open the SS7 sc to remove the plate. Restart the sample flow and close the door. Confirm to return the instrument to measurement mode.

Note: *After confirmation of return to measurement mode, the instrument will equilibrate for 2 minutes before the output mode changes. Instrument measurements will show on the display, but the value will flash and a "OUT MODE WARN" warning will display until the 2-minute equilibration period is complete.*

5.5.4 Instrument verification

Instrument verification is intended as a simple check to ensure SS7 sc functionality between calibrations. Verifications should be performed on a monthly basis using a manufacturer-provided standardization plate.

A verification directly after calibration is used to establish the baseline. Any verification afterwards, until the next calibration, that uses the same verification standard will reference the recorded value from the baseline verification as the "expected" value. In order for the verification to pass, the measured value should be within the limits set by the Pass/Fail Criteria of the baseline value.

Before starting the verification, read section 5.5.3.

1. From the Main Menu, select SENSOR SETUP and confirm.
2. If multiple sensors are attached to the controller, choose SELECT SENSOR>SS7 SETUP and confirm.
3. Select CALIBRATE and confirm.
4. Select VERIFICATION and confirm.
5. Select PERFORM VER and confirm.
6. The serial number on the standardization plate to be used for verification should match the serial number listed on the VALID SN screen. Confirm to accept the displayed serial number.

Important Note: *If the serial numbers do not match, a verification baseline (section 5.5.3) must be established before verification can be performed.*

7. Select the available Output Mode (Active, Hold or Transfer) from the list box and confirm.
8. Position the plate on top of the sample cylinder:
   a. Shut down the sample flow and wipe off the top of the sample cylinder.
   b. Place the standardization plate on top of the sample cylinder so that the light beam strikes the center of the plate. Note the orientation of the plate and always place it in the same position when using it to check standardization.
   c. Close the door to eliminate stray light. Confirm to continue.

9. When the displayed turbidity value is stable, confirm to select the measured reading. After confirming the reading:
   - GOOD VER! will be displayed if the verification is good, with an option to continue or to abort. Confirm to continue. Enter the operator initials and confirm.
   - BAD VER! will be displayed if the verification is bad, with an option to repeat or exit. To repeat the verification, confirm to return to the VALID SN screen (step 6).
10. Open the SS7 sc to remove the plate. Restart the sample flow and close the door. Confirm to return the instrument to measurement mode.

Note: *After confirmation of return to measurement mode, the instrument will equilibrate for 2 minutes before the output mode changes. Instrument measurements will show on the display, but the value will flash and a "OUT MODE WARN" warning will display until the 2-minute equilibration period is complete.*

5.5.4.1 Care of standardization plates

Clean standardization plates to remove fingerprints, dust and dirt.

- Clean plates using water and dry with a clean, lint-free cloth.
- Do not use abrasive cleaners or cleaning solvents.

Store the plates in a clean, dry place to prevent scratching or damage. Replace the plates if they become scratched or broken.

5.6 Calibration and verification history

The calibration and verification history logs contain information on the last 12 calibrations and the last 12 verifications. The calibration history log shows the gain value, the time and date of the calibration and the initials of the operator performing verification.

Note: *Restoring default settings from the DIAG/TEST menu will return the turbidimeter to its non calibration state (gain = 1.0) but it will not remove the previous calibration history from memory.*

The calibration history log is accessed from the Calibrate menu. The verification history log is accessed from the Verification menu (a submenu of the Calibrate menu).

Each verification history entry shows the serial number of the verification device, the value of the verification standard, the time and date of the verification and the initials of the operator performing the verification.

To view calibration history:

1. From the Main Menu, select SENSOR SETUP and confirm.
2. If multiple sensors are attached to the controller, choose SELECT SENSOR>SS7 SETUP and confirm.
3. Select CALIBRATE and confirm.
4. Select CAL HISTORY and confirm. The most recent calibration will be displayed on the screen.

5. Confirm to view the previous calibrations. After scrolling through all 12 histories, the display will return to the calibration menu level.

To view verification history:

1. From the Main Menu, select SENSOR SETUP and confirm.
2. If multiple sensors are attached to the controller, choose SELECT SENSOR>SS7 SETUP and confirm.
3. Select CALIBRATE and confirm.
4. Select VERIFICATION and confirm.
5. Select VER HISTORY and confirm. The most recent verification will be displayed on the screen.
6. Confirm to view previous verifications. After scrolling through all 12 histories, the display will return to the calibration menu level.

To view baseline history:

1. From the Main Menu, select SENSOR SETUP and confirm.
2. If multiple sensors are attached to the controller, choose SELECT SENSOR>SS7 SETUP and confirm.
3. Select CALIBRATE and confirm.
4. Select VERIFICATION and confirm.
5. Select BASELINE HIST and confirm. The most recent baseline, including the Gelex plate serial number and expected value, will be displayed on the screen.
6. Confirm to view previous verifications. After scrolling through all 12 histories, the display will return to the calibration menu level.

When the instrument is received from the factory, there will be one entry for the calibration and verification history information. As calibrations and verifications are performed, the history information will grow until there are 12 entries.

When the log is full, the newest entry is stored and the oldest entry in the log is deleted.

5.7 Operating the SS7 sc-HST

- If condensation forms in the enclosure, increase the air pressure (and flow) by increasing the air pressure setting of the pressure regulator for the flow multiplier.
- Make sure the bubble trap is working. Bubbles on the surface of the liquid will cause incorrect readings.
- If deposits accumulate inside the unit, wash the inside with warm water spray.
- The vent cover at the top of the turbidimeter body (Figure 5 on page 12, item 5) can be removed for cleaning if necessary. Loosen the light source before removing the cover. Check the alignment of the light after reinstalling the cover using the new alignment plate included in the kit (section 6.4.1 on page 38). Make sure the cover sits flat on top of the slant tube when installed.
- Calibrate the instrument using the calibration cup and formazin as described in section 5.5.2 on page 29.

Note: *Do not operate the instrument without the cover. Do not operate the instrument if the flow multiplier is not working.*

Section 6 Maintenance

DANGER
Only qualified personnel should conduct the tasks described in this section of the manual.

The nature of tasks described in this section of the manual requires individuals to be technically knowledgeable of the associated dangers. Burns, shock, eye damage, fire and chemical exposure may occur if this work is not done by qualified personnel. Always review appropriate Material Safety Data Sheets (MSDS) before working with chemicals.

6.1 Scheduled maintenance

Scheduled periodic maintenance requirements of the SS7 sc Turbidimeter are minimal. Standardization checks and calibration are the primary requirements. Several other activities should be performed on a regular basis, but the schedule for these may depend on the installation and sample.

6.2 Removing a sensor from the system

Prior to physically removing a sensor from the system, record all user defined settings such as relays, signal averaging, etc. Turn off power to the sc100 and SS7 sc, then disconnect the sensor at the controller.

6.3 Installing a sensor on the system

To return the system to normal operation following a software upgrade or sensor repair, perform the following procedure:

1. Detach all sensors from the sc100 controller.
2. From the Main Menu, press the **DOWN** key to highlight TEST/MAINT and confirm.
3. Use the **DOWN** key to scroll to SCAN SENSORS and confirm.
4. Remove attached sensors by selecting the corresponding serial number or select “All”.
5. **Power down the sc100 controller, then attach the sensor(s) to be used.**

   Note: *Clean sensors before installing on the system.*

6. Supply power to the sc100 controller. The system will initialize automatically.

6.3.1 Cleaning

Sediment may collect in the turbidimeter body and on the overflow weir. Algae may also form. The turbidimeter body should be drained and flushed—on a schedule determined by visual inspection—to remove accumulated sediment. Algae can be removed with a large bottle brush and a sterilizing solution such as dilute chlorine bleach.

Samples containing large amounts of settleable solids may cause frequent accumulation of solids in the turbidimeter body. To minimize cleaning frequency, the analyzer can be operated with the drain ball valve partially or completely open and the sample flow increased accordingly to provide continuous flushing of solids from the turbidimeter body. If the drain is left partially open, the ball valve supplied should be replaced with a valve designed for flow control. Operating the ball valve in a partially open position may damage the valve or cause plugging of the drain line.

When used in conjunction with the Auto-flush Kit (section 8.2 on page 49), the flush cycle feature may be used to operate a solenoid valve to divert sample and provide a periodic clear water flush.

The inside enclosure of the SS7 sc can be washed down with warm water spray if deposits accumulate inside the unit. The vent cover at the top of the SS7 sc-HST turbidimeter body can also be removed for cleaning as necessary.

Note: *Loosen the light source to remove or install the vent cover on the SS7 sc-HST. Use the alignment plate included in the unit to check the alignment of the light after installing the cover. Make sure the cover sits flat on top of the slant tube when installed.*

6.4 Unscheduled maintenance

Important Note: *Disconnect power to the instrument before removing any cover. To reduce the possibility of ESD damage to the equipment, avoid contact with electrical components. All replacement components must meet or exceed original equipment specifications to maintain applicable safety standards and certifications and ensure proper instrument performance.*

6.4.1 Lamp replacement

The lamp is located in the light source assembly block in the sample unit. It comes with attached leads terminated in a two-pin connector. The lamp is replaced as follows:

1. Set the power switch in the control unit to off. Disconnect power to the sc100 controller.
2. Open the sample unit door. Disconnect the lamp cable at the connector.
3. Remove the two screws that secure the lamp source assembly to the back plate. Remove the lamp source assembly (Figure 16).
4. Remove the four screws securing the end plate to the light source assembly housing. Remove the end plate with gasket, the notched spacer and the lamp.

5. Wipe the replacement lamp clean to remove any dust and fingerprints. Fingerprints left on the glass bulb can permanently damage the lamp. Install the lamp in the light source block.
6. Slide the notched spacer over the lamp cable with the notch away from the lamp base. Route the lamp cable through the notches. Install the lamp and spacer into the end of the housing with the spacer notch aligned with the notch in the housing.
7. Install the end plate using the two screws removed in step 3.
8. Install the assembled light source assembly in the sample unit using the two screws removed in step 2. Connect the lamp cable connector.
9. Using the alignment template supplied with the turbidimeter, verify that the light source assembly is positioned properly as follows:
    a. Be sure the lamp door is closed tightly. Apply power to the sc100 controller. Wait for the display to show the current turbidity reading before continuing.
    b. Install the calibration cylinder in the top of the turbidimeter body (Figure 15 on page 31).
    c. Place the alignment template on top of the calibration cylinder with the guide pin down and against the flat notch on the inside of the cylinder (Figure 17). The back edge of the template should be against the sample unit back plate.
    d. Check the position of the lamp image on the alignment template surface. It should fall on the target area so the center of the beam is centered between the lines (Figure 17).
    e. If the light source assembly needs adjustment, loosen the two mounting screws enough to adjust the position of the lamp image. Tighten when aligned properly.
10. Calibrate the instrument as described in section 5.5 on page 29.

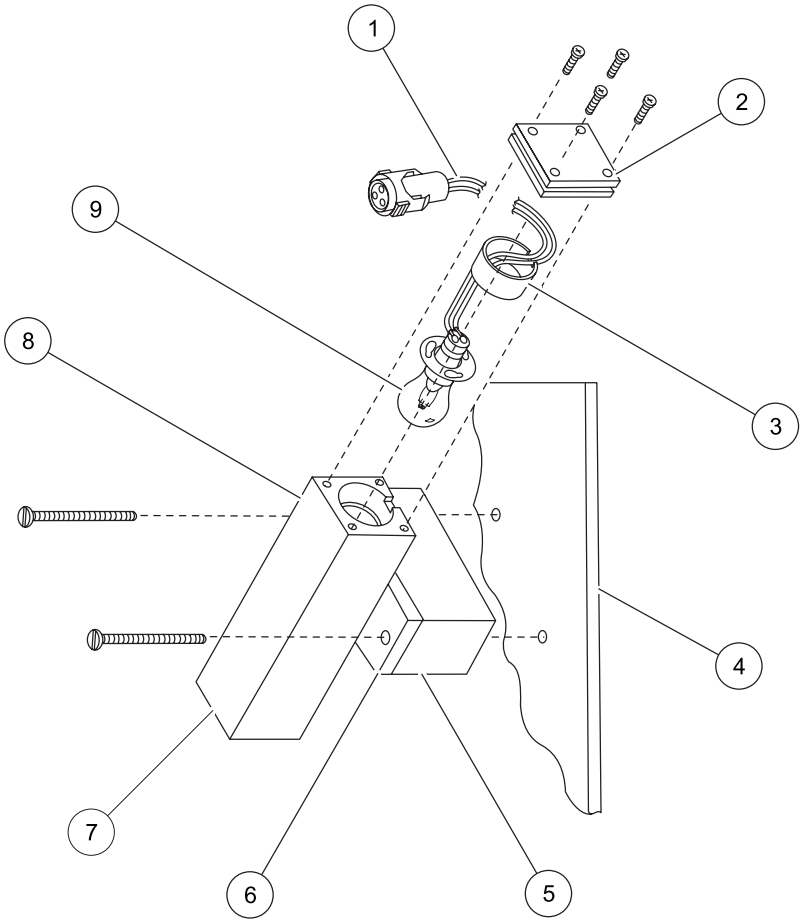

Figure 16 Lamp replacement

1	Lamp cable	**6**	Spacer
2	End plate	**7**	Housing
3	Notched spacer	**8**	Light source assembly
4	Back plate	**9**	Lamp
5	Base		

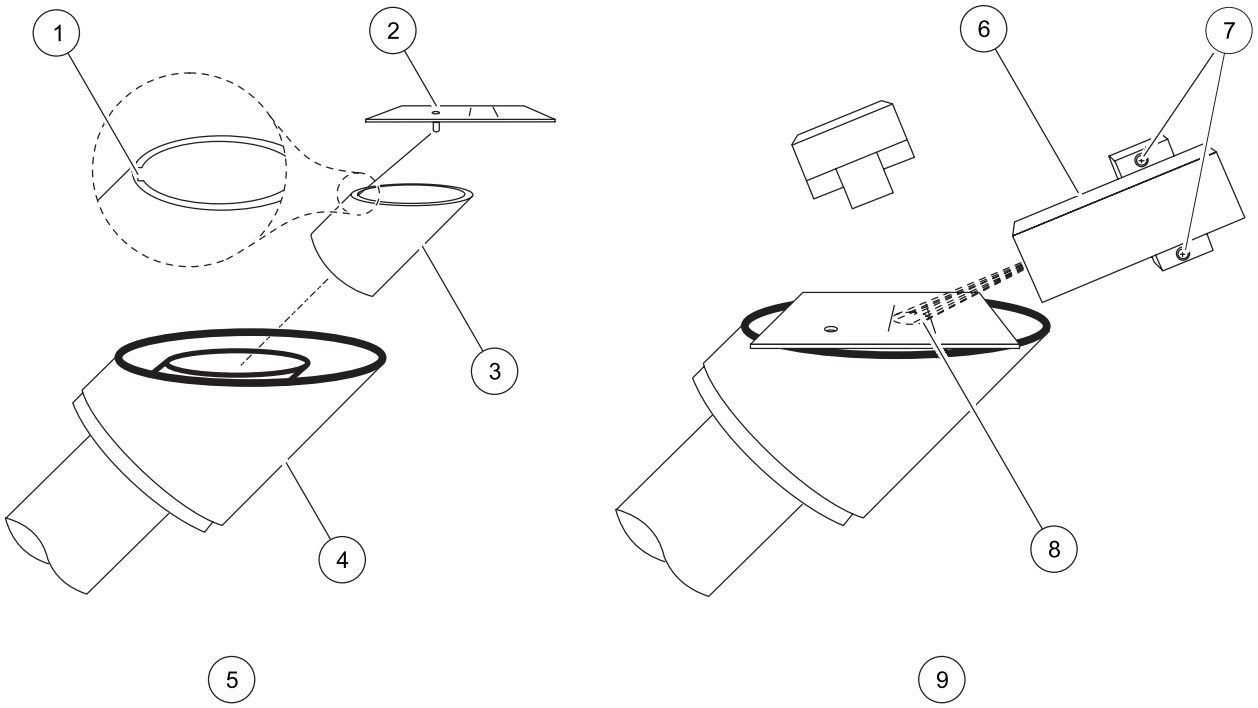

Figure 17 Alignment details

1	Flat notch	**6**	Light source assembly
2	Alignment template	**7**	Mounting screws
3	Calibration cylinder	**8**	Target area
4	Turbidimeter body	**9**	Adjust light source to align light beam in target area
5	Install calibration cylinder and alignment template		

6.4.2 Light source assembly maintenance

No maintenance of the light source assembly is normally necessary beyond changing the lamp. The lamp, several lenses, apertures and other components are located in the light source housing. If these components are removed for any reason, they must be installed exactly as they were removed. Placing any of the components in the wrong position or orientation can cause measurement errors and lack of alignment. Figure 18 illustrates the correct installation and orientation of the components. If difficulty is experienced in reassembly, contact Technical Support for assistance. Refer to Section 9 on page 51.

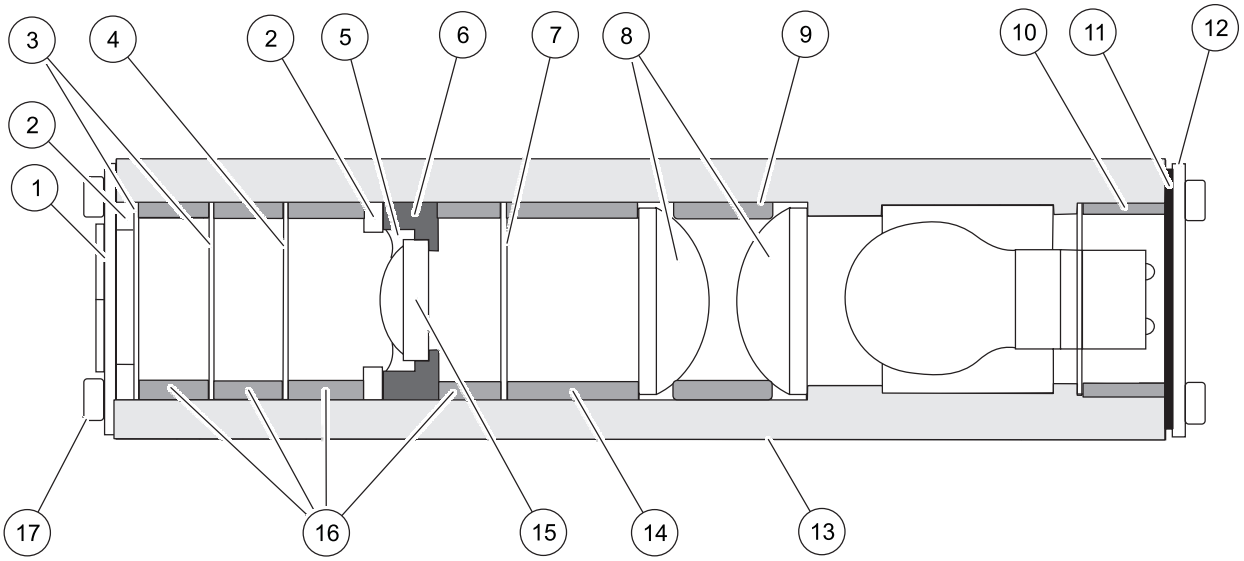

Figure 18 Light source assembly

1	Shield assembly (Cat. No. 45299-00)	**10**	Spacer, light source (Cat. No. 45039-00)
2	Wavy washer (2x) (Cat. No. 45042-00)	**11**	Gasket (Cat. No. 45033-00)
3	Medium aperture (Cat. No. 45044-00)	**12**	End plate (Cat. No. 45032-00)
4	Large aperture (Cat. No. 45045-00)	**13**	Body (Cat. No. 45027-00)
5	Retaining ring (Cat. No. 45041-00)	**14**	Large spacer (Cat. No. 45037-00)
6	Lens holder (Cat. No. 45040-00)	**15**	Small lens (Cat. No. 31465-00)
7	Small aperture (Cat. No. 45043-00)	**16**	Small spacer (4x) (Cat. No. 45038-00)
8	Large lens (2x) (Cat. No. 44114-00)	**17**	Screws (8x) (Cat. No. 5584-11)
9	Medium spacer (Cat. No. 45036-00)		

6.4.3 Detector assembly replacement

The detector assembly, listed as a replacement item in section 8.1 on page 49, is a sealed unit that is replaced entirely (Figure 19).

1. Write down the controller setup for all analog outputs and/or relays used with the SS7 sc.
2. Turn off the controller and disconnect it from power.
3. Disconnect the detector cable from the controller. Unscrew the nut (Figure 19, item 8) and remove it from the disconnected detector cable.
4. Open the SS7 sc enclosure door. Using a blunt object (¼-inch diameter or less, e. g. the blunt end of a pen) push on the bushing from the inside of the enclosure until it is free of the strain relief and clamping fingers. Remove the grommet from the detector cable.
5. Pull the detector cable through the strain relief. Open the cable clamps (Figure 19, item 3) and remove the cable.

6. Remove the two screws securing the detector assembly to the wall of the SS7 sc enclosure. Remove the complete detector assembly (Figure 19, item 1).
7. Use the two screws removed in step 6 to secure the new detector to the wall of the SS7 sc enclosure. Secure the cable with the cable clamps.
8. Thread the detector cable through the strain relief. Replace the split grommet (note the orientation in Figure 19) onto the detector cable. At the clamping fingers, rotate the grommet counter-clockwise while pushing the grommet back into place in the strain relief.
9. Thread the nut onto the detector cable and secure onto the strain relief.
10. Close the SS7 sc enclosure door. Attach the detector cable to the controller.
11. Apply power to the controller and turn it on. The controller will prompt the user that the SS7 cannot be found. The old detector serial number will be displayed.
12. Use the arrow keys to select the old detector serial number and remove it. The controller will then install the new detector assembly.
13. Establish the setup for all analog outputs and/or relays to be used with the SS7 sc. Use the settings recorded in step 1.
14. Calibrate the instrument (section 5.5 on page 29).

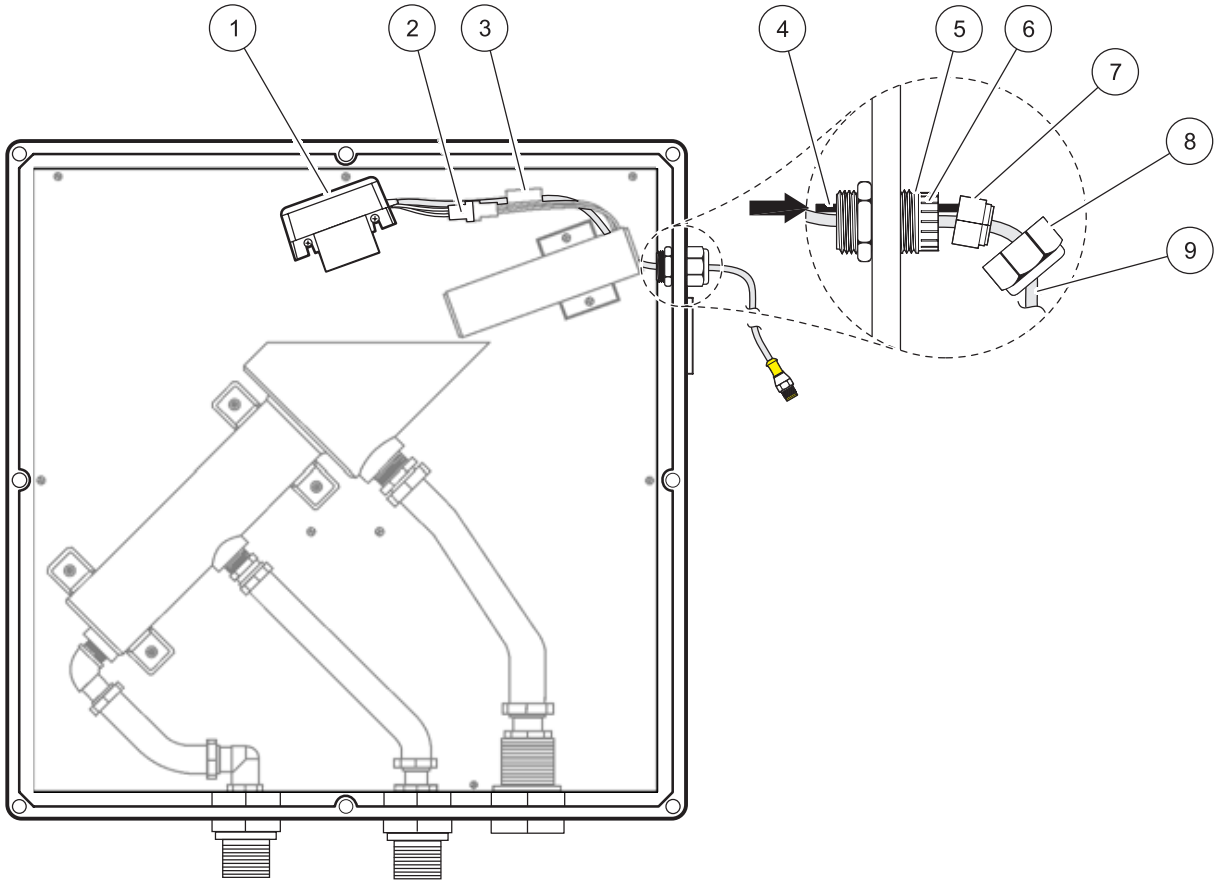

Figure 19 Detector assembly replacement

1	Detector assembly (Cat. No. 71221-00)	**6**	Clamping fingers
2	Light source assembly power connector	**7**	Bushing
3	Cable clamp	**8**	Nut
4	Blunt object	**9**	Detector assembly cable
5	Strain relief		

Section 7 Troubleshooting

7.1 Error Codes

Errors are indicated by a flashing measurement value and a flashing warning icon. Errors are defined in Table 2.

1. From the Main Menu, select SENSOR DIAG and confirm.
2. If multiple sensors are attached to the controller, choose SELECT SENSOR>SS7 SETUP and confirm.
3. Select ERROR LIST and confirm. All active errors will display.

Table 2 Error codes

DIsplayed error	Definition
ADC FAIL	The ADC has failed. Try cycling power. If cycling power does not work, replace the detector assembly (Cat. No. 71221-00).
LAMP FAIL	The light source has failed. See section 6.4.1 on page 38 for lamp replacement instructions.
FLASH FAIL	Datalog and event log will not work.

7.2 Warnings

Warnings are indicated by a flashing measurement value and a flashing warning icon. Warnings are defined in Table 3.

1. From the Main Menu, select SENSOR DIAG and confirm.
2. If multiple sensors are attached to the controller, choose SELECT SENSOR>SS7 SETUP and confirm.
3. Select WARNING LIST and confirm. All active warnings will display.

Table 3 Warning Codes

Warning Number	Displayed Warning	Definition/Resolution
1	DARK WARNING	Dark reading detects too much light. Close the SS7 sc enclosure and perform ZERO ELECTRONICS (under the CALIBRATION menu).
2	TEMP WARNING	Sensor head internal temperature is higher than specified. Contact the Technical Support Department. (> 70 °C)
3	DATA LOG FULL	Sensor data log is full. No additional data will be logged until sensor log is downloaded into controller memory.
4	EVENT LOG FULL	Sensor data log is full. No additional data will be logged until sensor log is downloaded into controller memory.
5	5 VOLT WARN	Monitored voltage is outside the range of 4.5–5.5 V.
6	VIN WARN	Monitored instrument input voltage from sc100 is outside the range of 9.08–14.3 V. Check cables. Make sure only one SS7 sc is connected to sc100 and if any other probe is connected it can only draw 4 watts maximum.
7	LAMP VOLT WARN	Monitored voltage is outside the range of 3.96–4.48 V.
8	LAMP CURR WARN	Monitored current is outside the range of 1.67–2.75 Amps.
9	OUTPUT MODE WARN	Activated when the sensor is not in normal measurement mode (such as when in calibration or verification mode).
10	AC UPDATE FAIL	The application code update failed.
11	EXT FLASH FAIL	External copy of the application code has failed. Self recovery should occur.

Table 3 Warning Codes (continued)

Warning Number	Displayed Warning	Definition/Resolution
12	INT FLASH FAIL	Internal copy of the application code has failed. Self-recovery should occur.
13	ENGLISH ONLY	English only device driver file. Update the device driver with the latest version.
14	VREF WARN	ADC voltage reference is out of specification.
15	SERVICE WARN	SS7 sc is currently in service mode

Table 4 presents sensor warnings displayed in the Event Log, possible causes and corrective actions.

Table 4 General Troubleshooting

Sensor Error or Warning	Possible Cause	Corrective Action
LAMP FAIL	Lamp burned out	Replace the lamp. See section 6.4.1 on page 38.
	Lamp unplugged	Restore connection
	+12 V connection loose at controller	Restore connection
	Dislodged lamp	Reinstall lamp
	Bad circuit board in turbidimeter head	Contact the Technical Support Department.
Low Readings	Detector coated/dirty	See section 6.3.1 on page 38. Contact the Technical Support Department.
	Lens coated/dirty	Clean the lens using isopropyl alcohol and a cotton swab.
	Obstructed light path	Remove obstruction
	See LAMP FAIL causes above	See LAMP FAIL corrective actions above
VIN FAIL	Loose connection at sc100	Tighten connection of cable at sc100
	SS7 sc to sc100 cable too long	Make sure that if an extension cable is used, only one is present and is no longer than 7 meters (approximately 30 feet).
	Fluctuation in voltage	Turn instrument power off and back on.
	Bad detector assembly	Replace detector assembly (Cat. No. 71221-00).
ADC FAIL	Fluctuation in voltage	Turn instrument power off and back on.
	Bad detector assembly	Replace detector assembly (Cat. No. 71221-00).
DARK WARNING	Light Leak—SS7 sc enclosure door is open during Power Up or Zero Electronics	Make sure the door is closed, then perform ZERO ELECTRONICS in the CALIBRATION MENU.
	Bad detector Assembly	Replace detector assembly (Cat. No. 71221-00).

Table 5 presents additional malfunctions which may not be recorded in the Event Log.

Table 5 Additional malfunctions not recorded in the event log

Symptom	Possible cause	Corrective action
Continuous underrange	The calibration standard was either improperly prepared or was unstable at the time the calibration was accepted.	Verify the accuracy of calibration standards and calibrate the instrument. See Low Readings in Table 4.
Continuous overrange	The calibration standard was either improperly prepared or was unstable at the time the calibration was accepted.	Verify the accuracy of calibration standards and recalibrate the instrument.
Erratic readings	Inadequate bubble removal from sample	Verify the accuracy of calibration standards and recalibrate the instrument. Increase the signal averaging time to a longer interval. Make sure the Bubble Reject feature is turned on. Slow the flow of sample into the instrument.
High readings	Dirty instrument Calibration standard was low Flow rate is too high causing bubbles	Clean the instrument. Check the value and expiration date on the calibration standard Verify the flow is within specifications Recalibrate the instrument.

7.3 Event codes

Events are automatically invoked to document major actions during normal instrument operation. Event codes are not displayed on controller and must be downloaded from the event log using Data Com software. Troubleshooting actions are provided in Table 4 on page 46.

Table 6 Event log list

Event	Event #	Data1	Data2	Data3
Bubble reject change	0	0 = OFF 1= ON	—	—
Signal avg	1	0 = 1, 1 = 6, 2 = 30, 3 = 60, 4 = 90	—	—
Data log interval change	2	0 = 5 sec, 1 = 30 sec, 2 = 1 min, 3 = 2 min, 4 = 5 min, 6 = 15 min, 7 = 30 min, 8 = 1 hr, 9 = 4 hr	—	—
Power on	3	—	—	—
Calibration	4	Std	Gain	Operator
Verification	5	Expected Value	Meas Value	Operator
Dark event	6	A/D counts	—	—
Temperature	7	Present	Min	Max
Volt warn	8	Vin	5V	Vref
Lamp warn event	9	Lamp V	Lamp I	—
A2D fail event	10	—	—	—
Lamp fail	11	Lamp V	Lamp I	—
Output mode change	12	0 = Normal, 1 = Active 2 = Hold, 3 = Transfer	—	—

Table 6 Event log list (continued)

Event	Event #	Data1	Data2	Data3
Baseline	13	Serial Number	Expected	Operator
AC update start	14	—	—	—
AC update done	15	—	—	—
AC update fail	16	—	—	—
AC internal fail	17	—	—	—
AC external fail	18	—	—	—
Flash erase	19	—	—	—
DD update	20	—	—	—
Service mode	21	0 = Off, 1 = On	—	—

Example of event log download using DataCom

15:00 01/09/06	BUBBLE REJECT	0	1			
1/9/2006 15:00	BUBBLE REJECT	0	0			
1/9/2006 15:00	SIGNAL AVG	1	2			
1/9/2006 15:00	SIGNAL AVG	1	1			
1/9/2006 15:00	DATALOG INTRVL	2	9			
1/9/2006 15:01	OUT MODE EVENT	12	1			
1/9/2006 15:01	CALIBRATION	4	2100	1.51	G7	
1/9/2006 15:01	BASELINE EVENT	13	7	2090.4	G7	
1/9/2006 15:02	OUT MODE EVENT	12	2			
1/9/2006 15:02	VERIFICATION	5	7	2090.4	2091.1	GS7

7.4 Data log

Measured data is automatically logged based on the setting of the data log interval. If, however, there is a calibration or verification being performed, the data log will be interrupted since the values of the measurements do not represent the normal process. The data log interval in the following example is set at 15 minutes.

Example of data log download using DataCom

Serial Number: FFFFFFFFFFFF

Device ID: 26

Manufacture ID: 0

Time	Channel 1
1/18/2006 12:15	2009.04
1/18/2006 12:30	2009.71
1/18/2006 12:45	2010.316
1/18/2006 13:00	2009.096

Section 8 Replacement parts and accessories

8.1 Replacement parts

Description	Cat. No.
Surface Scatter® 7 sc Installation Kit:	
Adapter, barb fitting, ¾" NPT to ¾" ID hose barb (2x)	40439-00
Adapter, barb fitting, 1" NPT to 1" ID hose	40372-00
Brush, cylinder, size 2	687-00
Calibration cup, SS7 sc	45021-00
Drain Valve	45073-00
Formazin Stock Solution, 4000 NTU, 500 mL	2461-49
Light Source Template	45076-00
Nipple, ¾" NPT	31551-00
Washer, ¼ ID x 1.00 OD (4x)	44173-00
Wall Mounting kit	44247-00
Light Source Shield Assemblies (2x)	45299-00
Detector Assembly	71221-00
Lamp Assembly, Surface Scatter 7 sc	45034-00
Manual	DOC026.53.00769
Quick Reference Document	DOC016.53.00769
Tubing Replacement Kit	46691-00

8.2 Accessories

Description	Cat. No.
Auto Flush Kit (120V)	46692-12
Auto Flush Kit (220V)	46692-22
Bubble Trap/Head Regulator	46680-00
Cable Extension for Sensor, 7.6 m (25 ft)	57960-00
DataCom (CD-rom)	59256-00
Formazin Stock Solution, 4000 NTU, 500 mL	2461-49
Heat Exchanger Unit (Sample cooler)	48551-00
Latch, replacement, SS6	44993-00
Manual, SS7 sc, English	DOC026.53.00769
Manual, SS7 sc, Chinese	DOC026.80.00769
Manual, SS7 sc, Japanese	DOC026.81.00769
Manual, SS7 sc, Korean	DOC026.84.00769
Power Cord, 125 VAC, 10A, 1.83 m (6 ft)	46306-00
Power Cord, 250 VAC, 10A, 1.83 m (6 ft)	46308-00
StablCal, 400 NTU, 500 mL	71216-49
Standardization Plate Kit, uncalibrated	23513-00
Sun Shield, sc100 Controller	LZ961.54
Upgrade Kit, Converting Standard SS7 sc to a SS7 sc-HST (High Sample Temperature)	45000-43

Section 9 How to order

U.S.A. customers

By telephone:
6:30 a.m. to 5:00 p.m. MST
Monday through Friday
(800) 227-HACH (800-227-4224)

By fax:
(970) 669-2932

By mail:
Hach Company
P.O. Box 389
Loveland, Colorado 80539-0389 U.S.A.
Ordering information by e-mail: orders@hach.com

Information required

- Hach account number (if available)
- Your name and phone number
- Purchase order number
- Brief description or model number
- Billing address
- Shipping address
- Catalog number
- Quantity

International customers

Hach maintains a worldwide network of dealers and distributors. To locate the representative nearest you, send an e-mail to: intl@hach.com or contact:

Hach Company World Headquarters; Loveland, Colorado, U.S.A.
Telephone: (970) 669-3050; Fax: (970) 669-2932

Technical and customer service (U.S.A. only)

Hach Technical and Customer Service Department personnel are eager to answer questions about our products and their use. Specialists in analytical methods, they are happy to put their talents to work for you.

Call 1-800-227-4224 or e-mail techhelp@hach.com

Section 10 Repair service

Authorization must be obtained from Hach Company before sending any items for repair. Please contact the Hach Service Center serving your location.

In the United States:
Hach Company
Ames Service
100 Dayton Avenue
Ames, Iowa 50010
(800) 227-4224 (U.S.A. only)
FAX: (515) 232-3835

In Canada:
Hach Sales & Service Canada Ltd.
1313 Border Street, Unit 34
Winnipeg, Manitoba
R3H 0X4
(800) 665-7635 (Canada only)
Telephone: (204) 632-5598
FAX: (204) 694-5134
E-mail: canada@hach.com

In Latin America, the Caribbean, the Far East,
Indian Subcontinent, Africa, Europe or the Middle East:
Hach Company World Headquarters,
P.O. Box 389
Loveland, Colorado, 80539-0389 U.S.A.
Telephone: (970) 669-3050
FAX: (970) 669-2932
E-mail: intl@hach.com

Section 11 Limited warranty

Hach Company warrants its products to the original purchaser against any defects that are due to faulty material or workmanship for a period of two years from date of shipment unless otherwise noted in the product manual.

In the event that a defect is discovered during the warranty period, Hach Company agrees that, at its option, it will repair or replace the defective product or refund the purchase price excluding original shipping and handling charges. Any product repaired or replaced under this warranty will be warranted only for the remainder of the original product warranty period.

This warranty does not apply to consumable products such as chemical reagents; or consumable components of a product, such as, but not limited to, lamps and tubing.

Contact Hach Company or your distributor to initiate warranty support. Products may not be returned without authorization from Hach Company.

Limitations

This warranty does not cover:

- Damage caused by acts of God, natural disaster, labor unrest, acts of war (declared or undeclared), terrorism, civil strife or acts of any governmental jurisdiction
- Damage caused by misuse, neglect, accident or improper application or installation
- Damage caused by any repair or attempted repair not authorized by Hach Company
- Any product not used in accordance with the instructions furnished by Hach Company
- Freight charges to return merchandise to Hach Company
- Freight charges on expedited or express shipment of warranted parts or product
- Travel fees associated with on-site warranty repair

This warranty contains the sole express warranty made by Hach Company in connection with its products. All implied warranties, including without limitation, the warranties of merchantability and fitness for a particular purpose, are expressly disclaimed.

Some states within the United States do not allow the disclaimer of implied warranties and if this is true in your state the above limitation may not apply to you. This warranty gives you specific rights, and you may also have other rights that vary from state to state.

This warranty constitutes the final, complete, and exclusive statement of warranty terms and no person is authorized to make any other warranties or representations on behalf of Hach Company.

Limitation of remedies

The remedies of repair, replacement or refund of purchase price as stated above are the exclusive remedies for the breach of this warranty. On the basis of strict liability or under any other legal theory, in no event shall Hach Company be liable for any incidental or consequential damages of any kind for breach of warranty or negligence.

Section 12 Certification

Hach Company certifies this instrument was tested thoroughly, inspected and found to meet its published specifications when it was shipped from the factory.

The **Model sc100 with SS7 sc or SS7 sc-HST Sensor** has been tested and is certified as indicated to the following instrumentation standards:

Product Safety

UL 61010A-1 Listed by ETL (cETLus safety mark)
CSA C22.2 No. 61010.1 Certified by ETL (cETLus safety mark)
Certified by Hach Co. to EN 61010-1 Amds. 1 & 2 (IEC1010-1) per 73/23/EEC, supporting test records by Intertek Testing Services.

Immunity

This equipment was tested for Industrial level EMC per:

EN 61326 (EMC Requirements for Electrical Equipment for Measurement, Control and Laboratory Use) **per 2004/108/EC EMC:** Supporting test records and compliance certification by Hach Company.

Standards include:

IEC 1000-4-2:1995 (EN 61000-4-2:1995) Electro-Static Discharge Immunity (Criteria B)
IEC 1000-4-3:1995 (EN 61000-4-3:1996) Radiated RF Electro-Magnetic Field Immunity (Criteria A)
IEC 1000-4-4:1995 (EN 61000-4-4:1995) Electrical Fast Transients/Burst (Criteria B)
IEC 1000-4-5:1995 (EN 61000-4-5:1995) Surge (Criteria B)
IEC 1000-4-6:1996 (EN 61000-4-6:1996) Conducted Disturbances Induced by RF Fields (Criteria A)
IEC 1000-4-11:1994 (EN 61000-4-11:1994) Voltage Dip/Short Interruptions (Criteria B)

Additional immunity Standard/s include:

ENV 50204:1996 Radiated Electro-Magnetic Field from Digital Telephones (Criteria A)

Emissions

This equipment was tested for Radio Frequency Emissions as follows:

Per **2004/108/EC** EMC: **EN 61326:1998** (Electrical Equipment for measurement, control and laboratory use—EMC requirements) Class “A” emission limits. Supporting test records by Hewlett Packard, Fort Collins, Colorado Hardware Test Center (A2LA # 0905-01) and certified compliance by Hach Company.

Standards include:

EN 61000-3-2 Harmonic Disturbances Caused by Electrical Equipment

EN 61000-3-3 Voltage Fluctuation (Flicker) Disturbances Caused by Electrical Equipment

Additional Emissions Standard/s include:

EN 55011 (CISPR 11) Class “A” emission limits

Canadian Interference-causing Equipment Regulation, IECS-003, Class A

Supporting test records and compliance certification by Hach Company.

This Class A digital apparatus meets all requirements of the Canadian Interference- Causing Equipment Regulations.

Cet appareil numÈrique de la classe A respecte toutes les exigences du RËglement sur le matÈriel brouilleur du Canada.

FCC PART 15, Class “A” Limits

Supporting test records and compliance certification by Hach Company.

This device complies with Part 15 of the FCC Rules. Operation is subject to the following two conditions:

(1) this device may not cause harmful interference, and (2) this device must accept any interference received, including interference that may cause undesired operation.

Changes or modifications to this unit not expressly approved by the party responsible for compliance could void the user's authority to operate the equipment.

This equipment has been tested and found to comply with the limits for a Class A digital device, pursuant to Part 15 of the FCC Rules. These limits are designed to provide reasonable protection against harmful interference when the equipment is operated in a commercial environment. This equipment generates, uses, and can radiate radio frequency energy and, if not installed and used in accordance with the instruction manual, may cause harmful interference to radio communications. Operation of this equipment in a residential area is likely to cause harmful interference, in which case the user will be required to correct the interference at his own expense. The following techniques of reducing the interference problems are applied easily.

1. Disconnect the Controller from its power source to verify that it is or is not the source of the interference.
2. If the Controller is connected into the same outlet as the device with which it is interfering, try another outlet.
3. Move the Controller and SS7 sc sensor away from the device receiving the interference.
4. Reposition the device receiving the interference.
5. Try combinations of the above.

Appendix A Modbus register

Tag Name	Register #	Data Type	Length	R/W	Description
TURB	40001	Float	2	R	Measured turbidity value
TURB INT	40003	Unsigned Integer	1	R	Integer turbidity value
TURB INT X 100	40004	Unsigned Integer	1	R	Integer turbidity * 100
SENSOR NAME	40005	String	6	R/W	Sensor name or location
BUBBLE REJECT	40011[1]	Unsigned Integer	1	R/W	Bubble reject status (0=OFF; 1=ON)
SIGNAL AVG	400121	Unsigned Integer	1	R/W	Signal average (0=1; 1=6sec; 2=30sec;3=60sec;4=90sec)
DATALOG INTRVL	400131	Unsigned Integer	1	R/W	Datalog interval (0=5sec;1=30sec;2=1min;3=2min;4=5min;6=10 min;7=15min;8=30min;9=60min, 10=4hr)
RESOLUTION	40014	Unsigned Integer	1	R/W	Maximum number of decimal places (0=xxxxx, 1=xxxx.x, 2=xxx.xx)
P/F CRITERIA	400151	Unsigned Integer	1	R/W	Pass / Fail criteria for verification. (1 to 10 percent)
TURB UNIT	40016	Unsigned Integer	1	R/W	Turb units (0=mg/L:7=NTU;42=FTU)
SERVICE MODE	400181	Unsigned Integer	1	R/W	Used to determine if the instrument is in the service mode (0 = disabled; 1= enabled)
SERIAL NUMBER	40021	String	6	R	Instrument serial number
CODE VERSION	40027	Float	2	R	Software version
DD Firmware	40029	Unsigned Integer	1	R	Device driver firmware version
DD CONTENT	40030	Unsigned Integer	1	R	Device driver content version
HW VERSION	40031	Unsigned Integer	1	R	Hardware version of pc board
TEMP	40032	Float	2	R	Temperature measurement in Celsius
DARK	40034	Unsigned Integer	2	R	Dark turbidity A/D counts.
RAW TURB	40036	Float	2	R	Turbidity value with dark offset and gain applied.
TURB COUNTS	40038	Unsigned Integer	2	R	Turbidity A/D counts
TEMP MAX	40040	Float	2	R	Maximum temperature
TEMP MIN	40042	Float	2	R	Minimum temperature
LAMP V	40044	Float	2	R	Lamp voltage
LAMP CURR	40046	Float	2	R	Lamp current (amps)
Plus 5V	40048	Float	2	R	Plus five volt measurement
INPUT V	40050	Float	2	R	Input voltage (~12V)
VREF	40052	Float	2	R	Voltage reference measurement (2.5V)
CAL GAIN	40067	Float	2	R	Calibration gain factor - used to convert A/D counts to turbidity
INITIALS	40083	String	2	R	Initials used for the latest calibration
LAST CAL DATE	40085	Time2	2	R	Time of the latest calibration
CAL VALUE	40087	Float	2	R	The standard value used for the latest calibration

[1] In order to write to these tags, write 46478 to register 49938

Appendix B Theory of operation

B.1 SS7 sc principle of operation

The Surface Scatter 7 sc Turbidimeter is a sensitive and precise instrument designed to measure the light scattered by particles suspended in the sample fluid. The sample flows up through the turbidimeter body at a rate between 1 and 2 liters per minute (¼ to ½ gallon per minute). As the fluid spills over the top of the turbidimeter body, a stable, flat surface of fluid forms and becomes the measuring surface.

Because there is no contact between the fluid being analyzed and any of the optical surfaces, the instrument can monitor even highly turbid samples without frequent cleaning. Electrically and mechanically, the Surface Scatter 7 sc Turbidimeter has been constructed to ensure reliable operation in adverse environments.

The lamp, powered by a regulated voltage source, provides a high intensity beam of light that is adjusted to strike the fluid surface at an angle. Most of the light striking the surface of the fluid is either reflected into the upper left hand corner of the cabinet and absorbed, or refracted down into the turbidimeter tube (Figure 3 on page 10). A small amount of the light is scattered by the particles suspended in the fluid. Light scattered at 90 degrees from the incident beam is detected by the detector assembly. The electronic signal generated by the detector assembly is directly related to the concentration of particles suspended in the fluid.

Directing the light beam at the fluid surface at an angle and placing the detector assembly directly over the point where the light enters the fluid is a very important design feature. Because the light is scattered at or near the surface, only a minimum amount of scattered light is absorbed by the fluid before it reaches the detector assembly. Therefore, the amount of light scattered will increase with increasing turbidity, regardless of how high the turbidity becomes. This allows the instrument to measure very high, as well as very low, levels of turbidity.

B.2 SS7 sc-HST principle of operation

The SS7 sc-HST instrument is designed for high temperature samples, or in applications where a significant difference between the sample temperature and the ambient temperature causes condensation and fogging in the unit. The SS7 sc-HST functions in the same manner as the SS7 sc, but accommodates samples of higher temperature and a moist air removal system has been added.

The moist air removal system contains an air flow multiplier that creates a vacuum to draw moisture away from the sample tube and remove the moisture from the enclosure. The moisture removal system requires the customer to provide a source of air pressure, such as compressed air, shop air, or an on-site air compressor. The air line is connected to the top of the flow multiplier (Figure 4, item 1).

HACH® Instruction Sheet

Bubble Trap/Head Regulator Cat. No. 46680-00

Instructions for Installation and Use

The Hach Bubble Trap/Head Regulator is designed for use with Hach Surface Scatter 6 Turbidimeters and other process instruments to reduce or eliminate gas bubbles that may interfere with measurement. The device may also be used as a head regulator to dampen fluctuations in flow due to pulsations from a pump and/or sample pressure.

Using the Bubble Trap/Head Regulator will in-crease response time to changes in sample turbidity or concentration. The body of the unit holds approximately 3 liters (3/4 gal.). Response time may vary from one to two minutes at high flow rate (2 L/minute) to five minutes or more at flow rates less than 1 L/minute. For best response time, use the highest flow practical for the sample conditions. High flow rates decrease effectiveness of bubble removal. The need for response time and bubble removal must be balanced for optimum performance.

Description

The Bubble Trap/Head Regulator is constructed of PVC (polyvinyl chloride) plastic and is resistant to most chemicals. The device should not be used for samples containing solvents such as tetrahydrofuran, toluene, trichloroethylene or methyl acetone. The unit body is equipped with four 3/4-inch female NPT ports for plumbing connections—one in the bottom comes with a factory installed plug. Three 3/4-inch NPT-to-hosebarb fittings are supplied and must be installed on the side ports. See Figure 1.

Installation

Note: *The Bubble Trap/Head Regulator can also be installed with smaller user-supplied plumbing connections. Using smaller plumbing connections and tubing requires the Bubble Trap/Head Regulator to be installed at a greater height above the process instrument. Each foot of head height will create a static pressure of 0.433 psi.*

The Bubble Trap/Head Regulator is designed for wall mounting with the two pipe hangers provided with the unit. Refer to Figure 1 and install the unit as follows:

1. Mount the pipe hangers approximately 11 inches apart, one above the other, using two 3/8-inch bolts or screws for each. Position the pipe hangers so that the overflow fitting of the Bubble Trap/Head Regulator is above the top water level of the turbidimeter or analyzer. Allow approximately 6-inches of clearance at the top to facilitate cleaning.
2. Install the 3/4-inch NPT-to-hosebarb fittings in the side ports of the Bubble Trap/Head Regulator. Teflon thread tape (not supplied) is recommended.
3. Position the body of the Bubble Trap/Head Regulator in the hangers so that the fittings do not interfere with the pipe hangers when they close. When in position, press the body firmly against the back of the hangers. The hangers will close and lock.
4. Connect the sample line to the center hose barb fitting on the side of the device.
5. Using flexible tubing or hard piping, connect the sample outlet fitting on the Bubble Trap/Head Regulator (lowest side fitting) to the sample inlet of the turbidimeter or analyzer.
6. Connect a sample overflow line to the highest side fitting and run it to a drain.

Maintenance

Remove the top cap of the Bubble Trap/Head Regulator to clean the body. Remove the bottom plug to drain the instrument without disturbing other plumbing connections. Use a mild soap solution or dilute acid rinses to remove accumulated sediment and scale.

To remove the Bubble Trap/Head Regulator from the pipe hangers, pry the notched straps apart with a screwdriver or other suitable tool while spreading the holder.

Replacement Parts

Description	Cat. No.
Plug, threaded, 3/4-inch NPT	46676-00
Cap, Bubble Trap/Head Regulator top	46678-00
Pipe hanger, 3-inch iron pipe size	46685-00
Fitting, 3/4-inch NPT to hosebarb	31569-00

Bubble Trap/Head Regulator

Figure 1 Installing the Bubble Trap/Head Regulator

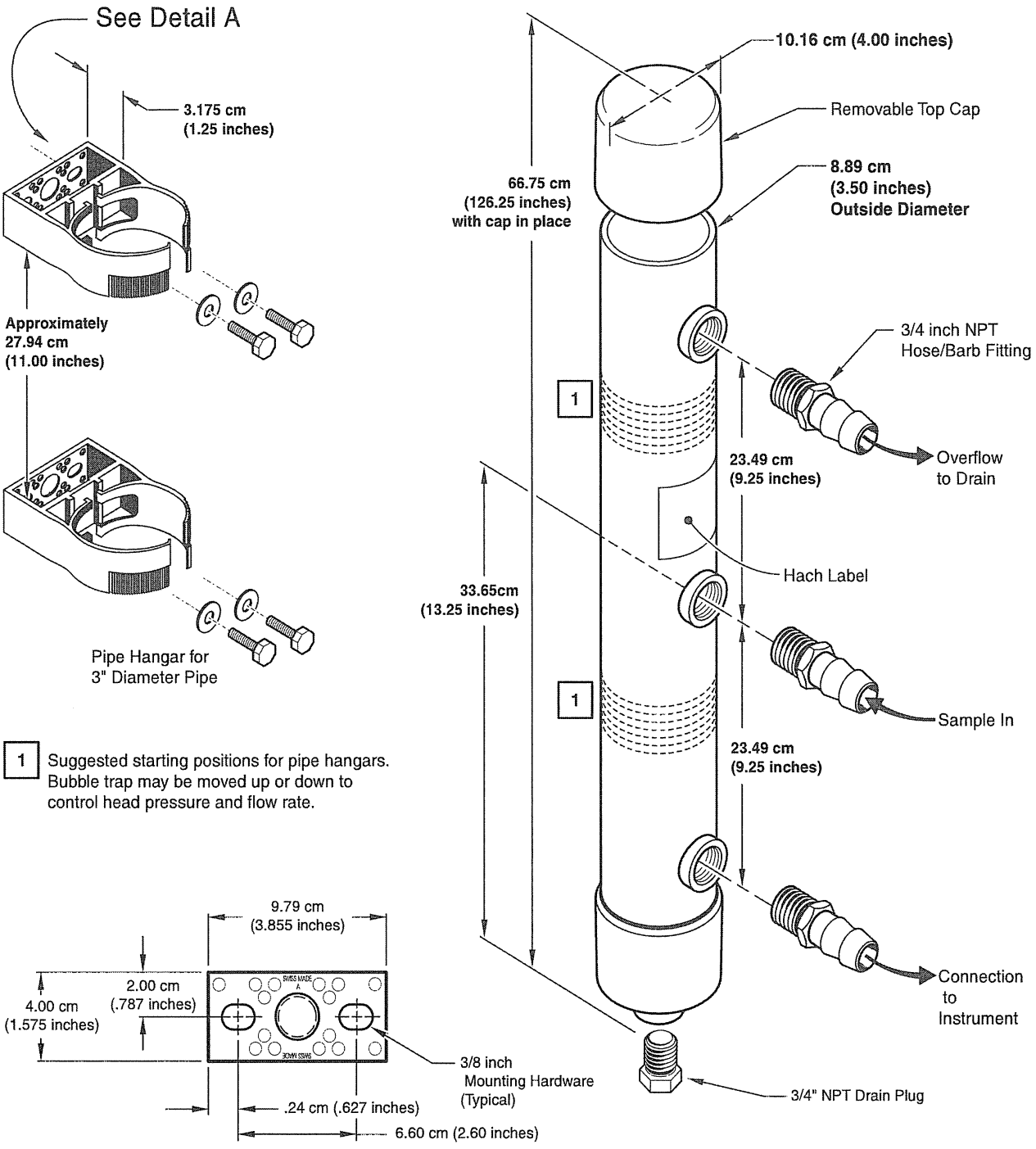

FOR TECHNICAL ASSISTANCE, PRICE INFORMATION AND ORDERING:
In the U.S.A. – **Call toll-free 800-227-4224**
Outside the U.S.A. – **Contact the HACH office or distributor serving you.**
On the Worldwide Web – **www.hach.com**; E-mail – **techhelp@hach.com**

HACH COMPANY
WORLD HEADQUARTERS
Telephone: (970) 669-3050
FAX: (970) 669-2932

© Hach Company, 2001. Printed in the U.S.A. All rights reserved

dd/dp 3/01 3ED

RAW WATER FLOWMETER

LEFT BLANK

KROHNE

ENVIROMAG
Electromagnetic Flowmeters

...for water and wastewater measurements



Varialbe Area Flowmeters
Vortex Flowmeters
Flow Controllers
Electromagnetic Flowmeters
Ultrasonic Flowmeters
Mass Flowmeters
Level Measuring Instruments
Communications Technology
Engineering Systems & Solutions

KROHNE

Electromagnetic flowmeters

The modular system with the ENVIROMAG Hardrubber and Polyurethane primary head

The modular system will have the right electromagnetic flowmeter for your specific application – right from both the flowmetering and the economic viewpoint.

The ENVIROMAG primary head is compatible with all **KROHNE** signal converters:

IFC 010 F	IFC 010 K
IFC 020 F+ E	IFC 020 K
IFC 090 F	IFC 090 K
IFC 110 F	

Full signal converter data are specified in the relevant Data Sheets.

Type code

IFM	Electromagnetic flowmeter
IFS	Primary head
IFC	Signal converter
E	Separate system (19" plug-in)
F	Separate system (field housing)
K	Compact system

ENVIROMAG

Hardrubber and Polyurethane

Compact systems



010 K / 020 K



090 K

Separate systems

Primary head



ENVIROMAG

Signal converters

010 F
020 F
020 E



IFC 010 F / IFC 020 F+ E

090 F



IFC 090 F

110 F



IFC 110 F

KROHNE

ENVIROMAG

Hardrubber and Polyurethane

Primary head

Economic • standard-setting

Quality

Flowmeters are manufactured by KC to ISO 9000 - certified quality assurance standards.

Economic Benefits

- **Low investment and operating costs**
- Meter size 1” - 60” **flange connections** to DIN and ANSI
- **Measuring tube liner:**
  Hardrubber: 1” - 60”
  Polyurethane: 1” - 40”
- **Easy, quick, low-cost installation**
- **Short delivery times, allowing just-in-time purchasing**
- **Absolutely maintenance-free, reliable, no mechanically moving parts**

Wide scope of application

- **Suitable for water and wastewater**
- **For process temperatures up to 176°F**
- **For pressures up to 580 psig**
- **IP 67 protection equivalent to NEMA 6,** suitable for short-time submersion
- Its **favorable price/performance payoff and low operating costs** means that the flowmeter will quickly pay for itself even in applications where it was previously not possible to carry out measurements at all or only by means of other methods.

KROHNE

ENVIROMAG
Hardrubber



Technical data

Meter sizes	1" – 60"
Pipe flanges	
to ANSI B 16.5	1" – 24" / Class 150 lb / RF
to AWWA	28" – 60" / Class B / RF
Electrical conductivity	⩾ 20 µS/cm

Temperatures	Ambient temperature	Process temperature
Compact systems	- 13 to + 140°F	- 13 to + 140°F
ENVIROMAG (separate)		
Hardrubber (DN 100 - 1500...4" - 60")	- 13 to + 140°F	- 13 to + 176°F
In storage	- 13 to + 140°F	

Limits for pressure and temperature

Liner	Flange Standard	Nominal diameter	Pressure rating Class	S O	Max. Operating pressure in psi at a process temperature of... < 68°F	< 104°F	< 140°F	< 176°F	< 194°F
Hardrubber	ANSI B 16.5	1" - 6"	150 lb	S	285.7	284.2	275.5	271.2	—
			300 lb	O	on request				
		8"	150 lb	S	285.7	284.2	275.5	271.2	—
			300 lb	O	342.6	342.6	339.3	326.3	—
		10"	150 lb	S	285.7	284.2	275.5	271.2	—
			300 lb	O	465.5	465.5	465.5	465.5	—
		12"	150 / 300 lb	S / O	285.7	284.2	275.5	265.4	—
		14"	150 / 300 lb	S / O	258.1	258.1	255.2	245.1	—
		16"	150 / 300 lb	S / O	226.2	226.2	223.3	214.6	—
		18"	150 / 300 lb	S / O	200.1	200.1	198.7	190.0	—
		20"	150 / 300 lb	S / O	179.8	179.8	178.3	171.1	—
		24"	150 / 300 lb	S / O	205.9	205.9	204.5	197.2	—
	AWWA	28" – 60"	D	O	145.0	145.0	145.0	145.0	—

S = Standard
O = Option

Vacuum load

Liner	Meter size	Max. Allowed vacuum load in psig at product temperature of ... < 68°F	< 104°F	< 140°F	< 176° F
Hardrubber	1" - 60"	3.6	3.6	5.8	5.8

Insulation class of field coils	E
Electrodes design	
1" - 60"	flat elliptical electrodes, solidly fitted, surface-polished
Protection category	IP 67 and IP 68
Materials	
Measuring tube	stainless steel 1.4301 (AISI 304)
Electrodes	AISI 316 L (option HC and Titanium)
Housing	steel SAE 1008, paint finish
Grounding rings	stainless steel 1.4435 (AISI 316) / 1.4301 (AISI 304)
Terminal box	die-cast aluminium

KROHNE

ENVIROMAG
Polyurethane



Technical data

Meter sizes	1" – 40"
Pipe flanges	
to ANSI B 16.5	1" – 24" / Class 150 lb / RF
to AWWA	28" – 40" / Class D / RF
Electrical conductivity	⩾ 5 µS/cm

Temperatures		Ambient temperature	Process temperature
Compact systems		- 13 to + 140°F	- 13 to + 140°F
ENVIROMAG (separate)			
Polyurethane	1" – 40"	- 13 to + 140°F	- 13 to + 140°F
In storage		- 13 to + 140°F	

Limits for pressure and temperature

Liner	Flange Standard	Nominal diameter	Pressure rating Class	S O	Max. Operating pressure in psi at a process temperature of ...				
					< 68°F	< 104°F	< 140°F	< 176°F	< 194°F
Polyurethane	ANSI B 16.5	1" – 3"	150 lb	S	285.7	284.2	275.5	—	—
			300 lb	O	on request				
	ANSI B 16.5	4" – 6"	150 lb	S	285.7	284.2	275.5	—	—
			300 lb	O	on request				
		8"	150 lb	S	285.7	284.2	275.5	—	—
			300 lb	O	342.6	342.6	339.3	—	—
		10"	150 lb	S	285.7	284.2	275.5	—	—
			300 lb	O	465.5	465.5	465.5	—	—
		12"	150 / 300 lb	S / O	285.7	284.2	275.5	—	—
		14"	150 / 300 lb	S / O	258.1	258.1	255.2	—	—
		16"	150 / 300 lb	S / O	226.2	226.2	223.3	—	—
		18"	150 / 300 lb	S / O	200.1	200.1	198.7	—	—
		20"	150 / 300 lb	S / O	179.8	179.8	178.3	—	—
		24"	150 / 300 lb	S / O	205.9	205.9	204.5	—	—
	AWWA	28" – 40"	D	O	145.0	145.0	145.0	—	—

S = Standard
O = Option

Vacuum load	max. allowed vacuum load 7,2 psig (< 104°F)
Insulation class of field coils	E
Electrodes design	exchangeable electrodes
Protection category	IP 67 and IP 68
Materials	
Measuring tube	stainless steel 1.4301 (AISI 304)
Electrodes	AISI 316 L (option HC, Tantalum, Titanium)
Housing	steel SAE 1008, paint finish
Grounding rings	stainless steel 1.4435 (AISI 316) / 1.4301 (AISI 304)
Terminal box	die-cast aluminium

Technical Information

Selection of meter size

The optimum flow velocity should be 6 – 9 ft/s. For products with solids contents between 9 and 15 ft/s. The exact flow velocity can be determined from the columns in the tables.

v = 40 ft/s as shown in the following example:

- Meter size: 3”
- Desired measuring range:
  200 US Gal/min
  From the table obtain for
  v = 40 ft/s the flow rate of 955.9 US Gal/min at 3” meter size

$$v = \frac{200 \text{ US Gal/min}}{955.9 \text{ US Gal/min}} \times 40 \text{ ft/s}$$

v = 8.37 ft/s

Meter size	$Q_{100\%}$ in US Gal/min	
	v = 1 ft/s	v = 40 ft/s
inch	(minimum)	(maximum)
1	2.334	93.34
1 1/2	5.979	239.0
2	9.339	373.5
3	23.90	955.6
4	37.35	1,493
5	58.38	2,334
6	84.05	3,361
8	149.43	5,975
10	233.4	9,334
12	336.2	13,442
14	464.8	18,593
16	597.9	23,899
20	933.9	37,345
24	1,345	53,781
28	1,919	76,760
30	2,203	88,133
32	2,507	100,272
36	3,173	126,904
40	3,917	156,672
42	4,121	164,693
48	5,464	218,560
54	6,807	272,255
60	8,405	336,114

Recommendations for installation

- **Location and position as required,** but electrode axis **x–** · –· –· –**x** must be approximately horizontal in a horizontal pipe run.

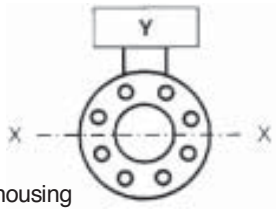

Y terminal box or converter housing

- **Measuring tube must be completely filled at all times.**
- **Direction of flow is arbitrary.**
- **Stud bolts and nuts:** to fit, make sure there is sufficient room next to the pipe flanges.
- **Vibration**: support the pipeline on both sides of the compact flowmeter.
- **Do not expose to direct sunlight,** fit a sunshade if necessary, not included with flowmeter, to be provided by customer.
- **Large meter sizes (≥ 8”)**: use adapter pipes to allow axial shifting of the counterflanges and to facilitate installation.
- **Strong electromagnetic fields,** avoid in vicinity of flowmeter.
- **Straight inlet run minimum of 5 x DN and outlet run minimum of 2 x DN,** (DN = meter size), measured from the electrode axis.
- **Vortex and corkscrew flow:** increase length of inlet and outlet runs or install flow conditioners.
- **Mixing different process liquids:** install flowmeter upstream of mixing point or at an adequate distance downstream (minimum of 30 x DN), otherwise display may be unsteady.
- **Plastic pipes and internally coated metal pipelines:** grounding rings required.
- **Insulated pipeline:** do not insulate flowmeter.
- **Zero setting not necessary:** To check, it should be possible to set “zero” flow velocity in the completely filled measuring tube. Shutoff valves should therefore, be provided either downstream of the flowmeter or upstream and downstream of the flowmeter.

Grounding rings

For process flow measurement reasons the product must be grounded. Such as grounding system is lacking in pipes upstream and downstream of the primary head which feature a corrosion-resistant internal coating or liner, or are made entirely of plastic material. In such cases, grounding rings must be fitted on both sides of the primary head.

ENVIROMAG Hardrubber and Polyurethane

Dimensions and weights

The **total dimension for the height** is obtained from **dimension B** (see table) **plus the height** of the terminal box or the signal converter, see drawings.

The **total weight** is made up of the weight of the primary head (see table) **plus** the weight of the terminal box or signal converter, see below.

Terminal Box

Weight approx. 1.1 lb

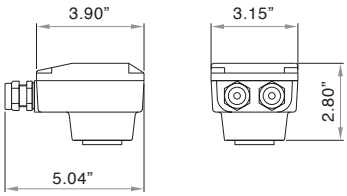

IFC 010 K and IFC 020 K

Signal converters
Weight approx. 3.6 lb

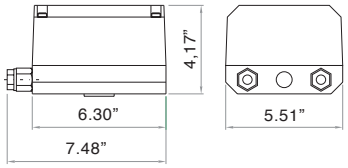

IFC 090 K

Signal converter
Weight approx. 5.1 lb

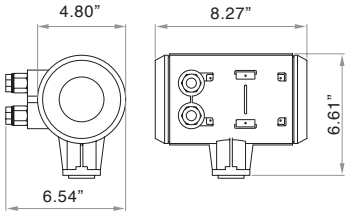

Flange connections to			**Dimensions** in inch
ANSI B 16.5	1" – 24"	150 lb / RF	see table
		⩾ 300 lb / RF	information supplied on request
AWWA	⩾ 28"	Class B, D / RF	information supplied on request

Dimension "A": Gaskets not included with flowmeter
With Grounding Rings: Dimension A + 2 x thickness of the gasket + 2 x 0.12" (thickness of grounding rings)

Nominal Diameter	Dimensions in inch								Weight
ANSI	A		B		C		D		approx.
Inch	DIN ISO	ANSI	DIN. ISO	ANSI	DIN. ISO	ANSI	DIN. ISO	ANSI	lb
1"	5.91	5.91	9.21	9.21	5.12	5.12	4.53	4.25	6.90
1 1/2"	5.91	5.91	9.21	9.21	5.12	5.12	5.91	5.00	13.20
2"	7.87	7.87	7.52	7.28	6.50	6.00	6.50	6.00	17.60
3"	7.87	7.87	8.23	8.03	7.87	7.50	7.87	7.50	37.50
4"	9.84	9.84	10.04	10.24	8.66	8.98	8.66	8.98	41.90
5"	9.84	9.84	11.03	11.10	9.84	10.00	9.84	10.00	48.50
6"	11.81	11.81	11.81	11.69	11.22	10.98	11.22	10.98	57.30
8"	13.78	13.78	14.06	14.17	13.39	13.50	13.39	13.50	110.20
10"	15.75	15.75	16.97	17.20	15.55	16.00	15.55	16.00	161.00
12"	19.69	19.69	19.02	19.76	17.52	19.02	17.52	19.02	218.30
14"	19.69	19.69	21.30	21.85	19.88	21.00	19.88	21.00	251.30
16"	23.62	23.62	24.92	24.92	22.24	23.50	22.24	23.50	337.30
18"	23.62	23.62	26.22	26.54	24.21	25.00	24.21	25.00	374.80
20"	23.62	23.62	28.11	28.62	26.38	26.38	26.38	27.50	418.90
24"	23.62	23.62	33.07	33.66	30.71	32.00	30.71	32.00	551.10
28"	27.56	27.56	36.61	37.68	35.24	36.50	35.24	36.50	661.40
30"	31.50	31.50	–	42.91	–	38.75	–	38.75	793.70
32"	31.50	31.50	41.34	42.24	39.96	41.75	39.96	41.75	1,003.00
36"	35.43	35.43	45.91	47.09	43.90	46.00	43.90	46.00	1,212.50
40"	39.37	39.37	50.16	50.91	48.43	50.75	48.43	50.75	1,385.00
42"	51.18	51.18	–	55.40	–	53.00	–	53.00	1,541.00
48"	51.18	51.18	59.91	62.13	57.28	59.50	57.28	59.50	1,995.00
54"	62.99	62.99	–	68.11	–	66.25	–	66.25	2,275.00
60"	66.93	66.93	–	73.82	–	73.00	–	73.00	3,858.00

Obs: 1" to 24" – weight with ANSI flanges
28" to 40" – weight with AWWA Class D flanges
42" to 60" – weight with AWWA Class B flanges

ENVIROMAG Hardrubber and Polyurethane

Dimensions

1” – 1 1/2”

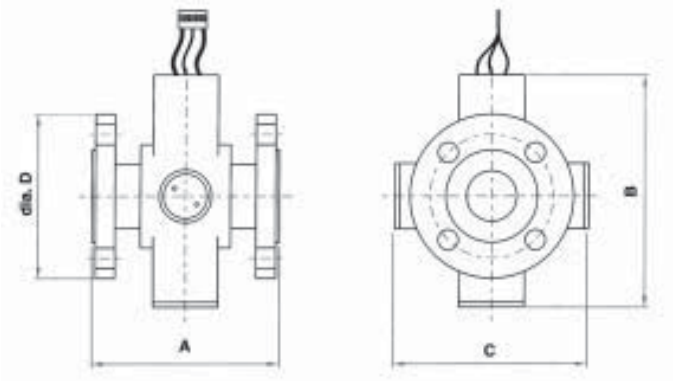

Tolerance details for fitting length dimensions “A”

ANSI B 16.5

⩽ 12” : ± 0.5%, min. ± 0.04”

⩾ 14” : ± 0.5%

2” – 12”

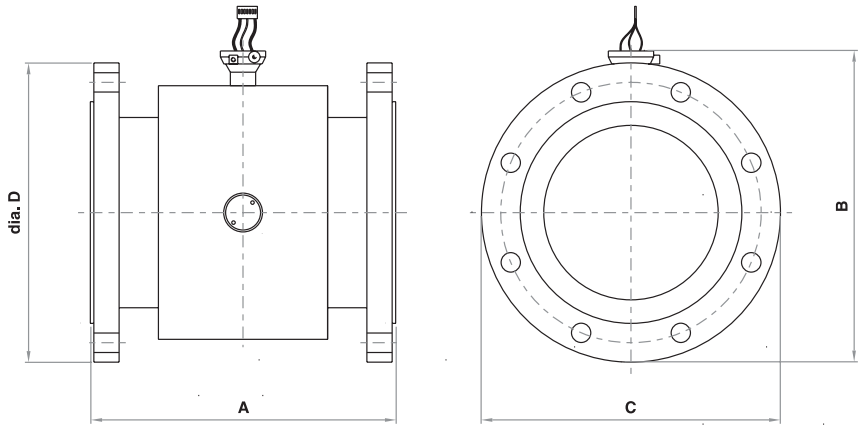

14” – 60”

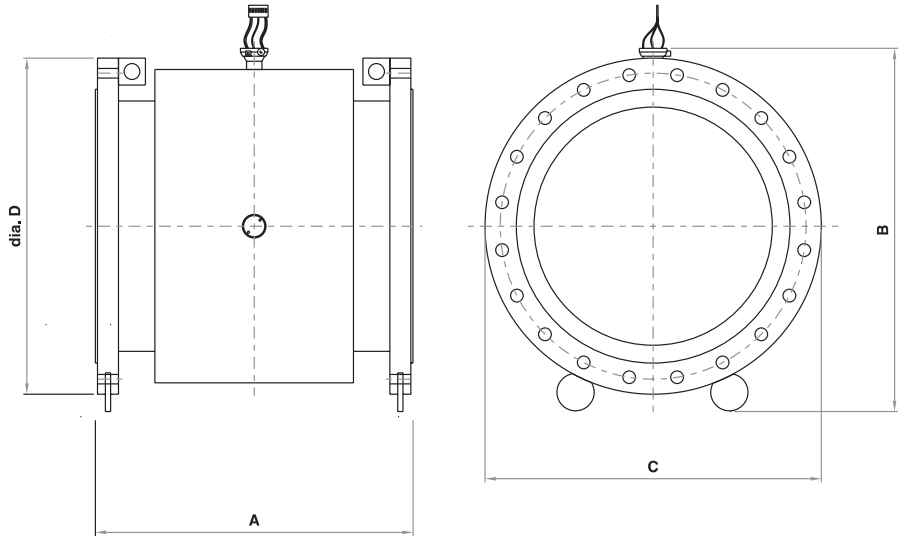

Electro magnetic flow sensor ENVIROMAG 2000 F

For connection to signal converter : IFC 010 C/W & IFC 300 C / W /F / R.
DC-field operation for liquids with conductivity≥ 20 µS/cm

ENVIROMAG 2000
DN 200 - DN 450 / 8" - 1

Code

Primary Head

VB15 4 **Nominal Diameter**

E	2000 F	DN 200 / 8"	**Hardrubber**
F	2000 F	DN 250 / 10"	**Hardrubber**
G	2000 F	DN 300 / 12"	**Hardrubber**
H	2000 F	DN 350 / 14"	**Hardrubber**
K	2000 F	DN 400 / 16"	**Hardrubber**
L	2000 F	DN 450 / 18"	**Hardrubber**
M	2000 F	DN 500 / 20"	**Hardrubber**
N	2000 F	DN 600 / 24"	**Hardrubber**

Nominal pressure

A	ASME 150 lbs RF:	DN > 250 (10") : max.operating pressure 10 bar (higher on request)	**see Flange Options Page A**
B	ASME 300 lbs RF:	DN > 250 (10") : max.operating pressure 10 bar (higher on request)	**see Flange Options Page A**
W	**AWWA C207 Class D**		**see Flange Options Page B**

Others on request

*** NOTE : Grounding ring DN200 / 8" up see Ring Options Page C**

Approval (in combination with IFC 300 for Ex only)

0 non Ex

A CSA Ordinary Locatior

System design

1	Compact with aluminum converter housing	/ at converter
2	Compact with stainless steel converter housing	/ at converter
4	Separate with aluminum connection box	/ 1/2" NPT
A	Separate with stainless steel connection box	/ 1/2" NPT

Converter model

0	Without / modular		
1	IFC 010 C	(compact design)	
2	IFC 010 W	(wall mount version)	
C	IFC 300 C	(compact design)	
D	IFC 300 F	(field mount version)	
E	IFC 300 W	(wall mount version)	
F	IFC 300 R	(rack mount version)	*** In preparation / pending

Lining

0 Hardrubber (standard)

Electrodes

2	316 L (standard)
3	Hastelloy C4
4	Hastelloy B2
5	Tantalum
6	Titanium
7	Platinum

	Construction of electrodes		
→	2 Exchangeable (except Ex approval)		
	Material of Flange		
→	1 Carbon Stee		
	2 Stainless Steel 1.4306 (304 L		see Flange Options Page A
	3 Stainless Steel 1.4404 (316 L		see Flange Options Page A
	6 Stainless Steel 1.4435 (316		see Flange Options Page A
	7 Stainless Steel 1.4301 (304		see Flange Options Page A
	Protection category		
→	0 IP 67		
	2 IP 68	(only with stainless steel connection box)	
	Cable		
→	0 Compact - without / separate D:		see Cable Options Page E
	1 Separate BTS		see Cable Options Page E
	Cable lenght		
→	0 Compact - none / separate - 5 m - 15 ft		0
	1 10 m - 30 ft		see Cable Options Page E
	2 15 m - 45 ft		see Cable Options Page E
	3 20 m - 60 ft		see Cable Options Page E
	4 25 m - 75 ft		see Cable Options Page E
	5 30 m - 90 ft		see Cable Options Page E
	6 40 m - 120 ft		see Cable Options Page E
	7 50 m - 150 ft		see Cable Options Page E
	8 100 m - 300 ft		see Cable Options Page E
	Calibration		
→	0 Standard		
	1 Stainless Steel 1.4301 (304) tagplat		
	Ring / Material		
	0 Whithout		
	2 Ring #1 / Hastelloy C		see Ring Options Page C
→	6 Ring #1 / 1.4404 - 316 L		see Ring Options Page C
	E Ring #3 / 1.4404 - 316 L		see Ring Options Page C
	P Protection ring #2 / 1.4404 - 316 L		see Ring Options Page C
	Construction requirements		
→	0 Standard		
	1 Group 1	*** In preparation / pending	pending
	2 Group 2	*** In preparation / pending	pending
	3 Group 3	*** In preparation / pending	pending
	QA / QC requirements		
→	0 Standard		
	1 Group 1	*** In preparation / pending	pending
	2 Group 2	*** In preparation / pending	pending
	3 Group 3	*** In preparation / pending	pending
VB15		**Complete ordering code**	

KROHNE
The Level and Flow Company

KROHNE Inc.
7 Dearborn Road
Peabody, MA 01960
(978) 535-6060
(800) 356-9464
http://www.krohne.com

Subject to change without notice

© Copyright KROHNE

KROHNE

© KROHNE 04/2004 7.x0xxx.xx.00

GR

Installation and operating instructions

ENVIROMAG IFS 4000 KC F 010 K 020 K 080 K

Electromagnetic flowmeters for water and sewage

- **Primary head**
- **Compact flowmeter**

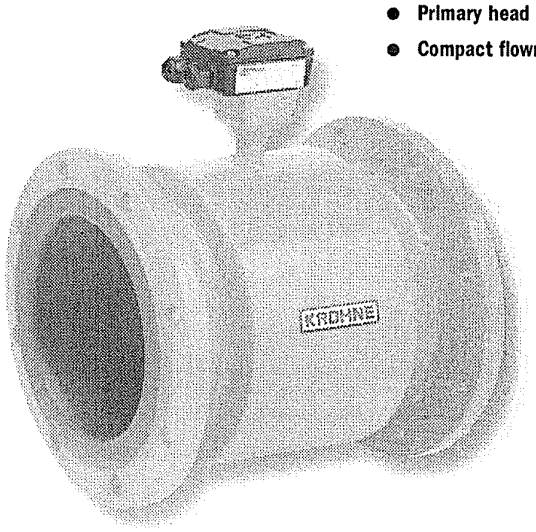

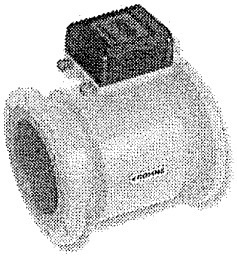

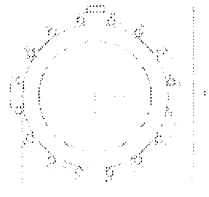

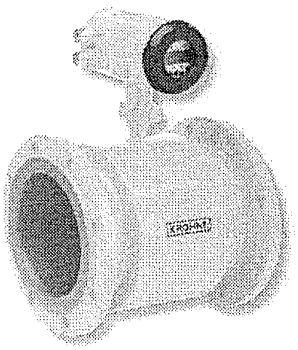

- Variable area flowmeters
- Vortex flowmeters
- Flow controllers
- **Electromagnetic flowmeters**
- Ultrasonic flowmeters
- Mass flowmeters
- Level measuring instruments
- Communications technology
- Engineering systems & solutions
- Switches, counters, displays and recorders
- Heat metering
- Pressure and temperature

Subject to change without notice.

General advice on safety

- Do not install, operate or maintain this flow meter without reading, understanding and following the factory-supplied instructions, otherwise injury or damage may result.
- Read these instructions carefully before starting installation and save them for future reference.
- Observe all warnings and instructions marked on the product.
- Use only mains supply with protective earthing connected.
- Do not use the product with removed covers under wet conditions.
- Consider handling and lifting instructions to avoid damage.
- Install the product securely and stable.
- Install and connect cabling proper to exclude damage or harmful situations.
- If the product does not operate normally, refer to the service instructions or refer to qualified KROHNE service engineers.
- There are no operator-serviceable parts inside the product.

The following symbols may appear in this manual or on the product



ATTENTION: Refer to operating and installation instructions!



DANGER: Risk of electric shock!



PROTECTIVE EARTH (PE) conductor terminal!

These terms may appear in this manual or on the instrument:



WARNING statement: Identify conditions or practice that could result in injury or loss of life.



CAUTION statement: Identify conditions or practice that could result in damage to the instrument or other property.

Disclaimer

- This document contains important information on the instrument. KROHNE attempts to be as accurate and up-to-date as possible but assumes no responsibility for errors or omissions. Nor does KROHNE make any commitment to update the information contained herein. This manual and all other documents are subject to change without prior notice.
- KROHNE will not be liable for any damage of any kind by using its instrument, including, but not limited to direct, indirect, incidental, punitive and consequential damages.
- This disclaimer does not apply in case KROHNE has acted on purpose or with gross negligence. In the event any applicable law does not allow such limitations on implied warranties or the exclusion of limitation of certain damages, you may, if such law applies to you, not be subject to some or all of the above disclaimer, exclusions or limitations.
- Any instrument purchased from KROHNE is warranted in accordance with the relevant product documentation and our Terms and Conditions of Sale.
- KROHNE reserves the right to alter the content of its documents, including this disclaimer in any way, at any time, for any reason, without prior notification, and will not be liable in any way for possible consequences of such changes.

Product liability and warranty

IFS 4000 KC electromagnetic flowmeters are designed solely for measuring the volumetric flowrate of electrically conductive, liquid process products.
Flowmeters with IFS 4000 KC flow sensors are not certified for use in hazardous locations. Other flowmeters series are available for such applications.
Responsibility as to suitability and intended use of these electromagnetic flowmeters rests solely with the operator.
Improper installation and operation of the flowmeters (systems) may lead to loss of warranty.
In addition, the "General conditions of sale" forming the basis of the purchase contract are applicable.
If IFS 4000 KC flowmeters need to be returned to Krohne, please note the information given on the last-but-one page of this manual. KROHNE regrets that they cannot repair or check your flowmeter(s) unless accompanied by the completed form sheet

- Responsibility for suitability and intended use of this ultrasonic flow meter rests solely with the user. Improper installation and operation of the flow meter (system) may lead to loss of warranty.
- In addition, the Terms and Conditions of Sale are applicable and are the basis for the purchase contract.
- If flow meters need to be returned to KROHNE, please note the information given on the last pages of the installation and operating instructions. KROHNE regrets that they cannot repair or check flow meter(s) unless accompanied by the completed form (see last pages of the installation and operating instructions).

Contents

1 1 Important information for installation: 5

2 Suggestions for installation 5

3 Instrument nameplate 6

4 Flowmeter versions 6

5 Installation in the pipeline 6

6 Torques 6

7 Grounding 6

8 Replacement of the separate flow sensor 7

9 Technical data 8

10 Dimensions and weights 9

System description

IFS 4000 KC electromagnetic flowmeters are precision measuring instruments designed for the linear flow measurement of process liquids.
The process liquids must be electrically conductive: ≥ 20 µS/cm for demineralized cold water
The full-scale range Q100% can be set as a function of the meter size:
IFS 4000 KC 010 K / 020 K / 080 K 1" - 040" Q100% = 0.1 - 033 900 m3/hr = 0.02 - 1156 640 US GPM
IFS 4000 KC 1 - 120" Q100% = 0.1 - 305 000 m3/hr = 0.02 - 1 400 000 US GPM
This is equivalent to a flow velocity of 0.3 - 12 m/s, or 1 - 40 ft/s

Standards and approvals

Please refer to the installation and operating instructions for the signal converter.

Items supplied

IFS 4000 KC F flow sensors

- flow sensor in the size as ordered
- Connecting wires for grounding, refer to Section 7 "Grounding"
- Certificate of calibration data
- Grounding rings (optional), if ordered
- Installation instructions

IFS 4000 KC 010 K, 020 K and 080 K compact flowmeters

- Compact flowmeter in the size as ordered
- Connecting wires for grounding, see
- Section 7 "Grounding"
- Certificate of calibration data
- Grounding rings (optional), if ordered
- Installation instructions
- Installation and operating instructions for the signal converter
- Items included with supply

Fitting accessories (stud bolts, nuts, gaskets, etc.) are not supplied with the flowmeter. These are to be provided by the customer!

IFS 4000 KC 010 K, 020 K and 080 K compact flowmeters

- Compact flowmeter in the size as ordered
- Connecting wires for grounding, see
- Section 7 "Grounding"
- Certificate of calibration data
- Grounding rings (optional), if ordered
- Installation instructions
- Installation and operating instructions for the signal converter
- Items included with supply

Handling

Do not lift the signal converter housing or the terminal box.
Check the weight of the flow meter as indicated on the type plate before handling the unit.
When handling the flow meter avoid hard blows, jolts or impacts

Do not set flowmeter down on signal converter housing or terminal box.

PLEASE NOTE the temperature limits for storage and transport.



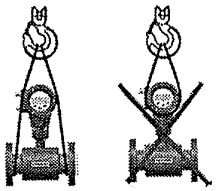



1 1 Important information for installation:

PLEASE NOTE !



- Location and position as required, but electrode axis X – • – • – • – X must be approximately horizontal in a horizontal pipe run.
- Y terminal box or converter housing
- Measuring tube must be completetly filled at all times.
- Direction of flow is arbitrary. Arrow on flowmeter can normally be ignored. For exceptions, refer to Section "Factory settings" in the installation and operating instructions for the signal converter.
- Stud bolts and nuts: to fit, make sure there is sufficient room next to the pipe flanges.
- Vibration: support the pipeline on both sides of the compact flowmeter. Level of vibration in conformity with IEC 068-2-34: below 2.2g for compact flowmeters in the frequency range of 20-50 Hz with the IFC 010 K / IFC 020 K and 20-150 Hz with the IFC 090 K.
- Do not expose to direct sunlight, fit a sunshade if necessary, not included with flowmeter, to be provided by customer.
- Large meter sizes (≥ DN 200 / ≥ 8"): use adapter pipes to allow axial shifting of the counterflanges and to facilitate installation.
- Use only solventless detergents to clean the signal converter housing (polycarbonate).
- Strong electromagnetic fields, avoid in vicinity of flowmeter
- Straight inlet run minimum of 5 × DN and outlet run minimum of 2 × DN, (DN = meter size), measured from the electrode axis.
- Vortex and corkscrew flow: increase length of inlet and outlet runs or install flow conditioners.
- Mixing different process liquids: install flowmeter upstream of mixing point or at an adequate distance downstream (minimum of 30 × DN), otherwise display may be unsteady.
- Plastic pipes and internally coated metal pipelines: grounding rings required, see Section 7 "Grounding".
- Insulated pipeline: do not insulate flowmeter
- Zero setting not necessary. To check, it should be possible to set "zero" flow velocity in the completely filled measuring tube. Shutoff valves should therefore be provided either downstream of the flowmeter or upstream and downstream of the flowmeter.

2 Suggestions for installation

To avoid measuring errors due to gas/air inclusion or to pipe running empty, please observe the following:

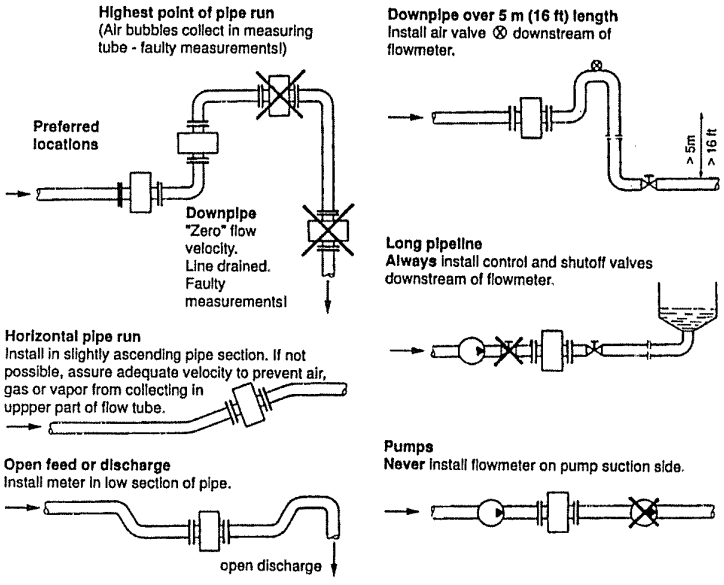

3 Instrument nameplate

IFS 4000 KC F
separate flow sensor

4 Flowmeter versions

IFS 4000 KC F, Separate flow sensor (F), electrically connected to the signal converter by signal and field current cables.
IFS 4000 KC 010 K, Compact flowmeter (K), IFC 010 K or IFC 020 K signal converter mounted
IFS 4000 KC 020 K, direct on the flow sensor.
IFS 4000 KC 080 K; Compact flowmeter (K), IFC 090 K signal converter mounted direct on the flow sensor.

5 Installation in the pipeline

- Installation material not included, to be provided by customer (stud bolts, nuts, gaskets, etc.)
- Pipe flanges and operating pressure: refer to tables on "limits" in Section 11.
- Distance between pipe flanges
  see fitting dimension "a", in Section 10 "Dimensions and weights".
- Position of flanges Install flowmeter in line with the pipe axis. Pipe flange faces must be parallel to each other, max. permissible deviation:
- Lmax – Lmin $\leq$ 0.5 mm $\leq$ 0.02"
- Gaskets
  Use gaskets suitable for the application and appropriate to the liner, not included with flowmeter, to be provided by customer.
- Grounding rings / protective rings (option)
  On plastic pipes and internally coated metal pipelines, grounding rings must form the conductive connection with the fluid. Refer to Section 7 "Grounding for electrical connection.

6 Torques

- Tighten stud bolts uniformly in diagonally opposite sequence, see table for number and type.
- 10 Nm ~ 1.0 kpm ~ 7.23 ft × lbf
- Note: Process pressure must not exceed ANSI

7 Grounding

- All flowmeters must be properly grounded to avoid personnel shock hazard.
- The ground conductor should not transmit any interference voltages, therefore do not ground any other electrical devices together with this conductor.

IFS 4000 KCF separate flow sensor with terminal box

- An FE functional ground must always be connected.
- Signal converter with field power supply > 125 mA / 60 V a PE protective conductor must be connected to the flow sensor, because of the higher field current from the signal converter. See grounding diagrams below.

IFS 4000 KC010 K, 020 K and 080 K compact systems

Supply power > 50 V AC

- Grounding is via **the PE protective ground conductor** incorporated in the power supply cable, see also Section "Connection to power" in the installation and operating instructions for the signal converter.
- **EXCEPTION: Do not connect up the PE protective ground conductor in the terminal box** if e.g. compact units are operated in the proximity of electric furnaces, electrolysis plants, etc., and large potential differences occur in the pipeline system. An FE functional ground must simultaneously take over the function of the protective conductor (combined protective/functional ground). Refer to appropriate national codes for specific requirements for this type of installation, which may require the addition of a ground fault detection circuit interrupter.

Power supply 24 V AC or DC

- Protective separation (PELV) must be ensured (VDE 0100 / VDE 0106 or IEC 364 / IEC 536 or equivalent national regulations).
- An FE functional ground conductor must be connected for measurement reasons.

8 Replacement of the separate flow sensor

Switch off power source before commencing work !

1) Note down terminal assignment before dismantling the "old" flow sensor.
2) Install the new flow sensor as described in the supplied installation instructions.
3) Make electrical connection at the signal converter as described in the installation and operating instructions for the signal converter.
4) Specific calibration data are defined during factory calibration for each flow sensor, which are indicated on the instrument nameplate.
   This includes the primary constant GK and the magnetic field frequency. These data need to be reset in the signal converter.
5) If the size of flow sensor is also different from the old one, the full-scale range Q100% and the meter size will need to be reset.
6) After resetting the signal converter, carry out a zero point check.
7) If necessary, reset the internal electronic totalizer of the signal converter.

9 Technical data

Meter sizes		
Compact syste	1" – 040"	
IFS 4000 KCF (separate)	1" – 60"	
Pipe flanges		
to DIN 2501 (= BS 4504)		
to ANSI B16.5	1" – 24" / Class 150 lb / RF	
to AWWA	28" – 60" / Class B or D / FF	
Electrical conductivity	≥ 20 µS/cm	
Temperatures	Ambient temperature	Process temperature
Compact systems		
	– 13 to +140°F	– 13 to ≤ +140°F
	– 13 to +140°F	– 13 to +140°F
IFS 4000 KCF (separate)	– 13 to +140°F	– 13 to +176°F
Max. allowable operating data	Process temperature, operating pressure and vacuum load for the liner, refer to Page 3 "Limits"	
Insulation class of field coils	E	
Electrode design		
1" – 60"	flat elliptical electrodes, solidly fitted, surface-polished	
Protection category (EN 60 529 / IEC 529)		
Standard	IP 67, equivalent to NEMA 6	
Option	IP 68, equivalent to NEMA 6	
Grounding rings	available as an option	
Materials		
Measuring tube	stainless steel 1.4301 (or higher materials number), equivalent to SS 304	
Liner		
1 - 40"	polyurethane	
1" – 60"	hard rubber	
Electrodes		
Standard	Hastelloy C4	
Option	stainless steel 1.4571 or SS 316 Ti, titanium	
Connecting flanges*		
ANSI	steel ASTM A 105 N	
Terminal box*		
IFS 4000 KCF (separate)	die-cast aluminium	
Grounding rings (option)	stainless steel 1.4571or SS 316 Ti	
* with polyurethane coating		

10 Dimensions and weights

Terminal box

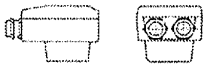

Weight approx. 0.5 kg (1.1 lb)

IFC 010 K and IFC 020 K signal converters

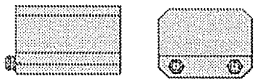

Weight approx. 1.6 kg (3.6 lb)

IFC 090 K s9ignal converter

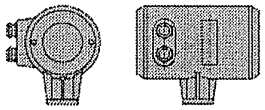

Weight approx. 2.3 kg (5.1 lb)

Flange connections to...			Dimensions in inch
ANSI B 16.5	1" - 24"	150 lb / RF	see table
		≥ 300 lb / RF	dimensions supplied on request
AWWA	≥ 28"	Class B, D / FF	dimensions supplied on request

Dimension "a" without flange gaskets:
Not included with flowmeter to be provided by customer

Nominal Diameter	Dimensions in inches (ANSI)								Weight
ANSI	A		B		C		D		approx.
Inch	DIN ISO	ANSI	DIN ISO	ANSI	DIN ISO	ANSI	DIN ISO	ANSI	lb
1	5.91	5.91	9.21	9.21	5.12	5.12	4.53	4.25	6.90
1 1/2	5.91	5.91	9.21	9.21	5.12	5.12	5.91	5.00	13.20
2	7.87	7.87	7.52	7.28	6.50	6.00	6.50	6.00	17.60
3	7.87	7.87	8.23	8.03	7.87	7.50	7.87	7.50	37.50
4	9.84	9.84	10.04	10.24	8.66	8.98	8.66	8.98	41.90
6	11.81	11.81	11.81	11.69	11.22	10.98	11.22	10.98	57.30
8	13.78	13.78	14.06	14.17	13.39	13.50	13.90	13.50	110.20
10	15.75	15.75	16.97	17.20	15.55	16.00	15.55	16.00	161.00
12	19.69	19.69	19.02	19.76	17.52	19.02	17.52	19.02	218.30
14	19.69	19.69	21.30	21.85	19.88	21.00	19.88	21.00	251.30
16	23.62	23.62	24.92	24.92	22.24	23.50	22.24	23.50	337.30
18	23.62	23.62	26.22	26.54	24.21	25.00	24.21	25.00	374.80
20	23.62	23.62	28.11	28.62	26.38	26.38	26.38	27.50	418.90
24	23.62	23.62	33.07	33.66	30.71	32.00	30.71	32.00	551.10

If you need to return flowmeters for testing or repair to KROHNE

Your electromagnetic flowmeter

- has been carefully manufactured and tested by a company with ISO 9001 certification
- and volumetrically calibrated in one of the world's most accurate test rigs.

If installed and operated in accordance with these operating instructions, your flowmeter will rarely present any problems.

Should you nevertheless need to return a flowmeter for checkout or repair, please pay strict attention to the following points:

Due to statutory regulations concerning protection of the environment and the health and safety of our personnel, Krohne may only handle, test and repair returned flowmeters that have been in contact with liquids if it is possible to do so without risk to personnel and environment. This means that Krohne can only service your flowmeter if it is accompanied by a certificate in line with the following model confirming that the flowmeter is safe to handle.

If the flowmeter has been operated with toxic, caustic, flammable or water-endangering liquids, you are kindly requested

- to check and ensure, if necessary by rinsing or neutralizing, that all cavities in the flowmeter are free from such dangerous substances.
  (Directions on how you can find out whether the primary head has to be opened and then flushed out or neutralized are obtainable from Krohne on request.)
- to enclose a certificate with the flowmeter confirming that the flowmeter is safe to handle and stating the liquid used.

Krohne regret that they cannot service your flowmeter unless accompanied by such a certificate.

SPECIMEN certificate

Company: ..... Address: .....

Department: ..... Name: .....

Tel. No.: ..... Fax No.: .....

The enclosed instrument

Type: .....

KROHNE Order No. or Series No .....

has been operated with the following liquid: .....

Because this liquid is
water-endangering * / toxic * / caustic * / flammable *
we have
- checked that all cavities in the instrument are free from such substances *
- flushed out and neutralized all cavities in the flowmeter *

(* delete if not applicable)

We confirm that there is no risk to man or environment through any residual liquid contained in the instrument.

Date: ..... Signature: .....

Company stamp:

Notes

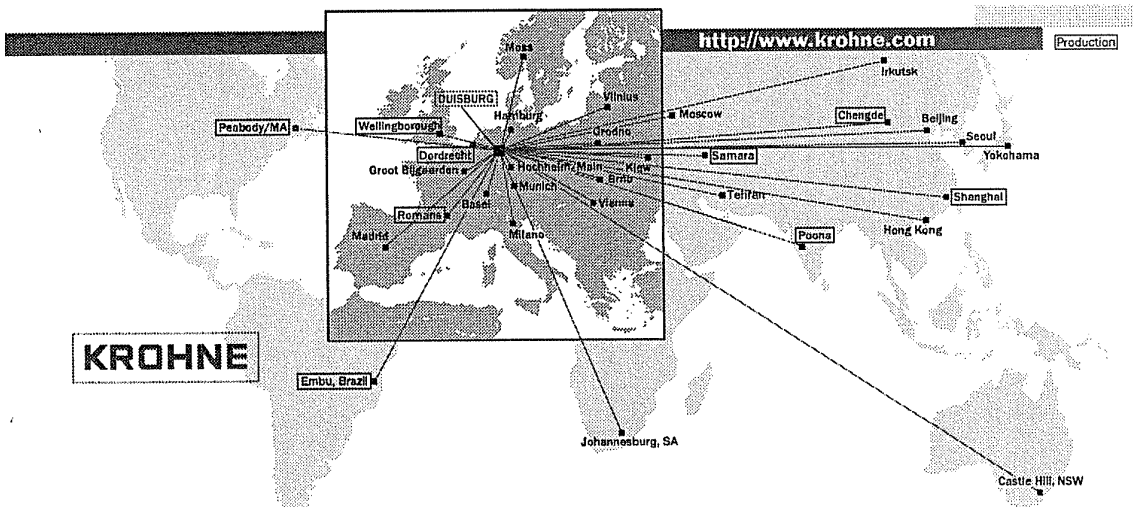

Australia
KROHNE Australia Pty Ltd
Quantum Business Park
10/287 Victoria Rd
Rydalmere NSW 2116
TEL.: +61 2 8846 1700
FAX: +61 2 8846 1755
e-mail: krohne@krohne.com.au

Austria
KROHNE Austria Ges.m.b.H.
Modecenterstraße 14
A-1030 Wien
TEL.: +43(0)1/203 45 32
FAX: +43(0)1/203 47 78
e-mail: info@krohne.at

Belgium
KROHNE Belgium N.V.
Brusselstraat 320
B-1702 Groot Bijgaarden
TEL.: +32(0)2-4 66 00 10
FAX: +32(0)2-4 66 08 00
e-mail: krohne@krohne.be

Brazil
KROHNE Conaut
Controles Automaticos Ltda.
Estrada Das Águas Espraiadas, 230 C.P. 56
06835 - 080 EMBU - SP
TEL.: +55(0)11-4785-2700
FAX: +55(0)11-4785-2768
e-mail: conaut@conaut.com.br

China
KROHNE Measurement Instruments
(Shanghai) Co. Ltd , (KMIC)
Room 1501, Tower A
City Centre of Shanghai
100 Zun Yi Road
Shanghai 200051
TEL.: +86 21 6237 2770
FAX: +86 21 6237 2771
Cellphone: +86 (0) 139 01954185
e-mail: info@krohne-asia.com

CIS
Kanex KROHNE Engineering AG
Business-Centre Planeta, Office 403
ul. Manistskaja 3
109147 Moscow/Russia
TEL.: +7(0)095-9117165
FAX: +7(0)095-9117231
e-mail: krohne@dol.ru

Czech Republic
KROHNE CZ, spol. s r.o.
Sobětická 156
CZ-63800 Brno
TEL.: +420 545 532 111
FAX: +420 545 220 093
e-mail: brno@krohne.cz

France
KROHNE S.A.S.
Les Ors
BP 98
F-26103 ROMANS Cedex
TEL.: +33(0)4-75 05 44 00
FAX: +33(0)4-75 05 00 48
e-mail: info@krohne.fr

Germany
KROHNE Messtechnik
GmbH & Co. KG
Ludwig-Krohne-Straße
D-47058 Duisburg
TEL.: +49(0)203-301-0
FAX: +49(0)203-301 389
e-mail: krohne@krohne.de

India
KROHNE Marshall Ltd.
A-34/35, M.I.D.C.
Industrial Area, H-Block,
Pimpri Poona 411018
TEL.: +91(0)202-7442020
FAX: +91(0)202-7442020
e-mail: pcu@vsnl.net

Iran
KROHNE Liaison Office
North Sohrevardi Ave.
26, Sarmad St., Apt. #9
Tehran 15539
TEL.: ++98-21-874-5973
FAX: ++98-21-850-1268
e-mail: krohne@krohneiran.com

Italy
KROHNE Italia Srl
Via V. Monti 75
I-20145 Milano
TEL.: +39(0)2-4 30 06 61
FAX: +39(0)2-43 00 66 66
e-mail: krohne@krohne.it

Korea
KROHNE Korea
Room 508 Miwon Bldg
43 Yoido-Dong
Youngdeungpo-Ku
Seoul, Korea
TEL.: 00-82-2-780-1743
FAX: 00-82-2-780-1749
e-mail: krohnekorea@krohnekorea.com

Netherlands
KROHNE Altometer
Kerkeplaat 12
NL-3313 LC Dordrecht
TEL.: +31(0)78-6306300
FAX: +31(0)78-6306390
e-mail: postmaster@krohne-altometer.nl

Netherlands
KROHNE Nederland B.V.
Kerkeplaat 12
NL-3313 LC Dordrecht
TEL.: +31(0)78-6306200
FAX: +31(0)78-6306405
Service Direkt: +31(0)78-6306222
e-mail: info@krohne.nl

Norway
Krohne Instrumentation A.S.
Ekholtveien 114
NO-1526 Moss
P.O. Box 2178, NO-1521 Moss
TEL.: +47(0)69-264860
FAX: +47(0)69-267333
e-mail: postmaster@krohne.no
Internet: www.krohne.no

Singapore
Tokyo Keiso - KROHNE Pte. Ltd.
27 Kian Teck Drive Jurong
Singapore 628844
Singapore
TEL.: ++65-62-64-3378
FAX: ++65-62-65-3382

South Africa
KROHNE Pty. Ltd.
163 New Road
Halfway House Ext. 13
Midrand
TEL.: +27(0)11-315-2685
FAX: +27(0)11-805-0531
e-mail: mkrand@krohne.co.za

Spain
LL KROHNE Iberia, S.r.L.
Polígono Industrial Nilo
Calle Brasil, n°. 5
E-28806 Alcalá de Henares-Madrid
TEL.: +34(0)91-8 83 21 52
FAX: +34(0)91-8 83 48 54
e-mail: krohne@krohne.es

Switzerland
KROHNE AG
Uferstr. 90
CH-4019 Basel
TEL.: +41(0)61-638 30 30
FAX: +41(0)61-638 30 40
e-mail: info@krohne.ch

United Kingdom
KROHNE Ltd.
Rutherford Drive
Park Farm Industrial Estate
Wellingborough,
Northants NN8 6AE, UK
TEL.: +44(0)19 33-408 500
FAX: +44(0)19 33-408 501
e-mail: info@krohne.co.uk

USA
KROHNE Inc.
7 Dearborn Road
Peabody, MA 01960
TEL.: +1-978 535-6060
FAX: +1-978 535-1720
e-mail: info@krohne.com

Other Representatives

Algeria	Japan
Argentina	Jordan
Belarus	Kuwait
Bulgaria	Latvia
Camaroon	Lithuania
Canada	Marocco
Chile	Mauritius
Colombia	Mexico
Croatia	New Zealand
Denmark	Pakistan
Ecuador	Peru
Egypt	Poland
Estonia	Portugal
Finland	Saudi Arabia
French Antilles	Senegal
Greece	Slovakia
Guinea	Slovenia
Hong Kong	Sweden
Hungary	Taiwan
Indonesia	Thailand
Ivory Coast	Turkey
Iran	Tunesia
Ireland	Venezuela
Israel	Yugoslavia

Other Countries
KROHNE Messtechnik
GmbH & Co. KG
Ludwig-Krohne-Str.
D-47058 Duisburg
TEL.: +49(0)203-301 309
FAX: +49(0)203-301 389
e-mail: export@krohne.de

Subject to change without notice



IFC 100 Technical Datasheet

Electromagnetic Flow Converter

- Quick and easy to install and operate
- Diagnostics of application and instrument
- Extremely quick signal conversion

KROHNE

The more than economical solution

The **IFC 100** offers a broad range of performance with an outstanding price/performance ratio.

The **IFC 100** has been developed for applications requiring an economical solution for the measuring task at a high technological level.



1 Large, illuminated graphic display with intuitive operation
2 For AC and DC operation

Highlights

- Quick and easy to install and operate
- Large, illuminated graphic display with intuitive operation
- Multiple user languages as standard
- Maintenance-free
- Outstanding price/performance ratio
- Extremely quick signal conversion

Industries

- Agriculture
- Heating, Ventilation & Air Conditioning
- Machinery
- Power Plants
- Water
- Wastewater

Applications

- Measuring homogeneous media
- Water distribution networks and spray-irrigation systems
- Water treatment
- Environmental technology

Options and variants



Modular converter concept

Despite its somewhat different appearance, the IFC 100 has many of the same functions as its "big brother", the IFC 300. The diagnostics function, conductivity measurement and simple menu navigation, to mention just a few. This latest member of the transformer family also has a large number of fully-developed functions:

- various auxiliary power supply versions (AC, DC, AC/DC)
- HART as standard
- optional Ex version available



Compact design in various versions

The IFC 100 C in the 0° version is ideal for installation in vertical pipes. The 45° version, on the other hand, allows draining of liquids when it is installed in horizontal pipes. The angled design also improves the readability of the display.
The backlit display provides excellent readability from long distances. The 4 softkeys enable easy operation, start-up and parametrization.
Both housing versions can be rotated in 90° increments, allowing customer-specific installation positions.



Signal converter in wall version

With the IFC 100 W, remote installation is possible in the case of temperature effects, vibration or difficult-to-reach locations. A signal cable is used to connect the sensor and the converter for the purposes of power supply and signal processing. The electronics can be used in all housing versions without reparametrization.

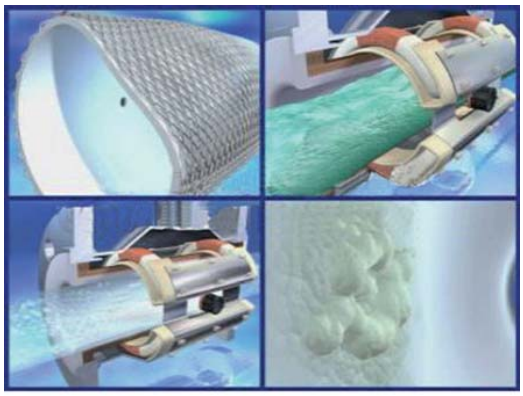

Diagnosis

The IFC 100 has been equipped with an extensive diagnostic tool for device function and application tests.

- Conductivity measurement
- Electrode error
- Process or ambient temperature too high

Technical data

Measuring system

Measurement principle	Faraday's law of induction
Function	Continuous measurement of current volume flow, flow velocity, conductivity, mass flow (at constant density), coil temperature of the measuring sensor
Modular construction	The measurement system consists of a measuring sensor and a signal converter
Signal converter	
Compact version (C)	IFC 100 C (0° & 45° version)
Remote version (W)	IFC 100 W
Measuring sensor	
OPTIFLUX 1000	IFC 100 C & W: DN10...150 / 3/8" 6"
OPTIFLUX 2000	IFC 100 C & W: DN25...1200 / 1" 48"
OPTIFLUX 4000	IFC 100 C: DN2.5...1200 / 1/10" 48"; IFC 100 W: DN10...1200 / 3/8" 48";
OPTIFLUX 5000	IFC 100 C: DN2.5...250 / 1/10" 12"; IFC 100 W: DN10...250 / 3/8" 12"
OPTIFLUX 6000	IFC 100 C: DN2.5...150 / 1/10" 6"; IFC 100 W: DN10...150 / 3/8" 6"
Communication	
Outputs	Current (incl. HART®), pulse, frequency, status output and/or limit switch
Counter	2 internal counters with a max. of 8 counter places (e.g. for counting volume and/or mass units)
Verification	Integrated verification, diagnosis functions: flowmeter, empty pipe detection, stabilization
Display and user interface	
Graphic display	LC display, backlit white; size: 128x64 pixels, corresponds to 59x31 mm = 2.32"x1.22"
Display functions	2 measured value pages, 1 status page, 1 graphic page (measured values and depictions adjustable as required)
Units	Metric, British and US units selectable as required from lists for volume / mass flow and counting, flow speed, electrical conductivity, temperature
Language of display texts	English, French, German (others on request)
Operating elements	4 keys for operator control of the signal converter without opening the housing

Measuring accuracy

Maximum measuring error	±0.3% of the measured value ±1 mm/s, depending on the measuring sensor (see accuracy curves)
Repeatability	±0.1%

Operating conditions

Temperature	
Process temperature	See also data sheet for the measuring sensor
Ambient temperature	-40 +65°C / -40 +149°F (ambient temperature 55°C / 131°F and higher: protect electronics against self-heating, because an increase in the electronics temperature in 10°C / 50°F steps leads to a corresponding reduction of the electronics' service life by a factor of two.)
Storage temperature	-50 +70°C / -58 +158°F
Electrical conductivity	
All media except for water	Min. 5 µS/cm (see also data sheet for the measuring transformer)
Water	Min. 20 µS/cm

Materials

Die-cast aluminium (polyurethane-coated)	Standard

Electrical connection

Voltage	Standard: 100 230 VAC (-15% / +10%), 50/60 Hz
	Option 1: 24 VDC (-55% / +30%)
	Option 2: 24 VAC/DC (AC: -15% / +10%; DC: -25% / +30%)
Power consumption	Standard: 8 VA
	Option 1: 4 W
	Option 2: AC 8 VA; DC: 4 W
Signal cable	Only for remote versions
A: type DS 300	Max. length: 600 m / 1950 ft (depending on electrical conductivity and measuring sensor version)
Cable entries	Standard: M20 x 1.5
	Option: ½" NPT, PF ½

Outputs

Current output		
Function	Measurement of volume and mass (at constant density), HART® communication	
Settings	**Without HART®**	**With HART®**
	Q = 0%: 0 15 mA	Q = 0%: 4 15 mA
	Q = 100%: 10 21.5 mA	Q = 100%: 10 21.5 mA
	Error identification: 0 22 mA	Error identification: 3.5 22 mA
Operating data		
Active	$U_{int,nom}$ = 24 VDC I ≤ 22 mA R_L ≤ 750 Ω	
Passive	U_{ext} ≤ 32 VDC I ≤ 22 mA U_0 ≤ 2 V at I = 22 mA	
Pulse or frequency output		
Function	Can be set as a pulse output (e.g.- for volume or mass counting) or frequency output	
Settings	For Q = 100%: 0.01...10000 pulses per second or pulses per unit volume	
	Pulse width: setting automatic, symmetric or fixed (0.05...2000 ms)manual	
Operating data		
Passive	U_{ext} ≤ 32 VDC	
	100 Hz < f_{max} ≤ 10 kHz: I ≤ 20 mA open: I ≤ 0.1 mA at U_{ext} = 5 V I ≤ 0.5 mA at U_{ext} = 24 V I ≤ 0.7 mA at U_{ext} = 32 V closed: U_0 ≤ 0.8 V at I = 1 mA U_0 ≤ 1.5 V at I = 10 mA U_0 ≤ 3.5 V at I = 100 mA f ≤ 1 kHz: R_L ≤ 10 kΩ f ≤ 10 kHz: R_L ≤ 2 kΩ	

Status output / limit switch	
Function and settings	Settable as automatic measuring range change, indicator for direction of flow, overflow, error, operating point or empty pipe detection
	Valve control with activated dosing function
	Status and/or control: ON or OFF
Operating data	
Passive	$U_{ext} \leq 32$ VDC $I \leq 100$ mA open: $I \leq 0.05$ mA at $U_{ext} = 32$ VDC closed: $U_0 \leq 0.2$ V at I = 10 mA $U_0 \leq 2$ V at I = 100 mA
Low-flow cutoff	
On	0...±9.999 m/s; 0...20.0%, settable in 0.1% steps, separately for each current and pulse output
Off	0...±9.999 m/s; 0...19.0%, settable in 0.1% steps, separately for each current and pulse output
Time constant	
Function	Can be set together for all flow indicators and outputs, or separately for: current, pulse and frequency output, and for limit switches and the 2 internal counters
Time setting	0 100 seconds, settable in 0.1 second steps

Approvals

Hazardous areas	
Non-Ex	Standard
EEx - Zone 1/2	In preparation
SAA version Ex Zone 1/2	In preparation
TIIS - Zone 1/2	In preparation
Protection category to IEC 529 / EN 60529	
All versions	IP 66 / 67 (corresponds to NEMA 4X/6)

Dimensions and weights

Wall-mounted version

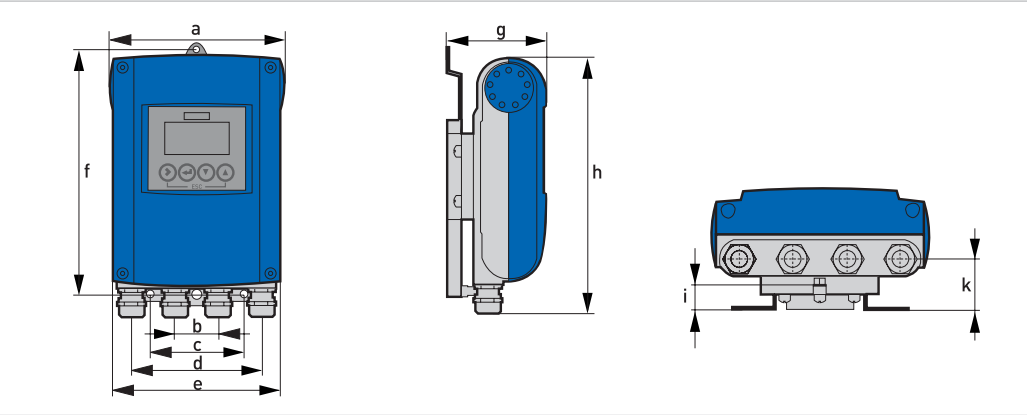

Dimensions and weight in mm and kg

	Dimensions [mm]										Weight [kg]
	a	b	c	d	e	f	g	h	i	k	
Wall-mounted version	161	40	87.2	120	155	241	95.2	257	19.3	39.7	Std: 1.9 Ex: 2.4

Dimensions and weight in inches and lbs

	Dimensions [inches]										Weight [lbs]
	a	b	c	d	e	f	g	h	i	k	
Wall-mounted version	6.34	1.57	3.43	4.72	6.10	241	9.49	10.12	0.76	1.56	Std: 4.2 Ex: 5.3

Compact 0° version

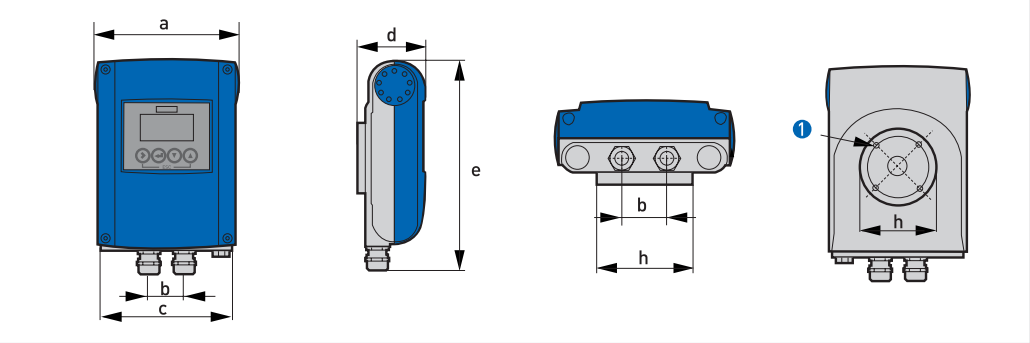

1 4 x M 6

Dimensions and weight in mm and kg

	Dimensions [mm]								Weight [kg]
	a	b	c	d	e	f	g	h	
0° version	161	40	155	81.5	257	-	-	Ø72	Std: 1.9 Ex: 2.4

Dimensions and weight in inches and lbs

	Dimensions [inches]								Weight [lbs]
	a	b	c	d	e	f	g	h	
0° version	6.34	1.57	6.1	3.21	10.12	-	-	Ø2.83	Std: 4.2 Ex: 5.3

Compact 45° version

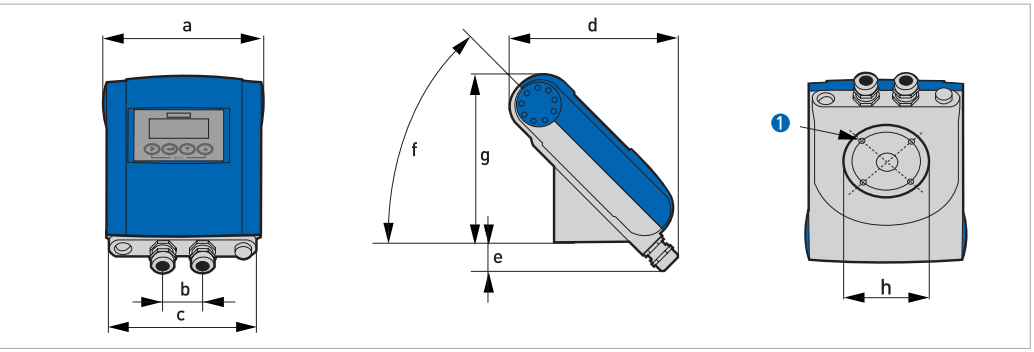

1 4 x M 6

Dimensions and weight in mm and kg

	Dimensions [mm]								Weight [kg]
	a	b	c	d	e	f	g	h	
45° version	161	40	155	184	27.4	45°	186	Ø72	Std: 2.1 Ex: 2.6

Dimensions and weight in inches and lbs

	Dimensions [inches]								Weight [lbs]
	a	b	c	d	e	f	g	h	
45° version	6.34	1.57	2.17	2.74	1.08	45°	7.32	Ø2.83	Std: 4.6 Ex: 5.7

Flow tables

Flow rate in m/s and m^3/h

	$Q_{100\ \%}$ in m^3/h			
v [m/s]	0.3	1	3	12
DN [mm]	Min. flow	Nominal flow		Max. flow
2.5	0.01	0.02	0.05	0.21
4	0.01	0.05	0.14	0.54
6	0.03	0.10	0.31	1.22
10	0.08	0.28	0.85	3.39
15	0.19	0.64	1.91	7.63
20	0.34	1.13	3.39	13.57
25	0.53	1.77	5.30	21.21
32	0.87	2.90	8.69	34.74
40	1.36	4.52	13.57	54.29
50	2.12	7.07	21.21	84.82
65	3.58	11.95	35.84	143.35
80	5.43	18.10	54.29	217.15
100	8.48	28.27	84.82	339.29
125	13.25	44.18	132.54	530.15
150	19.09	63.62	190.85	763.40
200	33.93	113.10	339.30	1357.20
250	53.01	176.71	530.13	2120.52
300	76.34	254.47	763.41	3053.64
350	103.91	346.36	1039.08	4156.32
400	135.72	452.39	1357.17	5428.68
450	171.77	572.51	1717.65	6870.60
500	212.06	706.86	2120.58	8482.32
600	305.37	1017.90	3053.70	12214.80
700	415.62	1385.40	4156.20	16624.80
800	542.88	1809.60	5428.80	21715.20
900	687.06	2290.20	6870.60	27482.40
1000	848.22	2827.40	8482.20	33928.80
1200	1221.45	3421.20	12214.50	48858.00

Flow rate in ft/s and gallons/min

	$Q_{100\ \%}$ in .US gallons/min			
v [ft/s]	1	3.3	10	40
DN [inch]	Min. flow	Nominal flow		Max. flow
1/10	0.02	0.09	0.23	0.93
1/8	0.06	0.22	0.60	2.39
1/4	0.13	0.44	1.34	5.38
3/8	0.37	1.23	3.73	14.94
1/2	0.84	2.82	8.40	33.61
3/4	1.49	4.98	14.94	59.76
1	2.33	7.79	23.34	93.36
1.25	3.82	12.77	38.24	152.97
1.5	5.98	19.90	59.75	239.02
2	9.34	31.13	93.37	373.47
2.5	15.78	52.61	159.79	631.16
3	23.90	79.69	239.02	956.09
4	37.35	124.47	373.46	1493.84
5	58.35	194.48	583.24	2334.17
6	84.03	279.97	840.29	3361.17
8	149.39	497.92	1493.29	5975.57
10	233.41	777.96	2334.09	9336.37
12	336.12	1120.29	3361.19	13444.77
14	457.59	1525.15	4574.93	18299.73
16	597.54	1991.60	5975.44	23901.76
18	756.26	2520.61	7562.58	30250.34
20	933.86	3112.56	9336.63	37346.53
24	1344.50	4481.22	13445.04	53780.15
28	1829.92	6099.12	18299.20	73196.79
32	2390.23	7966.64	23902.29	95609.15
36	3025.03	10082.42	30250.34	121001.37
40	3734.50	12447.09	37346.00	149384.01
48	5377.88	17924.47	53778.83	215115.30

Accuracy

Reference conditions

- Medium: water
- Temperature: 20°C / 68°F
- Pressure: 1 bar / 14.5 psi
- Inlet run: ≥ 5 DN

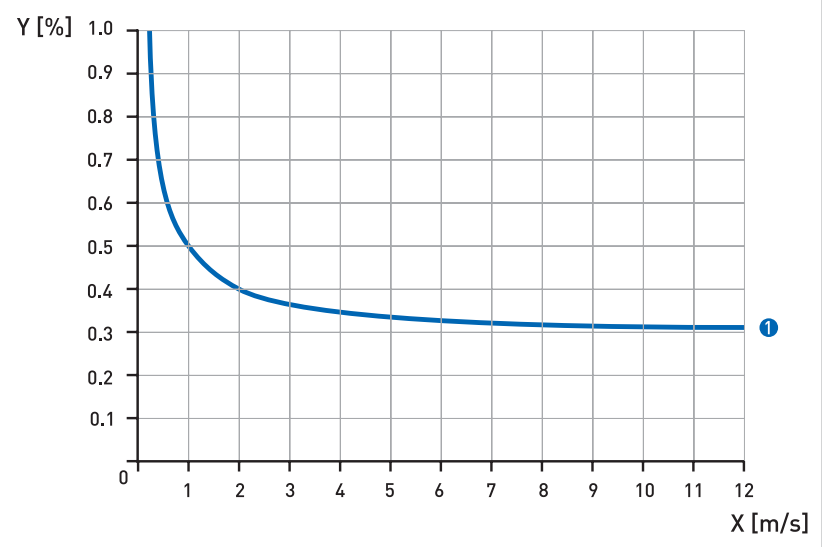

- X [m/s]: flow velocity
- Y [%]: deviation from the actual measured value (mv)

	DN [mm]	DN [inch]	Accuracy	Curve
OPTIFLUX 2100 / 4100 / 5100 / 6100	10 1200	3/8 48	0.3% of mv +1 mm/s	1
OPTIFLUX 1100	10 150	3/8 6	0.4% of mv +1 mm/s	as 1 + 0.1%
OPTIFLUX 4100 / 5100 / 6100	2.5 6	1/10 1/4		



KROHNE Product Overview

- Electromagnetic flowmeters
- Variable area flowmeters
- Mass flowmeters
- Ultrasonic flowmeters
- Vortex flowmeters
- Flow controllers
- Level measuring instruments
- Pressure gauges
- Temperature measuring instruments
- Water solutions & analysis
- Oil and gas turnkey solutions

Addresses:

Germany

Northern sales office

KROHNE Messtechnik GmbH & Co. KG
Bremer Str. 133
D-21073 Hamburg
Phone:+49 (0)40 767 3340
Fax:+49 (0)40 767 33412
nord@krohne.de
ZIP code: 10000 - 29999, 49000 - 49999

Western and middle sales office

KROHNE Messtechnik GmbH & Co. KG
Ludwig-Krohne-Straße
D-47058 Duisburg
Phone:+49 (0)203 301 416
Fax:+49 (0)203 301 10416
west@krohne.de
ZIP code: 30000 - 34999, 37000 - 48000, 50000 - 53999, 57000 - 59999, 98000 - 99999

Southern sales office

KROHNE Messtechnik GmbH & Co. KG
Landsberger Str. 392
D-81241 Munich
Phone:+49 (0)89 121 5620
Fax:+49 (0)89 129 6190
sued@krohne.de
ZIP code: 0 - 9999, 80000 - 89999, 90000 - 97999

Southwestern sales office

KROHNE Messtechnik GmbH & Co. KG
Rüdesheimer Str. 40
D-65239 Hochheim/Main
Phone: +49(0)6146) 827 30
Fax:+49 (0)6146 827 312
rhein-main@krohne.de
ZIP code: 35000 - 36999, 54000 - 56999, 60000 - 79999

Instrumentation and control equipment catalog

TABLAR Messtechnik GmbH
Ludwig-Krohne-Straße 5
D-47058 Duisburg
Phone:+49 (0)2 03 305 880
Fax:+49 (0)2 03 305 8888
kontakt@tablar.de www.tablar.de

KROHNE sales companies

International

Australia
KROHNE Australia Pty Ltd
Quantum Business Park 10/287
Victoria Rd Rydalmere NSW 2116
Phone: +61 2 8846 1700
Fax: +61 2 8846 1755
krohne@krohne.com.au

Austria
KROHNE Gesellschaft m.b.H.
Modecenterstraße 14
A-1030 Vienna
Phone:+43 (0)1/203 45 32
Fax:+43 (0)1/203 45 32 99
info@krohne.at

Belgium
KROHNE Belgium N.V.
Brusselstraat 320
B-1702 Groot Bijgaarden
Phone:+32 (0)2 4 66 00 10
Fax:+32 (0)2 4 66 08 00
krohne@krohne.be

Brazil
KROHNE Conaut Controles Automaticos Ltda.
Estrada Das Águas Espraiadas, 230
C.P. 56 06835 - 080 EMBU - SP
Phone:+55 (0)11-4785-2700
Fax:+55 (0)11 4785-2768
conaut@conaut.com.br

China
KROHNE Measurement Instruments (Shanghai) Co. Ltd., (KMIC)
Room 1501
1033 Zhaojiabang Road
Shanghai 200030
Phone: +86 21 6487 9611
Fax:+86 21 6438 7110
info@krohne-asia.com

Czech Republic
Krohne CZ, spol. s r.o.
Sobisická 156
63800 Brno
Phone: +420 (0)545.242 627
Fax: +420 (0)545 220 093
brno@krohne.cz

France
KROHNE S.A.S.
Les Ors BP 98
F-26103 ROMANS Cedex
Phone:+33 (0)4 75 05 44 00
Fax:+33 (0)4 75 05 00 48
info@krohne.fr

Great Britain
KROHNE Ltd.
Rutherford Drive
Park Farm Industrial Estate
Wellingborough
Northants NN8 6AE
Phone:+44 (0)19 33 408 500
Fax:+44 (0)19 33 408 501
info@krohne.co.uk

CIS
Kanex KROHNE Engineering AG
Business-Centre Planeta
Office 404 ul.
Marxistskaja 3
109147 Moscow/Russia
Phone:+7 (0)095 911 7165
Fax:+7 (0)095 742 8873
krohne@dol.ru

India
Krohne Marshall Ltd.
A-34/35, M.I.D.C. Industrial Area,
H-Block
Pimpri Poona 411018
Phone:+91 (0)202 744 2020
Fax:+91 (0)202 744 2020
pcu@vsnl.net

Iran
KROHNE Liaison Office
North Sohrevardi Ave. 26,
Sarmad St., Apt. #9
Tehran 15539
Phone: +9821 8874 5973
Fax: +9821 8850 1268
krohne@krohneiran.com

Italy
KROHNE Italia Srl.
Via V. Monti 75
I-20145 Milan
Phone:+39 02 4300 661
Fax:+39 02 4300 6666
info@krohne.it

Korea
KROHNE Korea
Room 508 Miwon Bldg 43
Yoido-Dong Youngdeungpo-Ku
Seoul, Korea
Phone: 00-82-2-782-1900
Fax: 00-82-2-780-1749
mail@krohne.co.kr

Netherlands
KROHNE Nederland B.V.
Kerkeplaat 14
NL-3313 LC Dordrecht
Phone:+31 (0)78 630 6200
Fax:+31 (0)78 630 6405
Service Direct: +31 (0)78 630 6222
info@krohne.nl

Norway
KROHNE Norway A.S.
Ekholtveien 114
NO-1521 Moss
Phone:+47 (0)69 264 860
Fax:+47 (0)69 267 333
postmaster@krohne.no

Poland
KROHNE Polska Sp.z.o.o.
ul. Stary Rynek Oliwski 8a
80-324 Gdansk
Phone: +48 (0)58 520 9211
Fax.:+48 (0)58 520 9212
info@krohne.pl

Switzerland
KROHNE AG
Uferstr. 90
CH-4019 Basel
Phone:+41 (0)61 638 30 30
Fax:+41 (0)61 638 30 40
info@krohne.ch

Singapore
Tokyo Keiso - KROHNE (Singapore) Pte. Ltd.
14, International Business Park,
Jurong East
Chiyoda Building, #01-01/02
Singapore 609922
Phone: (65) 6567 4548
Fax : (65) 6567 9874
tks@tokyokeiso-krohne.com.sg

Republic of South Africa
KROHNE Pty. Ltd.
Bushbock Close
Corporate Park South
Midrand, Gauteng
P.O. Box 2069
Midrand, 1685
Tel.: +27 (0)11 314 1391
Fax: +27 (0)11 314 1681
midrand@krohne.co.za

Spain
I.I. KROHNE IBERIA, S.r.l.
Poligono Industrial Nilo
Calle Brasil, nº. 5
28806 Alcalá de Henares Madrid
Phone: +34 (0)91 883 2152
Fax: +34 (0)91 883 4854
krohne@krohne.es

USA
KROHNE, Inc.
7 Dearborn Road
Peabody, MA 01960
Phone: +1 (800) FLOWING
Phone: +1 (978) 535 6060 (in MA)
info@krohne.com

Representatives

Algeria
Argentina
Cameroon
Canada
Chile
Columbia
Croatia
Denmark
Ecuador
Egypt
Finland
Gabon
Ghana
Greece
Hong Kong
Hungary
Indonesia
Iran
Ireland
Israel
Ivory Coast
Japan
Jordan
Kuwait
Libya
Lithuania
Malaysia
Mauritius
Mexico
Morocco
New Zealand
Peru
Portugal
Romania
Saudi Arabia
Senegal
Slovakia
Slovenia
Sweden
Taiwan
Thailand
Tunisia
Turkey
Venezuela
Yugoslavia

Other countries

KROHNE Messtechnik GmbH & Co. KG
Ludwig-Krohne-Str. 5
D-47058 Duisburg
Phone:+49 (0)203 301 0
Fax:+49 (0)203 301 389
export@krohne.de

© KROHNE 10/2007
4000040501 - TD IFC 100 R01 en
Subject to change without notice



IFC 100 Handbook

Signal converter for electromagnetic flowmeters

KROHNE

IMPRINT

All rights reserved. It is prohibited to reproduce this documentation, or any part thereof, without the prior written authorisation of KROHNE Messtechnik GmbH & Co. KG.

Subject to change without notice.

Copyright 2007 by KROHNE Messtechnik GmbH & Co.KG - Ludwig-Krohne-Straße 5 - 47058 Duisburg

1 Safety instructions 6
1.1 Safety instructions from the manufacturer 6
1.1.1 Copyright and data protection 6
1.1.2 Disclaimer 6
1.1.3 Product liability and warranty 7
1.1.4 Information concerning the documentation 7
1.1.5 Display conventions 8
1.2 Safety instructions for the operator 8
2 Instrument description 9
2.1 Scope of delivery 9
2.2 Instrument description 10
2.2.1 Wall version 11
2.3 Nameplates 12
2.3.1 Nameplate (example) 12
3 Installation 13
3.1 Notes on installation 13
3.2 Storage 13
3.3 Installation specifications 13
3.4 Transport 14
3.5 Mounting of the compact version 14
3.6 Mounting the wall-mounted housing, remote version 15
3.6.1 Wall mounting 15
4 Electrical connections 17
4.1 Safety instructions 17
4.2 Important notes on electrical connection 17
4.3 Electrical cables for remote device versions, notes 18
4.3.1 Notes on signal cable A 18
4.3.2 Notes on field current cable C 18
4.3.3 Using other signal cables 19
4.4 Preparing the signal and field current cables 20
4.4.1 Signal cable A (type DS 300), construction 20
4.4.2 Preparing signal cable A, connection to signal converter 21
4.4.3 Length of signal cable A 23
4.4.4 Preparing field current cable B, connection to signal converter 24
4.4.5 Prepare signal cable A, connect to measuring sensor 25
4.4.6 Preparing field current cable C, connection to measuring sensor 27
4.5 Connecting the signal and field current cables 28
4.5.1 Connecting the signal and field current cables to the signal converter, remote version 29
4.5.2 Connection diagram for signal and field current cable 31

4.6 Grounding the measuring sensor ... 32
4.6.1 Classical method ... 32
4.7 Connecting the power ... 33
4.8 Description of the outputs ... 35
4.8.1 Current output ... 35
4.8.2 Pulse and frequency output ... 36
4.8.3 Status output and limit switch ... 37
4.9 Electrical connection of the outputs ... 37
4.9.1 Electrical connection of the outputs ... 38
4.9.2 Laying electrical cables correctly ... 39
4.10 Connection diagrams of outputs ... 40
4.10.1 Description of the electrical symbols ... 40
4.10.2 Basic outputs ... 41
4.10.3 HART® connection ... 44
5 Start-up ... 46
5.1 Switching on the power ... 46
5.2 Starting the signal converter ... 46
6 Operation ... 47
6.1 Display and operator input elements ... 47
6.1.1 Time-out functions ... 48
6.1.2 Display in measuring mode ... 48
6.1.3 Display for selection of menu and functions ... 48
6.1.4 Display for setting of data and functions ... 49
6.1.5 Display after change of data and functions ... 49
6.2 Program structure ... 50
6.3 Function tables ... 51
6.3.1 Menu A, quick setup ... 51
6.3.2 Menu B, test ... 52
6.3.3 Menu C, setup ... 54
6.3.4 Set free units ... 67
6.3.5 Reset counter in Quick Setup menu ... 68
6.3.6 Deleting error messages in the Quick Setup menu ... 68
6.4 Status messages and diagnostic information ... 69
7 Service ... 72
7.1 Spare parts availability ... 72
7.2 Availability of services ... 72
7.3 Returning the device to the manufacturer ... 73
7.3.1 General information ... 73
7.3.2 Form (for copying) to accompany a returned instrument ... 74
7.4 Disposal ... 74

8 Technical data 75
8.1 Technical data 75
8.2 Flow tables 79
8.3 Accuracy 81
8.4 Dimensions and weights 82
8.4.1 Housing 82
8.4.2 Mounting plate, wall-mounted version 85
9 KROHNE Product Overview 88

1.1 Safety instructions from the manufacturer

1.1.1 Copyright and data protection

The contents of this document have been created with great care. Nevertheless, we provide no guarantee that the contents are correct, complete or up-to-date.

The contents and works in this document are subject to German copyright. Contributions from third parties are identified as such. Reproduction, processing, dissemination and any type of use beyond what is permitted under copyright requires written authorisation from the respective author and/or the manufacturer.

The manufacturer tries always to observe the copyrights of others, and to draw on works created in-house or works in the public domain.

The collection of personal data (such as names, street addresses or e-mail addresses) in the manufacturer's documents is always on a voluntary basis whenever possible. Whenever feasible, it is always possible to make use of the offerings and services without providing any personal data.

We draw your attention to the fact that data transmission over the Internet (e.g. when communicating by e-mail) may involve gaps in security. It is not possible to protect such data completely against access by third parties.

We hereby expressly prohibit the use of the contact data published as part of our duty to publish an imprint for the purpose of sending us any advertising or informational materials that we have not expressly requested.

1.1.2 Disclaimer

The manufacturer will not be liable for any damage of any kind by using its product, including, but not limited to direct, indirect, incidental, punitive and consequential damages.

This disclaimer does not apply in case the manufacturer has acted on purpose or with gross negligence. In the event any applicable law does not allow such limitations on implied warranties or the exclusion of limitation of certain damages, you may, if such law applies to you, not be subject to some or all of the above disclaimer, exclusions or limitations.

Any product purchased from the manufacturer is warranted in accordance with the relevant product documentation and our Terms and Conditions of Sale.

The manufacturer reserves the right to alter the content of its documents, including this disclaimer in any way, at any time, for any reason, without prior notification, and will not be liable in any way for possible consequences of such changes.

1.1.3 Product liability and warranty

The operator shall bear responsibility for the suitability of the flowmeters for the specific purpose. The manufacturer accepts no liability for the consequences of misuse by the operator. Improper installation and operation of the flowmeters (systems) will cause the warranty to be void. The respective "Standard Terms and Conditions" which form the basis for the sales contract shall also apply.

1.1.4 Information concerning the documentation

To prevent any injury to the user or damage to the device it is essential that you read the information in this document and observe applicable national standards, safety requirements and accident prevention regulations.

If this document is not in your native language and if you have any problems understanding the text, we advise you to contact your local the manufacturer office for assistance. The manufacturer can not accept responsibility for any damage or injury caused by misunderstanding of the information in this document.

This document is provided to help you establish operating conditions, which will permit safe and efficient use of this device. Special considerations and precautions are also described in the document, which appear in the form of underneath icons.

1.1.5 Display conventions

The following symbols are used to help you navigate this documentation more easily:



WARNING!
These warning signs must be observed without fail. Even only partial disregarding such warnings can result in serious health damage, damage to the device itself or to parts of the operator's plant.



DANGER!
This symbol designates safety advice on handling electricity.



CAUTION!
These warnings must be observed without fail. Even only partial disregarding such warnings can lead to improper functioning of the device.



LEGAL NOTICE!
This symbol designates information on statutory directives and standards.



NOTE!
This symbol designates important information for the handling of the device.



- HANDLING
  This symbol designates all instructions for actions to be carried out by the operator in the specified sequence.

➲ CONSEQUENCE
This symbol designates all important consequences of the previous actions.

1.2 Safety instructions for the operator



WARNING!
In general, devices from the manufacturer may only be installed, commissioned, operated and maintained by properly trained and authorized personnel.
This document is provided to help you establish operating conditions, which will permit safe and efficient use of this device.

2.1 Scope of delivery

NOTE!
Inspect the cartons carefully for damage or signs of rough handling. Report damage to the carrier and to your local office.

NOTE!
Check the packing list to make sure that you have received your complete order.

NOTE!
Please check on the device nameplates, that the device is supplied according to your order. Check for the correct mains voltage printed on the nameplate. If not, contact your local representative for advice.

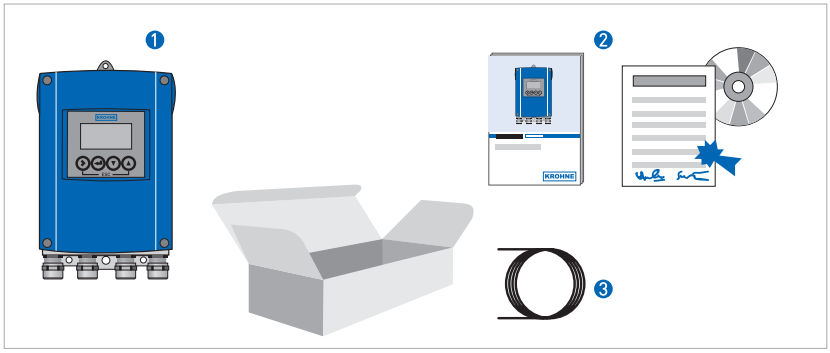

Figure 2-1: **Scope of delivery**

1. Device in the version as ordered
2. Documentation (calibration report, Quick Start directions, CD-ROM with product documentation for measuring sensor and signal converter)
3. Signal cable (only for remote version)

2.2 Instrument description

Electromagnetic flowmeters are exclusively suitable for measurement of flow rates and the conductivity of electrically conductive liquid media.

Your measuring device is supplied ready for operation. The factory settings for the operating data have been made in accordance with your order specifications.

The following versions are available:

- Compact version (the signal converter is mounted directly on the measuring sensor)
- Remote version (electrical connection to the measuring sensor via field current and signal cable)

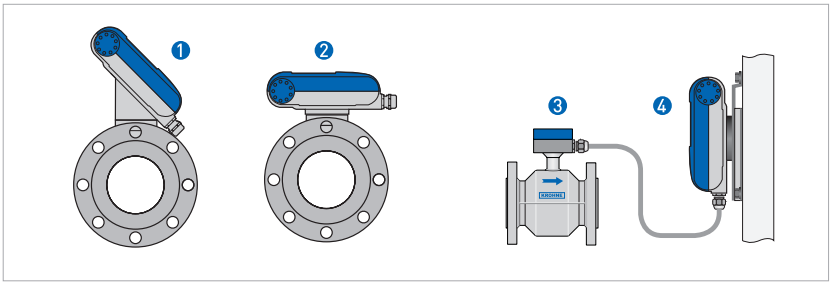

Figure 2-2: **Device versions**

1. Compact 45° version
2. Compact 0° version
3. Measuring sensor with outlet box
4. Wall-mounted version

2.2.1 Wall version

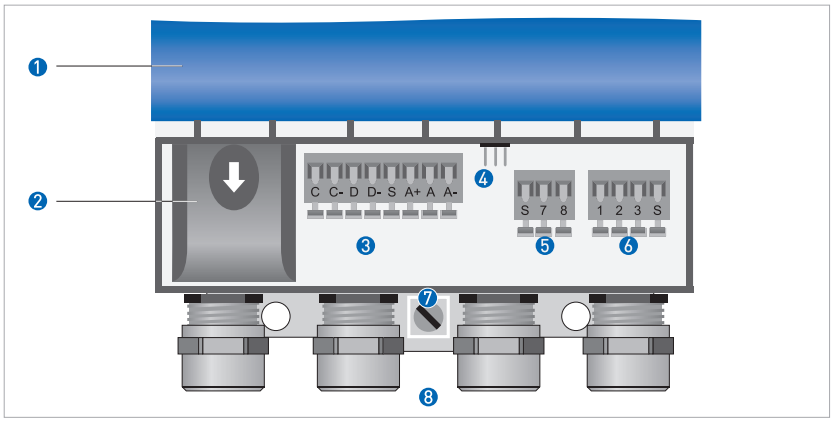

Figure 2-3: **Structure of wall-mounted version**

1. Open housing cover
2. Terminal compartment for power with safety cover (shock-hazard protection)
3. Connection terminals of the outputs
4. GDC bus interface (for Service only)
5. Connection terminals of the field current cable
6. Connection terminals of the signal cable
7. Connection screw for grounding the housing
8. Cable entries; example for remote version (for compact version the two outer cable entries are omitted)

2.3 Nameplates

NOTE!
Please check on the device nameplates, that the device is supplied according to your order. Check for the correct mains voltage printed on the nameplate. If not, contact your local representative for advice.

2.3.1 Nameplate (example)

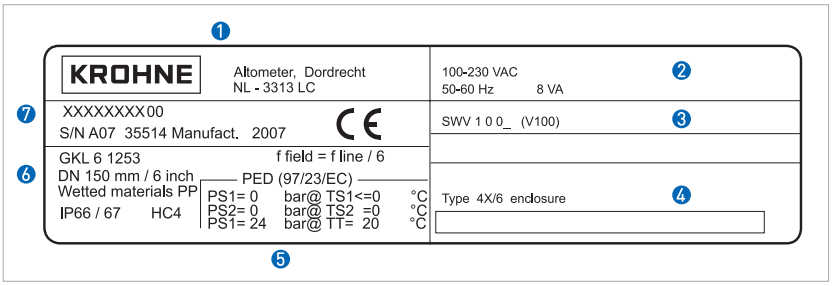

Figure 2-4: **Example of a nameplate**

1. Manufacturer
2. Power supply information
3. Software version
4. Tag name
5. Approvals-related pressure and temperature thresholds
6. GK/GKL values (measuring sensor constants); size (mm /inches); field frequency; protection category; materials of parts in contact with media
7. Product designation, serial number and date of manufacture

3.1 Notes on installation

NOTE!
Inspect the cartons carefully for damage or signs of rough handling. Report damage to the carrier and to your local office.

NOTE!
Check the packing list to make sure that you have received your complete order.

NOTE!
Please check on the device nameplates, that the device is supplied according to your order. Check for the correct mains voltage printed on the nameplate. If not, contact your local representative for advice.

3.2 Storage

- Store the device in a dry, dust-free location.
- Avoid continuous direct sunlight.
- Store the device in its original packaging.

3.3 Installation specifications

NOTE!
The following precautions must be taken to ensure reliable installation.

- Make sure that there is adequate space to the sides.
- Protect the signal converter from direct sunlight and install a sun shade if necessary.
- Signal converters installed in control cabinets require adequate cooling, for example fans or heat exchangers.
- Do not subject the signal converter to heavy vibrations. The flowmeters are tested for a vibration level in accordance with IEC 68-2-3.

3.4 Transport

Signal converter

- No special requirements.

Compact versions

- Do not lift the flowmeter by the signal converter housing.
- Do not use lifting chains.
- To transport flange devices, use lifting straps. Wrap these around both process connections.

3.5 Mounting of the compact version



NOTE!
The signal converter is mounted directly on the measuring sensor. For installation of the flowmeter, please observe the instructions in the supplied product documentation for the measuring sensor.

3.6 Mounting the wall-mounted housing, remote version

NOTE!
Mounting materials and tools are not part of the scope of supply. Use the mounting material and tools in compliance with the applicable occupational health and safety directives.

3.6.1 Wall mounting

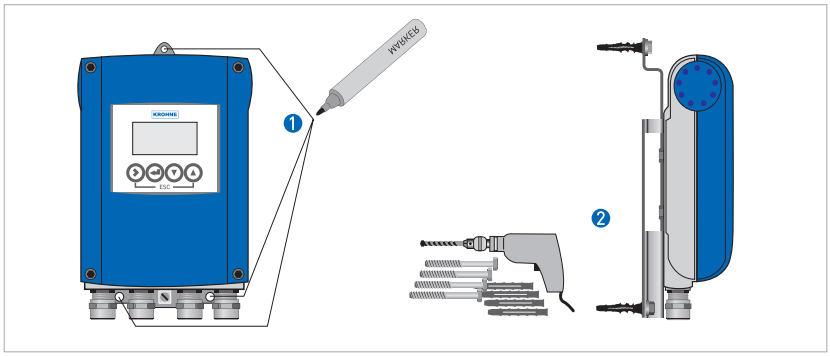

Figure 3-1: **Mounting the wall-mounted housing**

1. Prepare the holes with the aid of the mounting plate. Additional information refer to *Mounting plate, wall-mounted version* on page 85.
2. Fasten the device securely to the wall with the mounting plate.

NOTE!
Mounting multiple devices next to each other:

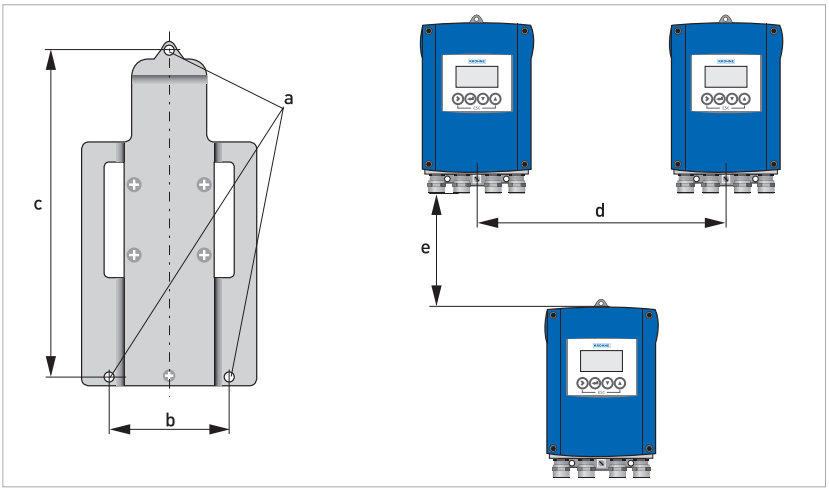

	[mm]	[inches]
a	Ø6.5	Ø0.26
b	87.2	3.4
c	241	9.5
d	310	12.2
e	257	10.1

4.1 Safety instructions



DANGER!
All work on the electrical connections may only be carried out with the power disconnected. Take note of the voltage data on the nameplate!



DANGER!
Observe national installation regulations!



WARNING!
Observe the regional occupational health and safety regulations without fail. Only work on the device electrics if you are appropriately trained.



NOTE!
Please check on the device nameplates, that the device is supplied according to your order. Check for the correct mains voltage printed on the nameplate. If not, contact your local representative for advice.

4.2 Important notes on electrical connection



DANGER!
Electrical connection is carried out in conformity with the VDE 0100 directive "Regulations for electrical power installations with line voltages up to 1000 V" or equivalent national regulations.



NOTE!

- *Use suitable cable entries for the various electrical cables.*
- *The measuring sensor and signal converter have been calibrated together at the factory! The devices should therefore always be installed in pairs. Make sure that the measuring sensor constants GK/GKL have identical settings (see nameplates).*
- *In the event of separate delivery or the installation of devices that have not been calibrated together, the signal converter must be set to the DN size and GK/GKL of the measuring sensor, refer to Function tables* on page 51.

4.3 Electrical cables for remote device versions, notes

4.3.1 Notes on signal cable A

NOTE!
Signal cable A (type DS 300) with double shielding ensures proper transmission of measured values.

Observe the following notes:

- Lay the signal cable with fastening elements.
- It is permissible to lay the signal cable in water or in the ground.
- The insulating material is flame-retardant to EN 50625-2-1, IEC 60322-1.
- The signal cable does not contain any halogens and is unplasticized, and remains flexible at low temperatures.
- The connection of the inner shield is carried out via the stranded drain wire (1).
- The connection of the outer shield (60) is carried out via the stranded drain wire (6).

4.3.2 Notes on field current cable C

DANGER!
*A shielded two-wire copper cable is used as the field current cable. The shielding **MUST** be connected in the housing of the measuring sensor and signal converter.*

NOTE!
The field current cable is not part of the scope of supply.

4.3.3 Using other signal cables



NOTE!
When other signal cables are used, the following electrical values must be observed.

Electrical safety

- To EN 60811 (Low Voltage Directive) or equivalent national regulations.

Capacitance of the insulated conductors

- Insulated conductor / insulated conductor < 50 pF/m
- Insulated conductor / shield < 150 pF/m

Insulation resistance

- R_{iso} > 100 GΩ x km
- U_{max} < 24 V
- I_{max} < 100 mA

Test voltages

- Insulated conductor / inner shield 500 V
- Insulated conductor / insulated conductor 1000 V
- Insulated conductor / outer shield 1000 V

Twisting of the insulated conductors

- At least 10 twists per meter, important for screening magnetic fields.

4.4 Preparing the signal and field current cables

NOTE!
Mounting materials and tools are not part of the scope of supply. Use the mounting material and tools in compliance with the applicable occupational health and safety directives.

4.4.1 Signal cable A (type DS 300), construction

- Signal cable A is a double-shielded cable for signal transmission between the measuring sensor and signal converter.
- Bending radius: ≥ 50 mm / 2"

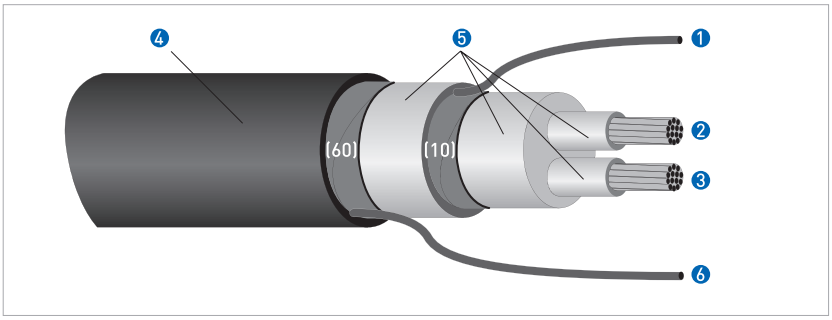

Figure 4-1: **Construction of signal cable A**

1. Stranded drain wire (1) for the inner shield (10), 1.0 mm^2 Cu / AWG 17 (not insulated, bare)
2. Insulated wire (2), 0.5 mm^2 Cu / AWG 20
3. Insulated wire (3), 0.5 mm^2 Cu / AWG 20
4. Outer sheath
5. Insulation layers
6. Stranded drain wire (6) for the outer shield (60)

4.4.2 Preparing signal cable A, connection to signal converter

NOTE!
Mounting materials and tools are not part of the scope of supply. Use the mounting material and tools in compliance with the applicable occupational health and safety directives.

- Connection of the two shields in the signal converter is carried out via the stranded drain wires.
- Bending radius: ≥ 50 mm / 2"

Required materials

- PVC insulation tubing, Ø2.5 mm / 0.1"
- Heat-shrinkable tubing
- 2x wire end ferrules to DIN 46 228: E 1.5-8 for the stranded drain wires (1, 6)
- 2x wire end ferrules DIN 46 228: E 0.5-8 for the insulated conductors (2, 3)

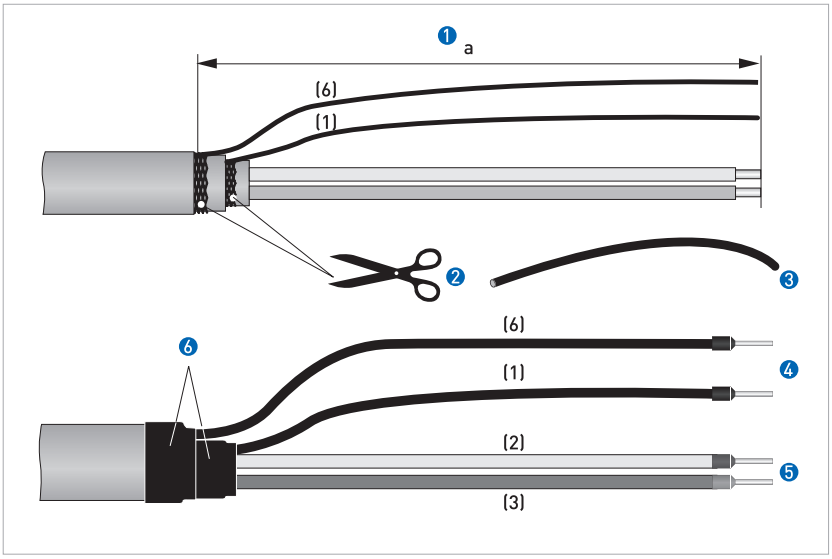

Figure 4-2: **Preparation of signal cable A**

- a = 80 mm / 3.15"

1. Strip the conductor to dimension a.
2. Cut off the inner shield (10) and the outer shield (60). Make sure not to damage the stranded drain wires (1, 6).
3. Slide the insulation tubing over the stranded drain wires (1, 6)
4. Crimp the wire end ferrules onto the stranded drain wire.
5. Crimp the wire end ferrules onto the conductors (2, 3).
6. Pull the heat-shrinkable tubing over the prepared signal cable

4.4.3 Length of signal cable A

NOTE!
For temperatures of the medium above 150° C / 300° F, a special signal cable and a ZD intermediate socket are necessary. These are available including the changed electrical connection diagrams.

Measuring sensor	Size		Min. electrical conductivity [µS/cm]	Curve for signal cable A
	DN [mm]	[inch]		
OPTIFLUX 1000 F	10...150	3/8...6	5	A1
OPTIFLUX 2000 F	25...150	1...6	20	A1
	200...1200	8...48	20	A2
OPTIFLUX 4000 F	10...150	3/8...6	1	A1
	200...1200	8...48	1	A2
OPTIFLUX 5000 F	25...100	1...4	1	A1
	150...250	6...10	1	A2
OPTIFLUX 6000 F	25...150	1...6	1	A1

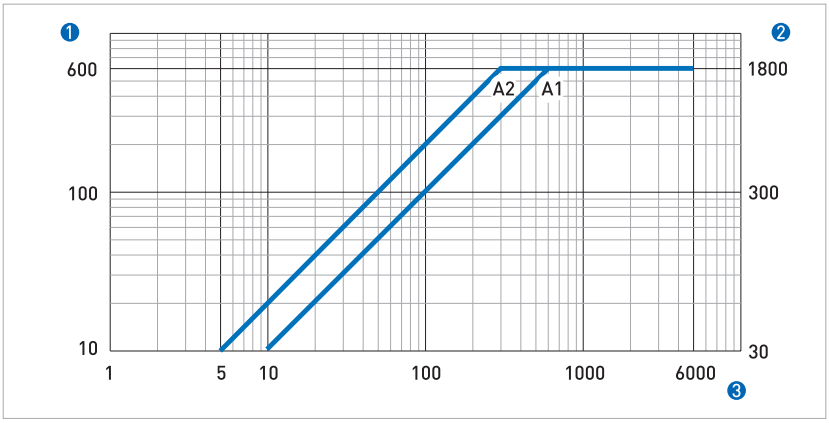

Figure 4-3: **Maximum length of signal cable A**

1. Maximum length of signal cable A between the measuring sensor and signal converter [m]
2. Maximum length of signal cable A between the measuring sensor and signal converter [ft]
3. Electrical conductivity of the medium being measured [µS/cm]

4.4.4 Preparing field current cable B, connection to signal converter



DANGER!
*A shielded two-wire copper cable is used as the field current cable. The shielding **MUST** be connected in the housing of the measuring sensor and signal converter.*



NOTE!
Mounting materials and tools are not part of the scope of supply. Use the mounting material and tools in compliance with the applicable occupational health and safety directives.

- Field current cable C is not part of the scope of supply.
- Bending radius: ≥ 50 mm / 2"

Required materials:

- Shielded, at least 2-wire copper cable with suitable heat-shrinkable tubing
- Insulating tubing, size according to the cable being used
- DIN 46 228 wire end ferrules: size according to the cable being used

Length and cross-section of field current cable C

Length		Cross-section A_F (Cu)	
[m]	[ft]	[mm²]	[AWG]
0...150	0...500	2 x 0.75 Cu ❶	2 x 18
150...300	500...1000	2 x 1.50 Cu ❶	2 x 14
300...600	1000...2000	2 x 2.50 Cu ❶	2 x 12

❶ Cu = copper cross-section

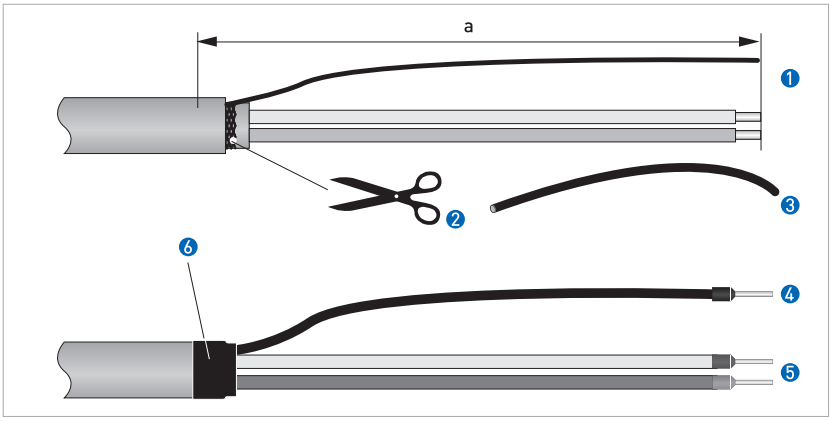

Figure 4-4: **Field current cable C, preparation for the signal converter**

- a = 80 mm / 3.15"

1. Strip the conductor to dimension a.
2. If a stranded drain wire is present, remove the shield that is present. Make sure not to damage the stranded drain wire.
3. Slide an insulating tube over the stranded drain wire.
4. Crimp a wire end ferrule onto the stranded drain wire.
5. Crimp wire end ferrules onto the conductors.
6. Pull a shrinkable tube over the prepared cable.

4.4.5 Prepare signal cable A, connect to measuring sensor

NOTE!
Mounting materials and tools are not part of the scope of supply. Use the mounting material and tools in compliance with the applicable occupational health and safety directives.

- The outer shield (60) is connected in the terminal compartment of the measuring sensor directly via the shield and a clip.
- Bending radius: ≥ 50 mm / 2"

Required materials

- PVC insulation tubing, Ø2.0...2.5 mm / 0.08...0.1"
- Heat-shrinkable tubing
- Wire end ferrule to DIN 46 228: E 1.5-8 for the stranded drain wire (1)
- 2x wire end ferrules DIN 46 228: E 0.5-8 for the insulated conductors (2, 3)

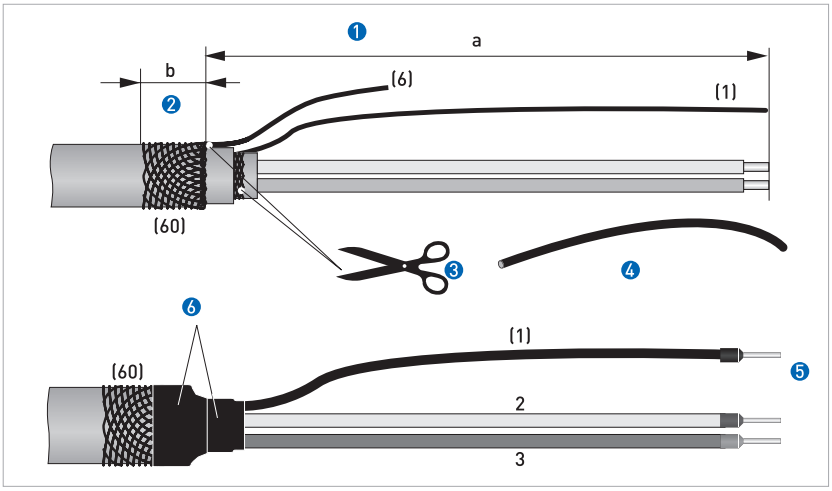

Figure 4-5: **Prepare signal cable A, connect to measuring sensor**

- a = 50 mm / 2"
- b = 10 mm / 0.39"

1. Strip the conductor to dimension a.
2. Trim the outer shield (60) to dimension b and pull it over the outer sheath.
3. Remove the stranded drain wire (6) of the outer shield and the inner shield (10). Make sure not to damage the stranded drain wire (1) of the inner shield.
4. Slide an insulating tube over the stranded drain wire (1).
5. Crimp the wire end ferrules onto conductors 2 and 3 and the stranded drain wire (1).
6. Pull the heat-shrinkable tubing over the prepared signal cable

4.4.6 Preparing field current cable C, connection to measuring sensor

NOTE!
Mounting materials and tools are not part of the scope of supply. Use the mounting material and tools in compliance with the applicable occupational health and safety directives.

- The field current cable is not part of the scope of supply.
- The shield is connected in the terminal compartment of the measuring sensor directly via the shield and a clip.
- Bending radius: ≥ 50 mm / 2"

Required materials

- Shielded 2-wire insulated copper cable
- Insulating tubing, size according to the cable being used
- Heat-shrinkable tubing
- DIN 46 228 wire end ferrules: size according to the cable being used

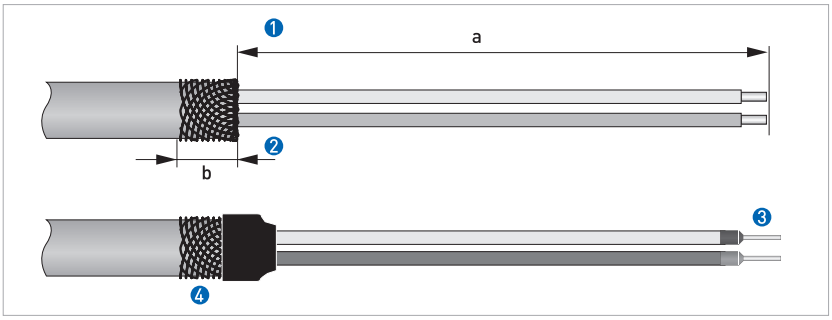

Figure 4-6: **Preparation of field current cable C**

- a = 50 mm / 2"
- b = 10 mm / 0.4"

1. Strip the conductor to dimension a.
2. Trim the outer shield to dimension b and pull it over the outer sheath.
3. Crimp wire end ferrules onto both conductors.
4. Pull a shrinkable tube over the prepared cable.

4.5 Connecting the signal and field current cables



DANGER!
The signal and field current cables may only be connected when the auxiliary power supply is switched off



DANGER!
The device must be grounded in accordance with regulations in order to protect personnel against electric shocks.



DANGER!
For devices used in hazardous areas, additional safety notes apply; please refer to the special Ex instructions.



WARNING!
Observe the regional occupational health and safety regulations without fail. Only work on the device electrics if you are appropriately trained.

4.5.1 Connecting the signal and field current cables to the signal converter, remote version

INFORMATION!
The compact version is supplied preassembled from the factory.

Open housing

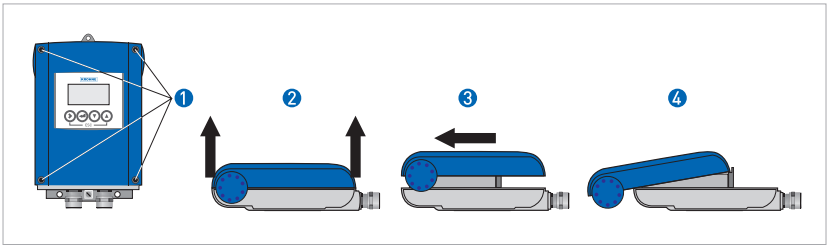

Figure 4-7: **Open housing**

1. Loosen the 4 screws with a suitable tool
2. Lift the housing at the top and bottom at the same time.
3. Slide the housing cover upward.
4. The housing cover is guided and held by the inside hinge.

Connecting the signal and field current cables

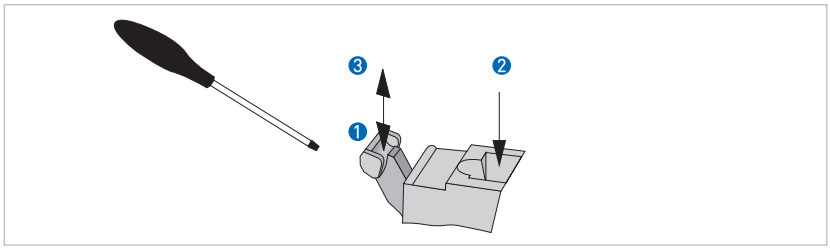

Figure 4-8: **Function of the electrical connection terminal**

Connect the electrical conductors as follows:

1. Push the lever downwards with a screwdriver in good condition (blade: 3.5 mm wide and 0.5 mm thick).
2. Insert the electrical conductor into the plug.
3. The conductor will be clamped as soon as the lever is released.

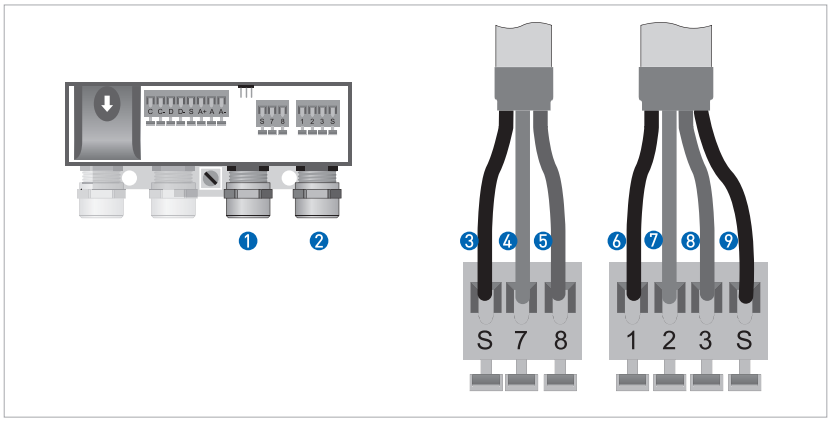

Figure 4-9: **Connecting the signal and field current cables**

1. Cable entry for field current cable
2. Cable entry for signal cable
3. Connection of the shield for the field current cable
4. Electrical conductor (7)
5. Electrical conductor (8)
6. Stranded drain wire (1) of the inner shield (10) of the signal cable
7. Electrical conductor (2)
8. Electrical conductor (3)
9. Stranded drain wire (S) of the outer shield (60)

4.5.2 Connection diagram for signal and field current cable

DANGER!
The device must be grounded in accordance with regulations in order to protect personnel against electric shocks.

- A shielded two-wire copper cable is used as the field current cable. The shielding **MUST** be connected in the housing of the measuring sensor and signal converter.
- The outer shield (60) is connected in the terminal compartment of the measuring sensor directly via the shield and a clip.
- Bending radius of signal and field current cable: ≥ 50 mm / 2"
- The following illustration is schematic. The positions of the electrical connection terminals may vary depending on the housing version.

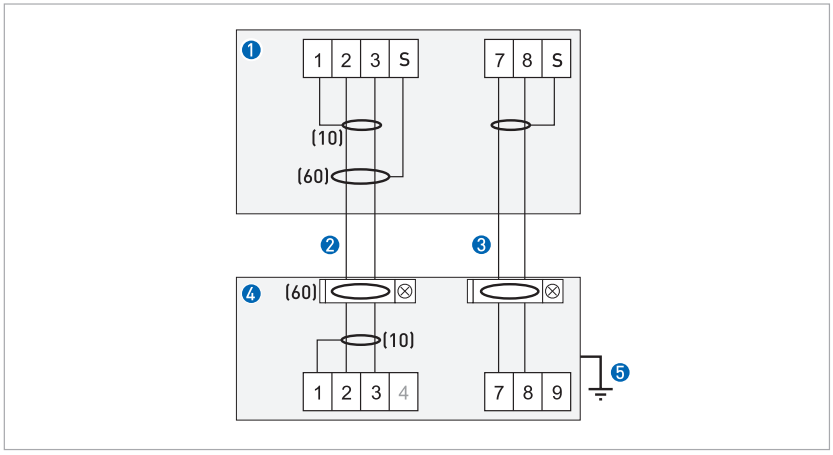

Figure 4-10: **Connection diagram for signal and field current cable**

1. Electrical terminal compartment for signal and field current cable in signal converter.
2. Signal cable A
3. Field current cable C
4. Electrical terminal compartment in measuring sensor
5. Functional ground FE

4.6 Grounding the measuring sensor

4.6.1 Classical method



DANGER!
There should be no difference in potential between the measuring sensor and the housing or protective earth of the signal converter!

- The measuring sensor must be properly grounded.
- The grounding cable should not transmit any interference voltages.
- Do not use the grounding cable to connect more than one device to ground at the same time.
- The measuring sensors are connected to ground by means of a functional grounding conductor FE.
- Special grounding instructions for the various measuring sensors are provided in the separate installation instructions for the measuring sensors.
- The installation instructions for the measuring sensors also contain descriptions on how to use grounding rings and how to install the measuring sensors in metal or plastic pipes or in pipes which are coated on the inside.

4.7 Connecting the power

DANGER!
The device must be grounded in accordance with regulations in order to protect personnel against electric shocks.

- The housings of the flowmeters, which are designed to protect the electronic equipment from dust and moisture, should be kept well closed at all times. Creepage distances and clearances are dimensioned to VDE 0110 and IEC 664 for pollution severity 2. Supply circuits are designed for overvoltage category III and the output circuits for overvoltage category II.
- Fuse protection ($I_N \leq 16$ A) for the infeed power circuit, and also a disconnecting device (switch, circuit breaker) to isolate the signal converter must be provided.

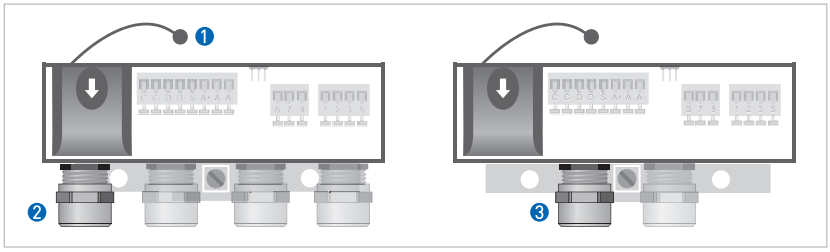

Figure 4-11: **Terminal compartment for power supply**

1. Retaining band of the cover
2. Cable entry for power supply, remote version
3. Cable entry for power supply, compact version

- Open the cover of the electrical terminal compartment by pressing down and pulling forwards at the same time.

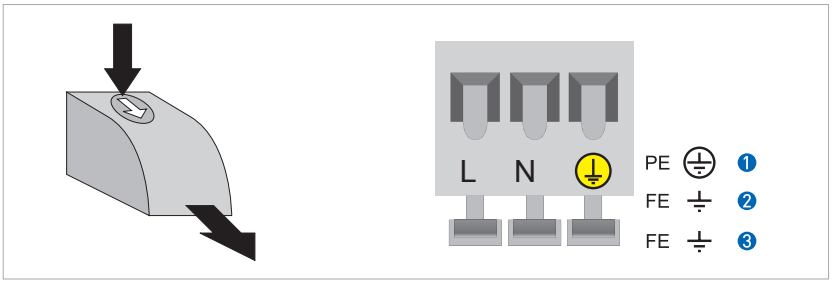

Figure 4-12: **Connection to power**

1. 100...230 VAC (-15% / +10%), 8 VA
2. 24 VDC (-55% / +30%), 4 W
3. 24 VAC/DC (AC: -15% / +10%; DC: -25% / +30%), 8 VA and 4 W

- Close the cover after the power has been connected.

100...230 VAC (tolerance range: -15% / +10%)

- Note the power supply voltage and frequency (50...60 Hz) on the nameplate.

NOTE!
240 VAC+5% is included in the tolerance range.

24 VDC (tolerance range: -55% / +30%)
24 VAC/DC (tolerance ranges: AC: -15% / +10%; DC: -25% / +30%)

- Note the data on the nameplate!
- When connecting to functional extra-low voltages, provide a facility for protective separation (PELV) (acc. to VDE 0100 / VDE 0106 and/or IEC 364 / IEC 536 or relevant national regulations).

NOTE!
For 24 VDC, 12 VDC-10% is included in the tolerance range.

4.8 Description of the outputs

4.8.1 Current output

- All outputs are electrically isolated from each other and from all other circuits.
- All operating data and functions can be set.
- Passive mode: external power $U_{ext} \leq 32$ VDC $I \leq 22$ mA
- Active mode: load impedance $R_L \leq 750\ \Omega$ at $I \leq 22$ mA
- Self-monitoring: interruption or load impedance too high in the current output loop
- Error message possible via status output, error indication on LCD display.
- Current value error detection can be set.
- Automatic range function via threshold. The setting range for the threshold is between 5% and 80%of $Q_{100\%}$, ± 0...5% hysteresis (corresponding ratio from smaller to larger range of 1:20 to 1:1.25).
  Signaling of the active range possible via a status output (settable).
- Forward / reverse flow measurement (F/R mode) is possible

INFORMATION!
Additional information refer to Connection diagrams of outputs on page 40 and refer to *Technical data* on page 75.

DANGER!
For devices used in hazardous areas, additional safety notes apply; please refer to the special Ex instructions.

4.8.2 Pulse and frequency output

- All outputs are electrically isolated from each other and from all other circuits.
- All operating data and functions can be set.
- Passive mode:
  External power supply required: $U_{ext} \leq 32$ VDC
  $I \leq 20$ mA at $f \leq 10$ kHz (overflow up to $f_{max} \leq 12$ kHz)
  $I \leq 100$ mA at $f \leq 100$ Hz
- Scaling:
  Frequency output: in pulses per unit time (e.g. 1000 pulses/s at $Q_{100\%}$);
  Pulse output: in pulses per unit volume (e.g. 100 pulses/m^3).
- Pulse width:
  symmetrical (pulse duty factor 1:1, independent of output frequency)
  automatic (with fixed pulse width, duty factor approx. 1:1 at $Q_{100\%}$), or
  fixed (pulse width adjustable as required from 0.05 ms...2 s)
- Forward / reverse flow measurement (F/R mode) is possible
- The pulse and frequency outputs can also be used as a status output / limit switch.

INFORMATION!
Additional information refer to Connection diagrams of outputs on page 40 and refer to *Technical data* on page 75.

DANGER!
For devices used in hazardous areas, additional safety notes apply; please refer to the special Ex instructions.

4.8.3 Status output and limit switch

- The status outputs / limit switches are electrically isolated from each other and from all other circuits.
- The output stages of the status outputs / limit switches behave like relay contacts.
- All operating data and functions can be set.
- Passive mode: external power required:
  $U_{ext} \leq 32$ VDC; $I \leq 100$ mA
- For information on the operating states refer to *Function tables* on page 51 that can be set.

INFORMATION!
Additional information refer to Connection diagrams of outputs on page 40 and refer to *Technical data* on page 75.

DANGER!
For devices used in hazardous areas, additional safety notes apply; please refer to the special Ex instructions.

4.9 Electrical connection of the outputs

NOTE!
Mounting materials and tools are not part of the scope of supply. Use the mounting material and tools in compliance with the applicable occupational health and safety directives.

4.9.1 Electrical connection of the outputs

DANGER!
All work on the electrical connections may only be carried out with the power disconnected. Take note of the voltage data on the nameplate!

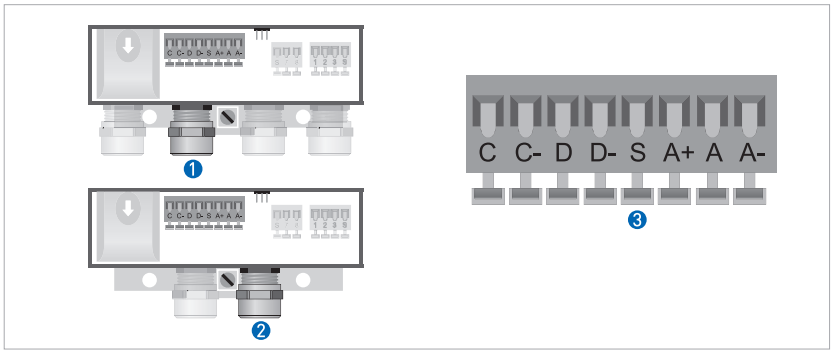

Figure 4-13: **Connection of outputs**

1. Cable entry, remote version
2. Cable entry, compact version
3. Terminal S for shield

- Open the housing cover
- Push the prepared cables through the cable entries and connect the necessary conductors.
- Connect the shield.
- Close the housing cover.

NOTE!
Ensure that the housing seal is properly fitted, clean and undamaged.

4.9.2 Laying electrical cables correctly

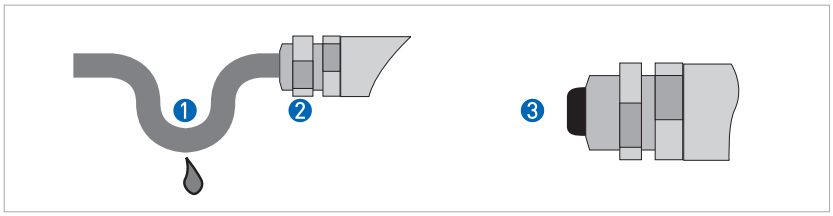

Figure 4-14: **Protect housing from dust and water**

1. For compact versions with nearly horizontally-oriented cable entries, lay the necessary electric cables with a drip loop as shown in the illustration.
2. Tighten the screw connection of the cable entry securely.
3. Seal cable entries that are not needed with a plug.

4.10 Connection diagrams of outputs

4.10.1 Description of the electrical symbols

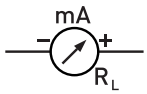	Milliammeter 0...20 mA or 4...20 mA and others R_L also includes the line resistances
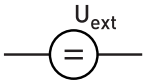	DC voltage source (U_{ext}), external power supply, any connection polarity
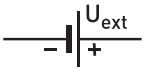	DC voltage source (U_{ext}), connection polarity as shown in the diagrams
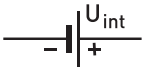	Internal DC voltage source
	Controlled internal power source in the device
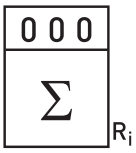	Electronic or electromagnetic counter At frequencies above 100 Hz, shielded cables must be used to connect the counters. R_i Internal resistance of the counter
	Button, NO contact or similar

Table 4-1: **Description of symbols**

4.10.2 Basic outputs

INFORMATION!
Additional information refer to Description of the outputs on page 35 and refer to *HART® connection* on page 44.

Current output active (HART®)

- $U_{int,nom}$ = 20 VDC
- I ≤ 22 mA
- R_L ≤ 750 Ω

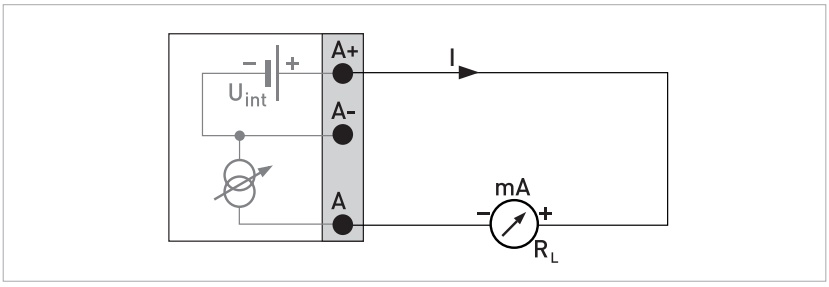

Figure 4-15: **Current output active I_a**

Current output passive (HART®)

- U_{ext} ≤ 32 VDC
- I ≤ 22 mA
- U_0 ≤ 2 V at I = 22 mA

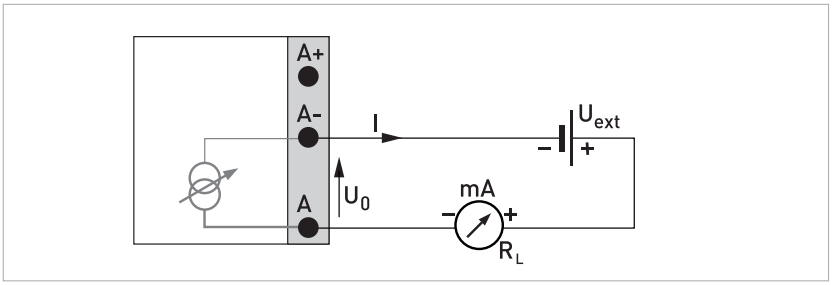

Figure 4-16: **Current output passive I_p**

INFORMATION!
At frequencies above 100 Hz, shielded cables must be used. Shielding takes place at the electrical connection (S) of the output terminal block.

Pulse/frequency output passive

- $U_{ext} \leq 32$ VDC
- 100 Hz < $f_{max} \leq 10$ kHz:
  I ≤ 20 mA
  open:
  I ≤ 0.1 mA at U_{ext} = 5 V
  I ≤ 0.5 mA at U_{ext} = 24 V
  I ≤ 0.7 mA at U_{ext} = 32 V
  closed:
  $U_0 \leq 0.8$ V at I = 1 mA
  $U_0 \leq 1.5$ V at I = 10 mA
  $U_0 \leq 3.5$ V at I = 100 mA
- R is required if the internal resistance of the counter does not reach the maximum load resistance R_L.
  f ≤ 1 kHz: $R_L \leq 10$ kΩ
  f ≤ 10 kHz: $R_L \leq 2$ kΩ
- Can also be set as a status output; for the electrical connection see status output connection diagram.

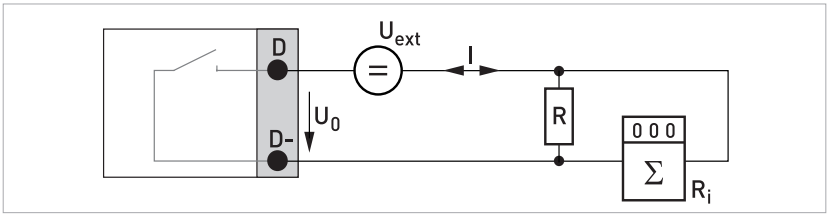

Figure 4-17: **Pulse frequency output passive P_p**

Status output / limit switch passive

- $U_{ext} \leq 32$ VDC
- $I \leq 100$ mA
- $R_L \leq 10$ kΩ
- open:
  $I \leq 0.1$ mA at $U_{ext} = 5$ V
  $I \leq 0.5$ mA at $U_{ext} = 24$ V
  $I \leq 0.7$ mA at $U_{ext} = 32$ V
  closed:
  $U_0 \leq 0.8$ V at $I = 1$ mA
  $U_0 \leq 1.5$ V at $I = 10$ mA
  $U_0 \leq 3.5$ V at $I = 100$ mA
- The output is closed when the device is de-energized.

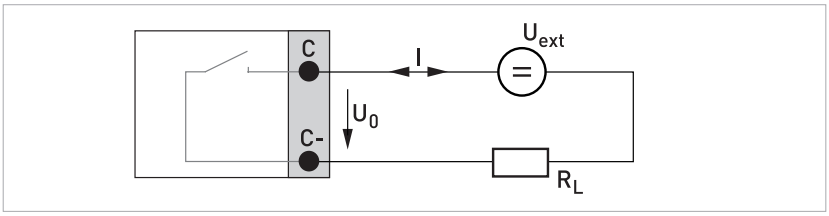

Figure 4-18: **Status output / limit switch passive S_p**

4.10.3 HART® connection

INFORMATION!

- *The current output at connection terminals A+/A-/A always has HART® capability.*

HART® connection active (point-to-point)

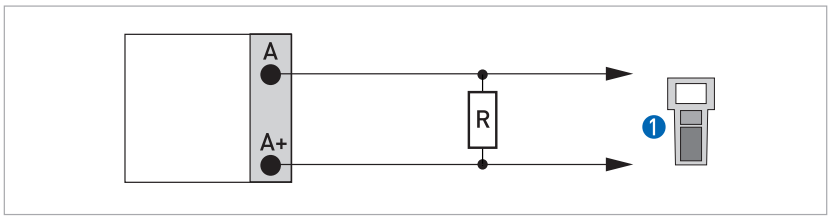

Figure 4-19: **HART® connection active (I_a)**

1 HART® communicator

The shunt resistor for the HART® communicator must have R ≥ 230 Ω.

HART® connection passive (multidrop mode)

- I: $I_{0\%}$ = 4 mA
- Multidrop I: I_{fix} = 4 mA
- $U_{ext} \leq 32$ VDC
- RL ≤ 230 Ω

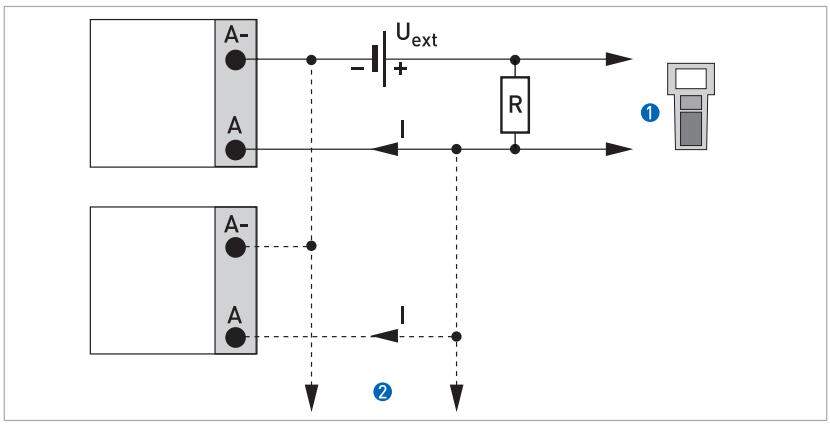

Figure 4-20: **HART® connection passive (I_p)**

1 HART® communicator
2 Additional devices with HART® capability

5.1 Switching on the power

Before connecting to power, please check that the system has been correctly installed. This includes:

- The flowmeter must be mechanically safe and mounted in compliance with the regulations.
- The power connections must have been made in compliance with the regulations.
- The electrical terminal compartments must be secured and the covers have been screwed on.
- Check that the electrical operating data of the power supply are correct.



- Switch the power on.

5.2 Starting the signal converter

The measuring device, consisting of the measuring sensor and the signal converter, is supplied ready for operation. All operating data have been set at the factory in accordance with your order specifications.

When the power is switched on, a self test is carried out. After that the flowmeter immediately begins measuring, and the current values are displayed.

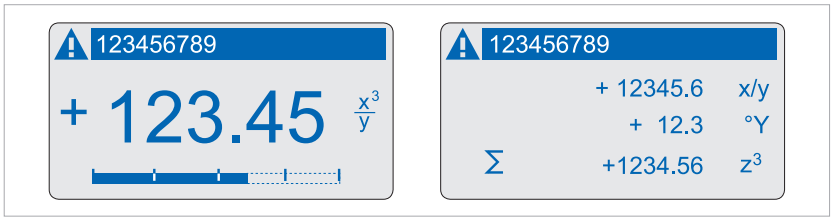

Figure 5-1: **Display in measuring mode, examples**

It is possible to change between the 1st and 2nd measured values windows, the trend display and (if present) the list with the status messages by pressing the keys ↑ and ↓. Possible status messages, their meaning and cause refer to *Status messages and diagnostic information* on page 69.

6.1 Display and operator input elements

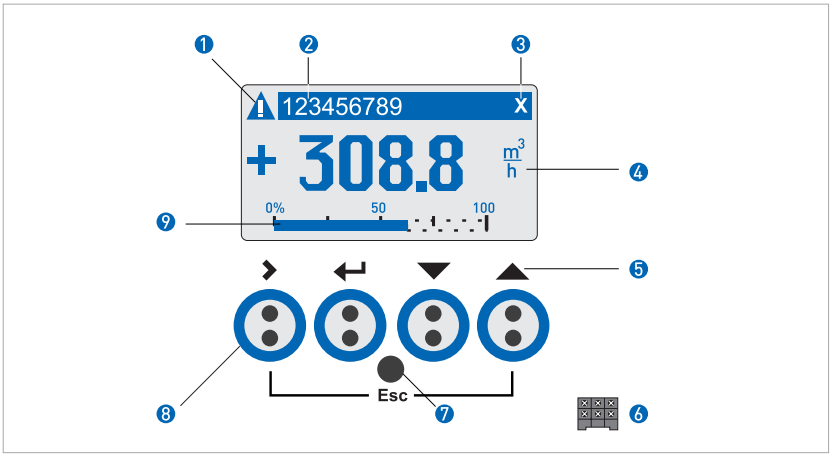

Figure 6-1: **Display and operational elements, example with flow indication**

1. Signals a status message in the status bar
2. The measuring point number (tag) is only indicated if this number was entered previously by the operator.
3. Indicates when a key has been pressed
4. 1st and 2nd display line for indication of different measured variables (here large depiction of only one measured variable)
5. Symbols of the operator input keys
6. Interface to the GDC bus (not present in all signal converter versions)
7. Infrared sensor (not present in all signal converter versions)
8. Operator input keys (see table below for description)
9. 3rd display line (here bargraph)

Symbol	Meas. mode	Menu mode	Function mode	Data mode
>	Switch from measuring mode to menu mode; press key for 2.5 s, then "Quick Start" menu displayed	Entry into selected menu displayed, then 1st function of the menu	Entry into displayed selected function or subfunction	For numerical values, move cursor (blue) one place to the right
↵	-	Return to measuring mode, preceded by query whether changed data to be accepted	Press 1 - 3 times, return to menu mode with data acceptance	Return to function or subfunction with acceptance of data
↓↑	Alternate between display measured value pages 1 + 2, trend and any status list(s), if provided	Select menu	Select function or subfunction	Blue cursor... - change number - change unit - change property - change decimal point
Esc (> + ↑)	-	-	Return to menu mode without data acceptance	Return to function or subfunction without acceptance of data

Table 6-1: **Function of keys**

6.1.1 Time-out functions

In Operator Control mode

- After 5 minutes without key op., return to meas. mode.
  Prev. changed data are not accepted.

In Test Menu mode

- After 60 minutes without key op., return to meas. mode.
  Prev. changed data are not accepted.

6.1.2 Display in measuring mode

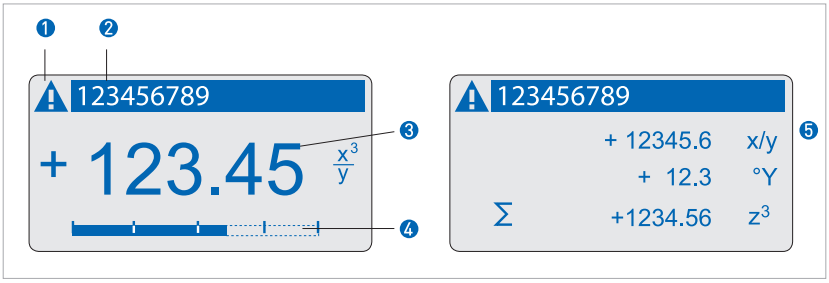

Figure 6-2: **Example for display in measuring mode**

1. Signals a status message in the status list
2. Measuring point number (tag); is only indicated if this number was assigned previously by the operator.
3. 1st measured value (depiction of the 1st measured value via the 1st and 2nd display lines)
4. 3rd display line as a bargraph
5. 3 measured values (depiction of 3 different measured values in display lines 1...3)

6.1.3 Display for selection of menu and functions

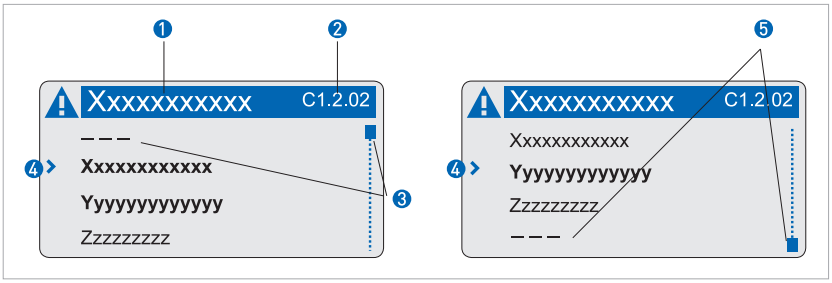

Figure 6-3: **Display for selection of menu or function**

1. Menu description
2. Function number (only in setup menu C)
3. Position within the menu or function list (here the beginning)
4. Current function (open: →; forward/back: ↑↓)
5. Position within the menu or function list (here the end)

6.1.4 Display for setting of data and functions

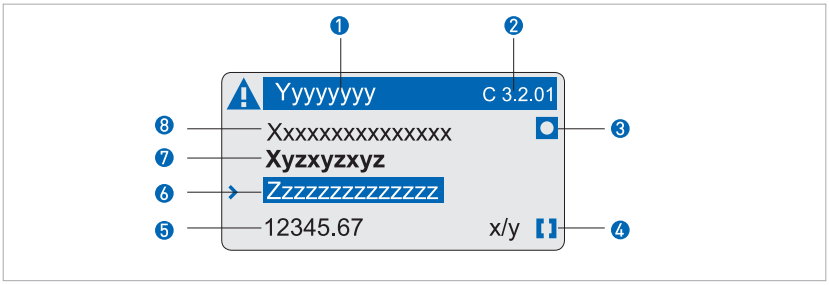

Figure 6-4: **Display for setting of data and functions**

1. Current menu
2. Function number (only in setup menu C)
3. Identifies factory settings
4. Identifies permitted value range
5. Next function or permissible value range for numeric values
6. Value, unit or function set at present (in white lettering on a blue background when selected →) The value is changed here.
7. Current (sub)function (open: →)
8. Factory setting of the current (sub)function (for information only, cannot be changed)

6.1.5 Display after change of data and functions

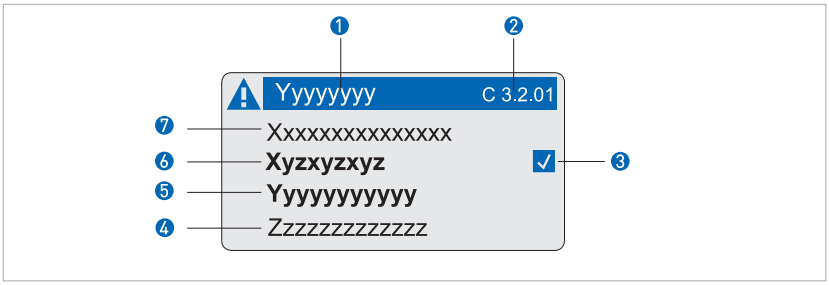

Figure 6-5: **Display after change of data and functions**

1. Current menu
2. Function number (only in setup menu C)
3. Indicates a change to a (sub)function; simple check of the changed data by paging through the (sub)function lists
4. Next function or permissible value range for numeric values
5. Value, unit or function set at present (in white lettering on a blue background when selected →)
6. Current (sub)function (open: →)
7. Factory setting of the current (sub)function (for information only, cannot be changed)

6.2 Program structure

Measuring mode		Select menu ↓↑		Select function and/or subfunction ↓↑				Set data ↓↑
↵	Press > 2.5 s							
	A Quick setup		> ↵	A1 Language			> ↵	
				A2 Tag				
				A3 Reset				
				A4 Analog outputs				
				A5 Digital outputs				
↵	B Test		> ↵	B1 Simulation			> ↵	
				B2 Actual values				
				B3 Information				
↵	C Setup		> ↵	C1 Process input	> ↵	1.1 Calibration	> ↵	
						1.2 Filter		
						1.3 Self test		
						1.4 Information		
						1.5 Simulation		
↵			> ↵	C2 Inputs/outputs (I/Os)	> ↵	2.1 Hardware	> ↵	
						2.☐ Current output X		
						2.☐ Frequency output X		
						2.☐ Pulse output X		
						2.☐ Status output X		
						2.☐ Limit switch X		
↵			> ↵	C3 I/O counter	> ↵	3.1 Counter 1	> ↵	
						3.2 Counter 2		
↵			> ↵	C4 I/O HART	> ↵	4.1 PV is...	> ↵	
						4.2 SV is...		
						4.3 TV is...		
						4.4 4V is...		
↵			> ↵	C5 Device	> ↵	5.1 Device info	> ↵	
						5.2 Display		
						5.3 Meas. page 1		
						5.4 Meas. page 2		
						5.5 Graphic page		
						5.6 Special functions		
						5.7 Units		
						5.8 HART		
						5.9 Quick setup		
		↓↑		↓↑		↓↑		↓↑ >

6.3 Function tables

INFORMATION!
Depending on the device version, not all functions are available.

6.3.1 Menu A, quick setup

No.	Function	Setting / description

A1 Language

A1	Language	Language selection depends on the device version.

A2 Tag

A2	Tag	Measuring point identifier (Tag No.) (also for HART® operation), appears in the LCD display header (up to 8 places).

A3 Reset

A3	Reset	
A3.1	Error reset	Reset error? Select: No/Yes
A3.2	Reset counter 1	Reset counter? Select: No / Yes (available if activated in C5.9.1)
A3.3	Reset counter 2	Reset counter? Select: No / Yes (available if activated in C5.9.2)

A4 Analog outputs (only for HART®)

A4	Analog outputs	Applicable to current output (term. A), frequency output (term. D), limit switches (term. C and / or D) and display page 1 / line 1
A4.1	Measurement	1) Measurement selection: volume flow / mass flow / diagnosis value / flow speed / coil temperature / conductivity
		2) Use for all outputs? (also use this output for the fcts. A4.2...A4.5!) Setting: No (applies only to the main current output) / Yes (applies to all analog outputs)
A4.2	Unit	Selection of the unit from a list, depending on the measured variable
A4.3	Range	1) Setting for main current output (measuring range: 0...100%) Setting: 0...x.xx (format and unit, depending on the measured variable, see A4.1 and A4.2 above)
		2) Use for all outputs? Make setting, see Fct. A4.1 above!
A4.4	Low flow cutoff	1) Setting for main current output (sets output value to "0") Setting: x.xxx ± x.xxx% (range: 0.0...20%) (1st value = operating point / 2nd value = hysteresis); condition: 2nd value ≤ 1st value
		2) Use for all outputs? Make setting, see Fct. A4.1 above!
A4.5	Time constant	1) Setting for main current output (applicable to all flow rate measurements) Setting: xxx.x s (setting range: 000.1...100 s)
		2) Use for all outputs? Make setting, see Fct. A4.1 above!

No.	Function	Setting / description

A5 Digital outputs

A5	Digital outputs	Applicable to pulse output (term. D) and counter 1
A5.1	Measured value	1) Select measurement: volume flow / mass flow
		2) Use for all outputs? (also use this output for the fcts. A5.2 to A5.4!) Setting: No (only for pulse output D) / Yes (for all digital outputs)
A5.2	Pulse value unit	Selection of the unit from a list, depending on the measured variable
A5.3	Value p. pulse	1) Setting for pulse output D (volume or mass value per pulse) Setting: xxx.xxx in l/s or kg/s
		2) Use for all outputs? Make setting, see Fct. A5.1 above!
A5.4	Low flow cutoff	1) Setting for pulse output D (sets output value to "0") Setting: x.xxx ± x.xxx% (setting range: 0.0…20%) (1st value = operating point / 2nd value = hysteresis); condition: 2nd value ≤ 1st value
		2) Use for all outputs? Make setting, see Fct. A5.1 above!

6.3.2 Menu B, test

No.	Function	Setting / description

B1 Simulation

B1	Simulation	Displayed values are simulated
B1.1	Flow speed	Flow speed simulation
		Break (exit function without simulation)
		Set value (range: -12…+12 m/s; unit selection in Fct. C5.7.7)
		Query: Start simulation?
		Settings: No (exit function without simulation) / Yes (start simulation)
B1.2	Volume flow	Volume flow simulation, sequence and settings similar to B1.1, see below!
		[X stands for one of the connection terminals A, C or D] ☐ stands for Fct. No. B1.3...1.6
B1.☐	Current out X	Simulation X Sequence and settings similar to B1.1, see below! [X stands for one of the connection terminals A, C or D] For pulse output a set number of pulses is output once in 1s!
B1.☐	Pulse output X	
B1.☐	Frequency out X	
B1.☐	Limit switch X	
B1.☐	Status output X	

No.	Function	Setting / description

B2 Actual values

B2	Actual values	Display the current values; exit the displayed function with the ↵ key.
B2.1	Operating hours	
B2.2	Act. flow speed	
B2.3	Act. coil temp.	See also Fcts. C1.1.7...C1.1.8
B2.4	Electronic temperature	
B2.5	Act. conductivity	See also Fcts. C1.3.1...C1.3.2
B2.6	Act. electr. noise	See also Fcts.C1.3.13...C1.3.15
B2.8	Act. coil resistance	Current resistance of the field coils according to the current coil temperature

B3 Information

B3	Information	LCD display
		1st line: ID No. of the circuit board
		2nd line: software version
		3rd line: date of calibration/manufacture
B3.1	C number	Electronics type
B3.2	Process input	Process input section
B3.3	Device	Electronics and HART® software
B3.4	Display	User interface
B3.5	"Interface"	"Bus interface" (in preparation)

6.3.3 Menu C, setup

No.	Function / subfunction	Settings / descriptions

C1 Process input

C1.1 Calibration

C1.1	Calibration	
C1.1.1	Zero calibration	Display of current zero value (zero)
		Query: calibrate zero?
		Setting: break (return with ↵) /standard (factory setting) / manual (display last value, set new value, range: -1.00...+1 m/s) / automatic (shows the current value as the new zero value)
C1.1.2	Size	Select from size table; range: DN2.5...1200 mm / 1/10...48"
C1.1.5	GKL	Set value acc. to nameplate; range: 0.5...12 (20)
C1.1.7	Coil resistance Rsp	Field coil resistance at 20°C; range: 10.00...220 Ω
C1.1.8	Calib. coil temp.	The coil temperature is derived from the coil resistance at the reference temperature.
		Set coil temperature: Break return with ↵ key Standard (= 20°C) Automatic (set current temperature); range: -40.0...+200°C
		Set coil temperature: Break (return with ↵ key) Standard (= setting from Fct. C1.1.7) Automatic (= calibration with the current resistance)
C1.1.9	Density	Calculation of mass flow with constant density of product; range: 0.1...5 kg/l
C1.1.10	Target conduct.	Reference value for on-site calibration; range: 1.000...50000 µS/cm
C1.1.11	EF electr. factor	For calculation of the conductivity based on the electrode impedance
		Query: calibrate EF? Break (return with ↵ key)
		Set value in the following: Standard (with factory setting) / Manual (set desired value) / Automatic (determines EF according to the setting in Fct. C1.1.10)
C1.1.13	Field frequency	Setting as on measuring sensor nameplate = Line frequency x value (from the following list):
		2; 4/3; 2/3; 1/2; 1/4; 1/6; 1/8; 1/12; 1/18; 1/36; 1/50
C1.1.14	Select settling	Select settling (special function)
		Select: Standard (fixed allocation) / Manual (manual time setting for the settling time for the field current)
C1.1.15	Settling time	Only when "Manual" selected under Fct. C1.1.14; range: 1.0...250 ms
C1.1.16	Line frequency	Set line frequency
		Automatic (measuring & setting; for DC systems fixed setting 50 Hz)
		Select: 50 Hz or 60 Hz (fixed setting)
C1.1.17	Act. coil resistance	Display of the current value for calculation of the temperature

No.	Function / subfunction	Settings / descriptions

C1.2 Filter

C1.2	filter	
C1.2.1	limitation	Limitation of all flow values, before smoothing by time constant, affects all outputs
		Settings: -xxx.x / +xxx.x m/s; condition: 1st value < 2nd value
		Range 1st value: -100.0 m/s ≤ value ≤ -0.001 m/s
		Range 2nd value: +0.001 m/s ≤ value ≤ +100 m/s
C1.2.2	flow direction	Define polarity of flow values
		Forwards (according to the arrow on the measuring sensor) or backwards (in the opposite direction to the arrow)
C1.2.3	Time constant	For all flow measurements and outputs
		xxx.x s; range: 0.0…100 s
C1.2.4	Pulse filter	Suppresses noise due to solids, air/gas bubbles and sudden changes in pH
		Select: Off (without pulse filter) / On (with pulse filter)
C1.2.5	Pulse width	Only when pulse filter switched on, Fct. C1.2.4
		Length of interference and delays to be suppressed on sudden changes in flow
		xx.x s; range: 0.01...10 s
C1.2.6	Pulse limitation	Dynamic limitation from one measured value to the next, only when pulse filter switched on, Fct. C1.2.4 effective.
		xx.x s; range: 0.01...100 m/s
C1.2.7	Noise filter	Suppresses noise at low conductivity, high solids content, air and gas bubbles, and chemically inhomogeneous media
		Select: Off (without noise filter) / On (with noise filter)
C1.2.8	Noise level	Range within which changes are evaluated as noise, and outside of which changes are evaluated as flow (only with noise filter switched on, Fct. C1.2.7)
		xx.xx m/s; range 0.01…10 m/s
C1.2.9	Noise suppression	Set noise suppression (only when noise filter switched on, Fct. C1.2.7)
		Range: 1…10, noise suppression factor [min = 1...max = 10]
C1.2.10	Low flow cutoff	Sets output value of all outputs to "0":
		x.xxx ± x.xxx%; range: 0.0…20%
		(1st value = operating point / 2nd value = hysteresis); condition: 2nd value ≤ 1st value

No.	Function / subfunction	Settings / descriptions

C1.3 Self test

C1.3	Self test	
C1.3.1	Empty pipe	Switch conductivity measurement off and on (measurement of the electrode resistance)
		Select: off / on
		Additional setting necessary when "on":
		Cond. + empty pipe [F] (conductivity measurement and empty pipe indication, error category [F] application); Flow indication "= 0" when pipe empty
		Cond. + empty pipe [S] (conductivity measurement and empty pipe indication, error category [S] measurement outside of specification); Flow indication "≠ 0" when pipe empty
C1.3.2	Act. conductivity	Only available when empty pipe activated [..] in Fct. C1.3.1
		Current conductivity is indicated. Activation takes place only after setting mode is exited!
C1.3.3	Limit empty pipe	Only available when empty pipe activated [..] in Fct. C1.3.1
		Range: 0.0...9999 µS (set max 50% of the lowest occurring conductivity in operation. Conductivity below this value = signal as empty pipe)
C1.3.9	Coil current	Automatic test switched off / on, select: off / on
C1.3.13	Electrode noise	Automatic test switched off/on, select: off / on
C1.3.14	Limit electr. noise	Only with electrode noise activated, see Fct. C1.3.13
		Range: 0.000...12 m/s (noise above this threshold generates an error of category [S])
C1.3.15	Act. electr. noise	Only available when electrode noise "on" activated in Fct. C1.3.13. Activation takes place only after the setting mode is exited!
C1.3.17	Diagnosis value	Select diagnosis value for testing the various analog outputs.
		Select: off (no diagnosis) / electrode noise (activate Fct. C1.3.13)
		Terminal 2 (electrode DC voltage) / Terminal 3 (electrode DC voltage)

C1.4 Information

C1.4	Information	
C1.4.1	Liner	Shows material of the liner
C1.4.2	Electr. material	Shows material of the electrodes
C1.4.3	Calibration date	Not available at this time
C1.4.4	Serial no. sensor	Shows serial no. of the measuring sensor
C1.4.5	V no. sensor	Shows the order number of the measuring sensor
C1.4.6	Sensor electr. info	Shows the serial no. and calibration date of the electronics and the software version

No.	Function / subfunction	Settings / descriptions

C1.5 Simulation

C1.5	Simulation	
C1.5.1	Flow speed	Sequence see Fct. B1.1
C1.5.2	Volume flow	Sequence see Fct. B1.2

No.	Function / subfunction	Settings / descriptions

C2 Inputs/outputs (I/Os)

C2.1 Hardware

C2.1	Hardware	Assignment of connection terminals dependent on signal converter version: active / passive / NAMUR
C2.1.1	Terminal A	Select: off (switched off) / current output / frequency output / pulse output / status output / limit switch
C2.1.3	Terminal C	Select: off (switched off) / current output / status output / limit switch
C2.1.4	Terminal D	Select: off (switched off) / frequency output / pulse output / status output / limit switch

C2.☐ Current output X

C2.☐	Current output X	X stands for connection terminal A ☐ stands for Fct. No. C2.2 (A)
C2.☐.1	Range 0%...100%	Current range for the selected measured variable, e.g. 4...20 mA, corresponds to 0...100%
		xx.x ... xx.x mA; Range: 0.00...20 mA (condition: 0 mA ≤ 1st value ≤ 2nd value ≤ 20 mA)
C2.☐.2	Extended range	Exceeding the min. and max. limits
		xx.x...xx.x mA; range: 03.5...21.5 mA (condition: 0 mA ≤ 1st value ≤ 2nd value ≤ 21.5 mA)
C2.☐.3	Error current	Specify error current
		xx.x mA; range: 0.00...22 mA (condition: 0 mA ≤ value ≤ 25 mA, outside of extended range)
C2.☐.4	Error condition	The following error conditions can be selected
		Select: error in device (error category [F]) / application error (error category [F]) / out of specification (error category [S])
C2.☐.5	Measurement	Measured variables for activating the output
		Select: volume flow / mass flow / diagnosis value / flow speed / coil temperature / conductivity
C2.☐.6	Range	0...100% of the measured variable set in Fct. C2.☐.5
		0...xx.xx _ _ _ (format and unit depend on the measured variable, see above)
C2.☐.7	Polarity	Set measured value polarity, please note flow direction in C1.2.2!
		Select: both polarities (plus and minus values are displayed) / positive polarity (display for negative values = 0) / negative polarity (display for positive values = 0) / absolute value (use for the output)

No.	Function / subfunction	Settings / descriptions
C2.☐.8	Limitation	Limitation before applying the time constant
		±xxx … ±xxx%; range: -150…+150%
C2.☐.9	Low flow cutoff	Sets output value to "0"
		x.xxx ± x.xxx%; range: 0.0…20%
		(1st value = operating point / 2nd value = hysteresis), condition: 2nd value ≤ 1st value
C2.☐.10	Time constant	Range: 000.1…100 s
C2.☐.11	Special function	Automatic range; select:
		off (switched off)
		automatic range (range is changed automatically, extended lower range, only makes sense together with a status output)
C2.☐.12	Threshold	Appears only when Fct. C2.☐.11 is activated Threshold between extended and normal range. The automatic range function always changes from the extended to the normal range when 100% current is reached
		The upper 100% value of the hysteresis is then = 0. The threshold is then the hysteresis value, instead of "threshold ± hysteresis" as shown in the display.
		Range: 5.0%…80%
		(1st value = operating point / 2nd value = hysteresis), condition: 2nd value ≤ 1st value
C2.☐.13	Information	Serial number of the I/O circuit board, software version number and calibration date of the circuit board
C2.☐.14	Simulation	Sequence see B1.☐ Current output X
C2.☐.15	4mA trimming	Trimming of the current at 4 mA
		Resetting to 4 mA restores the factory calibration.
		Used for HART® setting.
C2.☐.16	20mA trimming	Trimming of the current at 20 mA
		Resetting to 20 mA restores the factory calibration.
		Used for HART® setting.

C2.☐ Frequency output X

C2.☐	Frequency out X	X stands for connection terminal D ☐ stands for Fct. No. C2.5 (D)
C2.☐.1	Pulse shape	Specify the pulse shape
		Select: symmetric (about 50% on and 50% off) / automatic (constant pulse with about 50% on and 50% off at 100% pulse rate) / fixed (fixed pulse rate, see below Fct. C2.☐.3 100% pulse rate)
C2.☐.2	Pulse width	Only available if set to "fixed" in Fct. C2.☐.1
		Range: 0.05…2000 ms
		Note: max. setting value Tp [ms] ≤ 500 / max. pulse rate [1/s], Gives the pulse width = time where the output is activated
C2.☐.3	100% pulse rate	Pulse rate for 100% of the measuring range
		Range: 0.0…10000 1/s
		Limitation 100% pulse rate ≤ 100/s: $I_{max} \leq 100$ mA Limitation 100% pulse rate > 100/s: $I_{max} \leq 20$ mA

No.	Function / subfunction	Settings / descriptions
C2.☐.4	Measurement	Measured variables for activating the output
		Select: volume flow / mass flow / diagnosis value / flow speed / coil temperature / conductivity
C2.☐.5	Range	0…100% of the measured variable set in Fct. C2.☐.4
		0…xx.xx _ _ _ (format and unit depend on the measured variable, see above)
C2.☐.6	Polarity	Set measured value polarity, please note flow direction in C1.2.2!
		Select: both polarities (plus and minus values are displayed) / positive polarity (display for negative values = 0) / negative polarity (display for positive values = 0) / absolute value (use for the output)
C2.☐.7	Limitation	Limitation before application of the time constant
		± xxx … ± xxx%; range: -150…+150%
C2.☐.8	Low flow cutoff	Sets output value to "0":
		x.xxx ± x.xxx%; range: 0.0…20%
		(1st value = operating point / 2nd value = hysteresis); condition: 2nd value ≤ 1st value
C2.☐.9	Time constant	Range: 000.1…100 s
C2.☐.10	Invert signal	Select:
		off (activated output generates a high current at the output, switch closed)
		on (activated output generates a low current at the output, switch open)
C2.☐.12	Information	Serial number of the I/O circuit board, software version number and calibration date of the circuit board
C2.☐.13	Simulation	Sequence see B 1.☐ Frequency out X

C2.☐ Pulse output X

C2.☐	Pulse output X	X stands for connection terminal D ☐ stands for Fct. No. C2.5 (D)
C2.☐.1	Pulse shape	Specify the pulse shape
		Select: symmetric (about 50% on and 50% off) / automatic (constant pulse with about 50% on and 50% off at 100% pulse rate) / fixed (fixed pulse rate, setting see below Fct. C2.☐.3 100% pulse rate)
C2.☐.2	Pulse width	Only available if set to "fixed" in Fct. C2.☐.1
		Range: 0.05…2000 ms
		Note: max. setting value Tp [ms] ≤ 500 / max. pulse rate [1/s], Gives the pulse width = time where the output is activated
C2.☐.3	100 % pulse rate	Pulse rate for 100% of the measuring range
		Range: 0.0…10000 1/s
		Limitation 100% pulse rate ≤ 100/s: I_{max} ≤ 100 mA Limitation 100% pulse rate > 100/s: I_{max} ≤ 20 mA
C2.☐.4	Measurement	Measured variables for activating the output
		Select: volume flow / mass flow
C2.☐.5	Pulse value unit	Selection of the unit from a list, depending on the measured variable
C2.☐.6	Value p. pulse	Set value for volume or mass per pulse
		xxx.xxx, meas. range in [l] or [kg] (volume or mass for current output C2.☐.6)
		At max. pulse rate see above 2.☐.3 Pulse output

No.	Function / subfunction	Settings / descriptions
C2.☐.7	Polarity	Set measured value polarity, please note flow direction in C1.2.2!
		Select: both polarities (plus and minus values are displayed) / positive polarity (display for negative values = 0) / negative polarity (display for positive values = 0) / absolute value (use for the output)
C2.☐.8	Low flow cutoff	Sets output value to "0"
		x.xxx ± x.xxx%; range: 0.0…20%
		(1st value = operating point / 2nd value = hysteresis); condition: 2nd value ≤ 1st value
C2.☐.9	Time constant	Range: 000.1…100 s
C2.☐.10	Invert signal	Select:
		off (activated output generates a high current at the output, switch closed)
		on (activated output generates a low current at the output, switch open)
C2.☐.12	Information	Serial number of the I/O circuit board, software version number and calibration date of the circuit board
C2.☐.13	Simulation	Sequence see B 1.☐ Pulse output X

C2.☐ Status output X

C2.☐	Status output X	X (Y) stands for one of the connection terminals C or D ☐ stands for Fct. No. C2.4 (C) / C2.5 (D)
C2.☐.1	Mode	The output shows the following measuring conditions:
		Out of specification (output activated, signals application error or error in device refer to *Status messages and diagnostic information* on page 69 / Application error (output activated, signals application error or error in device refer to *Status messages and diagnostic information* on page 69 / Polarity flow (polarity of the current flow) / Over range flow (over range of the flow) / Counter 1 preset (activates counter X when preset value is reached) / Counter 2 preset (activates counter X when preset value is reached) / Output A (activated by the status of output Y, additional output data see below) / Output C (activated by the status of output Y, additional output data see below) / Output D (activated by the status of output Y, additional output data see below) / Off (switched off) / Empty pipe (when empty pipe, output active) / Error in device (when error, output activated)
C2.☐.2	Current output Y	Only appears if output A is set under "mode (see above)", and this output is a "current output".
		Polarity (is signaled)
		Over range (is signaled)
		Automatic range signals lower range
C2.☐.2	Frequency out Y and pulse output Y	Only appears if output D is set under "mode (see above)" and this output is a "frequency / pulse output".
		Polarity (is signaled)
		Over range (is signaled)
C2.☐.2	Status output Y	Only appears if output C or D is set under "mode (see above)" and this output is a "status output".
		Same signal (like other connected status output, signal can be inverted, see below)

No.	Function / subfunction	Settings / descriptions
C2.☐.2	Limit switch Y	Only appears if output C or D is set under "mode (see above)", and this output is a "limit switch".
		Status off (is always selected here if status output X is connected with a limit switch.
C2.☐.2	off	Only appears if output A, C or D is set under "mode (see above)" and this output is switched off.
C2.☐.3	Invert signal	off (activated output supplies a high current, switch closed)
		on (activated output supplies a low current, switch open)
C2.☐.4	Information	Serial number of the I/O circuit board, software version number and calibration date of the circuit board
C2.☐.5	Simulation	Sequence see B 1.☐ Status output X

C2.☐ Limit switch X

C2.☐	Limit switch X	X stands for one of the connection terminals C or D ☐ stands for Fct. No. C2.4 (C) / C2.5 (D)
C2.☐.1	Measurement	Select: volume flow / mass flow / diagnosis value / flow speed / coil temperature / conductivity
C2.☐.2	Threshold	Switching level, set threshold with hysteresis
		xxx.x ±x.xxx (format and unit depend on the measured variable, see above)
		(1st value = threshold / 2nd value = hysteresis); condition: 2nd value ≤ 1st value
C2.☐.3	Polarity	Set measured value polarity, please note flow direction in C1.2.2!
		Select: both polarities (plus and minus values are displayed) / positive polarity (display for negative values = 0) / negative polarity (display for positive values = 0) / absolute value (use for the output)
C2.☐.4	Time constant	Range: 000.1…100 s
C2.☐.5	Invert signal	Select:
		off (activated output generates a high current, switch closed)
		on (activated output generates a low current, switch open)
C2.☐.6	Information	Serial number of the I/O circuit board, software version number and calibration date of the circuit board
C2.☐.7	Simulation	Sequence see B 1.☐ Limit switch X

No.	Function / subfunction	Settings / descriptions

C3 I/O counter

C3.1	Counter 1	Set function of counter ☐ ☐ stands for 1, 2 (= counter 1, 2) The basic version (standard) has only 2 counters!
C3.2	Counter 2	
C3.☐.1	Function of counter	Select: sum counter (counts positive and negative values) / +counter (counts only the positive values) / -counter (counts only the negative values) / off (counter is switched off) /
C3.☐.2	Measurement	Selection of the measured variable for counter ☐
		Select: volume flow / mass flow
C3.☐.3	Low flow cutoff	Sets output value to "0".
		Range: 0.0%...20%
		(1st value = operating point / 2nd value = hysteresis); condition: 2nd value ≤ 1st value
C3.☐.4	Time constant	Range: 0.1...100 s
C3.☐.5	Preset value	If this value is reached (positive or negative), a signal is generated that can be used for a status output at which "preset counter X" has to be set
		Preset value (max. 8 places) x.xxxxx in selected unit, see C5.7.10 + 13
C3.☐.6	reset counter	Sequence see Fcts. A 3.2 and A 3.3
C3.☐.7	Set counter	Set counter ☐ to the desired value
		Select: break (exit function) / set value (opens the editor to make the entry)
		Query: set counter?
		Select: no (exit function without setting the value) / yes (sets the counter and exits the function)
C3.☐.8	Stop counter	Counter ☐ stops and holds the current value
		Select: no (exits the function without stopping the counter) / yes (stops the counter and exits the function)
C3.☐.9	Start counter	Start counter ☐ after that counter is stopped
		Select: no (exits the function without starting the counter) / yes (starts the counter and exits the function)
C3.☐.10	Information	Serial number of the I/O circuit board, software version number and calibration date of the circuit board

No.	Function / subfunction	Settings / descriptions

C4 I/O HART

C4	I/O HART	Selection / display of the 4 dynamic variables (DV) for HART®
		The HART® current output (Term. A basic I/Os or Term. C EExi I/Os) always has a fixed link to the primary variables (PV). Fixed links of the other DVs (1-3) are only possible if 1 additional analog output (frequency) is available; if not, the measured variable may be freely selected from the following list: see Fct. A4.1 "Measurement"
		☐ stands for 1, 3 or 4 X stands for connection terminals A, C or D
C4.1	PV is _ _ _	Current output (primary variable)
C4.2	SV is _ _ _	(secondary variable)
C4.3	TV is _ _ _	(tertiary variable)
C4.4	4V is _ _ _	(4th variable)
C4.☐.1	Current output X	Shows the current analog measured value of the linked frequency output. The measured variable cannot be changed!
C4.☐.1	Frequency output X	Shows the current analog measured value of the linked frequency output, if present. The measured variable cannot be changed!
C4.☐.1	HART dynam. var.	Measurements of the dynamic variables for HART®
		Linear measured variables: volume flow / mass flow / diagnosis value / flow speed / coil temperature / conductivity
		Digital measured variables: counter 1 / counter 2 / operating hours

No.	Function / subfunction	Settings / descriptions

C5 Device

C5.1 Device info

C5.1	Device info	
C5.1.1	Tag	Settable characters (max. 8 places): A…Z; a…z; 0…9; / - , .
C5.1.2	C number	Electronic type, cannot be changed
C5.1.3	Device serial no.	Serial no. of the system
C5.1.4	Electronic serial no.	Serial no. of the electronic assembly, cannot be changed
C5.1.5	Information	Serial no. of the circuit board, version no. of the main software, date of manufacture of the circuit board

No.	Function / subfunction	Settings / descriptions

C5.2 Display

C5.2	Display	
C5.2.1	Language	Language selection depends on the device version.
C5.2.2	Contrast	Adjust display contrast for extreme temperatures. Setting: -9…0…+9
		This change takes place immediately, not just when setting mode is exited!
C5.2.3	Default display	Specification of the default display page that is returned to after a short delay period.
		Select: None (the current page is always active) / 1. meas. page (show this page) / 2. meas. page (show this page) / Status page (show only status messages) / Graphics page (trend display of the 1st measurement)
C5.2.4	Self test	Not available at this time
C5.2.5	Information	Serial no. of the circuit board, user software version no., date of manufacture of the circuit board

C5.3 and C5.4 meas. page 1 and 2

C5.3	1. meas. page	☐ stands for 3 = meas. page 1 and 4 = meas. page 2
C5.4	2. meas. page	
C5.☐.1	Function	Specify number of measured value lines (font size)
		Select: one line / two lines / three lines
C5.☐.2	Measurement 1.line	Specify measured variable for 1st line
		Select: volume flow / mass flow / diagnosis value / flow speed / coil temperature / conductivity
C5.☐.3	Range	0…100% of the measured variable set in Fct. C5.☐.2
		0…xx.xx _ _ _ (format and unit depend on the measured variable)
C5.☐.4	Limitation	Limitation before application of the time constant
		xxx%; range: -120…+120%
C5.☐.5	Low flow cutoff	Sets output value to "0": x.xxx ± x.xxx % Range: 0.0…20 %
		(1st value = operating point / 2nd value = hysteresis) Condition: 2nd value ≤ 1st value
C5.☐.6	Time constant	Range: 0.1…100 s
C5.☐.7	Format 1.line	Specify decimal places
		Select: Automatic (adaptation carried out automatically) / X (= none) …X.XXXXXXXX (max. 8 places)
C5.☐.8	Measurement 2.line	Specify measured variable for 2nd line (only available if this 2nd line is activated)
		Select: bar graph (for the measured variable selected in the 1st line) / volume flow / mass flow / diagnosis value / flow speed / counter 1 / counter 2 / conductivity / coil temperature
C5.☐.9	Format 2.line	Specify decimal places
		Select: Automatic (adaptation carried out automatically) / X (= none) …X.XXXXXXXX (max. 8 places)

No.	Function / subfunction	Settings / descriptions
C5.☐.10	Measurement 3.line	Specify measured variable for 3rd line (only available if this 3rd line is activated)
		Select: volume flow / mass flow / diagnosis value / flow speed / coil temperature / conductivity / counter 1 / counter 2
C5.☐.11	Format 3.line	Specify decimal places
		Select: Automatic (adaptation carried out automatically) / X (= none) ...X.XXXXXXXX (max. 8 places)

C5.5 Graphic page

C5.5	Graphic page	
C5.5.1	Select range	Graphic page always shows trend curve of the measurement of the 1st page / 1st line, see Fct.. C5.3.2
		Select: Manual (set range in Fct. C5.5.2) / Automatic (automatic depiction based on the measured values) Reset only after parameter change or after switching off and on.
C5.5.2	Range	Set the scaling for the Y axis. Only available if "Manual" is set in C5.5.1.
		+xxx ±xxx%; range: -100...+100%
		(1st value = lower limit / 2nd value = upper limit), condition: 1st value ≤ 2nd value
C5.5.3	Time scale	Set the time scaling for the X axis, trend curve
		xxx min; range: 0...100 min

C5.6 Special functions

C5.6	Special functions	
C5.6.1	Reset errors	Reset error?
		Select: No / Yes
C5.6.2	Save settings	Save current settings Select: break (exit function without saving) / backup 1 (save in storage location 1) / backup 2 (save in storage location 2)
		Query: go on with copy? (cannot be undone) Select: No (exit function without saving) / Yes (copy current settings to storage backup 1 or backup 2)
C5.6.3	Load settings	Load saved settings Select: break (exit function without loading) / factory settings (load in state as delivered) / backup 1 (load data from storage location 1) / backup 2 (load data from storage location 2)
		Query: go on with copy? (cannot be undone) Select: No (exit the function without saving) Yes (load data from the selected storage location)
C5.6.4	Password quick setup	Password required to change data in the quick setup menu
		0000 (= to quick setup menu without password)
		xxxx (password required); range 4place: 0001...9999
C5.6.5	Password setup	Password required to change data in the setup menu
		0000 (= to quick setup menu without password)
		xxxx (password required); range 4place: 0001...9999

No.	Function / subfunction	Settings / descriptions

C5.7 Units

C5.7	Units	
C5.7.1	Volume flow	m³/h; m³/min; m³/s; l/h; l/min; l/s (l = liters); ft³/h; ft³/min; ft³/s; gal/h; gal/min; gal/s; free unit (set factor and text in the next two functions, sequence see below)
C5.7.2	Text free unit	Text refer to *Set free units* on page 67 to be specified:
C5.7.3	[m³/s] × factor	Specification of the conversion factor, based on m³/s:
		xxx.xxx refer to *Set free units* on page 67
C5.7.4	Mass flow	kg/s; kg/min; kg/h; t/min; t/h; g/s; g/min; g/h; lb/s; lb/min; lb/h; ST/min; ST/h (ST = Short Ton); LT/h (LT = Long Ton); free unit (set factor and text in the next two functions, sequence see below)
C5.7.5	Text free unit	Text refer to *Set free units* on page 67 to be specified:
C5.7.6	[kg/s] × factor	Specification of the conversion factor, based on kg/s:
		xxx.xxx refer to *Set free units* on page 67
C5.7.7	Flow speed	m/s; ft/s
C5.7.8	Conductivity	µS/cm; S/cm
C5.7.9	Temperature	°C; °F; K
C5.7.10	Volume	m³; l (liters); hl; ml; gal; IG; in³; ft³; yd³; free unit (set factor and text in the next two functions, sequence see below)
C5.7.11	Text free unit	Text refer to *Set free units* on page 67 to be specified:
C5.7.12	[m³] × factor	Specification of the conversion factor, based on m³:
		xxx.xxx refer to *Set free units* on page 67
C5.7.13	Mass	kg; t; mg; g; lb; ST; LT; oz; free unit (set factor and text in the next two functions, sequence see below)
C5.7.14	Text free unit	Text refer to *Set free units* on page 67 to be specified:
C5.7.15	[kg] × factor	Specification of the conversion factor, based on kg:
		xxx.xxx refer to *Set free units* on page 67
C5.7.16	Density	Kg/cm³; kg/l; kg/m³; lb/ft³; lb/gal; free unit (set factor and text in the next two functions, sequence see below)
C5.7.17	Text free unit	Text refer to *Set free units* on page 67 to be specified:
C5.7.18	[kg/m³] × factor	Specification of the conversion factor, based on kg/m³:
		xxx.xxx refer to *Set free units* on page 67

No.	Function / subfunction	Settings / descriptions

C5.8 HART®

C5.8	HART	
C5.8.1	HART	Switch HART® communication on/off:
		Select: on (HART® activated) current = 4…20 mA / off (HART® not activated) current = 0…20 mA
C5.8.2	Address	Set address for HART® operation:
		Select: 00 (point to point operation, current output has normal function, current = 4…20 mA) / 01...15 (multidrop operation, current output has a constant setting of 4 mA)
C5.8.3	Message	Set required text:
		A…Z ; a…z ; 0…9 ; / - + , . *
C5.8.4	Description	Set required text:
		A…Z ; a…z ; 0…9 ; / - + , . *

C5.9 Quick setup

C5.9	Quick setup	Activate quick access in quick setup menu:
		Select: yes (switched on) / no (switched off)
C5.9.1	Reset counter 1	Reset counter 1 in quick setup menu?
		Select: yes (activated) / no (switched off)
C5.9.2	Reset counter 2	Reset counter 2 in quick setup menu?
		Select: yes (activated) / no (switched off)

6.3.4 Set free units

Free units	Sequences to set tests and factors
Texts	
Volume flow, mass flow and density:	3 places before and after the slash xxx/xxx (max. 3 places before / after the slash)
Volume, mass	xxx (max. 3 places)
Permissible characters:	A…Z; a…z; 0…9; / - + , . *; @ $ % ~ () [] _
Conversion factors	
Desired unit	= [unit see above] × conversion factor
Conversion factor	Max. 9 places
Shift decimal point:	↑ to the left and ↓ to the right

6.3.5 Reset counter in Quick Setup menu

INFORMATION!
It may be necessary to activate resetting of the counter in the Quick Setup menu in function C5.9.

Key	Display	Description and setting
→	Quick setup	Time counts backwards from 2.5...0.0 s, after that release the key.
→	Language	
2 x ↓	Reset?	
→	Reset error?	
↓	Reset counter 1	Select desired counter
↓	Reset counter 2	
→	Reset counter	
→	No	
↓ or ↑	Yes	
↵	Reset counter	Counter has been reset
2 x ↵	Measuring operation	

6.3.6 Deleting error messages in the Quick Setup menu

NOTE!
The detailed list of the possible error messages refer to Status messages and diagnostic information on page 69.

Key	Display		Description and setting
→	Quick setup		Time counts backwards from 2.5...0.0 s, after that release the key.
→	Language		
2 x ↓	Reset?		
→	Reset error?		
→	Reset?	no	
↓ or ↑	Reset?	Yes	
↵	Reset errors		Error has been reset
2 x ↵	Measuring operation		

6.4 Status messages and diagnostic information

Operational faults in device

Messages on the display	Description	Actions
Status: F _ _ _ _ _	**Operational fault in device, mA output ≤ 3.6 mA or set fault current (depending on the seriousness of the fault), status output open, pulse / frequency output: no pulses**	**Repair necessary.**
F error in device	Fault or failure of device. Parameter or hardware error. No measurement possible.	Group message, when one of the following or some other severe error occurs.
F IO 1	Error, operational fault in IO 1. Parameter or hardware error. No measurement possible.	Load settings (Fct. C4.6.3) (Backup 1, Backup 2 or factory settings). If status message still does not disappear, replace electronic unit.
F parameter	Error, operational fault of data manager, parameter or hardware error. Parameters no longer usable.	
F IO 2	Error, operational fault in IO 2. Parameter or hardware error. No measurement possible.	
F configuration	Invalid configuration: display software, bus parameter or main software do not match existing configuration.	If device configuration unchanged: defective, replace electronic unit.
F display	Error, operational fault in display. Parameter or hardware error. No measurement possible.	Defective, replace electronic unit.
F sensor electronic	Error, operational fault in sensor electronics. Parameter or hardware error. No measurement possible.	Defective, replace electronic unit.
F sensor global	Data error in the global data of the sensor electronic equipment.	Load settings (Fct. C5.6.3, (Backup 1, 2 or factory settings). If status message still does not disappear, replace electronic unit.
F sensor local	Data error in the local data of the sensor electronic equipment.	Defective, replace electronic unit.
F field current local	Data error in the local data of the field current supply	Defective, replace electronic unit.
F current output A	Error, operational fault in current output. Parameter or hardware error. No measurement possible.	Defective, replace electronic unit
F software user interface	Fault revealed by CRC check of operator software.	Replace electronic unit.
F hardware settings	The set hardware parameters do not match the identified hardware. A dialogue appears in the display.	Answer queries in dialogue mode, follow directions. Defective, replace electronic unit.
F hardware detection	Existing hardware cannot be identified.	Replace electronic unit.
F RAM/ROM error IO1	A RAM or ROM error is detected during the CRC check.	Defective, replace electronic unit.
F RAM/ROM error IO2		
F Fieldbus	Malfunction of the fieldbus interface	

Measurements out of specification

Messages on the display	Description	Actions
Status: S _ _ _ _ _	**Out of specification, measurement continues, accuracy possibly less.**	**Maintenance required.**
S uncertain measurement	Device maintenance necessary; measured values only conditionally usable.	Group message, when errors as described below or other influences occur.
S empty pipe	1 or 2 measuring electrodes are not in contact with the medium: measured value is set to zero. Measurement continues.	Filling level of EMF less than 50% or electrodes completely insulated. If "0" to be indicated when pipe is empty, activate under Fct. C 1.3.1 "cond.+empty pipe [F]".
	The two empty pipe messages cannot appear at the same time. The difference lies in whether the measured value is also set to zero upon the detection of an empty pipe. The sensor electronics will use one or the other function (setting to zero or further measurement) depending on a selection made by the user.	
Electrode noise	Noise on the electrodes too high. Measured values are still supplied. No message when empty pipe.	a) Electrodes extremely soiled; b) Conductivity too low: activate noise or pulse filter Fct. C1.2.4, C1.2.7; c) Gas bubbles, solids or chem. reactions in medium: activate noise or pulse filter Fct. C1.2.4, C1.2.7; d) Electrode corrosion (if message also appears when flow is zero): use sensor with suitable electrode material
S gain error	Preampfl. not equal to the calibrated value; check calibration. Measured values are still supplied.	Defective, replace electronic unit.
S electrode symmetry	Impedance of the two measuring electrodes not equal. Measured values are still supplied.	Deposits in measuring tube or electrode short-circuit to ground. Clean and check measuring tube!
S field coil broken	Field coil resistance too high.	Check field coil connections to the electronic module (for remote versions: field current cable) for open circuit / short circuit
S field coil bridged	Field coil resistance too low.	
S field current deviation	Measured field current not equal to the calibrated value. Check calibration. Measured values are still supplied. No message if coil broken or bridged.	Check field current connections. If OK: defect, replace electronic unit.
S electronic temperature	Upper limit for the permissible electronic temperature has been exceeded.	Ambient temperature too high, direct solar radiation or, for C version, process temp. too high.
S coil temperature	Upper limit for the permissible coil temperature has been exceeded. No message if coil broken/bridged.	Process and ambient temperature too high.
S overflow counter 1	This is counter 1 or FB2 (with Profibus). Counter has overrun and started again at zero.	
S overflow counter 2	This is counter 2 or FB3 (with Profibus). Counter has overrun and started again at zero.	
S backplane invalid	The data record on the backplane is invalid. The CRC check has revealed a fault.	No data can be loaded from the backplane when the electronics are replaced. Replace housing.

Simulation of the measured values

Messages on the display	Description	Actions
Status: C _ _ _ _ _	**Output values partially simulated or fixed**	**Maintenance required.**
C checks in progress	Test mode of the device. Measured values are possibly simulated values or values with fixed settings.	Message depending on the situation via HART® or FDT.
Test sensor	Test function of the measuring sensor electronics active.	
Field bus simulation	Values on the field bus interface foundation are simulated.	

Information

Messages on the display	Description	Actions
Status: I _ _ _ _ _	**Information (current measurement OK)**	
I counter 1 stopped	This is counter 1 or FB2 (with Profibus). The counter has stopped.	If counter to continue counting, activate "yes" in Fct. C2.y.9 (Start counter).
I counter 2 stopped	This is counter 2 or FB3 (with Profibus). The counter has stopped.	
I power fail	The device was not in operation for an unknown period of time, because the emergency current was switched off. This message is for information only.	Temporary line failure, during which counters stop counting.
I over range display 1	1st line on page 1 (2) of display limited by filter setting.	Menu display Fct. C4.3 and/or C4.4, select meas. page 1 or 2 and increase values in functions C4.z.3 Meas. range and/or C4.z.4 Limitation
I backplane sensor	The sensor data on the backplane are not usable because they have been generated with an incompatible version.	
I backplane settings	The global settings on the backplane are not usable because they have been generated with an incompatible version.	
I backplane difference	The data on the backplane differ from the data in the display. If the data are usable, a dialogue is indicated in the display.	
I write cycles overfl.	The maximum number of write cycles of the EEPROM or FRAMS on the Profibus DP PCB has been exceeded.	
I baudrate search	The baudrate of the Profibus DP interface is searched for.	
I no data exchange	There is no data exchange between the signal converter and the Profibus.	
I conductivity off	Conductivity measurement switched off.	Changing of settings in Fct. C1.3.1.
I diagnosis channel off	Diagnosis value switched off.	Changing of settings in Fct. C1.3.17.

7.1 Spare parts availability

The manufacturer adheres to the basic principle that operational spare parts for each flowmeter or each important accessory part will be kept available for period of 10 (ten) years after delivery of the last production run for that device.

Operational spare parts are defined as parts that are subject to faults in normal operation.

7.2 Availability of services

The manufacturer offers a range of services to support the customer after expiration of the warranty. These include repair, technical support and training.



NOTE!
For more precise information, please contact your local representative.

7.3 Returning the device to the manufacturer

7.3.1 General information

This device has been carefully manufactured and tested. If installed and operated in accordance with these operating instructions, it will rarely present any problems.



CAUTION!
Should you nevertheless need to return a device for inspection or repair, please pay strict attention to the following points:

- *Due to statutory regulations on environmental protection and safeguarding the health and safety of our personnel, manufacturer may only handle, test and repair returned devices that have been in contact with products without risk to personnel and environment.*
- *This means that the manufacturer can only service this device if it is accompanied by the following certificate (see next section) confirming that the device is safe to handle.*



CAUTION!
If the device has been operated with toxic, caustic, flammable or water-endangering products, you are kindly requested:

- *to check and ensure, if necessary by rinsing or neutralizing, that all cavities are free from such dangerous substances,*
- *to enclose a certificate with the device confirming that is safe to handle and stating the product used.*

7.3.2 Form (for copying) to accompany a returned instrument

Company:		Address:
Department:		Name:
Tel. no.:		Fax no.:
Manufacturer's order no. or serial no.:		
The device has been operated with the following medium:		
This medium is:		water-hazardous
		toxic
		caustic
		flammable
		We checked that all cavities in the device are free from such substances.
		We have flushed out and neutralized all cavities in the device.
We hereby confirm that there is no risk to persons or the environment through any residual media contained in the device when it is returned.		
Date:		Signature:
Stamp:		

7.4 Disposal



CAUTION!
Disposal must be carried out in accordance with legislation applicable in your country.

8.1 Technical data

Measuring system

Measurement principle	Faraday's law of induction
Function	Continuous measurement of current volume flow, flow velocity, conductivity, mass flow (at constant density), coil temperature of the measuring sensor
Modular construction	The measurement system consists of a measuring sensor and a signal converter
Signal converter	
Compact version (C)	IFC 100 C (0° & 45° version)
Remote version (W)	IFC 100 W
Measuring sensor	
OPTIFLUX 1000	IFC 100 C & W: DN10...150 / 3/8"...6"
OPTIFLUX 2000	IFC 100 C & W: DN25...1200 / 1"...48"
OPTIFLUX 4000	IFC 100 C: DN2.5...1200 / 1/10"...48"; IFC 100 W: DN10...1200 / 3/8"...48";
OPTIFLUX 5000	IFC 100 C: DN2.5...250 / 1/10"...12"; IFC 100 W: DN10...250 / 3/8"...12"
OPTIFLUX 6000	IFC 100 C: DN2.5...150 / 1/10"...6"; IFC 100 W: DN10...150 / 3/8"...6"
Communication	
Outputs	Current (incl. HART®), pulse, frequency, status output and/or limit switch
Counter	2 internal counters with a max. of 8 counter places (e.g. for counting volume and/or mass units)
Verification	Integrated verification, diagnosis functions: flowmeter, empty pipe detection, stabilization
Display and user interface	
Graphic display	LC display, backlit white; size: 128x64 pixels, corresponds to 59x31 mm = 2.32"x1.22"
Display functions	2 measured value pages, 1 status page, 1 graphic page (measured values and depictions adjustable as required)
Units	Metric, British and US units selectable as required from lists for volume / mass flow and counting, flow speed, electrical conductivity, temperature
Language of display texts	English, French, German (others on request)
Operating elements	4 keys for operator control of the signal converter without opening the housing

Measuring accuracy

Maximum measuring error	±0.3% of the measured value ±1 mm/s, depending on the measuring sensor (see accuracy curves)
Repeatability	±0.1%

Operating conditions

Temperature	
Process temperature	See also data sheet for the measuring sensor
Ambient temperature	-40…+65°C / -40…+149°F (ambient temperature 55°C / 131°F and higher: protect electronics against self-heating, because an increase in the electronics temperature in 10°C / 50°F steps leads to a corresponding reduction of the electronics' service life by a factor of two.)
Storage temperature	-50…+70°C / -58…+158°F
Electrical conductivity	
All media except for water	Min. 5 µS/cm (see also data sheet for the measuring transformer)
Water	Min. 20 µS/cm

Materials

Die-cast aluminium (polyurethane-coated)	Standard

Electrical connection

Voltage	Standard: 100…230 VAC (-15% / +10%), 50/60 Hz
	Option 1: 24 VDC (-55% / +30%)
	Option 2: 24 VAC/DC (AC: -15% / +10%; DC: -25% / +30%)
Power consumption	Standard: 8 VA
	Option 1: 4 W
	Option 2: AC 8 VA; DC: 4 W
Signal cable	Only for remote versions
A: type DS 300	Max. length: 600 m / 1950 ft (depending on electrical conductivity and measuring sensor version)
Cable entries	Standard: M20 x 1.5
	Option: ½" NPT, PF ½

Outputs

Current output		
Function	Measurement of volume and mass (at constant density), HART® communication	
Settings	**Without HART®**	**With HART®**
	Q = 0%: 0…15 mA	Q = 0%: 4…15 mA
	Q = 100%: 10…21.5 mA	Q = 100%: 10…21.5 mA
	Error identification: 0…22 mA	Error identification: 3.5…22 mA
Operating data		
Active	$U_{int,nom}$ = 24 VDC I ≤ 22 mA R_L ≤ 750 Ω	
Passive	U_{ext} ≤ 32 VDC I ≤ 22 mA U_0 ≤ 2 V at I = 22 mA	
Pulse or frequency output		
Function	Can be set as a pulse output (e.g.- for volume or mass counting) or frequency output	
Settings	For Q = 100%: 0.01...10000 pulses per second or pulses per unit volume	
	Pulse width: setting automatic, symmetric or fixed (0.05...2000 ms)manual	
Operating data		
Passive	U_{ext} ≤ 32 VDC	
	100 Hz < f_{max} ≤ 10 kHz: I ≤ 20 mA open: I ≤ 0.1 mA at U_{ext} = 5 V I ≤ 0.5 mA at U_{ext} = 24 V I ≤ 0.7 mA at U_{ext} = 32 V closed: U_0 ≤ 0.8 V at I = 1 mA U_0 ≤ 1.5 V at I = 10 mA U_0 ≤ 3.5 V at I = 100 mA f ≤ 1 kHz: R_L ≤ 10 kΩ f ≤ 10 kHz: R_L ≤ 2 kΩ	

Status output / limit switch	
Function and settings	Settable as automatic measuring range change, indicator for direction of flow, overflow, error, operating point or empty pipe detection
	Valve control with activated dosing function
	Status and/or control: ON or OFF
Operating data	
Passive	$U_{ext} \leq 32$ VDC $I \leq 100$ mA open: $I \leq 0.05$ mA at $U_{ext} = 32$ VDC closed: $U_0 \leq 0.2$ V at I = 10 mA $U_0 \leq 2$ V at I = 100 mA
Low-flow cutoff	
On	0...±9.999 m/s; 0...20.0%, settable in 0.1% steps, separately for each current and pulse output
Off	0...±9.999 m/s; 0...19.0%, settable in 0.1% steps, separately for each current and pulse output
Time constant	
Function	Can be set together for all flow indicators and outputs, or separately for: current, pulse and frequency output, and for limit switches and the 2 internal counters
Time setting	0...100 seconds, settable in 0.1 second steps

Approvals

Hazardous areas	
Non-Ex	Standard
EEx - Zone 1/2	In preparation
SAA version Ex Zone 1/2	In preparation
TIIS - Zone 1/2	In preparation
Protection category to IEC 529 / EN 60529	
All versions	IP 66 / 67 (corresponds to NEMA 4X/6)

8.2 Flow tables

Flow rate in m/s and m^3/h

	$Q_{100\ \%}$ in m^3/h			
v [m/s]	0.3	1	3	12
DN [mm]	Min. flow	Nominal flow		Max. flow
2.5	0.01	0.02	0.05	0.21
4	0.01	0.05	0.14	0.54
6	0.03	0.10	0.31	1.22
10	0.08	0.28	0.85	3.39
15	0.19	0.64	1.91	7.63
20	0.34	1.13	3.39	13.57
25	0.53	1.77	5.30	21.21
32	0.87	2.90	8.69	34.74
40	1.36	4.52	13.57	54.29
50	2.12	7.07	21.21	84.82
65	3.58	11.95	35.84	143.35
80	5.43	18.10	54.29	217.15
100	8.48	28.27	84.82	339.29
125	13.25	44.18	132.54	530.15
150	19.09	63.62	190.85	763.40
200	33.93	113.10	339.30	1357.20
250	53.01	176.71	530.13	2120.52
300	76.34	254.47	763.41	3053.64
350	103.91	346.36	1039.08	4156.32
400	135.72	452.39	1357.17	5428.68
450	171.77	572.51	1717.65	6870.60
500	212.06	706.86	2120.58	8482.32
600	305.37	1017.90	3053.70	12214.80
700	415.62	1385.40	4156.20	16624.80
800	542.88	1809.60	5428.80	21715.20
900	687.06	2290.20	6870.60	27482.40
1000	848.22	2827.40	8482.20	33928.80
1200	1221.45	3421.20	12214.50	48858.00

Flow rate in ft/s and gallons/min

	$Q_{100\ \%}$ in .US gallons/min			
v [ft/s]	1	3.3	10	40
DN [inch]	Min. flow	Nominal flow		Max. flow
1/10	0.02	0.09	0.23	0.93
1/8	0.06	0.22	0.60	2.39
1/4	0.13	0.44	1.34	5.38
3/8	0.37	1.23	3.73	14.94
1/2	0.84	2.82	8.40	33.61
3/4	1.49	4.98	14.94	59.76
1	2.33	7.79	23.34	93.36
1.25	3.82	12.77	38.24	152.97
1.5	5.98	19.90	59.75	239.02
2	9.34	31.13	93.37	373.47
2.5	15.78	52.61	159.79	631.16
3	23.90	79.69	239.02	956.09
4	37.35	124.47	373.46	1493.84
5	58.35	194.48	583.24	2334.17
6	84.03	279.97	840.29	3361.17
8	149.39	497.92	1493.29	5975.57
10	233.41	777.96	2334.09	9336.37
12	336.12	1120.29	3361.19	13444.77
14	457.59	1525.15	4574.93	18299.73
16	597.54	1991.60	5975.44	23901.76
18	756.26	2520.61	7562.58	30250.34
20	933.86	3112.56	9336.63	37346.53
24	1344.50	4481.22	13445.04	53780.15
28	1829.92	6099.12	18299.20	73196.79
32	2390.23	7966.64	23902.29	95609.15
36	3025.03	10082.42	30250.34	121001.37
40	3734.50	12447.09	37346.00	149384.01
48	5377.88	17924.47	53778.83	215115.30

8.3 Accuracy

Reference conditions

- Medium: water
- Temperature: 20°C / 68°F
- Pressure: 1 bar / 14.5 psi
- Inlet run: ≥ 5 DN

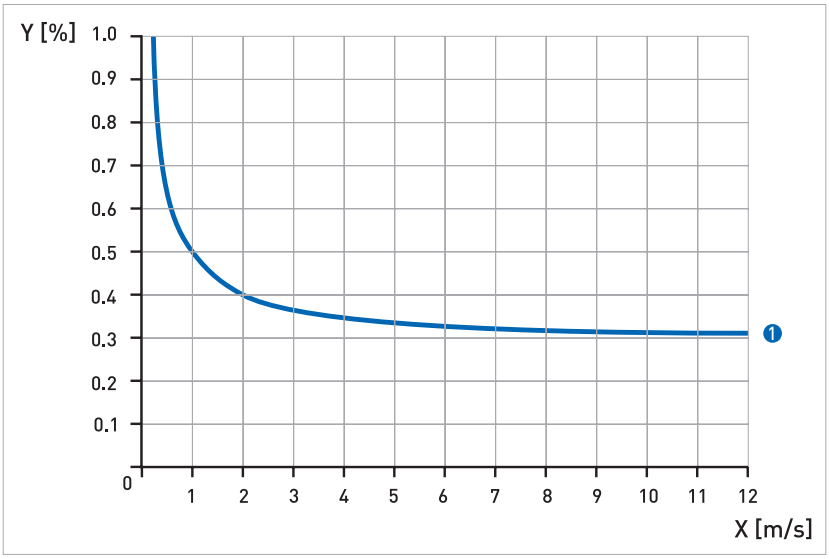

- X [m/s]: flow velocity
- Y [%]: deviation from the actual measured value (mv)

	DN [mm]	DN [inch]	Accuracy	Curve
OPTIFLUX 2100 / 4100 / 5100 / 6100	10…1200	3/8…48	0.3% of mv +1 mm/s	1
OPTIFLUX 1100	10…150	3/8…6	0.4% of mv +1 mm/s	as 1 + 0.1%
OPTIFLUX 4100 / 5100 / 6100	2.5…6	1/10…1/4		

8.4 Dimensions and weights

8.4.1 Housing

Wall-mounted version

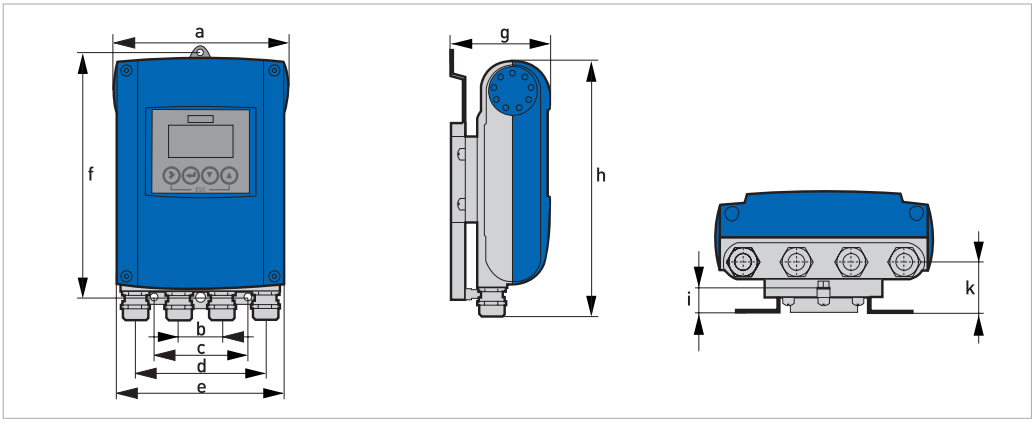

Dimensions and weight in mm and kg

	Dimensions [mm]										Weight [kg]
	a	b	c	d	e	f	g	h	i	k	
Wall-mounted version	161	40	87.2	120	155	241	95.2	257	19.3	39.7	Std: 1.9 Ex: 2.4

Dimensions and weight in inches and lbs

	Dimensions [inches]										Weight [lbs]
	a	b	c	d	e	f	g	h	i	k	
Wall-mounted version	6.34	1.57	3.43	4.72	6.10	9.50	3.75	10.12	0.76	1.56	Std: 4.2 Ex: 5.3

Compact 0° version

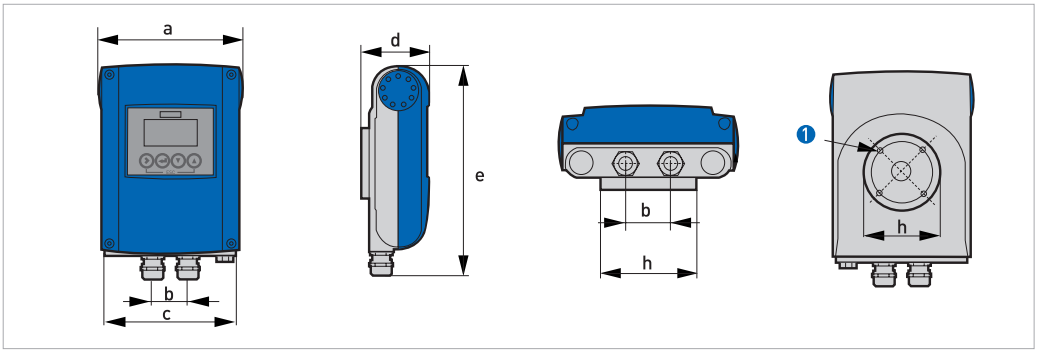

1 4 x M 6

Dimensions and weight in mm and kg

	Dimensions [mm]								Weight [kg]
	a	b	c	d	e	f	g	h	
0° version	161	40	155	81.5	257	-	-	Ø72	Std: 1.9 Ex: 2.4

Dimensions and weight in inches and lbs

	Dimensions [inches]								Weight [lbs]
	a	b	c	d	e	f	g	h	
0° version	6.34	1.57	6.1	3.21	10.12	-	-	Ø2.83	Std: 4.2 Ex: 5.3

Compact 45° version

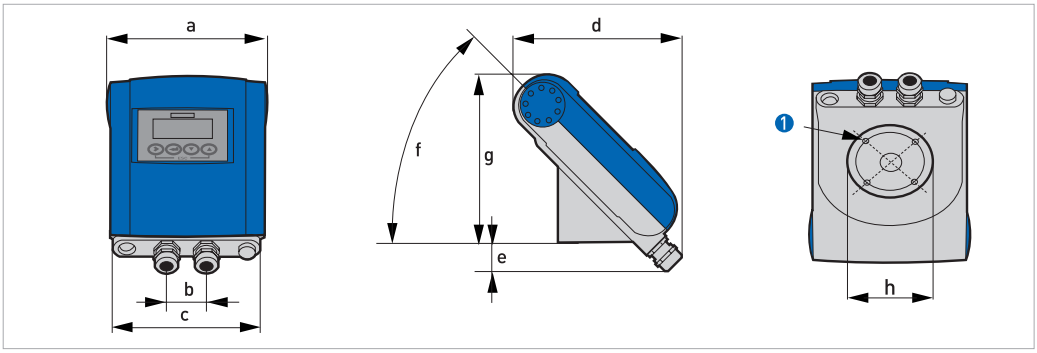

1 4 x M 6

Dimensions and weight in mm and kg

	Dimensions [mm]								Weight [kg]
	a	b	c	d	e	f	g	h	
45° version	161	40	155	184	27.4	45°	186	Ø72	Std: 2.1 Ex: 2.6

Dimensions and weight in inches and lbs

	Dimensions [inches]								Weight [lbs]
	a	b	c	d	e	f	g	h	
45° version	6.34	1.57	6.10	7.24	1.08	45°	7.32	Ø2.83	Std: 4.6 Ex: 5.7

8.4.2 Mounting plate, wall-mounted version

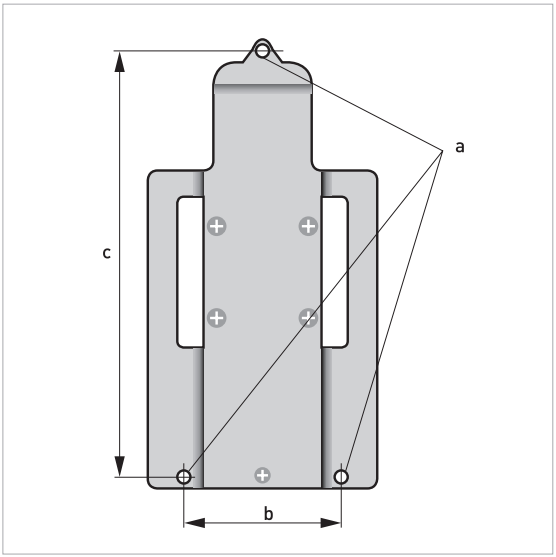

Dimensions in mm and inches

	[mm]	[inches]
a	Ø6.5	Ø0.26
b	87.2	3.4
c	241	9.5

KROHNE Product Overview

- Electromagnetic flowmeters
- Variable area flowmeters
- Mass flowmeters
- Ultrasonic flowmeters
- Vortex flowmeters
- Flow controllers
- Level measuring instruments
- Pressure gauges
- Temperature measuring instruments
- Water solutions & analysis
- Oil and gas turnkey solutions

Addresses:

Germany

Northern sales office

KROHNE Messtechnik GmbH & Co. KG
Bremer Str. 133
D-21073 Hamburg
Phone:+49 (0)40 767 3340
Fax:+49 (0)40 767 33412
nord@krohne.de
ZIP code: 10000 - 29999, 49000 - 49999

Western and middle sales office

KROHNE Messtechnik GmbH & Co. KG
Ludwig-Krohne-Straße
D-47058 Duisburg
Phone:+49 (0)203 301 416
Fax:+49 (0)203 301 10416
west@krohne.de
ZIP code: 30000 - 34999, 37000 - 48000, 50000 - 53999, 57000 - 59999, 98000 - 99999

Southern sales office

KROHNE Messtechnik GmbH & Co. KG
Landsberger Str. 392
D-81241 Munich
Phone:+49 (0)89 121 5620
Fax:+49 (0)89 129 6190
sued@krohne.de
ZIP code: 0 - 9999, 80000 - 89999, 90000 - 97999

Southwestern sales office

KROHNE Messtechnik GmbH & Co. KG
Rüdesheimer Str. 40
D-65239 Hochheim/Main
Phone: +49(0)6146) 827 30
Fax:+49 (0)6146 827 312
rhein-main@krohne.de
ZIP code: 35000 - 36999, 54000 - 56999, 60000 - 79999

Instrumentation and control equipment catalog

TABLAR Messtechnik GmbH
Ludwig-Krohne-Straße 5
D-47058 Duisburg
Phone:+49 (0)2 03 305 880
Fax:+49 (0)2 03 305 8888
kontakt@tablar.de www.tablar.de

KROHNE sales companies

International

Australia
KROHNE Australia Pty Ltd
Quantum Business Park 10/287
Victoria Rd Rydalmere NSW 2116
Phone: +61 2 8846 1700
Fax: +61 2 8846 1755
krohne@krohne.com.au

Austria
KROHNE Gesellschaft m.b.H.
Modecenterstraße 14
A-1030 Vienna
Phone:+43 (0)1/203 45 32
Fax:+43 (0)1/203 45 32 99
info@krohne.at

Belgium
KROHNE Belgium N.V.
Brusselstraat 320
B-1702 Groot Bijgaarden
Phone:+32 (0)2 4 66 00 10
Fax:+32 (0)2 4 66 08 00
krohne@krohne.be

Brazil
KROHNE Conaut Controles Automaticos Ltda.
Estrada Das Águas Espraiadas, 230
C.P. 56 06835 - 080 EMBU - SP
Phone:+55 (0)11-4785-2700
Fax:+55 (0)11 4785-2768
conaut@conaut.com.br

China
KROHNE Measurement Instruments (Shanghai) Co. Ltd., (KMIC)
Room 1501
1033 Zhaojiabang Road
Shanghai 200030
Phone: +86 21 6487 9611
Fax:+86 21 6438 7110
info@krohne-asia.com

Czech Republic
Krohne CZ, spol. s r.o.
Sobisická 156
63800 Brno
Phone: +420 (0)545.242 627
Fax: +420 (0)545 220 093
brno@krohne.cz

France
KROHNE S.A.S.
Les Ors BP 98
F-26103 ROMANS Cedex
Phone:+33 (0)4 75 05 44 00
Fax:+33 (0)4 75 05 00 48
info@krohne.fr

Great Britain
KROHNE Ltd.
Rutherford Drive
Park Farm Industrial Estate
Wellingborough
Northants NN8 6AE
Phone:+44 (0)19 33 408 500
Fax:+44 (0)19 33 408 501
info@krohne.co.uk

CIS
Kanex KROHNE Engineering AG
Business-Centre Planeta
Office 404 ul.
Marxistskaja 3
109147 Moscow/Russia
Phone:+7 (0)095 911 7165
Fax:+7 (0)095 742 8873
krohne@dol.ru

India
Krohne Marshall Ltd.
A-34/35, M.I.D.C. Industrial Area,
H-Block
Pimpri Poona 411018
Phone:+91 (0)202 744 2020
Fax:+91 (0)202 744 2020
pcu@vsnl.net

Iran
KROHNE Liaison Office
North Sohrevardi Ave. 26,
Sarmad St., Apt. #9
Tehran 15539
Phone: +9821 8874 5973
Fax: +9821 8850 1268
krohne@krohneiran.com

Italy
KROHNE Italia Srl.
Via V. Monti 75
I-20145 Milan
Phone:+39 02 4300 661
Fax:+39 02 4300 6666
info@krohne.it

Korea
KROHNE Korea
Room 508 Miwon Bldg 43
Yoido-Dong Youngdeungpo-Ku
Seoul, Korea
Phone: 00-82-2-782-1900
Fax: 00-82-2-780-1749
mail@krohne.co.kr

Netherlands
KROHNE Nederland B.V.
Kerkeplaat 14
NL-3313 LC Dordrecht
Phone:+31 (0)78 630 6200
Fax:+31 (0)78 630 6405
Service Direct: +31 (0)78 630 6222
info@krohne.nl

Norway
KROHNE Norway A.S.
Ekholtveien 114
NO-1521 Moss
Phone:+47 (0)69 264 860
Fax:+47 (0)69 267 333
postmaster@krohne.no

Poland
KROHNE Polska Sp.z.o.o.
ul. Stary Rynek Oliwski 8a
80-324 Gdansk
Phone: +48 (0)58 520 9211
Fax.:+48 (0)58 520 9212
info@krohne.pl

Switzerland
KROHNE AG
Uferstr. 90
CH-4019 Basel
Phone:+41 (0)61 638 30 30
Fax:+41 (0)61 638 30 40
info@krohne.ch

Singapore
Tokyo Keiso - KROHNE (Singapore) Pte. Ltd.
14, International Business Park,
Jurong East
Chiyoda Building, #01-01/02
Singapore 609922
Phone: (65) 6567 4548
Fax : (65) 6567 9874
tks@tokyokeiso-krohne.com.sg

Republic of South Africa
KROHNE Pty. Ltd.
Bushbock Close
Corporate Park South
Midrand, Gauteng
P.O. Box 2069
Midrand, 1685
Tel.: +27 (0)11 314 1391
Fax: +27 (0)11 314 1681
midrand@krohne.co.za

Spain
I.I. KROHNE IBERIA, S.r.l.
Poligono Industrial Nilo
Calle Brasil, nº. 5
28806 Alcalá de Henares Madrid
Phone: +34 (0)91 883 2152
Fax: +34 (0)91 883 4854
krohne@krohne.es

USA
KROHNE, Inc.
7 Dearborn Road
Peabody, MA 01960
Phone: +1 (800) FLOWING
Phone: +1 (978) 535 6060 (in MA)
info@krohne.com

Representatives

Algeria
Argentina
Cameroon
Canada
Chile
Columbia
Croatia
Denmark
Ecuador
Egypt
Finland
Gabon
Ghana
Greece
Hong Kong
Hungary
Indonesia
Iran
Ireland
Israel
Ivory Coast
Japan
Jordan
Kuwait
Libya
Lithuania
Malaysia
Mauritius
Mexico
Morocco
New Zealand
Peru
Portugal
Romania
Saudi Arabia
Senegal
Slovakia
Slovenia
Sweden
Taiwan
Thailand
Tunisia
Turkey
Venezuela
Yugoslavia

Other countries

KROHNE Messtechnik GmbH & Co. KG
Ludwig-Krohne-Str. 5
D-47058 Duisburg
Phone:+49 (0)203 301 0
Fax:+49 (0)203 301 389
export@krohne.de

© KROHNE 01/2008
4000041002 - MA IFC 100 R02 en
Subject to change without notice

KROHNE

LEFT BLANK

COAGULATION PH METER

LEFT BLANK

Technology For Solutions

GLI International

Data Sheet PRO-P3/1001
Supersedes PRO-P3/501

PRO-series pH/ORP Transmitter

(Model PRO-P3 measures pH or ORP)



CE

Certified Compliant to
European Community Standards

■ **Multiple Measurements.**
The PRO-P3 transmitter can be selected to measure pH or ORP (oxidation reduction potential). Measured pH and temperature values can be displayed separately or together. The corresponding 4-20 mA analog output can also be shown.

■ **Versatile Hookup Capability.**
PRO-series transmitters can be wired in a two, three or four-wire hookup arrangement to meet your application requirement.

■ **Compact Size and NEMA 4X Universal Mounting.**
The compact PRO-series transmitter can be panel, wall, pipe or integral sensor mounted.

■ **Electromagnetic Conformance.**
All PRO-series transmitters exceed U.S. and meet European standards for EMI and RFI emissions and immunity.

■ **Multiple Language Capability.**
All screens can be selected for display in English or Spanish. (Different languages such as French or German may also be substituted.)

■ **"Menu-guided" Operation.**
The simple keypad and logical menu structure make this transmitter easy to use. Menu screens guide you through setup, operation, calibration, and test/maintenance functions.

■ **Passcode-protected Access.**
For security, use the passcode feature to restrict configuration and calibration settings to only authorized personnel.

■ **Isolated 4-20 mA Output.**
The isolated 4-20 mA analog output can represent the measured pH or temperature (or ORP). During calibration, the analog output is automatically held at the last measured value and, upon completion, returned to its active state.

■ **Versatile Sensor Capability.**
The PRO-P3 transmitter can be used with any GLI Differential Technique pH or ORP sensor, or any conventional combination pH or ORP electrode.

■ **Auto/Manual Temperature Compensation.**
Automatic temperature compensation is provided when using NTC 300 ohm thermistor, Pt 1000 RTD or Pt 100 RTD temperature elements. For applications requiring fixed temperature compensation, the PRO-P3 can be manually set to a desired temperature.

■ **Simple Interactive Diagnostics.**
Built-in diagnostics continuously test transmitter and sensor operation.

■ **OEM Versions Available.**
PRO-series transmitters can be packaged or configured to accommodate OEM-specific needs.

Specifications

Operational:

Display..... Two-line by 16 character LCD

NOTE: *The measured pH (or ORP) and temperature can be separately displayed or shown together on one screen. The corresponding 4-20 mA analog output value can also be shown.*

Measurement	Selectable Ranges
pH	-2.0 to 14.0 pH or -2.00 to 14.00 pH
ORP	-2100 to +2100 mV
Temperature	-4.0 to +392.0°F or -20.0 to +200.0°C
Analog Outputs	4.00-20.00 mA

Ambient Conditions..... Operation: -4 to +140°F (-20 to +60°C); 0 to 95% relative humidity, non-condensing
Storage: -22 to +158°F (-30 to +70°C); 0 to 95% relative humidity, non-condensing

Temperature Compensation ..... Automatic from 14.0 to 230.0°F (-10.0 to +110.0°C) with selection for NTC 300 ohm thermistor, Pt 1000 ohm RTD or Pt 100 ohm RTD temperature element, or manually fixed at a user-entered temperature; additional selectable temperature correction factors (ammonia, morpholine or user-defined pH/°C linear slope) available for pure water automatic compensation from 0.0-50.0°C

Sensor-to-Analyzer Distance:
- GLI Differential Technique Sensor ..... 3000 ft. (914 m) maximum
- Conventional Combination Electrode with Preamp ..... 985 ft. (300 m) maximum
- Conventional Combination Electrode without Preamp ..... 100 ft. (30 m) maximum with electrode cable capacitance of less than 30 pF/foot

Power Requirements ..... Two-wire Hookup: 16-30 VDC; Three-wire Hookup: 14-30 VDC*; Four-wire Hookup: 12-30 VDC*
(Class 2 Power Supply) *16 VDC minimum with RS-485 serial communication.

Calibration Methods:
- 2-point Buffer (pH only) ..... Automatic calibration and buffer recognition using two buffers from a selected buffer set*.
- 1-point Buffer (pH only) ..... Automatic calibration and buffer recognition using one buffer from a selected buffer set*.

**Buffer Sets: 4.00, 7.00, and 10.00 or DIN standard (1.09, 4.65, 6.79, 9.23, and 12.75)*

NOTE: *When using buffers that are not included in either buffer set, calibrate using only the Sample method (1 or 2).*

- 2-point Sample (pH only) ..... Enter two known sample values (determined by laboratory analysis or comparison reading) or two known pH buffer values.
- 1-point Sample (pH and ORP) ..... Enter one known sample value (determined by laboratory analysis or comparison reading), or one known pH buffer value (or, for ORP measurement, one known reference solution value)

Analog Output..... Isolated 4-20 mA output with 0.004 mA (12-bit) resolution

NOTE: *Output can represent the measured pH or temperature (or ORP). Parameter values can be entered to define the endpoints at which the 4 mA and 20 mA output values are desired (range expand). During calibration, the analog output is automatically held at the last measured value and, upon completion, returned to its active state.*

Maximum Loop Load..... Dependent on power supply voltage, transmitter hookup arrangement, and wire resistance:

Maximum Permissible Loads							
Transmitter Hookup Arrangement	Power Supply Voltage						
	12 VDC	14 VDC	16 VDC	20 VDC	24 VDC	28 VDC	30 VDC
Two-wire Hookup	- - - -	- - - -	100 ohms	300 ohms	500 ohms	700 ohms	800 ohms
Three-wire Hookup	- - - -	500 ohms	600 ohms	800 ohms	1000 ohms	1200 ohms	1300 ohms
Four-wire Hookup	400 ohms	500 ohms	600 ohms	800 ohms	1000 ohms	1200 ohms	1300 ohms

Memory (non-volatile)..... All user settings are retained indefinitely in memory without battery backup

EMI/RFI Conformance..... Exceeds U.S. and meets European standards for conducted and radiated emissions and immunity; certified CE compliant for applications as specified by EN 50081-2 for emissions and EN 50082-2 for immunity

Electrical Certifications:
- General Purpose (pending) ..... UL, C-UL, FM, and CENELEC
- Division 2 (pending) ..... UL, C-UL, and FM: Groups A, B, C, D, F, and G

Analyzer Performance(Electrical, Analog Outputs):

Accuracy**..... ± 0.1% of span
Sensitivity**..... ± 0.05% of span
Repeatability**..... ± 0.05% of span
Temperature Drift**..... Zero and Span: ± 0.02% of span per °C
Response Time ..... 1-60 seconds to 90% of value upon step change (with output filter setting of zero)

**These performance specifications are typical at 25°C.

Mechanical:

Enclosure..... Polycarbonate; NEMA 4X general purpose; choice of included mounting hardware
Mounting Configurations..... Panel, wall, pipe or integral sensor mounting
Dimensions..... With Back Cover: 3.75 in. W x 3.75 in. H x 2.32 in. D (95 mm W x 95 mm H x 60 mm D)
Without Back Cover for Panel Mount: 3.75 in. W x 3.75 in. H x 0.75 in. D (95 mm W x 95 mm H x 19 mm D)
Net Weight..... 10 oz. (280 g) approximately

Ordering Information

MODEL NUMBER (see Notes 1 and 3)

- **PRO-P3A** pH/ORP transmitter with wall/pipe/integral sensor mount kit (see Note 2)
- **PRO-P3B** pH/ORP transmitter with panel mount kit (includes gasket, retainer plate, and four screws)
- **PRO-P3C** Basic pH/ORP transmitter (without mounting hardware -- electronics only)

RESERVED CATEGORY

EQUIPMENT TAGGING (specify tag data)

- **N** None
- **P** Paper
- **S** Stainless steel

1 **Product Number**

Choose item from each category.

Ordering Notes:

1. The standard on-screen languages for PRO-series transmitter operation are English and Spanish. A different language (French, German, etc.) may be substituted for Spanish. Please specify the desired language.
2. This mounting kit includes all hardware needed to wall, pipe or integral sensor mount the transmitter. When integrally mounting the transmitter onto a GLI sensor, please specify the sensor part number with a "PRO1" suffix to ensure a correct sensor cable length and coupling. When the coupling is not required (replacement sensor), please specify the sensor part number with a "PRO2" suffix.
3. Each transmitter is supplied with a CD-ROM containing operating manuals (in PDF-file format) for all of the PRO-series transmitters. Paper manuals are also available (see Accessories at right).

Accessories (order separately):

- **Retrofit Wall/Pipe/Integral Sensor Mount Kit 1000A3457-001**

  This hardware kit enables an existing panel-mounted PRO-series transmitter to be wall, pipe or integral sensor mounted.

- **Retrofit Panel Mount Kit 1000A3455-001**

  This hardware kit enables an existing wall, pipe or integral sensor-mounted PRO-series transmitter to be panel mounted.

- **Couplings to Retrofit Transmitter onto Sensor**

Installed Sensor	Required Coupling	
	Part Number	Size
pHD™-series:		
Convertible (tee mount)	3P2120-125	1 x 1/2-inch
Convertible (union mount)	None required	- - - -
Sanitary	3P2120-125	1 x 1/2-inch
Insertion	Not available	- - - -
LCP-series:		
Convertible	3P2120-130	1-1/2 x 1/2-inch
Union mount	3P2120-130	1-1/2 x 1/2-inch
PC-series 3/4-inch Combination	3P2120-122	3/4 x 1/2-inch

- **Operating Manual No. PRO-P3**

  A paper booklet operating manual for the PRO-P3 pH/ORP transmitter.

pH and ORP Sensors

For various styles of GLI pH and ORP sensors, refer to these data sheets for complete details: PD, LRE, 6000P0, FTA, HPW, PC or PR6300M.

Engineering Specification

1. The microprocessor-based transmitter shall accept any GLI 5-wire Differential Technique pH or ORP sensor, or any conventional combination pH or ORP electrode.
2. The transmitter shall measure pH and process temperature or ORP.
3. The transmitter shall be operable in multiple languages.
4. The transmitter shall have a two-line by 16 character LCD. It shall display measured pH and temperature separately or together on a single screen. The corresponding 4-20 mA analog output value shall also be shown.
5. The transmitter shall have these calibration methods:
   a) 2-point Buffer Method (pH only): Automatic calibration and buffer recognition using two buffers from a selected buffer set.
   b) 1-point Buffer Method (pH only): Automatic calibration and buffer recognition using one buffer from a selected buffer set.
   c) 2-point Sample Method (pH only): Enter two known sample values (determined by laboratory analysis or comparison reading) or two known pH buffer values.
   d) 1-point Sample Method (pH and ORP): Enter one known sample value (determined by laboratory analysis or comparison reading) or one known pH buffer value (or, for ORP measurement, one known reference solution value).
6. The transmitter shall have a passcode to restrict configuration and calibration settings only to authorized personnel.
7. The transmitter shall have two temperature compensation methods:
   a) Automatic: When the pH sensor has an NTC 300 ohm thermistor, Pt 1000 RTD or Pt 100 RTD temperature element, the pH measurement is automatically compensated for process temperature.
   b) Manual: The transmitter can be set to compensate the pH measurement to a fixed, user-entered temperature.
8. The transmitter shall have user-test diagnostics for transmitter and sensor operation without requiring special test equipment.
9. The transmitter shall have an RS-485 data communication port.
10. The transmitter shall have an isolated 4-20 mA analog output that can be assigned to represent the measured pH or temperature (or ORP). Parameter values can be entered to define the endpoints at which the 4 mA and 20 mA analog output values are desired (range expand). During calibration, the analog output is automatically held at the last measured value and, upon completion, returned to its active state.
11. The transmitter shall be GLI International, Inc. Model PRO-P3.

Mounting Configurations

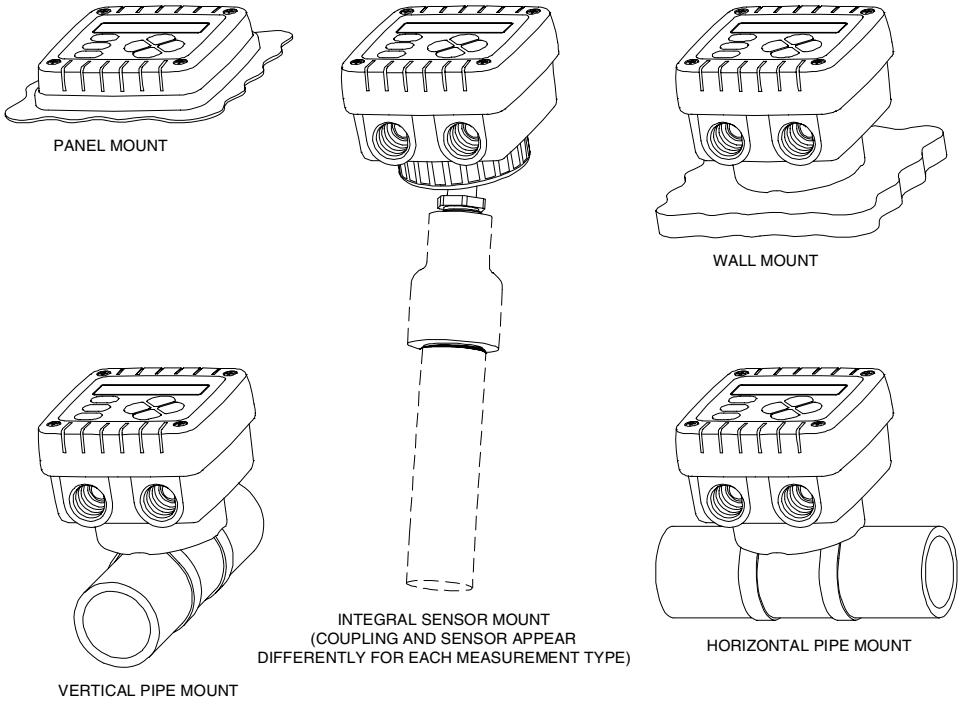

GLI pHD™ Differential pH and ORP Sensors
(for use with PRO-P3 Transmitter

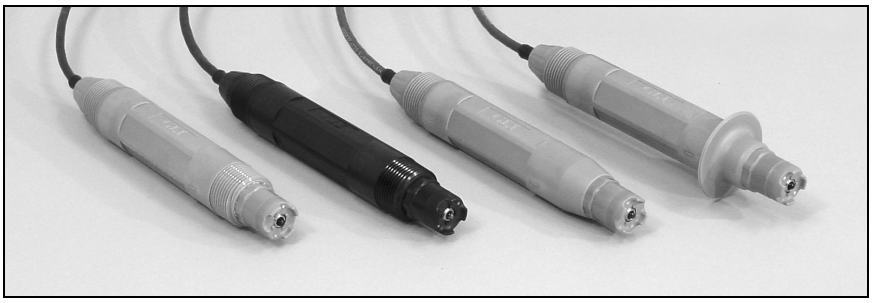

For complete details and specifications, refer to Data Sheet PD.

Data Sheet PRO-P3

Worldwide Headquarters and Sales:

GLI International, Inc.
9020 West Dean Road
Milwaukee, Wisconsin 53224
U.S.A.

Phone: [414] 355-3601
Fax: [414] 355-8346
E-mail: info@gliint.com
Web: www.gliint.com

Represented By:

In the interest of improving and updating its equipment, GLI reserves the right to alter specifications to equipment at any time.
A **Viridor Instrumentation** company

Differential pH and ORP Sensors



Hach Digital pHD sc sensors are available in convertible (PEEK® or Ryton®), insertion, and sanitary body styles. Three electrodes are used in these sensors to increase measurement accuracy and eliminate sensor ground loops.

Features and Benefits

Differential Electrode Measurement Technique

This field-proven technique uses three electrodes instead of the two normally used in conventional pH sensors. Process and reference electrodes measure the pH differentially with respect to a third ground electrode. The end result is unsurpassed measurement accuracy, reduced reference junction potential, and elimination of sensor ground loops. These sensors provide greater reliability, resulting in less downtime and maintenance.

Patented Technology

The former GLI, now a Hach Company brand, invented the Differential Electrode Technique for pH measurement in 1970. The pHD™ sensor series (U.S. Patent Number 6395158B1, dated May 28, 2002) takes this field-proven technology to a new level.

Replaceable Salt Bridge/Protector

The unique, replaceable salt bridge holds an extraordinary volume of buffer to extend the working life of the sensor by protecting the reference electrode from harsh process conditions. The salt bridge simply threads onto the end of the sensor if replacement is needed.

Built-in Encapsulated Preamp

Encapsulated construction protects the sensor's built-in preamp from moisture and humidity, ensuring reliable sensor operation. The preamp in the pHD analog sensor produces a strong signal, enabling the sensor to be located up to 1000 m (3280 ft.) from the analyzer.

Durable Body Materials

Both the digital and analog pH and ORP differential sensors feature a durable PEEK® body for chemical compatibility with most process solutions. For less aggressive solutions, Hach offers a Ryton® sensor in a convertible style for pH and ORP measurement. A sensor with a stainless steel body is available for immersion applications.

Digital Electronics Modules

Sensors are available with integral digital electronics or with a gateway module for high temperature (above 70°C) applications.

Versatile Mounting Styles

Sensors are available in four mounting styles—convertible, insertion, immersion, and sanitary. Please turn to page 5 for more information.

Full Featured "Plug and Play" sc100 Digital Controller

There's no complicated wiring or set up procedures with the Hach sc100 controller. Just plug in any Hach digital sensor and it's ready to use—it's "plug and play."

One or two sensors—Use the sc100 Digital Controller to receive data from up to two Hach digital sensors in any combination.

Communications—Multiple alarm/control schemes are available using three relays and two PID control outputs. Communications use analog 4-20 mA and digital MODBUS®/RS485, MODBUS®/RS232 protocols. (Other digital protocols are available. Contact your Hach representative for details.) Every sc100 controller is equipped with wireless communication through an infrared port.

Data logger—A built-in data logger collects measurement data, calibration, verification points, and alarm history for up to 6 months.

DW = drinking water WW = wastewater municipal PW = pure water / power
IW = industrial water E = environmental C = collections FB = food and beverage

Specifications*

pH Sensors

Most pH applications fall in the 2.5 to12.5 pH range. A Hach pHD sc Differential pH sensor with the wide-range glass process electrode performs exceptionally well in this range. Some industrial applications require accurate measurement and control below 2 or above 12 pH. In these special cases, please contact Hach Technical Support for further details.

Measuring Range
-2 to 14 pH

Sensitivity
± 0.01 pH

Stability
0.03 pH per 24 hours, non-cumulative

Operating Temperature
Digital Sensor: -5 to 70ºC (23 to 158ºF)
Analog Sensor with Digital Gateway: -5 to 105ºC (23 to 221ºF)
Immersion Sensor: 0 to 50ºC (32 to 122ºF)

Flow Rate
3 m (10 ft.) per second, maximum

Sensor Pressure/Temperature Limits
Digital: 6.9 bar at 70ºC (100 psi at 158ºF)
Analog: 6.9 bar at 105ºC (100 psi at 221ºF)

Built-in Temperature Element
NTC 300 ohm thermistor for automatic temperature compensation and analyzer temperature readout

Transmission Distance
100 m (328 ft.), maximum
1000 m (3280 ft.), maximum when used with a termination box

Sensor Cable (integral)
4 conductor cable with one shield and polyurethane jacket; rated to 105ºC (221ºF); 10 m (33 ft.) standard length

Wetted Materials
PEEK® or Ryton® (PVDF), salt bridge of matching material with Kynar® junction, glass process electrode, titanium ground electrode, and Viton® O-ring seals

(pH sensor with optional HF-resistant glass process electrode has 316 stainless steel ground electrode, and perfluoroelastomer wetted O-rings; consult factory for other available wetted O-ring materials)

ORP (Redox) Sensors

For best ORP measuring results in solutions containing zinc, cyanide, cadmium or nickel, Hach recommends using the pHD sc ORP sensor equipped with an optional gold electrode.

Measuring Range
-1500 to +1500 mV

Sensitivity
± 0.5 mV

Stability
2 mV per 24 hours, non-cumulative

Operating Temperature
Digital Sensor: -5 to 70ºC (23 to 158ºF)
Analog Sensor with Digital Gateway: -5 to 105ºC (23 to 221ºF)
Immersion Sensor: 0 to 50ºC (32 to 122ºF)

Flow Rate
3 m (10 ft.) per second, maximum

Sensor Pressure/Temperature Limits
Digital: 6.9 bar at 70ºC (100 psi at 158ºF)
Analog: 6.9 bar at 105ºC (100 psi at 221ºF)

Built-in Temperature Element
NTC 300 ohm thermistor for analyzer temperature readout only—no automatic temperature compensation necessary for ORP measurement

Transmission Distance
100 m (328 ft.), maximum
1000 m (3280 ft.), maximum when used with a termination box

Sensor Cable (integral)
4 conductor cable with one shield and polyurethane jacket; rated to 105ºC (221ºF); 10 m (33 ft.) standard length

Wetted Materials
PEEK® or Ryton® (PVDF), salt bridge of matching material with Kynar® junction, glass and platinum (or plastic and gold) process electrode, titanium ground electrode, and Viton® O-ring seals

**Specifications subject to change without notice.*

PEEK® is a registered trademark of ICI Americas, Inc.; Ryton® is a registered trademark of Phillips 66 Co.;
Kynar® is a registered trademark of Pennwalt Corp.; Viton® is a registered trademark of E.I. DuPont de Nemours + Co.

Engineering Specifications

PEEK® Sensor

1. The pH or ORP sensor shall be of Differential Electrode Technique design using two measuring electrodes to compare the process value to a stable internal reference standard buffer solution. The standard electrode shall have non-flowing and fouling-resistant characteristics.
2. The sensor shall have a hex-shaped body to facilitate mounting, and shall be constructed of PEEK® material for exceptional chemical resistance and mechanical strength. This material shall enable the sensor to be installed in metal fittings without leakage usually caused by heating and cooling cycles when dissimilar materials are threaded together.
3. The sensor shall have a:
   a) Convertible body style featuring 1-inch NPT threads on both ends to mount into a standard 1-inch pipe tee, into a Hach adapter pipe for union mounting with a standard 1-1/2 inch tee, or onto the end of a pipe for immersion into a vessel.
   b) Insertion body style featuring 1-inch NPT threads only on the cable end to mount into a Hach ball valve hardware assembly, enabling the sensor to be inserted into or retracted from the process without stopping the process flow.
   c) Sanitary body style featuring an integral 2-inch flange to mount into a Hach 2-inch sanitary tee. The sanitary body style sensor shall include a special cap and EDPM compound gasket for use with the Hach sanitary hardware.
4. The built-in electronics of the sensor shall be completely encapsulated for protection from moisture and humidity.
5. The sensor shall have a built-in preamplifier to enable the signal to be transmitted up to 100 m (328 ft.) with standard cabling and up to 1000 m (3280 ft.) with a termination box.
6. The sensor signal shall have an integral temperature sensor. The pH sensor shall automatically compensate measured values for changes in process temperature.
7. The ORP sensor shall include a titanium ground electrode (standard) to eliminate ground loop currents in the measuring electrodes.
8. The sensor shall be Hach Company Model pHD sc or pHD for pH or ORP measurement.

Ryton® Sensor

1. The pH or ORP sensor shall be of Differential Electrode Technique design using two measuring electrodes to compare the process value to a stable internal reference standard buffer solution. The standard electrode shall have non-flowing and fouling-resistant characteristics.
2. The sensor shall have a hex-shaped body to facilitate mounting, and shall be constructed of Ryton® material for exceptional chemical resistance and mechanical strength. This material shall enable the sensor to be installed in metal fittings without leakage usually caused by heating and cooling cycles when dissimilar materials are threaded together.
3. The sensor shall have a convertible body style featuring 1-inch NPT threads on both ends to mount into a standard 1-inch pipe tee, into a Hach adapter pipe for union mounting with a standard 1-1/2 inch tee, or onto the end of a pipe for immersion into a vessel.
4. The built-in electronics of the sensor shall be completely encapsulated for protection from moisture and humidity.
5. The sensor shall have a built-in preamplifier to enable the signal to be transmitted up to 100 m (328 ft.) with standard cabling and up to 1000 m (3280 ft.) with a termination box.
6. The sensor signal shall have an integral temperature sensor. The pH sensor shall automatically compensate measured values for changes in process temperature.
7. The ORP sensor shall include a titanium ground electrode (standard) to eliminate ground loop currents in the measuring electrodes.
8. The sensor shall be Hach Company Model pHD sc or pHD for pH or ORP measurement.

Stainless Steel Sensor

1. The pH or ORP sensor shall be of differential electrode technique design using two measuring electrodes to compare the process value to a stable internal reference standard buffer solution. The standard electrode shall have non-flowing and fouling-resistant characteristics.
2. The sensor shall be capable of chain mounting for immersion applications, and shall be constructed of 316 stainless steel.
3. The built-in electronics of the sensor shall be completely encapsulated for protection from moisture and humidity.
4. The sensor shall have a built-in preamplifier to enable the signal to be transmitted up to 100 m (328 ft.) with standard cabling and up to 1000 m (3280 ft.) with a termination box.
5. The sensor signal shall have an integral temperature sensor to automatically compensate measured values for changes in process temperature.
6. The sensor shall include a titanium ground electrode (standard) to eliminate ground loop currents in the measuring electrodes.
7. The sensor shall be Hach Company Model pHD sc or pHD for pH or ORP measurement.

Dimensions

Convertible Style

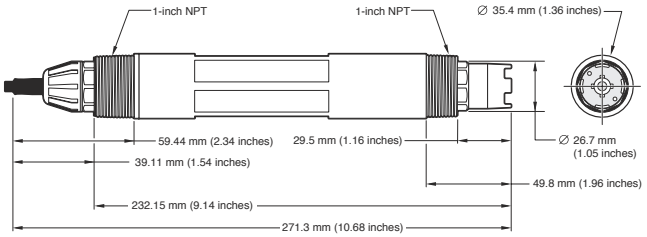

Insertion Style

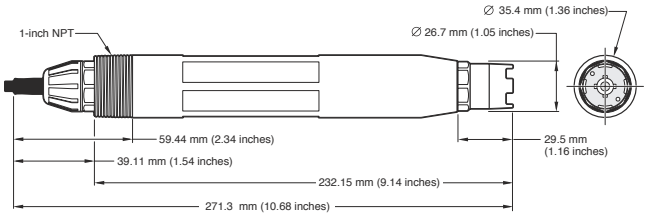

Sanitary Style

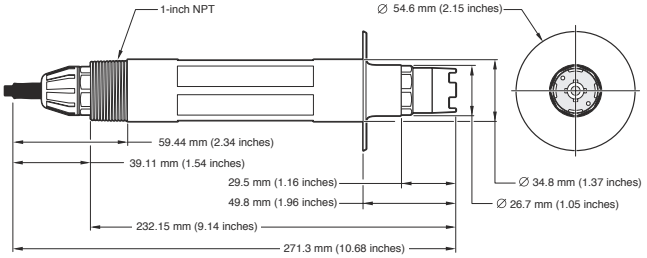

Immersion Style

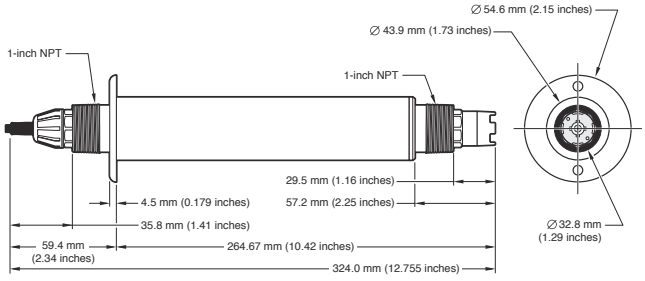

Digital Gateway

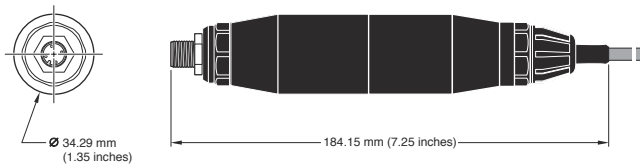

Analog Convertible Style

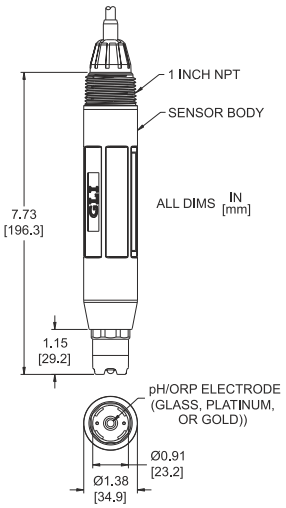

Analog Insertion Style

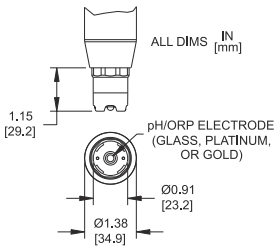

Analog Sanitary Style

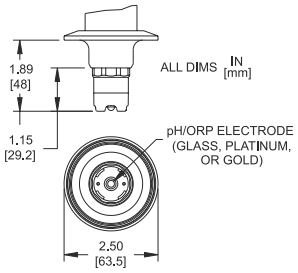

Ordering Information

pHD sc Digital Differential pH/ORP Sensors

All digital sensors include built-in digital electronics and integral 10 m (33 ft.) cable terminated with connector for the sc100 digital controller. Body styles:

- *Convertible – 1-inch NPT threads at both ends, designed for tee-mounting or other flow through mountings, and pipe mounting for immersion*
- *Insertion – no threads on the electrode end, designed for use with insertion valve assembly*
- *Sanitary – 2-inch flange for a tri-clover style fitting*
- *Immersion – used with chain mounting or pipe mounting*

pH Sensors

Product Number	Body Material	Body Style	Electrode Material	Max Temp
DPD1P1	PEEK[1]	Convertible	Glass, General Purpose	70°C (158°F)
DPD1P3	PEEK[1]	Convertible	Glass, HF-resistant	70°C (158°F)
DPD2P1	PEEK[1]	Insertion	Glass, General Purpose	70°C (158°F)
DPD3P1	PEEK[1]	Sanitary	Glass, General Purpose	70°C (158°F)
DPD1R1	Ryton[2]	Convertible	Glass, General Purpose	70°C (158°F)
DPD1R3	Ryton[2]	Convertible	Glass, HF-resistant	70°C (158°F)
DPS1	Stainless Steel	Immersion	Glass, General Purpose	50°C (122°F)

[1]Polyetheretherketone [2]Polyphenelene Sulfide

ORP Sensors

Product Number	Body Material	Body Style	Electrode Material	Max Temp
DRD1P5	PEEK[1]	Convertible	Platinum	70°C (158°F)
DRD1P6	PEEK[1]	Convertible	Gold	70°C (158°F)
DRD2P5	PEEK[1]	Insertion	Platinum	70°C (158°F)
DRD1R5	Ryton[2]	Convertible	Platinum	70°C (158°F)
DRD1R6	Ryton[2]	Convertible	Gold	70°C (158°F)
DRS5	Stainless Steel	Immersion	Platinum	50°C (122°F)

[1]Polyetheretherketone [2]Polyphenelene Sulfide

Digital Gateway

6120500 Digital Gateway, convert pHD analog sensors to digital output for connecting to sc100 digital controller

pHD Analog Sensors

All analog sensors include built-in preamplifier and integral 4.5 m (15 ft.) cable terminated with stripped and tinned wires.

Definitions of body styles:

- *Convertible – 1-inch NPT threads at both ends, designed for tee-mounting or other flow through mountings, and pipe mounting for immersion*
- *Insertion – has no threads on the electrode end, designed for use with insertion valve assembly*
- *Sanitary – has a 2-inch flange for a Tri-Clover style fitting*

pH Sensors

Product Number	Body Material	Body Style	Electrode Material	Max Temp
PD1P1	PEEK[1]	Convertible	Glass, General Purpose	95°C (203°F)
PD1P3	PEEK[1]	Convertible	Glass, HF-resistant	95°C (203°F)
PD2P1	PEEK[1]	Insertion	Glass, General Purpose	95°C (203°F)
PD3P1	PEEK[1]	Sanitary	Glass, General Purpose	95°C (203°F)
PD1R1	Ryton[2]	Convertible	Glass, General Purpose	95°C (203°F)
PD1R3	Ryton[2]	Convertible	Glass, HF-resistant	95°C (203°F)

[1]Polyetheretherketone [2]Polyphenelene Sulfide

ORP Sensors

Product Number	Body Material	Body Style	Electrode Material	Max Temp
RD1P5	PEEK[1]	Convertible	Platinum	95°C (203°F)
RD1P6	PEEK[1]	Convertible	Gold	95°C (203°F)
RD2P5	PEEK[1]	Insertion	Platinum	95°C (203°F)
RD1R5	Ryton[2]	Convertible	Platinum	95°C (203°F)
RD1R6	Ryton[2]	Convertible	Gold	95°C (203°F)

[1]Polyetheretherketone [2]Polyphenelene Sulfide

Ordering Information *continued*

pHD sc Digital and pHD Analog Sensor Accessories

Cables

Extension cables are used only with digital sensors or digital gateways when connecting to the sc100 Digital Controller.

61224-00 Digital Extension Cable, 1 m (3.2 ft.)

57960-00 Digital Extension Cable, 7.7 m (25 ft.)

57961-00 Digital Extension Cable, 15 m (50 ft.)

57962-00 Digital Extension Cable, 31 m (100 ft.)

Interconnect cables are used only with analog sensors, junction box, and controller.

1W11-00 Analog Interconnect Cable, order per foot

Digital Termination Box

Required when the length of cable between the digital sensor/digital gateway and sc100 Digital Controller is between 100 m (328 ft.) and 1000 m (3280 ft.)

58670-00 Digital Termination Box

Analog Junction Box

Required when the length of cable between the analog sensor and analog controller is greater than standard length of sensor cable. Each junction box includes terminal strip and gasket.

60A2053 Junction Box, Surface-mount, aluminum (includes mounting hardware)

60A9944 Junction Box, Pipe-mount, PVC (for 1/2-inch diameter pipe, includes mounting hardware)

60G2052 Junction Box, Pipe-mount, PVC (for 1-inch diameter pipe, includes mounting hardware)

76A4010-001 Junction Box, NEMA 4X (no mounting hardware included)

Protector for Convertible style sensor

1000F3374-002 PEEK protector

1000F3374-003 Ryton protector

Salt Bridges

The double junction salt bridge on the standard cell of all Hach pHD sensors is field-replaceable. Each salt bridge has a ceramic inner junction, Viton® O-ring, and contains binary, equi-transferrant fill solution. Salt bridges are shipped in a salt solution.

Product Number	*pHD sc and pHD Sensor Body Material*	*Salt Bridge Materials*	
		Body	*Outer Junction*
SB-P1SV	PEEK	PEEK	Kynar (PVDF)
SB-P2SV	PEEK	PEEK	Ceramic
SB-P1SP[1]	PEEK	PEEK	Kynar (PVDF)
SB-R1SV	Ryton	Ryton	Kynar (PVDF)

[1]*Special perfluoroelastomer O-ring in place of the Viton® O-ring*

Cleaning Systems for pHD sc and pHD Sensors

Self-Contained Air Blast Cleaning System
Includes Kynar® (PVDF) washer head with 7.6 m (25 ft.) tubing for air delivery, a quick-disconnect tube fitting, and a compressor housed in a NEMA 4X enclosure.

1000A3335-005 For 115 VAC operation
1000A3335-006 For 230 VAC operation

Air/Water Blast Cleaning Washer Head
Intended only for immersion applications with a user-supplied air or water wash system.

1000A3335-004 Kynar (PVDF) washer head includes 1/4-inch barb fitting

pHD sc Digital and pHD Analog Sensor Reagents and Standards

25M1A1025-115 Standard Cell Solution, to replenish standard cell chamber in Hach pHD sensors while replacing salt bridge, 500 mL

25M8A1002-101 Gel Powder, for high temperature applications, 2 g

pH Buffers

Product Number	*Description*	*Volume*
22835-49	pH 7	500 mL (1 pint)
22834-49	pH 4	500 mL (1 pint)
22836-49	pH 10	500 mL (1 pint)

ORP Reference Solutions (in resealable plastic bottles)

Product Number	*Description*	*Volume*
25M2A1001-115	200 mV	500 mL (1 pint)
25M2A1002-115	600 mV	500 mL (1 pint)

Ordering Information *continued*

Mounting Hardware for pHD sc Differential Sensors

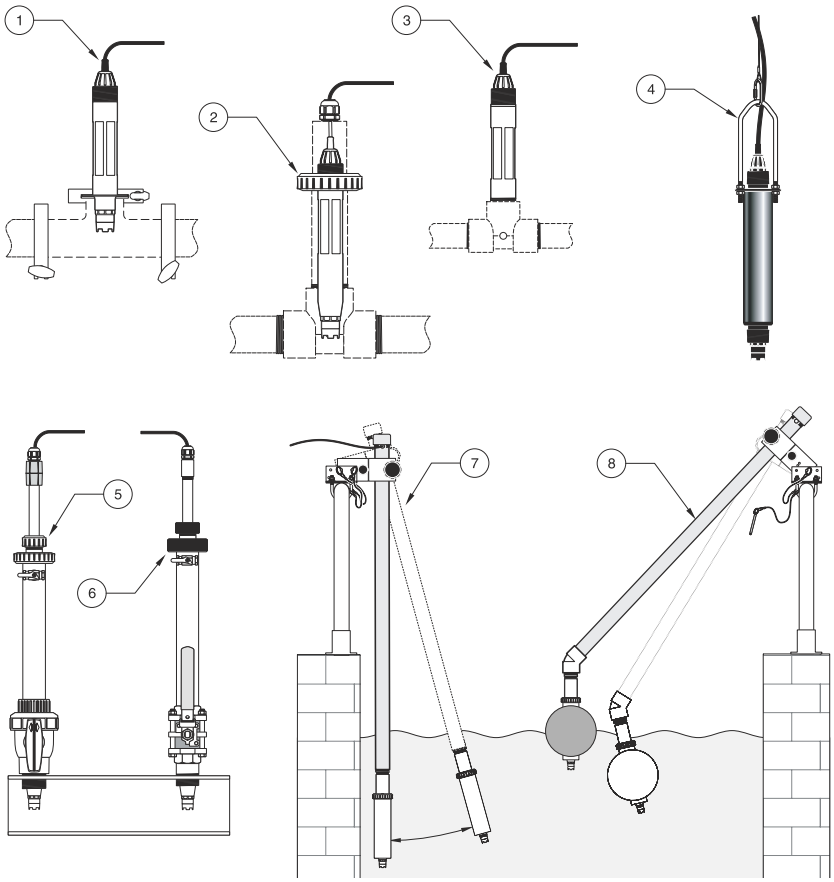

1. Sanitary mount
2. Union mount
3. Flow-through mount
4. Hanging stainless steel sensor with the bail
5. PVC Insertion mount
6. Stainless steel insertion mount
7. Immersion mount
8. Immersion mount, ball float

Sanitary Mount

MH018S8SZ 316 SS
Includes 2-inch sanitary tee and heavy-duty clamp. Special cap and EPDM compound gasket are supplied with sensor but can be separately ordered.

Union Mount

61313-00 CPVC
61314-00 316 SS
Includes standard 1-1/2 inch tee, special union pipe with adapter, sealing hub, and lock ring in respective material, and Viton® O-ring.

Flow-through Mount

MH334N4NZ CPVC
MH314N4MZ 316 SS
Includes a standard 1-inch tee in respective material.

Insertion Mount

Digital		*Analog*	
61367-00	CPVC	**MH736M4MZ**	CPVC
61368-00	316 SS	**MH716M4MZ**	316 SS

Includes a 1-1/2 inch ball valve in respective material, 1-1/2 inch NPT close nipple, sensor adapter with two Viton® O-rings and wiper, extension pipe, pipe adapter, back tube, and lock ring.

Immersion Mount

Standard Hardware

Digital		*Analog*	
61364-00	CPVC	**MH434A00B**	CPVC
61365-00	316 SS	**MH414A00B**	316 SS

Includes 1-inch diameter by 4 ft. long pipe and 1-inch x 1-inch NPT coupling in respective material. (Pipe-mount junction box with terminal strip included in analog hardware.)

Handrail Hardware

MH236B00Z CPVC
Includes 1-1/2 inch diameter by 7.5 ft. long CPVC pipe, and a unique swivel/pivot/ pipe clamp assembly.

Chain Mount Hardware

2881900 316 ss
Includes stainless steel bail, nuts, and washers. Does not include chain. To be used with stainless steel immersion sensor only.

NOTE

Contact Hach Technical Support or your Hach representative for information about retro fit hardware for existing installations.

To complete your pH and ORP measurement system, choose the sc100 Controller...

Model sc100 Controller

(see Lit. #2463)



There's no complicated wiring or set up procedures with the Hach sc100 controller. Just plug in any Hach digital sensor and it's ready to use—it's "plug and play" with one or two sensors. A built-in data logger collects measurements at user selectable intervals of one to 15 minutes. Local display, recall, graphing and trending in CSV format make chart recorders redundant. No analog/digital conversion is required—it communicates via MODBUS® or IR port. Two PID controllers and three form 'C' relay contacts for alarm or control are available.

LXV401.52.00002 sc100 Controller Standard

LXV401.52.01002 sc100 Controller with RS-232 MODBUS®

LXV401.52.02002 sc100 Controller with RS-485 MODBUS®

At Hach, it's about learning from our customers and providing the right answers. It's more than ensuring the quality of water—it's about ensuring the quality of life. When it comes to the things that touch our lives...

Keep it pure.

Make it simple.

Be right.

For current price information, technical support, and ordering assistance, contact the Hach office or distributor serving your area.

In the United States, contact:

HACH COMPANY World Headquarters
P.O. Box 389
Loveland, Colorado 80539-0389
U.S.A.
Telephone: 800-227-4224
Fax: 970-669-2932
E-mail: orders@hach.com
www.hach.com

U.S. exporters and customers in Canada, Latin America, sub-Saharan Africa, Asia, and Australia/New Zealand, contact:

HACH COMPANY World Headquarters
P.O. Box 389
Loveland, Colorado 80539-0389
U.S.A.
Telephone: 970-669-3050
Fax: 970-461-3939
E-mail: intl@hach.com
www.hach.com

In Europe, the Middle East, and Mediterranean Africa, contact:

HACH + LANGE Europe
Dr. Bruno Lange GmbH & Co. KG
Willstätterstraße 11
D-40549 Düsseldorf
GERMANY
Tel: +49 (0) 211 5288-0
Fax: +49 (0) 211 5288-143
E-mail: kundenservice@drlange.de
www.drlange.com

Lit. No. 2467
XXXX Printed in U.S.A.
©Hach Company, 2004. All rights reserved.
In the interest of improving and updating its equipment, Hach Company reserves the right to alter specifications to equipment at any time.

HACH®

Be Right™

OPERATING MANUAL

PRO-series Model P3
pH/ORP Transmitter

(for pH and ORP measurement)

Worldwide Headquarters and Sales:

GLI International, Inc.
9020 West Dean Road
Milwaukee, Wisconsin 53224
U.S.A.

Phone: [414] 355-3601
Fax: [414] 355-8346
E-mail: info@gliint.com
Web: www.gliint.com

A2852 UL REGISTERED FIRM ISO 9001
GLI INTERNATIONAL, INC.

In the interest of improving and updating its equipment, GLI reserves the right to alter specifications to equipment at any time.



This operating manual and other GLI operating manuals are available on GLI's web site at gliint.com when viewed using Adobe's free Acrobat reader. To get this reader, link to Adobe through GLI's web site or visit Adobe's web site at adobe.com.

WARRANTY

GLI International, Inc. warrants the PRO-series Model P3 to be free from defects in material or workmanship for a period of 2 years (24 months) from the date of shipment of this product from our facility. A warranty claim will not be honored if defects are not reported within the warranty period, or if GLI International determines that defects or damages are due to normal wear, misapplication, lack of maintenance, abuse, improper installation, alteration, or abnormal conditions. GLI International's obligation under this warranty shall be limited to, at its option, replacement or repair of this product. The product must be returned to GLI International, freight prepaid, for examination. The product must be thoroughly cleaned and any process chemicals removed before it will be accepted for replacement or repair. GLI International's liability shall not exceed the cost of the product. Under no circumstances will GLI International be liable for any incidental or consequential damages, whether to person or property. GLI International will not be liable for any other loss, damage or expense of any kind, including loss of profits, resulting from the installation, use, or inability to use this product.

Declaration of Conformity

according to ISO/IEC Guide 22 and EN 45014

Manufacturer's Name: GLI International, Inc.

Manufacturer's Address: 9020 West Dean Road
P.O. Box 245022
Milwaukee, Wisconsin 53224, USA

declares that the products:

Product Names:
PRO-series pH/ORP Transmitter
PRO-series Dissolved Oxygen Transmitter
PRO-series Electrodeless Conductivity Transmitter
PRO-series Contacting Conductivity Transmitter
PRO-series Flow Transmitter

Model Numbers: PRO-P3xxx, PRO-D3xxx, PRO-E3xxx, PRO-C3xxx, PRO-F3xxx

conforms to the following Product Specifications:

EMC: **EN 50081-2 : 1993**
Generic Emission Standard (Industrial Environment)

EN 55011 : 1998 / CISPR 11 : 1999		Group 1, Class A

EN 61000-6-2 : 1999
Generic Immunity Standard (Industrial Environment)

EN 61000-4-2 : 1995 -	ESD Immunity	4 kV CD, 8kV AD
EN 61000-4-3 : 1997 -	Radiated Immunity	10 V/m, 80% AM (1 kHz)
EN 61000-4-4 : 1995 -	EFT/B Immunity	1.0 kV Signal & Power Lines
EN 61000-4-6 : 1996 -	Conducted Immunity	10 V, 80% AM (1 kHz)

Supplementary Information:

The products herewith comply with the requirements of the following directives and carry the CE marking accordingly:

EMC Directive 89/336/EEC

Products were tested in typical configurations. Specific test configurations and results are published in L.S. Compliance's Test Report Numbers: 301140, 301222, 301256 and EMC Testing Wisconsin's Test Report Number 00340.

These devices comply with Part 15 of the FCC Rules. Operation is subject to the following two conditions: (1) this device may not cause harmful interference, and (2) this device must accept any interference received, including interference that may cause undesired operation.

These devices comply with U.S. UL Standard 1604 (USL) and Canadian National Standard C22.2 No. 213-M1987 (CNL). All devices are UL Listed (Control Number 9NX6) and hold a Class I, Division 2, Groups A, B, C, and D Hazardous Locations rating.

For Compliance Information ONLY, contact:

Product Regulations Manager
GLI International
9020 West Dean Road
Milwaukee, Wisconsin 53224, USA

IMPORTANT SAFETY INFORMATION

Please read and observe the following:

- The transmitter can be located in a Class 1, Division 2, Group A, B, C or D hazardous area.
- Since the transmitter is powered by only low DC voltage, it is completely safe to handle.
- Install the transmitter in accordance with relevant local codes and instructions contained in this operating manual. Also, note and comply with the transmitter's technical specifications and ratings.
- Whenever it appears that transmitter safety is questionable, disable the transmitter to ensure against any unintended operation. For example, an unsafe condition is likely when:
    1) The transmitter appears visibly damaged.
    2) The transmitter fails to operate properly or provide the intended measurements.
    3) The transmitter has been stored for long periods at temperatures above 158°F (70°C).
- Only qualified personnel should perform wiring or repairs, and only when the transmitter is not powered.

HELPFUL IDENTIFIERS

In addition to information on installation and operation, this instruction manual may contain WARNINGS pertaining to user safety, CAUTIONS regarding possible instrument malfunction, and NOTES on important, useful operating guidelines.

WARNING:

A WARNING LOOKS LIKE THIS. IT WARNS YOU OF THE POTENTIAL FOR PERSONAL INJURY.

CAUTION:

A CAUTION LOOKS LIKE THIS. IT ALERTS YOU TO POSSIBLE INSTRUMENT MALFUNCTION OR DAMAGE.

☞ ***NOTE:*** *A note looks like this. It alerts you to important operating information.*

CONDENSED OPERATING INSTRUCTIONS

This manual contains details for all operating aspects of the instrument. The following condensed instructions are provided to assist you in getting the instrument started up and operating as quickly as possible. **These condensed instructions only pertain to basic pH measurement operation using a GLI Differential pH sensor.** To measure ORP, or use a conventional combination electrode or specific features of the instrument, refer to the appropriate sections in this manual for instructions.

A. CONNECTING SENSOR/CONFIGURING SENSOR TYPE AND TEMPERATURE ELEMENT

1. After properly mounting the transmitter (PART TWO, Section 2), connect the GLI Differential Technique pH sensor, matching wire colors to terminals as indicated:

Sensor Wire Colors	Connect to TB2
White	Terminal 1
- - - -	Terminal 2 (unused)
Inner Shield and Black	Terminal 3
Yellow	Terminal 4
Green	Terminal 5
- - - -	Terminal 6 (unused)
Red	Terminal 7
Outer Shield (see Note)	Earth Ground

NOTE: *For GLI Differential sensors with only one shield wire, always connect it to Terminal 3 on TB2.*

For systems not requiring CE compliance and lacking an earth ground, connect the outer shield to Terminal 3 on TB2.

2. The transmitter is factory-set for use with a GLI Differential Technique pH sensor. To use another type of pH sensor or an ORP sensor, change the sensor type. For details, see PART THREE, Section 3.2, subheading “SELECT SENSOR Type.”

3. The transmitter is factory-set for automatic temperature compensation using the 300 ohm (NTC300) temperature element built into all GLI Differential sensors (except GLI 6006P4-2000 pure water pH sensor system which uses a PT 1000 RTD). To use a sensor with a different temperature element, or if you want fixed MANUAL temperature compensation, change the temperature element type. For details, see PART THREE, Section 3.2, subheading “Select TEMP ELEMENT Type.”

B. CONNECTING DC POWER

Refer to PART TWO, Section 3.2, 3.3, 3.4, or 3.5 to connect DC power to the transmitter.

C. CONFIGURING BUFFER TYPE/CALIBRATING THE TRANSMITTER

The transmitter must be calibrated so that measured values will correspond to actual process values. Before calibrating for the first time, select the buffer set you intend to use. Then, calibrate using the recommended “2 POINT BUFFER” method which provides the most accurate pH measurements.

1. The transmitter is factory-set for the common 4.00, 7.00, and 10.00 pH buffer set. To use DIN 19267 standard value buffers, change the buffer set. For details, see PART THREE, Section 3.2, subheading “SELECT BUFFER Set for pH Calibration.”

(continued on next page)

CONDENSED OPERATING INSTRUCTIONS

C. CALIBRATING THE TRANSMITTER -- (continued)

NOTE: *When using buffers that are not included in either of these buffer sets, use only the "2 POINT SAMPLE" method for calibration. Refer to that subheading in PART THREE, Section 4.2 for instructions.*

2. Immerse the sensor in the first buffer (preferably pH 7). **Important: Allow the sensor and buffer temperatures to equalize.** Depending on their temperature differences, this may take 30 minutes or more.

   NOTE: *An in-progress calibration can always be aborted by pressing the **ESC key**. After the "ABORT: YES?" screen appears, do <u>one</u> of the following:*

   - *Press **ENTER key** to abort. After the "CONFIRM ACTIVE?" screen appears, press **ENTER key** again to return the analog output to its active state (MEASURE screen appears).*
   - *Use ⇧ **or** ⇩ **key** to choose "ABORT: NO?" screen, and press **ENTER key** to continue calibration.*

   Calibration Tip! *If, at any time during calibration, the "2 POINT BUFFER: CONFIRM FAILURE?" screen appears, press **ENTER key** to confirm. Then, use the ⇧ **or** ⇩ **key** to select between "CAL: EXIT" or "CAL: REPEAT" and do <u>one</u> of the following:*

   - *With the "2 POINT BUFFER? (CAL: EXIT)" screen selected, press **ENTER key**. Then, after the "2 POINT BUFFER: CONFIRM ACTIVE?" screen appears, press **ENTER key** to return the analog output to its active state (MEASURE screen appears).*
   - *With the "2 POINT BUFFER? (CAL: REPEAT)" screen selected, press **ENTER key** to repeat calibration of this point.*

3. Press **MENU key** to display a "MAIN MENU" screen. If the 

screen is not showing, use ⇧ **or** ⇩ **key** to display it.

4. Press **ENTER key** to display 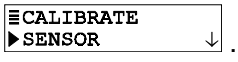

.

5. Press **ENTER key** again to display 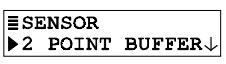

.

6. Press **ENTER key** again to display 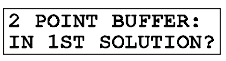

. With the sensor in the first buffer, press **ENTER key** again to confirm this.

   NOTE: *During calibration, the analog output is automatically "held" at the last measured value.*

(continued on next page)

CONDENSED OPERATING INSTRUCTIONS

C. CALIBRATING THE ANALYZER -- (continued)

7. While the `2 POINT BUFFER: PLEASE WAIT` screen is displayed, the transmitter waits for the pH and temperature signals to stabilize, measures the buffer value, and automatically calibrates this point. Thereafter, a screen like this `2 POINT BUFFER: PT1 = 7.00 pH` appears for 5 seconds to confirm calibration of this point.

   NOTE: *Any time the "PLEASE WAIT" screen appears during calibration you can manually complete calibration of the point by pressing the* ***ENTER key****. However, this is not recommended because the pH and temperature signals may not be fully stabilized, resulting in a less accurate calibration.*

8. After the `2 POINT BUFFER: IN 2ND SOLUTION?` screen appears, remove the sensor from the first buffer, rinse it with clean water, and immerse it in the second buffer (typically pH 4). Then press **ENTER key** to confirm this.

9. While the `2 POINT BUFFER: PLEASE WAIT` screen is displayed, the transmitter waits for the pH and temperature signals to stabilize, measures the buffer value, and automatically calibrates this point. Thereafter, a screen like this `2 POINT BUFFER: PT2 = 4.00 pH` appears for 5 seconds to confirm calibration of this point.

10. A "pH SLOPE XX.X mV/pH" screen appears, indicating a slope value to gauge sensor performance. The slope should be between 54 and 62 mV/pH for optimal sensor performance.

11. Press **ENTER key** to end calibration ("2 POINT BUFFER: CONFIRM CAL OK?" screen appears).

12. Install the sensor into the process.

13. Press **ENTER key** to display the active measurement reading on the "2 POINT BUFFER: CONFIRM ACTIVE?" output status screen. When the reading corresponds to the actual typical process value, press **ENTER key** again to return the analog output to its active state (MEASURE screen appears).

This completes "2 POINT BUFFER" calibration. The transmitter is now ready to measure pH.

D. COMPLETING TRANSMITTER CONFIGURATION

To further configure the transmitter to your application requirements, use the appropriate CONFIGURE screens to make selections and "key in" values. Refer to PART THREE, Section 3 for complete configuration details.

T A B L E O F C O N T E N T S

P A R T O N E - I N T R O D U C T I O N

SECTION 1 **GENERAL INFORMATION**

1.1 Capability Highlights 13
1.2 Transmitter Safety 14
1.3 Retained Configuration Values 14
1.4 Transmitter Serial Number 14
1.5 EMC Conformance 14

SECTION 2 **SPECIFICATIONS** 15-16

P A R T T W O - I N S T A L L A T I O N

SECTION 1 **UNPACKING** 17

SECTION 2 **MECHANICAL REQUIREMENTS**

2.1 Location 17
2.2 Wall and Pipe Mounting 18
2.3 Panel Mounting 19
2.4 Integral Sensor Mounting 20

SECTION 3 **ELECTRICAL CONNECTIONS**

3.1 pH or ORP Sensor:
GLI Differential Technique Sensor 22-23
Conventional Combination Electrode 23
Conventional Combination Electrode with Ground Rod 24
3.2 Two-wire Hookup 24-25
3.3 Three-wire Hookups (load sinking or load sourcing with or without RS-485 serial communication) 25-27
3.4 Four-wire Hookups (with or without RS-485 serial communication) 27-28
3.5 Monitor Mode Hookups (without current loop and with or without RS-485 serial communication) 29

P A R T T H R E E - O P E R A T I O N

SECTION 1 **USER INTERFACE**

1.1 Display 30
1.2 Keypad 30-31
1.3 MEASURE Screen (normal display mode) 32

TABLE OF CONTENTS (continued)

SECTION 2 MENU STRUCTURE

2.1 Displaying Main Branch Selection Screen 33
2.2 Displaying Top-level Menu Screens 34
2.3 Displaying Submenu Screens 35
2.4 Adjusting Edit/Selection Screen Values 35
2.5 Entering (Storing) Edit/Selection Screen Values/Choices 35

SECTION 3 TRANSMITTER CONFIGURATION

3.1 Selecting LANGUAGE to Operate Transmitter 36
3.2 Configuring Sensor Characteristics:
- SELECT SENSOR Type 36-37
- Select DISPLAY FORMAT 37
- SELECT BUFFER Set for pH Calibration 38
- Select PURE H2O COMP (for special applications) 38-39
- SET FILTER Time 39
- ENTER NOTE (top line of MEASURE screen) 40
- Select TEMP ELEMENT Type 40-41

3.3 SET °C OR °F (temperature display format) 41-42
3.4 Configuring Analog Output:
- SET PARAMETER (representation) 42
- SET 4 mA and 20 mA VALUES (range expand) 43
- SET FILTER Time 43
- SET FAIL LEVEL Mode (off, 4 mA or 20 mA) 44

3.5 SET PASSCODE (feature enabled or disabled) 45
3.6 Configuration Setting Summary (ranges/choices and defaults) 46

SECTION 4 TRANSMITTER CALIBRATION

4.1 Important Information:
- Calibrate Periodically 47
- Temperature-corrected pH Measurement 47

4.2 pH Calibration:
- 2 POINT BUFFER Method 48-50
- 1 POINT BUFFER Method 50-52
- 2 POINT SAMPLE Method 52-54
- 1 POINT SAMPLE Method 54-56

4.3 ORP Calibration 56-58
4.4 Analog Output Calibration 58-59

TABLE OF CONTENTS (continued)

SECTION 5 TEST/MAINTENANCE

5.1 STATUS Check (transmitter and sensor) 60-61
5.2 HOLD OUTPUT 61-62
5.3 OUTPUT Test Signal 62
5.4 Firmware (EPROM VERSION) Check 62
5.5 SELECT SIM Measurement 63
5.6 SIM SENSOR Setting 63
5.7 RESET CONFIGURE Values to Factory Defaults 64
5.8 RESET CALIBRATE Values to Factory Defaults 64

PART FOUR - SERVICE AND MAINTENANCE

SECTION 1 GENERAL INFORMATION 65

SECTION 2 PRESERVING MEASUREMENT ACCURACY

2.1 Keeping Sensor Clean 65
2.2 Keeping Transmitter Calibrated 65
2.3 Avoiding Electrical Interference 66

SECTION 3 TROUBLESHOOTING

3.1 Ground Loops:
Determining if Ground Loop Exists 66-67
Finding Source of Ground Loop 67
3.2 Isolating Measuring System Problem:
Checking Electrical Connections 67
Verifying Sensor Operation 67
Verifying Transmitter Operation 68-69
Verifying Sensor Interconnect Cable Integrity 69

SECTION 4 TRANSMITTER REPAIR/RETURN

4.1 Customer Assistance 70
4.2 Repair/Return Policy 70

TABLE OF CONTENTS (continued)

ILLUSTRATIONS

Figure 1-1 EMC Diagram 14
Figure 2-1 Wall and Pipe Mounting Details 18
Figure 2-2 Panel Mounting Details 19
Figure 2-3 Integral Sensor Mounting Details 20
Figure 2-4 Transmitter Terminal Designations 21
Figure 2-5 Connecting GLI Differential Technique Sensor 23
Figure 2-6 Connecting Conventional Combination Electrode 23
Figure 2-7 Connecting Conventional Combination Electrode with Ground Rod 24
Figure 2-8 Two-wire Hookup 25
Figure 2-9 Three-wire Hookup -- Load Sinking 26
Figure 2-10 Three-wire Hookup -- Load Sinking with RS-485 Serial Communication 26
Figure 2-11 Three-wire Hookup -- Load Sourcing 27
Figure 2-12 Three-wire Hookup -- Load Sourcing with RS-485 Serial Communication 27
Figure 2-13 Four-wire Hookup without RS-485 Serial Communication 28
Figure 2-14 Four-wire Hookup with RS-485 Serial Communication 28
Figure 2-15 Monitor Mode Hookup (without Current Loop) -- without RS-485 Serial Communication 29
Figure 2-16 Monitor Mode Hookup (without Current Loop) -- with RS-485 Serial Communication 29
Figure 3-1 Transmitter Keypad 31

TABLES

TABLE A Transmitter Configuration Settings (Ranges/Choices and Defaults) 46

PART ONE - INTRODUCTION

SECTION 1
GENERAL INFORMATION

1.1 Capability Highlights

Sensor Input

The transmitter can be used with any GLI Differential Technique pH or ORP sensor, or any conventional combination electrode. The transmitter accepts the common temperature compensator elements used in these sensors (NTC 300 ohm thermistor, Pt 1000 RTD or Pt 100 RTD).

MEASURE Screen

The MEASURE screen (normal display mode) can provide different readouts of measured data. With the MEASURE screen displayed, press ⇦ **and** ⇨ **key** to show:

When Used as pH Transmitter	When Used as ORP Transmitter
• Measured pH • Measured temperature (°C or °F) • Measured pH and temperature • Measured analog output value (mA)	• Measured ORP • Measured analog output value (mA)

Passcode-protected Access

For security, you can enable a passcode feature to restrict access to configuration and calibration settings to authorized personnel only. See PART THREE, Section 3.5 for details.

Calibration Methods

Four methods are available to calibrate the transmitter for pH. See PART THREE, Section 4.2 for details. For ORP calibration, refer to Section 4.3. The analog output loop can also be calibrated (Section 4.4).

Analog Output

The transmitter's isolated 4-20 mA analog output can be assigned to represent the measured pH or temperature. (When measuring ORP, the output only represents ORP.)

Parameter values can be entered to define the endpoints at which the 4 mA and 20 mA analog output values are desired (range expand). For analog output setup details, see PART THREE, Section 3.4.

☞ ***NOTE:*** *During calibration, the analog output is automatically held at the last measured value and, upon completion, returned to its active state.*

1.2 Transmitter Safety

The transmitter is completely safe to handle. Only low DC voltage is present.

NOTE: *The transmitter can be located in a Class 1, Div. 2 hazardous area.*

1.3 Retained Configuration Values

All user-entered configuration values are retained indefinitely, even if power is lost or turned off. The non-volatile transmitter memory does not require battery backup.

1.4 Transmitter Serial Number

A label with the transmitter model number, serial number, and build date is located between the terminal blocks.

1.5 EMC Conformance

The transmitter is designed to provide protection from most normally encountered electromagnetic interference. This protection exceeds U.S. standards and meets European IEC 1000 (EN 61000) series testing for electromagnetic and radio frequency emissions and immunity. Refer to Figure 1-1 and the specifications in Section 2.1 for more information.

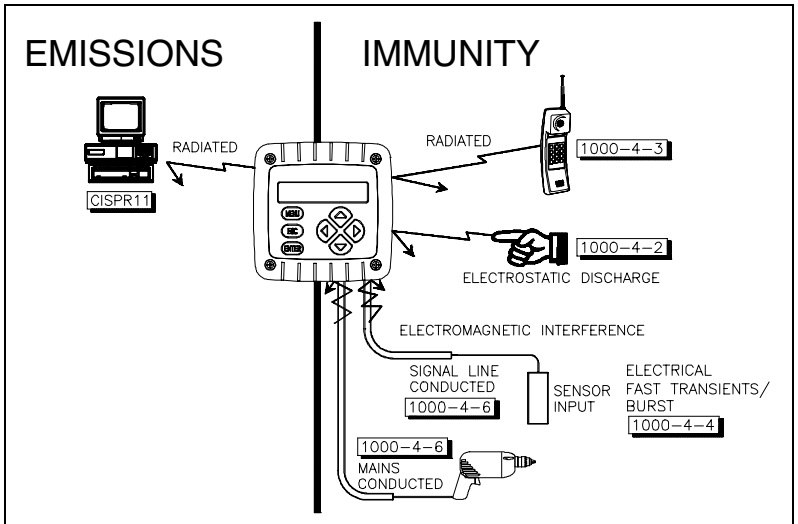

FIGURE 1-1 EMC Diagram

SECTION 2
SPECIFICATIONS

2.1 Operational

Display..... Two-line by 16 character LCD

NOTE: *The measured pH and temperature can be displayed separately or shown together on a single screen. The corresponding 4-20 mA analog output value can also be shown.*

Measurement	Ranges
pH	-2.0 to 14.0 pH or -2.00 to 14.00 pH
ORP	-2100 to +2100 mV
Temperature	-4.0 to +392.0°F or -20.0 to +200.0°C
Analog Output	4.00-20.00 mA

Ambient Conditions:
- Operation..... -4 to +140°F (-20 to +60°C); 0-95% relative humidity, non-condensing
- Storage..... -22 to +158°F (-30 to +70°C); 0-95% relative humidity, non-condensing

Temperature Compensation ..... Automatic from 14.0 to 230.0°F (-10.0 to +110.0°C) with selection for NTC 300 ohm thermistor, Pt 1000 ohm RTD or Pt 100 ohm RTD temperature element; or manually fixed at a user-set temperature; additional selectable temperature correction factors (ammonia, morpholine or user-defined pH/°C linear slope) available for pure water automatic compensation from 0.0-50.0°C

Sensor-to-Transmitter Distance:
- GLI Differential
  - Technique Sensor ..... 3000 ft. (914 m) maximum
- Conventional Combination
  - Electrode with preamp ..... 985 ft. (300 m) maximum
- Conventional Combination
  - Electrode w/o preamp ..... 100 ft. (30 m) maximum with electrode cable capacitance of less than 30 pF per foot

Power Requirements (Class 2 Power Supply):
- Two-wire Hookup ..... 16-30 VDC
- Three-wire Hookup..... 14-30 VDC (16 VDC min. with RS-485 comm.)
- Four-wire Hookup..... 12-30 VDC (16 VDC min. with RS-485 comm.)

Calibration Methods:
- 2 POINT BUFFER (for pH only)..... Automatic calibration and buffer recognition using two buffers from a selected buffer set*.

  NOTE: *When using buffers that are not included in either transmitter buffer set, use only the "2 POINT SAMPLE" method for calibration.*

  **Buffer Sets: 4.00, 7.00, and 10.00 or DIN 19267 standard (1.09, 4.65, 6.79, 9.23, and 12.75)*

- 1 POINT BUFFER (for pH only)..... Automatic calibration and buffer recognition using one buffer from a selected buffer set*.

  NOTE: *When using a buffer that is not included in either transmitter buffer set, use only the "1 POINT SAMPLE" method for calibration.*

- 2 POINT SAMPLE (for pH only)..... Enter two known sample values (determined by laboratory analysis or comparison reading) or two known pH buffer values

1 POINT SAMPLE (for pH or ORP) ..... Enter one known sample value (determined by laboratory analysis or comparison reading) or one known pH buffer value (or, for ORP measurement, one known reference solution value)

Analog Output ..... Isolated 4-20 mA output with 0.004 mA (12-bit) resolution

NOTE: *The output can be assigned to represent the measured pH or temperature (or ORP). Parameter values can be entered to define the endpoints at which the 4 mA and 20 mA output values are desired (range expand). During calibration, the output is automatically held at the last measured value and, upon completion, returned to its active state.*

Maximum Loop Load ..... Dependent on power supply voltage, transmitter hookup arrangement, and wire resistance (see load resistance charts for respective hookup diagrams in PART TWO, Section 3.2, 3.3 or 3.4)

Memory (non-volatile) ..... All user settings are retained indefinitely without battery backup

Certifications:
- European Community EMC ..... Certified CE compliant for conducted and radiated emissions (EN 50081-2) and immunity (EN 61000-6-2)
- General Purpose ..... UL, C-UL, and FM
- Class I, Div. 2 ..... UL, C-UL, and FM

2.2 Transmitter Performance (Electrical, Analog Outputs)

Accuracy* ..... ± 0.1% of span
Sensitivity* ..... ± 0.05% of span
Repeatability* ..... ± 0.05% of span
Temperature Drift ..... Zero and Span: ± 0.02% of span per °C
Response Time ..... 1-60 seconds to 90% of value upon step change (with sensor filter setting of zero)

*These performance specifications are typical at 25°C.

2.3 Mechanical

Enclosure ..... Polycarbonate, NEMA 4X general purpose; choice of included mounting hardware

Mounting Configurations ..... Panel, wall, pipe or integral sensor mounting

Dimensions ..... With Back Cover:
3.75 in. W x 3.75 in. H x 2.32 in. D
(95 mm W x 95 mm H x 60 mm D)
Without Back Cover for Panel Mount:
3.75 in. W x 3.75 in. H x 0.75 in. D
(95 mm W x 95 mm H x 19 mm D)

Net Weight ..... 10 oz. (280 g) approximately

PART TWO - INSTALLATION

SECTION 1
UNPACKING

Unpack and examine the equipment even if you do not use it immediately. If there is evidence of damage, notify the transit carrier immediately. **Recommendation: Save the shipping carton and packing materials in case the instrument must be stored or re-shipped.**

SECTION 2
MECHANICAL REQUIREMENTS

2.1 Location

1. It is recommended to locate the transmitter as close as possible to the installed sensor. Depending on the sensor type, the maximum allowable distance between the sensor and transmitter is:

GLI Differential Technique Sensor	Conventional Combination Electrode **with** Preamp	Conventional Combination Electrode **without** Preamp
3000 feet (914 m)	985 feet (300 m)	*100 feet (30 m)

*An external GLI Model 714 preamp can be used to extend this distance to 3000 feet (914 m), but the preamp must be located within 100 feet (30 m) of the electrode.

☞ ***NOTE:*** *The transmitter is suitable for use in a Class 1, Div. 2 hazardous area.*

2. Mount the transmitter in a location that is:

   - ➥ Clean and dry where there is little or no vibration.
   - ➥ Protected from corrosive fluids.
   - ➥ Within ambient temperature limits (-4 to +140°F or -20 to +60°C).

CAUTION:

EXPOSING THE TRANSMITTER TO DIRECT SUNLIGHT MAY INCREASE THE OPERATING TEMPERATURE ABOVE ITS SPECIFIED LIMIT, AND DECREASE DISPLAY VISIBILITY.

2.2 Wall and Pipe Mounting

Figure 2-1 illustrates how to wall or pipe mount the transmitter using the supplied GLI hardware kit. Determine the mounting method, and attach the hardware as shown.

1. Fasten the wall/pipe adapter to the wall or pipe.
2. Using a blunt tool, open both cable entry knockout holes in the back cover.
3. Insert-and-twist the back cover onto the installed wall/pipe adapter, and tighten its two screws to lock back cover onto the adapter.
4. Attach transmitter to back cover using its four captive screws.

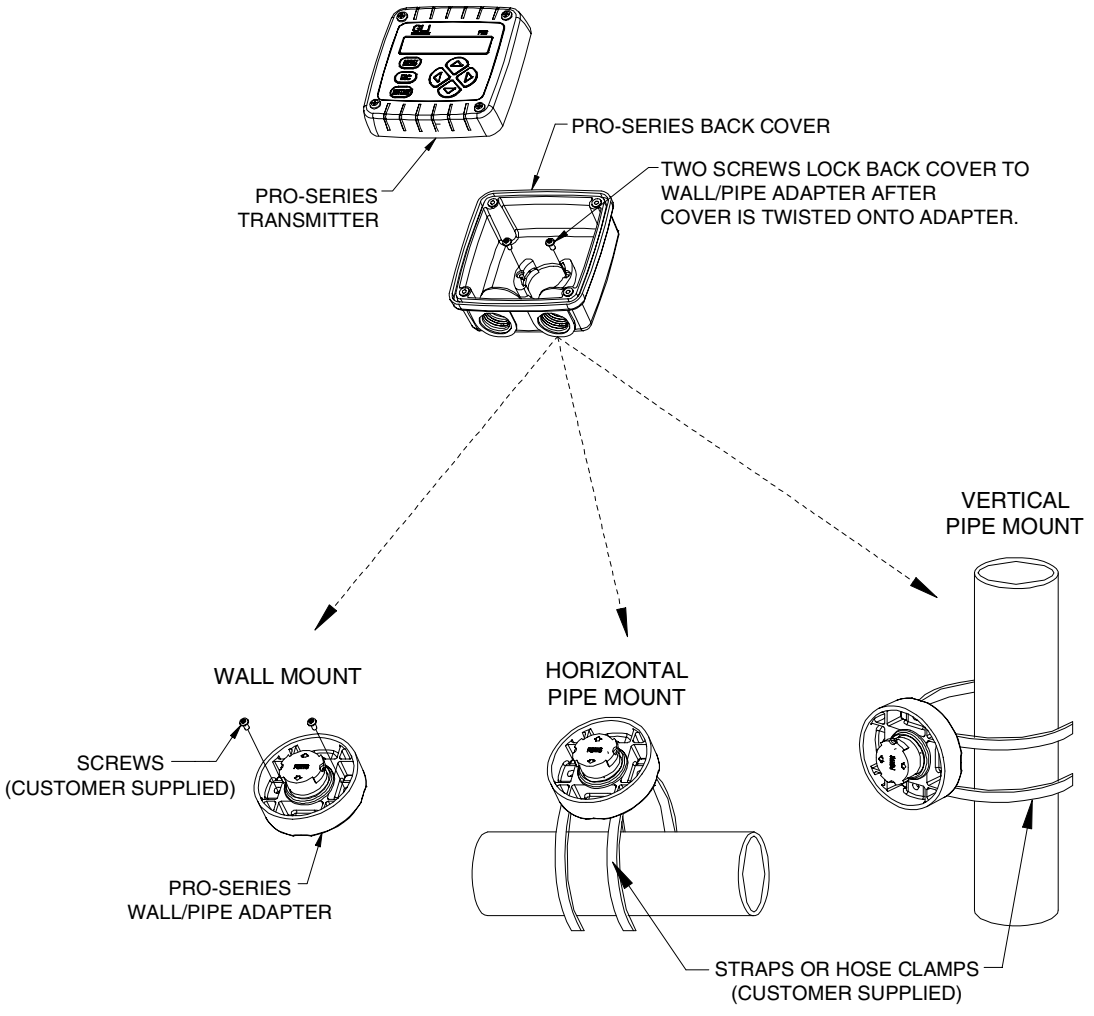

FIGURE 2-1 Wall and Pipe Mounting Details

2.3 Panel Mounting

Figure 2-2 illustrates how to panel mount the transmitter using the supplied GLI panel mount hardware kit.

1. Cut a 3.30-inch (84 mm) square cutout hole in panel.
2. Position panel-mount gasket over cutout in front of panel, and place retainer plate behind panel with its four threaded inserts facing away from back of panel.
3. Attach transmitter to retainer plate using its four captive screws.

NOTE: *If panel is too thick, remove captive screws from transmitter, and use longer screws provided in hardware kit.*

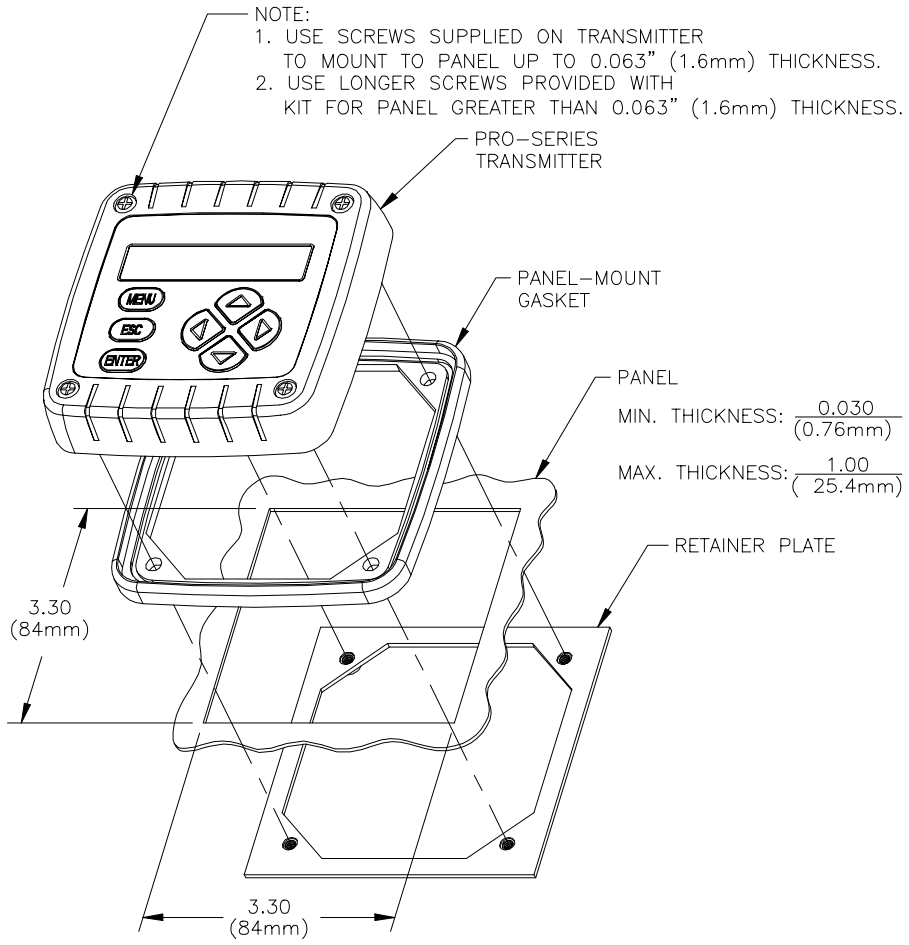

FIGURE 2-2 Panel Mounting Details

2.4 Integral Sensor Mounting

Figure 2-3 illustrates how to integrally mount the transmitter onto a sensor using the supplied GLI mounting hardware kit.

1. Using a blunt tool, open knockout hole in bottom of swivel ball for routing the sensor cable.

2. Attach swivel-mount assembly onto back end of sensor using coupling provided with GLI sensor (only sensors with “PRO1” suffix in their part number) or an appropriately-sized coupling that you provide.

3. Insert-and-twist the back cover onto the installed swivel-mount assembly. Tighten its two screws to lock the back cover onto the swivel-mount assembly.



NOTE: *To change mounting angle, loosen swivel-mount assembly by lifting tab on bottom of swivel nut. Position to desired angle and re-tighten swivel nut.*

4. Attach transmitter to back cover using its four captive screws.

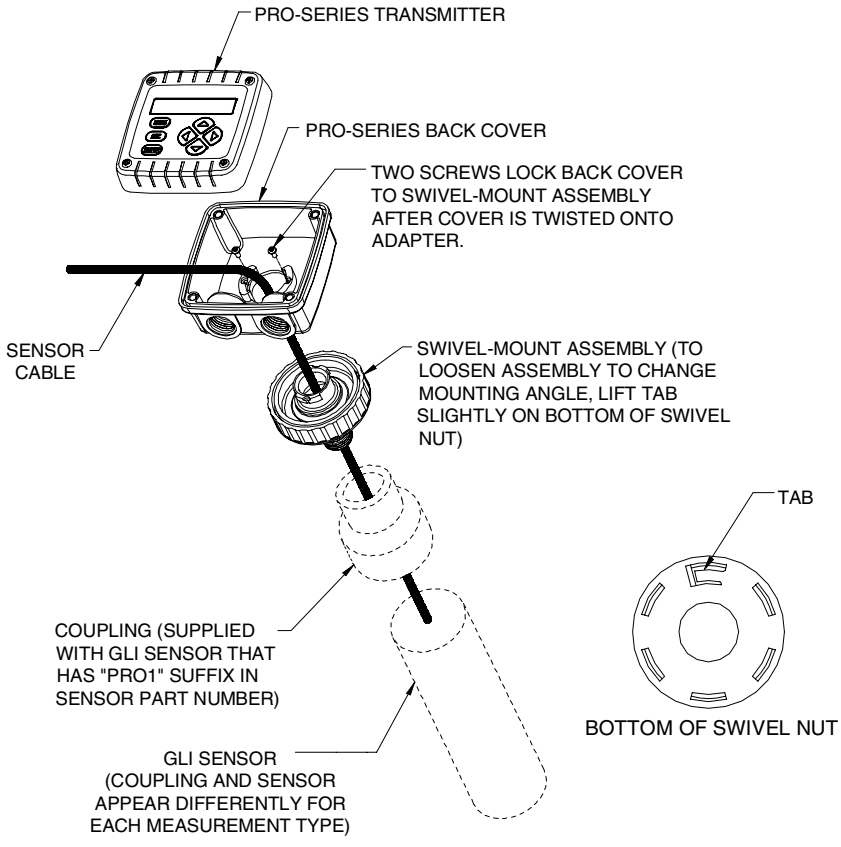

FIGURE 2-3 Integral Sensor Mounting Details

SECTION 3
ELECTRICAL CONNECTIONS

Figure 2-4 shows the terminal block arrangement and terminal designations for the transmitter.

☞ ***NOTE:*** *All terminals are suitable for single wires up to 14 AWG (2.5 mm^2).*

☞ **Wiring Tip!** To comply with European Community (CE) electromagnetic compatibility requirements, follow these general wiring guidelines:

1. Locate transmitter as far as possible from motors and other non-CE certified devices with excessive electromagnetic emissions.
2. Use GLI-specified ferrites and cables. Failure to do so may eliminate compliance. **Locate all ferrites as close as possible to the transmitter.**
   - ◆ DC Power Supply Cable (GLI 1W0980 two-conductor plus shield): Connect cable shield to earth ground at the supply end. Loop cable 2-1/2 times through ferrite (Steward #28B0686-200, Fair-Rite Corp. #2643665702, or equivalent).
   - ◆ Sensor Cable: Keep cable shields as short as possible. At the transmitter end, connect the outer shield to earth ground, and the inner shield to the SHIELD terminal. If sensor cable has one shield, connect it to the SHIELD terminal. In either case, clamp ferrite (Steward #28A2025-OAO, Fair-Rite Corp. #0431164281, or equivalent) on sensor cable.
   - ◆ Analog mA Output Cable (four-wire hookup only -- GLI 1W0980 two-conductor plus shield): Connect cable shield to earth ground at the supply end. Loop cable 2-1/2 times through ferrite (Steward #28B0686-200, Fair-Rite Corp. #2643665702, or equivalent).

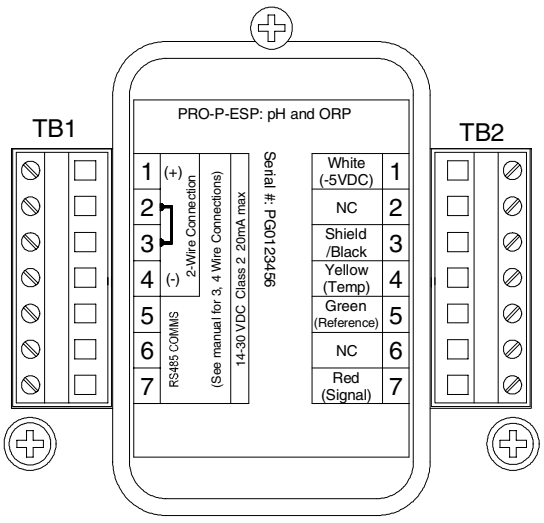

FIGURE 2-4 Transmitter Terminal Designations

3.1 pH or ORP Sensor

Depending on how transmitter is mounted, route the sensor (or interconnect) cable into the transmitter as follows:

- **Wall/Pipe-mounted Transmitter:** Route cable through left side cable entry knockout hole in the back cover.
- **Panel-mounted Transmitter:** Route cable behind panel to the exposed TB2 terminal strip.
- **Integral Sensor-mounted Transmitter:** Route cable through swivel ball knockout hole and center hole in back cover. (Do not open left side cable entry knockout hole in back cover.)

GLI Differential Technique Sensor

All GLI Differential Technique sensors have a built-in temperature element for automatic temperature compensation and for measuring process temperature.

☞ **Wiring Tip!** Route the sensor cable in 1/2-inch, grounded metal conduit to protect it from moisture, electrical noise, and mechanical damage.

For installations where the distance between sensor and transmitter exceeds the sensor cable length, indirectly connect the sensor to the transmitter using a junction box and interconnect cable.

☞ ***NOTE:*** *Do not route the sensor cable in any conduit containing AC or DC power wiring ("electrical noise" may interfere with the sensor signal).*

Refer to Figure 2-5 and connect the sensor (or interconnect) cable wires as shown, matching colors as indicated.

☞ ***NOTE:*** *For GLI Differential sensors with only one shield wire, always connect it to Terminal 3 on TB2.*

For systems not requiring CE compliance and lacking an earth ground, connect the outer shield to Terminal 3 on TB2.

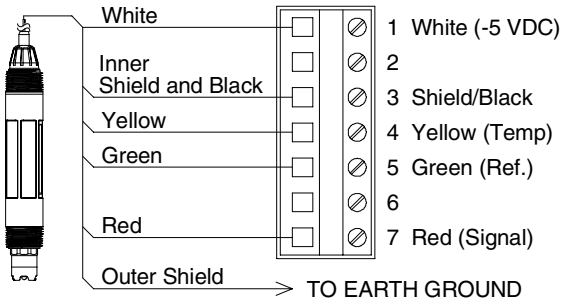

FIGURE 2-5
Connecting GLI Differential Technique Sensor

Conventional Combination Electrode

The electrode must be within 100 ft. (30 m) of the transmitter (985 ft./300 m for electrode with preamp). Refer to Figure 2-6 and directly connect the electrode's coaxial cable to the transmitter.

1. Connect the electrode's reference signal -- braided shield wire of coaxial cable (black insulated wire for GLI electrode) -- to Terminal 5 on TB2.

2. Connect the electrode's active signal -- center wire of coaxial cable (clear insulated wire for GLI electrode) -- to Terminal 7 on TB2.

3. Connect a jumper between Terminals 3 and 5 on TB2.

4. Connect the electrode's temperature element (typically white and red insulated wires for GLI electrode) to Terminals 3 and 4 on TB2, attaching either wire to either terminal.

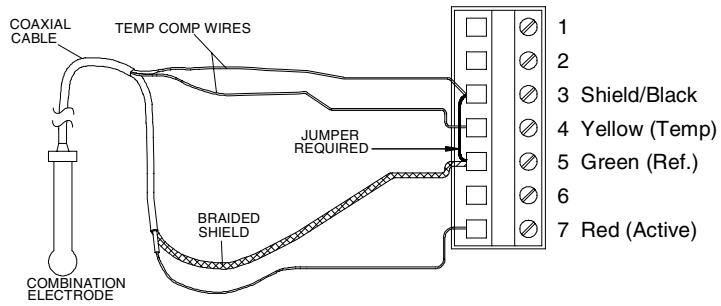

FIGURE 2-6
Connecting Conventional Combination Electrode

Conventional Combination Electrode with Ground Rod

Some applications require that an external ground rod be used with the combination electrode. The electrode must be within 100 ft. (30 m) of the transmitter (985 ft./300 m for electrode with preamp). Refer to Figure 2-7 and directly connect the electrode's coaxial cable to the transmitter.

Connect the electrode and temperature element wires in the same way as described in the previous "Conventional Combination Electrode" subheading -- and also connect the ground rod wire to Terminal 3 on TB2.

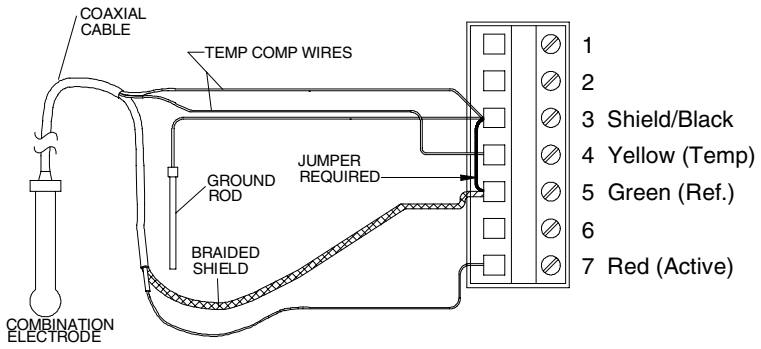

FIGURE 2-7
Connecting Conventional Combination Electrode with Ground Rod

3.2 Two-wire Hookup

In a two-wire hookup, at least 16 VDC is required for operation. A load device can be connected in the current loop (see Figure 2-8 for details).

Depending on how the transmitter is mounted, route the DC power/analog output wiring into the transmitter as follows:

- **Wall/Pipe-mounted Transmitter:** Route cable through right side cable entry knockout hole in the back cover.
- **Panel-mounted Transmitter:** Route cable behind panel to the exposed TB1 terminal strip.
- **Integral Sensor-mounted Transmitter:** Route cable through right side cable entry knockout hole in the back cover. (Do not open left side cable entry knockout hole in cover.)

☞ **Wiring Tip!** Use high quality, shielded instrumentation cable.

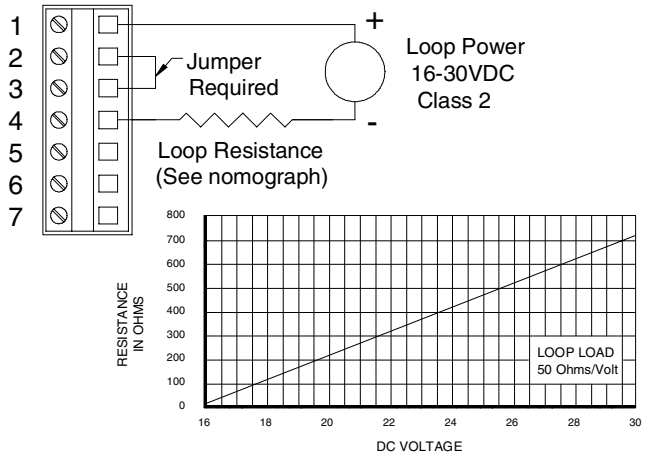

FIGURE 2-8
Two-wire Hookup

3.3 Three-wire Hookups

In a three-wire hookup, the transmitter can be wired four ways depending on load “sinking” or “sourcing” and whether or not RS-485 serial communication is used. At least 14 VDC is required for operation (16 VDC with serial communication). When using RS-485, consult GLI for Command Set.

Depending on how the transmitter is mounted, route the DC power, analog output, and RS-485 serial communication wiring into the transmitter as follows:

- **Wall/Pipe-mounted Transmitter:** Route cable through right side cable entry knockout hole in the back cover.
- **Panel-mounted Transmitter:** Route cable behind panel to the exposed TB1 terminal strip.
- **Integral Sensor-mounted Transmitter:** Route cable through right side cable entry knockout hole in the back cover. (Do not open left side cable entry knockout hole in cover.)

☞ **Wiring Tip!** Use high quality, shielded instrumentation cable.

Refer to the three-wire hookup that meets your application requirements, and connect the transmitter accordingly.

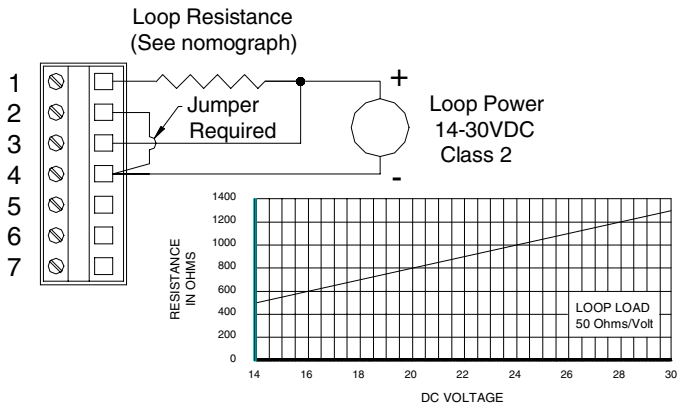

FIGURE 2-9
Three-wire Hookup -- Load Sinking

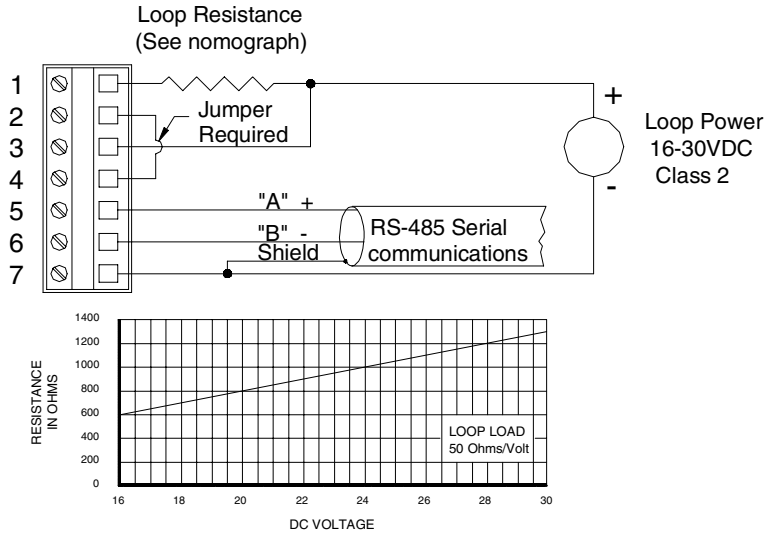

FIGURE 2-10
Three-wire Hookup -- Load Sinking with RS-485 Serial Communication

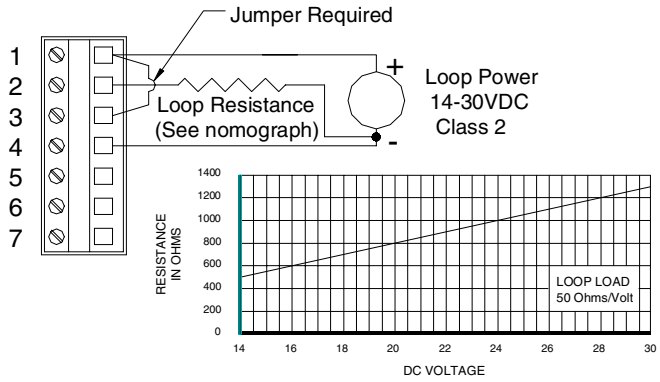

FIGURE 2-11
Three-wire Hookup -- Load Sourcing

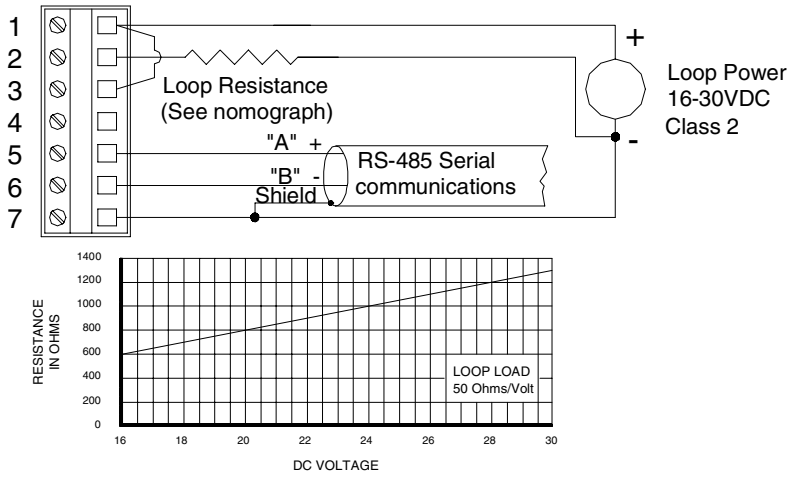

FIGURE 2-12
Three-wire Hookup -- Load Sourcing with RS-485 Serial Communication

3.4 Four-wire Hookups

In a four-wire hookup, the transmitter can be wired two ways depending on whether or not RS-485 serial communication is used. At least 12 VDC is required for operation (16 VDC with serial communication). When using RS-485, consult GLI for Command Set.

Depending on how the transmitter is mounted, route the DC power, analog output, and RS-485 serial communication wiring into the transmitter as follows:

- **Wall/Pipe-mounted Transmitter:** Route cable through right side cable entry knockout hole in the back cover.

- **Panel-mounted Transmitter:** Route cable behind panel to the exposed TB1 terminal strip.
- **Integral Sensor-mounted Transmitter:** Route cable through right side cable entry knockout hole in the back cover. (Do not open left side cable entry knockout hole in cover.)

☞ **Wiring Tip!** Use high quality, shielded instrumentation cable.

Refer to the four-wire hookup that meets your application requirements, and connect the transmitter accordingly.

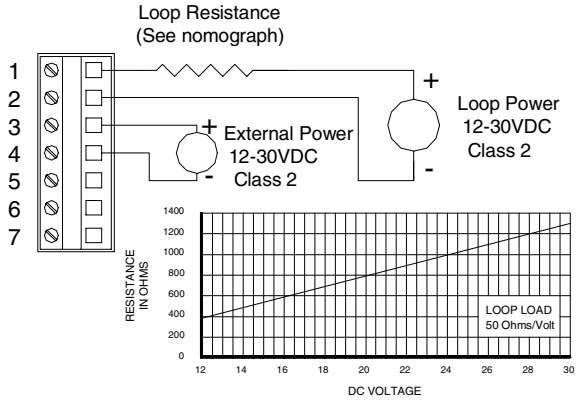

FIGURE 2-13
Four-wire Hookup without RS-485 Serial Communication

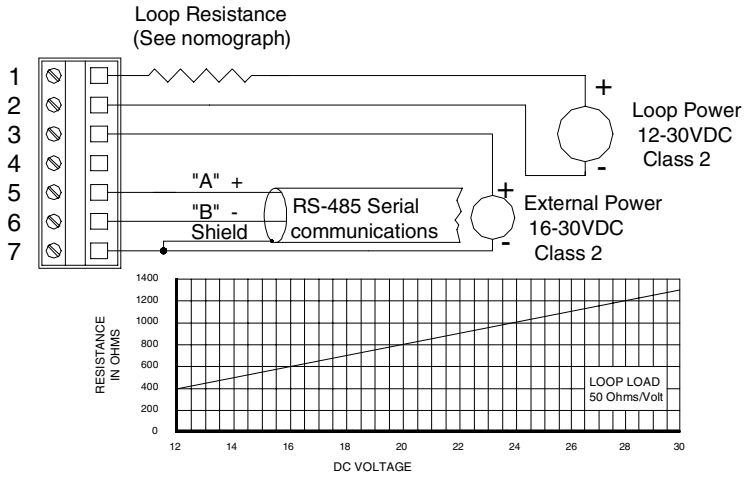

FIGURE 2-14
Four-wire Hookup with RS-485 Serial Communication

3.5 Monitor Mode Hookups (without current loop)

The transmitter can be wired two ways in a monitor mode hookup (without current loop), depending on whether or not RS-485 serial communication is used. At least 12 VDC is required for operation (16 VDC with serial communication). When using RS-485, consult GLI for Command Set.

Depending on how the transmitter is mounted, route the DC power and RS-485 serial communication wiring into the transmitter as follows:

- **Wall/Pipe-mounted Transmitter:** Route cable through right side cable entry knockout hole in the back cover.
- **Panel-mounted Transmitter:** Route cable behind panel to the exposed TB1 terminal strip.
- **Integral Sensor-mounted Transmitter:** Route cable through right side cable entry knockout hole in the back cover. (Do not open left side cable entry knockout hole in cover.)

☞ **Wiring Tip!** Use high quality, shielded instrumentation cable.

Refer to the monitor mode hookup that meets your application requirements, and connect the transmitter accordingly.

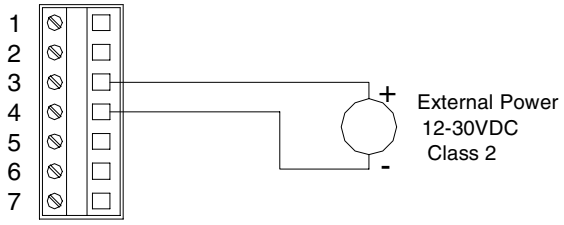

FIGURE 2-15
Monitor Mode Hookup (without Current Loop) -- without RS-485 Serial Communication

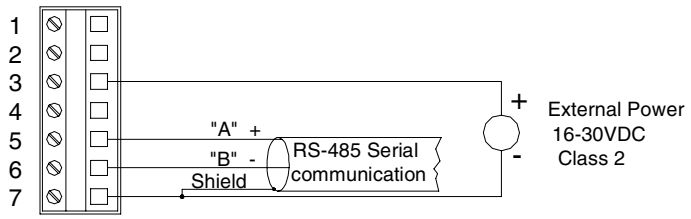

FIGURE 2-16
Monitor Mode Hookup (without Current Loop) -- with RS-485 Serial Communication

PART THREE - OPERATION

SECTION 1
USER INTERFACE

The user interface consists of a two-line LCD display and a keypad with **MENU**, **ENTER**, **ESC**, ⇦, ⇨, ⇧, **and** ⇩ **keys**.

1.1 Display

By using the keypad, you can display three types of screens:

- **MEASURE Screens:** The normal display mode shows the measured pH (or ORP). Pressing the ⇨ **key** sequentially scrolls through these other measurement readouts:
  - ✓ Measured process temperature
  - ✓ Measured pH and temperature

  } not provided when using transmitter to measure ORP
  - ✓ Measured analog output mA value
- **MENU Screens:** These top-level and lower-level (sub-menu) screens within the three main branches of the menu tree are used to access edit/selection screens for configuration. (EXIT screens at the end of each menu branch enable you to move up one level in the menu tree by pressing the **ENTER key**. This is functionally the same as pressing the **ESC key**.)
- **Edit/Selection Screens:** These screens enter values/choices to calibrate, configure, and test the transmitter.

1.2 Keypad

The keypad enables you to move throughout the transmitter menu tree. The keys and their related functions are:

1. **MENU key:** Pressing this key with the MEASURE screen displayed shows the "MAIN MENU ▶ CALIBRATE" screen. To display the CONFIGURE or TEST/MAINT top-level main branch screen, press the ⇩ **key**. Pressing the **MENU key** with a menu screen displayed always shows the top-level screen in that branch. (Pressing the **MENU key** also "aborts" the procedure to change values or selections.)

2. **ENTER key:** Pressing this key does two things: it displays submenu and edit/selection screens, and it enters (saves) configuration values/selections.

3. **ESC key:** Pressing this key always takes the display up one level in the menu tree. (Example: With the "MAIN MENU" screen displayed, pressing the **ESC key** once takes the display up one level to the MEASURE screen.) The **ESC key** can also "abort" the procedure to change a value or selection.

4. ⇦ **and** ⇨ **keys:** Depending on the type of displayed screen, these keys do the following:
   - MEASURE Screen: Changes readout (in continuous loop sequence) to show different measurements.
   - Menu Screens: These keys are non-functional.
   - Edit/Selection Screens: Moves cursor left or right to select digit for adjustment with ⇧ **and** ⇩ **keys**.

5. ⇧ **and** ⇩ **keys:** Depending on the type of displayed screen, these keys do the following:
   - MEASURE Screen: These keys are non-functional.
   - Menu Screens: Moves up or down respectively between other same-level menu screens.
   - Edit/Selection Screens: Adjusts selected digit value up or down, or moves up or down between choices.

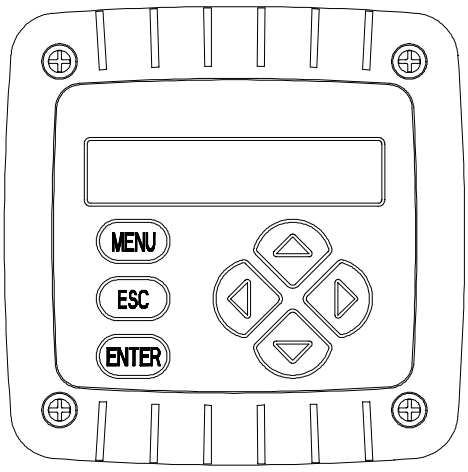

FIGURE 3-1 Transmitter Keypad

1.3 MEASURE Screen (normal display mode)

The MEASURE screen is normally displayed. Pressing the **MENU key** temporarily replaces the MEASURE screen with the top-level "MAIN MENU ▶ CALIBRATE" branch selection screen. Using the keypad, you can then display other screens to calibrate, configure or test the transmitter. **If the keypad is not used within 30 minutes, except during calibration or while using specific transmitter test/ maintenance functions, the display will automatically return to the MEASURE screen.** To display the MEASURE screen at any time, press the **MENU key** once and then press the **ESC key** once.

When using the transmitter to measure pH, the MEASURE screen can show four different readout versions. To select between them, in continuous loop sequence, press the ⇦ **or** ⇨ **key**. These are examples of the different versions:

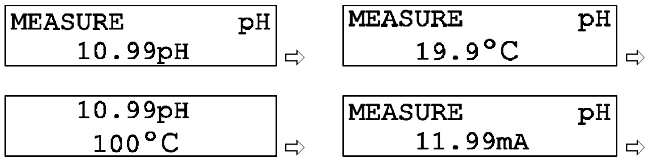

☞ ***NOTE:*** *If pure water temperature compensation was selected (PART THREE, Section 3.2, subheading "Select PURE H2O COMP") the MEASURE screen will show an asterisk after the pH reading to indicate it is being applied.*

When using the transmitter to measure ORP, only two readouts are shown: measured mV and the mA output. The two screens showing temperature are not available.

☞ ***NOTE:*** *When the transmitter returns to its normal MEASURE screen mode, the appearing readout is always the version last selected.*

Note that three MEASURE screen readout examples show the factory-default "PH" notation on their top lines, illustrating the transmitter notation feature. To create your own notation, refer to PART THREE, Section 3.2, subheading "ENTER NOTE (top line of MEASURE screen)."

When the measured value is beyond the transmitter measuring range, a series of " + " or " - " screen symbols appear, respectively indicating that the value is above or below range.

SECTION 2
MENU STRUCTURE

The transmitter menu tree is divided into three main branches: CALIBRATE, CONFIGURE, and TEST/MAINT. Each main branch is structured similarly in layers with top-level screens, related lower-level submenu screens and, in many cases, sub-submenu screens.

Each layer contains an EXIT screen to return the display up one level to the previous layer of screens.

☞ **Menu Structure Tip!** For operating convenience, the layers within each main branch are organized with the most frequently used function screens at their beginning, rather than the function screens used for initial startup.

2.1 Displaying Main Branch Selection Screens

1. With the MEASURE screen displayed, pressing the **MENU key** always shows the 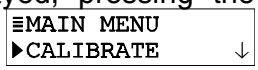

branch selection screen. (Pressing the **MENU key** with any other type of screen displayed always returns the display to the top of that respective menu branch).

2. Press ⇩ **and** ⇧ **keys** to select between the three MAIN MENU branch selection screens (CALIBRATE, CONFIGURE or TEST/MAINT), or the EXIT screen:

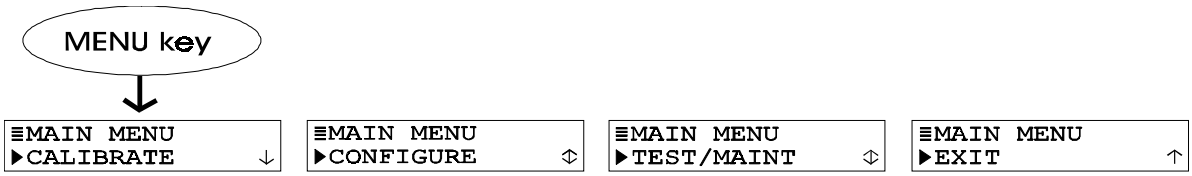

3. With the desired MAIN MENU branch selection screen displayed, press **ENTER key** to display the first top-level menu screen within that branch.

2.2 Displaying Top-level Menu Screens

With the first top-level menu screen of the desired main branch displayed, use the ⇩ **and** ⇧ **keys** to scroll through other top-level screens to access a desired screen.

The top-level menu screens for each main branch are:

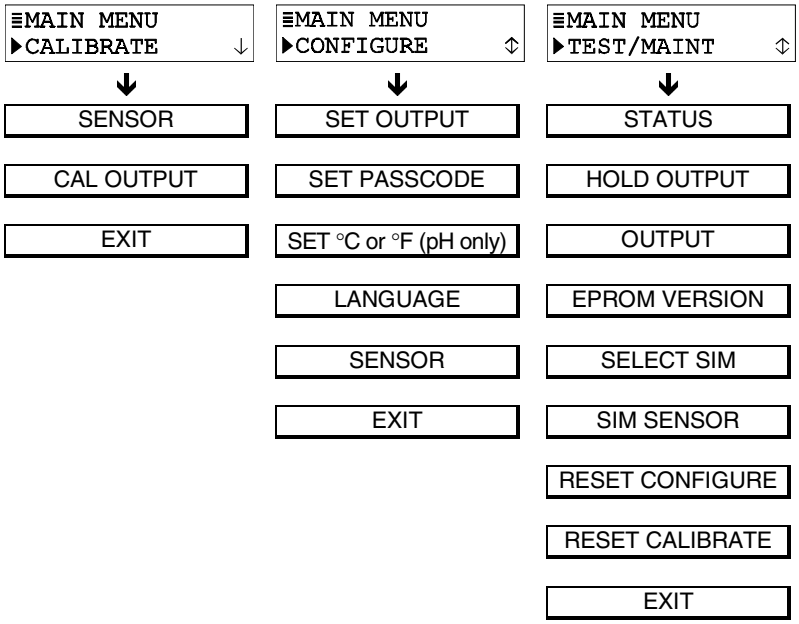

☞ **Menu Structure Tip!** A menu screen with a horizontal bar symbol (≣) at the start of its first line indicates there is a related submenu or edit/selection screen.

A menu screen with a "▶" symbol at the start and a "↓" symbol at the end of its second line indicates that you can select other screens within the same layer by pressing the ⇩ **key**. A "↕" symbol at the end of the second line indicates that you can move up or down between screens by respectively pressing the ⇧ **or** ⇩ **key**. When a "↑" symbol appears, it indicates you have reached the end of the screens in that layer. You can select previous screens using the ⇧ **key**.

2.3 Displaying Submenu Screens

After selecting a top-level menu screen, press the **ENTER key** to display a related submenu or edit/selection screen:

- **Submenu Screens** are usually linked to other related same-level screens. Pressing the ⇩ **key** displays these other related menu screens.

  Example: With this submenu screen displayed:

  ```
  ≣SET OUTPUT
  ▶SET PARAMETER ↓
  ```

  pressing the ⇩ **key** displays this related, same-level submenu screen:

  ```
  ≣SET OUTPUT
  ▶SET 4mA VALUE ↕
  ```

- **Edit/Selection Screens** always have a first line ending with a "?". Pressing the ⇩ **or** ⇧ **key** changes the value/ choice enclosed by parenthesis (second line on screen).

  Example: With this submenu screen displayed:

  ```
  SET °C OR °F?
  (°C              )
  ```

  pressing the ⇩ **key** displays this related choice:

  ```
  SET °C OR °F?
  (°F              )
  ```

2.4 Adjusting Edit/Selection Screen Values

Use **arrow keys** to edit/change the value/choice enclosed by parenthesis (examples shown above and below).

```
SET PARAMETER?
(SENSOR          )
```

```
SET 4mA VALUE?
(12.33 pH        )
```

A choice can be changed by simply using the ⇧ **and** ⇩ **keys**. Numerical values can be adjusted using the ⇦ **and** ⇨ **keys** to select a digit, and ⇧ **and** ⇩ **keys** to adjust its value.

2.5 Entering (Storing) Edit/Selection Screen Values/Choices

With the desired value/choice displayed, press the **ENTER key** to enter (store) it into the non-volatile transmitter memory. The previous screen will then re-appear.

☞ ***NOTE:*** *You can always press the **ESC key** to abort saving a new setting. The original setting will be retained.*

SECTION 3
TRANSMITTER CONFIGURATION

☞ ***NOTE:*** *When the passcode feature is enabled (Section 3.5), you must successfully enter the passcode before attempting to enter a configuration setting.*

3.1 Selecting LANGUAGE to Operate Transmitter

The transmitter is normally equipped to display screens in English and Spanish (Español). However, another language such as French (Français), German (Deutsche), etc. may be substituted for Spanish. The transmitter is factory-set for English. To select the other language:

1. Press **MENU key** to display a "MAIN MENU screen. If the 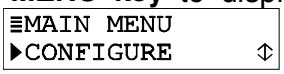

screen is not showing, use ⇩ **or** ⇧ **key** to display it.

2. Press **ENTER key** to display 

.

3. Press ⇩ **key** until 

screen appears.

4. Press **ENTER key** to display 

. Use ⇩ **or** ⇧ **key** to select a language, and press **ENTER key** to enter it.

☞ ***NOTE:*** *After a language is selected and entered, all screens are displayed in that language.*

3.2 Configuring Sensor Characteristics

The transmitter must be configured to define the sensor used with it, and other related items such as the display format, desired buffer set for calibration, temperature element, input signal filtering, etc.

SELECT SENSOR Type

1. With the 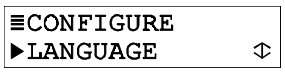

screen displayed, press ⇩ **key** <u>once</u> to display 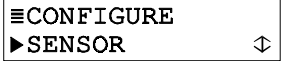

.

2. Press **ENTER key** to display
```
≣SENSOR
▶SELECT SENSOR ↓
```
.

3. Press **ENTER key** again to display a screen like
```
SELECT SENSOR?
(DIFF pH      )
```
. Use ⇩ **and** ⇧ **keys** to select the type of sensor to be used with the transmitter, and press **ENTER key** to enter it:

   - **DIFF pH:** Selects GLI Differential pH sensor.
   - **COMBINATION pH:** Selects conventional combination pH electrode.
   - **ORP:** Selects ORP sensor (either a GLI Differential ORP sensor or a conventional combination ORP electrode).

WARNING:

CHANGING THE SENSOR TYPE AUTOMATICALLY REPLACES ALL USER-ENTERED CONFIGURATION VALUES WITH FACTORY-DEFAULTS.

Select DISPLAY FORMAT

When using the transmitter to measure ORP, this function is not provided. (The ORP display format is fixed to show mV values as only whole numbers.) For pH measurement, select the desired display format (XX.XX or XX.X) for the MEASURE screen. This format setting has no effect on edit/selection screens, which always show pH values in a XX.XX format.

1. With the
```
≣SENSOR
▶SELECT SENSOR ↓
```
screen displayed, press ⇩ **key** once to display
```
≣SENSOR
▶DISPLAY FORMAT↕
```
.

2. Press **ENTER key** to display a screen like
```
DISPLAY FORMAT?
(XX.XX pH     )
```
. Use ⇩ **and** ⇧ **keys** to select the desired format (XX.XX or XX.X), and press **ENTER key** to enter it.

SELECT BUFFER Set for pH Calibration

When using the transmitter to measure ORP, this function is not provided. For pH measurement, configure the transmitter to use one of these buffer sets for pH calibration:

- 4.00, 7.00, and 10.00
- DIN 19267 Standard (1.09, 4.65, 6.79, 9.23, and 12.75)

☞ ***NOTE:*** *When using buffers that are not included in either of the transmitter buffer sets, disregard selecting the buffer set. In this case, use only the "1 (or) 2 POINT SAMPLE" method for pH calibration.*

The transmitter automatically recognizes pH values from the selected buffer set and uses its associated built-in table of pH-versus-temperature values to improve measurement accuracy. To select a buffer set:

1. With the `≡SENSOR ▶DISPLAY FORMAT⇕` screen displayed, press ⇩ **key** <u>once</u> to display `≡SENSOR ▶SELECT BUFFER ⇕`.

2. Press **ENTER key** to display a screen like `SELECT BUFFER? (4,7,10 )`. Use ⇩ **and** ⇧ **keys** to select a buffer set (4, 7, 10 or DIN 19267) for use during calibration, and press **ENTER key** to enter it.

Select PURE H2O COMP (only for special applications)

When using the transmitter to measure ORP, this function is not provided. When measuring pH in solutions with the weakly dissociating electrolytes ammonia or morpholine, built-in tables provide a correction factor for pure water temperature compensation. This special compensation is specifically for use in power plant applications. It adds an associated temperature-dependent offset, from the selected table, to the measured pH. If custom compensation is required for pure water applications, a "user-defined" pH/°C linear slope factor can be applied to the measured pH.

☞ ***NOTE:*** *The selected pure water temperature compensation is limited to 50°C. If the process temperature is higher, the offset corresponding to 50°C is used.*

1. With the `≡SENSOR ▶SELECT BUFFER ⇕` screen displayed, press ⇩ **key** <u>once</u> to display `≡SENSOR ▶PURE H2O COMP ⇕`.

2. Press **ENTER key** to display
```
≣PURE H2O COMP
▶SELECT TYPE    ↓
```
.

3. Press **ENTER key** again to display a screen like
```
PURE H2O COMP?
(NONE           )
```
. Use ⇩ **and** ⇧ **keys** to select the desired pure water temperature compensation (NONE, AMMONIA, MORPHOLINE or USER DEFINED), and press **ENTER key** to enter it.

4. If "USER DEFINED" was selected, you must set the specific pH/°C linear slope:

   A. With the
```
≣PURE H2O COMP
▶SELECT TYPE    ↓
```
screen displayed, press ⇩ **key** once to display
```
≣PURE H2O COMP
▶SET SLOPE      ⇳
```
.

   B. Press **ENTER key** to display a screen like
```
SET SLOPE?
(0.0000 pH/°C  )
```
. Use **arrow keys** to adjust to a desired slope, and press **ENTER key** to enter it.

☞ ***NOTE:*** *The MEASURE screen will show an asterisk after the pH reading to indicate pure water temperature compensation was selected and is being applied.*

SET FILTER Time

A time constant (in seconds) can be set to filter or "smooth out" the sensor signal. A minimum value of "0 seconds" has no smoothing effect. A maximum value of "60 seconds" provides maximum smoothing. Deciding what sensor signal filter time to use is a compromise. The higher the filter time, the longer the sensor signal response time will be to a change in the actual process value.

1. With the
```
≣SENSOR
▶PURE H2O COMP ⇳
```
screen displayed, press ⇩ **key** once to display
```
≣SENSOR
▶SET FILTER     ⇳
```
.

2. Press **ENTER key** to display a screen like
```
SET FILTER?
(0 SECONDS      )
```
. Use **arrow keys** to adjust to a desired filter time, and press **ENTER key** to enter it.

ENTER NOTE (top line of MEASURE screen)

The top line of the MEASURE screen readouts that separately show the measurement, temperature, and analog output values are factory set to read “PH.” This notation can be changed, for example, to “BASIN 1” to tailor the transmitter MEASURE screen to the application. The top line would then be “MEASURE BASIN 1.” The notation is limited to eight characters which can be a combination of capital letters A through Z, numbers 0 through 9, spaces, # symbols, hyphens, and periods.

1. With the `≡SENSOR ▶SET FILTER ⇕` screen displayed, press ⇩ **key** once to display `≡SENSOR ▶ENTER NOTE ⇕`.

2. Press **ENTER key** to display `ENTER NOTE? ([P]H )`. Create the desired notation on the second line:

   A. Starting with extreme left character position, use ⇧ **and** ⇩ **keys** to select the desired first character.

   B. Press ⇨ **key** once to select the next character, and use ⇧ **and** ⇩ **keys** to select its desired character.

   C. Repeat procedure until desired notation is displayed.

3. Press **ENTER key** to enter the displayed notation.

Select TEMP ELEMENT Type

When using the transmitter to measure ORP, this function is not provided since ORP measurement does not require temperature compensation. When measuring pH, configure the transmitter for either automatic temperature compensation (by defining the sensor’s built-in temperature element or an external element) or fixed MANUAL temperature compensation. When using MANUAL you must determine and enter a specific temperature.

☞ ***NOTE:*** *When a temperature element type has been selected but the element is not connected to the transmitter, a “WARNING: CHECK STATUS” message will appear. To prevent or clear the message, connect the element or select “MANUAL.”*

1. With the `≡SENSOR ▶ENTER NOTE ⇕` screen displayed, press ⇩ **key** once to display `≡SENSOR ▶TEMP ELEMENT ⇕`.

2. Press **ENTER key** to display
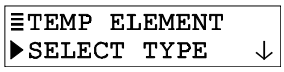

.

3. Press **ENTER key** again to display a screen like
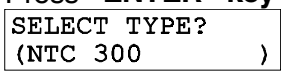

. Use ⇩ **and** ⇧ **keys** to select the type of temperature element used with the pH sensor to compensate the measurement, and press **ENTER key** to enter it:

   - **NTC300:** Selects automatic temperature compensation using only a NTC 300 ohm thermistor temperature element (in all GLI Differential pH sensors -- except Model 6006P4-2000 pure water pH sensor systems which use a Pt 1000 RTD).
   - **PT1000:** Selects automatic temperature compensation using only a Pt 1000 RTD temperature element.
   - **PT100:** Selects automatic temperature compensation using only a Pt 100 RTD temperature element.
   - **MANUAL:** For pH measurement only -- selects fixed manual temperature compensation (disregards temperature element -- see step 4).

4. If "MANUAL" was selected, you must set the specific manual temperature compensation value:

   A. With the
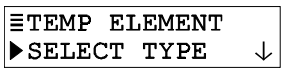

screen displayed, press ⇩ **key** <u>once</u> to display
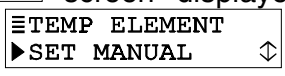

.

   B. Press **ENTER key** to display a screen like
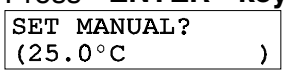

. Use **arrow keys** to adjust to a desired temperature for fixed MANUAL compensation, and press **ENTER key** to enter it.

3.3 SET °C OR °F (temperature display format)

When using the transmitter to measure ORP, this function is not provided. When measuring pH, the temperature can also be displayed. The MEASURE screen can be set to display temperature values in °C or °F. In either case, display resolution for measured temperature is always "XX.X."

1. With the ≣TEMP ELEMENT / ▶SELECT TYPE ↓ or ≣TEMP ELEMENT / ▶SET MANUAL ⇳ screen displayed, press **ESC key** <u>twice</u> to display ≣CONFIGURE / ▶SENSOR ⇳.

2. Press ⇧ **key** -- not ⇩ **key** -- <u>twice</u> to display ≣CONFIGURE / ▶SET °C OR °F ⇳.

3. Press **ENTER key** to display a screen like SET °C OR °F? / (°C). Use ⇩ **and** ⇧ **keys** to select the displayed temperature units (°C or °F), and press **ENTER key** to enter it.

3.4 Configuring Analog Output

The transmitter provides an isolated 4-20 mA analog output. During normal measurement operation, the output is active but can be held at the last measured value for up to 30 minutes by using the "HOLD OUTPUT" function in the TEST/MAINT menu. (See PART THREE, Section 5.2 for details.) During calibration, the output is automatically held at the last measured value and, upon completion, returned to its active state.

SET PARAMETER (representation)

When using the transmitter to measure ORP, this function is not provided. (The output always represents the measured ORP.) When measuring pH, the output can be assigned to represent the SENSOR (measured pH) or measured TEMPERATURE.

1. With the ≣CONFIGURE / ▶SET °C OR °F ⇳ screen displayed, press ⇧ **key** -- not ⇩ **key** -- <u>twice</u> to display ≣CONFIGURE / ▶SET OUTPUT ↓.

2. Press **ENTER key** to display ≣SET OUTPUT / ▶SET PARAMETER ↓.

3. Press **ENTER key** again to display SET PARAMETER? / (SENSOR). Use ⇩ **and** ⇧ **keys** to select the parameter the output will represent, press **ENTER key** to enter it.

SET 4 mA and 20 mA VALUES (range expand)

Parameter values can be set to define the endpoints at which the 4 mA and 20 mA analog output values are desired.

1. With the ≣SET OUTPUT / ▶SET PARAMETER ↓ screen displayed, press ⇩ **key** <u>once</u> to display ≣SET OUTPUT / ▶SET 4mA VALUE ⇳ .

2. Press **ENTER key** to display a screen like SET 4mA VALUE? / (7.00 pH) . Use **arrow keys** to set the value at which 4 mA is desired, and press **ENTER key** to enter it.

3. After the ≣SET OUTPUT / ▶SET 4mA VALUE ⇳ screen re-appears, press ⇩ **key** <u>once</u> to display ≣SET OUTPUT / ▶SET 20mA VALUE⇳ .

4. Press **ENTER key** to display a screen like SET 20mA VALUE? / (12.33 pH) . Use **arrow keys** to set the value at which 20 mA is desired, and press **ENTER key** to enter it.

☞ ***NOTE:*** *If the same values are set for 4 mA and 20 mA, the output automatically goes to, and remains at, 20 mA.*

SET FILTER Time

A time constant (in seconds) can be set to filter or “smooth out” the analog output signal. A minimum value of “0 seconds” has no smoothing effect. A maximum value of “60 seconds” provides maximum smoothing. Deciding what output filter time to use is a compromise. The higher the filter time, the longer the analog output signal response time will be to a change in the measured value.

1. With the ≣SET OUTPUT / ▶SET 20mA VALUE⇳ screen displayed, press ⇩ **key** <u>once</u> to display ≣SET OUTPUT / ▶SET FILTER ⇳ .

2. Press **ENTER key** to display a screen like SET FILTER? / (0 SECONDS) . Use **arrow keys** to adjust to a desired filter time, and press **ENTER key** to enter it.

SET FAIL LEVEL Mode (off, 4 mA or 20 mA)

When a "WARNING CHECK STATUS" message appears, indicating that a system problem may exist, the analog output can be set to respond in one of three ways:

- **OFF:** Output remains active.
- **4mA:** Output automatically goes to and remains at 4 mA.
- **20mA:** Output automatically goes to and remains at 20 mA.

To SET FAIL LEVEL mode to suit your application:

1. With the 

screen displayed, press ⇩ **key** <u>once</u> to display 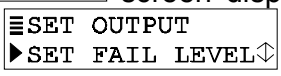

.

2. Press **ENTER key** to display 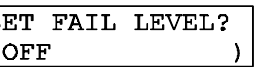

. Use ⇩ **and** ⇧ **keys** to select a response mode (OFF, 4mA or 20mA), and press **ENTER key** to enter it.

3.5 SET PASSCODE (feature enabled or disabled)

The transmitter has a passcode feature to restrict access to configuration settings and calibration to only authorized personnel.

- **DISABLED:** With the passcode feature disabled, all configuration settings can be displayed and changed, and the transmitter can be calibrated.

- **ENABLED:** With the passcode feature enabled, all configuration settings can be displayed -- but they cannot be changed -- and the CALIBRATE and TEST/MAINT menus cannot be accessed without the passcode. When you attempt to change a setting in the CONFIGURE menu by pressing the **ENTER key**, a displayed notification requests passcode entry. A valid passcode entry saves the changed setting and returns the display to the "MAIN MENU" branch selection screen. An incorrect passcode entry causes the display to momentarily show an error notification before returning to the "MAIN MENU" branch selection screen. There is no limit on attempts to enter a valid passcode.

The passcode is factory-set to "**3 4 5 6**." It cannot be changed.

To enable or disable the passcode feature:

1. Press **MENU key** to display a "MAIN MENU" screen. If the 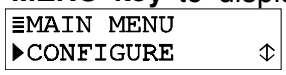

screen is not showing, use ⇩ **or** ⇧ **key** to display it.

2. Press **ENTER key** to display 

.

3. Press ⇩ **key** once to display 

.

4. Press **ENTER key** to display 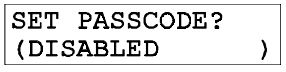

. Use ⇩ **and** ⇧ **keys** to select the desired passcode mode (DISABLED or ENABLED), and press **ENTER key** to enter it.

3.6 Configuration Setting Summary

TABLE A lists all configuration settings and their entry ranges/choices and factory defaults, categorized by basic functions.

TABLE A -- Transmitter Configuration Settings (Ranges/Choices and Defaults)

Displayed Screen Title	Entry Range or Choices (where applicable)	Factory Default	Your Setting
LANGUAGE Setting			
LANGUAGE?	ENGLISH and SPANISH (French, German, etc. may be substituted for Spanish)	ENGLISH	
SENSOR Settings			
SELECT SENSOR?	DIFF pH, COMB pH or ORP	DIFF pH	
DISPLAY FORMAT?	pH: XX.XX pH or XX.X pH ORP: Fixed at XXXX mV	pH: XX.XX pH ORP: XXXX mV	
SELECT BUFFER?	pH: 4, 7, 10 or DIN 19267 ORP: Screen not applicable/provided.	pH: 4, 7, 10 ORP: Not applicable	
PURE H2O COMP SELECT TYPE?	pH: NONE, AMMONIA MORPHOLINE or USER DEFINED ORP: Screen not applicable/provided.	pH: NONE ORP: Not applicable	
SET FILTER?	0-60 seconds	0 seconds	
ENTER NOTE?	pH: Replace PH with up to eight characters ORP: Replace ORP with up to eight characters	pH: PH ORP: ORP	
TEMP ELE: SELECT TYPE?	pH: NTC300, PT1000, PT100 or MANUAL ORP: Screen not applicable/provided.	pH: NTC300 ORP: Not applicable	
TEMP ELE: SET MANUAL?	pH: 0.0-100.0°C ORP: Screen not applicable/provided.	pH: 25.0°C ORP: Not applicable	
TEMPERATURE Display Setting			
SET °C OR °F?	pH: °C or °F ORP: Screen not applicable/provided.	pH: °C ORP: Not applicable	
OUTPUT Settings			
SET PARAMETER?	pH: SENSOR or TEMPERATURE ORP: Screen not applicable/provided.	pH: SENSOR ORP: Not applicable	
SET 4mA VALUE?	pH: -2.00 to +14.00 pH ORP: -2100 to +2100 mV TEMP: -20.0 to +200.0°C or -4.0 to 392.0°F	pH: 0.00 pH ORP: 0 mV TEMP: 0.0°C or 32.0°F	
SET 20mA VALUE?	pH: -2.00 to +14.00 pH ORP: -2100 to +2100 mV TEMP: -20.0 to +200.0°C or -4.0 to 392.0°F	pH: 14.00 pH ORP: +2100 mV TEMP: 200.0°C or 392.0°F	
SET FILTER?	0-60 seconds	0 seconds	
SET FAIL LEVEL?	OFF, 4 mA or 20 mA	OFF	
PASSCODE Setting			
SET PASSCODE?	DISABLED or ENABLED	DISABLED	
TEST/MAINT Simulation Function Settings			
SELECT SIM?	pH: SENSOR or TEMPERATURE ORP: Screen not applicable/provided.	pH: SENSOR ORP: Not applicable	
SIM SENSOR?	pH: -2.00 to +14.00 pH ORP: -2100 to +2100 mV TEMP: -20.0 to +200.0°C or -4.0 to 392.0°F	Present measured value of sensor's selected parameter (pH, ORP or temperature)	

SECTION 4
TRANSMITTER CALIBRATION

4.1 Important Information

Four methods are available for pH calibration (Section 4.2). To calibrate ORP, use only the 1-POINT SAMPLE method described in Section 4.3. The analog output loop can also be calibrated (Section 4.4).

Calibrate Periodically

To maintain best measurement accuracy, periodically calibrate the transmitter. Performance of the pH or ORP sensor slowly degrades over time, eventually causing inaccurate readings. The time period between calibrations, and the rate of system drift, can vary considerably with each application and its specific conditions.

☞ **Calibration Tip!** Establish a maintenance program to keep the sensor relatively clean and the transmitter calibrated. The daily, weekly or monthly intervals between performing maintenance will be influenced by the characteristics of the process solution, and can only be determined by operating experience.

Temperature-corrected pH Measurement

The transmitter is factory-calibrated for accurate temperature measurement. It will provide pH readings that are automatically corrected for temperature changes when the transmitter:

- Receives a temperature signal from a pH sensor that has a built-in temperature element (all GLI Differential sensors) or from an external temperature element.
- Has been correctly set for the type of temperature element being used for automatic compensation.

☞ ***NOTE:*** *When the passcode feature is enabled (Section 3.5), you must successfully enter the passcode before attempting to calibrate the transmitter.*

An in-progress calibration can always be aborted by pressing the ESC key. *After the "ABORT: YES?" screen appears, do <u>one</u> of the following:*

- *Press **ENTER key** to abort. After the "CONFIRM ACTIVE?" screen appears, press **ENTER key** to return the analog output to its active state (MEASURE screen appears).*
- *Press ⇧ **or** ⇩ **key** to choose "ABORT: NO?" screen, and press **ENTER key** to continue calibration.*

Calibration Tip! If a "CONFIRM FAILURE?" screen appears during calibration, press **ENTER key** to confirm. Then, use ⇧ **or** ⇩ **key** to select between "CAL: EXIT" or "CAL: REPEAT" and do one of the following:

- With "(CAL: EXIT)" selected, press **ENTER key**. After the "CONFIRM ACTIVE?" screen appears, press **ENTER key** to return the analog output to its active state (MEASURE screen appears).
- With "(CAL: REPEAT)" selected, press **ENTER key** to repeat calibration of the point.

4.2 pH Calibration

Based on convenience and your application requirements, use one of the four methods provided for pH calibration.

CAUTION:

WHEN USING A NEW SENSOR OR REPLACING THE STANDARD CELL SOLUTION AND SALT BRIDGE ON AN EXISTING GLI DIFFERENTIAL SENSOR, ALWAYS PERFORM A "RESET CALIBRATE" USING THE TEST/MAINT MENU (PART THREE, SECTION 5.8) BEFORE CALIBRATING.

NOTE: *When calibrating a sensor for the first time, always use a two-point method for best accuracy.*

2 POINT BUFFER Method

This recommended method requires two buffers, typically pH 7 and pH 4. (pH 10 buffer is also readily available but is not as stable, particularly at extreme temperatures.) This method automatically recognizes buffers from the selected buffer set. **Therefore, you must use buffers that match values in the buffer set** (see PART THREE, Section 3.2, subheading "SELECT BUFFER Set for pH Calibration" for details.)

NOTE: *When using buffers that are not included in either of the transmitter buffer sets, disregard this calibration method. Instead, use only the "2 POINT SAMPLE" calibration method.*

1. Immerse the sensor in the first pH buffer (preferably pH 7). **Important: Allow the sensor and buffer temperatures to equalize.** Depending on their temperature differences, this may take 30 minutes or more.

2. Press **MENU key** to display a "MAIN MENU" screen. If the `≡MAIN MENU ▶CALIBRATE ↓` screen is not showing, use ⇩ **or** ⇧ **key** to display it.

3. Press **ENTER key** to display `≡CALIBRATE ▶SENSOR ↓`.

4. Press **ENTER key** again to display `≡SENSOR ▶2 POINT BUFFER↓`.

5. Press **ENTER key** again to display `2 POINT BUFFER: IN 1ST SOLUTION?`. With the sensor in the first buffer, press **ENTER key** again to confirm this.

☞ ***NOTE:*** *During calibration, the analog output is automatically "held" at the last measured value.*

6. While the `2 POINT BUFFER: PLEASE WAIT` screen is displayed, the transmitter waits for the pH and temperature signals to stabilize, measures the buffer value, and automatically calibrates this point. Thereafter, a screen like `2 POINT BUFFER: PT1 = 7.00 pH` appears for 5 seconds to confirm calibration of this point.

☞ ***NOTE:*** *Any time the "PLEASE WAIT" screen appears during calibration you can <u>manually</u> complete calibration of the point by pressing the **ENTER key**. However, this is not recommended because the pH and temperature signals may not be fully stabilized, resulting in a less accurate calibration.*

7. After the `2 POINT BUFFER: IN 2ND SOLUTION?` screen appears, remove the sensor from the first buffer, rinse it with <u>clean</u> water, and immerse it in the second buffer (typically 4 pH). Then press **ENTER key** to confirm this.

8. While the `2 POINT BUFFER: PLEASE WAIT` screen is displayed, the

transmitter waits for the pH and temperature signals to stabilize, measures the buffer value, and automatically calibrates this point. Thereafter, a screen like

```
2 POINT BUFFER:
PT2 = 4.00 pH
```

appears for 5 seconds to confirm calibration of this point.

9. A "pH SLOPE XX.X mV/pH" screen appears, indicating a slope value to measure sensor performance. The slope should be between 54 and 62 mV/pH for optimal sensor performance. Typically, as the sensor ages and/or becomes dirty, its slope decreases. When the slope is less than 54 mV/pH, clean the sensor to improve its performance. If you are using a GLI Differential sensor and the slope remains low, replace the salt bridge and standard cell solution (see sensor operating manual for details). If using a conventional combination electrode, consider replacing it.

10. Press **ENTER key** to end calibration ("2 POINT BUFFER: CONFIRM CAL OK?" screen appears).

11. Re-install the sensor into the process.

12. Press **ENTER key** to display the active measurement reading on the "2 POINT BUFFER: CONFIRM ACTIVE?" output status screen. When the reading corresponds to the actual typical process value, press **ENTER key** again to return the analog output to its active state (MEASURE screen appears).

This completes "2 POINT BUFFER" calibration.

1 POINT BUFFER Method

This method is similar to the 2 POINT BUFFER method except that only one buffer is used to calibrate one point. This method also automatically recognizes buffers from the buffer set you selected. Therefore, you must use a buffer that matches a value in the buffer set. (See PART THREE, Section 3.2, subheading "SELECT BUFFER Set for pH Calibration" for selection details.)

☞ ***NOTE:*** *When using a buffer that is not included in either of the transmitter buffer sets, disregard this calibration method. Instead, use only the "1 POINT SAMPLE" calibration method.*

1. Immerse the sensor in the pH buffer. **Important: Allow the sensor and buffer temperatures to equalize.** Depending on their temperature differences, this may take 30 minutes or more.

2. Press **MENU key** to display a "MAIN MENU" screen. If the `≣MAIN MENU ▶CALIBRATE ↓` screen is not showing, use ⇩ **or** ⇧ **key** to display it.

3. Press **ENTER key** to display `≣CALIBRATE ▶SENSOR ↓`.

4. Press **ENTER key** again to display `≣SENSOR ▶2 POINT BUFFER↓`.

5. Press ⇩ **key** <u>once</u> to display `≣SENSOR ▶1 POINT BUFFER⇕`.

6. Press **ENTER key** to display `1 POINT BUFFER: SAMPLE READY?`. With the sensor in the buffer, press **ENTER key** to confirm this.

☞ ***NOTE:*** *During calibration, the analog output is automatically "held" at the last measured value.*

7. While the `1 POINT BUFFER: PLEASE WAIT` screen is displayed, the transmitter waits for the pH and temperature signals to stabilize, measures the buffer value, and automatically calibrates the point. Thereafter, a screen like `1 POINT BUFFER: PT = 7.00 pH` appears for 5 seconds to confirm calibration of the point.

☞ ***NOTE:*** *Any time the "PLEASE WAIT" screen appears during calibration, you can <u>manually</u> complete calibration of the point by pressing the **ENTER key**. However, this is not recommended because the pH and temperature signals may not be fully stabilized, resulting in a less accurate calibration.*

8. A "pH SLOPE XX.X mV/pH" screen appears, indicating a slope value to measure sensor performance. The slope should be between 54 and 62 mV/pH for optimal sensor performance. Typically, as the sensor ages and/or becomes dirty, its slope decreases. When the

slope is less than 54 mV/pH, clean the sensor to improve its performance. If you are using a GLI Differential sensor and the slope remains low, replace the salt bridge and standard cell solution (see sensor operating manual for details). If using a conventional combination electrode, consider replacing it.

9. Press **ENTER key** to end calibration ("1 POINT BUFFER: CONFIRM CAL OK?" screen appears).

10. Re-install the sensor into the process.

11. Press **ENTER key** to display the active measurement reading on the "1 POINT BUFFER: CONFIRM ACTIVE?" output status screen. When the reading corresponds to the actual typical process value, press **ENTER key** again to return the analog output to its active state (MEASURE screen appears).

This completes "1 POINT BUFFER" calibration.

2 POINT SAMPLE Method

This method requires you to enter the known pH values of two process samples (or two pH buffers). Determine sample values using laboratory analysis or comparison readings.

1. Immerse the sensor in the first solution (sample or buffer). **Important: Allow the sensor and sample temperatures to equalize.** Depending on their temperature differences, this may take 30 minutes or more.

2. Press **MENU key** to display a "MAIN MENU" screen. If the 

screen is not showing, use ⇩ **or** ⇧ **key** to display it.

3. Press **ENTER key** to display 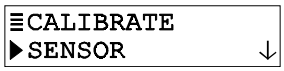

.

4. Press **ENTER key** again to display 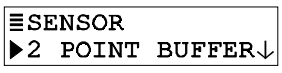

.

5. Press ⇩ **key** twice to display 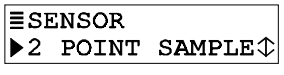

.

6. Press **ENTER key** to display `2 POINT SAMPLE: IN 1ST SOLUTION?` . With the sensor in the first sample, press **ENTER key** again to confirm this. This active `2 POINT SAMPLE: PT1 = X.XX pH` screen appears showing the measurement reading.

7. Wait for the reading to stabilize which may take up to 30 minutes. Then press **ENTER key**. The "PLEASE WAIT" screen may appear if the reading is still too unstable. After the reading has stabilized, this static `2 POINT SAMPLE? (X.XX pH )` screen appears showing the "last" measured value.

8. Determine the pH value of the first solution. For a sample, use laboratory analysis or a calibrated portable pH meter. (When using a pH buffer, refer to the table on the buffer bottle to find the exact pH value corresponding to the temperature of the buffer.)

9. With the static `2 POINT SAMPLE? (X.XX pH )` screen displayed, use **arrow keys** to adjust the displayed value to exactly match the known pH value of the first solution (sample or buffer). Then press **ENTER key** to enter it, completing calibration of the first point.

10. After the `2 POINT SAMPLE: IN 2ND SOLUTION?` screen appears, remove the sensor from the first solution, and rinse it with clean water.

11. Immerse the sensor in the second solution, and press **ENTER key** to confirm. This active `2 POINT SAMPLE: PT2 = X.XX pH` screen appears showing the measurement reading.

12. Wait for the reading to stabilize which may take up to 30 minutes. Then press **ENTER key**. The "PLEASE WAIT" screen may appear if the reading is still too unstable. After the reading has stabilized, this static `2 POINT SAMPLE? (X.XX pH )` screen appears showing the "last" measured value.

13. Determine the pH value of the second solution.

14. With the static 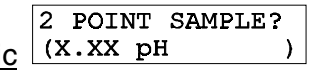

screen displayed, use **arrow keys** to adjust the displayed value to exactly match the known pH value of the second solution. Then press **ENTER key** to enter it, completing calibration of the second point.

15. A "pH SLOPE XX.X mV/pH" screen appears, indicating a slope value to measure sensor performance. The slope should be between 54 and 62 mV/pH for optimal sensor performance. Typically, as the sensor ages and/or becomes dirty, its slope decreases. When the slope is less than 54 mV/pH, clean the sensor to improve its performance. If you are using a GLI Differential sensor and the slope remains low, replace the salt bridge and standard cell solution (see sensor operating manual for details). If using a conventional combination electrode, consider replacing it.

16. Press **ENTER key** to end calibration ("2 POINT SAMPLE: CONFIRM CAL OK?" screen appears).

17. Re-install the sensor into the process.

18. Press **ENTER key** to display the active measurement reading on the "2 POINT SAMPLE: CONFIRM ACTIVE?" output status screen. When the reading corresponds to the actual typical process value, press **ENTER key** again to return the analog output to its active state (MEASURE screen appears).

This completes "2 POINT SAMPLE" calibration.

1 POINT SAMPLE Method

This method is similar to the 2 POINT SAMPLE method except that only one sample (or buffer) is used to calibrate one point. This method requires you to enter the known pH value of the sample (or pH buffer). Determine the sample value using laboratory analysis or a comparison reading.

1. Immerse the sensor in the sample (or buffer). **Important: Allow the sensor and sample temperatures to equalize.** Depending on their temperature differences, this may take 30 minutes or more.

2. Press **MENU key** to display a "MAIN MENU" screen. If the 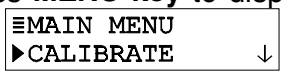

screen is not showing, use ⇩ **or** ⇧ **key** to display it.

3. Press **ENTER key** to display 

.

4. Press **ENTER key** again to display 

.

5. Press ⇩ **key** three times to display 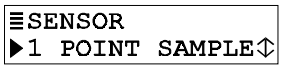

.

6. Press **ENTER key** to display 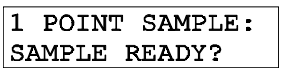

. With the sensor in the sample, press **ENTER key** to confirm this. This active 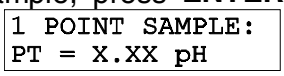

screen appears showing the measurement reading.

7. Wait for the reading to stabilize which may take up to 30 minutes. Then press **ENTER key**. The "PLEASE WAIT" screen may appear if the reading is still too unstable. After the reading has stabilized, this static 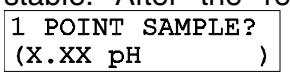

screen appears showing the "last" measured value.

8. Determine the pH value of the sample using laboratory analysis or a calibrated portable pH meter. (When using a pH buffer, refer to the table on the buffer bottle to find the exact pH value corresponding to the temperature of the buffer.)

9. With the static 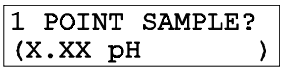

screen displayed, use **arrow keys** to adjust the displayed value to exactly match the known pH value of the sample (or buffer). Then press **ENTER key** to enter it, completing calibration of the point.

10. A "pH SLOPE XX.X mV/pH" screen appears, indicating a slope value to measure sensor performance. The slope should be between 54 and 62 mV/pH for optimal sensor performance. Typically, as the sensor ages and/or becomes dirty, its slope decreases. When the slope is less than 54 mV/pH, clean the sensor to

improve its performance. If you are using a GLI Differential sensor and the slope remains low, replace the salt bridge and standard cell solution (see sensor operating manual for details). If using a conventional combination electrode, consider replacing it.

11. Press **ENTER key** to end calibration ("1 POINT SAMPLE: CONFIRM CAL OK?" screen appears).

12. Re-install the sensor into the process.

13. Press **ENTER key** to display the active measurement reading on the "1 POINT SAMPLE: CONFIRM ACTIVE?" output status screen. When the reading corresponds to the actual typical process value, press **ENTER key** again to return the analog output to its active state (MEASURE screen appears).

This completes "1 POINT SAMPLE" calibration.

4.3 ORP Calibration

Calibrate for ORP measurement using only this "1 POINT SAMPLE" method.

CAUTION:

WHEN USING A NEW SENSOR OR REPLACING THE STANDARD CELL SOLUTION AND SALT BRIDGE ON AN EXISTING GLI DIFFERENTIAL SENSOR, ALWAYS PERFORM A "RESET CALIBRATE" USING THE TEST/MAINT MENU (PART THREE, SECTION 5.8) BEFORE CALIBRATING.



NOTE: *A two-point calibration method is purposely excluded since it could provide bad results. Immersing the sensor into one reference solution and then into the other could contaminate electrochemical components of the sensor.*

The "1 POINT SAMPLE" method requires you to enter the known mV value of a sample (or reference solution).

Determine the sample mV value using laboratory analysis or a comparison reading.

1. Immerse the sensor in the sample (or reference solution).

2. Press **MENU key** to display a "MAIN MENU" screen. If the `≡MAIN MENU ▶CALIBRATE ↓` screen is not showing, use ⇩ **or** ⇧ **key** to display it.

3. Press **ENTER key** to display `≡CALIBRATE ▶SENSOR ↓`.

4. Press **ENTER key** again to display `≡SENSOR ▶1 POINT SAMPLE↓`.

5. Press **ENTER key** again to display `1 POINT SAMPLE: SAMPLE READY?`. With the sensor in the sample (or reference solution), press **ENTER key** to confirm this. This <u>active</u> `1 POINT SAMPLE: PT = XXXX mV` screen appears showing the measurement reading.

6. Wait for the reading to stabilize. Then press **ENTER key**. The "PLEASE WAIT" screen may appear if the reading is still too <u>unstable</u>. After the reading has stabilized, this <u>static</u> `1 POINT SAMPLE? (XXXX mV )` screen appears showing the "last" measured value.

7. If not using an ORP reference solution, determine the mV value of the sample using laboratory analysis or a calibrated portable ORP meter.

8. With the <u>static</u> `1 POINT SAMPLE? (XXXX mV )` screen displayed, use **arrow keys** to adjust the displayed value to exactly match the <u>known</u> mV value of the sample (or reference solution). Then press **ENTER key** to enter it, completing calibration of the point.

9. Press **ENTER key** again to end calibration ("1 POINT SAMPLE: CONFIRM CAL OK?" screen appears).

10. Re-install the sensor into the process.

11. Press **ENTER key** to display the <u>active</u> measurement

reading on the "1 POINT SAMPLE: CONFIRM ACTIVE?" output status screen. When the reading corresponds to the actual typical process value, press **ENTER key** to return the analog output to its active state (MEASURE screen appears).

This completes ORP calibration.

4.4 Analog Output Calibration

The transmitter analog output is factory-calibrated. However, it can be re-calibrated if desired.



NOTE: *When the passcode feature is enabled (Section 3.5), you must successfully enter the passcode before attempting to calibrate the analog output.*

Also, the transmitter adjustment range for output values during calibration is ± 2 mA.

1. Press **MENU key** to display a "MAIN MENU" screen. If the ≡MAIN MENU ▶CALIBRATE ↓ screen is not showing, use ⇩ **or** ⇧ **key** to display it.

2. Press **ENTER key** to display ≡CALIBRATE ▶SENSOR ↓.

3. Press ⇩ **key** once to display ≡CALIBRATE ▶CAL OUTPUT ⇕.

4. Press **ENTER key** to display ≡CAL OUTPUT ▶CAL OUT 4mA ↓.

5. Press **ENTER key** again to display a screen like CAL OUT 4mA? (XXX). The displayed value is "counts" -- not mA -- that dynamically change as the output is adjusted.

6. Connect a calibrated digital multimeter in series with the loop load to measure the actual minimum mA output in the loop.

7. Use **arrow keys** to adjust the minimum output value to read exactly "4.00 mA" on the digital multimeter -- not

the transmitter display, and press **ENTER key** to complete calibration of the minimum endpoint value.

8. After the 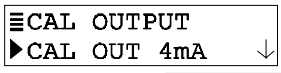

screen re-appears, press ⇩ **key** <u>once</u> to display 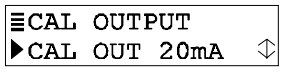

.

9. Press **ENTER key** to display a screen like 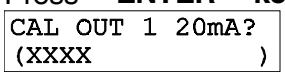

. Once again, the displayed value is “counts” -- not mA -- that dynamically change as the output is adjusted.

10. Now measure the actual <u>maximum</u> mA output in the loop with the digital multimeter.

11. Use **arrow keys** to adjust the maximum output value to read <u>exactly</u> “20.00 mA” on the <u>digital</u> <u>multimeter</u> -- not the transmitter display, and press **ENTER key** to complete calibration of the maximum endpoint value.

This completes analog output calibration.

SECTION 5
TEST/MAINTENANCE

The transmitter has TEST/MAINT menu screens to:

- Check operating status of the transmitter and sensor.
- Hold analog output at its last measured value.
- Provide analog output test signal to confirm operation of connected device.
- Identify transmitter firmware EPROM version.
- Simulate a pH (or mV) or temperature signal to exercise the measurement loop.
- Reset configuration -- not calibration -- values to defaults.
- Reset calibration -- not configuration -- values to defaults.

☞ ***NOTE:*** *When the passcode feature is enabled (Section 3.5), you must successfully enter the passcode before attempting to use the TEST/MAINT menu screens.*

5.1 STATUS Check (transmitter and sensor)

The system diagnostic capabilities of the transmitter enable you to check the operating status of the transmitter and sensor. The MEASURE screen will flash the "WARNING: CHECK STATUS" message when a system diagnostic "fail" condition has been detected. To determine the condition causing the warning, display the "STATUS" screens.

1. Press **MENU key** to display a "MAIN MENU" screen. If the 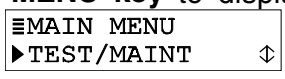

screen is not showing, use ⇩ **or** ⇧ **key** to display it.

2. Press **ENTER key** to display 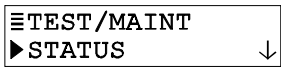

.

3. Press **ENTER key** again to display "STATUS: ANALYZER OK" screen. This screen confirms that the transmitter is operating properly. If "FAIL" appears, it may mean:
   - Analog-to-digital converter not responding.
   - Internal serial communications failure.

4. Press **ENTER key** once to view "STATUS: SENSOR OK" screen. If "FAIL" appears, it indicates that the sensor is inoperative or its signal is out of range (more than + 480 mV or less than -480 mV for pH, or more than +2100 mV or less than -2100 mV for ORP).

5. Press **ENTER key** once to view "STATUS: SLOPE" screen, which indicates a slope value to measure sensor performance. The slope should be between 54 and 62 mV/pH for optimal sensor performance. Typically, as the sensor ages and/or becomes dirty, its slope decreases. When the slope is less than 54 mV/pH, clean the sensor to improve its performance. If you are using a GLI Differential sensor and the slope remains low, replace the salt bridge and standard cell solution (see sensor operating manual for details). If using a conventional combination electrode, consider replacing it.

6. Press **ENTER key** once to view the "STATUS: TEMP OK" screen. If "FAIL" appears, it indicates that the temperature element in the sensor is inoperative, disconnected or incorrectly wired.

7. To end status checking, press **ESC key** or **ENTER key** (display returns to previous level of TEST/MAINT menu branch).

5.2 HOLD OUTPUT

The HOLD OUTPUT function conveniently holds the analog output at its last measured value for up to 30 minutes to suspend operation of any connected device.

1. With the 

screen displayed, press ⇩ **key** once to display 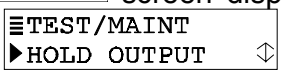

.

2. Press **ENTER key** to immediately hold the analog output ("HOLD OUTPUT: ENTER TO RELEASE" screen appears, acknowledging hold is applied).

NOTE: *If the keypad is not used within 30 minutes, the analog output will automatically change back to its active state and the display will return to the MEASURE screen.*

3. To release the hold at any time and return the analog output back to its "active" state, press **ENTER key** (display returns to previous level of TEST/MAINT menu branch).

5.3 OUTPUT Test Signal

The OUTPUT function provides an analog output test signal of a desired mA value to confirm operation of a connected device.

1. With the ≣TEST/MAINT ▶STATUS ↓ screen displayed, press ⇩ **key** until ≣TEST/MAINT ▶OUTPUT ⇳ screen appears.

2. Press **ENTER key** to display a screen like OUTPUT? (XX.XXmA) .



NOTE: *The mA output test signal is now active. Its value is shown on this screen.*

3. Use **arrow keys** to adjust the displayed value to obtain the desired mA test signal.

4. To remove the output test signal and return to the previous level of the TEST/MAINT menu branch, press **ESC key** or **ENTER key**.

5.4 Firmware (EPROM VERSION) Check

The EPROM VERSION function checks the version of firmware used in the transmitter.

1. With the ≣TEST/MAINT ▶STATUS ↓ screen displayed, press ⇩ **key** until ≣TEST/MAINT ▶EPROM VERSION ⇳ screen appears.

2. Press **ENTER key** to view the EPROM version screen.

3. To return to the previous level of the TEST/MAINT menu branch, press **ESC key** or **ENTER key**.

5.5 SELECT SIM Measurement

The SELECT SIM function selects a type of simulated measurement. It is used in conjunction with the SIM SENSOR function (Section 5.6) to simulate a measured value, making the analog output respond accordingly. **(When using the transmitter to measure ORP, the SELECT SIM function is not provided because the simulated measurement always represents mV.)**

1. With the ≡TEST/MAINT ▶STATUS ↓ screen displayed, press ⇩ **key** until ≡TEST/MAINT ▶SELECT SIM ⇳ screen appears.

2. Press **ENTER key** to display a screen like SELECT SIM? (SENSOR). Use ⇩ **and** ⇧ **keys** to select the type of simulated measurement, and press **ENTER key** to enter it:
   - **SENSOR:** Selects simulated measurement to be pH.
   - **TEMPERATURE:** Selects simulated measurement to be temperature.

5.6 SIM SENSOR Setting

After selecting the type of simulated measurement (Section 5.5), use the SIM SENSOR function to set the desired simulation value.

1. With the ≡TEST/MAINT ▶SELECT SIM ⇳ screen displayed, press ⇩ **key** once to display ≡TEST/MAINT ▶SIM SENSOR ⇳.

2. Press **ENTER key** to display a screen like SIM SENSOR? (X.XX pH).

☞ ***NOTE:*** *The analog output signal is now active. It has a mA value that corresponds to the measurement value shown on this screen.*

3. Use **arrow keys** to adjust the displayed simulation value to the desired value.

4. To remove the simulated output and return to the previous level of the TEST/MAINT menu branch, press **ESC key** or **ENTER key**.

5.7 RESET CONFIGURE Values to Factory Defaults

The RESET CONFIGURE function resets stored configuration settings (all at the same time) -- **but not calibration settings** -- to their factory-set defaults shown in TABLE A.

NOTE: *Resetting configuration values also excludes the SELECT SENSOR function (DIFF pH, COMB pH or ORP) which remains as is until you change it.*

1. With the ≣TEST/MAINT ▶STATUS ↓ screen displayed, press ⇩ **key** until ≣TEST/MAINT ▶RESET CONFIGURE screen appears.
2. Press **ENTER key** to display the "RESET CONFIGURE: ARE YOU SURE?" screen, asking if you really intend to perform this extreme action. (To abort this procedure, press **ESC key** now.)
3. Press **ENTER key** to reset stored configuration settings -- **not calibration settings** -- to factory defaults. The "RESET CONFIGURE: DONE" screen appears, acknowledging that reset has occurred.
4. To return to the previous level of the TEST/MAINT menu branch, press **ESC key** or **ENTER key**.

5.8 RESET CALIBRATE Values to Factory Defaults

The RESET CALIBRATE function resets stored calibration settings -- **but not configuration settings** -- to factory-set defaults.

1. With the ≣TEST/MAINT ▶STATUS ↓ screen displayed, press ⇩ **key** until ≣TEST/MAINT ▶RESET CALIBRATE screen appears.
2. Press **ENTER key** to display the "RESET CALIBRATE: ARE YOU SURE?" screen, asking if you really intend to perform this extreme action. (To abort this procedure, press **ESC key** now.)
3. Press **ENTER key** to reset all stored calibration settings -- **not configuration settings** -- to factory defaults. The "RESET CALIBRATE: DONE" screen appears, acknowledging that reset has occurred.
4. To return to the previous level of the TEST/MAINT menu branch, press **ESC key** or **ENTER key**.

PART FOUR - SERVICE AND MAINTENANCE

SECTION 1
GENERAL INFORMATION

If a measurement problem exists and you suspect the sensor cable, inspect it for physical damage. If an interconnect cable is used, check the junction box, then disconnect the cable at both ends (sensor and transmitter) and, using an ohmmeter, check its wires for continuity and internal shorts.

SECTION 2
PRESERVING MEASUREMENT ACCURACY

2.1 Keeping Sensor Clean

To maintain measurement accuracy, periodically clean the sensor. Operating experience will help you determine when to clean the sensor (daily, weekly or monthly intervals). Use the recommended cleaning procedure described in the GLI sensor operating manual.

2.2 Keeping Transmitter Calibrated

Depending on application circumstances, periodically calibrate the transmitter to maintain measurement accuracy.



Maintenance Tip! Upon startup, frequently check the system until operating experience can determine the optimum time between calibrations that provides acceptable measurement results.

- pH: Calibrate using one of the methods described in PART THREE, Section 4.2.
- ORP: Calibrate using only the method described in PART THREE, Section 4.3.

Calibrating with old, contaminated or diluted pH buffers may cause measurement errors. **Do not reuse buffers.** Never pour the portion of buffer used for calibration back into the buffer bottle -- always discard it. Note that the pH value of a buffer changes as its temperature changes. (Always refer to the pH value-versus-temperature table on the buffer bottle.) Therefore, always allow the temperatures of the sensor and buffer to equalize while calibrating.

2.3 Avoiding Electrical Interference

Recommendation: Do not run the sensor cable (and interconnect cable, if used) in the same conduit with AC or DC power wiring. Also, connect cable shielding as recommended (PART TWO, Section 3.1).



Maintenance Tip! Excess cable should not be coiled near motors or other equipment that may generate electrical or magnetic fields. Cut cables to proper length during installation to avoid unnecessary inductive pickup ("electrical noise" may interfere with sensor signal).

SECTION 3
TROUBLESHOOTING

3.1 Ground Loops

The transmitter may be affected by a "ground loop" problem (two or more electrically grounded points at different potentials).

Symptoms Indicating a Possible Ground Loop

- Transmitter reading is offset from the actual value by a consistent amount, or ....
- Transmitter reading is frozen on one value, or ....
- Transmitter reading is "off scale" (upscale or downscale).

Although the source of a ground loop is difficult to determine, there are several common causes.

Common Causes of a Ground Loop

- Components, such as recorders or computers, are connected to non-isolated analog outputs.
- Not using shielded cabling or failure to properly connect all cable shields.
- Moisture or corrosion in a junction box.

Determining if Ground Loop Exists

The following simple test can help to determine if there is a ground loop:

1. With the pH (or ORP) MEASURE screen displayed, immerse the sensor in a non-conductive container (plastic or glass) filled with a pH buffer (or ORP refer-

ence solution) of known value. Note the transmitter reading for this solution.

2. Connect one end of a wire to a known earth ground such as a metal water pipe. Place the other end of this wire into the buffer next to the sensor.

3. Note the transmitter reading now and compare it with the reading taken in step 1. If the reading changed, a ground loop exists.

Finding Source of Ground Loop

Sometimes the source of a ground loop is easy to find, but it usually takes an organized approach to isolate the problem.



Troubleshooting Tip! Use a systematic troubleshooting method. If possible, start by grounding all shields and electrical grounds at one stable point. One at a time, turn off all pumps, motors, and switches that are in contact with the process. Each time you do this, check if the ground loop still exists. Since the process media being measured is electrically conductive, the source of the ground loop may not be readily apparent.

3.2 Isolating Measuring System Problem

When experiencing problems, try to determine the primary measurement system component causing the problem (sensor, transmitter or interconnect cable, if used):

Checking Electrical Connections

1. Verify that adequate DC voltage exists at the appropriate transmitter TB1 terminals.

2. Check all transmitter wiring to ensure proper connections.

Verifying Sensor Operation

To verify sensor operation, refer to the procedure in the troubleshooting section of the sensor operating manual. Or replace the suspect sensor with a known new or working sensor and perform calibration

Verifying Transmitter Operation

1. After disconnecting DC power from the transmitter, disconnect the sensor (and interconnect cable, if used).

2. Depending on the type of sensor, refer to the appropriate category below and follow the steps to simulate a pH (or ORP) input signal and a temperature signal:

For GLI Differential Technique Sensor

A. Connect a jumper between Terminal 3 (shield/black) and Terminal 5 (green) on TB2.

B. Connect a millivolt generator (or a jumper, if generator is not available) between Terminal 5 (green) and Terminal 7 (red) on TB2, with the (+) lead on Terminal 7.

C. When using the transmitter to measure pH, connect a 1% tolerance, 301 ohm resistor between Terminals 4 (yellow) and 5 (green) on TB2. **When using transmitter to measure ORP, disregard this step.**

D. Make sure transmitter is configured for a 300 ohm NTC temperature element (PART THREE, Section 3.2, subheading “Select TEMP ELEMENT Type”).

For Conventional Combination Electrode

A. Connect a jumper between Terminal 3 and Terminal 5 (reference) on TB2.

B. Connect a millivolt generator (or a jumper, if generator is not available) between Terminal 3 and Terminal 7 (active) on TB2, with the (+) lead on Terminal 7.

C. When using the transmitter to measure pH, connect a 1% tolerance, 1000 ohm resistor between Terminals 3 and 4 on TB2. **When using transmitter to measure ORP, disregard this step.**

D. Make sure the transmitter is configured for a Pt 1000 temperature element (PART THREE, Section 3.2, subheading “Select TEMP ELEMENT Type”).

3. Reconnect DC power to the transmitter.

4. Set millivolt generator to provide each of the following outputs, checking the transmitter MEASURE screen each time for these corresponding pH (or mV) readings:

Generator Output	Corresponding Transmitter Reading	
	For pH	For ORP
Zero mV	7 pH (approximately)	0 mV
(-)175 mV	10 pH (approximately)	(-)175 mV
(+)175 mV	4 pH (approximately)	(+)175 mV
When Using Jumper Only (not generator)		
- - - -	7 pH (approximately)	0 mV

5. When using the transmitter to measure pH, change the transmitter MEASURE screen to show temperature. **When using transmitter to measure ORP, disregard this step.**

   - For a GLI Differential Technique sensor, the temperature value should be approximately “25°C.”
   - For a conventional combination electrode, the temperature value should be approximately “0°C.”

If these readings are achieved, the transmitter is operating properly, but the interconnect cable (if used) may be faulty.

Verifying Interconnect Cable Integrity

1. Disconnect DC power, the millivolt generator, and temperature simulation resistor from the transmitter.

2. Reconnect the sensor directly to the transmitter (purposely bypassing the interconnect cable and junction box, if used).

3. Reconnect DC power to the transmitter.

4. Use a two-point method to calibrate the transmitter. (For ORP measurement, use only the “1 POINT SAMPLE” method described in PART THREE, Section 4.3.) If calibration was:

   - **Successful:** The transmitter and sensor are operating properly, but the interconnect cable is probably faulty.
   - **Unsuccessful:** The sensor is probably inoperative.

SECTION 4
TRANSMITTER REPAIR/RETURN

4.1 Customer Assistance

If you need assistance in troubleshooting or repair service, please contact your local GLI representative, or GLI Customer Service at:

GLI International, Inc.
9020 West Dean Road
Milwaukee, WI 53224

Phone: [800] 543-8907
Fax: [414] 355-8346
E-mail: info@gliint.com

— GLI CUSTOMER SERVICE HOURS —

	Eastern Std. Time	Central Std. Time	Mountain Std. Time	Pacific Std. Time
Monday through Thursday	8:30 a.m. to 5:30 p.m.	7:30 a.m. to 4:30 p.m.	6:30 a.m. to 3:30 p.m.	5:30 a.m. to 2:30 p.m.
Friday	8:30 a.m. to 4:00 p.m.	7:30 a.m. to 3:00 p.m.	6:30 a.m. to 2:00 p.m.	5:30 a.m. to 1:00 p.m.

4.2 Repair/Return Policy

Call GLI Customer Service before returning a transmitter for repair. Many problems can be diagnosed and resolved over the telephone. GLI will issue a Return Material Authorization (RMA) number for a transmitter being returned. **All returned transmitters must be freight prepaid and include:**

1. A clearly written description of the malfunction.
2. Name of person to contact and the phone number where they can be reached.
3. Proper return address to ship transmitter back. Include preferred shipping method (UPS, Federal Express, etc.) if applicable.
4. A purchase order if transmitter(s) is out of warranty to cover costs of repair.

☞ ***NOTE:*** *If the transmitter is damaged during return shipment because of inadequate packaging, the customer is responsible for any resulting repair costs. (**Recommendation:** Use the original GLI shipping carton or an equivalent.)*

Also, GLI will not accept transmitters returned for repair or replacement unless they are thoroughly cleaned and all process material is removed.

CLARIFIED WATER TURBIDIMETER

LEFT BLANK

THE NEW

1720E

experience + accuracy + simplicity

What can the unsurpassed

WORLD LEADER IN TURBIDITY

measurement do for you?



The 1720E TURBIDIMETER

is the newest in a long line of successful Hach turbidimeters from the unsurpassed world leader in turbidity measurement.

HACH®

Be Right™

THE NEW

1720E

experience + accuracy + simplicity

EXPERIENCE

The Model 1720E Low Range Turbidimeter reflects an astounding 45 years of Hach leadership in turbidity measurement science. Metropolitan water treatment systems, rural water utilities, wastewater treatment plants large and small, and industrial processes of every kind - all have relied on Hach turbidimeters for nearly five decades. In fact, Hach has the largest turbidimeter installation base in the world.

Operators and engineers alike know they can count on the performance of Hach turbidimeters and calibration standards as well as the experienced Hach personnel designing, manufacturing, selling, installing, and supporting these systems. Additionally, Hach offers a 2-year warranty on the 1720E, compared to the 1-year warranty offered with many other turbidimeters on the market. Hach is not only the world's turbidity leader, but also your partner in turbidity measurement, filtration management, and treatment process optimization solutions.



ACCURACY

Now, the 1720E Turbidimeter combines Hach's proven design, demonstrated accuracy and reliability, plus innovative elements that add more power and utility to your low-level turbidity monitoring program:

> Built-in bubble removal system - eliminates falsely high readings at low levels

> Sensitivity - fast response to fine changes in low-level turbidity

> Repeatability -not effected by sample flow and pressure

SIMPLICITY

> Simplified two-module design - sensor and controller interface with simple plug & play connection

> Reduced instrumentation - controller accepts two sensors; adding a second 1720E sensor unit gives you two complete turbidimeters

> Easy, calibration and verification - with no interruption in sample flow

THE BEST TOOL FOR EFFLUENT MONITORING REQUIREMEN

PRINCIPLE OF OPERATION

NEPHELOMETRIC MEASUREMENT

Incandescent light directed from the sensor head assembly down into the turbidimeter body is scattered by suspended particles in the sample. The sensor's submerged photocell detects light scattered at 90° from the incident beam.

SAMPLE FLOW PATH

Sample enters the center column of the turbidimeter, rises into the measuring chamber and spills over the weir into the drain port. This configuration results in an optically flat surface free of turbulence.

SIMPLIFIED CALIBRATION

One-point calibration with prepared StablCal™ Stabilized Formazin Solution eliminates the errors of formazin suspension dilution, takes less than two minutes per sensor, and is a USEPA-accepted method.

BUILT-IN BUBBLE REMOVAL

Continuously flowing sample flows through the patented* bubble removal system, which vents entrained air from the sample stream and eliminates the most significant interference in low-level turbidity measurement. The built-in bubble removal system is immune to changes in sample flow and pressure.

COMPLIANT DESIGN

The 1720E Low Range Turbidimeter applies the instrument design and meets performance criteria established by the U.S. Environmental Protection Agency (USEPA) in Method 180.1, making it suitable for regulatory reporting.

*U.S. patent 5,831,727





SIMPLE RELIABLE CALIBRATION TOOLS

ICE-PIC VERIFICATION MODULE

The ICE-PIC Module is a newer, faster way to calibrate and check the performance of Hach 1720 series turbidimeters. The benefits of using the ICE-PIC Module include:

- > Saves time - verify performance in less than one minute
- > Accurate - factory calibrated, with a certificate of accuracy provided
- > Cost effective - a one-time investment, with no consumables
- > Small and lightweight - great for spot verification around the facility
- > Available in 20 and 1.0 NTU

TS!

STABLCAL® STABILIZED FORMAZIN PRIMARY STANDARDS

- > Disposable and non-toxic
- > Avoid preparation and dilution of formazin standards with StablCal standards
- > Can be used to calibrate any turbidimeter
- > Guaranteed shelf life of two years
- > Low level certified standards available in 1 L or 3.78 L (1 Gallon)
- > Low level standards range from 0.06 to 1 NTU

POWERFUL DATA MANAGEMENT AND COMMUNICATIONS

DATA COLLECTION AND DISPLAY

The 1720E Turbidimeter sc100 Controller receives data from one or two sensors. Its built-in data logger collects turbidity measurements at user selectable intervals (1-15 minutes), along with calibration and verification points, alarm history, and instrument setup changes for 6 months. Local display, recall, graphing, and trending in CSV format make chart recorders redundant.

DIRECT DIGITAL COMMUNICATION

This revolutionary smart controller is a new standard for Hach instruments. Not only will it accept a rapidly increasing number of Hach anaylytical tools; but it will reduce your operator training load as a wide variety of instruments will share the same interface and control method.

The sc100 Controller also offers optional DigitalDirect solutions for direct measurement from sensor to control room - no analog/digital conversion. Choose from MODBUS® /RS485, MODBUS/RS232, LonWorks protocols, or the wireless IR port.



MORE OUTPUT FEATURES

Meet your specific application needs with even more data management and communication features:

- > Two analog outputs; three set-point alarms
- > Wireless IR port communication
- > Compatibility with existing AquaTrend® Networks
- > Data is downloadable in user-selected time intervals; stores up to 6 months of data

THE LARGEST SURFACE WATER TREATMENT PLANT

in the world has been using Hach process turbidimeters for years.



The city of Chicago has two plants that currently have more than 300 Hach 1720D turbidimeters installed to meet the high volume demand and NPDWR regulatory rules. Why Hach? According to John Spatz, the Bureau of Water Supply Deputy Commissioner, the instruments have proven to be "very accurate and dependable."

The facility has found that the 1720D turbidimeters need very little maintenance and are easy to operate. Spatz says they rarely refer back to the manual once the instrument is installed. "The instruments are very user-friendly" according to Spatz. He also likes the idea of having data back-up in the unit, in case the SCADA system is not operational.

During the purchasing research, the city looked at several turbidimeters, then chose Hach because the 1720D best fit the facilities' needs. The plants also use several Hach bench-top turbidimeters.

HACH®

Be Right™

1720E SPECIFICATIONS*

Range	0.001-100 Nephelometric Turbidity Units (NTU)
Accuracy**	± 2% of reading or ± 0.015 NTU (whichever is greater) from 0 to 10 NTU; ± 5% of reading from 10 to 40 NTU; ± 10% of reading from 40 to 100 NTU
Displayed Resolution	0.0001 NTU from 0 to 9.9999 NTU; 0.001 NTU from 10.000 to 99.999 NTU
Repeatability**	Better than ± 1.0% of reading or ± 0.002 NTU, whichever is greater
Response Time	For a full-scale step change, initial response in 1 minute, 15 seconds
Signal Average Time	User Selectable ranging from 6, 30, 60, 90 seconds; user default 30 seconds
Sample Flow Required	200 to 750 mL/minute (3.1 to 11.9 gal/hour)
Storage Temperature	-20 to +60° C (-4 to 140° F)
Operating Temperature	0 to 50° C (32 to 122° F) for single sensor system, 0 to 40° C (32 to 104° F) for two sensor system
Operating Humidity	5 to 95% non-condensing
Sample Temperature	0 to 50° C (32 to 122° F)
Recorder Outputs	Two selectable for 0-20 mA or 4-20 mA. Output span programmable over any portion of the 0-100 NTU range; built into the sc100 Controller
Alarms	Three set-point alarms, each equipped with an SPDT relay with unpowered contacts rated 5A resistive load at 230 VAC; built into the sc100 Controller
Power Requirements	100-230 VAC, 50/60 Hz, auto selecting; 40 VA
Sample Inlet Fitting	1/4" NPT female, 1/4" compression fitting (provided)
Drain Fitting	1/2" NPT female, 1/2" hose barb (provided)
Enclosures	NEMA-4X/IP66 Controller
Digital Communications	Network card compatible; MODBUS/RS485, MODBUS/RS232, LonWorks® protocol (optional)
Wireless Communication	IR Port on the sc100 Controller to download into a handheld Personal Digital Assistant (PDA) or laptop computer via MODBUS
Compliance	Standard Methods 2130B, USEPA 180.1, Hach Method 8195
Certification	
Safety:	Listed by ETL to UL 61010A-1: Certified by ETL to CSA C22.2 No. 1010.1: CE certified by Hach Company to EN 61010-1
Immunity:	CE certified by Hach Company to EN61326 (industrial levels)
Emissions	
Class A:	EN 61326, CISPR 11, FCC Part 15, Canadian Interference-Causing Equipment Regulation ICES-003
Dimensions	Turbidimeter Body and Cap: 10 x 12 x 16 inches (25.4 x 30.5 x 40.6 cm) sc100 Controller: 5.67 x 5.67 x 5.91 inches (14.4 X 14.4 X 15.0 cm)
Mounting	Turbidimeter Body and Head Assembly: wall and floor stand sc100 Controller: wall, pole, panel, and floor stand
Shipping Weight	1720E Turbidimeter and sc100 Controller: 13.5 lbs. (6.12 kg) 1720E Turbidimeter: 10 lbs. (4.54 kg)

* Subject to change without notice.

** Defined according to ISO 15839.

Typical Proposal Specifications: 1720E Low Range Turbidimeter

GENERAL

The turbidity monitoring system shall include at least one Turbidimeter and one interface unit. The system shall be capable of functioning as a single sensor system and also be easily expanded up to two turbidimeters per interface unit. The connections between the turbidimeter and interface unit will include plug & play connections.

TURBIDIMETER

The turbidimeter shall measure turbidity in the range of 0.001-100 NTU and be a microprocessor-based, continuous-reading, on-line nephelometric instrument meeting all design and performance criteria specified by USEPA method 180.1. Light shall be directed through the surface of the sample and the detector shall be immersed in the sample, eliminating glass windows and flow cells. Optical components shall be mounted in a sealed head assembly that can be removed easily for calibration/service, without disturbing sample flow. The turbidimeter body shall be constructed of corrosion-resistant polystyrene, and shall include an internal bubble removal system to vent entrained air from the sample stream. The turbidimeter shall offer the choice of formazin-based (20 or 1 NTU) or instrument comparison-based calibration methods. Accuracy shall be ± 2% of reading or ± 0.015 NTU (whichever is greater) from 0 to 10 NTU; ± 5% of reading from 10 to 40 NTU; ± 10% of reading from 40 to 100 NTU. Displayed resolution shall be 0.0001 NTU from 0 to 9.9999 NTU; 0.001 NTU from 10.000 to 99.999 NTU and repeatability shall be better than ± 1.0% of reading or ± 0.002 NTU (whichever is greater). User selectable signal averaging, bubble removal, alarm and recorder output hold, and self-test diagnostics shall be provided. All turbidimeters on the network shall have the option for MODBUS/RS232, MODBUS/RS485, LonWorks serial input/output capability for two-way communication to a computer or have wireless downloading capability through the IR Port located on the interface unit to download and print real-time turbidity data, calibration history, and current set points in a CSV format.

INTERFACE MODULE

The Interface unit shall allow operators to control sensor and interface functions with user-friendly, menu-driven software, and shall provide data logging of measurement data from up to two turbidimeters for 15 minutes, 1 hour, 24 hours, 30 days, or 180 days and the capability to transfer data to a computer or printer via direct MODBUS communications or directly into a Personal Digital Assistant (PDA) via a wireless IR Port. The interface unit will also have a built-in data logger with the storage capacity to store data on 15-minute intervals for up to 6 months with two sensors per controller. Each interface will also include two analog outputs and 3 un-powered SPDT alarm contacts. The interface unit and the DC power supply shall be housed in a NEMA-4X (indoor) industrial metal/plastic enclosure, and the power supply shall automatically accept input in the range of 100 to 230 Vac, 50/60 Hz.

SAFETY AND ELECTRICAL DESIGN STANDARDS

All system components are ETL listed to UL 61010A-1, certified by ETL to CSA C22.2 No. 1010.1, and CE certified by manufacturer for safety to EN 61010-1. For EMC immunity and emissions, system components are CE certified by manufacturer to EN 61326 (industrial levels), for North America to FCC Part 15, and Canadian Interference-Causing Equipment Regulation ICES-003, and for rest of world to CISPR 11 Class A levels.

INSTALLATION

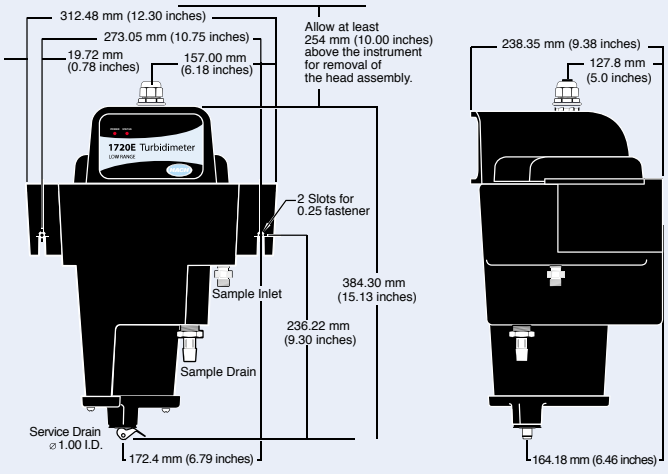

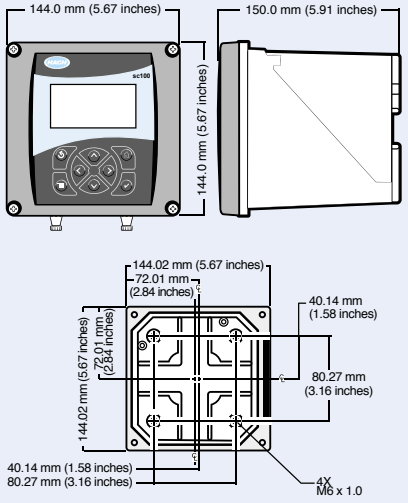

HOW TO ORDER

60101-00	1720E Turbidimeter with sc100 Controller
60101-01	1720E Turbidimeter, Sensor Only

1720E with DigitalDirect communications

60101-02	1720E/sc100 with MODBUS/RS485 output
60101-03	1720E/sc100 with MODBUS/RS232 output
60101-04	1720E/sc100 with LonWorks output

CABLES*

57960-00	25 ft. (7.7 M) Extension Cable
46306-00	Power Cord with Strain Relief (125 VAC)
46308-00	Power Cord with Strain Relief (230 VAC), European Style Plug

*Note: Power cables must be ordered separately.

OPTIONAL ACCESSORIES
ICE-PIC Verification Module/1720E:

52250-00	20 NTU
52215-00	1 NTU

STABLCAL COMPARATIVE CALIBRATION STANDARDS (for 1720E, 1720D, and 1720C Turbidimeters)***

26601-53	20.0 NTU, 1 L each

*** Note: Calibration Cylinder must be ordered separately.

STABLCAL VERIFICATION STANDARDS

26598-53	1.0 NTU, 1 L each
27463-53	40.0 NTU, 1 L each
26979-53	0.3 NTU, 1 L each
26980-53	0.5 NTU, 1 L each
27233-53	0.1 NTU, 1 L each

FORMAZIN CALIBRATION STANDARDS

44156-00	Formazin Calibration Kit for user-prepared calibration includes 4000 NTU Formazin, (500 mL), TenSette® Pipet, and Calibration Cylinder
2461-49	Formazin Primary Standard, 4000 NTU, 500 mL, replacement for kit #44156-00
44153-000	Calibration Cylinder, 1L
57432-00	Floor Stand



Lit. No. 2446
J35 Printed in U.S.A.
© Hach Company, 2003. All rights reserved.

At Hach, it's about learning from our customers and providing the right answers. It's more than ensuring the quality of water – it's about ensuring the quality of life. When it comes to the things that touch our lives...

Keep it pure.

Make it simple.

Be right.

For current price information, technical support, and ordering assistance, contact the Hach office or distributor serving your area.

In the United States, contact:

HACH Company
World Headquarters
P.O. Box 389
Loveland, Colorado 80539-0389
U.S.A.
Telephone: 800-227-4224
Fax: 970-669-2932
E-mail: orders@hach.com
Website: www.hach.com

U.S. exporters and customers in Canada, Latin America, sub-Saharan Africa, Asia, and Australia/New Zealand, contact:

HACH Company
World Headquarters
P.O. Box 389
Loveland, Colorado 80539-0389
U.S.A.
Telephone: 970-669-3050
Fax: 970-461-3939
E-mail: intl@hach.com
Website: www.hach.com

In Europe, the Middle East, and Mediterranean Africa, contact:

HACH + LANGE Europe
Dr. Bruno Lange GmbH & Co. KG
Willstätterstraße 11
D-40549 Düsseldorf
GERMANY
Telephone: +49 (0) 211-5288-0
Fax: +49 (0) 211-5288-143
E-mail: kundenservice@drlange.de
www.drlange.com

HACH®

Be Right™

sc100 Controller



The Model sc100 Controller receives data from one or two sensors. Its plug-and-play, mix-and-match operation lets it fit into any facility or workflow. Digital communication with any Hach digital sensor or probe is simple and reliable.

Features and Benefits

One Controller for One or Two Sensors

The Hach sc100 Controller receives data from up to two sensors. Use any of Hach's line of digital sensors for pH/ORP, conductivity, dissolved oxygen, or turbidity.

One Controller for One or Two Parameters

Not only can the sc100 controller be used for up to two sensors, but the sensors need not be the same. Mix and match any combination of parameters.

One Controller for Many Options

Communications using RS485/MODBUS® or RS232/MODBUS® protocols or the wireless infrared port are available. (Contact your Hach representative for other communication protocols.) Multiple control functions include built-in PID, control contacts, and alarm functions.



"Plug and Play" Operation

There's no complicated wiring or set up procedures with the sc100 controller. Just plug the sensor in and it's ready for use without special ordering or software configuration.

Simple, Reliable Data Collection

A built-in data logger collects measurement at user selectable intervals (1 to 15 minutes), together with calibration and verification points, alarm history, and instrument setup changes for up to 6 months. With a two-year warranty, the Hach sc100 Controller is built to last.

DW = drinking water WW = wastewater municipal PW = pure water / power
IW = industrial water E = environmental C = collections FB = food and beverage

HACH®

Be Right™

Specifications*

Ambient Conditions

Operation
With less than 7 W sensor load:
-20 to 60° C (-4 to 140° F); 0 to 95% relative humidity, non-condensing

With less than 25 W sensor load:
-20 to 40° C (-4 to 104° F); 0 to 95% relative humidity, non-condensing

Storage
-20 to 70° C (-4 to 158° F); 0 to 95% relative humidity, non-condensing

Power Requirements

100 to 230 Vac, 50/60 Hz; Power: 11W with 7W sensor load; 35W with 25W sensor load

Display

Graphic dot matrix LCD, 128 x 64 pixels with LED backlighting

Relays

Three SPDT, user-configurable contacts rated 100 to 230 Vac, 5 Amp resistive maximum

Outputs

Two analog 4-20 mA, maximum impedance 500 Ohms, optional digital network connection

Control

PID, High/low phasing, setpoint, deadband, overfeed timer, off delay, and on delay

Alarms

Low alarm point, low alarm point deadband, high alarm point, high alarm point deadband, off delay, and on delay

Communication (Optional)

RS-232 (MODBUS®): Configure and retrieve measured data for one analyzer using IBM-compatible PC

RS-485 (MODBUS®): Advanced communications/networking with PLC or SCADA system directly from analyzer.

Memory Backup

All user settings are retained indefinitely in memory (non-volatile) (EEPROM)

Mounting Configurations

Surface, panel, and pipe (horizontal and vertical)

Enclosure

NEMA 4X/IP66; metal enclosure with corrosion-resistant finish

Dimensions

1/2 DIN; 144 x 144 x 150 mm (5.7 x 5.7 x 5.9 in.)

Weight

1.6 kg (3.5 lbs.)

Certifications

ETL to UL 61010A-1 and CSA C22.2 No. 1010.1

**Specifications subject to change without notice.*

Engineering Specifications

1. The controller shall be a microprocessor-based instrument.
2. Connections between the sensors and the controller shall be “plug and play.”
3. The controller shall have the option for RS232/MODBUS® or RS485/MODBUS® serial input/output capability for two-way communication to a computer and have wireless downloading capability through an IR Port located on the interface unit to download and print realtime data, calibration history, and current set points in a CSV format.
4. The Interface unit shall allow operators to control sensor and interface functions with menu-driven software.
5. The interface unit shall have a built-in data logger with the capacity to store data on 15-minute intervals for up to 6 months with two sensors per controller.
5. The interface unit shall include two analog 4-20 mA outputs and 3 unpowered SPDT form ‘C’ alarm contacts.
7. The interface unit shall include two independent PID control functions.
8. The interface unit shall be housed in a NEMA-4X/IP66 metal enclosure with corrosion-resistant finish.
9. The controller shall be mounted horizontal or vertical on surface, panel, or pipe.
10. The AC power supply shall be housed in the interface unit and automatically accept input in the range of 100 to 230 Vac, 50/60 Hz.
11. All system components shall be certified by ETL to UL 61010A-1, CSA C22.2 No. 1010.1.
12. The controller shall be warranted for two full years against defects in material and workmanship.
13. The controller shall be Hach Company Model sc100 Controller.

Dimensions

The sc100 controller unit can be installed on a surface, panel, or pipe (horizontally or vertically). No tools are needed to connect the controller unit to any Hach digital sensor.

Front and Side Views

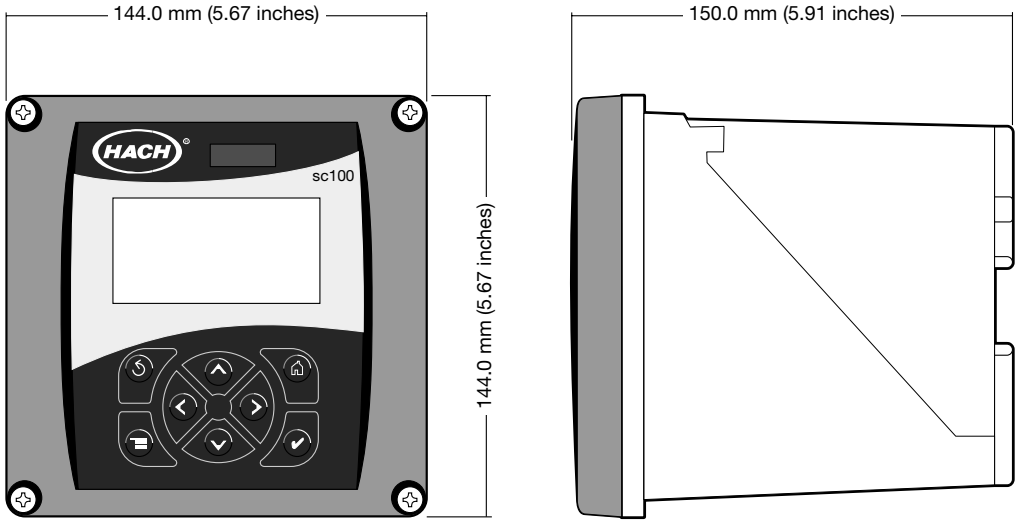

Back View

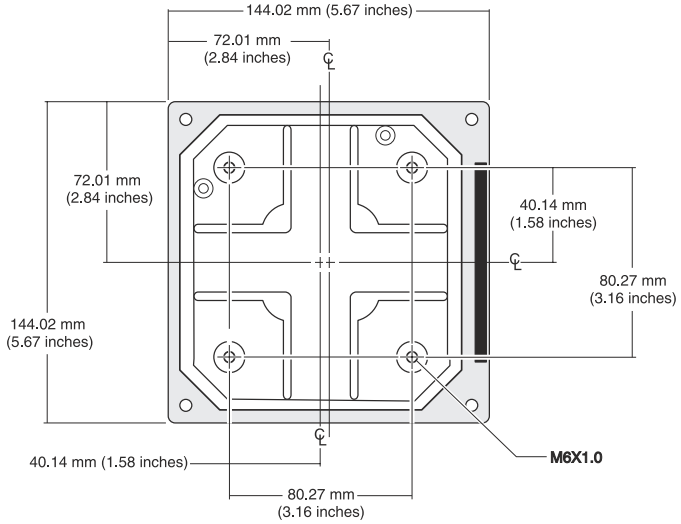

Panel Mount Cut-Out Dimensions

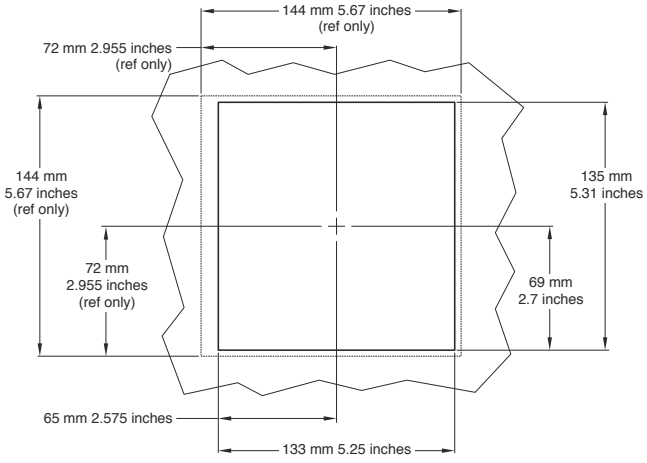

Conduit Hole Dimensions

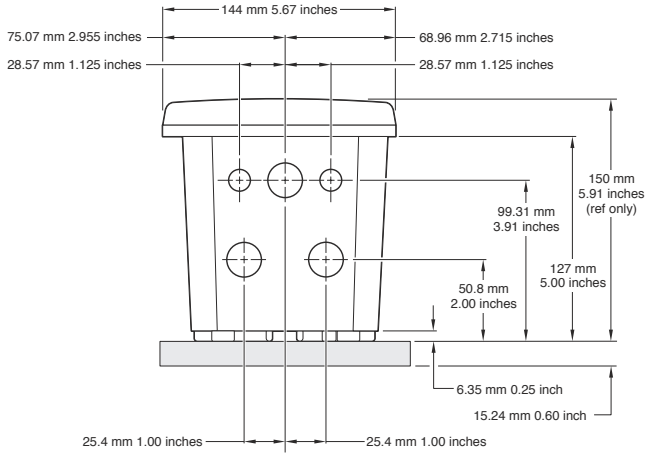

Ordering Information

LXV401.52.00002 sc100 Controller Standard

LXV401.52.01002 sc100 Controller with RS-232 (MODBUS®)

LXV401.52.02002 sc100 Controller with RS-485 (MODBUS®)

Note: Power cords must be ordered separately.

Note: Other communication options are available. Please contact Hach Technical Support or your Hach representative.

Power Cords

54488-00	Power Cord with strain relief, 125 Vac
54489-00	Power Cord with strain relief, 230 Vac, European-style plug

Accessories

58690-00	Sun Shield, for controller

To complete your measurement system, choose from Hach's family of digital sensors...



Lit. No. 2463
XXXX Printed in U.S.A.
©Hach Company, 2004. All rights reserved.
In the interest of improving and updating its equipment, Hach Company reserves the right to alter specifications to equipment at any time.

At Hach, it's about learning from our customers and providing the right answers. It's more than ensuring the quality of water—it's about ensuring the quality of life. When it comes to the things that touch our lives...

Keep it pure.

Make it simple.

Be right.

For current price information, technical support, and ordering assistance, contact the Hach office or distributor serving your area.

In the United States, contact:

HACH COMPANY World Headquarters
P.O. Box 389
Loveland, Colorado 80539-0389
U.S.A.
Telephone: 800-227-4224
Fax: 970-669-2932
E-mail: orders@hach.com
www.hach.com

U.S. exporters and customers in Canada, Latin America, sub-Saharan Africa, Asia, and Australia/New Zealand, contact:

HACH COMPANY World Headquarters
P.O. Box 389
Loveland, Colorado 80539-0389
U.S.A.
Telephone: 970-669-3050
Fax: 970-461-3939
E-mail: intl@hach.com
www.hach.com

In Europe, the Middle East, and Mediterranean Africa, contact:

HACH + LANGE Europe
Dr. Bruno Lange GmbH & Co. KG
Willstätterstraße 11
D-40549 Düsseldorf
GERMANY
Tel: +49 (0) 211 5288-0
Fax: +49 (0) 211 5288-143
E-mail: kundenservice@drlange.de
www.drlange.com

HACH®

Be Right™

Catalog Number 60100-18

Hach sc100™ 1720E Analysis System

Instrument Manual

11/03 2ed

© Hach Company, 2003. All rights reserved. Printed in the U.S.A. ds/dp

Table of Contents

Section 1 Specifications 4

Section 2 General Information 6
2.1 Safety Information 6
2.2 General Product Information 6
2.3 Theory of Operation 7

Section 3 Installation 8
3.1 Mechanical Installation 8
3.1.1 Controller Dimension Illustrations 9
3.1.2 Using the Optional Sun Shield 11
3.1.3 Mounting the Controller 12
3.2 Electrical Installation 14
3.2.1 Installation in Conduit 14
3.2.3 Wiring for Power at the Controller 15
3.3 Alarms and Relays 18
3.3.1 Connecting the Relays 18
3.3.2 Connecting the Analog Outputs 18
3.4 Connecting/Wiring the Sensor Cable 19
3.5 Connecting the Optional Digital Output 21
3.6 Turbidimeter Installation Information 24
3.6.1 Mounting the Turbidimeter Body 24
3.6.2 Installing the Head Assembly 24
3.7 Installing a Sample Line 24
3.8 Sample Connections 25

Section 4 Operation 26
4.1 Using the Keypad 26
4.2 Controller Display Features 27
4.2.1 Important Key Presses 27
4.3 Instrument Setup 28
4.3.1 Software Text Abbreviation Conventions 28
4.3.2 Adjusting Display Contrast 28
4.3.3 Specifying the Displayed Language 29
4.3.4 Setting the Time and Date 29
4.4 Changing the Sensor Name 30
4.4.1 Setting Up System Security 31
4.5 Output Options 32
4.5.1 Output Setup Menu (from System Setup) 32
4.5.2 Hold/Transfer Outputs 33
4.5.3 Release Outputs 33
4.6 Relay Options 34
4.6.1 Relay Setup Menu (from System Setup) 34
4.7 Data and Event Logging Options 36
4.7.1 Data Logging Options 36
4.8 Digital Network Options 36
4.9 Menu Structure 36
4.9.1 Sensor Diagnostics Menu 36
4.9.2 Sensor Setup Menu 37
4.9.3 System Setup Menu 37
4.9.4 Test/Maint Menu 38

Section 5 System Startup 40
5.1 General Operation 40
5.2 Starting Sample Flow 40
5.3 Sensor Calibration and Verification 40
5.3.1 User-prepared Calibration 41
5.3.2 Calibration with StablCal® 42
5.4 Instrument Verification 43
5.4.1 Dry Verification 44
5.4.2 Wet Verification 45
5.5 Calibration and Verification History 46

Section 6 Maintenance 47
6.1 Maintenance Schedule 47
6.2 Removing a Sensor from the System 47
6.3 Reinstalling a Sensor on the System 47
6.4 Cleaning 48
6.4.1 Cleaning the Controller 48
6.4.2 Cleaning the Photocell Window 48
6.4.3 Cleaning the Turbidimeter Body and Bubble Trap 48
6.4.4 Replacing the Lamp Assembly 49
6.5 Fuse Replacement 51

Section 7 Troubleshooting 52
7.1 Error Codes 52
7.2 Warnings 52
7.3 Event Codes 54

Section 8 Replacement Parts and Accessories 55

Section 9 How to Order 57
9.1 Information Required 57
9.2 International Customers 57
9.3 Technical and Customer Service (U.S.A. only) 57

Section 10 Repair Service 58

Section 11 Limited Warranty 59

Section 10 Compliance Information 60

Appendix A ModBUS Register Information 62

Index 70

Section 1 Specifications

Specifications are subject to change without notice.

Table 1 Turbidimeter Specifications

<table>
<tr><td>Method of Detection</td><td>Nephelometric light scatter at 90 degrees relative to the incident light beam. The incident light beam is composed of a tungsten filament light source with a color temperature between 2200 and 3000K.</td></tr>
<tr><td>Range</td><td>0.001–100 nephelometric turbidity units (NTU)</td></tr>
<tr><td>Accuracy</td><td>± 2% of reading or ± 0.015 NTU (whichever is greater) from 0 to 40 NTU;
± 5% of reading from 40 to 100 NTU</td></tr>
<tr><td>Linearity</td><td>Better than 1% 0–40 NTU on formazin. Allows for accurate calibration at high turbidity values. Temperature dependent ±2 °C.</td></tr>
<tr><td>Resolution (Displayed)</td><td>0.0001 NTU up to 9.9999 NTU; 0.001 NTU from 10.000 to 99.999 NTU</td></tr>
<tr><td>Repeatability</td><td>Better than ±1.0% of reading or ±0.002 NTU, whichever is greater for each range.</td></tr>
<tr><td>Response Time</td><td>For a full-scale step change, initial response in 1 minute, 15 seconds. Varies with flow rate, see the table below. The response time is also dependent on the signal averaging time, which is user selectable.
<table>
<tr><th rowspan="2">% Step Change</th><th colspan="3">Flow Rate</th></tr>
<tr><th>750</th><th>500</th><th>250</th></tr>
<tr><td>10</td><td>1¼ minutes</td><td>1½ minutes</td><td>2½ minutes</td></tr>
<tr><td>50</td><td>2 minutes</td><td>2½ minutes</td><td>6 minutes</td></tr>
<tr><td>90</td><td>3½ minutes</td><td>3½ minutes</td><td>9 minutes</td></tr>
<tr><td>99</td><td>4 minutes</td><td>5 minutes</td><td>12 minutes</td></tr>
</table></td></tr>
<tr><td>Sample Flow Required</td><td>200 to 750 mL/minute (3.2 to 11.9 gal/hour)</td></tr>
<tr><td>Sensor Storage Temperature</td><td>–20 to 60 °C (–4 to 140 °F); 95% relative humidity, non-condensing.</td></tr>
<tr><td>Operating Temperature</td><td>0 to 50 °C (32–122 °F) for single sensor system, 0 to 40 °C (32–104 °F) for two sensor system</td></tr>
<tr><td>Sample Temperature Range</td><td>0 to 50 °C (32–122 °F)</td></tr>
<tr><td>Operating Humidity</td><td>5 to 95% non-condensing</td></tr>
<tr><td>Power Requirements</td><td>12 V dc ±5%, 12.5 watts maximum</td></tr>
<tr><td>Sample Inlet Fitting</td><td>¼-inch NPT female. ¼-inch compression fitting (supplied)</td></tr>
<tr><td>Drain Fitting</td><td>½-inch NPT female, ½-inch hose barb (supplied)</td></tr>
<tr><td>Signal Average (Filter) Time</td><td>no averaging, 6, 30, 60, and 90 seconds, user selectable. Default is 30 seconds.</td></tr>
<tr><td>Sensor Dimensions</td><td>Turbidimeter body and cap: 25.4 x 30.5 x 40.6 cm (10 x 12 x 16 inches)</td></tr>
<tr><td>Sensor Cable Length</td><td>2 m (6.6 ft); Optional 7.62 m (25 ft) extension cable. Maximum cable length is 9.62 m (31.6 ft).</td></tr>
<tr><td>Sensor Cable Rating</td><td>Cable: 105 °C, 300 V, PVC jacket
Wires: 22 AWG, PVC jacket</td></tr>
<tr><td>Mounting Options</td><td>Wall; floor stand</td></tr>
<tr><td>Shipping Weight</td><td>1720E Turbidimeter and Controller: 6.31 kg (13.5 lb); 1720E Turbidimeter only: 4.71 kg (10 lb)</td></tr>
</table>

Table 1 Turbidimeter Specifications (continued)

Calibration Methods	**1.** StablCal® (stabilized formazin) – primary or wet calibration of the instrument **2.** Formazin – user-prepared primary or wet calibration of the instrument **3.** Multi-sensor calibration – Performed with a specialized calibration procedure for up to eight sensors on a single set of fresh StablCal® standards.
Verification (Wet) Method	**1.** StablCal® (stabilized formazin) – recommended for verification in the appropriate application range of measurement. For regulatory verification, standards of 0.1. 0.3. 0.5 and 1.0 NTU are available. **2.** Formazin – fresh user-prepared standard
Verification (Dry) Method	**1.** ICE-PIC™ Verification Module with factory-set values of 20.0 or 1.0 ±25%. Unique value is assigned when dry verification is done immediately after calibration and is used as pass/fail criteria for subsequent verifications.
Recommended Cleaning Intervals	**1.** Mandatory before calibration **2.** Optional before verification **3.** Mandatory upon verification failure
Languages	English (default), German, Spanish, Nederlands
Installation Environment	Indoor
Primary Compliance Method	USEPA 180.1; Hach Method 8195; ASTM D 6698; Standard Methods 2130B
Limit of Detection	0.0032 NTU (according to criteria specified by ISO 15839)

Table 2 Controller Specifications

Component Description	Microprocessor-controlled measuring unit with measured value display, temperature display (for some parameters), and menu-driven system
Controller Operating Temperature	–20 to 60 °C (–4 to 140 °F); 95% relative humidity, non-condensing with sensor load <7 W; –20 to 40 °C (–4 to 104 °F) with sensor load <25 W
Controller Storage Temperature	–20 to 70 °C (–4 to 158 °F); 95% relative humidity, non-condensing
Enclosure	NEMA 4X/IP66 metal enclosure with a corrosion-resistant finish
Power Requirements	100–230 V ac ±10%, 50/60 Hz; Power: 11 W with 7 W sensor load, 35 W with 25 W sensor load
Pollution Degree/Installation Category	II; II
Outputs	Two (Analog outputs, each selectable for 0–20mA or 4–20 mA), maximum impedance 500 ohm. Output span programmable over any portion of the 0–100 NTU range. Optional digital network connection[1]. Infrared Data Acquisition (IrDA).
Relays	Three SPDT, user-configurable contacts rated 100–230 V ac, 5 Amp resistive maximum.
Controller Dimensions	½ DIN—144 x 144 x 150 mm (5.7 x 5.7 x 5.9 inches)
Controller Weight	1.6 kg (3.5 lb)

1. See Replacement Parts and Accessories on page 55.

Section 2 General Information

2.1 Safety Information

Please read this entire manual before unpacking, setting up, or operating this equipment. Pay attention to all danger and caution statements. Failure to do so could result in serious injury to the operator or damage to the equipment.

To ensure that the protection provided by this equipment is not impaired, do not use or install this equipment in any manner other than that specified in this manual.

Use of Hazard Information
DANGER: Indicates a potentially or imminently hazardous situation which, if not avoided, could result in death or serious injury.

CAUTION: Indicates a potentially hazardous situation that may result in minor or moderate injury.

Note: Information that requires special emphasis.

Precautionary Labels
Read all labels and tags attached to the instrument. Personal injury or damage to the instrument could occur if not observed.

	This symbol, if noted on the instrument, references the instruction manual for operation and/or safety information.
	This symbol, when noted on a product enclosure or barrier, indicates that a risk of electrical shock and/or electrocution exists.
	This symbol, if noted on the product, indicates the need for protective eye wear.
	This symbol, when noted on the product, identifies the location of the connection for Protective Earth (ground).

2.2 General Product Information

The controller enclosure is NEMA4X/IP66-rated and has a corrosion-resistant finish designed to withstand corrosive environmental constituents such as salt spray and hydrogen sulfide. The controller display shows the current turbidity reading if connected to a single sensor, or two readings when two sensors are connected.

The 1720E Turbidimeter is a continuous-reading nephelometric turbidimeter designed for low-range turbidity monitoring. This process turbidimeter is capable of measuring turbidity from 0.001 to 100.0 NTU. Calibration is based on formazin, the primary turbidity reference standard adopted by the APHA *Standard Methods for the Examination of Water and Wastewater* and the U.S. Environmental Protection Agency (EPA) and on StablCal® which is also recognized as a primary standard.

2.3 Theory of Operation

The 1720E Turbidimeter measures turbidity by directing a strong beam of collimated light from the sensor head assembly down into the sample in the turbidimeter body. Light scattered at 90° relative to the center line of incident light by suspended particles in the sample is detected by the submerged photocell (see Figure 1).

Figure 1 90 Degree Detector

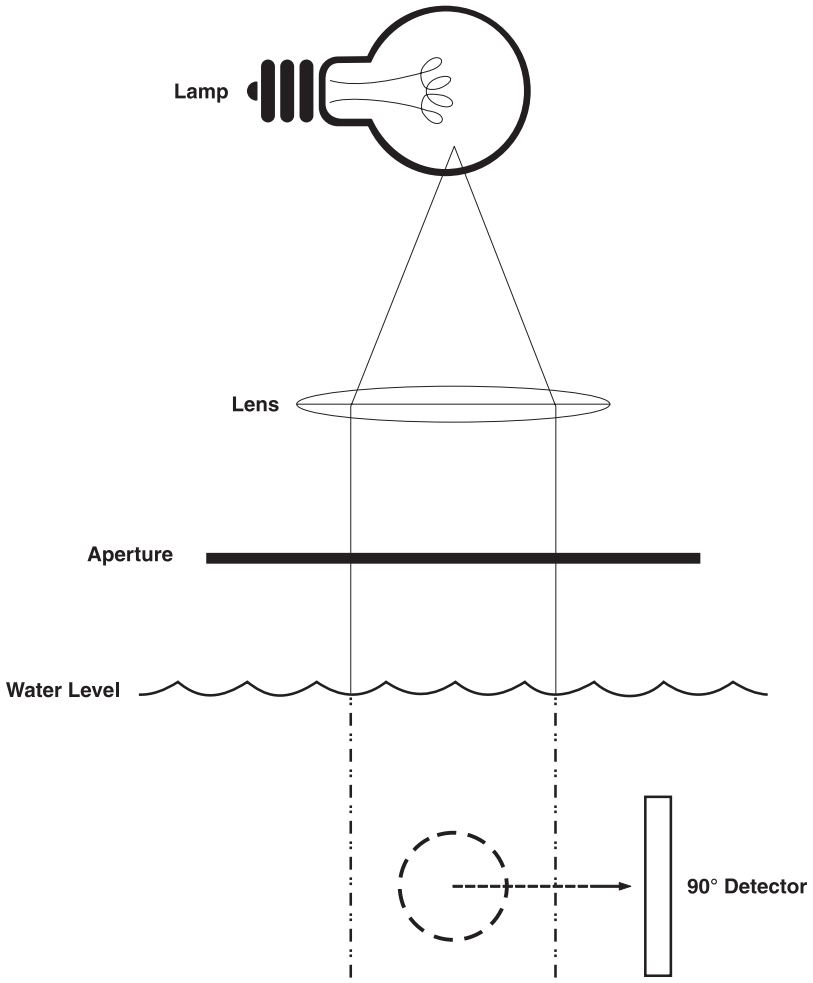

The amount of light scattered is proportional to the turbidity of the sample. If the turbidity of the sample is negligible, little light will be scattered and detected by the photocell and the turbidity reading will be low. High turbidity, on the other hand, will cause a high level of light scattering and result in a high reading.

Sample enters the turbidimeter body and flows through the baffle network of the bubble trap. The flow allows bubbles to either cling to surfaces of the baffle system or rise to the surface and vent to atmosphere. After traveling through the bubble trap, sample enters the center column of the turbidimeter body, rises into the measuring chamber and spills over the weir into the drain port. A reading is taken once per second.

Section 3 Installation

DANGER
Only qualified personnel should conduct the installation tasks described in this section of the manual. The 1720E/sc100 product configuration is not intended for installation in hazardous locations.

Figure 2 Controller Mounting Components

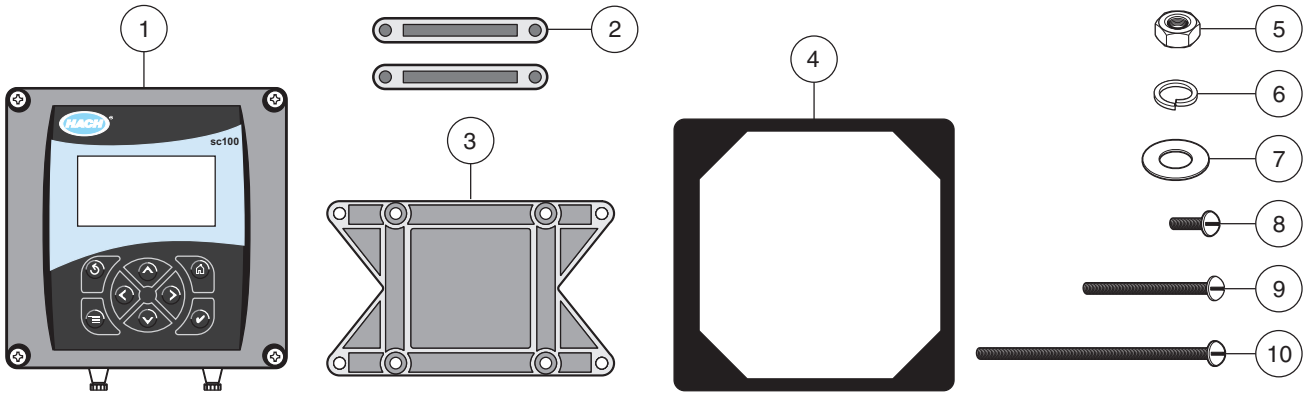

1. Controller	**6.** Lock washer, ¼-inch I.D. (4), Cat. No. 8H1336
2. Mounting foot for panel mounting (2), Cat. No. 1000B4F3222	**7.** Flat washer, ¼-inch I.D. (4), Cat. No. 8H1346
3. Bracket for panel and pipe mounting, Cat. No. 1000C4F3217-101	**8.** Pan head screws (4), M6 x 1.0 x 20 mm, Cat. No. 58674-00
4. Gasket for panel mounting, rubber, Cat. No. 1000A4F3249-101	**9.** Pan head screws (4), M6 x 1.0 x 100 mm, Cat. No. 5867500
5. Hex nut, M6 (4), Cat. No. 5867300	**10.** Pan head screws (4), M6 x 1.0 x 150 mm, Cat. No. 5867600

Table 3 Customer-supplied Items

Item
14-AWG wire for electrical power connections in conduit or if allowed by local electrical codes, 115 or 230 V ac power cord plus a NEMA 4X-rated strain relief
High-quality, shielded instrumentation cable for connecting the analog outputs plus a NEMA 4X-rated strain relief
Mounting hardware for the sensor
Sun shield for mounting configurations where the sun strikes the front of the display (available from the manufacturer, order separately). See Figure 8 on page 11.
Common hand tools

3.1 Mechanical Installation

Install in an environment that is protected from corrosive fluids. The sensor is adversely affected by ClO_2. Install the sensor in an area well ventilated from any corrosive liquids or gasses.

3.1.1 Controller Dimension Illustrations

Figure 3 Controller Dimensions

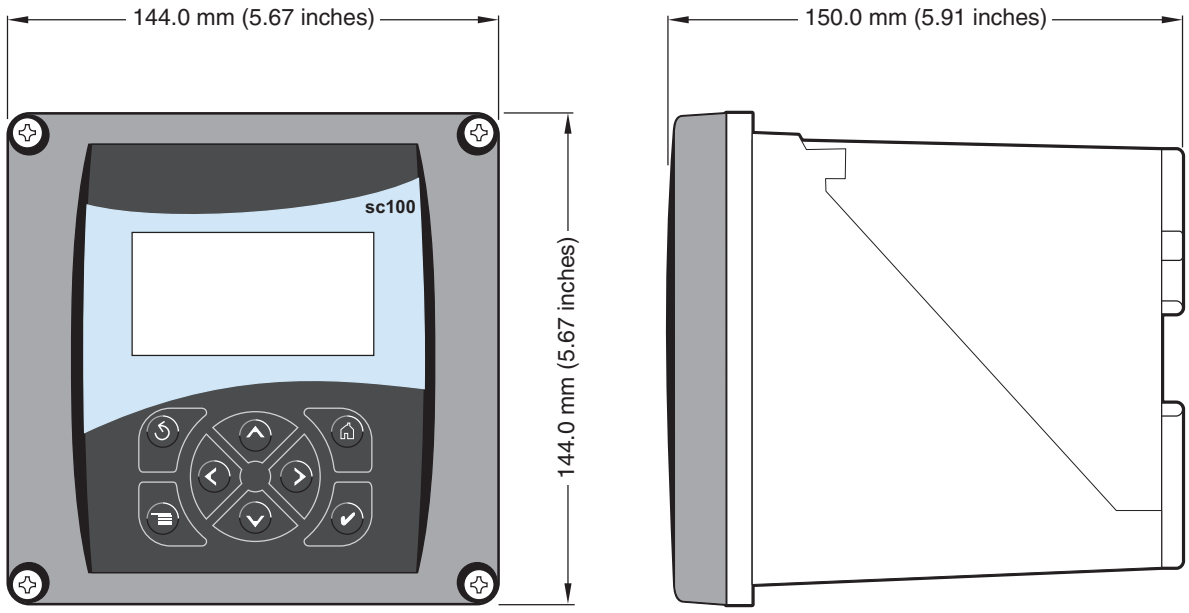

Figure 4 Controller Mounting Dimensions

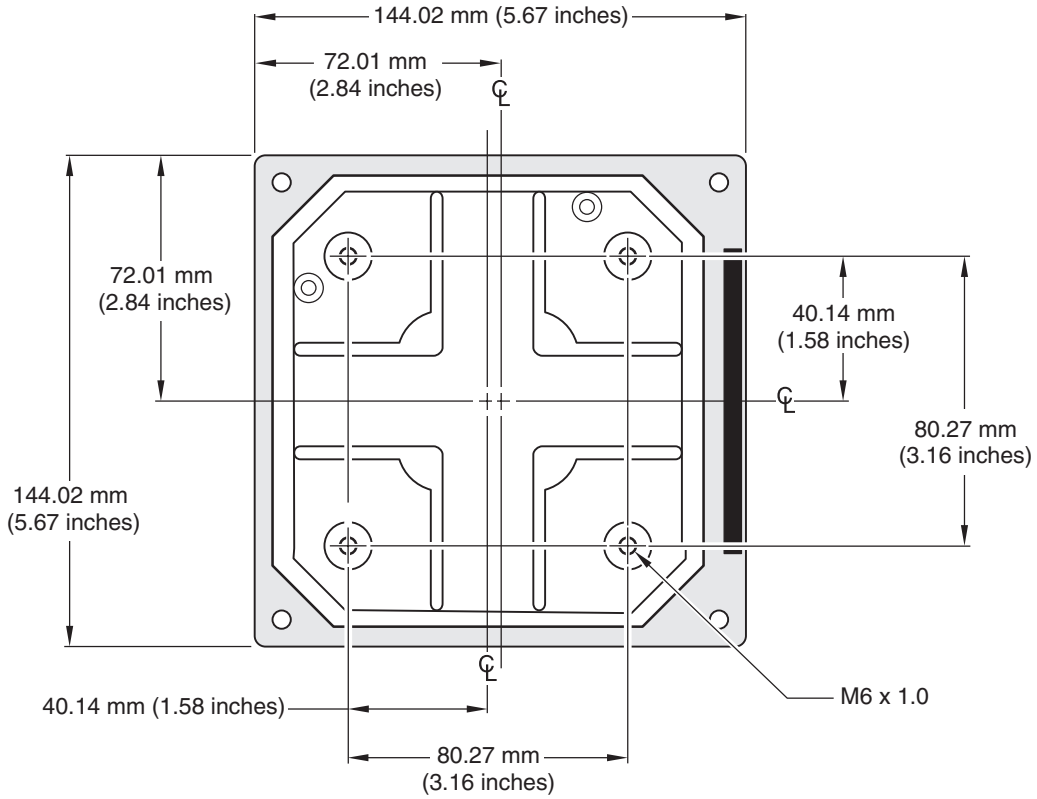

Figure 5 Panel Mount Cut-out Dimensions

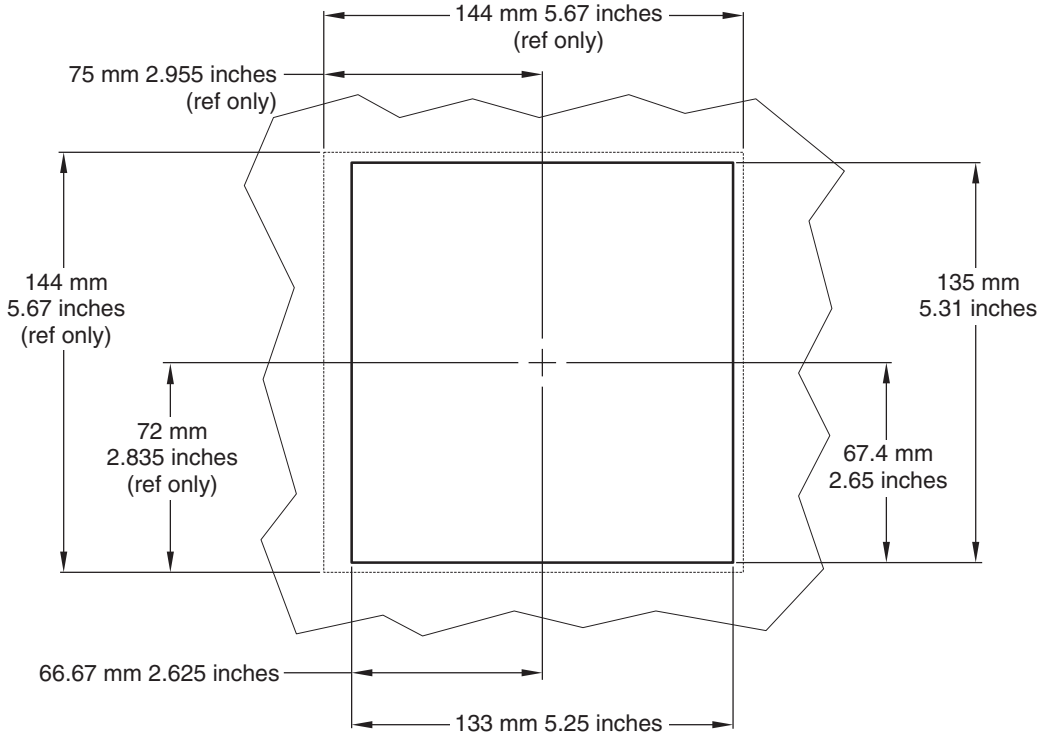

Figure 6 Conduit Hole Dimensions

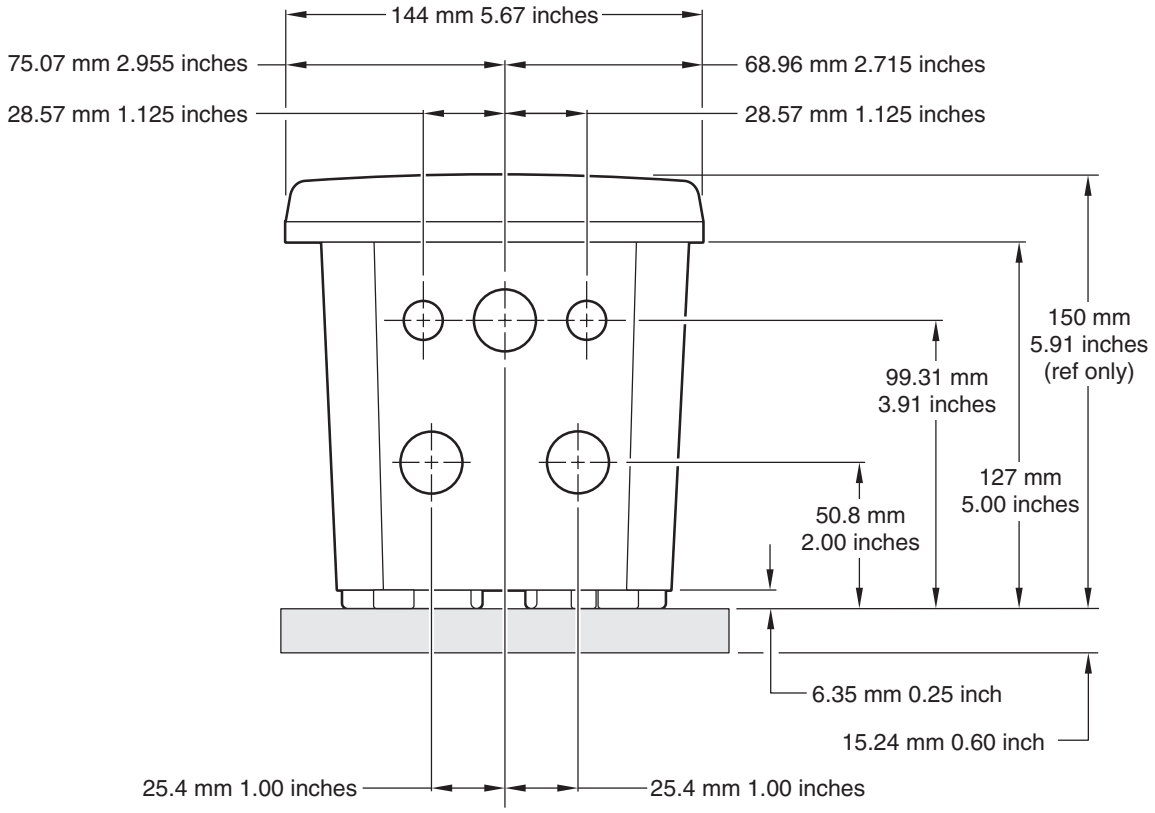

3.1.2 Using the Optional Sun Shield

The optional sun shield was designed to increase the readability of the display by screening it from direct sunlight. See Replacement Parts and Accessories on page 55 for ordering information.

Figure 7 Sun Shield Kit Components

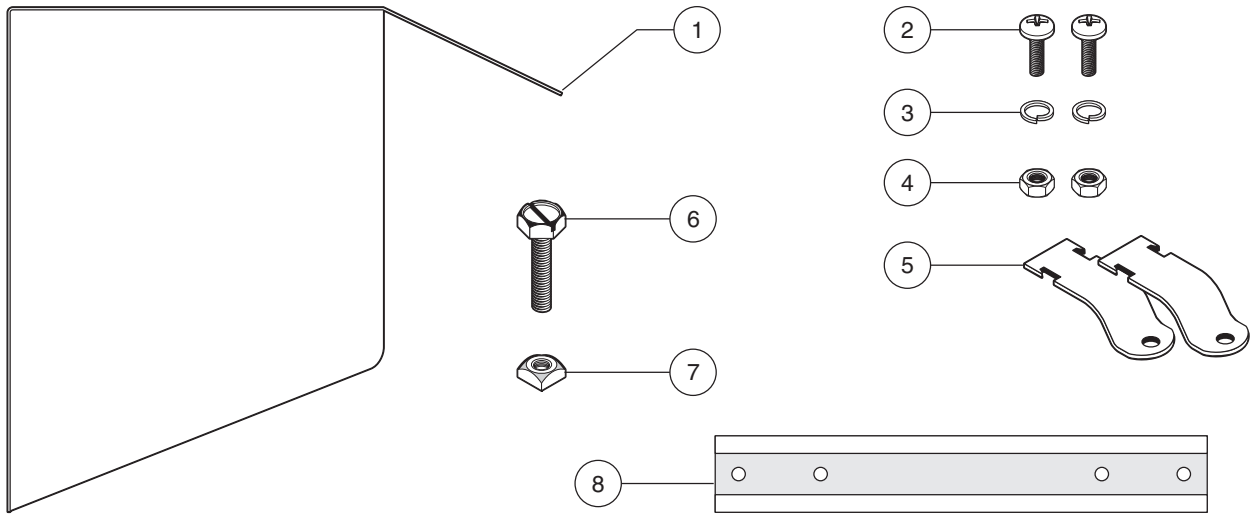

1.	Sun shield	**5.**	Pipe mounting brackets (2), includes items 6 and 7, Cat. No. 9H1079
2.	Pan head screws, M6 x 1.0 x 12 mm (6), Cat. No. 200-1025	**6.**	Hex/slotted head screw, 5/16-inch x 1.0-inch (supplied with item number 5)
3.	Lock washers, ¼-inch I.D. (2), Cat. No. 8H1336	**7.**	Square nut, 5/16-inch (supplied with item number 5)
4.	Hex nuts, M6 x 1.0 (2), Cat. No. 5867300	**8.**	Uni-strut, 27 cm (10.5 inch) length, Cat. No. 276F1227

Figure 8 Mounting the Controller in the Sun Shield

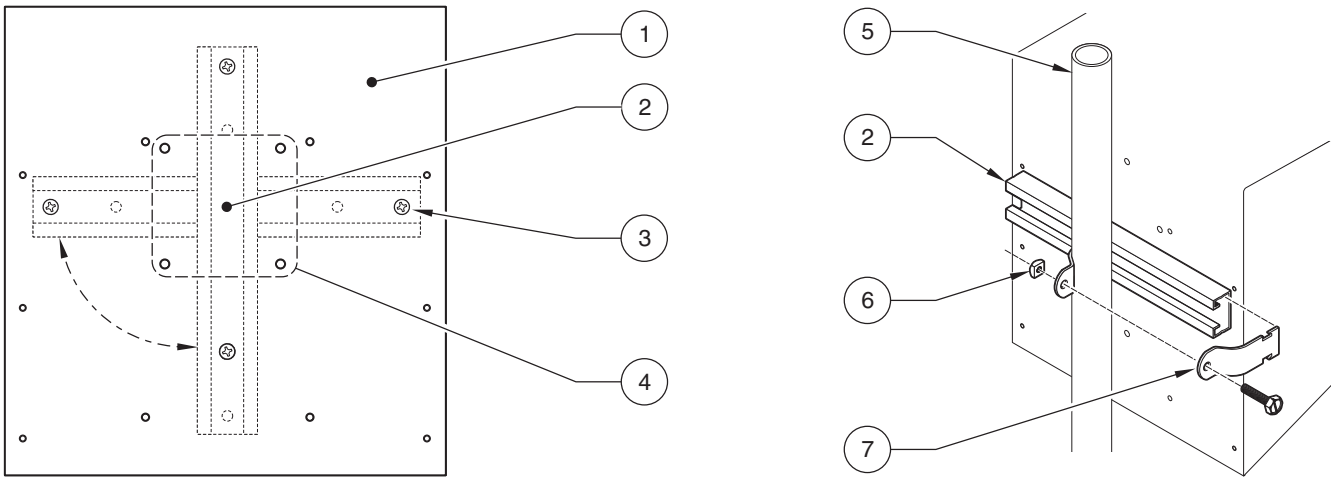

1.	Sun shield	**4.**	Hole pattern for mounting controller	**7.**	Slide mounting brackets into the uni-strut as shown. Place the mounting brackets around the pipe and fasten the hardware.
2.	Uni-strut (rotate 90° as required)	**5.**	Pipe (vertical or horizontal as required)		
3.	Pan head screw, lock washer (2 each)	**6.**	Hex/slotted head screw and square nut		

3.1.3 Mounting the Controller

Attach the controller to a rail or wall or mount it in a panel. Supplied mounting hardware is shown in Figure 9, Figure 10, and Figure 11.

Figure 9 Vertical or Horizontal Pipe Mounting the Controller

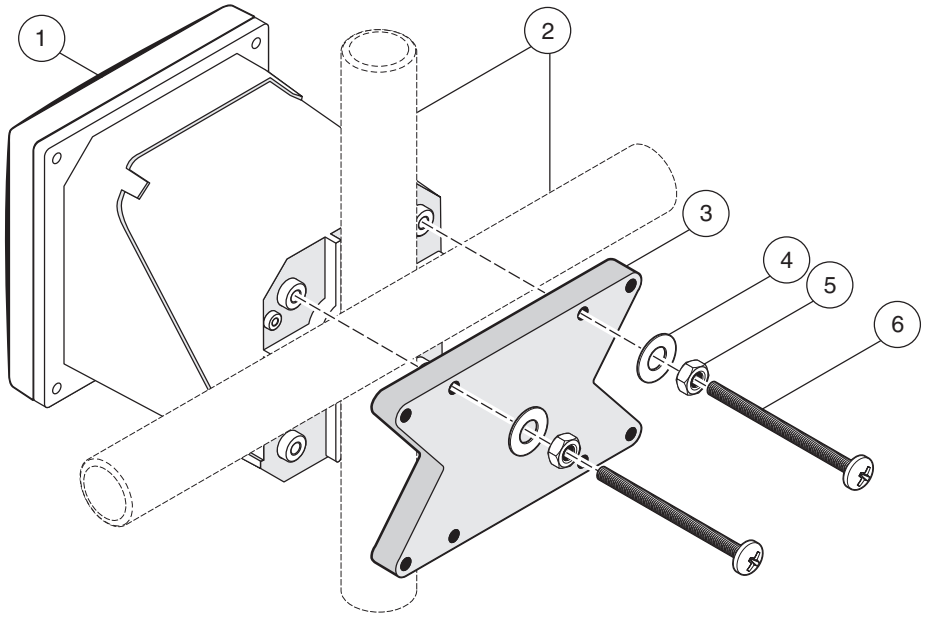

1.	Controller	**4.**	Flat washer, ¼-inch I.D. (4), Cat. No. 8H1346
2.	Pipe (vertical or horizontal)	**5.**	Hex nut, M6 (4), Cat. No. 5867300
3.	Bracket, pipe mounting, Cat. No. 1000C4F3217-101	**6.**	Pan head screw, M6 x 1.0 x 100 mm (4), Cat. No. 5867400

Figure 10 Wall Mounting the Controller

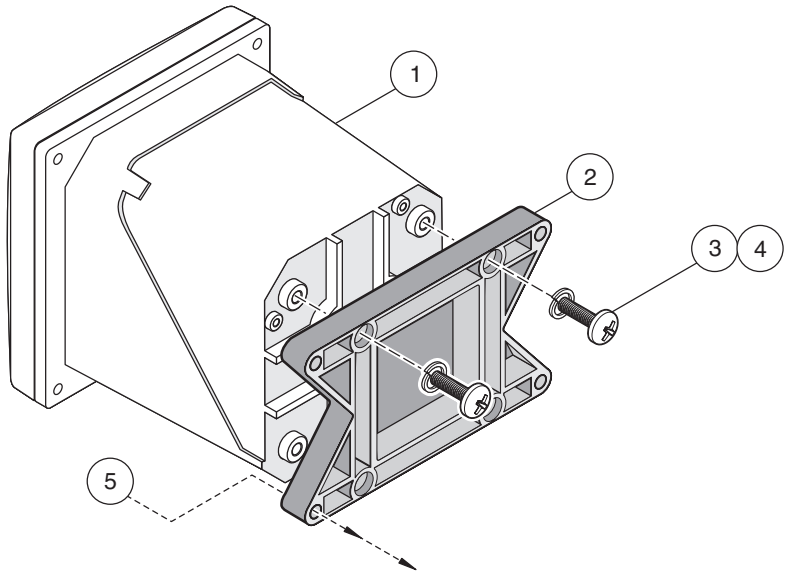

1.	Controller	**4.**	Pan head screw, M6 x 1.0 x 20 mm (4), Cat. No. 5867400
2.	Bracket, Cat. No. 1000C4F3217-101	**5.**	Customer-supplied hardware for wall mounting
3.	Lock washer, ¼-inch I.D., Cat. No. 8H1336		

Figure 11 Panel Mounting the Controller

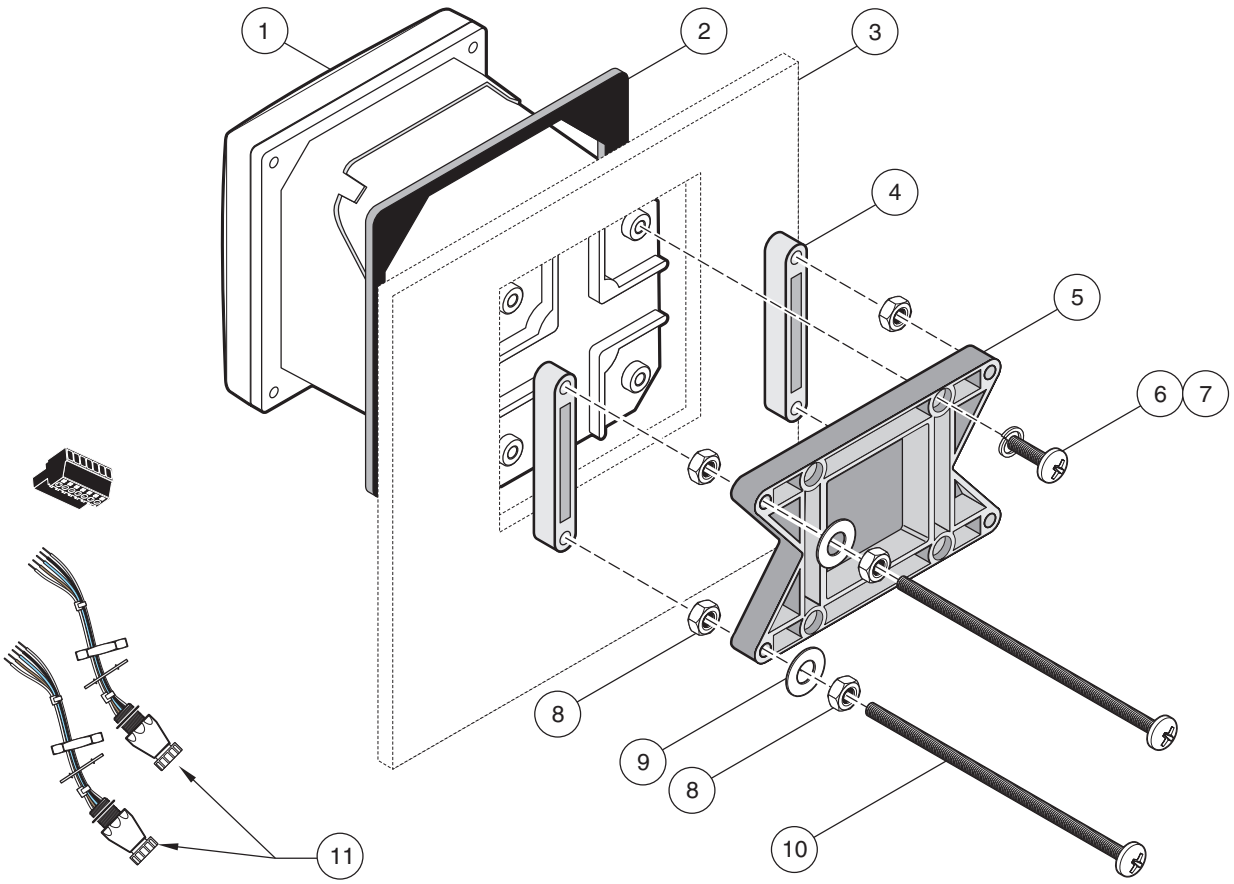

1.	Controller	**7.**	Lock washer, ¼-inch I.D., (4) Cat. No. 8H1336
2.	Gasket, rubber, panel mount, Cat. No. 1000A4F3249-101	**8.**	Hex nut (4), Cat. No. 5867300
3.	Panel (maximum thickness is 9.5 mm (3/8 inch))	**9.**	Flat washer (4), Cat. No. 8H1346
4.	Mounting Foot (2), Cat. No. 1000B4F3222	**10.**	Pan head screw, M6 x 1.0 x 150 mm (4), Cat. No. 5867600
5.	Mounting bracket, controller, Cat. No. 1000C4F3217-101	**11.**	It may be necessary to remove the sensor connectors. See procedure below.
6.	Pan head screw (4), Cat. No. 5867400		

To remove the sensor connectors before inserting the controller enclosure into the panel cut-out:

1. Disconnect power to the controller.

1. Disconnect the wires at terminal block J5, see Figure 21 on page 21.

2. Loosen and remove the nut securing the sensor connector inside the enclosure. Remove the sensor connector and wires. Repeat step 1 and 2 for the other sensor connector.

3. After the controller is in place in the panel, reinstall the sensor connectors and reconnect the wiring to terminal J5 as shown in Figure 21 on page 21.

3.2 Electrical Installation

DANGER
The instrument must be installed by qualified technical personnel for adherence to all applicable electrical codes. The 1720E/sc100 product configuration is not intended for installation in hazardous locations.

High-voltage wiring for the controller is conducted behind the high voltage barrier in the controller enclosure. The barrier must remain in place unless a qualified installation technician is installing wiring for power, alarms, or relays. See Figure 12 for barrier removal information.

3.2.1 Installation in Conduit

In hard-wired electrical applications, the power and safety ground service drops for the instrument must be 18 to 12 AWG. See Figure 13 on page 15 for strain relief and conduit opening sealing plug information. See section 3.2.3 on page 15 for wiring information.

3.2.2 Installation Using a Power Cord

DANGER
Use of power cords is not permitted in hazardous locations.

Where permitted by local electrical codes, a sealing-type strain relief to maintain the NEMA 4X/IP66 environmental rating and a power cord less than 3 meters (10 feet) in length with three 18-gauge conductors (including a safety ground wire) can be used, see Replacement Parts and Accessories on page 55. See Figure 13 on page 15 for strain relief and conduit opening sealing plug assembly. See section 3.2.3 on page 15 for wiring information.

Figure 12 Removing Voltage Barrier

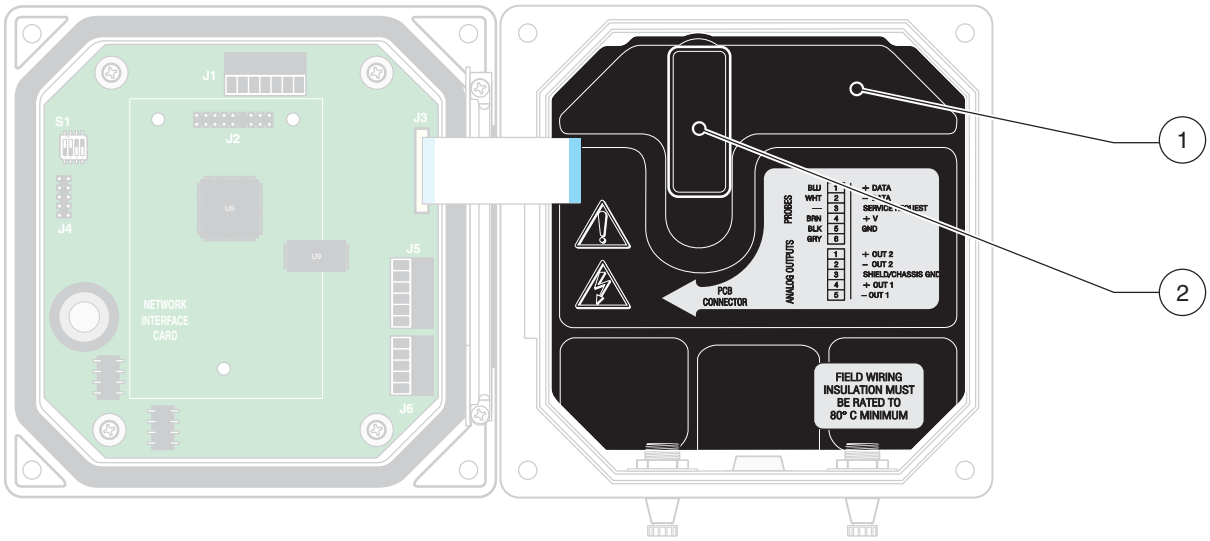

1. High voltage barrier	**2.** Unsnap the barrier latch then pull out to remove the barrier.

Figure 13 Using the Optional Strain Relief and Conduit Plug

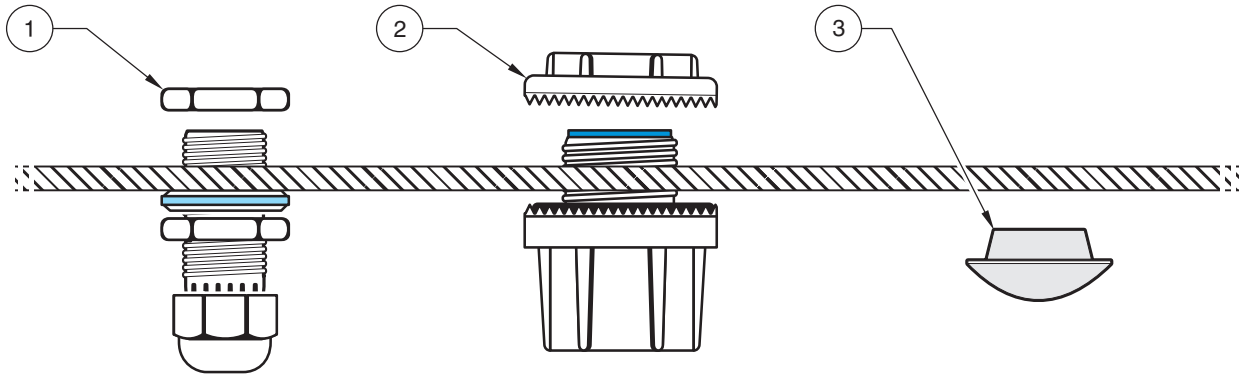

1. Power cord strain relief	**2.** Conduit strain relief	**3.** Conduit opening sealing plug

Figure 14 Proper Wire Preparation and Insertion

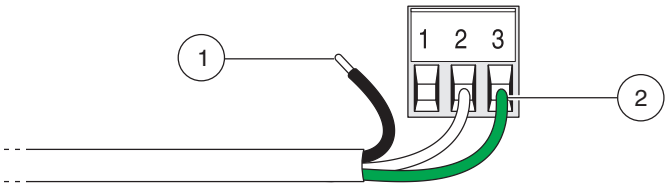

1. Strip ¼-inch of insulation.	**2.** Seat insulation against connector with no bare wire exposed.

3.2.3 Wiring for Power at the Controller

Wire the instrument for line power by hard-wiring in conduit or by wiring to a power cord if local code allows. Regardless of the type of wire used, the connections are made at the same terminal. A local disconnect designed to meet local electrical code is required and must be identified for all types of installation. See Figure 16 and Figure 17 on page 17 for suggested local disconnect configurations.

1. Obtain appropriate fittings with NEMA 4X/IP66 environmental rating.
2. Loosen the screws using a phillips-head screwdriver and open the hinged controller cover.
3. Remove the high-voltage barrier (see Figure 12 on page 14).
4. Insert the wires through the strain relief fitting or conduit hub located in the right-rear access hole in the bottom of the enclosure. Tighten the strain relief if used, to secure the cord.
5. Properly prepare each wire (Figure 14) and insert each wire into the terminal according to Table 4. Tug gently after each insertion to ensure the connection is secure.
6. Seal any unused openings in the controller box with conduit opening sealing plugs, see Replacement Parts and Accessories on page 55.
7. Reinstall the high-voltage barrier and latch to secure.

Table 4 Power Wiring Information

Terminal Number	Terminal Description	Wire Color Code for North America	Wire Color Code for Europe
1	Hot (L1)	Black	Brown
2	Neutral (N)	White	Blue
3	Protective Earth (PE)	Green	Green w/yellow tracer

Figure 15 Wiring Connections

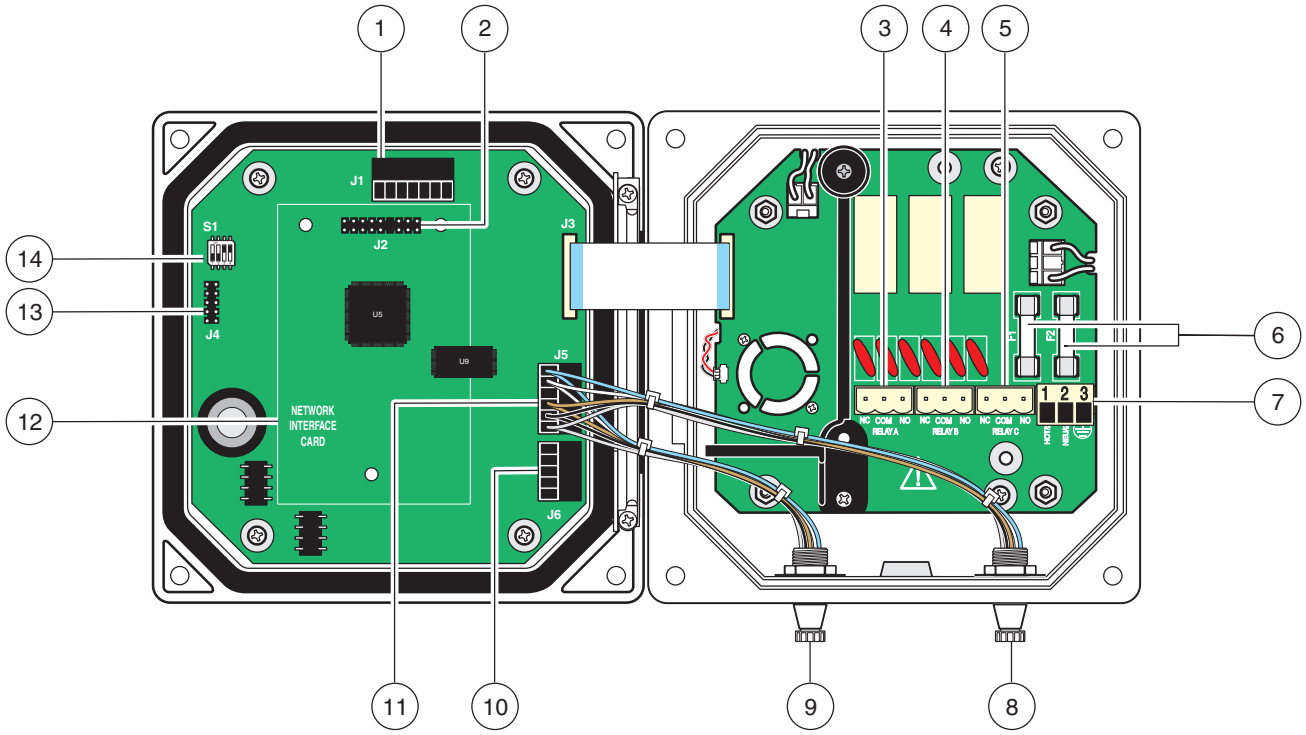

1. J1—Network connector	**8.** Sensor connector
2. J2—Header for optional network interface card	**9.** Sensor connector
3. J5—Relay A connector	**10.** J6—Analog output (4–20 mA) connector
4. J6—Relay B connector	**11.** J5—Sensor connector for hard-wiring
5. J7—Relay C connector	**12.** Position for network interface card
6. Fuses (F1, F2)	**13.** Service port
7. J8—ac Power connections	**14.** Sensor terminator selector/service port configuration

Figure 16 Local Disconnect for Power Cord

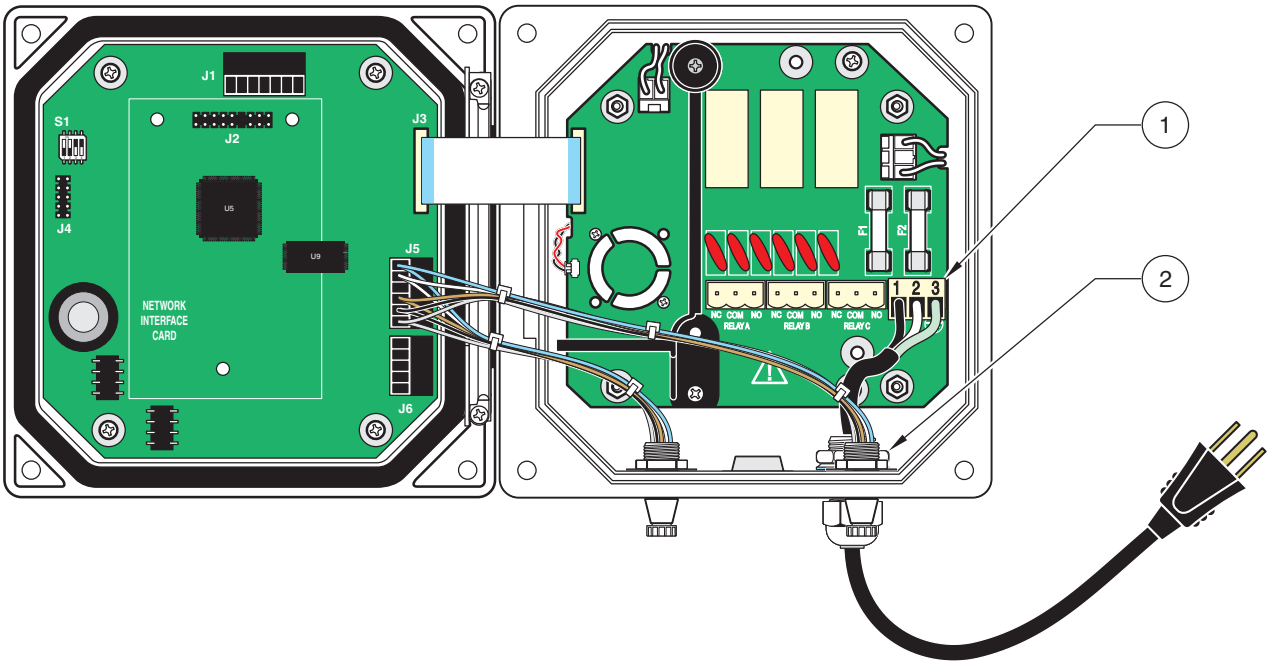

1. Power terminal	**2.** Power cord strain relief

Figure 17 Local Disconnect for Hard-wired Line Power

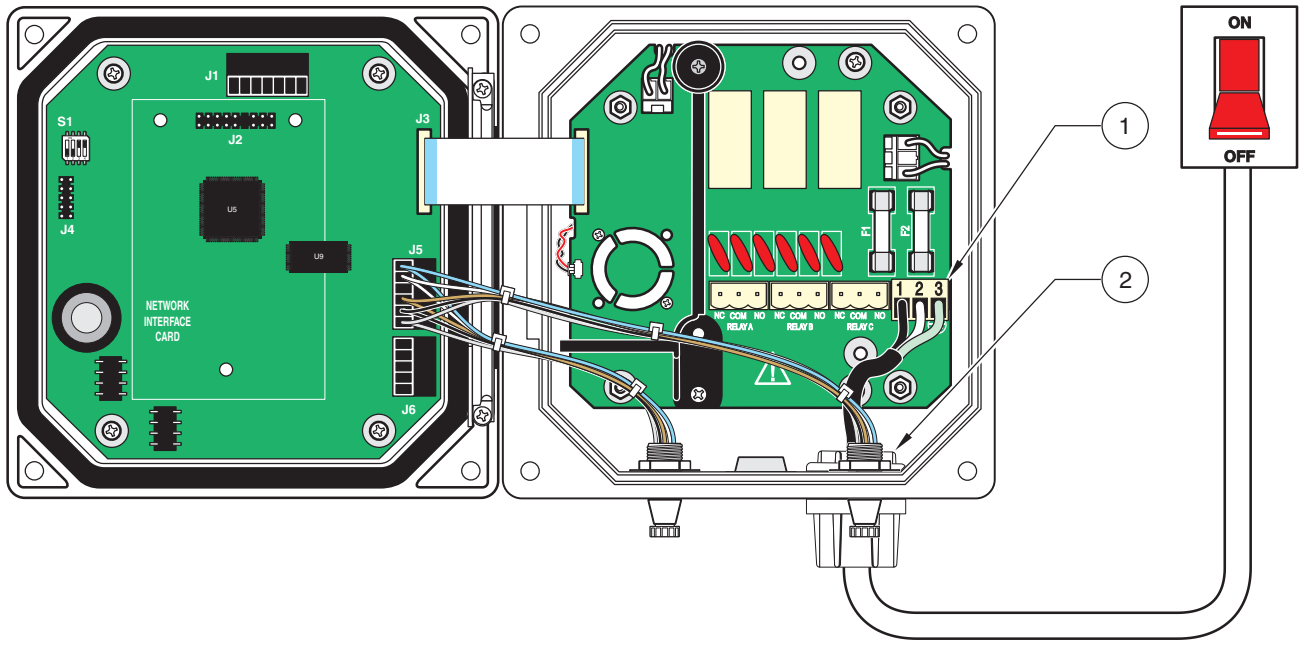

1. Power terminal	**2.** Conduit strain relief

3.3 Alarms and Relays

The controller is equipped with three unpowered relays rated 100–230 V ac, 50/60 Hz, 5 amp resistive maximum.

3.3.1 Connecting the Relays

The relay connector accepts 18–12 AWG wire (as determined by load application). Wire gauge less than 18 AWG is not recommended.

Danger: Relay loads must be resistive. User must externally limit current to the relays to 5 Amps by use of a fuse or breaker.

The controller contains three relays designed for use with high voltage (greater than 30V-RMS and 42.2V-PEAK or 60 V dc). Refer to Figure 18 for connection information. The wiring is not designed for low voltage connections. Relay must not be powered from the same wiring used to power the controller. See section 4.6 on page 34 for relay setup details.

Danger: ac power terminals are designed for single wires. Do not use more than one wire in each terminal.

The Normally Open (NO) and Common (COM) relay contacts will be connected when an alarm or other condition is active. The Normally Closed (NC) and Common relay contacts will be connected when an alarm or other condition is inactive or when power is removed from the controller.

Figure 18 Alarm and Relay Connections

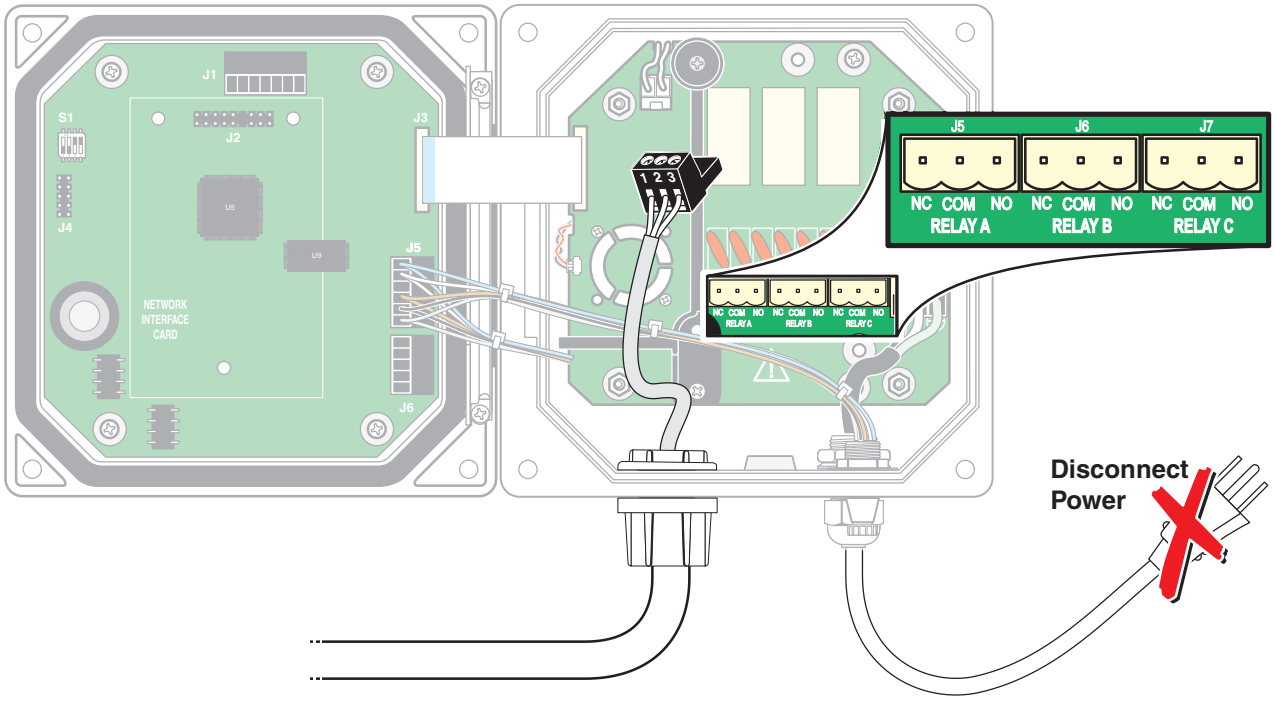

3.3.2 Connecting the Analog Outputs

Two isolated analog outputs (1 and 2) are provided, see Figure 19. Each output can be set to 0–20 or 4–20 mA, and can be assigned to represent the measured parameter or secondary measurement such as temperature. Make connections with twisted-pair shielded wire and connect the shield at the controlled component end or at the control loop end. Do not connect the shield at both ends of the cable. Use of non-shielded cable may result in radio frequency emission or susceptibility levels higher than allowed. Maximum loop resistance is 500 ohm. Refer to section 4.5 on page 32 for output software setup.

Make wiring connections at the analyzer end as shown in Figure 19.

Table 5 Output Connections at Terminal Block J6

Recorder Wires	Circuit Board Position
Output 2 +	1
Output 2 –	2
Shield	3
Output 1 +	4
Output 1 –	5

Figure 19 Analog Output Connections

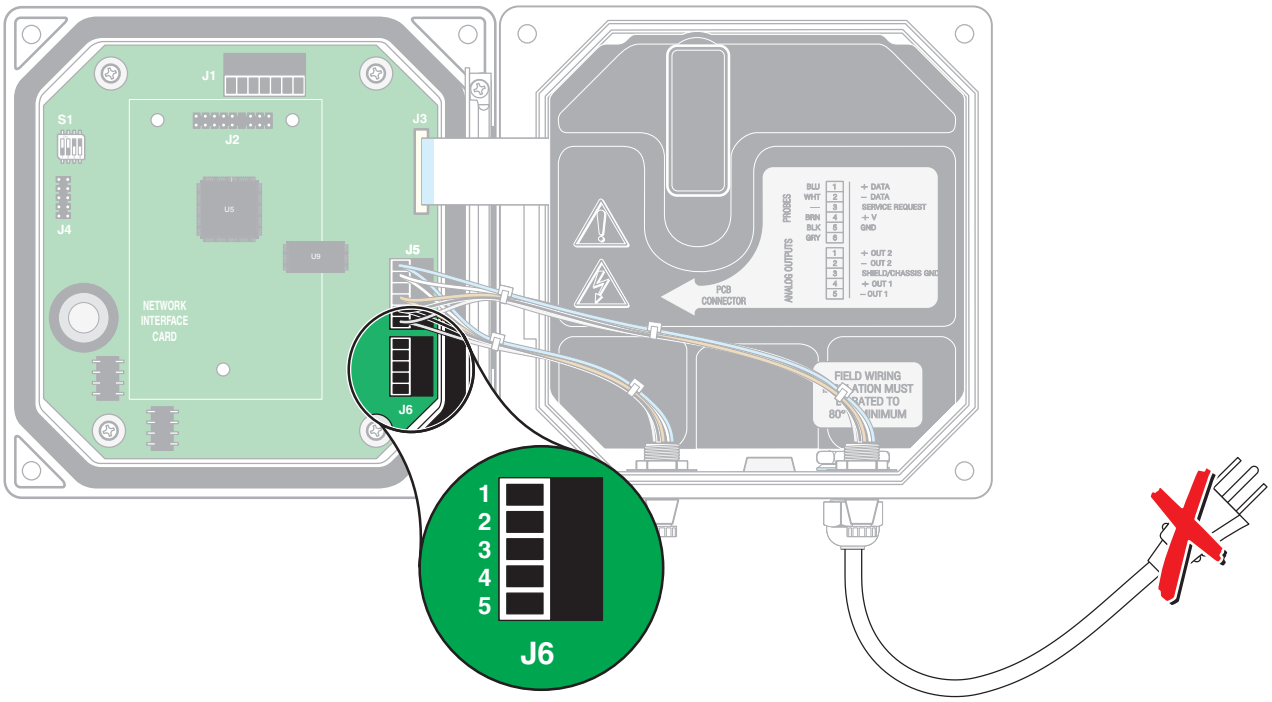

3.4 Connecting/Wiring the Sensor Cable

The sensor cable is supplied with a keyed quick-connect fitting for easy attachment to the controller, see Figure 20. Retain the connector cap to seal the connector opening in case the sensor must be removed.

The 1720E sensor cable may be extended by a maximum of 7.62 m (25 ft), see Replacement Parts and Accessories on page 55.

Modify the controller for sensor hard-wiring as follows:

1. Remove all power to the controller.
2. Open the controller cover.

3. Disconnect and remove the existing wires between the quick connect and terminal block J5, see Figure 21 on page 21.

4. Remove the quick connect fitting and wires and install the threaded plug on the opening to maintain the environmental rating.

Table 6 Wiring the Sensor at Terminal Block J5

Terminal Number	Terminal Designation	Wire Color
1	Data (+)	Blue
2	Data (–)	White
3	Service Request	No Connection
4	+12 V dc	Brown
5	Circuit Common	Black
6	Shield	Shield (grey wire in existing quick disconnect fitting)

Figure 20 Attaching the Sensor using the Quick-connect Fitting

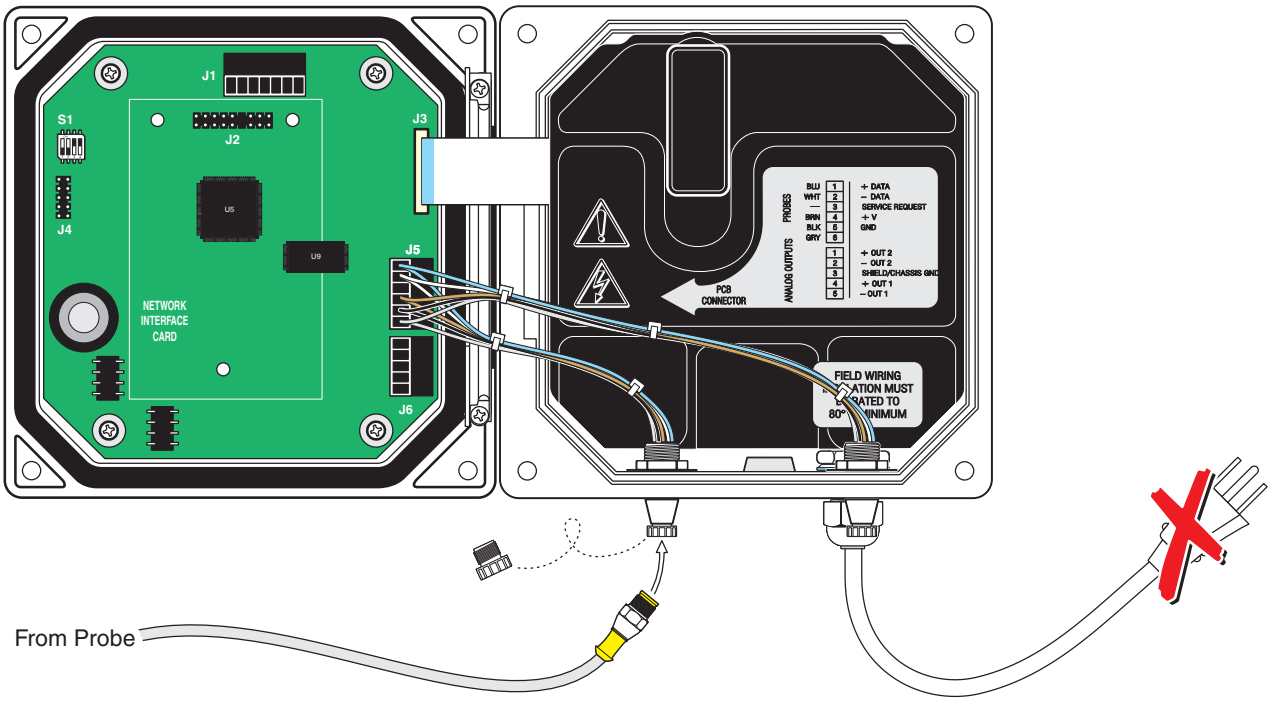

5. Cut the connector from the sensor cable.

6. Reinstall the plug on the sensor access opening to maintain the environmental rating.

7. Strip the insulation on the cable back 1-inch. Strip ¼-inch of each individual wire end.

8. Wire as shown in Table 6.

9. Pass the cable through conduit and a conduit hub or a strain relief fitting and an available access hole in the controller enclosure. Tighten the fitting.

10. Close and secure the cover.

Figure 21 Hard-wiring the Sensor

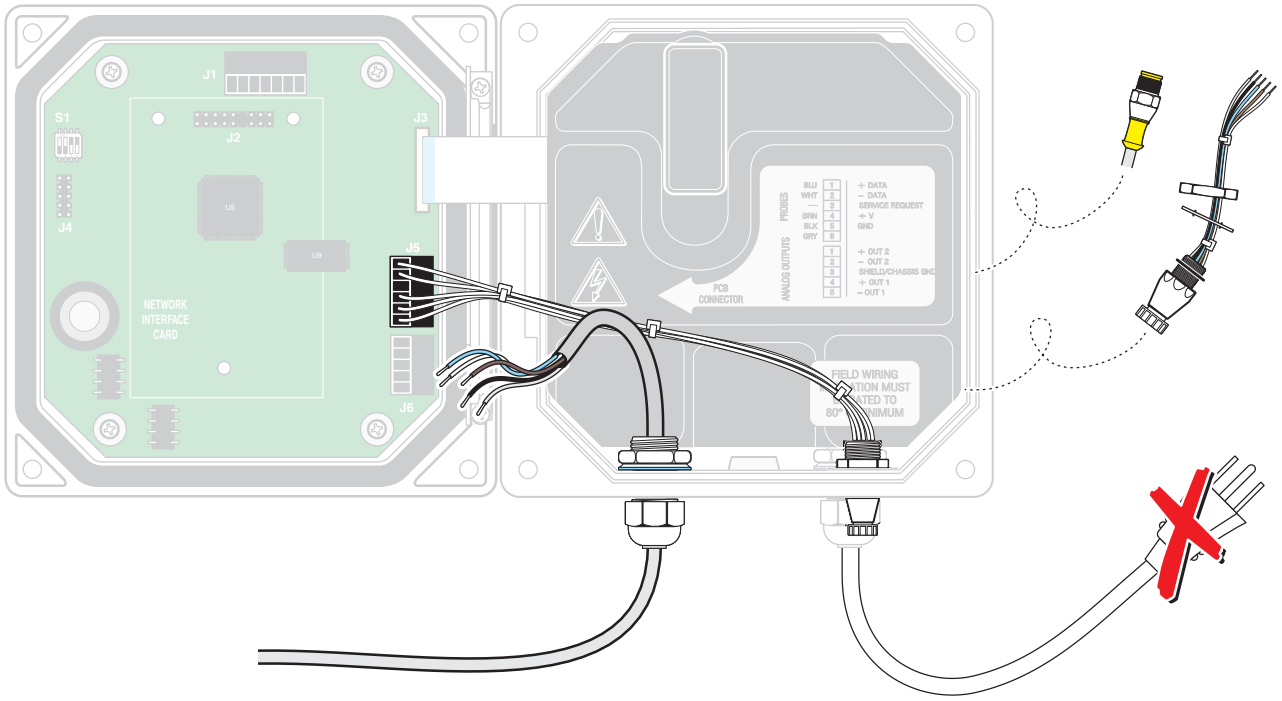

3.5 Connecting the Optional Digital Output

At this time, the manufacturer supports ModBUS RS485 and ModBUS RS232 communication protocols. The optional digital output card is installed in the location indicated in Figure 22 on page 22. Terminal block J1 provides user connection to the optional network card. The terminal connection is based on the selected network card. Refer to the instructions supplied with the network card for more details.

Table 7 Network Connections at Terminal Block J1

Terminal Number	ModBUS RS485	ModBUS RS232
1	In +	—
2	In –	—
3	Out +	—
4	Out –	—
5	Common	Common
6	No connection	No connection
7	Shield	Shield

Figure 22 Network Card Position in the Controller

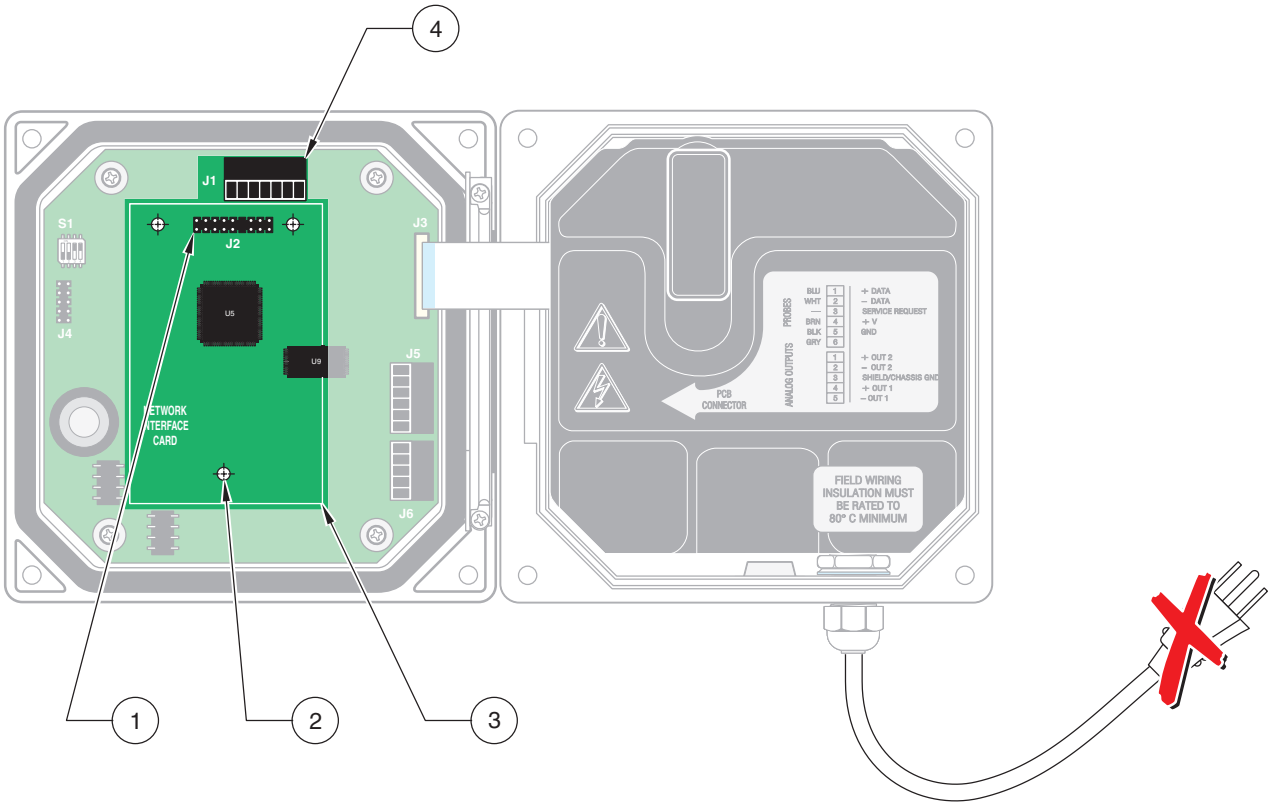

1. J2—Network card header	**2.** Mounting hole (3)	**3.** Network card placement	**4.** J1 Terminal

Figure 23 1720E Dimensions

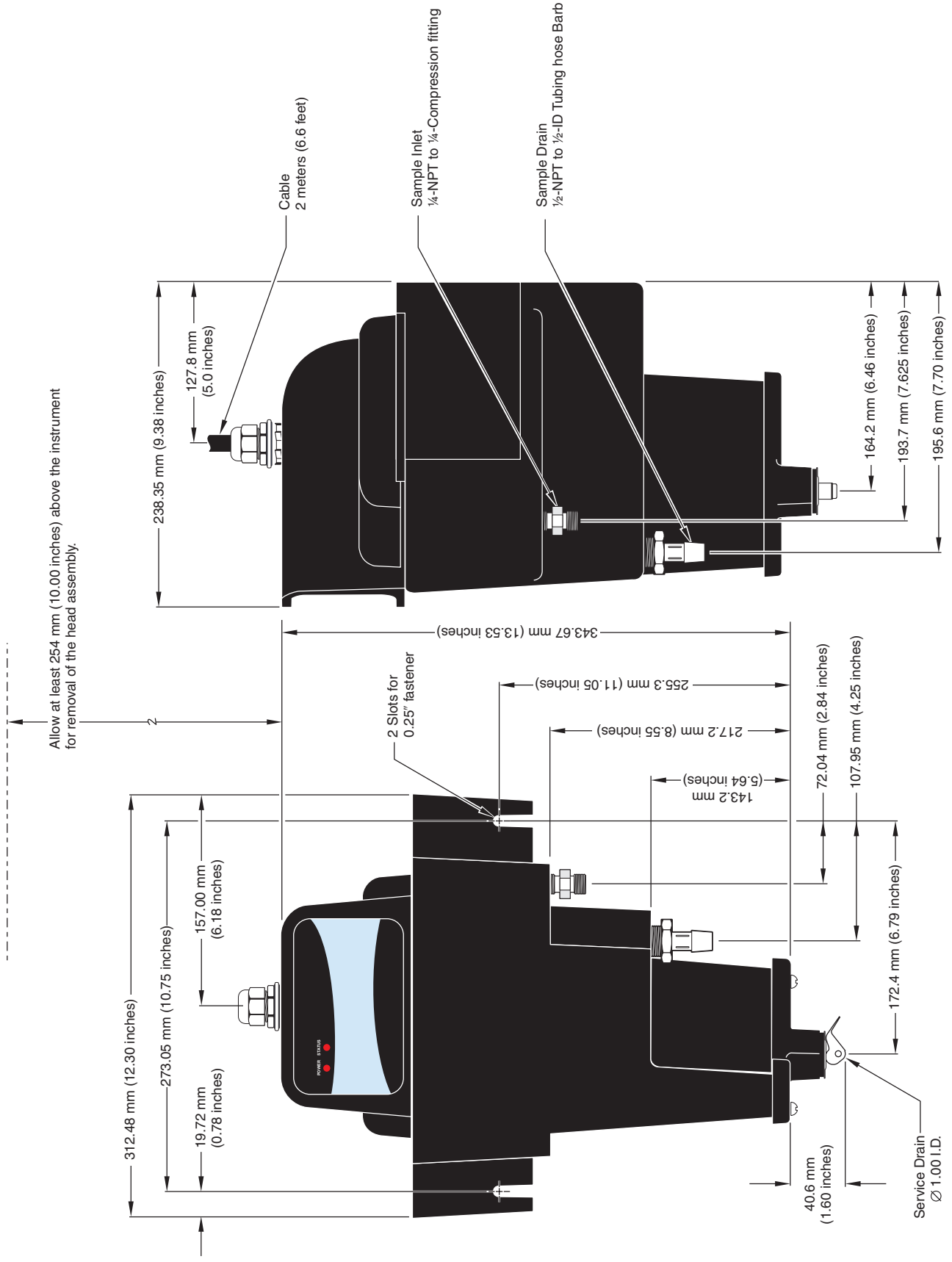

3.6 Turbidimeter Installation Information

The turbidimeter body is designed for wall-mounting (although it may be mounted on the optional floor stand). The turbidimeter sensor must be mounted within six feet of the controller unless an extension cable is used. Maximum cable length is 9.6 m (31 feet).

3.6.1 Mounting the Turbidimeter Body

Locate the turbidimeter as close to the sampling point as possible. A shorter distance for the sample to travel results in a faster response time.

Clean the turbidimeter body and bubble trap before installation using the instructions supplied in section 6.4.3, Cleaning the Turbidimeter Body and Bubble Trap on page 48. Slotted mounting brackets are integral parts of the turbidimeter body. Install customer-supplied hardware appropriate for the installation environment using the criteria detailed below:

- Install in a location that is isolated from vibration.
- Allow at least 22 cm (approximately 10 inches) clearance for removal of the head assembly and bubble trap cover from the top of the turbidimeter body.
- Leave enough room below the turbidimeter body to remove the bottom plug and to place a container under the drain when calibrating or cleaning.

Note: *Make sure the top of the turbidimeter body is level.*

- Install two ¼-20 bolts 10-3/4 inches apart (on center). Leave at least ¼-inch of the bolt head exposed.
- Make sure the bolts are installed level.

Slide the slotted mounting brackets of the turbidimeter body onto the bolts.

3.6.2 Installing the Head Assembly

After the turbidimeter body has been mounted, install the bubble trap cover, then place the head assembly on the turbidimeter body with the label facing the front. Move the head assembly back and forth slightly to ensure it is properly seated on the body of the instrument. Failure to properly seat the head will result in light leakage and erroneous readings.

The rear portion of the head assembly has a molded “lip” which may be used to hang the head assembly on the turbidimeter body edge for routine maintenance.

3.7 Installing a Sample Line

DANGER
This turbidimeter is not designed for use in hazardous locations or with samples that are flammable or explosive in nature. If any sample solution other than water is used in this product, test the sample/product compatibility to ensure user safety and proper product performance.

One-fourth inch O.D. rigid or semi-rigid tubing is recommended for sample lines. Run them as directly as possible between the turbidimeter body and the sampling point to minimize sample flow lag time.

Install sample line taps into larger process pipes to minimize interference from air bubbles or pipeline bottom sediment. A tap projecting into the center of the pipe is ideal. Figure 24 shows examples of sample tap installations.

Note: *When setting the flow rate, take care to avoid sweeping air “micro-bubbles” through the internal bubble trap. Observe the sample flow inside the turbidimeter body. If small air bubbles can be seen flowing up through the center, reduce the flow rate.*

Figure 24 Sampling Techniques

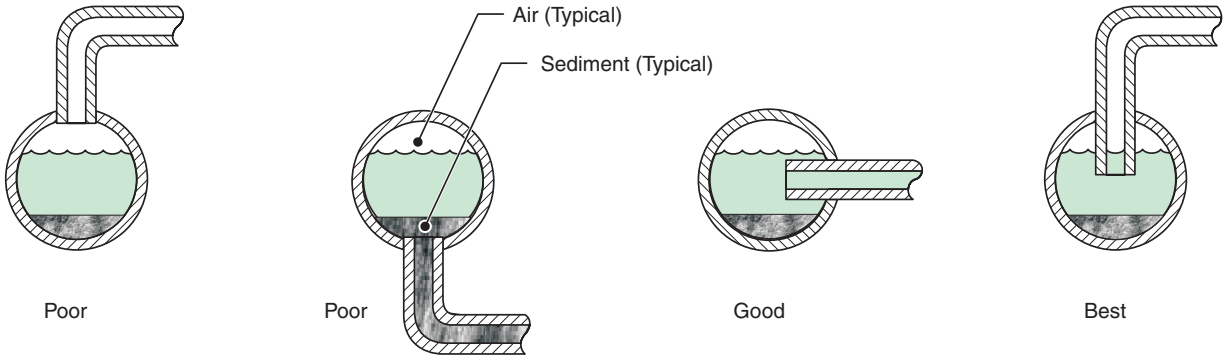

3.8 Sample Connections

Sample inlet and drain connections are made on the turbidimeter body. The sample inlet fitting installed in the body is a ¼-inch NPT x ¼-inch compression fitting. One additional fitting supplied with the instrument is a ½-inch NPT-to-hose fitting for use with ½-inch ID flexible plastic tubing on the drain.

Note: *For samples with high solids content (high turbidity), operate at the highest flow rate possible. For samples with low solids content (low expected turbidity), operate at a low flow rate (200–300 mL/min).*

The required flow rate is 200 to 750 mL/minute (4.0 to 11.9 gal/hour). Flow rate into the turbidimeter may be controlled with a flow restriction device on the inlet line. Flow rates below 200 mL/min will reduce response time and cause inaccurate readings. Flow rates above 750 mL/min will cause the turbidimeter to overflow, indicating the flow rate is too high.

Figure 25 Sample Connections

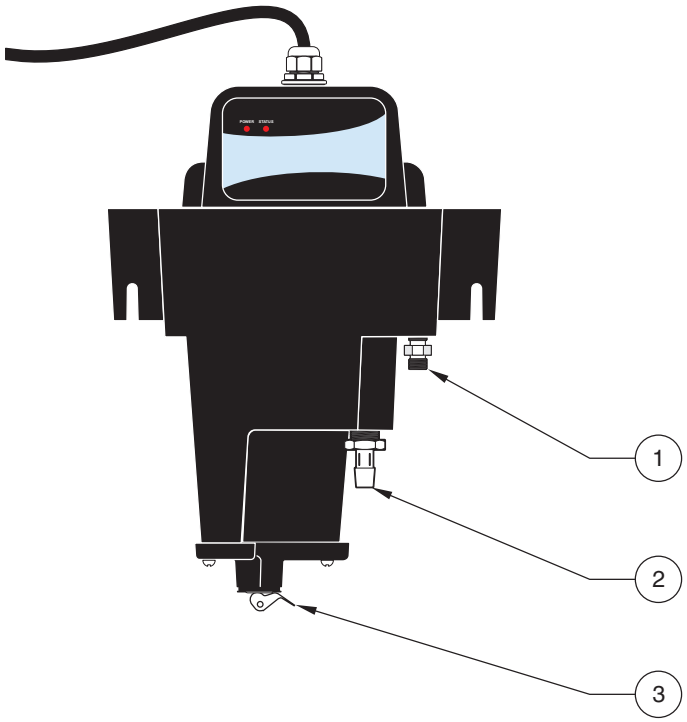

1. Sample Inlet, ¼-28 NPT x ¼-inch Compression fitting	**2.** Drain, ½-inch NPT fitting	**3.** Service Drain

4.1 Using the Keypad

The front of the controller is shown in Figure 26. The keypad consists of the eight keys described in Table 8.

Figure 26 Front of the Controller

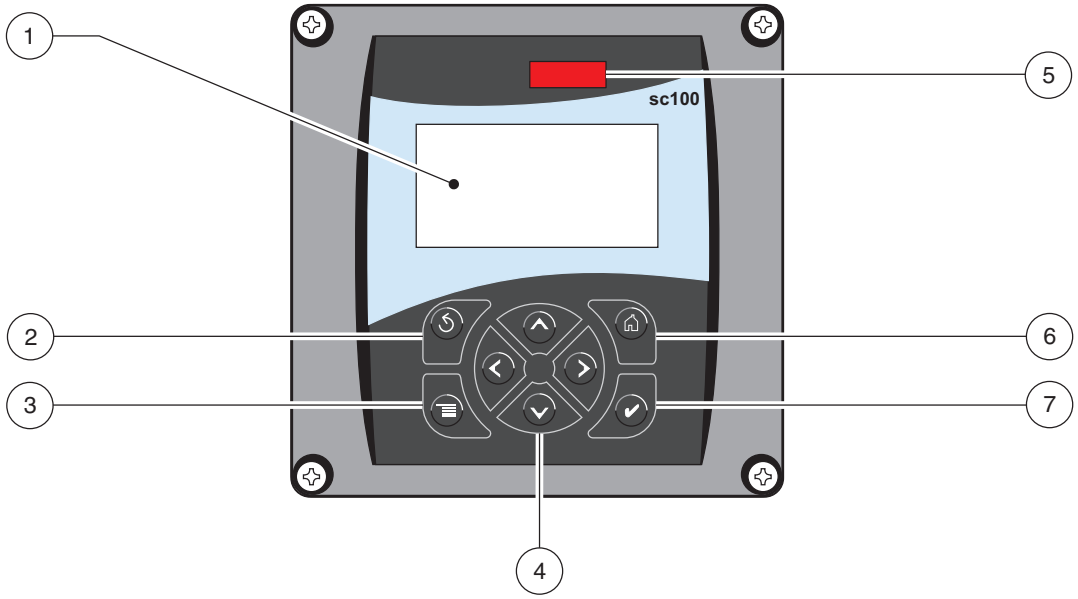

1. Instrument Display	**4.** Right, Left, Up, and Down keys	**7.** Enter key
2. Back key	**5.** IrDA (Infrared Data Acquisition) window	
3. Menu key	**6.** Home key	

Table 8 Controller Key Functions/Features

Number	Key	Function
2	back	Move back one level in the menu structure.
3	menu	Move to the main menu from other menus. This key is not active in menus where a selection or other input must be made.
4		Navigate through the menus, change settings, and increment and decrement digits.
5	home	Move to the Main Measurement screen from any other screen. This key is not active in menus where a selection or other input must be made.
6	enter	Accept an input value, updates, or accepts displayed menu options.

4.2 Controller Display Features

When the controller is in measurement mode, measurements for each connected sensor are displayed.

The display will flash on startup, when the hold outputs function has been activated, and when the filter function (signal average) is changed to a different value.

An active system warning will cause the warning icon (a triangle with an exclamation point inside) to be displayed on the right side of the display.

Figure 27 Display

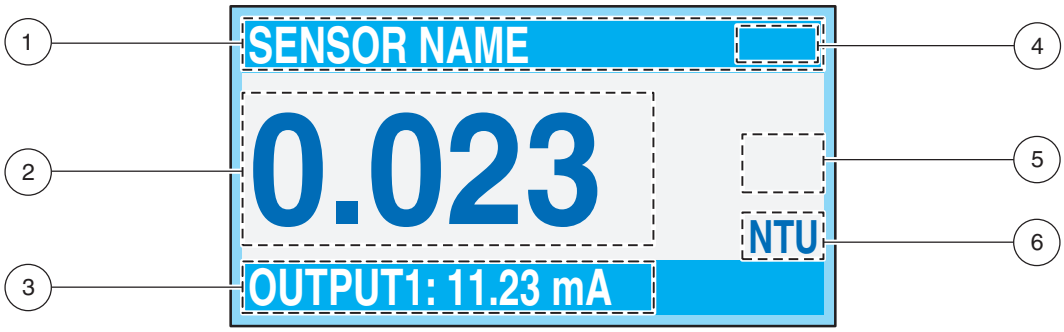

1.	Status bar. Indicates the sensor name and status of relays. The relay letter is displayed when the relay is energized.	**4.**	Energized relay indicator
2.	Main measurement	**5.**	Warning icon area
3.	Secondary measurement/output information	**6.**	Measurement units

4.2.1 Important Key Presses

- Press the **HOME** key then the **RIGHT** or **LEFT** key to display two readings when two sensors are connected. Continue to press the **RIGHT** or **LEFT** key to toggle through the available display options as shown below.

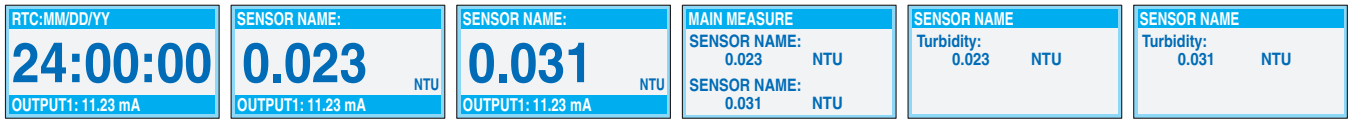

- Press the **UP** and **DOWN** keys to toggle the status bar at the bottom of the measurement display to display the output information.

- In Menu mode, an arrow may appear on the right side of the display to indicate that more items are available. Press the **UP** or **DOWN** key (corresponding to the arrow direction) to display additional menus.

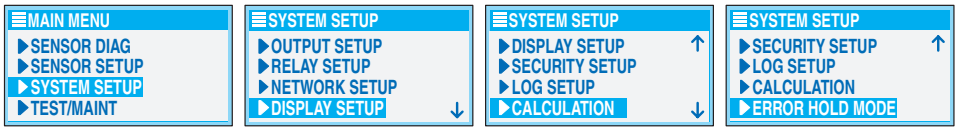

4.3 Instrument Setup

4.3.1 Software Text Abbreviation Conventions

Abbreviation	Meaning	Abbreviation	Meaning
Adj	Adjust	P/F	Pass/Fail
Cal	Calibration	Pass	Password
Cont.	Continue	Preped	Prepared
Cyl	Cylinder	SN	Serial Number
Dflt	Default	Std	Standard
Diag	Diagnostic	Temp	Temperature
Int	Internal	Ver	Verification
Meas.	Measurement	Xfer	Transfer

4.3.2 Adjusting Display Contrast

Step	Select	Menu Level/Instructions	Confirm
1		MAIN MENU	—
2		SYSTEM SETUP	
3		DISPLAY SETUP	
4	—	ADJ CONTRAST	
5		(+0–50)	
6		MAIN MENU or Main Measurement Screen	—

4.3.3 Specifying the Displayed Language

Step	Select	Menu Level/Instructions	Confirm
1		MAIN MENU	—
2		SYSTEM SETUP	
3		DISPLAY SETUP	
4		LANGUAGE	
5		select language	
6		Main Menu or Main Measurement Screen	—

4.3.4 Setting the Time and Date

4.3.4.1 Setting the Time

Note: *The time is available only in 24-hour (military) format.*

Step	Select	Menu Level/Instructions	Confirm
1		MAIN MENU	—
2		SYSTEM SETUP	
3		DISPLAY SETUP	
4		SET DATE/TIME	
5		highlight TIME	
6		select character to edit	
		choose appropriate number	
7		Main Menu or Main Measurement Screen	—

4.3.4.2 Setting the Date Format and Date

Step	Select	Menu Level/Instructions	Confirm
1		MAIN MENU	—
2		SYSTEM SETUP	
3		DISPLAY SETUP	
4		SET DATE/TIME	
5	—	highlight DATE FORMAT	
6		choose appropriate date format	
7		Highlight DATE	
8		select character to edit	—
		choose appropriate number	
9		Main Menu or Main Measurement Screen	—

4.4 Changing the Sensor Name

Step	Select	Menu Level/Instructions	Confirm
1		MAIN MENU	—
2		SENSOR SETUP	
3		highlight sensor of interest if more than one sensor is attached	
4		CONFIGURE	
5		EDIT NAME	
6		select character to edit	—
		choose appropriate alpha/numeric digit	
7		Main Menu or Main Measurement Screen	—

4.4.1 Setting Up System Security

The sc100 has a passcode feature to restrict unauthorized access to Network Setup, Security Setup, Log Setup, and Test/Maint menus. In addition, the passcode also regulates function selection for relay options. The passcode is factory set to **sc100** (the five digits must be followed by a space to remove the trailing asterisk). The passcode may be changed, see section 4.4.1.1.

The following two options are available:

Disabled: All configuration settings and calibrations can be changed. This is the default setting.

Enabled: All configuration settings can be displayed but not changed. Network Setup, Security Setup, Log Setup, and Test/Maint menus cannot be accessed without the passcode.

Step	Select	Menu Level/Instructions	Confirm
1	menu	MAIN MENU	—
2	⌄	SYSTEM SETUP	enter
3	⌄	SECURITY SETUP	enter
4	—	SET PASSCODE	enter
5	⌄	highlight ENABLED	enter
6	menu home	Main Menu or Main Measurement Screen	—

4.4.1.1 Editing the Passcode

If the passcode is enabled, it may be edited. The passcode can consist of up to six digits (alpha and/or numeric and available characters). If a passcode is forgotten, obtain the Master passcode from the Technical Consulting Services Department, see Technical and Customer Service (U.S.A. only) on page 57.

Step	Select	Menu Level/Instructions	Confirm
1	menu	MAIN MENU	—
2	⌄	SYSTEM SETUP	enter
3	⌄	highlight SECURITY SETUP	enter
4	‹ ›	ENTER (current or default) PASSCODE	—
	⌄	EDIT PASSCODE	enter

Step	Select	Menu Level/Instructions	Confirm
5		Change the existing passcode	
6		Main Menu or Main Measurement Screen	—

4.5 Output Options

The controller provides two isolated analog outputs (Output 1 and Output 2). Customize the outputs using the table in section 4.5.1 on page 32.

4.5.1 Output Setup Menu (from System Setup)

1.	Select OUTPUT 1 or 2
SELECT SOURCE	
	Press **ENTER** to access a list of all connected sensors. Choose the sensor to associate with the output.
SET PARAMETER	
	Highlight the appropriate displayed parameter and press **ENTER.**
SET FUNCTION	
	Select LINEAR CONTROL for current output to track the measurement value. Select PID CONTROL for the sc100 to operate as a PID controller.
SET TRANSFER	
	Each analog output is normally active, responding to the measured value of its assigned parameter. However, during calibration, each output can be transferred to this preset transfer value. Default: 4mA; Range: 0–20
SET FILTER	
	Allows the user to average the analog outputs over time Default: 0; Range: 0–120 seconds
SCALE 0 mA/4 mA	
	Select 0 mA or 4 mA for minimum current (outputs will be set to 0–20 mA or 4–20 mA).
ACTIVATION	
	FUNCTION set to LINEAR CONTROL
	If LINEAR CONTROL was selected in SET FUNCTION, set the low and the high values for the current output here. Defaults: Low = 0; High = 100; Low Value Range: 0–100, High Value Range: 0–100.
	FUNCTION set to PID CONTROL
	If PID CONTROL was selected in SET FUNCTION, configure the PID Control as follows: **1.** Set MODE: AUTO or MANUAL. Manual output default: 100% **2.** Set PHASE: DIRECT or REVERSE controller operation. **3.** SET SETPOINT: enter the set point the PID control will control the process to. Default: 100; Range: 0–100 **4.** PROP BAND: control the proportional band for the PID control. Default: 5.00; Range: 0–1000 **5.** INTEGRAL: control the integral action time period in minutes. Range: 0–999 **6.** DERIVATIVE: control the settings for the rate control. Range: 0–999

4.5.2 Hold/Transfer Outputs

When cleaning or servicing the instrument, the analog outputs can be held at the last measured values. To hold the output until released:

Step	Select	Menu Level/Instructions	Confirm
1		MAIN MENU	—
2		TEST/MAINT	
		Enter Passcode if enabled	
3		HOLD OUTPUTS	
4	—	SET OUTMODE	
5		Select HOLD OUTPUTS or XFER OUTPUTS	
6		SET CHANNELS	
7		Select ALL or 1720E	
8		ACTIVATION	
9	—	LAUNCH	
10		Main Menu or Main Measurement Screen	reading will flash

During calibration, the analog outputs can remain active, be held, or be transferred to a preset mA value. When output hold or transfer is enabled during a calibration, the hold or transfer is automatically released when calibration is completed. See section 5.3, Sensor Calibration and Verification on page 40.

4.5.3 Release Outputs

Step	Select	Menu Level	Confirm
1		MAIN MENU	—
2		TEST/MAINT	
3		HOLD OUTPUTS	
4		ACTIVATION	

Step	Select	Menu Level	Confirm
5	—	RELEASE	enter
6	menu home	Main Menu or Main Measurement Screen	—

4.6 Relay Options

Step	Select	Menu Level	Confirm
1	menu	MAIN MENU	—
2		SYSTEM SETUP	enter
3		RELAY SETUP	enter
4	—	Customize the options using the information in section 4.6.1	—

4.6.1 Relay Setup Menu (from System Setup)

1. Select Relay A, B, or C	
SELECT SOURCE	
	Choose from the available options (none, installed sensors, real time clock (RTC)).
SET PARAMETER	
	Choose from the available options.
SET FUNCTION	
	Source set to sensor
	Alarm: Operates relays in response to the measured parameter. Contains separate High and Low Alarm points, deadbands, and ON/OFF delay. Defaults: Low = 0.000 NTU, high = 100.00 NTU, low deadband = 5.000 NTU, high deadband = 5.000 NTU, on/off delays default to zero seconds; Range: 0–999 sec. **Feeder Control**: Operates in response to the measured parameter. Can be set for phasing, set point, deadband, overfeed timer, and ON/OFF delay. **Event Control**: Controls a cleaning system (or equivalent) on a timed basis. **Warning**: Activated when the analyzer detects a sensor warning.
	Source set to RTC
	Timer: Sets the timer for a cleaning system (or equivalent). Controls the output hold, interval, duration and off delay.
SET TRANSFER	
	Normally, each control or alarm relay is active, responding to the measured value of its assigned parameter. During calibration, however, the relay can be transferred to a preset on/off state to suit the application requirements. Select Energize or De-energize and press **ENTER**.

4.6.1 Relay Setup Menu (from System Setup) (continued)

ACTIVATION		
Function set to ALARM		
	LOW ALARM	Sets the value where the relay will turn on in response to decreasing measured value. For example: if the low alarm is set for 1.0 and the measured value drops to 0.9, the relay will be activated. Range: 0.00–100 NTU
	HIGH ALARM	Sets the value where the relay will turn on in response to increasing measured value. For example: if the high alarm is set for 4.0 and the measured value increases to 4.2, the relay will be activated. Range: 0.00–100 NTU
	LOW DEADBAND	Sets the range where the relay remains on after the measured value increases above the low alarm value. Default is 20% of the range. For example: if the low alarm is set for 1.0 and the low deadband is set for 0.5, then the relay remains on between 1.5 and 1.0. Range: 0.00–100 NTU
	HIGH DEADBAND	Sets the range where the relay remains on after the measured value decreases below the high alarm value. For example: if the high alarm is set for 4.0 and the high deadband is set for 0.5, then the relay remains on between 3.5 and 4.0. Range: 0.00–100 NTU
	OFF DELAY	Sets a time to delay the relay from normally turning off. Off Delay Range: 0–999 seconds
	ON DELAY	Sets a time to delay the relay from normally turning on. On Delay Range: 0–999 seconds
Function set to FEEDER CONTROL		
	PHASE	“High” phase assigns the relay setpoint to respond to an increasing measured value; conversely, a “Low” phase assigns the relay setpoint to respond to a decreasing measured value.
	SET SETPOINT	Sets the value where the relay will turn on. Default: 100 NTU; Range: 0–100
	DEADBAND	Sets the range where the relay remains on after the measured value decreases below the setpoint value (high phase relay) or increases above the setpoint value (low phase relay). Default: 5 NTU; Range: 0–100 NTU
	OVERFEED TIMER	Sets the time to limit how long the relay can remain “on.” Default: 5 minutes; Range: 0–999 minutes
	OFF DELAY	Sets a time to delay the relay from normally turning off. Default: 0 seconds; Range: 0–999 seconds
	ON DELAY	Sets a time to delay the relay from normally turning on. Default: 0 seconds; Range: 0–999 seconds
Function set to EVENT CONTROL		
	PHASE	“High” phase assigns the relay setpoint to respond to increasing measured value; conversely, a “Low” phase assigns the relay setpoint to respond to decreasing measured value.
	SET SETPOINT	Sets the value where the relay will turn on. Default: 100; Range: 0–100
	DEADBAND	Sets the range where the relay remains on after the measured value decreases below the setpoint value (high phase relay) or increases above the setpoint value (low phase relay). Default: 5 NTU; Range: 0–100 NTU,
	OnMax TIMER	Sets the time to limit the time the relay can remain “on.” Default: 0 seconds; Range: 0–999 seconds
	OffMax TIMER	Sets a time to delay the relay from normally turning off. Default: 0 seconds; Range: 0–999 seconds
	OnMin TIMER	Sets the time to limit the time the relay can remain “on.” Default: 0 seconds; Range: 0–999 seconds
	OffMin TIMER	Sets the time to limit the time the relay can remain “off.” Default: 0 seconds; Range: 0–999 seconds
Function set to TIMER CONTROL (RTC selected in SELECT SOURCE)		
	HOLD OUTPUTS	Set OUTMODE to select output hold operation and select the channels that cause the outputs to be held.
	INTERVAL	Set the off time for the relay. Default: 5 minutes; Range: 0–999 minutes
	DURATION	Set the on time for the relay. Default: 30 seconds; Range: 0–999 seconds
	OFF DELAY	Set the time for additional hold/output time after the relay has been turned off. Default: 1 second; Range: 0–999 seconds
Function set to WARNING CONTROL		
	WARNING LEVEL	Set the warning level that will trigger a relay. Range: 0–32 (warnings assigned to 1-9 for 1720E). For example: Set the warning level to 0 to allow all warnings to trigger the relay; set the warning level to 5 to allow warnings 6 and above to trigger the relay. Set the warning level to 9 or greater to not trigger the relay on any warning. See Table 10 on page 52 for a full list of warnings.

4.7 Data and Event Logging Options

The sc100 provides two data logs (one for each sensor) and two event logs (one for each sensor). The data logs store the measurement data at selected intervals. The event log stores a variety of events that occur on the devices such as configuration changes, alarms, and warning conditions. The data logs are stored in a packed binary format and the event logs are stored in a CSV format. The logs can be downloaded through either the digital network port or the IrDA port using the file transfer program available from the manufacturer.

The default datalogging frequency is 15 minutes. If the datalogging frequency is set to 15 minute intervals, the instrument can continue to store data for approximately six months.

4.7.1 Data Logging Options

Sensor Data Log:

Step	Select	Menu Level/Instructions	Confirm
1	menu	MAIN MENU	—
2		SENSOR SETUP	enter
3		Highlight sensor of interest if more that one sensor is attached.	enter
4		CONFIGURE	enter
5		DATALOG INTERVAL (select from 30 sec., 1 min., 5 min., 10 min., 15 min.)	enter
6	menu home	Main Menu or Main Measurement Screen	—

4.8 Digital Network Options

The sc100 provides two digital communication methods with the controller (the digital network port and the IrDA port). Either of the digital ports can be used to access setup data, measurement data, or data/event logs. For the features available for each individual digital network port, refer to the instruction sheet supplied with the selected network card.

4.9 Menu Structure

4.9.1 Sensor Diagnostics Menu

SELECT SENSOR		
	ERROR LIST	Displays a list of errors that are present. See section 7.1 on page 52.
	WARNING LIST	Displays a list of warnings that are present. See section 7.2 on page 52.

4.9.2 Sensor Setup Menu

CALIBRATE		
SELECT SENSOR (if more than one sensor is attached)		
	USER PREPD CAL	Calibration using 4000 NTU stock solution diluted to 20.00 NTU formazin.
	STABLCAL CAL	Calibration using 20 NTU StablCal Stabilized Formazin Standard
	VERIFICATION	Perform a verification, set the pass/fail criteria, and view the verification history.
	0 ELECTRONICS	Zero electronics
	SET DFLT GAIN	Return instrument to default calibration.
	CAL HISTORY	View the last 12 entered calibrations. Press the ENTER key to move to the next history entry. See section 5.5 on page 46 for more information.
CONFIGURE		
	BUBBLE REJECT	Choose Yes or No to enable/disable bubble reject. Default: Yes
	SIGNAL AVG	Choose no averaging or specify the amount of time for signal averaging. Available options are: no averaging, 6 sec., 30 sec., 60 sec., or 90 sec. Default is 30 seconds.
	MEAS UNITS	Select the appropriate measurement units to display. Choose from mg/L, NTU, TE/F, and FTU. Default: NTU
	EDIT NAME	Enter up to a 12-digit name in any combination of symbols and alpha or numeric characters. Press **ENTER** when the entry is complete. The name will be displayed on the status line above the measurement value on the main display.
	SET RESOLUTION	Set the number of significant digits to display. Default is three significant digits.
	DATALOG INTRVL	Choose the amount of time between saving data points to the data log. Default: 15 min.; Options: 30 sec., 1 minute, 5 minutes, 10 minutes, or 15 minutes.
DIAG/TEST		
	SOFTWARE VERS.	Displays the software version number.
	DRIVER VERS	Displays the software driver version number.
	SERIAL NUMBER	Displays the serial number of the sensor.
	INT TEMP	Displays the internal temperature of the sensor electronics in °C.
	DEFAULT SETUP	Restores the sensor's factory default settings and invalidates the current calibration.
	POWER CHECK	Displays the electrical statistics for the sensor.
	CAL VALUE	Displays the gain and zero electronics values for the current calibration.

4.9.3 System Setup Menu

OUTPUT SETUP (see section 4.5 on page 32 for expanded menu information)		
SELECT OUTPUT 1 or 2		
	SELECT SOURCE	Press **ENTER** to access a list of all connected sensors and select the sensor that will drive the output.
	SET PARAMETER	Press **ENTER** to select from the displayed parameters.
	SET FUNCTION	Select LINEAR CONTROL for current output to track the measurement valve. Select PID CONTROL for the sc100 to operate as a PID controller.
	SET TRANSFER	Each analog output is normally active, responding to the measured value of its assigned parameter. However, during calibration, each output can be transferred to this preset transfer value.
	SET FILTER	Average measurements over time (0–120 seconds). Default: 0 seconds.
	SCALE 0 mA/4 mA	Select 0 mA or 4 mA for minimum current (outputs will be set to 0–20 mA or 4–20 mA).
	ACTIVATION	Dependent on Function selected previously. See section 4.5 on page 32 for additional information.

4.9.3 System Setup Menu (continued)

RELAY SETUP (See section 4.6 on page 34 for expanded menu information.)		
SELECT RELAY A, B, or C		
	SELECT SOURCE	Select from none, any connected sensor, or the real time clock (RTC).
	SET PARAMETER	Press **ENTER** to select from the displayed parameters.
	SET FUNCTION	Select from the available options to customize the relay functions. See section 4.6.1 on page 34 for additional details.
	SET TRANSFER	Sets the relay to Energize or De-energize (user-selectable).
	ACTIVATION	Activate the relays from this menu (dependent on Function selected).
NETWORK SETUP (this menu appears only if a network card is installed in the controller)		
	MODBUS ADDRESS	Highlight sc100 Analyzer, or either connected sensor then press **ENTER** to select. Choose a number between 1 and 247 as the address (each source must have a different address) then press **ENTER**.
	BAUD RATE	Select a baud rate of 9600, 19200, 38.4K, 57.6K, or 115.2K. Default: 19200
	STOP BITS	Select 1 or 2 stop bits. Default: 1
	MODBUS MODE	Select RTU or ASCII. Default: RTU
	DATA ORDER	Select NORMAL or SWAPPED.
DISPLAY SETUP		
	ADJ CONTRAST	Use the **UP** and **DOWN** keys to increase or decrease the contrast, see section 4.3.2 on page 28. Range = 0–50
	LANGUAGE	The default is English. Choose from the available options to allow all menus to appear in the selected language.
	SET DATE/TIME	Use this menu to select the date format and to set the date and time (24-hour (military) format), see section 4.3.4 on page 29.
SECURITY SETUP (Enter a 6-digit passcode)		
SET PASSCODE		
	ENABLE	Enables system security. See section 4.4.1 on page 31.
	DISABLE	Disables system security. See section 4.4.1 on page 31.
LOG SETUP (Not used for 1720E system. Enable datalogging from the sensor setup menu for 1720E)		
	DATALOG SETUP	Set up datalogging of data and events. See section 4.7.1 on page 36.
ERROR HOLD MODE		
	HOLD OUTPUTS	Holds outputs when unable to communicate with the sensor.
	XFER OUTPUTS	Goes to transfer state when unable to communicate with the sensor.

4.9.4 Test/Maint Menu

STATUS		
	Indicates the status of each relay and indicates which sensors are connected to the controller.	
OUTPUT CAL		
	SELECT OUTPUT 1 or 2	
		Calibrate Analog Output by specifying values to correspond to 4 mA and 20 mA.
HOLD OUTPUTS		
	SET OUTMODE	Choose Hold Outputs or Xfer Outputs.
	SET CHANNELS	Choose any individual attached sensor or all attached sensors to be held or transferred.
	ACTIVATION	Select Launch or Release.

4.9.4 Test/Maint Menu (continued)

OVERFEED RESET		
	Reset the overfeed time out.	
TEST OUTPUT		
	SELECT OUTPUT 1 or 2	
		User selectable mA value. 0–20 mA
TEST RELAY		
	SELECT RELAY A, B, or C	
		Energize or de-energize the selected relay.
RESET CONFIG		
		Reset to default configuration of the controller
SIMULATION		
	SELECT SOURCE, SET PARAMETER, SET SIM VALUE	
		Simulate sensor measurement values for testing the outputs and relays.
SCAN SENSORS		
	Manually scans for sensors to determine if sensors have been added or removed.	
MODBUS STATS		
	Indicates the communication statistics for use with an external network.	
CODE VERSION		
	Indicates the controller software version.	

Section 5 System Startup

5.1 General Operation

Plug the sensor into the unpowered controller by aligning the orientation tab on the cable connector with the channel in the controller connector. Push in and turn to secure the connection. Tug gently to check the connection.

After all plumbing and electrical connections have been completed and checked, place the head on the body and supply power to the system. Ensure the head is seated on the body when power is applied, since dark readings are measured at this time. If power is applied while the sensor head is off the turbidimeter body, cycle the power with the sensor head on the body.

The first time a controller is powered up, a language selection menu will appear. The user must select the correct language from the displayed options.
Use the **UP** and **DOWN** keys to highlight the appropriate language and press **ENTER** to select.

Following language selection and upon power-up, the controller will search for connected sensors. The display will show the main measurement screen. Press the **MENU** key to access the menus.

5.2 Starting Sample Flow

Start sample flow through the instrument by opening the sample supply valve. Allow the turbidimeter to run long enough for the tubing and body to become completely wetted and the reading on the display to stabilize. One to two hours or longer may be required initially for complete stabilization. Allow measurements to become stable through adequate conditioning before completing instrument settings or performing calibrations.

5.3 Sensor Calibration and Verification

The manufacturer offers two EPA-approved calibration methods one using user-prepared formazin and the other using StablCal® stabilized formazin. Two verification methods (wet and dry) are also offered.

The 1720E Turbidimeter is factory-calibrated using StablCal® Stabilized Formazin before shipment. The instrument must be recalibrated before use to meet published accuracy specifications. In addition, recalibration is recommended after any significant maintenance or repair and at least once every three months during normal operation. **The turbidimeter body and bubble trap must be thoroughly cleaned and rinsed before initial use and prior to each calibration.**

Tips to achieve the most accurate calibrations:

- Optimum performance is achieved when calibration is performed in the turbidimeter body. Accurately prepare the standard then add it to the turbidimeter body at the appropriate step in the procedure. Do not prepare the standard in the body.
- Stop sample flow, drain, and clean the turbidimeter body before beginning the calibration procedure.
- Always clean the photocell window per the instructions in section 6.4.2 on page 48. Rinse the photocell with deionized water and dry with a soft, lint-free cloth before calibrating.

- Always clean the turbidimeter body or calibration cylinder per the instructions in section 6.4.3 on page 48. Rinse with deionized water before calibrating.
- Store the calibration cylinder upside-down to minimize contamination between calibrations.
- Pour the calibration standard into the turbidimeter body at the inflow end (left side when facing the instrument).
- Gently invert StablCal standards for 1 minute before opening. Do not shake. This ensures a consistent turbidity of the standard.
- If the 20.0 NTU StablCal standard is allowed to sit in the calibration cylinder or turbidimeter body for more than 15 minutes, it must be remixed (gently swirled in the calibration cylinder) before use to ensure a consistent turbidity.
- Discard all standards after use per the instructions on the container. Never transfer the standard back into its original container. Contamination will result.
- Always recalibrate after restoring default settings.

5.3.1 User-prepared Calibration

Before starting the calibration, read and apply the tips in section 5.3.

Follow the procedure as written (using 1 L of deionized water and 5.0 mL of 4000 NTU formazin) **if using a calibration cylinder** for calibration.

If using the turbidimeter body for the user-prepared calibration follow the procedure below using 20 NTU formazin in step 6c. Prepare the standard as follows**:**

1. Stop the sample flow, then drain and clean the body.
2. Prepare a 20 NTU standard by adding 5.0 mL of 4000 NTU formazin to a 1-L flask. Dilute to the mark with deionized water and invert gently to mix.
3. Drain the deionized water and pour the prepared 20 NTU standard into the turbidimeter body at step 6c. Do not add additional 4000 NTU formazin.

Step	Select	Menu Level/Instructions	Confirm
1	menu	MAIN MENU	—
2	⌄	SENSOR SETUP	enter
3	⌄	SELECT SENSOR (if more than one sensor is connected)	enter
4	⌄	CALIBRATE	enter
5	—	USER PREPD CAL	enter

Step	Select	Menu Level/Instructions	Confirm
6		OUTPUT MODE Select ACTIVE, HOLD, or TRANSFER	
	a	Stop sample flow. Drain body and clean the body and bubble trap. FILL CYL WITH 1 L DI WATER. REPLACE HEAD.	
	b	Measured reading (based on a gain of 1.0) displayed	
	c	(Remove head) ADD 5 ML OF 4000 NTU FORMAZIN INTO CAL CYLINDER.	
	d	Measured reading (based on a gain of 1.0) displayed	
	e	GOOD CAL! GAIN: X.XX ENTER TO CONT	 (to store)
	f	Verify CAL? (see Note below)	 to verify  exit no verify
7		Select VERIFICATION type (begin at step 7 in section 5.4.1 on page 44 or section 5.4.2 on page 45) or enter initials to complete calibration.	
8	—	RETURN SENSOR TO MEASURE MODE	
9		Main Menu or Main Measurement Screen	—

Note: *If a dry verification is performed directly after a calibration, the measured value is assigned as the expected value for future verifications (when using the dry verification device with the same serial number). As long as the verification exists within the verification history, the expected value will be retained. Otherwise, the expected value will be the nominal labeled value associated with the dry verification device.*

5.3.2 Calibration with StablCal®

Before starting the calibration, read and apply the tips in section 5.3 on page 40.

Step	Select	Menu Level/Instructions	Confirm
1		MAIN MENU	—
2		SENSOR SETUP	

Step	Select	Menu Level/Instructions	Confirm
3	—	CALIBRATE	enter
4		STABLCAL CAL	enter
5		OUTPUT MODE Select ACTIVE, HOLD, or TRANSFER	enter
6	a	Drain/clean/rinse the turbidimeter body or cal cylinder. POUR 20 NTU STD INTO CYL/BODY. REPLACE HEAD	enter
	b	Measured reading and reading based on 1.0 gain displayed	enter
	c	GOOD CAL! GAIN: X.XX ENTER TO CONT	enter (to store)
	d	Verify CAL? (see Note below)	enter to verify/ back exit no verify
	e	Select VERIFICATION type (begin at step 7 in section 5.4.1 on page 44 or section 5.4.2 on page 45) or enter initials to complete calibration.}	enter
7	—	RETURN SENSOR TO MEASURE MODE	enter
8	menu home	Main Menu or Main Measurement Screen	—

Note: *If a dry verification is performed directly after a calibration, the measured value is assigned as the expected value for future verifications (when using the dry verification device with the same serial number). As long as the verification exists within the verification history, the expected value will be retained. Otherwise, the expected value will be the nominal value associated with the dry verification device.*

5.4 Instrument Verification

Instrument verification is intended as a simple check to ensure turbidimeter functionality between calibrations. A verification is initially performed directly after a calibration and subsequent independent verifications are referenced to the initial verification. The pass/fail criteria is set and subsequent verifications are deemed good or bad, when compared to the initial verification. All verifications are based on the current calibration and must be repeated when the instrument is recalibrated or when the pass/fail criteria is not met.

Two types of verifications are offered. The dry verification is performed using a “dry” calibration device such as the ICEPIC™. A wet verification is performed using a standard with a predetermined value such as StablCal® Stabilized Formazin or a user-prepared standard with a value that has been verified on an independent device such as a laboratory turbidimeter.

5.4.1 Dry Verification

Step	Select	Menu Level/Instructions	Confirm
1	menu	MAIN MENU	—
2	⌄	SENSOR SETUP	enter
3	⌄	CALIBRATE	enter
4	⌄	VERIFICATION	enter
5	—	PERFORM VER	enter
6	⌃ ⌄	OUTPUT MODE Choose ACTIVE, HOLD, or TRANSFER	enter
7	—	VER TYPE Select DRY	enter
8	⌃ ⌄	DRY VERIFY select 1 NTU STD or 20 NTU STD or verify SN of previously used calibration device	enter
		Set Head on Standard	enter
		Reading Displayed	enter (to accept)
		GOOD VER!	enter (to store)
9	⌃ ⌄	ENTER INITIALS (user input)	enter
10	—	RETURN SENSOR TO MEASURE MODE	enter
11	menu home	MAIN MENU or Main Measurement Screen	—

5.4.2 Wet Verification

Before starting the verification, read and apply the appropriate tips in section 5.3 on page 40.

Step	Select	Menu Level/Instructions	Confirm
1	menu	MAIN MENU	—
2	⌄	SENSOR SETUP	enter
3	—	CALIBRATE	enter
4	⌄	VERIFICATION	enter
5	—	PERFORM VER	enter
6	⌃ ⌄	OUTPUT MODE Choose ACTIVE, HOLD, TRANSFER	enter
7	⌄	Select VER TYPE Select WET	enter
8	⌃ ⌄	Enter Std Turbidity	enter
	a.	DRAIN AND CLEAN SENSOR BODY. ENTER TO CONT	enter
	b.	POUR STANDARD INTO CYL/BODY. PLACE HEAD ON. ENTER TO CONT	enter
	c.	Reading Displayed	enter (to accept)
	d.	GOOD VER!	enter
9	⌃ ⌄	ENTER INITIALS	enter
10	⌃ ⌄	RETURN SENSOR TO MEASURE MODE	enter
11	menu home	Main Menu or Main Measurement Screen	—

5.5 Calibration and Verification History

The calibration and verification history logs contain information on the last 12 calibrations and the last 12 verifications. The calibration history log shows the gain value, the time and date of the calibration, and the initials of the operator performing verification.

Note: *Restoring default settings from the DIAG/TEST menu will return the turbidimeter to its non calibration state (gain = 1.0) but it will not remove the previous calibration history from memory.*

The calibration history log is accessed from the Calibrate menu. The verification history log is accessed from the Verification menu (a submenu of the Calibrate menu).

Each verification history entry shows the serial number of the verification device (dry verification) or the value of the verification standard (wet verification), the time and date of the verification, and the initials of the operator performing the verification.

Scroll through the entries by pressing the **ENTER** key. After scrolling through all 12 histories, the display will return to the calibration menu level.

When the instrument is received from the factory, default values or blank spaces will be shown for the calibration and verification history information. Those values will be replaced with real data as the history log is filled.

The data is retained as first in, first out. When the log is full, the newest entry is stored and the oldest entry in the log is deleted.

Section 6 Maintenance

DANGER
Only qualified personnel should conduct the maintenance tasks described in this section of the manual.

6.1 Maintenance Schedule

Maintenance Task	Frequency
Clean the sensor	Before each calibration and as needed. Depends on sample characteristics.
Calibrate Sensor (as required by regulatory agency)	Per agency-dictated schedule.

Scheduled periodic maintenance requirements of the 1720E are minimal and include calibration and cleaning of the photocell window, bubble trap, and body. Check and clean the bubble trap and turbidimeter body (as described in section 6.4.3) if visual inspection shows that it is necessary. Perform other maintenance on a regular basis; experience will dictate scheduling and may depend on the installation, sample type, and season.

It is very important to maintain the cleanliness of the interior and exterior of the turbidimeter body, head assembly, the integral bubble trap, and the surrounding area. Doing so will ensure accurate, low-level turbidity measurements.

Clean the body before calibration and verification (especially when measurements are being made at 1.0 NTU or lower).

Check and/or perform a calibration periodically (as experience dictates) using one of the methods described in section 5.3 on page 40. A calibration history menu option is available under Sensor Setup/Calibrate.

6.2 Removing a Sensor from the System

Prior to physically removing a sensor from the system, record all user defined settings such as relays, signal averaging, etc. Disconnect the sensor connector at the controller.

6.3 Reinstalling a Sensor on the System

To return the system to normal operation following a software upgrade or sensor repair perform the following procedure:

1. Detach all sensors from the sc100 controller.
2. From the main menu, press the down arrow key to highlight TEST/MAINT. Press **ENTER**.
3. Use the down arrow key to scroll to SCAN SENSORS and press **ENTER**.
4. Remove attached sensors by selecting the corresponding serial number or select “All”.
5. **Power down the sc100 then attach the 1720E.**
6. Supply power to the sc100. The system will initialize automatically.

Note: *Clean sensors before reinstallation on the system.*

6.4 Cleaning

6.4.1 Cleaning the Controller

With the enclosure securely closed, wipe the exterior with a damp cloth.

6.4.2 Cleaning the Photocell Window

Occasional cleaning of the photocell window is required. The frequency will depend on the nature and concentration of dissolved and suspended solids in the sample. Biological activity is a primary factor in mineral scale deposit on the window and the amount differs with sample temperature. In general, more growth will occur in warm temperatures and less in cold.

Note: *Take care to not scratch the photocell window.*

Inspect the photocell window often to determine cleaning needs. Remove any organic growth or film on the photocell window before standardization or calibration. Use a cotton swab and isopropyl alcohol or a mild detergent (such as Liqui-nox®) to remove most sediment and dirt. Mineral scale buildup may require cleaning with a mild acid applied with a cotton swab followed by a detergent wash. **Do not use abrasive cleaners.**

6.4.3 Cleaning the Turbidimeter Body and Bubble Trap

Sediment may collect in the turbidimeter body after extended use. Noise (fluctuation) in the reading could indicate the need to clean the body and/or bubble trap. The 1720E bubble trap and bottom plate may be removed to make cleaning easier. Drain and clean the turbidimeter body before each calibration. Establish a regular schedule or perform cleaning as determined by visual inspection.

Cleaning the Turbidimeter Body

Note: *The turbidimeter body, bubble trap, and detector must be cleaned before each calibration.*

1. Turn off sample flow to the turbidimeter body.
2. Remove the head assembly and bubble trap cover from the body. Remove the bubble trap by lifting it vertically. Set it aside to be cleaned separately.
3. Drain the body by removing the plug from the bottom of the body.
4. Replace the drain plug and fill the body to the weir with cleaning solution. This cleaning solution can consist of dilute chlorine solution (25 mL of household bleach in 3.78 liters of water) or a laboratory detergent such as Liqui-nox (1 mL detergent in 1 liter of water).
5. Use a soft brush to clean the inside surfaces of the body.
6. Remove the drain plug again and thoroughly flush the turbidimeter body with ultra-filtered deionized water. Clean and replace the plug.

Cleaning the Bubble Trap

1. Prepare a cleaning solution (as in step 4 above) in a container large enough to submerge the entire bubble trap.
2. Using a test tube brush such as Cat. No. 690-00, clean each surface.
3. Rinse the bubble trap thoroughly with ultra-filtered deionized water and reinstall it in the turbidimeter body.
4. Replace the bubble trap cover and head assembly on the top of the body.

5. Restore sample flow to the instrument.

6. Calibrate the instrument using one of the methods in section 5.3 on page 40.

If the above cleaning procedures have been performed and the turbidimeter readings are still noisy, the bottom plate and gasket may need to be removed and cleaned. Carefully perform the following procedure to ensure the turbidimeter body integrity is maintained.

1. Turn off sample flow to the turbidimeter body.

2. Remove the head assembly, bubble trap cover, and bubble trap (by lifting it vertically) from the body.

3. Drain the body by removing the plug from the bottom of the body.

4. Lift the body off of its mounting screws.

5. With the body turned upside-down, remove the two Phillips-head screws holding the bottom plate.

6. Lift the bottom plate off the body; set the gasket aside for use in reassembly.

7. Use a soft brush and a dilute cleaning solution (as prepared above) to clean the bottom plate and inside surfaces of the turbidimeter body. Rinse the entire body and bottom plate with ultra-filtered deionized water.

8. Reassemble by inserting the gasket into the molded channel in the bottom plate.

9. Fit the bottom plate onto the turbidimeter body.

10. Reinstall both screws and carefully tighten to 15 inch-lb maximum.

11. Reinstall the turbidimeter onto the wall mounting screws.

12. Replace the bubble trap, bubble trap cover, and head assembly on the top of the body.

13. Restore sample flow to the instrument.

6.4.4 Replacing the Lamp Assembly

The Lamp Assembly is located on the head assembly. Under normal use, Hach recommends replacing the lamp once a year to maintain peak performance. Replacement bulbs have been “burned-in” at the factory and are ready for installation and use.

To change the lamp, refer to Figure 28 on page 50 and perform the following steps:

1. Disconnect power to the controller to remove all power to the turbidimeter.

2. Disconnect the lamp leads by unplugging the connector.

3. After the bulb has cooled, remove as follows:

a. Wear cotton gloves to protect your hands and to avoid fingerprints on the bulb.

b. Grasp the bulb.

c. Twist the bulb in a counterclockwise direction, pulling out slightly, until it is released from the housing.

d. Pull the lamp leads and connector through the hole in the lamp housing.

Do not touch the new bulb with bare hands. Etched glass and reduced lamp life will result. Wear cotton gloves or grasp the lamp assembly with a tissue to avoid contamination. If contamination occurs, clean the glass bulb portion with isopropyl alcohol.

Replace the bulb by reversing the above instructions. The bulb base only fits one way; align the notch in the metal bulb flange with the hole in the lamp holder.

Figure 28 Lamp Replacement

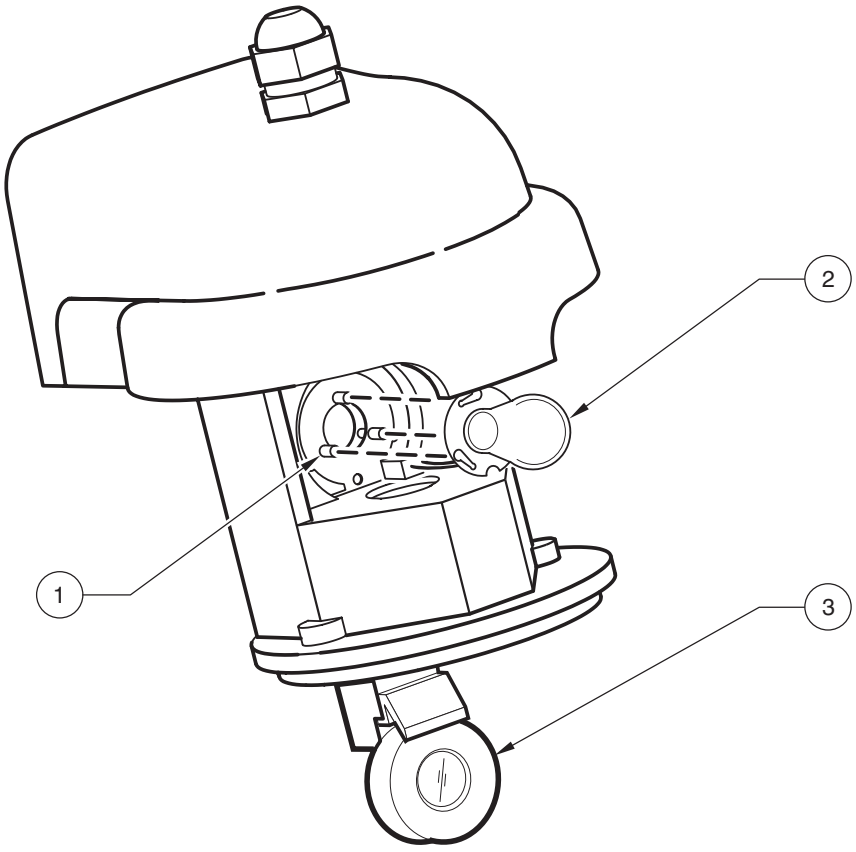

1. Lamp Housing	**2.** Lamp Assembly	**3.** Photo Detector

6.5 Fuse Replacement

The controller contains two mains fuses. Failed fuses are an indication that an equipment problem could exist. Problem resolution and fuse replacement should only be performed by qualified service personnel. Refer to Figure 29 and perform the following steps to replace the fuses:

1. Disconnect power to the controller (including power to relays if powered).
2. Open the hinged controller cover by completely loosening all four captive screws in the cover.
3. Remove the high voltage barrier; pull out on the lever of the captive fastener then pull straight out on the barrier. Set the barrier aside for reinstallation.
4. Remove the fuses and install new fuses of the same type and rating (T, 1.6A, 250 V, slow blow).
5. Reinstall the high voltage barrier.
6. Close the controller cover and hand-tighten the four screws.
7. Reconnect all power to the instrument.

Figure 29 Fuse Replacement

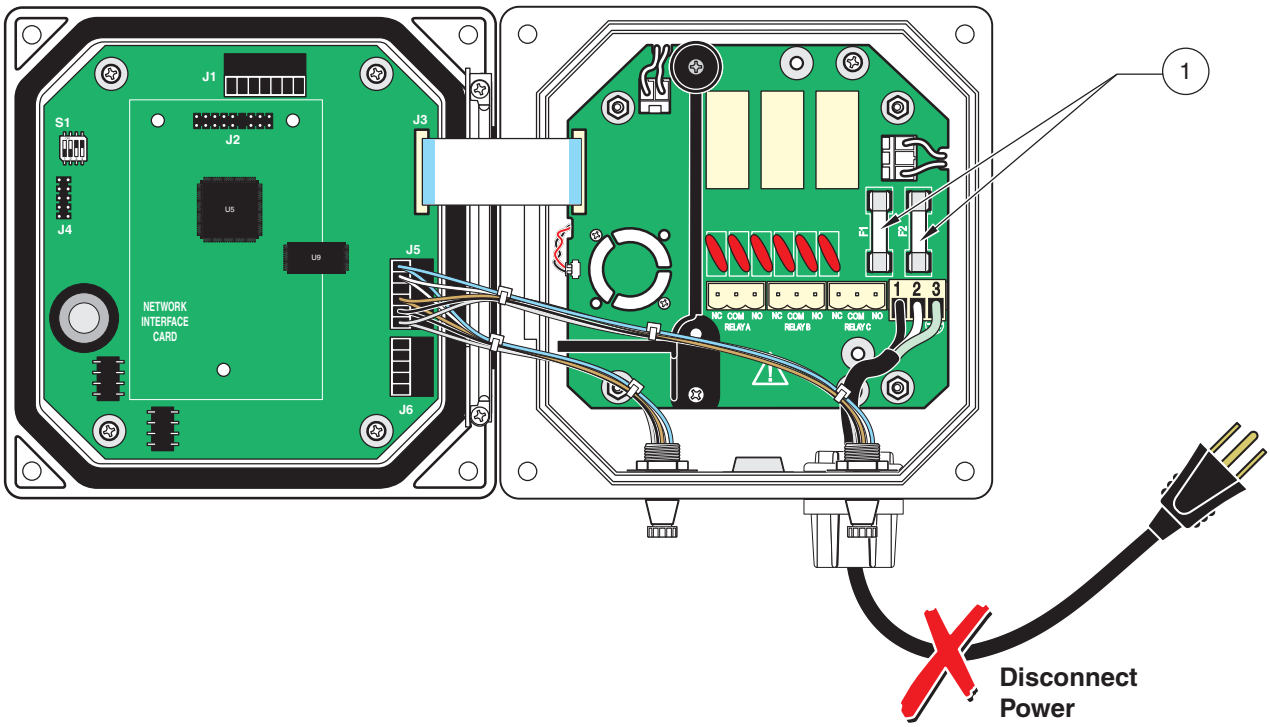

1.	Fuses F1 and F2, 1.6 A

Section 7 Troubleshooting

7.1 Error Codes

When a sensor is experiencing an error condition, the sensor reading on the measurement screen will flash and all relays and analog outputs associated with the sensor will be held.

Highlight the Probe Diag menu and press **ENTER**. Highlight Errors and press **ENTER** to determine the case of the error. Errors are defined in Table 9.

Table 9 Error Codes

Displayed Error	Definition
A/D Fail	Failed A/D converter. Call the Service Department.
Lamp Fail	The light source has failed. See section 6.4.4 on page 49 for instructions for replacing it.
Flash Fail	Datalog and event log will not work.

7.2 Warnings

A sensor warning will leave all menus, relays, and outputs functioning normally, but will cause a warning icon to flash on the right side of the display. Highlight the Probe Diag menu and press **ENTER** to determine the cause of the error. Warnings are defined in Table 10.

A warning may be used to trigger a relay and users can set warning levels to define the severity of the warning. Errors are defined in Table 10.

Table 10 Warning Codes

Warning Number	Displayed Warning	Definition/Resolution
1	Dark Reading Warning	Dark reading detects too much light.
2	Temperature Warning	Sensor head internal temperature is higher than specified. Contact the Service Department.
3	Data Log Full Warning	Sensor data log is full. No additional data will be logged until sensor log is downloaded into controller memory.
4	Event Log Full Warning	Sensor data log is full. No additional data will be logged until sensor log is downloaded into controller memory.
5	5 Volt Warning	Monitored voltage is outside the range of 4.5 – 5.5 V @ microprocessor input -> 698 to 854 counts from the microprocessor ADC.
6	Voltage in Warning	Monitored voltage is outside the range of 9.08 – 14.3 V @ microprocessor pin -> 279 to 435 counts from the microprocessor ADC.
7	Lamp V Warning	Monitored voltage is outside the range of 3.96 – 4.48 V @ microprocessor pin -> 614 to 385 counts from the microprocessor ADC.
8	Lamp I Warning	Monitored voltage is outside the range of 1.67 – 2.75 V @ microprocessor pin -> 39 to 64 counts from the microprocessor ADC.
9	Output Mode Not Normal	Activated when the sensor is not in normal measurement mode (such as when in calibration or verification mode).

Table 11 presents sensor warnings displayed in the Event Log, possible causes, and corrective actions.

Table 11 Troubleshooting

Sensor Warning	Possible Cause	Corrective Action
Bad Lamp	Lamp burned out	Replace the lamp. See section 6.4.4 on page 49.
	Lamp unplugged	Restore connection
	+12 V connection loose at controller	Restore connection
	Dislodged lamp	Reinstall lamp
	Bad circuit board in turbidimeter head	Contact the Customer Service Department.
Low Signal	Photocell coated/dirty	See Cleaning the Photocell Window on page 48. Contact the Customer Service Department.
	Photocell wires disconnected	Reconnect wires
	Photocell broken/cracked	Replace photocell Contact the Customer Service Department.
	Lens coated/dirty	Clean the lens using isopropyl alcohol and a cotton swab.
	Obstructed light path	Remove obstruction
	Sample turbidity >100 NTU	Switch to a high range turbidimeter
	See Bad Lamp causes above	See Bad Lamp corrective actions above
Bad System Voltage	Improper wiring at controller	See the controller wiring instructions in section 3.2, Electrical Installation on page 14.
	Turbidimeter head cable shortened to improper length	Contact the Customer Service Department.
	Fluctuation in voltage	Turn instrument power off and back on.
	Bad circuit board in turbidimeter head	Contact the Service Department
A/D Converter Timeout	Fluctuation in voltage	Turn instrument power off and back on.
	Bad circuit board in turbidimeter head	Contact the Customer Service Department.
High Dark Counts	Light Leak—Turbidimeter head not on turbidimeter body or calibration cylinder during Power Up or Zero Electronics	Make sure the turbidimeter head is on the turbidimeter body and properly aligned and repower instrument or perform ZERO ELECTRONICS in the CALIBRATION MENU.
	Light Leak—Turbidimeter head not properly aligned on the turbidimeter body or calibration cylinder during Power Up or Zero Electronics	Make sure the turbidimeter head is properly aligned and repower instrument or perform ZERO ELECTRONICS in the CALIBRATION MENU.
	Photocell broken/cracked	Contact the Customer Service Department.

The following table presents additional malfunctions which may not be recorded in the Event Log.

Table 12 Additional Malfunctions Not Recorded in the Event Log

Symptom	Possible Cause	Corrective Action
Continuous Underrange (negative reading)	Calibration standards not in the correct order or incorrect dilution	Verify the accuracy of calibration standards and recalibrate the instrument. See Low Signal in Table 11.
Continuous Overrange (100 NTU)	Calibration standards not in the correct order or incorrect dilution	Verify the accuracy of calibration standards and recalibrate the instrument.

Table 12 Additional Malfunctions Not Recorded in the Event Log (continued)

Symptom	Possible Cause	Corrective Action
Erratic Readings	Calibration standards have the same value Inadequate bubble removal from sample	Verify the accuracy of calibration standards and recalibrate the instrument. Increase the signal averaging time to a longer interval. Make sure the Bubble Reject feature is turned on. Slow the flow of sample into the instrument.
High Readings	Deionized water turbidity is greater than 0.5 NTU	Clean the instrument. Access Calibration History for turbidity value of ultra-filtered water. Verify the flow is between 200–750 mL/min. Recalibrate the instrument.

7.3 Event Codes

Event codes are not displayed on the screen of the sc100 and must be downloaded from the event log to be viewed. See section 4.7 on page 36 for additional information. Troubleshooting actions are given in section Table 11 on page 53.

Table 13 Event Log List

Event	Event #	Data1	Data2	Data3
Bubble Reject Change	0	0 = OFF 1= ON	—	—
Filter Size Change	1	0 = No avg 1 = 6 sec 2 = 30 sec 3 = 60 sec 4 = 90 sec	—	—
Data Log Interval Change	2	0 = 30 sec 1 = 1min 2 = 5 min 3 = 10 min 4 = 15 min	—	—
Power On	3	1	—	—
Calibration	4	Cal Gain	Initials	—
Verification	5	Expected Value	Meas Value	Initials
Dark Reading Warning	6	Measured Value	—	—
Temperature Warning	7	Temperature Value	—	—
Voltage Warning	8	16 = +5V high 32 = +5V low 64 = V in high 128 = V in low	—	—
Lamp Warning	9	1 = lamp V high 2 = lamp V low 4 = lamp I high 8 = lamp I low	—	—
A/D Fail	10	1	—	—
Lamp Fail	11	2	—	—
Flash Fail	12	3	—	—
Output Mode Change	13	1 = Hold 2 = Transfer	—	—

Section 8 Replacement Parts and Accessories

Replacement Items

Item	Cat. No.
Fuse, T, 1.6 A, 250 V	52083-00
Instruction Manual, sc100 Controller, English	58600-18
Instruction Manual, 1720E Turbidimeter System, English	60100-18
Installation kit, sc100 Controller	58672-00
Lamp Assembly	18950-00
sc100 Controller	58600-00

Optional Accessories

Cable, sensor extension, 7.7 m (25 ft)		57960-00
Cap, Connector Receptacle	each	52100-00
Deionized (demineralized) water	1 L	272-56
Digital Output Card for ModBUS RS232 communication		59200-00
Digital Output Card for ModBUS RS485 communication		59200-01
Drain plug for the 1720E body	each	44116-00
Filter, 0.45 µm, to produce ultra-filtered water for cleaning and calibration	each	26705-00
Filter, 0.2 µm, to produce ultra-filtered water for calibration standard preparation	each	23238-10
Formazin Calibration Kit includes:		
Calibration Cylinder, TenSette® Pipet, 4000 NTU Formazin Primary Standard (500 mL)	each	44156-00
Floor Stand	each	57432-00
Flow meter, 500–700 mL/min	each	40282-00
ICE-PIC Module for Calibration and Calibration Verification		
20 NTU	each	52250-00
1 NTU	each	52215-00
0.5 NTU	each	52225-00
Lid, Bubble Trap, 1720E	each	52012-00
Photocell Replacement Kit for the 1720E	each	52180-00
Pipet tips for 19700-01 TenSette Pipet	50/pkg	21856-96
Pipet tips for 19700-10 TenSette Pipet	50/pkg	21997-96
Plug, conduit opening		58687-00
Power Cord with strain relief, 115 V		54488-00
Power Cord with strain relief, 230 V		54489-00
Power Cord Kit, 10A-125V, 1.8 m (6 ft), UL/CSA listed	each	46306-00
Power Cord Kit, 10A-230V, 1.8 m (6 ft), European-style plug, VDE approved	each	46308-00
StablCal Calibration Set for the 1720 Series Turbidimeter		
Includes: StablCal Standards, < 0.1 NTU, 20.0 NTU	1 L/each	26596-00
StablCal Standard, 0.1 NTU	1 L	27233-53
StablCal Standard, 0.3 NTU	1 L	26979-53
StablCal Standard, 0.5 NTU	1 L	26980-53
StablCal Standard, 1.0 NTU	1 L	26598-53
Strain relief, Heyco		16664
Sun shield		58690-00
Swabs, Cotton, presterilized for cleaning the photodetector	100/pkg	25543-00
TenSette Pipet, 0.1 to 1.0 mL	each	19700-01
TenSette Pipet, 1.0 to 10.0 mL	each	19700-10
Tubing, Inlet, ¼ inch O.D., Polyethylene	per foot	51322-00
Tubing, Outlet, ½ inch I.D., ¾ inch O.D., Tygon R3603	per foot	51263-00

Calibration and Verification Standards and Accessories

Item	Qty	Cat. No.
Calibration Cylinder	each	44153-00
Formazin Calibration Standards		
Formazin, 4000 NTU Stock Solution	500 mL	2461-49
Calibration/Verification Modules		
ICE-PIC™ Module, 1 NTU	1 each	52215-00
ICE-PIC™ Module, 20 NTU	1 each	52250-00
StablCal® Calibration Standards		
StablCal® Stabilized Formazin Standard, 1 NTU	1 L	26598-53
StablCal® Stabilized Formazin Standard, 20 NTU	1 L	26601-53
StablCal® Stabilized Formazin Standard, <0.1 NTU	1 L	26597-53
StablCal® Stabilized Formazin Set, four 1-L bottles 20-NTU and four 1-L bottles <0.1 NTU	1 L each	26596-00
StablCal® Stabilized Formazin Standard, 40 NTU	1 gallon (3.78 L)	27463-56
StablCal® Stabilized Formazin Standard, 0.1 NTU	1 gallon (3.78 L)	27233-56

Section 9 How to Order

U.S.A. Customers

By Telephone:
6:30 a.m. to 5:00 p.m. MST
Monday through Friday
(800) 227-HACH (800-227-4224)

By Fax:
(970) 669-2932

By Mail:
Hach Company
P.O. Box 389
Loveland, Colorado 80539-0389 U.S.A.

Ordering information by e-mail: orders@hach.com

9.1 Information Required

- Hach account number (if available)
- Your name and phone number
- Purchase order number
- Brief description or model number
- billing address
- Shipping address
- Catalog number
- Quantity

9.2 International Customers

Hach maintains a worldwide network of dealers and distributors. To locate the representative nearest you, send e-mail to intl@hach.com or contact:

Hach Company World Headquarters; Loveland, Colorado, U.S.A.
Telephone: (970) 669-3050; Fax: (970) 669-2932

9.3 Technical and Customer Service (U.S.A. only)

Hach Technical and Customer Service Department personnel are eager to answer questions about our products and their use. Specialists in analytical methods, they are happy to put their talents to work for you.

Call 1-800-227-4224 or e-mail techhelp@hach.com

Section 10 Repair Service

Authorization must be obtained from Hach Company before sending any items for repair. Please contact the Hach Service Center serving your location.

In the United States:
Hach Company
Ames Service
100 Dayton Avenue
Ames, Iowa 50010
(800) 227-4224 (U.S.A. only)
FAX: (515) 232-3835

In Canada:
Hach Sales & Service Canada Ltd.
1313 Border Street, Unit 34
Winnipeg, Manitoba
R3H 0X4
(800) 665-7635 (Canada only)
Telephone: (204) 632-5598
FAX: (204) 694-5134
E-mail: canada@hach.com

In Latin America, the Caribbean, the Far East, the
Indian Subcontinent, Africa, Europe, or the Middle East:
Hach Company World Headquarters,
P.O. Box 389
Loveland, Colorado, 80539-0389 U.S.A.
Telephone: (970) 669-3050
FAX: (970) 669-2932
E-mail: intl@hach.com

Section 11 Limited Warranty

Hach Company warrants its products to the original purchaser against any defects that are due to faulty material or workmanship for a period of one year from date of shipment unless otherwise noted.

In the event that a defect is discovered during the warranty period, Hach Company agrees that, at its option, it will repair or replace the defective product or refund the purchase price, subject to the pro-rated schedule above, excluding original shipping and handling charges. Any product repaired or replaced under this warranty will be warranted only for the remainder of the original product warranty period.

This warranty does not apply to consumable products such as chemical reagents; or consumable components of a product, such as, but not limited to, lamps and tubing.

Contact Hach Company or your distributor to initiate warranty support. Products may not be returned without authorization from Hach Company.

Limitations

This warranty does not cover:

- **Damage caused by acts of God, natural disaster, labor unrest, acts of war (declared or undeclared), terrorism, civil strife or acts of any governmental jurisdiction**
- **Damage caused by misuse, neglect, accident or improper application or installation**
- **Damage caused by any repair or attempted repair not authorized by Hach Company**
- **Any product not used in accordance with the instructions furnished by Hach Company**
- **Freight charges to return merchandise to Hach Company**
- **Freight charges on expedited or express shipment of warranted parts or product**
- **Travel fees associated with on-site warranty repair**

This warranty contains the sole express warranty made by Hach Company in connection with its products. All implied warranties, including without limitation, the warranties of merchantability and fitness for a particular purpose, are expressly disclaimed.

Some states within the United States do not allow the disclaimer of implied warranties and if this is true in your state the above limitation may not apply to you. This warranty gives you specific rights, and you may also have other rights that vary from state to state.

This warranty constitutes the final, complete, and exclusive statement of warranty terms and no person is authorized to make any other warranties or representations on behalf of Hach Company.

Limitation of Remedies

The remedies of repair, replacement or refund of purchase price as stated above are the exclusive remedies for the breach of this warranty. On the basis of strict liability or under any other legal theory, in no event shall Hach Company be liable for any incidental or consequential damages of any kind for breach of warranty or negligence.

Section 10 Compliance Information

Hach Co. certifies this instrument was tested thoroughly, inspected and found to meet its published specifications when it was shipped from the factory.

The **Model sc100 with 1720E Sensor** has been tested and is certified as indicated to the following instrumentation standards:

Product Safety

UL 61010A-1 (ETL Listing # 65454)
CSA C22.2 No. 1010.1 (ETLc Certification # 65454)
Certified by Hach Co. to EN 61010-1 Amds. 1 & 2 (IEC1010-1) per 73/23/EEC, supporting test records by Intertek Testing Services.

Immunity

This equipment was tested for Industrial level EMC per:

EN 61326 (EMC Requirements for Electrical Equipment for Measurement, Control and Laboratory Use) **per 89/336/EEC EMC:** Supporting test records by Hach Company, certified compliance by Hach Company.

Standards include:

IEC 1000-4-2:1995 (EN 61000-4-2:1995) Electro-Static Discharge Immunity (Criteria B)
IEC 1000-4-3:1995 (EN 61000-4-3:1996) Radiated RF Electro-Magnetic Field Immunity (Criteria A)
IEC 1000-4-4:1995 (EN 61000-4-4:1995) Electrical Fast Transients/Burst (Criteria B)
IEC 1000-4-5:1995 (EN 61000-4-5:1995) Surge (Criteria B)
IEC 1000-4-6:1996 (EN 61000-4-6:1996) Conducted Disturbances Induced by RF Fields (Criteria A)
IEC 1000-4-11:1994 (EN 61000-4-11:1994) Voltage Dip/Short Interruptions (Criteria B)

Additional immunity Standard/s include:

ENV 50204:1996 Radiated Electro-Magnetic Field from Digital Telephones (Criteria A)

Emissions

This equipment was tested for Radio Frequency Emissions as follows:

Per **89/336/EEC** EMC: **EN 61326:1998** (Electrical Equipment for measurement, control and laboratory use—EMC requirements) Class “A” emission limits. Supporting test records by Hewlett Packard, Fort Collins, Colorado Hardware Test Center (A2LA # 0905-01) and certified compliance by Hach Company.

Standards include:

EN 61000-3-2 Harmonic Disturbances Caused by Electrical Equipment
EN 61000-3-3 Voltage Fluctuation (Flicker) Disturbances Caused by Electrical Equipment

Additional Emissions Standard/s include:

EN 55011 (CISPR 11) Class “A” emission limits

Canadian Interference-causing Equipment Regulation, IECS-003, Class A

Supporting test records by Hewlett Packard, Fort Collins, Colorado Hardware Test Center (A2LA # 0905-01) and certified compliance by Hach Company.

This Class A digital apparatus meets all requirements of the Canadian Interference- Causing Equipment Regulations.

Cet appareil numÈrique de la classe A respecte toutes les exigences du RËglement sur le matÈriel brouilleur du Canada.

FCC PART 15, Class “A” Limits

Supporting test records by Hewlett Packard, Fort Collins, Colorado Hardware Test Center (A2LA # 0905-01) and certified compliance by Hach Company.

This device complies with Part 15 of the FCC Rules. Operation is subject to the following two conditions:

(1) this device may not cause harmful interference, and (2) this device must accept any interference received, including interference that may cause undesired operation.

Changes or modifications to this unit not expressly approved by the party responsible for compliance could void the user's authority to operate the equipment.

This equipment has been tested and found to comply with the limits for a Class A digital device, pursuant to Part 15 of the FCC Rules. These limits are designed to provide reasonable protection against harmful interference when the equipment is operated in a commercial environment. This equipment generates, uses, and can radiate radio frequency energy and, if not installed and used in accordance with the instruction manual, may cause harmful interference to radio communications. Operation of this equipment in a residential area is likely to cause harmful interference, in which case the user will be required to correct the interference at his own expense. The following techniques of reducing the interference problems are applied easily.

1. Disconnect the Model sc100 Controller from its power source to verify that it is or is not the source of the interference.

2. If the Model sc100 Controller is connected into the same outlet as the device with which it is interfering, try another outlet.

3. Move the Model sc100 Controller and 1720E sensor away from the device receiving the interference.

4. Reposition the device receiving the interference.

5. Try combinations of the above.

Appendix A ModBUS Register Information

Table 14 Controller ModBUS Registers

Group Name	Tag Name	Register #	Data Type	Length	R/W	Description
Measurements	Calculated Value	40001	Float	2	R	Value calculated from two sensor measurements
Setup	Language	40003	Unsigned Integer	1	R/W	Current System Language
Setup	Date Format	40004	Unsigned Integer	1	R/W	Current Data Display Format (0 = DD/MM/YY; 1 = MM/DD/YY; 2 = DD-MM-YY; 3 = MM-DD-YY)
Setup	Error Hold Mode	40005	Unsigned Integer	1	R/W	Error Mode Hold State (0 = Hold outputs; 1 = Transfer outputs to predefined value)
Setup/Analog Output 1	Source	40006	Unsigned Integer	1	R/W	Selects data source for this output (0 = None; 2 = sensor; 4 = Calculation)
Setup/Analog Output 1	Sensor Select	40007	Unsigned Integer	1	R/W	Selects sensor source when Source = Sensor (0 = sensor1; 1 = sensor2)
Setup/Analog Output 1	Measurement Select	40008	Unsigned Integer	1	R/W	Selects measurement on the sensor (0 = Meas1.. 3 = Meas4)
Setup/Analog Output 1	Type	40009	Unsigned Integer	1	R/W	Selects output type (0 = Linear output; 1 = PID control)
Setup/Analog Output 1	Transfer Value	40010	Float	2	R/W	Sets the transfer value
Setup/Analog Output 1	Filter	40012	Unsigned Integer	1	R/W	Sets the output filter value in seconds (0 to 120 sec.)
Setup/Analog Output 1	0mA - 4mA Select	40013	Unsigned Integer	1	R/W	Selects 0mA/4mA for min output (0 = 0mA; 1 = 4mA)
Setup/Analog Output 1/Linear	Min Setting	40014	Float	2	R/W	Sets the min output value
Setup/Analog Output 1/Linear	Max Setting	40016	Float	2	R/W	Sets the max output value
Setup/Analog Output 1/PID	PID Mode	40018	Unsigned Integer	1	R/W	Sets the PID mode (0 = auto; 1 = manual)
Setup/Analog Output 1/PID	PID Manual Set	40019	Float	2	R/W	Sets the PID manual output value (0.0 to 100.0%)
Setup/Analog Output 1/PID	PID Setpoint	40021	Float	2	R/W	Sets the PID setpoint
Setup/Analog Output 1/PID	PID Phase	40023	Unsigned Integer	1	R/W	Sets the PID phase (0 = Direct; 1 = Reverse)
Setup/Analog Output 1/PID	PID Proportional Band	40024	Float	2	R/W	Sets the PID proportional band
Setup/Analog Output 1/PID	PID Integral Time	40026	Unsigned Integer	1	R/W	Sets the PID integral time (min)
Setup/Analog Output 1/PID	PID Derivative Time	40027	Unsigned Integer	1	R/W	Sets the PID derivative time (min)
Setup/Analog Output 2	Source	40028	Unsigned Integer	1	R/W	Selects data source for this output (0 = None; 2 = Sensor; 4 = Calculation)
Setup/Analog Output 2	Sensor Select	40029	Unsigned Integer	1	R/W	Selects sensor source when Source = Sensor (0 = Sensor1; 1 = Sensor2)
Setup/Analog Output 2	Measurement Select	40030	Unsigned Integer	1	R/W	Selects measurement on the Sensor (0 = Meas1 .. 3 = Meas4)

Table 14 Controller ModBUS Registers (continued)

Group Name	Tag Name	Register #	Data Type	Length	R/W	Description
Setup/Analog Output 2	Type	40031	Unsigned Integer	1	R/W	Selects output type (0 = Linear output; 1 = PID control)
Setup/Analog Output 2	Transfer Value	40032	Float	2	R/W	Sets the transfer value
Setup/Analog Output 2	Filter	40034	Unsigned Integer	1	R/W	Sets the output filter value in seconds (0 to 120 sec)
Setup/Analog Output 2	0mA - 4mA Select	40035	Unsigned Integer	1	R/W	Selects 0mA/4mA for min output (0 = 0mA; 1 = 4mA)
Setup/Analog Output 2/Linear	Min Setting	40036	Float	2	R/W	Sets the min output value
Setup/Analog Output 2/Linear	Max Setting	40038	Float	2	R/W	Sets the max output value
Setup/Analog Output 2/PID	Mode	40040	Unsigned Integer	1	R/W	Sets the PID mode (0 = auto; 1 = manual)
Setup/Analog Output 2/PID	Manual Set	40041	Float	2	R/W	Sets the PID manual output value (0.0 to 100.0%)
Setup/Analog Output 2/PID	Setpoint	40043	Float	2	R/W	Sets the PID setpoint
Setup/Analog Output 2/PID	Phase	40045	Unsigned Integer	1	R/W	Sets the PID phase (0 = Direct; 1 = Reverse)
Setup/Analog Output 2/PID	Proportional Band	40046	Float	2	R/W	Sets the PID proportional band
Setup/Analog Output 2/PID	Integral Time	40048	Unsigned Integer	1	R/W	Sets the PID integral time (min)
Setup/Analog Output 2/PID	Derivative Time	40049	Unsigned Integer	1	R/W	Sets the PID derivative time (min)
Setup/Relay 1	Source	40050	Unsigned Integer	1	R/W	Selects data source for this relay (0 = None; 1 = Real Time Clock; 2 = Sensor; 4 = Calculation)
Setup/Relay 1	Sensor Select	40051	Unsigned Integer	1	R/W	Selects Sensor source when Source = Sensor (0 = Sensor1; 1 = Sensor2)
Setup/Relay 1	Measurement Select	40052	Unsigned Integer	1	R/W	Selects measurement on the Sensor (0 = Meas1 .. 3 = Meas4)
Setup/Relay 1	Type	40053	Unsigned Integer	1	R/W	Selects the relay type (0 = Alarm; 1 = Control; 2 = Status; 3 = Timer; 4 = Event)
Setup/Relay 1	Transfer Setting	40054	Unsigned Integer	1	R/W	Selects the transfer value for the relays (0 = De-energized; 1 = Energized)
Setup/Relay 1/Alarm	High Alarm	40055	Float	2	R/W	Sets the high alarm setpoint
Setup/Relay 1/Alarm	Low Alarm	40057	Float	2	R/W	Sets the low alarm setpoint
Setup/Relay 1/Alarm	High Deadband	40059	Float	2	R/W	Sets the high alarm deadband
Setup/Relay 1/Alarm	Low Deadband	40061	Float	2	R/W	Sets the low alarm deadband
Setup/Relay 1/Alarm	On Delay	40063	Unsigned Integer	1	R/W	Sets the on delay time
Setup/Relay 1/Alarm	Off Delay	40064	Unsigned Integer	1	R/W	Sets the off delay time
Setup/Relay 1/Control	Setpoint	40065	Float	2	R/W	Sets the controller setpoint

Table 14 Controller ModBUS Registers (continued)

Group Name	Tag Name	Register #	Data Type	Length	R/W	Description
Setup/Relay 1/Control	Phase	40067	Unsigned Integer	1	R/W	Sets the controller phase (0 = Low; 1 = High)
Setup/Relay 1/Control	Deadband	40068	Float	2	R/W	Sets the controller deadband
Setup/Relay 1/Control	Overfeed Timer	40070	Unsigned Integer	1	R/W	Sets the overfeed timer value (mins)
Setup/Relay 1/Control	On Delay	40071	Unsigned Integer	1	R/W	Sets the on delay time (sec)
Setup/Relay 1/Control	Off Delay	40072	Unsigned Integer	1	R/W	Sets the off delay time (sec)
Setup/Relay 1/Control	Reset Overfeed Timer	40073	Unsigned Integer	1	R/W	Resets the overfeed timer
Setup/Relay 1/Event	Setpoint	40074	Float	2	R/W	Sets the event setpoint
Setup/Relay 1/Event	Phase	40076	Unsigned Integer	1	R/W	Sets the event phase (0 = Low; 1 = High)
Setup/Relay 1/Event	Deadband	40077	Float	2	R/W	Sets the event deadband
Setup/Relay 1/Event	On Max Time	40079	Unsigned Integer	1	R/W	Sets the max on time (mins)
Setup/Relay 1/Event	On Min Time	40080	Unsigned Integer	1	R/W	Sets the min on time (mins)
Setup/Relay 1/Event	Off Max Time	40081	Unsigned Integer	1	R/W	Sets the max off time (mins)
Setup/Relay 1/Event	Off Min Time	40082	Unsigned Integer	1	R/W	Sets the min off time (mins)
Setup/Relay 1/Timer	Hold Type	40083	Unsigned Integer	1	R/W	Sets which Sensor outputs are affected during timer on time (0 = None; 2 = Selected Sensor; 13 = All Sensors)
Setup/Relay 1/Timer	Sensor Select	40084	Unsigned Integer	1	R/W	Selects which Sensor outputs are being held/transferred during the timers on time (this is used when Hold type is set for single Sensor)
Setup/Relay 1/Timer	Hold Mode	40085	Unsigned Integer	1	R/W	Selects hold outputs vs. set transfer value during timers on time
Setup/Relay 1/Timer	Duration Time	40086	Unsigned Integer	1	R/W	Sets the timer on duration time (sec)
Setup/Relay 1/Timer	Period Time	40087	Unsigned Integer	1	R/W	Sets the period between timer on events (mins)
Setup/Relay 1/Timer	Off Delay	40088	Unsigned Integer	1	R/W	Sets the time the affected Sensor outputs are held/transferred after the timer turns off (sec)
Setup/Relay 1/Status	Level	40089	Unsigned Integer	1	R/W	Sets the status level which will trigger the relay
Setup/Relay 2	Source	40090	Unsigned Integer	1	R/W	Selects data source for this relay (0 = None; 1 = Real Time Clock; 2 = Sensor; 4 = Calculation)
Setup/Relay 2	Sensor Select	40091	Unsigned Integer	1	R/W	Selects Sensor source when Source = Sensor (0 = Sensor1; 1 = Sensor2)
Setup/Relay 2	Measurement Select	40092	Unsigned Integer	1	R/W	Selects measurement on the Sensor (0 = Meas1 .. 3 = Meas4)

Table 14 Controller ModBUS Registers (continued)

Group Name	Tag Name	Register #	Data Type	Length	R/W	Description
Setup/Relay 2	Type	40093	Unsigned Integer	1	R/W	Selects the relay type (0 = Alarm; 1 = Control; 2 = Status; 3 = Timer; 4 = Event)
Setup/Relay 2	Transfer Setting	40094	Unsigned Integer	1	R/W	Selects the transfer value for the relays (0 = De-energized; 1 = Energized)
Setup/Relay 2/Alarm	High Alarm	40095	Float	2	R/W	Sets the high alarm setpoint
Setup/Relay 2/Alarm	Low Alarm	40097	Float	2	R/W	Sets the low alarm setpoint
Setup/Relay 2/Alarm	High Deadband	40099	Float	2	R/W	Sets the high alarm deadband
Setup/Relay 2/Alarm	Low Deadband	40101	Float	2	R/W	Sets the low alarm deadband
Setup/Relay 2/Alarm	On Delay	40103	Unsigned Integer	1	R/W	Sets the on delay time
Setup/Relay 2/Alarm	Off Delay	40104	Unsigned Integer	1	R/W	Sets the off delay time
Setup/Relay 2/Control	Setpoint	40105	Float	2	R/W	Sets the controller setpoint
Setup/Relay 2/Control	Phase	40107	Unsigned Integer	1	R/W	Sets the controller phase (0 = Low; 1 = High)
Setup/Relay 2/Control	Deadband	40108	Float	2	R/W	Sets the controller deadband
Setup/Relay 2/Control	Overfeed Timer	40110	Unsigned Integer	1	R/W	Sets the overfeed timer value (mins)
Setup/Relay 2/Control	On Delay	40111	Unsigned Integer	1	R/W	Sets the on delay time (sec)
Setup/Relay 2/Control	Off Delay	40112	Unsigned Integer	1	R/W	Sets the off delay time (sec)
Setup/Relay 2/Control	Reset Overfeed Timer	40113	Unsigned Integer	1	R/W	Resets the overfeed timer
Setup/Relay 2/Event	Setpoint	40114	Float	2	R/W	Sets the event setpoint
Setup/Relay 2/Event	Phase	40116	Unsigned Integer	1	R/W	Sets the event phase (0 = Low; 1 = High)
Setup/Relay 2/Event	Deadband	40117	Float	2	R/W	Sets the event deadband
Setup/Relay 2/Event	On Max Time	40119	Unsigned Integer	1	R/W	Sets the max on time (mins)
Setup/Relay 2/Event	On Min Time	40120	Unsigned Integer	1	R/W	Sets the min on time (mins)
Setup/Relay 2/Event	Off Max Time	40121	Unsigned Integer	1	R/W	Sets the max off time (mins)
Setup/Relay 2/Event	Off Min Time	40122	Unsigned Integer	1	R/W	Sets the min off time (mins)
Setup/Relay 2/Timer	Hold Type	40123	Unsigned Integer	1	R/W	Sets which Sensor outputs are affected during timer on time (0 = None; 2 = Selected Sensor; 13 = All Sensors)
Setup/Relay 2/Timer	Sensor Select	40124	Unsigned Integer	1	R/W	Selects which Sensor outputs are being held/transferred during the timers on time (this is used when Hold type is set for single Sensor)
Setup/Relay 2/Timer	Hold Mode	40125	Unsigned Integer	1	R/W	Selects hold outputs vs. set transfer value during timers on time

Table 14 Controller ModBUS Registers (continued)

Group Name	Tag Name	Register #	Data Type	Length	R/W	Description
Setup/Relay 2/Timer	Duration Time	40126	Unsigned Integer	1	R/W	Sets the timer on duration time (sec)
Setup/Relay 2/Timer	Period Time	40127	Unsigned Integer	1	R/W	Sets the period between timer on events (mins)
Setup/Relay 2/Timer	Off Delay	40128	Unsigned Integer	1	R/W	Sets the time the affected Sensor outputs are held/transferred after the timer turns off (sec)
Setup/Relay 2/Status	Level	40129	Unsigned Integer	1	R/W	Sets the status level which will trigger the relay
Setup/Relay 3	Source	40130	Unsigned Integer	1	R/W	Selects data source for this relay (0 = None; 1 = Real Time Clock; 2 = Sensor; 4 = Calculation)
Setup/Relay 3	Sensor Select	40131	Unsigned Integer	1	R/W	Selects Sensor source when Source = Sensor (0 = Sensor1; 1 = Sensor2)
Setup/Relay 3	Measurement Select	40132	Unsigned Integer	1	R/W	Selects measurement on the Sensor (0 = Meas1 .. 3 = Meas4)
Setup/Relay 3	Type	40133	Unsigned Integer	1	R/W	Selects the relay type (0 = Alarm; 1 = Control; 2 = Status; 3 = Timer; 4 = Event)
Setup/Relay 3	Transfer Setting	40134	Unsigned Integer	1	R/W	Selects the transfer value for the relays (0 = De-energized; 1 = Energized)
Setup/Relay 3/Alarm	High Alarm	40135	Float	2	R/W	Sets the high alarm setpoint
Setup/Relay 3/Alarm	Low Alarm	40137	Float	2	R/W	Sets the low alarm setpoint
Setup/Relay 3/Alarm	High Deadband	40139	Float	2	R/W	Sets the high alarm deadband
Setup/Relay 3/Alarm	Low Deadband	40141	Float	2	R/W	Sets the low alarm deadband
Setup/Relay 3/Alarm	On Delay	40143	Unsigned Integer	1	R/W	Sets the on delay time
Setup/Relay 3/Alarm	Off Delay	40144	Unsigned Integer	1	R/W	Sets the off delay time
Setup/Relay 3/Control	Setpoint	40145	Float	2	R/W	Sets the controller setpoint
Setup/Relay 3/Control	Phase	40147	Unsigned Integer	1	R/W	Sets the controller phase (0 = Low; 1 = High)
Setup/Relay 3/Control	Deadband	40148	Float	2	R/W	Sets the controller deadband
Setup/Relay 3/Control	Overfeed Timer	40150	Unsigned Integer	1	R/W	Sets the overfeed timer value (mins)
Setup/Relay 3/Control	On Delay	40151	Unsigned Integer	1	R/W	Sets the on delay time (sec)
Setup/Relay 3/Control	Off Delay	40152	Unsigned Integer	1	R/W	Sets the off delay time (sec)
Setup/Relay 3/Control	Reset Overfeed Timer	40153	Unsigned Integer	1	R/W	Resets the overfeed timer
Setup/Relay 3/Event	Setpoint	40154	Float	2	R/W	Sets the event setpoint
Setup/Relay 3/Event	Phase	40156	Unsigned Integer	1	R/W	Sets the event phase (0 = Low; 1 = High)
Setup/Relay 3/Event	Deadband	40157	Float	2	R/W	Sets the event deadband
Setup/Relay 3/Event	On Max Time	40159	Unsigned Integer	1	R/W	Sets the max on time (mins)

Table 14 Controller ModBUS Registers (continued)

Group Name	Tag Name	Register #	Data Type	Length	R/W	Description
Setup/Relay 3/Event	On Min Time	40160	Unsigned Integer	1	R/W	Sets the min on time (mins)
Setup/Relay 3/Event	Off Max Time	40161	Unsigned Integer	1	R/W	Sets the max off time (mins)
Setup/Relay 3/Event	Off Min Time	40162	Unsigned Integer	1	R/W	Sets the min off time (mins)
Setup/Relay 3/Timer	Hold Type	40163	Unsigned Integer	1	R/W	Sets which Sensor outputs are affected during timer on time (0 = None; 2 = Selected Sensor; 13 = All Sensors)
Setup/Relay 3/Timer	Sensor Select	40164	Unsigned Integer	1	R/W	Selects which Sensor outputs are being held/transferred during the timers on time (this is used when Hold type is set for single Sensor)
Setup/Relay 3/Timer	Hold Mode	40165	Unsigned Integer	1	R/W	Selects hold outputs vs. set transfer value during timers on time
Setup/Relay 3/Timer	Duration Time	40166	Unsigned Integer	1	R/W	Sets the timer on duration time (sec)
Setup/Relay 3/Timer	Period Time	40167	Unsigned Integer	1	R/W	Sets the period between timer on events (mins)
Setup/Relay 3/Timer	Off Delay	40168	Unsigned Integer	1	R/W	Sets the time the affected Sensor outputs are held/transferred after the timer turns off (sec)
Setup/Relay 3/Status	Level	40169	Unsigned Integer	1	R/W	Sets the status level which will trigger the relay
Comm/Net Card	Mode	40170	Unsigned Integer	1	R/W	Sets the Modbus mode (0 = RTU; 1 = ASCII)
Comm/Net Card	Baud	40171	Unsigned Integer	1	R/W	Sets the Modbus baud rate (0 = 9600; 1 = 19200; 2 = 38400; 3 = 57600; 4 = 115200)
Comm/Net Card	Stop Bits	40172	Unsigned Integer	1	R/W	Sets the number of stop bits (1,2)
Comm/Net Card	Data Order	40173	Unsigned Integer	1	R/W	Sets the register data order for floats (0 = Normal; 1 = Reversed)
Comm/Net Card	Min Response Time	40174	Unsigned Integer	1	R/W	Sets the minimum response time (0 to 30 sec)
Comm/Net Card	Max Response Time	40175	Unsigned Integer	1	R/W	Sets the maximum response time (100 to 1000 sec)
Comm/Net Card/Addresses	sc100	40176	Unsigned Integer	1	R/W	Sets the sc100 Modbus Address
Comm/Net Card/Addresses	Sensor 1	40177	Unsigned Integer	1	R/W	Sets the Sensor 1 Modbus Address
Comm/Net Card/Addresses	Sensor 2	40178	Unsigned Integer	1	R/W	Sets the Sensor 2 Modbus Address
Comm/Net Card/Stats	Good Messages	40179	Unsigned Integer	2	R/W	Number of good messages
Comm/Net Card/Stats	Bad Messages	40181	Unsigned Integer	2	R/W	Number of failed messages
Comm/Net Card/Stats	% Good Mesg	40183	Float	2	R/W	% of good messages

Table 14 Controller ModBUS Registers (continued)

Group Name	Tag Name	Register #	Data Type	Length	R/W	Description
Comm/Service Port	Mode	40185	Unsigned Integer	1	R/W	Sets the Modbus mode (0 = RTU; 1 = ASCII)
Comm/Service Port	Baud	40186	Unsigned Integer	1	R/W	Sets the Modbus baud rate (0 = 9600; 1 = 19200; 2 = 38400; 3 = 57600; 4 = 115200)
Comm/Service Port	Stop Bits	40187	Unsigned Integer	1	R/W	Sets the number of stop bits (1,2)
Comm/Service Port	Data Order	40188	Unsigned Integer	1	R/W	Sets the register data order for floats (0 = Normal; 1 = Reversed)
Comm/Service Port	Min Response Time	40189	Unsigned Integer	1	R/W	Sets the minimum response time (0 to 30 sec)
Comm/Service Port	Max Response Time	40190	Unsigned Integer	1	R/W	Sets the maximum response time (100 to 1000 sec)
Comm/Service Port/Addresses	sc100	40191	Unsigned Integer	1	R/W	Sets the sc100 Modbus Address
Comm/Service Port/Addresses	Sensor 1	40192	Unsigned Integer	1	R/W	Sets the Sensor 1 Modbus Address
Comm/Service Port/Addresses	Sensor 2	40193	Unsigned Integer	1	R/W	Sets the Sensor 2 Modbus Address
Comm/Service Port/Stats	Good Messages	40194	Unsigned Integer	2	R/W	Number of good messages
Comm/Service Port/Stats	Bad Messages	40196	Unsigned Integer	2	R/W	Number of failed messages
Comm/Service Port/Stats	% Good Mesg	40198	Float	2	R/W	% of good messages
Comm/Sensor/ Sensor1 Stats	Good Messages	40200	Unsigned Integer	2	R/W	Number of good messages
Comm/Sensor/ Sensor1 Stats	Bad Messages	40202	Unsigned Integer	2	R/W	Number of failed messages
Comm/Sensor/ Sensor1 Stats	% Good Mesg	40204	Float	2	R/W	% of good messages
Comm/Sensor/ Sensor2 Stats	Good Messages	40206	Unsigned Integer	2	R/W	Number of good messages
Comm/Sensor/ Sensor2 Stats	Bad Messages	40208	Unsigned Integer	2	R/W	Number of failed messages
Comm/Sensor/ Sensor2 Stats	% Good Mesg	40210	Float	2	R/W	% of good messages
Calibration	Output1 4mA count	40212	Unsigned Integer	1	R/W	Calibration counts for the 4mA output 1
Calibration	Output1 20mA count	40213	Unsigned Integer	1	R/W	Calibration counts for the 20mA output 1
Calibration	Output2 4mA count	40214	Unsigned Integer	1	R/W	Calibration counts for the 4mA output 2
Calibration	Output2 20mA count	40215	Unsigned Integer	1	R/W	Calibration counts for the 20mA output 2

Table 15 Sensor ModBUS Registers

Group Name	Tag Name	Register #	Data Type	Length	R/W	Units (U)	Range
Measurements	Cal Gain	40013	float	2	R	none	0.5 to 2.0
Verification	PF Criteria	40062	Integer	1	R/W	—	—
Measurements	Turbidity	40001	Float	2	R	NTU	0/100
Diagnostics	Temperature	40005	Float	2	R	Deg C	—
Diagnostics	Dark Reading	40009	Float	2	R	NTU	0/100
Diagnostics	Raw Turbidity	40011	Float	2	R	NTU	—
Diagnostics	Lamp Voltage	40018	Float	2	R	Volts	—
Diagnostics	Lamp Current	40020	Float	2	R	Amps	—
Diagnostics	Plus 5V	40022	Float	2	R	Volts	—
Diagnostics	Voltage In	40024	Float	2	R	Volts	—
Setup	Software Version	40015	Float	2	R	—	—
Setup	Bubble Rej	40017	Integer	1	R/W	—	On/Off
Setup	DataLog Interval	40026	Integer	1	R/W	Sec or Min	30 sec, 1 min, 5 min, 10 min, 15 min
Setup	Sensor Name	40027	String	6	R/W	—	—
Setup	Filter Size	40033	Integer	1	R/W	sec	no averaging, 6, 30, 60, 90
Setup	Sensor Ser Num	40036	String	6	R/W	—	12 digits
Setup	Output Mode	40042	Integer	1	R/W	—	—
Setup	Set Resolution	40061	Integer	1	R/W	decimal places	4, 3, or 2

Index

Numerics
90 Degree Detector 7

A
Accuracy 4
Alarms 18
Analog Outputs 18

B
Bubble trap 7
bubble trap 7

C
Calibration 40
  History 46
  StablCal 42
  User-prepared 41
Calibration Methods 5
Cleaning 48
Components
  Customer Supplied 8
  System 8
Controller Dimensions 9

D
Data Logging 36
Date
  Setting 30
Digital Output 21
Dimensions
  Conduit Hole 10
Display 27
  Contrast 28

E
Electrical Installation 14
  Conduit 14
  Connecting/Wiring the Sensor Cable 19
  Hard-wiring the Sensor 19
  Power Cord 14
Enclosure, Controller 6
Event Codes 54
Event Logging 36

F
Flow Rate 25
Fuse
  Rating 51
  Replacement 51

H
Head Assembly 24

I
Installation 8
  Controller 12
  Panel 10
  Panel Mounting 13
  Pipe Mounting 12
  Wall Mounting 12

K
Key
  Functions 26

L
Language
  Displayed 29

M
Maintenance
  Cleaning 48
  Fuse Replacement 51
  Schedule 47
ModBUS RS232 21
Mounting 24

O
Output
  Connections 19
  Setup 32, 37
Outputs 5
  Hold/Transfer 33
  Release 33

P
Photocell Window 48
Power Requirements 4

R
Range 4
Relay
  Setup 34, 38
  Setup Menu 34
Relays 18
  Connecting 18
  Specifications 5
Response Time 4

S
Safety Information 6
Sample
  Connections 25
  Flow 4, 40

Sample Line Installation 24
Security
    Passcode 31
    Setup 31, 38
    System 31
Sensor
    Setup 37
Starting Sample Flow 40
Sun Shield 11
System
    Setup 37
System Power 40
System Startup 40

T

Test/Maintenance Menu 38
Theory of Operation 7
Time
    Setting 29
Turbidimeter Body 48

V

Verification 40

W

Warnings
    Sensor 53
Wire preparation 15

ROTAMETER

LEFT BLANK

PDF Published June 11, 2008

Variable Area Flow Meters

Chemline F Series Variable Area Flow Meters are ideal for plastic piping. They provide a combination of accurate visual flow rate measurement and clear flow indication from a distance. Optional limit switches allow the units to signal a low or high flow alarm. An optional flow transmitter provides a 4 to 20 mA signal output. These flow meters must be installed vertically with flow upward.

Low Cost Visual Indication

For Water, Chemicals or Gas

CHEMLINE Plastics Limited

Your Pipeline To Quality

SERIES: FC – Compact – 5" Single Scale
FS – Full Size – 7" Dual Scale[1]

MATERIALS:

Tube: Clear PVC, Polyamide (PA), Polysulfone (PSU), or PVDF[2]

Float: PVDF

Ends: PVC, CPVC, PP, PVDF Socket, Threaded, Flanged, Butt or ChemFlare™[3]

O-Rings: EPDM, FPM (Viton®)

CAPACITIES: Up to 220 USGPM (50,000 litres per hour)

CRN REGISTERED
CONSULT CHEMLINE

Features

- **Clear Visual Indication**
  – Large orange float is visible from a distance
  – Range indicators slide along dovetail track
- **Easy Installation and Maintenance**
  Just unscrew union nuts and tube slides out of line
- **Choice of Four Tube Materials for Many Applications:**
  Clear PVC – For Water or Chemicals up to 60°C (140°F) – High Chemical resistance at low cost.
  Polyamide (PA) – For Water or Air up to 75°C (167°F) – High impact strength and optical clarity.
  Polysulfone (PSU) – For Chemicals and Gases up to 100°C (212°F) – High impact strength and good chemical resistance.
  PVDF [2] – For Chemicals and Ultrapure fluids up to 110°C (230°F) – High impact strength and excellent chemical resistance.
- **Ideal for All Types of Plastic Piping**
  All types of end connections in PVC, CPVC, PP & PVDF
- **Low Pressure Drop**
- **Good Measuring Accuracy – Class IV**
  ± 3% of indicated value, plus ± 1% of full scale.
  – Read scale at top (largest diameter) of float
- **Non Fouling** – Float is self supporting in the flow. No guide rod (which can cause the float to jam) is necessary.



Standard Full Size

Compact

[1] USGPM and litres per hour (water) scale is supplied as standard on full size meters.
[2] Because PVDF is translucent, a magnetic float and limit switches are usually used.
[3] For ChemFlare™ end connectors, consult Chemline.

06/08 ©Chemline Plastics Limited 2008
Chemline is a registered trade mark of Chemline Plastics Limited

Variable Area Flow Meters

NOTES:

PVDF flow meters are available in all sizes. Change third letter in item number to **K**.
[1] ΔP = Pressure loss through flow meter with water at 20°C (68°F).
[2] Dimension **L** is for PVC Socket ends.

FC SERIES – COMPACT SIZE – 5" SCALE

Single USGPM (water) scale is supplied standard.

End Conn. Size	Item Number			Flow Range (water)		Dimensions (inches)			Pressure Drop (psi)[1]	
	PVC Tube	Polyamide Tube	Polysulfone Tube	USGPM	Litres per hour	A	L[2]	D	Water	Air
3/8"	FCA00020	FCT00020	FCP00020	0.0132 – 0.106	3 – 24	6.50	8.2	1.38	0.05	0.07
	FCA00060	FCT00060	FCP00060	0.022 – 0.264	5 – 60	6.50	8.2	1.38	0.05	0.07
	FCA00100	FCT00100	FCP00100	0.04 – 0.44	10 – 100	6.50	8.2	1.38	0.05	0.07
	FCA00250	FCT00250	FCP00250	0.11 – 1.10	25 – 250	6.50	8.2	1.38	0.05	0.07
1/2"	FCA00051	FCT00051	FCP00051	0.02 – 0.22	5 – 50	6.69	8.7	1.69	0.04	0.06
	FCA00151	FCT00151	FCP00151	0.07 – 0.66	15 – 150	6.69	8.7	1.69	0.04	0.06
	FCA00251	FCT00251	FCP00251	0.11 – 1.10	25 – 250	6.69	8.7	1.69	0.04	0.06
	FCA00401	FCT00401	FCP00401	0.18 – 1.76	40 – 400	6.69	8.7	1.69	0.04	0.06
3/4"	FCA00152	FCT00152	FCP00152	0.07 – 0.66	15 – 150	7.28	9.6	2.09	0.09	0.12
	FCA00402	FCT00402	FCP00402	0.22 – 1.76	40 – 400	7.28	9.6	2.09	0.09	0.12
	FCA00602	FCT00602	FCP00602	0.26 – 2.64	60 – 600	7.28	9.6	2.09	0.09	0.12
	FCA01002	FCT01002	FCP01002	0.44 – 4.40	100 – 1,000	7.28	9.6	2.09	0.09	0.12
1"	FCA00253	FCT00253	FCP00253	0.11 – 1.10	25 – 250	7.87	10.5	2.36	0.09	0.12
	FCA00403	FCT00403	FCP00403	0.18 – 1.76	40 – 400	7.87	10.5	2.36	0.09	0.12
	FCA01003	FCT01003	FCP01003	0.44 – 4.40	100 – 1,000	7.87	10.5	2.36	0.09	0.12
	FCA01503	FCT01503	FCP01503	0.66 – 6.60	150 – 1,500	7.87	10.5	2.36	0.09	0.12

FS SERIES – STANDARD FULL SIZE – 7" SCALE

Dual USGPM (water) and litres per hour scales are supplied standard.

End Conn. Size	Item Number			Flow Range (water)		Dimensions (inches)			Pressure Drop (psi)[1]	
	PVC Tube	Polyamide Tube	Polysulfone Tube	USGPM	Litres per hour	A	L[2]	D	Water	Air
1"	FSA00150	FST00150	FSP00150	0.07 – 0.66	15 – 150	13.78	16.3	2.36	0.18	0.23
	FSA00300	FST00300	FSP00300	0.13 – 1.32	30 – 300	13.78	16.3	2.36	0.18	0.23
	FSA00600	FST00600	FSP00600	0.26 – 2.64	60 – 600	13.78	16.3	2.36	0.18	0.23
	FSA01000	FST01000	FSP01000	0.44 – 4.40	100 – 1,000	13.78	16.3	2.36	0.18	0.23
1-1/4"	FSA01500	FST01500	FSP01500	0.66 – 6.60	150 – 1,500	13.78	16.6	2.83	0.18	0.23
	FSA02500	FST02500	FSP02500	1.10 – 11.00	250 – 2,500	13.78	16.6	2.83	0.18	0.23
1-1/2"	FSA02000	FST02000	FSP02000	0.88 – 8.80	200 – 2,000	13.78	16.8	3.27	0.18	0.23
	FSA03000	FST03000	FSP03000	1.32 – 13.20	300 – 3,000	13.78	16.8	3.27	0.18	0.23
2"	FSA04000	FST04000	FSP04000	1.76 – 17.60	400 – 4,000	13.78	17.2	4.06	0.32	0.39
	FSA06000	FST06000	FSP06000	2.64 – 26.40	600 – 6,000	13.78	17.2	4.06	0.32	0.39
	FSA10000	FST10000	FSP10000	4.40 – 44.00	1,000 – 10,000	13.78	17.2	4.06	0.32	0.39
2-1/2"	FSA15000	FST15000	FSP15000	6.60 – 66.00	1,500 – 15,000	13.78	17.7	4.80	0.49	0.58
	FSA25000	FST25000	FSP25000	11.00 – 110.00	2,500 – 25,000	13.78	17.7	4.80	0.49	0.58
	FSA50000	FST50000	FSP50000	44.00 – 220.00	10,000 – 50,000	13.78	17.7	4.80	0.49	0.58

CONVERSION CHART – FLOW UNITS

From To	m^3/hr	litres/hr	USGPM	ImpGPM	ft^3/min
m^3/hr	1	1000	4.4029	3.6662	0.5886
litres/hr	0.001	1	.004403	.003666	.000589
USGPM	0.2271	227.12	1	0.8327	0.1337
ImpGPM	0.2728	272.77	1.2009	1	0.1605
ft^3/min	1.6990	1699	7.4806	6.2289	1

†Values based on water at 20°C (68°F).

Variable Area Flow Meters

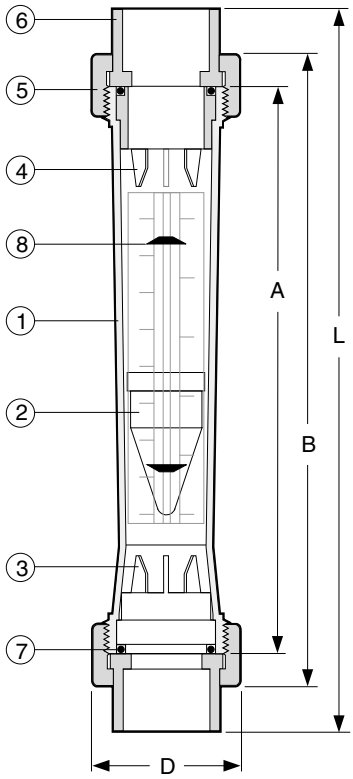

PARTS

▲ Recommended Spare Parts

No.	Part	Pcs.	Materials
1	Tube	1	Polyamide (PA), Polysulfone (PSU), Clear PVC, PVDF
2	Float	1	PVDF (standard or magnetic)
3	Lower Float Stop	1	PVDF
4	Upper Float Stop	1	PVDF
5	Union Nut	2	PVC, PPG, PVDF
6	End Connector	2	PVC, CPVC, PP or PVDF
7▲	O-Rings	2	EPDM, FPM (Viton®)
8▲	Range Indicator	2	ABS

ACCESSORIES

- **Limit Switches** – One switch for both maximum or minimum. A magnetic float is required.
- **Switch Ratings** – P (max) = 10 VA, E (max) = 470VAC, I (max) = 0.5A
- **Throttling Valve** for flow control
- **4–20 mA Output Signal Unit** must be factory calibrated for specific service

OPTIONS

- **Custom Direct Reading Scale** for services other than water
- **Alternate O-Rings** – ie. FPM (Viton®)
- **End Size Reduction** – Accuracy is not significantly affected by end reduction
- **Other Ends** – Threaded, socket or flanged end connections in PVC, CPVC, PP or PVDF. Butt ends in PP or PVDF.

MAXIMUM WORKING PRESSURES AND TEMPERATURE RANGES

Construction (‡ = Optional Materials)				Maximum	
Tube	O-Rings	Union Nuts	Ends	Pressure[2]	Temperature Range
PVC	EPDM	PVC	PVC	150 psi	0 to 60°C (32 to 140°F)
Polyamide (PA)	EPDM	PVC	PVC	150 psi	0 to 60°C (32 to 140°F)
Polyamide (PA)	EPDM	PPG‡	PP or CPVC‡	150 psi	0 to 75°C (32 to 167°F)
Polysulfone (PSU)	EPDM	PVC	PVC	150 psi	0 to 60°C (32 to 140°F)
Polysulfone (PSU)	EPDM	PPG‡	PP or CPVC‡	150 psi	0 to 90°C (32 to 194°F)
PVDF	FPM(Viton®)	PVDF	PVDF	150 psi	–40 to 110°C (–40 to 230°F)

[2] 150 psi is not recommended at maximum temperatures. Consult Chemline.

Flow Meter Sizing – Liquid Flow

Standard Scale values are for clean water flow at 20°C (68°F). For liquids with densities and viscosities similar to water (ie. specific gravity of 1.0 and viscosities between 0.5 cP and 1.3 cP) the standard water scale will be accurate enough.

The table below shows correction factors to be applied for liquids with specific gravities other then 1.0. Multiply the correction factor by the water scale value to obtain actual flow rate. Example: For a liquid of specific gravity of 1.66, the correction factor is 0.740. For water flow range of 100 to 1000 litres/hr, corrected range becomes 74 to 740 litres/hr. Viscosity should be between 0.5 cP and 1.3 cP for standard scales to be accurate.

For "sizing" liquid flows ie. determining actual flow range of a tube, please advise the **chemical name, concentration, temperature, specific gravity** and **viscosity.** Custom direct reading scales in any units are available special order.

SCALE CORRECTION FACTORS – FOR LIQUIDS WITH SPECIFIC GRAVITIES OTHER THAN 1.00

Specific Gravity	.00	.01	.02	.03	.04	.05	.06	.07	.08	.09
	Scale Correction Factor									
0.4	1.647	1.626	1.605	1.585	1.565	1.548	1.529	1.513	1.495	1.479
0.5	1.462	1.447	1.433	1.418	1.404	1.391	1.377	1.364	1.351	1.339
0.6	1.326	1.316	1.304	1.292	1.282	1.271	1.259	1.250	1.239	1.229
0.7	1.220	1.211	1.202	1.192	1.183	1.175	1.167	1.157	1.149	1.142
0.8	1.134	1.125	1.117	1.111	1.104	1.096	1.089	1.082	1.075	1.068
0.9	1.062	1.055	1.048	1.042	1.035	1.030	1.024	1.017	1.011	1.005
1.0	1.000	0.994	0.988	0.982	0.978	0.972	0.967	0.962	0.956	0.951
1.1	0.947	0.943	0.936	0.932	0.927	0.923	0.917	0.913	0.909	0.904
1.2	0.900	0.895	0.891	0.887	0.883	0.878	0.874	0.870	0.866	0.862
1.3	0.858	0.854	0.850	0.846	0.842	0.838	0.835	0.831	0.827	0.824
1.4	0.820	0.818	0.814	0.810	0.806	0.803	0.800	0.797	0.794	0.791
1.5	0.787	0.784	0.781	0.778	0.776	0.773	0.770	0.767	0.764	0.759
1.6	0.756	0.754	0.751	0.748	0.745	0.742	0.740	0.737	0.734	0.730
1.7	0.728	0.726	0.723	0.720	0.717	0.714	0.712	0.709	0.706	0.704
1.8	0.701	0.699	0.696	0.694	0.691	0.689	0.686	0.684	0.682	0.679
1.9	0.677	0.674	0.672	0.669	0.667	0.665	0.663	0.661	0.658	0.657
2.0	0.654	0.652	0.650	0.648	0.646	0.644	0.641	0.604	0.637	0.636

Variable Area Flow Meters

Flow Meter Sizing – Gas Flow

FLOW RANGES FOR AIR – AT STANDARD CONDITIONS (atmospheric pressure 14.7 psia/20°C).

FC SERIES – COMPACT SIZE – 5" SCALE

Flow Meter Item No.	Normal m^3/hr	Standard CFM
FCT00020	0.2 – 1.0	0.1 – 0.6
FCT00060	0.2 – 2.5	0.1 – 1.5
FCT00100	0.6 – 3.6	0.4 – 2.1
FCT00250	0.5 – 9.0	0.3 – 5.3
FCT00051	0.4 – 2.8	0.2 – 1.6
FCT00151	0.8 – 6.2	0.5 – 3.6
FCT00251	0.9 – 9.5	0.5 – 5.6
FCT00401	2.0 – 15.0	1.2 – 8.8
FCT00152	0.5 – 5.5	0.3 – 3.2
FCT00402	2.0 – 14.0	1.2 – 8.2
FCT00602	2.5 – 22.0	1.5 – 12.9
FCT01002	4.0 – 34.0	2.4 – 20.0
FCT00253	1.0 – 8.0	0.6 – 4.7
FCT00403	2.0 – 14.0	1.2 – 8.2
FCT01003	4.0 – 34.0	2.4 – 20.0
FCT01503	5.0 – 50.0	2.9 – 29.4

FS SERIES – STANDARD FULL SIZE – 7" SCALE

Flow Meter Item No.	Normal m^3/hr	Standard CFM
FST00150	0.7 – 5.5	0.4 – 3.2
FST00300	1 – 10	0.6 – 5.9
FST00600	2.5 – 20	1.5 – 12
FST01000	4 – 34	2.4 – 20
FST01500	5 – 50	2.9 – 29
FST02000	8.5 – 76	5.0 – 45
FST02500	8 – 70	4.7 – 41
FST03000	10 – 90	5.9 – 53
FST04000	14 – 125	8.2 – 74
FST06000	22 – 190	13 – 112
FST10000	35 – 300	21 – 177
FST15000	50 – 500	29 – 294
FST25000	80 – 720	47 – 424
FST50000	400 – 1,500	234 – 883

SCALE CORRECTION FACTORS – FOR AIR AT NON-STANDARD TEMPERATURES AND PRESSURES

Air density is dependent on the actual pressure and temperature.
Calculate the Scale Correction Factor using either Method 1 or 2. Multiply the standard air flow ranges above by the Factor to obtain actual flow rates.

Method 1

Calculate the Factor with the following formula.

$$\text{Factor} = \frac{1}{3.7005}\sqrt{\frac{\text{psia}}{(1+0.00367t)}}$$

psia = pressure of the air absolute
= psig + 14.7 (atmospheric pressure = 14.7 psia)
t = temperature of the air °C

Method 2

Calculate the density of the air at conditions and find factor from the chart below.

$$\text{Air Density (g/ml)} = \frac{\text{psia}}{11{,}360\ (1+0.00367t)}$$

psia = pressure of the air absolute
= psig + 14.7 (atmospheric pressure = 14.7 psia)
t = temperature of the air °C

Air Density vs. Flow Factor

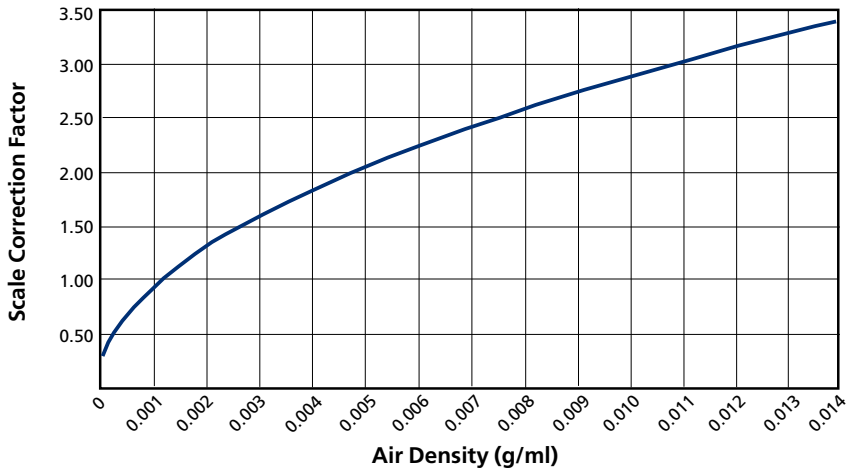

CHEMLINE Plastics Limited
55 Guardsman Road, Thornhill, Ontario, Canada, L3T 6L2
Tel: 905-889-7890 request@chemline.com
Fax: 905-889-8553 www.chemline.com

ISO 9001:2000 Certified

Your Pipeline To Quality Valves, Piping, Flow Meters and Controls

SCRAPER

ST-010

LEFT BLANK

JOHN MEUNIER

NOMENCLATURE/ BILL OF MATERIALS

TITRE/ TITLE	Rev.	DESCRIPTION	PAR/ BY:	APPR:	DATE:	Affaire / Contract	Meadowbank Mining
Scraper	0	SUBMITTAL	P. Ste-Marie	P.S.M.	2009-03-26		
	1						
	2					REF. No.	NC01 | | 0
	3						
DESSIN /DWG # ST-010	4					Date:	2009-03-26

REV.	ITEM	QTE/QTY. Unit.	QTE/QTY. Total	DESCRIPTION	P&ID I.D./TAG	CAT. ACCPAC	SOURCE	FA/SA FI SITE	P / N
	NC01ST-010-1	1	2	**SCRAPER GEARBOX**	S2-011	B68		SA	
				Manufacturer:	S2-021				
				SEW Eurodrive					
				Model:					
				RF97AD4ZR-FA47DT71D4					
				Combination Flanged Helical Gear					
				Helical gear motor with load cell arrangement					
				Rotational shaft speed (output):					
				1,6 rpm (fixed)					
				Ratio :					
				1101:1					
				Running torque:					
				623 lb-ft (845 Nm) equivalent force on load cell 247 N					
				Alarm torque:					
				934,5 lb-ft (1267Nm) equivalent force on load cell 370 N					
				Shutt-off torque:					
				1246 lb-ft (1689Nm) equivalent force on load cell 494 N					
				Mounting position :					
				M4 TB-0 CE-1					
				Mounting flange Dia. :					
				300 mm Bolt Circle diameter (AJ)					
				Output shaft Dia. :					
				2 3/8" x 120 mm					

JOHN MEUNIER

NOMENCLATURE/ BILL OF MATERIALS

TITRE/ TITLE	Rev.	DESCRIPTION	PAR/ BY:	APPR:	DATE:	Affaire / Contract	Meadowbank Mining
Scraper	0	SUBMITTAL	P. Ste-Marie	P.S.M.	2009-03-26		
	1						
	2					REF. No.	NC01 | 0
	3						
DESSIN /DWG # ST-010	4					Date:	2009-03-26

REV.	ITEM	QTE/QTY. Unit.	QTE/QTY. Total	DESCRIPTION	P&ID I.D./TAG	CAT. ACCPAC	SOURCE	FA/SA FI SITE	P / N
				Motor Model:					
				DT71D4					
				Type:					
				squirrel cage motor/ IEC standard					
				Service:					
				continuous					
				Insulation class :					
				F					
				Motor speed :					
				1800 rpm nominal					
				Power :					
				0,375 kW (0,5 HP)					
				Electrical feed					
				575V/3ph/60Hz					
				Full Load amp					
				1.0 A					
				S.F. motor:					
				1,2					
				Total weight (motoreducteur + oil)					
				138 kg (304 lbs)					
				Lubrifiant:					
				(14 + 1.9) liters food grade oil type					
				Protection					
				IP55					
				KS1 and KS2 protection					

JOHN MEUNIER

NOMENCLATURE/ BILL OF MATERIALS

TITRE/ TITLE	Rev.	DESCRIPTION	PAR/ BY:	APPR:	DATE:	Affaire / Contract	Meadowbank Mining
Scraper	0	SUBMITTAL	P. Ste-Marie	P.S.M.	2009-03-26		
	1						
	2					REF. No.	NC01 | | 0
	3						
DESSIN /DWG # ST-010	4					Date:	2009-03-26

REV.	ITEM	QTE/QTY. Unit.	QTE/QTY. Total	DESCRIPTION	P&ID I.D./TAG	CAT. ACCPAC	SOURCE	FA/SA FI SITE	P / N
	NC01ST-010-2	1	2	**LOAD CELL**		B68		FI	
				Supplier:					
				SEW Eurodrive					
				Model:					
				BLH alpha load beam					
				Range					
				500Newtons					
	NC01ST-010-3	1	2	**CONTROL MODULE :**		B68		FI	
				Strain Gauge transmitter					
				Model :					
				HPL220					
				Electrical feed :					
				24Vdc					
				Output signal :					
				4-20 mA 1000 ohms max					
				Insulation (box):					
				N/A installed wihtin junction box					
	NC01ST-010-4	1	2	**REDUCER BOX**		B68		SA	
				Supplier					
				John Meunier Inc.					
				Ratio :					
				4,59:1					
				Rotational output speed					
				0,35 rpm (fixed)					

LEFT BLANK

SCRAPER

GEARBOX

LEFT BLANK

SEW EURODRIVE







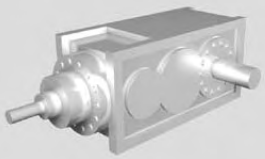

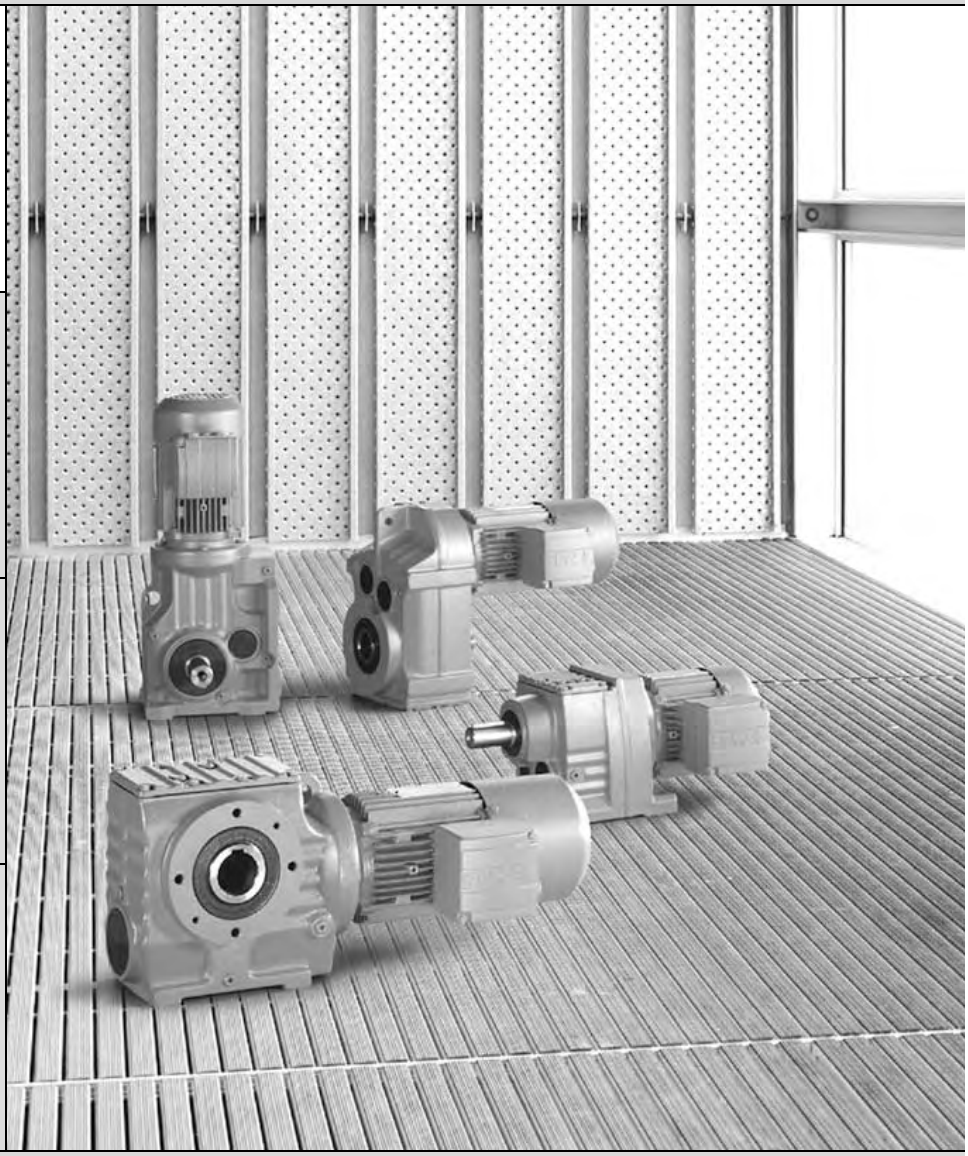

Gear Units, R..7, F..7, K..7, S..7 Series, SPIROPLAN® W

A6.B01

Edition 05/2004

11226811 / EN

Operating Instructions



SEW EURODRIVE



1 Important Notes 4

2 Safety Notes 6

3 Gear Unit Structure 9
3.1 Basic structure of helical gear units 9
3.2 Basicstructure of parallel shaft helical gear units 10
3.3 Basic structure of helical-bevel gear units 11
3.4 Basic structure of helical-worm gear units 12
3.5 Basic structure of SPIROPLAN® gear units 13
3.6 Nameplate, unit designation 14

4 Mechanical Installation 15
4.1 Required tools / aids 15
4.2 Prerequisites for assembly 15
4.3 Installing the gear unit 16
4.4 Gear unit with solid shaft 19
4.5 Torque arms for mounted gear units 21
4.6 Mounted gear unit with keyway or splined hollow shaft 23
4.7 Mounted gear units with shrink disc 27
4.8 Mounted gear units with TorqLOC® 30
4.9 AM adapter coupling 36
4.10 AQ adapter coupling 38
4.11 AD input shaft assembly 40

5 Startup 44
5.1 Startup of helical-worm and SPIROPLAN® W gear units 44
5.2 Startup of helical, parallel shaft helical and helical-bevel gear units 44

6 Inspection and Maintenance 45
6.1 Inspection and maintenance intervals 45
6.2 Lubricant change intervals 45
6.3 Inspection and maintenance of the gear unit 46
6.4 Inspection / maintenance of AM / AQA adapters 47
6.5 Inspection / maintenance of AD adapters 47

7 Malfunctions 48
7.1 Gear unit malfunctions 48
7.2 AM / AQA / AL adapter malfunctions 48
7.3 AD input shaft assembly malfunctions 49

8 Mounting Positions 50
8.1 General information on mounting positions 50
8.2 Key to the mounting position sheets 51
8.3 Mounting positions for R helical gearmotors 52
8.4 Mounting positions of RX helical gearmotors 55
8.5 Mounting positions for parallel shaft helical gearmotors 57
8.6 Mounting positions for helical-bevel gearmotors 60
8.7 Mounting positions for helical-worm gearmotors 65
8.8 Mounting positions for SPIROPLAN® W gearmotors 71

9 Lubricants 74
9.1 Lubricant table 74
9.2 Lubricant fill quantities 77

10 Appendix 82
10.1 Index of changes 82

11 Index 83

1 Important Notes

Safety and warning instructions

Always follow the safety and warning instructions in this publication!



Electrical hazard
Possible consequences: Severe or fatal injuries.



Hazard
Possible consequences: Severe or fatal injuries.



Hazardous situation
Possible consequences: Slight or minor injuries.



Harmful situation
Possible consequences: Damage to the drive and the environment.



Tips and useful information.



You must adhere to the operating instructions to ensure:

- Trouble-free operation
- Fulfillment of any rights to claim under guarantee

Consequently, read the operating instructions before you start working with the gear unit!

The operating instructions contain important information about servicing. Therefore, keep the operating instructions close to the gear unit.



- Adjust the lubricant fill volume and position of the breather valve accordingly in the event of a change of mounting position (see Sec. "Lubricants" and "Mounting Positions").
- Follow the instructions in Sec. "Mechanical installation" / "Installing the gear unit"!

Waste disposal



Please follow the latest instructions: Dispose of the following materials in accordance with the regulations in force:

- Steel scrap:
  - Housing parts
  - Gears
  - Shafts
  - Anti-friction bearing
  - Gray-cast iron (if there is no special collection)
- Parts of the worm gears are made of non-ferrous metals. Dispose of the worm gears as appropriate.
- Collect waste oil and dispose of it correctly.

2 Safety Notes

Preface

The following safety notes are primarily concerned with the use of gear units. If using **gearmotors**, please also refer to the safety notes for motors in the relevant operating instructions.

Please also consider the supplementary safety notes in the individual sections of these operating instructions.

General information

During and after operation, gearmotors, gear units and motors have:

- Live parts
- Moving parts
- Hot surfaces (may be the case)

Only qualified personnel may carry out the following work:

- Transportation
- Putting into storage
- Installation / assembly
- Connection
- Startup
- Maintenance
- Servicing

The following information and documents must be observed during these processes:

- Relevant operating instructions and wiring diagrams
- Warning and safety signs on the gear unit / gearmotor
- System-specific regulations and requirements
- National / regional regulations governing safety and the prevention of accidents

Serious injuries and property damage may result from:

- Improper use
- Incorrect installation or operation
- Unauthorized removal of necessary protection covers or the housing

Designated use

Gearmotors / gear units from SEW are intended for industrial systems. They correspond to the applicable standards and regulations.

Technical data and information about the permitted conditions can be found on the nameplate and in the documentation.

It is essential that you follow all the instructions!

Transportation

Inspect the shipment for any damage that may have occurred in transit as soon as you receive the delivery. Inform the shipping company immediately. It may be that you are not permitted to startup the drive due to the damage.

Tighten installed eyebolts. The eyebolts are only designed for the weight of the gearmotor / gear unit. Do not attach any additional loads.

The installed lifting eyebolts comply with DIN 580. The loads and regulations specified in this standard must always be observed. If two eyebolts are available, use both of them for transport. In this case, the tension force vector of the slings must not exceed a 45° angle in accordance with DIN 580.

Use suitable, sufficiently rated handling equipment if necessary. Remove any transportation fixtures prior to startup.

Extended storage of gear units

Gear units of the "extended storage" type have:

- An oil fill suitable for the mounting position so the unit is ready to run (mineral oil CLP and synthetic oil CLP HC). You should still check the oil level before startup (see Sec. "Inspection / Maintenance" / "Inspection and maintenance of the gear unit").
- A higher oil level in some cases (synthetic oil CLP PG / food grade oil). Correct the oil level before startup (see Sec. "Inspection / Maintenance" / "Inspection and maintenance of the gear unit").

Comply with the storage conditions specified in the following table for extended storage:

Climate zone	Packaging[1)]	Storage location	Storage time
Temperate (Europe, USA, Canada, China and Russia, excluding tropical zones)	Packed in containers, with desiccant and moisture indicator sealed in the plastic wrap.	With roof, protected against rain and snow, no shock loads.	Up to three years with regular checks on the packaging and moisture indicator (relative atmospheric humidity < 50 %).
	Open	With roof, enclosed at constant temperature and atmospheric humidity (5 °C < ϑ < 60 °C, < 50 % relative atmospheric humidity). No sudden temperature fluctuations and controlled ventilation with filter (free from dirt and dust). No aggressive vapors and no shock loads.	Two years or more given regular inspections. Check for cleanliness and mechanical damage as part of the inspection. Check corrosion protection.
Tropical (Asia, Africa, Central and South America, Australia, New Zealand excluding temperate zones)	Packed in containers, with desiccant and moisture indicator sealed in the plastic wrap. Protected against insect damage and mildew by chemical treatment.	With roof, protected against rain, no shock loads.	Up to three years with regular checks on the packaging and moisture indicator (relative atmospheric humidity < 50 %).
	Open	With roof, enclosed at constant temperature and atmospheric humidity (5 °C < ϑ < 60 °C, < 50 % relative atmospheric humidity). No sudden temperature fluctuations and controlled ventilation with filter (free from dirt and dust). No aggressive vapors and no shock loads. Protection against insect damage.	Two years or more given regular inspections. Check for cleanliness and mechanical damage as part of the inspection. Check corrosion protection.

1) Packaging must be performed by an experienced company using the packaging materials that have been expressly specified for the particular application.

Installation / assembly	Observe the instructions in the sections "Installation" and "Assembly/Removal"!
Startup / operation	Check that the direction of rotation is correct in **decoupled** status. Listen out for unusual grinding noises as the shaft rotates. Secure the shaft keys for test mode without drive components. Do not render monitoring and protection equipment inoperative even for test mode. Switch off the gearmotor if in doubt whenever changes occur in relation to normal operation (e.g. increased temperature, noise, vibration). Determine the cause; contact SEW-EURODRIVE if necessary.
Inspection / maintenance	Follow the instructions in the section "Inspection and Maintenance"!

3.2 Basicstructure of parallel shaft helical gear units

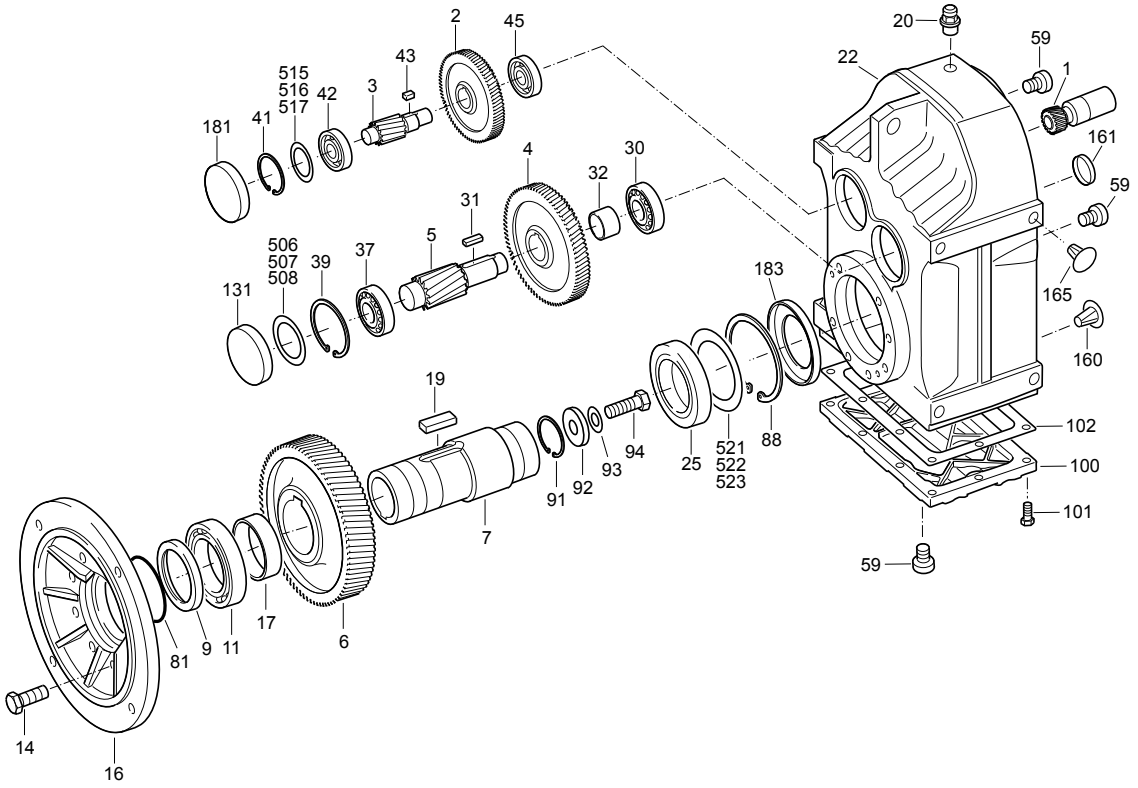

05676AXX

Figure 2: Basic structure of parallel shaft helical gear units

Key

1	Pinion	22	Gearcase	91	Circlip	506	Shim ring
2	Gear	25	Anti-friction bearing	92	Washer	507	Shim ring
3	Pinion shaft	30	Anti-friction bearing	93	Lock washer	508	Shim ring
4	Gear	31	Key	94	Hex head bolt	515	Shim ring
5	Pinion shaft	32	Spacer	100	Gearcase cover	516	Shim ring
6	Gear	37	Anti-friction bearing	101	Hex head bolt	517	Shim ring
7	Hollow shaft	39	Circlip	102	Gasket	521	Shim ring
9	Oil seal	41	Circlip	131	Closing cap	522	Shim ring
11	Anti-friction bearing	42	Anti-friction bearing	160	Closing plug	523	Shim ring
14	Hex head bolt	43	Key	161	Closing cap		
16	Output flange	45	Anti-friction bearing	165	Closing plug		
17	Spacer	59	Screw plug	181	Closing cap		
19	Key	81	O-ring	183	Oil seal		
20	Breather valve	88	Circlip				

3.3 Basic structure of helical-bevel gear units

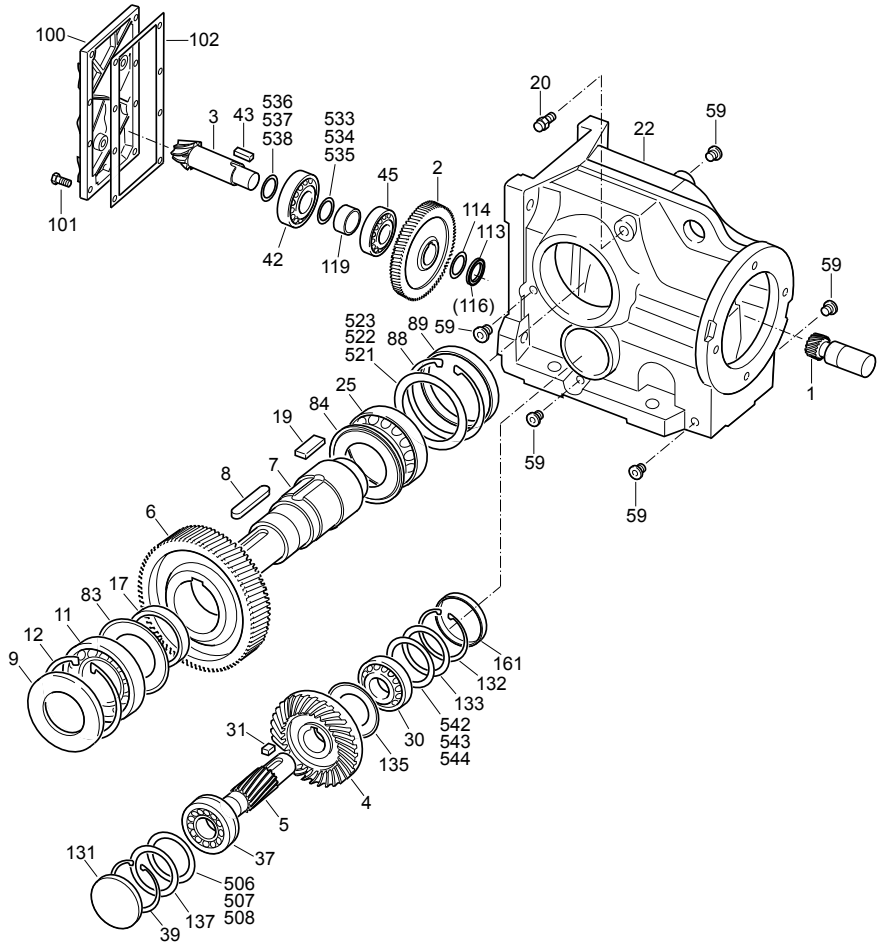

05675AXX

Figure 3: Basic structure of helical-bevel gear units

Key

1 Pinion	25 Anti-friction bearing	102 Adhesive and sealing compound	522 Shim ring
2 Gear	30 Anti-friction bearing	113 Slotted round nut	523 Shim ring
3 Pinion shaft	31 Key	114 Multi-tang washer	533 Shim ring
4 Gear	37 Anti-friction bearing	116 Thread lock	534 Shim ring
5 Pinion shaft	39 Circlip	119 Spacer	535 Shim ring
6 Gear	42 Anti-friction bearing	131 Closing cap	536 Shim ring
7 Output shaft	43 Key	132 Circlip	537 Shim ring
8 Key	45 Anti-friction bearing	133 Spacer	538 Shim ring
9 Oil seal	59 Screw plug	135 Nilos ring	542 Shim ring
11 Anti-friction bearing	83 Nilos ring	161 Closing cap	543 Shim ring
12 Circlip	84 Nilos ring	506 Shim ring	544 Shim ring
17 Spacer	88 Circlip	507 Shim ring	
19 Key	89 Closing cap	508 Shim ring	
20 Breather valve	100 Gearcase cover	521 Shim ring	
22 Gearcase	101 Hex head bolt	521 Shim ring	

3.6 Nameplate, unit designation

Sample nameplate

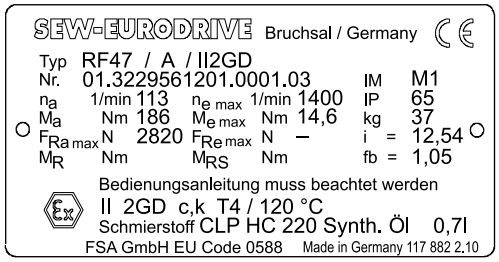

06687ADE

Figure 6: Sample nameplate

f_b		= Service factor
$F_{Ra\,max}$	[N]	= Maximum overhung load on the output side
$F_{Re\,max}$	[N]	= Maximum overhung load on the input side (with input shaft assembly AD)
i		= Gear unit reduction ratio
IM		= Mounting position
IP..		= Enclosure
$n_{e\,max}$	[1/min]	= Maximum input speed
n_a	[1/min]	= Output speed
$M_{e\,max}$	[Nm]	= Maximum input torque
M_a	[Nm]	= Output torque
M_R	[Nm]	= Overload torque when using an AR adapter
M_{RS}	[Nm]	= Locking torque of the backstop

Unit designation

Example: Helical gear unit, category II2GD

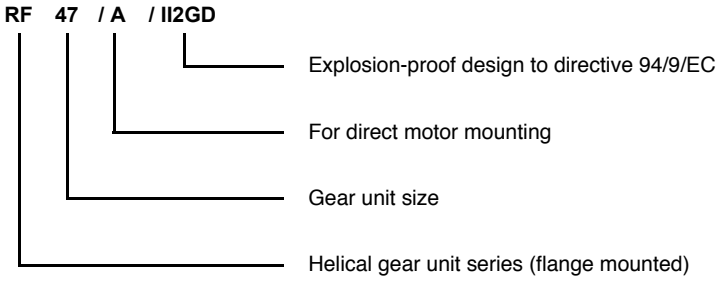

Example: Serial number

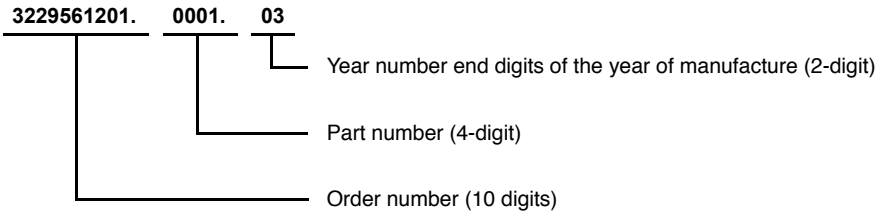

4 Mechanical Installation

4.1 Required tools / aids

- Set of spanners
- Torque wrench for:
  - Shrink discs
  - AQH motor adapter
  - Input shaft assembly with centering shoulder
- Mounting device
- Shims and distance rings if necessary
- Fixing devices for input and output elements
- Lubricant (e.g. NOCO® Fluid)
- Bolt adhesive (for input shaft assembly with centering shoulder), e.g. Loctite® 243
- Standard parts are not part of the delivery

Installation tolerances

Shaft end	Flanges
Diameter tolerance in accordance with DIN 748 • ISO k6 for solid shafts with ∅ ≤ 50 mm • ISO m6 for solid shafts with ∅ > 50 mm • ISO H7 for hollow shafts • Center bore in accordance with DIN 332, shape DR	Centering shoulder tolerance in accordance with DIN 42948 • ISO j6 with b1 ≤ 230 mm • ISO h6 with b1> 230 mm

4.2 Prerequisites for assembly

Check that the following conditions have been met:

- The data on the nameplate of the gearmotor matches the voltage supply system.
- The drive has not been damaged during transportation or storage.
- Ensure that the following requirements have been met:
  - **For standard gear units:**
    Ambient temperature according to the lubricant table in Sec. "Lubricants" (see standard).
    The drive must not be assembled in the following ambient conditions:
    - Potentially explosive atmosphere
    - Oil
    - Acids
    - Gas
    - Vapors
    - Radiation
  - **For special versions:**
    The drive configured in accordance with the ambient conditions.
  - **For helical-worm / SPIROPLAN® W gear units:**
    No large external mass moments of inertia which could exert a retrodriving load on the gear unit.
    [At η' (retrodriving) = 2 – 1/η < 0.5 self-locking]

- You must clean the output shafts and flange surfaces thoroughly to ensure they are free of anti-corrosion agents, contamination or similar. Use a commercially available solvent. Do not let the solvent come into contact with the sealing lips of the oil seals – danger of damage to the material!
- When the drive is installed in abrasive ambient conditions, protect the output end oil seals against wear.

4.3 Installing the gear unit

The gear unit or gearmotor is only allowed to be installed in the specified mounting position. SPIROPLAN® gear units are not dependent on the mounting position.

The support structure must have the following characteristics:

- Level
- Vibration damping
- Torsionally rigid

Maximum permitted flatness error for foot and flange mounting (approximate values with reference to DIN ISO 1101):

- Gear unit size ≤ 67: max. 0.4 mm
- Gear unit size 77 ... 107: max. 0.5 mm
- Gear unit size 137 ... 147: max. 0.7 mm
- Gear unit size 157 ... 187: max. 0.8 mm

Do not tighten the housing legs and mounting flanges against one another and ensure that you comply with the permitted overhung and axial loads!

Secure the gearmotors with bolts of quality 8.8.

Secure the following gearmotors with bolts of quality 10.9:

- RF37, R37F with flange ∅ 120 mm
- RF47, R47F with flange ∅ 140 mm
- RF57, R57F with flange ∅ 160 mm



The oil checking and drain screws and the breather valves must be freely accessible!

At the same time, also check that the oil fill is as specified for the mounting position (see Sec. "Lubricants" / "Lubricant fill quantities" or refer to the information on the nameplate). The gear units are filled with the required oil volume at the factory. There may be slight deviations at the oil level plug as a result of the mounting position, which are permitted within the manufacturing tolerances.

Adjust the lubricant fill volumes and the position of the breather valve accordingly in the event of a change of mounting position.

Please contact our SEW customer service if you change the mounting position of K gear units to M5 or M6 or between M5 and M6.

Please contact our SEW customer service if you change the mounting position of size S47 S97 S gear units to mounting position M2.

Use plastic inserts (2 ... 3 mm thick) if there is a risk of electrochemical corrosion between the gear unit and the driven machine. The material used must have an electrical bleeder resistor < 10^9 Ω. Electrochemical corrosion can occur between various metals, for example, cast iron and high-grade steel. Also install the bolts with plastic washers! Ground the housing additionally – use the grounding bolts on the motor.

Installation in damp locations or in the open

Drives are supplied in corrosion-resistant versions for use in damp areas or in the open air. Repair any damage to the paint work (e.g. on the breather valve).

When mounting the motors onto AM, AQ, AR, AT adapters, seal the flange areas with a suitable sealing compound, e.g. Loctite® 574.

Gear unit venting

No breather plug is required for the following gear units:

- R07 in mounting positions M1, M2, M3, M5 and M6
- R17, R27 and F27 in mounting positions M1, M3, M5 and M6
- SPIROPLAN® W gear units

SEW-EURODRIVE supplies all other gear units with the breather valve installed and activated according to the particular mounting position.

Exceptions:

1. SEW supplies the following gear units with a screw plug on the vent hole provided:
   - Gear units for extended storage
   - Pivoted mounting positions, if possible
   - Gear units for mounting on a slant

   The breather valve is located in the motor terminal box. Before startup, you must replace the highest screw plug with the breather valve supplied.
2. SEW supplies a breather valve in a plastic bag for **gear head units** requiring venting on the input end.
3. **Enclosed gear units** are supplied without a breather valve.

Activating the breather valve

As a rule, the breather valve is already activated at the factory. If the breather valve has not been activated, you must remove the transport fixture from the breather valve before starting up the gear unit!

1. Breather valve with transport fixture
2. Remove the transport fixture
3. Breather valve activated

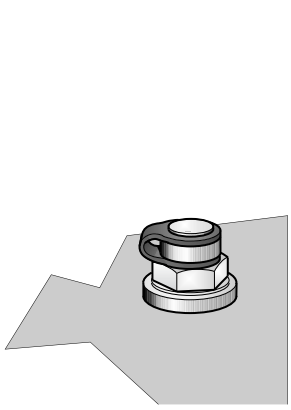

02053BXX

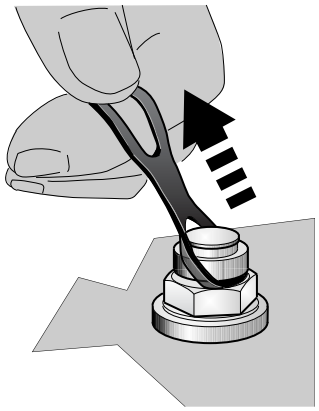

02054BXX

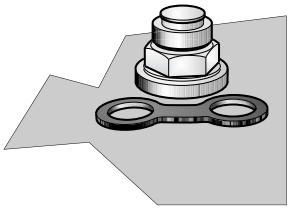

02055BXX

Painting the gear unit

If you paint or respray the drive, ensure that you cover the breather valve and oil seals carefully. Remove the strips of tape after completing the painting work.

4.4 Gear unit with solid shaft

Installing input and output elements

The following figure shows a mounting device for installing couplings or hubs on gear unit or motor shaft ends. It may be possible to dispense with the thrust bearing on the mounting device.

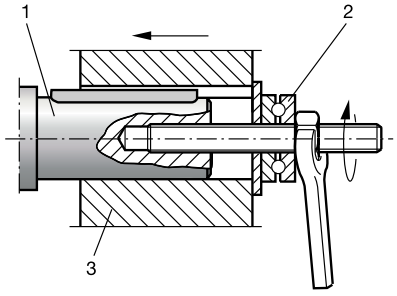

1) Gear shaft end
2) Thrust bearing
3) Coupling hub

03371BXX

Avoid impermissibly high overhung loads: Install the gear or chain sprocket according to figure **B**.

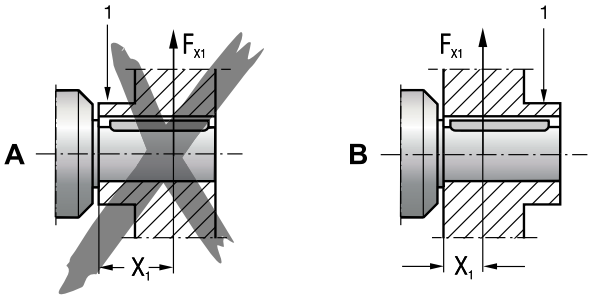

1 = Hub

A = Unfavorable
B = Correct

03369BXX

- Only use a mounting device for installing input and output elements. Use the center bore and the thread on the shaft end for positioning.
- **Never drive belt pulleys, couplings, pinions, etc. onto the shaft end by hitting them with a hammer This will damage the bearings, housing and the shaft!**
- **In the case of belt pulleys, make sure the belt is tensioned correctly in accordance with the manufacturer's instructions.**
- Power transmission elements should be balanced after fitting and must not give rise to any impermissible radial or axial forces (see the "Gearmotor" or "Explosion-Proof Drives" catalogs for permitted values).

Note:

Assembly is easier if you first apply lubricant to the output element or heat it up briefly (to 80 ... 100 °C).

Installing couplings

Couplings must be mounted and balanced according to the information provided by the coupling manufacturer:

a) Maximum and minimum clearance

b) Axial misalignment

c) Angular misalignment

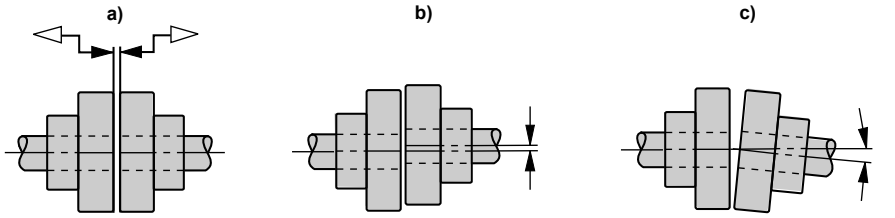

03356AXX

Figure 7: Clearance and misalignment for coupling installation



Input and output elements such as belt pulleys, couplings, etc. must be protected against contact!

4.6 Mounted gear unit with keyway or splined hollow shaft

For the configuration of customer shafts, please also refer to the design notes in the Gearmotors catalog!

Installation notes

1. Apply NOCO® fluid.

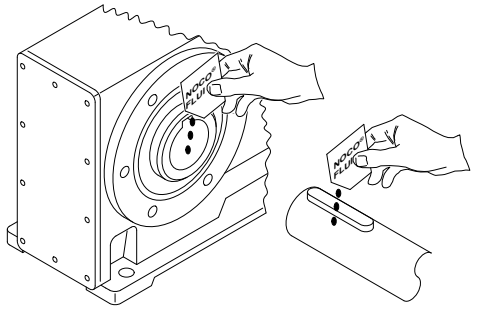

02042BXX

2. Distribute the NOCO® fluid carefully.

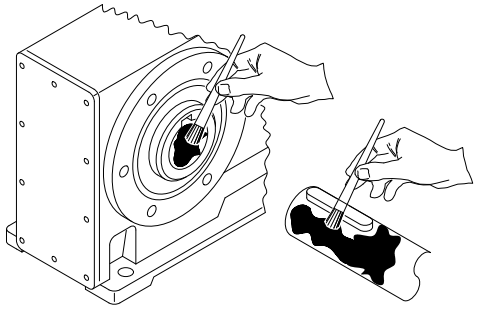

02043AXX

3. Install the shaft and secure it axially
   (mounting is facilitated by using a mounting device)
   3A: Mounting with standard scope of delivery

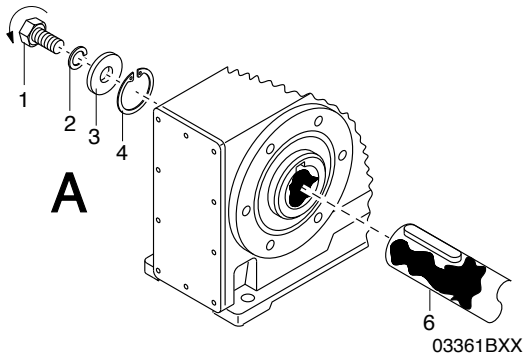

03361BXX

1 Short retaining bolt (standard scope of delivery)
2 Lock washer
3 Washer
4 Circlip
6 Customer shaft

3B: Assembly with SEW-EURODRIVE assembly/disassembly kit (→ page 26)

– Customer's shaft **with** contact shoulder

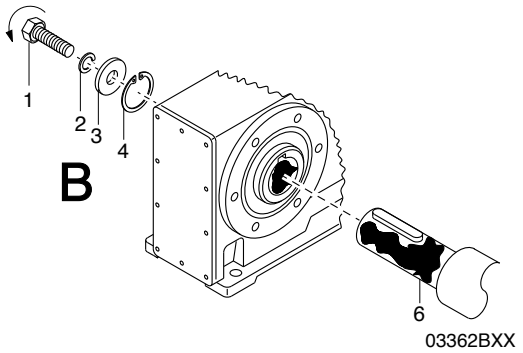

1 Retaining bolt
2 Lock washer
3 Washer
4 Circlip
6 Customer's shaft with contact shoulder

3C: Assembly with SEW-EURODRIVE assembly/disassembly kit (→ page 26)

– Customer's shaft **without** contact shoulder

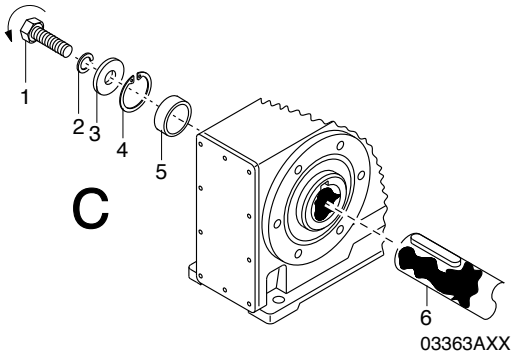

1 Retaining bolt
2 Lock washer
3 Washer
4 Circlip
5 Spacer
6 Customer's shaft without contact shoulder

4. Tighten the retaining bolt to the appropriate torque (see table).

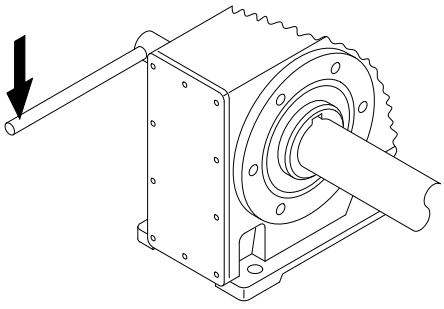

Bolt	Tightening torque [Nm]
M5	5
M6	8
M10/12	20
M16	40
M20	80
M24	200

Note:

To avoid contact corrosion, we recommend that the customer's shaft should additionally be recessed between the two contact surfaces!

Removal notes

This description is only applicable when the gear unit was assembled using the installation/removal kit from SEW-EURODRIVE(→ page 26) (see the previous description, point 3B or 3C).

1. Loosen the retaining bolt [1].
2. Remove parts 2 to 4 and, if fitted, spacer 5.

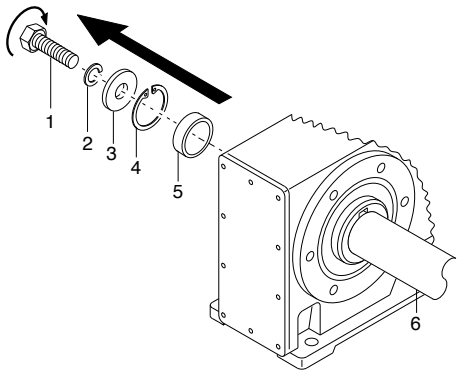

1 Retaining bolt
2 Lock washer
3 Washer
4 Circlip
5 Spacer
6 Customer shaft

03366AXX

3. Insert the forcing washer [8] and the fixed nut [7] from the SEW-EURODRIVE installation/removal kit between the customer's shaft [6] and the circlip [4].
4. Re-insert the circlip [4].
5. Screw the retaining bolt [1] back in. Now you can force the gear unit off the shaft by tightening the bolt.

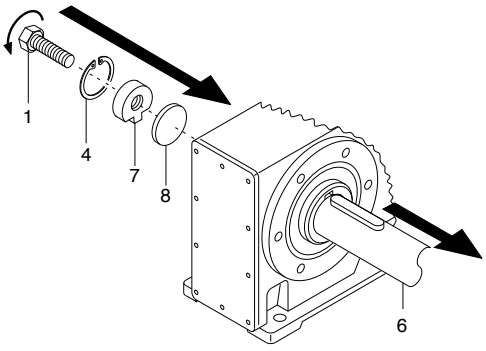

1 Retaining bolt
4 Circlip
6 Customer shaft
7 Fixed nut
8 Forcing washer

03367AXX

SEW installation/removal kit

The SEW-EURODRIVE installation/removal kit can be ordered under the following part number.

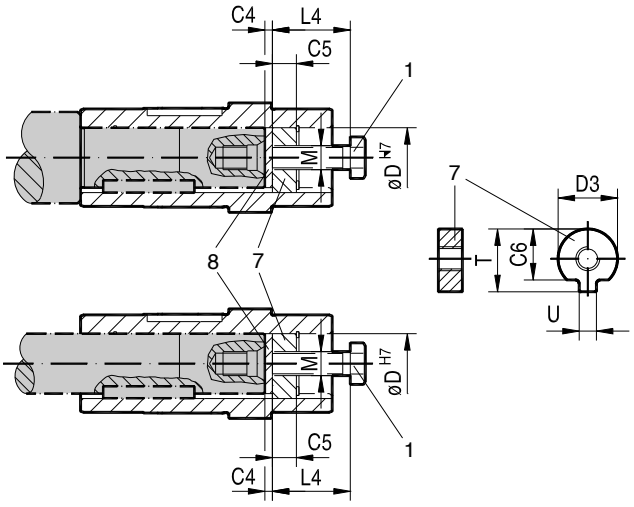

03394AXX

Figure 12: SEW-EURODRIVE installation/removal kit

1 Retaining bolt
7 Fixed nut for disassembly
8 Forcing washer

Type	D^{H7} [mm]	M[1)]	C4 [mm]	C5 [mm]	C6 [mm]	$U^{-0.5}$ [mm]	$T^{-0.5}$ [mm]	$D3^{-0.5}$ [mm]	L4 [mm]	Part number of installation/removal kit
WA..10	16	M5	5	5	12	4.5	18	15.7	50	643 712 5
WA..20	18	M6	5	6	13.5	5.5	20.5	17.7	25	643,682 X
WA..20, WA..30, SA..37	20	M6	5	6	15.5	5.5	22.5	19.7	25	643 683 8
FA..27, SA..47	25	M10	5	10	20	7.5	28	24.7	35	643 684 6
FA..37, KA..37, SA..47, SA..57	30	M10	5	10	25	7.5	33	29.7	35	643 685 4
FA..47, KA..47, SA..57	35	M12	5	12	29	9.5	38	34.7	45	643 686 2
FA..57, KA..57, FA..67, KA..67, SA..67	40	M16	5	12	34	11.5	41.9	39.7	50	643 687 0
SA..67	45	M16	5	12	38.5	13.5	48.5	44.7	50	643 688 9
FA..77, KA..77, SA..77	50	M16	5	12	43.5	13.5	53.5	49.7	50	643 689 7
FA..87, KA..87, SA..77, SA..87	60	M20	5	16	56	17.5	64	59.7	60	643 690 0
FA..97, KA..97, SA..87, SA..97	70	M20	5	16	65.5	19.5	74.5	69.7	60	643 691 9
FA..107, KA..107, SA..97	90	M24	5	20	80	24.5	95	89.7	70	643 692 7
FA..127, KA..127	100	M24	5	20	89	27.5	106	99.7	70	643 693 5
FA..157, KA..157	120	M24	5	20	107	31	127	119.7	70	643 694 3

1) Retaining bolt

The SEW assembly kit for mounting the customer shaft is a recommendation from SEW-EURODRIVE. You must always check whether this design can compensate the axial loads. In particular applications (e.g. mounting mixer shafts), a different design may have to be used to secure the shaft axially. In these cases, customers can use their own devices. However, you must ensure that these designs do not cause potential sources of combustion according to DIN EN 13463 (for example, impact sparks).

5 Startup



Prior to startup check that the oil level is as specified for the mounting position. The oil checking and drain screws and the breather valves must be freely accessible.

5.1 Startup of helical-worm and SPIROPLAN® W gear units



Note: The direction of rotation of the output shaft in series S..7 helical-worm gear units has been changed from CW to CCW; this is different from the S..2 series. Change direction of rotation: Swap over two motor feeder cables.

Run-in period

SPIROPLAN® and helical-worm gear units require a run-in period of at least 24 hours before reaching their maximum efficiency. A separate run-in period applies for each direction of rotation if the gear unit is operated in both directions of rotation. The table shows the average power reduction during the run-in period.

No. of starts	Worm		Spiroplan®	
	Power reduction	i range	Power reduction	i range
1 start	ca. 12 %	ca. 50...280	ca. 15 %	approx. 40 ... 75
2 start	ca. 6 %	ca. 20...75	ca. 10 %	ca. 20...30
3 start	ca. 3 %	ca. 20...90	ca. 8 %	ca. 15
4 start	-	-	ca. 8 %	ca. 10
5 start	ca. 3 %	ca. 6...25	ca. 5 %	ca. 8
6 start	ca. 2 %	ca. 7...25	-	-

5.2 Startup of helical, parallel shaft helical and helical-bevel gear units

No special startup instructions are required for helical, parallel shaft helical and helical-bevel gear units providing the gear units have been installed in accordance with Sec. "Mechanical Installation".

6 Inspection and Maintenance

6.1 Inspection and maintenance intervals

Frequency	What to do?
• Every 3000 machine hours, at least every 6 months.	• Check oil and oil level. • Check the seals visually for leakage. • For gear units with a torque arm: Check the rubber buffer and change it, if necessary
• Depending on the operating conditions (see chart below), every 3 years at the latest. • According to oil temperature.	• Change mineral oil.
	• Replace anti-friction bearing grease (recommendation). • Replace oil seal (do not install it in the same track).
• Depending on the operating conditions (see chart below), every 5 years at the latest. • According to oil temperature.	• Change synthetic oil
	• Replace anti-friction bearing grease (recommendation). • Replace oil seal (do not install it in the same track).
• Gear unitsR07, R17, R27, F27 and Spiroplan® are have lubrication for life and are therefore maintenance-free	
• Varying (depending on external factors).	• Touch up or renew the surface/anticorrosion coating.

6.2 Lubricant change intervals

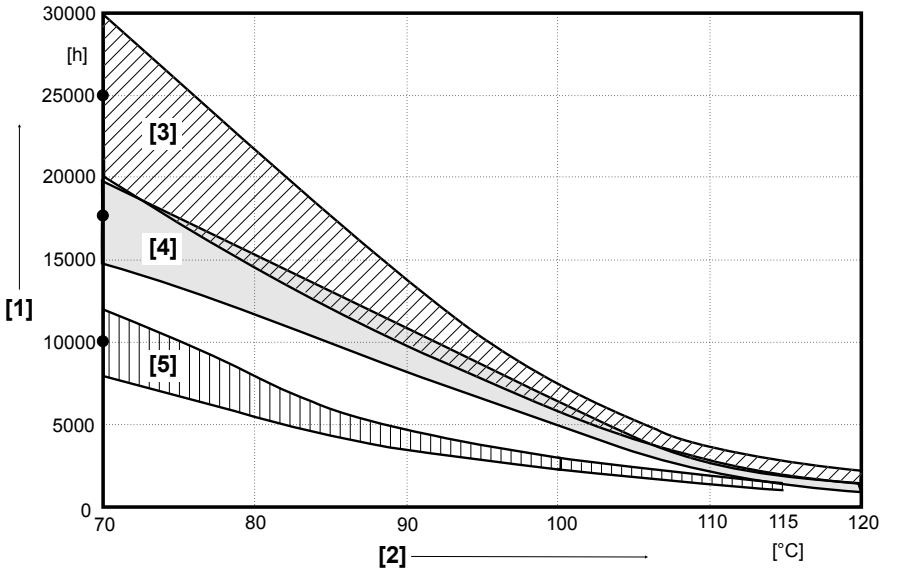

Figure 13: Oil change intervals for standard gear units under normal environmental conditions

[1] Operating hours
[2] Sustained oil bath temperature
- Average value per oil type at 70 °C

[3] CLP PG
[4] CLP HC / HCE
[5] CLP / HLP / E

6.3 Inspection and maintenance of the gear unit

Do not intermix synthetic lubricants and do not mix synthetic and mineral lubricants together!

The standard lubricant is mineral oil (except for Spiroplan® gear units).

The position of the oil level and oil drain plug and the breather valve depends on the mounting position. Refer to the diagrams of the mounting positions.

Checking the oil level



1. **De-energize the gearmotor and secure it to prevent it from being switched on inadvertently!**

   Wait until the gear unit has cooled off – Danger of burns!
2. Refer to Sec. "Installing the gear unit" when changing the mounting position!
3. For gear units with an oil level plug: Remove the oil level plug, check the fill level and correct it if necessary. Screw the oil level plug back in.

Checking the oil



1. **De-energize the gearmotor and secure it to prevent it from being switched on inadvertently!**

   Wait until the gear unit has cooled off – Danger of burns!
2. Remove a little oil from the oil drain plug.
3. Check the oil consistency.
   - Viscosity
   - If you can see that the oil is heavily contaminated, we recommend that you change the oil even if this is outside the service intervals specified in "Inspection and maintenance periods".
4. For gear units with an oil level plug: Remove the oil level plug, check the fill level and correct it if necessary. Screw the oil level plug back in.

Changing the oil



Only change the oil when the gear unit is at operating temperature.

De-energize the gearmotor and secure it to prevent it from being switched back on inadvertently!

Wait until the gear unit cools down - Danger of burns!

Note: The gear unit must still be warm otherwise the high viscosity of excessively cold oil will make it harder to drain the oil correctly.

With oil drain plug / oil level screw

1. Place a container underneath the oil drain plug
2. Remove the oil level plug, breather plug/breather valve and oil drain plug.
3. Drain all the oil.
4. Screw in the oil drain plug.
5. Pour in new oil of the same type through the vent hole (if changing the oil type, please first contact our customer service). Do not mix synthetic lubricants.
   - Pour in the volume of oil in accordance with the mounting position (see Sec. "Lubricant fill quantities") or as specified on the nameplate.
   - Check at the oil level plug.
6. Screw the oil level plug back in
7. Screw in the breather plug/breather valve.

Without oil drain plug / oil level plug

1. Remove cover plate.
2. Drain the oil through the cover plate opening.
3. Pour in new oil of the same type through the vent hole (if changing the oil type, please first contact our customer service). Do not mix synthetic lubricants.
   – Pour in the volume of oil in accordance with the mounting position (see Sec. "Lubricant fill quantities") or as specified on the nameplate.
4. Check the oil level (→ Sec. "Check oil level for gear units with oil level plug")
5. Attach cover plate (observe the tightening torque and series → Sec. "Check the oil level for gear units without an oil level plug")

Changing the oil seal



1. **De-energize the gearmotor and secure it to prevent it from being switched on inadvertently!**

   Wait until the gear unit has cooled off – Danger of burns!
2. When changing the oil seal, ensure that there is a sufficient grease reservoir between the dust lip and protective lip, depending on the type of gear unit.
3. If you use double oil seals, the space has to be filled one-third with grease.

6.4 Inspection / maintenance of AM / AQA adapters

Frequency	What to do?
• Every 3000 machine hours, at least every 6 months	• Check torsional play • Visually check the elastic annular gear • Check the adapter visually for leakage
• After 25000 - 30000 machine hours	• Renew the anti-friction bearing grease • Replace oil seal (do not install it in the same track) • Change the elastic annular gear.

6.5 Inspection / maintenance of AD adapters

Frequency	What to do?
• Every 3000 machine hours, at least every 6 months	• Check running noise for possible bearing damage • Check the adapter visually for leakage
• After 25000 - 30000 machine hours	• Renew the anti-friction bearing grease
	• Change the oil seal

7 Malfunctions

Customer service

Please have the following information to hand if you require the assistance of our customer service:
- Data from the nameplate (complete)
- Nature and extent of the fault
- Time and peripheral circumstances of the fault
- Presumed cause

7.1 Gear unit malfunctions

Problem	Possible cause	Remedy
Unusual, regular running noise	A Meshing/grinding noise: Bearing damage. B Knocking noise: Irregularity in the gearing	A Check the oil (see Sec. "Inspection and Maintenance"), change bearings B Contact customer service
Unusual, irregular running noise	Foreign bodies in the oil	• Check the oil (see Sec. "Inspection and Maintenance") • Stop the drive, contact customer service
Oil leaking[1)] • From the gear cover plate • From the motor flange • From the motor oil seal • From the gear unit flange • From the output end oil seal	A Rubber seal on the gear cover plate leaking B Seal defective C Gear unit not vented	A Tighten the bolts on the gear cover plate and observe the gear unit. Oil still leaking: Contact customer service B Contact customer service C Vent the gear unit (see Sec. "Mounting Positions")
Oil leaking from breather valve	A Too much oil B Drive operated in incorrect mounting position C Frequent cold starts (oil foams) and/or high oil level	A Correct the oil level (see Sec. "Inspection and Maintenance") B Mount the breather valve correctly (see Sec. "Mounting Positions") and correct the oil level (see "Lubricants")
Output shaft does not turn although the motor is running or the input shaft is rotated	Connection between shaft and hub in gear unit interrupted	Send in the gear unit/gearmotor for repair

1) Short-term oil/grease leakage at the oil seal is possible in the run-in phase (24 hours running time).

7.2 AM / AQA / AL adapter malfunctions

Problem	Possible cause	Remedy
Unusual, regular running noise	Meshing/grinding noise: Bearing damage	Contact SEW-EURODRIVE customer service
Oil leaking	Seal defective	Contact SEW-EURODRIVE customer service
Output shaft does not turn although the motor is running or the input shaft is rotated	Connection between shaft and hub in gear unit interrupted	Send the gear unit to SEW-EURODRIVE for repair.
Change in running noise and / or vibrations occur	A Annular gear wear, short-term torque transfer through metal contact B Bolts to secure hub axially are loose.	A Change the annular gear B Tighten the bolts
Premature wear in annular gear	A Contact with aggressive fluids / oil; ozone influence; too high ambient temperatures etc, which can cause a change in the physical properties of the annular gear. B Impermissibly high ambient/contact temperature for the annular gear; maximum permitted temperature –20 °C to +80 °C. C Overload	Contact SEW-EURODRIVE customer service

8 Mounting Positions

8.1 General information on mounting positions

Mounting position designation

SEW differentiates between six mounting positions M1 ... M6 for gear units. The following figure shows the spatial orientation of the gearmotor in mounting positions M1 ... M6.

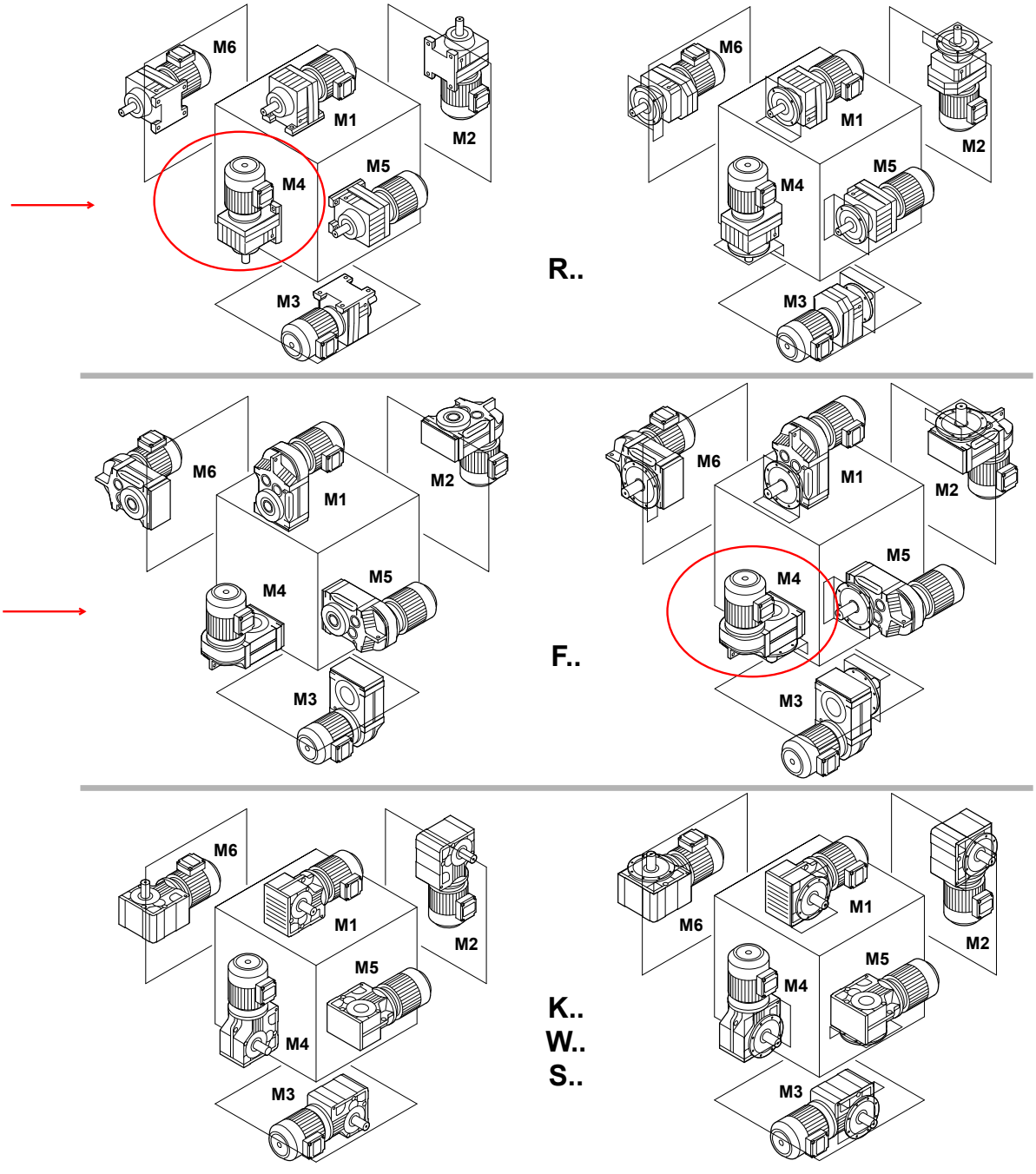

Figure 14: Depiction of mounting positions M1 ... M6

8.2 Key to the mounting position sheets

SPIROPLAN® gearmotors do not depend on any particular mounting position. However, mounting positions M1 to M6 are also shown for SPIROPLAN® gearmotors to assist you in working with this documentation.

Important: SPIROPLAN® gearmotors cannot be equipped with breather valves, oil level plugs or drain plugs.

Symbols used

The following table shows the symbols used in the mounting position sheets and what they mean:

Symbol	Meaning
	Breather valve
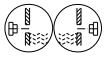	Oil level plug
	Oil drain plug

Churning losses



Increased churning losses may arise in some mounting positions. Contact SEW-EURODRIVE in case of the following combinations:

Mounting position	Gear unit type	Gear unit size	Input speed [1/min]
M2, M4	R	97 ... 107	> 2500
		> 107	>1500
M2, M3, M4, M5, M6	F	97 ... 107	> 2500
		> 107	> 1500
	K	77 ... 107	> 2500
		> 107	> 1500
	S	77 ... 97	> 2500

RF07-RF167

04 041 200

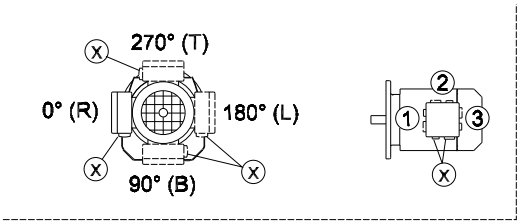

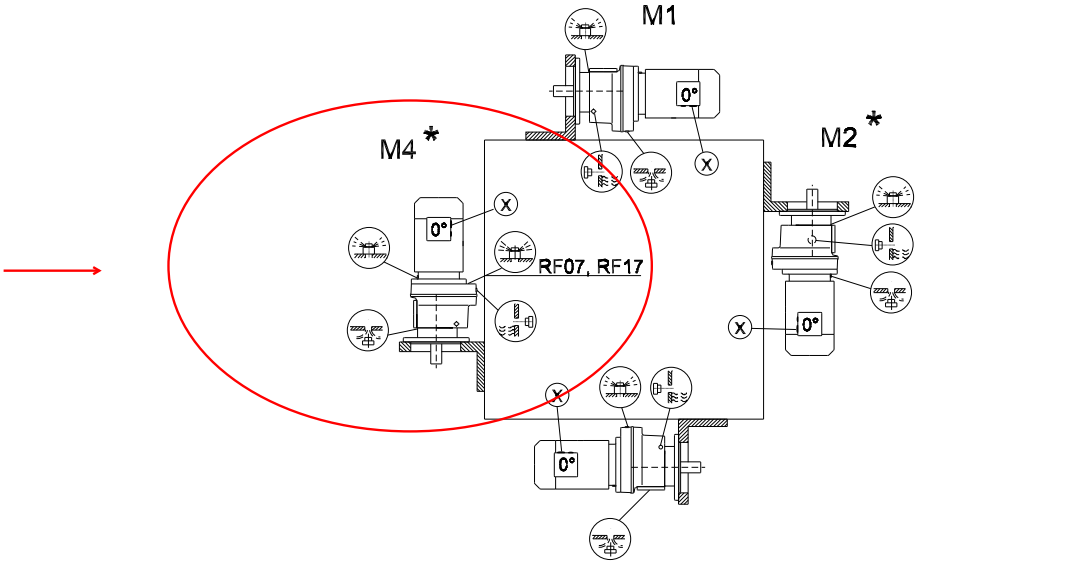

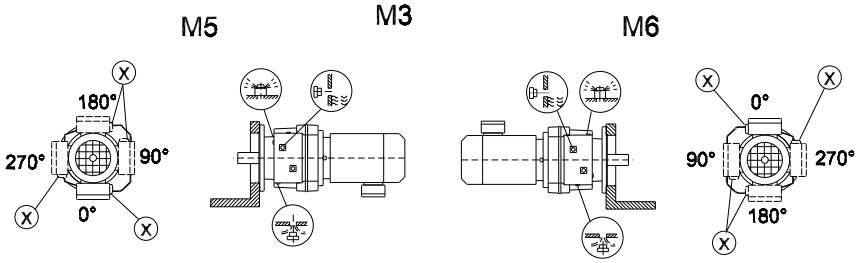

RF07		M1, M2 , M3 , M5 , M6
RF17, RF27		M1, M3 , M5 , M6
RF07, RF17, RF27		
RF47, RF57		M5

* → page 51

FA/FH27-157, FV27-107, FT37-97

42 044 200

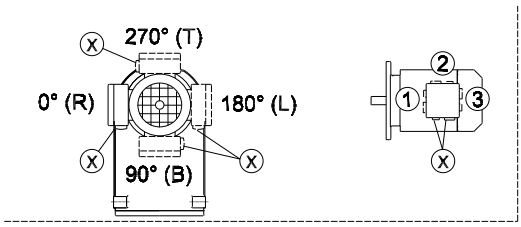

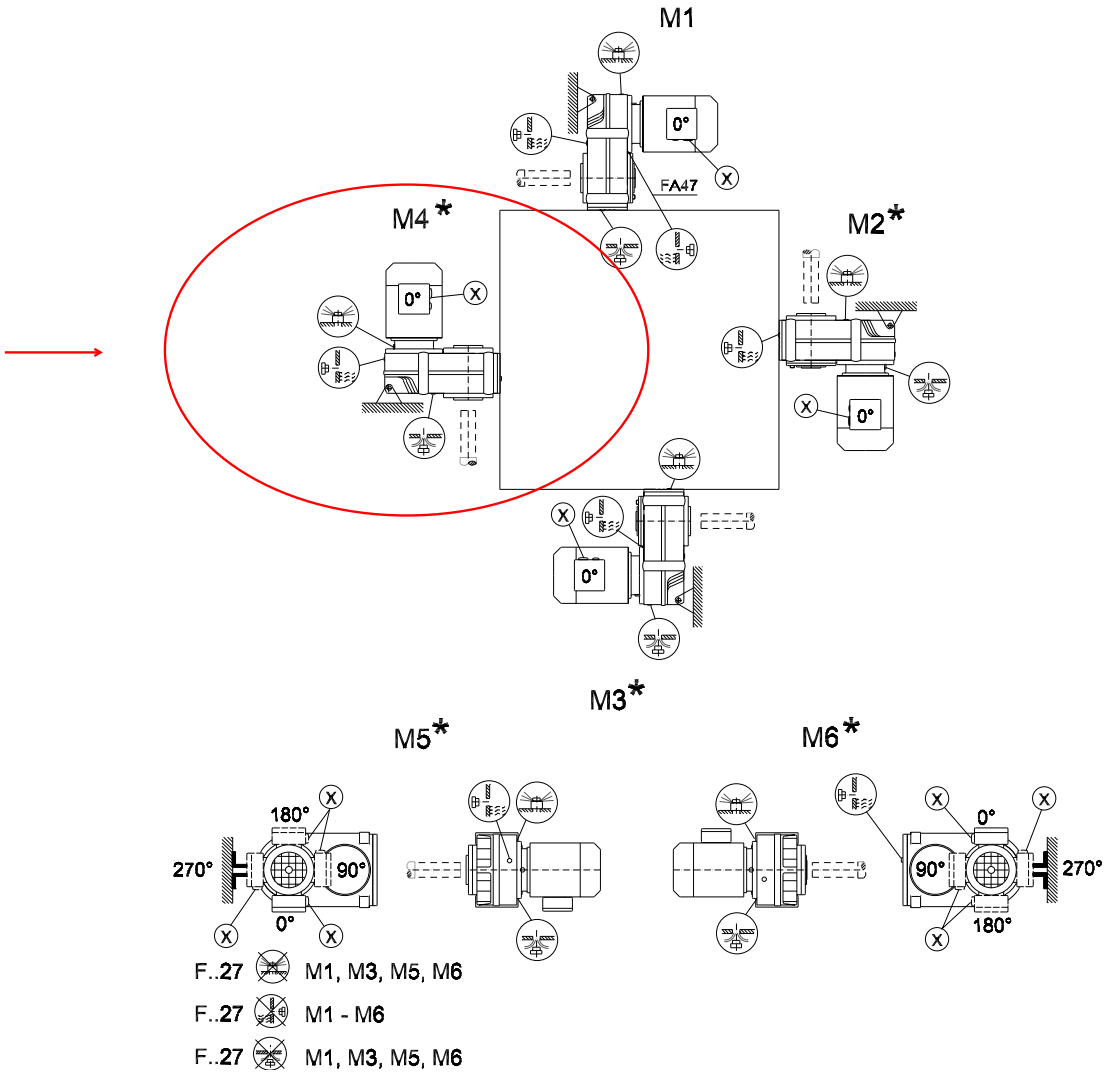

F..27 M1, M3, M5, M6

F..27 M1 - M6

F..27 M1, M3, M5, M6

* → page 51

9 Lubricants

General information

Unless a special arrangement is made, SEW-EURODRIVE supplies the drives with a lubricant fill adapted for the specific gear unit and mounting position. The decisive factor is the mounting position (M1 ... M6, → Sec. "Mounting Positions and Important Order Information") specified when ordering the drive. You must adapt the lubricant fill to any subsequent changes made to the mounting position (→ Lubricant fill quantities).

9.1 Lubricant table

The lubricant table on the following page shows the permitted lubricants for SEW-EURODRIVE gear units. Please note the following key to the lubricant table.

Key to the lubricant table

Abbreviations used, meaning of shading and notes:

CLP	= Mineral oil
CLP PG	= Polyglycol (W gear units, conforms to USDA-H1)
CLP HC	= Synthetic hydrocarbons
E	= Ester oil (water pollution danger category WGK 1)
HCE	= Synthetic hydrocarbons + ester oil (USDA-H1 certification)
HLP	= Hydraulic oil
	= Synthetic lubricant (= synthetic anti-friction bearing grease)
	= Mineral lubricant (= mineral-based anti-friction bearing grease)
1)	Helical-worm gear units with PG oil: Please contact SEW
2)	Special lubricant for Spiroplan® gear units only
3)	Recommendation: Select SEW $f_B \geq 1.2$
4)	Pay attention to critical starting behavior at low temperatures!
5)	Low-viscosity grease
6)	Ambient temperature
	Lubricant for the food industry (food grade oil)
	Biodegradable oil (lubricant for use in agriculture, forestry and water resources)

Anti-friction bearing greases

The anti-friction bearings in gear units and motors are given a factory-fill with the greases listed below. SEW-EURODRIVE recommends regreasing anti-friction bearings with a grease fill at the same time as changing the oil.

	Ambient temperature	Manufacturer	Type
Anti-friction bearing in gear unit	-20 °C ... +60 °C	Mobil	Mobilux EP 2
	-40 °C ... +80 °C	Mobil	Mobiltemp SHC 100
Anti-friction bearing in motor	-20 °C ... +80 °C	Esso	Unirex EQ3
	-20 °C ... +60 °C	Shell	Alvania RL3
	+80 °C ... +100 °C	Klüber	Barrierta L55/2
	-45 °C ... -25 °C	Shell	Aero Shell Grease 16
Special greases for anti-friction bearings in gear units:			
	-30 °C ... +40 °C	Aral	Eural Grease EP 2
	-20 °C ... +40 °C	Aral	Aralube BAB EP2

The following grease quantities are required:

- For fast-running bearings (motor and gear unit input end): Fill the cavities between the rolling elements one third full with grease.
- For slow-running bearings (in gear units and at gear unit output end): Fill the cavities between the rolling elements two thirds full with grease.

Lubricant table

01 805 892

	6) °C -50 0 +50 +100	DIN (ISO)	ISO,NLGI	Mobil®	Shell	Klüber	Aral	BP	Tribol	TEXACO		FUCHS
R...	Standard -10 +40	CLP(CC)	VG 220	Mobilgear 630	Shell Omala 220	Klüberoil GEM 1-220	Aral Degol BG 220	BP Energol GR-XP 220	Tribol 1100/220	Meropa 220	Optigear BM 220	Renolin CLP 220
K...(HK...)	-25 +80	CLP PG	VG 220	Mobil Glygoyle 30	Shell Tivela S 220	Klübersynth GH 6-220	Aral Degol GS 220	BP Enersyn SG-XP 220	Tribol 800/220	Synlube CLP 220	Optiflex A 220	
	4) -40 +80	CLP HC	VG 220	Mobil SHC 630	Shell Omala HD 220	Klübersynth EG 4-220	Aral Degol PAS 220		Tribol 1510/220	Pinnacle EP 220	Optigear Synthetic A 220	Renolin Unisyn CLP 220
	4) -40 +40		VG 150	Mobil SHC 629	Shell Omala HD 150	Klübersynth EG 4-150				Pinnacle EP 150		
F...	-20 +25	CLP (CC)	VG 150 VG 100	Mobilgear 627	Shell Omala 100	Klüberoil GEM 1-150	Aral Degol BG 100	BP Energol GR-XP 100	Tribol 1100/100	Meropa 150	Optigear BM 100	Renolin CLP 150
	-30 +10	HLP (HM)	VG 68-46 VG 32	Mobil D.T.E. 13M	Shell Tellus T 32	Klüberoil GEM 1-68	Aral Degol BG 46		Tribol 1100/68	Rando EP Ashless 46	Optigear 32	Renolin B 46 HVI
	4) -40 +10	CLP HC	VG 32	Mobil SHC 624		Klüber-Summit HySyn FG-32				Cetus PAO 46		
	4) -40 -20	HLP (HM)	VG 22 VG 15	Mobil D.T.E. 11M	Shell Tellus T 15	Isoflex MT 30 ROT		BP Energol HLP-HM 15		Rando HDZ 15		
S...(HS...)	Standard 0 +40	CLP (CC)	VG 680	Mobilgear 636	Shell Omala 680	Klüberoil GEM 1-680	Aral Degol BG 680	BP Energol GR-XP 680	Tribol 1100/680	Meropa 680	Optigear BM 680	Renolin CLP 680
	-20 +60	CLP PG	VG 680 1)		Shell Tivela S 680	Klübersynth GH 6-680		BP Enersyn SG-XP 680	Tribol 800/680	Synlube CLP 680		
	4) -30 +80	CLP HC	VG 460	Mobil SHC 634	Shell Omala HD 460	Klübersynth EG 4-460				Pinnacle EP 460		
	4) -40 +10		VG 150	Mobil SHC 629	Shell Omala HD 150	Klübersynth EG 4-150				Pinnacle EP 150		
	-20 +10	CLP (CC)	VG 150 VG 100	Mobilgear 627	Shell Omala 100	Klüberoil GEM 1-150	Aral Degol BG 100	BP Energol GR-XP 100	Tribol 1100/100	Meropa 100	Optigear BM 100	Renolin CLP 150
	-25 +20	CLP PG	VG 220 1)	Mobil Glygoyle 30	Shell Tivela S 220	Klübersynth GH 6-220			Tribol 800/220	Synlube CLP 220	Optiflex A 220	
	4) -40 0	CLP HC	VG 32	Mobil SHC 624		Klüber-Summit HySyn FG-32				Cetus PAO 46		
R...,K...(HK...), F...,S...(HS...)	4) -30 +40	HCE	VG 460		Shell Cassida Fluid GL 460	Klüberoil 4UH1-460 N	Aral Eural Gear 460				Optileb GT 460	
	-20 +40	E	VG 460			Klüberbio CA2-460	Aral Degol BAB 460				Optisynt BS 460	
W...(HW...)	Standard -20 +40	SEW PG	VG 460 2)			Klüber SEW HT-460-5						
	4) -40 +10	API GL5	SAE 75W90 (~VG 100)	Mobilube SHC 75 W90-LS								
	-20 +40	CLP PG	VG 460 3)			Klübersynth UH1 6-460						
R32 R302	-25 +60	DIN 51 818 5)	00	Glygoyle Grease 00	Shell Tivela GL 00	Klübersynth GE 46-1200				Multifak 6833 EP 00		
	Standard -15 +40		000 - 0	Mobilux EP 004	Shell Alvania GL 00		Aralub MFL 00	BP Energrease LS-EP 00		Multifak EP 000	Longtime PD 00	Renolin SF 7 - 041

9.2 Lubricant fill quantities

The specified fill quantities are **recommended values**. The precise values vary depending on the number of stages and gear ratio. When filling, it is essential to check the **oil level plug since it indicates the precise oil capacity**.

The following tables show guide values for lubricant fill quantities in relation to the mounting position M1 ... M6.

Helical (R) gear units

Gear unit type R.., R..F	Fill quantity in liters					
	M1[1)]	M2[1)]	M3	M4	M5	M6
R07/R07F	0.12	0.20	0.20	0.20	0.20	0.20
R17/R17F	0.25	0.55	0.35	0.55	0.35	0.35
R27/R27F	0.25/0.40	0.70	0.50	0.70	0.50	0.50
R37/R37F	0.30/0.95	0.85	0.95	1.05	0.75	0.95
R47/R47F	0.70/1.50	1.60	1.50	1.65	1.50	1.50
R57/R57F	0.80/1.70	1.90	1.70	2.10	1.70	1.70
R67/R67F	1.10/2.30	2.60/3.50	2.80	3.20	1.80	2.00
R77/R77F	1.20/3.00	3.80/4.10	3.60	4.10	2.50	3.40
R87/R87F	2.30/6.0	6.7/8.2	7.2	7.7	6.3	6.5
R97	4.60/9.8	11.7/14.0	11.7	13.4	11.3	11.7
R107	6.0/13.7	16.3	16.9	19.2	13.2	15.9
R137	10.0/25.0	28.0	29.5	31.5	25.0	25.0
R147	15.4/40.0	46.5	48.0	52.0	39.5	41.0
R167	27.0/70.0	82.0	78.0	88.0	66.0	69.0
Gear unit type RF.. / RM..	**Fill quantity in liters**					
	M1[1)]	**M2[1)]**	**M3**	**M4**	**M5**	**M6**
RF07	0.12	0.20	0.20	0.20	0.20	0.20
RF17	0.25	0.55	0.35	0.55	0.35	0.35
RF27	0.25/0.40	0.70	0.50	0.70	0.50	0.50
RF37	0.35/0.95	0.90	0.95	1.05	0.75	0.95
RF47	0.65/1.50	1.60	1.50	1.65	1.50	1.50
RF/RM57	0.80/1.70	1.80	1.70	2.00	1.70	1.70
RF/RM67	1.20/2.50	2.70/3.60	2.70	2.60	1.90	2.10
RF/RM77	1.20/2.60	3.80/4.10	3.30	4.10	2.40	3.00
RF/RM87	2.40/6.0	6.8/7.9	7.1	7.7	6.3	6.4
RF/RM97	5.1/10.2	11.9/14.0	11.2	14.0	11.2	11.8
RF/RM107	6.3/14.9	15.9	17.0	19.2	13.1	15.9
RF/RM137	9.5/25.0	27.0	29.0	32.5	25.0	25.0
RF/RM147	16.4/42.0	47.0	48.0	52.0	42.0	42.0
RF/RM167	26.0/70.0	82.0	78.0	88.0	65.0	71.0

1) The output end gear unit of multi-stage gear units must be filled with the larger oil volume.

FA.., FH.., FV.., FAF.., FHF.., FVF.., FAZ.., FHZ.., FVZ..:

Gear unit type	Fill quantity in liters					
	M1	M2	M3	M4	M5	M6
F..27	0.60	0.80	0.65	0.70	0.60	0.60
F..37	0.95	1.25	0.70	1.25	1.00	1.10
F..47	1.50	1.80	1.10	1.90	1.50	1.70
F..57	2.70	3.50	2.10	3.40	2.90	3.00
F..67	2.70	3.80	1.90	3.80	2.90	3.20
F..77	5.9	7.3	4.30	8.0	6.0	6.3
F..87	10.8	13.0	7.7	13.8	10.8	11.0
F..97	18.5	22.5	12.6	25.2	18.5	20.0
F..107	24.5	32.0	19.5	37.5	27.0	27.0
F..127	39.0	54.5	34.0	61.0	45.0	46.5
F..157	68.0	103.0	62.0	104.0	85.0	77.0

Helical-bevel (K) gear units

K.., KA..B, KH..B, KV..B:

Gear unit type	Fill quantity in liters					
	M1	M2	M3	M4	M5	M6
K..37	0.50	1.00	1.00	1.25	0.95	0.95
K..47	0.80	1.30	1.50	2.00	1.60	1.60
K..57	1.20	2.30	2.50	2.80	2.60	2.40
K..67	1.10	2.40	2.60	3.45	2.60	2.60
K..77	2.20	4.10	4.40	5.8	4.20	4.40
K..87	3.70	8.0	8.7	10.9	8.0	8.0
K..97	7.0	14.0	15.7	20.0	15.7	15.5
K..107	10.0	21.0	25.5	33.5	24.0	24.0
K..127	21.0	41.5	44.0	54.0	40.0	41.0
K..157	31.0	62.0	65.0	90.0	58.0	62.0
K..167	33.0	95.0	105.0	123.0	85.0	84.0
K..187	53.0	152.0	167.0	200	143.0	143.0

KF..:

Gear unit type	Fill quantity in liters					
	M1	M2	M3	M4	M5	M6
KF37	0.50	1.10	1.10	1.50	1.00	1.00
KF47	0.80	1.30	1.70	2.20	1.60	1.60
KF57	1.30	2.30	2.70	3.15	2.90	2.70
KF67	1.10	2.40	2.80	3.70	2.70	2.70
KF77	2.10	4.10	4.40	5.9	4.50	4.50
KF87	3.70	8.2	9.0	11.9	8.4	8.4
KF97	7.0	14.7	17.3	21.5	15.7	16.5
KF107	10.0	21.8	25.8	35.1	25.2	25.2
KF127	21.0	41.5	46.0	55.0	41.0	41.0
KF157	31.0	66.0	69.0	92.0	62.0	62.0

10 Appendix

10.1 Index of changes

The following additions and changes have been made compared to the previous edition of the "Explosion-Proof Gear Units R..7, F..7, K..7, S..7, SPIROPLAN® W" (publication number: 1055520x, edition 11/2002) operating instructions:

General additions and corrections.

Mechanical installation

- Installing the gear unit: Data on flatness error
- Installing torque arms for mounted gear units: Data on retaining bolts
- Mounted gear units with shrink disks: Information on assembly / removal has been added
- Mounted gear units with TorqLOC®
- AM adapter coupling: Point A

Inspection and maintenance

- Lubricant change intervals

11 Index

A

AD inspection / maintenance 47
AD, mounting on the input shaft assembly 40
Adapter coupling 36
Adjusting the mounting position 17
AM with backstop 38
Anti-friction bearing greases 75
AQ, installing the coupling adapter 38
AQA, maintenance / inspection 47

B

Backstop RS 38
Breather valve 18

C

Centering shoulder AD../ZR 41
Change the oil seal 47
Check oil 46
Check oil level 46
Churning losses 51
Couplings, installation 20
Cover with backstop AD../RS 43
Cover with motor mounting platform AD../P 40
Customer service 48

D

Damp locations 17
Designated use 6

E

Extended storage 7

F

F gear units, lubricant fill quantities 78
Flatness error 16

G

Gear unit inspection 46
Gear unit maintenance 46
Gear unit structure 9
Gear unit venting 18

H

Helical gear units, lubricant fill quantities 77, 78
helical gear units, structure 9
Helical-bevel gear units, lubricant fill quantities 79
Helical-bevel gear units, structure 11
Helical-worm gear unit, structure 12
Helical-worm gear units, lubricant fill quantities 80

I

IEC adapter 36
Input and output elements, installation 19
Inspection intervals 45
Inspection of AD adapter 47
Inspection of AM / AQA adapters 47
Installation tolerances 15
Installing couplings 20
Installing input and output elements 19
Installing the AM coupling adapter 36
Installing the AQ coupling adapter 38
Installing the gear unit 16

K

K gear units, lubricant fill quantities 79
Keyway 23

L

Lubricant change intervals 45
Lubricant fill quantities 77
Lubricant fill quantities for helical gear units 77, 78
Lubricant fill quantities for helical-bevel gear units 79
Lubricant fill quantities for helical-worm gear units 80
Lubricant fill quantities for parallel shaft helical gear units 78
Lubricant fill quantities for Spiroplan® gear units 80
Lubricant table 74, 76
Lubricants 74

M

Maintenance / inspection 47
Maintenance intervals 45
Maintenance of AD adapter 47
Maintenance of AM / AQA adapters 47
Malfunctions 48
  AD input shaft assembly 49
  AM / AQA / AL adapters 48
  Gear units 48
Mechanical installation 15
Motor mounting platform 40
Mounted gear units 23, 27, 30
Mounting on the input shaft assembly AD 40
Mounting position designation 50
Mounting positions
  Helical gear units 52, 55
  Helical-bevel gear units 60
  Helical-worm gear units 65
  Parallel shaft helical gear units 57
  Spiroplan® gear units 71
Mounting torque arms 21

N

Nameplate 14
NEMA adapter 36



O

Oil change 46
Open air 17

P

Painting gear units 18
Parallel shaft helical gear unit, structure 10
Parallel shaft helical gear units, lubricant fill quantities 78

R

R gear units, lubricant fill quantities 77
RS backstop 43
RX gear units, lubricant fill quantities 78

S

S gear units, lubricant fill quantities 80
Safety notes 6
Serial number 14
Shrink disk 27
Solid shaft 19
Spiroplan® gear units, lubricant fill quantities 80
Spiroplan® W gear units, structure 13
Splined hollow shaft 23
Startup 44
- *Helical, parallel shaft helical and helical-bevel gear units* 44
- *Helical-worm and Spiroplan® W gear units* 44

Structure
- *Helical gear units* 9
- *Helical-bevel gear units* 11
- *Helical-worm gear unit* 12
- *Parallel shaft helical gear unit* 10
- *Spiroplan® gear units* 13

T

TorqLOC® 30
Torque arm for helical-bevel gear units 21
Torque arm for helical-worm gear units 22
Torque arm for Spiroplan® W gear units 22
Torque arms for parallel shaft helical gear units 21
Torque arms, mounting 21
Transportation 7

U

Unit designation 14

W

W gear units, lubricant fill quantities 80
Waste disposal 5

Australia			
Assembly **Sales** **Service**	**Melbourne**	SEW-EURODRIVE PTY. LTD. 27 Beverage Drive Tullamarine, Victoria 3043	Tel. +61 3 9933-1000 Fax +61 3 9933-1003 http://www.sew-eurodrive.com.au enquires@sew-eurodrive.com.au
	Sydney	SEW-EURODRIVE PTY. LTD. 9, Sleigh Place, Wetherill Park New South Wales, 2164	Tel. +61 2 9725-9900 Fax +61 2 9725-9905 enquires@sew-eurodrive.com.au

Austria			
Assembly **Sales** **Service**	**Wien**	SEW-EURODRIVE Ges.m.b.H. Richard-Strauss-Strasse 24 A-1230 Wien	Tel. +43 1 617 55 00-0 Fax +43 1 617 55 00-30 http://sew-eurodrive.at sew@sew-eurodrive.at

Belgium			
Assembly **Sales** **Service**	**Brüssel**	CARON-VECTOR S.A. Avenue Eiffel 5 B-1300 Wavre	Tel. +32 10 231-311 Fax +32 10 231-336 http://www.caron-vector.be info@caron-vector.be

Brazil			
Production **Sales** **Service**	**Sao Paulo**	SEW-EURODRIVE Brasil Ltda. Avenida Amâncio Gaiolli, 50 Caixa Postal: 201-07111-970 Guarulhos/SP - Cep.: 07251-250	Tel. +55 11 6489-9133 Fax +55 11 6480-3328 http://www.sew.com.br sew@sew.com.br
	Additional addresses for service in Brazil provided on request!		

Bulgaria			
Sales	**Sofia**	BEVER-DRIVE GMBH Bogdanovetz Str.1 BG-1606 Sofia	Tel. +359 2 9532565 Fax +359 2 9549345 bever@mbox.infotel.bg

Cameroon			
Sales	**Douala**	Electro-Services Rue Drouot Akwa B.P. 2024 Douala	Tel. +237 4322-99 Fax +237 4277-03

Canada			
Assembly **Sales** **Service**	**Toronto**	SEW-EURODRIVE CO. OF CANADA LTD. 210 Walker Drive Bramalea, Ontario L6T3W1	Tel. +1 905 791-1553 Fax +1 905 791-2999 http://www.sew-eurodrive.ca l.reynolds@sew-eurodrive.ca
	Vancouver	SEW-EURODRIVE CO. OF CANADA LTD. 7188 Honeyman Street Delta. B.C. V4G 1 E2	Tel. +1 604 946-5535 Fax +1 604 946-2513 b.wake@sew-eurodrive.ca
	Montreal	SEW-EURODRIVE CO. OF CANADA LTD. 2555 Rue Leger Street LaSalle, Quebec H8N 2V9	Tel. +1 514 367-1124 Fax +1 514 367-3677 a.peluso@sew-eurodrive.ca
	Additional addresses for service in Canada provided on request!		

Chile			
Assembly **Sales** **Service**	**Santiago de Chile**	SEW-EURODRIVE CHILE LTDA. Las Encinas 1295 Parque Industrial Valle Grande LAMPA RCH-Santiago de Chile P.O. Box Casilla 23 Correo Quilicura - Santiago - Chile	Tel. +56 2 75770-00 Fax +56 2 75770-01 sewsales@entelchile.net

China			
Production **Assembly** **Sales** **Service**	**Tianjin**	SEW-EURODRIVE (Tianjin) Co., Ltd. No. 46, 7th Avenue, TEDA Tianjin 300457	Tel. +86 22 25322612 Fax +86 22 25322611 victor.zhang@sew-eurodrive.cn http://www.sew.com.cn



Switzerland			
Assembly **Sales** **Service**	**Basel**	Alfred Imhof A.G. Jurastrasse 10 CH-4142 Münchenstein bei Basel	Tel. +41 61 41717-17 Fax +41 61 41717-00 http://www.imhof-sew.ch info@imhof-sew.ch

Thailand			
Assembly **Sales** **Service**	**Chon Buri**	SEW-EURODRIVE (Thailand) Ltd. Bangpakong Industrial Park 2 700/456, Moo.7, Tambol Donhuaroh Muang District Chon Buri 20000	Tel. +66 38 454281 Fax +66 38 454288 sewthailand@sew-eurodrive.co.th

Tunisia			
Sales	**Tunis**	T. M.S. Technic Marketing Service 7, rue Ibn El Heithem Z.I. SMMT 2014 Mégrine Erriadh	Tel. +216 1 4340-64 + 1 4320-29 Fax +216 1 4329-76

Turkey			
Assembly **Sales** **Service**	**Istanbul**	SEW-EURODRIVE Hareket Sistemleri Sirketi Bagdat Cad. Koruma Cikmazi No. 3 TR-34846 Maltepe ISTANBUL	Tel. +90 216 4419163 + 216 4419164 + 216 3838014 Fax +90 216 3055867 sew@sew-eurodrive.com.tr

USA			
Production **Assembly** **Sales** **Service**	**Greenville**	SEW-EURODRIVE INC. 1295 Old Spartanburg Highway P.O. Box 518 Lyman, S.C. 29365	Tel. +1 864 439-7537 Fax Sales +1 864 439-7830 Fax Manuf. +1 864 439-9948 Fax Ass. +1 864 439-0566 Telex 805 550 http://www.seweurodrive.com cslyman@seweurodrive.com
Assembly **Sales** **Service**	**San Francisco**	SEW-EURODRIVE INC. 30599 San Antonio St. Hayward, California 94544-7101	Tel. +1 510 487-3560 Fax +1 510 487-6381 cshayward@seweurodrive.com
	Philadelphia/PA	SEW-EURODRIVE INC. Pureland Ind. Complex 2107 High Hill Road, P.O. Box 481 Bridgeport, New Jersey 08014	Tel. +1 856 467-2277 Fax +1 856 845-3179 csbridgeport@seweurodrive.com
	Dayton	SEW-EURODRIVE INC. 2001 West Main Street Troy, Ohio 45373	Tel. +1 937 335-0036 Fax +1 937 440-3799 cstroy@seweurodrive.com
	Dallas	SEW-EURODRIVE INC. 3950 Platinum Way Dallas, Texas 75237	Tel. +1 214 330-4824 Fax +1 214 330-4724 csdallas@seweurodrive.com
	Additional addresses for service in the USA provided on request!		

Venezuela			
Assembly **Sales** **Service**	**Valencia**	SEW-EURODRIVE Venezuela S.A. Av. Norte Sur No. 3, Galpon 84-319 Zona Industrial Municipal Norte Valencia, Estado Carabobo	Tel. +58 241 832-9804 Fax +58 241 838-6275 sewventas@cantv.net sewfinanzas@cantv.net

How we're driving the world

With people who think fast and develop the future with you.

With a worldwide service network that is always close at hand.

With drives and controls that automatically improve your productivity.

With comprehensive knowledge in virtually every branch of industry today.

With uncompromising quality that reduces the cost and complexity of daily operations.



SEW-EURODRIVE
Driving the world

With a global presence that offers responsive and reliable solutions. Anywhere.

With innovative technology that solves tomorrow's problems today.

With online information and software updates, via the Internet, available around the clock.









SEW EURODRIVE

SEW-EURODRIVE GmbH & Co KG
P.O. Box 3023 · D-76642 Bruchsal / Germany
Phone +49 7251 75-0 · Fax +49 7251 75-1970
sew@sew-eurodrive.com

→ **www.sew-eurodrive.com**

Dimensions
Type RF Gearmotors - Flange Mounted

FIG. I

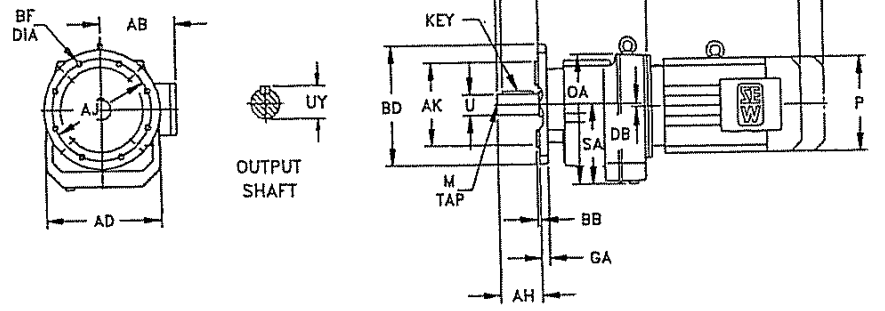

FIG. II

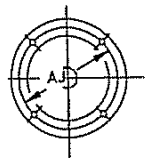

Drawing Notes:

Dimension AB is to conduit box.

Dimension LB is for motor brake option.

Eyebolts are supplied for motor sizes ≥ DV112 and reducer sizes ≥ RX67 and are removable.

Gearcase

Model	AD	DB	OA	Q	SA
RF97	13.70	0.40	14.72	17.32	9.06
	348	10.2	374	440	230
RF107	16.10	0.80	16.26	19.49	10.04
	409	20.4	413	495	255

Output Shaft Inch Series/*Optional Metric Series*

U	UY	V	VO	Key	M
$2.375^{+0}_{-.001}$	2.65	4.72	0.51	$5/8 \times 5/8 \times 3\,5/8$	$3/4 - 10 \times 1.61$
$60^{+.030}_{+.011}$	*64*	*120*	*5*	*18 x 11 x 110*	*M20 x 42*
$2.875^{+0}_{-.001}$	3.20	5.51	0.67	$3/4 \times 3/4 \times 4\,1/8$	$3/4 - 10 \times 1.61$
$70^{+.030}_{+.011}$	*74.5*	*140*	*7.5*	*20 x 12 x 125*	*M20 x 42*

Flange (Specify BD dimension when ordering)

Model		AH	AJ	AK	BB	BD	BF	GA
RF97	Fig. I	4.72	15.75	$13.780^{+0}_{-.001}$	0.20	17.72	0.69	1.00
		120	400	$350^{+0}_{-.036}$	5	450	17.5	25.5
	Fig. II	4.72	11.81	$9.843^{+0}_{-.001}$	0.20	13.78	0.69	0.93
		120	300	$250^{+0}_{-.029}$	5	350	17.5	23.5
RF107	Fig. I	5.51	15.75	$13.780^{+0}_{-.001}$	0.20	17.72	0.69	0.93
		140	400	$350^{+0}_{-.036}$	5	450	17.5	23.5
	Fig. II	5.51	11.81	$9.843^{+0}_{-.001}$	0.20	13.78	0.69	0.79
		140	300	$250^{+0}_{-.029}$	5	350	17.5	20

Motor

Model		DT			DV								
		80	90	100	112M	132S	132M	132ML	160M	160L	180	200	225
	AB	5.43	6.73	6.89	7.40	7.40	9.13	9.13	9.13	10.04	10.55	11.81	11.97
		138	171	175	188	188	232	232	232	255	268	300	304
	LB	2.52	3.35	3.35	3.15	3.15	4.41	4.41	4.41	6.14	6.14	6.14	6.14
		64	85	85	80	80	112	112	112	156	156	156	156
	P	5.71	7.76	7.76	8.70	8.70	10.83	10.83	10.83	13.03	13.03	15.51	15.51
		145	197	197	221	221	275	275	275	331	331	394	394
RF97	C	26.42	27.20	29.21	30.59	32.36	33.15	35.51	35.51	37.40	40.24	42.09	—
		671	691	742	777	822	842	902	902	950	1022	1069	—
RF107	C	—	—	31.10	32.52	34.29	35.08	37.44	37.44	39.33	42.17	44.02	47.24
		—	—	790	826	871	891	951	951	999	1071	1118	1200

Dimensions are inch / mm

See page 122 for available output shaft sizes.

Dimensions
Type FA Gearmotors - Shaft Mounted

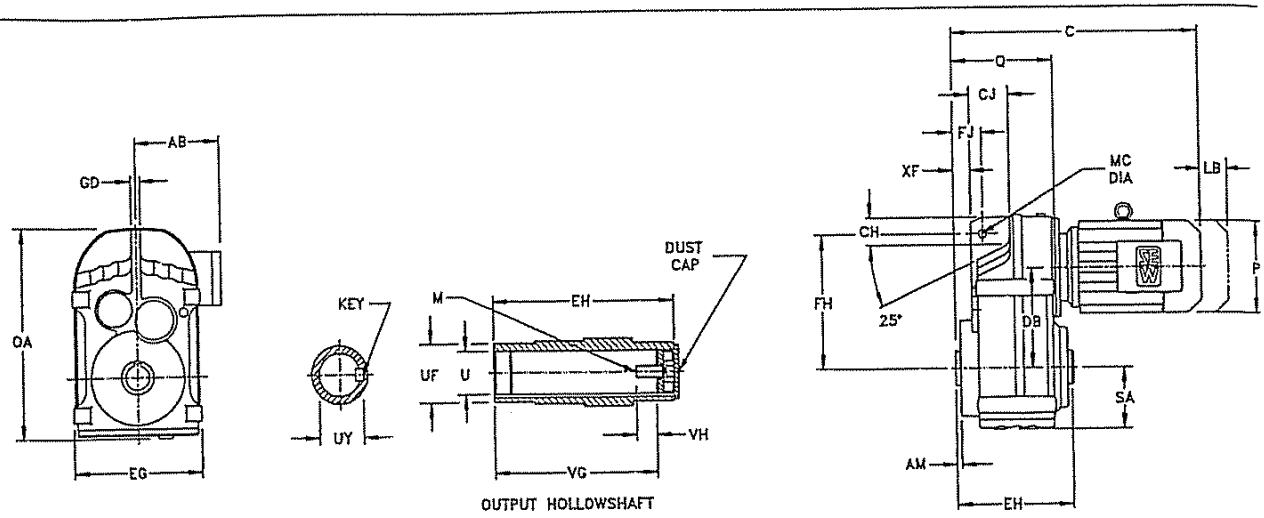

Drawing Notes:

Dimension AB is to conduit box.

Dimension LB is for motor brake option.

Eyebolts are supplied for motor sizes ≥ DV112 and reducer sizes ≥ R67 and are removable

Gearcase

Model		AM	CH	CJ	DB	EG	FH	FJ	GD	MC	OA	Q	SA	XF
FA37		0.02	1.18	1.81	4.41	6.65	6.22	1.24	0.47	0.55	9.92	4.33	2.99	0.59
		0.5	30	46	112	169	158	31.5	12	14	252	110	76	15
FA47		0.04	0.87	2.52	5.04	7.28	6.69	1.26	0.47	0.55	10.59	5.24	3.03	0.47
		1	22	64	128.1	185	170	32	12	14	269	133	77	12
FA57		0.04	1.22	2.36	5.35	8.07	7.80	1.59	0.55	0.55	12.48	5.91	3.66	0.77
		1	31	60	136	205	198	40.5	14	14	317	150	93	19.5
FA67		0.04	1.57	2.56	6.28	8.54	8.58	1.61	0.63	0.55	13.50	6.34	3.82	0.83
		1	40	65	159.5	217	218	41	16	14	343	161	97	21

Output Shaft Inch Series/*Optional Metric Series* For solid shaft design see page 242.

Model	EH	U	UF	UY	VG	VH	Key	M
FA37	4.72	1.250 $^{+.0005}_{-0}$	1.77	1.37	4.13	0.67	1/4 × 1/4 × 1 11/16	7/16–14 × 1
	120	*30* $^{+.021}_{-0}$	*45*	*33.3*	*105*	*17*	*8 x 7 x 40*	*M10 x 25*
FA47	5.91	1.375 $^{+.0005}_{-0}$	1.97	1.52	5.20	0.65	5/16 × 5/16 × 1 13/16	1/2–13 × 1
	150	*35* $^{+.025}_{-0}$	*50*	*38.3*	*132*	*22*	*10 x 8 x 45*	*M12 x 30*
FA57	7.09	1.500 $^{+.0005}_{-0}$	2.17	1.67	6.14	1.36	3/8 × 3/8 × 2 1/4	5/8–11 × 1 3/4
	180	*40* $^{+.025}_{-0}$	*55*	*43.3*	*156*	*29*	*12 x 8 x 50*	*M16 x 40*
FA67	7.09	1.500 $^{+.0005}_{-0}$	2.17	1.67	6.14	1.36	3/8 × 3/8 × 2 1/4	5/8–11 × 1 3/4
	180	*40* $^{+.025}_{-0}$	*55*	*43.3*	*156*	*29*	*12 x 8 x 50*	*M16 x 40*

Motor

Model		DT				DV	
		71	80	90	100	112M	132S
	AB	5.43 138	5.43 138	6.73 171	6.89 175	7.40 188	7.40 188
	LB	2.52 64	2.52 64	3.35 85	3.35 85	3.15 80	3.15 80
	P	5.71 145	5.71 145	7.76 197	7.76 197	8.70 221	8.70 221
FA37	C	12.40 315	14.37 365	15.16 385	17.24 438	— —	— —
FA47	C	13.31 338	15.28 388	16.06 408	18.15 461	— —	— —
FA57	C	13.74 349	15.71 399	16.50 419	18.46 469	19.84 504	21.73 552
FA67	C	14.17 360	16.14 410	16.93 430	18.90 480	20.28 515	22.17 563

Dimensions are $\frac{\text{inch}}{\text{mm}}$

See page 238 for torque arm details

See page 241 for available output shaft sizes.

LEFT BLANK

SCRAPER

MOTOR

LEFT BLANK

SEW EURODRIVE



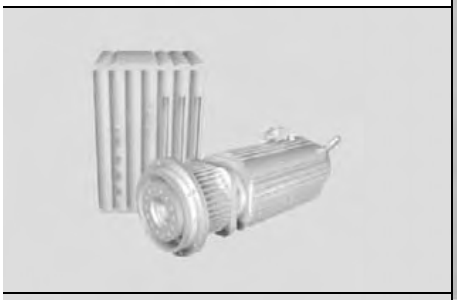

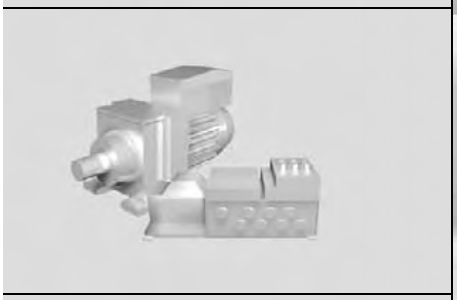

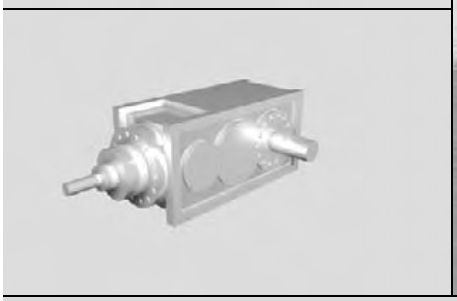

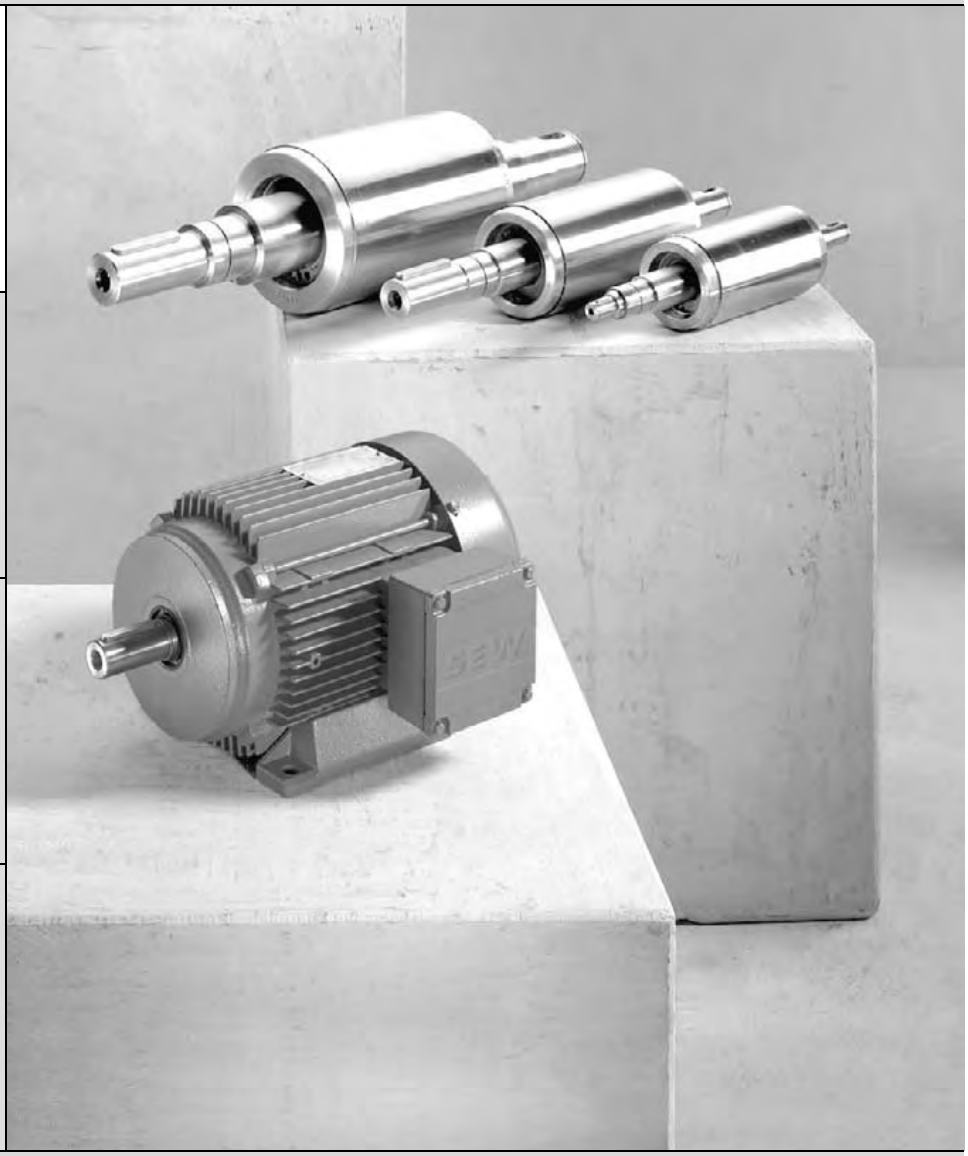

AC Motors DR/DV/DT/DTE/DVE, Asynchronous Servo Motors CT/CV

A6.C01

Edition 08/2004

11291613 / EN

Operating Instructions



SEW EURODRIVE

1 Important Notes 4

2 Safety Notes 5

3 Motor Design 6
3.1 Basic structure of AC motors 6
3.2 Nameplate, unit designation 7

4 Mechanical Installation 9
4.1 Before you begin 9
4.2 Preliminary work 9
4.3 Installing the motor 10
4.4 Installation tolerances 11

5 Electrical Installation 12
5.1 Wiring notes 12
5.2 Special aspects for operation with a frequency inverter 12
5.3 Special aspects of single-phase motors 12
5.4 Improving the grounding (EMC) 13
5.5 Special aspects of torque motors and low-speed motors 13
5.6 Special aspects in switching operation 14
5.7 Environmental conditions during operation 14
5.8 Connecting the motor 15
5.9 Preparing motor sizes 56 and 63 – knockout 16
5.10 Connecting DT56 motor...+/BMG 16
5.11 Single-phase version ET56 17
5.12 Connecting the motor using the IS plug connector 17
5.13 Connect the motor using plug connectors AB.., AD.., AM.., AS 21
5.14 Connecting the motor using ASK1 plug connector 21
5.15 Connecting the brake 23
5.16 Accessory equipment 24

6 Startup 28
6.1 Prerequisites for startup 28
6.2 Altering the blocking direction on motors with a backstop 29

7 Malfunctions 31
7.1 Motor Malfunctions 31
7.2 Brake problems 32
7.3 Malfunctions during operation with a frequency inverter 32

8 Inspection / Maintenance 33
8.1 Inspection and maintenance intervals 33
8.2 Preliminary work for motor and brake maintenance 34
8.3 Inspection / maintenance on the motor 37
8.4 Inspection / maintenance of the BMG02 brake 39
8.5 Inspection / maintenance of the brake BR03 40
8.6 Inspection / maintenance for BMG05-8, BM15-62 brakes 44
8.7 Inspection / maintenance of the BMG61/122 brake 49

9 Technical Data 52
9.1 Work done, braking torque BMG02 52
9.2 Information for ordering a replacement BMG02 52
9.3 Work done, working air gap, braking torques of BMG05-8, BR03 53
9.4 Work done, working air gap, braking torques of BM15 - 62 54
9.5 Operating currents 55
9.6 Permitted ball bearing types 59
9.7 Lubricant table for anti-friction bearings of SEW motors 59

10 Appendix 60
10.1 Index of changes 60
10.2 Index 61

1 Important Notes

Safety and warning notes

Always follow the safety and warning instructions in these operating instructions!



Electrical hazard
Possible consequences: Severe or fatal injuries.



Hazard
Possible consequences: Severe or fatal injuries.



Hazardous situation
Possible consequences: Slight or minor injuries.



Harmful situation
Possible consequences: Damage to the drive and the environment.



Tips and useful information.



You must adhere to the operating instructions to ensure:

- Trouble-free operation
- Fulfillment of any rights to claim under limited warranty

Consequently, read the operating instructions before you start operating the drive!

The operating instructions contain important information about servicing. Therefore, keep the operating instructions close to the drive.

Waste disposal



Dispose of the following materials in accordance with the regulations in force:

- Iron
- Aluminum
- Copper
- Plastic
- Electronic components

2 Safety Notes

Preface

The following safety notes are concerned with the use of motors. If using **gearmotors**, also refer to the safety notes for gear units in the corresponding operating instructions.

Please also consider the supplementary safety notes in the individual sections of these operating instructions.

General information

During and after operation, motors and gearmotors have live and moving parts and their surfaces may be hot.

All work related to transport, putting into storage, setting up/mounting, connection, startup, maintenance and repair may only be performed by trained personnel observing

- The corresponding detailed operating instructions and wiring diagrams
- The warning and safety signs on the motor/gearmotor
- The specific regulations and requirements for the system
- The national / regional regulations governing safety and accident prevention

Severe injuries and damage to property may result from

- Improper use
- Incorrect installation or operation
- Unauthorized removal of necessary protection covers or the housing

Designated use

These electric motors are intended for industrial systems. They fulfill the applicable standards and regulations:

- Low voltage directive 73/23/EEC

Technical data and information about the permitted conditions can be found on the nameplate and in the documentation.

It is essential to observe all the specified information!

Transportation

Inspect the shipment for damage as soon as you receive the delivery. Inform the shipping company immediately. It may be necessary to preclude startup.

Tighten installed eyebolts. They are only designed for the weight of the motor/gearmotor; do not attach any additional loads.

The installed lifting eyebolts comply with DIN 580. Observe the loads and regulations specified in this standard. If the gearmotor is equipped with two suspension eye lugs or lifting eyebolts, then both of the suspension eye lugs should be used for transportation. In this case, the tension force vector of the slings must not exceed a 45° angle in accordance with DIN 580.

Use suitable, sufficiently rated handling equipment if necessary. Remove any transportation fixtures prior to startup.

Installation / assembly

Follow the instructions in the section "Mechanical Installation"!

Inspection / maintenance

Follow the instructions in the section "Inspection and Maintenance"!

3 Motor Design

The following illustration is intended to explain the general structure. Its only purpose is to facilitate the assignment of components to the spare parts lists. Discrepancies are possible depending on the motor size and version!

3.1 Basic structure of AC motors

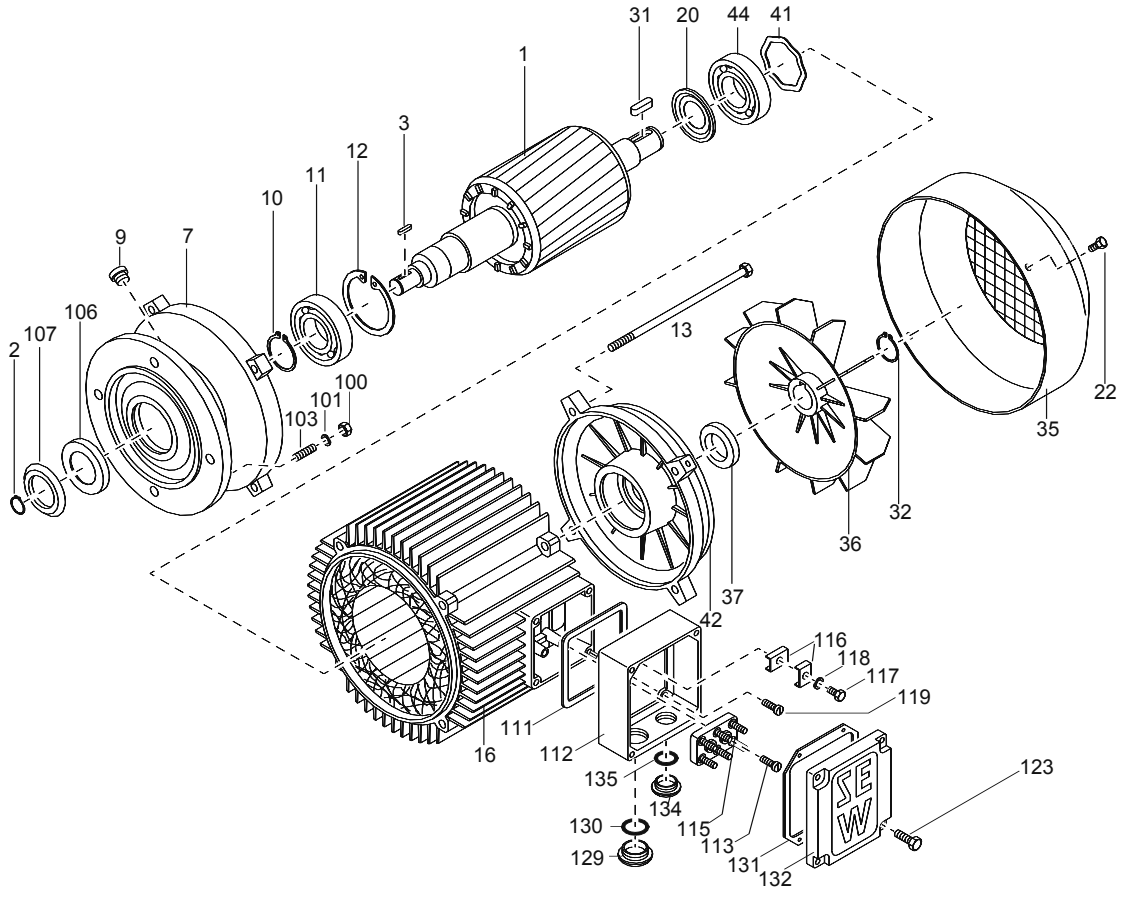

02969AXX

[1] Rotor, cpl.	[31] Key	[107] Oil-flinger ring	[131] Sealing washer
[2] Circlip	[32] Circlip	[111] Gasket	[132] Terminal box cover
[3] Key	[35] Fan guard	[112] Terminal box lower part	[134] Screw plug
[7] Flanged end shield	[36] Fan	[113] Machine screw	[135] Sealing washer
[9] Screw plug	[37] V-ring	[115] Terminal board	
[10] Circlip	[41] Equalizing ring	[116] Terminal yoke	
[11] Grooved ball bearing	[42] Non drive-end bearing shield	[117] Hex head bolt	
[12] Circlip	[44] Grooved ball bearing	[118] Lock washer	
[13] Hex head screw (tie rod)	[100] Hex nut	[119] Machine screw	
[16] Stator, cpl.	[101] Lock washer	[123] Hex head bolt	
[20] Nilos ring	[103] Stud	[129] Screw plug	
[22] Hex head bolt	[106] Oil seal	[130] Sealing washer	

3.2 Nameplate, unit designation

Nameplate

Example: DFV 160 M4 /BM brake motor

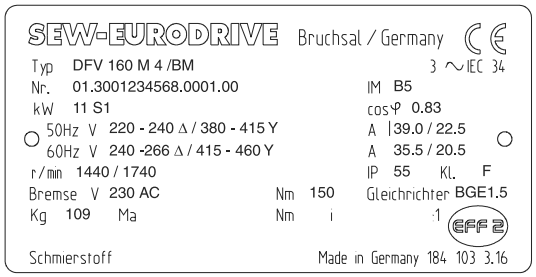

03214BXX

Unit designation

Example: DR / DT / DV / DTE / DVE AC (brake) motors

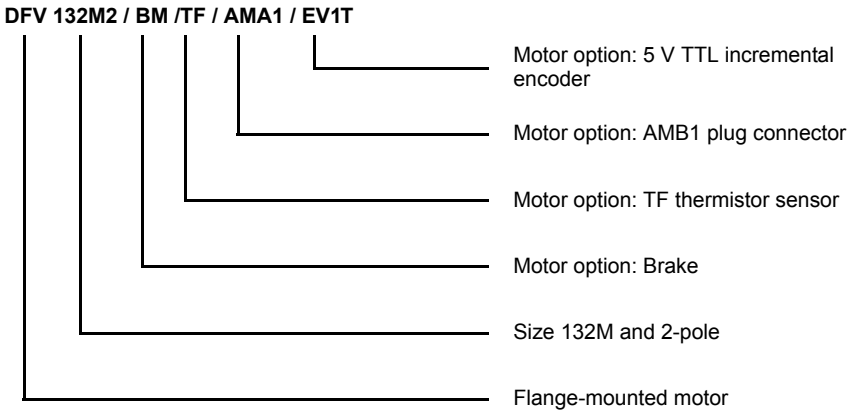

Example: Serial number

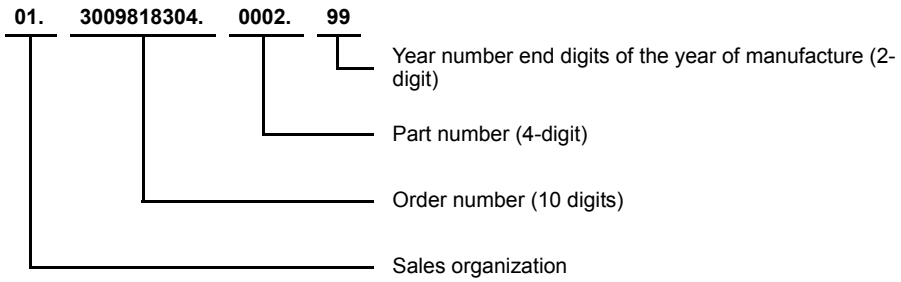

Nameplate

Example: CT90L4 / BMG / TF / ES1S servo brake motor

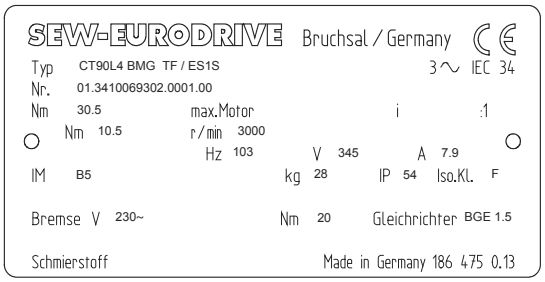

51358BXX

Unit designation

Examples: Servo (brake) motors CT / CV

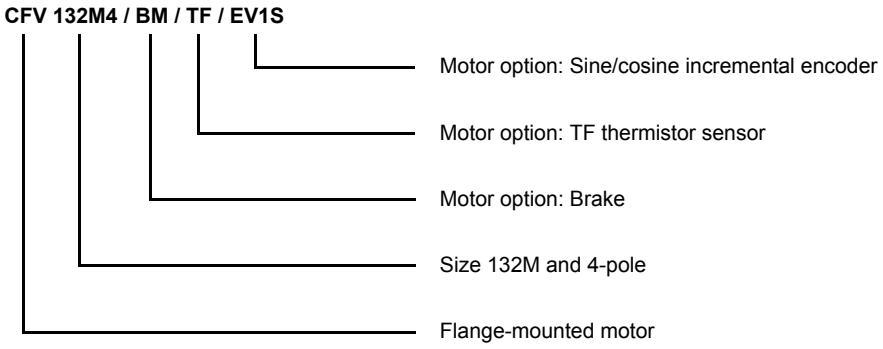

Example: Serial number

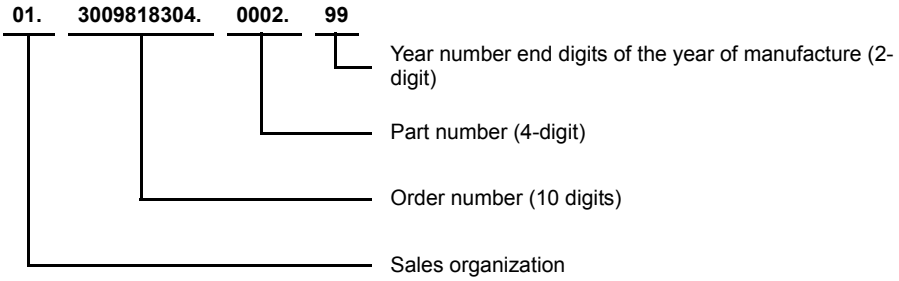

4 Mechanical Installation

It is essential to comply with the safety notes in Section 2 during installation!

4.1 Before you begin

The drive may only be installed if

- The entries on the nameplate of the drive and/or the output voltage of the frequency inverter match the voltage supply system
- The drive is undamaged (no damage caused by transportation or storage)
- It is certain that the following requirements have been met:
  - Ambient temperature between –20 °C and +40 °C[1)]
  - No oil, acid, gas, vapors, radiation, etc.
  - Installation altitude max. 1000 m above sea level
  - Note the restrictions for encoders
  - Special versions: Drive configured in accordance with the ambient conditions

4.2 Preliminary work

Motor shaft ends must be thoroughly cleaned of anti-corrosion agents, contamination or similar (use a commercially available solvent). Do not allow the solvent to penetrate the bearings or shaft seals – this could cause material damage!

Extended storage of motors

- Please note the reduced grease utilization period of the ball bearings after storage periods exceeding one year.
- Check whether the motor has absorbed moisture as a result of being stored for a long time. Measure the insulation resistance to do this (measuring voltage 500 V).

The insulation resistance (→ following figure) varies greatly depending on the temperature! The motor must be dried if the insulation resistance is not adequate.

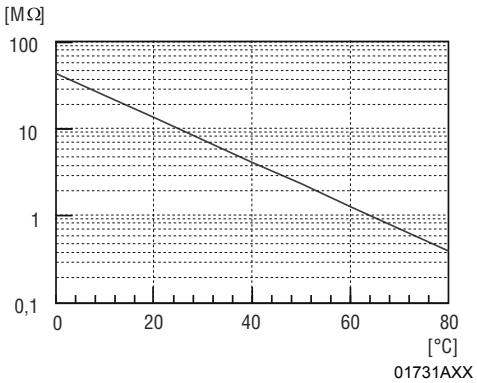

1) Minimum temperature for motors with backstop: –15 °C. Note that the temperature range of the gear unit may also be restricted (→ gear unit operating instructions)

Drying the motor

Heat up the motor

- with hot air or
- using an isolation transformer
  - Connect the windings in series (→ following figure)
  - Auxiliary AC voltage supply max. 10 % of the rated voltage with max. 20 % of the rated current

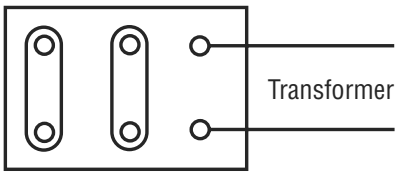

01730AEN

The drying process is finished when the minimum insulation resistance has been attained.

Check the terminal box to see whether

- The inside is clean and dry
- The connections and fixing parts are free from corrosion
- The joint seals are OK
- The cable glands are sound, otherwise clean or replace them.

4.3 Installing the motor



The motor or gearmotor may only be mounted or installed in the specified mounting position on a level and torsionally rigid support structure which is not subjected to shocks.

Carefully align the motor and the driven machine to avoid placing any unacceptable strain on the output shafts (observe permissible overhung load and axial thrust data!).

Do not butt or hammer the shaft end.

Use an appropriate cover to protect motors in vertical mounting positions from objects or fluids entering (protection cowl C).

Ensure an unobstructed cooling air supply and that air heated by other apparatus cannot be drawn in or reused.

Balance components for subsequent mounting on the shaft with a half key (motor shafts are balanced with a half key).

Any condensation drain holes will be sealed by plastic plugs and should only be opened when necessary; open condensation drain holes are not permitted, as this would invalidate higher classes of enclosure.

If using brake motors with manual brake release, screw in either the hand lever (with self-reengaging manual brake release) or the setscrew (with lockable manual brake release).

Note the following for encoder mounting:

Foot-mounted motors CT/DT71, CT/DT90, CV/DV132M, CV/DV160L must be mounted on supports because the radius of the cover is greater than the shaft height.

For foot-mounted (brake) motors sizes DTE90L and DVE132M, the shaft height corresponds to the IEC standard motor of the next higher power level (100 mm or 160 mm). The foot dimensions of DTE90, DVE180, and DVE225 motors differ from the IEC dimensions; see Sec. "Dimension Sheet Notes" in the Gearmotors catalog.

Installation in damp locations or in the open

If possible, arrange the terminal box so the cable entries are pointing downwards.

Coat the threads of cable glands and pocket caps with sealant and tighten them well – then coat them again.

Seal the cable entry well.

Thoroughly clean the sealing surfaces of terminal boxes and terminal box covers prior to reassembly; gaskets must be glued in on one side. Install new gaskets to replace embrittled ones!

Restore the anticorrosive coating if necessary.

Check the enclosure.

4.4 Installation tolerances

Shaft end	Flanges
Diameter tolerance in accordance with DIN 748 • ISO k6 at Ø ≤ 50 mm • ISO m6 at Ø > 50 mm • Center bore in accordance with DIN 332, shape DR..	Centering shoulder tolerance in accordance with DIN 42948 • ISO j6 at Ø ≤ 230 mm • ISO h6 at Ø > 230 mm

5 Electrical Installation



It is essential to comply with the safety notes in section 2 during installation!

Switch contacts in utilization category AC-3 to EN 60947-4-1 must be used for switching the motor and the brake.

Using the wiring diagrams

The motor must only ever be connected as shown in the wiring diagram included with the motor. **Do not connect or start up the motor if this wiring diagram is missing.** You can obtain the valid wiring diagram free of charge from SEW-EURODRIVE.

5.1 Wiring notes

Comply with the safety notes during installation.

Protecting brake control systems against interference

Do not route brake cables alongside switched-mode power cables, as otherwise there is a risk of disrupting brake control systems.

Switched-mode power cables include in particular:

- Output cables from frequency and servo controllers, converters, soft start units and brake units
- Feeder cables for brake resistors and similar options

Protecting motor protection devices against interference

To protect SEW motor protection devices (temperature sensors TF, winding thermostats TH) against interference:

- Route separately shielded feeder cables together with switched-mode power lines in one cable
- Do not route unshielded feeder cables together with switched-mode power lines in one cable

5.2 Special aspects for operation with a frequency inverter

When motors are powered from inverters, you must adhere to the wiring instructions issued by the inverter manufacturer. It is essential to observe the operating instructions for the frequency inverter.

5.3 Special aspects of single-phase motors

Bear in mind that SEW single-phase motors are supplied without accessory equipment such as capacitors, starting relays or centrifugal switches (exception: ET56L4 → Sec. "Single-phase version ET56"). Any parts you need must be obtained from your dealer and connected according to the corresponding instructions and wiring diagrams.

5.4 Improving the grounding (EMC)

For improved, low-impedance grounding at high frequencies, we recommend using the following connections with the DR/DV/DT AC motors:

- Sizes DT71 ... DV 132S: [1] M5x10 thread rolling screw and 2 serrated lock washers to DIN 6798 in the stator housing.

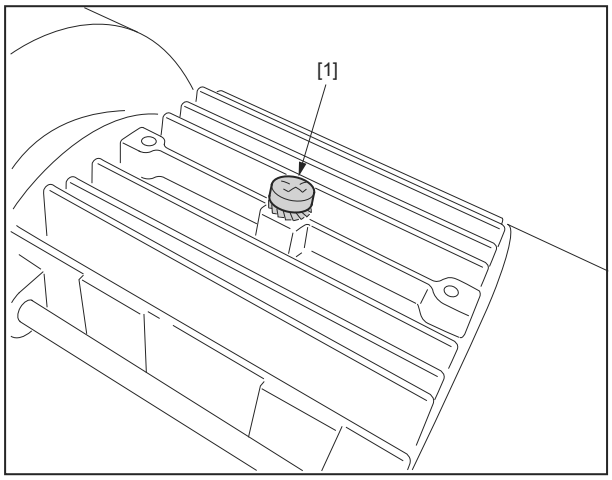

- Sizes DV112M ... DV280: Screw and 2 serrated lock washers in the bore of the eye bolt.

  Thread size of the eye bolt:

  – DV112 / 132S: M8
  – DV132M ... 180L: M12
  – DV200 ... 280: M16

5.5 Special aspects of torque motors and low-speed motors

Due to the design of torque motors and low-speed motors, very high induction voltages may be generated when they are switched off. Consequently, SEW-EURODRIVE recommends using the varistor circuit shown below for protection. The size of the varistors depends, amongst other factors, on the starting frequency – note for project planning!

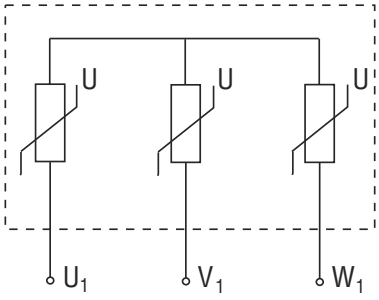

01732CXX

5.6 Special aspects in switching operation

When the motors are used in switching operation, possible interference of the switchgear must be excluded by ensuring suitable wiring. According to EN 60204 (electrical equipment of machines), motor windings must have interference suppression to protect the numerical or programmable logic controllers. As it is primarily switching operations that cause interference, SEW-EURODRIVE recommends installing protective circuitry in the switching devices.

5.7 Environmental conditions during operation

Ambient temperature

The temperature range of -20 °C to +40 °C must be ensured unless specified otherwise on the nameplate. Motors intended for use in higher or lower ambient temperatures have the appropriate designation on the nameplate.

Altitude

The maximum installation altitude of 1000 m above sea level must not be exceeded as otherwise this causes a derating as specified in the following diagram.

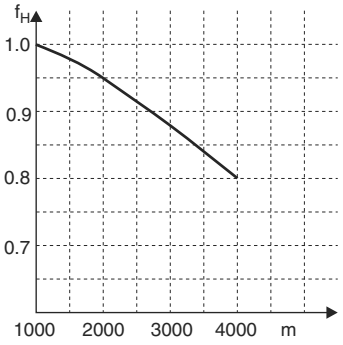

Hazardous radiation

Motors must not be subjected to hazardous radiation. Contact SEW-EURODRIVE if necessary.

5.8 Connecting the motor

In case of operation with electronic control units, it is essential to adhere to the corresponding operating instructions / wiring diagrams!

Connecting the motor via terminal boxes

- According to the circuit diagram provided
- Check the line cross section
- Arrange terminal links correctly
- Screw connections and protective earth conductors on firmly
- In terminal boxes: Check winding connections and tighten them if necessary

Small connection accessories

Note: In the case of motor sizes DR63 - DV132S, the small connection accessories (connection nuts for feeder cables, terminal links, lock washer and washers) are supplied in a bag. Depending on the type of terminal board, install the parts in accordance with the figure below. In the connection type shown on the right in the figure below, the second retaining nut, the lock washer and the washer are not used. The external connection [6] can be installed directly or as a lug [4] below the connection disk [5]. The tightening torque of the hex net in the figure on the right is:

- 1.6 Nm ± 20 % for M4
- 2 Nm ± 20 % for M5

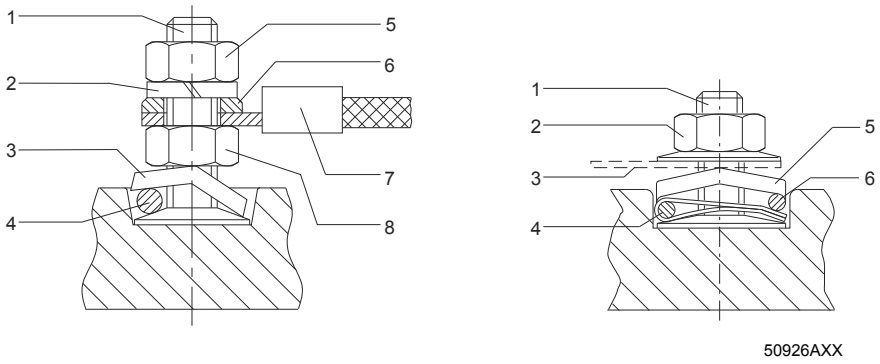

1 Terminal stud
2 Lock washer
3 Connection disk
4 Motor terminal lead
5 Top nut
6 Washer
7 External connection
8 Bottom nut

1 Terminal stud
2 Hex nut with flange
3 Terminal link
4 Motor connection with Stocko connection
5 terminal
6 Connection disk
External connection

The asynchronous servomotors of the CT/CV series are supplied with connected terminal links according to the nameplate.

5.9 Preparing motor sizes 56 and 63 – knockout

Important: Wear safety glasses – danger of injury from fragments!

- Put on the terminal box cover and screw it into place
- Define which cable entries to open
- Open the cable entries
  - with a chisel or similar (hold at an angle)
  - by a light tap with a hammer

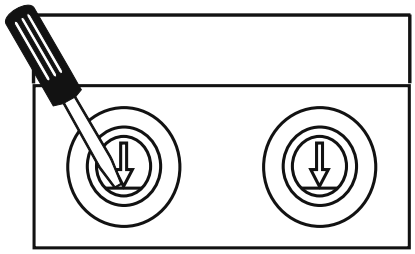

01733AXX

Caution – Do not knock through into the inside of the terminal box!

- Open the terminal box, remove the knockout cover if it has broken off
- Secure the cable screw fittings with the supplied lock nuts

5.10 Connecting DT56 motor...+/BMG

The motor has a star point with three fixed connection points in the winding overhang. The supply system leads (L1, L2, L3) are connected to a spring cage terminal block [2] in the terminal box [1]. The BMG02 brake is controlled using the BG1.2 brake rectifier [3]. As an alternative, the brake can be controlled from the switch cabinet using BM series rectifiers.

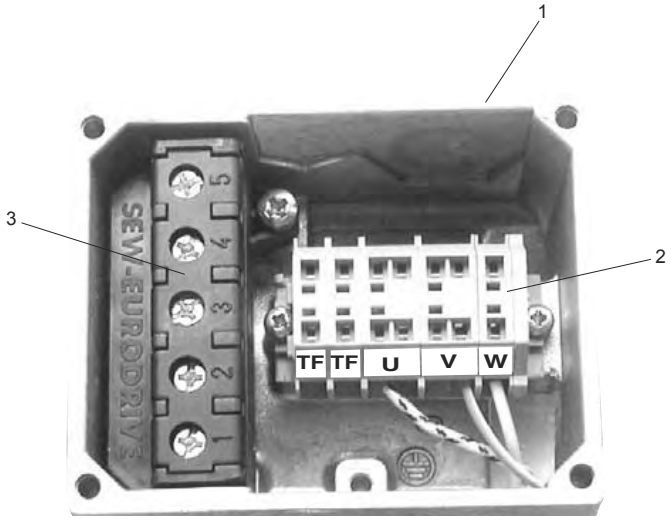

04861AXX

5.11 Single-phase version ET56

The ET56 single-phase motor is supplied with a running capacitor that is mounted and connected:

1~230 V, 50 Hz C_B = 4 µF

1~230 V, 60 Hz C_B = 4 µF

1~110 V, 60 Hz C_B = 20 µF

STOP

No full-load startup is possible with the running capacitor alone! The single-phase motor cannot be combined with a TF.

5.12 Connecting the motor using the IS plug connector

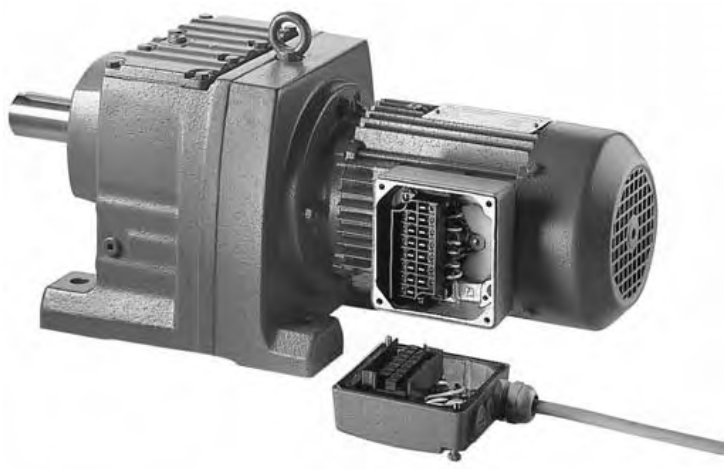

03075AXX

The IS plug connector is supplied from the factory with its base fully wired-up, including additional features such as a brake rectifier. The upper section of the IS connector is included in the scope of delivery and must be connected as shown in the wiring diagram.

The IS plug connector has CSA approval up to 600 V. Note for application according to CSA regulations: Tighten the M3 terminal screws to a torque of 0.5 Nm! See the following table for American Wire Gauge (AWG) line cross sections!

Line cross section

Make sure the type of line corresponds to the applicable regulations. The rated currents are specified on the motor nameplate. The line cross sections that can be used are listed in the following table.

Without variable terminal link	With variable terminal link	Link cable	Double assignment (Motor and brake/SR)
0.25 - 4.0 mm^2	0.25 - 2.5 mm^2	max. 1.5 mm^2	max. 1 x 2.5 and 1 x 1.5 mm^2
23 - 12 # AWG	23 - 14 # AWG	max. 16 # AWG	max. 1 x 14 # and 1 x 16 # AWG

Wiring the upper section of the plug connection

- Loosen the housing cover screws
  - Remove the housing cover
- Remove the screws from the upper section of the plug connector
  - Remove the upper section of the plug connector from the cover
- Strip the insulation off the connection lead
  - Strip about 9 mm insulation off the connecting leads
- Pass the cable through the cable gland

Wiring up as shown in circuit diagram DT82, DT83

- Connect the lines as shown in the circuit diagram
  - Tighten the clamping screws carefully!
- Install the plug connector (→ Sec. "Installing the plug connector")

Wiring up as shown in wiring diagram DT81

For ⅄ / △ startup:

- Connect with 6 lines
  - Tighten the clamping screws carefully!
  - Motor contactors in the switch cabinet
- Install the plug connector (→ Sec. "Installing the plug connector")

For ⅄ or △ operation:

- Connect as shown in the wiring diagram
- Install the variable terminal link as shown in the following figures according to the required motor operation (△ or ⅄)
- Install the plug connector (→ Sec. "Installing the plug connector")

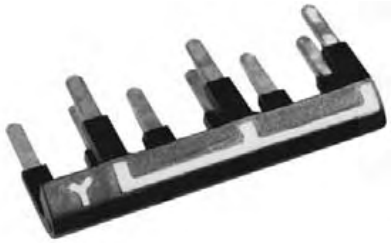

01734AXX



01735AXX

Brake control system BSR – preparing the variable terminal link

For ⅄ operation:

On the ⅄ side of the variable terminal link as shown in the following figure: Remove only the bare metal pin of the marked prong horizontally – touch guard!

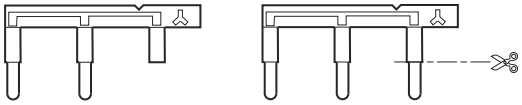

50429AXX

For △ operation:

On the △ side of the variable terminal link as shown in the following figure: Completely remove two prongs horizontally.

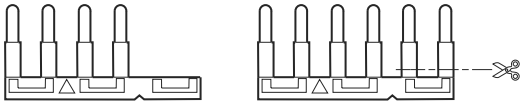

50430AXX

Wiring according to the DT81 wiring diagram for ⅄ or △ operation with double terminal assignment

- At terminal point for double assignment:
  - Connect the link cable
- When operation is as required:
  - Insert the link cable in the variable terminal link
- Install the variable terminal link
- At terminal point for double assignment:
  - Connect the motor lead above the variable terminal link
- Connect the other lines as shown in the wiring diagram.
- Install the plug connector (→ Sec. "Installing the plug connector")



01738AXX

Installing the plug connector

The housing cover of the IS plug connector can be screwed onto the lower section of the plug connector depending on the required position of the cable lead. The upper section of the plug connector shown in the following figure must first be installed in the housing cover so it will match the position of the lower section of the plug connector:

- Define the required mounting position
- Install the upper section of the plug connector into the housing cover in accordance with the mounting position
- Close the plug connector
- Tighten the cable gland



01739AXX

Mounting position of the upper section of the plug connection in the housing cover

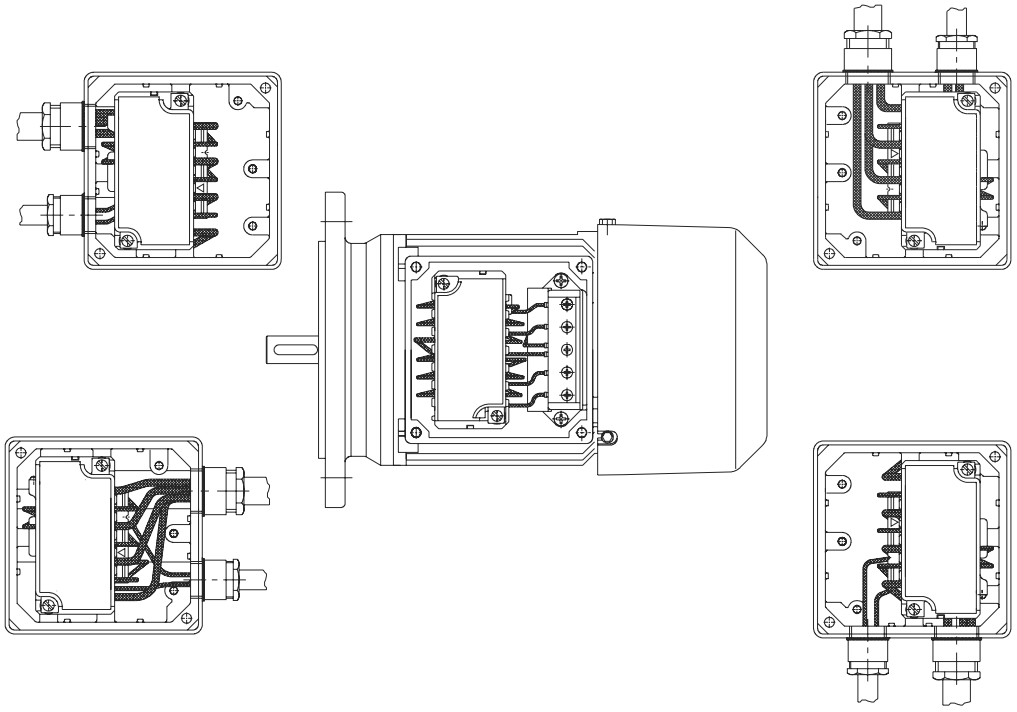

01740AXX

5.13 Connect the motor using plug connectors AB.., AD.., AM.., AS

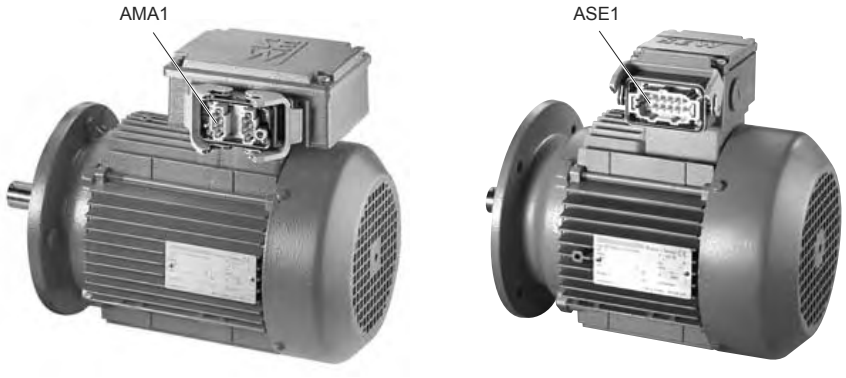

50956AXX

The installed plug connector systems AB.., AD.., AM.., AC.. and AS.. are based on the plug connector systems made by Harting.

- AB.., AD.., AM.. → Han Modular®
- AC.., AS.. → Han 10E / 10ES

The plugs are mounted on the side of the terminal box. They are locked either using two clamps or one clamp on the terminal box.

UL approval has been granted for the plug connectors.

The mating connectors (sleeve housing) with contact tubes are not included in the scope of delivery.

The enclosure is only applied when the mating connector is mounted and locked.

5.14 Connecting the motor using ASK1 plug connector

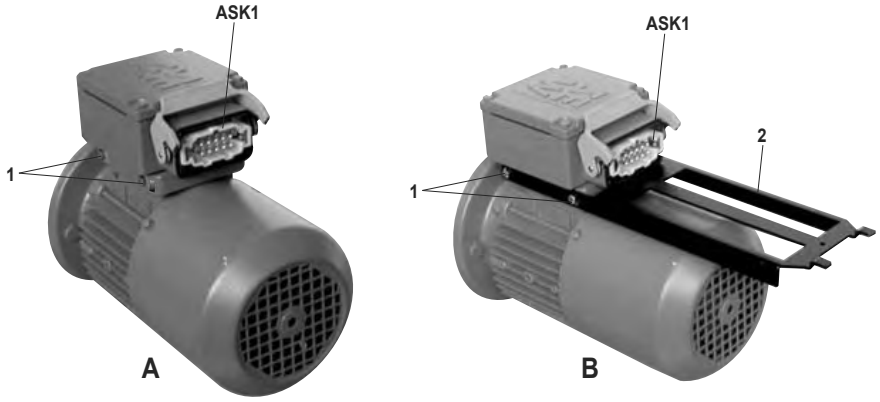

51081AXX

Drives with ASK1 plug connectors are certified according to the ECOFAST specification (version 1.1). Switchgear or control units which also have to be certified can be connected to SEW-EURODRIVE motors using a pre-fabricated system cable or a carrier plate (installation integrated in the motor → Fig. B). The ASK1 plug connector with single-clip locking is mounted on the side of the terminal box and is supplied from the

factory fully wired up, including additional features such as a brake rectifier.

- **The customer must obtain the system cable pre-fabricated according to the ECOFAST specification from a specialist retailer.**
- **For installation integrated in the motor according to the ECOFAST specification, the customer must obtain the carrier plate from SEW-EURODRIVE by quoting part number 0187 390 3. Carrier plates from other manufacturers do not fit on SEW-EURODRIVE motors.**

Position of the plug connector

Possible positions of the ASK1 plug connector are "X" (= normal position), "1", "2" or "3". Unless specified otherwise, the unit is supplied with the plug connector in position "3". For installation integrated in the motor (using the carrier plate), units are exclusively supplied with the plug connector in position "3".

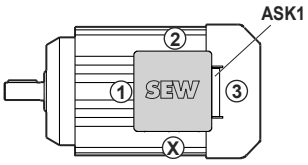

51323AXX

Installing the carrier plate

- Unscrew and remove four retaining screws [1] below the terminal box (→ Fig. A)
- Place the carrier plate [2] against the holes for the retaining screws and install it by screwing in the four retaining screws [1] (→ Fig. B).

5.16 Accessory equipment

Connect supplied accessory equipment according to the wiring diagrams included.

TF temperature sensor

Do not apply voltage!

The positive temperature coefficient (PTC) thermistors comply with DIN 44082.

Resistance measurement (measuring instrument with V ≤ 2.5 V or I < 1 mA):

- Standard measured values: 20...500 Ω, thermal resistance > 4000 Ω
- Measured values pole-changing with separate winding: 40...1000 Ω,
  Thermal resistance > 4000 Ω

When using the temperature sensor for thermal monitoring, the evaluation function must be activated to maintain reliable isolation of the temperature sensor circuit. If the temperature reaches an excessive level, the thermal protection function must be effective immediately.

TH winding thermostats

The thermostats are connected in series as standard and open when the permitted winding temperature is exceeded. They can be connected in the drive monitoring loop.

	V_{AC}		V_{DC}	
Voltage U [V]	250	400	60	24
Current (cos φ = 1.0) [A]	2.5	0.75	1.0	1.6
Current (cos φ = 0.6) [A]	1.6	0.5		
Contact resistance max. 1 ohm at 5 V = / 1 mA				

Forced cooling fan

Motor sizes 71 - 132S

VS system

- 1 x 230 V_{AC}, 50 Hz
- Connection in separate terminal box
- Max. connection cross section 3 x 1.5 mm^2
- Cable screw fitting M16x1.5

Refer to the VS wiring diagram for information about connecting the VS forced cooling fan (order number: 0975 8385).

VR system

- 24 V_{DC} ± 20 %
- Plug connector
- Max. connection cross section 3x1 mm^2
- Pg7 cable gland with 7 mm inside diamater

The **VR forced cooling fan** is available for 24 V DC voltage and for 100 ... 240 V AC voltage.

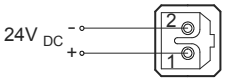

50990AXX

The AC voltage type includes a VR forced cooling fan and the UWU51A switch-mode power supply (→ following figure).

- Input: 90 ... 265 V_{AC} – 6 % / + 10 %, 50/60 Hz
- Output: 24 V_{DC} – 1 % / + 2 %, 1.3 A
- Connection: Terminal screws 0.2 ... 2.5 mm^2, separable
- Enclosure: IP20; mounted on mounting rail EN 60715TH35 in the switch cabinet

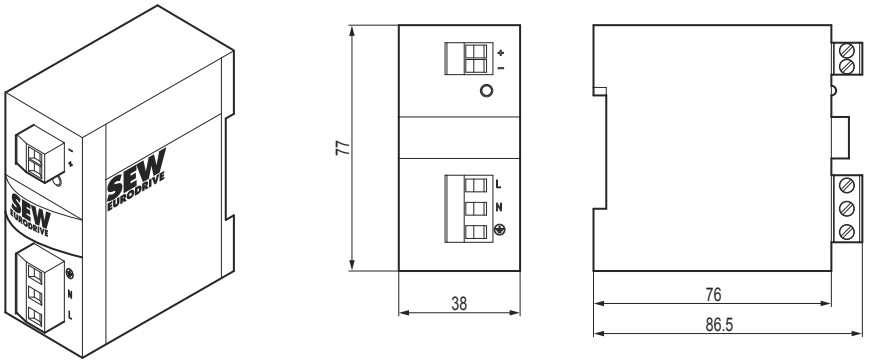

54411AXX

Refer to the VR wiring diagram for information about connecting the VR forced cooling fan (order number: 0880 3198)

Motor size 132M - 280

V system

- 3 x 400 V_{AC}, 50 Hz
- Connection in separate terminal box
- Max. connection cross section 4 x 1.5 mm^2
- Cable gland M16x1.5

Refer to the V wiring diagram for information about connecting the V system (order number: 0975 8385).

A transformer may be present in the VS system to adapt to a voltage other than the standard. The VS and V systems are also available for 60 Hz.

Overview of encoders

Encoder	For SEW motor	Encoder type	Shaft	Specification	Supply	Signal
EH1T[1)]	DR63...	Encoder	Hollow shaft	-	5 V_{DC} regulated	5 V_{DC} TTL/RS-422
EH1S[2)]					24 V_{DC}	1 V_{ss} sin/cos
EH1R						5 V_{DC} TTL/RS-422
EH1C						24 V_{DC} HTL
ES1T[1)]	CT/DT/CV/DV71...100 DTE/DVE90...100	Encoder	Spreadshaft	-	5 V_{DC} regulated	5 V_{DC} TTL/RS-422
ES1S[2)]					24 V_{DC}	1 V_{ss} sin/cos
ES1R						5 V_{DC} TTL/RS-422
ES1C						24 V_{DC} HTL
ES2T[1)]	CV/DV(E)112...132S				5 V_{DC} regulated	5 V_{DC} TTL/RS-422
ES2S[2)]					24 V_{DC}	1 V_{ss} sin/cos
ES2R						5 V_{DC} TTL/RS-422
ES2C						24 V_{DC} HTL
EV1T[1)]	CT/CV71...200 DT/DV71...280 DTE/DVE90...225		Solid shaft		5 V_{DC} regulated	5 V_{DC} TTL/RS-422
EV1S[2)]					24 V_{DC}	1 V_{ss} sin/cos
EV1R						5 V_{DC} TTL/RS-422
EV1C						24 V_{DC} HTL
NV11	DT/DV71...132 DTE/DVE90...132S	Proximity sensor	Solid shaft	A track	24 V_{DC}	1 pulse/revolution, normally open contact
NV21				A+B tracks		
NV12				A track		2 pulses/revolution, normally open contact
NV22				A+B tracks		
NV16				A track		6 pulses/revolution, normally open contact
NV26				A+B tracks		
AV1Y	CT/CV71...200 DT/DV71...280 DTE/DVE90...225	absolute encoder	Solid shaft	-	15/24 V_{DC}	MSSI interface and 1 V_{ss} sin/cos
AV1H[3)]		HIPERFACE® encoder			12 V_{DC}	RS485 interface and 1 V_{ss} sin/cos

1) Recommended encoder for operation with MOVITRAC® 31C

2) Recommended encoder for operation with MOVIDRIVE®

3) recommended encoder for operation with MOVIDRIVE® compact



- Refer to the following wiring diagrams for information about connecting ES1./ES2./EV1./EH1. encoders and AV1Y and AV1H absolute encoders:
  - Wiring diagrams for ES1./ES2./EV1./EH1. encoders: Order number 0918 6832
  - Wiring diagram AV1Y absolute encoder: Order number 0918 6808
  - Wiring diagram AV1H absolute encoder: Order number 1052 9705



- Maximum oscillation load for encoder ≤ 10 g ≈ 100 m/s^2 (10 Hz ... 2 kHz)
- Shock resistance ≤ 100 g ≈ 1000 m/s^2

Encoder connection

When connecting the encoders to the inverters, always follow the operating instructions for the relevant inverter!

- Maximum line length (inverter - encoder):
  - 100 m with a capacitance per unit length ≤ 120 nF/km
- Core cross section: 0,20 ... 0.5 mm^2
- Use a shielded cable with twisted pairs of insulated conductors (exception: cable for HTL sensor) and connect the shield over a large surface area at both ends:
  - to the encoder in the cable gland or in the encoder plug
  - to the inverter on the electronics shield clamp or to the housing of the sub D plug
- Install the encoder cables separately from the power cables, maintaining a distance of at least 200 mm.

6 Startup

6.1 Prerequisites for startup



It is essential to comply with the safety notes in Sec. 2 during startup!

Before startup, make sure that

- The drive is undamaged and not blocked
- The measures stipulated in the "Preliminary work" section are performed after extended storage
- All connections have been made properly
- The direction of rotation of the motor/gearmotor is correct
  - (motor rotating clockwise: U, V, W to L1, L2, L3)
- All protective covers have been fitted correctly
- All motor protection equipment is active and set for the rated motor current
- The self-reengaging manual brake release is used in case of hoist drives
- There are no other sources of danger present

During startup, make sure that

- The motor is running correctly (no overload, no speed fluctuation, no loud noises, etc.)
- The correct braking torque is set according to the specific application (→ Sec. "Technical Data")
- In case of problems (→ Sec. "Malfunctions")



In brake motors with self-reengaging manual brake release, the manual brake release lever must be removed after startup. A bracket is provided for storing the lever on the outside of the motor.

6.2 Altering the blocking direction on motors with a backstop

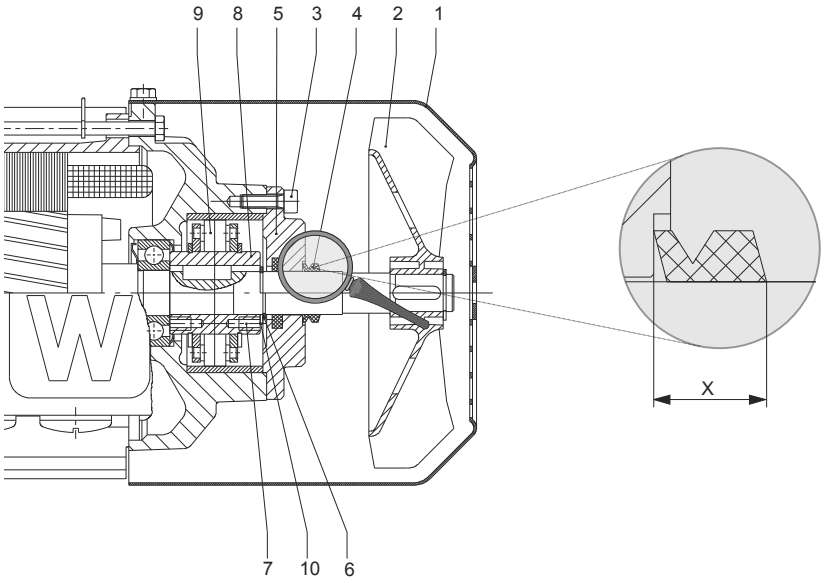

50447AXX

[1] Fan guard
[2] Fan
[3] Hexagon socket head cap screw
[4] V-ring
[5] Felt ring
[6] Circlip
[7] Threaded hole
[8] Carrier
[9] Wedge element train
[10] Equalizing ring

Dimension "x" after installation

Motor	Dimension "x" after installation
DT71/80	6.7 mm
DT90/DV100	9.0 mm
DV112/132S	9.0 mm
DV132M-160M	11.0 mm
DV160L - 225	11.0 mm
DV250-280	13.5 mm





Do not start up the motor in the blocking direction (note the phase angle when connecting). Note the direction of rotation of the output shaft and the number of stages when mounting the motor on a gear unit. The backstop can be operated once in the blocking direction at half the motor voltage for checking purposes.

1. **Isolate the motor from the supply, safeguarding it against unintentional power-up.**
2. Remove fan guard [1] and fan [2], unscrew hexagon socket head cap screws [3]
3. Remove the V-ring [4] and sealing flange with felt ring [5]. (Collect the grease for subsequent use.)
4. Remove the circlip [6] (not for DT71/80); for DV132M-160M, also remove the equalizing rings [10].
5. Pull the carrier [8] and wedge element train [9] completely off the threaded holes [7], turn them by 180° and press them back on.
6. Refill the grease.



7. **Important: Do not exert pressure on or hit the wedge element train – danger of damaging the material!**
8. During the press-in operation – shortly before the wedge element penetrates the locking collar – slowly turn the rotor shaft by hand in the direction of rotation. This allows the wedge element to slide into the locking collar more easily.
9. Install the remaining parts of the backstop by following steps 4. to 2. in reverse order. Note the installation dimension "x" for the V-ring [4].

7 Malfunctions

7.1 Motor Malfunctions

Problem	Possible cause	Remedy
Motor does not start up	Interruption in connecting harness	Check connections, correct if necessary
	Brake does not release	→ Sec. "Brake Problems"
	Fuse blown	Replace fuse
	Motor protection has tripped	Check motor protection for correct setting, correct error if necessary.
	Motor protection does not switch, error in control	Check motor protection control, correct error if necessary.
Motor does not start or only with difficulty	Motor designed for delta connection but used in star connection	Correct circuit
	Voltage and frequency deviate markedly from setpoint, at least during switch-on	Provide better power supply system; check cross section of connecting harness
Motor does not start in star connection, only in delta connection	Torque not sufficient in star connection	Switch on directly if delta inrush current is not too great; otherwise use a larger motor or a special version (contact SEW)
	Contact fault on star delta switch	Rectify fault
Incorrect direction of rotation	Motor connected incorrectly	Swap over two phases
Motor hums and has high current consumption	Brake does not release	→ Sec. "Brake Problems"
	Winding defective	Send motor to specialist workshop for repair
	Rotor rubbing	
Fuses blow or motor protection trips immediately	Short circuit in line	Rectify short circuit
	Short circuit in motor	Send motor to specialist workshop for repair
	Lines connected incorrectly	Correct circuit
	Ground fault on motor	Send motor to specialist workshop for repair
Severe speed loss under load	Overload	Perform power measurement, use larger motor or reduce load if necessary
	Voltage drops	Increase cross section of connecting harness
Motor heats up excessively (measure temperature)	Overload	Perform power measurement, use larger motor or reduce load if necessary
	Inadequate cooling	Correct cooling air supply or clear cooling air passages, retrofit forced cooling fan if necessary
	Ambient temperature is too high	Adhere to permitted temperature range
	Use delta connection for motor rather than star connection as provided for	Correct circuit
	Loose contact in connecting harness (one phase missing)	Rectify loose contact
	Fuse blown	Look for and rectify cause (see above); replace fuse
	Supply voltage deviates from rated motor voltage by more than 5 %. A higher voltage has a particularly unfavorable effect in motors with a low-speed winding since in these, the no-load current is already close to the rated current even when the voltage is normal.	Adapt motor to supply voltage
	Rated operation type (S1 to S10, DIN 57530) exceeded, e.g. through excessive starting frequency	Adjust rated operation type of motor to required operating conditions; if necessary call in a specialist to determine correct drive
Excessively loud	Ball bearing compressed, contaminated or damaged	Re-align motor, inspect ball bearing (→ Sect. "Permitted ball bearing types"), grease if necessary (→ Sect. "Lubricant Table for Anti-Friction Bearings of SEW Motors"), replace
	Vibration of rotating parts	Rectify cause, possibly imbalance
	Foreign bodies in cooling air passages	Clean the cooling air passages

7.2 Brake problems

Problem	Possible cause	Remedy
Brake does not release	Incorrect voltage on brake control unit	Apply correct voltage
	Brake control unit failed	Install a new brake control system, check internal resistance and insulation of brake coil, check switchgear
	Max. permitted working air gap exceeded because brake lining worn down	Measure and set working air gap
	Voltage drop along connecting harness > 10 %	Provide for correct connection voltage; check cable cross section
	Inadequate cooling, brake overheats	Replace type BG brake rectifier with type BGE
	Brake coil has interturn fault or short circuit to exposed conductive part	Replace complete brake and brake control system (specialist workshop), check switchgear
	Rectifier defective	Replace the rectifier and brake coil
Motor does not brake	Working air gap not correct	Measure and set working air gap
	Brake lining worn down	Replace entire brake disk
	Incorrect braking torque	Change the braking torque (→ Sect. "Technical Data") • By the type and number of brake springs • BrakeBMG 05: By installing the same brake coil body design as in brakeBMG 1 • BrakeBMG 2: By installing the same brake coil body design as in brakeBMG 4
	BM(G) only: Working air gap so large that setting nuts come into contact	Set the working air gap
	Only BR03, BM(G): Manual brake release device not set correctly	Set the setting nuts correctly
Brake is applied with time lag	Brake is switched on AC voltage side	Switch on DC and AC voltage sides (e.g. BSR); please refer to wiring diagram
Noise in the brake area	Gearing wear caused by jolting startup	Check project planning
	Pulsating torques due to incorrectly set frequency inverter	Check/correct setting of frequency inverter according to operating instructions

7.3 Malfunctions during operation with a frequency inverter

The symptoms described in the "Motor Malfunctions" section may also occur when the motor is operated with a frequency inverter. Please refer to the frequency inverter operating instructions for the significance of the problems which occur and to find information about rectifying the problems.

Customer service

Please have the following information to hand if you require the assistance of our customer service:
- Data from the nameplate (complete)
- Nature and extent of the fault
- Time and peripheral circumstances of the fault
- Presumed cause

8 Inspection / Maintenance

- Use only genuine spare parts in accordance with the valid parts list!
- Always install a new brake control system at the same time as replacing the brake coil!
- Motors can become very hot during operation danger of burns!
- Secure hoist drives or lower them (danger of falling).
- Isolate the motor and brake from the supply before starting work, safeguarding them against unintentional power-up!

8.1 Inspection and maintenance intervals

Unit / unit part	Frequency	What to do?
Brake BMG02, BR03, BMG05-8, BM15-62	• **If used as a working brake:** At least every 3000 hours of operation[1)]	Inspect the brake • Measure the brake disk thickness • Brake disk, lining • Measure and set working air gap • Pressure plate • Carrier / gearing • Pressure rings
	• **If used as a holding brake:** Every 2 to 4 years, depending on operating conditions [1)]	• Extract the abraded matter. • Inspect the switch elements and change if necessary (e.g. in case of burn-out)
Motor	• **Every 10,000 hours of operation**	Inspect the motor: • Check ball bearings and change if necessary • Change the oil seal • Clean the cooling air passages
Motor with backstop		• Change the low-viscosity grease in the backstop
Tacho-generator		• Inspection / maintenance as described in the enclosed operating instructions
Drive	• Varies (depending on external factors)	• Touch up or renew the surface/anticorrosion coating.

1) The periods of wear are affected by many factors and may be short. The machine designer must calculate the required inspection/maintenance intervals individually in accordance with the project planning documents (e.g. "Drive Planning").

8.2 Preliminary work for motor and brake maintenance

Isolate the motor and brake from the power supply before starting work, safeguarding them against unintentional power-up!

Removing the EV1. incremental encoder / AV1H absolute encoder

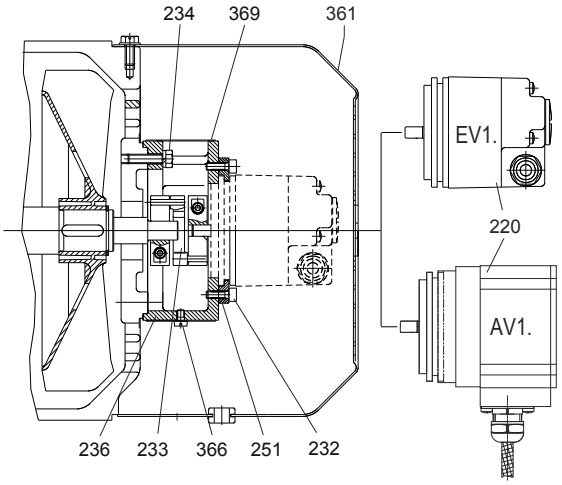

51322AXX

Removing EV1. / AV1 encoders from motors up to size 225

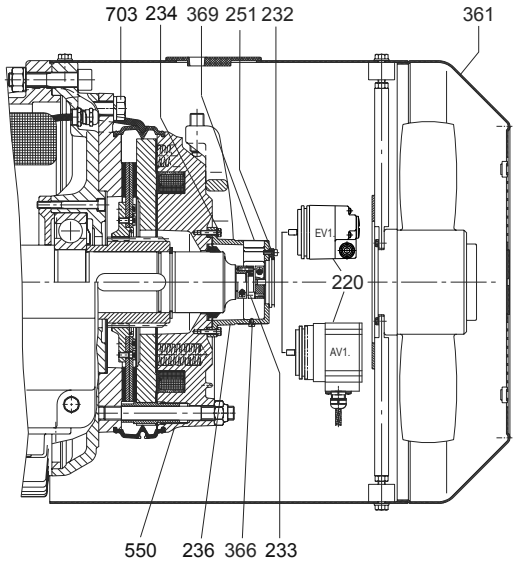

51324AXX

Removing EV1. / AV1 encoders from motors from size 250 upwards

[220] Encoder
[232] Hexagon socket head cap screw
[233] Coupling
[234] Hex head screw
[236] Adapter flange
[251] Conical spring washer
[361] Protective canopy / fan guard
[366] Hexagon socket head cap screw
[369] Cover plate
[550] Brake
[703] Hex head screw

- Remove the protective canopy [361]. If a forced cooling fan is fitted, remove it first.
- Unscrew the screw [366] from the adapter flange and remove the cover plate [369].
- Unscrew the clamping hub connection of the coupling.
- Loosen the retaining screws [232] and turn the conical spring washers [251] outwards.
- Remove the encoder [220] together with the coupling [233].
- Lever off the intermediate flange [236] after removing the screws [234].

Note:

During re-assembly, make sure the runout of the shaft end is ≤ 0.05 mm.

Brakes for the encoder mounting must be completely replaced.

Incremental encoder ES1. Removing / ES2. / EH1.

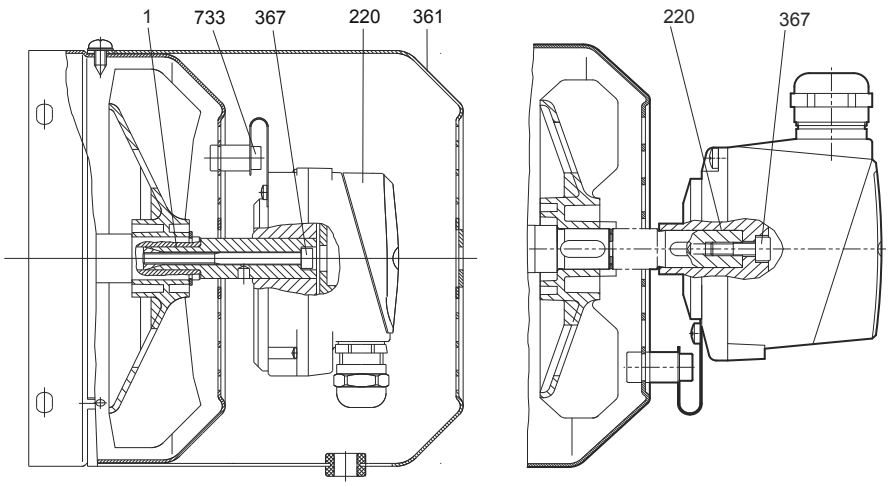

[220] Encoder
[367] Retaining screw
[361] Protective canopy
[733] Retaining screw for torque arm

- Remove the protective canopy [361].
- Unscrew the retaining screws [733] for the torque arm.
- Open the screw cover at the rear of the encoder [220].
- Unscrew the central retaining screw [367] by about 2-3 turns and loosen the cone by tapping lightly on the head of the screw. Then unscrew the retaining screw and pull off the encoder.

During re-assembly:

– Apply Noco® fluid to the encoder spigot
– Tighten the central retaining screw [367] to 2.9 Nm.

Removing the proximity sensor NV1. / NV2.

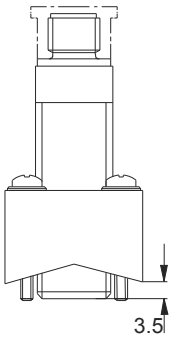

01114CXX

Caution! It is essential for the fan wheel to be stationary!

- Disconnect plug
- Pull off the fan guard including NV1. / NV2. Do not tilt it, in order to avoid damaging the proximity switch.
- If the mounting block has been removed from the fan guard or has come loose, it is essential to ensure the following during re-assembly:

  The switching surface of the proximity switch must be calibrated to a distance of 3.5 mm from the edge of the prismatic block (→ figure above).

8.3 Inspection / maintenance on the motor

Example: Motor DFT90

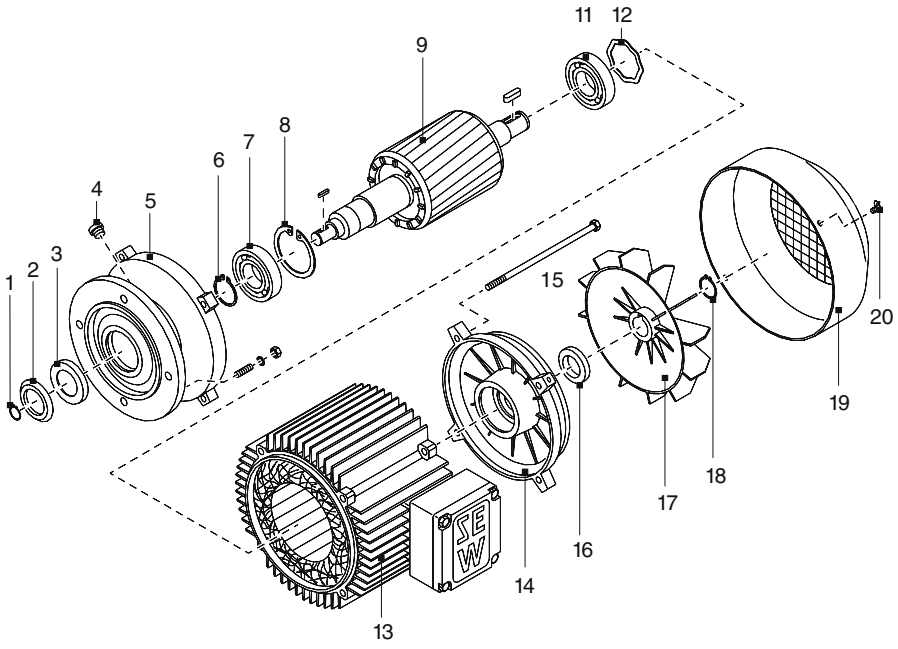

Key

1	Circlip	8	Circlip	16	V-ring
2	Oil-flinger ring	9	Rotor	17	Fan
3	Oil seal	11	Ball bearing	18	Circlip
4	Screw plug	12	Equalizing ring	19	Fan guard
5	Drive end bearing end shield	13	Stator	20	Housing screw
6	Circlip	14	Non drive-end bearing shield		
7	Ball bearing	15	Hex head bolt		

Sequence



Isolate the motor and brake from the supply, safeguarding them against unintentional power-up!

1. Remove the forced cooling fan and encoder, if installed (→ Sec. "Preliminary work for motor and brake maintenance")
2. Remove flange or fan guard [19], fan [17].
3. Remove the hex head bolt [15] from the drive end bearing end shield [5] and the non-drive end bearing end shield [14], release the stator [13] from the drive end bearing end shield.
4. **Motors with BM/BMG brake:**
   - Open the terminal box cover, unfasten the brake cable from the rectifier
   - Push the non-drive end bearing end shield and the brake off the stator and carefully lift them off (if necessary, run the brake cable along with trailing wire)
   - Pull the stator back by approx. 3 to 4 cm
5. **Motors with BMG02, BR03 brake:**
   - Remove the complete brake with the releasing lever (on version with manual brake release)
6. Visual inspection: Are there traces of gear oil or condensation inside the stator?
   - If not, continue with 9
   - If there is condensation, continue with 7
   - If there is gear oil, have the motor repaired by a specialist workshop
7. If there is moisture inside the stator:
   - With gearmotors: Remove the motor from the gear unit
   - With motors without a gear unit: Remove the drive end flange
   - Remove the rotor [9]
8. Clean the winding, dry it and check it electrically (→ Sec. "Preliminary work")
9. Replace the ball bearings [7], [11] (only use authorized ball bearings → Sec. "Permitted ball bearing types")
10. Reseal the stator seat ("Hylomar L Spezial") and grease the V-ring or labyrinth seal (DR63)
11. Install the motor, brake and accessories
12. Check the gear unit (→ gear unit operating instructions)

Lubrication of the backstop

The backstop is supplied with Mobil LBZ low-viscosity grease as a lubricant and anticorrosion protection. If you want to use a different grease, make sure it complies with NLGI class 00/000, with a base oil viscosity of 42 mm^2/s at 40 °C on a lithium saponified and mineral oil base. The temperature range extends from –50 °C to +90 °C. See the following table for the amount of grease required.

Motor type	71/80	90/100	112/132	132M/160M	160L/225	250/280
Grease [g]	9	15	15	20	45	80

9.5 Operating currents

The current values I_H (holding current) specified in the tables are r.m.s. values. Use only units to measure the r.m.s. values. The inrush current (acceleration current) I_B only flows for a short time (max. 120 ms) when the brake is released or during voltage dips below 70 % of rated voltage. There is no increased inrush current if the BG brake rectifier is used or if there is a direct DC voltage supply – both are only possible with brakes up to motor size BMG4.

BMG02, BR03 brake

	BMG02	BR03
Motor size	56	63
Max. braking torque [Nm]	1.2	3.2
Braking power [W]	25	25
Inrush current ratio I_B/I_H	-	4

Rated voltage V_N		BMG02		BR03	
V_{AC}	V_{DC}	I_H [A_{AC}]	I_G [A_{DC}]	I_H [A_{AC}]	I_G [A_{DC}]
	24	-	0.72	-	0.72
24 (23-26)	**10**	-	-	1.5	1.80
42 (40-45)	**18**	-	-	0.81	1.01
48 (46-50)	**20**	-	-	0.72	0.90
53 (51-56)	**22**	-	-	0.64	0.80
60 (57-63)	**24**	-	-	0.57	0.72
67 (64-70)	**27**	-	-	0.50	0.64
73 (71-78)	**30**	-	-	0.45	0.57
85 (79-87)	**36**	-	-	0.40	0.51
92 (88-98)	**40**	-	-	0.35	0.45
110 (99-110)	**44**	-	-	0.31	0.40
120 (111-123)	**48**	-	-	0.28	0.36
133 (124-138)	**54**	-	-	0.25	0.32
147 (139-154)	**60**	-	-	0.22	0.29
160 (155-173)	**68**	-	-	0.20	0.25
184 (174-193)	**75**	-	-	0.17	0.23
208 (194-217)	**85**	-	-	0.16	0.20
230 (218-243)	**96**	0.14	0.18	0.14	0.18
254 (244-273)	**110**	-	-	0.12	0.16
290 (274-306)	**125**	-	-	0.11	0.14
318 (307-343)	**140**	-	-	0.10	0.13
360 (344-379)	**150**	-	-	0.09	0.11
400 (380-431)	**170**	0.08	0.10	0.08	0.10
460 (432-500)	**190**	0.07	0.09	0.07	0.09

Key

- I_B Accelerator current – brief inrush current
- I_H Holding current r.m.s. value in the connecting harness to the SEW brake rectifier
- I_G Direct current with direct DC voltage supply with rated voltage V_N
- V_N Rated voltage (rated voltage range)

BMG 05 - BMG 4 brake

	BMG05	BMG1	BMG2	BMG4
Motor size	71/80	80	90/100	100
Max. braking torque [Nm]	5	10	20	40
Braking power [W]	32	36	40	50
Inrush current ratio I_B/I_H	4	4	4	4

Rated voltage V_N		BMG05		BMG 1		BMG 2		BMG 4	
V_{AC}	V_{DC}	I_H [A_{AC}]	I_G [A_{DC}]	I_H [A_{AC}]	I_G [A_{DC}]	I_H [A_{AC}]	I_G [A_{DC}]	I_H [A_{AC}]	I_G [A_{DC}]
	24		1.38		1.54		1.77		2.20
24 (23-25)	**10**	2.0	3.3	2.4	3.7	-	-	-	-
42 (40-46)	**18**	1.14	1.74	1.37	1.94	1.46	2.25	1.80	2.80
48 (47-52)	**20**	1.02	1.55	1.22	1.73	1.30	2.00	1.60	2.50
56 (53-58)	**24**	0.90	1.38	1.09	1.54	1.16	1.77	1.43	2.20
60 (59-66)	**27**	0.81	1.23	0.97	1.37	1.03	1.58	1.27	2.00
73 (67-73)	**30**	0.72	1.10	0.86	1.23	0.92	1.41	1.14	1.76
77 (74-82)	**33**	0.64	0.98	0.77	1.09	0.82	1.25	1.00	1.57
88 (83-92)	**36**	0.57	0.87	0.69	0.97	0.73	1.12	0.90	1.40
97 (93-104)	**40**	0.51	0.78	0.61	0.87	0.65	1.00	0.80	1.25
110 (105-116)	**48**	0.45	0.69	0.54	0.77	0.58	0.90	0.72	1.11
125 (117-131)	**52**	0.40	0.62	0.48	0.69	0.52	0.80	0.64	1.00
139 (132-147)	**60**	0.36	0.55	0.43	0.61	0.46	0.70	0.57	0.88
153 (148-164)	**66**	0.32	0.49	0.39	0.55	0.41	0.63	0.51	0.79
175 (165-185)	**72**	0.29	0.44	0.34	0.49	0.37	0.56	0.45	0.70
200 (186-207)	**80**	0.26	0.39	0.31	0.43	0.33	0.50	0.40	0.62
230 (208-233)	**96**	0.23	0.35	0.27	0.39	0.29	0.44	0.36	0.56
240 (234-261)	**110**	0.20	0.31	0.24	0.35	0.26	0.40	0.32	0.50
290 (262-293)	**117**	0.18	0.28	0.22	0.31	0.23	0.35	0.29	0.44
318 (294-329)	**125**	0.16	0.25	0.19	0.27	0.21	0.31	0.25	0.39
346 (330-369)	**147**	0.14	0.22	0.17	0.24	0.18	0.28	0.23	0.35
400 (370-414)	**167**	0.13	0.20	0.15	0.22	0.16	0.25	0.20	0.31
440 (415-464)	**185**	0.11	0.17	0.14	0.19	0.15	0.22	0.18	0.28
500 (465-522)	**208**	0.10	0.15	0.12	0.17	0.13	0.20	0.16	0.25

Key

I_B Accelerator current – brief inrush current

I_H Holding current r.m.s. value in the connecting harness to the SEW brake rectifier

I_G Direct current with direct DC voltage supply

V_N Rated voltage (rated voltage range)

BMG 8 - BM 32/62 brake

	BMG8	BM 15	BM30/31; BM32/62
Motor size	112/ 132S	132M-160M	160L-225
Max. braking torque [Nm]	75	150	600
Braking power [W]	65	95	120
Inrush current ratio I_B/I_H	6.3	7.5	8.5

Rated voltage V_N		BMG8	BM 15	BM 30/31; BM 32/62
V_{AC}	V_{DC}	I_H [A_{AC}]	I_H [A_{AC}]	I_H [A_{AC}]
	24	2.77[1)]	4.15[1)]	4.00[1)]
42 (40-46)	**-**	2.31	3.35	-
48 (47-52)	**-**	2.10	2.95	-
56 (53-58)	**-**	1.84	2.65	-
60 (59-66)	**-**	1.64	2.35	-
73 (67-73)	**-**	1.46	2.10	-
77 (74-82)	**-**	1.30	1.87	-
88 (83-92)	**-**	1.16	1.67	-
97 (93-104)	**-**	1.04	1.49	-
110 (105-116)	**-**	0.93	1.32	1.78
125 (117-131)	**-**	0.82	1.18	1.60
139 (132-147)	**-**	0.73	1.05	1.43
153 (148-164)	**-**	0.66	0.94	1.27
175 (165-185)	**-**	0.59	0.84	1.13
200 (186-207)	**-**	0.52	0.74	1.00
230 (208-233)	**-**	0.46	0.66	0.90
240 (234-261)	**-**	0.41	0.59	0.80
290 (262-293)	**-**	0.36	0.53	0.71
318 (294-329)	**-**	0.33	0.47	0.63
346 (330-369)	**-**	0.29	0.42	0.57
400 (370-414)	**-**	0.26	0.37	0.50
440 (415-464)	**-**	0.24	0.33	0.44
500 (465-522)	**-**	0.20	0.30	0.40

1) Direct current in BSG operation

Key

I_H Holding current r.m.s. value in the connecting harness to the SEW brake rectifier

I_B Accelerator current – brief inrush current

I_G Direct current with direct DC voltage supply

V_N Rated voltage (rated voltage range)

BMG61, BMG122 brake

	BMG61	BMG122
Motor size	250M...280S	
Max. braking torque [Nm]	600	1200
Braking power [W]	200	
Inrush current ratio I_B/I_H	6	

Rated voltage V_N **V_{AC}**	**BMG61/122** **I_H [A_{AC}]**
208 (194-217)	1.50
230 (218-243)	1.35
254 (244-273)	1.20
290 (274-306)	1.10
318 (307-343)	1.00
360 (344-379)	0.85
400 (380-431)	0.75
460 (432-484)	0.65
500 (485-500)	0.60

Key

I_B Accelerator current – brief inrush current

I_H Holding current r.m.s. value in the connecting harness to the SEW brake rectifier

V_N Rated voltage (rated voltage range)

9.6 Permitted ball bearing types

Motor type	Drive-end bearing (AC motor, brakemotor)			Non drive-end bearing (foot-mounted, flange-mounted, gearmotors)	
	Flange-mounted motor	Gearmotor	Foot-mounted motor	AC motor	Brake motor
DT56	-	6302-2Z-J	-	6001-2RS-J	6001-2RS-J
DFR63	6203-2Z-J	6303-2Z-J	-	6202-2Z-J	6202-2RS-J-C3
DT71 - DT80	6204-2Z-J	6303-2Z-J	6204-2Z-J	6203-2Z-J	6203-2RS-J-C3
DT(E)90 - DV(E)100		6306-2Z-J		6205-2Z-J	6205-2RS-J-C3
DV(E)112 - 132S	6208-2Z-J	6307-2Z-J	6208-2Z-J	6207-2Z-J	6207-2RS-J-C3
DV(E)132M - 160M	6309-2Z-J-C3			6209-2Z-J-C3	
DV(E)160L - 180L	6312-2Z-J-C3			6213-2Z-J-C3	
DV(E)200 - 225	6314-2Z-J-C3			6314-2Z-J-C3	
DV250-280	6316-2Z-J-C3			6315-2Z-J-C3	

9.7 Lubricant table for anti-friction bearings of SEW motors

The bearings are 2Z or 2RS closed bearings and cannot be regreased.

	Ambient temperature	Manufacturer	Type
Anti-friction bearing in motor	–20 °C ... +80 °C	Esso	Polyrex EM[1)]
	+20 °C ... +100 °C	Klüber	Barrierta L55/2[2)]
	–40 °C ... +60 °C	Klüber	Asonic GHY72[2)]

1) Mineral lubricant (= mineral-based anti-friction bearing grease)

2) Synthetic lubricant (= synthetic-based anti-friction bearing grease)

10 Appendix

10.1 Index of changes

The following additions and changes have been made since the last edition of the "DR/DV/DT/DTE/DVE AC Motors, CT/CV Asynchronous Servomotors" operating instructions (publication number: 10567917, Edition 02/2003):

General updates and revisions.

Motor design	• Nameplate, unit designation: Example has been changed.
Mechanical installation	• Before you start: Ambient temperature.
Electrical installation	• Using wiring diagrams. • Improving the grounding (EMC). • Ambient conditions during operation. • Connecting the motor: Tightening torques. • Connecting the motor via the plug connectors AB.., AD.., AM.., AS. • Optional equipment: VR forced cooling fan.
Inspection / maintenance	• Inspection / maintenance of the BMG61/122 brake.



10.2 Index

A
Absolute encoder, removal 34
Altering the blocking direction 29
AM....21
Ambient temperature....14
Anti-friction bearings for motors 59
AS 21
ASK1....21
AV 26
AV1H removal....34

B
Backstop 29, 38
Ball bearing types....59
BM02 operating currents....55
BM15-62, BMG61/122 54
BMG02 spare parts....52
BMG02 work done, braking torque 52
BMG05 - BMG4 operating currents....56
BMG05-8, BC, Bd 53
BMG05-8, BM15-62 brake 44, 49
BMG61, BMG122 operating currents....58
BMG8 - BMG32/62 operating currents....57
BR03 operating currents 55
Brake connection 23
Brake control system, interference....12
Brake maintenance, preliminary work 34
Braking torque
  BM15-62, BMG61/122....54
  BMG02 52
  BMG05-8, BC, Bd....53
Bremsenanschluss....23

C
Connecting accessory equipment....24
Connecting the motor using the IS plug connector .. 17
Connection for encoder....27

D
Designated use 5
DT56 motor connection....16
Dust....14

E
EH 26
Electrical installation....12
Encoder....26
Encoder connection 27
Encoder removal....34
Environmental conditions....14
ES 26
ET56 motor connection....17
ET56 single-phase motor....17
EV 26
EV1 removal....34
Extended storage of motors 9

F
Forced cooling fan.... 24
  V 26
  VR.... 25
  VS 24
Frequency inverter 12

G
Gas.... 14

I
Incremental encoder, removal.... 34
Inspection.... 33
  BMG02 brake.... 39
  BMG-05-8, BM15-62 brake.... 44, 49
  BR03 brake.... 40
  Motor.... 37
Inspection intervals 33
Installation altitude 14
Installation tolerances 11
Interference
  Brake control system 12
  Motor protection equipment 12
IS.... 17
IS Integrated plug connector 17

K
Knockout 16

L
Low-speed motors.... 13
Lubricant table for anti-friction bearings 59

M
Maintenance.... 33, 44, 49
  BMG02 brake.... 39
  BR03 brake.... 40
  Motor.... 37
Maintenance intervals 33
Malfunctions 31
  Brake 32
  Frequency inverter.... 32
  Motor.... 31
Mechanical installation 9
Motor connection.... 15
  DT56 16
  ET56 17
Motor maintenance, preliminary work 34
Motor protection equipment, interference 12

N
Nameplate.... 7
NV 26
NV1 removal 36
NV2 removal 36

O
Operating currents 55
BM02, BR03 55
BMG05 - BMG4 56
BMG61, BMG122 58
BMG8 - BMG32/62 57
Operation with Frequency inverter 12
Overivew of encoders 26

P
Permitted ball bearing types 59
Plug connector
AM 21
AS 21
ASK1 21
IS 17
Proximity sensor, removal 36

R
Radiation 14
Removal
AV1H 34
EV1 34

S
Safety and warning notes 4
Safety notes 5
Serial number 7
Single-phase motors 12
Size 56 / 63, preparation for installation 16
Spare parts BMG02 52
Startup 28
Switching operation 14

T
Technical data 52
Temperature sensor TF 24
TF 24
TH 24
Torque motors 13
Transportation 5

U
Unit designation 7

V
V 26
Vapors 14
VR 25
VS 24

W
Waste disposal 4
Winding thermostat TH 24
Wiring diagrams 12
Wiring notes 12
Work done
BM15-62, BMG61/122 54
BMG02 52
BMG05-8, BC, Bd 53
Working air gap
BM15-62, BMG61/122 54
BMG05-8, BC, Bd 53

Australia			
Assembly **Sales** **Service**	**Melbourne**	SEW-EURODRIVE PTY. LTD. 27 Beverage Drive Tullamarine, Victoria 3043	Tel. +61 3 9933-1000 Fax +61 3 9933-1003 http://www.sew-eurodrive.com.au enquires@sew-eurodrive.com.au
	Sydney	SEW-EURODRIVE PTY. LTD. 9, Sleigh Place, Wetherill Park New South Wales, 2164	Tel. +61 2 9725-9900 Fax +61 2 9725-9905 enquires@sew-eurodrive.com.au

Austria			
Assembly **Sales** **Service**	**Wien**	SEW-EURODRIVE Ges.m.b.H. Richard-Strauss-Strasse 24 A-1230 Wien	Tel. +43 1 617 55 00-0 Fax +43 1 617 55 00-30 http://sew-eurodrive.at sew@sew-eurodrive.at

Belgium			
Assembly **Sales** **Service**	**Brüssel**	CARON-VECTOR S.A. Avenue Eiffel 5 B-1300 Wavre	Tel. +32 10 231-311 Fax +32 10 231-336 http://www.caron-vector.be info@caron-vector.be

Brazil			
Production **Sales** **Service**	**Sao Paulo**	SEW-EURODRIVE Brasil Ltda. Avenida Amâncio Gaiolli, 50 Caixa Postal: 201-07111-970 Guarulhos/SP - Cep.: 07251-250	Tel. +55 11 6489-9133 Fax +55 11 6480-3328 http://www.sew.com.br sew@sew.com.br
	Additional addresses for service in Brazil provided on request!		

Bulgaria			
Sales	**Sofia**	BEVER-DRIVE GMBH Bogdanovetz Str.1 BG-1606 Sofia	Tel. +359 2 9532565 Fax +359 2 9549345 bever@mbox.infotel.bg

Cameroon			
Sales	**Douala**	Electro-Services Rue Drouot Akwa B.P. 2024 Douala	Tel. +237 4322-99 Fax +237 4277-03

Canada			
Assembly **Sales** **Service**	**Toronto**	SEW-EURODRIVE CO. OF CANADA LTD. 210 Walker Drive Bramalea, Ontario L6T3W1	Tel. +1 905 791-1553 Fax +1 905 791-2999 http://www.sew-eurodrive.ca l.reynolds@sew-eurodrive.ca
	Vancouver	SEW-EURODRIVE CO. OF CANADA LTD. 7188 Honeyman Street Delta. B.C. V4G 1 E2	Tel. +1 604 946-5535 Fax +1 604 946-2513 b.wake@sew-eurodrive.ca
	Montreal	SEW-EURODRIVE CO. OF CANADA LTD. 2555 Rue Leger Street LaSalle, Quebec H8N 2V9	Tel. +1 514 367-1124 Fax +1 514 367-3677 a.peluso@sew-eurodrive.ca
	Additional addresses for service in Canada provided on request!		

Chile			
Assembly **Sales** **Service**	**Santiago de Chile**	SEW-EURODRIVE CHILE LTDA. Las Encinas 1295 Parque Industrial Valle Grande LAMPA RCH-Santiago de Chile P.O. Box Casilla 23 Correo Quilicura - Santiago - Chile	Tel. +56 2 75770-00 Fax +56 2 75770-01 sewsales@entelchile.net

China			
Production **Assembly** **Sales** **Service**	**Tianjin**	SEW-EURODRIVE (Tianjin) Co., Ltd. No. 46, 7th Avenue, TEDA Tianjin 300457	Tel. +86 22 25322612 Fax +86 22 25322611 victor.zhang@sew-eurodrive.cn http://www.sew.com.cn



Switzerland			
Assembly **Sales** **Service**	**Basel**	Alfred Imhof A.G. Jurastrasse 10 CH-4142 Münchenstein bei Basel	Tel. +41 61 41717-17 Fax +41 61 41717-00 http://www.imhof-sew.ch info@imhof-sew.ch

Thailand			
Assembly **Sales** **Service**	**Chon Buri**	SEW-EURODRIVE (Thailand) Ltd. Bangpakong Industrial Park 2 700/456, Moo.7, Tambol Donhuaroh Muang District Chon Buri 20000	Tel. +66 38 454281 Fax +66 38 454288 sewthailand@sew-eurodrive.co.th

Tunisia			
Sales	**Tunis**	T. M.S. Technic Marketing Service 7, rue Ibn El Heithem Z.I. SMMT 2014 Mégrine Erriadh	Tel. +216 1 4340-64 + 1 4320-29 Fax +216 1 4329-76

Turkey			
Assembly **Sales** **Service**	**Istanbul**	SEW-EURODRIVE Hareket Sistemleri Sirketi Bagdat Cad. Koruma Cikmazi No. 3 TR-34846 Maltepe ISTANBUL	Tel. +90 216 4419163 + 216 4419164 + 216 3838014 Fax +90 216 3055867 sew@sew-eurodrive.com.tr

USA			
Production **Assembly** **Sales** **Service**	**Greenville**	SEW-EURODRIVE INC. 1295 Old Spartanburg Highway P.O. Box 518 Lyman, S.C. 29365	Tel. +1 864 439-7537 Fax Sales +1 864 439-7830 Fax Manuf. +1 864 439-9948 Fax Ass. +1 864 439-0566 Telex 805 550 http://www.seweurodrive.com cslyman@seweurodrive.com
Assembly **Sales** **Service**	**San Francisco**	SEW-EURODRIVE INC. 30599 San Antonio St. Hayward, California 94544-7101	Tel. +1 510 487-3560 Fax +1 510 487-6381 cshayward@seweurodrive.com
	Philadelphia/PA	SEW-EURODRIVE INC. Pureland Ind. Complex 2107 High Hill Road, P.O. Box 481 Bridgeport, New Jersey 08014	Tel. +1 856 467-2277 Fax +1 856 845-3179 csbridgeport@seweurodrive.com
	Dayton	SEW-EURODRIVE INC. 2001 West Main Street Troy, Ohio 45373	Tel. +1 937 335-0036 Fax +1 937 440-3799 cstroy@seweurodrive.com
	Dallas	SEW-EURODRIVE INC. 3950 Platinum Way Dallas, Texas 75237	Tel. +1 214 330-4824 Fax +1 214 330-4724 csdallas@seweurodrive.com
	Additional addresses for service in the USA provided on request!		

Venezuela			
Assembly **Sales** **Service**	**Valencia**	SEW-EURODRIVE Venezuela S.A. Av. Norte Sur No. 3, Galpon 84-319 Zona Industrial Municipal Norte Valencia, Estado Carabobo	Tel. +58 241 832-9804 Fax +58 241 838-6275 sewventas@cantv.net sewfinanzas@cantv.net

How we're driving the world

With people who think fast and develop the future with you.

With a worldwide service network that is always close at hand.

With drives and controls that automatically improve your productivity.

With comprehensive knowledge in virtually every branch of industry today.

With uncompromising quality that reduces the cost and complexity of daily operations.



SEW-EURODRIVE
Driving the world

With a global presence that offers responsive and reliable solutions. Anywhere.

With innovative technology that solves tomorrow's problems today.

With online information and software updates, via the Internet, available around the clock.









SEW-EURODRIVE GmbH & Co KG
P.O. Box 3023 · D-76642 Bruchsal / Germany
Phone +49 7251 75-0 · Fax +49 7251 75-1970
sew@sew-eurodrive.com

→ **www.sew-eurodrive.com**

Continuous Duty - 40°C Ambient - up to 3300 ft Elevation **Synchronous speed 1800 rpm @ 60Hz**

Frame Size	P_n hp	P_n kW	n_n rpm	I_n Amp 230V	I_n Amp 460V	I_n Amp 575V	I_a/I_n %	T_n lb-in.	T_a/T_n %	T_k/T_n %	Cos φ	η %	Code Letter	J_m lb-ft² *	J_m lb-ft² **	Z_o Starts/hr. BG[2]	Z_o Starts/hr. BGE[3]	T_B lb-in.	Weight lbs. *	Weight lbs. **
DT71K4	0.25	0.18	1700	1.10	0.55	0.44	340	8.95	185	225	0.67	62	G	.0062	.0084	9000	9000	22	13	19
DT71C4	0.33	0.25	1720	1.32	0.66	0.53	490	12.3	265	280	0.66	72	J	.0104	.0125	7800	9000	44	15	22
DT71D4	0.5	0.37	1700	2.00	1.00	0.80	400	18.4	215	225	0.71	68	H	.0104	.0125	5200	9000	44	15	22
DT80K4	0.75	0.55	1700	2.90	1.45	1.16	445	27.3	245	270	0.67	74	H	.0156	.0177	3700	8000	88	22	28
DT80N4	1	0.75	1700	3.70	1.85	1.48	490	37.3	300	270	0.69	75.5	J	.0207	.0228	2800	7500	88	25	32
DT90S4	1.5	1.1	1740	5.20	2.60	2.10	610	53.4	300	340	0.69	77	K	0594	.0722	2000	5000	177	35	57
DT90L4	2	1.5	1720	6.2	3.10	2.50	700	73.7	325	340	0.76	80	K	.0789	.0936	1500	3800	177	40	62
DT100LS4	3	2.2	1720	8.6	4.30	3.45	640	108	300	305	0.80	81.5	J	.101	.114	1000	2700	354	51	73
DT100L4	5	3.7	1680	13.6	6.8	5.4	570	186	260	250	0.84	81.5	G	.126	.139	800	2000	354	60	82
DV112M4	5.4	4.0	1730	14.0	7.0	5.6	700	195	280	285	0.82	85.5	J	.233	.262	—	1400	487	84	110
DV132S4	7.5	5.5	1720	18.8	9.4	7.5	670	270	275	275	0.85	86.5	H	.416	.445	—	1200	664	106	139
DV132M4	10	7.5	1740	27.4	13.7	11.0	545	363	255	225	0.78	88.5	G	655	.769	—	1000	885	146	198
DV132ML4	12.5	9.2	1740	32.8	16.4	13.1	600	444	260	220	0.80	88.5	G	783	.887	—	900	1328	165	220
DV160M4	15	11	1740	40.8	20.4	16.3	530	534	280	215	0.78	87.5	G	.945	1.049	—	700	1328	185	240
DV160L4	20	15	1760	53.6	26.8	21.5	540	720	300	210	0.79	88.5	G	2.197	2.449	—	560	1770	326	419
DV180M4	25	18.5	1760	63.5	31.6	25.3	575	888	285	200	0.80	88.5	G	2.660	2.912 3.164[1]	—	450	2655 2655[1]	386	476 485[1]
DV180L4	30	22	1760	81.2	40.6	32.5	505	1056	290	195	0.79	87.5	F	3.064	3.316 3.567[1]	—	400	2655 2655[1]	410	503 512[1]
DV200L4	40	30	1760	95	47.5	38	580	1441	280	200	0.89	90.2	F	5.558	5.809 6.061[1]	—	330	2655 5310[1]	538	650 659[1]
DV225S4	50	37	1760	118	59	47	560	1777	310	190	0.89	91.0	F	7.149	7.400 7.652[1]	—	250	2655 5310[1]	653	765 774[1]
DV225M4	60	45	1760	140	70	57	620	2161	310	200	0.88	91.7	G	8.479	8.730 8.982[1]	—	200	2655 5310[1]	717	831 840[1]

* Without Brake
** With Brake
1) Double Disc Brake
2) Values with BG rectifier (standard for frame size 100L and smaller)
3) Values with BGE rectifier (standard for frame size 112M and larger)

Abbreviations

P_n Rated Power
n_n Full Load Speed
I_n Full Load Current
I_a/I_n Starting Current Ratio (Locked Rotor)
T_n Full Load Torque
T_a/T_n Starting Torque Ratio
T_k/T_n Breakdown Torque Ratio
Cos φ Power Factor
η Motor Efficiency
J_m Motor Inertia
Z_o Permissible no-load starting frequency at 50% ED
T_B Maximum Brake Torque

Dimensions
Type DT/DV Motors and Brakemotors - Foot Mounted

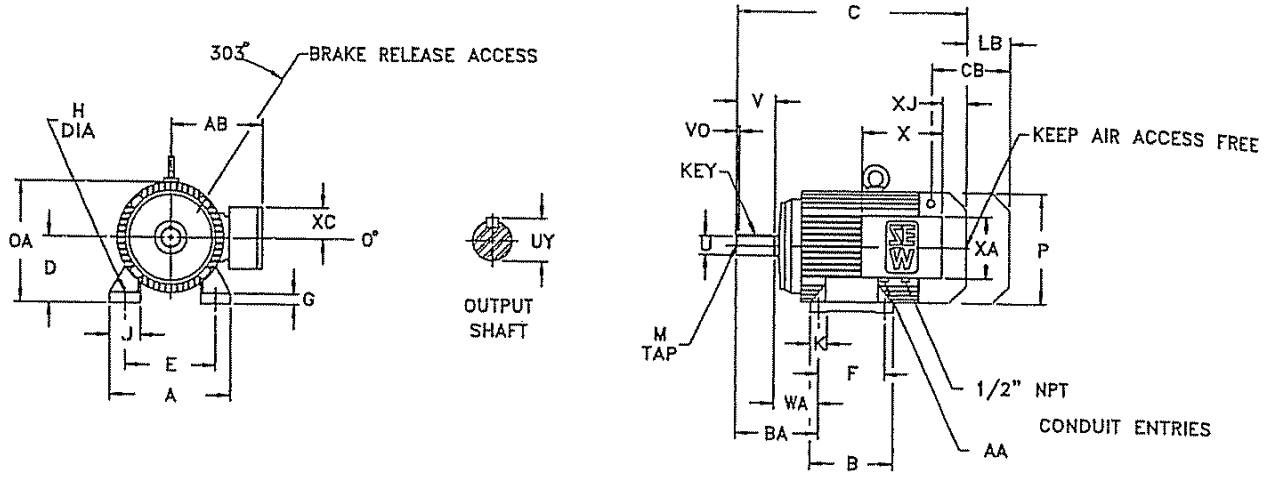

Motor

Model	A	B	BA	C	CB	D	E	F	G	H	J	K	LB	OA	P	WA
DT71	5.67	4.53	2.95	9.13	2.32	2.80 $^{+0}_{-.02}$	4.41	3.54	0.20	0.28	1.22	1.26	2.52	5.67	5.71[1]	1.77
	144	115	75	232	59	71 $^{+0}_{-.5}$	112	90	5	7	31	32	64	144	145[1]	45
DT80	5.87	4.92	3.54	11.50	2.32	3.15 $^{+0}_{-.02}$	4.92	3.94	0.39	0.35	1.30	1.10	2.52	6.02	5.71	1.97
	149	125	90	292	59	80 $^{+0}_{-.5}$	125	100	10	9	33	28	64	153	145	50
DT90	6.93	5.98	4.17	12.72	2.72	3.54 $^{+0}_{-.02}$	5.51	4.92[2]	0.31	0.35	1.26	1.26	3.35	7.44	7.76[1]	2.20
	176	152	106	323	69	90 $^{+0}_{-.5}$	140	125[2]	8	9	32	32	85	189	197[1]	56
DT100	7.40	6.69	4.84	14.61	2.72	3.94 $^{+0}_{-.02}$	6.30	5.51	0.47	0.47	1.50	1.38	3.35	7.83	7.76	2.48
	188	170	123	371	69	100 $^{+0}_{-.5}$	160	140	12	12	38	35	85	199	197	63
DV112M	8.66	6.69	5.12	16.10	3.82	4.41 $^{+0}_{-.02}$	7.48	5.51	0.55	0.47	1.73	1.38	3.15	8.78	8.70	2.76
	220	170	130	409	97	112 $^{+0}_{-.5}$	190	140	14	12	44	35	80	223	221	70

Output Shaft

Model	U	UY	V	VO	Key	M
DT71	0.551 $^{+.0005}_{-0}$	0.63	1.18	0.16	.20 x .20 x .87	M5 x .49
	14 $^{+.012}_{+.001}$	16	30	4	5 x 5 x 22	M5 x 12.5
DT80	0.748 $^{+.0006}_{+.0001}$	0.85	1.57	0.16	.24 x .24 x 1.26	M6 x .63
	19 $^{+.015}_{+.002}$	21.5	40	4	6 x 6 x 32	M6 x 16
DT90	0.945 $^{+.0005}_{+.0001}$	1.06	1.97	0.20	.31 x .28 x 1.57	M8 x .75
	24 $^{+.015}_{+.002}$	27	50	5	8 x 7 x 40	M8 x 19
DT100	1.102 $^{+.0006}_{+.0001}$	1.22	2.36	0.20	.31 x .28 x 1.97	M10 x .87
	28 $^{+.015}_{+.002}$	31	60	5	8 x 7 x 50	M10 x 22
DV112M	1.102 $^{+.0006}_{+.0001}$	1.22	2.36	0.20	.31 x .28 x 1.97	M10 x .87
	28 $^{+.015}_{+.002}$	31	60	5	8 x 7 x 50	M10 x 22

Conduit Box

AA	AB	X	XA	XC	XJ
½ *NPT*	5.43	5.79	4.53	2.24	0.55
—	138	147	115	57	14
½ *NPT*	5.43	5.79	4.53	2.24	0.55
—	138	147	115	57	14
½ *NPT*	6.73	5.79	4.53	2.24	1.10
—	171	147	115	57	28
¾ *NPT*	6.89	6.57	4.84	2.40	1.22
—	175	167	123	61	31
¾ *NPT*	7.40	6.57	4.84	2.40	1.85
—	188	167	123	61	47

[1] Fan Guard flattened at base.
[2] Not per IEC for DT90S motors.

Dimensions are $\frac{\text{inch}}{\text{mm}}$
Dimension LB is for brake option.
Dimension CB is for brake release access.
Eye bolts are removable.

Dual-Voltage Motors
(single-speed)

Frame Size	Low Voltage	High Voltage
DT71 thru DV180	230V - 60Hz	460V - 60Hz
	200V - 50Hz	400V - 50Hz

SEW-Eurodrive, Inc. USA — Single-Speed / Dual-Voltage — Connection Diagram DT79

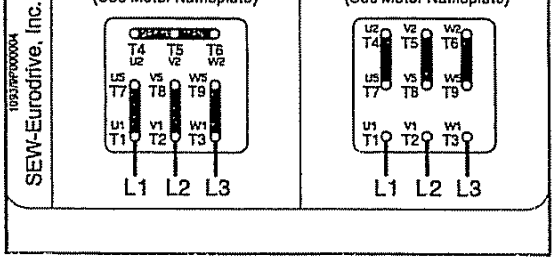

Frame Size	Low Voltage	High Voltage
DV200 thru DV225	230V - 60Hz	460V - 60Hz

SEW-Eurodrive, Inc. USA — Single-Speed / Dual-Voltage — Connection Diagram DT72

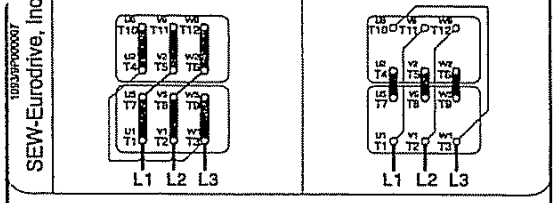

Frame Size	Low Voltage	High Voltage
DT71 thru DV225	200V - 50Hz	346V - 50Hz
	208V - 60Hz	360V - 60Hz
	220V - 50Hz	380V - 50Hz
	230V - 50Hz	400V - 50Hz
	240V - 50Hz	415V - 50Hz
	330V - 60Hz	575V - 60Hz

SEW-Eurodrive, Inc. USA — Single-Speed / Dual-Voltage — Connection Diagram DT13

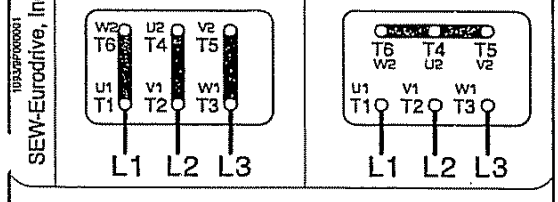

Single-Voltage Motors
(two-speed)

Frame Size: DT71 thru DV225

SEW-Eurodrive, Inc. USA — Two-Speed / Two-Winding — Connection Diagram DT43

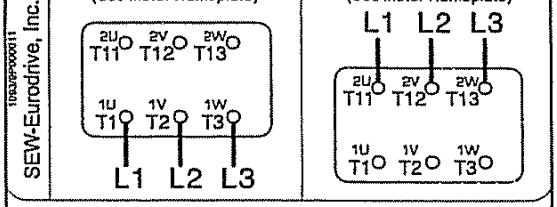

Frame Size: DT71 thru DV132S

SEW-Eurodrive, Inc. USA — Two-Speed / Single-Winding — Connection Diagram DT33

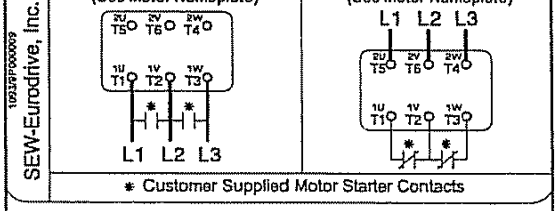

* Customer Supplied Motor Starter Contacts

Frame Size: DV132M thru DV225

SEW-Eurodrive, Inc. USA — Two-Speed / Single-Winding — Connection Diagram DT53

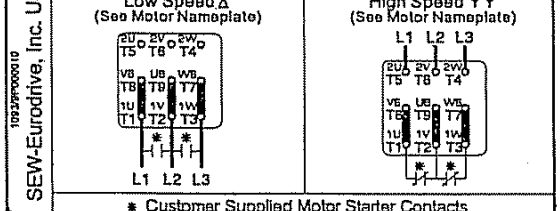

* Customer Supplied Motor Starter Contacts

SEW-Eurodrive, Inc. USA — Two-Speed / Two-Winding — Connection Diagram DT48

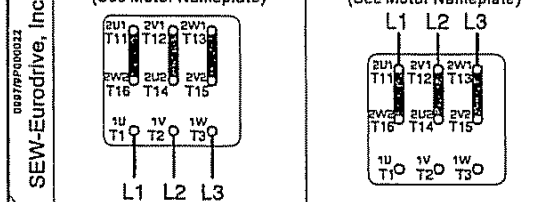

LEFT BLANK

JOHN MEUNIER

Meadowbank mining Corp.
ACP-700R
Technical Data Sheet
Reference : NC01

SCRAPER

LOAD CELL ARRANGEMENT

VEOLIA WATER
Solutions & Technologies

LEFT BLANK

Model Alpha Load Beam

Vishay BLH

Load Beam Transducer



FEATURES

- Capacity range: 5.5,11, 22, 34, 56, and 112 lb (25, 50, 100, 150, 250, 500 N)
- Precision accuracy and repeatability
- Environmentally sealed for washdown applications
- Fast, easy 2 bolt installation
- FM, CSA and OIML approved
- OIML certification for 11 to 112 pound capacities

DESCRIPTION

The Alpha Beam is a low capacity differential bending beam transducer designed for use in a wide range of medical, industrial, and testing applications. It's unique features are a combination of superb accuracy and performance in a package that is very well sealed against moisture and solvents. Alpha Beams meet both OIML requirements for accuracy and IP 67 requirements for moisture protection.

Rated force capacities range from approximately 5.5 to 112 pounds (25 to 500 Newtons). Within capacity range, Alpha Beams measure force bidirectionally, producing an output mV/V signal directly proportional to the force applied.

The heart of the patented Alpha Beam is the BLH developed SR-4® foil strain gage. Strain Gages are electrically connected to form a balanced Wheatstone Bridge. Compensation resistors maintain the accuracy of the bridge over a wide range of temperatures. The gaged element within the beam metal bellows is environmentally sealed against all adverse conditions, including water immersion.

Alpha Load Beams are approved by Factory Mutual Research (FM) and the Canadian Standards Association (CSA) for use in Class I, II, and III, Division 1 and 2 hazardous locations. They also are OIML tested and approved in accordance with paragraph 8.1 of the European Standard on Metrological aspects of nonautomatic weighing instrument EN 45501:1992 and by application of the OIML International Recommendation R 60 (Edition 1991).

APPLICATIONS

- Bench & portable scales
- Low capacity batching
- Medical weighing systems
- Pull/tear strength testing

CONFIGURATION

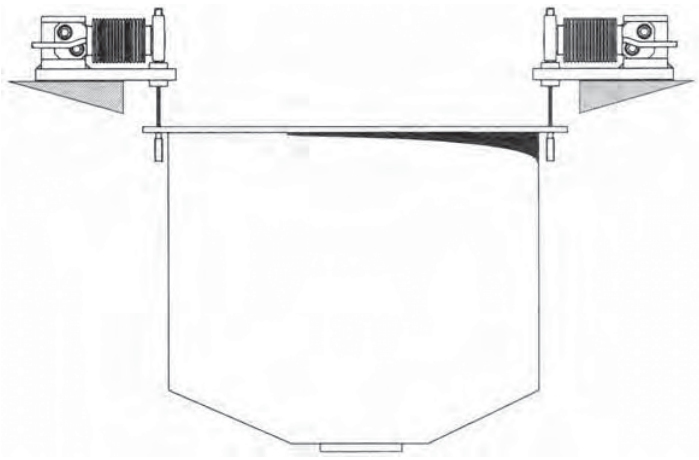

Model Alpha Load Beam

Vishay BLH — Load Beam Transducer

SPECIFICATIONS

Performance

Capacity	5.5,11, 22, 34, 56, 112 lb (25, 50, 100,150, 250, 500 N)
Rated Output (R.O.)	3mV/V nominal
Nonlinearity	0.02% R.O.
Hysteresis	0.02% R.O.
Repeatability	0.01% R.O.
Creep (20 minutes)	0.05% R.O.

Temperature

Safe Temperature	-15 to 175°F
Compensated Range	0 to + 150°F
Effect On Zero Balance	0.0008% RO/°F
Effect On Rated Output	0.0008% Load/°F

Electrical

Recommended Excitation	10 Vac/dc
Maximum Excitation	20 Vac/dc
Zero Balance	2.0% RO
Input Resistance	350ohms +/-3.5 ohms
Output Resistance	350ohms +/-3.5 ohms
Insulation Resistance	2 G-ohms
Electrical Connection	5-ft, 4 conductor shielded cable

Adverse Load Ratings

Safe Overload	175% RO
Ultimate Overload	300% RO

Materials

Element	Electroless nickel-plated berylium copper
Bellows	Tin-plated brass

Deflection at Rated Output

11 to 56lb	0.01 inch
112lb	0.017 inch

Sealing

IP67	all capacities

Approvals

FM	3611
CSA	C22.2 (all applicable sections)
OIML	EN 45501: 1992 (11-112lb)

Mechanical

Unit Weight	approx. 2 ounces

DIMENSIONS

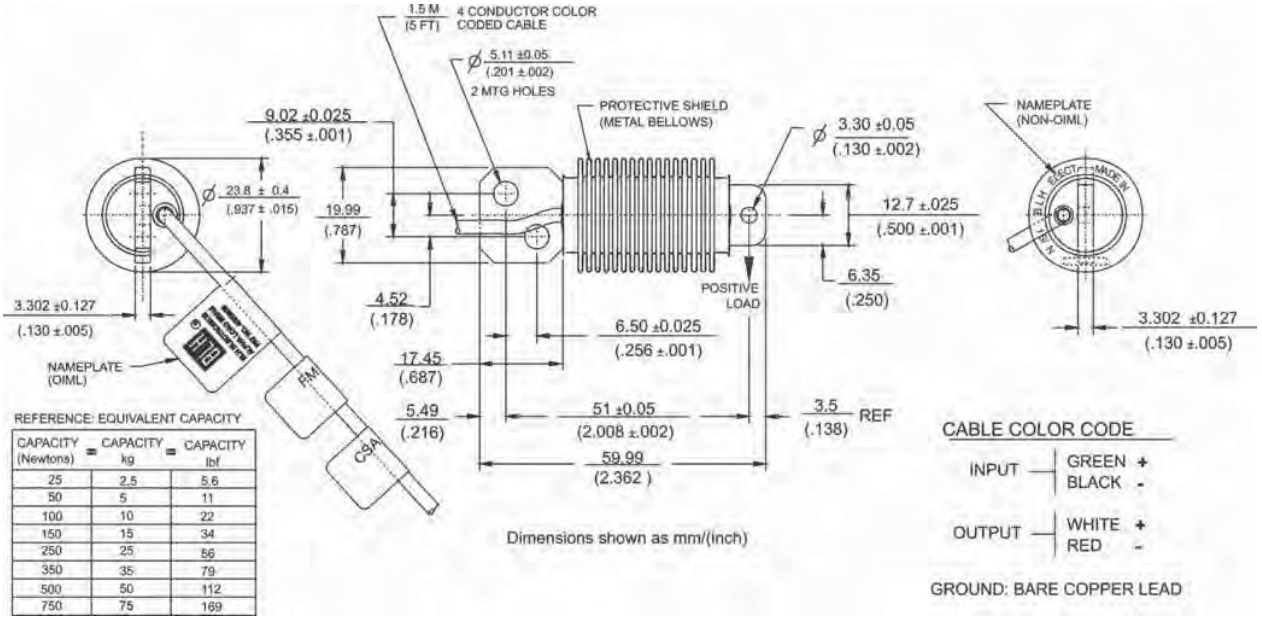

REFERENCE: EQUIVALENT CAPACITY

CAPACITY (Newtons)	= CAPACITY kg	= CAPACITY lbf
25	2.5	5.6
50	5	11
100	10	22
150	15	34
250	25	56
350	35	79
500	50	112
750	75	169

Vishay BLH is continually seeking to improve product quality and performance. Specifications may change accordingly.

VISHAY TRANSDUCERS (VT) SALES OFFICES

VT Americas System Products Norwood, MA
PH: +1-781-298-2200
FAX: +1-781-762-3988
vts.us@vishaymg.com

VT Canada Toronto
PH: +1-416-251-2554
FAX: +1-416-251-2690
vt.can@vishaymg.com

VMG UK Basingstoke
PH: +44-125-646-2131
FAX: +44-125-647-1441
vt.uk@vishaymg.com

VT Sweden Karlskoga
PH: +46-586-630-00
FAX: +46-586-630-99
vt.se@vishaymg.com

VMG Germany Heilbronn
PH: +49-7131-3901-260
FAX: +49-7131-3901-2666
vt.de@vishaymg.com

VMG France Chartres
PH: +33-2-37-33-31-20
FAX: +33-2-37-33-31-29
vt.fr@vishaymg.com

VT Norway System Products Oslo
PH: +47-22-884090
FAX: +47-22-884099
vt.no@vishaymg.com

VT Finland System Products Jorvas
PH: +358-9-8194-220
FAX: +358-9-8194-2211
vt.fi@vishaymg.com

VMG Israel Netanya
PH: +972-9-863-8888
FAX: +972-9-863-8800
vt.il@vishaymg.com

VT China Tianjin
PH: +86-22-2835-3503
FAX: +86-22-2835-7261
vt.prc@vishaymg.com

VT Taiwan* Taipei
PH: +886-2-2696-0168
FAX: +886-2-2696-4965
vt.roc@vishaymg.com
*Asia except China

Load Cell Arrangement
Mounting Instructions
Rigid mounted reducer size 100 or larger with FA47

1.To prevent fretting corrosion, "Never Seeze" or an equivalent corrosion retarding grease, should be applied to the input shaft of the rigid mounted reducer.

2. Install the 5mm spacer against the shoulder of the input shaft. Slide the FA47 reducer onto the input shaft. Secure the FA47 reducer screwing the ½"-13, 2"long retaining bolt into the centre tap of the input shaft. Bolt through the spring washer and disc, against snap ring.

3.Depending on the mounting position, remove one of the bolts that secure the input shaft assembly to the gear case, so that in this mounting position no static load is applied to the load cell. Replace this bolt with the one supplied with two spot faces on socket head. Mount spring washer and nut on bolt.

4.Mount the load cell on the support step. Apply "Loctite 242" to the two M5 socket head screws and tighten them utilizing two spring washers.

5.Mount the load cell support on the FA47 reducer lug using the fasteners supplied (one bolt, two plain washers and two nuts). The load cell tip must be aligned with the socket head of the bolt.

6.Using a wrench on the bolt spot faces, adjust it, so that the load cell tip is inserted into the socket head, and there is a 2 mm gap between the bolt head and the metal bellows.
Tighten spring washer and nut on bolt.

Notes:
-For indoor locations, use steel fasteners of property class 8.8 or higher.
-For outdoor locations, stainless steel fasteners of minimum property class 70 are recommended. A hood protecting the load cell is also suggested.

J.S./5.12.97
C:\Jorge\Tech\cell05.doc

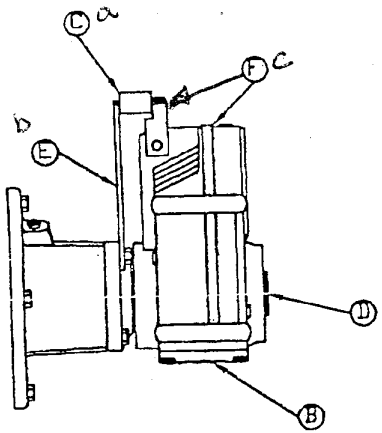

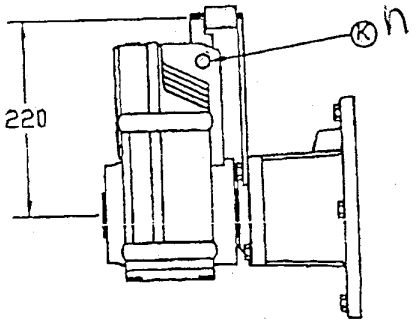

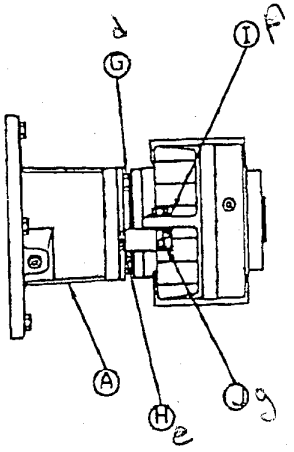

110 Nm MAXIMUM OUTPUT

K	HEXHEAD CAPSCREW M12X30-8.8	1
J	HEXHEAD CAPSCREW M5X10-0.8	2
I	LOCK WASHER 1/2"	1
H	HEXHEAD CAPSCREW M3X5-0.5	1
G	HEXHEAD CAPSCREW M12X40-8.8	2
F	FA47 / AD4 BRACKET 011011.03.A	1
E	FA47 / AD4 PLATE 011011.02.A	1
D	AD4 SHAFT 011012.02.A	1
C	ALPHA 100LB LOAD BEAM	1
B	FA47 ASSEMBLY	1
A	AD4ZR ASSEMBLY	1

SEE ASSEMBLY INSTRUCTION

	Name	Date
dwn	TYSON J	
chkd		

SCALE

Material

Old part Nr.

Unit Type

Title: LOAD CELL ASSEMBLY

SEW EURODRIVE BRAMALEA, ONT

011023.01.A

Page 1 OF 1

Mounting hardware

Rigid mounted reducer size 100 or larger with FA47

8.8 steel fasteners

Specific of this combination:

- 1 custom built load cell support.
- 1 modified socket head bolt, M16 , DIN 912 , length to suit.
- 1 spacer, o.d. 50mm, i.d. 1.375", width 5mm
- 1 hexagon bolt 1/2"-13 UNC, 2" long, stock # 9881441
- 1 hexagon nut, M16, DIN 934, stock # 102032
- 1 spring lock washer, M16, DIN 127 B, stock # 109959

Additional repetitive set:

- 2 socket head screws, M5-12, DIN 912, stock # 110485
- 2 spring lock washers, M5, DIN 127B, stock # 102555
- 1 hexagon bolt, M12-50, DIN 931, stock # 110302
- 2 plain washers, M12, DIN 125 A, stock # 102393
- 2 hexagon nuts, M12, DIN 934, stock # 102016

Shipped inside the FA47 hollow shaft (as per parts list):

- 1 standard retaining bolt
- 1 spring lock washer
- 1 disc
- 1 snap ring

J.S./5.12.97

C:\Jorge\Tech\Fasten.doc

Display & Programming.

Mode	Function	Parameter	▼	▲	Display	Default
Meas'mt	Display measurement		Min. peak	Max. peak	Meas'mt [%]	
Limits	Limit 1 prog./display	Off,5-100%	Decrease	Increase	Limit 1	80
Limits	Limit 2 prog./display	Off,5-100%	Decrease	Increase	Limit 2	Off
Ts [S]	Start timer	0.0-25.0 Sec.	Decrease	Increase	Ts [Sec]	2.0 Sec.
Tr [S]	Alarm reaction timer 1	0.0-25.0 Sec.	Decrease	Increase	Tr [Sec]	0.1 Sec.
Tr [S]	Alarm reaction timer 2	0.0-25.0 Sec.	Decrease	Increase	Tr [Sec]	0.1 Sec.
Hyst's	Hysteresis 1	5-50%	Decrease	Increase	Hyst's [%]	10
Hyst's	Hysteresis 2	5-50%	Decrease	Increase	Hyst's [%]	10
Units						
Full scale	Max. input	20-100%	Decrease	Increase	'Full scale'	100
Offset	Offset adjustment ±	±10%(F.S.)	Decrease	Increase	Meas'mt [%]	---
Input	Input select	Vdiff, 10V, 20mA	Vdiff-10V-20mA	20mA-10V-Vdiff	"Inp"	Vdiff

HPL220 is programmed by the use of only three keys located on the front panel, see the paragraph about programming on page 2. All parameters as well as their range are listed in the table above. The parameters are stored in EEPROM. When no key has been activated for about 5 seconds, the display returns to the „Meas'mt" position, except for the offset adjustment, where the display continuously shows the actual measurement for adjustment.

Note: The unit is equipped with accellerator on the keys, so the function of the keys is repeated if the keys are held down continuously.

Note! Only one of the inputs (vDiff, 0-10V, 0-20mA) may be used.

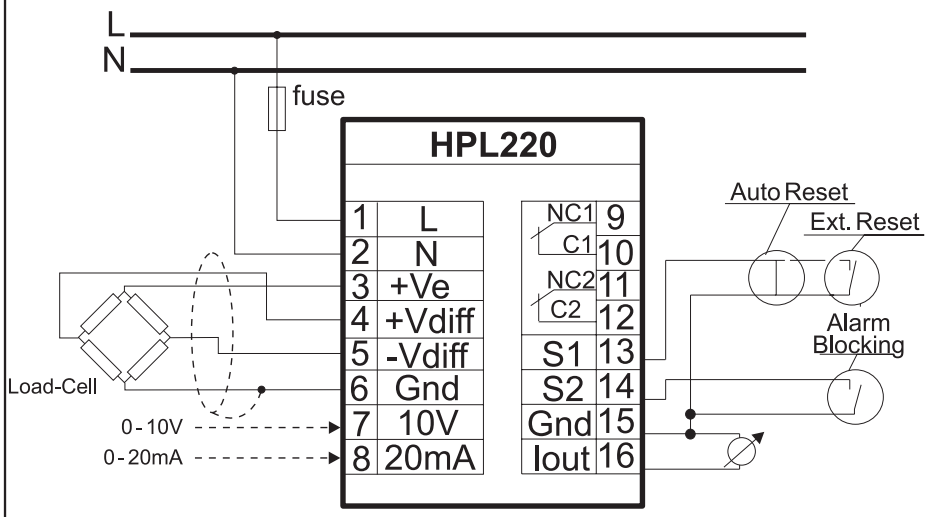

Example: HPL220 connected to a load-cell

Unipower HPL220

Version 4.0

Technical information — English edition

Technical Specifications

Mechnical

Housing
Makrolon 8020 (30% GV), UL94V-1 (housing). Makrolon 2800, UL94V-2 (connector + front).

Mounting
Snap-on construction for 35mm DIN-rail or wall mounting.

Protection class
IP40 (housing).
IP20 (connector).

Temperature range: -15 - +50 °C.

Weight: Ca. 450g.

Dimensions: D 110 x W 56 x H 75 mm.

Electrical

Supply
See technical info on the unit.
Also available:
1 x 120 VAC -> 1 x 240 VAC

Measurement range
Vdiff: 20 - 100mV full scale, 100kΩ
10V: 0-10V, 850kΩ
20mA: 0-20mA, 5Ω

Consumption: 2 VA

Transducer Supply
10V stabilized max. load 330Ω.

Relay: 250Vac, 5Amp.

Analogue output.
0-20mA, 0-400Ω.
The output is NOT electrically isolated from the measurement system.

CE-mark to:
EN50081-1, EN50082-2, EN61010-1

WENtechnology
Raleigh, NC, USA
(919) 954-1004 ***www.wentec.com***

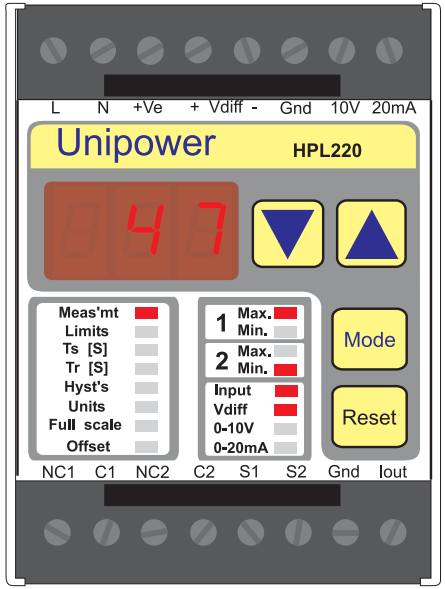

The CONCEPT

The Unipower HPL220 is a member of a family of ***"Intelligent Control Units"*** which is based upon the latest advance in the Microcontroller Technology. The HPL220 operates as both a measurement transducer and a signal conditioner for many different types of transducers. The device includes 2 trip points and associated relay outputs, timers and hysteresis functions which makes it an extremely flexible control unit. The HPL220 accepts 3 different types of transducer signals: 0-100 mV differential, 0-10V and 0-20mA. Each signal range is scalable with respect to span and offset. The lowest measurement range is 20mV F.S. The unit has a stabilized 10V supply for the transducer. The display shows the measurement in % of the range.

Generally

The HPL220 is often used together with a load-cell to protect motor driven machinery against overload etc. Other members of the HPL-family realize the same function from the measurement of the power consumption of the motor. The HPL220 is used in special cases where the power-consumption of the motor varies little as a function of the change of load. This is for example true when the motor uses a gear with a very large exchange ratio. The drawing below shows a possible load curve of a machine taken immediately after starting.

Programming:
HPL220 is programmed by the use of only three keys located on the front panel. The „Mode"-key is used to select one of the programmable parameters: When a parameter is selected its value may be altered using the arrow keys.

Measurement range:
Setting up the measurement range for the HPL220 consists of three settings: Selecting input (transducer output), Full scale and offset adjustment.

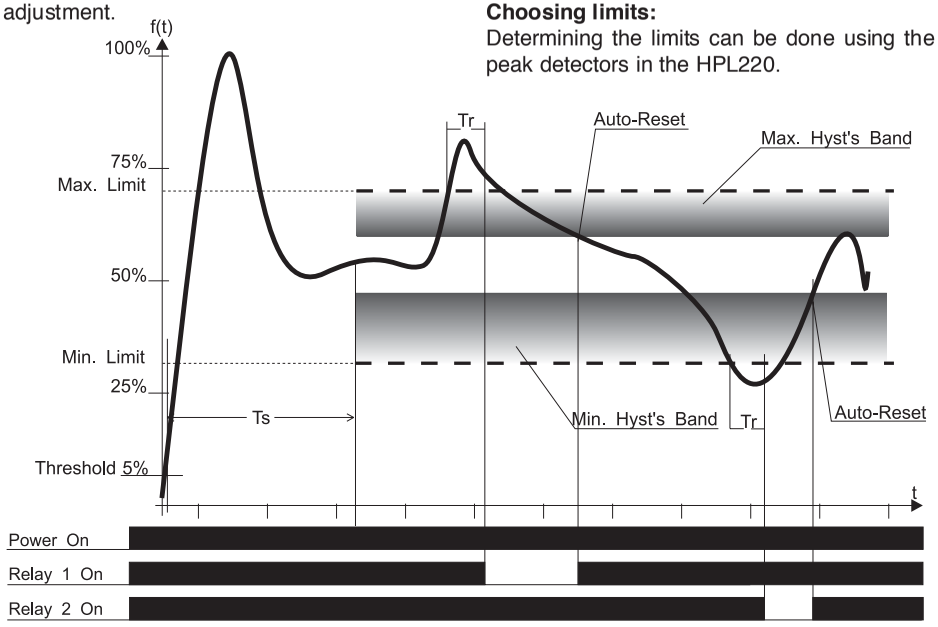

Input:
Using the arrow keys to select the 'input' to match the output of the transducer. The transducer is interfaced to the HPL220 terminals, which corresponds to the input selected.

Full scale:
The arrow keys are used to change the range continuously between 20% and 100%.

Offset adjustment:
The offset must be adjusted with the input signal = 0. The display shows the actual measurement. Using the arrow keys adjust the offset, until the display shows 0. At full scale above 50mV the arrow keys typically needs to be activated more than once to provide a change in the measurement.
Note! Adjustment only applies to Vdiff-input.

Absolute measurement:
The HPL220 measures bipolar input signal, but is able to show only up to 10% of full scale below zero. If the Dip. Sw. 2 is set to pos. 'On' negative signals are inverted.

Choosing limits:
Determining the limits can be done using the peak detectors in the HPL220.

Peak detectors:
Leave the system running at normal load and read the peak values by activating the arrow keys in „Meas'mt"-mode. The Max.peak is shown by arrow-up and the Min.Peak by arrow down. Place the Min limit appropriately below the Min peak value. Peak values are set to actual measurement by expiration of Ts. They may be reset separately by pressing the relevant arrow key and at the same time activate the Reset key.

Ts: Start timer
The start timer (Ts) is used to avoid alarms at system start. The Ts delay function is activated after the input signal reaches 5%. When Ts expires the limits, hysteresis and Tr become active. If the input signal drops below 5%, the supervision is switched off again.

Tr: Reaction timer
The figure shows how the reaction timer (Tr) is activated after the limit is exceeded. Tr is used to avoid alarms, unless the limit has been exceeded for a certain time. If Tr is set to 0, Tr ~ 50ms.

Reseting alarms:
Alarms may be reset by the reset key on the front panel or by Input S1.
Input S1: Auto or external reset
External reset: S1 is connected to Gnd using a switch or optocoupler output. See fig. below.
Auto reset: If S1 is connected to Gnd, Auto reset mode is enabled, which leads to reset of alarms by hysteresis.

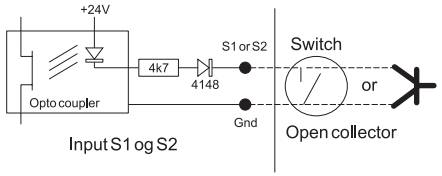

Hysteresis:
The figure to the left shows how a possible hysteresis band is placed relative to the limits; Always above a Min limit and below a Max limit. Hysteresis is activated when an alarm is generated and the external reset is active (Input S1, Auto reset mode).

Input S2: Blocking of alarms
Like Ts blocks for alarms during start up, alarms can be ignored by connecting S2 to Gnd.
Ex. 1: If a brief overload is expected, a PLC output or the like may be used to block for a short period of time.
Ex. 2: If the Min. limit is used, a spare break switch from the Motor Switch must be connected between the S2 input and Gnd, otherwise an alarm is generated each time the motor is switched off on purpose.

DIP switch:
The DIP switch is found immediately below the front plate (see the figure below).

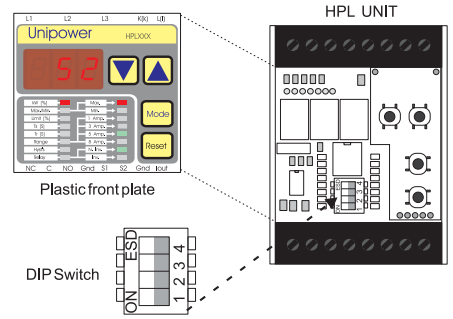

1. Turn off the unit.
2. Remove the plastic front plate (use a small screwdriver).
3. Make the changes and reassemble the unit.

DIP Switch Usage		
SW 1	Programming protection off	Off
SW 1	Programming protection on	On
SW 2	Bipolar mode	Off
SW 2	Unipolar (absolute) mode	On
SW 3	Limit 1 = Max. Limit	Off
SW 3	Limit 1 = Min. Limit	On
SW 4	Limit 2 = Max. Limit	Off
SW 4	Limit 2 = Min. Limit	On

LED-usage:

LED Usage	
Limit 1 active	Max/Min 1 LED On
Limit 2 active	Max/Min 2 LED On
Alarm 1 active	Max/Min 1 LED flashes
Alarm 2 active	Max/Min 2 LED flashes
Start delay active	Ts LED On
Alarm delay active	Tr LED On

JOHN MEUNIER

Meadowbank mining Corp.
ACP-700R
Technical Data Sheet
Reference : NC01

MICROSAND

ST-011

VEOLIA WATER
Solutions & Technologies

LEFT BLANK

JOHN MEUNIER

NOMENCLATURE/ BILL OF MATERIALS

TITRE/ TITLE	Rev.	DESCRIPTION	PAR/ BY:	APPR:	DATE:	Affaire / Contract	Meadowbank Mining
Microsand	0	SUBMITTAL	P.Ste-Marie	P.S.M.	2009-03-26		
	1						
	2					REF. No.	**NC01** **Rev.** **0**
	3						
DESSIN /DWG # **ST-011**	4					**Date:**	2009-03-26

REV.	ITEM	QTE/QTY. Unit.	QTE/QTY. Total	DESCRIPTION	P&ID I.D./TAG	CAT. ACCPAC	SOURCE	FA/SA FI SITE	P / N
	NC01ST-011-1	3	6	**MICROSAND**		Y44		SITE	
				Effective size:					
				135 microns					
				1 wooden pallet (about 48 bags of 50 lbs each)					
				Total quantity: 6 pallets					

LEFT BLANK

Material Safety Data Sheet

Revised:

September 2002

Section 1 – Product Identification

Trade Names:	Silica Sand-All Grades, Vita-S, RRW, Tip Top
Common Names/Synonyms:	Sand, Silica Sand, Quartz, Crystalline Silica, Flint, Ground Silica
Product Use:	Foundry Molds, Abrasive Blasting, Glass and Ceramic Melt Sand, Aggregate Filler, Filtration Media
Manufacturers Name:	Manley Bros. of Indiana, Inc
Manufacturers Address:	P.O. Box 80, 300 South Vermillion Street Troy Grove, IL 61372
Manufacturers Telephone:	(815) 539-7486
Date Revised:	September 2002
Emergency Number:	(815) 539-7486 (7:00 am – 4:00 pm Central Time, Monday-Friday)

Section 2 – Composition and Information on Ingredients

Hazardous Ingredient Name:	Silica, Quartz, SiO_2	
CAS Number:	14808 - 60- 7	
Concentration (%)	>95%	
Exposure Limits in Air:		
OSHA - PEL	10 mg/m^3 % SiO_2+2	(8-Hour Time Weighted Average)
ACGIH – TLV	0.05 mg/cubic meter	(8-Hour Time Weighted Average)
NIOSH	0.05 mg/cubic meter	(10-Hour Time Weighted Average, 40-hour work week)

Exposure Limits refer to the respirable fraction.

Silica is classified as hazardous under Occupational Safety and Health Administration (OSHA) regulations (29 CFR 1910.1200).

CAUTION:
Crystalline silica exists in several forms, the most common of which is quartz. If crystalline silica (quartz) is heated to more than 870°C it can change to a form of crystalline silica known as trydimite, and if crystalline silica (quartz) is heated to more than 1470°C, it can change to a form of crystalline silica known as cristobalite. Crystalline silica as trydimite and cristobalite are more fibrogenic than crystalline silica as quartz. The OSHA PEL for crystalline silica as trydimite and cristobalite is one-half the PEL for crystalline silica (quartz); the ACGIH TLV for crystalline silica as trydimite and cristobalite is one-half the TLV for crystalline silica as quartz.

Section 3 – Hazards Identification

Emergency Overview

Manley Bros. Silica Sand is a light buff to white sand with no odor. It is not flammable, combustible, or explosive. It can cause irritation to the eyes. A single exposure will not result in serious adverse health effects.

Potential Health Effects
Inhalation:

a. Silicosis: Respirable crystalline silica (quartz) can cause silicosis, a fibrosis (scarring) of the lungs. Silicosis may be progressive; it may lead to disability and death.

b. Cancer: Crystalline silica (quartz) inhaled from occupational sources in sufficient concentrations is classified as carcinogenic to humans. In its Ninth Annual Report on Carcinogens, the National Toxicology Program (NTP) listed crystalline silica as a known human carcinogen, based on sufficient evidence of carcinogenicity from studies in humans indicating a casual relationship between exposure to respirable crystalline silica and increased lung cancer rates in workers exposed to crystalline silica dust. The International Agency for Research on Cancer (IARC) has evaluated crystalline silica and determined that "crystalline silica inhaled in the form of quartz or cristobalite from occupational sources is carcinogenic to humans (Group 1)."

c. Scleroderma: There is evidence that exposure to respirable crystalline silica or that the disease silicosis is associated with the increased incidence of scleroderma, an autoimmune disorder manifested by a fibrosis (scarring) of the skin and internal organs.

d. Tuberculosis: Silicosis increases the risk of tuberculosis.

e. Nephrotoxicity: There are several studies suggesting that exposure to respirable crystalline silica or that the disease silicosis is associated with the increased incidence of kidney disorders.

Eye Contact: Crystalline silica (quartz) may cause abrasion of the cornea.

Skin Contact: Not applicable.

Ingestion: Not applicable.

Chronic Effects: The adverse health effects -- silicosis, cancer, scleroderma, tuberculosis, and nephrotoxicity -- are chronic effects.

Signs and Symptoms of Exposure: There are generally no signs or symptoms of exposure to crystalline silica (quartz). Often, chronic silicosis has no symptoms. The symptoms of chronic silicosis, if present, are shortness of breath, wheezing, cough and sputum production. The symptoms of acute silicosis are the same as those associated with chronic silicosis; additionally, weight loss and fever may also occur. The symptoms of scleroderma include thickening and stiffness of the skin, particularly in the fingers, shortness of breath, difficulty swallowing and joint problems.

Medical Conditions Generally Aggravated by Exposure: The condition of individuals with lung disease (e.g., bronchitis, emphysema, chronic obstructive pulmonary disease) can be aggravated by exposure.

See Section 11, Toxicological Information, for additional detail on potential adverse health effects.

Section 4 – First Aid Procedures

Inhalation – There is no specific treatment because the health effects associated with silica are chronic. If gross inhalation of silica occurs, remove the person to fresh air, perform artificial respiration as needed, and obtain medical attention as needed.

Eye – Wash the eye with water. If irritation persists, seek medical attention.

Skin – N/A

Ingestion – If large amounts are ingested, seek medical attention.

Section 5 – Fire Fighting Measures

Flashpoint:	None
Upper/Lower Explosive Limit:	None (N/A) (not combustible)
Autoignition Temperature:	None
Unusual Fire and Explosion Habits:	None
Extinguishing Media:	Compatible with all media; use the medium appropriate to the surrounding fire.
Special Fire Fighting Procedures:	None with respect to this product.
Hazardous Combustion Products:	None

Section 6 – Accidental Release Measures

Wear appropriate personal protective equipment as described in Section 8 of this document. Collect the material using a method which does not produce dust [High-Efficiency Particulate Air (HEPA) vacuum or thoroughly wetting down the silica]. Place the silica in a covered container appropriate for disposal. Dispose of the silica according to federal, state, and local regulations.

Section 7 – Handling and Storage

Do not breathe dust which may be created during the handling of this product. Do not rely on vision to determine whether respirable silica is present in the air, as it may be present without a visible cloud. Use good housekeeping procedures to prevent the accumulation of silica dust in the workplace. Avoid the creation of respirable dust.

Use adequate ventilation and dust collection equipment. Ensure that the dust collection system is adequate to reduce dust levels to below the appropriate occupational health limit.

In accordance with the U.S. Occupational Safety and Health Administration's (OSHA) Hazard Communication Standard (29 CFR 1910.1200, 1915.99, 1917.28, 1918.90, 1926.59, 1928.21), state, and/or local right-to-know laws and regulations, familiarize your employees with this MSDS and the information contained herein. Warn your employees of the potential health risks associated with the use of this product and train them in the appropriate use of personal protective equipment and engineering controls which will reduce their risks of exposure.

Section 8 – Exposure Controls/Personal Protection

Ventilation: Use local exhaust as required to maintain exposures below the occupational exposure limits; see also ACGIH, Industrial Ventilation – Recommended Practice (latest edition).

Respiratory Protection: NIOSH recommends that workers wear the type CE supplied air abrasive blasting respirator operated in the positive-pressure mode (assigned protection factor (APF) of 2,000) during abrasive blasting operations that involve crystalline silica sand. Avoid breathing dust produced during the use and handling of this product. The following chart specifies the types of respirators which may provide respiratory protection for crystalline silica. This chart is based on the OSHA PEL, assuming that the material involved is 98% crystalline silica, therefore resulting in a PEL of 0.1 mg/m^3.

CONDITION Particulate Concentration	**MINIMUM RESPIRATORY PROTECTION REQUIRED TO MEET THE CONDITION OSHA PEL FOR CRYSTALLINE SILICA (0.1 mg/m^3)**
Less than or equal to 1.0 mg/m^3 (10 x PEL)	• Any air-purifying respirator with a P100 filter approved by NIOSH.
Less than or equal to 2.5 mg/m^3 (25 x PEL)	• Any powered, air-purifying respirator with a P100 filter approved by NIOSH, or • Any supplied-air respirator equipped with a hood or helmet and operated in a continuous-flow mode (for example, type CE abrasive blasting respirators operated in the continuous flow mode) approved by NIOSH

CONDITION Particulate Concentration	MINIMUM RESPIRATORY PROTECTION REQUIRED TO MEET THE CONDITION OSHA PEL FOR CRYSTALLINE SILICA (0.1 mg/m³)
Less than or equal to 5.0 mg/m³ (50 x PEL)	• Any air-purifying respirator with a P100 filter approved by NIOSH, or • Any powered, air-purifying respirator with a tight-fitting facepiece and a P100 filter approved by NIOSH.
Less than or equal to 100 mg/m³ (1,000 x PEL)	• Any supplied-air respirator equipped with a half-mask and operated in a pressure-demand or other positive pressure mode.
Less than or equal to 200 mg/m³ (2000 x PEL)	• Any supplied-air respirator equipped with a half-mask and operated in a pressure-demand or other positive-pressure mode (for example, a type CE abrasive blasting respirator operated in a positive-pressure mode)
Planned or emergency entry into environments containing unknown concentrations or concentrations less than or equal to 1,000 mg/m³ (10,000 x PEL)	• Any self-contained breathing apparatus equipped with a full facepiece and operated in a pressure-demand or other positive-pressure mode, or • Any supplied-air respirator equipped with a full facepiece and operated in a pressure-demand or other positive-pressure mode in combination with an auxiliary self-contained breathing apparatus operated in a pressure-demand or other positive-pressure mode
Firefighting	• Any self-contained breathing apparatus equipped with a full facepiece and operated in a pressure-demand or other positive-pressure mode approved by NIOSH
Escape only	• Any air-purifying respirator with a P100 filter approved by NIOSH, or • Any appropriate escape-type, self-contained breathing apparatus

See also ANSI standard Z88.2 (latest revision) "American National Standard for Respiratory Protection," 29 CFR 1910.134 and 1926.103, and 42 CFR 84.

Permissible Exposure Levels:

Exposure Guidelines for Crystalline Silica						
OSHA		**ACGIH**		**NIOSH**		
TWA	**STEL**	**TWA**	**STEL**	**TWA**	**STEL**	**Unit**
$\frac{10\ mg/m^3}{\%\ SiO_2+2}$	None	0.05	None	0.05	None	mg/m³

If the workplace airborne crystalline silica concentration is unknown for a given task, conduct air monitoring to determine the appropriate level of respiratory protection. Consult with a certified industrial hygienist, your insurance risk manager, or the OSHA Consultative Services group for detailed information. Ensure appropriate respirators are worn during and following the task, including clean-up or whenever airborne dust is present, to insure ambient dust levels are below occupational health limits.

Gloves:Recommended in situations where abrasion from sand may occur.

Eye: Goggles recommended where airborne dust is produced.

Other: Protective clothing as appropriate for the work environment. Dusty clothing should be laundered before it is reused. Do not take dusty clothing home.

Section 9 – Physical and Chemical Properties

Appearance:	Light Buff to White Sand
Odor:	None
Physical State:	Granular Solid
pH:	Not Applicable
Vapor Pressure	Not Applicable
Vapor Density:	Not Applicable
Boiling Point or Range, °F:	Above 3500°F
Melting Point or Range, °F:	Above 2000°F
Solubility In Water:	Insoluble
Specific Gravity:	2.65 Crystalline

Section 10 – Stability and Reactivity

Stability:	Stable
Materials to Avoid:	Strong Oxidizing Agents
Hazardous Decomposition Products:	None
Hazardous Polymerization:	Will not occur

Section 11 – Toxicological Information

A. SILICOSIS

The major concern is silicosis (lung disease), caused by the inhalation and retention of respirable crystalline silica dust. Silicosis can exist in several forms, chronic (or ordinary), accelerated, or acute.

Chronic or Ordinary Silicosis is the most common form of silicosis, and can occur after many years of exposure to levels above the occupational exposure limits for airborne respirable crystalline silica dust. It is further defined as either simple or complicated silicosis.

Simple silicosis is characterized by lung lesions (shown as radiographic opacities) less than 1 centimeter in diameter, primarily in the upper lung zones. Often, simple silicosis is not associated with symptoms, detectable changes in lung function or disability. Simple silicosis may be progressive and may develop into complicated silicosis or progressive massive fibrosis (PMF).

Complicated silicosis or PMF is characterized by lung lesions (shown as radiographic opacities) greater than 1 centimeter in diameter. Although there may be no symptoms associated with complicated silicosis or PMF, the symptoms, if present, are shortness of breath, wheezing, cough and sputum production. Complicated silicosis or PMF may be associated with decreased lung function and may be disabling. Advanced complicated silicosis or PMF may lead to death. Advanced complicated silicosis or PMF can result in heart disease secondary to the lung disease (corpumonale).

Accelerated Silicosis can occur with exposure to high concentrations of respirable crystalline silica over a relatively short period; the lung lesions can appear within five (5) years of the initial exposure. The progression can be rapid. Accelerated silicosis is similar to chronic or ordinary silicosis, except that the lung lesions appear earlier and the progression is more rapid.

Acute Silicosis can occur with exposures to very high concentrations of respirable crystalline silica over a very short time period, sometimes as short as a few months. The symptoms of acute silicosis include progressive shortness of breath, fever, cough and weight loss. Acute silicosis is fatal.

B. CANCER

IARC - The International Agency for Research on Cancer ("IARC") concluded that there was "*sufficient evidence* in humans for the carcinogenicity of crystalline silica in the forms of quartz or cristobalite from occupational sources", and that there is "*sufficient evidence* in experimental animals for the carcinogenicity of quartz and cristobalite." The overall IARC evaluation was that "crystalline silica inhaled in the form of quartz or cristobalite from occupational sources is *carcinogenic to humans (Group 1)*." The IARC evaluation noted that "carcinogenicity was not detected in all industrial circumstances studies. Carcinogenicity may be dependent on inherent characteristics of the crystalline silica or on external factors affecting its biological activity or distribution of its polymorphs." For further information on the IARC evaluation, see IARC Monographs on the Evaluation of Carcinogenic Risks to Humans, Volume 68, "Silica, Some Silicates..." (1997).

NTP - The National Toxicology Program, in its Ninth Annual Report on Carcinogens, concluded that respirable crystalline silica is known to be a human carcinogen, based on sufficient evidence of carcinogenicity from studies in humans indicating a casual relationship between exposure to respirable crystalline silica and increased lung cancer rates in workers exposed to crystalline silica dust.

There is substantial literature on the issues of the carcinogenicity of crystalline silica, which the reader should consult for additional information. A summary of the literature is set forth in "Exposure to crystalline silica and risk of lung cancer; the epidemiological evidence", Thorax, Volume 51, pp. 97-102 (1996). The official statement of the American Thoracic Society on the issue of silica carcinogenicity was published in "Adverse Effects of Crystalline Silica Exposure", American Journal of Respiratory and Critical Care Medicine, Volume 155, pp. 761-765 (1997). The official statement concluded that "The available data support the conclusion that silicosis produces increased risk for bronchogenic carcinoma. The cancer risk may also be increased by smoking and other carcinogens in the workplace. Epidemiologic studies provide convincing evidence for increased cancer risk among tobacco smokers with silicosis. Less information is available for never-smokers and for workers exposed to silica but who do not have silicosis. For workers with silicosis, the risks for lung cancer are relatively high and consistent among various countries and investigators. Silicosis should be considered a condition that predisposes workers to an increased risk of lung cancer." Id. at 763.

C. SCLERODERMA
There is evidence that exposure to respirable crystalline silica or that the disease silicosis is associated with the increased incidence of scleroderma, an immune system disorder manifested by a fibrosis (scarring) of the lungs, skin and other internal organs. Recently, the American Thoracic Society noted that "there is persuasive evidence relating scleroderma to occupational silica exposures in setting where there is appreciable silicosis risk." The following may be consulted for additional information on silica, silicosis and scleroderma (also known as progressive systemic sclerosis): Occupational Lung Disorders, Third Edition, Chapter 12, entitled "Silicosis and Related Diseases", Parkes, W. Raymond (1994). "Adverse Effects of Crystalline Silica Exposure", American Journal of Respiratory and Critical Care Medicine, Volume 155, pp. 761-765 (1997).

D. TUBERCULOSIS
Individuals with silicosis are at increased risk to develop tuberculosis, if exposed to persons with tuberculosis. The following may be consulted for further information: Occupational Lung Disorders, Third Edition, Chapter 12, entitled "Silicosis and Related Diseases", Parkes, W. Raymond (1994). "Adverse Effects of Crystalline Silica Exposure", American Journal of Respiratory and Critical Care Medicine, Volume 155, pp. 761-765 (1997).

E. NEPHROTOXICITY
There are several recent studies suggesting that exposure to respirable crystalline silica or that the disease silicosis is associated with the increased incidence of kidney disorders. The following may be consulted for additional information on silica, silicosis and nephrotoxicity: Occupational Lung Disorders, Third Edition, Chapter 12, entitled "Silicosis and Related Diseases", Parkes, W. Raymond (1994). "Further evidence of human silica nephrotoxicity in occupationally exposed workers", British Journal of Industrial Medicine, Vol. 50, No. 10, pp. 907-912 (1993). "Adverse Effects of Crystalline Silica Exposure", American Journal of Respiratory and Critical Care Medicine, Volume 155, pp. 761-765 (1997).

Section 12 – Ecological Information

Crystalline silica is not known to be ecotoxic.

Section 13 – Disposal Considerations

General: Crystalline silica may be landfilled. Material should be placed in covered containers to minimize generation of airborne dust.

RCRA: Crystalline silica (quartz) is not classified as a hazardous waste under the Resource Conservation and Recovery Act, or its regulations, 40 CFR §261 et seq.

The above information applies to Manley Bros. Silica Sand only as sold. The product may be contaminated during use, and it is the responsibility of the user to assess the appropriate disposal method in this situation.

Section 14 – Transport Information

Crystalline silica (quartz) is not a hazardous material for purposes of transportation under the U. S. Department of Transportation Table of Hazardous Materials, 49 CFR §172.101.

Section 15 – Regulatory Information

UNITED STATES (FEDERAL AND STATE)

TSCA No.: Crystalline silica (quartz) appears on the EPA TSCA inventory under the CAS No. 14808-60-7.

RCRA: Crystalline silica (quartz) is not classified as a hazardous waste under the Resource Conservation and Recovery Act, or its regulations, 40 CFR §261 et seq.
CERCLA: Crystalline silica (quartz) is not classified as a hazardous substance under regulations of the Comprehensive Environmental Response Compensation and Liability Act (CERCLA), 40 CFR §302.
Emergency Planning and Community Right to Know Act: Crystalline silica (quartz) is not an extremely hazardous substance under Section 302 and is not a toxic chemical subject to the requirements of Section 313.
Clean Air Act: Crystalline silica (quartz) mined and processed was not processed with or does not contain any Class I or Class II ozone depleting substances.
FDA: Silica is included in the list of substances that may be included in coatings used in food contact surfaces, 21 CFR §175.300(b)(3)(xxvi).
NTP: Respirable crystalline silica (quartz) is classified as known to be a human carcinogen.
OSHA Carcinogen: Crystalline silica (quartz) is not listed.
California Proposition 65: Crystalline silica (quartz) is classified as a substance known to the state of California to be a carcinogen.

CANADA

Domestic Substances List: Silica, as a naturally occurring substance, is on the Canadian DSL.
WHMIS Classification: D-2A

OTHER

EINECS No.: 231-545-4
EEC Label (Risk/Safety Phrases): R 48/20, R 40/20, S22, S38
IARC: Crystalline silica (quartz) is classified in IARC Group 1.
National, state, provincial or local emergency planning, community right to know or other laws, regulations or ordinances may be applicable--consult applicable national, state, provincial or local laws.

Section 16 – Other Information

Hazardous Material Information System (HMIS):

Health	*
Flammability	0
Reactivity	0
Protective Equipment	E

* For further information on health effects, see Sections 3 and 11 of this MSDS.

More information on the effects of crystalline silica exposure may be obtained from the following:

National Institute for Occupational Safety and Health (NIOSH)-----Phone: 1-800-35-NIOSH
Website: http://www.cdc.gov/niosh

National Toxicology Program (NTP)-----Phone: 1-919-541-0530
Website: http://ntp-server.niehs.nih.gov

Occupational Safety and Health Administration (OSHA)-----Phone: 1-800-321-OSHA
Website: http://www.osha.gov

MANLEY BROS. OF INDIANA, INC. COMPANY DISCLAIMER

The data in this Material Safety Data Sheet relates only to the specific material designated herein and does not relate to use in combination with any other material or in any process. The information and recommendations set forth herein are based on technical data that Manley Bros. of Indiana, Inc. believes reliable. It is intended for use by persons having technical skill and at their own discretion and risk. Since conditions of use are outside the control of Manley Bros. of Indiana, Inc., no warranties, expressed or implied, are made and no liability is assumed in connection with any use of this information. Any use of this data and information must be determined by the user to be in accordance with federal, state, and local laws and regulations. Customers and users of silica must comply with all applicable health and safety laws, regulations, and orders.

LEFT BLANK

JOHN MEUNIER

Meadowbank mining Corp.
ACP-700R
Technical Data Sheet
Reference : NC01

COAGULANT DOSING

ST-051

VEOLIA WATER
Solutions & Technologies

LEFT BLANK

JOHN MEUNIER

NOMENCLATURE/ BILL OF MATERIALS

TITRE/ TITLE		Rev.	DESCRIPTION	PAR/ BY:	APPR:	DATE:	Affaire / Contract	Meadowbank Mining		
Coagulant dosing		0	SUBMITTAL	Julie Trudel	J.T.	2009-03-26				
		1								
		2					REF. No.	NC01	Rev.	0
		3								
DESSIN /DWG #	ST-051	4					Date:	2009-03-26		

REV.	ITEM		QTE/QTY. Unit.	QTE/QTY. Total	DESCRIPTION	P&ID I.D./TAG	CAT. ACCPAC	SOURCE	FA/SA FI SITE	P / N
	NC01ST-051-	**1**	1	1	**Coagulant automatic preparation system**	DF9-511	D56		FI	
					Manufacturer:					
					Hapman					
					Delivery rate					
					Up to 200 kg/h					
					Wetted material:					
					Stainless steel					
					Including:					
					One (1) Bulk Bag Unloader, hoist and trolley					
					One (1) Automatic Bag Agitator Assembly					
					One (1) Hapman U-Trough Feeder					
					One (1) Dust colletor					
					One (1) Mix Tank (1000L)					
					One (1) Use Tank (1000L)					
					Two (2) Tank level transmitters					
					One (1) Mix tank mixer					
	NC01ST-051-	**2**	1	1	**COAGULANT TRANSFER PUMP**	P9-515	D56		FI	
					Model #					
					BW 10 / A4-A7-A7-F0-GA-X					
					Supplier					
					Seepex					
					Description					
					Progressive cavity pump : 5000 L/H @ 2 bars, 541 rpm pump max speed. Progressive cavity pump with 2" NPT suction, 2" NPT discharge, stainless steel wetted casing parts and rotor, mechanical seal. Starting Direct On Line, 5 HP, 1150 rpm, 575V/3ph/60Hz.					

JOHN MEUNIER

NOMENCLATURE/ BILL OF MATERIALS

TITRE/ TITLE	Rev.	DESCRIPTION	PAR/ BY:	APPR:	DATE:	Affaire / Contract	Meadowbank Mining		
Coagulant dosing	0	SUBMITTAL	Julie Trudel	J.T.	2009-03-26				
	1								
	2					REF. No.	NC01	Rev.	0
	3								
DESSIN /DWG # ST-051	4					Date:	2009-03-26		

REV.	ITEM	QTE/QTY. Unit.	QTE/QTY. Total	DESCRIPTION	P&ID I.D./TAG	CAT. ACCPAC	SOURCE	FA/SA FI SITE	P / N
	NC01ST-051-3	1	3	**COAGULANT METERING PUMP**	P9-511	D56		SA	
				Model #	P9-512				
				MD 012-12 / A6-A7-A7-F0-GA-X	P9-513				
				Supplier					
				Seepex					
				Description					
				Progressive cavity pump : 9 - 87 L/H @ 2 bars, 242 rpm pump max speed. Progressive cavity pump in stainless steel construction with 1" NPT suction, 1/2" NPT discharge, stainless steel wetted casing parts and rotor, mechanical seal. Motor inverter duty, 0.5 HP, 1750 rpm, 575V/3ph/60Hz. Including a dry running protection and a 1 HP AC Tech/Jacmar drive, model ESV751N06TXC, Nema 4x.					
	NC01ST-051-4	1	3	**SAFETY RELIEF VALVE**	V9-515	D56		SA	
				Model #	V9-516				
				TVPR50-PVC-G	V9-517				
				Supplier					
				Primary Fluid					
				Description					
				Relief valve PVC, 1/2" FNPT c/w glycerine pressure gauge 0-60 psi with PVC Viton isolator.					
	NC01ST-051-5	1	1	**CALIBRATION TUBE**		D56		SA	
				Model #					
				PV#2-1000ml					
				Supplier					
				Primary Fluid					
				Description					
				Calibration tube; PVC; 1000 ml, connection 1/2" NPT at both ends					

JOHN MEUNIER

NOMENCLATURE/ BILL OF MATERIALS

TITRE/ TITLE	Rev.	DESCRIPTION	PAR/ BY:	APPR:	DATE:	Affaire / Contract	Meadowbank Mining
Coagulant dosing	0	SUBMITTAL	Julie Trudel	J.T.	2009-03-26		
	1						
	2					REF. No.	NC01 Rev. 0
	3						
DESSIN /DWG # ST-051	4					Date:	2009-03-26

REV.	ITEM	QTE/QTY. Unit.	QTE/QTY. Total	DESCRIPTION	P&ID I.D./TAG	CAT. ACCPAC	SOURCE	FA/SA FI SITE	P / N
	NC01ST-051-6	1	2	**CORPORATION STOPS**		D56		FI	
				Model #					
				CCS-56-PVC					
				Supplier					
				Primary Fluid System					
				Description					
				QUILL 6", Body PVC, Ball Check ceramic Check spring in SS 316					

LEFT BLANK

AUTOMATIC PREPARATION SYSTEM

LEFT BLANK

HAPMAN

Ideas that move.

BULK BAG FRAMES

INSTALLATION,
OPERATION
&
MAINTENANCE
MANUAL

REV 9/07

All owners and operators should read this manual and/or be instructed on safe operating and maintenance procedures before attempting to uncrate, install, operate, adjust or service this equipment

Following are symbols used in this manual along with a description of their meanings



DANGER indicates an imminently hazardous situation which, if not avoided, will result in death or severe injury.



WARNING indicates a potentially hazardous situation which, if not avoided, will result in death or severe injury



CAUTION indicates a potentially hazardous situation which, if not avoided, may result in minor/moderate injury and/or damage to equipment.

HAPMAN

BULK BAG FRAMES

Table of Contents

Definition of Warning Symbols 2

Major Features Index

- Forklift Model 4
- Hoist & Trolley Model 4
- Hopper Model 5
- Agitator Frame 5

1.0 Warranty 6

2.0 General Information 6

3.0 Introduction and Principles of Operation 7

4.0 Safety Instructions 7

5.0 Operation – Forklift Model 9

6.0 Operation – Hoist & Trolley Model 10

7.0 Operation – Hopper Model 10

8.0 Operation – Agitator Frame 12

9.0 Agitator Air Control Panel Components 12

10.0 Air Panel Operation 13

Air Panel Schematic 14

Replacement Parts 15

Major Features Index

Forklift Model

Figure 4

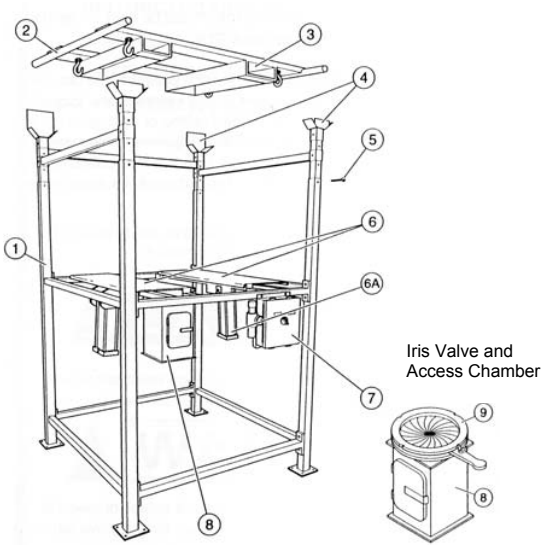

1. Frame
2. Lifting Apparatus (Transporter)
3. Fork Pockets (optional)
4. Transporter Rest Pads
5. Height Adjustment Pin
6. Agitator Assembly (optional)

6-A. Agitator Cylinder

7. Agitator Control Panel
8. Access Chamber
9. Iris Valve

Note: The marker numerical designations listed in this illustration are for reference purposes only within this manual.

Hoist & Trolley Model

Figure 5

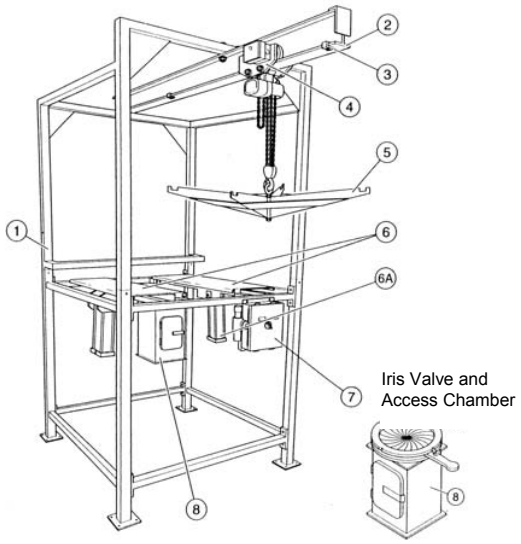

1. Frame
2. I-Beam
3. Adjustable Stop
4. Hoist/Trolley (optional)
5. Lifting Apparatus
6. Agitator Assembly (optional)

6-A. Agitator Cylinder

7. Agitator Control Panel (optional)
8. Access Chamber
9. Iris Valve

Note: The marker numerical designations listed in this illustration are for reference purposes only within this manual.

Hopper Model
Figure 6

Forklift Model Frame Option

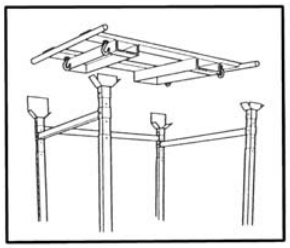

Hoist & Trolley Model Frame Option

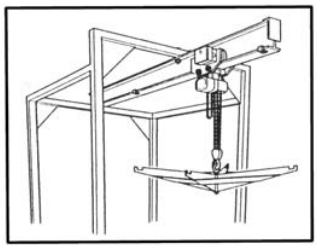

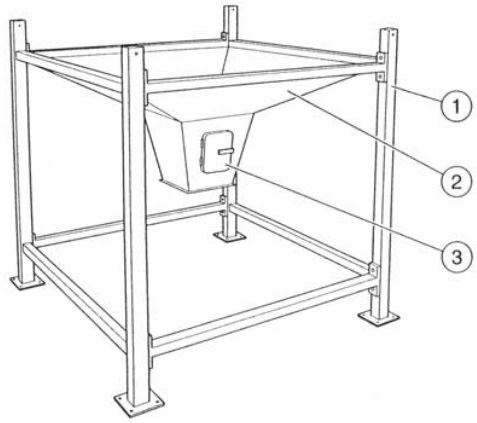

1. Frame

2. Hopper

3. Access Door

Note: For Forklift Model or Hoist/Trolley Model frame options, see page 4.

Note: The marker numerical designations listed in this illustrations are for reference purposes only within this manual.

Agitator Frame
Without Hoist/Trolley or Forklift Lifting Apparatus
Figure 7

Note: Customer is responsible for providing bag lifting and suspension equipment.

1. Frame

6. Agitator Assembly

6-A. Agitator Cylinder

7. Agitator Air Control Panel

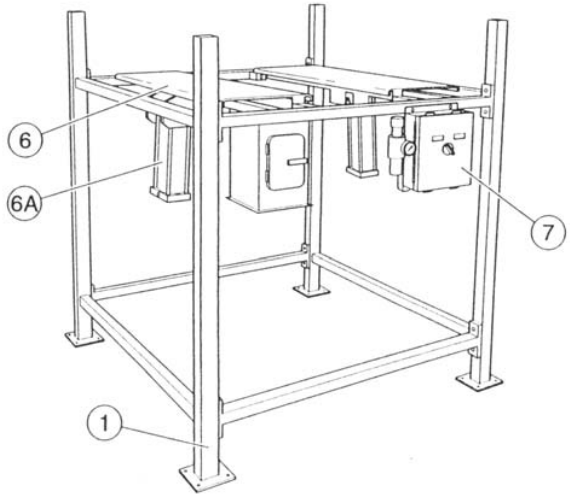

Note: The marker numerical designations listed in this illustration are for reference purposes only within this manual.

1.0 - WARRANTY

Equipment manufactured by Hapman is warranted to be free of defective material and workmanship under the use and service quoted for a period of one year after date of shipment. This warranty is void if serviced by anyone other than Hapman service personnel.

Hapman agrees to replace or repair any defective parts it has manufactured as covered under this warranty. F.O.B. our plant, subject to inspection of the part in question by Hapman's personnel. No article may be returned to Hapman without Hapman's written consent.

Parts supplied but not manufactured by Hapman are subject to the warranties extended to Hapman by its suppliers. Hapman's liability is limited to such adjustment as the respective manufacturer makes to the seller.

In no event shall Hapman be liable for costs incurred due to equipment malfunction such as consequential damages, lost production or the expenses or losses incurred due to geographical location or fault of the product, difficulty of access to the product as installed, or time urgency on the part of the user and/or buyer of the equipment.

NOTICE:
While all information in this manual has been checked for accuracy, changes in design or specifications may occur at any time in HAPMAN's continuing program of product improvement. HAPMAN cannot assume responsibility for errors in the production of this manual, or for unsafe operating practice of those employing HAPMAN equipment.



BEFORE INSTALLING, OPERATING OR MAINTAINING ANY EQUIPMENT, THE CONTENTS OF THIS MANUAL SHOULD BE THOROUGHLY REVIEWED AND UNDERSTOOD.

Statements and instructions set forth herein are based upon the best information and practices known to HAPMAN, but this may not be construed to suggest that every conceivable safety precaution is contained herein. As a matter of practicality, HAPMAN cannot guarantee that actions in accordance with such statements and instructions will result in the complete elimination of all hazards and thus assumes no liability for accidents which may occur.

For further information regarding installation, operation and maintenance please contact the factory service department.

HAPMAN Customer Service
6002 E. Kilgore Rd
Kalamazoo, MI 49048-2321 U.S.A.
Phone: 269-343-1675
U.S. Toll Free: 800-427-6260
Fax: (269) 382 8266
e-mail: service@HAPMAN.com

2.0 - General Information

This manual provides complete instructions of how to install, operate and maintain the equipment supplied by Hapman.

Assistance on part orders or service calls may be obtained from Hapman. Address and phone numbers are located on the last page of this manual. When calling or writing for parts or service, please reference the equipment serial number. This number is stamped on the Hapman nameplate

affixed to each piece of equipment. (space is provided on the last page of this manual for the recording of equipment identification.)

3.0 Introduction And Principles Of Operations

The Hapman Bulk Bag Frame is intended to receive and support large bulk bags, sometimes called supersacks, in a position to allow for the contents of the bag to flow into some other device such as a flexible screw conveyor, pneumatic or a tubular conveyor. Usually, such a device is equipped with an access chamber and iris valve. Both units are typically mounted on a hopper above the inlet of the conveyor.

Once the bulk bag is placed in the frame (suspended above – but not resting on the agitator assembly) the discharge spout of the bag is placed through the iris valve. This is done by opening the door of the access chamber and completely opening the iris valve allowing the discharge spout of the bag to be placed through the iris valve body. Once the spout is placed through the iris valve, the iris valve should be tightly closed prior to removing the tie string on the discharge spout. Now, close the access chamber door and gradually open the iris valve to introduce material into the conveyor inlet.

Hapman Bulk Bag Frames come in four styles being differentiated by the method of elevating and positioning the bag or by hopper design and agitator assembly. All units are covered in this manual.

4.0 Safety Instructions

⚠ CAUTION

All Hapman furnished equipment must be installed, operated and maintained in accordance with service instructions. Failure to follow these instruction may result in serious personal injury or property damage.

1. Once the Bulk Bag Frame has been properly positioned in the plant and in the desired location with other equipment such as conveyors, the frame must be securely fastened (anchored) to the floor or load cell before attempting to suspend a bulk bag from the frame.

2. The Bag Frame must be anchored to floor using (16) 5/8” dia. anchors – (4) per foot pad located on each corner of the frame. Floor anchor shall be suitable for this type of equipment and be designed to prevent movement and/or tipping over of the frame. Recommended anchor – Hilti HVA Adhesive Anchor System (or equivalent). Each anchor must have minimum pull out rating of 300 pounds.

3. Never exceed the maximum weight bearing capacity – 4000 pounds of the Bulk Bag Frame (Forklift Model and Hoist & Trolley Model). This capacity is clearly marked on the frame of the Forklift Model and the I-Beam of the Hoist & Trolley Model.

⚠ CAUTION

4. It is especially critical that the height of the Forklift Model be set properly before placing a full bulk bag (mounted on the Transporter) in the frame. The frame is equipped with adjustable mounting

holes (set a five (5) inch increments) and pins to secure the frame. Position the frame so that the bag does not rest on the optional agitator assembly. The bag should be suspended several inches above the agitator. (See Figure 9) Failure to do this could result in the agitator being severely bent and non-operational.

Figure 9

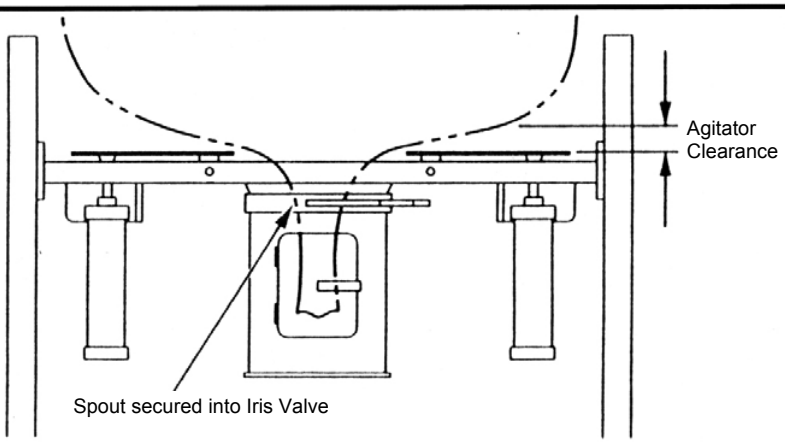

5. Before attaching the bag to the lifting apparatus, always inspect the lifting loops on the bulk bag to ensure they are secure and do not show excessive wear and weakness. If the lifting loops are frayed, damaged, loose or torn, they may not hold the bag in place when the entire bag is lifted or positioned in the frame.

6. Always attach all four (4) of the lifting loops to the lifting apparatus.

⚠ WARNING

7. The pneumatically operated agitator assembly is often purchased with the Bulk Bag Frame. When the Agitator assembly is installed, never operate the agitator control panel when personnel are near the equipment.

8. Use extreme care when lifting and positioning the bulk bag to ensure no one is between the bag and any portion of the frame.

9. Never attempt to release or untie the bulk bag discharge spout without placing the spout properly into the access chamber and securing it into the iris valve. If your unit is a Hopper Model, use the access door on the hopper to untie the bulk bag spout before quickly closing and securing the door.

10. Periodically inspect the bolts and welds of the frame to ensure their continued integrity and tightness.

11. When adjusting the height of the supporting frame of the Forklift Model, use care to hold and squarely lift (or lower) the frame and reinsert the retaining pins before easing the lifting unit out of the way.

5.0 Operation - Forklift Model

Loading Procedure
Reference Figure 4

A full bulk bag is usually delivered on a skid to the vicinity of the Bulk Bag Frame. Inspect the lifting loops for signs of wear, fraying or weakness.

Make sure the frame is adjusted to the proper height for the bulk bag being loaded. Frame will be designed for a specific bag size but also accommodate bags one size larger or smaller. There is a 10 inch vertical frame adjustment provided on this model. Adjustment holes (4) are positioned at 2-1/2" increments.

Make sure the total weight of the bulk bag and contents does not exceed the frames capacity (4,000 pounds). The not-to-exceed capacity is clearly marked on the frame.

With a forklift, position the bulk bag Transporter lifting apparatus (which is designed to fit on the forks of the forklift), over the bag. Lower the Transporter to the bag and hook the lifting loops over the hooks on the Transporter. **Note:** if the bag is equipped with a liner, secure it properly to the tensioner at this time.

Gently lift the bulk bag to make sure the lifting loops are secure. Then elevate the Transporter with the bag to a height that will allow the Transporter to clear the top of the frame.

Move the forklift forward and position the Transporter's four corners over the four Transporter rest pads at the top of the frame. Then lower the Transporter until it firmly rests in the frame on the Transporter's rest pad. **Make sure the bulk bag does not rest on the agitator assembly. (See Figure 12)**

Figure 12

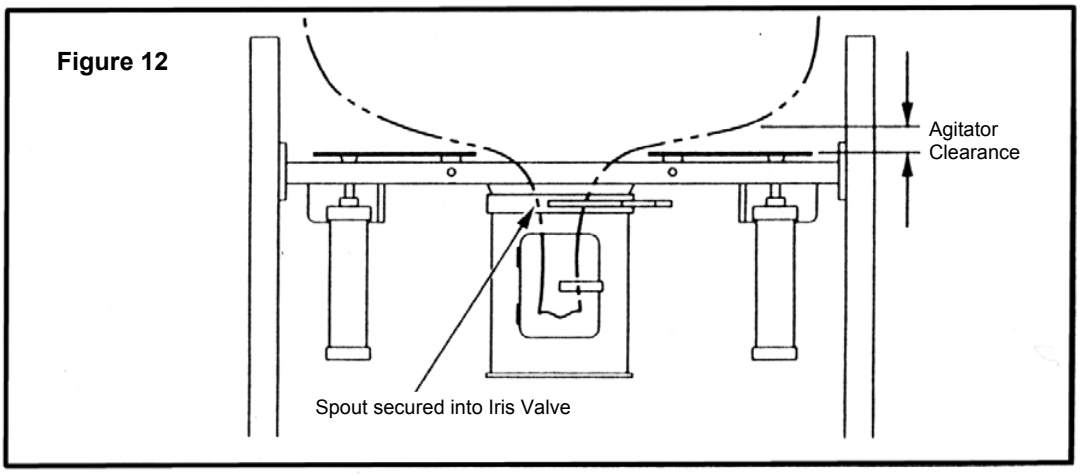

With the bulk bag correctly placed on the Bulk Bag Frame (suspended above the agitator assembly when furnished), place the discharge spout of the bag through the iris valve using the access chamber door. Close the iris valve, (See Figure 12) securing the discharge spout of the bag in the access chamber prior to removing the tie string on the spout. If this is not done correctly, the contents of the bulk bag discharge onto the floor.

6.0 Operation - Hoist & Trolley Model

Loading Procedure
Reference Figure 5

Full bulk bag is usually delivered on a skid to the Bulk Bag Frame and positioned directly under the extended portion of the I-Beam. Inspect the lifting loops for signs of wear, fraying or weakness.

Make sure the total weight of the bulk bag and contents does not exceed the frame's capacity (4,000 pounds). The not-to exceed capacity is clearly labeled (or stenciled) on the I-Beam.

With lifting apparatus attached to the hoist cable, lower the apparatus over the bulk bag and attach the lifting loops of the bag to the apparatus**. Note:** If the bag is equipped with a liner, secure it properly to the tensioner at this time. With the hoist, gently lift the bulk bag to make sure the lifting loops are secure. Then elevate the apparatus, with the attached bag, to a height that will clear the frame. It is critical to have the bag elevated to the correct height before using the trolley to move it into the frame. The height is determined by the elevation and location of the bag agitator assembly.

The I-Beam is equipped with adjustable stops on both ends to facilitate positioning of the hoist. Once the bulk bag is elevated to the proper height, use the trolley (manual, electric or pneumatic) to move the load to its proper position over the receiving equipment.

Lower the bulk bag to a position that will allow for the placement of the discharge spout through the iris valve and into the access chamber. **Do not allow the bag to rest on the agitator assembly**. Place the discharge spout of the bag through the iris valve (See Figure 13) sing the door of the access chamber. Close the iris valve securing the discharge spout of the bag into the access chamber prior to removing the tie string on the spout. If this is not done correctly, the contents of the bag may discharge onto the floor.

Figure 13

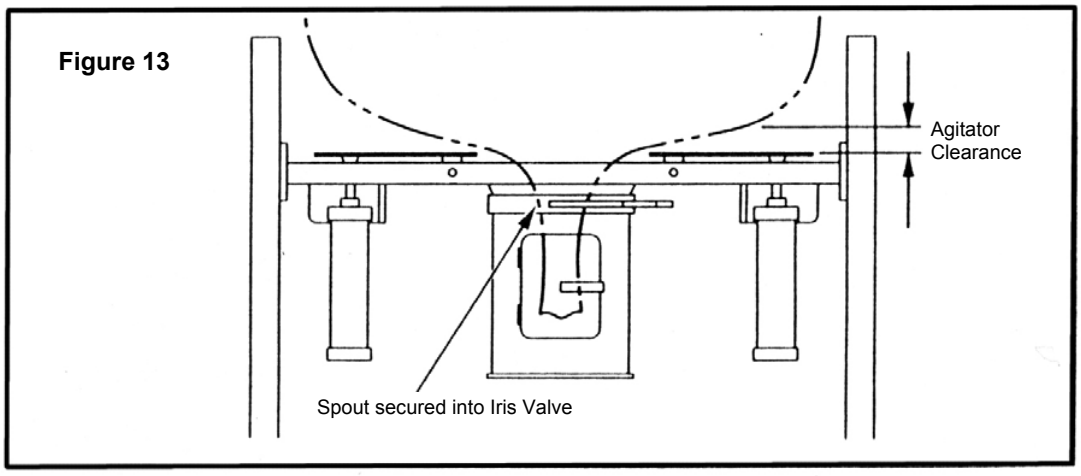

7.0 Operation - Hopper Model

Loading Procedure For Forklift Option
Reference Figure 5

A full bulk bag is usually delivered on a skid to the vicinity of the Bulk Bag Frame. Inspect the lifting loops for signs of wear, fraying or weakness. Make sure the frame is adjusted to the proper height for the bulk bag being loaded. Frame will be designed for a specific bag size but also accommodate

bags one size larger or smaller. There is a 10 inch vertical frame adjustment provided on this model. Adjustment holds (4) are positioned at 2-1/2" increments.

Make sure the total weight of the bulk bag and contents does not exceed the frame's capacity (4,000 pounds). The not-to-exceed capacity is clearly marked on the frame.

With a forklift, position the bulk bag Transporter lifting apparatus (which is designed to fit on the forks of the forklift), over the bag. Lower the Transporter to the bag and hook the lifting loops over the hooks on the Transporter**. Note:** if the bag is equipped with a fitted liner, secure it properly to the tensioner at this time.

Gently lift the bulk bag to make sure the lifting loops are secure. Then elevate the Transporter with the bag to a height that will allow the Transporter to clear the top of the frame.

Move the forklift forward and position the Transporters four corners over the four Transporter rest pads at the top of the frame. The lower the Transporter until it firmly rests in the frame on the Transporters rest pad.

With the bulk bag correctly placed on the Bulk Bag Frame (suspended slightly) above and not supported by the hopper, position the discharge spout of the bag within the hopper by using the access chamber door. Once in position, the tie string securing the spout can be untied and removed. Immediately, the material in the bulk bag will begin to discharge into the hopper, so it's important to quickly close and secure the access door to prevent the material from discharging onto the floor.

Loading Procedure For Hoist & Trolley Option
Reference Figure 5 & 6

Full bulk bag is usually delivered on a skid to the Bulk Bag Frame and positioned directly under the extended portion of the I-Beam. Inspect the lifting loops for signs of wear, fraying or weakness.

Make sure the total weight of the bulk bag and contents does not exceed the frame's capacity (4,000 pounds). The not-to-exceed capacity is clearly labeled (or stenciled) on the I-Beam.

With lifting apparatus attached to the hoist cable, lower the apparatus over the bulk bag and attach the lifting loops of the bag to the apparatus**. Note:** if the bag is equipped with a fitted liner, secure it properly to the tensioner at this time.

With the hoist, gently lift the bulk bag to make sure the lifting loops are secure. Then elevate the apparatus, with the attached bag, to a height that will clear the frame. It is critical to have the bag elevated to the correct height before using the trolley to move it into the frame. The height is determined by the elevation and location of the hopper.

The I-Beam is equipped with adjustable stops on both ends to facilitate positioning of the hoist. Once the bulk bag is elevated to the proper height, use the trolley (manual electric or pneumatic) to move the load to its proper position over the receiving hopper.

Lower the bulk bag to a position that will allow for the placement of the discharge spout into the receiving hopper. With the bulk bag correctly placed on the Bulk Bag Frame (suspended slightly above and not supported by the hopper), position the discharge spout of the bag within the hopper by using the access chamber door. Once in position, the tie string securing the spout can be untied and removed. Immediately, the material in the bulk bag will begin to discharge into the hopper, so its important to quickly close and secure the access door to prevent the material from discharging onto the floor.

8.0 Operation - Agitator Frame

Loading Procedure
Reference Figure 7

Using customer-supplied lifting equipment, position the bulk bag above the agitator frame. Lower the bulk bag to a position that will allow for the placement of the discharge spout through the iris valve and into the access chamber. **Do not allow the bag to rest on the agitator assembly.**

Place the discharge spout of the bag through the iris valve **(See Figure 16)** using the access chamber door. Close the iris valve, securing the discharge spout of the bag into the access chamber prior to removing the tie string on the spout. If this is not done correctly, the contents of the bag may discharge onto the floor.

Figure 16

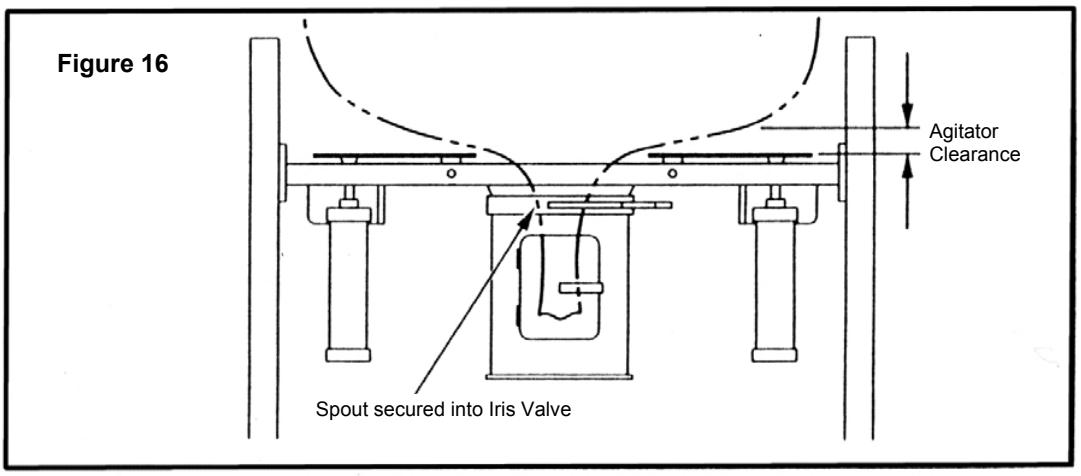

9.0 Agitator Air Control Panel Components

The following is a list of major components used on the agitator air control panel. These components are the most likely to need servicing should an operational problem arise.

Agitator Air Control Panel
1. Back Panel
2. Enclosure
3. Filter/Regulator
3A. System Pressure Gage
4. Pneumatic on/off Valve
5. Start/Stop Switch
6. Directional Valve
7. Oscillator Control
8. Air Filter
CC. Cylinder Connection
T1. Extend Time/Delay
T2. Retract Time/Delay

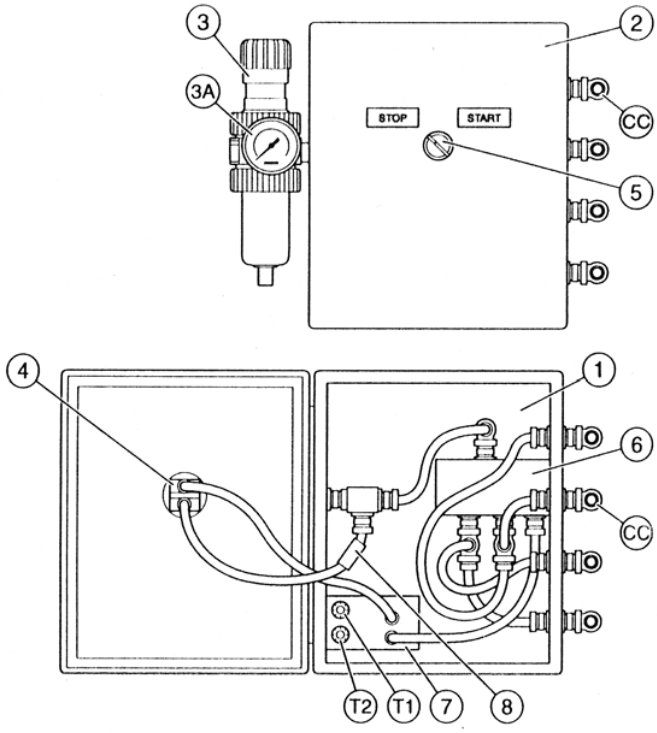

10.0 Air Panel Operation

Compressed air (80 PSIG at 225 CFM and not to exceed 150 PSIG) is provided to the unit by the customer. Do not use compressed gases. When the pneumatic switch (#5) is in the stop position, several things happen. First, the air passes through the filter/regulator (#3). At this point the air is filtered to 40 Micron. Gage pressure should be adjusted to read 65-75 PSI. The filtered/regulated air passes through the directional valve (#6) from port 1 to port 2. The valve (#6) is considered to be in its normal position at this time. When the air passes from port 1 to port 2 the cylinders are forced to return to the fully retracted position. The system should be at a stand still.

To put the system into the cycle mode the switch (#5) needs to be put into the start position. Pilot air is now allowed to pass through an additional filter (#8) in which 99.9%+ of the aerosols and submicron particles are removed from the air system. The purpose of this filter is to keep the air extremely clean going into the logic portion of the system. Please make sure to change this filter periodically.

With the cylinders still in the retract position, the pilot air makes its way to the oscillator control (#7). This unit controls the amount of time that the pilot signal is on and off to the main valve (#6). Please make sure that this is not the amount of time for the cylinder to extend or retract. It is however, the total amount of time that is allowed for the cylinder to both extend and dwell (or retract and dwell). The total “Extend/Dwell” time is controlled with the knob labeled “T1”. The total “Retract/Dwell” time is considered with the knob labeled “T2”.

Also note that the increments on the control are not in seconds or any particular unit. They are simply for reference. When a pilot signal is received from the oscillator control (#7), the valve (#6) shifts and air is allowed to pass from port 1 to port 4. Thus, the cylinders are forced to extend.

After fully extending, the unit will dwell (depending on the speed of the cylinder) while the oscillator (#7) finishes “counting”. The amount of the “count” is based on the position of the knob “T1”. When the counting is complete, the pilot signal is turned off for a period of time based on the position of the knob “T2”.

When there is not a pilot signal to the directional valve (#6), the valve shifts back and the air flow is from port 1 to port 2. The cylinders are again forced to retract. After the retract and dwell, the process repeats.

As you increase the number on “T1” the total “Extend/Dwell time” will increase. Also note that the knob may be turned more than one full revolution. The same is true for the “Retract/Dwell Time”. To increase or decrease this time, do so by adjusting the knob labeled “T2” accordingly.

To change the cylinder speed, you adjust the flow control valve that is located in the quick exhaust valve at each of the cylinder ports. Thus, you can individually control the speeds for each of the cylinders; extend and retract. These quick exhaust valves are used so that the air is exhausted back to atmosphere and not back into the enclosure.



Please note that this system can cause injury if precautions are not taken. It is an understanding the operator assumes full responsibility when operating this equipment.

Air Panel Schematic

Figure 20

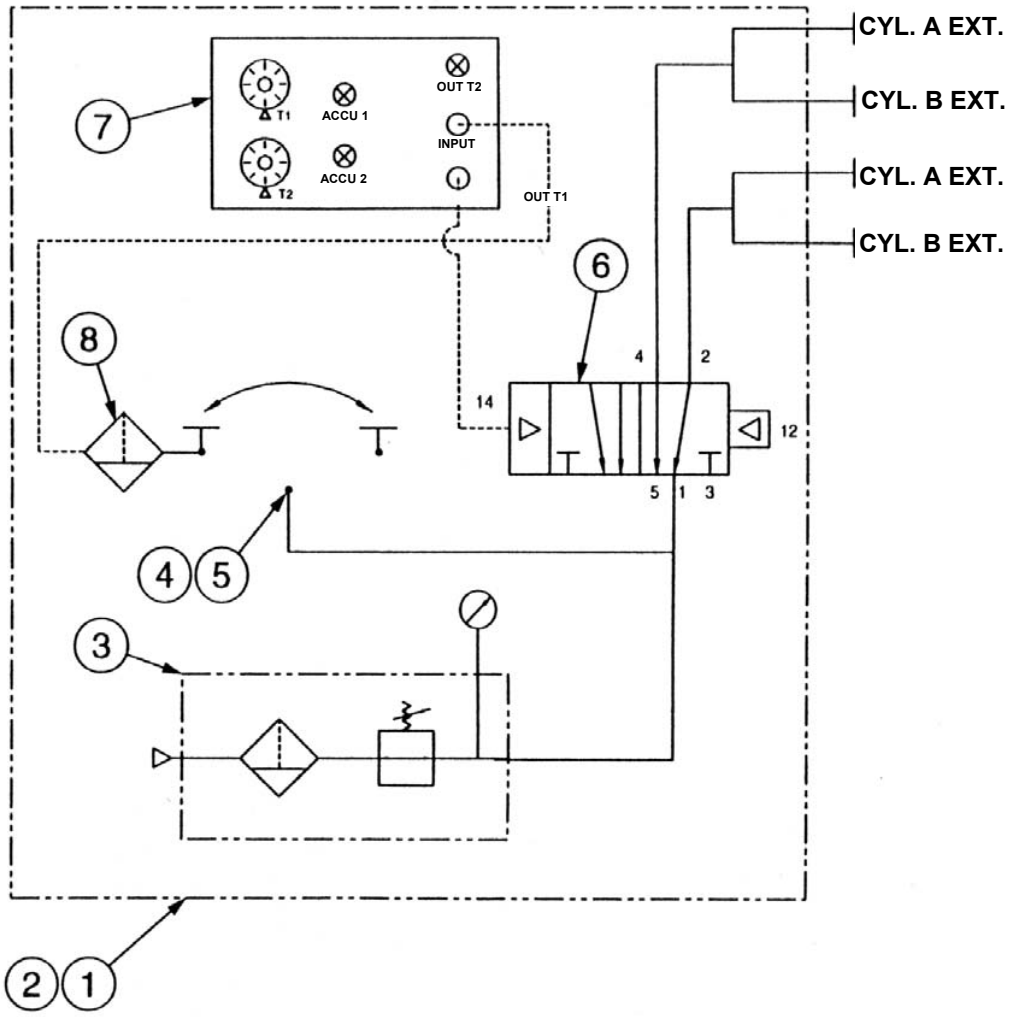

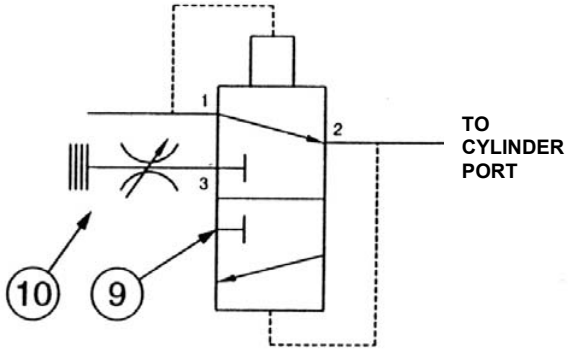

Bulk Bag Frame Components

#	Description – Forklift Model	Unit Quantity
2	Lifting Apparatus (Transporter)	
4	Transporter Rest Pad	1
5	Adjustable Height Pins	4
6	Agitator Assembly	1
6A	Agitator Cylinder	1
9	Iris Valve	

#	Description – Hoist & Trolly Model	Unit Quantity
3	Adjustable Stops	2
5	Lifting Apparatus	
6	Agitator Assembly	1
6A	Agitator Cylinder	1
9	Iris Valve	

#	Agitator Air Control Panel Components	Unit Quantity
1	Back Panel	1
2	Enclosure	1
3	Filter/Regulator	1
4	Pneumatic On/Off Valve	1
5	Pneumatic Switch Lever	1
6	Directional Valve	1
7	Oscillator	1
8	Filter	1
9	Quick Exhaust	4
10	Flow Control	4

Record Of Important Information For This Machine

Serial Number_____

Model Number_____

For Operational Information In This Plant Contact

Name_____

Department / Phone Number_____

Notes

_____

_____

_____

_____

_____

_____

_____

_____

_____

_____

HAPMAN

6002 E Kilgore Road • Kalamazoo, MI 49048

Ph 269-343-1675 • 800-427-6260 • Fax 269-349-2477 • www.hapman.com

HAPMAN

Ideas that move.

PosiPortion™ Feeders

INSTALLATION,
OPERATION
&
MAINTENANCE
MANUAL

REV 8/07

All owners and operators should read this manual and/or be instructed on safe operating and maintenance procedures before attempting to uncrate, install, operate, adjust or service this equipment

Following are symbols used in this manual along with a description of their meanings



DANGER indicates an imminently hazardous situation which, if not avoided, will result in death or severe injury.



WARNING indicates a potentially hazardous situation which, if not avoided, will result in death or severe injury



CAUTION indicates a potentially hazardous situation which, if not avoided, may result in minor/moderate injury and/or damage to equipment.

HAPMAN

PosiPortion™ Feeders

Table of Contents

Definition Of Warning Symbols 2
1.0 - Warranty 4
2.0 - Assembling Instructions 5
3.0 - Definitions & Safety Recommendations 5
4.0 - Cautionary Statements 6
5.0 - Adjustments for Operation
Single Motor Model 7
Dual Motor Model 7
6.0 - Maintenance and General Checks 8
7.0 - Removing Parts 9
8.0 - Troubleshooting 10
9.0 - Parts exploded drawing 11
10.0 - Parts list 11-13
Technical Specifications & Dimensions 14



1.0 - WARRANTY

Equipment manufactured by Hapman is warranted to be free of defective material and workmanship under the use and service quoted for a period of one year after date of shipment. This warranty is void if serviced by anyone other than Hapman service personnel.

Hapman agrees to replace or repair any defective parts it has manufactured as covered under this warranty. F.O.B. our plant, subject to inspection of the part in question by Hapman's personnel. No article may be returned to Hapman without Hapman's written consent.

Parts supplied but not manufactured by Hapman are subject to the warranties extended to Hapman by its suppliers. Hapman's liability is limited to such adjustment as the respective manufacturer makes to the seller.

In no event shall Hapman be liable for costs incurred due to equipment malfunction such as consequential damages, lost production or the expenses or losses incurred due to geographical location or fault of the product, difficulty of access to the product as installed, or time urgency on the part of the user and/or buyer of the equipment.

NOTICE:
While all information in this manual has been checked for accuracy, changes in design or specifications may occur at any time in HAPMAN's continuing program of product improvement. HAPMAN cannot assume responsibility for errors in the production of this manual, or for unsafe operating practice of those employing HAPMAN equipment.



BEFORE INSTALLING, OPERATING OR MAINTAINING ANY EQUIPMENT, THE CONTENTS OF THIS MANUAL SHOULD BE THOROUGHLY REVIEWED AND UNDERSTOOD.

Statements and instructions set forth herein are based upon the best information and practices known to HAPMAN, but this may not be construed to suggest that every conceivable safety precaution is contained herein. As a matter of practicality, HAPMAN cannot guarantee that actions in accordance with such statements and instructions will result in the complete elimination of all hazards and thus assumes no liability for accidents which may occur.

For further information regarding installation, operation and maintenance please contact the factory service department.

HAPMAN Customer Service
6002 E. Kilgore Rd
Kalamazoo, MI 49048-2321 U.S.A.
Phone: 269-343-1675
U.S. Toll Free: 800-427-6260
Fax: (269) 382 8266
e-mail: service@HAPMAN.com

2.0 – Assembly

UNPACKING

In general the box contains:
One (1) HAPMAN PosiPortion™ Feeder
One (1) Feed Screw
One (1) Nozzle
One (1) Nozzle Clamp
One (1) Safety Grate
One (1) Instruction Manual

If ordered, small parts are packed in the flexible hopper. Larger parts are packed separately (e.g. extension hoppers).

ASSEMBLING

1. The feed screw must be inserted through the molded hopper discharge and turned clockwise onto the threaded hopper shaft.

2. When a nozzle is supplied, it must be inserted into the hopper until it is flush with the end of the feed screw. Tighten the band clamp around the molded hopper discharge to fix the position of the nozzle.

3. Verify that the back panel (side opposite discharge) is in place and secure. This panel covers sprocket and roller chain components and must remain covered for safe operation.

4. For your convenience, unit is provided with a length of power cable which may be routed directly into control cabinet and terminated. A junction box on the feeder is located under left side panel (when looking in the direction of material flow).

Note: motors are wired to match the output of the drive panel, if so equipped. Otherwise the motor will be wired in accordance with the power requirements specified and documented in the equipment proposal. Alternative power supplies can be accommodated (see motor nameplate for wiring configurations).

3.0 - Definitions & Safety Recommendations

The HAPMAN PosiPortion™ Feeder is a machine developed for the purpose of dosing dry bulk ingredient on a volumetric basis.

When coupled with load cells or a scale platform for the purpose of controlling the feed, the HAPMAN PosiPortion™ Feeder is said to be operating in a Gravimetric mode.

Gravimetric feeding can be accomplished by monitoring a loss-in-weight signal from the feeder or a gain-in-weight signal at a downstream container or device.

When a HAPMAN PosiPortion™ Feeder is to be applied in a hazardous environment it must include such provisions as recommended for the area concerned such as, but not limited to, explosion proof motor construction.

When a HAPMAN PosiPortion™ Feeder is used to move dusty product, it is considered good practice to include sealed construction and appropriate ventilation equipment to remove, filter and exhaust airborne particulate.

When a HAPMAN PosiPortion™ Feeder is to be filled manually, care should be taken to position the product-inlet at a comfortable working height such that employees can safely perform their task.

Everyone working with the HAPMAN PosiPortion™ Feeder is strongly encouraged to make use of all appropriate personal protective equipment such as safety glasses and shoes, dust mask, gloves etc.

When using a lift truck to position the HAPMAN PosiPortion™ Feeder care should be taken to place forks under the feeder between the leveling pads. Note that leveling pads are intended for primarily for vertical support, thus may be damaged if exposed to excessive side loading such as may be caused when pushing or dragging unit into position.



Do not start the HAPMAN PosiPortion™ Feeder without the cover or protective screen being in place. These items are intended to minimize risk of personal injury as may be caused when coming in contact with the rotating feeding screw.



The HAPMAN PosiPortion™ Feeder should only be operated when access panels are in place and secured to all four sides.



Always use appropriate lock-out, tag-out procedures when servicing your HAPMAN PosiPortion™ Feeder.

4.0 - Cautionary Statements



- READ THE CONTENTS OF THIS MANUAL THOROUGHLY BEFORE USING THE HAPMAN POSIPORTION™ FEEDER
- DO NOT OPERATE THIS MACHINE WITHOUT THE COVER OR SAFETY GRID IN PLACE OVER THE FLEXIBLE HOPPER
- NEVER USE THE MACHINE WITHOUT ALL SIDE PANELS MOUNTED AND SECURED
- NEVER TOUCH MOVING PARTS
- DISCONNECT THE POWER SUPPLY BEFORE OPENING THE CONTROL BOX
- KEEP THIS MANUAL HANDY AT ALL TIMES TO REFER TO IF NECESSARY
- KEEP FOREIGN OBJECTS OUT OF THE FLEXIBLE HOPPER
- DISCONNECT AND LOCK OUT THE POWER WHEN SERVICING THE FEEDER
- ROUTE POWER SUPPLY CABLES SUCH THAT THEY ARE OUT OF THE NORMAL TRAFFIC PATTERN AND UNEXPOSED TO ANY CUTTING OR ABRADING POTENTIAL

- PROTECT YOURSELF AGAINST INHALATION OF DUST PARTICLES
- PROTECT YOUR BODY WITH GLOVES, SAFETY BOOTS, GLASSES AND STRONG WORK CLOTHING
- TAKE CARE TO ESTABLISH A RELIABLE GROUND-WIRE TO THE MACHINE, FOR SAFETY AND TO MINIMIZE ANY DETRIMENTAL EFFECTS OF STATIC CHARGE ACCUMULATION.



5.0 - Adjustments For Operation

> PosiPortion™ With <u>One</u> Motor <

The HAPMAN PosiPortion™ Feeder is suitable dosing a variety of dry bulk ingredients. Due to specific material properties, each application requires fine tuning to achieve optimum performance.

When the HAPMAN PosiPortion™ Feeder is assembled and installed, the hopper may be filled with material and energized.

Whereas control systems are as varied as the number of customer applications, the following is intended as a general guide. Depending on features of the individual control system, the following procedure may need to be expanded.

KEEP HANDS AND LOOSE CLOTHING AWAY FROM MOVING PARTS AT ALL TIMES

Control set up for HAPMAN PosiPortion™ Feeder - single drive type:

1. Energize the feeder.
2. Verify that the feed screw is turning in the right direction (material should move toward discharge).
3. If the screw is turning in wrong direction disconnect power and switch two motor leads or toggle reversing switch on VFD, if so equipped. Re-energize.
4. Access the variable frequency drive module adjustment and set to minimum.
5. Using a bucket, test scale and stop watch, gradually increase auger speed until the desired discharge rate is achieved.
6. Make a record of the drive speed setting and auger size. If the application requires multiple settings to accommodate several material types, rates and/or screw sets, change over time can be minimized by recording the various settings and components in chart form, then mounting it on or near the control panel for convenient reference.

> PosiPortion™ With <u>Dual</u> Motors <

HAPMAN PosiPortion™ Feeders with two drives are better suited for those applications with poorly flowing dry bulk products. The independently driven agitator enables up and down adjustment to achieve the right degree of agitation necessary to ensure continuous product flow for the specific product(s).

KEEP HANDS AND LOOSE CLOTHING AWAY FROM MOVING PARTS AT ALL TIMES

Control for HAPMAN PosiPortion™ Feeder 2-motor type:

1. Energize the feeder.

2. Verify that the feed screw is turning in the right direction (material should move toward discharge).

3. If the screw is turning in wrong direction disconnect power and switch two motor leads or toggle reversing switch on VFD, if so equipped. Re-energize.

4. Access the variable frequency drive module adjustment for both the screw and agitator and set both to 10 hertz.

5. Using a bucket, test scale and stop watch, determine optimum agitation setting by increasing the frequency of agitation, 10 hertz at a time until the highest discharge rate is observed. Record the agitation setting.

6. Repeat step 5 for every 10 hertz Increase in the screw rate.

7. Gradually adjust auger speed until the desired discharge rate is achieved for a given material type. Repeat steps 4 through 8 for each material type.

8. Make a record of the drive speed setting and auger size (if that changes to accommodate specific materials). If the application requires multiple settings for multiple material types, rates and/or screw sets, change over time can be minimized by recording the various settings and components in chart form, then mounting it on or near the control panel for convenient reference.

6.0 - Maintenance And General Checks

HAPMAN PosiPortion™ Feeders are designed and built using only high grade, industrial duty components, suitable for application in demanding environments. Nevertheless, it may be necessary to replace certain parts after long periods of hard use. To avoid exaggerated damage and more costly repairs, HAPMAN recommends several checks and simple maintenance.

Whereas every application is different, the frequency of necessary maintenance checks is hard to define. Duty cycle, material type and environmental issues all impact wear, thus influence the need for periodic inspection and maintenance.

Recommended maintenance and control checks:

- Periodically inspect the seal in the hopper bearing. Replace when cracks, tears, etc. are visible and/or when signs of material migration behind seal become evident.

- Periodically clean & inspect the hopper bearing for obvious signs of wear. Replace if excessive play is observed when dovetail arbor is inserted

- Periodically inspect guide rails on agitation forks. Replace guides when cracks, erosion or deterioration becomes evident.

- When the feeder is used in harsh environments (corrosive, elevated temperatures, etc.) inspect the insulation on wiring for cracks. Replace as necessary.

- Check the condition of chain(s) and sprockets regularly.
- Lubricate chain and sprockets every 3 months (or more if necessary).
- Inspect roller chain for slack. Play should not exceed 3/16" (lay a straight edge across sprocket teeth as a point of reference). Adjust tensioner sprocket accordingly.

320 Series Machines To reduce excess chain slack, loosen gear motor mounting bolts slightly and slide sideways. Re-tighten.

Bearings Three types of bearings are found in all HAPMAN PosiPortion™ Feeders

1. Self-lubricated bronze journal bearings (bearings on the agitation paddles);
2. Polyethylene bearings (hopper bearing, guide on fork);
3. Maintenance free ball bearings (all others).

It is unusual for these components to require replacement. However, in the event that they do, the procedure is fairly straight forward for the Poly and ball type bearings. Note that bronze bearings are pressed into collars and require added care. Use appropriate tools for extraction and insertion of replacements.

When chain and sprockets need replacement, it is generally considered good practice to replace them as a complete set. Take care to assure that all sprockets driven by the same roller chain are realigned using a straight edge.

7.0 - Removing Parts

⚠ WARNING

MAKE CERTAIN THAT POWER IS DISCONNECTED AND LOCKED OUT BEFORE PERFORMING ANY CLEANING, SERVICING OR INTERIOR INSPECTION

Because of the Quick-Disconnect-System it is easy to remove the screw and hopper.

Removing the feed screw:
1. Remove nozzle clamp.
2. Remove nozzle.
3. Turn screw counter clockwise until is detaches from arbor.

Removing side panels:
Panels are held in place by quarter-turn fasteners which are easily released by turning the fastener counter clockwise with a standard straight blade screwdriver.

Removing the flexible hopper:
1. Remove the nozzle clamp.
2. Remove the front panel.
3. Pull hopper away from the drive. If the hopper has been installed for a while, hopper may stick to frame and require a slight lifting action to loosen it before it can be pulled free.

Removing the hopper bearing:
1. Remove the flexible hopper as described above.

2. Loosen bearing retaining clamp.
3. Pull out the hopper bearing.

Mounting nozzles

1. Slide nozzle clamp loosely onto molded hopper.
2. Insert nozzle until feed screw is flush with discharge face of nozzle.
3. Position nozzle clamp such that it fully engages metallic hopper saddle under hopper and tighten.

8.0 - Troubleshooting

WARNING

MAKE CERTAIN THAT POWER IS DISCONNECTED AND LOCKED OUT BEFORE PERFORMING ANY CLEANING, SERVICING OR INTERIOR INSPECTION

Feeder will not run:

- Make sure that power is supplied to the control cabinet and from the cabinet to the feeder and that all wires are terminated appropriately.
- Verify that the machine's power button or switch is turned to the on or run position.
- Verify that the disconnect is in the on position.
- Check to see that the VFD is not set to 0 Hz.
- Check over load circuits. If fuses or overloads are tripped open, verify that the power supply matches the control and motor requirement.
- Look to see if there is any kind of error message on the display of the VFD.

Feeder runs irregularly:

- Verify that no mechanical obstructions exist, either in the feed screw or the driven parts (e.g. sprockets, chain, etc.)
- Check for any deformation of the feed screw- roll it on a flat surface and check its concentricity.
- Check roller chain for sufficient slack (the chain should have some but not more that about 3/16".
- Verify that the gear motor runs smoothly by removing the roller chains.
- Check incoming power for surges, etc.

Control panel does not respond to adjustments or responds inappropriately:

- Check the wiring inside the control panel by comparing it to schematic diagrams and look for bad or loose contacts.
- Verify that the power supply does not vary from the rated voltage by more than 10 %.

- Check to see if there is a fault code displayed on the VFD. If there is, look up its meaning in the VFD manual and take appropriate steps for clearing the fault.
- Check all remote devices such as limits switches, level sensors, etc. for proper operation.
- Check periphery for stray EMC which may be causing interference.

PARTS EXPLODED DRAWING

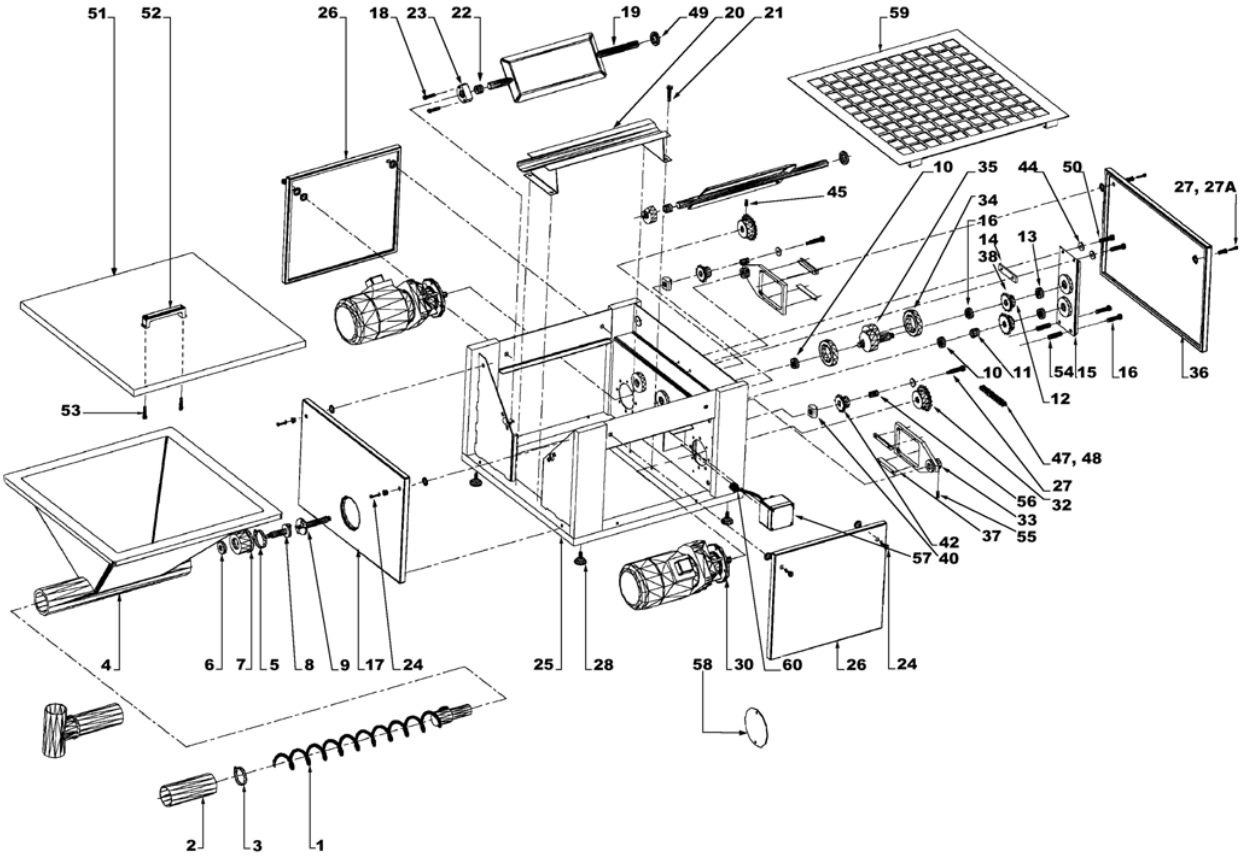

Parts List

Item No.	Description		Part Number 3 Digit Part/ Model No. (1st segment)			Part No. (2nd segment)	No. of Parts Required w/ 1 motor	w/2 motors	Wear Item?
1	Screw	SC	160	240	320	-diameter	1	2	Yes
2	Nozzle	NO	160	240	320	-diameter SC	1	2	Yes
3	Outer clamp		160	240	320	-506-00	1	2	
4	Flexible Hopper		160	240	320	-510-00	1	-	Yes
5	Inner clamp		160	240	320	-507-00	1	-	
6	Seal		160	240	320	-503-00	1	-	Yes
7	Hopper bearing		160	240	320	-005-00	1	-	Yes
8	Hopper shaft		160	240	320	-006-00	1	-	Yes
9	Main drive shaft		160	204	320	-007-00	1	-	
10	Bearing main drive shaft front		160	240	320	-501-00	1	-	
11	Bush		160	240	320	-017-00	1	-	
12	Sprocket main drive shaft		160	240	320	-514-15	1	-	Yes
13	Bearing MDS back & ECC, axis both		160	240		-502-00	3	-	
13	Bearing main drive shaft back				320	-502-00	1	-	
14	Plate bearing support		160	240	320	-023-00	1	-	
15	Bearing support		160	240	320	-009-01	1	-	
15 S	Bearing support	sus304	160	240	320	-009-02	1	-	
16	Bolt bearing support		160	240	320	-519-00	2	-	
17	Front panel		160	240	320	-013-00	1	-	
17 S	Front panel	sus304	160	240	320	-013-01	1	-	
18	Bold/paddle bearing		160	240	320	-529-00	4	-	
19	Paddle Left or Right		160	240	320	-004-00 L/R	2	-	
19 S	Paddle Left or Right	sus304	160	240	320	-004-01 L/R	2	-	
20	Hopper support		160	240	320	-014-00	1	-	
20 S	Hopper support	sus304	160	240	320	-014-01	1	-	
21	Bolt hopper support		160	240	320	-528-00	4	-	
22	Bearing paddle back		160	240	320	-505-00	4	-	yes
23	Front paddle bearing holder		160	240	320	-500-01	2	-	
24	¼ Turn lock assembly		160	240	320	-511-00	8	-	
24 S	¼ Turn lock assembly	sus304	160	240	320	-511-05	8	-	
25	Frame		160	240	320	-001-14	1	-	
25 S	Frame	sus304	160	240	320	-001-15	1	-	
26	Side panel		160	240	320	-011-00	2	-	
26 S	Side panel	sus304	160	240	320	-011-01	2	-	
27	Back panel lock bush		160	240	320	-511-28	2	-	

27 A	Lock screw	sus304	160	240	320	-511-30	2	-	
28	Adjustable foot		160	240	320	-508-01	4	-	
28 S	Adjustable foot	sus304	160	240	320	-508-02	4	-	
30	Motor		160	240	320	-512-00	1	2	
31	Bolt for motor		160	240	320	-525-00	4	8	
32	Sprocket motors		160			-513-24	1	2	
32	Sprocket motors			240		-513-18	1	2	
32	Sprocket motors				320	-513-21	1	2	Yes
33	Fork		160	240	320	-010-04	2		Yes
34	Bearing eccentric		160	240	320	-504-00	2	-	Yes
35	Eccentric sprocket				320	-018-00	2	-	
35	Eccentric set		160	240		-018-00	1	-	
36	Back panel		160	240	320	-011-02	1	-	
36 S	Back panel	sus304	160	240	320	-011-03	1	-	
37	Guide on fork		160	240	320	-501-02	4	-	
38	Sprocket agitation		160	240	320	-515-18	1	-	yes
39	Eccentric axis				320	-008-00	1	-	
40	Guide nut		160	240		-022-00	1	2	
41	Bearing eccentric axis				320	-502-01	4	-	
42	Sprocket span		160	240		-516-12	1	2	yes
43	Bold span		160	240		-526-00	1	2	
44	Washer		160	240	320	-527-00	9	10	
45	Set screw		160	240	320	-518-00	5	6	
47	Chain		160	240	320	-517-00	1	2	yes
48	Chain locker		160	240	320	-518-00	2	4	
49	Lock ring		160	240	320	-500-03	2	-	
50	Bolt bearing support		160	240	320	-531-00	2	-	
51	Lid		160	240	320	-015-00	1	-	
51 S	Lid	sus304	160	240	320	-015-01	1	-	
52	Grip		160	240		-509-00	1	-	
52	Grip				320	-509-00	2	-	
53	Bolt for grip		160	240		-509-01	2	-	
53	Bold for grip				320	-509-01	4	-	
54	Bush bearing support		160	240	320	-519-01	2	-	
55	Pin		160	240	320	-010-05	2	-	
56	Bearing span		160	240		-532-00	1	2	
57	Connection box		160	240	320	-650-01	1	-	
58	Protection plate		160	240	320	-533-01	1	0	
59	Safety grid		160	240	320	-003-01	1	-	
60	Cable sleeve/plug		160	240	320	-650-05	1	-	

DRIVE SPECIFICATIONS		❒ Model 160	❒ Model 240	❒ Model 320
Gear Motor Horsepower (std.)		1/6	1/3	3/4
Power Supply (std.)	VAC	*all wired for 230-460 v/ 3 ph/ 60 hz*		
Operating Current	Amps	0.78	1.4	2.4
Nominal Input	rpms	1700	1700	1700
Nominal Output	rpms	100	100	100
Gear Ratio		17:1	17:1	17:1
Protection	NEMA/IP	12/IP55	12/IP55	12/IP55

CONTROL SPECIFICATIONS ❒ Model 160 ❒ Model 240 ❒ Model 320

Refer to attached schematic diagrams, if controls were supplied by HAPMAN.

MECHANICAL SPECIFICATIONS	❒ Model 160	❒ Model 240	❒ Model 320
Screws and nuts	*all to international stds. (ISO,DIN,NEN,etc.)*		
Chain and sprockets	*all to international stds. (DIN 8187)*		
Dimensions	8 x 3mm	1/2" x 5/16"	3/4" x 7/16"
Flexible hopper	*all models modified polyurethane*		
Recommended max static strain	*all models 1%*		
By agitation caused dynamic strain	*all models 1%*		
Maximum allowable strain	*all models 2.5 %*		
Total weight one motor	66 pounds	174 pounds	364 pounds
Total weight two motors	82 pounds	192 pounds	415 pounds



Electric rotating machinery and high voltage can cause serious or fatal injury if improperly installed, operated or maintained. Responsible personnel should be familiarized with NEMA MG2: Safety Standards for Construction and Guide for Selection, Installation and Use of Electric Motors and Generators: National Electric Code and all local safety requirements.

When servicing, all power sources to the motor and to the accessory devices should be de-energized and disconnected and all rotating parts should be at a standstill.

Record Of Important Information For This Machine

Serial Number_____

Model Number_____

For Operational Information In This Plant Contact

Name_____

Department / Phone Number_____

Notes

_____

_____

_____

_____

_____

_____

_____

_____

_____

_____

HAPMAN

6002 E Kilgore Road • Kalamazoo, MI 49048

Ph 269-343-1675 • 800-427-6260 • Fax 269-349-2477 • www.hapman.com

Features

- Wide range of pressure ratings, sizes, and resilient materials provide long service life and low internal leakage
- High Flow Valves for liquid, corrosive, and air/inert gas service
- Industrial applications include:
  - Car wash
  - Laundry equipment
  - Air compressors
  - Industrial water control
  - Pumps



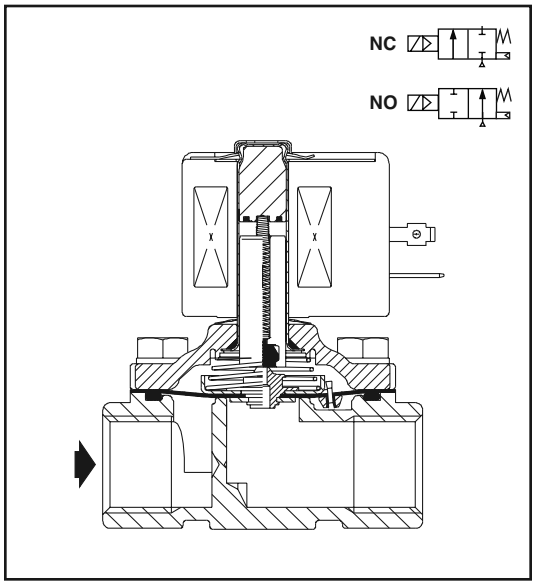

Construction

Valve Parts in Contact with Fluids		
Body	Brass	304 Stainless Steel
Seals and Discs	NBR or PTFE	
Disc-Holder	PA	
Core Tube	305 Stainless Steel	
Core and Plugnut	430F Stainless Steel	
Springs	302 Stainless Steel	
Shading Coil	Copper	Silver

Electrical

Standard Coil and Class of Insulation	Watt Rating and Power Consumption				Spare Coil Part Number			
		AC			General Purpose		Explosionproof	
	DC Watts	Watts	VA Holding	VA Inrush	AC	DC	AC	DC
F	-	6.1	16	40	238210	-	238214	-
F	11.6	10.1	25	70	238610	238710	238614	238714
F	16.8	16.1	35	180	272610	97617	272614	97617
F	-	17.1	40	93	238610	-	238614	-
F	-	20	43	240	99257	-	99257	-
F	-	20.1	48	240	272610	-	272614	-
H	30.6	-	-	-	-	74073	-	74073
H	40.6	-	-	-	-	238910	-	238914

Standard Voltages: 24, 120, 240, 480 volts AC, 60 Hz (or 110, 220 volts AC, 50 Hz). 6, 12, 24, 120, 240 volts DC. Must be specified when ordering.
Other voltages available when required.

Solenoid Enclosures

Standard: RedHat II - Watertight, Types 1, 2, 3, 3S, 4, and 4X; RedHat - Type I.

Optional: RedHat II - Explosionproof and Watertight, Types 3, 3S, 4, 4X, 6, 6P, 7, and 9; Red-Hat - Explosionproof and Watertight, Types 3, 4, 4X, 7, and 9.

(To order, add prefix "EF" to catalog number, except Catalog Numbers 8210B057, 8210B058, and 8210B059, which are not available with Explosionproof enclosures.)
See Optional Features Section for other available options.

Nominal Ambient Temp. Ranges

RedHat II/
RedHat AC: 32˚F to 125˚F (0˚C to 52˚C)

RedHat II DC: 32˚F to 104˚F (0˚C to 40˚C)
RedHat DC: 32˚F to 77˚F (0˚C to 25˚C)
(104˚F/40˚C occasionally)

Refer to Engineering Section for details.

Approvals

CSA certified. RedHat II meets applicable CE directives.
Refer to Engineering Section for details.

Specifications (English units)

Pipe Size (ins.)	Orifice Size (ins.)	Cv Flow Factor	Operating Pressure Differential (psi)							Max. Fluid Temp. °F		Brass Body			Stainless Steel Body			Watt Rating/ Class of Coil Insulation ⑦	
			Min.	Max. AC			Max. DC												
				Air-Inert Gas	Water	Light Oil @ 300 SSU	Air-Inert Gas	Water	Light Oil @ 300 SSU	AC	DC	Catalog Number	Const. Ref. ④	UL ⑤ Listing	Catalog Number	Const. Ref. ④	UL ⑤ Listing	AC	DC
NORMALLY CLOSED (Closed when de-energized), NBR or PTFE ② Seating																			
3/8	3/8	1.5	①	150	125	-	40	40	-	180	150	8210G073 ③	1P	●	8210G036 ③	1P	●	6.1/F	11.6/F
3/8	5/8	3	0	150	150	-	40	40	-	180	150	8210G093	5D	❍	-	-	-	10.1/F	11.6/F
3/8	5/8	3	5	200	150	135	125	100	100	180	150	8210G001	6D	❍	-	-	-	6.1/F	11.6/F
3/8	5/8	3	5	300	300	300	-	-	-	175	-	8210G006	5D	❍	-	-	-	17.1/F	-
1/2	7/16	2.2	①	150	125	-	40	40	-	180	150	8210G015 ③	2P	●	8210G037 ③	2P	●	6.1/F	11.6/F
1/2	5/8	4	0	150	150	-	40	40	-	180	150	8210G094	5D	❍	-	-	-	10.1/F	11.6/F
1/2	5/8	4	0	150	150	125	40	40	-	175	150	-	-	-	8210G087	7D	●	17.1/F	11.6/F
1/2	5/8	4	5	200	150	135	125	100	100	180	150	8210G002	6D	❍	-	-	-	6.1/F	11.6/F
1/2	5/8	4	5	300	300	300	-	-	-	175	-	8210G007	5D	❍	-	-	-	17.1/F	-
1/2	3/4	4	5	-	300	-	-	300	-	180	125	8210G227	5D	❍	-	-	-	17.1/F	40.6/H
3/4	5/8	4.5	0	150	150	125	40	40	-	175	150	-	-	-	8210G088	7D	●	17.1/F	11.6/F
3/4	3/4	5	5	125	125	125	100	90	75	180	150	8210G009	9D	❍	-	-	-	6.1/F	11.6/F
3/4	3/4	5	0	150	150	-	40	40	-	180	150	8210G095	8D	❍	-	-	-	10.1/F	11.6/F
3/4	3/4	6.5	5	250	150	100	125	125	125	180	150	8210G003	11D	❍	-	-	-	6.1/F	11.6/F
3/4	3/4	6	0	-	-	-	200	180	180	-	77	8210B026 ② ‡	10P	-	-	-	-	-	30.6/H
3/4	3/4	6	0	350	300	200	-	-	-	200	-	8210G026 ② ‡	40P	●	-	-	-	16.1F	-
1	1	13	0	-	-	-	100	100	80	-	77	8210B054 ‡	31D	-	8210D089	15D	-	-	30.6/H
1	1	13	0	150	125	125	-	-	-	180	-	8210G054	41D	●	8210G089	45D	●	16.1/F	-
1	1	13	5	150	150	100	125	125	125	180	150	8210G004	12D	❍	-	-	-	6.1/F	11.6/F
1	1	13.5	0	300	225	115	-	-	-	200	-	8210G027 ‡	42P	●	-	-	-	20.1/F	-
1	1	13.5	10	300	300	300	-	-	-	175	-	8210G078 ②	13P	-	-	-	-	17.1/F	-
1 1/4	1 1/8	15	0	-	-	-	100	100	80	-	77	8210B055 ‡	32D	-	-	-	-	-	30.6/H
1 1/4	1 1/8	15	0	150	125	125	-	-	-	180	-	8210G055	43D	●	-	-	-	16.1/F	-
1 1/4	1 1/8	15	5	150	150	100	125	125	125	180	150	8210G008	16D	❍	-	-	-	6.1/F	11.6/F
1 1/2	1 1/4	22.5	0	-	-	-	100	100	80	-	77	8210B056 ‡	33D	-	-	-	-	-	30.6/H
1 1/2	1 1/4	22.5	0	150	125	125	-	-	-	180	-	8210G056	44D	●	-	-	-	16.1/F	-
1 1/2	1 1/4	22.5	5	150	150	100	125	125	125	180	150	8210G022	18D	●	-	-	-	6.1/F	11.6/F
2	1 3/4	43	5	150	125	90	50	50	50	180	150	8210G100	20P	●	-	-	-	6.1/F	11.6/F
2 1/2	1 3/4	45	5	150	125	90	50	50	50	180	150	8210G101	21P	●	-	-	-	6.1/F	11.6/F
NORMALLY OPEN (Open when de-energized), NBR Seating (PA Disc-Holder, except as noted)																			
3/8	5/8	3	0	150	150	125	125	125	80	180	150	8210G033	23D	●	-	-	-	10.1/F	11.6/F
3/8	5/8	3	5	250	200	200	250	200	200	180	180	8210G011 ⑧ ⑨	39D	●	-	-	-	10.1/F	11.6/F
1/2	5/8	4	0	150	150	125	125	125	80	180	150	8210G034	23D	●	-	-	-	10.1/F	11.6/F
1/2	5/8	3	0	150	150	100	125	125	80	180	150	-	-	-	8210G030	37D	●	10.1/F	11.6/F
1/2	5/8	4	5	250	200	200	250	200	200	180	180	8210G012 ⑧ ⑨	39D	●	-	-	-	10.1/F	11.6/F
3/4	3/4	5.5	0	150	150	125	125	125	80	180	150	8210G035	25D	●	-	-	-	10.1/F	11.6/F
3/4	5/8	3	0	150	150	100	125	125	80	180	150	-	-	-	8210G038	38D	●	10.1/F	11.6/F
3/4	3/4	6.5	5	-	-	-	250	200	200	-	180	8210C013	24D	●	-	-	-	-	16.8/F
3/4	3/4	6.5	5	250	200	200	-	-	-	180	-	8210G013	46D	●	-	-	-	16.1/F	-
1	1	13	0	125	125	125	-	-	-	180	-	8210B057 ⑥ ⑩	34D	●	-	-	-	20/F	-
1	1	13	5	-	-	-	125	125	125	-	180	8210D014	26D	●	-	-	-	-	16.8/F
1	1	13	5	150	150	125	-	-	-	180	-	8210G014	47D	●	-	-	-	16.1/F	-
1 1/4	1 1/8	15	0	125	125	125	-	-	-	180	-	8210B058 ⑥ ⑩	35D	●	-	-	-	20/F	-
1 1/4	1 1/8	15	5	-	-	-	125	125	125	-	180	8210D018	28D	●	-	-	-	-	16.8/F
1 1/4	1 1/8	15	5	150	150	125	-	-	-	180	-	8210G018	48D	●	-	-	-	16.1/F	-
1 1/2	1 1/4	22.5	0	125	125	125	-	-	-	180	-	8210B059 ⑥ ⑩	36D	●	-	-	-	20/F	-
1 1/2	1 1/4	22.5	5	-	-	-	125	125	125	-	180	8210D032	29D	●	-	-	-	-	16.8/F
1 1/2	1 1/4	22.5	5	150	150	125	-	-	-	180	-	8210G032	49D	●	-	-	-	16.1/F	-
2	1 3/4	43	5	-	-	-	125	125	125	-	150	8210 103	30P	●	-	-	-	-	16.8/F
2	1 3/4	43	5	125	125	125	-	-	-	180	-	8210G103	50P	●	-	-	-	16.1/F	-
2 1/2	1 3/4	45	5	-	-	-	125	125	125	-	150	8210 104	27P	●	-	-	-	-	16.8/F
2 1/2	1 3/4	45	5	125	125	125	-	-	-	180	-	8210G104	51P	●	-			16.1/F	-

① 5 psi on Air; 1 psi on Water.
② Valve provided with PTFE main disc.
③ Valve includes Ultem (G.E. trademark) piston.
④ Letter "D" denotes diaphragm construction; "P" denotes piston construction.
⑤ ❍ Safety Shutoff Valve; ● General Purpose Valve.
Refer to Engineering Section (Approvals) for details.
⑥ Valves not available with Explosionproof enclosures.
⑦ On 50 hertz service, the watt rating for the 6.1/F solenoid is 8.1 watts.
⑧ AC construction also has PA seating.
⑨ No disc-holder.
⑩ Stainless steel disc-holder.
‡ Must have solenoid mounted vertical and upright.

Specifications (Metric units)

Pipe Size (ins.)	Orifice Size (mm)	Kv Flow Factor (m3/h)	Operating Pressure Differential (bar)							Max. Fluid Temp. °C		Brass Body			Stainless Steel Body			Watt Rating/ Class of Coil Insulation ⑦	
				Max. AC			Max. DC												
			Min.	Air-Inert Gas	Water	Light Oil @ 300 SSU	Air-Inert Gas	Water	Light Oil @ 300 SSU	AC	DC	Catalog Number	Const. Ref. ④	UL ⑤ Listing	Catalog Number	Const. Ref. ④	UL ⑤ Listing	AC	DC
NORMALLY CLOSED (Closed when de-energized), NBR or PTFE ② Seating																			
3/8	10	1.29	①	10	9	-	3	3	-	82	65	8210G073 ③	1P	●	8210G036 ③	1P	●	6.1/F	11.6/F
3/8	16	2.57	0	10	10	-	3	3	-	82	65	8210G093	5D	❍	-	-	-	10.1/F	11.6/F
3/8	16	2.57	0.3	14	10	9	9	7	7	82	65	8210G001	6D	❍	-	-	-	6.1/F	11.6/F
3/8	16	2.57	0.3	21	21	21	-	-	-	79	-	8210G006	5D	❍	-	-	-	17.1/F	-
1/2	11	1.89	①	10	9	-	3	3	-	82	65	8210G015 ③	2P	●	8210G037 ③	2P	●	6.1/F	11.6/F
1/2	16	3.43	0	10	10	-	3	3	-	82	65	8210G094	5D	❍	-	-	-	10.1/F	11.6/F
1/2	16	3.43	0	10	10	9	3	3	-	79	65	-	-	-	8210G087	7D	●	17.1/F	11.6/F
1/2	16	3.43	0.3	14	10	9	9	7	7	82	65	8210G002	6D	❍	-	-	-	6.1/F	11.6/F
1/2	16	3.43	0.3	21	21	21	-	-	-	79	-	8210G007	5D	❍	-	-	-	17.1/F	-
1/2	19	3.43	0.3	-	21	-	-	21	-	82	52	8210G227	5D	❍	-	-	-	17.1/F	40.6H
3/4	16	3.86	0	10	10	9	3	3	-	79	65	-	-	-	8210G088	7D	●	17.1/F	11.6/F
3/4	19	4.29	0.3	9	9	9	7	6	5	82	65	8210G009	9D	❍	-	-	-	6.1/F	11.6/F
3/4	19	4.29	0	10	10	-	3	3	-	82	65	8210G095	8D	❍	-	-	-	10.1/F	11.6/F
3/4	19	5.57	0.3	17	10	7	9	9	9	82	65	8210G003	11D	❍	-	-	-	6.1/F	11.6/F
3/4	19	5.14	0	-	-	-	14	12	12	-	25	8210B026 ② ‡	10P	-	-	-	-	-	30.6/H
3/4	19	5.14	0	24	21	14	-	-	-	93	-	8210G026 ② ‡	40P	●	-	-	-	16.1F	-
1	25	11.14	0	-	-	-	7	7	6	-	25	8210B054 ‡	31D	-	8210D089	15D	-	-	30.6/H
1	25	11.14	0	10	9	9	-	-	-	82	-	8210G054	41D	●	8210G089	45D	●	16.1/F	-
1	25	11.14	0.3	10	10	7	9	9	9	82	65	8210G004	12D	❍	-	-	-	6.1/F	11.6/F
1	25	11.57	0	21	16	8	-	-	-	93	-	8210G027 ‡	42P	●	-	-	-	20.1/F	-
1	25	11.57	0.7	21	21	21	-	-	-	79	-	8210G078 ②	13P	-	-	-	-	17.1/F	-
1 1/4	29	12.86	0	-	-	-	7	7	6	-	25	8210B055 ‡	32D	-	-	-	-	-	30.6/H
1 1/4	29	12.86	0	10	9	9	-	-	-	82	-	8210G055	43D	●	-	-	-	16.1/F	-
1 1/4	29	12.86	0.3	10	10	7	9	9	9	82	65	8210G008	16D	❍	-	-	-	6.1/F	11.6/F
1 1/2	32	19.29	0	-	-	-	7	7	6	-	25	8210B056 ‡	33D	-	-	-	-	-	30.6/H
1 1/2	32	19.29	0	10	9	9	-	-	-	82	-	8210G056	44D	●	-	-	-	16.1/F	-
1 1/2	32	19.29	0.3	10	10	7	9	9	9	82	65	8210G022	18D	●	-	-	-	6.1/F	11.6/F
2	44	36.86	0.3	10	9	6	3	3	3	82	65	8210G100	20P	●	-	-	-	6.1/F	11.6/F
2 1/2	44	38.57	0.3	10	9	6	3	3	3	82	65	8210G101	21P	●	-	-	-	6.1/F	11.6/F
NORMALLY OPEN (Open when de-energized), NBR Seating (PA Disc-Holder, except as noted)																			
3/8	16	2.57	0.0	10	10	9	9	9	6	82	65	8210G033	23D	●	-	-	-	10.1/F	11.6/F
3/8	16	2.57	0.3	17	14	14	17	14	14	82	82	8210G011 ⑧ ⑨	39D	●	-	-	-	10.1/F	11.6/F
1/2	16	3.43	0	10	10	9	9	9	6	82	65	8210G034	23D	●	-	-	-	10.1/F	11.6/F
1/2	16	2.57	0	10	10	7	9	9	6	82	65	-	-	-	8210G030	37D	●	10.1/F	11.6/F
1/2	16	3.43	0.3	17	14	14	17	14	14	82	82	8210G012 ⑧ ⑨	39D	●	-	-	-	10.1/F	11.6/F
3/4	19	4.71	0	10	10	9	9	9	6	82	65	8210G035	25D	●	-	-	-	10.1/F	11.6/F
3/4	16	2.57	0	10	10	7	9	9	6	82	65	-	-	-	8210G038	38D	●	10.1/F	11.6/F
3/4	19	5.57	0.3	-	-	-	17	14	14	-	82	8210C013	24D	●	-	-	-	-	16.8/F
3/4	19	5.57	0.3	17	14	14	-	-	-	82	-	8210G013	46D	●	-	-	-	16.1/F	-
1	25	11.14	0	9	9	9	-	-	-	82	-	8210B057 ⑥ ⑩	34D	●	-	-	-	20/F	-
1	25	11.14	0.3	-	-	-	9	9	9	-	82	8210D014	26D	●	-	-	-	-	16.8/F
1	25	11.14	0.3	10	10	9	-	-	-	82	-	8210G014	47D	●	-	-	-	16.1/F	-
1 1/4	29	12.86	0	9	9	9	-	-	-	82	-	8210B058 ⑥ ⑩	35D	●	-	-	-	20/F	-
1 1/4	29	12.86	0.3	-	-	-	9	9	9	-	82	8210D018	28D	●	-	-	-	-	16.8/F
1 1/4	29	12.86	0.3	10	10	9	-	-	-	82	-	8210G018	48D	●	-	-	-	16.1/F	-
1 1/2	32	19.29	0	9	9	9	-	-	-	82	-	8210B059 ⑥ ⑩	36D	●	-	-	-	20/F	-
1 1/2	32	19.29	0.3	-	-	-	9	9	9	-	82	8210D032	29D	●	-	-	-	-	16.8/F
1 1/2	32	19.29	0.3	10	10	9	-	-	-	82	-	8210G032	49D	●	-	-	-	16.1/F	-
2	44	36.86	0.3	-	-	-	9	9	9	-	65	8210 103	30P	●	-	-	-	-	16.8/F
2	44	36.86	0.3	9	9	9	-	-	-	82	-	8210G103	50P	●	-	-	-	16.1/F	-
2 1/2	44	38.57	0.3	-	-	-	9	9	9	-	65	8210 104	27P	●	-	-	-	-	16.8/F
2 1/2	44	38.57	0.3	9	9	9	-	-	-	82	-	8210G104	51P	●	-	-	-	16.1/F	-

① 0.3 bar on Air; 0.0 bar on Water.
② Valve provided with PTFE main disc.
③ Valve includes Ultem (G.E. trademark) piston.
④ Letter "D" denotes diaphragm construction; "P" denotes piston construction.
⑤ ❍ Safety Shutoff Valve; ● General Purpose Valve.
Refer to Engineering Section (Approvals) for details.
⑥ Valves not available with Explosionproof enclosures.
⑦ On 50 hertz service, the watt rating for the 6.1/F solenoid is 8.1 watts.
⑧ AC construction also has PA seating.
⑨ No disc-holder.
⑩ Stainless steel disc-holder.
‡ Must have solenoid mounted vertical and upright.

Dimensions: inches (mm)

Const. Ref.		H	K	L	P	W
1*	ins.	3.85	3.00	1.91	3.41	1.69
	mm	98	76	49	87	43
2*	ins.	4.17	3.25	2.28	3.63	1.69
	mm	106	83	58	92	43
5	ins.	3.84	2.31	2.75	3.28	2.28
	mm	98	59	70	83	58
6*	ins.	3.38	1.94	2.75	2.80	2.28
	mm	86	49	70	71	58
7	ins.	4.19	2.50	2.81	3.47	2.39
	mm	106	64	71	88	61
8	ins.	4.13	2.47	2.81	3.44	2.29
	mm	105	63	71	87	58
9*	ins.	3.66	2.10	2.81	2.96	2.28
	mm	93	53	71	75	58
10*	ins.	5.25	X	2.81	4.59	2.31
	mm	133	X	71	117	59
11*	ins.	4.16	2.66	3.84	3.52	2.75
	mm	106	68	98	89	70
12	ins.	5.64	3.15	3.75	4.01	3.36
	mm	143	80	95	102	85
13	ins.	4.44	3.22	3.75	4.19	5.81
	mm	113	82	95	106	147
15*	ins.	5.34	X	3.75	4.47	3.84
	mm	136	X	95	114	98
16	ins.	5.64	3.15	3.66	4.01	3.56
	mm	143	80	93	102	90
18	ins.	6.11	3.30	4.38	4.16	3.92
	mm	155	84	111	106	100
20*	ins.	7.33	3.71	5.06	4.57	4.87
	mm	186	94	129	116	124
21*	ins.	7.33	3.71	5.50	4.57	4.87
	mm	186	94	140	116	124
23	ins.	4.35	2.65	2.75	3.79	2.28
	mm	110	67	70	96	58
24	ins.	5.06	X	3.78	4.44	2.75
	mm	129	X	96	113	70
25	ins.	4.64	2.81	2.81	3.94	2.28
	mm	118	71	71	100	58
26	ins.	6.53	X	3.75	4.91	3.19
	mm	166	X	95	125	81
27	ins.	8.22	X	5.50	5.47	4.87
	mm	209	X	140	139	124
28	ins.	6.53	X	3.66	4.91	3.19
	mm	166	X	93	125	81
29	ins.	7.03	X	4.38	5.06	4.40
	mm	179	X	111	129	112

* DC dimensions slightly larger.
IMPORTANT: Valves may be mounted in any position, except as noted in specifications table.

Const. Ref. 1, 2

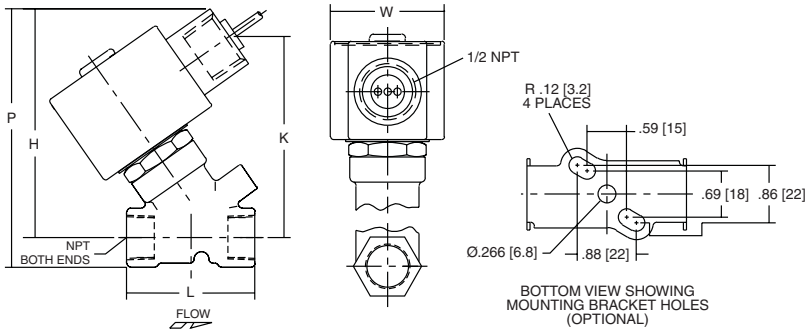

Const. Ref. 13

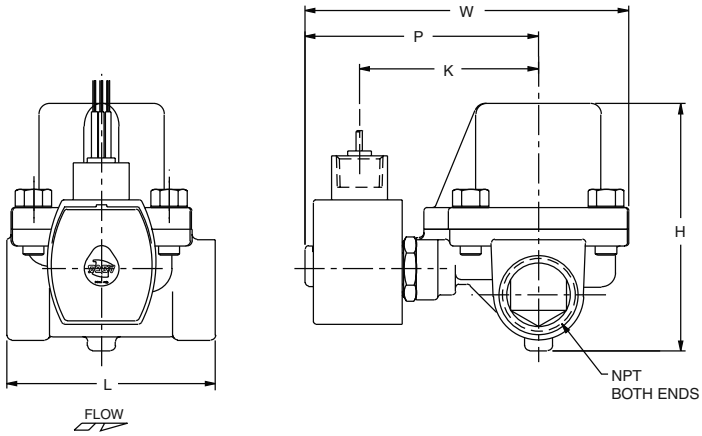

Const. Ref. 5-9, 11, 20, 21, 23 , 25, 37,38

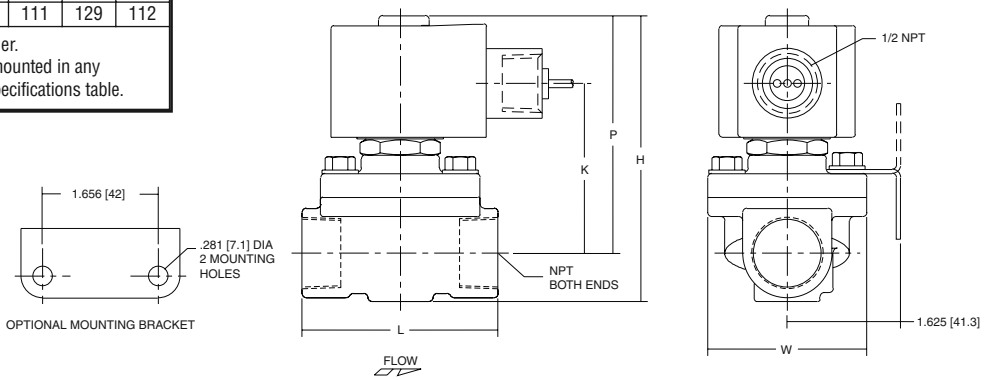

Dimensions: inches (mm)

Const. Ref.		H	K	L	P	W
30	ins.	8.22	X	5.06	5.47	4.87
	mm	209	X	129	139	124
31	ins.	5.25	X	3.75	4.44	3.25
	mm	133	X	95	113	83
32	ins.	5.69	X	3.66	4.69	3.25
	mm	145	X	93	119	83
33	ins.	6.06	X	4.38	4.94	3.91
	mm	154	X	111	125	99
34	ins.	6.91	X	3.75	6.09	3.25
	mm	176	X	95	155	83
35	ins.	7.34	X	3.66	6.34	3.25
	mm	186	X	93	161	83
36	ins.	7.66	X	4.38	6.56	3.91
	mm	1.95	X	111	167	99
37	ins.	4.61	2.75	2.81	3.89	2.39
	mm	117	70	71	99	61
38	ins.	4.61	2.75	2.81	3.89	2.39
	mm	117	70	71	99	61
39	ins.	5.42	2.31	2.75	4.86	3.80
	mm	138	59	70	123	97
40	ins.	5.20	3.29	2.81	4.50	2.28
	mm	132	83	71	114	58
41	ins.	5.13	3.10	3.75	4.32	3.25
	mm	130	79	95	110	83
42	ins.	6.43	4.40	3.93	5.62	3.25
	mm	163	112	100	143	83
43	ins.	5.57	3.35	3.66	4.57	3.25
	mm	142	85	93	116	83
44	ins.	5.90	3.57	4.38	4.79	3.91
	mm	150	91	111	122	99
45	ins.	5.26	3.17	3.75	4.38	3.84
	mm	134	81	95	111	98
46	ins.	4.95	3.10	3.84	4.31	2.75
	mm	126	79	98	110	70
47	ins.	6.43	3.59	3.75	4.81	3.52
	mm	163	91	95	122	90
48	ins.	6.43	3.59	3.66	4.81	3.73
	mm	163	91	93	122	95
49	ins.	6.91	3.75	4.38	4.96	4.40
	mm	176	95	111	126	112
50	ins.	8.13	4.15	5.06	5.37	4.87
	mm	207	105	129	136	124
51	ins.	8.13	4.15	5.50	5.37	5.18
	mm	207	105	140	136	132

IMPORTANT: Valves may be mounted in any position, except as noted in specifications table.

Const. Ref. 10, 15, 24, 26-36

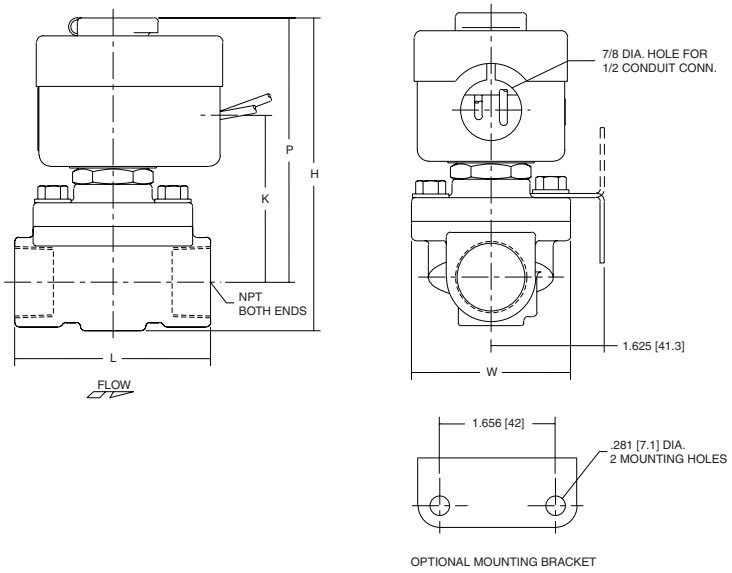

Const. Ref. 12, 16, 18

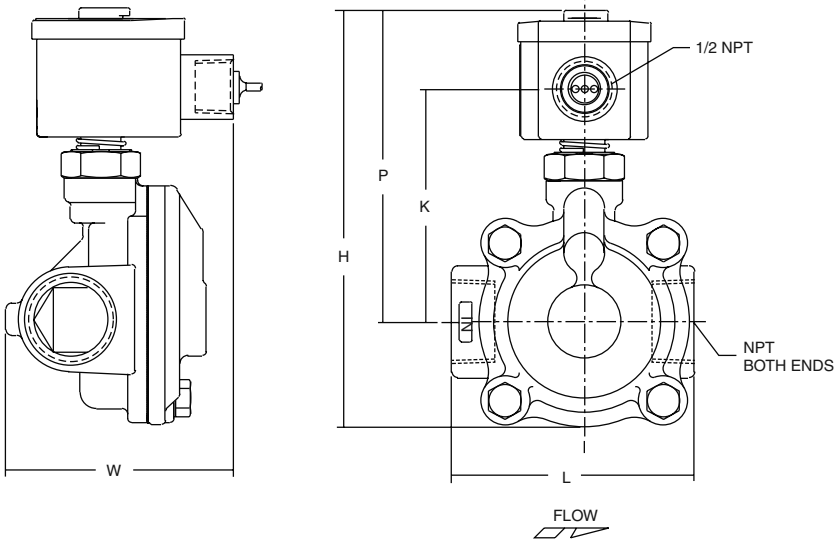

Dimensions: inches (mm)

Const. Ref. 39

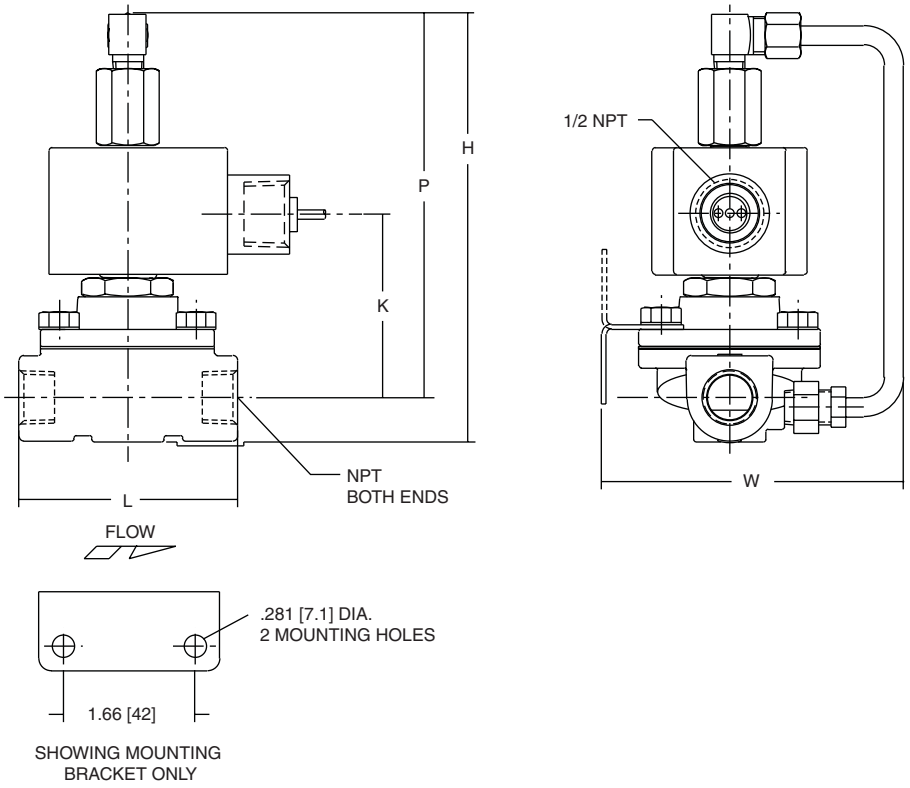

Const. Ref. 40-51

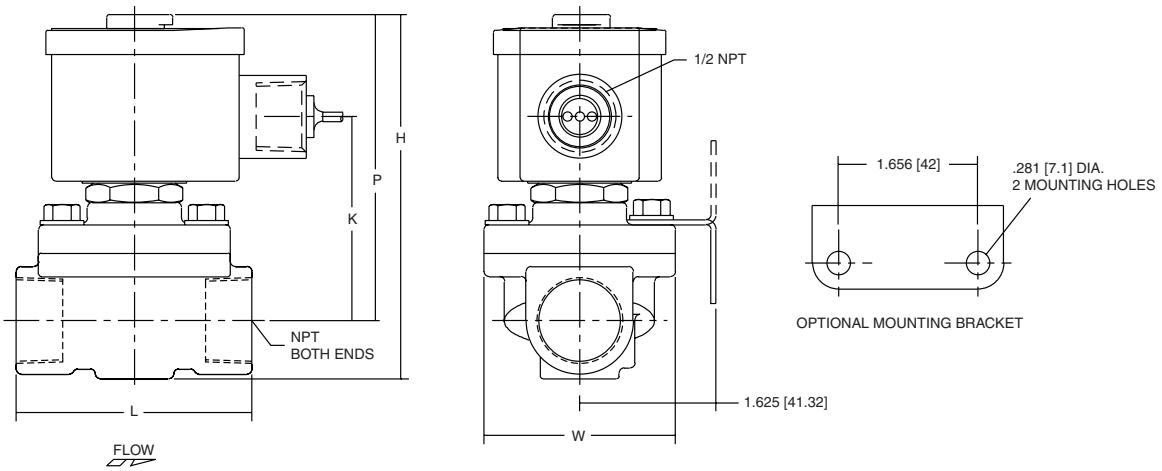

ERNST®
FLOW INDUSTRIES

www.ernstflow.com

Mailing Address - P.O. Box 925 • Farmingdale, NJ 07727-0925 • Shipping Address - 116 Main Street • Farmingdale, NJ 07727-1495
Toll Free: 800-992-2843 • Tel: (732) 938-5641 • Toll Free Fax: 888-992-2843 • E-mail: info@ernstflow.com



Basic
(Brass Construction Shown)

High Temperature
(Brass Construction Shown)

EFI INFLO
flow rate monitors

available in BASIC (Style B or G)
or HIGH TEMPERATURE (Style H or J)

Construction: Aluminum, Brass or Stainless Steel

FEATURES:

- All wetted parts are sealed within a high pressure casing. Outer window tube with scale does not come in contact with medium.
- Unrestricted mounting...install the monitor in any orientation-horizontal, vertical or inverted
- Can be used with oil or opaque liquids
- Uses the variable annular orifice technique in tandem with a transfer magnet and compression spring. A sharp-edged Stainless Steel orifice provides excellent measurement stability for viscosities from 0–500 SSU*
- Has a measuring accuracy of ±2.5% of full scale in the center third of the measuring range, and a ±4% of full scale accuracy over the entire flow measuring range
- Weather-tight external construction (BASIC style only, when used with Buna-N window seals) for use outdoors and/or on systems where wash downs are required
- Will provide years of maintenance-free performance
- **Five year limited warranty**

* Flow monitors can be specially calibrated for viscosities from 500 to 2000 SSU upon request ... contact EFI

EFI INFLO SPECIFICATIONS

BASIC (Style B...for Liquid) or (Style G...for Air & Gas)
HIGH TEMPERATURE (Style H...for 400˚F) or (Style J...for 600˚F)

MATERIALS OF CONSTRUCTION

(Wetted Components)

	ALUMINUM	BRASS	STAINLESS STEEL
High-Pressure Casing, End Ports and Tapered Shaft	Aluminum	Brass	Type 304 Stainless Steel
Seals...(Style B or G)	Buna-N...(Std.) EPR, Viton® or Kalrez® ...(Optional)	Buna-N...(Std.) EPR, Viton® or Kalrez® ...(Optional)	Viton® with PTFE backup ...(Std.) Buna-N, EPR or Kalrez® ...(Optional)
...(Style H) ...(Style J)	Viton® with PTFE backup Kalrez® with PTFE backup	Viton® with PTFE backup Kalrez® with PTFE backup	Viton® with PTFE backup Kalrez® with PTFE backup
Transfer Magnet	PTFE coated Alnico	PTFE coated Alnico	PTFE coated Alnico
Floating Orifice Disk	Type 304 Stainless Steel	Type 304 Stainless Steel	Type 304 Stainless Steel
Spring	Type 316 Stainless Steel	Type 316 Stainless Steel	Type 316 Stainless Steel
Pilot Disk	Type 304 or 316 Stainless Steel	Type 304 or 316 Stainless Steel	Type 304 or 316 Stainless Steel
Retainer Ring	Type 316 Stainless Steel	Type 316 Stainless Steel	Type 316 Stainless Steel

(Non-Wetted Components)

Window Tube ...(Style B or G) ...(Style H or J)	Lexan®...(Std.) Pyrex®...(Optional) Pyrex®	Lexan®...(Std.) Pyrex®...(Optional) Pyrex®	Lexan®...(Std.) Pyrex®...(Optional) Pyrex®
Window Seals ...(Style B or G) ...(Style H or J)	Buna-N...(Std.) PTFE...(Optional) PTFE	Buna-N...(Std.) PTFE...(Optional) PTFE	Buna-N...(Std.) PTFE...(Optional) PTFE

PERFORMANCE

Maximum Operating Pressure*: For Liquid...3500 PSIG (240 Bar) Aluminum or Brass
...6000 PSIG (410 Bar) Stainless Steel

For Air & Gas...600 PSIG (40 Bar) Aluminum or Brass
...1000 PSIG (70 Bar) Stainless Steel

*For Style H or J, see Temperature/Pressure Derating Chart for Aluminum or Brass Monitors

Maximum Operating Temperature: 240˚F (116˚C) Style B or *G
400˚F (204˚C) Style H
600˚F (315˚C) Style J

*For Air & Gas applications operating to 400˚F or 600˚F, Style H or J can be substituted

Port (Connection) Sizes: See Ordering Information Form

Flow Ranges: See Ordering Information Form

Reading: Direct Reading...360˚ Black Reference Line (Non-Electrical)

Installation Orientation: Horizontal, Vertical or Inverted (Scaled Vertically)

Measuring Accuracy: ±2.5% of full scale in the center third of the measuring range;
±4% of full scale over the entire measuring range

(continued on next page)

Repeatability: 1% of full scale

Standard Calibration Fluids: Oil Monitors: Mobil DTE 25 @ 110˚F (43˚C), 0.873 sg
Water Monitors: tap water @ 70˚F (21˚C), 1.0 sg
Air Monitors: air @ 70˚F (21˚C), 1.0 sg and 100 PSIG (6.8 Bar)

Pressure Differential: See graphs

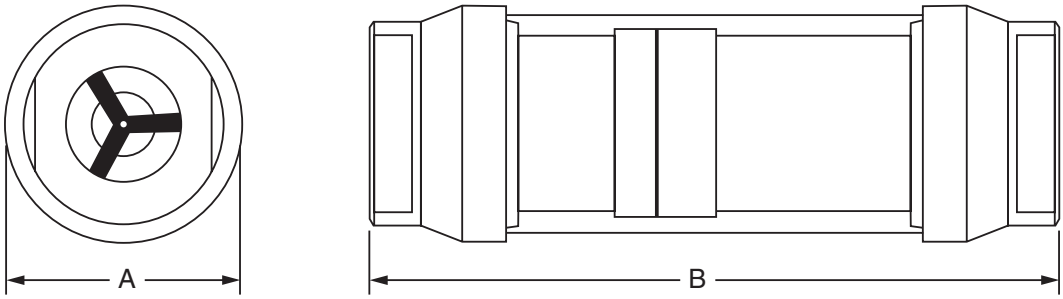

DIMENSIONS

	Size Code			
DIM	**3**	**4**	**5**	**5**
A	1-7/8" (48 mm)	2-3/8" (60 mm)	3-1/2" (90 mm)	3-1/2" (90 mm)
B	6-9/16" (167 mm)	7-5/32" (182 mm)	10-1/8" (258 mm)	12-5/8" (322 mm)
Port (Connection) Sizes	NPTF: 1/4", 3/8", 1/2" SAE: #6, #8, #10	NPTF: 3/4", 1" SAE: #12, #16	NPTF: 1-1/4", 1-1/2" SAE: #20, #24	NPTF: 2" SAE: #32

NOTE: SAE connections not available for Brass Monitors

OPERATING PRINCIPLE

Enclosed within a high pressure casing (A), a high strength magnet (B) in tandem with the sharp-edged annular orifice disk (C), is pressed towards the zero flow rate position by a linear rate compression spring (D). A tapered metering shaft (E) is positioned concentrically within the annular orifice disk and provides a variable-area opening that increases by the square of linear displacement of the orifice disk. Fluid flow creates a pressure differential across the orifice disk, pressing the magnet/orifice disk duo against the compression spring. Flow rate is read by aligning the magnetically coupled follower (F) with the graduated scale (G) located within the environmentally sealed window (H). The variable-area orifice design provides pressure differentials and orifice displacements that are linearly proportional to fluid flow rate.

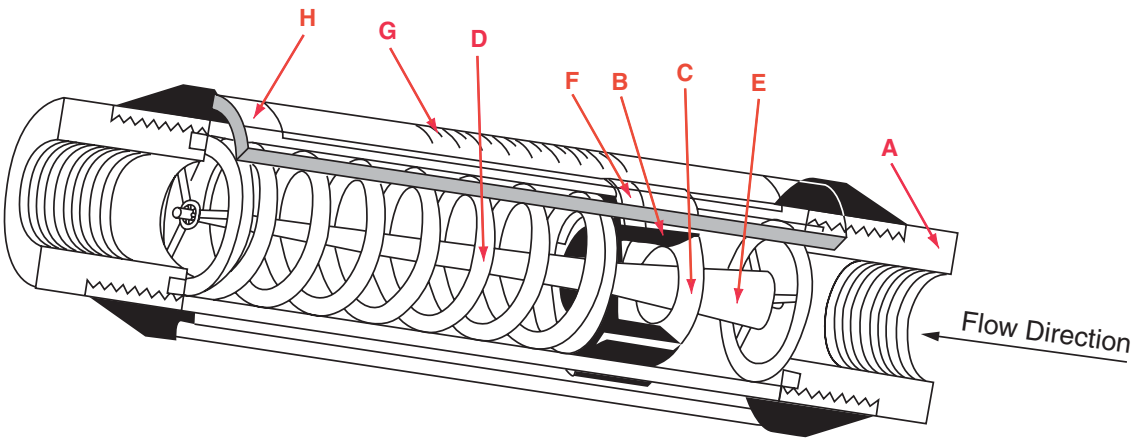

ORDERING INFORMATION FORM

EFI INFLO Model

□ □ □ – □ □ □ – □ □

1 2 3 4 5 6 7

When placing an inquiry or purchase order for an EFI INFLO monitor, please specify the following information:

Style
B = Basic For Liquid
G = Basic For Air and Gas
H = Hi-Temp 400˚F
J = Hi-Temp 600˚F

Size Code
3 = 1/4" to 1/2"
4 = 3/4" to 1"
5 = 1-1/4" to 2"

Material
A = Aluminum
B = Brass
S = Stainless Steel

Pressure Rating
4 = 600 PSIG Max.
Air & Gas (Aluminum/Brass)
5 = 1000 PSIG Max.
Air & Gas (Stainless Steel)
6 = 3500 PSIG Max.
Liquids (Aluminum/Brass)
7 = 6000 PSIG Max.
Liquids (Stainless Steel)

Example:
EFI INFLO Model **B4B-6WD-30**
Description:
1. Style: Basic For Liquids
2. Size Code: 3/4" to 1" NPT
3. Material: Brass
4. Pressure Rating: 3500 PSIG Max.
5. Fluid Media: Water
6. Connection: 1" NPT
7. Flow Range: 3-30 GPM

Connections (All Female)

	Size Code
S = 1/4" NPT	3
A = 3/8" NPT	3
B = 1/2" NPT	3
C = 3/4" NPT	4
D = 1" NPT	4
E = #6 SAE	3
F = #8 SAE	3
G = #10 SAE	3
H = #12 SAE	4
J = #16 SAE	4
K = 1-1/4" NPT	5
L = 1-1/2" NPT	5
M = 2" NPT	5
N = #20 SAE	5
P = #24 SAE	5
Q = #32 SAE	5

Note: SAE connections not available for brass monitors

Fluid Media
A = Air and Gases
H = Oil and 0.873 Specific Gravity
W = Water and 1.0 Specific Gravity

Flow Ranges

Liquid (Oil and Water)	Air (@ 100 PSIG)	Size Code
01 = 0.05-1 GPM (Oil Only)	1.5-12 SCFM	3
0.1-1 GPM (Water Only)		3
02 = 0.2-2 GPM	4-23 SCFM	3
0.2-2.6 GPM	2-30 SCFM	4
05 = 0.5-5 GPM	5-50 SCFM	3
0.5-5 GPM	6-60 SCFM	4
10 = 1-10 GPM	10-100 SCFM	3 & 4
15 = 1-15 GPM	15-150 SCFM	3 & 4
20 = 2-20 GPM	20-215 SCFM	4
25 = 2-25 GPM	20-250 SCFM	4 & 5
30 = 3-30 GPM	30-330 SCFM	4
40 = 4-40 GPM	30-400 SCFM	4
50 = 5-50 GPM	40-500 SCFM	4
5-50 GPM	30-470 SCFM	5
75 = 8-75 GPM	30-750 SCFM	5
88 = 10-100 GPM (Oil Only)	150-900 SCFM	5
15-90 GPM (Water Only)		5
99 = 20-150 GPM	150-1300 SCFM	5

Note: Contact EFI® for the following:
A. Optional materials for wetted or non-wetted components (See Specifications)
B. Special scales and custom units.

NOTE: Kalrez & Viton are DuPont's registered trademarks
Lexan is a General Electric registered trademark
Pyrex is a Corning Incorporated registered trademark

YOUR FUTURE IS IN SIGHT®

PRESSURE DIFFERENTIAL vs. FLOW RATE GRAPHS

For Style B, H or J Liquid Applications

Size Code 3 Monitors (1/4" to 1/2")

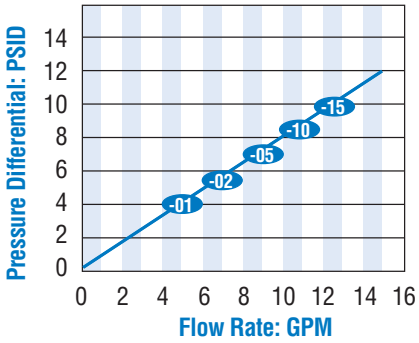

Size Code 4 Monitors (3/4" to 1")

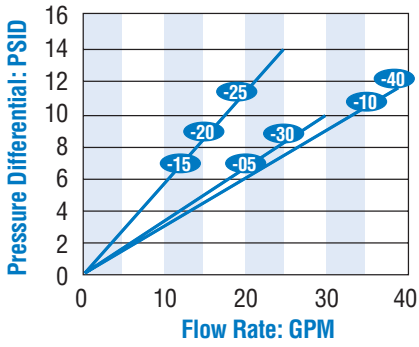

Size Code 5 Monitors (1-1/4" to 2")

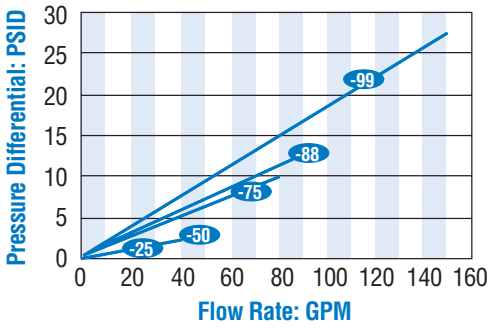

(For Style H or J ONLY)
Temperature/Pressure Derating for Aluminum or Brass Monitors

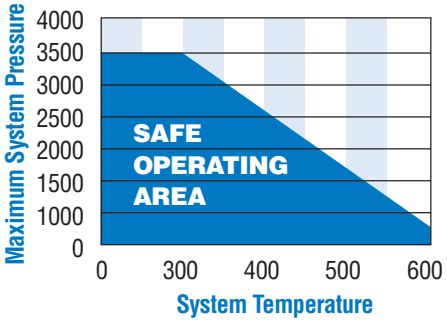

NOTE: -30 (Example) designates Flow Range code.
See Ordering Information Form for available Flow Ranges.

For Style G Air & Gas Applications

Size Code 3 Monitors (1/4" to 1/2")

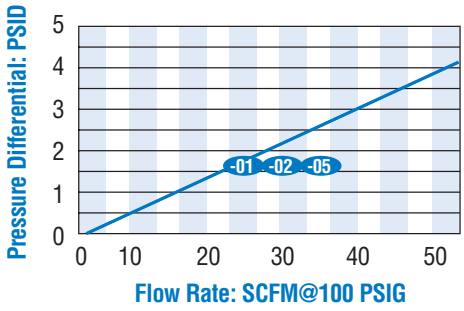

Size Code 4 Monitors (3/4" to 1")

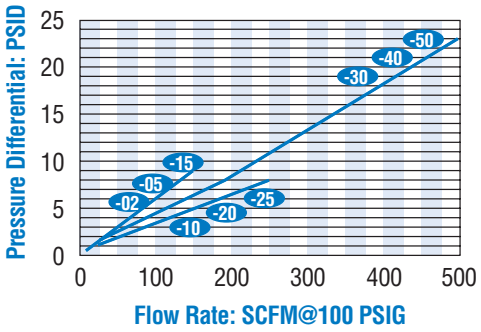

Size Code 5 Monitors (1-1/4" to 2")

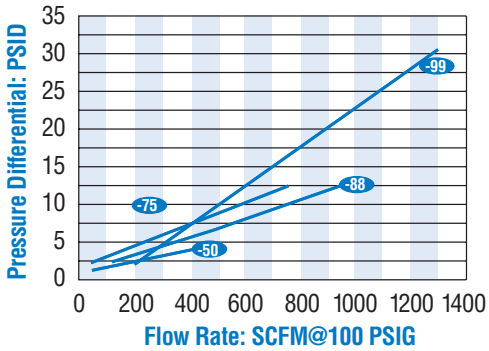

GUIDELINES WHEN CONSIDERING STYLE G (Air & Gas Application) MONITORS

There are three factors that affect the density of a gas: specific gravity, pressure and temperature. EFI INFLO Monitors are calibrated for air (specific gravity of 1.0) at 70˚F and 100 PSIG.

EFI® products are designed for pneumatic systems where pressures between 90-110 PSIG are used. In these common applications, an EFI® monitor with a standard calibration can be read directly without applying corrections.

Correction Factors

If an EFI® monitor is installed in a system where conditions differ from the standard listed above, correction factors will need to be applied to retain the design accuracy of the monitor. The appropriate correction factor equations are detailed in the chart indicated below. To assure the best monitoring accuracy, pressure and temperature measurements should be taken directly at the monitor's inlet port (connection).

Selecting the Proper Monitor

To order a pneumatic flow rate monitor the following information is required:

- port (connection) size
- media (air, nitrogen, argon, etc.) – for material compatibility and specific gravity considerations
- approximate flow range required
- system pressure: nominal, maximum, minimum
- system temperature

Installation Do's and Don'ts

To obtain satisfactory operation from an EFI® pneumatic flow rate monitor, the following points should be considered:

Do...

- install a pressure gage near the inlet of the monitor
- place throttling valves at the outlet of the monitor
- use pipe sealer on the connections
- install a union on one side of the monitor for easy removal for maintenance and calibration
- install solenoid valves at the monitor outlet (as far downstream as possible)
- mount in any orientation: vertical, horizontal or upside down

Do Not...

- install restrictions between pressure gages and the monitor inlet
- install solenoid valves at the monitor inlet
- place restrictions between the monitor's pressure gage and the monitor inlet
- use in systems where reverse flow is possible
- place monitor in non-aligned piping
- over-flow the monitor by more than 150% of maximum reading
- operate at pressures and temperatures greater than specified

Chart 1 - Density Correction Factors

SCFM (indicated) X (CF) = SCFM (actual) $CF = (f_1) \times (f_2) \times (f_3)$ Note: all correction factors need not be used.

Table 1. (f_1) Pressure correction factors (inlet pressure)

psig	25	50	75	100	125	150	175	200
f_1	.56	.75	.88	1.0	1.11	1.2	1.29	1.37

$$f_1 = \sqrt{\frac{14.7 + psig}{114.7}}$$

Table 2. (f_2) Temperature correction factors

˚F	10˚	30˚	50˚	70˚	90˚	110˚	130˚	150˚
f_2	1.08	1.04	1.02	1.0	.98	.96	.95	.93

$$f_2 = \sqrt{\frac{530}{460 + ˚F}}$$

Table 3. (f_3) Specific Gravity correction factor

$$f_3 = \sqrt{\frac{1}{Sp.\ Gr.}}$$

f_1 = correction factor for other than 100 PSI inlet.
f_2 = correction factor for other than 70˚F.
f_3 = correction factor for other than air at 1.0 Sp. Gr.

ERNST® FLOW INDUSTRIES
www.ernstflow.com

Mailing Address - P.O. Box 925 • Farmingdale, NJ 07727-0925
Shipping Address - 116 Main Street • Farmingdale, NJ 07727-1495
Toll Free: 800-992-2843 • Tel: (732) 938-5641 • Toll Free Fax: 888-992-2843
E-mail: info@ernstflow.com

VISA, MASTERCARD, DISCOVER AND AMERICAN EXPRESS ACCEPTED

2M/12/07

© Copyright 2007 Ernst® Flow Industries

VORTEX® IRIS VALVE™

The patented Vortex® Iris Valve is designed specifically to handle dry bulk solids in gravity discharge of free-flowing material from bins, bulk bags, chutes, and hoppers. The Vortex® Iris Valve is constructed with stainless steel control rings, metal handle and trigger lock, and nylon shim for durability and smooth actuation. A form fitted fabric sleeve provides a dust tight seal and product barrier, which prevents material leakage to atmosphere. The Iris Valve is designed to eliminate problems, enabling you to meet your objectives by increasing production, while decreasing labor and equipment costs.

Vortex® Iris Valve Features

- No Binding or Galling. Smooth Actuation
- Unobstructed Bore for Unrestricted Flow of Material
- Fabric Sleeve Prevents Material Degradation
- Easy Installation and Maintenance

Valve Specifications

Size/Bore Options	4", 6", 8", 10", 12", 15", and 18", Diameters
Media	Powder, Pellets, Granulars
Connection Options	Std. Flange Pattern, Tube Stub, or Ferrule Couplings
Media Temperature	Up to 120°F continuous to 250°F intermittent service
Media Pressure	0 PSIG, Gravity Flow Only
Metal Construction Options	304 or 316L Stainless Steel, and/or Aluminum
Sleeve Material Options	Nylon, Teflon, Urethane, or Rubber
Drive/Actuation Options	Infinite Position Hand Lever , Quick Lock Hand Lever, or Tote Handle
Position Confirmation	Visual, Proximity Switch
Compliance/Approvals	CE, FDA
Industry Use	Plastics, Petrochemicals, Chemicals, Foods, Minerals, Textiles, Agriculture





Patent No. 7021604

Application Specific Modifications

SC	All steel material contact components are 304 Stainless Steel alloy.
S-SC	All steel material contact components are 316L Stainless Steel alloy.
UR	Valve Sleeve is a 4 oz. nylon that is urethane coated.
TF	Valve Sleeve is an 8 oz. Teflon material.
FP	Optional bolt-hole pattern is specified.

EMI Incorporated
Heritage Park Rd., Box 912
Clinton, CT 06413-0912
(203) 669-1199
Fax (203) 669-7461
800-243-1188

Bulletin No. OM-1

CLAMP-ON
PORTABLE MIXERS RG, RAG, RH & RA SERIES
OPERATING AND MAINTENANCE INSTRUCTIONS

Handling

The mixer should be lifted with care. Usually the drive unit, shaft (6) and impellers (7) are separated when packed. If the mixer is moved with the impeller shaft assembled, the shaft should be adequately supported when not in the vertical position. Do not, at any time, attempt to lift the mixer by means of the shaft.

Assemble shaft (6) to the motor by means of the arbor (26). Check all set screws (5) for tightness.

Mixer Impeller Assembly

If your mixer is shipped from the factory with impeller(s) not assembled, carefully follow the instructions in this paragraph.

Care should be taken when mounting the impeller (7) on the shaft (6), that the driving face of the impeller is down. In other words, the impeller generally pumps towards the bottom of the vessel.

The single impeller is mounted on the mixer shaft just above the spiral pin (8). The spiral pin has been placed at the end of the mixer shaft to insure against the impeller dropping off the shaft into the product.

The lower impeller in a multiple configuration is mounted on the mixer's shaft in the same way as a single impeller. The spacing of the impeller is significant with respect to stability, fluid regime and the horsepower drawn by the impellers. The best impeller spacing peculiar to the particular application will be given by EMI. Generally, the minimum spacing is two impeller diameters with an optimum spacing of four impeller diameters.

NOTE: On gear driven models equipped with a hydrofoil impeller rather than a marine type propeller, be sure the impeller is secured to the shaft right side up. The hub of the impeller is marked "TOP" and should be facing you when viewed from the drive end of the mixer.

Mounting

See Figure A below, for proper positioning.

Install the portable mixer on the tank edge or other suitable support by tightening the clamp (39) thumbscrew.

Position the portable mixer as shown in Figure A for best top to bottom flow, this is accomplished through the ratchet handle (34) in the ball and socket. Rotate the handle clockwise to tighten; counter-clockwise to loosen. To release spring loaded ratchet, pull up on the handle. This will enable you to move the handle freely without tightening or loosening.

Power Supply

Make proper electrical connections as per local code dictates. Test machine for smoothness of operation. The motor should rotate so as to force liquid downward (unless otherwise specified). Always check this, especially if three-phase wiring is required. If a three-phase motor is used, reversing two of the three connections will reverse the rotation of the motor. Single phase motors are wired for proper rotation at the factory.

(continued on page 4)

Figure A

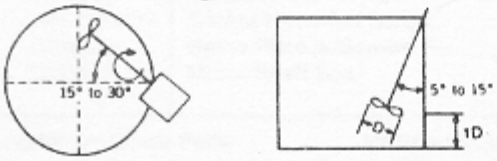

Note: For dual impeller installations, space upper one 1 D minimum above lower, or 1 D minimum below surface of liquid.

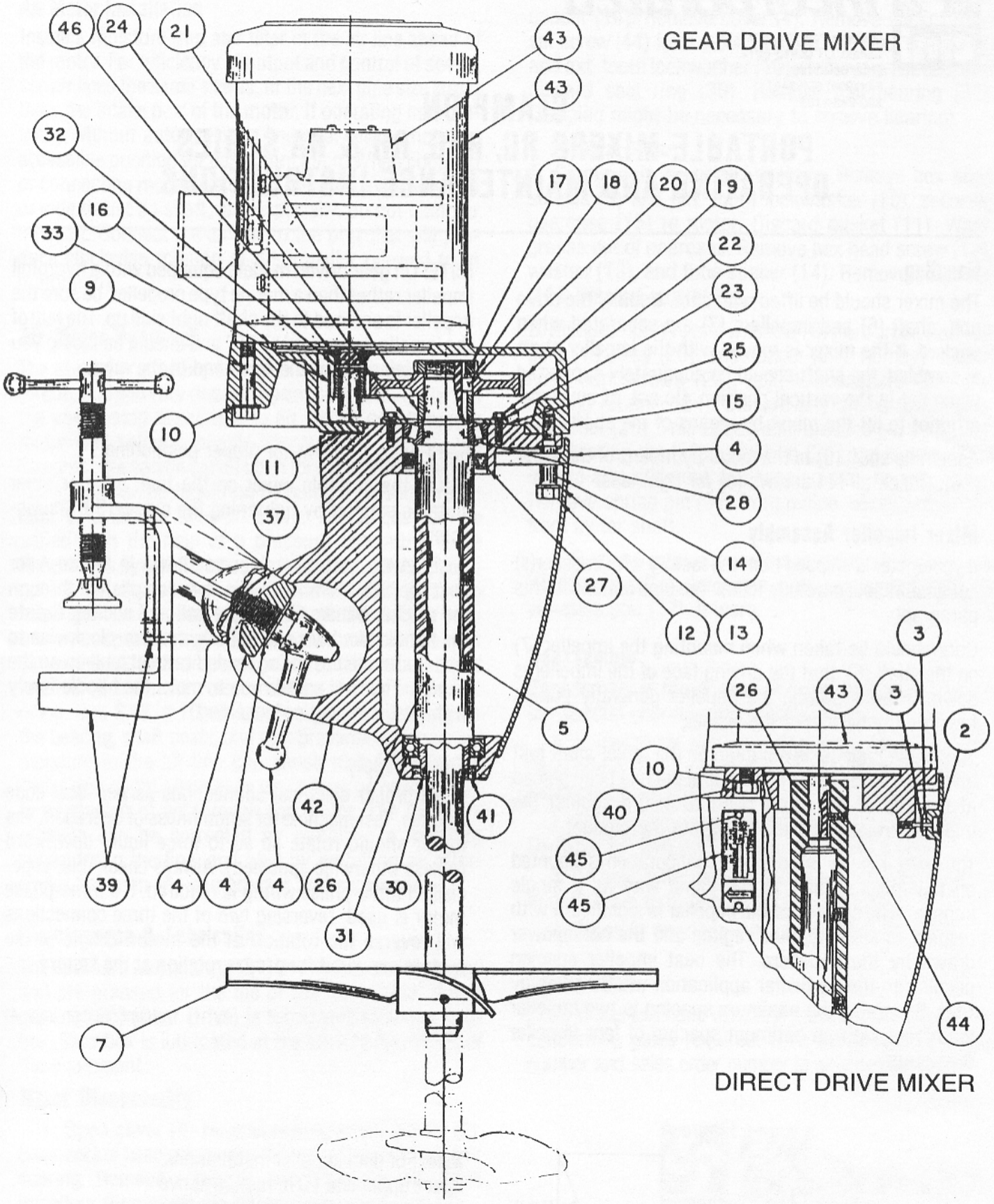
GEAR DRIVE MIXER
46
24
21
43
43
32
16
33
9
17
18
20
19
22
23
25
15
4
28
14
27
12
13
10
11
37
5
42
41
39
4
4
4
26
30
31
7
DIRECT DRIVE MIXER
3
26
43
3
2
10
40
45
45
44

PORTABLE MIXERS RG, RAG, RH, RS & RA SERIES
PARTS LIST

Ref. Number	Part Number	Description	# Per Assembly	
			Direct	Gear
2	330010	Panel Screw	1	1
3	330011	Retaining Ring	1	1
	330012	Retaining Washer	1	1
4	311083	Cover	1	1
5	320160P47	Set Screw	4	4
6	**317083	Shaft ¾"	1	1
	**317084	Shaft 1"	1	1
	**317085	Shaft 1¼"	1	1
7	***313850	Impellers	1-2	1-2
8	320108P13	Spiral Pin ¾"	1	1
	320108P8	Spiral Pin 1"	1	1
	320108P5	Spiral Pin 1¼"	1	1
9	320032P42	Hex Head Screw	0	3
10	330001P08	Ext. Tooth Washer	3	6
11	*314459	Gasket	0	2
12	320032P41	Hex Head Screw	1	1
13	320156P11	Washer	1	1
14	313821	Tube Spacer	1	1
15	311084	Gearcase	0	1
16	*314459	Gasket	0	1
17	*315385	Locknut	0	1
18	*329387P01	Lockwasher	0	1
19	*310151	Gear	0	1
20	*310268	Key, Gear	0	1
21	311088	Spacer	0	1
22	320217P62	Socket Head Cap Screw	0	4
23	320050P26	Lockwasher	0	4
24	310265	Bearing Retainer	0	1
25	*330005-1	Shims (.005")	0	A/R
	*330005-2	Shims (.007")	0	A/R
	*330005-3	Shims (.020")	0	A/R
26	322969P2	Arbor ¾" (Gear Drive)	0	1
	322969P1	Arbor 1" (Gear Drive)	0	1
	322968P1	Arbor 1¼" (Gear Drive)	0	1
26A	322970P2	Arbor ¾" (Direct Drive)	1	0
	322970P1	Arbor 1" (Direct Drive)	1	0
	322971P1	Arbor 1¼" (Direct Drive)	1	0
27	*320216P16	Seal Upper	0	1
28	*330014/15	Bearing Set (Upper)	0	1
29	323680	Grease (1 Lb.) (Not Shown)	0	1
30	*330006-3	Seal Ring ¾"	1	1
	*330006-2	Seal Ring 1"	1	1
	*330006-1	Seal Ring 1¼"	1	1
31	*322852P1	Bearing	1	1
32	*330498-77	Spring Pin	0	1
33	*313828	Pinion	0	1
34	323402P1	Ratchet Handle Assembly w/Locking Shoe & Washer	1	1
37	330420	Vibration Pad	1	1
39	†323783A1	C-Clamp Assembly	1	1
	†315158	Cup Plate Mount	1	1
40	320032P37	Hex Head Screw	3	3
41	*320216P12	Seal, Lower	1	1
42	311082	Bearing Support (RG/RAG)	0	1
42	311090	Bearing Support (RH/RA)	1	0
43	313865	Motor, Electric	1	1
	313866	Motor, Air (RA/RAG)	1	1
44	320160P29	Socket Head Set Screw	2	0
45	330526	Name Plate w/Screws	1	1
46	*330412-1	Motor Shaft Seal	1	1

* Recommended Spare Parts
*** Specify Bore, Diameter & Material When Ordering
** Specify Length When Ordering
† Specify Which Mounting Type When Ordering

NOTE: When Ordering Replacement, Specify H.P. Current Characteristics, Enclosure, EMI Sales Order Number and Model Number.

(continued from page 1)

Air Motor Installation

Install a moisture trap and filter in the air line ahead of the motor. For efficiency of output and control of speed, use air lines the same size as, or the next pipe size larger than, the intake port of the motor. If operating intermittently without automatic air line oiler, place motor in accessible position for easy lubrication. When coupling or connecting motor to a driven member, avoid any end or side thrust on shaft, and especially, do not hammer on shaft. Connect the air line to the port that will produce clockwise rotation of the impeller (viewed from motor end).

Air Motor Operation

The stalled or starting torque is less than the running torque, and will vary depending on the position at which the vanes stop in relation to air intake port. Operate motor well below available line pressure, so that full line pressure can be called upon for overloads on motor. The speed can be regulated by using a pressure regulator or a simple shut-off valve. The torque can be varied with the help of a pressure regulating valve (diaphragm type). For moderate speeds (under 2,000 r.p.m.), or intermittent operation, 1 squirt of oil in bearing oilers per day will suffice. If the duty is continuos, or speed is high, use an automatic air line oiler set to feed 1 to 3 drops per minute. The bearing will receive oil from the rotor chamber during automatic oiling. Use SAE #10 oil. Lubrication is necessary for the bearing, shaft seals, and rust prevention. Excessive moisture in the air line can cause rust formation in motor and might also cause ice to form on muffler, due to expansion of air through the motor. The moisture problem can be corrected by installing a moisture separator in the line, and also by installing an aftercooler between the compressor and air receiver.

Maintenance & Lubrication

The outboard ball bearing (31) in either model is sealed and pre-greased for the life of the equipment. Upper bearing (28) (Gear Drive) is lubricated from the gear box. Gear box is lubricated at the factory for the life of the equipment.

Mixer Disassembly

1. Open cover (4) by unscrewing panel screw (2). Back socket head set screws (5) well off shaft to prevent scoring. Remove shaft (6) and impellers (7). Slide impellers from shaft. Do not remove spiral pins (8).

2A. Direct Drive:

Remove hex head screw (12), washer (13) and tube spacer (14). Remove cover (4). Remove socket head set screw (44) from arbor. Remove hex head screw (40) and ext. tooth lockwasher (10). Remove arbor (26) and discard seal ring (30). Remove ball bearing (31). (Tapping might be necessary to remove bearing).

2B. Gear Drive:

A. Clamp unit in upright position. Remove hex head screws (9) and ext. tooth lockwasher (10), securing gearcase (15) to motor. Discard gasket (11). Wash grease out of gearcase. Remove hex head screw (12), washer (13), and tube spacer (14). Remove gearcase (15). Discard gasket (16).

B. Remove nut (17) and washer (18) from arbor. Remove gear (19), key (20), and spacer (21). Remove socket head cap screws (22), split lockwashers (23) and bearing retainer (24). Discard any shims (25). Press out arbor (26). This action also presses out seal (27), and bearing set (28). Seal ring (30) and bearing (31) should also slide out, but tapping may be necessary. Remove spring pin (32) from pinion. Slide pinion (33) from motor shaft.

3. Remove ratchet handle assembly w/washer and locking shoe (34). Remove c-clamp assembly. Replace vibration pad (37), if worn.

Reassembly

Reassembly is the reverse of disassembly, except for the special characteristics noted below.

1. If applicable, distance between double impellers must remain the same as described in the **Mixer Impeller Assembly** paragraph.

2. On gear drive models, pack gearcase with SHELL DARINA EP GREASE 2, approximately 1 pint.

3. On gear drive models, shim under bearing retainer in gear drive to obtain .002-.006 end play.

4. Press fit bearings into place using the arbor.

Spare Parts

Refer to the exploded view and parts list for information concerning parts required. Give the mixer assembly number and sales order number in any correspondence.

EMI Incorporated
Heritage Park Rd., Box 912
Clinton, CT 06413-0912
(203) 669-1199
Fax (203) 669-7461
800-243-1188

2M-3/95

TRANSFER PUMP

LEFT BLANK

seepex.com

Operating and Maintenance Instructions
Progressive Cavity Pump

range **size**

BW **10**

commission-No.

822812

Job # 2109552

This operating and maintenance instruction includes important safety information and instructions for installation, commissioning, operation and maintenance of the seepex machinery.

1.0
General

1.1
Application

These operating instructions contain basic information on the installation, commissioning and maintenance of seepex machines. Compliance with the work steps described in the individual sections is essential.

1.2
Details of the seepex machines

1.2.1
Operating Instructions

The Commission Number (comm. no) assigns the operating instructions to a particular seepex machine. The operating instructions are produced in relation to a specific job/commission and are valid only for the machine whose comm. no. is identical with that indicated on the cover sheet and possessing the associated data sheet, Point 9.

1.2.2
Manufacturer

The machines were manufactured by seepex.

1.2.3
Range, Size, Version

of the machines are stated in the appended data sheet, Point 9.

1.2.4
Machine Comm. No. and Year of Construction

are stated on the type plate at the machine.

1.2.5
Release Date of the Operating Instructions

is stated on the cover sheet of the operating instructions.

1.2.6
Modifications, Notes of Modification

If modifications to the machines are carried out in agreement with seepex, a new set of operating instructions will be provided, or the existing operating instructions will be supplemented by an additional sheet together with a new cover sheet. The date of modification and modification index will be noted on the new cover sheet.

1.2.7
EEC Machine Directive

1.2.7.1
Manufacturer's Declaration

seepex Manufacturer's Declaration as required by the EEC Machine Directive 89/392/EEC, Appendix II B:

The seepex machines delivered in accordance with our design are intended to be fitted in one machine or assembled together with other machines to form one machine/plant. The commissioning of the machine is forbidden until such a time as has been established that the entire machine/plant satisfies the requirements of the EEC Directive for Machines as amended 91/368/EEC and 93/44/EEC.

Particular attention must be paid to the safety requirements specified in EN809 (s and Equipment for Fluids) as well as the information in these operating instructions.

1.2.7.2
Declaration of Conformity

seepex machines possessing no safety accessories do not fulfill the requirements of the EEC Machine Directive 89/392/EEC as amended 91/368/EEC and 93/44/EEC.

For this reason, no Declaration of Conformity as required by the EEC Machine Directive 89/392/EEC, Appendix IIA can be issued before appropriate safety devices have been installed/mounted on the machine and/or plant with due regard to the information given in these operating instructions.

The following harmonized standards are particularly applicable:
EN 809, EN292T1, EN292T2
Applicable national standards and specifications must be taken into consideration.

Following assessment of the conformity of the machine/plant with the EEC Machine Directive, customers may on their own initiative place on the full machine/plant the EEC symbol 'CE' as defined in Identification Directive 93/68/EEC.

CAUTION

This documentation must be kept available for at least 10 years.

1.2.8
Copyright and Industrial Property Rights

These operating instructions are copyrighted. The reproduction, in particular by photocopying, of these instructions is not permitted (§§ 54, 54 UrhG) and constitutes a criminal offence (§ 106 UrhG). Proceedings will be instituted if the copyright is violated.

1.2.9
Specifications Required for Inquiries and Orders

The following information must be included when inquiring about replacement parts or placing orders:
- comm. no.
- / machine type
This information is given on the type plate mounted the machine.

1.2.10
Technical Data Sheet
see Point 9.

1.2.11
Performance Data, Load Index, Power Consumption

are indicated in the associated data sheet, Point 9.

1.2.12
Sound Pressure Level

The sound pressure level and/or noise characteris-tics of the seepex machines are ascertained in accordance with DIN 45635. The measuring guidelines are largely identical with the international standards ISO 3740-1980 and ISO 3744-1981.

1.2.13
Operating Range

Employment of the machine is not permissible for purposes other than those stated in the data sheet, see Point 9. seepex cannot accept liability for damage arising through failure to comply with this operating range.

1.3
Supplementary Information

1.3.1
Accessories, Optional Extras

Please refer to the data sheet, Point 9.

1.3.2
Company Address, Service Addresses

see Point 11

2.0 Safety

These operating instructions contain basic requirements to be observed during the installation, operation and maintenance of the machine. Therefore, the instructions must be read by the mechanical fitter and by the technical personnel/operator responsible for the machine prior to assembly and commissioning, and kept available at the operating site of the machine/plant at all times.

Compliance is required not only with the general safety instructions given in this section but also with the detailed instructions, e.g. for private usage, given under the other main headings in these operating instructions.

2.1 Labeling of Advice in the Operating Instructions

In these operating instructions safety advice whose non-observance could lead to danger for life or limb is labeled with the following general hazard symbol:



safety symbol acc. to ISO 3864 - B.3.1

Warnings regarding electric power are labeled with:



safety symbol acc. to ISO 3864 - B.3.6

Safety instructions whose non-observance could jeopardize the machine and its functions are labeled by the word

CAUTION

Always comply with instructions mounted directly on the machine, e.g.
- rotational direction arrow
- fluid connection indicators

and ensure that the information remains legible.

2.2 Personnel Qualifications and Training

Personnel charged with operation, maintenance, inspection and assembly must be in possession of the appropriate qualifications for the tasks. The company operating the machine must define exact areas of responsibility, accountabilities and personnel supervision schemes. Personnel lacking the required skills and knowledge must receive training and instruction. If necessary, the opera-ting company may commission the manufacturer/ supplier to conduct these training courses. Furthermore, the operating company must ensure that the personnel fully understand the contents of the operating instructions.

2.3 Dangers Resulting from Failure to Observe Safety Instructions

Failure to comply with the safety instructions may lead to hazards to life and limb as well as dangers for the environment and the machine. Non-observance of safety instructions can invalidate the right of claim to damages.

The following are just some **examples** of possible dangers resulting from failure to comply with the safety instructions:

- Failure of important machine/plant functions
- Failure of prescribed methods of service and maintenance
- Danger to life and limb due to electrical, mechanical and chemical influences
- Danger to the environment due to the leakage of hazardous substances

2.4 Safety-conscious Working

Always comply with the safety instructions listed in this document, the existing national accident prevention regulations and any company-internal work, operating and safety rules.

2.5
Safety Instructions for the Operating Company/Machine Operator

- Any potentially hazardous hot or cold machine parts must be provided with protection against accidental contact at the customer´s premises.

- Protective guards for moving parts (e.g. coupling) must never be removed while the machine is in operation.

- Leakages (e.g. in the shaft seal) of hazardous conveying liquids (e.g. explosive, toxic, hot) must be drained in such a way that no danger arises for persons or for the environment. Always observe the relevant statutory requirements.

- The risk of exposure to electrical power must be eliminated (for details, see the VDE regulations, for example, or those of the local power supply company).

2.6
Safety Instructions for Maintenance, Inspection and Assembly Work

The operator must ensure that all maintenance, inspection and assembly tasks are carried out by authorized and qualified personnel who have studied the operating instructions closely and become sufficiently familiar with the machine.

As a basic rule, the machine must be brought to a standstill before work is carried out. Always comply with the de-commissioning procedure described in this document.

Any machines or assemblies conveying media that are detrimental to health must be decontaminated.

Immediately following completion of work, all safety and protective devices must be replaced in position and, where applicable, re-activated.

Before re-starting the machine, observe the points listed under the heading "Initial Startup".

2.7
Unauthorized Modification and Manufacture of Replacement Parts

Conversions or modifications of the machine are permissible only in consultation with the manufacturers. Original manufacturer replacement parts and manufacturer-approved accessories enhance the operational safety of the machine. The usage of unauthorized parts may lead to the nullification of the manufacturer's liability for any resultant damages.

2.8
Impermissible Modes of Operation

The operational safety of the machines supplied is warranted only for employment in accordance with the intended use as defined in Section 1 - General - of these operating instructions. Never allow the threshold values specified in the data sheet to be exceeded.

3.0
Transport and Intermediate Storage

3.1
Safety Precautions

Employ appropriate transport means, hoists and tools when transporting and storing the machine, always observing the safety instructions.

3.2
Transport

Depending on its weight, the seepex machine must be transported manually or with appropriate transport means. Comply with the transport instructions on the packing.

3.3
Unpacking

The design of the packing is such that the equip-ment can be removed manually or, if demanded by the weight, by means of appropriate hoists.

Any screw fittings between the machine and the packing must be undone. Comply with the attached information notices and symbols.

3.4
Intermediate Storage/Preservation

Unless otherwise indicated in the data sheet, seepex machines are provided with preservation only for the duration of transport. If a long period of intermediate storage is foreseen before the machine is commissioned, it is necessary to pro-vide supplementary preservation. If necessary, the appropriate measures should be drawn up in consultation with seepex.

Intermediate storage in extreme climatic conditions is permissible only for machine whose design is appropriate to the circumstances. If necessary, seepex must be consulted.

CAUTION

Pumps of the range MAP
If the period from supply and subsequent storage until the commissioning is more than 4 weeks, the hoses should be dismantled, refer to Point 7.

3.5
Protection against Environmental Influences

To afford protection against environmental influences, the intermediate storage location must be dry, enclosed and free from frost.

4.
Description of the seepex Progressive Cavity Pump and Accessories

4.1
General Description, Design and Mode of Operation

Like all progressive cavity pumps, seepex pumps belong to the rotating positive-displacement pump family. The characteristic attribute of these pumps is the special formation and arrangement of the two conveying elements, namely the rotor and the stator.

The difference in the number of threads possessed respectively by the rotor and stator produces a chamber that opens and closes alternately in line with the constant turning motion of the rotor, effecting the continuous transportation of the conveying product from the suction side to the pressure side.

The geometrical formation of the two conveying elements combined with the constant contact that exists between them result in sealing lines that effect an airtight seal between the suction and pressure side in every position of the eccentric screw, even when the pump is stationary. The pump owes its high suction capacity to this
sealing between the suction and pressure sides.

4.2
Mechanical Design

Please consult the sectional drawing, Point 9, for the mechanical design of the pump. The data sheet, Point 9, gives information on the design of the pump housing, stator, rotor and rotating components.

Refer to document OM. SEA. __, for information on the design of the shaft seal.

The data sheet, specifies details of the design of the drive engine. Further details are
given in the appended manufacturer's documents, Point 10.

4.3
Accessories

Consult the data sheet for information.

4.4
Dimensions, Weight

Consult the appended dimensional drawing,

4.5
Design Variants

Refer to the data sheet, Point 9, for the design of the seepex progressive cavity pump. Other design variants are possible, whereby seepex must first check whether a particular pump is suitable for the intended purpose.

4.6
Operating Site Specifications

Operating site specifications are listed in the data sheet, Point 9. Details of the space required for installation, operation and maintenance are given in Point 5.2.1.

5.1 Mounting tools/lifting gear



CAUTION

Pump falling over
Slight injury or damage to property may result.

- ➢ Adhere to the lifting tool's starting point.
- ➢ Pay attention to the dimensions, weight and centre of gravity of the pump
- ➢ Use suitable mounting tools/lifting gear.

5.2 Required space

The required space should be determined by considering the following factors:

- Dimensions and weight.
- Requisite transport and lifting equipment.
- Pipe routing – dismantling (stator construction dimensions).

5.3 Stator construction dimensions (P)

- Refer to the dimensional drawing.

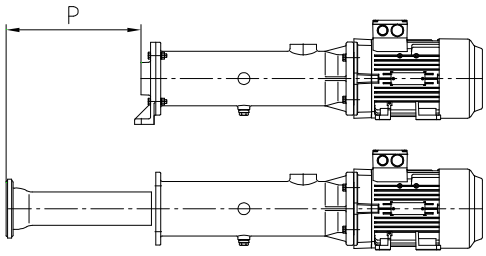

5.4 Erection of the complete mounted pump

- ➢ Erect in accordance with technical data (Chapter 3.0).
- ➢ Heed dimensional drawing.

Tension-free mounting of the pump
- ➢ Balance unevenness with suitable supports.
- Applies to mounting on foundations/load-bearing elements.
- Total areas of all pump bearing areas are resting on the surface.

Correct position of the drives
- All drives are set up ready for operation and mounted.
- Correct slipping of the drive during transport/installation of the pump by adjusting/fixing the drive motor.



CAUTION

Safety protection equipment.
Slight injury or damage to property may result.

- ➢ Connect safety protection equipment and activate.

5.5 Energy supply to the seepex pump



DANGER

Supply voltage and power frequency
Death or serious injury will result.

- Heed type plate on the pump.
- Pay attention to manufacturer's directions (Chapter 14.0).
- Pay attention to safety regulations.

5.6 Pipe work

5.6.1 Suction and pressure connection

- Refer to the dimension drawing for the position, nominal pipe size and norm.
- Heed rotational direction/direction of flow.

5.6.2 Dimensioning of pipe work

- Adhere to specifications regarding pressure in the pressure or suction connection.
- Heed technical data (Chapter 3.0).
- Nominal pipe size of suction pipe = nominal pipe size of suction connection of pumps

5.6.3 Residue-free pipe work

NOTICE

Damage to property through assembly residue
No claims under guarantee if violated.

- Keep all pipe work free of foreign objects.
- Remove weld spatters, screws, steel chips etc.

5.6.4 Tension-free mounting

- Assemble pipe work and other components in a tension-free manner.

6.0
Commissioning/De-commissioning

6.1
Engineering Data

Details regarding all technical specifications and operating conditions are given in these operating instructions together with the data sheet, Point 9.

To guarantee the correct assignment of documentation to pump, the commission number on the
- cover sheet
- and data sheet of these operating instructions must match the commission number stated on
- the nameplate of the pump.

6.1.1
See Point 7.2.2 for Lubricant Chart

6.2
Preparation for Operation

6.2.1
Bearing

6.2.1.1
See Point 7.2.1.4 for pump bearing.

6.2.1.2
See manufacturer's documents, Point 10, for drive bearings.

6.2.2
Shaft Sealing

See document OM.SEA.__,.

6.2.3
Filling Up of Suction Side to Avoid Dry Running at Startup

CAUTION

Before switching on the pump, fill the suction-sided pump casing with fluid so that the first rotations will lubricate the conveying elements immediately. A small quantity of fluid is sufficient for lubrication; the subsequent operation of the pump is self-priming, even if an air column up to the liquid level remains.

6.2.4
Electric/Hydraulic Connections



The connections are listed in the appended manufacturer's documents, Point 10.



The risk of exposure to electrical hazards must be ruled out. Always observe the safety regulations valid at the site of installation.

6.2.5
Checking Direction of Rotation



The rotational direction of the pump determines the flow direction of the conveying medium.

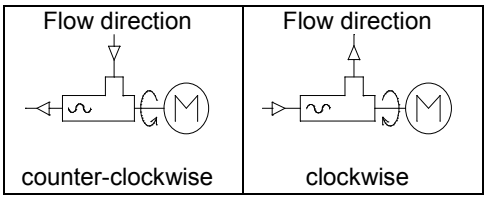

Prior to commissioning the rotational direction of the pump must be checked for compliance with the data sheet specification and the rotational direction arrow on the type plate of the pump.

6.3
Control and Monitoring Equipment

Where applicable, please refer to the associated documents, Point 10, for information on commissioning.

6.3.1
Performance Check

Any optional extras must be subjected to a performance check in conformity with the specifications by seepex or other manufacturers, see manufacturer's documents.

6.3.2
Setting

Unless already performed in the factory, setting must be carried out in accordance with the appended manufacturer's specifications, Point 10. Pay attention to the operating specifications in the data sheet.

6.4
Equipment for Protection of Persons

Machines must be fitted with mechanical protective devices complying with DIN EN 809.

- Moving or working parts must be protected against accidental contact.
- However, safety considerations demand it be possible at all times to check without hindrance whether the shaft seal is fully functional. A protective guard is necessary in this area only if components are mounted on the rotating, smooth shaft.



- If pumps are operated with an open suction flange/feed hopper, a suitable protective guard complying with DIN EN 294 must be mounted.
- Country-specific protective regu-lations must be observed at the site of installation. Prior to activation of the pump, check the proper function of all protective equipment.

6.5
Commissioning

6.5.1
Initial Startup/Re-starting

CAUTION

Every seepex progressive cavity pump is designed for the specific operating conditions documented in the data sheet. Commissioning is permissible only if the operating conditions conform with those indicated in the data sheet. Although the potential usages of the seepex pump are not confined to the specified operating conditions, any change in the original conditions must be checked and approved by seepex.

The right to make claims under the warranty agreement will be annulled if operating conditions are changed without prior approval by seepex.

6.5.2
Avoid Dry Running of Pump

CAUTION

The dry running of a pump increases the friction between rotor and stator, quickly causing an unacceptably high temperature to develop on the inner surface of the stator. This overheating leads to burning of the stator material and the total failure of the pump.

For this reason it is necessary to ensure that the suction-sided flow never dries up completely. If a continuous flow cannot be guaranteed for the plant, it is essential to fit the seepex dry running protection device TSE, available as an optional accessory.

6.5.3
Check Pressure at Suction and Pressure Flanges

6.5.3.1
Safeguard Pump Against Excessive Pressure at the Suction Flange

The seepex pump is designed to operate with the pressure at the suction flange (suction head or inlet pressure) specified in the data sheet. Deviating pressure conditions may lead to the failure and/or destruction of the shaft seal or entire pump.



For this reason the suction pressure specified in the data sheet must be guaranteed. Appropriate monitoring devices are oil-filled contact mano-meters that deactivate the pump.

6.5.3.2
Safeguard Pump Against Excessive Pressure at the Pressure Flange

The seepex pump operates according to the positive displacement principle. Operation of the pump against an excessive pressure caused by closed valves, by high pressure losses in the piping or by product sedimentation will lead to the destruction of the pump, drive, pipe work and/or downstream equipment. Every progressive cavity pump must therefore be protected against overpressure. Safety valves with bypass pipes or oil-filled contact manometers that disactivate the pump are appropriate protective devices.



6.5.4
Drive Engine

Consult the attached manufacturer's operating instructions, Point 10, for information on commissioning the drive engine.



6.5.5
Establish Clear Passage Through Pipelines

CAUTION

To prevent damage to the pump the unhindered flow of liquid must be guaranteed between the points of entry to and exit from the pipeline. For this reason, open all relevant valves etc. prior to activation of the pump.

6.6
De-commissioning

6.6.1
De-activation

The electric connections must be switched off and protected against accidental re-activation. Observe the safety regulations applying to the plants.



6.6.2
Stationary Pump

The pump and all optional equipment must be provided with the following protection modes while at a standstill:

- Frost protection
- Protection against solid particle deposits
- Protection against sedimentation of the medium
- Corrosion protection for parts in contact with the medium

We recommend that the pipeline and pump be emptied for the duration of the plant standstill. Following evacuation, the pump should be preserved.

6.6.3
Evacuation of the Pump

The pipeline must be evacuated on the suction and pressure side or shut-off directly behind the pump connections. Drain any residual liquid in the pump casing by opening/ removing the screwed sealing plugs (705) and (502), sealing rings (706) and (503). Casings without screwed plug must be evacuated by the connection branch (SAG and DRS). Refer to the data sheet and the sectional drawing of the associated operating instruction, Point 9, for information on the pump design. Conveying medium residues always remain in the rotor/ stator chambers and may run out during transport or disassembly of the pump. If conveying aggressive or hazardous media, therefore, wear appropriate protective gear during all installation work.



6.6.4
Disassembling the Pump

Dismantle the pipe work by removing the flange bolts (SCH) and flange seals (DFL) or the threaded connections (G).

Disassemble the pump together with the baseplate (GPU) or, as applicable, without the baseplate (GPU) following removal of the bolts (SCH) at the pump feet.

Block-design pumps with direct flange-mounted drive engine are liable to become unstable during disassembly. Stability can be restored by propping up the drive engine.



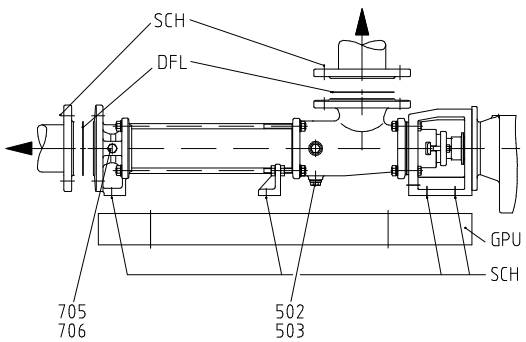

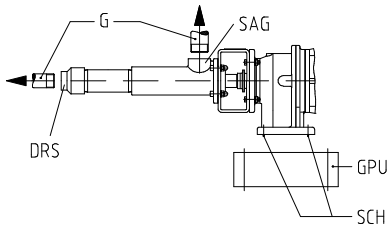

6.6.5
Preservation/Storage

The pump must be preserved prior to storage. Appropriate preservation measures must be agreed with **seepex**. Always state the pump commission number when making inquiries.

Range: BW
Size: 5-10

9.1.1 Prepare the pump for dismantling

	**DANGER** **Dangerous voltage.** Death or serious injury will result. ➢ Heed safety regulations. ➢ Disconnect pump from all sources of energy. ➢ Secure electrical connections against restarting.	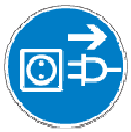

➢ Empty pipes.
➢ Allow pipes to cool down.
➢ Remove pipe connections (suction side/pressure side).
➢ Heed decommissioning (Chapter 6._).

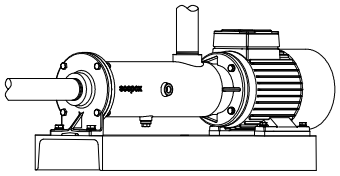

9.1.2 Demontage

	**WARNING** **Tilting or falling pump** Injuries and/or damage to equipment. Death or serious injury can result. ➢ Secure the pump.	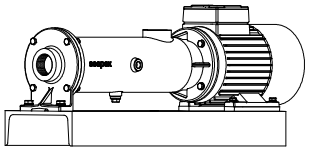

9.1.2.1 Druckstutzen (700) – Demontage

➢ Dismantle pressure branches (700).

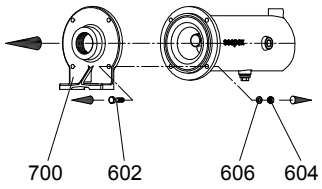

9.1.2.2 Stator (601) – dismantling

Remove stator (601) from suction casing (500).

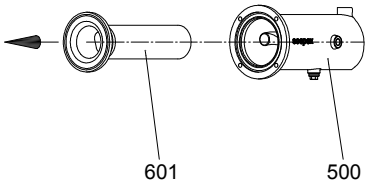

9.1.2.3 Suction Casing (500) – dismantling

- Dismantle suction casing (500).
- Remove casing gasket (501).

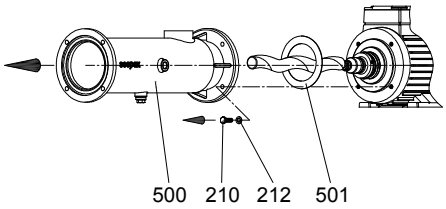

9.1.2.4 Rotor (600) – dismantling

- Remove Rotor (600) from plug in shaft (307).
- Dismantling of joint (G)
  - Rotating unit – individual parts (Chapter 9_)

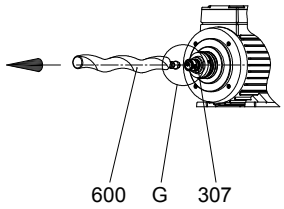

9.1.2.5 Mechanical Seal (SEA) – dismantling

- Detasch set screws (378).
- Dismantle set collar (372), Mechanical seal (SEA) and mechanical seal retainer (333).
- Dismantle shaft sealing (Chapter 9._)

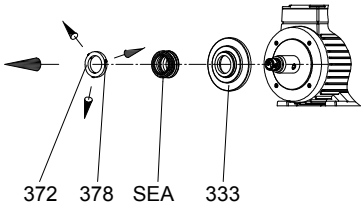

9.1.2.6 Plug in Shaft (307) – dismantling

	Tool (W26/assembly mandrel)

- Remove plug in shaft pin (309) from plug in shaft (307) with tool (W26).
- Remove plug in shaft (307).

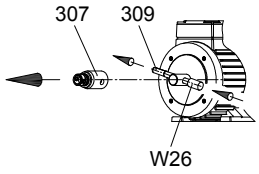

9.1.3 Reassembly



WARNING

Tilting or falling pump/pump parts
Injuries and/or damage to equipment. Death or series injury may result.

➢ Secure the pump.

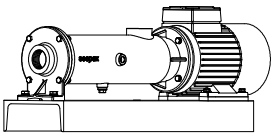



CAUTION

Danger of fingers being crushed
Slight injury may result.

➢ Do not grasp between connections.

9.1.3.1 Plug in Shaft (307) – reassembly

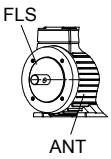

➢ Clean the flange mechanism surfaces (FLS) and output pivots of the drive (ANT).

➢ Slide on plug in shaft (307).

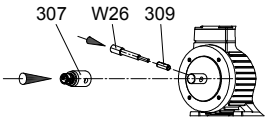



Tool (W26/assembly mandrel)

➢ Insert the plug in shaft pin (309) into the plug in shuft with tool (W26).

9.1.3.2 Mechanical Seal (SEA) - reassembly

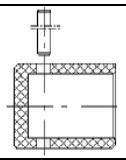

Tool (W27/Mounting sleeve with assembly mandrel)

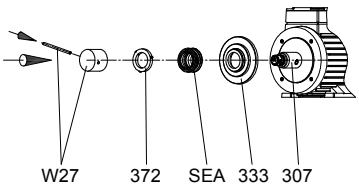

➢ Gleitringdichtungs-Aufnahme (333), Gleitringdichtung (SEA) und Stellring (372) auf Steckwelle (307) schieben.
➢ Secure Mechanical Seal (SEA) with tool (W27)..

➢ Tighten the set collar (372) with set screws (378).

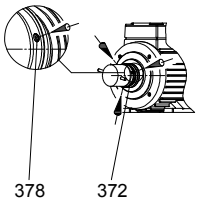

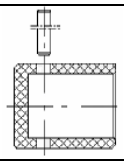	Tool (W27/Mounting sleeve with assembly mandrel)

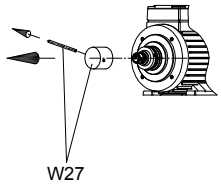

- Dismantle tool (W27)..

9.1.3.3 Rotor (600) – reassembly

- Assmble rotor (600).
- Joint (G) reassembly
  - Rotating unit – individual parts (Chapter 9_).

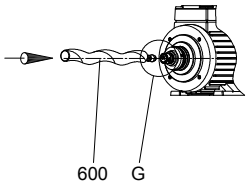

9.1.3.4 Sauggehäuse (500), Sauggehäusedichtung (501) – reassembly

- Provide rotor (600) with protective cover (SH).
- Slide on casing gasket (501).
- Assemble and adjust the pressure casing (500) (water level).

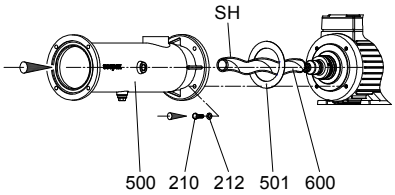

9.1.3.5 Stator (601) – reassembly

- Support rotor (600) with base (S) to prevent it falling down.
- Add lubricant (liquid soap) to the opening on the pressure branch side between the rotor (600) and stator (601).
- Turn rotor (600) in the “right” rotating direction.
-
-
- Add lubricant (liquid soap) to the opening on the pressure branch side between the rotor (600) and stator (601).
- Turn Stator (601) in the „right“ rotating direction and slide on the rotor (600).
- Slide on the Stator (601) up to the collar of the pressure casing (500).

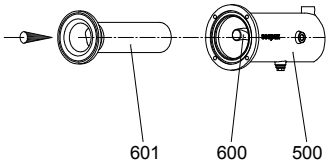

9.1.3.6 Suction branch (700) – reassembly

- Assemble suction (700) branch.

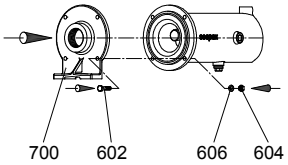

9.2.1 Dismantling

9.2.1.1 Dimantling of holding band (406, 407)



CAUTION

Danger of injury
Possible ejection of parts.
Slight injury or damage to property may result.

- Wear protective goggles.

- Detach holding band strap (SCL).
  - Use suitable tool (WM).
- Push out strap part of holding band (SCL).
- Remove holding band (406, 407).

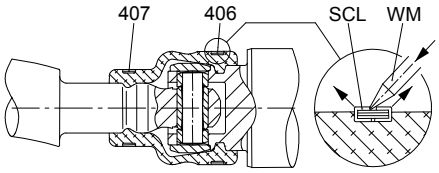

9.2.1.2 Universal joint sleeve (405) – dismantling

- Pull back universal joint sleeve (405).

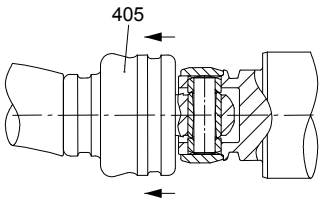

9.2.1.3 Retaining sleeve (401) – dismantling

- Knock back retaining sleeve (401).
  - Use suitable tool (WM).

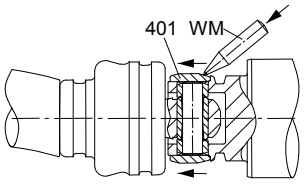

9.2.1.4 Detach joint

- Eject coupling rod pins (402).
- Remove Rotor (600).



Tool (W5/ Drift)

- Knock guide bushing (403) out with tool (W5).

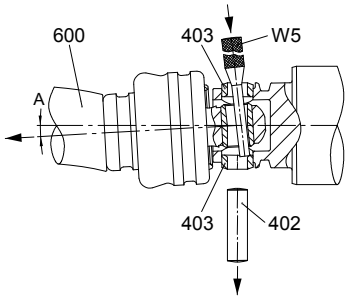

9.2.2 Rotating unit (RTE) – prepare individual parts for reassembly

9.2.2.1 Rotor (600)

- Remove existing damage.
- Clean the rotor (600).

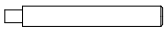	Tool (W4/assembly mandrel)

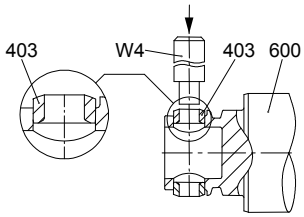

- Press in the guide bushing (403)
  - Use tool (W4).

9.2.2.2 Plug-in shaft (307)

- Remove existing damage.
- Clean the plug-in shaft (307).

	Tool (W4/assembly mandrel)

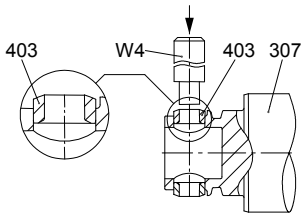

- Press in the guide bushing (403)
  - Use tool (W4).

9.2.3 Rotating unit (RTE) – individual parts – reassembly

HINWEIS
Faulty functioning of joints Malfunctioning and/or destruction of joints. Damage to property may result. ➢ Replace the coupling rod pins (402) and guide bushing (403) jointly.

9.2.3.1 Rotor (600) / Plug in shaft (307) – reassembly

- Slide the universal joint sleeve (405) onto the Rotor (600).
- Fill the joint head with seepex joint grease.
- Side on retaining sleeve (401).

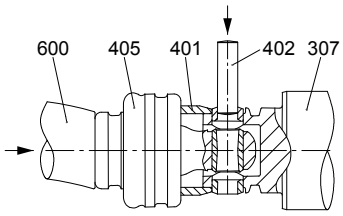

- Insert coupling rod pins (402).
- Connect the Rotor (600)/plug in shaft(307).
- Slide in coupling rod pins (402).

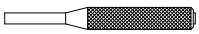	Tool (W5/ Drift).

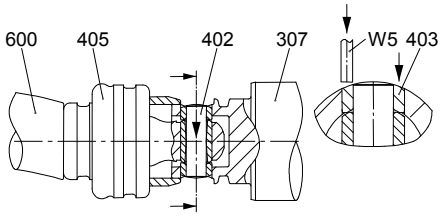

- Knock the guide bushing (403) in.
  - Use tool (W5).

9.2.3.2 Retaining sleeve (401) - reassembly

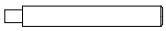	Tool (W4/ assembly mandrel)

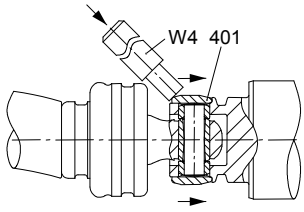

- Knock back the retaining sleeve (401).
  - Use tool (W4).

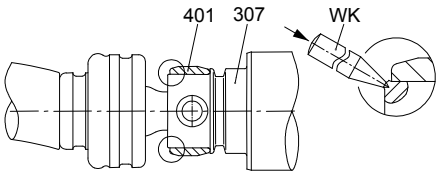

- Secure the retaining sleeve (401) in a displaced manner (2x180°).
  - Use suitable tool (WK).

	Tool (W15/Mounting plate)

- Remove tool (W15).

9.2.3.3 Universal joint sleeve (405) – reassembly

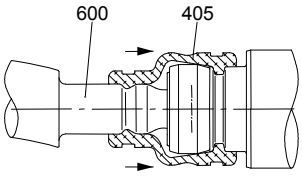

- Moisten the surface of the coupling rod (400)/ interior of the universal joint sleeve (405) with joint grease (maintenance, Chapter 7.0).
- Slide on the universal joint sleeve (405).

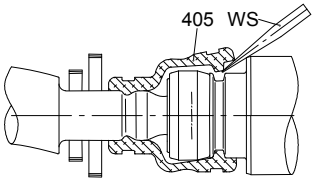

Vent the inside area of the joint.
Use suitable tool (WS).

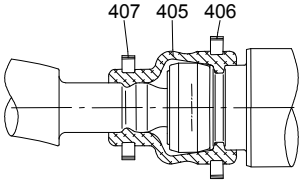

Assemble holding band
Holding band assembly (Chapter 9._).

Holding Band (HBD) - Assembly

Tools required for the re-assembly, see document OM.SPT.01.

- Prepare holding band

  Only prefabricated double-band holding bands should be used. The diameter (∅) and in particular the breadth (b) of the holding band is matched to the universal joint sleeve.

- Test holding band

  The bent holding band (HBD) must fit against the holding band loop (SCL), if necessary apply pressure with the tool/pliers (WZ).

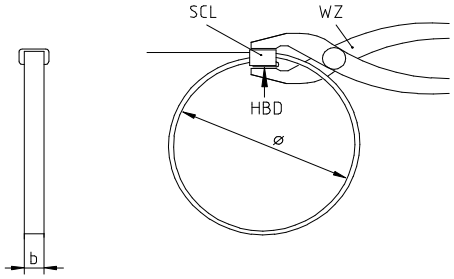

- Assembly of holding band

  Insert holding band in tool (W3/ see Point 9). Hold free end of holding band with control lever (EX), turn crank (KU) until the holding band is strained and fitting against the holding band loop (SCL). Carefully contract holding band until it fits inside the circular groove of the universal joint sleeve.

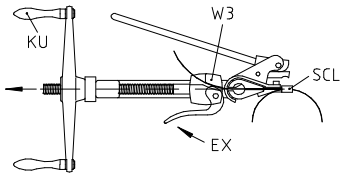

- Correct holding band tension (HBD)

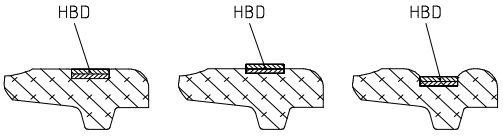

Correct
Holding band (HBD) has slightly con-tracted outer form of univers-al joint sleeve and is stuck in position.

Incorrect
Holding band (HBD) is too slack and liable to slip.

Incorrect
Holding band (HBD) is too tight. Universal joint sleeve will be damaged/sheared off.

- Folding back the holding band (HBD)

  Slowly swivel mounting tool upward by 60°, at the same time slackening the crank (KU) by approximately one half revolution. Swivel cutting lever (SH) forward until the pressure plate fits against the holding band loop (SCL).

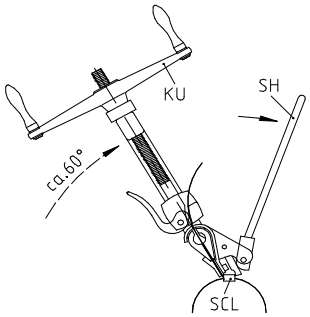

- Shearing off holding band (HBD) made of material AISI 304 and AISI 316

  A blow with the palm of the hand against the cutting lever (SH) causes the end of the holding band behind the loop (SCL) to be folded back and sheared off. If the holding band on the sheared off side is slightly raised as a result, it must be straightened carefully.

  CAUTION

  Never tap or hammer against the loop of the holding band (SCL), otherwise damage to the universal joint sleeve may occur.

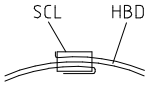

- Shearing off holding band (HBD) made of Hastelloy C

  The high strength of this material makes it impossible to shear off the holding band (HBD) with the cutting lever (SH). Once the end of the holding band is folded back, cut off the holding band (HBD), file off projecting edges and remove burr.

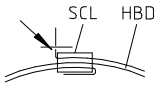

- Check after mounting of holding band

  The holding band must run all the way round the groove of the universal joint sleeve.

  The holding band (HBD) must be bent back and sheared off at the holding band loop (SCL) in such a way that the holding band (HBD) is unable to slip back through the holding band loop (SCL). If this has not been accomplished, then the holding band (HBD) must be replaced by a new one.

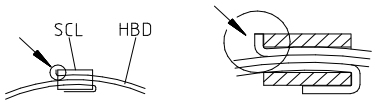

Breakdown											
pump has no suction	pump conveys irregularly	the conveying capacity is not achieved	pressure is not achieved	pump does not start	pump has seized or has stopped conveying	pump operates noisily	motor becomes too warm	the stator wears out early	shaft sealing leaks	seepex progressive cavity pumps will operate trouble-free if they are used in accordance with our data sheet (see item 9) and our operating and maintenance instructions:	
1	2	3	4	5	6	7	8	9	10		Reasons / Remedies
				X			X			a	Adhesion between rotor and stator excessive (as delivered). Lubricate (soft soap, genuine soap) between stator and rotor. Then turn the pump by means of the tool W2 .
X										b	Check rotational direction of the pump per data sheet and nameplate. In case of wrong direction, change wiring of motor.
X	X	X			X	X				c	Suction pipe or shaft sealing leak. Eliminate the leakage.
X	X	X				X				d	Suction head too high (item 6.5.3.1). Check suction head with vacuum gauge. Increase the suction pipe diameter and fit larger filters. Open the suction valve fully.
X	X	X								e	Viscosity of the liquid too high. Check and accommodate per data sheet.
		X		X			X			f	Wrong pump speed. Correct pump speed per data sheet.
	X	X								g	Avoid inclusions of air in the conveying liquid.
		X		X	X		X	X		h	Pressure head too high (point 6.5.3.2). Check pressure head with manometer. Reduce the pressure head by increasing the pressure pipe diameter or by shortening the pressure pipe.
X	X	X			X			X		i	Pump runs partially or completely dry (point 6.5.2). Check flow in the suction chamber. Install dry running protection TSE.
						X	X			j	Check coupling, possibly pump shaft is misaligned to drive. Check whether coupling gear is worn. Realign coupling. The coupling gear has perhaps to be replaced.
X		X								k	Speed too low. Increase the speed when high suction performances are required and when the liquid is very thin.
X	X					X				l	Speed too high. Reduce the speed when pumping products with high viscosities - danger of cavitation.
						X				m	Check the axial play in the coupling rod linkage. Check that the bush has been installed correctly see document OM.PJT.__.
X		X		X	X			X		n	Check for foreign substances in the pump. Dismantle the pump, remove foreign substances and replace worn parts.
X		X	X		X					o	Stator or rotor worn. Dismantle the pump and replace defective parts.
X		X			X	X				p	Joint parts worn. Replace worn parts and fill with special pin joint grease .
X		X			X			X		q	Suction pipework partially or completely blocked. Clean suction pipework.
X				X	X		X	X		r	Temperature of the pumping liquid too high. Excessive expansion of the stator. Check temperature and install rotor with diameter smaller than specified.
X		X		X			X		X	s	Gland packing too strongly tightened or worn. Ease or tighten stuffing box. Replace defective packing rings.
X				X	X			X		t	Solid contents and/or size of solids too large. Reduce pump speed and install perhaps a screen with suitable meshes. Increase fluid share.
X				X				X	X	u	When the pump is non operational the solids settle out and become hard. Clear and flush the pump immediately.
X				X	X			X	X	v	The liquid becomes hard when temperature falls below a certain limit. Heat the pump.
				X	X		X	X		w	Stator swollen and unsuitable for the pumped liquid. Select a suitable stator material. Use perhaps rotor with diameter smaller than specified.
						X			X	x	The bearing in the drive casing of the pump or in the drive engine is defective. Replace bearing.
									X	y	Mechanical seal defective. Check seal faces and O-rings. If necessary replace corresponding defective parts.

9.0
Auxiliary seepex documentation

seepex.com

Inc.

seepex
Inc.
511 Speedway Drive
Enon, OH 45323
Phone (937) 864-7150
Fax (937) 864-7157
sales@seepex.net
www.seepex.com

Data Sheet 822812

seepex			
date	05/12/09	**commission no.**	822812
customer	John Meunier.		
seepex job no.	2109552	**item/denomination**	5357/0506 item 3
project	PO # 015382		
1 of	**seepex progressive cavity pump type BW 10 / A4-A7-A7-F0-GA-X X=02R, 0802**		

conveying product C/289/CH

denomination	poly aluminum silicate sulfate		
rate of solids	no advice	**viscosity**	no advice
size of solids	no advice	**pH-value**	assumed neutral
density	no advice	**temperature**	32 to 113°F
composition	no advise		
remarks			

performance data	**nom.**	**min**	**max**	
conveying capacity	5000	-	-	**L/h**
pump speed	541	-	-	**rpm**
press in press. branch	2	-	-	**bar**
press in suct. branch	assumed flooded			

differential pressure	2	**bar**	**operating torque**	18	**lb. ft.**
required drive power	.96	**Hp**	**starting torque**	12	**lb. ft.**
remarks					

technical pump data

range	BW	**kind of install.**	horizontal
size	10	**direction of rot.**	clockwise
pressure stage	0	**pos. of branch**	1

component	**material**	**design/option**
suction casing	1.4308 / AISI 304	
suction connection		2” NPT thread
pressure branch	1.4308 / AISI 304	
pressure connection		2” NPT thread
joint	standard	standard
joint seal	NBR Perbunan	standard
joint grease	30321	standard
rotor	1.4571 / AISI 316Ti	standard
stator	NBR Perbunan	standard
seal casing	1.4308 / AISI 304	Single Acting Mechanical Seal
seal		Burgmann MG1-G60-055-Q1Q1-VGG
plug-in shaft	1.4571 / AISI 316Ti	drilled ϕ28x55
special designs		

Data Sheet 822812

general operating data

kind of operation	24 hr. /day operation
site of installation	indoor dry atmosphere
remarks	

drive

type	No Gear, Direct connected AC motor		
make		**ratio**	**i=1.0**
model			**nom./ min- max**
mounting position	IEC 132 – B14	**output speed**	1160 / - **rpm**
flange dia	200 mm	**motor speed**	1160 / - **rpm**
output shaft	716/0100-007A4	**frequency**	60 / - **Hz**
special			

electric motor

manufacturer	Baldor	**voltage**	3 X **575** VAC
nominal power	5 Hp	**rated frequency**	60 Hz.
mounting position	B3/B14	**protection**	TEFC
starting	Direct on freq. inverter	**thermal class**	F
special	IEC face, Super E, model number (6 pole motor) Baldor # 37L860Y762G1		

painting

execution	standard
color	RAL 5013 (blue)
remarks	

packing

packing type	Skid
marking	2109552

documentation

dimensional drawing no.	86958	**operating manual**	1 copy English
sectional drawing no.	106-003_2		
shaft sealing sect. View	106-0GB/0100-0-080_4		
remarks			

additional accessories / special designs / remarks

Copyright: This drawing is our property and patented for us according to the law of copyright and associated rights !
Urheberrechtschutz: Diese Zeichnung ist unser Eigentum und uns nach dem Gesetz über Urheberrechtschutz und verwandte Schutzrechte geschützt !

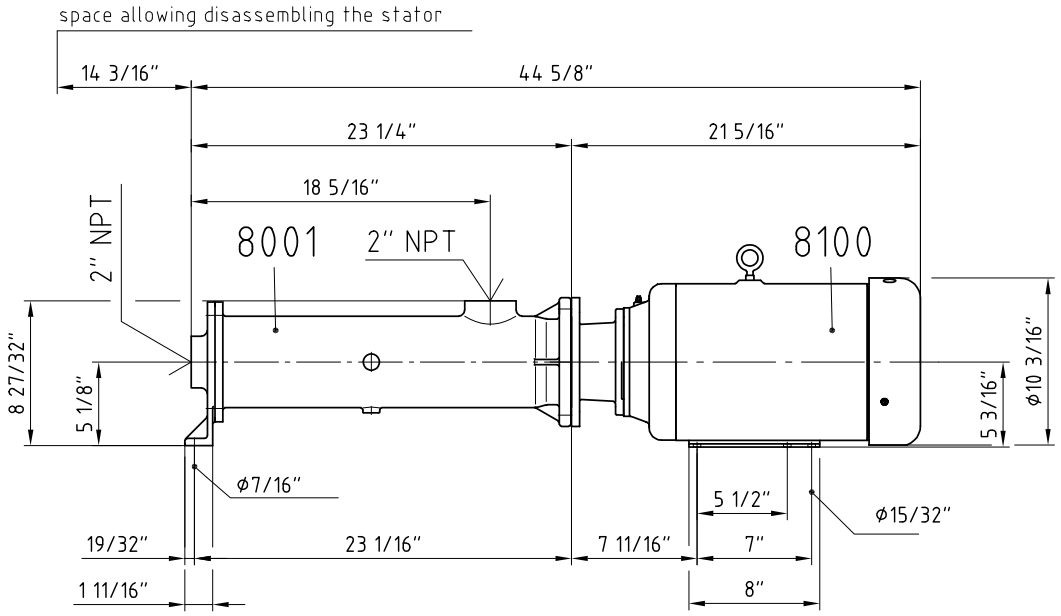

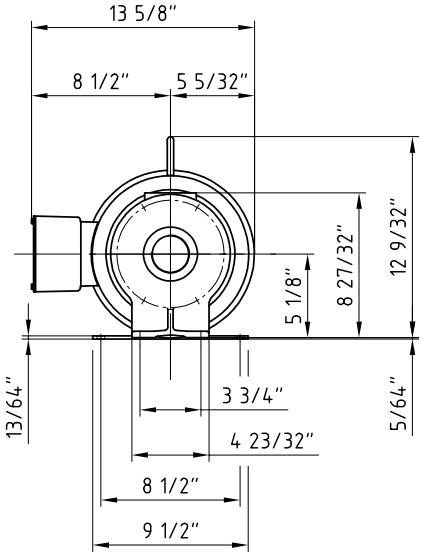

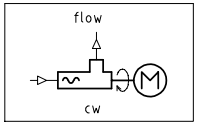

Stück Quant.	Bezeichnung Denomination	Pos. Item	Werkstoff Material	Bemerkung Note	Gewicht / kg Weight / kg
1	motor : Baldor IEC 132 5Hp B14	8100			
1	pump: BW 10	8001			34

seepex.com

seepex, Inc.
511 Speedway Drive
Enon, OH 45323
www.seepex.com

	Name/Name	Tag/Day	Maßstab/Scale	Gewicht/Weight	Bezeichnung/Denomination
2007 Bearbeitet Drawn	sbe	03.09.	◎▱ 1:10		Maßzeichnung dimensional drawing
Geprüft Checked	goe	03.09.	EDV-Nr./EDP-No. 86958.dwg		Zeichnungs-Nr./Drawing-no. 106-C44/0100-0-002A4

Maßänderungen vorbehalten / changes of dimensions reserved

Characteristic Curves
Size
BW 10

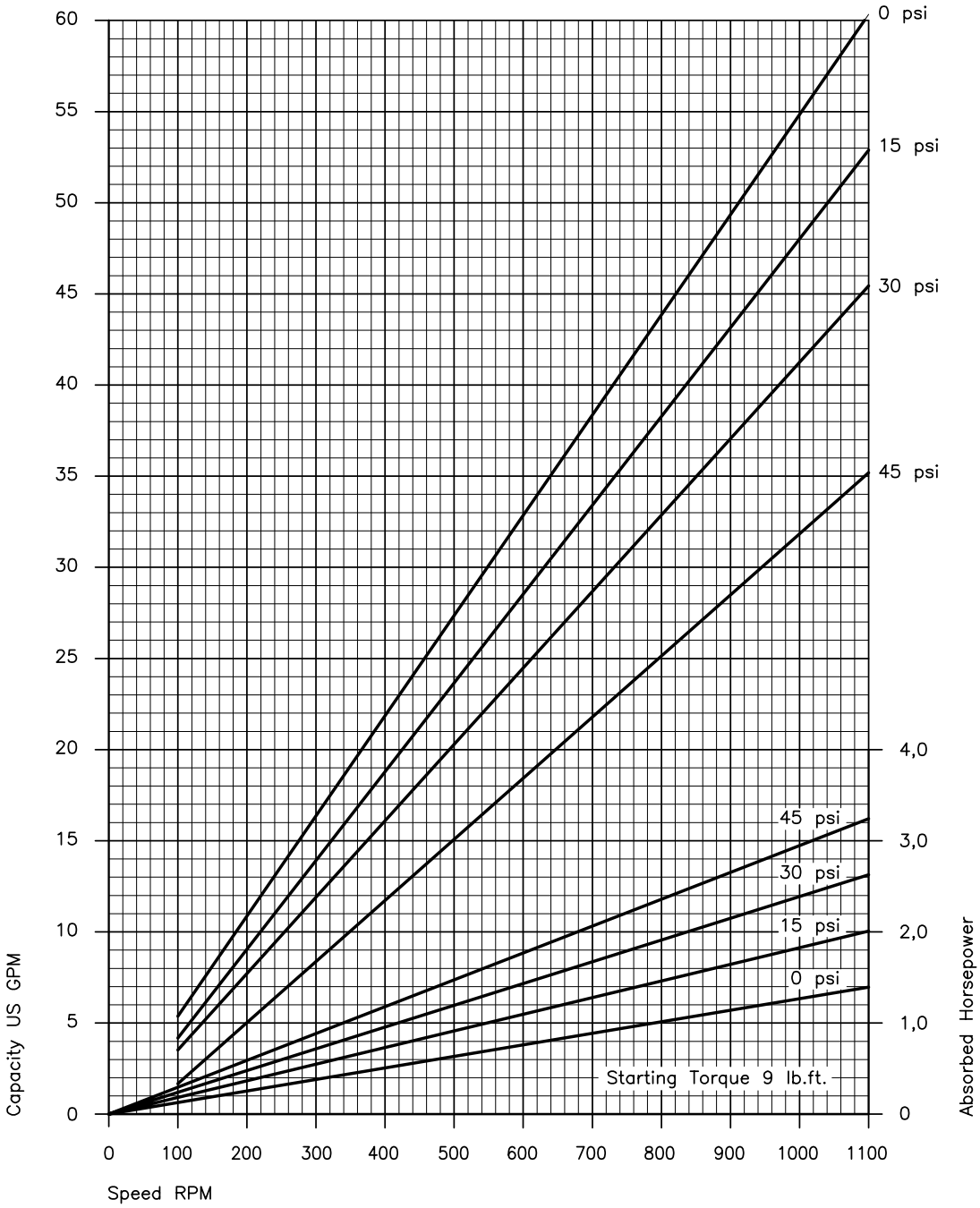

Values based upon water 68°F

CHA.BW10/5–6L A 05.06us

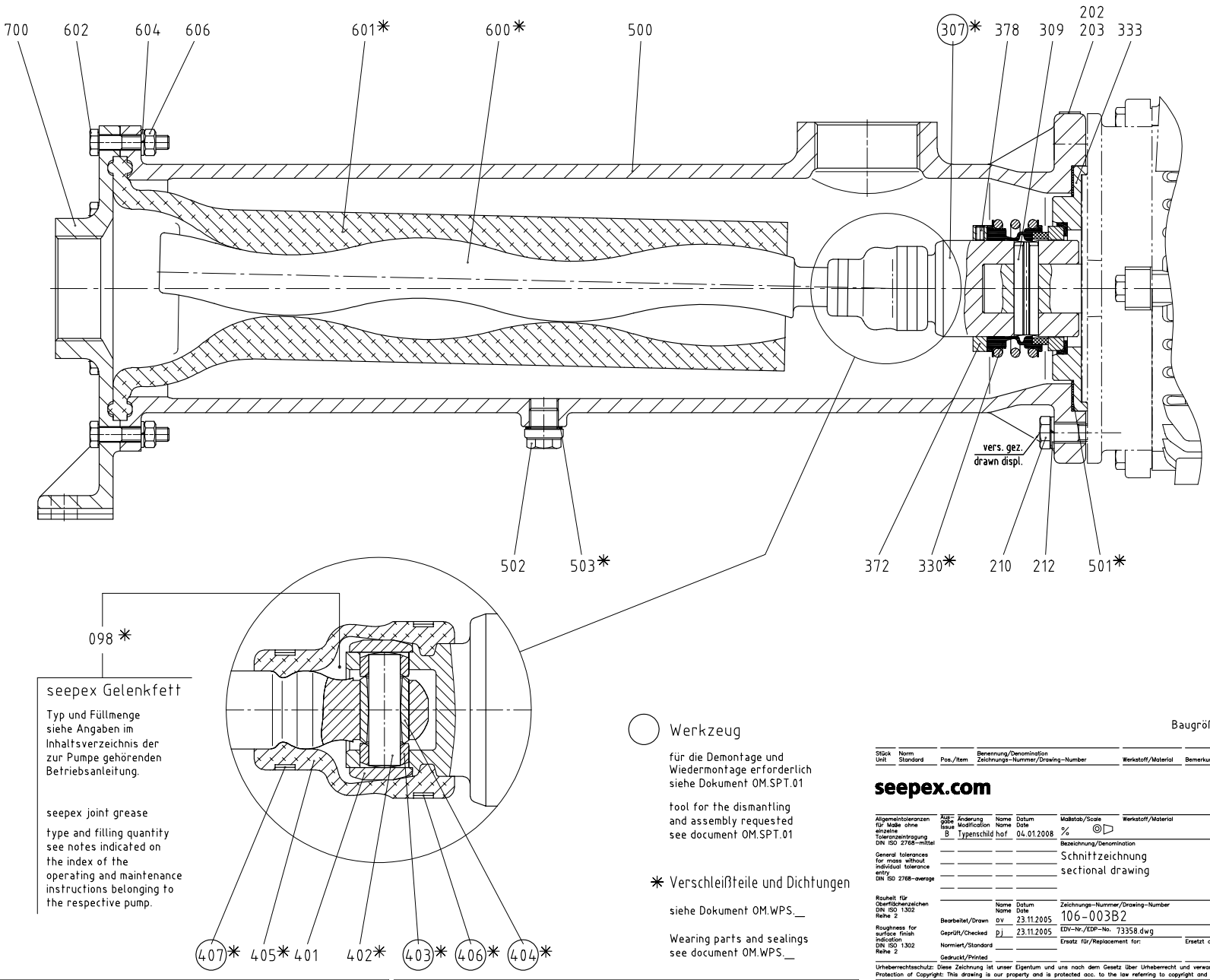

seepex Gelenkfett

Typ und Füllmenge
siehe Angaben im
Inhaltsverzeichnis der
zur Pumpe gehörenden
Betriebsanleitung.

seepex joint grease

type and filling quantity
see notes indicated on
the index of the
operating and maintenance
instructions belonging to
the respective pump.

Werkzeug

für die Demontage und
Wiedermontage erforderlich
siehe Dokument OM.SPT.01

tool for the dismantling
and assembly requested
see document OM.SPT.01

* Verschleißteile und Dichtungen

siehe Dokument OM.WPS.__

Wearing parts and sealings
see document OM.WPS.__

Baugröße / size : BW10

Stück Unit	Norm Standard	Pos./Item	Benennung/Denomination Zeichnungs-Nummer/Drawing-Number	Werkstoff/Material	Bemerkung/Remark	Gewicht Weight kg

seepex.com

Ausgabe Issue	Änderung Modification	Name Name	Datum Date
B	Typenschild	hof	04.01.2008

Maßstab/Scale: %

Werkstoff/Material

Gewicht/Weight

Bezeichnung/Denomination: Schnittzeichnung / sectional drawing

	Name Name	Datum Date
Bearbeitet/Drawn	ov	23.11.2005
Geprüft/Checked	pj	23.11.2005
Normiert/Standard		
Gedruckt/Printed		

Zeichnungs-Nummer/Drawing-Number: 106-003B2

EDV-Nr./EDP-No. 73358.dwg

Ersatz für/Replacement for:

Ersetzt durch/Replacement by:

Allgemeintoleranzen für Maße ohne einzelne Toleranzeintragung DIN ISO 2768-mittel

General tolerances for mass without individual tolerance entry DIN ISO 2768-average

Rauheit für Oberflächenzeichen DIN ISO 1302 Reihe 2

Roughness for surface finish indication DIN ISO 1302 Reihe 2

Urheberrechtsschutz: Diese Zeichnung ist unser Eigentum und uns nach dem Gesetz über Urheberrecht und verwandte Schutzrechte geschützt.
Protection of Copyright: This drawing is our property and is protected acc. to the law referring to copyright and related protective laws.

Stückliste
Parts List
Liste des pièces

Stck.	Pos.	DE	EN	FR
		Baureihe BW	**range BW**	**série BW**
		Schnittzeichnung Nr. 106-003_2	**sectional drawing No. 106-003_2**	**plan no. 106-003_2**
Stck.	**Pos.**	**Benennung Stck. / Pos.**	**denomination Qty. / item**	**désignation Qté. / Poste**
2	202	Halbrundnägel	round head pins	rivet
1	203	Typenschild	type plate	plaque signalique
4	210	6kt-Schraube	hexagon bolt	vis
4	212	Federring	spring washer	rondelle frein
1	307	Steckwelle	plug-in shaft	arbre à broche
1	309	Spannstift	spring pin	goupille fendue
1	330	Gleitringdichtung	mechanical seal	garniture mécanique
1	333	GLRD-Aufnahme	mechanical seal retainer	logement de la garniture mécanique
1	372	Stellring	set collar	anneau ajustable
3	378	Gewindestift	set screw	vis sans tête
1	401	Gelenkhülse	retaining sleeve	douille d'articulation
1	402	Kuppelstangenbolzen	coupling rod pin	axe d´articulation
2	403	Führungsbuchse	guide bushing	douille de guidage
1	404	Kuppelstangenbuchse	coupling rod bushing	chemise d´axe
1	405	Manschette	universal joint sleeve	manchette
1	406	Halteband	holding band	collier de serrage
1	407	Halteband	holding band	collier de serrage
1	500	Druckgehäuse	pressure casing	carter de refoulement
1	501	Gehäusedichtung	casing gasket	étanchéité du carter de refoulement
1	502	Verschlussschraube	casing gasket	étanchéité du carter d'aspiration
1	503	Dichtring	screwed plug	bouchon de vidange
1	600	Rotor	rotor	rotor
1	601	Stator	stator	stator
4	602	6kt-Schraube	hexagon bolt	vis
4	604	Federring	spring washer	rondelle frein
4	606	6kt-Mutter	hexagon nut	écrou
1	700	Saugstutzen	suction branch	bride d´aspiration
	098	seepex Gelenkfett Typ und Füllmenge: Betriebs- und Wartungsanleitung entnehmen	seepex joint grease type and filling quantity: see Operating and Maintenance Instruction	seepex graisse d' articulations sommaire pour type et quantité: voir Instructions de service et d'entretien
		Verschleißteile und Dichtungen: Betriebs- und Wartungsanleitung entnehmen	Wear parts and sealings: see Operating and Maintenance Instruction	pièces d'usure et étanchéités: voir Instructions de service et d'entretien
		Werkzeuge: Betriebs- und Wartungsanleitung entnehmen	Tools: see Operating and Maintenance Instruction	Outils: voir Instructions de service et d'entretien

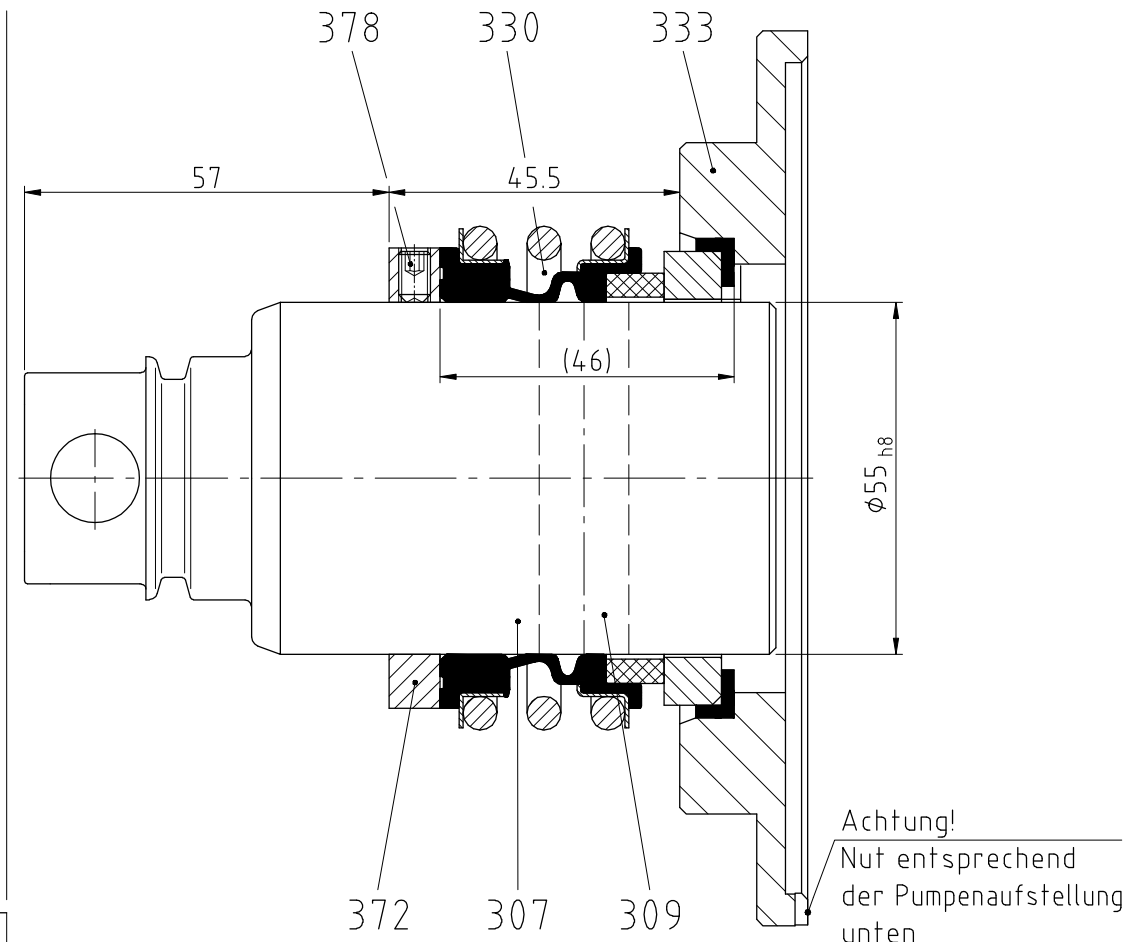

Stück Unit	Norm Standard	Pos./Item	Benennung/Denomination Zeichnungs-Nummer/Drawing-Number	Werkstoff/Material	Bemerkung/Remark	Gewicht Weight kg
3		378	Gewindestift / set screw		M5 x 8	
1		372	Stellring / set collar 062-372/0100-0-001_4			
1		333	GLRD-Aufnahme / mechanical seal retainer 106-333/0100-0-001_3			
1		330	GLRD / mechanical seal MG1-ϕ55-G60		Fabrikat / make : Burgmann	
1		309	Spannstift / spring pin		ϕ14x52-A	
1		307	Steckwelle / plug-in shaft 106-307/0100-0-001_3			

seepex.com

Allgemeintoleranzen für Maße ohne einzelne Toleranzeintragung DIN ISO 2768-mittel General tolerances for mass without individual tolerance entry DIN ISO 2768-average	Ausgabe Issue	Änderung Modification	Name Name	Datum Date	Maßstab/Scale 1:1	Werkstoff/Material	Gewicht/Weight
					Bezeichnung/Denomination GLRD-Schnittzeichnung mechanical seal sectional drawing Burgmann MG1-ϕ55-G60 BW10		
Rauheit für Oberflächenzeichen DIN ISO 1302 Reihe 2 Roughness for surface finish indication DIN ISO 1302 Reihe 2			Name Name	Datum Date	Zeichnungs-Nummer/Drawing-Number 106-0GB/0100-0-080A4		
		Bearbeitet/Drawn	tea	18.05.2009			
		Geprüft/Checked	hgg	18.05.2009	EDV-Nr./EDP-No. 100118.dwg		
		Normiert/Standard			Ersatz für/Replacement for:	Ersetzt durch/Replacement by:	
		Gedruckt/Printed					

Urheberrechtsschutz: Diese Zeichnung ist unser Eigentum und uns nach dem Gesetz über Urheberrecht und verwandte Schutzrechte geschützt.
Protection of Copyright: This drawing is our property and is protected acc. to the law referring to copyright and related protective laws.

7.0
Disassembly / Reassembly

7.1
Disassembly

- Remove flushing connections at shaft seal housing (SEA).
- Lift / displace splash ring (310) and eject plug-in shaft pin (309) horizontally.
- Withdraw rotating unit (RTE) together with shaft seal parallel from output shaft of drive and avoid chocking.
- Clean plug-in shaft (307) and remove burrs etc., which may damage sealing elements. Moisten plug-in shaft (307) with slip additive (diluted fluid soap).
- Loosen axial safety device of mechanical seal (330 or 372) and withdraw mechanical seal (330) from plug-in shaft (307).
- Remove mechanical seal housing (333) from lantern (200).
- Press counter-ring of mechanical seal with o-ring out of mechanical seal housing (333).

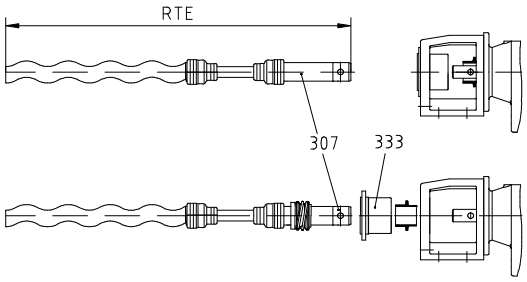

7.2
Reassembly

ATTENTION

Mechanical seals are precision parts of high quality. Therefore, the installation must be effected with care. Gentle handling and extreme neatness are essential.

- Clean mechanical seal housing (333)
- Evenly press counter-ring with o-ring into mechanical seal housing (333). To facilitate assembly, the o-ring should be moistened with a lubricant (diluted fluid soap).

ATTENTION

- Oil or grease must not be used to facilitate assembly.
- Install mechanical seal housing (333) to lantern (200) and onsure correct position of flushing connections.
- Remove plug-in shaft (307), burrs and roughness and clean the unit.
- Check / adjust set dimension of mechanical seal on plug-in shaft (307). Moisten plug-in shaft (307) and elastomer parts of mechanical seal with lubricant (diluted fluid soap).
- Slip mechanical seal onto plug-in shaft (307) as far as set ring.
- Lubricate drive shaft (ANT) with antiseize graphite petroleum.
- Moisten splash ring (310) and plug-in shaft (307) with pin joint grease, (for type, please see index) and slip splash ring (310) onto output shaft of drive. Note installating position of splash ring and refer to description on splash ring.
- Move rotating unit (RTE) through mechanical seal housing (333) and splash ring (310) and slip splash ring (310) onto output shaft of drive (ANT). Push in plug-in shaft pin (309) in horizontal position.
- Position of splash ring:
  Collar of splash ring shall be fitted in a distance of about 0.5 mm to lantern (200).

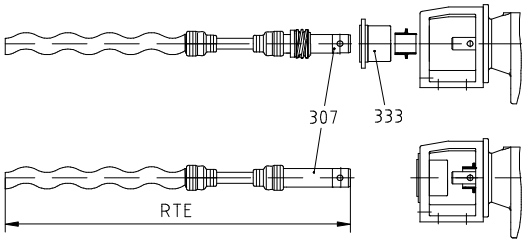

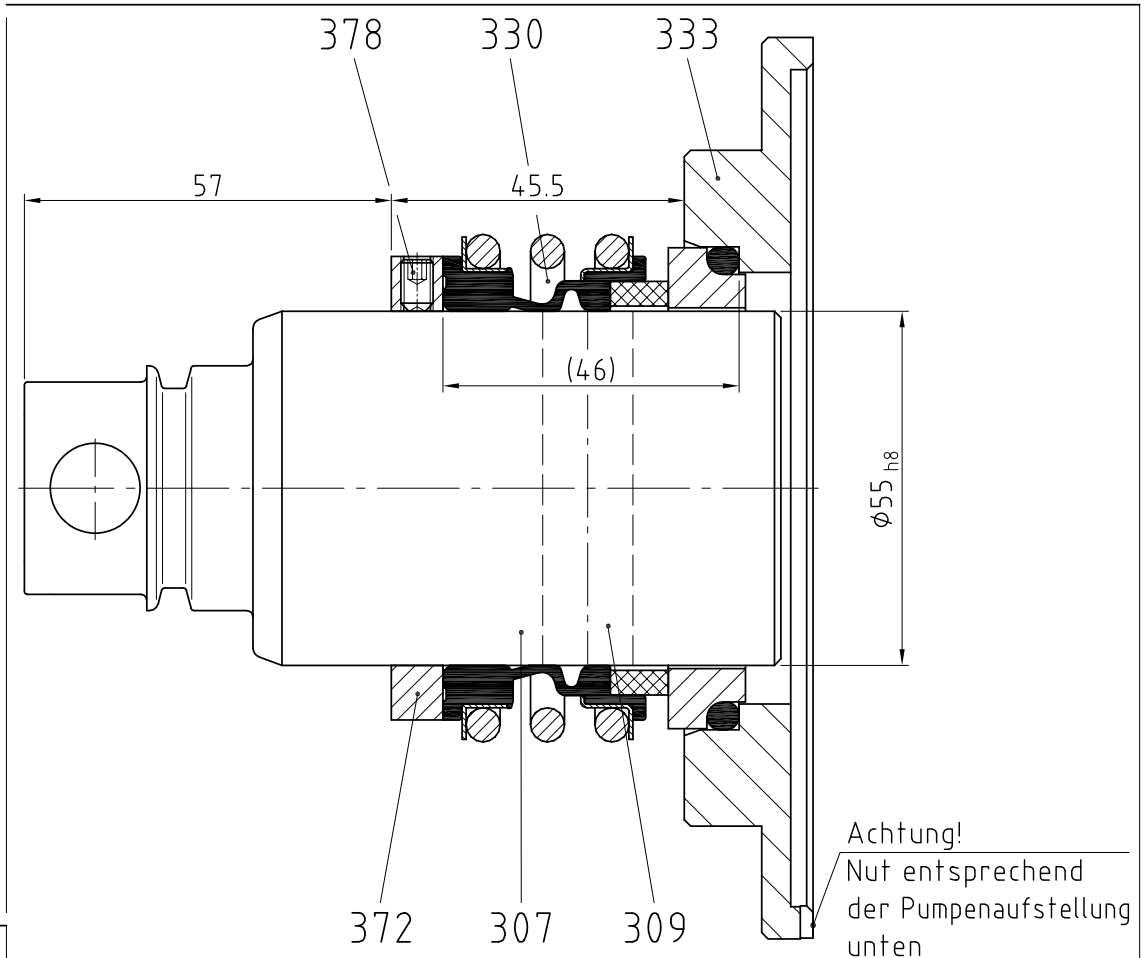

Stück Unit	Norm Standard	Pos./Item	Benennung/Denomination Zeichnungs–Nummer/Drawing–Number	Werkstoff/Material	Bemerkung/Remark	Gewicht Weight kg
3		378	Gewindestift / set screw		M5 x 8	
1		372	Stellring / set collar 062-372/0100-0-001_4			
1		333	GLRD-Aufnahme / mechanical seal retainer 106-333/0100-0-001_3			
1		330	GLRD / mechanical seal GA-ϕ55		Fabrikat / make : seepex	
1		309	Spannstift / spring pin		ϕ14x52-A	
1		307	Steckwelle / plug-in shaft 106-307/0100-0-001_3			

seepex.com

Allgemeintoleranzen für Maße ohne einzelne Toleranzeintragung DIN ISO 2768–mittel

General tolerances for mass without individual tolerance entry DIN ISO 2768–average

Rauheit für Oberflächenzeichen DIN ISO 1302 Reihe 2

Roughness for surface finish indication DIN ISO 1302 Reihe 2

Ausgabe Issue	Änderung Modification	Name Name	Datum Date
B	STW gekürzt	ov	20.11.2006

	Name Name	Datum Date
Bearbeitet/Drawn	ov	25.01.2006
Geprüft/Checked	hue	25.01.2006
Normiert/Standard		
Gedruckt/Printed		

Maßstab/Scale: 1:1

Werkstoff/Material:

Gewicht/Weight:

Bezeichnung/Denomination

GLRD-Schnittzeichnung
mechanical seal sectional drawing

seepex GA-ϕ55

BW10

Zeichnungs–Nummer/Drawing–Number: 106-0GA/0100-0-001B4

EDV–Nr./EDP–No. 74502.DWG

Ersatz für/Replacement for:

Ersetzt durch/Replacement by:

Urheberrechtsschutz: Diese Zeichnung ist unser Eigentum und uns nach dem Gesetz über Urheberrecht und verwandte Schutzrechte geschützt.
Protection of Copyright: This drawing is our property and is protected acc. to the law referring to copyright and related protective laws.

Range: **BW**
Sizes: **5 to 10**

To avoid the expenses incurred by lengthy stop periods of the pump, seepex recommend the acquisition of a set of wearing parts and a set of gaskets.
The table below shows the contents of these sets.

Part designation	small set of wearing parts	big set of wearing parts	set of gaskets	Item number acc. to sectional drawing of pump and parts list
	Number			
Rotor		1		600
Stator	1	1		601
Universal joint sleeve		1		405
Coupling rod pin		1		402
Holding band, small 1) 2)		1		407
Holding band, big 1)		1		406
Casing gasket			1	501
Sealing ring			1	503
Mechanical seal			1	330
Flushing ring			1	310
Plug-in shaft 1)		-		307
Special joint grease				098 1 cart. 300 gr (c. 315cm³) grease quantity per pin joint, see tech. specifications 1. Kart.
Tool				Essential for assembly, see document OM.SPT.01

1) see tools document OM.SPT.01
2) only BW 10

	Allgemeine normierte Werkzeuge / Standardized tools						
Werkzeug Nr. tool No.	W1	W2	W5	W6	W9	W11	W13
zur Montage von: tool for mounting of:	Packung packing	Stator stator	Gelenk joint	Lager bearing	allgemein general	Mutter für Teflon-manschette nut for teflon universal joint sleeve	Stator Stator 1)
Benennung: denomination:	Packungszieher packing lever	Ketten-Rohrzange + Ersatzkette chain pipe wrench +replacement chain	Durchschlag drift	Bolzen pin	Montierhebel mounting lever	Bandschlüssel strap wrench	Bandschlüssel strap wrench
Baugröße **size**	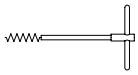					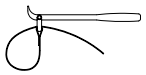	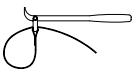
0005-24, 0015-24 003-12/-24 006-12/-24 012-12/-24 025-6L 025-12T, 05-6LT	PKZ XX 000 0000 0 X35M0	**Siehe W 13** **see W 13**					WKZ BDS 027 0 430
025-12, 025-24 05-12, 1-6L	PKZ XX 000 0000 0 X0FQ0	KRZ XX Z55 0250 0 00000 KEZ XX Z55 0250 0 00000	DHS XX 020 0000 0 A2620		2 Stück 2 pieces MHL XX SA 610		
05-24, 01-48, 025-48, 1-12, 2-6L 1-24, 1-12V 2-12, 5-6L			DHS XX 050 0000 0 A2620	BLZ XX 020 0008 0 A2619		WKZ BDS 027 0 430	
2-24, 2-12V 5-12, 8-12T 10-6L, 15-6LT 05-48	PKZ XX 000 0000 0 XOHV0		DHS XX 050 0000 0 A2620	BLZ XX 020 0010 0 A2619			
5-24, 5-12V 10-12, 17-6L, 30-6LT, 15-12T, 10-24R, 1-48		KRZ XX Z55 0300 6 00000 KEZ XX Z55 0300 6 00000	DHS XX 100 0000 0 A2620	BLZ XX 020 0010 0 A2619			
14-12, 26-6L, 40-6LT 10-24, 10-12V 17-12, 35-6L, 26-12, 52-6L, 55-6LT, 75-6LT 30-12T, 10-24, 17-24R 2-48	PKZ XX 000 0000 0 XA01A		DHS XX 120 0000 0 A2620	BLZ XX 025 0012 0 A2619			
17-24, 17-12V 35-12, 52-12, 70-6L, 100-6L, 110-6LT, 55-12T 34-24R 5-48		KRZ XX Z55 0300 8 00000 KEZ XX Z55 0300 8 00000	DHS XX 160 0200 0 A2620	BLZ XX 030 0012 0 A2619			
35-24, 35-12V 70-12, 130-6L, 200-6L, 110-12T 70-24R, 10-48 200-6L			DHS XX 200 0200 0 A2620	BLZ XX 035 0012 0 A2619			
130-12, 202-6L, 300-6L, 200-12T 70-18, 100-18, 130-18 70-24, 70-12V 130-24R 17-48		KRZ XX Z55 0301 2 00000 KEZ XX Z55 0301 2 00000	DHS XX 240 0250 0 A2620	BLZ XX 040 0015 0 A2619			
240-12, 300-12T 130-18, 130-24 35-48/70-48							

1) Gilt nur für Pumpen in Edelstahl Ausführung / only valid for pumps in special steel design

	Empfohlene seepex Werkzeuge Aufgrund der Ausführung für bestimmte Montagen empfohlen, durch allgemeine normierte Werkzeuge bedingt ersetzbar. **Recommended seepex tools** Due to the design recommended for certain repairs, these tools partially replace the standardized tools.							
Werkzeug Nr. tool No.	W4	W7	W8	W10	W12	W14	W15	W16
zur Montage von: tool for mounting of:	Gelenk joint	Lager bearing	Schmier-nippel lubrication nipple	Steckwelle plug-in shaft	Teflon-manschette teflon universal joint sleeve	Kuppelstangen-buchsen coupling rod bushing	Manschette universal joint sleeve	Lippendichtung lip seal
Benennung: denomination:	Montagedorn assembly mandrel	Montage-hülse mounting sleeve	Einschlag-hülse drive-in sleeve	Demontage-werkzeug dismantling tool	Montage-werkzeug mounting tool	Presswerkzeug pressing tool	Montageplatte mounting plate	Montagehülse Mounting sleeve
Baugröße **size**	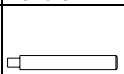			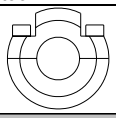		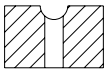	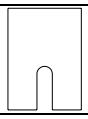	
0005-24, 0015-24 003-12/-24 006-12/-24 012-12/-24 025-6L 025-12T, 05-6LT	MTD L2 060 M120 0 XXXXX 2)						MTP A7 703 M500 0 002XX	MTH B7 703 M120 0 W0260
025-12, 025-24 05-12, 1-6L	MTD L2 060 M500 0 XXXXX	MTH M8 060 M500 0 XXXXX		AZV B2 262 M500 0 XXXXX			MTP A7 703 M500 0 002XX	
05-24, 01-48, 025-48, 1-12, 2-6L 1-24, 1-12V 2-12, 5-6L	MTD L2 060 0020 0 XXXXX	MTH M8 060 0020 0 XXXXX		AZV B2 262 0020 0 XXXXX	MMT M8 060 0020 0 XXXXX	PWZ C6 060 0020 0 XXXXX		
2-24, 2-12V 5-12, 8-12T 10-6L, 15-6LT 05-48	MTD L2 060 0050 0 XXXXX	MTH M8 060 0050 0 XXXXX		AZV B2 262 0050 0 XXXXX	MMT M8 060 0050 0 XXXXX	PWZ C6 060 0050 0 XXXXX		
5-24, 5-12V 10-12, 17-6L, 30-6LT, 15-12T, 10-24R, 1-48	MTD L2 060 0100 0 XXXXX	MTH M8 060 0100 0 XXXXX		AZV B2 262 0100 0 XXXXX	MMT M8 060 0100 0 XXXXX	PWZ C6 060 0100 0 XXXXX		
14-12, 26-6L, 40-6LT	MTD L2 060 0140 0 XXXXX	MTH M8 060 0140 0 XXXXX		AZV B2 262 0170 0 XF5XX		PWZ C6 060 1400 0 XXXXX		
10-24, 10-12V 17-12, 35-6L, 26-12, 52-6L, 55-6LT, 75-6LT 30-12T, 10-24, 17-24R 2-48	MTD L2 060 0170 0 XXXXX	MTH M8 060 0170 0 XXXXX	ESH N0 000 0000 0 A01A4	AZV B2 262 0170 0 XG0XX	MMT M8 060 0170 0 XXXXX	PWZ C6 060 0170 0 XXXXX		
17-24, 17-12V 35-12, 52-12, 70-6L, 100-6L, 110-6LT, 55-12T 34-24R, 5-48	MTD L2 060 0350 0 XXXXX	MTH M8 060 0350 0 XXXXX		AZV B2 262 0350 0 XH0XX		PWZ C6 060 0350 0 XXXXX		
35-24, 35-12V 70-12, 130-6L, 200-6L, 110-12T 70-24R, 10-48, 200-6L	MTD L2 060 0700 0 XXXXX	MTH M8 060 0700 0 XXXXX		AZV L7 703 0700 0 XK0XX		PWZ C6 060 0700 0 XXXXX		
130-12, 202-6L, 300-6L, 200-12T 70-18, 100-18, 130-18 70-24, 70-12V 130-24R 17-48	MTD L2 060 1300 0 XXXXX	MTH M8 060 1300 0 XXXXX				PWZ C6 060 1300 0 XXXXX		
240-12, 300-12T 130-18, 130-24 35-48/70-48						PWZ C6 060 2400 0 XXXXX		

2) entfällt ab Pumpen-Herstellungsdatum 01.04.93 / can be omitted as from 01.04.93 (pump manufacturing date)

	Empfohlene seepex Werkzeuge Aufgrund der Ausführung für bestimmte Montagen empfohlen, durch allgemeine normierte Werkzeuge bedingt ersetzbar. **Recommended seepex tools** Due to the design recommended for certain repairs, these tools partially replace the standardized tools.								**Spezial-werkzeuge** **Special tools**
Werkzeug Nr. tool No.	W17	W18	W19	W20	W22	W23	W24	W25	W3
zur Montage von: tool for mounting of:	Lippendichtung lip seal	Gleitlager-buchse plain bearing bush	Wellen-schonhülse shaft securing sleeve	Cartridge-Einheit cartridge-unit	Wellen-dichtring lip seal	Wellen-dichtring lip seal	Antriebs-gehäuse drive casing	Steckwellen-bolzen plug-in shaft pin	Halteband holding band
Benennung: denomination:	Schlagzylinder Zentrierdorn Montagebolzen cylinder centering mandrel mounting pin	Montagedorn mounting mandrel	Montagehülse mounting sleeve	Aufnahme intake	Montage-werkzeug mounting tool	Montage-werkzeug mounting tool	Aufhänge-vorrichtung suspension device	Montagedorn mounting mandrel	Montage-werkzeug mounting tool
Baugröße **size**	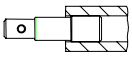	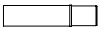	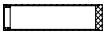						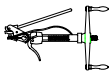
0005-24, 0015-24 003-12/-24 006-12/-24 012-12/-24 025-6L, 025-12T, 05-6LT	ZSH B7 703 M120 0 W0171 ZDR B7 703 M120 0 W0172 MBL A7 703 M120 0 W0173								MHB WH A00 1WHV 0 01000
025-12, 025-24 05-12, 1-6L									
05-24, 01-48, 025-48, 1-12, 2-6L 1-24, 1-12V 2-12, 5-6L								MTD L8 703 0050 0 SXX0J	
2-24, 2-12V									
5-12, 8-12T 10-6L, 15-6LT 05-48									
5-24, 5-12V									
10-12, 17-6L, 30-6LT, 15-12T, 10-24R, 1-48								MTD L8 703 0170 0 SXX0J	
14-12, 26-6L, 40-6LT									
10-24, 10-12V			SPT B4 703 0170 0 01000	SPT M8 703 0170 0 00900	SPT B4 703 0170 0 01100				
17-12, 35-6L, 26-12, 52-6L, 55-6LT, 75-6LT 30-12T, 10-24, 17-24R, 2-48									
17-24, 17-12V									
35-12, 52-12, 70-6L, 100-6L, 110-6LT, 55-12T 34-24R, 5-48								MTD L8 703 0350 0 SXX0J	
35-24, 35-12V									
70-12, 130-6L, 200-6L, 110-12T 70-24R, 10-48, 200-6L		SPT M8 703 1300 0 01000	SPT M8 703 1300 0 01100	SPT M8 703 1300 0 00900	SPT B4 703 1300 0 0A200	SPT B4 703 1300 0 0A300		MTD L8 703 0700 0 SXX0J	
130-12, 202-6L, 300-6L, 200-12T 70-18, 100-18, 130-18 70-24, 70-12V 130-24R 17-48								MTD L8 703 1300 0 SXX0J	
240-12, 300-12T 130-18, 130-24 35-48/70-48							SPT M8 703 2400 0 01400		

BIG Baugrößen / BIG sizes

	Allgemeine normierte Werkzeuge / Standardized tools				
Werkzeug Nr. tool No.	W1	W2	W5	W6	W9
zur Montage von: tool for mounting of:	Packung packing	Stator stator	Gelenk joint	Lager bearing	allgemein general
Benennung: denomination:	Packungszieher packing lever	Ketten-Rohrzange + Ersatzkette chain pipe wrench +replacement chain	Durchschlag drift	Bolzen pin	Montierhebel mounting lever
Baugröße **size**	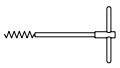				
240-6C	PKZ XX 000 0000 0 XA01A	KRZ XX Z55 0301 2 00000 KEZ XX Z55 0301 2 00000	DHS XX 240 0250 0 A2620	BLZ XX 040 0015 0 A2619	2 Stück 2 pieces MHL XX SA 610
300-3TR					
400-3TN					
500-3LA					
240-9C					
300-9TR					
400-6TN					
400-6TR					
500-6LA					
240-12C					
300-12TR					
240-18L					
400-12TR					
300-18TU					
300-24TV					
300-27TH					
400-18TU					

	Empfohlene seepex Werkzeuge Aufgrund der Ausführung für bestimmte Montagen empfohlen, durch allgemeine normierte Werkzeuge bedingt ersetzbar. **Recommended seepex tools** Due to the design recommended for certain repairs, these tools partially replace the standardized tools.						**Spezialwerkzeuge** **Special tools**
Werkzeug Nr. tool No.	W4	W7	W8	W14	W24	W25	W3
zur Montage von: tool for mounting of:	Gelenk joint	Lager bearing	Schmiernippel lubrication nipple	Kuppelstangen-buchsen coupling rod bushing	Antriebs-gehäuse drive casing	Steckwellen-bolzen plug-in shaft pin	Halteband holding band
Benennung: denomination:	Montagedorn assembly mandrel	Montagehülse mounting sleeve	Einschlaghülse drive-in sleeve	Presswerkzeug pressing tool	Aufhänge-vorrichtung suspension device	Montagedorn mounting mandrel	Montagewerkzeug mounting tool
Baugröße **size**				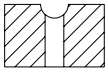	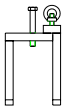		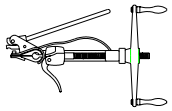
240-6C	MTD L2 060 1300 0 XXXXX	MTH M8 060 1300 0 XXXXX	ESH N0 000 0000 0 A01A4	PWZ C6 060 1300 0 XXXXX		MTD L8 703 1300 0 SXX0J	MHB WH A00 1WHV 0 01000
300-3TR							
400-3TN							
500-3LA							
240-9C				PWZ C6 060 2400 0 XXXXX	SPT M8 703 130B 0 01400		
300-9TR							
400-6TN							
400-6TR							
500-6LA							
240-12C							
240-12L							
300-12TU							
300-12TR							
240-18L					SPT M8 703 2400 0 01400		
400-12TR							
300-18TU							
300-24TV							
300-27TH							
400-18TU							

1 Scope

Size	Period of Storing	Preservation acc. to.
025-12 ... 130-6L	> 3 months ≤ 9 months	Measures for preservation 1
	> 9 months	Measures for preservation 2
130-12 ... 500-6L	> 3 months ≤ 9 months	Measures for preservation 1
	> 9 months	Measures for preservation 2

2 Description

2.1 Measures for preservation 1

2.1.1 Storing of the pump

- in dry and closed rooms
- free from vibration

Particular adjacent influences have to be advised by the customer and have to be checked and released by seepex before storage.

2.1.2 Protection of the stator

change the position of the once per month:

- Remove fan cover on the electric motor.
- Rotate the fan shaft 1/4 turn.

Fan shaft and fan must not be damaged! If necessary remove the fan and protect the shaft against damage during this procedure.

2.1.3 Gear

Note instruction of the manufacturer.

- Follow advice on the gear.

  - Reduce quantity of lubricant to the quantity stipulated for the operation before commissioning!
  - Reinstall vent screw during commissioning.

Belt Variable Speed Drive:

Store the belt separate (relevant standard ISO 2230):

- dry
- constant tempered at 10-15°C (max. 25°C)
- protected against light / stored in darkness (e.g. in a closed case or packed accordingly)

2.1.4 Motor

By the turn of the fan shaft (see point 2.1.2) a protection of the bearing in the motor is obtained at the same time.

2.1.5 Recommissioning



NOTICE

Before starting work read the operating instruction.

- Pay attention to a correct re-assembly of parts dismantled before.

2.2 Measures for preservation 2

In case of the correct storage and under consideration of the preservation measures, a storage of the pump is possible for max. 2 years.

NOTICE

In case of a longer storage period, the dimensions and shore hardness can change.
The function of the pump can be impaired.

➢ Bevor recommissioning Elastomere parts (stator, joint seal, gaskets, ...) have to be checked for crack formation and change of the surface.

2.2.1 Storing of the pump/pump parts

- in dry and closed rooms
- free from vibration

Particular adjacent influences have to be advised by the customer and have to be checked and released by seepex before storage.

2.2.2 Storing of the stator

Store the stator separate (relevant standard ISO 2230):

- dry
- constant tempered at 10-15°C (max. 25°C)
- protected against light / stored in darkness (e.g. in a closed case or packed accordingly)

2.2.3 Gear

Note instruction of the manufacturer.

- Follow advice on the gear.

  - Reduce quantity of lubricant to the quantity stipulated for the operation before commissioning!
  - Reinstall vent screw during commissioning.

Belt Variable Speed Drive:

Store the belt separate (relevant standard ISO 2230):

- dry
- constant tempered at 10-15°C (max. 25°C)
- protected against light / stored in darkness (e.g. in a closed case or packed accordingly)

2.2.4 Motor

Turn the fan shaft once a month to protect the bearing:

- Remove fan cover on the electric motor.
- Rotate the fan shaft 1/4 turn.

Fan shaft and fan must not be damaged! If necessary remove the fan and protect the shaft against damage during this procedure.

2.2.5 Recommissioning



NOTICE

Before starting work read the operating instruction.

- Pay attention to a correct re-assembly of parts dismantled before.

3 Advices and annotations

Guarantee-/Warranty claims cannot be derived from this document.

4 Alteration service

This document is subject to the alteration service of the engineering department (TE) and ist relevant valid issue is released by the quality assurance (QA). All alteration requests are handled and checked by engineering.

10.0
Manufacturer's documents from sub-supplier

Burgmann
INDUSTRIES

OPERATING MANUAL

This document was drawn up observing the EC directives
"Machinery" 98/37/EC, EN ISO 12100-2 and the German Standard VDI 4500



In case of this mechanical seal is operated in **explosion area an appropriate additional operating manual,** following EC directives 94/9/EC (ATEX 95), has to be observed **by all means**! If required this could be ordered at BURGMANN.

BURGMANN MECHANICAL SEAL (M.S.)

Type MG1/dw-00 and versions

applies to all mechanical seals of the same series

dw = specified shaft diameter

These instructions are intended for the assembly, operating and control personnel and should be kept at hand on site.

PLEASE READ this manual carefully and OBSERVE the information contained as to:

- **Safety**
- **Installation**
- **Transport / Storage**
- **Operation**
- **Information about the product**
- **Servicing**

If there are any unclear points please contact BURGMANN by all means!

Table of Contents

Keywords and Symbols 3

GENERAL SAFETY NOTES 4

Instructions for worker's protection 5

TRANSPORT / STORAGE 6

Transport 6
Packing and storage 6

INFORMATION ABOUT THE PRODUCT 8

Manufacturer and country of origin 8
Declaration by the manufacturer 8
Type designation 8
Designated use 8
Operating limits 9
Materials 9
Drawings, diagrams 9
Versions 10
Seat Versions 10
Description and function 11
Required space, connecting dimensions 11
Supply of M.S. 11
Emissions 12

INSTALLATION 13

Assembly utilities 13
Preparation for assembly 13
Assembly / installation 14

OPERATION 16

Instructions for safe operation 16
Instructions for start up 16

SERVICING 17

Maintenance 17
Directives in case of failure 17
After-sales service by BURGMANN 18
Reconditioning (repair) 18
Disassembly / removal 18
Spare parts 19
Required details for enquiries and orders 19
Disposal of the BURGMANN mechanical seal 20
Copyright 20

Keywords and Symbols

Following symbols for particularly important information are used:



"Attention, please pay special attention to these sections of text"

DANGER! Draws attention to a direct hazard that will lead to injury or death of persons

WARNING! Draws attention to the risk that a hazard could lead to serious injury or death of persons

CAUTION! Draws attention to a hazard or unsafe method of working that could lead to personal injury or damage to equipment

ATTENTION! Identifies a potentially dangerous situation. If it is not avoided the product or something in its vicinity could be damaged

IMPORTANT! Identifies tips for use and other particularly useful information.

GENERAL SAFETY NOTES



Any person being involved in assembly, disassembly, start up, operation and maintenance of the BURGMANN Mechanical Seal must have read and understood this Instruction Manual and in particular the safety notes. We recommend the user to have this confirmed.

BURGMANN Mechanical Seals are manufactured on a **high quality level** (quality management EN ISO 9001: 2000) and they keep a **high working reliability**. Yet, if they are **not operated** within their **intended purpose** or handled **inexpertly** by untrained personnel they may cause **risks**.

The machine has to be set up in such a way that seal leakage can be led off and disposed properly and that any personal injury caused by spurting product in the event of a seal failure is avoided.

Any operation mode that affects the **operational safety** of the mechanical seal is not permitted.

Unauthorised modifications or alterations are **not permitted** as they affect the **operational safety** of the mechanical seal.

BURGMANN mechanical seals must be installed, operated, maintained, removed or repaired by **authorised**, **trained and instructed personnel only.**

The **responsibilities** for the respective jobs to be done **have to be determined clearly and observed** in order to prevent unclear competencies from the point of **security**.

Any work to be done on the mechanical seal is **generally** only **permitted** when the seal is **neither operating nor pressurised**.

WARNING! Seals that have been used with **hazardous substances must be properly cleaned** so that there is no possible **danger** to people or to the environment.

Apart from the notes given in this manual the general **regulations for worker's protection and those for prevention of accidents** have to be observed.

Instructions for worker's protection



WARNING! If the **medium to be sealed** and/or the **supply liquid** is subject to the **Hazardous Substances Regulation** (GefStoffV), the **instructions for handling dangerous substances** (safety data sheets to EU Directive 91/155/EEC) and the **accident prevention regulations** have be observed.

Medium to be sealed and/or **supply medium may escape** if the seal **fails**. Injury of persons and environment may be **prevented by the user** providing for splash protection and wearing safety goggles. Care has to be taken by the user for **proper disposal** of the leakage. The user has to control these measures.

The **user** has to **check** what **effects a failure** of the mechanical seal might have and what safety measures have to be taken to prevent **personal** injury or damage to the environment.

TRANSPORT / STORAGE

Transport

If not specified differently by contract the BURGMANN standard packing is used which is suitable for dry transport by truck, train or plane. The warning signs and notes on the packing must be observed.

In addition seaworthy packing may become necessary.

Notes for income inspection:
- Check packaging for visible damages.
- Open packaging carefully. Do not damage or lose parts supplied separately.
- Check if consignment is complete (delivery note). Inform the supplier immediately in writing if parts are damaged or missing.

The mechanical seal has to be protected from damage during transport and storage. The transport case in which the seal is supplied is well suited for this purpose and should be kept for a possible return transport.

ATTENTION! If the machine as well as the mechanical seal installed into the machine are transported together the shaft has to be protected from deflection and shocks.

Packing and storage

The following recommendations apply to all BURGMANN mechanical seals which have been supplied and stored in their **undamaged original packaging**, as well as to seals which have been installed in a machine (e.g. pump, compressor, agitator, etc.) but have not yet been put into operation.

BURGMANN mechanical seals and spare parts are super finished and repeatedly tested machine elements. For the storage special conditions have to be followed.

Sliding materials and elastomers are subject to material-specific and time-based alterations (distortion, ageing) which might reduce the full efficiency of the mechanical seals. Yet, this may be avoided by observing the storage instructions.

For the stock keeping of elastomers special conditions are required. For all rubber-elastic parts the rules of DIN 7716 resp. of ISO 2230-1973 (E) are valid.

Conveniences for storing of mechanical seals
- dust free
- moderately ventilated
- constantly tempered
  - relative air humidity below 65 %,
  - temperature between 15 °C and 25 °C.

Protect the seal from
- direct exposure to heat (sun, heating)
- **ultraviolet light** (halogen or fluorescent lamps, sunlight, arc welding)
- presence or development of **ozone** (arc welding, mercury vapour lamps, high-voltage devices, electric motors)

➢ **risk of embrittlement** of elastomeric materials

It has to be differentiated between:
- ▫ **M.S. stored** in the stock room
- ▫ **M.S. installed** in the machine, but not yet in operation.

☐ **M.S. in the stock**

IMPORTANT! Store the **seal in the original packing** lying on a **flat surface**.

- Check the packaging periodically for damages.
- Plastic sheet packagings with humidity indicators have to be checked every 8 weeks. The check has to be recorded.

➢ Packings **exceeding 50 % rel. humidity** values have to be sent to the manufacturer or the **nearest BURGMANN service centre** for inspection and new packaging.

Duly stored mechanical seal:
- Latest 3 years after delivery of the mechanical seal
- For reasons of safety shipment of the M.S. to BURGMANN resp. nearest BURGMANN service centre for

➢ Exchange of all secondary seals and springs
➢ Verification of the flatness of the faces
➢ Perhaps static pressure test.

☐ **M.S. installed into the machine:**

ATTENTION! A **preservation** of the BURGMANN mechanical seals is **not allowed**.

Check in case of a preservation of complete machines with mechanical seals installed BURGMANN has to be contacted.
- **Do not** use corrosion protection agents.

➢ Risk of deposition and possibly chemical attack of the secondary seals.

Due to longer erecting times of new designed plants the period between delivery of the mechanical seal and on the other hand its installation and start up may exceed the period of 2-3 years.

Latest after 3 years and in time before the planned start-up of the plant the seal has to be dismantled and to be sent to the manufacturer or the nearest BURGMANN service centre where it can be checked and reconditioned, if necessary.

Damages caused by **improper** storage may **not** be claimed with reference to the **warranty** on the BURGMANN company**.**

INFORMATION ABOUT THE PRODUCT

All technical information given is based on the results of extensive testing and on BURGMANN's long term practical experience. However, in view of the great diversity of possible applications the technical data can only be taken as being of approximate nature. We can only guarantee the safe and efficient functioning in individual cases if we have been comprehensively informed of the operating conditions to which they will be subject, and if this has been confirmed in a separate agreement.

Manufacturer and country of origin

Burgmann Industries GmbH & Co. KG
Äußere Sauerlacher Str. 6-10
D - 82515 Wolfratshausen

Germany

Declaration by the manufacturer

within the meaning of the EC-directive "MACHINERY" 98/37/EG

A mechanical seal does **not function independently**. It is intended to be incorporated into or assembled with machinery.

Type designation

BURGMANN Mechanical Seal **MG1/dw-00**

Designated use

This mechanical seal is **exclusively** designed for the use in the specified application. A **different utilisation** or a utilisation going beyond the specification is considered **contrary to its designated use** and excludes a liability by the manufacturer.

Operation under conditions lying **outside** those limits stated in paragraph **"Operating limits"** is considered **contrary to its designated use**.

Should the seal be **operated under different conditions or at a different application** BURGMANN has to be asked for **recognition as safe in advance**.
- **Changes** to operating conditions **have to** be documented.

Operating limits

ATTENTION! Operating limits depend on the materials, the media to be sealed and the diameter of the sealing. (If there are any unclear points please contact BURGMANN.)

Shaft diameter	(dw)	:	10 - 100 mm
Pressure to be sealed	(p1)	:	12 bar g
Temperature to be sealed	(t1)	:	-20 ... 120° C
Max. sliding speed	(vg)	:	10 m/s

Operation under several limit values **simultaneously** should be **avoided** as higher loads (pressure, temperature, speed) can increase wear or lead to **damage** of sliding faces or elastomers. This could result in a shorter service life and in the **risk** of a sudden seal failure **endangering** men and environment.

The **selection** of the mechanical seal (type, suitability, materials) should be done **by BURGMANN staff** or other **authorised** persons. A wrong selection by unauthorised persons is **not covered by** BURGMANN's **warranty**.

Further information about the operating conditions can be found in the BURGMANN assembly drawing MG1/dw-00 or in the specification sheets of the machine manufacturer.

Materials

The materials of the mechanical seal depend on the application and are fixed in the order.

Drawings, diagrams

Assembly drawing MG1/dw-00

The original assembly drawing in its latest edition (latest revision) only is decisive for both the design of M.S. as well as the utilisation of this manual.

In the following description all figures in parentheses, e.g. (2) define the respective part item no. in fig. 1. The part item no. may vary from those stated in the assembly drawing.

Versions

- **MG12/…**
- **MG13/…**
- **MG1S20/…**
- **RMG12/…**
- **MG1 MULTIPLE M.S.**

The mechanical seal type MG1 can also be used as **multiple mechanical seal** (also in combination with seal types of other series) in **tandem arrangement** with quench (API, plan 52) or as **dual mechanical seal** with barrier fluid (API, plan 53). Consultation with the BURGMANN company is recommended.

ATTENTION! PTFE o-rings or double-PTFE-wrapped o-rings **may** not be used at seat versions **without torsion lock**.

This operating manual applies also to the mentioned seal versions with slight modifications and/or to combinations with seats not stated in this manual.

Seat Versions

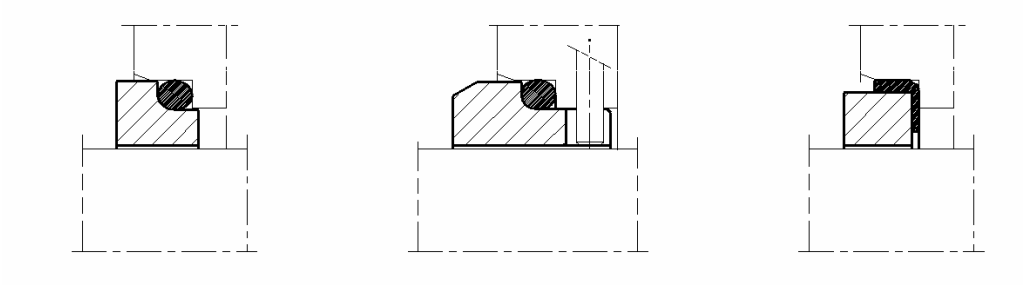

Description and function

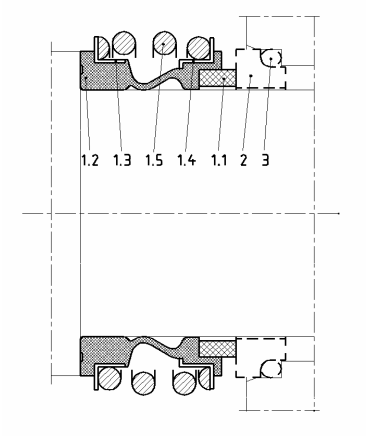

- **single seal**
- **unbalanced**
- **bi-directional**
- **stationary seat** (2)
- **o-ring** (3)
- **rotating seal face** (1.1)
- **elastomeric bellow** (1.2)
- **cylindrical single spring** (1.5)
- **no glued joints**
- **materials of the sliding parts replaceable**
- **for media containing solids** (e.g. sewage applications)
- **rotating, torsion-free elastomeric bellows** serving as
  - face housing
  - secondary sealing element
  - drive collar
- **torque transmission** from the seal face by means of "L"-rings and a rotating, cylindrical single spring
- **axial movability**
  d_w: 10 … 12 mm ±0,5 mm
  d_w: 14 … 18 mm ±1,0 mm
  d_w: 20 … 26 mm ±1,5 mm
  d_w: 28 … 100 mm ±2,0 mm

Required space, connecting dimensions

The required mounting space for the mechanical seal is decisive for the design of the housing parts by the machine manufacturer. The connecting dimensions have to be checked by the machine manufacturer by means of the BURGMANN drawing before mounting the mechanical seal.

Supply of M.S.

The mechanical seal has to be constantly wetted by liquid medium. The medium to be sealed must not damage the M.S. neither chemically (e.g. corrosion, embrittlement) nor physically (e.g. erosion, abrasion).

For a safe operation of the mechanical seal we recommend to apply **at inboard** the most suitable **type of circulation** described in **API 610 / 682**. This measure protects the seal cavity from deposition of solids.

To operate multiple seals special supply systems are required. Please contact BURGMANN.

Emissions

A mechanical seal is a **dynamic seal** that **cannot be free of leakage** due to physical and technical reasons. Seal design, manufacture tolerances, operating conditions, running quality of the machine, etc. mainly define the leakage value. In fact, compared to other sealing systems there is **few leakage**.

WARNING! If the **medium to be sealed** and/or the **supply liquid** is subject to the **Hazardous Substances Regulation** (GefStoffV), the **instructions for handling dangerous substances** (safety data sheets to EU Directive 91/155/EEC) and the **accident prevention regulations** have be observed.

A possibly increased leakage during start-up will decrease to a normal quantity after the running-in period of the sliding faces.

If this is not the case or if there are other malfunctions the mechanical seal has to be shut down, removed and checked for reasons of safety.

The leakage can be liquid or gaseous. Its aggressiveness corresponds to that of the medium to be sealed.

Leakage of mechanical seal at outboard side has to be drained and disposed properly.

IMPORTANT! Components which may get in contact with the leakage have to be corrosion-resistant or have to be adequately protected.

INSTALLATION

Assembly utilities

- ethyl alcohol
- cellulose-tissue (no rag, no cloth!)
- o-ring lifter
- water and washing up liquid
- cardboard discs

Preparation for assembly

ATTENTION! The seal should remain **packed** until the following working steps have been completely **terminated**.

Check the parts of the machine for:

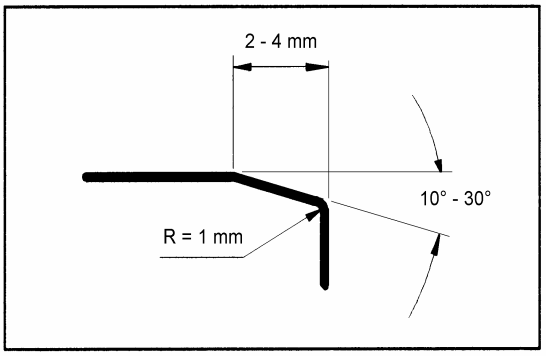

- **chamfered edges**
  (sliding cones i.e. 2 mm / 30° or in accordance with EN 12756)
- radiused transitions
- **mating fits** and o-ring surfaces:
  fine finished **Rz 10 µm** (= N7 = CLA 63)

- **Shaft surface** in the area of the mechanical seal finished according to EN 12756: **Ra = 0.8 µm** (= N6 = CLA 32).
- **Shoulder** or stop device for the bellows of the mech. seal to take up axial forces

Check at the machine:
- damage of connecting surfaces to the M.S.
- mating dimensions, rectangularity and concentricity to the shaft axis.

Run-out accuracy of the shaft (acc. to DIN ISO 5199):
- Shaft diameters up to 50 mm: max. 0.05 mm
- Shaft diameters 50 mm - 100 mm: max. 0.08 mm

- Prepare the place of assembly, take away any not required tool, cuttings, dirty cleaning wool etc.

- Cover the work bench with a piece of clean, non-fibrous cardboard.

Assembly / installation

BURGMANN mechanical seals are super-finished and repeatedly tested machine elements whose handling during assembly in particular of sliding materials and elastomers requires special care during several procedures.

For installation the assembly drawing of mechanical seal has to be observed.

IMPORTANT! The mechanical seal has to be installed under the cleanest conditions and very carefully.

- Unpack the seal and check seal face, seat and elastomer bellows for possible damages.
- ➢ Never place the seal faces or seats on their sliding faces without having covered them adequately.

- Check before starting assembly:
  - complete availability of all components by means of the drawing
  - all components have to be clean and in perfect condition.

- Sprinkle the elastomer bellows and the shaft with low-surface-tension water (add washing up liquid) or ethyl alcohol to decrease frictional force during assembly of the seal.

⚠

Oil or grease as assembly agent is not permitted in any case.

ATTENTION! **Do never force** during installation.

ATTENTION! **Avoid unnecessary rotation** of the shaft (damage of the sliding faces is possible).

ATTENTION! **Avoid knocking the seal!** Damage to mechanical seals has an adverse effect on their safe operation.

Possible installation order:

- Feed the **degreased** sealing element (o-ring, rubber cup) onto the seat.

If present:
- At the seat mark the position of the rear slot beside the sliding face.
- Align the seat with the torque transmission pin.

- Cover the sliding face of the seat with a cardboard washer
- Press the seat slowly and without interruption into its position.
  - ➢ Use plenty of water or alcohol as lubricant.
  - ➢ Use a distance sleeve, if necessary.
- Remove the cardboard washer from the sliding face.
- Check the rectangular position of the seat to the shaft axis.

- Mount the seal cover with the seat installed before.
- Clean the sliding faces thoroughly with ethyl alcohol and paper tissues (**no fabric, no cloths!**).

➢ In case of material **"BUKO"** (carbon graphite) wipe it until the paper tissues stay clean.
➢ Do not touch the sliding faces any more with bare fingers.
➢ Mount the sliding faces absolutely dry, dust-free and clean. Do not use any lubricants!

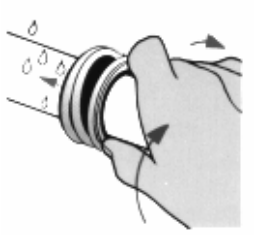

- Push rotating seal unit (bellows unit) with a slow clockwise turn onto the shaft.
- Stick to the dimensions in the assembly drawing!

➢ If necessary use a mounting sleeve.
➢ For long pushing distances add liquid several times.

- Check "L" rings, spring and seal face for correct fit.

- Mount stop device for bellows unit to take up axial forces.

➢ Stick to the dimensions in the assembly drawing **by all means!**

- Further assembly of the machine in accordance with the instructions of the machine manufacturer.

OPERATION

Instructions for safe operation

For a single mechanical seal the **pressure in the seal chamber** (stuffing box pressure) has to be **higher** than the ambient pressure at the machine at any time. Otherwise the machine will **suck in air** via the sliding faces, which will result in **dry-running** and consequent **failure** of the mechanical seal.

Damages due to dry-running are excluded from the warranty.

During every state of operation the mechanical seal has to be constantly wetted by the **medium** to be sealed **in its liquid form**, in particular when the machine is **started** or **stopped**. The machine design has to be such as to take this necessity into consideration.

If the medium to be pumped builds deposits or tends to solidify during cooling down or standstill of the machine the stuffing box has to be flushed with suitable clean liquid. The flow and the liquid should be determined by the user.

If the operation limit values and the instructions given in this manual are followed a trouble-free operation of the mechanical seal can be expected.

Instructions for start up

Safety checks before start up

- Torque transmission between mechanical seal and shaft duly installed
- Supply connections tightened pressure-sealed
- Disposal connections installed environmentally safe

For a safe operation of the mechanical seal we recommend to apply **at inboard** the most suitable **type of circulation** described in **API 610 / 682**. This measure protects the seal cavity from deposition of solids.

- Flood machine and seal cavity (stuffing box) with medium and vent thoroughly.

▫ Now the seal is ready for operation.

SERVICING

Maintenance

A correctly operated mechanical seal needs **low maintenance**. Wear parts, however, have to be replaced, if necessary.

A duly operation includes a regular check of the following parameters:
- Temperature
- Leakage (drainage) rate of the mechanical seal

An inspection of the mechanical seal should be carried out during a revision of the complete plant. We recommend to have this inspection be performed by responsible BURGMANN personnel.

If the mechanical seal is removed during a revision of the plant it has to be replaced by a new one.

Directives in case of failure

Try to define the kind of failure and record it.

- In the event of **excessive leakage**, note changes in the leakage amount and switch the pump off if necessary.
- ➢ If a constant amount is leaking in a steady flow, the mechanical seal is damaged.
- In the event of a **inadmissible temperature rise**, the machine **has to** be stopped for safety reasons.

If there is a **malfunction** which you cannot correct on your own, or if the cause of malfunction is not clearly recognisable please immediately contact the nearest **BURGMANN agency**, a BURGMANN service centre or the BURGMANN headquarters.

During the **warranty period** the BURGMANN mechanical seal must only be disassembled with approval of the manufacturer or when a representative is present.

After-sales service by BURGMANN

BURGMANN's customer service department offers a comprehensive service package covering consultancy, engineering, standardisation, installation, commissioning as well as damage analysis right through to seminars on sealing technology.

Addresses are listed in the known BURGMANN Design Manuals as well as in various other BURGMANN brochures.

Address of headquarters:

Burgmann Industries GmbH & Co. KG
Postfach 1240
D - 82515 Wolfratshausen

Germany

☎ +49 (0) 81 71-23 0
Fax +49 (0) 81 71-23 12 14
www.burgmann.com

Reconditioning (repair)

If **reconditioning** is necessary, the complete **seal** should be sent **to the manufacturer**, as this is the best way to find out which components can be reconditioned or which parts must be replaced in order to ensure an optimum tightness.

If, **for compelling reasons**, **a reconditioning** has to be carried out **on site** (e.g. no. spare seal on stock, long transport, problems with customs) the seal may be repaired in a clean room by **trained** personnel of the user under the direction of **BURGMANN mechanics**.

Disassembly / removal



- Stop the machine as instructed, allow to cool, depressurise and ensure that pressure cannot build up again.
- Work on the M.S. is only permitted when the machine is at a standstill and depressurised.
- There must be no product on the M.S. ⇒ if necessary drain the machine and rinse it out.
- Isolate the machine to prevent it starting up unexpectedly.
- Comply with the safety notes (safety data sheets).

IMPORTANT! When removing, please observe **by all means**:

- current **accident prevention regulations**
- **regulations for handling hazardous substances**

WARNING! Seals that have been used with **hazardous substances must be properly cleaned** so that there is no possible **danger** to people or to the environment.

IMPORTANT! The packaging used to transport the seal must

- be **identified** with the relevant **hazard symbol** and
- **include** the **safety data sheet** for the product and/or supply medium

The order of disassembly to remove the mechanical seal out of the machine depends on the design of the machine and should be determined by the machine manufacturer.

- Remove the seal in the reverse sequence as described for assembly (set up).

Spare parts

- Only BURGMANN original spare parts must be used. Otherwise
  - **Risks** of a seal failure, **endangering** persons and environment.
  - The BURGMANN guarantee for the mechanical seal **lapses**.
- For a quick exchange a complete **spare seal** should be on stock.

Required details for enquiries and orders

For enquiries and orders the following details are required:

- BURGMANN commission no.
- Drawing no. of M.S. **MG1/dw-00**
  dw = specified shaft diameter
- Part item no., designation, material, number of pieces with reference to the drawing.

Address of headquarters product field **FA**
Standard Mechanical Seals

Burgmann Industries GmbH & Co. KG
Postfach 1240
D - 82502 Wolfratshausen

Germany

☎ +49 (0) 81 71 - 23 0
Fax +49 (0) 81 71 - 23 14 44

Disposal of the BURGMANN mechanical seal

Usually, the BURGMANN mechanical seals can be easily disposed after a thorough cleaning.

- Metal parts (steels, stainless steels, non-ferrous heavy metals) divided into the different groups belong to scrap metal waste.
- Ceramic materials (synthetic carbons, ceramics, carbides) belong to waste products. They can be separated from their housing materials, as are physiologically recognised as safe.
- Synthetic materials/plastics (elastomers, PTFE) belong to special waste.

CAUTION! Material containing fluorine must not be burnt.

IMPORTANT! Some of the synthetic materials, divided into the different groups can be recycled.

Copyright

The **Burgmann Industries GmbH & Co. KG** (Germany) holds the copyright to this document. Customers and operators of mechanical seals are free to use this document in the preparation of their own documentation. No claims of any type or form can be derived in such instance.

We reserve the right to carry out technical modifications of the product, even if they have not yet been considered in this manual.

June 13, 2006
Department Technical Documentation

BALDOR • RELIANCE

Integral Horsepower
AC Induction Motors
ODP, WPI, WPII Enclosure
TEFC Enclosure
Explosion Proof

Installation & Operating Manual

2/07 MN400

Table of Contents

Section 1
General Information 1-1
Overview 1-1
Limited Warranty 1-1
Safety Notice 1-2
Receiving 1-4
Storage 1-4
Unpacking 1-4
Handling 1-4
Section 2
Installation & Operation 2-1
Overview 2-1
Location 2-1
Mounting 2-1
Alignment 2-1
Doweling & Bolting 2-2
Power Connection 2-2
Conduit Box 2-2
AC Power 2-2
First Time Start Up 2-4
Coupled Start Up 2-4
Jogging and Repeated Starts 2-4
Section 3
Maintenance & Troubleshooting 3-1
General Inspection 3-1
Lubrication & Bearings 3-1
Type of Grease 3-1
Relubrication Intervals 3-1
Relubrication Procedure 3-3
Accessories 3-4
Troubleshooting Chart 3-5

Section 1
General Information

Overview This manual contains general procedures that apply to Baldor Motor products. Be sure to read and understand the Safety Notice statements in this manual. For your protection, do not install, operate or attempt to perform maintenance procedures until you understand the Warning and Caution statements. A Warning statement indicates a possible unsafe condition that can cause harm to personnel. A Caution statement indicates a condition that can cause damage to equipment.

Important: **This instruction manual is not intended to include a comprehensive listing of all details for all procedures required for installation, operation and maintenance. This manual describes general guidelines that apply to most of the motor products shipped by Baldor. If you have a question about a procedure or are uncertain about any detail, Do Not Proceed. Please contact your Baldor distributor for more information or clarification.**

Before you install, operate or perform maintenance, become familiar with the following:

- NEMA Publication MG-2, Safety Standard for Construction and guide for Selection, Installation and Use of Electric Motors and Generators.
- The National Electrical Code
- Local codes and Practices

Limited Warranty

1. Most Baldor products are warranted for 18 months from the date of shipment to Baldor's customer from Baldor's district warehouse or, if applicable, from Baldor's factory. Baldor Standard-E® standard efficient motors are warranted for 24 months. Standard-E is limited to three phase, general purpose, 1-200 HP ratings that fall under the Energy Policy Act (EPAct). Baldor Super-E® premium efficient motors are warranted for 36 months. Baldor IEEE841 motors are warranted for 60 months. All warranty claims must be submitted to a Baldor Service Center prior to the expiration of the warranty period.
2. Baldor will, at its option repair or replace a motor which fails due to defects in material or workmanship during the warranty period if:
   a. the purchaser presents the defective motor at or ships it prepaid to, the Baldor plant in Fort Smith, Arkansas or one of the Baldor Authorized Service Centers and
   b. the purchaser gives written notification concerning the motor and the claimed defect including the date purchased, the task performed by the Baldor motor and the problem encountered.
3. Baldor will not pay the cost of removal of any electric motor from any equipment, the cost of delivery to Fort Smith, Arkansas or a Baldor Authorized Service Center, or the cost of any incidental or consequential damages resulting from the claimed defects. (Some states do not allow the exclusion or limitation of incidental or consequential damages, so the above exclusion may not apply to you.) Any implied warranty given by laws shall be limited to the duration of the warranty period hereunder. (Some states do not allow limitations on how long an implied warranty lasts, so the above limitation may not apply to you.)
4. Baldor Authorized Service Centers, when convinced to their satisfaction that a Baldor motor developed defects in material or workmanship within the warranty period, are authorized to proceed with the required repairs to fulfill Baldor's warranty when the cost of such repairs to be paid by Baldor does not exceed Baldor's warranty repair allowance. Baldor will not pay overtime premium repair charges without prior written authorization.
5. The cost of warranty repairs made by centers other than Baldor Authorized Service Centers **WILL NOT** be paid unless first authorized in writing by Baldor.
6. Claims by a purchaser that a motor is defective even when a failure results within one hour after being placed into service are not always justified. Therefore, Baldor Authorized Service Centers must determine from the condition of the motor as delivered to the center whether or not the motor is defective. If in the opinion of a Baldor Authorized Service Center, a motor did not fail as a result of defects in material or workmanship, the center is to proceed with repairs only if the purchaser agrees to pay for such repairs. If the decision is in dispute, the purchaser should still pay for the repairs and submit the paid invoice and the Authorized Service Center's signed service report to Baldor for further consideration.
7. This warranty gives you specific legal rights, and you may also have other rights which vary from state to state.

Safety Notice:

This equipment contains high voltage! Electrical shock can cause serious or fatal injury. Only qualified personnel should attempt installation, operation and maintenance of electrical equipment.

Be sure that you are completely familiar with NEMA publication MG-2, safety standards for construction and guide for selection, installation and use of electric motors and generators, the National Electrical Code and local codes and practices. Unsafe installation or use can cause conditions that lead to serious or fatal injury. Only qualified personnel should attempt the installation, operation and maintenance of this equipment.

WARNING: Do not touch electrical connections before you first ensure that power has been disconnected. Electrical shock can cause serious or fatal injury. Only qualified personnel should attempt the installation, operation and maintenance of this equipment.

WARNING: Be sure the system is properly grounded before applying power. Do not apply AC power before you ensure that all grounding instructions have been followed. Electrical shock can cause serious or fatal injury. National Electrical Code and Local codes must be carefully followed.

WARNING: Avoid extended exposure to machinery with high noise levels. Be sure to wear ear protective devices to reduce harmful effects to your hearing.

WARNING: This equipment may be connected to other machinery that has rotating parts or parts that are driven by this equipment. Improper use can cause serious or fatal injury. Only qualified personnel should attempt to install operate or maintain this equipment.

WARNING: Do not by-pass or disable protective devices or safety guards. Safety features are designed to prevent damage to personnel or equipment. These devices can only provide protection if they remain operative.

WARNING: Avoid the use of automatic reset devices if the automatic restarting of equipment can be hazardous to personnel or equipment.

WARNING: Be sure the load is properly coupled to the motor shaft before applying power. The shaft key must be fully captive by the load device. Improper coupling can cause harm to personnel or equipment if the load decouples from the shaft during operation.

WARNING: Use proper care and procedures that are safe during handling, lifting, installing, operating and maintaining operations. Improper methods may cause muscle strain or other harm.

WARNING: Before performing any motor maintenance procedure, be sure that the equipment connected to the motor shaft cannot cause shaft rotation. If the load can cause shaft rotation, disconnect the load from the motor shaft before maintenance is performed. Unexpected mechanical rotation of the motor parts can cause injury or motor damage.

WARNING: Disconnect all electrical power from the motor windings and accessory devices before disassembly of the motor. Electrical shock can cause serious or fatal injury.

WARNING: Do not use non UL/CSA listed explosion proof motors in the presence of flammable or combustible vapors or dust. These motors are not designed for atmospheric conditions that require explosion proof operation.

Safety Notice Continued

WARNING: **Motors that are to be used in flammable and/or explosive atmospheres must display the UL label on the nameplate along with CSA listed logo.**

Specific service conditions for these motors are defined in NFPA 70 (NEC) Article 500.

WARNING: **UL Listed motors must only be serviced by UL Approved Authorized Baldor Service Centers if these motors are to be returned to a hazardous and/or explosive atmosphere.**

Caution: **To prevent premature equipment failure or damage, only qualified maintenance personnel should perform maintenance.**

Caution: **Do not over-lubricate motor as this may cause premature bearing failure.**

Caution: **Do not lift the motor and its driven load by the motor lifting hardware. The motor lifting hardware is adequate for lifting only the motor. Disconnect the load from the motor shaft before moving the motor.**

Caution: **If eye bolts are used for lifting a motor, be sure they are securely tightened. The lifting direction should not exceed a 20° angle from the shank of the eye bolt or lifting lug. Excessive lifting angles can cause damage.**

Caution: **To prevent equipment damage, be sure that the electrical service is not capable of delivering more than the maximum motor rated amps listed on the rating plate.**

Caution: **If a HI POT test (High Potential Insulation test) must be performed, follow the precautions and procedure in NEMA MG1 and MG2 standards to avoid equipment damage.**

If you have any questions or are uncertain about any statement or procedure, or if you require additional information please contact your Baldor distributor or an Authorized Baldor Service Center.

Receiving

Each Baldor Electric Motor is thoroughly tested at the factory and carefully packaged for shipment. When you receive your motor, there are several things you should do immediately.

1. Observe the condition of the shipping container and report any damage immediately to the commercial carrier that delivered your motor.
2. Verify that the part number of the motor you received is the same as the part number listed on your purchase order.

Storage

If the motor is not put into service immediately, the motor must be stored in a clean, dry and warm location. Several precautionary steps must be performed to avoid motor damage during storage.

1. Use a “Megger” periodically to ensure that the integrity of the winding insulation has been maintained. Record the Megger readings. Immediately investigate any significant drop in insulation resistance.
2. Do not lubricate bearings during storage. Motor bearings are packed with grease at the factory. Excessive grease can damage insulation quality.
3. Rotate motor shaft at least 10 turns every two months during storage (more frequently if possible). This will prevent bearing damage due to storage.
4. If the storage location is damp or humid, the motor windings must be protected from moisture. This can be done by applying power to the motors’ space heater (if available) while the motor is in storage.

Unpacking

Each Baldor motor is packaged for ease of handling and to prevent entry of contaminants.

1. To avoid condensation inside the motor, do not unpack until the motor has reached room temperature. (Room temperature is the temperature of the room in which it will be installed). The packing provides insulation from temperature changes during transportation.
2. When the motor has reached room temperature, remove all protective wrapping material from the motor.

Handling

The motor should be lifted using the lifting lugs or eye bolts provided.

1. Use the lugs or eye bolts provided to lift the motor. Never attempt to lift the motor and additional equipment connected to the motor by this method. The lugs or eye bolts provided are designed to lift only the motor. Never lift the motor by the motor shaft or the hood of a WPII motor.
2. When lifting a WPII (Weather Proof Type 2) motor, do not lift the motor by inserting lifting lugs into holes on top of the cooling hood. These lugs are to be used for hood removal only. A spreader bar should be used to lift the motor by the cast lifting lugs located on the motor frame.
3. If the motor must be mounted to a plate with the driven equipment such as pump, compressor etc., it may not be possible to lift the motor alone. For this case, the assembly should be lifted by a sling around the mounting base. The entire assembly can be lifted as an assembly for installation. Do not lift using the motor lugs or eye bolts provided.

   If the load is unbalanced (as with couplings or additional attachments) additional slings or other means must be used to prevent tipping. In any event, the load must be secure before lifting.

Section 2
Installation & Operation

Overview

Installation should conform to the National Electrical Code as well as local codes and practices. When other devices are coupled to the motor shaft, be sure to install protective devices to prevent future accidents. Some protective devices include, coupling, belt guard, chain guard, shaft covers etc. These protect against accidental contact with moving parts. Machinery that is accessible to personnel should provide further protection in the form of guard rails, screening, warning signs etc.

Location

It is important that motors be installed in locations that are compatible with motor enclosure and ambient conditions. Improper selection of the motor enclosure and ambient conditions can lead to reduced operating life of the motor.

Proper ventilation for the motor must be provided. Obstructed airflow can lead to reduction of motor life.

1. **Open Drip-Proof/WPI** motors are intended for use indoors where atmosphere is relatively clean, dry, well ventilated and non-corrosive.
2. **Totally Enclosed and WPII** motors may be installed where dirt, moisture or dust are present and in outdoor locations.

Severe Duty, IEEE 841 and Washdown Duty enclosed motors are designed for installations with high corrosion or excessive moisture conditions. These motors should not be placed into an environment where there is the presence of flammable or combustible vapors, dust or any combustible material, unless specifically designed for this type of service.

Mounting

The motor must be securely installed to a rigid foundation or mounting surface to minimize vibration and maintain alignment between the motor and shaft load. Failure to provide a proper mounting surface may cause vibration, misalignment and bearing damage.

Foundation caps and sole plates are designed to act as spacers for the equipment they support. If these devices are used, be sure that they are evenly supported by the foundation or mounting surface.

After installation is complete and accurate alignment of the motor and load is accomplished, the base should be grouted to the foundation to maintain this alignment.

The standard motor base is designed for horizontal or vertical mounting. Adjustable or sliding rails are designed for horizontal mounting only. Consult your Baldor distributor or authorized Baldor Service Center for further information.

Alignment

Accurate alignment of the motor with the driven equipment is extremely important.

1. **Direct Coupling**
   For direct drive, use flexible couplings if possible. Consult the drive or equipment manufacturer for more information. Mechanical vibration and roughness during operation may indicate poor alignment. Use dial indicators to check alignment. The space between coupling hubs should be maintained as recommended by the coupling manufacturer.
2. **End-Play Adjustment**
   The axial position of the motor frame with respect to its load is also extremely important. The motor bearings are not designed for excessive external axial thrust loads. Improper adjustment will cause failure.
3. **Pulley Ratio**
   The pulley ratio should not exceed 8:1.
4. **Belt Drive**
   Align sheaves carefully to minimize belt wear and axial bearing loads (see End-Play Adjustment). Belt tension should be sufficient to prevent belt slippage at rated speed and load. However, belt slippage may occur during starting.

   Caution: Do not over tension belts.
5. Sleeve bearing motors are only suitable for coupled loads.

Doweling & Bolting

After proper alignment is verified, dowel pins should be inserted through the motor feet into the foundation. This will maintain the correct motor position should motor removal be required. (Baldor motors are designed for doweling.)

1. Drill dowel holes in diagonally opposite motor feet in the locations provided.
2. Drill corresponding holes in the foundation.
3. Ream all holes.
4. Install proper fitting dowels.
5. Mounting bolts must be carefully tightened to prevent changes in alignment. Use a flat washer and lock washer under each nut or bolt head to hold the motor feet secure. Flanged nuts or bolts may be used as an alternative to washers.

Power Connection

Motor and control wiring, overload protection, disconnects, accessories and grounding should conform to the National Electrical Code and local codes and practices.

Conduit Box

For ease of making connections, an oversize conduit box is provided. The box can be rotated 360° in 90° increments. Auxiliary conduit boxes are provided on some motors for accessories such as space heaters, RTD's etc.

AC Power

Connect the motor leads as shown on the connection diagram located on the name plate or inside the cover on the conduit box. Be sure the following guidelines are met:

1. AC power is within ±10% of rated voltage with rated frequency. (See motor name plate for ratings).
   OR
2. AC power is within ±5% of rated frequency with rated voltage.
   OR
3. A combined variation in voltage and frequency of ±10% (sum of absolute values) of rated values, provided the frequency variation does not exceed ±5% of rated frequency.

Performance within these voltage and frequency variations are shown in Figure 2-2.

Figure 2-1 Accessory Connections

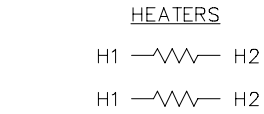

One heater is installed in each end of motor.
Leads for each heater are labeled H1 & H2.
(Like numbers should be tied together).

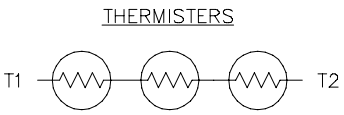

Three thermisters are installed in windings and tied in series.
Leads are labeled T1 & T2.

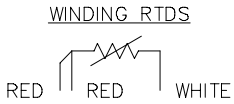

Winding RTDs are installed in windings (2) per phase.
Each set of leads is labeled W1, W2, W3, W4, W5, & W6.



* One bearing RTD is installed in Drive endplate (PUEP), leads are labeled RTDDE.
* One bearing RTD is installed in Opposite Drive endplate (FREP), leads are labeled RTDODE.

* Note RTD may have 2-Red/1-White leads; or 2-White/1-Red Lead.

Figure 2-2 Typical Motor Performance VS Voltage Variations

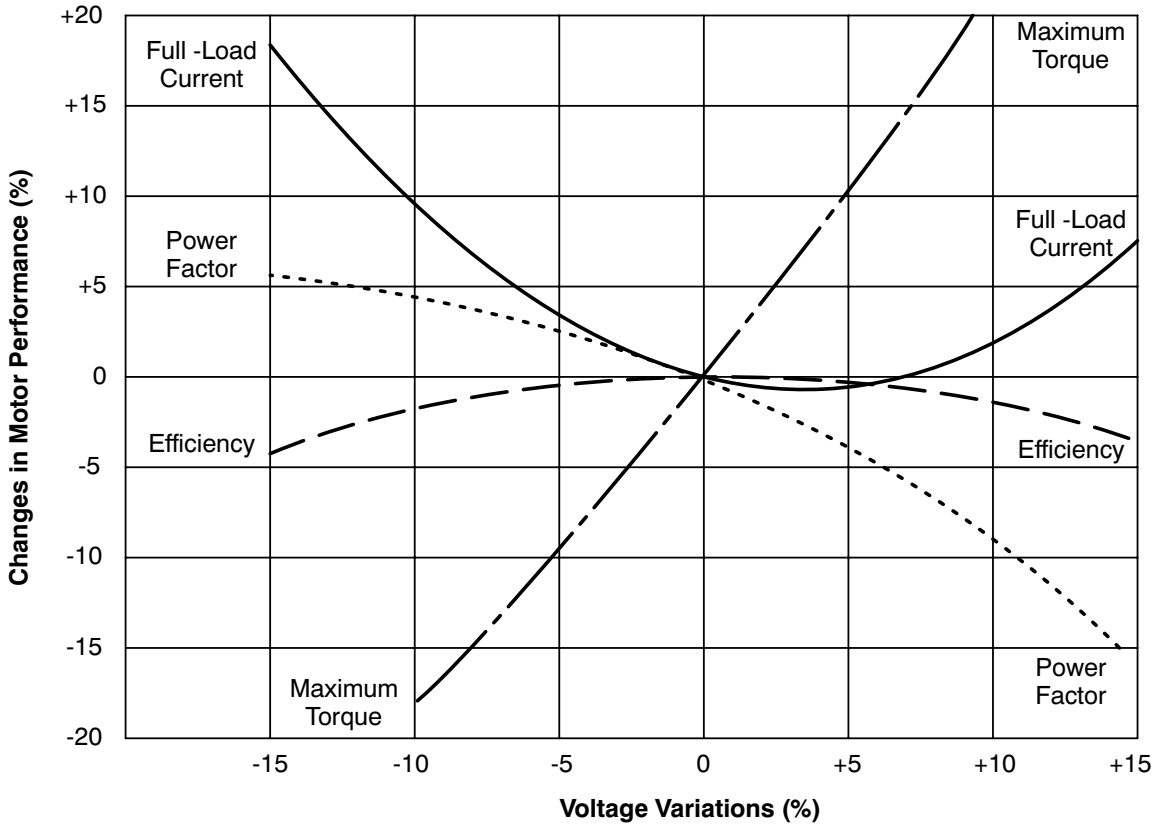

First Time Start Up

Be sure that all power to motor and accessories is off. Be sure the motor shaft is disconnected from the load and will not cause mechanical rotation of the motor shaft.

1. Make sure that the mechanical installation is secure. All bolts and nuts are tightened etc.
2. If motor has been in storage or idle for some time, check winding insulation integrity with a Megger.
3. Inspect all electrical connections for proper termination, clearance, mechanical strength and electrical continuity.
4. Be sure all shipping materials and braces (if used) are removed from motor shaft.
5. Manually rotate the motor shaft to ensure that it rotates freely.
6. Replace all panels and covers that were removed during installation.
7. Momentarily apply power and check the direction of rotation of the motor shaft.
8. If motor rotation is wrong, be sure power is off and change the motor lead connections. Verify rotation direction before you continue.
9. Start the motor and ensure operation is smooth without excessive vibration or noise. If so, run the motor for 1 hour with no load connected.
10. After 1 hour of operation, disconnect power and connect the load to the motor shaft. Verify all coupling guards and protective devices are installed. Ensure motor is properly ventilated.

Coupled Start Up

This procedure assumes a coupled start up. Also, that the first time start up procedure was successful.

1. Check the coupling and ensure that all guards and protective devices are installed.
2. Check that the coupling is properly aligned and not binding.
3. The first coupled start up should be with no load. Apply power and verify that the load is not transmitting excessive vibration back to the motor though the coupling or the foundation. Vibration should be at an acceptable level.
4. Run for approximately 1 hour with the driven equipment in an unloaded condition.

The equipment can now be loaded and operated within specified limits. Do not exceed the name plate ratings for amperes for steady continuous loads.

Jogging and Repeated Starts Repeated starts and/or jogs of induction motors generally reduce the life of the motor winding insulation. A much greater amount of heat is produced by each acceleration or jog than by the same motor under full load. If it is necessary to repeatedly start or jog the motor, it is advisable to check the application with your local Baldor distributor or Baldor Service Center.

Heating - Duty rating and maximum ambient temperature are stated on the motor name plate. Do not exceed these values. If there is any question regarding safe operation, contact your local Baldor distributor or Baldor Service Center.

Section 3
Maintenance & Troubleshooting

WARNING: UL Listed motors must only be serviced by UL Approved Authorized Baldor Service Centers if these motors are to be returned to a hazardous and/or explosive atmosphere.

General Inspection

Inspect the motor at regular intervals, approximately every 500 hours of operation or every 3 months, whichever occurs first. Keep the motor clean and the ventilation openings clear. The following steps should be performed at each inspection:

WARNING: Do not touch electrical connections before you first ensure that power has been disconnected. Electrical shock can cause serious or fatal injury. Only qualified personnel should attempt the installation, operation and maintenance of this equipment.

1. Check that the motor is clean. Check that the interior and exterior of the motor is free of dirt, oil, grease, water, etc. Oily vapor, paper pulp, textile lint, etc. can accumulate and block motor ventilation. If the motor is not properly ventilated, overheating can occur and cause early motor failure.
2. Use a "Megger" periodically to ensure that the integrity of the winding insulation has been maintained. Record the Megger readings. Immediately investigate any significant drop in insulation resistance.
3. Check all electrical connectors to be sure that they are tight.

Relubrication & Bearings

Bearing grease will lose its lubricating ability over time, not suddenly. The lubricating ability of a grease (over time) depends primarily on the type of grease, the size of the bearing, the speed at which the bearing operates and the severity of the operating conditions. Good results can be obtained if the following recommendations are used in your maintenance program.

Type of Grease

A high grade ball or roller bearing grease should be used. Recommended grease for standard service conditions is Polyrex EM (Exxon Mobil).

Equivalent and compatible greases include:
Texaco Polystar, Rykon Premium #2, Pennzoil Pen 2 Lube and Chevron SRI.

Relubrication Intervals

Recommended relubrication intervals are shown in Table 3-1. It is important to realize that the recommended intervals of Table 3-1 are based on average use.

Refer to additional information contained in Tables 3-2, 3-3 and 3-4.

Table 3-1 Relubrication Intervals *

NEMA / (IEC) Frame Size	Rated Speed - RPM					
	10000	6000	3600	1800	1200	900
Up to 210 incl. (132)	**	2700 Hrs.	5500 Hrs.	12000 Hrs.	18000 Hrs.	22000 Hrs.
Over 210 to 280 incl. (180)		**	3600 Hrs.	9500 Hrs.	15000 Hrs.	18000 Hrs.
Over 280 to 360 incl. (225)		**	* 2200 Hrs.	7400 Hrs.	12000 Hrs.	15000 Hrs.
Over 360 to 5800 incl. (300)		**	*2200 Hrs.	3500 Hrs.	7400 Hrs.	10500 Hrs.

* Relubrication intervals are for ball bearings.
For vertically mounted motors and roller bearings, divide the relubrication interval by 2.

** For motors operating at speeds greater than 3600 RPM, contact Baldor for relubrication recommendations.

Table 3-2 Service Conditions

Severity of Service	Hours per day of Operation	Ambient Temperature Maximum	Atmospheric Contamination
Standard	8	40° C	Clean, Little Corrosion
Severe	16 Plus	50° C	Moderate dirt, Corrosion
Extreme	16 Plus	>50° C* or Class H Insulation	Severe dirt, Abrasive dust, Corrosion, Heavy Shock or Vibration
Low Temperature		<-29 ° C **	

* Special high temperature grease is recommended (Dow Corning DC44). Note that Dow Corning DC44 grease does not mix with other grease types. Thoroughly clean bearing & cavity before adding grease.

** Special low temperature grease is recommended (Aeroshell 7).

Table 3-3 Relubrication Interval Multiplier

Severity of Service	Multiplier
Standard	1.0
Severe	0.5
Extreme	0.1
Low Temperature	1.0

Some motor designs use different bearings on each motor end. This is normally indicated on the motor nameplate. In this case, the larger bearing is installed on the motor Drive endplate. For best relubrication results, only use the appropriate amount of grease for each bearing size (not the same for both).

Table 3-4 Bearings Sizes and Types

Frame Size NEMA (IEC)	Bearing Description (These are the "Large" bearings (Shaft End) in each frame size)			
	Bearing	Weight of Grease to add * oz (Grams)	Volume of grease to be added	
			in^3	teaspoon
56 to 140 (90)	6203	0.08 (2.4)	0.15	0.5
140 (90)	6205	0.15 (3.9)	0.2	0.8
180 (100-112)	6206	0.19 (5.0)	0.3	1.0
210 (132)	6307	0.30 (8.4)	0.6	2.0
250 (160)	6309	0.47 (12.5)	0.7	2.5
280 (180)	6311	0.61 (17)	1.2	3.9
320 (200)	6312	0.76 (20.1)	1.2	4.0
360 (225)	6313	0.81 (23)	1.5	5.2
400 (250)	6316	1.25 (33)	2.0	6.6
440 (280)	6319	2.12 (60)	4.1	13.4
5000 to 5800 (315-450)	6328	4.70 (130)	9.2	30.0
5000 to 5800 (315-450)	NU328	4.70 (130)	9.2	30.0
360 to 449 (225-280)	NU319	2.12 (60)	4.1	13.4
AC Induction Servo				
76 Frame 180 (112)	6207	0.22 (6.1)	0.44	1.4
77 Frame 210 (132)	6210	0.32 (9.0)	0.64	2.1
80 Frame 250(160)	6213	0.49 (14.0)	0.99	3.3

* Weight in grams = .005 DB of grease to be added

Note: Not all bearing sizes are listed. For intermediate bearing sizes, use the grease volume for the next larger size bearing.

Caution: To avoid damage to motor bearings, grease must be kept free of dirt. For an extremely dirty environment, contact your Baldor distributor or an authorized Baldor Service Center for additional information.

Relubrication Procedure

Be sure that the grease you are adding to the motor is compatible with the grease already in the motor. Consult your Baldor distributor or an authorized service center if a grease other than the recommended type is to be used.

Caution: Do not over-lubricate motor as this may cause premature bearing failure.

With Grease Outlet Plug

1. With the motor stopped, clean all grease fittings with a clean cloth.
2. Remove grease outlet plug.

Caution: Over-lubricating can cause excessive bearing temperatures, premature lubrication breakdown and bearing failure.

3. Add the recommended amount of grease.
4. Operate the motor for 15 minutes with grease plug removed. This allows excess grease to purge.
5. Re-install grease outlet plug.

Without Grease Provisions

Note: Only a Baldor authorized and UL or CSA certified service center can disassemble a UL/CSA listed explosion proof motor to maintain it's UL/CSA listing.

1. Disassemble the motor.
2. Add recommended amount of grease to bearing and bearing cavity. (Bearing should be about 1/3 full of grease and outboard bearing cavity should be about 1/2 full of grease.)
3. Assemble the motor.

Sample Relubrication Determination

Assume - NEMA 286T (IEC 180), 1750 RPM motor driving an exhaust fan in an ambient temperature of 43° C and the atmosphere is moderately corrosive.

1. Table 3-1 list 9500 hours for standard conditions.
2. Table 3-2 classifies severity of service as "Severe".
3. Table 3-4 shows that 1.2 in^3 or 3.9 teaspoon of grease is to be added.

Note: Smaller bearings in size category may require reduced amounts of grease.

Table 3-5 Troubleshooting Chart

Symptom	Possible Causes	Possible Solutions
Motor will not start	Usually caused by line trouble, such as, single phasing at the starter.	Check source of power. Check overloads, fuses, controls, etc.
Excessive humming	High Voltage.	Check input line connections.
	Eccentric air gap.	Have motor serviced at local Baldor service center.
Motor Over Heating	Overload. Compare actual amps (measured) with nameplate rating.	Locate and remove source of excessive friction in motor or load. Reduce load or replace with motor of greater capacity.
	Single Phasing.	Check current at all phases (should be approximately equal) to isolate and correct the problem.
	Improper ventilation.	Check external cooling fan to be sure air is moving properly across cooling fins. Excessive dirt build-up on motor. Clean motor.
	Unbalanced voltage.	Check voltage at all phases (should be approximately equal) to isolate and correct the problem.
	Rotor rubbing on stator.	Check air gap clearance and bearings.
		Tighten “Thru Bolts”.
	Over voltage or under voltage.	Check input voltage at each phase to motor.
	Open stator winding.	Check stator resistance at all three phases for balance.
	Grounded winding.	Perform dielectric test and repair as required.
	Improper connections.	Inspect all electrical connections for proper termination, clearance, mechanical strength and electrical continuity. Refer to motor lead connection diagram.
Bearing Over Heating	Misalignment.	Check and align motor and driven equipment.
	Excessive belt tension.	Reduce belt tension to proper point for load.
	Excessive end thrust.	Reduce the end thrust from driven machine.
	Excessive grease in bearing.	Remove grease until cavity is approximately $^3/_4$ filled.
	Insufficient grease in bearing.	Add grease until cavity is approximately $^3/_4$ filled.
	Dirt in bearing.	Clean bearing cavity and bearing. Repack with correct grease until cavity is approximately $^3/_4$ filled.
Vibration	Misalignment.	Check and align motor and driven equipment.
	Rubbing between rotating parts and stationary parts.	Isolate and eliminate cause of rubbing.
	Rotor out of balance.	Have rotor balance checked are repaired at your Baldor Service Center.
	Resonance.	Tune system or contact your Baldor Service Center for assistance.
Noise	Foreign material in air gap or ventilation openings.	Remove rotor and foreign material. Reinstall rotor. Check insulation integrity. Clean ventilation openings.
Growling or whining	Bad bearing.	Replace bearing. Clean all grease from cavity and new bearing. Repack with correct grease until cavity is approximately $^3/_4$ filled.

Suggested bearing and winding RTD setting guidelines

Most large frame AC Baldor motors with a 1.15 service factor are designed to operate below a Class B (80°C) temperature rise at rated load and are built with a Class H winding insulation system. Based on this low temperature rise, RTD (Resistance Temperature Detectors) settings for Class B rise should be used as a starting point. Some motors with 1.0 service factor have Class F temperature rise.

The following tables show the suggested alarm and trip settings for RTDs. Proper bearing and winding RTD alarm and trip settings should be selected based on these tables unless otherwise specified for specific applications.

If the driven load is found to operate well below the initial temperature settings under normal conditions, the alarm and trip settings may be reduced so that an abnormal machine load will be identified.

The temperature limits are based on the installation of the winding RTDs imbedded in the winding as specified by NEMA. Bearing RTDs should be installed so they are in contact with the outer race on ball or roller bearings or in direct contact with the sleeve bearing shell.

Winding RTDs - Temperature Limit In °C (40°C Maximum Ambient)

Motor Load	Class B Temp Rise ≤ 80°C (Typical Design)		Class F Temp Rise ≤ 105°C		Class H Temp Rise ≤ 125°C	
	Alarm	Trip	Alarm	Trip	Alarm	Trip
≤ Rated Load	130	140	155	165	175	185
Rated Load to 1.15 S.F.	140	150	160	165	180	185

Note: • Winding RTDs are factory production installed, not from Mod-Express.
• When Class H temperatures are used, consider bearing temperatures and relubrication requirements.

Bearing RTDs - Temperature Limit In °C (40°C Maximum Ambient)

Bearing Type Oil or Grease	Anti-Friction		Sleeve	
	Alarm	Trip	Alarm	Trip
Standard*	95	100	85	95
High Temperature**	110	115	105	110

Note: * Bearing temperature limits are for standard design motors operating at Class B temperature rise.
** High temperature lubricants include some special synthetic oils and greases.

Greases that may be substituted that are compatible with Polyrex EM (but considered as "standard" lubricants) include the following:

- Texaco Polystar
- Rykon Premium #2
- Chevron SRI #2
- Mobilith SHC-100
- Pennzoil Pennzlube EM-2
- Chevron Black Pearl
- Darmex 707
- Darmex 711
- Petro-Canada Peerless LLG

See the motor nameplate for replacement grease or oil recommendation.
Contact Baldor application engineering for special lubricants or further clarifications.

Baldor District Offices Baldor District Offices Baldor District Offices

UNITED STATES

ARIZONA
PHOENIX
4211 S 43RD PLACE
PHOENIX, AZ 85040
PHONE: 602-470-0407
FAX: 602-470-0464

ARKANSAS
CLARKSVILLE
1001 COLLEGE AVE.
CLARKSVILLE, AR 72830
PHONE: 479-754-9108
FAX: 479-754-9205

CALIFORNIA
LOS ANGELES
6480 FLOTILLA
COMMERCE, CA 90040
PHONE: 323-724-6771
FAX: 323-721-5859

HAYWARD
21056 FORBES STREET
HAYWARD, CA 94545
PHONE: 510-785-9900
FAX: 510-785-9910

COLORADO
DENVER
3855 FOREST STREET
DENVER, CO 80207
PHONE: 303-623-0127
FAX: 303-595-3772

9980 PARK MEADOWS DRIVE
SUITE 214
LONE TREE, CO 80124-6739
PHONE: 303-339-9629
FAX: 303-339-9633

CONNECTICUT
WALLINGFORD
65 SOUTH TURNPIKE ROAD
WALLINGFORD, CT 06492
PHONE: 203-269-1354
FAX: 203-269-5485

FLORIDA
TAMPA/PUERTO RICO/
VIRGIN ISLANDS
3906 EAST 11TH AVENUE
TAMPA, FL 33605
PHONE: 813-248-5078
FAX: 813-247-2984

GEORGIA
ATLANTA
62 TECHNOLOGY DR.
ALPHARETTA, GA 30005
PHONE: 770-772-7000
FAX: 770-772-7200

5490 MCGINNIS FERRY PLACE
SUITE 133
ALPHARETTA, GA 30005
PHONE: 770-752-4254
FAX: 770-752-4257

ILLINOIS
CHICAGO
1601 FRONTENAC ROAD
NAPERVILLE, IL 60563
PHONE: 630-848-5100
FAX: 630-848-5110

INDIANA
COLUMBUS
3300 TENTH ST
COLUMBUS, IN 47201
PHONE: 812-378-2556
FAX: 812-378-2555

INDIANAPOLIS
5525 W. MINNESOTA STREET
INDIANAPOLIS, IN 46241
PHONE: 317-246-5100
FAX: 317-246-5110

IOWA
DES MOINES
1800 DIXON STREET, SUITE C
DES MOINES, IA 50316
PHONE: 515-263-6929
FAX: 515-263-6515

KANSAS
5030 BOB BILLINGS PKWY STE B
LAWRENCE, KS 66049
PHONE: 785-749-4339
FAX: 785-749-4217

MARYLAND
BALTIMORE
6660 SANTA BARBARA RD.
SUITE 22-24
ELKRIDGE, MD 21075
PHONE: 410-579-2135
FAX: 410-579-2677

MASSACHUSETTS
BOSTON
6 PULLMAN STREET
WORCESTER, MA 01606
PHONE: 508-854-0708
FAX: 508-854-0291

MICHIGAN
DETROIT
33782 STERLING PONDS BLVD.
STERLING HEIGHTS, MI 48312
PHONE: 586-978-9800
FAX: 586-978-9969

GRAND RAPIDS
668 THREE MILE ROAD NW
GRAND RAPIDS, MI 49504
PHONE: 616-785-1784
FAX: 616-785-1788

MINNESOTA
MINNEAPOLIS
21080 134TH AVE. NORTH
ROGERS, MN 55374
PHONE: 763-428-3633
FAX: 763-428-4551

MISSOURI
ST LOUIS
422 INDUSTRIAL DRIVE
MARYLAND HEIGHTS, MO 63043
PHONE: 314-298-1800
FAX: 314-298-7660

KANSAS CITY
1501 BEDFORD AVENUE
NORTH KANSAS CITY, MO 64116
PHONE: 816-587-0272
FAX: 816-587-3735

NEW YORK
AUBURN
ONE ELLIS DRIVE
AUBURN, NY 13021
PHONE: 315-255-3403
FAX: 315-253-9923

NORTH CAROLINA
GREENSBORO
1220 ROTHERWOOD ROAD
GREENSBORO, NC 27406
P O BOX 16500
GREENSBORO, NC 27416
PHONE: 336-272-6104
FAX: 336-273-6628

OHIO
CINCINNATI
2929 CRESCENTVILLE ROAD
WEST CHESTER, OH 45069
PHONE: 513-771-2600
FAX: 513-772-2219

CLEVELAND
8929 FREEWAY DRIVE
MACEDONIA, OH 44056
PHONE: 330-468-4777
FAX: 330-468-4778

29525 CHAGRIN BLVD SUITE 208
CLEVELAND, OH 44122
PHONE: 216-360-8296
FAX: 216-360-4172

OKLAHOMA
TULSA
2 EAST DAWES
BIXBY, OK 74008
PHONE: 918-366-9320
FAX: 918-366-9338

OREGON
PORTLAND
20393 SW AVERY COURT
TUALATIN, OR 97062
PHONE: 503-691-9010
FAX: 503-691-9012

PENNSYLVANIA
KING OF PRUSSIA
1060 FIRST AVE STE 400
KING OF PRUSSIA, PA 19406
PHONE: 610-768-8018
FAX: 215-672-5759

PHILADELPHIA
1035 THOMAS BUSCH
MEMORIAL HIGHWAY
PENNSAUKEN, NJ 08110
PHONE: 856-661-1442
FAX: 856-663-6363

PITTSBURGH
159 PROMINENCE DRIVE
NEW KENSINGTON, PA 15068
PHONE: 724-889-0092
FAX: 724-889-0094

TENNESSEE
MEMPHIS
4000 WINCHESTER ROAD
MEMPHIS, TN 38118
PHONE: 901-365-2020
FAX: 901-365-3914

TEXAS
ADDISON
3939 BELT LINE ROAD #250
ADDISON, TX 75001
PHONE: 972-499-7746, 499-7747
FAX: 972-242-1505

HOUSTON
4647 PINE TIMBERS
SUITE # 135
HOUSTON, TX 77041
PHONE: 713-895-7062
FAX: 713-690-4540

DALLAS
3040 QUEBEC
DALLAS, TX 75247
PHONE: 214-634-7271
FAX: 214-634-8874

UTAH
SALT LAKE CITY
2230 SOUTH MAIN STREET
SALT LAKE CITY, UT 84115
PHONE: 801-832-0127
FAX: 801-832-8911

VIRGINIA
RICHMOND
6767 FOREST HILL AVE STE 305
RICHMOND, VA 23225
PHONE: 804-545-6848
FAX: 804-545-6840

WASHINGTON
KIRKLAND, WA
550 KIRKLAND WAY STE 205
KIRKLAND, WA 98033
PHONE: 425-952-5000
FAX: 775-255-8019

WISCONSIN
MILWAUKEE
2725 SOUTH 163RD STREET
NEW BERLIN, WI 53151
PHONE: 262-784-5940
FAX: 262-784-1215

WAUKESHA
N14 W23777 STONE RIDGE DRIVE
SUITE 170
WAUKESHA, WI 53188
PHONE: 262-347-2000
FAX: 262-437-0258

INTERNATIONAL SALES
FORT SMITH, AR
P.O. BOX 2400
FORT SMITH, AR 72902
PHONE: 479-646-4711
FAX: 479-648-5895

CANADA
EDMONTON, ALBERTA
4053-92 STREET
EDMONTON, ALBERTA T6E 6R8
PHONE: 780-434-4900
FAX: 780-438-2600

11428-168 STREET
EDMONTON, ALBERTA T5M 3T9
PHONE: 780-822-7865
FAX: 780-822-7878

MISSISSAUGA, ONTARIO
244 BRITANNIA ROAD EAST
MISSISSAUGA, ONTARIO L4Z 1S6
PHONE: 905-890-5110
FAX: 905-890-5540

OAKVILLE, ONTARIO
2750 COVENTRY ROAD
OAKVILLE, ONTARIO L6H 6R1
PHONE: 905-829-3301
FAX: 905-829-3302

DORVAL, QUEBEC
95 RUE LINDSAY
DORVAL QUEBEC H9P 2S6
PHONE: 514-422-8818
FAX: 514-422-8982

MONTREAL, QUEBEC
1844 WILLIAM STREET
MONTREAL, QUEBEC H3J 1R5
PHONE: 514-933-2711
FAX: 514-933-8639

VANCOUVER,
BRITISH COLUMBIA
1538 KEBET WAY
PORT COQUITLAM,
BRITISH COLUMBIA V3C 5M5
PHONE 604-421-2822
FAX: 604-421-3113

WINNIPEG, MANITOBA
54 PRINCESS STREET
WINNIPEG, MANITOBA R3B 1K2
PHONE: 204-942-5205
FAX: 204-956-4251

AUSTRALIA
UNIT 3, 6 STANTON ROAD
SEVEN HILLS, NSW 2147, AUSTRALIA
PHONE: (61) (2) 9674 5455
FAX: (61) (2) 9674 2495

UNIT 8, 5 KELLETTS ROAD
ROWVILLE, VICTORIA, 3178
AUSTRALIA
PHONE: (61) (3) 9753 4355
FAX: (61) (3) 9753 4366

EL SALVADOR
RESIDENCIAL PINARES DE SUIZA
POL. 15 #44,
NVA. SAN SALVADOR, EL SALVADOR
PHONE: +503 2288-1519
FAX: +503 2288-1518

CHILE
LUIS THAYER OJEDA 166,
OF 402 - PROVIDENCIA
SANTIAGO, CHILE
PHONE: 56-2-290-0762
FAX: 56-2-290-0762

CHINA
ROOM NO. A-8421
JIAHUA BUSINESS CENTER
808 HONG QIAO ROAD
SHANGHAI 200030, CHINA
PHONE: (86-21) 6447 3060
FAX: (86-21) 6407 8620

UNIT 905, 9TH FLOOR,
TOWER B WANDA PLAZA
NO. 93 JIANGUO ROAD,
CHAOYANG DISTRICT
BEIJING, 100022, CHINA
PHONE +86 (010) 58205516
FAX +86 (010) 58204231

GERMANY
DIESELSTRASSE 22
D-85551 KIRCHHEIM
MUNICH, GERMANY
PHONE: +49 89 90 5080
FAX: +49 89 90 50 8492

HERMANN-HEINRICH-GOSSEN-STRASSE 3
D-50858 KÖLN, GERMANY
PHONE: 49 2234 37941 0
FAX: 49 2234 37941 64

INDIA
14, COMMERCE AVENUE
MAHAGANESH COLONY
PAUD ROAD
PUNE - 411038
MAHARASHTRA, INDIA
PHONE: 91 20 25452717, 25452718
FAX: 91 20 25452719

ITALY
BALDOR ASR AG
SUCCURSALE DI MENDRISIO
VIA BORROMINI, 20A
CH-6850 MENDRISIO
SWITZERLAND
PHONE: 0041 91 640 99 50
FAX: 0041 91 630 26 33

JAPAN
DIA BLDG 802,
2-21-1 TSURUYA-CHO,
KANAGAWA-KU
YOKOHAMA, 221-0835, JAPAN
PHONE: 81-45-412-4506
FAX: 81-45-412-4507

KOREA
ROOM 208-37
INCHEON INDUSTRIAL GOODS
CIRCULATING CENTER
SONGHYEON 3-DONG, DONG-GU
INCHEON. KOREA, 401-705
PHONE: (82) 32 588 3253
FAX: (82) 32 588 3254

MEXICO
LEON, GUANAJUATO
KM, 2.0 BLVD. AEROPUERTO
LEÓN 37545, GUANAJUATO, MÉXICO
PHONE: 52 477 761 2030
FAX: 52 477 761 2010

MIDDLE EAST & NORTH AFRICA
VSE INTERNATIONAL CORP.
P. O. BOX 5618
BUFFALO GROVE, IL 60089-5618
PHONE: 847 590 5547
FAX: 847 590 5587

SINGAPORE
51 KAKI BUKIT ROAD 2
K B WAREHOUSE COMPLEX
SINGAPORE 417863
PHONE: (65) 6744 2572
FAX: (65) 6747 1708

PANAMA
AVE. RICARDO J. ALFARO
EDIFICIO SUN TOWERS MALL
PISO 2, LOCAL 55
CIUDAD DE PANAMÁ, PANAMÁ
PHONE: +507 236-5155
FAX: +507 261-5355

SWITZERLAND
POSTFACH 73
SCHUTZENSTRASSE 59
CH-8245 FEUERTHALEN
SWITZERLAND
PHONE: +41 52 647 4700
FAX: +41 52 659 2394

TAIWAN
1F, NO 126 WENSHAN 3RD STREET,
NANTUN DISTRICT,
TAICHUNG CITY 408
TAIWAN R.O.C
PHONE: (886) 4 238 04235
FAX: (886) 4 238 04463

UNITED KINGDOM
6 BRISTOL DISTRIBUTION PARK
HAWKLEY DRIVE
BRISTOL BS32 0BF U.K.
PHONE: +44 1454 850000
FAX: +44 1454 859001

VENEZUELA
AV. ROMA. QTA EL MILAGRO. URB.
CALIFORNIA NORTE
CARACAS, 1070
VENEZUELA
PHONE: 58-414-114-8623
FAX: 58-412-322-5790



BALDOR • DODGE • RELIANCE

BALDOR ELECTRIC COMPANY
World Headquarters
P.O. Box 2400 Fort Smith, AR 72901-2400
(479) 646-4711 Fax (479) 648-5792
www.baldor.com

© Baldor Electric Company
MN400

Printed in USA
2/07

seepex.com

seepex GmbH
Postfach 10 15 64
46215 Bottrop
Scharnhölzstraße 344
46240 Bottrop
Germany

Tel +49.2041.996-0
Fax +49.2041.996-400
info@seepex.com
www.seepex.com

Europe:

Great Britain

seepex
UK Ltd.
3 Armtech Row
Houndstone Business Park
Yeovil Somerset BA22 8RW
Tel+44.1935.472376
Fax+44.1935.479836
sales@seepex.co.uk

Austria

seepex
Sales Office Austria
Obermüllergasse 18
A-3003 Gablitz
Tel +43.22 31.6 10 85
Fax +43.22 31.6 10 85 20
hfriedl@seepex.com

Belgium

seepex
Bureau België/Belgique
Dorp8B-228
8 Bouwel
Tel +32.14.501471
Fax+32.14.501461
seepex.be@seepex.com

Denmark

seepex
Nordic AS
Bakkegårdsvej 411
DK-3050 Humlebæk
Tel+45.49192200
Fax+45.49193200
info@seepex.dk

France

seepex
France SARL
1,Rue Pelloutier
F-77183 Croissy Beaubourg
Tel+33.1.64114450
Fax+33.1.64114469
info.fr@seepex.com

Ireland

seepex
Branch Office Ireland
No 5 Arden Glas
Portlaoise
Co.Laois
Tel+353.578681826
Fax+353.578681587
mryan@seepex.co.uk

Italy

seepex GmbH
Ufficio di Rappresentanza
per l'Italia
Piazza Luigi di Savoia,22
20124 Milano
Tel+39.02.36569360
Fax+39.02.92877853
info.it@seepex.com

Sweden

seepex
Nordic AS
Hamndalsvägen 58
S-61633 Åby
Tel +46.116 69 40
Fax +46.116 69 41
info@seepex.dk

North America:

The Netherlands

seepex
Bureau Nederland
Maagdenburgstraat 22c
NL-7421 ZC Deventer
Tel +31.570.51 66 44
Fax +31.570.51 60 77
seepex.nl@seepex.com

USA

seepex
Inc.
511 Speedway Drive
Enon
Ohio 45323
Tel +1.937.8 64 71 50
Fax +1.937.8 64 71 57
sales@seepex.net

Asia:

China

seepex
Pumps (Shanghai) Co., Ltd.
Xuanzhong Rd. 399, Building 13
Nanhui Industrial Area
201300 Shanghai
Tel +86.21.38 10 88 88
Fax +86.21.38 10 88 99
info.cn@seepex.com

Japan

seepex
Japan Co., Ltd.
Keyaki Building
Nakano-sakaue #101,
2-31-5 Chuo, Nakano-ku,
Tokyo 164-0011
Tel +81.3 57 55 59 71
Fax +81.3 57 55 59 72
info.jp@seepex.com

Malaysia

seepex
(M) Sdn. Bhd.
59-1, Jalan PJU 1/37
Dataran Prima
47301 Petaling Jaya
Selangor Darul Ehsan
Tel +60.3.78 80 69 51
Fax +60.3.78 80 69 59
seepex.m@seepex.com

More seepex sales partners in Europe, America, Asia, Africa and Oceania you will find on our website.

And what can we get flowing for you?
Your nearest contact:

Or visit www.seepex.com

LEFT BLANK

DOSING PUMP

LEFT BLANK

seepex.com

seepex
Inc.
511 Speedway Drive
Enon, Ohio 45323
Tel +1 (937) 864-71 50
Fax+1 (937) 864-71 57
sales@seepex.net
www.seepex.com

Operating and Maintenance Instructions
Progressive Cavity Pump

range | size | pressure stage | 17.01.2006

MD

commission-No.

822813-822815

Job#

2109552

This operating and maintenance instruction includes important safety information and instructions for installation, commissioning, operating and maintenance of the seepex machinery. It is essential therefore, that the responsible specialist refers to it before starting any work on the machinery as well as prior to commissioning. Futhermore, this instruction must always be available on site.

1.0
General

1.1
Application

These operating instructions contain basic information on the installation, commissioning and maintenance of seepex machines. Compliance with the work steps described in the individual sections is essential.

1.2
Details of the seepex machines

1.2.1
Operating Instructions

The Commission Number (comm. no) assigns the operating instructions to a particular seepex machine. The operating instructions are produced in relation to a specific job/commission and are valid only for the machine whose comm. no. is identical with that indicated on the cover sheet and possessing the associated data sheet, Point 9.

1.2.2
Manufacturer

The machines were manufactured by seepex.

1.2.3
Range, Size, Version

of the machines are stated in the appended data sheet, Point 9.

1.2.4
Machine Comm. No. and Year of Construction

are stated on the type plate at the machine.

1.2.5
Release Date of the Operating Instructions

is stated on the cover sheet of the operating instructions.

1.2.6
Modifications, Notes of Modification

If modifications to the machines are carried out in agreement with seepex, a new set of operating instructions will be provided, or the existing operating instructions will be supplemented by an additional sheet together with a new cover sheet. The date of modification and modification index will be noted on the new cover sheet.

1.2.7
EEC Machine Directive

1.2.7.1
Manufacturer's Declaration

seepex Manufacturer's Declaration as required by the EEC Machine Directive 89/392/EEC, Appendix II B:

The seepex machines delivered in accordance with our design are intended to be fitted in one machine or assembled together with other machines to form one machine/plant. The commissioning of the machine is forbidden until such a time as has been established that the entire machine/plant satisfies the requirements of the EEC Directive for Machines as amended 91/368/EEC and 93/44/EEC.

Particular attention must be paid to the safety requirements specified in EN809 (s and Equipment for Fluids) as well as the information in these operating instructions.

1.2.7.2
Declaration of Conformity

seepex machines possessing no safety accessories do not fulfill the requirements of the EEC Machine Directive 89/392/EEC as amended 91/368/EEC and 93/44/EEC.

For this reason, no Declaration of Conformity as required by the EEC Machine Directive 89/392/EEC, Appendix IIA can be issued before appropriate safety devices have been installed/mounted on the machine and/or plant with due regard to the information given in these operating instructions.

The following harmonized standards are particularly applicable:
EN 809, EN292T1, EN292T2
Applicable national standards and specifications must be taken into consideration.

Following assessment of the conformity of the machine/plant with the EEC Machine Directive, customers may on their own initiative place on the full machine/plant the EEC symbol 'CE' as defined in Identification Directive 93/68/EEC.

CAUTION

This documentation must be kept available for at least 10 years.

1.2.8
Copyright and Industrial Property Rights

These operating instructions are copyrighted. The reproduction, in particular by photocopying, of these instructions is not permitted (§§ 54, 54 UrhG) and constitutes a criminal offence (§ 106 UrhG). Proceedings will be instituted if the copyright is violated.

1.2.9
Specifications Required for Inquiries and Orders

The following information must be included when inquiring about replacement parts or placing orders:
- comm. no.
- / machine type
This information is given on the type plate mounted the machine.

1.2.10
Technical Data Sheet
see Point 9.

1.2.11
Performance Data, Load Index, Power Consumption

are indicated in the associated data sheet, Point 9.

1.2.12
Sound Pressure Level

The sound pressure level and/or noise characteris-tics of the seepex machines are ascertained in accordance with DIN 45635. The measuring guidelines are largely identical with the international standards ISO 3740-1980 and ISO 3744-1981.

1.2.13
Operating Range

Employment of the machine is not permissible for purposes other than those stated in the data sheet, see Point 9. seepex cannot accept liability for damage arising through failure to comply with this operating range.

1.3
Supplementary Information

1.3.1
Accessories, Optional Extras

Please refer to the data sheet, Point 9.

1.3.2
Company Address, Service Addresses

see Point 11

2.0
Safety

These operating instructions contain basic requirements to be observed during the installation, operation and maintenance of the machine. Therefore, the instructions must be read by the mechanical fitter and by the technical personnel/operator responsible for the machine prior to assembly and commissioning, and kept available at the operating site of the machine/plant at all times.

Compliance is required not only with the general safety instructions given in this section but also with the detailed instructions, e.g. for private usage, given under the other main headings in these operating instructions.

2.1
Labeling of Advice in the Operating Instructions

In these operating instructions safety advice whose non-observance could lead to danger for life or limb is labeled with the following general hazard symbol:



safety symbol acc. to ISO 3864 - B.3.1

Warnings regarding electric power are labeled with:



safety symbol acc. to ISO 3864 - B.3.6

Safety instructions whose non-observance could jeopardize the machine and its functions are labeled by the word

CAUTION

Always comply with instructions mounted directly on the machine, e.g.
- rotational direction arrow
- fluid connection indicators

and ensure that the information remains legible.

2.2
Personnel Qualifications and Training

Personnel charged with operation, maintenance, inspection and assembly must be in possession of the appropriate qualifications for the tasks. The company operating the machine must define exact areas of responsibility, accountabilities and personnel supervision schemes. Personnel lacking the required skills and knowledge must receive training and instruction. If necessary, the opera-ting company may commission the manufacturer/ supplier to conduct these training courses. Furthermore, the operating company must ensure that the personnel fully understand the contents of the operating instructions.

2.3
Dangers Resulting from Failure to Observe Safety Instructions

Failure to comply with the safety instructions may lead to hazards to life and limb as well as dangers for the environment and the machine. Non-observance of safety instructions can invalidate the right of claim to damages.

The following are just some **examples** of possible dangers resulting from failure to comply with the safety instructions:

- Failure of important machine/plant functions
- Failure of prescribed methods of service and maintenance
- Danger to life and limb due to electrical, mechanical and chemical influences
- Danger to the environment due to the leakage of hazardous substances

2.4
Safety-conscious Working

Always comply with the safety instructions listed in this document, the existing national accident prevention regulations and any company-internal work, operating and safety rules.

2.5
Safety Instructions for the Operating Company/Machine Operator

- Any potentially hazardous hot or cold machine parts must be provided with protection against accidental contact at the customer´s premises.

- Protective guards for moving parts (e.g. coupling) must never be removed while the machine is in operation.

- Leakages (e.g. in the shaft seal) of hazardous conveying liquids (e.g. explosive, toxic, hot) must be drained in such a way that no danger arises for persons or for the environment. Always observe the relevant statutory requirements.

- The risk of exposure to electrical power must be eliminated (for details, see the VDE regulations, for example, or those of the local power supply company).

2.6
Safety Instructions for Maintenance, Inspection and Assembly Work

The operator must ensure that all maintenance, inspection and assembly tasks are carried out by authorized and qualified personnel who have studied the operating instructions closely and become sufficiently familiar with the machine.

As a basic rule, the machine must be brought to a standstill before work is carried out. Always comply with the de-commissioning procedure described in this document.

Any machiness or assemblies conveying media that are detrimental to health must be decontaminated.

Immediately following completion of work, all safety and protective devices must be replaced in position and, where applicable, re-activated.

Before re-starting the machine, observe the points listed under the heading "Initial Startup".

2.7
Unauthorized Modification and Manufacture of Replacement Parts

Conversions or modifications of the machine are permissible only in consultation with the manufacturers. Original manufacturer replacement parts and manufacturer-approved accessories enhance the operational safety of the machine. The usage of unauthorized parts may lead to the nullification of the manufacturer's liability for any resultant damages.

2.8
Impermissible Modes of Operation

The operational safety of the machines supplied is warranted only for employment in accordance with the intended use as defined in Section 1 - General - of these operating instructions. Never allow the threshold values specified in the data sheet to be exceeded.

3.0
Transport and Intermediate Storage

3.1
Safety Precautions

Employ appropriate transport means, hoists and tools when transporting and storing the machine, always observing the safety instructions.

3.2
Transport

Depending on its weight, the seepex machine must be transported manually or with appropriate transport means. Comply with the transport instructions on the packing.

3.3
Unpacking

The design of the packing is such that the equip-ment can be removed manually or, if demanded by the weight, by means of appropriate hoists.

Any screw fittings between the machine and the packing must be undone. Comply with the attached information notices and symbols.

3.4
Intermediate Storage/Preservation

Unless otherwise indicated in the data sheet, seepex machines are provided with preservation only for the duration of transport. If a long period of intermediate storage is foreseen before the machine is commissioned, it is necessary to pro-vide supplementary preservation. If necessary, the appropriate measures should be drawn up in consultation with seepex.

Intermediate storage in extreme climatic conditions is permissible only for machine whose design is appropriate to the circumstances. If necessary, seepex must be consulted.

CAUTION

Pumps of the range MAP
If the period from supply and subsequent storage until the commissioning is more than 4 weeks, the hoses should be dismantled, refer to Point 7.

3.5
Protection against Environmental Influences

To afford protection against environmental influences, the intermediate storage location must be dry, enclosed and free from frost.

4.
Description of the seepex Progressive Cavity Pump and Accessories

4.1
General Description, Design and Mode of Operation

Like all progressive cavity pumps, seepex pumps belong to the rotating positive-displacement pump family. The characteristic attribute of these pumps is the special formation and arrangement of the two conveying elements, namely the rotor and the stator.

The difference in the number of threads possessed respectively by the rotor and stator produces a chamber that opens and closes alternately in line with the constant turning motion of the rotor, effecting the continuous transportation of the conveying product from the suction side to the pressure side.

The geometrical formation of the two conveying elements combined with the constant contact that exists between them result in sealing lines that effect an airtight seal between the suction and pressure side in every position of the eccentric screw, even when the pump is stationary. The pump owes its high suction capacity to this
sealing between the suction and pressure sides.

4.2
Mechanical Design

Please consult the sectional drawing, Point 9, for the mechanical design of the pump. The data sheet, Point 9, gives information on the design of the pump housing, stator, rotor and rotating components.

Refer to document OM. SEA. __, for information on the design of the shaft seal.

The data sheet, specifies details of the design of the drive engine. Further details are
given in the appended manufacturer's documents, Point 10.

4.3
Accessories

Consult the data sheet for information.

4.4
Dimensions, Weight

Consult the appended dimensional drawing,

4.5
Design Variants

Refer to the data sheet, Point 9, for the design of the seepex progressive cavity pump. Other design variants are possible, whereby seepex must first check whether a particular pump is suitable for the intended purpose.

4.6
Operating Site Specifications

Operating site specifications are listed in the data sheet, Point 9. Details of the space required for installation, operation and maintenance are given in Point 5.2.1.

5.0
Assembly / Installation

5.1
Mounting Tools / Hoists

No special tools are required for the assembly and installation of the pump.

The customer must check the dimensions and weight of the seepex progressive cavity pump to ascertain whether the available hoisting apparatus is sufficient for the assembly and fitting of the pump.

5.2
Initial Assembly

5.2.1
Inspection Prior to Commencement of Assembly

5.2.1.1
Location

The place of installation for the pump must con-form with the site stated in the data sheet in Point 9. Any change of location must be checked and approved by seepex.

5.2.1.2
Space Requirements

Customers are responsible for determining the space requirements; the following factors must be taken into consideration:

- dimensions and weight of the machine
- required transport and hoisting equipment
- possible piping layout with allowance for the space allowing disassembly of the rotor as defined in 5.2.1.3
- freedom of movement to:
  operate the drive /
  speed regulation
  read speed and pressure indicators
  adjust a stator retensioning device, if fitted
  operate a buffer fluid supply unit, if fitted
- space required for lubrication / renewal of lubricants
- disassembly of mechanical protective devices, e.g. V-belt or coupling protection
- space required for handling the mounting tools, e.g. sufficient wall clearance

5.2.1.3
Space Allowing Disassembly of Stator P

A specific space must be allowed for exchanging the stator. The required dimension "P" is indicated in the index of these operating instructions or in the appended dimensional drawing, Point 9.

CAUTION

Ensure also that the pipe work can be dismounted at this location too.

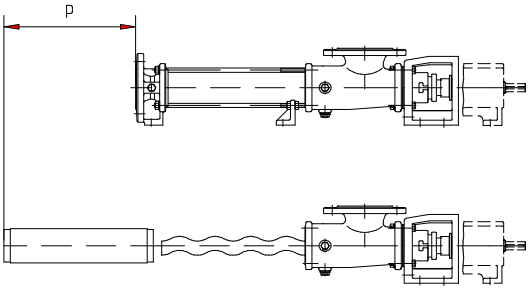

5.2.2
Installation of the Fully Assembled Pump

- Installation in conformity with data sheet
  Installation of the pump is permissible only in accordance with the data sheet specifications and the associated basic drawing, see Point 9. Any change in the position must be checked and approved by seepex.

- Tension-free mounting of pump
  This rule applies to pumps with and without drives, to versions with and without baseplate, for mounting on the foundation or other bearing elements. The entire area of all bearing surfaces of the machine must rest on the ground. Any unevenness must be corrected by appropriate supports.

- Correct seating of drives
  All drives have been aligned ready for operation and mounted by seepex. However, displace-ments may occur during transport or installation. For this reason, check that the alignment and fastening of the drive and coupling are correct.

- Protective devices
  On completion of the assembly and installation work, immediately mount all safety and protective devices in their proper locations and set them in operation.



5.2.3
Protective and Controlling Equipment

Information on equipment of this nature, where fitted, is provided in the data sheet, Point 9. Consult the attached manufacturer's specifications, Point 10, for instructions on assembly and installation.

5.2.4
Electric Connection of Electric Motor and Frequency Converter

The electric connections must be established in accordance with the manufacturer's specifications, Point 10, as well as the safety specifications applying at the installation site. The mains voltage and frequency must match the ratings indicated on the type and rating plates.



- Switch on electric motor „direct-on-line“

CAUTION

An increased starting torque is necessary due to the clamping between the rotor and stator conveying elements. This means the electric motors that drive the progressive cavity pumps must always be switched on directly. As a rule, star-delta startup is not possible unless special arrangements have been made with seepex.

Three-phase cage motor

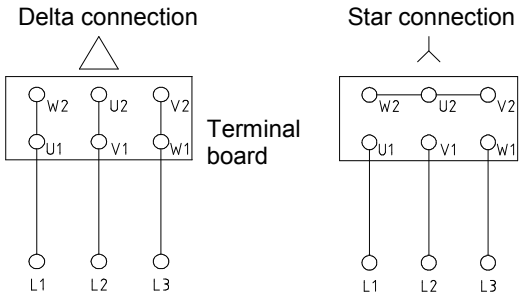

low . . . high . . .
. . . voltage indicated on rating plate

- Speed regulation via frequency inverter
  When progressive cavity pumps with frequency-controlled drives are started up problems may occur due to unsuitable or wrongly set frequency inverters. For this reason we recommend the purchase of the complete drive, including frequency inverter, from seepex, so that the frequency inverter can be tuned on the seepex test field along with a trial run.

  Ensure that customer-supplied frequency inverters comply with the starting torque and running power specified in the appended data sheet, Point 9.

CAUTION

Consult the appended document TI.FRU.01, see Point 9, for further information on the electric connection and the setting of frequency inverter and variable-speed motor.

5.2.5
Piping

5.2.5.1
Suction and Pressure Flanges

The position, nominal width and standard of the suction and pressure flange of the progressive cavity pump are specified in the dimension drawing, Point 9, and data sheet, Point 9. Always observe the rotational direction and flow direction defined in Point 6.2.5.

5.2.5.2
Piping Dimensioning

CAUTION

The pipe diameters on the suction and pressure sides must be dimensioned in accordance with the customer's pressure-loss calculation in such a way that the pressures specified in the data sheet, Point 9, are not exceeded. The nominal width of the suction pipe should at least match that of the pump suction flange.

5.2.5.3
Residue-free Piping

CAUTION

Prior to starting up the pump, ensure that all pipelines are free from foreign bodies. Installation residues (such as weld spatter, screws, steel chips etc.) will lead to damage of the **seepex** pump for which guarantee claims will not be accepted.

5.2.5.4
Tension-free Mounting

CAUTION

Pipelines and other components requiring to be connected with the pump must be mounted without stresses.

5.2.5.5
Fluid Connections for Optional Extras

Consult the data sheets, Point 9, for information regarding the optional extras, if any, that are fitted. The technical description is given under Point 9.

6.0
Commissioning/De-commissioning

6.1
Engineering Data

Details regarding all technical specifications and operating conditions are given in these operating instructions together with the data sheet, Point 9.

To guarantee the correct assignment of documentation to pump, the commission number on the
- cover sheet
- and data sheet of these operating instructions must match the commission number stated on
- the nameplate of the pump.

6.1.1
See Point 7.2.2 for Lubricant Chart

6.2
Preparation for Operation

6.2.1
Bearing

6.2.1.1
See Point 7.2.1.4 for pump bearing.

6.2.1.2
See manufacturer's documents, Point 10, for drive bearings.

6.2.2
Shaft Sealing

See document OM.SEA.__,.

6.2.3
Filling Up of Suction Side to Avoid Dry Running at Startup

CAUTION

Before switching on the pump, fill the suction-sided pump casing with fluid so that the first rotations will lubricate the conveying elements immediately. A small quantity of fluid is sufficient for lubrication; the subsequent operation of the pump is self-priming, even if an air column up to the liquid level remains.

6.2.4
Electric/Hydraulic Connections



The connections are listed in the appended manufacturer's documents, Point 10.



The risk of exposure to electrical hazards must be ruled out. Always observe the safety regulations valid at the site of installation.

6.2.5
Checking Direction of Rotation



The rotational direction of the pump determines the flow direction of the conveying medium.

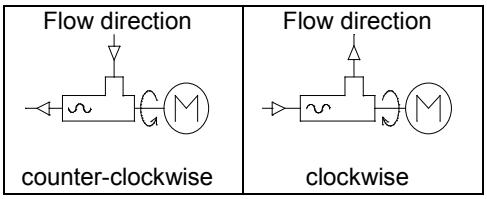

Prior to commissioning the rotational direction of the pump must be checked for compliance with the data sheet specification and the rotational direction arrow on the type plate of the pump.

6.3
Control and Monitoring Equipment

Where applicable, please refer to the associated documents, Point 10, for information on commissioning.

6.3.1
Performance Check

Any optional extras must be subjected to a performance check in conformity with the specifications by seepex or other manufacturers, see manufacturer's documents.

6.3.2
Setting

Unless already performed in the factory, setting must be carried out in accordance with the appended manufacturer's specifications, Point 10. Pay attention to the operating specifications in the data sheet.

6.4
Equipment for Protection of Persons

Machines must be fitted with mechanical protective devices complying with DIN EN 809.

- Moving or working parts must be protected against accidental contact.
- However, safety considerations demand it be possible at all times to check without hindrance whether the shaft seal is fully functional. A protective guard is necessary in this area only if components are mounted on the rotating, smooth shaft.



- If pumps are operated with an open suction flange/feed hopper, a suitable protective guard complying with DIN EN 294 must be mounted.
- Country-specific protective regu-lations must be observed at the site of installation. Prior to activation of the pump, check the proper function of all protective equipment.

6.5
Commissioning

6.5.1
Initial Startup/Re-starting

CAUTION

Every seepex progressive cavity pump is designed for the specific operating conditions documented in the data sheet. Commissioning is permissible only if the operating conditions conform with those indicated in the data sheet. Although the potential usages of the seepex pump are not confined to the specified operating conditions, any change in the original conditions must be checked and approved by seepex.

The right to make claims under the warranty agreement will be annulled if operating conditions are changed without prior approval by seepex.

6.5.2
Avoid Dry Running of Pump

CAUTION

The dry running of a pump increases the friction between rotor and stator, quickly causing an unacceptably high temperature to develop on the inner surface of the stator. This overheating leads to burning of the stator material and the total failure of the pump.

For this reason it is necessary to ensure that the suction-sided flow never dries up completely. If a continuous flow cannot be guaranteed for the plant, it is essential to fit the seepex dry running protection device TSE, available as an optional accessory.

6.5.3
Check Pressure at Suction and Pressure Flanges

6.5.3.1
Safeguard Pump Against Excessive Pressure at the Suction Flange

The seepex pump is designed to operate with the pressure at the suction flange (suction head or inlet pressure) specified in the data sheet. Deviating pressure conditions may lead to the failure and/or destruction of the shaft seal or entire pump.



For this reason the suction pressure specified in the data sheet must be guaranteed. Appropriate monitoring devices are oil-filled contact mano-meters that deactivate the pump.

6.5.3.2
Safeguard Pump Against Excessive Pressure at the Pressure Flange

The seepex pump operates according to the positive displacement principle. Operation of the pump against an excessive pressure caused by closed valves, by high pressure losses in the piping or by product sedimentation will lead to the destruction of the pump, drive, pipe work and/or downstream equipment. Every progressive cavity pump must therefore be protected against overpressure. Safety valves with bypass pipes or oil-filled contact manometers that disactivate the pump are appropriate protective devices.



6.5.4
Drive Engine

Consult the attached manufacturer's operating instructions, Point 10, for information on commissioning the drive engine.



6.5.5
Establish Clear Passage Through Pipelines

CAUTION

To prevent damage to the pump the unhindered flow of liquid must be guaranteed between the points of entry to and exit from the pipeline. For this reason, open all relevant valves etc. prior to activation of the pump.

6.6
De-commissioning

6.6.1
De-activation

The electric connections must be switched off and protected against accidental re-activation. Observe the safety regulations applying to the plants.



6.6.2
Stationary Pump

The pump and all optional equipment must be provided with the following protection modes while at a standstill:

- Frost protection
- Protection against solid particle deposits
- Protection against sedimentation of the medium
- Corrosion protection for parts in contact with the medium

We recommend that the pipeline and pump be emptied for the duration of the plant standstill. Following evacuation, the pump should be preserved.

6.6.3
Evacuation of the Pump

The pipeline must be evacuated on the suction and pressure side or shut-off directly behind the pump connections. Drain any residual liquid in the pump casing by opening/ removing the screwed sealing plugs (705) and (502), sealing rings (706) and (503). Casings without screwed plug must be evacuated by the connection branch (SAG and DRS). Refer to the data sheet and the sectional drawing of the associated operating instruction, Point 9, for information on the pump design. Conveying medium residues always remain in the rotor/ stator chambers and may run out during transport or disassembly of the pump. If conveying aggressive or hazardous media, therefore, wear appropriate protective gear during all installation work.



6.6.4
Disassembling the Pump

Dismantle the pipe work by removing the flange bolts (SCH) and flange seals (DFL) or the threaded connections (G).

Disassemble the pump together with the baseplate (GPU) or, as applicable, without the baseplate (GPU) following removal of the bolts (SCH) at the pump feet.

Block-design pumps with direct flange-mounted drive engine are liable to become unstable during disassembly. Stability can be restored by propping up the drive engine.



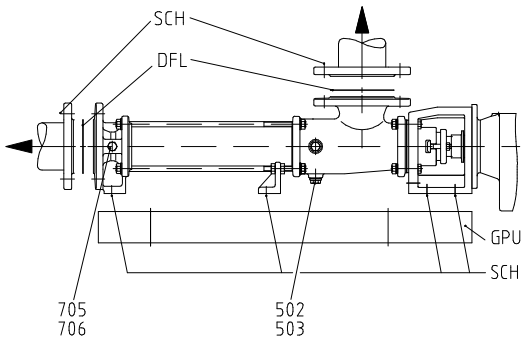

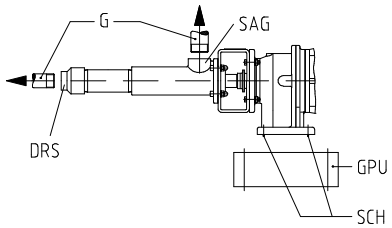

6.6.5
Preservation/Storage

The pump must be preserved prior to storage. Appropriate preservation measures must be agreed with **seepex**. Always state the pump commission number when making inquiries.

These operating instructions are valid for range MD (stainless steel-design) size 0015-24 to 012-24

7.0
Service and Maintenance

Contents
7.1 General Instructions
7.2 Service and Inspection
7.3 Dismantling
7.4 Re-assembly

The sectional drawing and parts list relevant for Points 7.3 and 7.4 can be found in Point 9.

7.1
General Instructions

A requirement for the reliable operation of any pump is service and maintenance in compliance with instructions. Maintenance personnel must therefore have access to these operating instructions and adhere to them meticulously. seepex will accept no liability for damages arising through non-observance of these operating instructions.

7.2
Maintenance and Inspection

7.2.1
Lubrication

7.2.1.1
Rotor and Stator

The rotor and stator are lubricated by the conveying medium.

7.2.1.2
Shaft Sealing

Consult document OM.SEA.__ for information on lubricating the shaft seal.

7.2.1.3
Pin Joint

The pin joints are filled with special grease and lubricated for the expected duration of service. The seepex joint grease specified in the index of these operating instructions should be used exclusively for any required maintenance work.

CAUTION

Usage of other grease types will lead to premature joint failure and render invalid any right to claims under guarantee.

7.2.1.4
Bearing of the Pump/Drive Engine

The bearing of the rotating pump parts is effected by the drive engine. Lubrication instructions are therefore included in the appended drive engine operating instructions.

7.2.2
Lubricant Filling Levels

Details are specified in the index.

7.2.3
Drives and Optional Extras



For maintenance and inspection specifications, see the appended manufacturer's documents.

7.2.4
Supervision during Operation

7.2.4.1
Shaft Sealing

See document OM.SEA.__.

7.2.4.2
Optional Extras

These must be monitored in accordance with the separate documents, Point 9/Point 10.

7.2.4.3
Drive Engines

These must be monitored in accordance with the separate manufacturer's documents, Point 10.

7.2.5
Preventive Measures

To avoid the expenses incurred by lengthy stop periods of the pump, seepex recommends the acquisition of a set of wearing parts and a set of gaskets. The contents are listed in the document OM.WPS.40.

7.3
Dismantling the seepex Progressive Cavity Pump

Tools are required for dismantling and re-assembly. These tools are listed in Point 9 of the document OM.SPT.01.

The stator (601) and the rotating pump parts can be exchanged in site. The rotating pump parts can be dismantled as a complete rotating unit (RTE) (Point 7.3.4) or as individual components (Point 7.3.5).

Before commencing the dismantling of pump parts, safeguard the pump against tipping over or falling down by fastening it at the drive (ANT).

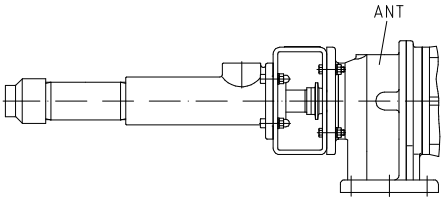

7.3.1
Pressure Flange (700) - Dismantling

Prior to dismantling see Point 7.3.2

CAUTION

Pressure branch (700) is glued in place with an adhesive of medium strength.
Therefore, to break the seal / adhesive compound it is recommended to heat upto a maximum of 80 °C.

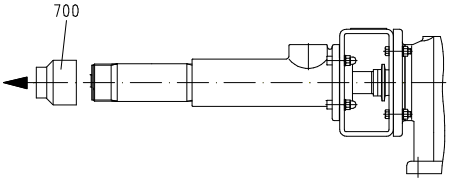

7.3.2
Stator (601) - Dismantling

- Maintenance tip:
  Disassembly of the stator can be made considerably easier by first moistening the inner surface of the stator with antiseize agent (soft or liquid soap). Before removing the pressure flange (700), pour the antiseize agent into the opening between rotor and stator on the pressure flange side. Several clockwise (see Point 6.2.5) revolutions of the rotor will then distribute the antiseize agent over the inner surface of the stator and reduce the friction between rotor and stator considerably.
- Lock drive shaft against rotation.

CAUTION

Stator (601) is glued in place with an adhesive of medium strength. Therefore, to break the seal / adhesive compound it is recommended to heat upto a maximum of 80 °C. Dismantling the stator (601) with tool (W13/see Point 9).

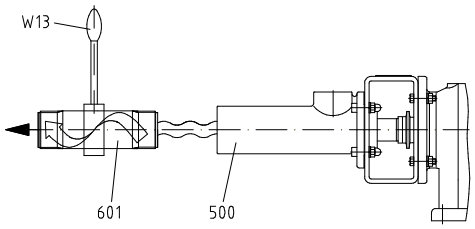

7.3.3
Suction Casing (500), Casing Gasket (501) - Dismantling

Fit the rotor (600) with a protective cover (SH).

CAUTION

Suction casing (500) with reducing unit (529)
Reducing unit (529) is glued in place with an adhesive of medium strength.
Therefore, to break the seal /adhesive compound it is recommended to heat upto a maximum of 80°C.

Suction casing (500) **without** reducing unit (529)

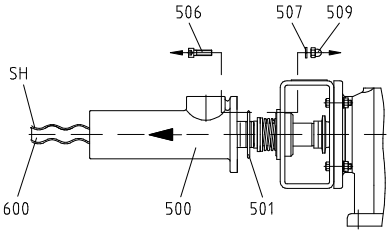

Suction casing (500) **with** reducing unit (529)

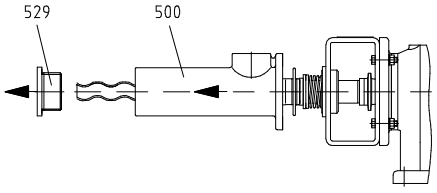

7.3.4
Rotating Unit (RTE) - Dismantling

CAUTION

Before dismantling the rotating unit it is essential to comply with the specifications in document OM.SEA.__ Shaft Seal Dismantling, see Point 9..

- Remove flushing connections at shaft seal housing (SEA).
- Raise/shift splash ring (310) and eject plug-in shaft pin (309) in horizontal direction.
- Remove rotating unit (RTE)/plug-in shaft (307), together with shaft seal (SEA) from output shaft of the drive (ANT). See Document OM.SPT.01, in Point 9 for tool (W10) used for pulling off.
- See in document OM.SEA.__ for removal of the shaft seal (SEA) from the plug-in shaft (307).

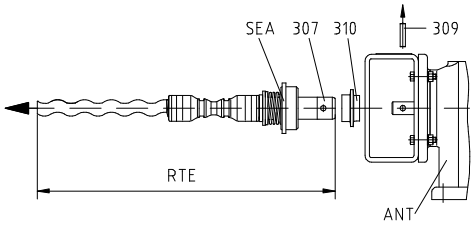

7.3.5
Rotating Pump Parts - Dismantling

7.3.5.1
Rotor (600), Coupling Rod (400)

Detach the rotor (600) and coupling rod (400) from the plug-in shaft (307) by dismantling the joint (G) in accordance with Point 7.3.6.

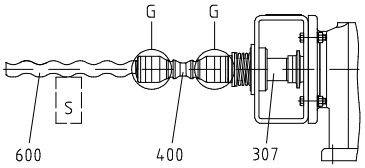

7.3.5.2
Plug-in Shaft (307)

The plug-in shaft (307) is removed in the same way as the rotating unit (RTE), see Point 7.3.4.

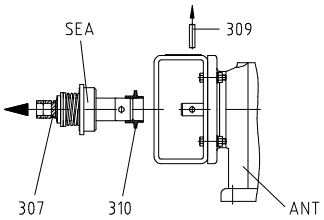

7.3.6
Dismantling of Joint

see document OM.PJT.04 Point 1.

7.3.7
Shaft Sealing

See document OM.SEA.__ for information on dismantling the shaft sealing.

7.3.8
Lantern (200)/Drive (ANT) - Dismantling

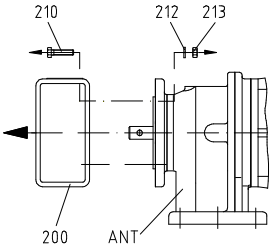

7.4
Re-assembly

Before commencing the re-assembly, fasten the drive (ANT) in such a way that it cannot tip over or fall down during the re-assembly of the drive and all pump components.



7.4.1
Lantern (200)/Drive (ANT) - Assembly

Clean flange bearing surfaces (FLS), centering diameter and output pivot of the drive (ANT).

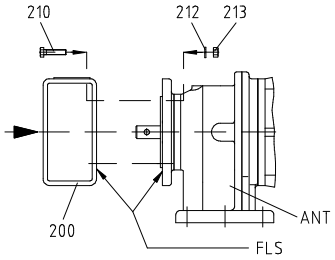

7.4.2
Rotating Unit (RTE) - Re-assembly

The rotating unit (RTE) has been assembled in accordance with the description in document OM.PJT.04

- Mount shaft seal (SEA) on plug-in shaft (307) in the way described in document OM.SEA.__, see Point 9.

- Moisten splash ring (310) and plug-in shaft (307) with joint grease (see index for type) and slide splash ring (310) onto plug-in shaft (307), observing the fitting position of the splash ring, (see lettering on the splash ring).
- Apply antiseize graphite petroleum to the output pivot of the drive (ANT) and slide on the rotating unit (RTE). Insert plug-in shaft pin (309) horizontally.
- Splash ring position (310)
  Outer edge of splash ring (310) has to occlude with outer edge of plug-in shaft (309).

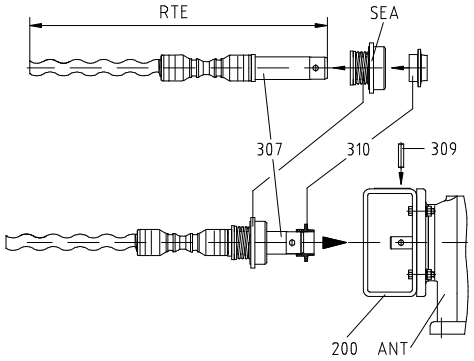

7.4.3
Rotating Pump Parts - Re-assembly

Prepare main components:
Prepare rotor (600), coupling rod (400) and plug-in shaft (307) as described in document OM.PJT.04 Point 2. to 2.3
Joint (G) re-assembly as described in document OM.PJT.04 Point 3.

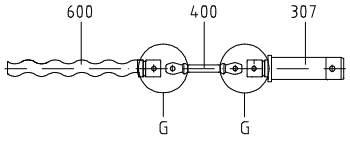

7.4.4
Suction Casing (500), Casing Gasket (501) - Re-assembly

Fit protective cover (SH) on rotor (600).
Assemble casing gasket (501) and suction casing (500).

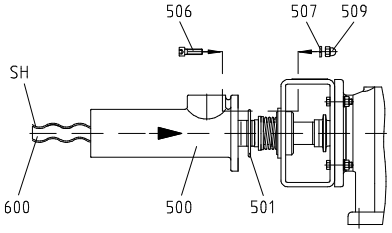

CAUTION

Install reducing unit (529) to suction casing (500) with an adhesive of medium strength

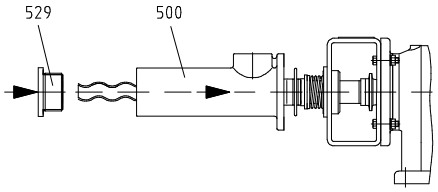

7.4.5
Stator (601) - Assembly / Re-assembly

Maintenance tip:
Disassembly of the stator can be facilitated considerably by first moistening the inner surface of the stator with antiseize agent (soft or liquid soap).
Before removing the pressure flanges (700), pour the antiseize agent into the opening between rotor and stator on the pressure flange side. Several clockwise (see Point 6.2.5) revolutions of the rotor will then distribute the antiseize agent over the inner surface of the stator and reduce the friction between rotor and stator considerably
Lock drive (ANT) shaft against rotation.

CAUTION

Install external thread of stator (601) with an adhesive of medium strength. Turn stator (601) to the right using a tool (W13/see Point 9), slip it onto rotor (600) and screw it into the suction casing (500) at the same time.

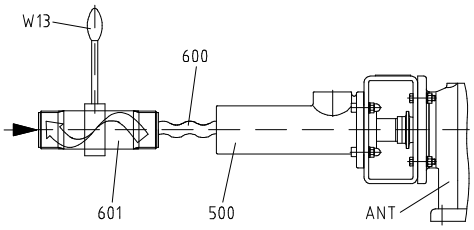

7.4.6
Pressure Flange (700) - Assembly

CAUTION

Install pressure branch (700) with an adhesive of medium strength

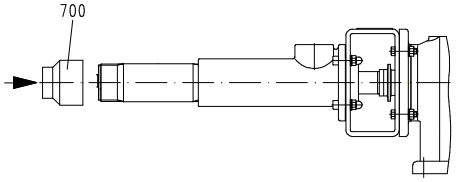

1.0
Dismantling of Joint

1.1
Holding Band (406) - Dismounting

Cut through loop (SCL) of the holding band (406) with a metal saw.

Wear protective goggles when squeezing out the two halves of the holding band loop (SCL).



Remove holding band (406).

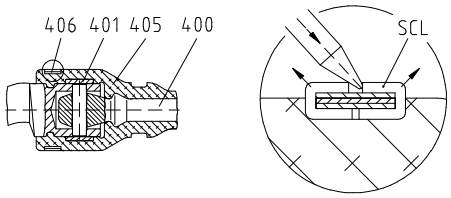

1.2
Rotor (600) - Dismantling

Withdraw universal joint sleeve (405) with retaining sleeve (401) in coupling rod direction and fix it by using a special maintenance tool (W15/see document OM.SPT.01)

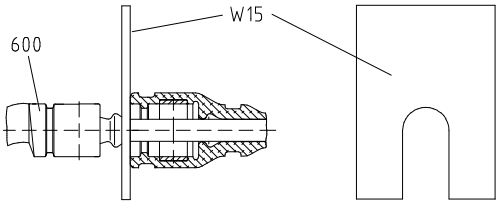

- **Separation of Joint**

  Eject coupling rod pins (402). Pull coupling rod (400) out of joint top.

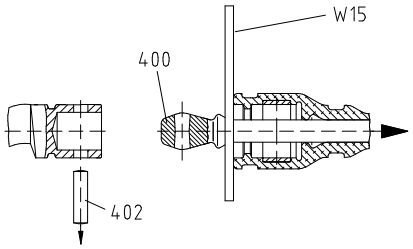

1.3
Universal Joint Sleeve (405)

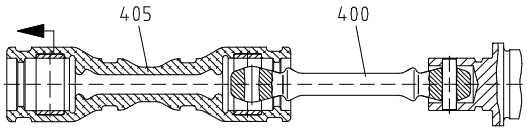

1.4
Coupling Rod (400)

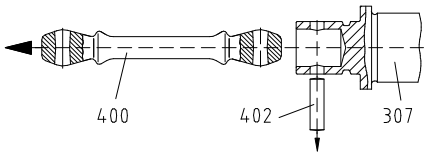

1.5
Retaining Sleeve (401)

Remove retaining sleeve (401) from universal joint sleeve (405).

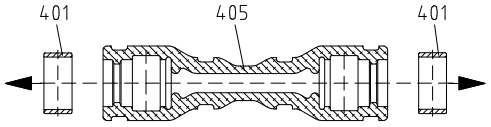

2.0
Prepare main components for Re-assembly

2.1
Rotor (600) - Preparation for Joint Assembly

First remove any burr, flaws or similar defects from the rotor, then clean it.
If the hole for the coupling rod pin (402) has worn out, a new rotor (600) has to be installed.

2.2
Coupling Rod (400) - Preparation for the Joint Assembly

Clean coupling rod and check top drilling regarding wear.

CAUTION

If the top drilling shows wear, a new coupling rod will have to be used.

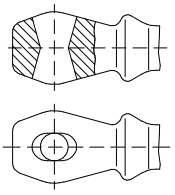

Correct top drilling

2.3
Plug-in Shaft (307) - Preparation for Joint Assembly

Remove any burr, flaws or similar defects from the plug-in shaft (307), then clean it.
If the hole for the coupling rod pin (402) has worn out, a new plug-in shaft (307) has to be installed.

3.0
Joint - Re-assembly

CAUTION

To ensure a perfect operation of the joints, coupling rod pins (402) and coupling rods (400) showing wear should be replaced. Refer to Point 2.2

3.1
Joint Grease (098)

Joint head at rotor (600) and plug-in shaft (307)
Fill joint head with joint grease (098).
(Regarding joint grease (098) refer to index of operating instruction)

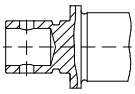

3.2
Coupling Rod (400)

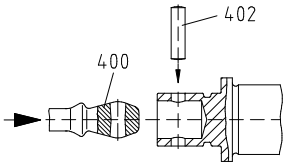

3.3
Retaining Sleeve (401)

Moisten both sides of retaining sleeve (401) with joint grease and insert this unit in universal joint sleeve (405).

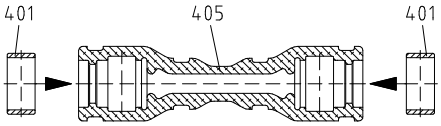

3.4
Universal Joint Sleeve (405)

Moisten surface of coupling rod (400) and inner surface of universal joint sleeve with joint grease Regarding joint grease (098) refer to index of operating instruction.
Slip universal joint sleeve (405) with fitted retaining sleeves (401) onto coupling rod (400) and joint head.

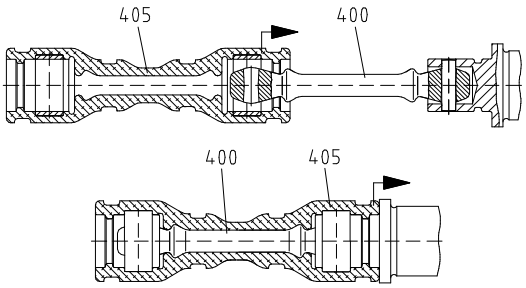

3.5
Rotor (600)

Push back universal joint sleeve (405) at rotor side towards coupling rod (400) and fix it using the relevant tool (W15/refer to document OM.SPT.01).

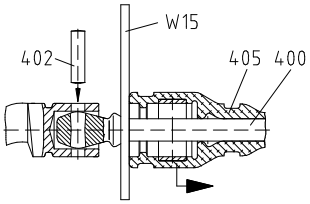

Slip universal joint sleeve (405) onto joint head.

3.6
Universal Joint Sleeve - Deaeration

Deaerate interior space of joint at the side of plug-in shaft and rotor using relevant tool/screw driver (WS)

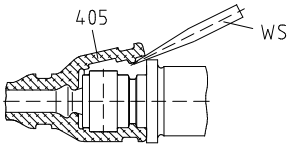

3.7
Holding Band Re-assembly

Mount holding band (406) using tool (W3/OM:SPT.01) as described in document OM.HBD.01.

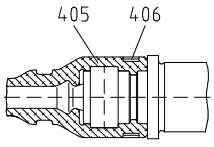

Holding Band (HBD) - Assembly

Tools required for the re-assembly, see document OM.SPT.01.

- Prepare holding band

  Only prefabricated double-band holding bands should be used. The diameter (∅) and in particular the breadth (b) of the holding band is matched to the universal joint sleeve.

- Test holding band

  The bent holding band (HBD) must fit against the holding band loop (SCL), if necessary apply pressure with the tool/pliers (WZ).

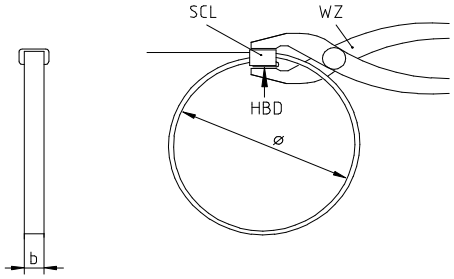

- Assembly of holding band

  Insert holding band in tool (W3/ see Point 9). Hold free end of holding band with control lever (EX), turn crank (KU) until the holding band is strained and fitting against the holding band loop (SCL). Carefully contract holding band until it fits inside the circular groove of the universal joint sleeve.

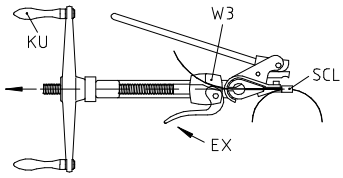

- Correct holding band tension (HBD)

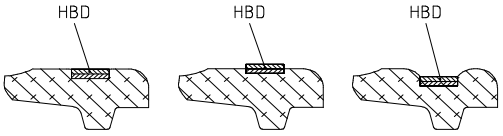

Correct
Holding band (HBD) has slightly con-tracted outer form of univers-al joint sleeve and is stuck in position.

Incorrect
Holding band (HBD) is too slack and liable to slip.

Incorrect
Holding band (HBD) is too tight. Universal joint sleeve will be damaged/sheared off.

- Folding back the holding band (HBD)

  Slowly swivel mounting tool upward by 60°, at the same time slackening the crank (KU) by approximately one half revolution. Swivel cutting lever (SH) forward until the pressure plate fits against the holding band loop (SCL).

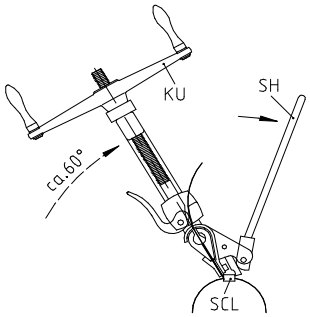

- Shearing off holding band (HBD) made of material AISI 304 and AISI 316

  A blow with the palm of the hand against the cutting lever (SH) causes the end of the holding band behind the loop (SCL) to be folded back and sheared off. If the holding band on the sheared off side is slightly raised as a result, it must be straightened carefully.

  CAUTION

  Never tap or hammer against the loop of the holding band (SCL), otherwise damage to the universal joint sleeve may occur.

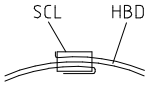

- Shearing off holding band (HBD) made of Hastelloy C

  The high strength of this material makes it impossible to shear off the holding band (HBD) with the cutting lever (SH). Once the end of the holding band is folded back, cut off the holding band (HBD), file off projecting edges and remove burr.

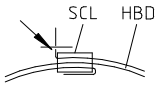

- Check after mounting of holding band

  The holding band must run all the way round the groove of the universal joint sleeve.

  The holding band (HBD) must be bent back and sheared off at the holding band loop (SCL) in such a way that the holding band (HBD) is unable to slip back through the holding band loop (SCL). If this has not been accomplished, then the holding band (HBD) must be replaced by a new one.

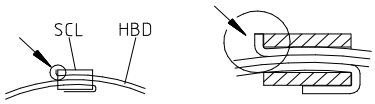

Breakdown											
pump has no suction	pump conveys irregularly	the conveying capacity is not achieved	pressure is not achieved	pump does not start	pump has seized or has stopped conveying	pump operates noisily	motor becomes too warm	the stator wears out early	shaft sealing leaks	seepex progressive cavity pumps will operate trouble-free if they are used in accordance with our data sheet (see item 9) and our operating and maintenance instructions:	
1	2	3	4	5	6	7	8	9	10		Reasons / Remedies
				X			X			a	Adhesion between rotor and stator excessive (as delivered). Lubricate (soft soap, genuine soap) between stator and rotor. Then turn the pump by means of the tool W2 .
X										b	Check rotational direction of the pump per data sheet and nameplate. In case of wrong direction, change wiring of motor.
X	X	X			X	X				c	Suction pipe or shaft sealing leak. Eliminate the leakage.
X	X	X				X				d	Suction head too high (item 6.5.3.1). Check suction head with vacuum gauge. Increase the suction pipe diameter and fit larger filters. Open the suction valve fully.
X	X	X								e	Viscosity of the liquid too high. Check and accommodate per data sheet.
		X		X			X			f	Wrong pump speed. Correct pump speed per data sheet.
	X	X								g	Avoid inclusions of air in the conveying liquid.
		X		X	X		X	X		h	Pressure head too high (point 6.5.3.2). Check pressure head with manometer. Reduce the pressure head by increasing the pressure pipe diameter or by shortening the pressure pipe.
X	X	X			X			X		i	Pump runs partially or completely dry (point 6.5.2). Check flow in the suction chamber. Install dry running protection TSE.
						X	X			j	Check coupling, possibly pump shaft is misaligned to drive. Check whether coupling gear is worn. Realign coupling. The coupling gear has perhaps to be replaced.
X		X								k	Speed too low. Increase the speed when high suction performances are required and when the liquid is very thin.
X	X					X				l	Speed too high. Reduce the speed when pumping products with high viscosities - danger of cavitation.
						X				m	Check the axial play in the coupling rod linkage. Check that the bush has been installed correctly see document OM.PJT.__.
X		X		X	X			X		n	Check for foreign substances in the pump. Dismantle the pump, remove foreign substances and replace worn parts.
X		X	X		X					o	Stator or rotor worn. Dismantle the pump and replace defective parts.
X		X			X	X				p	Joint parts worn. Replace worn parts and fill with special pin joint grease .
X		X			X			X		q	Suction pipework partially or completely blocked. Clean suction pipework.
X				X	X		X	X		r	Temperature of the pumping liquid too high. Excessive expansion of the stator. Check temperature and install rotor with diameter smaller than specified.
X		X		X			X		X	s	Gland packing too strongly tightened or worn. Ease or tighten stuffing box. Replace defective packing rings.
X				X	X			X		t	Solid contents and/or size of solids too large. Reduce pump speed and install perhaps a screen with suitable meshes. Increase fluid share.
X				X				X	X	u	When the pump is non operational the solids settle out and become hard. Clear and flush the pump immediately.
X				X	X			X	X	v	The liquid becomes hard when temperature falls below a certain limit. Heat the pump.
				X	X		X	X		w	Stator swollen and unsuitable for the pumped liquid. Select a suitable stator material. Use perhaps rotor with diameter smaller than specified.
						X			X	x	The bearing in the drive casing of the pump or in the drive engine is defective. Replace bearing.
									X	y	Mechanical seal defective. Check seal faces and O-rings. If necessary replace corresponding defective parts.

9.0
Auxiliary seepex documentation

seepex.com
Inc.

seepex
Inc.
511 Speedway Drive
Enon, OH 45323
Phone (937) 864-7150
Fax (937) 864-7157
sales@seepex.net
www.seepex.com

Data Sheet 822813-822815 Page 1

seepex			
date	05/12/09	**commission no.**	822813-822815
customer	John Meunier		
seepex job no.	2109552	**item/denomination**	5357/0500 item 3
project	P.O. 015382		
3 of	**seepex progressive cavity pump** **type MD 012-12 / A6-A7-A7-F0-GA-X** **X = 0802, 17T, 20A7**		

conveying product			C.289.CH
denomination	Poly Aluminum Silicate Sulphate		
rate of solids	no advice	**viscosity**	ass < 500 cPs
size of solids	no advice	**pH-value**	ass. 5 – 9
specific gravity	ass. 1.0	**temperature**	32 – 113 F
composition	no advice		
remarks			

performance data	**nom.**	**min**	**max**	
conveying capacity	-	9	87	**l/h**
pump speed	-	25	242	**rpm**
press in press. branch	-	30	30	**psig**
press in suct. branch	flooded suction ass.			
differential pressure	30 **psi**	**operating torque**	1	**lb. ft.**
required drive power	0.01 **Hp**	**starting torque**	8	**lb. ft.**
remarks				

technical pump data			
range	MD	**kind of install.**	horizontal
size	012	**direction of rot.**	counter clockwise
pressure stage	12	**pos. of branch**	1

component	**material**	**design/option**
lantern	steel St 37-2	standard
suction casing	1.4408 / 316	standard
suction connection		1” NPT
pressure branch	1.4408 / 316	
pressure connection		1/2” NPT
joint	standard	standard
grease	30321	
joint seal	NBR - Perbunan	
coupling rod	1.6582	standard
rotor	1.4571 / 316Ti	standard
stator	NBR - Perbunan	TSE Design / Stainless steel sleeve
o-ring	FPM - Viton	
mechanical seal casing	1.4571 / 316Ti	Single Acting Mechanical Seal
mechanical seal		Burgmann MG1-025/G60 AQ1 VGG
plug-in shaft	1.4571 / 316Ti	drilled ϕ19x35
special designs	**TSE controller and pump end components**	

general operating data				
kind of operation	continuous operation - 8 h/day			
site of installation	indoor dry atmosphere			
remarks				
drive				
type	Gearbox			
make	Nord	**ratio**	**i=11.27**	
model	SK02XF-56C		**nom. / min- max**	
mounting position	B3/B5	**output speed**	155 / 25 - 242	**rpm**
flange dia	120 mm	**motor speed**	1750 / 282 - 2727	**rpm**
output shaft	716/M120-002C4	**frequency**	60 / 8 - 78	**Hz**
electric motor				
manufacturer	Marathon	**voltage**	3x 575 VAC	
nominal power	1/2 Hp	**rated frequency**	60 Hz.	
mounting position	B5	**protection**	IP55	
starting	direct at freq inv.	**thermal class**	F	
special	**Black Max Y555 (56H17T5311); Frame Size 56C**			
dry running protection device				
model	TSE – 115 VAC	**voltage**	110-115 VAC / 50/60 Hz.	
delivery scope				
remarks	TSE with NPT connections			
painting				
execution	standard			
color	Blue (RAL 5013)			
remarks				
packing				
packing type	Box			
marking	2109552			
documentation				
dimensional drawing no.	100116	**operating manual**	1 copy English	
sectional drawing no.	103-007_2			
shaft sealing sect. view	103-0GB/M120-0-129A4			
remarks				

additional accessories / special designs / remarks

Copyright: This drawing is our property and patented for us according to the law of copyright and associated rights !

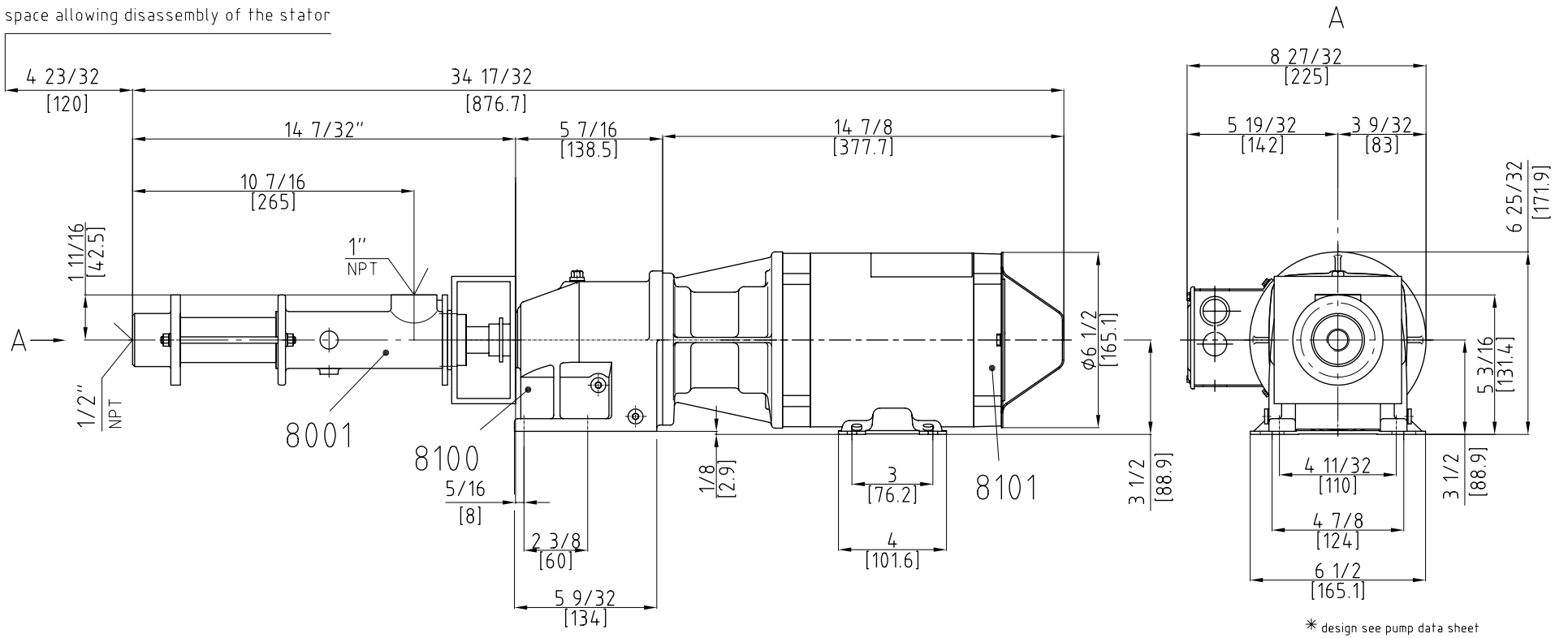

all dimensions in [....] are in millimeters

Quant.	Denomination	Item	Material	Note	Weight / kg
1	motor: Marathon Y555	8101			18
1	gear: SK02XF-56C	8100			20
1	pump: MD/MDP 012-12 / 025-6L / 025-12T / 05-12T	8001			4

		Name	Day	Scale	Weight	Denomination
2009	Drawn	aon	15.05	◎▷ 1:5	42 kg	dimensional drawing
	Checked	sbe	18.05	EDP-No. 100116.dwg		Drawing-no. 103-C37/M120-C-704A4

seepex.com

seepex, Inc.
511 Speedway Drive
Enon, OH 45323
www.seepex.com

changes of dimensions reserved

Characteristic Curves
Size
012–12

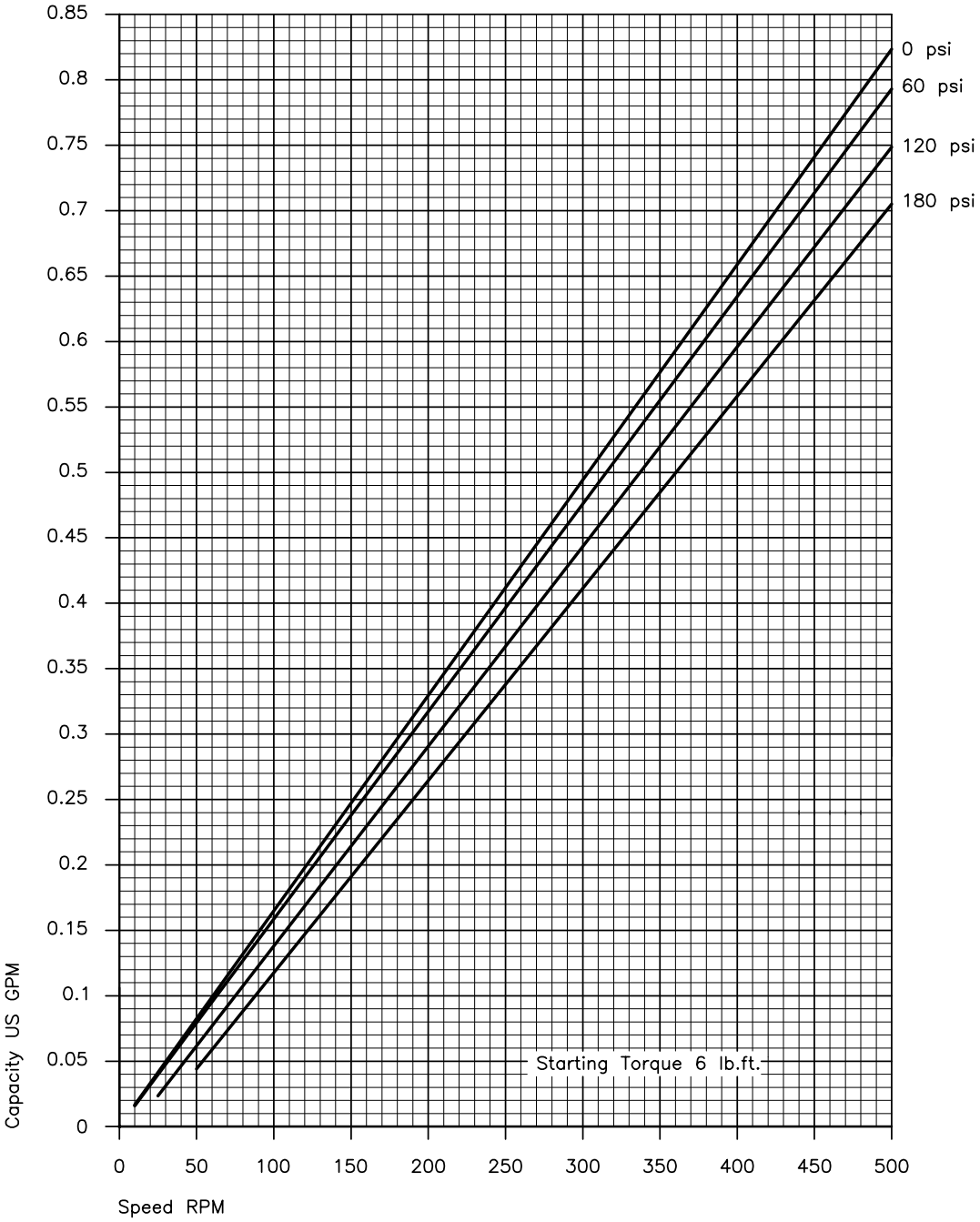

Values based upon water 68°F

CHA.012–12.s B 01.03us

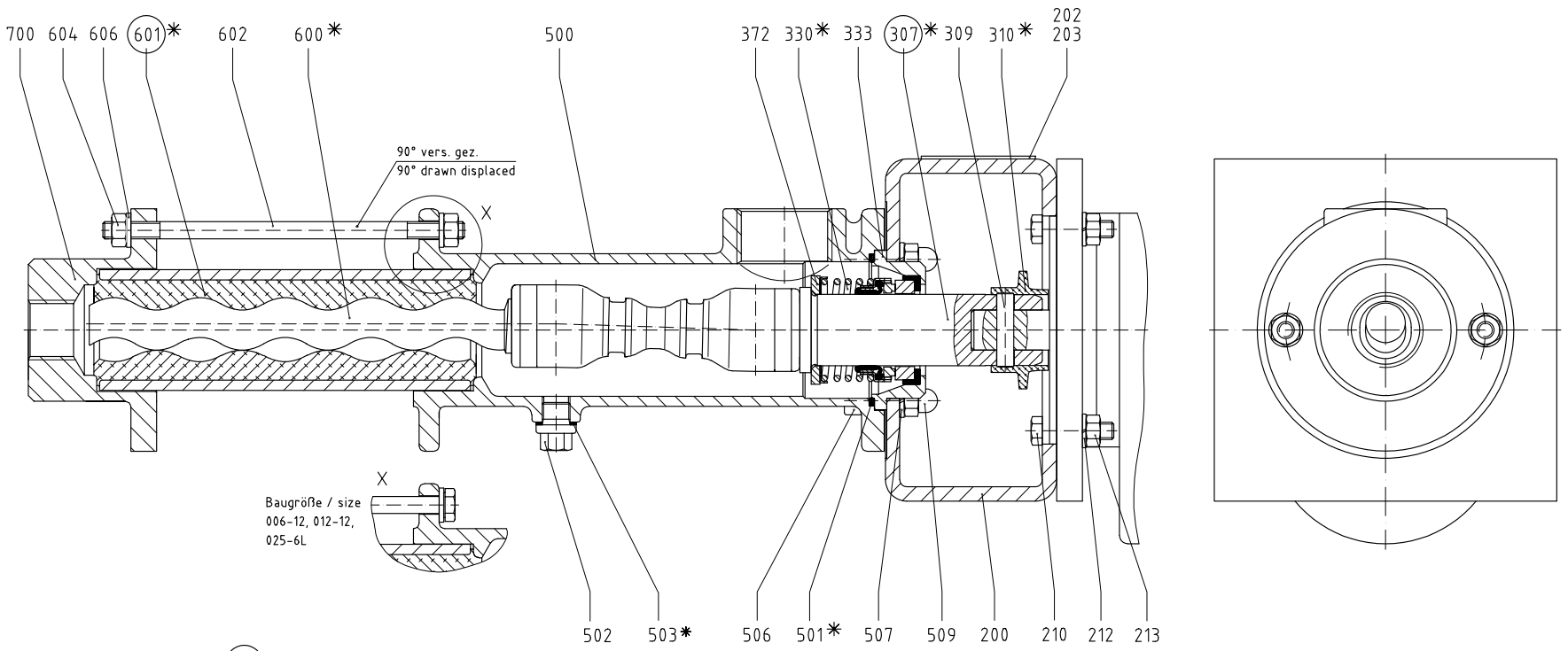

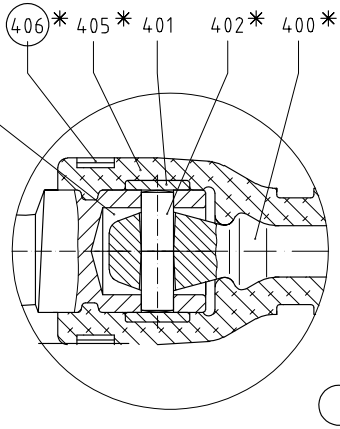

seepex Gelenkfett

Typ und Füllmenge:
Betriebs- und Wartungsanleitung entnehmen

seepex joint grease

type and filling quantity:
see operating and maintenance instruction

Werkzeug
Betriebs- und Wartungsanleitung entnehmen

tool
see operating and maintenance instruction

* Verschleißteile und Dichtungen
Betriebs- und Wartungsanleitung entnehmen

Wearing parts and sealings
see operating and maintenance instruction

Werkstoff-Ausführung 4440-,
material-construction 4440-,

Stück Unit	Norm Standard	Pos./Item	Benennung/Denomination Zeichnungs-Nummer/Drawing-Number	Werkstoff/Material	Bemerkung/Remark	Gewicht Weight kg

seepex.com

seepex
GmbH + Co KG
Schornhölzstraße 344
46240 Bottrop
www.seepex.com

Allgemeintoleranzen für Maße ohne einzelne Toleranzeintragung DIN ISO 2768-mittel	Ausgabe Issue	Änderung Modification	Name Name	Datum Date
General tolerances for mass without individual tolerance entry DIN ISO 2768-average				
Rauheit für Oberflächenzeichen DIN ISO 1302 Reihe 2				
Roughness for surface finish indication DIN ISO 1302 Reihe 2				

Maßstab/Scale: %

Werkstoff/Material

Gewicht/Weight

Bezeichnung/Denomination
Schnittzeichnung Baureihe "MD"
sectional drawing range "MD"
mit 2 Spannschrauben
with 2 tie bolts

	Name Name	Datum Date
Bearbeitet/Drawn	ov	18.08.1997
Geprüft/Checked	hue	18.08.1997
Normiert/Standard		
Gedruckt/Printed		

Zeichnungs-Nummer/Drawing-Number
103-007A2

EDV-Nr./EDP-No. L:\LFDZCHNG.245\24646

Ersatz für/Replacement for:

Ersetzt durch/Replacement by:

Urheberrechtsschutz: Diese Zeichnung ist unser Eigentum und uns nach dem Gesetz über Urheberrecht und verwandte Schutzrechte geschützt.
Protection of Copyright: This drawing is our property and is protected acc. to the law referring to copyright and related protective laws.

Stückliste
Parts List
Liste des pièces

Stck.	Pos.	DE **Baureihe MD** **Schnittzeichnung Nr. 103-007_2** **Benennung Stck. / Pos.**	GB **range MD** **sectional drawing No. 103-007_2** **denomination Qty. / item**	FR **série MD** **plan no. 103-007_2** **désignation Qté. / Poste**
1	200	Laterne	lantern	lanterne
2	202	Halbrundkerbnägel	round head grooved pin	rivet
1	203	Typenschild	type plate	plaque signalitique
4	210	6kt-Schraube	hexagon bolt	vis
4	212	Federring	spring washer	rondelle frein
4	213	6kt-Mutter	hexagon nut	écrou
1	307	Steckwelle	plug-in shaft	arbre à broche
1	309	Steckwellenbolzen	plug-in shaft pin	cheville pour arbre à broche
1	310	Spritzring	splash ring	bague de projection
1	330	Gleitringdichtung	mechanical seal	garniture mécanique
1	333	Gleitringdichtungsgehäuse	mechanical seal casing	carter de la garniture mécanique
1	372	Stützring	support ring	bague d'appui
1	400	Kuppelstange	coupling rod	barre d'accouplement
2	401	Gelenkhülse	retaining sleeve	douille d'articulation
2	402	Kuppelstangenbolzen	coupling rod pin	axe d'articulation
1	405	Manschette	universal joint sleeve	manchette
2	406	Halteband	holding band	collier de serrage
1	500	Sauggehäuse	suction casing	carter d'aspiration
1	501	Sauggehäusedichtung	casing gasket	étanchéité du carter d'aspiration
4	506	Zylinderschraube	socket screw	vis à tête cylindrique
4	507	Federring	spring washer	rondelle frein
4	509	6kt-Mutter	hexagon nut	écrou
1	600	Rotor	rotor	rotor
1	601	Stator	stator	stator
2	602	6kt-Schraube	hexagon bolt	vis
2	604	6kt-Mutter	hexagon nut	écrou
2	606	Scheibe	washer	rondelle
1	700	Druckstutzen	pressure branch	bride de refoulement
	098	seepex Gelenkfett Typ und Füllmenge: Betriebs- und Wartungsanleitung entnehmen	seepex joint grease type and filling quantity: see Operating and Maintenance Instruction	seepex graisse d' articulations sommaire pour type et quantité: voir Instructions de service et d'entretien
		Verschleißteile und Dichtungen: Betriebs- und Wartungsanleitung entnehmen	Wear parts and sealings: see Operating and Maintenance Instruction	pièces d'usure et étanchéités: voir Instructions de service et d'entretien
		Werkzeuge: Betriebs- und Wartungsanleitung entnehmen	Tools: see Operating and Maintenance Instruction	Outils: voir Instructions de service et d'entretien
		versetzt gezeichnet	drawn displaced	plan separé

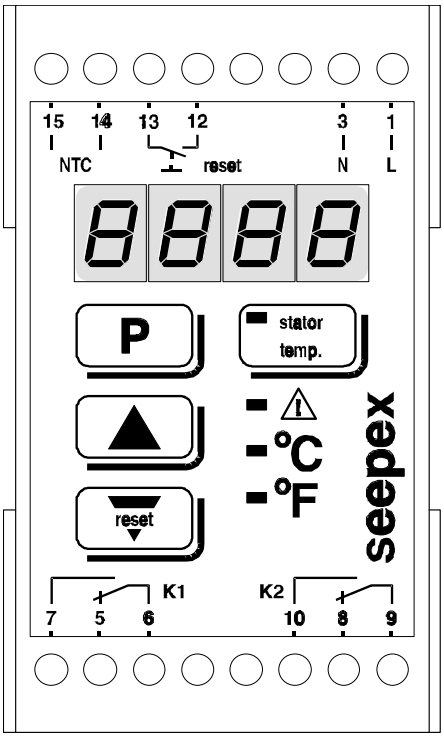

CONTENTS:

1.0 General

1.1 Introduction
1.2 Function

2.0 Technical Data

2.1 Temperature Sensor
2.2 TSE Control Device for Installation in Control Panel

3.0 Electrical Connection of the TSE

3.1 Installation Instructions
3.2 Connection Diagram of TSE Control Device
3.3 Relay Function

4.0 Procedures prior to Commissinong

4.1 Check Position of the Temperature Measuring Point at the Pump
4.2 Function Check
4.3 Approximate Adjustment of Trip Temperature

5.0 Commissioning and Operation

5.1 Fine Adjustment of Trip Temperature
5.2. Resetting of the Control Device after Dry-Running
5.3 Changeover of Display from ºC to ºF

6.0 Replacement of Stator

6.1 Order of Replacement Stator
6.2 Dismantling and Re-Assembly of Connection Head and Temperature Sensor

7.0 Malfunction

7.1 General
7.2 Function Check of Sensor Circuit
7.3 Function Check of TSE Control Device

8.0 Enclosures

. 8.1 Drawing 702-000/0000-0-009 __ for sizes 006-12 and 025-6L
. 8.2 Drawing 702-000/0000-0-008 __ for Sizes 025-12 up to 500-6LA
. 8.3 Additional Information ZU.TSE.02 for TSE Motor Control
. 8.4 Additional Information ZU.TSE.03 for TSE in Explosion Proof Construction

1.0 General

1.1 Introduction

Progressive cavity pumps should generally be protected against dry-running. Due to the increased friction between the main conveying elements ie. rotor and stator, which occurs in the event of dry-running the pump, the temperature at the internal surface of the stator can quickly rise depending on the pump speed.
When exceeding the max. permissible operating temperature the internal surface of the stator will burn and cease operation. If this occurs the stator needs to be replaced. The possible malfunction of an progressive cavity pump can be easily avoided by using the patented dry-running protection device TSE.

1.2 Function

The general operating principle of the dry-running protection device TSE is to continuously monitor the temperature in the stator and to trip the pump when reaching a limit temperature. The temperature in the pump stator is compared with the pre-set trip temperature via a NTC temperature sensor, which is fitted in the stator of the pump as well as the TSE control device, which is positioned in the control panel. In case of dry-running of the pump and a temperature increase in the stator up to the pre-set switch-off value, two relays will switch.

The drive motor of the pump will be switched-off via the potential-free changeover contacts and a fault message will be released. After rectification of the cause of the dry-running and the cooling down of the stator, the fault message at the TSE device can be acknowledged and the pump can be switched on again.

By acknowledging the fault message an automatic re-connection without inspection and correction of the cause of the dry-running is avoided.

2. 0 Technical Data

2.1 Temperature Sensor

The NTC thermister is installed in a stainless steel protection sleeve in the stator of the pump.
Permissible Temperature Range: 0-150 ºC
Standard Resistance: 10 kOhm at 25 ºC

Temp. °C	Resistance Ohm	Temp. °C	Resistance Ohm
0	32.650	70	1.752
10	19.900	80	1.255
20	12.490	90	915
25	**10.000**	100	678
30	8.057	110	510
40	5.327	120	389
50	3.603	130	301
60	2.488	140	235

2.2 TSE Control Device for Installation in Control Panel

2.2.1 Technical Data

Type:	SGRTSE 230 AC, SGRTSE 115 AC, SGRTSE 24 AC, SGRTSE 24 DC
Temperature Range:	0-150 ºC
Input:	NTC temperature sensor 10 kOhm (at 25 ºC) with sensor breaking protection at - 25 ºC.
Relay Output: changeover	2 potential-free contacts (K1,K2), breaking capacity 500 VA at 110/230 V Ohmic load.
Deliverable Operating Voltage:	24V, 115V, 230V AC; 24V DC
Power Consumption:	max. 4VA
Sensor Circuit:	No load voltage max. 2.5 VDC Short circuit current 0.5 mA DC
Display at Device:	Fault/Dry Running Trip temperature Stator temperature
Operation at Device:	Adjustment of trip temperature. Reset of fault message.
Casing Material:	ABS
Fastening:	Mounting on standard rail 35 mm acc. to standards or screw fixings acc. to standards
Kind of Protection:	Casing IP 40 Terminals IP 20
Ambient Temperature:	0-50 ºC
Dimension:	45x75x110 mm (WxHxD)
EMV (89/336/EEC)	CE conform acc. to standards

2.2.2
Dimensions and Wall Mounting

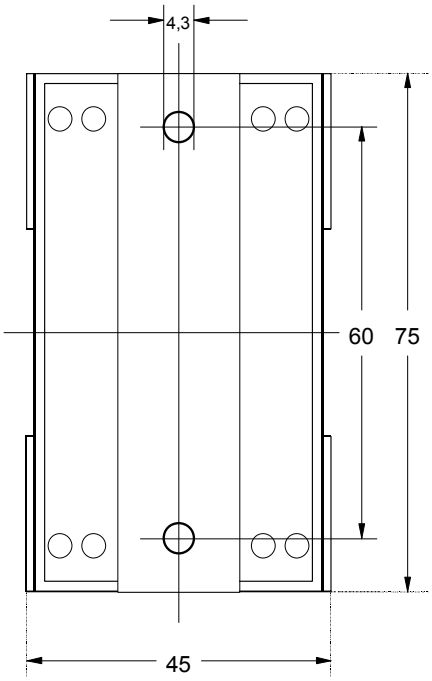

Installation Depth = 110 mm

3.0
Electrical Connection of the TSE

3.1
Installation Instructions

Prior to the connection and the commissioning of the device it has to be ensured that the supply voltage corresponds to the nominal voltage shown on the name plate. Nominal voltage fluctuations are permissible in the range of +/- 10 % of the device's nominal voltage.

The electrical connections have to be carried out in accordance with the wiring diagram and the regulation of the local EVV or the VDE directions.

In case of power fluctuations which lead to a malfunction of the device, adequate procedures have to be taken to avoid its reoccurrence. Alternatively these errors could be filtered out by an external supply filter. The device has to be provided with an internal supply filter.

Sensor leads have to be shielded. The shield has to be earthed at one end.

3.2
Connection Diagram of TSE Control Device

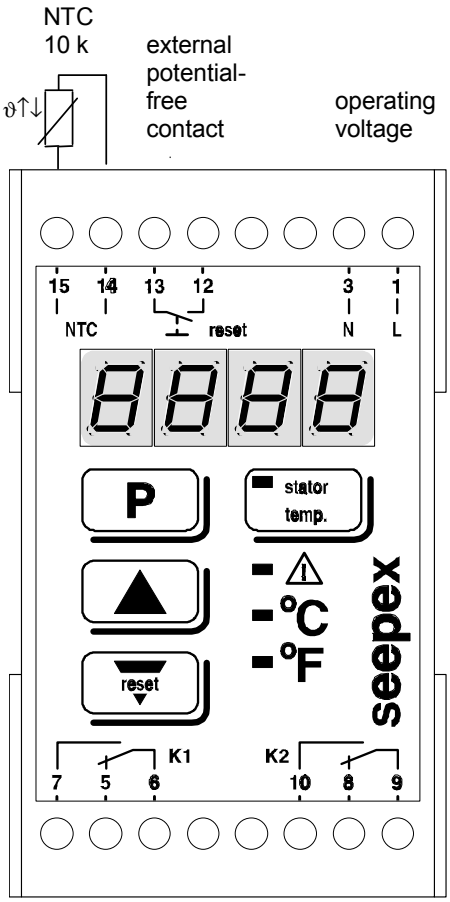

Should the TSE control device be reset after a dry-running from the control panel door or another remote position, a button ("make contact") at the terminals 12 +13 can be used.

3.3.
Relay Function

Actual temperature ‹ trip temperature
(trouble free operation)
Contacts 6 to 7 and 9 to 10 closed
Contacts 6 to 5 and 9 to 8 open

Actual temperature › trip temperature
(Malfunction/Dry Running)
Contacts 6 to 5 and 9 to 8 closed
Contacts 6 to 7 and 9 to 10 open

Relays K1 and K2 are switched parallel to each other and operate simultaneously. K1 is integrated in the motor contactor control serving as a switch-off provision. K 2 is optional as stand by for additional connection to a fault indicator or as a reserve to the process control computer.

4.0
Procedures prior to Commissioning

4.1
Check Position of the Temperature Measuring Point at the Pump

Considering the rotating direction and thus the conveying direction of the pump, the temperature sensor is fitted in our factory as per the following figures.

When changing direction of the pump and when replacing the stator the specified installation position of the temperature measuring point has to be checked. The temperature sensor must always be installed at the product entry side of the stator as the quickest temperature increase in case of dry-running will arise at this point.

4.1.1
Pump "counter clockwise rotation" - standard construction

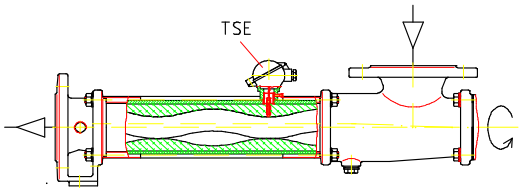

4.1.2
Pump "clockwise rotation" special construction

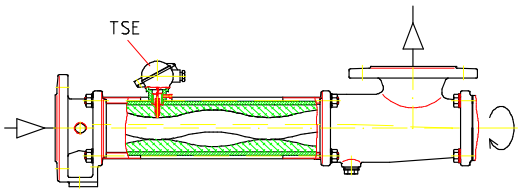

4.2
Function Check

After the electrical connection of the TSE and prior to the initial operation of the pump the following function check has to be carried out.

Switch-on control voltage at terminals 1 and 3 (Digital display at the TSE control device illuminates).

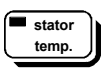

Press and hold button "stator temp" and read the temperature value.

If the shown temperature correspond to the ambient temperature in the pump the TSE is functioning correctly. In case of deviation proceed as per paragraph 7 - Malfunctioning.



4.3
Approximate Adjustment of Trip Temperature

The TSE control device is pre-set to a trip temperature of 50 ºC prior to leaving our factory. In order to achieve the shortest trip time after a dry-run and thus the max. protection of the pump stator, the trip temperature at the TSE control device has to be set as low as possible.

For the initial commissioning the temperature value pre-set in our factory should be maintained. Should the product have higher temperatures the value has to be adjusted to 20 to 30 ° C above the temperature of the conveying product.

Switch on control voltage. After self-check of the control device the actual pre-set temperature will show at the display.



Press and release button. Adjusting Mode is activated. The displays shows alternately "set" and the last set trip temperature.



Increasing the trip temperature - press button and release.
The adjusted temperature increases by + 1ºC. Press button and hold approx. 3 seconds in + 10 ° C steps.



Decreasing of trip temperature - press button and release.
The adjusted temperature decreases by - 1º C. Press button and hold approx. 3 sec. in - 10º C steps.



Press and release button. Return the unit to the operating mode. The adjusted trip temperature is transferred to a continuous memory and shown on the display.

Note: During the adjusting mode, if a button is not pressed within 10 seconds the controller automatically returns to the operating mode and disregards any previous adjustment.

Following the above approximate instruction, the seepex pump can operate for a limited period of time (approx. 1 hour). Then a correction of the adjustment according to paragraph 5 - Fine Adjustment - has to be carried out.



5.0 Commissioning and Operation

5.1 Fine Adjustment of the Trip Temperature

Following the instruction for approximate adjustment in paragraph 4.3 the seepex pump has to operate for at least 30 to 60 minutes to allow the operating temperature in the stator become stable.

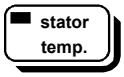

While the pump is in operation the temperature of the pump is shown on the display of the TSE controller by continuously pressing the button.

The final trip temperature has now to be set 10 ºC higher then the indicated operating temperature according to the instructions in paragraph 4.3.

Attention

For all adjustments the max. product temperature occurring during operation has always to be considered. In case of a product temperature higher than 40 ºC, it always has to be checked if this is mentioned in the data sheet of the pump and has therefore been considered in the rotor/stator design. If the temperature shown on the data sheet does not correspond to the actual temperature, please contact seepex.

5.2 Resetting of the Control Device after Dry-Running

In the event of dry-running of the pump and temperature increase in the stator above the pre-set limit value, the installed relays trip and maintain locked in this position. After the pump has cooled down the remaining fault message (red LED) has to be acknowledged using one of the following procedures, so that the relay will be reset.

5.2.1

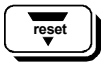

Press at the TSE control device for at least 1 sec.

5.2.2

Switch-off operating voltage at TSE control device (terminals 1-3).

5.2.3

With external contact (reset button, closed for at least 1 sec.)

5.3 Changeover of the Display from ºC to ºF.



Press and hold button for 10 secs. until display changes over.

The selected temperature units are shown via an LED next to the Symbol ºC or ºF.

6.0 Replacement of Stator

6.1 Order of Replacement Stator

When ordering a replacement stator for a seepex pump, please quote:

Stator drilled for TSE fitted with sensor sleeve in 1.4571.

If the pump is used to convey highly corrosive products where 1.4571 material is not resistant, a sensor sleeve made of 2.4610 (Hastelloy C4) has to be ordered.



Attention

The sensor sleeve is fitted in our factory. It is pre-set for operation and may not be adjusted.

6.2 Dismantling/Re-Assembly of the Connection Head and Temperature Sensor.

The following drawings apply:

- For TSE in elastic stators:
  Drawing No. 702-000/0000-0-009 __
  for pump sizes 006-12 and 025-6L.

  Drawing No. 702-000/0000-0-008 __
  for pump sizes 025-12 to 500-6LA.

- For TSE in fixed stators:
  Drawing No. 702-000/0000-0-005 __

6.2.1 Dismantling

Lift the cover of the connection head and disconnect wires of the temperature sensor. After having loosened the side screw slide the connection head off the threaded sleeve. Remove threaded sleeve from the stator and remove clamping ring, rubber ring and temperature sensor from sensor sleeve. The temperature sensor cannot be re-used and can thus be disposed off with the damaged stator.

6.2.2
Re-Assembly

The items mentioned in paragraph 6.2.1 have to be re-installed into the new stator. It is vital to consider the temperature measuring point when installing the stator (refer to paragraph 4.1).

Do not further adjust or change the sensor sleeve setting as this has already been done in our factory.

Remove protective pipe (protective transport packaging).

Push the thermistor sensor with clamping screws and rubber ring to the bottom of the sensor sleeve and adjust.

Screw the threaded sleeve with 2 O-Rings in the tapped hole at the stator.

When installing the connection head, the connection wires of the thermistor sensor must be threaded through the hole in the junction box. After fastening the connection head on the threaded stator barred, recannect wires and put the cover back onto the connection head.

7.0
Malfunction

7.1
General

Fault messages and switch-off of the pump without actual dry-running or overload might be caused by a defect in the temperature sensor wire, the TSE control device or other electrical switch devices.



The following reasons might have caused this error alarm at the TSE control device:

break of sensor or line
short circuit of sensor or line
measuring range (-25 ...150°C) is exceeded or remained under

The following procedure is recommended to check the TSE control device and the sensor circuit including temperature sensor:

7.2
Function Check of Sensor Circuit

Disconnect the temperature sensor wire at the TSE control device terminals 14 and 15 and connect a resistance measuring device (Multimeter or Ohmmeter). The measured electrical resistance must conform with the value in the table shown in paragraph 2.1 in accordance with the pump temperature. In case of deviations of the resistance value of more than 10% of the set value, measure the resistance at the connection head of the TSE at the pump. To do this the wire to the control device at the connection head of the pump needs to be removed. If the same deviations occur when measuring the resistance at the temperature sensor
directly at the pump, the temperature sensor is damaged and needs to be replaced (refer to paragraph 6.2 and 6.3).

Should the resistance check at the temperature sensor show correct values, then damage to the connection cable or the connection terminal is the cause of malfunction.

7.3
Function Check of TSE Control Device

If an trouble-free sensor circuit has been determined during the testing according to paragraph 7.2, damage to the TSE control device is most likely. In order to carry out the check, remove the sensor wires at terminals 14 and 15 and connect a commercial deposited carbon or metal film resistor as per the following list.:

Resistance (Ohm)	Switching Temp. °C
10.000	25
5.600	39
2.200	63
1.000	87
560	107
220	143

Switch-on control voltage at terminal 1+3
(Digital Display at the TSE device illuminates)

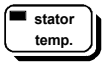

Press and hold button “stator temp.” and read the temperature value.

The shown value must correspond to the switch temperature, which applies to the resistance used. Should the shown value deviate by more than 5-10 ºC or should the value be absent at all, the TSE control device must be sent to seepex for repair.

TSE Control Unit

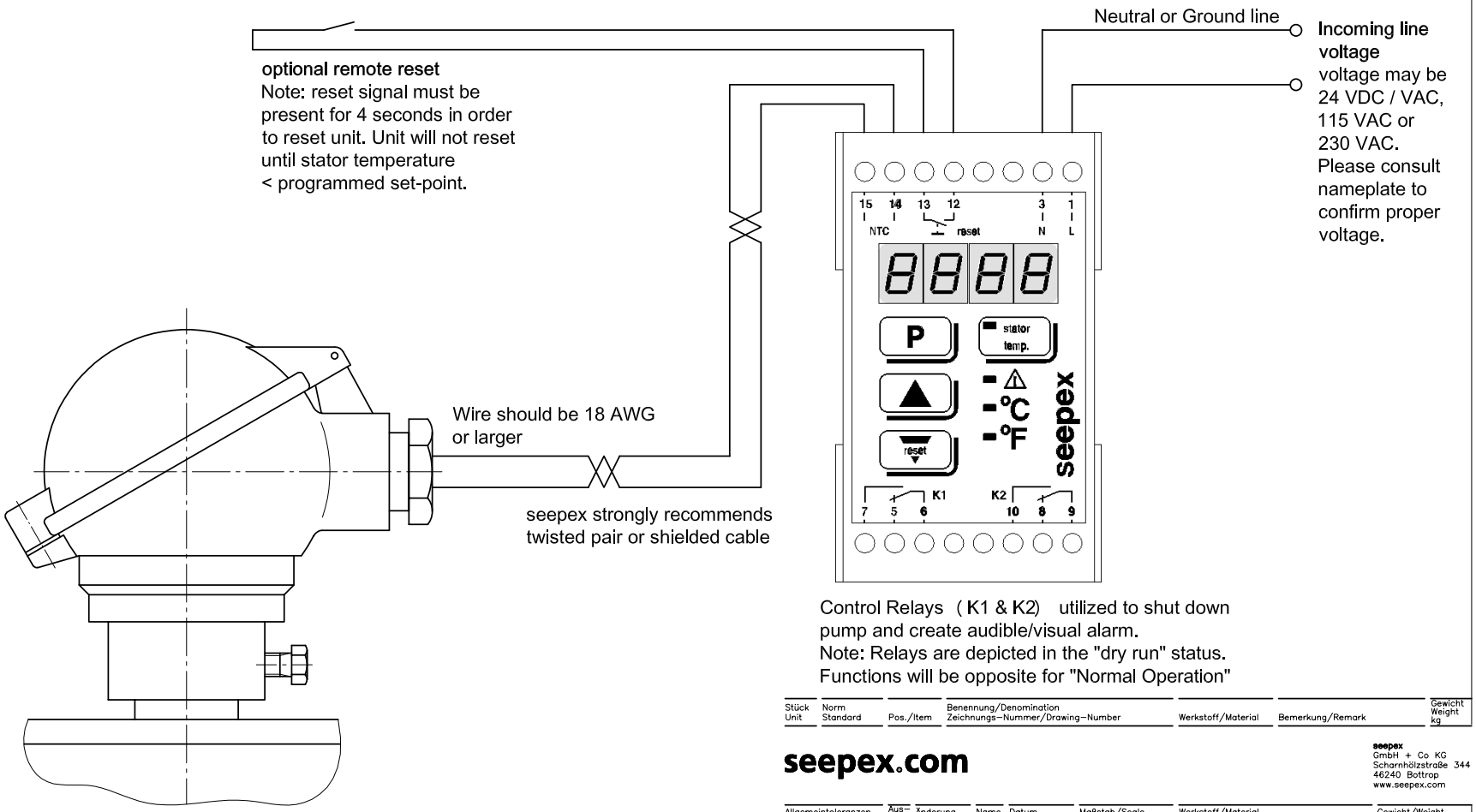

Control Relays (K1 & K2) utilized to shut down pump and create audible/visual alarm.
Note: Relays are depicted in the "dry run" status.
Functions will be opposite for "Normal Operation"

Stück Unit	Norm Standard	Pos./Item	Benennung/Denomination Zeichnungs-Nummer/Drawing-Number	Werkstoff/Material	Bemerkung/Remark	Gewicht Weight kg

seepex.com

seepex
GmbH + Co KG
Scharnhölzstraße 344
46240 Bottrop
www.seepex.com

Allgemeintoleranzen für Maße ohne einzelne Toleranzeintragung DIN ISO 2768-mittel	Ausgabe Issue	Änderung Modification	Name Name	Datum Date	Maßstab/Scale %	Werkstoff/Material	Gewicht/Weight
General tolerances for mass without individual tolerance entry DIN ISO 2768-average					Bezeichnung/Denomination: Simplified wiring instruction for seepex TSE dry running protection (seepex Inc.)		
Rauheit für Oberflächenzeichen DIN ISO 1302 Reihe 2			Name Name	Datum Date	Zeichnungs-Nummer/Drawing-Number: 711-TSE/0000-0-005A3		
Roughness for surface finish indication DIN ISO 1302 Reihe 2	Bearbeitet/Drawn		hof	20.03.2006	EDV-Nr./EDP-No. 75657.dwg		
	Geprüft/Checked		ham	20.03.2006	Ersatz für/Replacement for:	Ersetzt durch/Replacement by:	
	Normiert/Standard						
	Gedruckt/Printed						

Urheberrechtsschutz: Diese Zeichnung ist unser Eigentum und uns nach dem Gesetz über Urheberrecht und verwandte Schutzrechte geschützt.
Protection of Copyright: This drawing is our property and is protected acc. to the law referring to copyright and related protective laws.

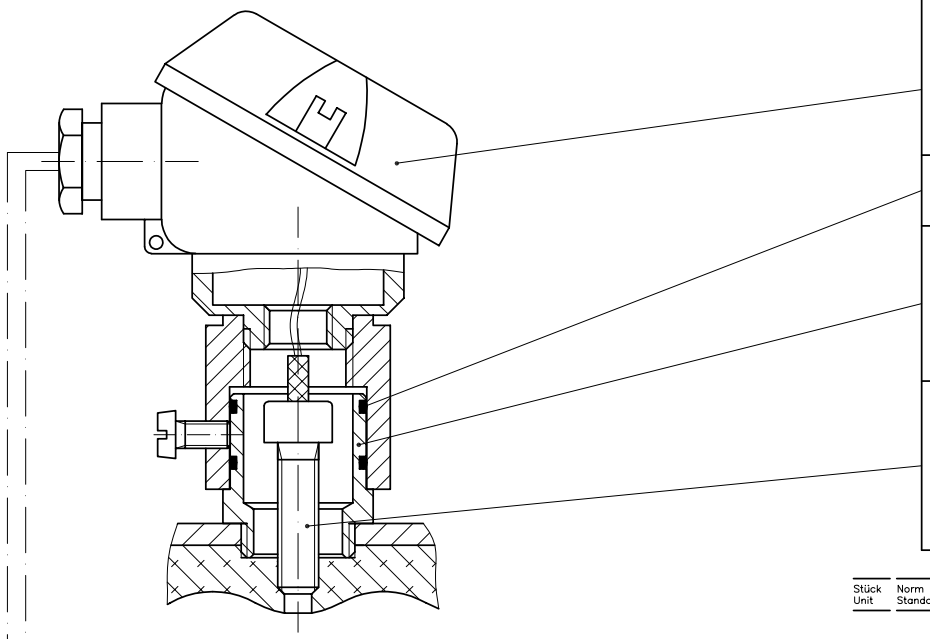

Elektrischer Anschluß siehe TSE-Betriebs- und Montageanleitung
Electric connection see TSE operating and assembly instructions

			Pumpen-Baugröße pumpe size
			006-12 006-24 012-12 012-24 025-6L
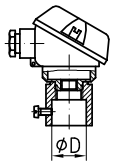	Anschlußkopf connection head	Pos. item	650
		Typ type	MA
		ØD	20.1+0.2
	O-ring o-ring	Pos. item	651
		Größe size	ø16x1.5
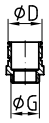	Gewindehülse screw socket	Pos. item	652
		ØD	ø19.9-0.1
		ØG	G3/8"
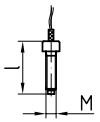	Thermistor- Fühlerschraube thermistor sensor screw	Pos. item	653
		Größe size	F6-25
		M	M6
		l	31

Stück Unit	Norm Standard	Pos./Item	Benennung/Denomination Zeichnungs-Nummer/Drawing-Number	Werkstoff/Material	Bemerkung/Remark	Gewicht Weight kg

seepex.com

seepex
GmbH + Co KG
Scharnhölzstraße 344
D-46240 Bottrop
www.seepex.com

Allgemeintoleranzen für Maße ohne einzelne Toleranzeintragung DIN ISO 2768-mittel

General tolerances for mass without individual tolerance entry DIN ISO 2768-average

Rauheit für Oberflächenzeichen DIN ISO 1302 Reihe 2

Roughness for surface finish indication DIN ISO 1302 Reihe 2

Ausgabe Issue	Änderung Modification	Name Name	Datum Date
B	überarbeitet	hof	17.06.1996
C	Baugröße 01-48	ov	23.09.1998
D	01-48 entfällt	hof	15.12.1998
E	Nachtrag 025-6L	hof	06.01.1999
F	025-12T,05-6LT	hof	29.04.2002
G	025-12,05-6LT raus	hof	18.02.2003

	Name Name	Datum Date
Bearbeitet/Drawn	hof	17.06.1996
Geprüft/Checked	wgr	18.06.1996
Normiert/Standard		
Gedruckt/Printed		

Maßstab/Scale 1:1

Werkstoff/Material

Gewicht/Weight

Bezeichnung/Denomination

TSE / Pumpenseitige Teile
TSE / pumpsided parts
für elastische Statoren / for elastic stators

Zeichnungs-Nummer/Drawing-Number

702-000/0000-0-009G3

EDV-Nr./EDP-No. 14998.dwg

Ersatz für/Replacement for: A2428-4

Ersetzt durch/Replacement by:

Urheberrechtsschutz: Diese Zeichnung ist unser Eigentum und uns nach dem Gesetz über Urheberrecht und verwandte Schutzrechte geschützt.
Protection of Copyright: This drawing is our property and is protected acc. to the law referring to copyright and related protective laws.

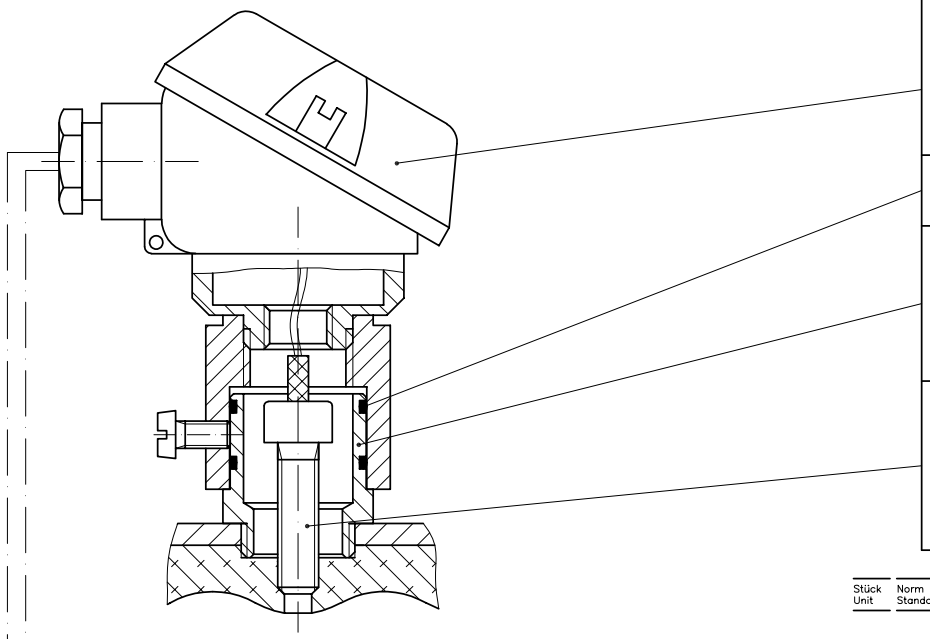

Elektrischer Anschluß siehe TSE-Betriebs- und Montageanleitung
Electric connection see TSE operating and assembly instructions

			Pumpen-Baugröße pumpe size
			006-12 006-24 012-12 012-24 025-6L
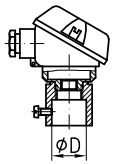	Anschlußkopf connection head	Pos. item	650
		Typ type	MA
		ØD	20.1+0.2
	O-ring o-ring	Pos. item	651
		Größe size	ø16x1.5
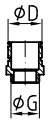	Gewindehülse screw socket	Pos. item	652
		ØD	ø19.9-0.1
		ØG	G3/8"
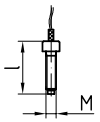	Thermistor- Fühlerschraube thermistor sensor screw	Pos. item	653
		Größe size	F6-25
		M	M6
		l	31

Stück Unit	Norm Standard	Pos./Item	Benennung/Denomination Zeichnungs-Nummer/Drawing-Number	Werkstoff/Material	Bemerkung/Remark	Gewicht Weight kg

seepex.com

seepex
GmbH + Co KG
Scharnhölzstraße 344
D-46240 Bottrop
www.seepex.com

Allgemeintoleranzen für Maße ohne einzelne Toleranzeintragung DIN ISO 2768-mittel

General tolerances for mass without individual tolerance entry DIN ISO 2768-average

Rauheit für Oberflächenzeichen DIN ISO 1302 Reihe 2

Roughness for surface finish indication DIN ISO 1302 Reihe 2

Ausgabe Issue	Änderung Modification	Name Name	Datum Date
B	überarbeitet	hof	17.06.1996
C	Baugröße 01-48	ov	23.09.1998
D	01-48 entfällt	hof	15.12.1998
E	Nachtrag 025-6L	hof	06.01.1999
F	025-12T,05-6LT	hof	29.04.2002
G	025-12,05-6LT raus	hof	18.02.2003

	Name Name	Datum Date
Bearbeitet/Drawn	hof	17.06.1996
Geprüft/Checked	wgr	18.06.1996
Normiert/Standard		
Gedruckt/Printed		

Maßstab/Scale 1:1

Werkstoff/Material

Gewicht/Weight

Bezeichnung/Denomination

TSE / Pumpenseitige Teile
TSE / pumpsided parts
für elastische Statoren / for elastic stators

Zeichnungs-Nummer/Drawing-Number

702-000/0000-0-009G3

EDV-Nr./EDP-No. 14998.dwg

Ersatz für/Replacement for: A2428-4

Ersetzt durch/Replacement by:

Urheberrechtsschutz: Diese Zeichnung ist unser Eigentum und uns nach dem Gesetz über Urheberrecht und verwandte Schutzrechte geschützt.
Protection of Copyright: This drawing is our property and is protected acc. to the law referring to copyright and related protective laws.

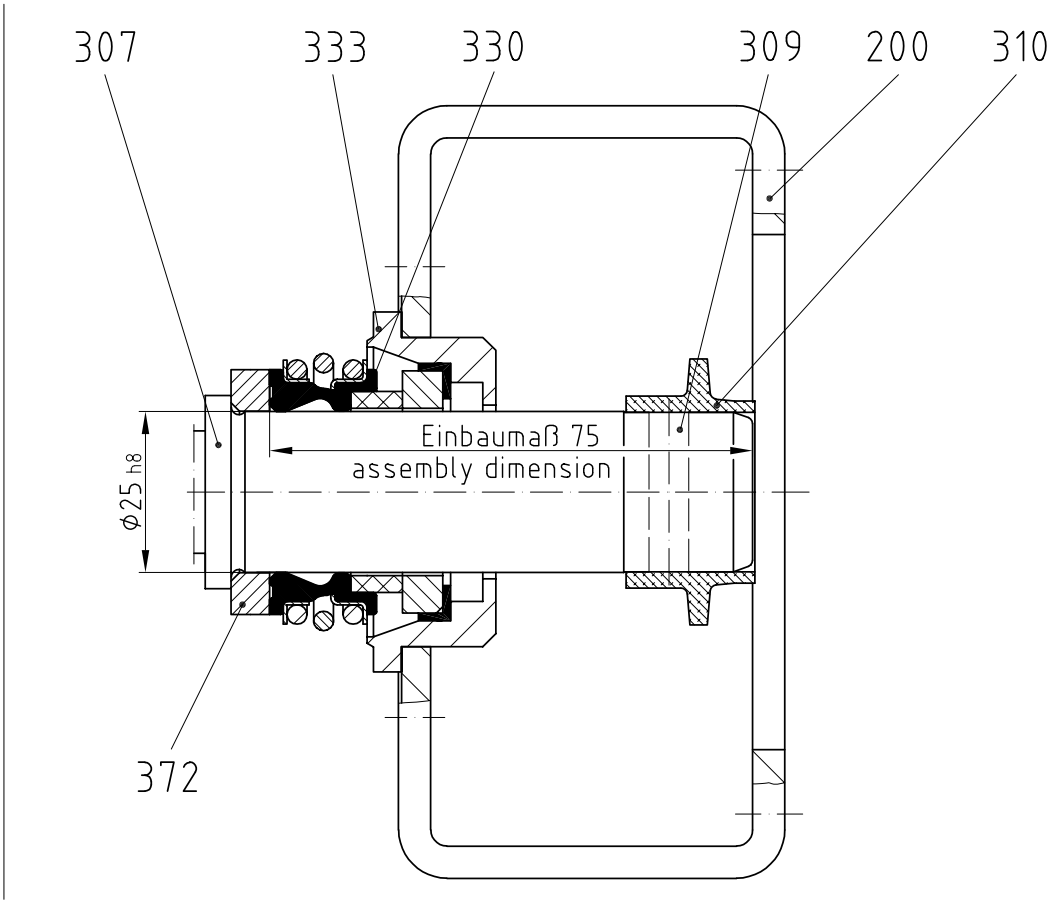

Stück Unit	Norm Standard	Pos./Item	Benennung/Denomination Zeichnungs-Nummer/Drawing-Number	Werkstoff/Material	Bemerkung/Remark	Gewicht Weight kg
1		372	Stützring / support ring 062-372/M120-0-060A4			
1		333	GLRD-Gehäuse / mechanical seal casing 103-333/M120-0-005A4			
1		330	GLRD / mechanical seal MG1/ϕ25-G60		Fabrikat / make : Burgmann	
1		310	Spritzring / splash ring 062-310/M120-0-001A4			
1		309	Steckwellenbolzen / plug-in shaft pin 062-309/M120-0-001A4			
1		307	Steckwelle / plug-in shaft 103-307/M120-0-304E4			
1		200	Laterne / lantern 103-200/M120-0-____			

seepex.com

seepex
GmbH + Co KG
Scharnhölzstraße 344
46240 Bottrop
www.seepex.com

Allgemeintoleranzen für Maße ohne einzelne Toleranzeintragung DIN ISO 2768-mittel

General tolerances for mass without individual tolerance entry DIN ISO 2768-average

Rauheit für Oberflächenzeichen DIN ISO 1302 Reihe 2

Roughness for surface finish indication DIN ISO 1302 Reihe 2

Ausgabe Issue	Änderung Modification	Name Name	Datum Date

	Name Name	Datum Date
Bearbeitet/Drawn	hgg	28.05.2004
Geprüft/Checked	kno	28.04.2004
Normiert/Standard		
Gedruckt/Printed		

Maßstab/Scale: 1:1

Werkstoff/Material:

Gewicht/Weight:

Bezeichnung/Denomination

GLRD Schnittzeichnung
mechanical seal sectional drawing

Burgmann MG1/ϕ25/G60 für Sondermaterial / for special material
mit erhöhter Vorspannung/ with increased pre-clamping

Zeichnungs-Nummer/Drawing-Number: 103-0GB/M120-0-129A4

EDV-Nr./EDP-No. 62810.dwg

Ersatz für/Replacement for:

Ersetzt durch/Replacement by:

Urheberrechtsschutz: Diese Zeichnung ist unser Eigentum und uns nach dem Gesetz über Urheberrecht und verwandte Schutzrechte geschützt.
Protection of Copyright: This drawing is our property and is protected acc. to the law referring to copyright and related protective laws.

1.
General

- Please take the appertaining drawing from respective pump data sheet.

- The mechanical seal is suitable for the operating conditions indicated in the pump data sheet. Modifications are only admissible after the customer has consulted with **seepex**. Additionally, attention must be paid to the manufacturer's operating manual.

2.
Safety

Any mode of operation impairing the operating safety of the mechanical seal has to be avoided.

The operator is advised to consider the possible effects on the environment which could be caused by a defective mechanical seal and what additional measures must be taken to protect the environment and the public.

The pump must be mounted and operated in such a way that operation with a defective mechanical seal will not result in injury or harm to the public and that any leakage can be safely and properly dealt with.

Mechanical seals are often used to seal hazardous material (chemicals, drugs, etc.). It is essential that rules pertaining to the handling of hazardous materials are adhered to.

Modifications effected by the customer himself and changes influencing the safety of the mechanical seal are not allowed.

3.
Emissions

A mechanical seal is a dynamic seal and leakage is unavoidable.

ATTENTION

Components that may contact leakage must be resistant to corrosion or be protected accordingly.

Mechanical seal leakage must be drained in a safe and proper manner.

1.0
General

- Please take the appertaining drawing from respective pump data sheet.
- The mechanical seal is suitable for the operating conditions indicated in the pump data sheet. Modifications are only admissible after the customer has consulted with seepex. Additionally, attention must be paid to the manufacturer's operating manual.

2.0
Safety

Any mode of operation impairing the operating safety of the mechanical seal has to be avoided.

The operator is advised to consider the possible effects on the environment which could be caused by a defective mechanical seal and what additional measures must be taken to protect the environment and the public.

The pump must be mounted and operated in such a way that operation with a defective mechanical seal will not result in injury or harm to the public and that any leakage can be safely and properly dealt with.

Mechanical seals are often used to seal hazardous material (chemicals, drugs, etc.). It is essential that rules pertaining to the handling of hazardous materials are adhered to.

Modifications effected by the customer himself and changes influencing the safety of the mechanical seal are not allowed.

3.0
Emissions

A mechanical seal is a dynamic seal and leakage is unavoidable.

ATTENTION

Components that may contact leakage must be resistant to corrosion or be protected accordingly.

Mechanical seal leakage must be drained in a safe and proper manner.

4.0
Flushing or circulation of single-acting mechanical seals

Single-acting mechanical seals contacting the conveying liquid require no additional flushing or a circulation pipe because sufficient flushing and heat exchange occurs around the seal due to the conveying liquid.

However, in particular cases, a direct flushing pipe can be installed into the flushing connection on the mechanical seal housing.

5.0
Commissioning

Regardless of the pump's operating status, the conveying medium to be sealed must always be in liquid form at the mechanical seal. This particularly applies to the pump's commissioning and its placing out of service.

6.0
Maintenance

When operating the pump according to the instructions, no maintenance is required.

**7.0
Disassembly / Reassembly**

**7.1
Disassembly**

- Remove flushing connections at shaft seal housing (SEA).
- Lift / displace splash ring (310) and eject plug-in shaft pin (309) horizontally.
- Withdraw rotating unit (RTE) together with shaft seal parallel from output shaft of drive and avoid chocking.
- Clean plug-in shaft (307) and remove burrs etc., which may damage sealing elements. Moisten plug-in shaft (307) with slip additive (diluted fluid soap).
- Loosen axial safety device of mechanical seal (330 or 372) and withdraw mechanical seal (330) from plug-in shaft (307).
- Remove mechanical seal housing (333) from lantern (200).
- Press counter-ring of mechanical seal with o-ring out of mechanical seal housing (333).

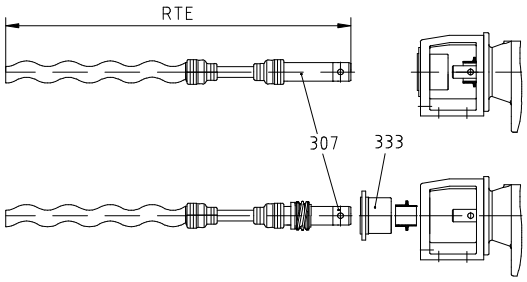

**7.2
Reassembly**

ATTENTION

Mechanical seals are precision parts of high quality. Therefore, the installation must be effected with care. Gentle handling and extreme neatness are essential.

- Clean mechanical seal housing (333)
- Evenly press counter-ring with o-ring into mechanical seal housing (333). To facilitate assembly, the o-ring should be moistened with a lubricant (diluted fluid soap).

ATTENTION

- Oil or grease must not be used to facilitate assembly.
- Install mechanical seal housing (333) to lantern (200) and onsure correct position of flushing connections.
- Remove plug-in shaft (307), burrs and roughness and clean the unit.
- Check / adjust set dimension of mechanical seal on plug-in shaft (307). Moisten plug-in shaft (307) and elastomer parts of mechanical seal with lubricant (diluted fluid soap).
- Slip mechanical seal onto plug-in shaft (307) as far as set ring.
- Lubricate drive shaft (ANT) with antiseize graphite petroleum.
- Moisten splash ring (310) and plug-in shaft (307) with pin joint grease, (for type, please see index) and slip splash ring (310) onto output shaft of drive. Note installating position of splash ring and refer to description on splash ring.
- Move rotating unit (RTE) through mechanical seal housing (333) and splash ring (310) and slip splash ring (310) onto output shaft of drive (ANT). Push in plug-in shaft pin (309) in horizontal position.
- Position of splash ring:
  Collar of splash ring shall be fitted in a distance of about 0.5 mm to lantern (200).

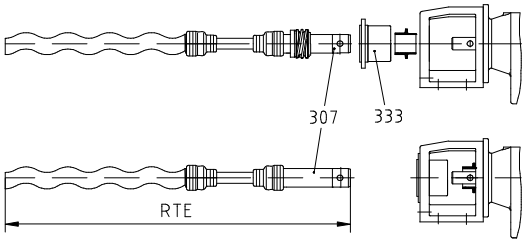

Range: MD, MDF

To avoid the expenses incurred by lengthy stop periods of the pump, seepex recommend the acquisition of a set of wearing parts and a set of gaskets.
The table below shows the contents of these sets.

Part designation	small set of wearing parts	big set of wearing parts	set of gaskets	Item number acc. to sectional drawing of pump and parts list
	Number			
Rotor		1		600
Stator 2)	1	1		601
Universal joint sleeve		1		405
Coupling rod pin		2		402
Guide bush 2)		-		-
Coupling rod		1		400
Coupling rod bush 2)		-		-
Casing gasket			1	501
Holding band, small 2)		-		-
Holding band, large 2)		2		406
Packing ring set 2) 3)	1	1		301
Mechanical seal 3)			1	330
Sealing ring			4	571, 726
Splash ring			1	310
O-ring			1	572
Plug-in shaft 2)		1		307
Special joint grease				098 1 cart. 300 gr (c. 315cm³) grease quantity per pin joint, see tech.
Tool				Essential for assembly, see Point 9, document OM.SPT.01

2) see tools Point 9., document OM.SPT.01
3) Item 330 and item 301 (as an alternative) depend on the pump design. With regard to the pump design, refer to the appertaining data sheet and the sectional drawing. See Point 9.

	Allgemeine normierte Werkzeuge / Standardized tools						
Werkzeug Nr. tool No.	W1	W2	W5	W6	W9	W11	W13
zur Montage von: tool for mounting of:	Packung packing	Stator stator	Gelenk joint	Lager bearing	allgemein general	Mutter für Teflon-manschette nut for teflon universal joint sleeve	Stator Stator 1)
Benennung: denomination:	Packungszieher packing lever	Ketten-Rohrzange + Ersatzkette chain pipe wrench +replacement chain	Durchschlag drift	Bolzen pin	Montierhebel mounting lever	Bandschlüssel strap wrench	Bandschlüssel strap wrench
Baugröße **size**	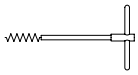					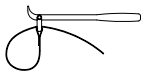	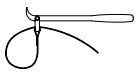
0005-24, 0015-24 003-12/-24 006-12/-24 012-12/-24 025-6L 025-12T, 05-6LT	PKZ XX 000 0000 0 X35M0	**Siehe W 13** **see W 13**					WKZ BDS 027 0 430
025-12, 025-24 05-12, 1-6L	PKZ XX 000 0000 0 X0FQ0	KRZ XX Z55 0250 0 00000 KEZ XX Z55 0250 0 00000	DHS XX 020 0000 0 A2620		2 Stück 2 pieces MHL XX SA 610		
05-24, 01-48, 025-48, 1-12, 2-6L 1-24, 1-12V 2-12, 5-6L			DHS XX 050 0000 0 A2620	BLZ XX 020 0008 0 A2619		WKZ BDS 027 0 430	
2-24, 2-12V 5-12, 8-12T 10-6L, 15-6LT 05-48	PKZ XX 000 0000 0 XOHV0		DHS XX 050 0000 0 A2620	BLZ XX 020 0010 0 A2619			
5-24, 5-12V 10-12, 17-6L, 30-6LT, 15-12T, 10-24R, 1-48		KRZ XX Z55 0300 6 00000 KEZ XX Z55 0300 6 00000	DHS XX 100 0000 0 A2620	BLZ XX 020 0010 0 A2619			
14-12, 26-6L, 40-6LT 10-24, 10-12V 17-12, 35-6L, 26-12, 52-6L, 55-6LT, 75-6LT 30-12T, 10-24, 17-24R 2-48	PKZ XX 000 0000 0 XA01A		DHS XX 120 0000 0 A2620	BLZ XX 025 0012 0 A2619			
17-24, 17-12V 35-12, 52-12, 70-6L, 100-6L, 110-6LT, 55-12T 34-24R 5-48		KRZ XX Z55 0300 8 00000 KEZ XX Z55 0300 8 00000	DHS XX 160 0200 0 A2620	BLZ XX 030 0012 0 A2619			
35-24, 35-12V 70-12, 130-6L, 200-6L, 110-12T 70-24R, 10-48 200-6L			DHS XX 200 0200 0 A2620	BLZ XX 035 0012 0 A2619			
130-12, 202-6L, 300-6L, 200-12T 70-18, 100-18, 130-18 70-24, 70-12V 130-24R 17-48		KRZ XX Z55 0301 2 00000 KEZ XX Z55 0301 2 00000	DHS XX 240 0250 0 A2620	BLZ XX 040 0015 0 A2619			
240-12, 300-12T 130-18, 130-24 35-48/70-48							

1) Gilt nur für Pumpen in Edelstahl Ausführung / only valid for pumps in special steel design

	Empfohlene seepex Werkzeuge Aufgrund der Ausführung für bestimmte Montagen empfohlen, durch allgemeine normierte Werkzeuge bedingt ersetzbar. **Recommended seepex tools** Due to the design recommended for certain repairs, these tools partially replace the standardized tools.							
Werkzeug Nr. tool No.	W4	W7	W8	W10	W12	W14	W15	W16
zur Montage von: tool for mounting of:	Gelenk joint	Lager bearing	Schmier-nippel lubrication nipple	Steckwelle plug-in shaft	Teflon-manschette teflon universal joint sleeve	Kuppelstangen-buchsen coupling rod bushing	Manschette universal joint sleeve	Lippendichtung lip seal
Benennung: denomination:	Montagedorn assembly mandrel	Montage-hülse mounting sleeve	Einschlag-hülse drive-in sleeve	Demontage-werkzeug dismantling tool	Montage-werkzeug mounting tool	Presswerkzeug pressing tool	Montageplatte mounting plate	Montagehülse Mounting sleeve
Baugröße **size**	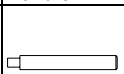			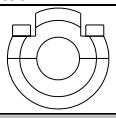		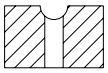	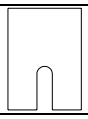	
0005-24, 0015-24 003-12/-24 006-12/-24 012-12/-24 025-6L 025-12T, 05-6LT	MTD L2 060 M120 0 XXXXX 2)						MTP A7 703 M500 0 002XX	MTH B7 703 M120 0 W0260
025-12, 025-24 05-12, 1-6L	MTD L2 060 M500 0 XXXXX	MTH M8 060 M500 0 XXXXX		AZV B2 262 M500 0 XXXXX			MTP A7 703 M500 0 002XX	
05-24, 01-48, 025-48, 1-12, 2-6L 1-24, 1-12V 2-12, 5-6L	MTD L2 060 0020 0 XXXXX	MTH M8 060 0020 0 XXXXX		AZV B2 262 0020 0 XXXXX	MMT M8 060 0020 0 XXXXX	PWZ C6 060 0020 0 XXXXX		
2-24, 2-12V 5-12, 8-12T 10-6L, 15-6LT 05-48	MTD L2 060 0050 0 XXXXX	MTH M8 060 0050 0 XXXXX		AZV B2 262 0050 0 XXXXX	MMT M8 060 0050 0 XXXXX	PWZ C6 060 0050 0 XXXXX		
5-24, 5-12V 10-12, 17-6L, 30-6LT, 15-12T, 10-24R, 1-48	MTD L2 060 0100 0 XXXXX	MTH M8 060 0100 0 XXXXX		AZV B2 262 0100 0 XXXXX	MMT M8 060 0100 0 XXXXX	PWZ C6 060 0100 0 XXXXX		
14-12, 26-6L, 40-6LT	MTD L2 060 0140 0 XXXXX	MTH M8 060 0140 0 XXXXX		AZV B2 262 0170 0 XF5XX		PWZ C6 060 1400 0 XXXXX		
10-24, 10-12V 17-12, 35-6L, 26-12, 52-6L, 55-6LT, 75-6LT 30-12T, 10-24, 17-24R 2-48	MTD L2 060 0170 0 XXXXX	MTH M8 060 0170 0 XXXXX	ESH N0 000 0000 0 A01A4	AZV B2 262 0170 0 XG0XX	MMT M8 060 0170 0 XXXXX	PWZ C6 060 0170 0 XXXXX		
17-24, 17-12V 35-12, 52-12, 70-6L, 100-6L, 110-6LT, 55-12T 34-24R, 5-48	MTD L2 060 0350 0 XXXXX	MTH M8 060 0350 0 XXXXX		AZV B2 262 0350 0 XH0XX		PWZ C6 060 0350 0 XXXXX		
35-24, 35-12V 70-12, 130-6L, 200-6L, 110-12T 70-24R, 10-48, 200-6L	MTD L2 060 0700 0 XXXXX	MTH M8 060 0700 0 XXXXX		AZV L7 703 0700 0 XK0XX		PWZ C6 060 0700 0 XXXXX		
130-12, 202-6L, 300-6L, 200-12T 70-18, 100-18, 130-18 70-24, 70-12V 130-24R 17-48	MTD L2 060 1300 0 XXXXX	MTH M8 060 1300 0 XXXXX				PWZ C6 060 1300 0 XXXXX		
240-12, 300-12T 130-18, 130-24 35-48/70-48						PWZ C6 060 2400 0 XXXXX		

2) entfällt ab Pumpen-Herstellungsdatum 01.04.93 / can be omitted as from 01.04.93 (pump manufacturing date)

	Empfohlene seepex Werkzeuge Aufgrund der Ausführung für bestimmte Montagen empfohlen, durch allgemeine normierte Werkzeuge bedingt ersetzbar. **Recommended seepex tools** Due to the design recommended for certain repairs, these tools partially replace the standardized tools.								**Spezial-werkzeuge** **Special tools**
Werkzeug Nr. tool No.	W17	W18	W19	W20	W22	W23	W24	W25	W3
zur Montage von: tool for mounting of:	Lippendichtung lip seal	Gleitlager-buchse plain bearing bush	Wellen-schonhülse shaft securing sleeve	Cartridge-Einheit cartridge-unit	Wellen-dichtring lip seal	Wellen-dichtring lip seal	Antriebs-gehäuse drive casing	Steckwellen-bolzen plug-in shaft pin	Halteband holding band
Benennung: denomination:	Schlagzylinder Zentrierdorn Montagebolzen cylinder centering mandrel mounting pin	Montagedorn mounting mandrel	Montagehülse mounting sleeve	Aufnahme intake	Montage-werkzeug mounting tool	Montage-werkzeug mounting tool	Aufhänge-vorrichtung suspension device	Montagedorn mounting mandrel	Montage-werkzeug mounting tool
Baugröße **size**	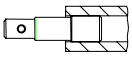	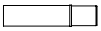	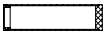						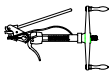
0005-24, 0015-24 003-12/-24 006-12/-24 012-12/-24 025-6L, 025-12T, 05-6LT	ZSH B7 703 M120 0 W0171 ZDR B7 703 M120 0 W0172 MBL A7 703 M120 0 W0173								MHB WH A00 1WHV 0 01000
025-12, 025-24 05-12, 1-6L									
05-24, 01-48, 025-48, 1-12, 2-6L 1-24, 1-12V 2-12, 5-6L								MTD L8 703 0050 0 SXX0J	
2-24, 2-12V									
5-12, 8-12T 10-6L, 15-6LT 05-48									
5-24, 5-12V									
10-12, 17-6L, 30-6LT, 15-12T, 10-24R, 1-48								MTD L8 703 0170 0 SXX0J	
14-12, 26-6L, 40-6LT									
10-24, 10-12V									
17-12, 35-6L, 26-12, 52-6L, 55-6LT, 75-6LT 30-12T, 10-24, 17-24R, 2-48			SPT B4 703 0170 0 01000	SPT M8 703 0170 0 00900	SPT B4 703 0170 0 01100				
17-24, 17-12V									
35-12, 52-12, 70-6L, 100-6L, 110-6LT, 55-12T 34-24R, 5-48								MTD L8 703 0350 0 SXX0J	
35-24, 35-12V									
70-12, 130-6L, 200-6L, 110-12T 70-24R, 10-48, 200-6L		SPT M8 703 1300 0 01000	SPT M8 703 1300 0 01100	SPT M8 703 1300 0 00900	SPT B4 703 1300 0 0A200	SPT B4 703 1300 0 0A300		MTD L8 703 0700 0 SXX0J	
130-12, 202-6L, 300-6L, 200-12T 70-18, 100-18, 130-18 70-24, 70-12V 130-24R 17-48								MTD L8 703 1300 0 SXX0J	
240-12, 300-12T 130-18, 130-24 35-48/70-48							SPT M8 703 2400 0 01400		

10.0
Manufacturer's documents from sub-supplier

Burgmann
INDUSTRIES

OPERATING MANUAL

This document was drawn up observing the EC directives
"Machinery" 98/37/EC, EN ISO 12100-2 and the German Standard VDI 4500



In case of this mechanical seal is operated in **explosion area an appropriate additional operating manual,** following EC directives 94/9/EC (ATEX 95), has to be observed **by all means**! If required this could be ordered at BURGMANN.

BURGMANN MECHANICAL SEAL (M.S.)

Type MG1/dw-00 and versions

applies to all mechanical seals of the same series

dw = specified shaft diameter

These instructions are intended for the assembly, operating and control personnel and should be kept at hand on site.

PLEASE READ this manual carefully and OBSERVE the information contained as to:

- **Safety**
- **Installation**
- **Transport / Storage**
- **Operation**
- **Information about the product**
- **Servicing**

If there are any unclear points please contact BURGMANN by all means!

Table of Contents

Keywords and Symbols 3

GENERAL SAFETY NOTES 4

Instructions for worker's protection 5

TRANSPORT / STORAGE 6

Transport 6
Packing and storage 6

INFORMATION ABOUT THE PRODUCT 8

Manufacturer and country of origin 8
Declaration by the manufacturer 8
Type designation 8
Designated use 8
Operating limits 9
Materials 9
Drawings, diagrams 9
Versions 10
Seat Versions 10
Description and function 11
Required space, connecting dimensions 11
Supply of M.S. 11
Emissions 12

INSTALLATION 13

Assembly utilities 13
Preparation for assembly 13
Assembly / installation 14

OPERATION 16

Instructions for safe operation 16
Instructions for start up 16

SERVICING 17

Maintenance 17
Directives in case of failure 17
After-sales service by BURGMANN 18
Reconditioning (repair) 18
Disassembly / removal 18
Spare parts 19
Required details for enquiries and orders 19
Disposal of the BURGMANN mechanical seal 20
Copyright 20

Keywords and Symbols

Following symbols for particularly important information are used:



"Attention, please pay special attention to these sections of text"

DANGER! Draws attention to a direct hazard that will lead to injury or death of persons

WARNING! Draws attention to the risk that a hazard could lead to serious injury or death of persons

CAUTION! Draws attention to a hazard or unsafe method of working that could lead to personal injury or damage to equipment

ATTENTION! Identifies a potentially dangerous situation. If it is not avoided the product or something in its vicinity could be damaged

IMPORTANT! Identifies tips for use and other particularly useful information.

GENERAL SAFETY NOTES



Any person being involved in assembly, disassembly, start up, operation and maintenance of the BURGMANN Mechanical Seal must have read and understood this Instruction Manual and in particular the safety notes. We recommend the user to have this confirmed.

BURGMANN Mechanical Seals are manufactured on a **high quality level** (quality management EN ISO 9001: 2000) and they keep a **high working reliability**. Yet, if they are **not operated** within their **intended purpose** or handled **inexpertly** by untrained personnel they may cause **risks**.

The machine has to be set up in such a way that seal leakage can be led off and disposed properly and that any personal injury caused by spurting product in the event of a seal failure is avoided.

Any operation mode that affects the **operational safety** of the mechanical seal is not permitted.

Unauthorised modifications or alterations are **not permitted** as they affect the **operational safety** of the mechanical seal.

BURGMANN mechanical seals must be installed, operated, maintained, removed or repaired by **authorised**, **trained and instructed personnel only.**

The **responsibilities** for the respective jobs to be done **have to be determined clearly and observed** in order to prevent unclear competencies from the point of **security**.

Any work to be done on the mechanical seal is **generally** only **permitted** when the seal is **neither operating nor pressurised**.

WARNING! Seals that have been used with **hazardous substances must be properly cleaned** so that there is no possible **danger** to people or to the environment.

Apart from the notes given in this manual the general **regulations for worker's protection and those for prevention of accidents** have to be observed.

Instructions for worker's protection



WARNING! If the **medium to be sealed** and/or the **supply liquid** is subject to the **Hazardous Substances Regulation** (GefStoffV), the **instructions for handling dangerous substances** (safety data sheets to EU Directive 91/155/EEC) and the **accident prevention regulations** have be observed.

Medium to be sealed and/or **supply medium may escape** if the seal **fails**. Injury of persons and environment may be **prevented by the user** providing for splash protection and wearing safety goggles. Care has to be taken by the user for **proper disposal** of the leakage. The user has to control these measures.

The **user** has to **check** what **effects a failure** of the mechanical seal might have and what safety measures have to be taken to prevent **personal** injury or damage to the environment.

TRANSPORT / STORAGE

Transport

If not specified differently by contract the BURGMANN standard packing is used which is suitable for dry transport by truck, train or plane. The warning signs and notes on the packing must be observed.

In addition seaworthy packing may become necessary.

Notes for income inspection:
- Check packaging for visible damages.
- Open packaging carefully. Do not damage or lose parts supplied separately.
- Check if consignment is complete (delivery note). Inform the supplier immediately in writing if parts are damaged or missing.

The mechanical seal has to be protected from damage during transport and storage. The transport case in which the seal is supplied is well suited for this purpose and should be kept for a possible return transport.

ATTENTION! If the machine as well as the mechanical seal installed into the machine are transported together the shaft has to be protected from deflection and shocks.

Packing and storage

The following recommendations apply to all BURGMANN mechanical seals which have been supplied and stored in their **undamaged original packaging**, as well as to seals which have been installed in a machine (e.g. pump, compressor, agitator, etc.) but have not yet been put into operation.

BURGMANN mechanical seals and spare parts are super finished and repeatedly tested machine elements. For the storage special conditions have to be followed.

Sliding materials and elastomers are subject to material-specific and time-based alterations (distortion, ageing) which might reduce the full efficiency of the mechanical seals. Yet, this may be avoided by observing the storage instructions.

For the stock keeping of elastomers special conditions are required. For all rubber-elastic parts the rules of DIN 7716 resp. of ISO 2230-1973 (E) are valid.

Conveniences for storing of mechanical seals
- dust free
- moderately ventilated
- constantly tempered
  - relative air humidity below 65 %,
  - temperature between 15 °C and 25 °C.

Protect the seal from
- direct exposure to heat (sun, heating)
- **ultraviolet light** (halogen or fluorescent lamps, sunlight, arc welding)
- presence or development of **ozone** (arc welding, mercury vapour lamps, high-voltage devices, electric motors)

➢ **risk of embrittlement** of elastomeric materials

It has to be differentiated between:
- **M.S. stored** in the stock room
- **M.S. installed** in the machine, but not yet in operation.

☐ **M.S. in the stock**

IMPORTANT! Store the **seal in the original packing** lying on a **flat surface**.

- Check the packaging periodically for damages.
- Plastic sheet packagings with humidity indicators have to be checked every 8 weeks. The check has to be recorded.

➢ Packings **exceeding 50 % rel. humidity** values have to be sent to the manufacturer or the **nearest BURGMANN service centre** for inspection and new packaging.

Duly stored mechanical seal:
- Latest 3 years after delivery of the mechanical seal
- For reasons of safety shipment of the M.S. to BURGMANN resp. nearest BURGMANN service centre for

➢ Exchange of all secondary seals and springs
➢ Verification of the flatness of the faces
➢ Perhaps static pressure test.

☐ **M.S. installed into the machine:**

ATTENTION! A **preservation** of the BURGMANN mechanical seals is **not allowed**.

Check in case of a preservation of complete machines with mechanical seals installed BURGMANN has to be contacted.
- **Do not** use corrosion protection agents.

➢ Risk of deposition and possibly chemical attack of the secondary seals.

Due to longer erecting times of new designed plants the period between delivery of the mechanical seal and on the other hand its installation and start up may exceed the period of 2-3 years.

Latest after 3 years and in time before the planned start-up of the plant the seal has to be dismantled and to be sent to the manufacturer or the nearest BURGMANN service centre where it can be checked and reconditioned, if necessary.

Damages caused by **improper** storage may **not** be claimed with reference to the **warranty** on the BURGMANN company**.**

INFORMATION ABOUT THE PRODUCT

All technical information given is based on the results of extensive testing and on BURGMANN's long term practical experience. However, in view of the great diversity of possible applications the technical data can only be taken as being of approximate nature. We can only guarantee the safe and efficient functioning in individual cases if we have been comprehensively informed of the operating conditions to which they will be subject, and if this has been confirmed in a separate agreement.

Manufacturer and country of origin

Burgmann Industries GmbH & Co. KG
Äußere Sauerlacher Str. 6-10
D - 82515 Wolfratshausen

Germany

Declaration by the manufacturer

within the meaning of the EC-directive "MACHINERY" 98/37/EG

A mechanical seal does **not function independently**. It is intended to be incorporated into or assembled with machinery.

Type designation

BURGMANN Mechanical Seal **MG1/dw-00**

Designated use

This mechanical seal is **exclusively** designed for the use in the specified application. A **different utilisation** or a utilisation going beyond the specification is considered **contrary to its designated use** and excludes a liability by the manufacturer.

Operation under conditions lying **outside** those limits stated in paragraph **"Operating limits"** is considered **contrary to its designated use**.

Should the seal be **operated under different conditions or at a different application** BURGMANN has to be asked for **recognition as safe in advance**.
- **Changes** to operating conditions **have to** be documented.

Operating limits

ATTENTION! Operating limits depend on the materials, the media to be sealed and the diameter of the sealing. (If there are any unclear points please contact BURGMANN.)

Shaft diameter	(dw)	:	10 - 100 mm
Pressure to be sealed	(p1)	:	12 bar g
Temperature to be sealed	(t1)	:	-20 ... 120° C
Max. sliding speed	(vg)	:	10 m/s

Operation under several limit values **simultaneously** should be **avoided** as higher loads (pressure, temperature, speed) can increase wear or lead to **damage** of sliding faces or elastomers. This could result in a shorter service life and in the **risk** of a sudden seal failure **endangering** men and environment.

The **selection** of the mechanical seal (type, suitability, materials) should be done **by BURGMANN staff** or other **authorised** persons. A wrong selection by unauthorised persons is **not covered by** BURGMANN's **warranty**.

Further information about the operating conditions can be found in the BURGMANN assembly drawing MG1/dw-00 or in the specification sheets of the machine manufacturer.

Materials

The materials of the mechanical seal depend on the application and are fixed in the order.

Drawings, diagrams

Assembly drawing MG1/dw-00

The original assembly drawing in its latest edition (latest revision) only is decisive for both the design of M.S. as well as the utilisation of this manual.

In the following description all figures in parentheses, e.g. (2) define the respective part item no. in fig. 1. The part item no. may vary from those stated in the assembly drawing.

Versions

- **MG12/…**
- **MG13/…**
- **MG1S20/…**
- **RMG12/…**
- **MG1 MULTIPLE M.S.**

The mechanical seal type MG1 can also be used as **multiple mechanical seal** (also in combination with seal types of other series) in **tandem arrangement** with quench (API, plan 52) or as **dual mechanical seal** with barrier fluid (API, plan 53). Consultation with the BURGMANN company is recommended.

ATTENTION! PTFE o-rings or double-PTFE-wrapped o-rings **may** not be used at seat versions **without torsion lock**.

This operating manual applies also to the mentioned seal versions with slight modifications and/or to combinations with seats not stated in this manual.

Seat Versions

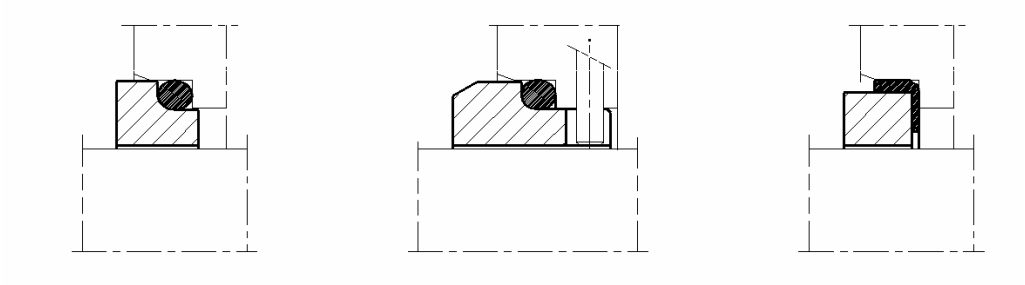

Description and function

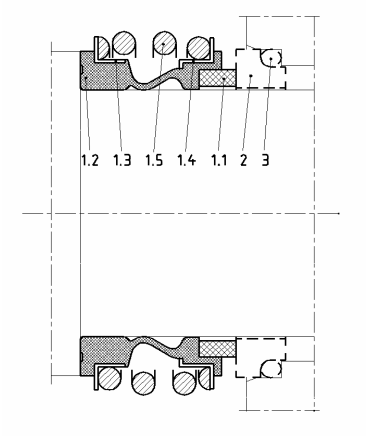

- **single seal**
- **unbalanced**
- **bi-directional**
- **stationary seat** (2)
- **o-ring** (3)
- **rotating seal face** (1.1)
- **elastomeric bellow** (1.2)
- **cylindrical single spring** (1.5)
- **no glued joints**
- **materials of the sliding parts replaceable**
- **for media containing solids** (e.g. sewage applications)
- **rotating, torsion-free elastomeric bellows** serving as
  - face housing
  - secondary sealing element
  - drive collar
- **torque transmission** from the seal face by means of "L"-rings and a rotating, cylindrical single spring
- **axial movability**
  d_w: 10 … 12 mm ±0,5 mm
  d_w: 14 … 18 mm ±1,0 mm
  d_w: 20 … 26 mm ±1,5 mm
  d_w: 28 … 100 mm ±2,0 mm

Required space, connecting dimensions

The required mounting space for the mechanical seal is decisive for the design of the housing parts by the machine manufacturer. The connecting dimensions have to be checked by the machine manufacturer by means of the BURGMANN drawing before mounting the mechanical seal.

Supply of M.S.

The mechanical seal has to be constantly wetted by liquid medium. The medium to be sealed must not damage the M.S. neither chemically (e.g. corrosion, embrittlement) nor physically (e.g. erosion, abrasion).

For a safe operation of the mechanical seal we recommend to apply **at inboard** the most suitable **type of circulation** described in **API 610 / 682**. This measure protects the seal cavity from deposition of solids.

To operate multiple seals special supply systems are required. Please contact BURGMANN.

Emissions

A mechanical seal is a **dynamic seal** that **cannot be free of leakage** due to physical and technical reasons. Seal design, manufacture tolerances, operating conditions, running quality of the machine, etc. mainly define the leakage value. In fact, compared to other sealing systems there is **few leakage**.

WARNING! If the **medium to be sealed** and/or the **supply liquid** is subject to the **Hazardous Substances Regulation** (GefStoffV), the **instructions for handling dangerous substances** (safety data sheets to EU Directive 91/155/EEC) and the **accident prevention regulations** have be observed.

A possibly increased leakage during start-up will decrease to a normal quantity after the running-in period of the sliding faces.

If this is not the case or if there are other malfunctions the mechanical seal has to be shut down, removed and checked for reasons of safety.

The leakage can be liquid or gaseous. Its aggressiveness corresponds to that of the medium to be sealed.

Leakage of mechanical seal at outboard side has to be drained and disposed properly.

IMPORTANT! Components which may get in contact with the leakage have to be corrosion-resistant or have to be adequately protected.

INSTALLATION

Assembly utilities

- ethyl alcohol
- cellulose-tissue (no rag, no cloth!)
- o-ring lifter
- water and washing up liquid
- cardboard discs

Preparation for assembly

ATTENTION! The seal should remain **packed** until the following working steps have been completely **terminated**.

Check the parts of the machine for:

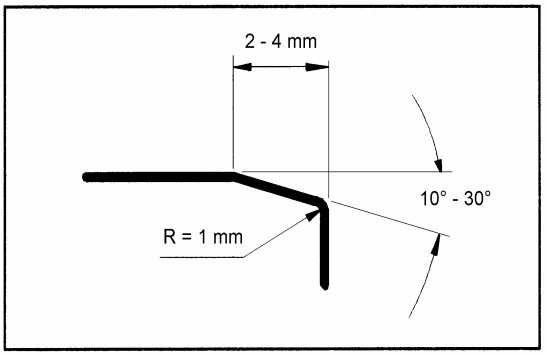

- **chamfered edges**
  (sliding cones i.e. 2 mm / 30° or in accordance with EN 12756)
- radiused transitions
- **mating fits** and o-ring surfaces:
  fine finished **Rz 10 µm** (= N7 = CLA 63)

- **Shaft surface** in the area of the mechanical seal finished according to EN 12756: **Ra = 0.8 µm** (= N6 = CLA 32).
- **Shoulder** or stop device for the bellows of the mech. seal to take up axial forces

Check at the machine:
- damage of connecting surfaces to the M.S.
- mating dimensions, rectangularity and concentricity to the shaft axis.

Run-out accuracy of the shaft (acc. to DIN ISO 5199):
- Shaft diameters up to 50 mm: max. 0.05 mm
- Shaft diameters 50 mm - 100 mm: max. 0.08 mm

- Prepare the place of assembly, take away any not required tool, cuttings, dirty cleaning wool etc.

- Cover the work bench with a piece of clean, non-fibrous cardboard.

Assembly / installation

BURGMANN mechanical seals are super-finished and repeatedly tested machine elements whose handling during assembly in particular of sliding materials and elastomers requires special care during several procedures.

For installation the assembly drawing of mechanical seal has to be observed.

IMPORTANT! The mechanical seal has to be installed under the cleanest conditions and very carefully.

- Unpack the seal and check seal face, seat and elastomer bellows for possible damages.
- ➢ Never place the seal faces or seats on their sliding faces without having covered them adequately.

- Check before starting assembly:
  - ▫ complete availability of all components by means of the drawing
  - ▫ all components have to be clean and in perfect condition.

- Sprinkle the elastomer bellows and the shaft with low-surface-tension water (add washing up liquid) or ethyl alcohol to decrease frictional force during assembly of the seal.

⚠

Oil or grease as assembly agent is not permitted in any case.

ATTENTION! **Do never force** during installation.

ATTENTION! **Avoid unnecessary rotation** of the shaft (damage of the sliding faces is possible).

ATTENTION! **Avoid knocking the seal!** Damage to mechanical seals has an adverse effect on their safe operation.

Possible installation order:

- Feed the **degreased** sealing element (o-ring, rubber cup) onto the seat.

If present:
- At the seat mark the position of the rear slot beside the sliding face.
- Align the seat with the torque transmission pin.

- Cover the sliding face of the seat with a cardboard washer
- Press the seat slowly and without interruption into its position.
  - ➢ Use plenty of water or alcohol as lubricant.
  - ➢ Use a distance sleeve, if necessary.
- Remove the cardboard washer from the sliding face.
- Check the rectangular position of the seat to the shaft axis.

- Mount the seal cover with the seat installed before.
- Clean the sliding faces thoroughly with ethyl alcohol and paper tissues (**no fabric, no cloths!**).
  - ➢ In case of material **"BUKO"** (carbon graphite) wipe it until the paper tissues stay clean.
  - ➢ Do not touch the sliding faces any more with bare fingers.
  - ➢ Mount the sliding faces absolutely dry, dust-free and clean. Do not use any lubricants!

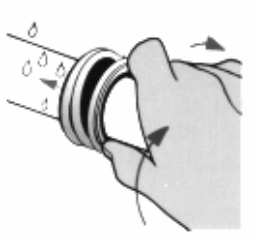

- Push rotating seal unit (bellows unit) with a slow clockwise turn onto the shaft.
- Stick to the dimensions in the assembly drawing!
  - ➢ If necessary use a mounting sleeve.
  - ➢ For long pushing distances add liquid several times.

- Check "L" rings, spring and seal face for correct fit.

- Mount stop device for bellows unit to take up axial forces.
  - ➢ Stick to the dimensions in the assembly drawing **by all means!**

- Further assembly of the machine in accordance with the instructions of the machine manufacturer.

OPERATION

Instructions for safe operation

For a single mechanical seal the **pressure in the seal chamber** (stuffing box pressure) has to be **higher** than the ambient pressure at the machine at any time. Otherwise the machine will **suck in air** via the sliding faces, which will result in **dry-running** and consequent **failure** of the mechanical seal.

Damages due to dry-running are excluded from the warranty.

During every state of operation the mechanical seal has to be constantly wetted by the **medium** to be sealed **in its liquid form**, in particular when the machine is **started** or **stopped**. The machine design has to be such as to take this necessity into consideration.

If the medium to be pumped builds deposits or tends to solidify during cooling down or standstill of the machine the stuffing box has to be flushed with suitable clean liquid. The flow and the liquid should be determined by the user.

If the operation limit values and the instructions given in this manual are followed a trouble-free operation of the mechanical seal can be expected.

Instructions for start up

Safety checks before start up

- Torque transmission between mechanical seal and shaft duly installed
- Supply connections tightened pressure-sealed
- Disposal connections installed environmentally safe

For a safe operation of the mechanical seal we recommend to apply **at inboard** the most suitable **type of circulation** described in **API 610 / 682**. This measure protects the seal cavity from deposition of solids.

- Flood machine and seal cavity (stuffing box) with medium and vent thoroughly.

▫ Now the seal is ready for operation.

SERVICING

Maintenance

A correctly operated mechanical seal needs **low maintenance**. Wear parts, however, have to be replaced, if necessary.

A duly operation includes a regular check of the following parameters:
- Temperature
- Leakage (drainage) rate of the mechanical seal

An inspection of the mechanical seal should be carried out during a revision of the complete plant. We recommend to have this inspection be performed by responsible BURGMANN personnel.

If the mechanical seal is removed during a revision of the plant it has to be replaced by a new one.

Directives in case of failure

Try to define the kind of failure and record it.

- In the event of **excessive leakage**, note changes in the leakage amount and switch the pump off if necessary.
- ➢ If a constant amount is leaking in a steady flow, the mechanical seal is damaged.
- In the event of a **inadmissible temperature rise**, the machine **has to** be stopped for safety reasons.

If there is a **malfunction** which you cannot correct on your own, or if the cause of malfunction is not clearly recognisable please immediately contact the nearest **BURGMANN agency**, a BURGMANN service centre or the BURGMANN headquarters.

During the **warranty period** the BURGMANN mechanical seal must only be disassembled with approval of the manufacturer or when a representative is present.

After-sales service by BURGMANN

BURGMANN's customer service department offers a comprehensive service package covering consultancy, engineering, standardisation, installation, commissioning as well as damage analysis right through to seminars on sealing technology.

Addresses are listed in the known BURGMANN Design Manuals as well as in various other BURGMANN brochures.

Address of headquarters:

Burgmann Industries GmbH & Co. KG
Postfach 1240
D - 82515 Wolfratshausen

Germany

☎ +49 (0) 81 71-23 0
Fax +49 (0) 81 71-23 12 14
www.burgmann.com

Reconditioning (repair)

If **reconditioning** is necessary, the complete **seal** should be sent **to the manufacturer**, as this is the best way to find out which components can be reconditioned or which parts must be replaced in order to ensure an optimum tightness.

If, **for compelling reasons**, **a reconditioning** has to be carried out **on site** (e.g. no. spare seal on stock, long transport, problems with customs) the seal may be repaired in a clean room by **trained** personnel of the user under the direction of **BURGMANN mechanics**.

Disassembly / removal



- Stop the machine as instructed, allow to cool, depressurise and ensure that pressure cannot build up again.
- Work on the M.S. is only permitted when the machine is at a standstill and depressurised.
- There must be no product on the M.S. ⇒ if necessary drain the machine and rinse it out.
- Isolate the machine to prevent it starting up unexpectedly.
- Comply with the safety notes (safety data sheets).

IMPORTANT! When removing, please observe **by all means**:

- current **accident prevention regulations**
- **regulations for handling hazardous substances**

WARNING! Seals that have been used with **hazardous substances must be properly cleaned** so that there is no possible **danger** to people or to the environment.

IMPORTANT! The packaging used to transport the seal must

- be **identified** with the relevant **hazard symbol** and
- **include** the **safety data sheet** for the product and/or supply medium

The order of disassembly to remove the mechanical seal out of the machine depends on the design of the machine and should be determined by the machine manufacturer.

- Remove the seal in the reverse sequence as described for assembly (set up).

Spare parts

- Only BURGMANN original spare parts must be used. Otherwise
  - **Risks** of a seal failure, **endangering** persons and environment.
  - The BURGMANN guarantee for the mechanical seal **lapses**.
- For a quick exchange a complete **spare seal** should be on stock.

Required details for enquiries and orders

For enquiries and orders the following details are required:

- BURGMANN commission no.
- Drawing no. of M.S. **MG1/dw-00**
  dw = specified shaft diameter
- Part item no., designation, material, number of pieces with reference to the drawing.

Address of headquarters product field **FA**
Standard Mechanical Seals

Burgmann Industries GmbH & Co. KG
Postfach 1240
D - 82502 Wolfratshausen

Germany

☎ +49 (0) 81 71 - 23 0
Fax +49 (0) 81 71 - 23 14 44

Disposal of the BURGMANN mechanical seal

Usually, the BURGMANN mechanical seals can be easily disposed after a thorough cleaning.

- Metal parts (steels, stainless steels, non-ferrous heavy metals) divided into the different groups belong to scrap metal waste.
- Ceramic materials (synthetic carbons, ceramics, carbides) belong to waste products. They can be separated from their housing materials, as are physiologically recognised as safe.
- Synthetic materials/plastics (elastomers, PTFE) belong to special waste.

CAUTION! Material containing fluorine must not be burnt.

IMPORTANT! Some of the synthetic materials, divided into the different groups can be recycled.

Copyright

The **Burgmann Industries GmbH & Co. KG** (Germany) holds the copyright to this document. Customers and operators of mechanical seals are free to use this document in the preparation of their own documentation. No claims of any type or form can be derived in such instance.

We reserve the right to carry out technical modifications of the product, even if they have not yet been considered in this manual.

June 13, 2006
Department Technical Documentation

UNICASE® Helical Inline Gearboxes
Installation and Maintenance Instructions

BIM 1010

USA

CDN

Retain These Safety Instructions For Future Use

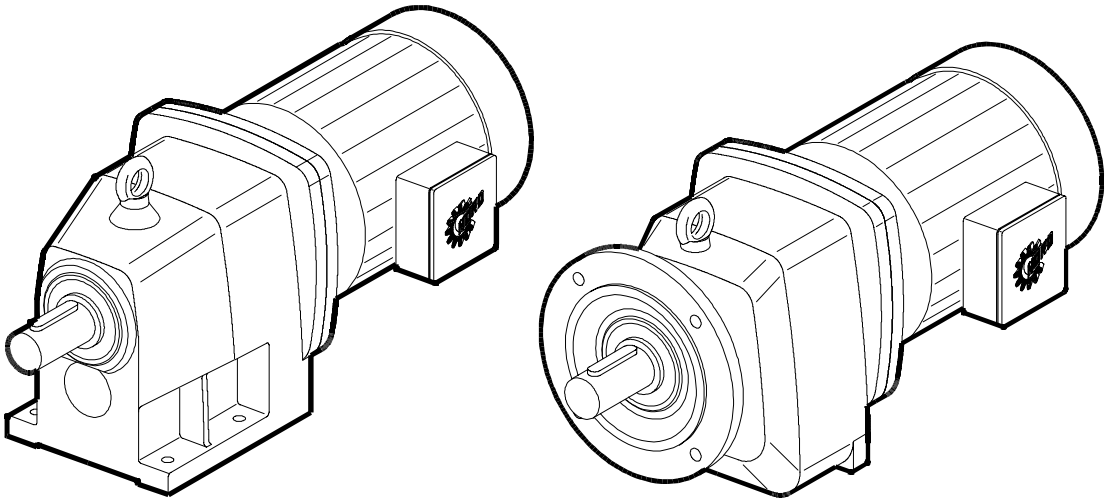

INSPECTION OF UNIT

Thoroughly inspect the equipment for any shipping and handling damage before accepting shipment from the freight company. If any of the goods called for in the bill of lading or express receipt are damaged or the quantity is short, do not accept until the freight or express agent makes an appropriate notation on your freight bill or express receipt. If any concealed loss or damage is discovered later, notify your freight carrier or express agent at once and request him to make an inspection. We will be very happy to assist you in collecting claims for loss or damage during shipment; however, this willingness on our part does not remove the transportation company's responsibility in reimbursing you for collection of claims or replacement of material. Claims for loss or damage in shipment must not be deducted from the NORD Gear invoice, nor should payment of the NORD Gear invoice be withheld awaiting adjustment of such claims, as the carrier guarantees safe delivery.

If considerable damage has been incurred and the situation is urgent, contact the nearest NORD Gear Sales Office for assistance. Please keep a written record of all communications.

RECORD NAMEPLATE DATA

Locate the gear reducer nameplate and record all nameplate data for future reference.

SK _____ S/N _____

RATIO _____ MAX TORQUE _____ RPM _____ MTG. POS _____

STORAGE

PROPER STORAGE UNTIL INSTALLED

Keep unit in a dry, temperature controlled area. If stored other than said, long term storage methods must be applied to the unit including complete fill with lubricant. Protect machined surfaces and rotate shafts periodically. Prior to putting unit into service, drain lubricant and refill to proper level as determined by the mounting position.

PROPER HANDLING OF THE UNIT

Exercise care to prevent damage to the unit when moving. Lift only at designed lifting points. Do not attach other machinery and lift by the unit lifting points. The lifting points are to be used to lift the unit only. Insure that adequate safety measures are taken to protect personnel during transportation. Protect the mounting surface from damage.

INSTALLATION OF UNIT

To ensure long service and dependable performance, an enclosed gear drive must be rigidly supported and the shafts accurately aligned. The following describes the minimum precautions required to accomplish this end.

FOUNDATION
The responsibility for the design and construction of the foundation lies with the user. The foundation must be adequate to withstand normal operating loads and possible overloads while maintaining alignment to attached system components under such loads.

MOUNTING POSITION
Unless a unit is specifically ordered for inclined mounting, the foundation must be level and flat. The lubrication system may not operate properly if the unit is not mounted in the position for which it is designed. It may be desirable to elevate the foundation to facilitate oil drainage.

CONCRETE FOUNDATION
If a concrete foundation is used, steel mounting pads and bolts of sufficient size to distribute the stress into the concrete should be grouted into the foundation.

STEEL FOUNDATION
If a structural steel foundation is used (i.e. wide flange beams or channels), a base plate or sole plate of suitable thickness should be used and should extend under the entire unit.

FOOT MOUNTED UNITS
Use shims under the feet of the unit to align the output shaft to the driven equipment. Make sure that all feet are supported so that the housing will not distort when it is bolted down. Improper shimming will reduce the life of the unit and may cause failure. Dowel pins may be installed to prevent misalignment and ensure proper realignment if removed for service.

FLANGE MOUNTED UNITS
If a structural steel foundation is used (i.e. wide flange beams or channels), a base plate or sole plate of suitable thickness should be used and should extend under the entire unit. If a bulk head plate is used it should be of proper strength to minimize buckling distortions.

Flange Pilot 'AK' or 'AK1' tolerance
Metric (mm)

> ∅ 50 ≤ ∅ 80 = +0.012/-0.007
> ∅ 80 ≤ ∅ 120 = +0.013/-0.009
> ∅ 120 ≤ ∅ 180 = +0.014/-0.011
> ∅ 180 ≤ ∅ 230 = +0.016/-0.013
> ∅ 230 ≤ ∅ 315 = +0.000-0.032
> ∅ 315 ≤ ∅ 400 = +0.000/-0.036
> ∅ 400 ≤ ∅ 500 = +0.000/-0.040

Inch

> ∅ 1.969 ≤ ∅ 3.150 = +0.005/-0.0003
> ∅ 3.150 ≤ ∅ 4.724 = +0.005/-0.0004
> ∅ 4.724 ≤ ∅ 7.087 = +0.006/-0.0004
> ∅ 7.087 ≤ ∅ 9.055 = +0.006/-0.0005
> ∅ 9.055 ≤ ∅ 12.402 = +0.000/-0.0013
> ∅ 12.402 ≤ ∅ 15.748 = +0.000/-0.0014
> ∅ 15.748 ≤ ∅ 19.685 = +0.000/-0.0016

BOLT STRENGTH
Bolt size, strength and quantity should be verified to insure proper torque reaction capacity whatever the mounting arrangement.

PRIME MOVER MOUNTING
Align the prime mover to the reducer-input shaft using shims under the feet. Make sure that the feet are supported. Dowel the prime mover to its foundation.

SHAFT CONNECTIONS
When connecting shafts to either the input or output of the reducer, consider the following instructions.

FITS
Clearance or interference fits for coupling hubs should be in accordance with ANSI/AGMA 9002-A86 or as follows.

Output and Input shaft Diameter tolerance
Metric (mm)

≤ ∅ 18 = +0.012/+0.001
> ∅ 18 ≤ ∅ 30 = +0.015/+0.002
> ∅ 30 ≤ ∅ 50 = +0.018/+0.002
> ∅ 50 ≤ ∅ 80 = +0.030/+0.011
> ∅ 80 ≤ ∅ 120 = +0.035/+0.013
> ∅ 120 ≤ ∅ 180 = +0.040/+0.015

Inch

≤ ∅ 1.750 = +0.0000/-0.0005
> ∅ 1.750 = +0.0000/-0.0010

Output and Input shaft Drill and tap shaft end
Metric (mm)

≤ ∅ 16 = M5
> ∅ 16 ≤ ∅ 21 = M6
> ∅ 21 ≤ ∅ 24 = M8
> ∅ 24 ≤ ∅ 30 = M10
> ∅ 30 ≤ ∅ 38 = M12
> ∅ 38 ≤ ∅ 50 = M16
> ∅ 50 ≤ ∅ 85 = M20
> ∅ 85 ≤ ∅ 130 = M24

Inch

≤ ∅ 0.438 = #10-24 x 0.4 deep
> ∅ 0.438 ≤ ∅ 0.813 = ¼-20 x 0.6 deep
> ∅ 0.813 ≤ ∅ 0.938 = 5/16-18 x 0.7 deep
> ∅ 0.938 ≤ ∅ 1.125 = 3/8-16 x 0.9 deep
> ∅ 1.125 ≤ ∅ 1.375 = 1/2-13 x 1.1 deep
> ∅ 1.375 ≤ ∅ 1.875 = 5/8-11 x 1.4 deep
> ∅ 1.875 ≤ ∅ 3.250 = 3/4-10 x 1.7 deep
> ∅ 3.250 = 1-8 x 2.2 deep

Outboard pinion and sprocket fits should be as recommended by the pin sprockets with interference fits should be heated according to the manufacturer's recommendations, generally 250°F to 300°F, (120°C to 150° C) before assembling to the shaft.

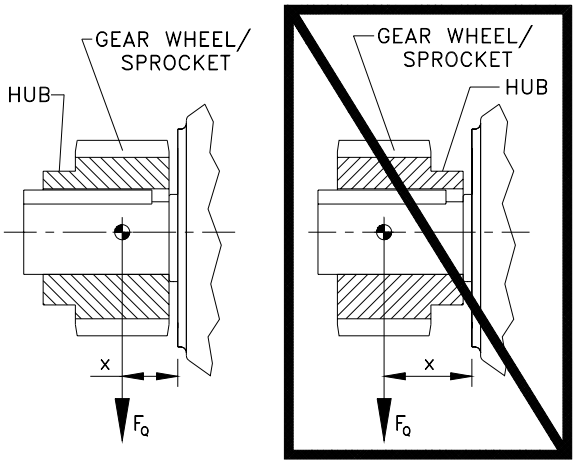

LOCATION
Coupling hubs should be mounted flush with the shaft ends, unless specifically ordered for overhung mounting. Pinions, sprockets and sheaves should be mounted as close as possible to the unit housing to minimize bearing loads and shaft deflections.

COUPLING ALIGNMENT
Shaft couplings should be installed according to the coupling manufacturer's recommendations for gap, angular and parallel alignment. In many installations, it is necessary to allow for thermal and mechanical shaft movement when determining shaft alignment. The coupling manufacturer's recommendations should be followed.

AXIAL DISPLACEMENT
The gap between shaft ends should be the same as the specified coupling gap unless overhung mounting of the coupling hub is specified. The coupling gap and shaft gap must be sufficient to accommodate any anticipated thermal or mechanical axial movement.

ANGULAR ALIGNMENT
Insert a spacer or shim stock equal to the required coupling gap between the coupling hub faces and measure the clearance using feeler gauges. Repeat this at the same depth at 90-degree intervals to determine the amount of angular misalignment.

PARALLEL ALIGNMENT
Mount a dial indicator to one coupling hub, and rotate this hub, sweeping the outside diameter of the other hub. The parallel misalignment is equal to one-half of the total indicator reading. Another method is to rest a straight edge squarely on the outside diameter of the hubs at 90-degree intervals and measure any gaps with feeler gauges. The maximum gap measurement is the parallel misalignment.

CHECKING ALIGNMENT
After both angular and parallel alignments are within specified limits, tighten all foundation bolts securely and repeat the above procedure to check alignment. If any of the specified limits for alignment are exceeded, realign the coupling.

SPROCKET OR SHEAVE ALIGNMENT
Align the sheaves or sprockets square and parallel by placing a straight edge across their faces. Alignment of bushed sheaves and sprockets should be checked after bushings have been tightened. Check horizontal shaft alignment by placing a level vertically against the face of the sheave or sprocket. Adjust belt or chain tension per the manufacturer's specified procedure.

OUTBOARD PINION ALIGNMENT
Align the pinion by adjusting the gear tooth clearance according to the manufacturer's recommendations and checking for acceptable outboard pinion tooth contact. The foundation bolts may have to be loosened and the unit moved slightly to obtain this contact. When the unit is moved to correct tooth contact, the prime mover should be realigned.

RECHECK ALIGNMENT
After a period of operation, recheck alignment and adjust as required.

1. Properly install unit on a rigid foundation
   - adequately supported
   - securely bolted into place
   - leveled so as not to distort the gear case
2. Properly install couplings suitable for the application and connected equipment.
3. Ensure accurate alignment with other equipment.
4. Furnish and install adequate machinery guards as needed to protect operating personnel and as required by the applicable standards of the Occupational Safety and Health Administration (OSHA), and by other applicable safety regulations;
5. Ensure that driving equipment is running in the correct direction before coupling to reducers with backstops (designed to operate only in a specific direction) or machinery designed to operate only in one direction.

CHANGES IN PERFORMANCE SPECIFICATIONS
Owner has the responsibility to consult with NORD GEAR if such items such as applied loads, operating speeds or other operating conditions have changed.

WARNING:
LOCK OUT POWER before any maintenance is performed. Make absolutely sure that no voltage is applied while work is being done on the gearbox.

START-UP
1. Ensure that switches, alarms, heaters, coolers and other safety and protection devices are installed and operational for their intended purpose.
2. Verify that the installed mounting position is the same as the nametag mounting position. If not, adjust the oil level accordingly and relocate the vent plug, fill plug and drain plug according to the mounting position. See following.

AUTOVENT PLUG
The Autovent plug is brass in color and will be located at the highest point on the gearbox. It operates like a check-valve to allow the reducer to relieve internal pressure while preventing lubricant contamination during cooling. A spring presses a ball or plunger against a machined orifice until pressure exceeds 2 psi. Above 2 psi the air is allowed to escape depressurizing the gearcase. When internal pressure drops below 2 psi, the autovent re-seals closing the unit to the outside environment. After shutdown, the reducer cools along with the air inside the reducer. The unit will temporarily maintain a slight vacuum until normalization occurs. NORD Gear supplies an Autovent as a standard feature.

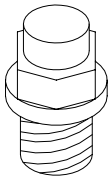
AUTOVENT PLUG

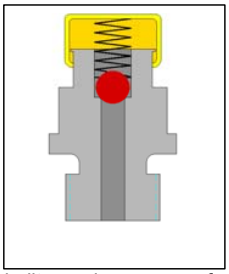

The Autovent releases built-up air pressure from inside the gearbox (Max. pressure 2 psi).

FILL LEVEL & DRAIN PLUGS
The drain plugs are metric socket head cap screws. They will be located at the lowest part of the gearbox for ease of draining. The fill level plug is a hex head cap screw. It will be located between the Autovent and drain plug. Both types of plugs will have gaskets included to prevent oil from leaking.

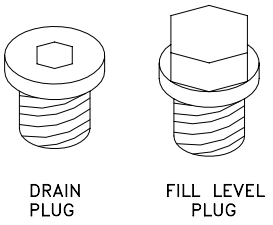

Two types of plugs for maintenance

LUBRICANT
All NORD reducers are shipped from the factory properly filled with lubricant and all plugs are installed according to the mounting position given on the reducer nametag. Acceptable oil fill level is within ½ inch of the bottom of the fill plug threads.

OPERATION AND MAINTENANCE CHECKLIST
1. Operate the equipment as it was intended to be operated
2. Do not overload.
3. Run at correct speed.
4. Maintain lubricant in good condition and at proper level.
5. Dispose of used lubricant in accordance with applicable laws and regulations.
6. Apply proper maintenance to attached equipment at prescribed intervals recommended by the manufacturer.
7. Perform periodic maintenance of the gear drive as recommended by NORD.

MOUNTING POSITIONS

These charts detail the mounting positions for horizontal and vertical mounting. The Autovent, oil fill plug and drain plug are indicated on each mounting position picture. The factory set mounting position and plug locations match that shown on the gearbox nametag. For mounting orientations other than shown consult NORD Gear.

VERTICAL POSITION

	SK 11E - SK 51 E	SK 02 - SK 52	SK 03 - SK 53	SK 62 - SK 103
V1 *	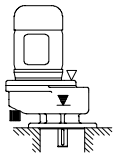	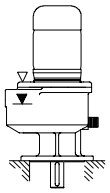	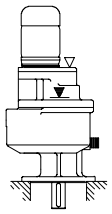	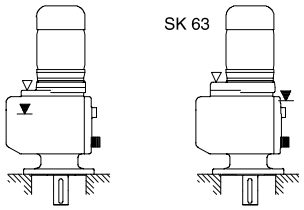
V3	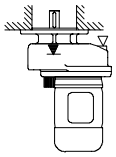	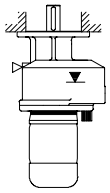	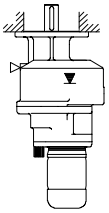	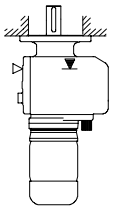
V5 *	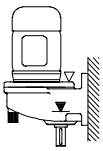	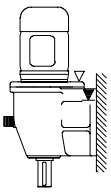	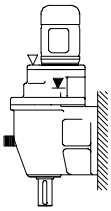	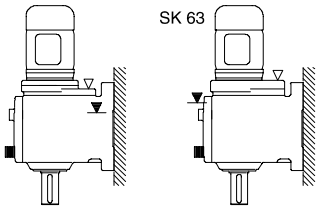
V6	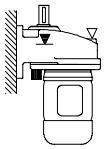	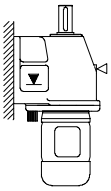	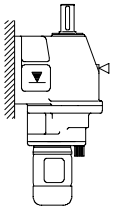	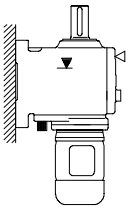

Symbols: ▽ Vent plug ▼ Oil level ■ Drain plug ▨ Mounting surface

* Mounting position V1 or V5 with lubricant expansion unit

HORIZONTAL POSITION

	SK 11 E - SK 51 E	SK 02 - SK 52 SK 03 - SK 53	SK 62 - SK 103
B3	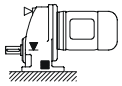	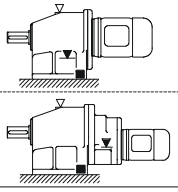	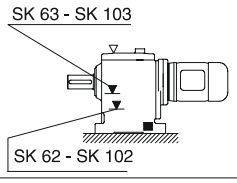
B6	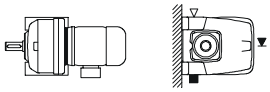	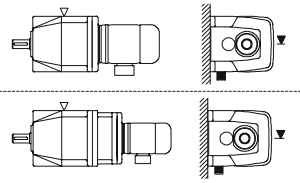	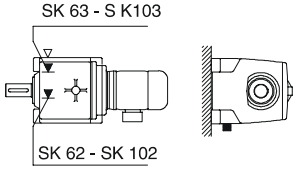
B7	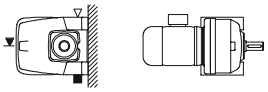	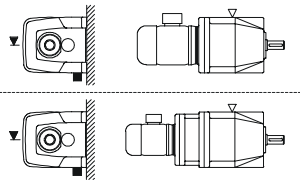	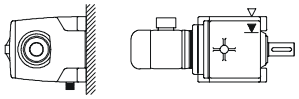
B8	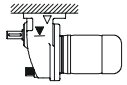	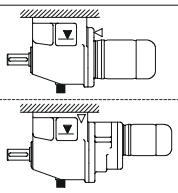	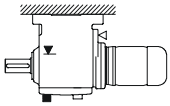
B5	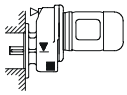	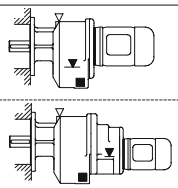	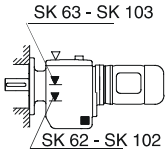
B5I	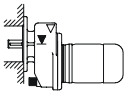	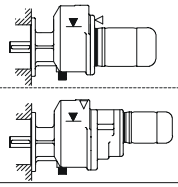	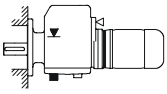
B5II	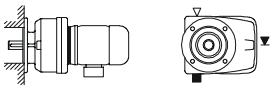	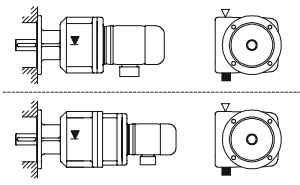	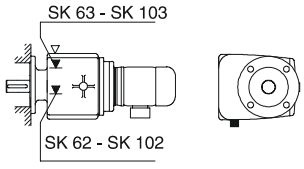
B5III	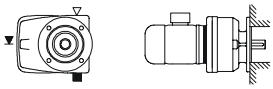	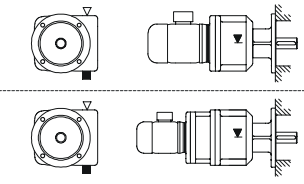	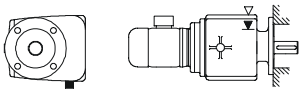

Symbols: ▽ Vent plug ▼ Oil level ■ Drain plug ▨ Mounting surface

MAINTENANCE

Mineral lubricant should be changed every 10,000 service hours or after two years. For synthetic oils, the lube should be changed every 20,000 service hours or after four years. In case of extreme operating (e.g. high humidity, aggressive environment or large temperature variations), shorter intervals between changes are recommended.

OIL SPECIFICATIONS

NORD supplies all reducers filled with oil from the factory. Consult the sticker adjacent to the fill plug to determine the type of lubricant installed at the factory. Standard lubricant is ISO VG220 mineral-based oil. However, some units have special lubricants designed to operate in certain environments or to extend the service life of the lubricant. If in doubt about which lubricant is needed, contact NORD Gear.

STANDARD OIL – ISO VG220

Ambient Temperature	Formulation
20 to 104°F (-5 to 40°C)	Mineral

TYPICAL OILS

Viscosity ISO NLGI	Formulation	Service Temperature Range	Mobil	Shell	Castrol	KLÜBER LUBRICATION	bp	Tribol
VG 460	Conventional Mineral	20°C to +50°C 68F to +122°F	Mobilgear 634	Omala 460	7EP	Klüberoil GEM 1-460	Energol GR-XP 460	Tribol 1100/460
	Synthetic PAO	-30°C to +80°C -22°F to +176°F	Mobil SHC 634	Omala 460 HD	Isolube EP 460	Klübersynth EG 4-460	N/A	Tribol 1510/460
VG 320	Conventional Mineral	0°C to +30°C 32°F to +86°F	Mobilgear 632	Omala 320	6EP	Klüberoil GEM 1-320	Energol GR-XP 320	Tribol 1100/320
	Synthetic PAO	-35°C to +80°C -31°F to +176°F	Mobil SHC 632	Omala 320 HD	Isolube EP 460	Klübersynth EG 4-320	N/A	Tribol 1510/320
VG 220	Conventional Mineral	-5°C to +40°C +20°F to +104°F	Mobilgear 630	Omala 220	5EP	Klüberoil GEM 1-220	Energol GR-XP 220	Tribol 1100/220
	Synthetic PAO	-34°C to +80°C -30°F to +176°F	Mobil SHC 630	Omala 220 HD	Isolube EP 220	Klübersynth EG 4-220	N/A	Tribol 1510/220
VG 150 & VG 100	Conventional Mineral	-15°C to +25°C 5°F to +77°F	Mobilgear 629	Omala 100	4EP	Klüberoil GEM 1-150	Energol GR-XP 100	Tribol 1100/100
	Synthetic PAO	-37°C to +10°C -35°F to +50°F	Mobil SHC 629	Omala 150 HD	Isolube EP 150	Klübersynth EG 4-150	N/A	N/A
VG 68	Conventional Mineral	-15°C to +25°C 5°F to +77F	Mobilgear 626	Omala 68	2EP	Klüberoil GEM 1-68	Energol GR-XP 68	Tribol 1100/68
	Synthetic PAO	-40°C to +10°C -40°F to +50F	Mobil SHC 626	N/A	Isolube EP 68	N/A	N/A	N/A
VG 32	Synthetic PAO	-40°C to +10°C -40°F to +50°F	Mobil SHC 624	N/A	N/A	Klüber-Summit HySyn FG-32	N/A	N/A

PAO = Poly Alpha Olefin

SPECIAL PURPOSE LUBRICANTS

Ambient Temperature	Formulation	Manufacturer	Oil Brand Name
20 to 104°F (-5 to 40°C)	*Food Grade* Oil - Synthetic	Chevron	FM ISO 220
20 to 104°F (-5 to 40°C)	*Food Grade* Oil - Synthetic	OilJAX	Magnaplate 85W140-FG
5 to 125°F (-20 to 50°C)	Fluid Grease	Mobil	Mobilux EP023
-30 to 140°F (-35 to 60°C)	Fluid Grease - Synthetic	Mobil	Mobilith SHC 007
-30 to 140°F (-35 to 60°C)	Fluid Grease - Synthetic	Shell	Albida LC

STANDARD BEARING GREASE – NLGI 2EP Lithium

Ambient Temperature	Formulation
-20 to 140°F (-30 to 60°C)	Mineral

OPTIONAL BEARING GREASES

Ambient Temperature	Formulation	Manufacturer	Grease Brand Name
-40 to 230°F (-40 to 110°C)	Synthetic	Shell	Aeroshell 6
-40 to 230°F (-40 to 110°C)	*Food Grade* - Synthetic	Lubriplate	SFL1

LUBRICANT CAPACITY

Each reducer has the oil level and oil quantity adjusted according to the mounting position shown in the tables. When replacing the oil, consult the tables below to determine the proper amount of oil to be installed according to the reducer size and mounting position. Note that this is approximate and the final level will be adjusted when the reducer is installed. Acceptable oil fill level is within ½ inch of the bottom of the fill plug threads.

LUBRICATION CAPACITY – HELICAL INLINE GEARBOXES

Mounting position		*Horizontal position*								*Vertical position*			
		single reduction											
		B 3	**B 6**	**B 7**	**B 8**	**B 5**	**B 5I**	**B 5II**	**B 5III**	**V 1**	**V 3**	**V 5**	**V 6**
SK 11E	quarts	0.26	0.37	0.37	0.58	0.32	0.53	0.42	0.42	0.32	0.37	0.42	0.53
	liters	0.25	0.35	0.35	0.55	0.30	0.50	0.40	0.40	0.30	0.35	0.40	0.50
SK 21E	quarts	0.63	1.06	1.06	1.27	0.53	1.16	0.95	0.95	0.74	1.48	1.06	1.27
	liters	0.60	1.00	1.00	1.20	0.50	1.10	0.90	0.90	0.70	1.40	1.00	1.20
SK 31E	quarts	1.16	1.80	1.80	2.32	0.85	1.74	2.11	2.11	1.16	1.37	2.43	2.85
	liters	1.10	1.70	1.70	2.20	0.80	1.65	2.00	2.00	1.10	1.30	2.30	2.70
SK 41E	quarts	1.80	2.75	2.75	3.49	1.06	2.96	3.49	3.49	1.69	2.75	2.64	2.75
	liters	1.70	2.60	2.60	3.30	1.00	2.80	3.30	3.30	1.60	2.60	2.50	2.60
SK 51E	quarts	2.32	3.59	3.59	4.97	1.90	4.33	4.02	4.02	3.17	3.70	4.23	4.65
	liters	2.20	3.40	3.40	4.70	1.80	4.10	3.80	3.80	3.00	3.50	4.00	4.40
Mounting position		**double reduction**											
		B 3	**B 6**	**B 7**	**B 8**	**B 5**	**B 5I**	**B 5II**	**B 5III**	**V 1**	**V 3**	**V 5**	**V 6**
SK 02	quarts	0.16	0.42	0.42	0.74	0.26	0.63	0.53	0.53	0.63	0.63	0.63	0.63
	liters	0.15	0.40	0.40	0.70	0.25	0.60	0.50	0.50	0.60	0.60	0.60	0.60
SK 12	quarts	0.26	0.53	0.53	0.90	0.37	0.95	0.63	0.63	0.95	0.90	0.79	0.79
	liters	0.25	0.50	0.50	0.85	0.35	0.90	0.60	0.60	0.90	0.85	0.75	0.75
SK 22	quarts	0.53	1.43	1.43	2.11	0.74	2.11	1.64	1.64	1.90	2.11	1.90	1.90
	liters	0.50	1.35	1.35	2.00	0.70	2.00	1.55	1.55	1.80	2.00	1.80	1.80
SK 32	quarts	0.95	2.11	2.11	3.17	1.37	3.49	2.54	2.54	3.28	3.06	3.06	2.64
	liters	0.90	2.00	2.00	3.00	1.30	3.30	2.40	2.40	3.10	2.90	2.90	2.50
SK 42	quarts	1.37	3.38	3.38	4.76	1.90	4.76	3.91	3.91	4.23	4.65	4.54	6.13
	liters	1.30	3.20	3.20	4.50	1.80	4.50	3.70	3.70	4.00	4.40	4.30	5.80
SK 52	quarts	2.64	5.39	5.39	7.19	3.17	6.55	5.92	5.92	7.82	7.19	7.19	7.40
	liters	2.50	5.10	5.10	6.80	3.00	6.20	5.60	5.60	7.40	6.80	6.80	7.00
SK 62	quarts	6.87	15.85	15.85	13.74	7.40	14.79	16.91	16.91	19.55	15.85	16.91	15.85
	liters	6.50	15.00	15.00	13.00	7.00	14.00	16.00	16.00	18.50	15.00	16.00	15.00
SK 72	quarts	9.51	24.30	24.30	19.02	10.57	19.55	24.30	24.30	29.59	24.30	27.47	24.30
	liters	9.00	23.00	23.00	18.00	10.00	18.50	23.00	23.00	28.00	23.00	26.00	23.00
SK 82	quarts	14.79	33.81	33.81	28.53	15.85	30.64	36.46	36.46	47.55	39.10	46.49	36.98
	liters	14.00	32.00	32.00	27.00	15.00	29.00	34.50	34.50	45.00	37.00	44.00	35.00
SK 92	quarts	26.42	54.95	54.95	49.66	27.47	49.66	54.95	54.95	82.42	77.14	80.31	77.14
	liters	25.00	52.00	52.00	47.00	26.00	47.00	52.00	52.00	78.00	73.00	76.00	73.00
SK 102	quarts	38.04	75.02	75.02	69.74	42.27	69.74	76.08	76.08	109.90	85.59	107.78	83.48
	liters	36.00	71.00	71.00	66.00	40.00	66.00	72.00	72.00	104.00	81.00	102.00	79.00
Mounting position		**triple reduction**											
		B 3	**B 6**	**B 7**	**B 8**	**B 5**	**B 5I**	**B 5II**	**B 5III**	**V 1**	**V 3**	**V 5**	**V 6**
SK 03	quarts	0.32	0.63	0.63	0.85	0.53	0.95	0.85	0.85	1.16	0.86	0.95	1.32
	liters	0.30	0.60	0.60	0.80	0.50	0.90	0.80	0.80	1.10	0.81	0.90	1.25
SK 13	quarts	0.63	0.74	0.74	1.16	0.85	1.27	1.00	1.00	1.27	1.27	1.27	1.32
	liters	0.60	0.70	0.70	1.10	0.80	1.20	0.95	0.95	1.20	1.20	1.20	1.25
SK 23	quarts	1.37	1.69	1.69	2.43	2.64	1.59	2.96	2.96	2.96	2.75	2.48	2.54
	liters	1.30	1.60	1.60	2.30	2.50	1.50	2.80	2.80	2.80	2.60	2.35	2.40
SK 33	quarts	1.69	2.43	2.43	3.38	2.01	3.70	2.75	2.75	4.65	3.59	4.44	3.06
	liters	1.60	2.30	2.30	3.20	1.90	3.50	2.60	2.60	4.40	3.40	4.20	2.90
SK 43	quarts	3.17	3.80	3.80	5.49	3.70	5.28	4.33	4.33	6.45	6.02	6.97	5.92
	liters	3.00	3.60	3.60	5.20	3.50	5.00	4.10	4.10	6.10	5.70	6.60	5.60
SK 53	quarts	4.76	6.34	6.34	8.14	5.49	7.40	7.08	7.08	9.40	8.88	9.19	9.19
	liters	4.50	6.00	6.00	7.70	5.20	7.00	6.70	6.70	8.90	8.40	8.70	8.70
SK 63	quarts	10.57	13.74	13.74	11.62	11.62	12.68	14.79	14.79	19.02	14.79	16.91	15.32
	liters	10.00	13.00	13.00	11.00	11.00	12.00	14.00	14.00	18.00	14.00	16.00	14.50
SK 73	quarts	14.79	21.13	21.13	18.49	14.79	19.02	21.13	21.13	29.06	23.78	28.53	21.13
	liters	14.00	20.00	20.00	17.50	14.00	18.00	20.00	20.00	27.50	22.50	27.00	20.00
SK 83	quarts	23.25	34.87	34.87	27.47	24.30	28.53	35.93	35.93	42.27	35.93	39.10	32.76
	liters	22.00	33.00	33.00	26.00	23.00	27.00	34.00	34.00	40.00	34.00	37.00	31.00
SK 93	quarts	42.27	51.78	51.78	46.49	42.27	46.49	51.78	51.78	78.19	73.97	76.08	73.97
	liters	40.00	49.00	49.00	44.00	40.00	44.00	49.00	49.00	74.00	70.00	72.00	70.00
SK 103	quarts	58.12	70.80	70.80	58.12	58.12	62.34	70.80	70.80	104.61	82.42	102.50	75.02
	liters	55.00	67.00	67.00	55.00	55.00	59.00	67.00	67.00	99.00	78.00	97.00	71.00

Note: Filling quantities are approximate figures. Oil level must be checked according to oil level plug after final installation. Acceptable oil fill level is within ½ inch of the bottom of the fill plug threads For mounting angles not shown, consult factory.

PARTS LIST

SK 11 E - SK 51 E

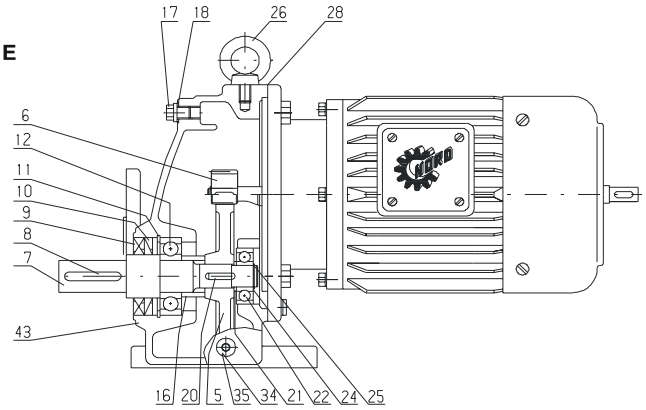

SK 02 - SK 52

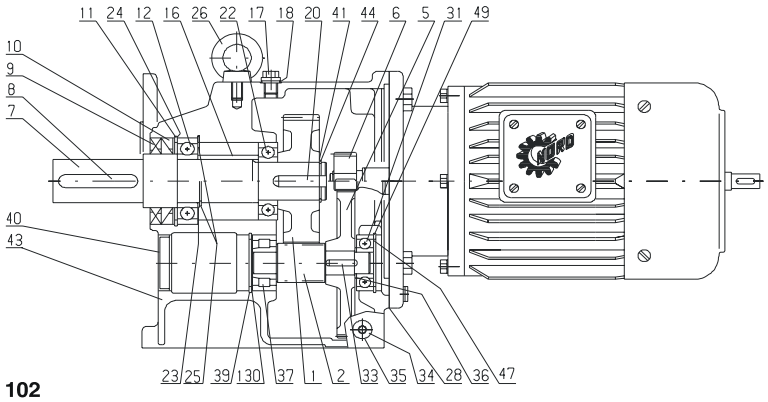

SK 62 - SK 102

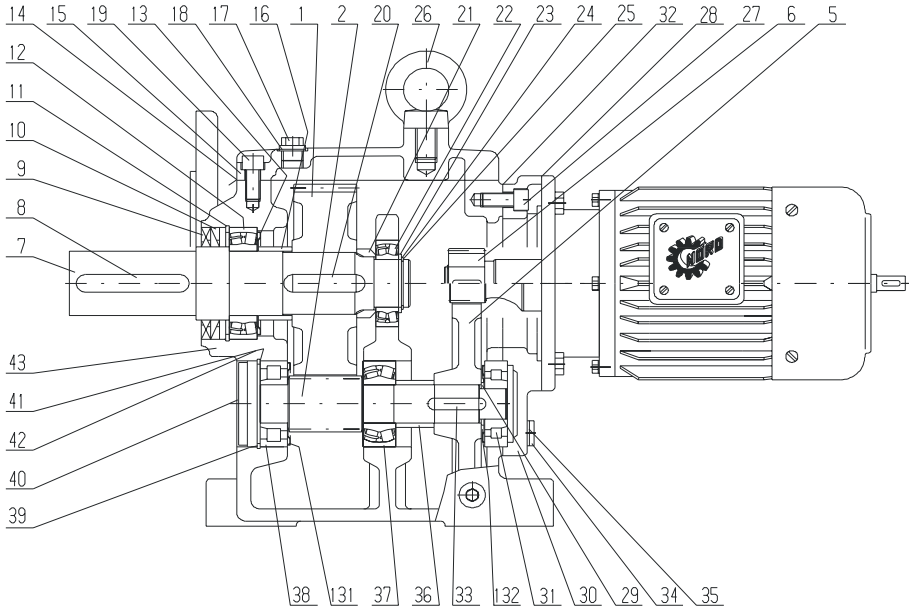

1	Driven gear
2	Pinion shaft
5	Driving gear
6	Driving pinion
7	Output shaft
8	Key
9	Shaft seal
10	Shaft seal
11	Circlip
12	Output shaft bearing
13	NILOS ring
14	Seal
15	Gearcase cover
16	Spacer
17	Vent plug
18	Seal
19	Socket head screw
20	Key
21	Spacer
22	Output shaft bearing
23	Supporting disc
24	Shim
25	Circlip
26	Flanged eye bolt
27	Bolt
28	Seal
29	Spacer
30	Gearbox cover
31	Pinion shaft bearing
32	Seal
33	Key
34	Drain plug
35	Seal
36	Spacer
37	Pinion shaft bearing
38	Pinion shaft bearing
39	Circlip
40	Locking cap
41	Shim
42	Supporting disc
43	Gear case
44	Circlip
47	Shim
49	Circlip
130	Shim
131	NILOS ring
132	NILOS ring

RECOMMENDED SPARE PARTS

Bearings – *all* Gaskets – *all* Shims – *all*
Seals – *all* Seal Plugs – *all*

IMPORTANT!

When ordering parts, it is necessary to have the ***NORD SERIAL NUMBER*** from the unit the parts are for. The serial number will dictate the correct parts for that particular unit. The gearbox nameplate will have the serial number on it.

PARTS LIST

SK 03 - SK 53

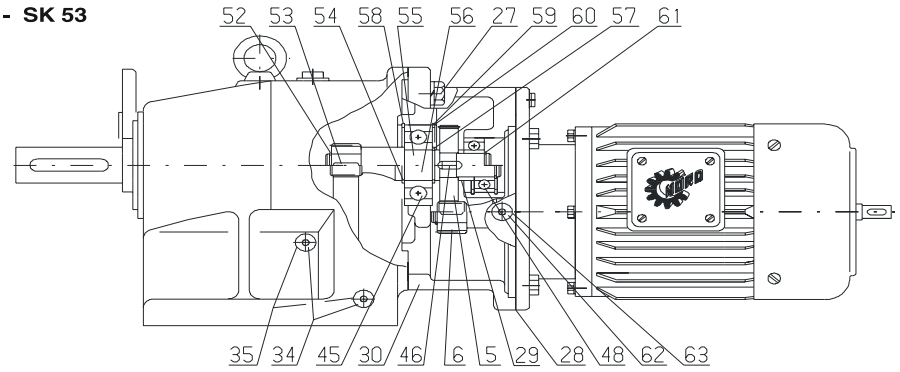

SK 63 - SK 103

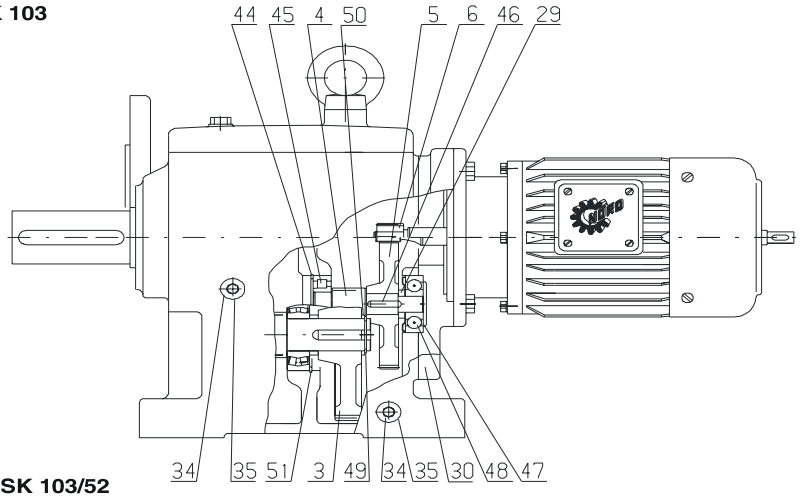

SK 12/02 - SK 103/52

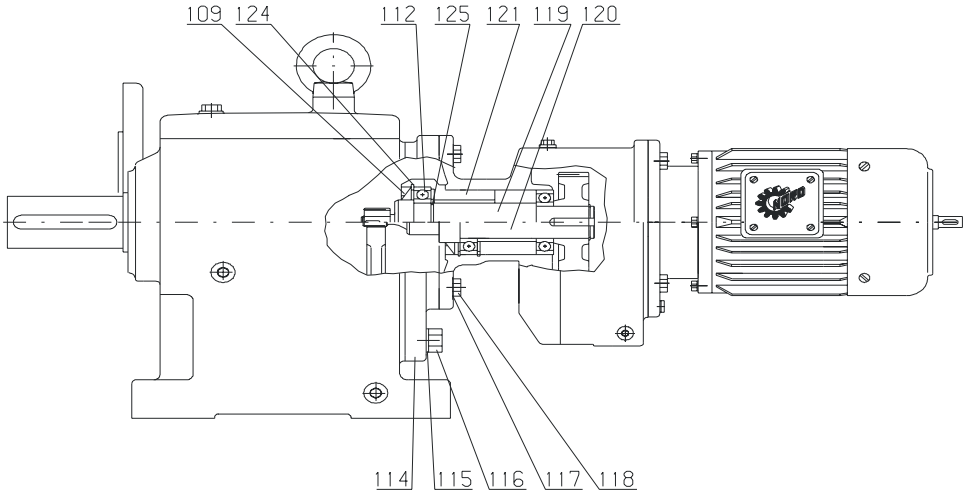

3	Driven gear
4	Pinion shaft SK 63 - SK 103
5	Driving gear
6	Driving pinion
27	Fixing bolt
28	Seal
29	Spacer
30	Third reduction gearcase
34	Drain plug
35	Seal
44	Circlip
45	Ball bearing
46	Key
47	Shim
48	Ball bearing
49	Circlip
50	Supporting disc
51	Circlip
52	Circlip
53	Key
54	Circlip
55	Intermediate shaft, plain
56	Intermediate shaft, gearcut
57	Circlip
58	Circlip
59	Shim
60	Circlip
61	Circlip
62	Oil-plug
63	Seal
109	Shaft seal
112	Ball bearing
114	Intermediate flange
115	Spring washer
116	Bolt
118	Bolt
119	Intermediate shaft, plain
120	Intermediate shaft, gearcut
121	Bearing sleeve
124	Circlip
125	Circlip

NOTES

TROUBLE SHOOTING

PROBLEM WITH THE REDUCER		POSSIBLE CAUSES	SUGGESTED REMEDY
Runs Hot	Overloading	Load exceeds the capacity of the reducer	Check rated capacity of reducer, replace with unit of sufficient capacity or reduce load
	Improper lubrication	Insufficient lubrication	Check lubricant level and adjust up to recommended levels
		Excessive lubrication	Check lubricant level and adjust down to recommended levels
		Wrong lubrication	Flush out and refill with correct lubricant as recommended
Runs Noisy	Loose foundation bolts	Weak mounting structure	Inspect mounting of reducer. Tighten loose bolts and/ or reinforce mounting and structure
		Loose hold down bolts	Tighten bolts
	Worn RV Disc	Overloading unit may result in damage to disc	Disassemble and replace disc. Recheck rated capacity of reducer.
	Failure of Bearings	May be due to lack of lubricant	Replace bearing. Clean and flush reducer and fill with recommended lubricant.
		Overload	Check rated capacity of reducer.
	Insufficient Lubricant	Level of lubricant in the reducer not properly maintained.	Check lubricant level and adjust to factory recommended level.
Output Shaft Does Not Turn	Internal parts are broken	Overloading of reducer can cause damage.	Replace broken parts. Check rated capacity of reducer.
		Key missing or sheared off on input shaft.	Replace key.
		Coupling loose or disconnected.	Properly align reducer and coupling. Tighten coupling.
Oil Leakage	Worn Seals	Caused by dirt or grit entering seal.	Replace seals. Autovent may be clogged. Replace or clean.
		Overfilled reducer.	Check lubricant level and adjust to recommended level.
		Autovent clogged.	Clean or replace, being sure to prevent any dirt from falling into the reducer.
		Improper mounting position, such as wall or ceiling mount of horizontal reducer.	Check mounting position. Name tag & verify with mounting chart in manual.

NORD Gear Corporation
National Customer Service Toll Free 888-314-6673

www.nord.com

NORD Gear Limited
Toll Free in Canada 800-668-4378

WEST
1121 Railroad Street
Building 101
Corona, CA 92882
Phone 951-279-2600
Fax 888-408-6673

MIDWEST
PO Box 367
800 Nord Drive
Waunakee, WI 53597
Phone 608-849-7300
Fax 800-373-6673

SOUTH
100 Forsyth Hall Dr.
Building 100B
Charlotte, NC 28273
Phone 704-529-1255
Fax 888-259-6673

CANADA
41 West Drive
Brampton, Ontario L6T 4A1
Phone 905-796-3606
Fax 905-796-8130

Installation, Operation and Maintenance Instructions

for AC Induction Motors
56- 6800 Frames (NEMA)
63 – 280 Frames (IEC)



MARATHON ELECTRIC
Contact Motor Customer Service at:
Phone: (715) 675-3311
www.marathonelectric.com

Form 5554E

INSTALLER: PLEASE LEAVE THIS MANUAL FOR THE OWNER'S USE
OWNER: READ AND SAVE THESE INSTRUCTIONS

SAFETY INSTRUCTIONS

⚠ This is the safety alert symbol. It is used to alert you to potential personal injury hazards. Obey all safety messages that follow this symbol to avoid possible injury or death.

⚠ WARNING
Before installing, using, or servicing this product, carefully read and fully understand the instructions including all warnings, cautions, & safety notice statements. To reduce risk of personal injury, death and/or property damage, follow all instructions for proper motor installation, operation and maintenance.

These instructions are not intended as a complete listing of all details for installation, operation, and maintenance. If you have any questions concerning any of the procedures, STOP, and call the appropriate Regal-Beloit motor company.

Table of Contents

1.0 INSTALLER / OWNER / OPERATOR RESPONSIBILITY
- 1.1 Electrical Safety
- 1.2 Mechanical Safety
- 1.3 Environmental Safety

2.0 RECEIVING & INSPECTION
- 2.1 Initial Inspection
  - 2.1.1 Packing List & Inspect
  - 2.1.2 Turn Motor Shaft
  - 2.1.3 Check Nameplate
- 2.2 Handling
  - 2.2.1 Correct Lifting Angles
- 2.3 Storage
  - 2.3.1 Bearing Lubrication
  - 2.3.2 Shaft Rotation
  - 2.3.3 Damp or Humid Storage Locations

3.0 INSTALLATION AND OPERATION
- 3.1 Location
  - 3.1.1 Selecting a Location
  - 3.1.2 Ambient Temperature Limits
  - 3.1.3 Construction Selection per Location
    - 3.1.3.1 Dripproof
    - 3.1.3.2 Totally Enclosed
    - 3.1.3.3 Hazardous Locations Motors
- 3.2 Mounting Motor
  - 3.2.1 Rigid Base (Footed)
  - 3.2.2 Rigid Base Hole Selection -6 or 8 Hole Bases
  - 3.2.3 Vertical
- 3.3 Application Assembly to Motor
  - 3.3.1 General: Proper Alignment
  - 3.3.2 Direct Coupling
  - 3.3.3 Direct Connected
  - 3.3.4 Belted
  - 3.3.5 VFD Operation
  - 3.3.6 Accessories
    - 3.3.6.1 General
    - 3.3.6.2 Brake Motors
    - 3.3.6.3 Space Heaters
    - 3.3.6.4 Thermal Protection General, Thermostats, Thermisters & RTDs
    - 3.3.6.5 RTD Alarm & Trip Settings
  - 3.3.7 Guards
- 3.4 Electrical Connections
  - 3.4.1 Power Supply / Branch Circuit
    - 3.4.1.1 Branch Circuit Supply
    - 3.4.1.2 Fuses, Breakers, Overload Relays
    - 3.4.1.3 AC Power Supply Limits
  - 3.4.2 Terminal Box
    - 3.4.2.1 Conduit opening
    - 3.4.2.2 Hazardous Locations
  - 3.4.3 Lead Connections
    - 3.4.3.1 Wire Size Requirements (Single Phase)
    - 3.4.3.2 Extension Cords (Single Phase)
  - 3.4.4 Ground Connections
  - 3.4.5 Start Up
    - 3.4.5.1 Start Up – No Load Procedure
    - 3.4.5.2 Start Up – Load Connected Procedure
    - 3.4.5.3 Jogging and/or repeated starts

4.0 MAINTENANCE
- 4.1 General Inspection

4.1.1 Ventilation
4.1.2 Insulation
4.1.3 Electrical Connections
4.2 Lubrication and Bearings
4.2.1 Grease Type
4.2.2 Bearing Operating Temperature
4.2.3 Lubrication Interval
4.2.4 Lubrication Procedure
4.2.5 Lubrication Example
4.3 Trouble Shooting
4.3.1 General Trouble-Shooting Warnings
4.3.2 Trouble-Shooting Cause / Corrective Action

motor is suitable for use on Pulse Width Modulated (PWM) type VFD power. In addition, the nameplate must be marked with the inverter rating; for example, "2:1 CT", "2 to 1 Constant Torque", etc.

1.0 INSTALLER/OWNER/OPERATOR RESPONSIBILITY:

1.1 ELECTRICAL SAFETY

WARNING: ELECTRICAL SHOCK HAZARD

Electrical connections shall be made by a qualified electrical personnel in accordance with all applicable codes, ordinances and sound practices. Failure to follow these instructions could result in serious personal injury, death and/or property damage. Only qualified personnel who are familiar with the applicable National Code (USA = NEC) and local codes should install or repair electrical motors and their accessories.

WARNING: ELECTRICAL LIVE CIRCUIT HAZARD

Do not touch electrically live parts. Disconnect, lockout and tag input power supply before installing or servicing motor (includes accessory devices). Use a voltmeter to verify that power is off before contacting conductors.

WARNING: ELECTRICAL GROUNDING HAZARD

Failure to properly ground motors, per the National Electrical Code (NEC) Article 430 and local codes may cause serious injury or death to personnel. For general information on grounding refer to NEC Article 250. (Also see "Ground Connections section 3.4.4").

WARNING: AUTOMATIC RESET PROTECTOR HAZARD

Do not use automatic reset protectors if automatically restarting the motor will place personnel or equipment at risk. . Failure to follow this instruction could result in serious personal injury, death and/or property damage

WARNING: MANUAL RESET PROTECTOR HAZARD

If a tripped manual reset thermal protector is exposed to a temperature less than –7°C (20°F) it may reset and restart the motor automatically. If an application requires a motor with a manual reset thermal protector that will be operated at temperatures less than –7°C (20°F) contact the manufacturer to review the application / motor requirements. Failure to follow this instruction could result in serious personal injury, death and/or property damage

1.2 MECHANICAL SAFETY

WARNING: LOOSE PARTS HAZARD

Before starting the motor, remove all unused shaft keys and loose rotating parts to prevent them from flying off. Failure to follow these instructions could result in serious personal injury, death and/or property damage.

WARNING: ROTATING PARTS HAZARD

Keep extremities, hair, jewelry and clothing away from moving parts. Failure to follow these instructions could result in serious personal injury, death and/or property damage.

1.3 ENVIRONMENTAL SAFETY

WARNING: HAZARDOUS LOCATIONS

(1) The NEC and the local authority having jurisdiction must be consulted concerning the installation and suitability of motors for use in Hazardous Locations. The local authority having jurisdiction must make the final determination of what type of motor is required. The application and operation is beyond the control of the motor manufacturer.

(2) Division 1 Hazardous Locations motors can only be modified or reworked by the manufacturer or a facility that is Listed under UL's category "Motors and Generators, Rebuilt for use in Hazardous Locations". Failure to follow these instructions could result in serious personal injury, death and/or property damage.

(3) Do not use a Hazardous Locations motor with a Variable Frequency Drive (VFD) unless the motor nameplate specifically states that the

2.0 RECEIVING AND INSPECTION

2.1 INITIAL INSPECTIONS

2.1.1 CHECK PACKING LIST AND INSPECT the packaging to make certain no damage has occurred in shipment. If there is visible damage to the packaging, unpack and inspect the motor immediately. Claims for any damage done in shipment must be made by the purchaser against the transportation company.

2.1.2 TURN MOTOR SHAFT by hand to be certain that it rotates freely. Note: Shaft seals and bearing seals may add drag.

2.1.3 CHECK NAMEPLATE for conformance with purchase order requirements and compliance with power supply and control equipment requirements.

2.2 HANDLING:

WARNING: FALLING OBJECT HAZARD

Eyebolts or lifting lugs, where provided, are intended for lifting only the motor and accessories mounted by the motor manufacturer (unless specifically stated otherwise on the motor). Utilizing the motor lifting provision to lift other components such as pumps and gear boxes could result in serious personal injury, death and/or property damage.

WARNING: FALLING OBJECT HAZARD

Before using the lifting provision, check the eyebolts and/or other lifting means to assure they are not bent or damaged and are completely threaded, seated & secured to the motor. Equipment to lift motor must have adequate lifting capacity. While lifting the motor DO NOT stand under or in the vicinity of the motor. Failure to follow these instructions could result in serious personal injury, death and/or property damage.

2.2.1 LIFTING ANGLE LIMITATIONS

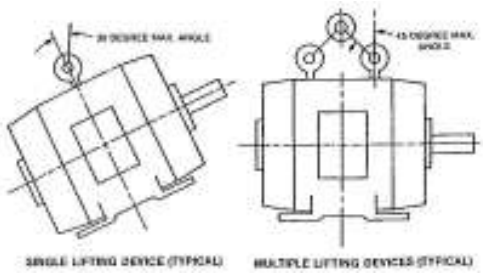

2.3 STORAGE: Motors, not put into service immediately, must be stored indoors in a clean, dry location. Avoid locations with large temperature swings that will result in condensation. Motors must be covered to eliminate airborne dust and dirt. If the storage location exhibits high vibration, place isolation pads under motor to minimize damage to motor bearings.

2.3.1 BEARING LUBRICATION: Bearings are grease packed at the factory; relubrication upon receipt of motor or while in storage is not necessary. If stored more than one year, add grease per lubrication instructions (Table 4-4) before start-up.

2.3.2 SHAFT ROTATION: It is recommended that the motor shaft be rotated 5 to 10 rotations every three months to distribute the grease in the bearings. This will reduce the chance for corrosion to form on the bearing rolling elements and raceways. Note: Shaft seals and bearing seals may add drag.

2.3.3 DAMP OR HUMID STORAGE LOCATIONS: Treat unpainted flanges, shafts, and fittings with a rust inhibitor. Apply appropriate power to the motor's space heaters (if so equipped)

3.0 INSTALLATION AND OPERATION

⚠ **WARNING:** Only qualified personnel who are familiar with the appropriate national code, local codes and sound practices should install or repair electrical motors and their accessories. Installation should conform to the appropriate national code as well as local codes and sound practices. Failure to follow these instructions could result in serious personal injury, death and/or property damage.

⚠ **WARNING: ELECTRICAL LIVE CIRCUIT HAZARD**
Do not touch electrically live parts. Disconnect, Lockout and Tag input power supply before installing or servicing motor (includes accessory devices). Use a voltmeter to verify that power is off before contacting conductors.

3.1 LOCATION

3.1.1 SELECTING A LOCATION: Consideration should be given to environment and ventilation. Motors should be installed in an area that is protected from direct sunlight, corrosives, harmful gases or liquids, dust, metallic particles, and vibration. A motor with the proper enclosure for the expected operating condition should be selected. Provide accessible clearance for cleaning, repair, service, and inspections (See section 3.1.3 for construction clearances). The location should be considered for possible future motor removal / handling. The free flow of air around the motor should not be obstructed.

3.1.2 AMBIENT TEMPERATURE LIMITS: The ambient temperatures of the air inlet to the motor should not exceed 40°C (104°F) or be less than -30°C (-22°F) unless the motor nameplate specifically states an ambient temperature outside of these limits. The ambient inside an enclosure built around the motor shall not exceed the nameplate ambient. For ambient temperatures outside of these limits consult the motor manufacturer.

⚠ **CAUTION: INSULATION DEGRADATION WARNING**
Insulation at high temperatures ages at an accelerated rate. Each 10°C increase in temperature reduces the insulation life by one half.

⚠ **WARNING: HAZARDOUS LOCATIONS AMBIENT LIMIT:** Division 1 Hazardous Locations motors shall **NOT** be operated below –25°C (-13°F) ambient. (Low temperatures reduce the component mechanical properties.)

3.1.3 CONSTRUCTION SELECTION per LOCATION:

3.1.3.1 DRIPPROOF (OPEN) MOTORS are intended for use indoors where the atmosphere is relatively clean, dry, and non-corrosive. Recommended a minimum clearance of ½ the shaft height between vent openings and the nearest obstruction.

3.1.3.2 TOTALLY ENCLOSED MOTORS are suitable for indoor or outdoor standard service applications.

TEAO or AOM (Totally Enclosed Air Over) motors must be mounted in the air stream. When the motor nameplate states a minimum airflow the motor must be mounted in an air stream meeting this minimum value.

TEFC (Totally Enclosed Fan Cooled) motors must meet a minimum distance of ½ the shaft height between the fan guard grill openings and the nearest obstruction.

3.1.3.3 HAZARDOUS LOCATIONS MOTORS: Hazardous Locations motors are intended for installations in accordance with NEC Article 500. For all installations involving Hazardous Locations motors, consult the applicable national codes, local codes, and the authority having jurisdiction.

Division 1 Installations – includes Class I & II: Use only motors that are UL Listed and CSA Certified or UL Listed and UL Certified for Canada. These motors bear a separate nameplate that includes the UL Listing Mark and CSA Certification Mark or includes the UL Listing Mark and the UL Mark for Canada. This plate also bears the phrase: " Electric motor for Hazardous Locations" and is marked with the Class, Group and Operating Temperature Code.

Division 2 Installations – Class I only: Use only motors that are CSA Certified and bear the CSA Certification Mark. These motors include a phrase on the main motor nameplate that indicates the motor is CSA Certified for Class I, Division 2 / Zone 2 locations.

Division 2 Installation – Class II only: Use only Class II motors as described above under "Division I Installations".

⚠ **WARNING: EXPLOSION HAZARD**
A motor should never be placed in an area with a hazardous process or where flammable gases or combustible materials may be present unless it is specifically designed and nameplated for this type of service. Hazardous Locations motors are intended for installations in accordance with NEC Article 500. For all installations involving Hazardous Locations motors, consult the NEC, local codes, and the authority having jurisdiction. Failure to follow these instructions could result in serious personal injury, death and/or property damage. (For other limitations see section 1.3)

3.2 MOUNTING MOTOR:

3.2.1 RIGID BASE (FOOTED): The motor must be securely installed to a rigid foundation or a mounting surface to minimize vibration and maintain alignment between the motor shaft and the load's shaft. The mounting surfaces of the four mounting pads must be flat within 0.01 inches for 210 frame & smaller; 0.015 inches for 250 frame & larger. [IEC 0.25 mm for 130 frame & smaller, 0.38 mm for 160 frame & larger]. This may be accomplished by shims under the motor feet. For special isolation mounting, contact manufacturer for assistance

3.2.2 RIGID BASE HOLE SELECTION -6 OR 8 HOLES

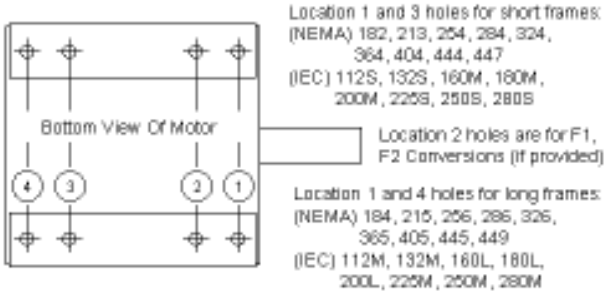

3.2.3 VERTICAL MOUNTING:

CAUTION: ENCLOSURE PROTECTION CAUTION: Most Dripproof rigid base (footed) motors do **NOT** meet "Dripproof" requirements when mounted vertically. If the motor is located in unprotected environments, the addition of a drip cover may be available. Drip covers not available for cast iron rigid base motors.

⚠ **WARNING: FALLING OBJECT HAZARD**
The lifting provision on standard horizontal footed motors is not designed for lifting the motor in a vertical shaft up or shaft down position. (see 2.2.1 lifting angles). Lifting method / provisions for

mounting a rigid base (footed) motor vertically is the responsibility of the installer.

VERTICAL SHAFT DOWN: Most standard horizontal motors thru 449 Fr. (excluding brake motors) can be mounted in a vertical shaft down orientation. For vertical brake motors see section 3.3.6.2.

VERTICAL SHAFT UP:

WARNING: HAZARDOUS LOCATIONS VERTICAL MOUNT: Hazardous locations motors must **NOT** be mounted vertically shaft up without approval by the motor manufacturer. Without proper retaining provisions the rotor may move axially and contact components, creating a spark hazard.

Belted or Radial Load when mounted vertically: The following frame sizes / constructions with applied (axial) down loads within the limit stated are acceptable when mounted vertical shaft up.

Table 3-1 Belted or Radial Load Applications (All speeds)

Frame Size	Enclosure	Construction	Shaft Up OK	Max Applied Down Load[3]
56	TEFC & ODP	Steel	Yes	25 lbs
140	TEFC	Steel & Cast Iron	Yes	25 lbs
	ODP	Steel	Yes	25 lbs
180	TEFC	All	Yes	35 lbs
	ODP	Steel	Yes	35 lbs
210	TEFC	All	Yes	40 lbs
	ODP	Steel	Yes	40 lbs
250	TEFC	All	Yes	40 lbs
	ODP	Steel	Yes	40 lbs
		Cast Iron	No[2]	N/A
280-320	320 TTFC models	Cast Iron	Eng[1]	N/A
	All Other TEFC	Cast Iron & Aluminum	Yes	30 lbs
	ODP	Cast Iron	No[2]	N/A
	TEFC & ODP	Steel	Build Up Only[4]	N/A
360 & Up	TEFC	Cast Iron	Build Up Only[4]	N/A
	ODP	Cast Iron	No[2]	N/A
	TEFC & ODP	Steel	Build Up Only[4]	N/A

Notes:

1 For TEFC model numbers beginning with 324TTFC or 326TTFC consult the motor manufacturer to determine if a build up motor is required.

2 The max applied down load is any applied load external to the motor, including such things as sheave weight, fan loads, axial belt force, pump load, etc. If the application is direct drive with no applied radial load, consult the motor manufacturer.

3 "Build-up only", refers to motors that are specifically ordered and built for shaft up applications. It does not imply that all build-up motors are suitable for shaft up applications.

3.3 APPLICATION ASSEMBLY TO MOTOR:

CAUTION: EQUIPMENT DAMAGE:
Do not connect or couple motor to load until correct rotational direction is established.

3.3.1 GENERAL: PROPER ALIGNMENT of the motor and driven equipment minimizes vibration levels, maximizes bearing life, and extends the overall life of the machinery. Consult the drive or equipment manufacturer for more information.

CAUTION: BEARING FAILURE
During assembly do NOT force components onto the shaft. Striking or hammering the component may result in bearing damage.

3.3.2 DIRECT COUPLING: Use flexible couplings if possible. For applications that apply radial, axial or moment loading on the motor shaft see section 3.3.3.

CAUTION: BEARING FAILURE
Unless approved by the motor manufacturer do **NOT** direct couple a vertical shaft up or roller bearing motor. Direct coupling a vertical shaft up motor or a motor with a roller bearing may result in bearing damage.

3.3.3 DIRECT CONNECTED: Radial loading for direct connected equipment (gears, fans etc.) must be approved by the motor manufacturer unless within the maximum overhung load limits (Table 3-2). Combined loading (axial, radial and/or moments) must be approved by motor manufacturer. For belted loads see section 3.3.4.

Table 3-2 Maximum Radial Load (lbf) @ Middle of the Shaft Extension Length

Frame Number	Motor Rated RPM			
	3600	1800	1200	900
143T	106	166	193	210
145T	109	170	199	218
182T	187	230	261	287
184T	193	237	273	301
213T	319	317	470	510
215T	327	320	480	533
254T	500	631	729	793
256T	510	631	736	820
284T	-	866	990	1100
286T	-	871	1005	1107
324T	-	950	1100	1215
326T	-	950	1113	1230
364T	-	1078	1365	1515
365T	-	1078	1380	1540
404T	-	1388	1590	1762
405T	-	1400	1610	1780
444T	-	1580	1795	2005
445T	-	1520	1795	1985
447T	-	1455	1765	1985
449T	-	1640	1885	2130

Values based on 26,280 hrs B-10 Life
For "End of Shaft" Load multiply value by 0.88
To convert from lbf to N multiply value by 4.4482.

3.3.4 BELTED:

The goal of any belted system is to efficiently transmit the required torque while minimizing the loads on the bearings and shafts of the motor and driven equipment. This can be accomplished by following four basic guidelines:

1. Use the largest practical sheave diameter.
2. Use the fewest number of belts possible.
3. Keep sheaves as close as possible to support bearings.
4. Tension the belts to the lowest tension that will still transmit the required torque without slipping. It is normal for V-belts to squeal initially when line starting a motor

3.3.4.1 Sheave Diameter Guidelines:

In general, smaller sheaves produce greater shaft stress and shaft deflection due to increased belt tension. See Table 3-3 for recommended minimum sheave diameters. Using larger sheaves increases the contact with belts which reduces the number of belts required. It also increases the belt speed, resulting in higher system efficiencies. When selecting sheaves, do not exceed the manufacturer's recommended maximum belt speed, typically 6,500 feet per minute for cast iron sheaves. Determine belt speed by the following formula:

Figure 1



$$\textbf{BELT SPEED (Ft/min)} = \frac{Shaft\ RPM\ x\ 3.14\ x\ Sheave\ Dia\ (inches)}{12}$$

3.3.4.2 Number of Belts

In general, use the fewest number of belts that will transmit the required torque without slipping. See Table 3-3 for recommended maximum number of belts. Each belt adds to the tension in the system, which increases load on the shafts and bearings. Belts are most efficient when operated at or near their rated horsepower.
If the sheaves have more grooves than the number of belts required, use the grooves closest to the motor.

3.3.4.3 Sheave Location

Install sheaves as close to the housing as possible to increase the bearing life of the motor and driven equipment

Figure 2

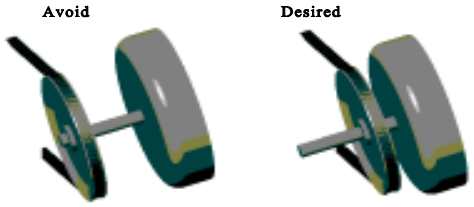

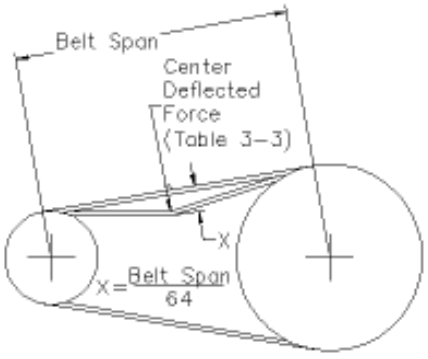

3.3.4.4 Belt Tension

CAUTION: Equipment Failure Caution
Belt tensioning by feel is **NOT** acceptable. Tensioning by "feel" can be very misleading, and can damage motor and equipment.
It is normal for V-belts to squeal initially when line starting a motor.

In general, belt tensions should be kept as loose as possible while still transmitting the required torque without slipping. Belt tensions must be measured with a belt tension gage. These inexpensive gages may be obtained through belt manufacturers, or distributors.

Proper belt tension is determined by measuring the force required to deflect the center of the belt a given distance. The proper deflection (in inches) is determined by dividing the belt span in inches by 64. Calculate the proper deflection and then see Table 3-3 for the required “Deflected Force” to achieve that deflection.
After tensioning the belt, rotate the sheaves for several rotations or operate the system for a few minutes to seat belts into the grooves, then re-tension the belts. New belts will stretch during use, and should be retensioned after the first eight hours of use.

Table 3-3 Recommended Minimum Sheave Diameters, Belt Type, Number of Belts and Deflected Force

Motor Hp	1200 rpm				1800 rpm				3600 rpm			
	Min Sheave Dia (in)	Belt Type	Max # of Belts	Avg. Deflected Force (lbs)	Min Sheave Dia (in)	Belt Type	Max # of Belts	Avg. Deflected Force (lbs)	Min Sheave Dia (in)	Belt Type	Max # of Belts	Avg. Deflected Force (lbs)
0.75	2.2	3VX	1	3.4	2.2	3VX	1	2.2	2.2	3VX	1	1.3
1	2.4	3VX	1	4.0	2.2	3VX	1	3.1	2.2	3VX	1	1.6
1.5	2.4	3VX	2	3.1	2.4	3VX	2	2.1	2.2	3VX	1	2.5
2	2.4	3VX	3	2.8	2.4	3VX	2	2.9	2.4	3VX	1	2.7
3	3.0	3VX	2	3.3	2.4	3VX	3	2.9	2.4	3VX	2	2.3
5	3.0	3VX	3	4.0	3.0	3VX	3	3.7	2.4	3VX	3	2.5
7.5	3.8	3VX	4	4.7	3.0	3VX	4	4.1	3.0	3VX	2	4.2
10	4.4	3VX	4	5.4	3.8	3VX	4	4.3	3.0	3VX	3	3.8
15	4.4	3VX	5	5.4	4.4	3VX	4	5.4	3.8	3VX	3	4.4
20	5.2	3VX	6	6.0	4.4	3VX	6	4.8	4.4	3VX	3	5.0
25	6.0	3VX	7	5.6	4.4	3VX	7	5.2	4.4	3VX	4	4.7
30	6.8	3VX	7	5.9	5.2	3VX	7	5.3				
40	6.8	5VX	4	11.6	6.0	3VX	7	6.0				
50	8.2	5VX	4	14.6	6.8	3VX	8	5.9				
60	8.2	5VX	5	14.1	7.4	5VX	4	13.3				
75	10.0	5VX	5	14.5	8.6	5VX	4	14.3				
100	10.0	5VX	6	16.0	8.6	5VX	6	13				
125	12.0	5V	7	14.1	10.5	5V	6	13.1				
150	13.2	5V	7	15.4	10.5	5V	7	13.4				
200	15.0	5V	8	16.0	13.2	5V	8	13.1				
250	15.0	8V	6	27.6	14.0	5V	9	13.8				
300	16.0	8V	7	27.1	14.0	5V/**8V**	11 / **7**	23.4				
350	16.5	8V	7	30.3	14.5	5V/**8V**	12 / **7**	26.0				
400	17.5	8V	8	29.1	15.0	5V/**8V**	13 / **8**	25.7				
450	18	8V	8	31.6	16.0	5V/**8V**	14 / **9**	25.2				
500	18.5	8V	9	30.7	16.5	5V/**8V**	15 / **9**	26.9				
600					17.5	8V	11	26.3				
700					19.0	8V	12	27.3				
800					20.0	8V	13	28.2				

Contact Motor Manufacturer when Belting 3600 rpm Motors Greater than 25 HP

Notes:

1. Horsepower is the nameplate motor horsepower, and RPM is the motor (driver) speed.
2. Minimum sheave diameters are from NEMA standards where applicable.
3. **For variable speed applications or values outside these recommendations, consult motor manufacturer.**
4. Selections are based on a 1.4 service factor, 5 to 1 speed ratio and various Power Transmission Manufacturers' catalogs.
5. These selections are for Narrow V-belt sections only. Consult manufacturer for details on conventional V-belt sections (A, B, C, D and E), or other belt types.
6. "Average Deflected Force is per section 3.3.4.4 of this document and is the force required to deflect the center of a belt 1/64 of the belt span distance. Tolerance on this force is ±1 lbf for forces ≤10 lbs, and ±2 lbs for forces >10 lbs as measured utilizing a belt tension gage.
7. When more than one belt is required the belts must be a matched set (matched for length).
8. If possible, the lower side of the belt should be the driving side to increase the length of wrap on the sheave).
9. For belted loads do not exceed 125% of 60 Hz operating RPM.

3.3.5 VFD (Variable Frequency Drives) OPERATION:

⚠ WARNING: VFD Motors with Reset Thermal Protectors
UL Recognition, UL Listing, or CSA certification does not apply to motors that are equipped with a manual or automatic reset thermal protector when the motor is operated on VFD power.

⚠ WARNING: Power Factor Correction Capacitors:
Power factor correction capacitors should never be installed between the drive and the motor.

⚠ CAUTION: VFD / Motor Setup:
It is the responsibility of the startup personnel during set up of the VFD / motor system to properly tune the drive to the motor for the specific application per the VFD user manual. The correct voltage boost and volts per hertz settings are application dependent and unique to each motor design. Failure to connect over temperature devices (when provided) will void the warranty.

3.3.5.1 Overspeed Capability:

Belted loads: Do not exceed 125% of 60 Hz operating RPM.

Table 3-4 Maximum Safe Continuous Speed (RPM) For Coupled and Direct Connected Loads

NEMA / [IEC] Frame Size	2-Pole	4, 6, or 8 Pole
56-180 [80-110]	7200 *	5400 *
210-250 [130-160]	5400 *	4200*
280 [180]	5400 *	3600
320 [200]	4500 *	3600
360 [225]	4500 *	2700
400-440 [250-280]	3600	2700
>440 [>280]	3600	1800

* = Fan cooled motors (Totally Enclosed & Hazardous Locations Motors) are limited to a maximum safe continuous speed of 4000 RPM **For higher speeds or shortened duty cycle contact motor manufacturer**

3.3.5.2 Cable Lengths: For optimum insulation life, limit VFD to motor cable lengths of general purpose motors

to Table 3-5 values. Definite purpose VFD motors may accommodate longer cable lengths. For additional information contact motor manufacturer.

Table 3-5 Max Cable Lengths General Purpose Motors
These values are based on 3 kHz carrier frequency. Add suitable VFD output-side filters when exceeding the listed values.

Frame Size	230V	460 V	575 V
NEMA 56-320	600 ft.	125 ft.	40 ft.
NEMA 360-5011	1000 ft.	225 ft.	60 ft.
IEC 80-200	180 m.	40 m.	12 m.
IEC 225-280.	300 m.	70 m.	18 m.

3.3.5.3 VFD Grounding: Equipment grounding conductors may be run in the same conduit as the AC motor power leads. This wire must be used as the equipment ground for the motor and not as the fourth current carrying wire of a "WYE" motor circuit. The grounded metal conduit carrying the output power conductors can provide EMI shielding, but the conduit does not provide an adequate ground for the motor; a separate grounding conductor must be used. Grounding the motor neutral (WYE) of a VFD powered motor may result in a VFD ground fault trip. Improper grounding of an inverter fed motor may result in frame voltages in excess of 500 Volts. Refer to Grounding section 3.4.4

3.3.5.4 VFD – Single Phase:

CAUTION: SINGLE PHASE MOTOR FAILURE:
Single Phase motors are **NOT** suitable for use on VFD power. Connecting a Single Phase Motor to a VFD voids the warranty.

3.3.5.5 Stray Voltage on Accessory Leads:

VFD's will couple stray (common-mode) voltage to motor-mounted RTDs, thermistors, thermostats and space heaters. The leads of these elements must be properly insulated and control input circuits must be designed to withstand this common-mode voltage.

3.3.6 ACCESSORIES / PROVISIONS:

3.3.6.1 General: Carefully read and understand the accessory manufacturer's instructions, supplied with motor. Contact the manufacturer for additional information.

3.3.6.2 Brake Motors:

CAUTION: Vertical Motor Premature Brake Failure
Motors with brakes that are designed for vertical applications are equipped with springs to support the brake pressure plate. Mounting a horizontal brake motor vertically shaft up or down may require a pressure plate spring modification. Failure to modify the brake for the vertical application may result in premature brake failure. If in question, consult brake literature or brake manufacturer.

Brake Solenoid Wiring: Do NOT connect the brake solenoid to the output of a VFD. The brake solenoids must be wired to 50/60 Hz line power

3.3.6.3 Space Heaters:

Motors provided with space heaters have two leads that are brought into the conduit box or into an auxiliary box. These leads are marked "H1", "H2" ("H3", "H4" if a second space heater is supplied). See the space heater nameplate on motor for heater rating.

WARNING: DIVISION 2 EXPLOSION HAZARD
The space heater temperature rating when used in Class I, Division 2 motors shall **NOT** exceed 80% of the auto ignition temperature of the hazardous gas or vapor. See the space heater nameplate on motor for heater Temperature Code and heater rating. Failure to follow this instruction could result in serious personal injury, death and/or property damage

3.3.6.4 Thermal Protection:

General Information: When thermal protection is provided, one of the following will be stamped on the nameplate:

1. **"THERMALLY PROTECTED"** This motor has built in thermal protection. Thermal protectors open the motor circuit electrically when the motor overheats or is overloaded. The protector cannot be reset until the motor cools. If the protector is automatic, it will reset itself. If the protector is manual, disconnect motor from power supply. After protector cools (five minutes or more) press the reset button and reapply power to the motor. In some cases a motor is marked "Auto" and the connection diagram on the motor will identify T'Stat leads – see "2 " below. (See warnings on Manual and Automatic reset protectors - section 1.1)

2. **"WITH OVERHEAT PROTECTIVE DEVICE"**: This motor is provided with an overheat protective device that does not directly open the motor circuit. Motors nameplated with this phrase have either thermostats, thermisters or RTD's. The leads to these devices are routed into the motor conduit box or into an auxiliary box. The lead markings are defined on the nameplate (normally "P1", "P2") . The circuit controlled by the overheat protection device must be limited to a maximum of 600 volts and 360 volt-amps. See connection decal provided inside the terminal box cover. Failure to connect these over temperature devices (when provided) will void the warranty.

   WARNING: EXPLOSION HAZARD
   For Hazardous Locations motors provided with thermostats UL and the NEC require connection of thermostat leads into the control portion of a manual reset start circuit. Failure to follow this instruction could result in serious personal injury, death and/or property damage

Resistance Temperature Detectors (RTD): When winding and/or bearing RTDs are provided the RTD lead markings are defined on the nameplate. (Normally "R1", "R2", "R3" etc.)

3.3.6.5 RTD Alarm & Trip Settings:

Tables 3-6 & 3-7 are suggested initial RTD alarm and trip settings. For motors found to operate significantly below these values the settings may be reduced accordingly.

Table 3-6 Winding RTD – Temperature Limit (°C) 40 °C Max Ambient

Motor Load	Class B Temp Rise≤ 80°C		Class F Temp Rise≤ 105°C	
	Alarm	Trip	Alarm	Trip
Up to 1.0 SF	130	140	155	165
>1.0 to 1.15 SF	140	150	160	165

Table 3-7 Bearing RTD – Temperature Limit (°C) 40 °C Max Ambient

Ambient	Alarm	Trip
Up to 40**°C**	95	100
> 40**°C**	110	115
Bearings that are Heat Stabilized to 150 **°C**	130	135

3.3.7 GUARDS:

WARNING: ROTATING PARTS HAZARD
When devices are assembled to the motor shaft, be sure to install protective devices such as belt guards, chain guards, and shaft covers. These devices must protect against accidental contact with extremities, hair, and clothing. Consider the application and provide guarding to protect personnel. Remove all unused shaft keys and loose rotating parts to prevent them from flying off and causing bodily injury. Failure to follow this warning could result in serious personal injury, death and/or property damage.

3.4 ELECTRICAL CONNECTIONS:

WARNING: ELECTRICAL HAZARDS

Before proceeding read Section 1-1 on Electrical Safety. Failure to follow the instructions in Section 1-1 could result in serious personal injury, death and/or property damage

3.4.1 POWER SUPPLY / BRANCH CIRCUIT

WARNING: POWER SUPPLY INCOMPATIBILITY HAZARD

Check power supply to make certain that voltage, frequency and current carrying capacity are in accordance with the motor nameplate. Failure to match motor nameplate values could result in serious personal injury, death and/or property damage

WARNING: BRANCH CIRCUIT SUPPLY HAZARD

Motor and control wiring, fusing, overload protection, disconnects, accessories and grounding must always conform to the applicable electrical codes as well as local codes and sound practices.

3.4.1.1 Branch Circuit Supply to a motor should include a disconnect switch, short circuit current fuse or breaker protection, motor starter (controller) and correctly sized thermal elements or overload relay protection.

3.4.1.2 Fuses, Breakers, Overload Relays

Short Circuit Current Fuses or Breakers are for the protection of the branch circuit. Starter or motor controller overload relays are for the protection of the motor. Each of these should be properly sized and installed per the applicable electrical codes as well as local codes and practices.

WARNING: PROTECTIVE DEVICE DISABLED HAZARD

DO NOT bypass or disable protective devices. Protection removal could result in serious personal injury, death and/or property damage

3.4.1.3 AC Power Supply Limits

Motors are designed to operate within the following limits at the motor terminals:

1- AC power is within +/- 10 % of rated voltage with rated frequency applied. (Verify with nameplate ratings) **OR**

2- AC power is within +/- 5% of rated frequency with rated voltage **OR**

3- A combined variation in voltage and frequency of +/- 10% (sum of absolute values) of rated values, provided the frequency variation does not exceed +/-5% of rated frequency.

4- For 3 phase motors the line to line full load voltage must be balanced within 1%.

5- If the motor is rated 208-230V, the voltage deviations must be calculated from 230V.

CAUTION: Reduced Motor Performance

Operation outside of these limits will degrade motor performance and increase operating temperature.

3.4.2 TERMINAL BOX:

3.4.2.1 Conduit Opening: For ease of connections, motors are typically provided with large terminal boxes. Most motors have conduit access in 90 degree increments, the terminal box conduit opening is typically provided via knockouts, holes with covers, or the terminal box is rotate-able. Fabricated conduit boxes may have a removable plate for the installer to provide correctly sized hole(s).

3.4.2.2 Hazardous Locations Motors:

WARNING: EXPLOSION HAZARDS

(1) Terminal Boxes mounted to motor with a pipe nipple: If a pipe nipple mounted terminal box is removed or rotated it must be reassembled with a minimum of five full threads of engagement.

(2) Component Removal: Do not set a terminal box component on its machined surfaces. Prior to component reassembly wipe clean all machined surfaces.

(3) Machined Surface Gap (Hazardous Locations Terminal Boxes): The gap between mating surfaces with the machined terminal box MUST BE LESS THAN 0.002 inches. This gap must be checked with a feeler gage along the entire perimeter. If there is visible damage to the mating surfaces, or if the gap between these surfaces exceeds 0.002 inches, DO NOT complete the installation and contact the motor manufacturer. Failure to follow these instructions could result in serious personal injury, death and/or property damage

3.4.3 LEAD CONNECTIONS

Electrical connections to be made per nameplate connection diagram or separate connection plate. In making connections follow the applicable electrical code as well as local codes and practices.

WARNING: ELECTRICAL CONNECTION HAZARD

Failure to correctly connect the motor leads and grounding conductor can result in injury or death. Motor lead connections can short and cause damage or injury if not well secured and insulated.

3.4.3.1 Wire Size (Single Phase) Requirements

The minimum wire size for Single Phase, 115 & 230 Volt Circuits must meet table 3-8 for a given distance between motor and either Fuse or Meter Box.

Table 3-8 Minimum Wire Gage Size Single Phase 115 & 230 Volt Circuits

Distance (Feet) - Motor to Fuse or Meter Box								
Motor	100 Ft.		200 Ft.		300 Ft.		500 Ft.	
HP	115	230	115	230	115	230	115	230
1/4	14	14	10	12	8	10	6	8
1/3	12	14	10	12	6	10	4	8
1/2	10	12	8	10	6	8	4	6
3/4	10	12	6	10	4	8	2	6
1	8	10	6	8	4	6		4
1 1/2	4	10	0	8		6		4
2		8		6		4		2
3		8		6		4		2
5		6		4		2		0

3.4.3.2 Extension Cords (Single Phase Motors):

Where an extension cord(s) is utilized to provide power to the motor the extension cord(s) must be…(1) the proper gauge size per table 3-8, (2) in good working condition (3) properly grounded.

3.4.4 GROUND CONNECTION(S):

WARNING: ELECTRICAL GROUNDING HAZARD

For general information on grounding (USA) refer to NEC Article 250. Improper grounding of an inverter fed motor may result in frame voltages in excess of 500 Volts. In making the ground connection, the installer must make certain that a good electrical connection is obtained between motor and grounding lead. Failure to properly ground motors, per the applicable national code (such as NEC Article 430) and local codes may cause serious injury or death to personnel.

Primary "Internal" Ground: A grounding conductor must be connected to the grounding terminal provided in the terminal housing. This grounding terminal is either a ground screw, ground lug, or a tapped hole to be used with a separately provided ground screw. The internal grounding feature is accessible inside the terminal housing and must be used as the primary grounding connection.

Secondary "External" Ground: Some motors are provided with a supplemental grounding terminal located on the external surface of the motor frame or feet. This external terminal is for supplemental bonding connections where local codes permit or require such connection

3.4.5 START UP:

WARNING: ELECTRICAL SHOCK HAZARD:

Be certain that all connections are secure and the conduit box cover is fastened in place before electrical power is connected. Failure to follow these instructions could result in serious personal injury, death, and/or property damage.

⚠ WARNING: LOOSE & ROTATING PARTS HAZARD
Before proceeding read Section 1-2 on Mechanical Safety. Failure to follow the instructions in Section 1-2 could result in serious personal injury, death and/or property damage

⚠ WARNING: EXCESSIVE SURFACE TEMPERATURE HAZARD
Motors with the temperature code stated on the nameplate are designed to operate within this limit. Improper application or operation can cause the maximum surface temperature to be exceeded. A motor operated in a Hazardous Location that exceeds this surface temperature limit increases the potential of igniting hazardous materials. *Therefore, motor selection, installation, operation, and maintenance must be carefully considered to ensure against the following conditions:* (1) Motor load exceeds service factor value, (2) Ambient temperature above nameplate value, (3) Voltages outside of limits (3.4.1.3), (4) Loss of proper ventilation, (5) VFD operation exceeding motor nameplate rating, (6) Altitude above 3300 feet / 1000 meters, (7) Severe duty cycles, (8) Repeated starts, (9) Motor stall, (10) Motor reversing, and (10) Single phase operation. Failure to follow these instructions could result in serious personal injury, death and/or property damage.

⚠ CAUTION: HOT SURFACE
Normal motor surface temperatures may exceed 90 ° C (194° F). Touching the motor frame may cause discomfort or injury. Surface temperatures should only be measured with suitable instruments and not estimated by hand touch.

3.4.5.1 Start Up - No Load Procedure

1. **Check Instructions:** Before startup carefully read and fully understand these instructions including all warnings, cautions, and safety notice statements.
2. **Motor out of storage after more than three months:** Check winding insulation integrity with a Megger. If winding resistance to ground is less than 1.5 Meg-ohms consult the local authorized service shop before energizing the motor.
3. **Check Installation: Mechanical** - Check tightness of all bolts and nuts. Manually rotate the motor shaft to ensure motor shaft rotates freely. Note: Shaft & bearing seals will add drag.
   Electrical - Inspect all electrical connections for proper terminations, clearance, mechanical tightness and electrical continuity. Be sure to verify connections are made per the nameplate connection diagram or separate connection plate. Replace all panels and covers that were removed during installation before energizing the motor.
4. **Energize Motor: Check Rotation**
   If practical check motor rotation before coupling to the load. Unlock the electrical system. Momentarily provide power to motor to verify direction of rotation. If opposite rotation is required, lock out power before reconnecting motor. If motor has a rotational arrow only operate the motor in the rotation identified. Reapply power to ensure proper operation.
5. **Record No Load Amps, Watts & Voltage:**
   Recommend - To establish a baseline value check and record the no load amps, watts, and voltage.

3.4.5.2 Start Up – Load Connected Procedure

1. **Check Instructions:** Before startup carefully read and fully understand these instructions including all warnings, cautions, & safety notice statements.
2. **Coupling Installation:** Check that the connected equipment is properly aligned and not binding. Check that all guards and protective devices are properly installed.
3. **Energize Motor:** When all personnel are clear of the machine, apply power and verify that the load is not transmitting excessive vibration back to the motor though the shaft or the foundation. Verify that motor amps are within nameplate rating. For repeated starts see 3.4.5.3. The equipment can now be fully loaded and operated within specified limits as stated on the nameplate.

3.4.5.3 Jogging and/or Repeated Starts

Do not start more than twice in succession under full load. Repeated starts and/or jogs of induction motors can cause overheating and immediate failure. Contact the motor manufacturer if it is necessary to repeatedly start or jog the motor.

4.0 MAINTENANCE:

⚠ WARNING: Hazardous Locations Motor Repair HAZARD:
Division 1 Hazardous Locations motors can only be modified or repaired by the manufacturer or a facility that is Listed under UL's category "Motors and Generators, Rebuilt for use in Hazardous Locations". Failure to follow these instructions could result in serious personal injury, death and/or property damage.

⚠ WARNING: ELECTRICAL SHOCK HAZARD
Electrical connections are to be made by qualified electrical personnel in accordance with all applicable codes, ordinances and sound practices. Failure to follow these instructions could result in serious personal injury, death and/or property damage. Only qualified personnel who are familiar with the applicable national codes, local codes and sound practices should install or repair electric motors and their accessories.

⚠ WARNING: ELECTRICAL LIVE CIRCUIT HAZARD
Do not touch electrically live parts. Disconnect, lockout and tag input power supply before installing or servicing motor (includes accessory devices).

4.1 GENERAL INSPECTION

Inspect the motor approximately every 500 hours of operation or every three months, whichever occurs first. Keep the motor clean and the ventilation and fin openings clear. The following steps should be performed at each inspection:

4.1.1 VENTILATION: Check that the ventilation openings and/or exterior of the motor is free of dirt, oil, grease, water, etc, which can accumulate and block motor ventilation. If the motor is not properly ventilated, overheating can occur and cause early motor failure.

4.1.2 INSULATION: Use a "Megger" periodically to ensure that the integrity of the winding insulation has been maintained. Record the Megger readings. If winding resistance to ground is less than 1.5 Meg-ohms consult the local authorized service shop before re-energizing the motor.

4.1.3 ELECTRICAL CONNECTIONS: Check all electrical connectors to be sure that they are tight.

4.2 LUBRICATION & BEARINGS:

The lubricating ability of grease (over time) depends primarily on the type of grease, the size of the bearing, the speed at which the bearing operates and the severity of the operating conditions. Longer bearing life can be obtained if the listed recommendations are followed:

NOTE: If lubrication instructions are provided on the motor nameplate, the nameplate instructions will supersede these instructions. Motors marked "Permanently Lubricated" do not require additional service.

⚠ CAUTION: BEARING / MOTOR DAMAGE WARNING
Lubricant should be added at a steady moderate pressure. If added under heavy pressure bearing shield(s) may collapse. Over greasing bearings greatly increases bearing friction and can cause premature bearing and/or motor failure.

4.2.1 GREASE TYPE (unless nameplate states otherwise):
Nameplate Ambient Temperature between -30°C (-22°F) to 65°C (150°F) inclusive: Recommended grease for standard service conditions is Mobil Polyrex ® EM. Equivalent and compatible greases include: Texaco Polystar RB, Rykon Premium #2, Pennzoil Pen 2 Lube, Chevron SRI & Mobil SHC 100.

Nameplate Ambient Temperature below -30°C (-22°F): Special low temperature grease is recommended, such as Aeroshell 7 or Beacon 325 for ball bearings and Mobil SHC 100 for roller bearings.

Nameplate Ambient Temperature above 65°C (150°F): Dow Corning DC44 or equivalent, a special high temperature grease is required. Note that Dow Corning DC44 grease does not mix with other grease types.

4.2.2 BEARING OPERATING TEMPERATURE:

⚠ CAUTION: HOT SURFACE

The external surface temperature of the end shield (bracket) bearing hub may reach 100° C (212° F) during normal operation. Touching this surface may cause discomfort or injury. Surface temperatures should only be measured with suitable instruments and not estimated by hand touch.

For RTD settings see Table 3-7.

4.2.3 LUBRICATION INTERVALS: (For motors with regreasing provisions)

Eq. 4.2 Lubrication Interval = [(Table 4-1) hrs] x [Interval Multiplier (Table 4-2)] x [Construction Multiplier (Table 4-3)]

Table 4-1 Lubrication Intervals (Hours) These values are based on average use.

NEMA / [IEC] Frame Size	Operating Speed – RPM (See Table 3.4 for Maximum Operating Speed)					
	<7200	<5400	<4500	<3600	<1800	<1200
56-180 [80-110]	2500 Hrs.	4000 Hrs	5000 Hrs	6000 Hrs.	17000 Hrs.	20000 Hrs.
210-250 [130-160]		2500 Hrs	4000 Hrs	5000 Hrs.	12000 Hrs.	16000 Hrs.
280 [180]		2000 Hrs	3000 Hrs	4000 Hrs.	10000 Hrs.	14000 Hrs.
320 [200]			2000 Hrs	3000 Hrs.	9000 Hrs.	12000 Hrs.
360 [225]			1500 Hrs	2000 Hrs.	8000 Hrs.	10000 Hrs.
400-440 [250 – 280]				1500 Hrs.	4000 Hrs.	7000 Hrs.
>440 [>280]				1000 Hrs.	3000 Hrs.	5000 Hrs.

Seasonal Service: If motor remains idle for more than six months, Lubricate at the beginning of the season, then follow lubrication interval.

Do not exceed maximum safe operating speed Table 3-4 without manufacturer's approval

Table 4-2 Service Conditions

Use highest level Multiplier: Maximum Ambient Temperature and Contamination are independent factors

Severity of Service	Maximum Ambient Temperature	Atmospheric Contamination	Multiplier
Standard	Less than 40° C (104° F)	Clean, Slight Corrosion, indoors, less than 16 hrs per day	1.0
Severe	Above 40° C (104° F) to 50° C	Moderate dirt or Corrosion or outdoors or more than 16 hrs per day	0.5
Extreme	Greater than 50° C or Class H Insulation	Severe dirt or Abrasive dust or Corrosion	0.2

Table 4-3 Construction Multiplier

Construction	Multiplier
Angular Contact or Roller Bearing	0.5
Vertical Motor	0.5
All others	1.0

Table 4-4 Relubrication Amounts

Frame Size		Volume		
NEMA	IEC	Cu. In.	Fluid oz	ml
48-56	80	0.25	0.14	4.0
143-145	90	0.25	0.14	4.0
182-184	110	0.50	0.28	8.0
213-215	130	0.75	0.42	12.5
254-256	160	1.00	0.55	16.0
284-286	180	1.50	0.83	25.0
324-326	200	2.00	1.11	33.0
364-365	225	3.00	1.66	50.0
404-405	250	3.80	2.11	62.0
444-449	280	4.10	2.27	67.0
>449	>280	4.50	2.50	74.0

For regreasing while operating multiply volume by 125%.

4.2.4 LUBRICATION PROCEDURE: (For Motors with Regreasing Provisions)

CAUTION: BEARING DAMAGE WARNING
Added grease must be compatible with the original equipment's grease. If a grease other than those stated in 4.2.1 is to be utilized contact the motor manufacturer. Nameplate information supersedes section 4.2.1 (GREASE TYPE). New grease must be free of dirt. Failure to follow these instructions and procedure below may result in bearing and/or motor damage.

For an extremely dirty environment, contact the motor manufacturer for additional information.

LUBRICATION PROCEDURE:

1. Clean the grease inlet plug or zerk fittings prior to regreasing.
2. (If present) Remove grease drain plug and clear outlet hole blockage.

CAUTION: GREASE DRAIN PLUGGED:
Old grease may completely block the drain opening and must be mechanically removed prior to regreasing. Forcing a blocked drain open by increased greasing pressure may collapse bearing shields and / or force excess grease through the bearings and into the motor.

3. Add grease per Table 4-4
4. Re-install grease inlet and drain plugs (if removed).

WARNING: EXPLOSION HAZARD
Do NOT energize a Hazardous Locations motor without all grease fittings properly installed.

4.2.5 EXAMPLE: LUBRICATION

Assume - NEMA 286T (IEC 180), 1750 RPM Vertical motor driving an exhaust fan in an ambient temperature of 43° C and the atmosphere is moderately corrosive.

1. Table 4-1 list 10,000 hours for standard conditions.
2. Table 4-2 classifies severity of service as "Severe" with a multiplier of 0.5.
3. Table 4-3 lists a multiplier value of 0.5 for "Vertical"
4. (Eq. 4.2) Interval = 10,000 hrs x 0.5 x 0.5 = 2500 hrs

Table 4-4 shows that 1.5 in^3 of grease is to be added.

Relubricate every 2,500 hrs of service with 1.5 in^3 of recommended grease.

4.3 TROUBLE-SHOOTING

WARNING: READ INSTRUCTIONS:
Before trouble-shooting a motor, carefully read and fully understand the warnings, cautions, *&* safety notice statements in this manual.

WARNING: Hazardous Locations Motor Repair:
Motors nameplated for use in Division 1 Hazardous Locations can only be disassembled, modified or repaired by the plant of manufacturer or a facility that is Listed under UL's category "Motors and Generators, Rebuilt for use in Hazardous Locations". Failure to follow these instructions could result in serious personal injury, death and/or property damage

CAUTION: DISASSEMBLY APPROVAL REQUIRED:
Motor disassembly must be performed by a party approved by the motor manufacturer. To disassemble the motor without approval voids the warranty.

4.3.1 GENERAL TROUBLE-SHOOTING WARNINGS

1. **DISCONNECT POWER TO THE MOTOR BEFORE PERFORMING SERVICE OR MAINTENANCE.**
2. **Discharge all capacitors before servicing motor.**
3. **Always keep hands and clothing away from moving parts.**
4. **Be sure required safety guards are in place before starting equipment.**
5. **If the problem persists contact the manufacturer.**

4.3.2 Motor Trouble-shooting Cause / Corrective Action - Table 4-5

Issue:	Likely Cause:	Corrective Action:
Motor fails to start upon initial installation:		
A.)	Supply voltage is too low or is severely unbalanced (one phase is low or missing).	(1) Check power supply fuses (2) Match motor lead wiring to nameplate connection diagram and supply voltage (3) Ensure that steady state supply voltage at motor terminals is within limits (see section 3.4.1.3). Correct as needed (4) Obtain correct motor to match actual supply voltage.
B.)	Motor leads are miswired at conduit box.	
C.)	Driven load exceeds motor capacity	(1) Verify that motor & load turn freely (2) Disconnect motor from load & ensure motor turns freely. Note: Roller bearings make noise when motor is uncoupled and shaft is rotated (3) Verify that motor starts when disconnected from load (4) Remove excessive / binding load if present.
D.)	Load is jammed.	
E.)	Fan guard is bent and making contact with fan	Replace fan guard & fan (if blades are damaged)
F.)	VFD with power factor capacitors installed	Remove power factor correction capacitors if equipped
G.)	VFD with motor neutral lead grounded	Ensure that motor neutral lead is ungrounded
H.)	VFD programmed incorrectly	(1) Repeat checks listed above (2) Verify that VFD current limit and starting boost are set correctly (5) Double-check motor and feedback parameter settings and VFD permissives (6) Repeat autotune (for vector drives) procedure (7) Consult VFD supplier.
Motor has been running, then slow down, stalls, or fails to restart:		
A.)	Supply voltage has drooped or has become severely unbalanced	(1) Replace fuse or reset circuit breaker. Allow motor to cool down before resetting manual protector on motor. **Warnings** - See section 1.1 for automatic and manual reset protector warnings (2) Verify that rated and balanced supply voltage has been restored before restarting motor. Measure voltage during restart. Ensure that steady state supply voltage at motor terminals is within limits (see section 3.4.1.3).
B.)	Motor is overloaded	(1) Verify that motor & load turn freely. Repair binding components as needed (2) Reduce driven load to match motor capacity or increase motor size to match load requirements.
C.)	Motor bearings are seized	
D.)	Load Is jammed.	
E.)	VFD will not restart motor after tripping	(1) Check fault codes on VFD and follow VFD troubleshooting procedures (2) Verify that VFD input voltage is balanced and within limits (3) Remove excessive mechanical load if present.
F.)	Capacitor failure on single phase motor (if equipped)	**Warning: Potential Shock Hazard**: Contact service shop to check capacitor.
Motor takes too long to accelerate:		
A.)	Motor leads are not connected correctly	Match motor lead wiring to nameplate diagram.
B.)	Supply voltage has drooped or become severely unbalanced.	(1) Ensure that steady state supply voltage at motor terminals is within limits (see section 3.4.1.3). Correct as needed (2) Obtain correct motor to match actual supply voltage.
C.)	Load exceeds motor capability	Determine correct motor size and contact motor representative to obtain replacement motor.
D.)	Faulty start capacitor (Single Phase)	Motor may be too small for load. Record acceleration time. Start capacitors may fail if acceleration time exceeds 3 seconds.
E.)	Mechanical Failure	(1) Check to make sure motor & load turn freely (2) Disconnect motor from load & ensure motor turns freely
Motor rotates in the wrong direction:		
A.)	Incorrect wiring connection at motor	[Single Phase] Reconnect motor according to wiring schematic provided. Note: Some motors are non-reversible
		[Three Phase] Interchange any two power supply (phase) leads.
Motor overheats or overload protector repeatedly trips		
A.)	Driven Load is excessive	(1) If motor current exceeds nameplate value, ensure that driven load has not increased. Correct as needed. (2) If new motor is a replacement, verify that the rating is the same as the old motor. If previous motor was a special design, a general purpose motor may not have the correct performance.
B.)	Ambient temperature too high	Most motors are designed to operate in an ambient up to 40 °C. (See section 4.2.2 Hot Surface Caution)
C.)	Motor cooling fins and/or vent openings blocked	Remove foreign materials – clear vent openings, fan guard air inlets and frame fins (TEFC motors)
D.)	Insufficient Air Flow	TEAO (Totally Enclosed Air Over) motors: Measure airflow next to motor surface and obtain minimum requirements from motor manufacturer.

	E.)	Motor is started too frequently	See section 3.4.5.3
	F.)	Supply voltage too low, too high, or unbalanced	(1) Ensure that steady state supply voltage at motor terminals is within limits (see section 3.4.1.3) Correct as needed (2) Reconnect motor per input voltage (3) Obtain correct motor to match power supply.
Motor Vibrates			
	A.)	Motor misaligned to load.	Realign load
	B.)	Load out of balance (Direct drive application)	(1) Ensure that load is dynamically balanced: (2) Remove motor from load and inspect motor by itself. Verify that motor shaft is not bent. Rule of thumb is 0.002" runout for shafts extension lengths up to 3.00". Add 0.0005" per every additional inch of shaft length beyond 3.00".
	C.)	Uneven tension on multiple belts	Mixing new with used belts. Replace multiple belt applications with a complete set of matched belts.
	D.)	Driven load operating at resonant point / natural frequency.	(1) De-energize motor and record vibration as load coasts from 100% speed to 0 RPM. If vibration drops immediately, vibration source is electrical. If levels do not drop immediately, source is mechanical (2) Redesign system to operate below the resonant point (3) On VFD-driven loads, program skip frequencies to bypass resonant points (4) Increase carrier frequency to obtain <3% THD current (5) On variable torque loads reduce volts/hertz below base speed.
	E.)	VFD torque pulsations	(1) Adjust VFD to obtain <3% THD current @ rated motor current (2) Adjust VFD stability for smooth operation. Vector drives may be unstable at light load.
	F.)	Motor miswired at terminal box	Match motor lead wiring to nameplate connection diagram.
	G.)	Uneven, weak or loose mounting support.	Shim, strengthen or tighten where required.
	H.)	Motor bearings defective	Test motor by itself. If bearings are bad, you will hear noise or feel roughness. Roller bearings are normally noisy when operated without load. If sleeve bearing, add oil per nameplate instructions. For motors with regreasing provisions, add grease per relubricating instructions (see section 4.2.3). If noise persists contact warranty service.
	I.)	Motor out of balance	Disconnect from load. Set motor on rubber pads on solid floor. Secure a ½ height key in shaft keyway and energize from balanced power supply @ rated voltage. Record vibration levels and compare with appropriate standards. If excessive vibration persists contact motor manufacturer.

Bearings repeatedly fail.			
	A.)	Load to motor may be excessive or unbalanced	(1) If belt drive check system per section 3.3.4. (2) Other than belting, check loading on motor shaft. An unbalanced load will also cause the bearings to fail. (3) Check runouts of mating components, such as a C-face and pump flange.
	B.)	Bearings contaminated.	Motor enclosure not suitable for environment. Replace with correct enclosure construction
	C.)	Incorrect grease or bearings for ambient extremes.	See section 4.2.1
	D.)	VFD bearing damage	Ground brush, common mode filter, or insulated bearings must be added. Contact motor manufacturer.
Motor, at start up, makes a loud rubbing, grinding, or squealing noise.			
	A.)	Contact between rotating and stationary components	Belt squeal during across the line starting is normal: (1) Verify that supply voltage is within limits (see section 3.4.1.3). (2) Ensure that motor lead wiring matches nameplate connection diagram: (3) Isolate motor from load. (4) To locate point of contact turn motor shaft by hand. (5) If point of contact is not located contact motor service shop.
Start capacitors repeatedly fail.			
	A.)	The motor acceleration time is too long	Motor may be too small for load. Record acceleration time. Start capacitors may fail if acceleration time exceeds 3 seconds.
	B.)	Motor is being started too frequently	Excessive starting will damage motor capacitors. Contact motor manufacturer if motor is started more than 20 times/hour or if acceleration time exceeds 3 seconds.
	C.)	Motor voltage low	Verify that voltage at the motor terminals is within limits (see section 3.4.1.3).
	D.)	Defective start switch inside motor	Motor internal switch failure overheats start capacitor. Contact service shop or motor manufacturer.
Run capacitor fails.			
	A.)	High ambient temperature	Verify that the ambient does not exceed motor's nameplate value

	B.)	Input voltage exceeds limit	Verify that voltage to the motor terminals is within limits (see section 3.4.1.3).
	C.)	Power surge to motor (caused by lightning strike or other high transient voltage).	If a common problem, install surge protector.

104043

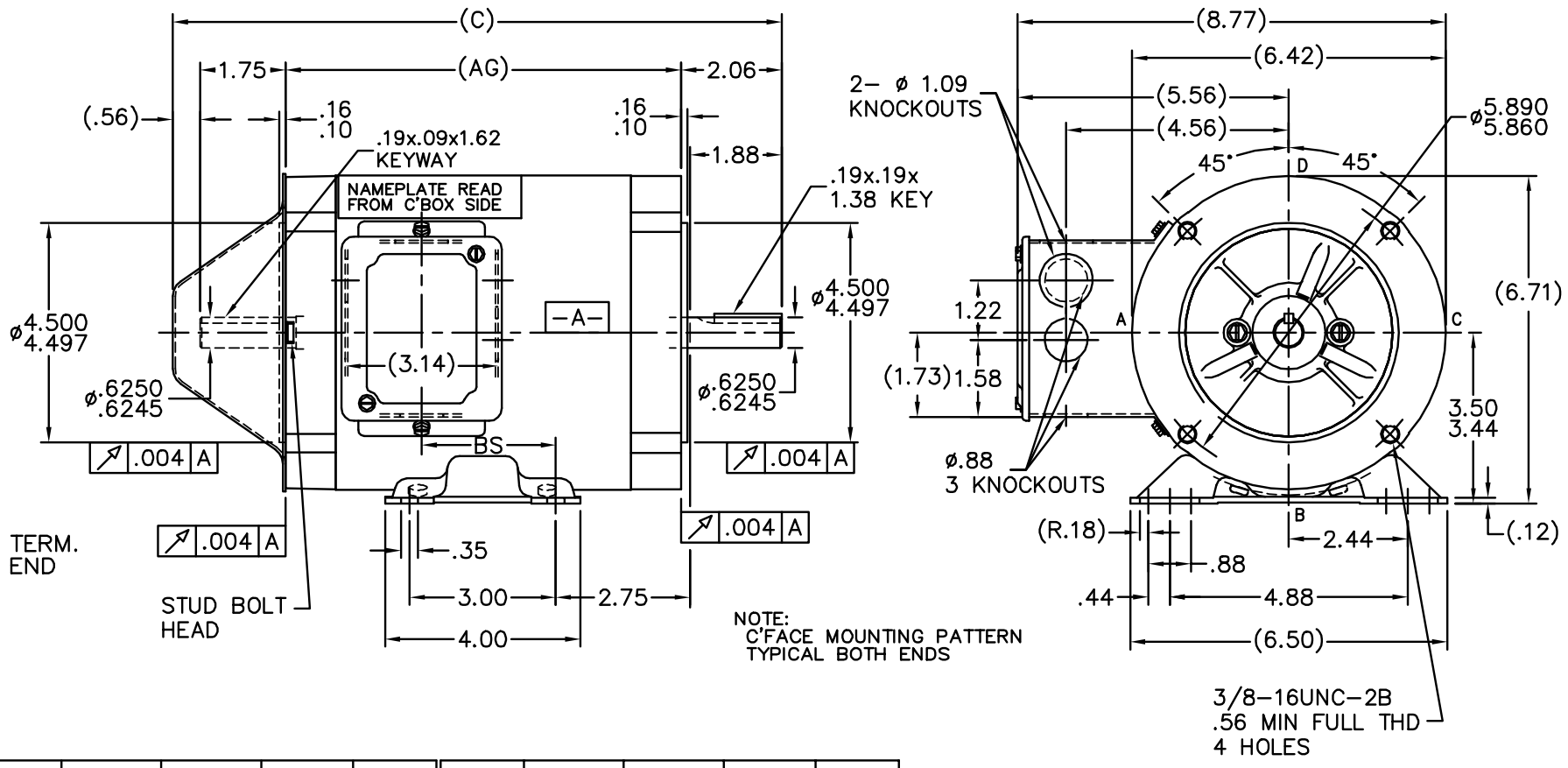

NOTE:
C'FACE MOUNTING PATTERN
TYPICAL BOTH ENDS

DASH	FR.	C	AG	BS	DASH	FR.	C	AG	BS
606	56-60	12.48	8.11	2.75	756	56-75	13.98	9.61	4.25
656	56-65	12.98	8.61	3.25	806	56-80	14.48	10.11	4.75
706	56-70	13.48	9.11	3.75	856	56-85	14.98	10.61	5.25

NOTES:
1- REMOVABLE BASE
2- CONDUIT BOX CAN BE ROTATED 180°

NO.	REVISION	BY & DATE	CHK
5	REDRAWN IN AUTOCAD	TAT 07-06-2004	ML
4	ADDED KEYWAY TO FRONT EXT. CN 27200-169	CAV 02-21-2000	
3	REMOVED KEYWAY FROM FRONT EXT. CN 27400-442	CAV 10-08-1999	
2	REV. BLACK MAX 56 FR. -706 WAS -856 CN27400-264	BLR 07-14-1999	

TOLERANCES UNLESS SPECIFIED	
DEC.	INCHES
.X	±.1
.XX	±.03
.XXX	±.005
.XXXX	±.0005
ANG	±7'30"

MARATHON ELECTRIC

TITLE OUTLINE
56 FR. - TENV - BB - DBL. C' FACE

MAT'L.

FINISH

CAD FILE 104043

RFP

DIST WP

DRAWN	CEB 08-16-1995
CHK	DA 08-18-1995
APPD	EAB 08-21-1995
SCALE	5=16
REF	
FMF	
PREV	

SIZE A | DRAWING NO. 104043 | PAGE OF | REV. 5

THIS DRAWING IN DESIGN AND DETAIL IS OUR PROPERTY AND MUST NOT BE USED EXCEPT IN CONNECTION WITH OUR WORK ALL RIGHTS OF DESIGN AND INVENTION ARE RESERVED
THIS IS AN ELECTRONICALLY GENERATED DOCUMENT - DO NOT SCALE THIS PRINT

EE7300T

THREE PHASE – SINGLE VOLTAGE
MOTOR – CONDUIT BOX @ 'A'

TO REVERSE ROTATION:
INTERCHANGE ANY TWO LINE
LEAD CONNECTIONS

NOTE FOR FACTORY USE ONLY:
TO SURGE TEST:
FOR 3 LEAD COMMON CONNECT:
CONNECT P1 TO T1 THEN P2 TO L1
FOR 6 LEAD COMMON CONNECT:
CONNECT P1 TO BOTH T1
THEN P2 TO L1

IF MOTOR HAS MULTIPLE
T'S PER LEAD CONNECT
TOGETHER LIKE T'S

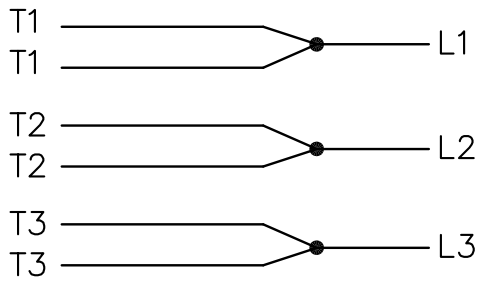

A–9806 DECAL

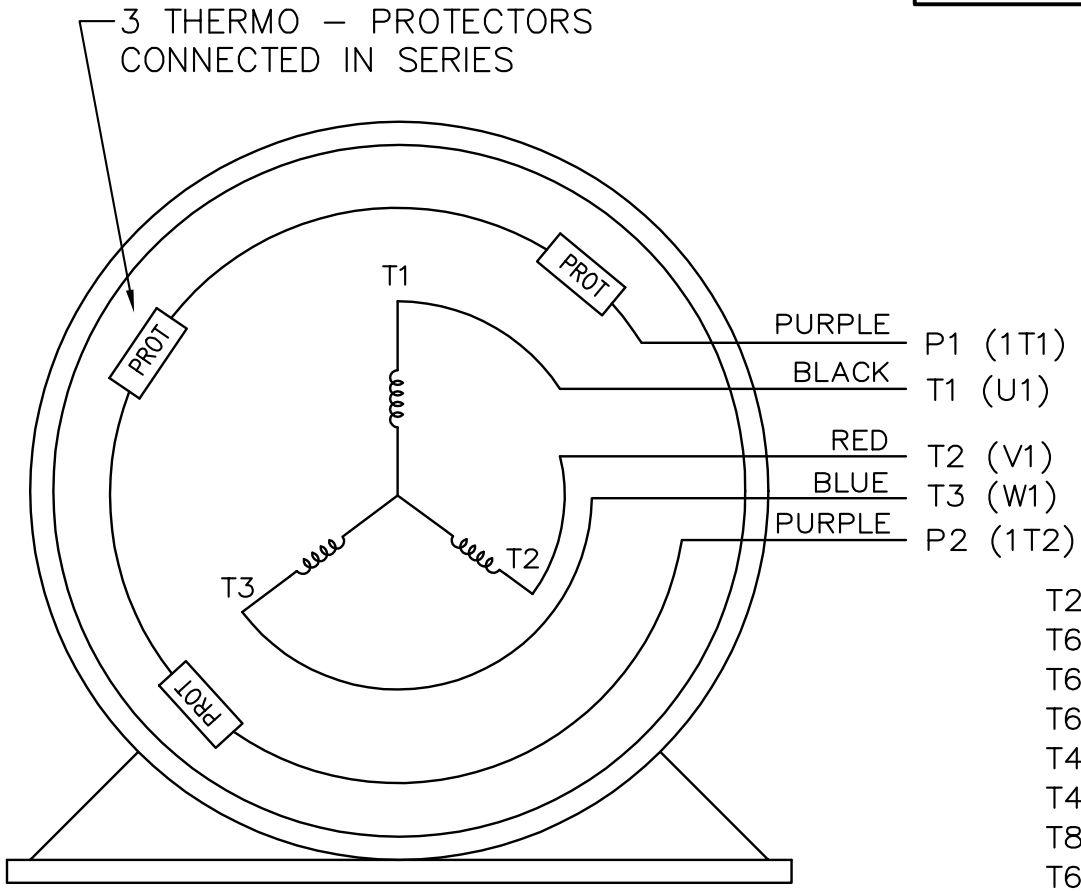

VIEW OF TERMINAL END

T2BM
T6AW
T6AL
T6Z
T4EG
T4BF
T8A
T6H
T6A
T4AX
T4A
T2A
T2F

NO.	REVISION	BY & DATE	CHK
17	ADDED LEAD COLORS CN 40472	TAT 08-01-2006	ML
16	ADDED FEC TERM MARKINGS MU72670	DRS	
15	REVISED "IF MOTOR HAS MULTIPLE		
	T'S PER LEAD... NOTE CN26568	MRB 10-16-1998	
14	ADDED SURGE TESTER NOTE – FOR		
	FACTORY USE ONLY CN24255	MH 03-13-1997	

TOLERANCES UNLESS SPECIFIED
DEC. INCHES
.X ± –
.XX ± –
.XXX ± –
.XXXX ± –
ANG ± –

MARATHON ELECTRIC

DRAWN LZ 01-04-1994
CHK ML 01-20-1994
APPD GK 01-20-1994
SCALE 1=1
REF
FMF
PREV

TITLE CONNECTION DIAGRAM
3ø – SINGLE VOLT – MOTOR WITH PROTECTOR
MAT'L.
FINISH

THIS DRAWING IN DESIGN AND DETAIL IS OUR PROPERTY AND MUST NOT BE USED EXCEPT IN CONNECTION WITH OUR WORK ALL RIGHTS OF DESIGN AND INVENTION ARE RESERVED
THIS IS AN ELECTRONICALLY GENERATED DOCUMENT – DO NOT SCALE THIS PRINT

RFP
DIST WA-LB-SB
CAD FILE EE7300T

SIZE	DRAWING NO.	PAGE	OF	REV.
A	EE7300T			17

Warranty Card

Complete and return to validate warranty

Please complete this card and return it to **seepex** Inc. By using this card, the valid warranty period will commence at the pump "start-up" date. If this card is not completed the warranty coverage period will commence on the date the pump is shipped from the **seepex** factory. This card must be completed and mailed no later than one year from the date of shipment.

User Entity: _____

Mailing Address: _____

_____

_____

Contact Person: _____

Phone Number: _____

Fax Number: _____

Pump Model # _____

Pump Commission #: _____

Pumped Product: _____

Diff. Pressure: _____ Flow Rate: _____

Temperature: _____ Visosity: _____

Solids Size: _____ Solids %: _____

Was the pump delivered as scheduled? __ Yes __ No

Was the appearance of the pump acceptable? __ Yes __ No

Did the pump suffer any freight damage? __ Yes __ No

Did the pump perform as expected? __ Yes __ No

Did you receive: - Data Sheets? __ Yes __ No

-O&M Manuals? __ Yes __ No

Did you local seepex distributor contact you to arrange a start-up? __ Yes __ No

Other Comments: _____

_____

Name of person completing card (please print): _____

Date: _____ Signature: _____

seepex, Inc.
511 Speedway Drive
Enon, OH 45323
Phone (937) 864-7150
Fax (937) 864-7157
www.seepex.com
sales@seepex.net

TERMS & CONDITIONS OF SALES AND/OR REPAIR

The following terms and conditions shall apply to an order for all or any part the articles covered by this quotation unless specifically excepted therein:

Prices
Any prices quoted shall only be valid for orders placed within 30 days from the date of issue of the quotation. Prices are F.O.B. our plant in U.S. or Canadian dollars. We reserve the right to correct typographical or clerical errors.

Terms
All orders are subject to approval by our Credit Department. Unless otherwise stated, if payment for the invoice due is not made within thirty (30) days after shipment, administration fees of eighteen percent (18%) per year (equivalent to a nominal monthly interest rate of 1½%) will be applied on overdue accounts. The terms and conditions herein set forth are based upon tariffs, taxes, foreign exchange rates, delivery, and other conditions in effect on the date of this contract. In the event changed conditions, legislations, regulations, or other matters shall become applicable to any quotation, contract, or delivery hereunder, any increased exchange, duties, taxes, ocean freight, or other charges resulting from such action shall be for the customer's account and **seepex**, Inc. may charge such increased duties, taxes, or charges to the customer.

Unless the order includes the appropriate exemption certificates and/or licenses, duties, and taxes levied by Federal, State, or other governments are required to be charged automatically at the rate imposed at time of importation/shipment. Any change in law, regulations, or Government Department practice which causes a variation of any kind in the applicable charges from the amounts allowed for the quotation, shall result in an equivalent change in the price quoted.

Until payment is made in full, **seepex**, Inc. shall retain the right, without notice, to repossess and/or retain the items, and/or dispose of them, for its benefit and hold the customer responsible for any loss. Customer agrees to enter into any agreements, contracts, or notices required to confirm such rights.

Security
In order to secure any obligations due to **seepex**, Inc. from the customer (whether or not under this contract) the customer grants and confirms in **seepex**, Inc. a security interest in:

a) the merchandise covered by this contract, and
b) in all property and funds of the customer now or hereafter in **seepex**, Inc. possession, whether or not arising out of this contract, and in all additions, accessions, and proceeds of such merchandise and/or property. The customer hereby authorizes **seepex**, Inc. to sign alone any financing statement or statements and to do all and any other things which may be necessary to perfect such security interest.

Cancellation
After acceptance, orders may be canceled only with our approval and payment in accordance with contract by the customer for work performed and/or material expenses incurred by us to date of cancellation. We reserve the right to cancel the order if the customer's financial condition, in our sole judgment, places the payment in jeopardy.

Return
No credit will be allowed for returns unless our authorization in writing for such returns has been obtained beforehand. A copy of this authorization is to be returned with the item as the packing slip.

Shipment

a) Handling Charge: Customer shall be responsible for making all arrangements for shipment of the order with a suitable carrier. In the event that customer requests that seepex make arrangements for shipment, then customer agrees to pay to seepex, in addition to the applicable shipping charges, a handling charge in the amount of 10% of the shipping charges with a minimum $5.00 to a maximum charge of $150.00, with special services requiring additional charges.
b) New Articles: Where shipping instructions indicate no exact routing, our best judgement will be used in determining routing but we shall not be liable for any charges beyond F.O.B. point. If changes are made at customer's request in a) F.O.B. point, b) in our normal routing from either the manufacturers' or our own plants and in these changes involve extra costs, such costs shall be for the customer's account, unless otherwise noted on the **seepex** price quotation.
c) Repair Work: Defined as work and services performed by **seepex**, Inc. All orders shall be delivered to and picked up from our plant unless otherwise specified. All costs of delivery shall be for the customer's account unless otherwise agreed to in writing prior to shipment.
d) All Orders: On collect freight shipments, cartage charges from plant to carrier are for customer's account. Title to articles passes to customer upon delivery to carrier acting as customer's agent subject to any right of retention by us. All claims for shortage in, and damages in, shipment or otherwise must be reported to carrier immediately upon receipt with copy or report to ourselves within five (5) days.

Guarantee

a) New Articles: We guarantee articles of our manufacture against defects in material and/or workmanship for a period of three (3) years from date of acceptance, providing that the articles have been installed, maintained, and operated in accordance with our recommendations and instructions.
b) Repair Work: Defined herein as work and services performed by **seepex**, Inc. We guarantee all work and services performed by us against defect arising from workmanship and/or materials provided by us for a period of ninety (90) calendar days from the date of shipment to customer.
c) All Orders: Claims shall be submitted promptly in writing to **seepex**, Inc. Replacement and/or repair under guarantee shall be made F.O.B. our plant. Our liability under these guarantees is limited to the replacement and/or repair only of defective material or workmanship and in no event shall **seepex**, Inc. be liable for any loss or damage of whatever kind of nature out of defects in material and/or workmanship, or resulting from delay, or loss of use of articles, or any installation into which the article may be installed, or arising out, of the contract of the work or service or from negligence.

seepex, Inc. shall not be liable for any loss or damage resulting from delay and/or late delivery due to causes beyond our reasonable control. In no event shall seepex, Inc. be liable for any claim exceeding the amount of this order. Our guarantee on products of other than our own manufacture is limited to the guarantee extended to us by the original manufacturer. On any claims for repairs and/or replacement under such guarantee, all costs incurred by us which are not underwritten by the original manufacturers shall be for the claimant's account. Except as stated above no representations, conditions, or warranties are made with respect to products, work, or services, express or implied verbal or otherwise, including warranties of merchantability and fitness. Our guarantee and warranty shall not apply to materials or workmanship which have been subject to misuse, neglect, or accident.
seepex, Inc. shall be held free and harmless from any dispute or claim anywhere arising relating to infringement of patent, design, trademark, or copyright of items, sold or repaired under this contract.

Property **rights and risks**
The customer's property at all times shall remain at the risk of the customer while being worked on by our personnel or on our premises and shall not be responsible for any loss or damage to the customer's property resulting from any cause whatsoever.

Title to and rights in relation to item sold under this contract/quotations shall remain with **seepex**, Inc. until such items are paid for, subject to risk on products sold passing to the customer upon acceptance by a carrier or other, which shall constitute good delivery.

Deutschland

seepex
GmbH + Co KG
Postfach 10 15 64
D-46215 Bottrop
Tel +49.2041.9 96-0
Fax +49.2041.9 96-400
info**@seepex**.com
www.**seepex**.com

Deutschland

seepex
Werksbüro West
Scharnhölzstrasse 344
D-46240 Bottrop
Tel +49.700.73 37 39 04
Fax+49.20 41.996-279
bwickermann**@seepex**.com

Deutschland

seepex
Werksbüro Nord
Albert-Einstein-Str. 4
D-30926 Seelze
Tel +49.700.73 37 39 02
Fax +49.511.4 00 80 99 23
bgschulz**@seepex**.com

Deutschland

seepex
Werksbüro Rhein-Main
Dr. Hermann-Künanz-Str. 14
D-63683 Ortenberg-Selters
Tel +49.700.73 37 39 07
Fax+49.60 46.9 60 43 14
hkoch**@seepex**.com

Deutschland

seepex
Werksbüro Südwest
Schwetzinger Strasse 25
D-68519 Viernheim
Tel +49.700.73 37 39 08
Fax+49.62 04.91 12 704
tdufner**@seepex**.com

Deutschland

seepex
Werksbüro Süd
Johann-Karg-Str. 25
D-85540 Haar/München
Tel +49.700.73 37 39 05
Fax+49.89.90 46 87 24
arohrmueller**@seepex**.com

Deutschland

seepex
Werksbüro Ost
Zur Wetterwarte 10, Haus 104
D-01109 Dresden
Tel +49.700.73 37 39 03
Fax+49.351.89 08 36 7
olibnow**@seepex**.com

Österreich

seepex
Vertriebsbüro Österreich
Obermüllergasse 18
3003 Gablitz
Tel. +43.2231 61085
Fax +43.2231.6 10 85-20
hfriedl**@seepex**.com

Niederlande

seepex
Bureau Nederland
Maagdenburgstraat 22c
7421 ZC Deventer
Tel +31.570.516644
Fax +31.570.516077
seepex.nl**@seepex**.com

Belgien

seepex
Bureau België
Dorp 8
B-2288 Bouwel
Tel +32.14.50 14 71
Fax+32.14.50 14 61
seepex.be**@seepex**.com

Dänemark

seepex
Nordic AS
Bakkegårdsvej 411
DK-3050 Humlebæk
Tel +45.49 19 22 00
Fax+45.49 19 32 00
info**@seepex**.dk

Schweden

seepex
Nordic AS
Skogsvägen 39
61634 Åby
Tel +46.11 66 940
Fax +46.11 66 941
info**@seepex**.dk

Grossbritannien

seepex
UK Ltd.
3 Armtech Row
Houndstone Business Park
Yeovil, Somerset BA 22 8RW
Tel +44.19 35.47 23 76
Fax+44.19 35.47 98 36
sales**@seepex**.co.uk

Grossbritannien

seepex
UK Ltd., Northern Office
Dane Mill Business Centre
Broadhurst Lane Congleton
Cheshire CW12 1LA
Tel +44.12 60 27 10 01
Fax+44.12 60 27 40 04
northernoffice**@seepex**.co.uk

Grossbritannien

seepex
UK Ltd. Midlands Office
15 Tudor Close
Hollywood, Birmingham
West Midlands B14 4TL
Tel +44.121.6 03 11 91
Fax +44.121.6 03 21 82
jcashmore**@seepex**.co.uk

Irland

seepex
Dublin Office
61 Clonkeen Road
Deansgrange
Dublin
Tel +353.1.2 89 43 93
Fax +353.1.2 89 44 96
dublinoffice**@seepex**.co.uk

Frankreich

seepex
France SARL
1, Rue Pelloutier
77183 Croissy Beaubourg
Tel +33.1.64 11 44 50
Fax +33.1.64 11 44 69
info**@seepex**.com

Frankreich

seepex
France SARL
Agence Rhône Alpes
15, rue des Sports
F-69210 Lentilly
Tel +33.474.01 87 20
Fax+33.474 01 88 30
lnouel**@seepex**.com

Frankreich

seepex
France SARL
Agence Pays de
Loire-Bretagne
Le Clos Rellan
F-35380 Treffendel
Tel +33.2.99 61 88 10
Fax+33.2.99 61 88 13
mrousseau**@seepex**.com

Frankreich

seepex
France SARL
Agence Aquitaine
28, Chemin de Facteurs
F-33260 La Teste de Buch
Tel +33.5.56 54 68 86
Fax +33.5.57 52 65 47
jose.enrique@free.com

Frankreich

seepex
France SARL
Agence Est
7, rue des Terres Blanches
F-54300 Lunéville
Tel +33.3.83 73 32 59
Fax+33.3.83 73 91 36
tlefloch**@seepex**.com

USA

seepex
Inc.
511 Speedway Drive
Enon, Ohio 45323
Tel +1 (937) 864-71 50
Fax+1 (937) 864-71 57
sales@**seepex**.net

USA

seepex
Inc.
1249 Tilton Park Drive
Rochelle, IL 61068
Tel +1 (815) 562-63 04
Fax+1 (815) 562-83 04
arenick@**seepex**.net

USA

seepex
Inc.
135 Dennis Drive
Glenshaw PA 15116-3003
Tel +1(412) 487-1144
Fax +1(412) 487-6116
lbeatty@**seepex**.net

USA

seepex
Inc.
12374 S.E. 93rd Court Road
P.O. Box 690
Summerfield FL 34492-0690
Tel +1 (352) 245-9405
Fax +1 (352) 245-9446
rbraidich@**seepex**.net

USA

seepex
Inc.
40 Bel Flora
Los Flores, CA 92688
Tel +1 (949) 589-60 23
Fax+1 (949) 589-64 59
bstark@**seepex**.net

USA

seepex
Inc.
7136 Sample Drive
The Colony, TX 75056
Tel +1(469) 287-2042
Fax +1(469) 287-2568
slong@**seepex**.net

USA

seepex
Inc.
2904 Southhurst Drive
Huntsville, AL 35803
Tel +1(256) 650-7236
Fax +1 (256) 650-0288
dheigl@**seepex**.net

USA

seepex
Inc.
1110 East, 1525 North
Layton, UT 84040
Tel +1 (801) 593-1606
Fax +1 (801) 593-1608
kthomas@**seepex**.net

USA

seepex
Inc.
8761 Denison Drive
Columbia, IL 62236-0527
Tel +1(618) 977-3229
Fax +1(618) 939-5874
rbiby@**seepex**.net

USA

seepex
Inc.
411 Lorwood Drive
Shelby, OH 44875-1716
Tel +1 (937) 232-6563
Fax +1 (937) 864-7157
dwalsh@**seepex**.net

China

seepex
Pumps (Shanghai) Co., Ltd.
No. 21, Lane 1365
Kangqiao Dong Road
Shanghai, 201 315
Tel +86.21.3810 8888
Fax +86.21.3810 8899
info.cn@**seepex**.com

China

seepex
Beijing Office
No. 1 (A) Gao Bei Dian Cun
Chaoyang District,
Beijing 100022,
Tel +86.10.8774 3092
Fax +86.10.8774 2997
seepex.bjo@**seepex**.com

China

seepex
Guangzhou Office
501 Linjanf Dadao
Tianhe District
Guangzhou, 510655
Tel. +86.20.3193 5308
Fax +86.20.3889 0479
seepex.gzo@**seepex**.com

China

seepex
Qingdao Office
Shandong Province
Tel +86.138 5329 9850
Fax +86.532 508 5358
seepex.qdo@**seepex**.com

China

seepex
Lanzhou Office
Room 1214, Jinyu Mansion
No. 3 West Jiangong Street
Qilihe District
Lanzhou 730050
Tel +86.931.260 4039
Fax +86.931.260 4239
szhang@**seepex**.com

Malaysia

seepex
(M) Sdn. Bhd.
59-1, Jalan PJU 1/37,
Dataran Prima
47301 Petaling Jaya,
Selangor Darul Ehsan
Tel +60.3.78 80 69 51
Fax+60.3.78 80 69 59
seepex.m@**seepex**.com

Vertretungen:

Europa:

Finnland
Griechenland
Island
Italien
Norwegen
Polen
Portugal
Rumänien
Russland
Schweiz
Spanien
Tschechische Republik
Ungarn

Amerika:

Argentinien
Chile
Equador
Kanada
Kolumbien
Mexiko
Panama
Peru
Puerto Rico
Venezuela

Asien:

Brunei
Indien
Indonesien
Iran
Israel
Japan
Kasachstan
Korea
Kuwait
Pakistan
Philippinen
Saudi Arabien
Singapur
Taiwan
Thailand
V.A.E

Afrika:

Ägypten
Südafrika

Ozeanien:

Australien
Neuseeland

Ihre **seepex** Vertretung

LEFT BLANK

SAFETY RELIEF VALVE

LEFT BLANK

TOP VALVE * PAT

Back Pressure & Pressure Relief Valves

Designed to Enhance the ACCURACY and SAFETY of Metering Pumps



Back Pressure/Anti-Siphon and Pressure Relief Valves

- Long life diaphragm
- Range to 350 PSIG
- Built-in air release and optional gauge port
- Available in PVC, CPVC, PVDF, polypropylene, Teflon, stainless steel, Alloy 20 and Hastelloy C
- 7 sizes (1/4" - 2" threaded, flanged or socket)
- Color coded handles indicate size at a glance
- High temperature valves available to (300°F/149°C)

For detailed product information visit our website: primaryfluid.com

PRIMARY FLUID SYSTEMS INC.

Call Toll Free 1-800-776-6580
Tel (905) 333-8743 Fax (905) 333-8746

E-Mail: primary@primary fluid.com
www.primaryfluid.com

TOP VALVE*PAT

For detailed product information visit our website: primaryfluid.com

Back Pressure/Anti-Siphon and Pressure Relief Valves

Description

This line of diaphragm style, back pressure/anti-siphon and pressure relief valves features a completely adjustable pressure range to 350 PSIG and a built-in air release to reduce priming difficulties. The valves are available in sizes from 1/4" through 2", eight materials of construction, offer a three year warranty and are available with socket weld, flanged or special threaded connections. High temperature to (300°F/149°C) valves are available. *CRN certification available. Please contact factory.*

Ordering Information e.g. Part # TVBP50-S/S-V-S

TV - B - P - 50 - S/S - V - S

TOP VALVE

Valve Type:
B = Backpressure
P = Pressure Relief
P2 = Pressure Relief (2 port)

Valve Style or Connection:
P = Backpressure, FNPT thr'd
R = Pressure Relief, FNPT thr'd
FW = Welded Flange
FT = Thr'd Companion Flanged
F = Flanged Non-Metallic
S = Socket
B = BSP thread
T = High Temperature (300°F/149°C)
H = High Pressure (to 350 psig)

Valve Port Connection Size:
25 = 1/4" 10 = 1"
45 = 1/4" X 1/2" 15 = 1 1/2"
50 = 1/2" 20 = 2"
75 = 3/4"

Standard Top: PVC/CPVC
Top Options:
A = Aluminum Top
S = 316L S/S Top
C = CPVC Top
P = Polycarbonate Top

Miscellaneous Options:
E = EPDM Diaphragm
P = PVC Diaphragm
V = Viton Diaphragm
G = Gauge Port

Body Material of Construction:
PVC = polyvinylchloride
CPVC= Corzan
PP = polypropylene
TFE = 24% glass filled Teflon
PVDF= polyvinylfluoride
S/S = 316L Stainless Steel
ALL20= Alloy 20
Hast = Hastelloy C 276

Flow Rates

Flow capacity through TOP VALVE back pressure/anti-siphon and pressure relief valves under continuous flow conditions **@ 50 PSIG** with ambient temperature water.

Size	1/4"	1/4" / 1/2"	1/2"	3/4"	1"	1 1/2"	2"
Flow rate USGPM	4	4	6	8	14	25	40

Note: Capacities will increase with pressure. If pressure is doubled, flow rate wll approximately double. For capacities of valves with pulsating flow, use approximately 1/3 of the given flow rates.

Typical Installations

The installations below are typical installation examples only. Consult your engineering department for the appropriate installation of your application or call Primary Fluid Systems Inc. for advice.

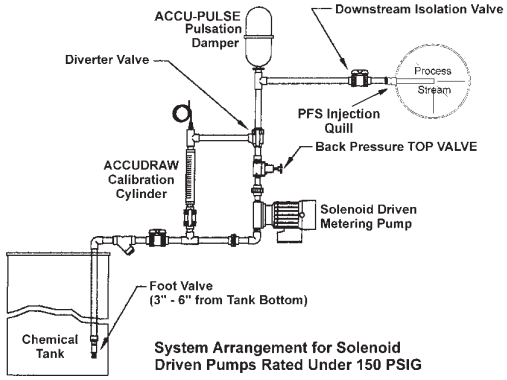

System Arrangement for Solenoid Driven Pumps Rated Under 150 PSIG

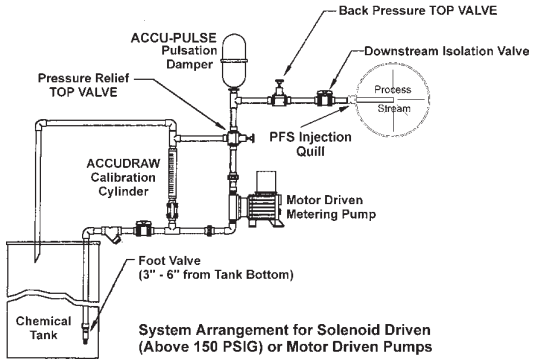

System Arrangement for Solenoid Driven (Above 150 PSIG) or Motor Driven Pumps

Distributed By:

PRIMARY FLUID SYSTEMS INC.

Distribution Territories Available

Call Toll Free 1-800-776-6580
Tel: (905) 333-8743
Fax: (905) 333-8746

E:Mail: primary@primaryfluid.com
www.primaryfluid.com

® Registered Trade Mark of Primary Fluid Systems
*PAT 5,857,486/5,944,050

CALIBRATION CYLINDER

LEFT BLANK

ACCUDRAW® Calibration Cylinders



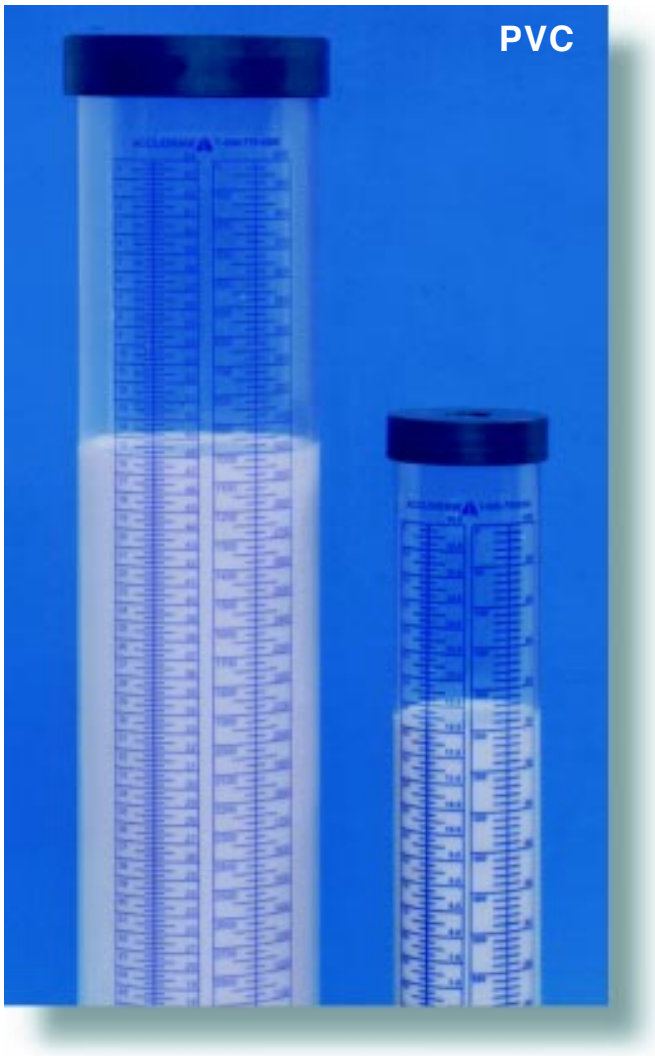

ACCUDRAW® ***has been developed for the accurate calibration of metering pumps. Standard features include:***

- translucent
- chemical resistant
- break resistant
- threaded or socket
- colored graduations and lettering

- PVC has dual scale USGPH & ml
- PVC sizes 100 - 20000 ml
- POLY sizes 100 - 4000 ml
- POLY meets ISO standards
- custom sizes and other materials (acrylic, glass) on request

PRIMARY FLUID SYSTEMS INC.
Call Toll Free 1-800-776-6580
Tel (905) 333-8743 Fax (905) 333-8746
E-Mail: primary@primaryfluid.com
www.primaryfluid.com

ACCUDRAW® Calibration Cylinders

ACCUDRAW COAGULANT

"For Accuracy That Counts"

Sizing and Ordering Information

Polypropylene Construction

Size	*Conn.*	*BC*	*BTC*	*BDC*
100 ml	1/2" NPT	AC#1-100	AC#2-100	AC#3-100
250 ml	1/2" NPT	AC#1-250	AC#2-250	AC#3-250
500 ml	1/2" NPT	AC#1-500	AC#2-500	AC#3-500
1000 ml	1/2" NPT	AC#1-1000	AC#2-1000	AC#3-1000
2000 ml	1.0" NPT	AC#1-2000	AC#2-2000	AC#3-2000
4000 ml	1.0" NPT	AC#1-4000	AC#2-4000	AC#3-4000

BC = bottom connection only, open top
BTC= bottom and top connections
BDC= bottom connection and dust cover top

PVC Construction

Size/Scale	*Conn*	*BC*	*BTC*	*BDC*
100 ml/ 1.6 GPH	1/2" NPT	PV#1-100	PV#2-100	PV#3-100
250 ml/ 4 GPH	1/2" NPT	PV#1-250	PV#2-250	PV#3-250
500 ml/ 8 GPH	1/2" NPT	PV#1-500	PV#2-500	PV#3-500
1000 ml/ 16 GPH	1/2" NPT	PV#1-1000	PV#2-1000	PV#3-1000
2000 ml/ 32 GPH	1.0" NPT	PV#1-2000	PV#2-2000	PV#3-2000
4000 ml/ 64 GPH	1.0" NPT	PV#1-4000	PV#2-4000	PV#3-4000
10000 ml/ 160 GPH	2.0" NPT	PV#1-10000	PV#2-10000	PV#3-10000
20000 ml/ 320 GPH	2.0" NPT	PV#1-20000	PV#2-20000	PV#3-20000

Note: PVC cylinders available with socket weld connections.
Add suffix "S" to model # e.g. PV#3-100S
For BSP threads, add suffix "B" to model # e.g. PV#3-100B

Dimensional Information

Polypropylene Construction

Model	Size (ml)	Dev (ml)	A (inches)	B (inches)
AC#1	100	1	9.88	1.38
AC#1	250	2	12.44	1.75
AC#1	500	5	14.1	2.33
AC#1	1000	10	17.19	2.63
AC#1	2000	20	20.88	3.38
AC#1	4000	50	23.56	4.38
AC#2/AC#3	100	1	9.25	1.38
AC#2/AC#3	250	2	11.63	1.75
AC#2/AC#3	500	5	13	2.32
AC#2/AC#3	1000	10	16.5	2.69
AC#2/AC#3	2000	20	19.5	3.38
AC#2/AC#3	4000	50	22.13	4.38

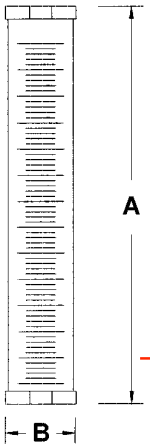

PVC Construction

Model	Size (ml)	Divisions (ml)	Size (GPH)	Divisions (GPH)	A (inches)	B (inches)
PV#1	100	1	1.6	0.02	10.24	1.388
PV#1	250	2	4	0.05	11.04	1.888
PV#1	500	5	8	0.05	12.25	2.388
PV#1	1000	10	16	0.125	16.24	2.765
PV#1	2000	20	32	0.25	20.16	3.517
PV#1	4000	25	64	0.25	22.16	4.521
PV#1	10000	200	160	2	22.64	6.906
PV#1	20000	200	320	2	42.19	6.906
PV#2/PV#3	100	1	1.6	0.02	10.75	1.388
PV#2/PV#3	250	2	4	0.05	11.51	1.888
PV#2/PV#3	500	5	8	0.05	12.75	2.388
PV#2/PV#3	1000	10	16	0.125	16.76	2.765
PV#2/PV#3	2000	20	32	0.25	20.67	3.517
PV#2/PV#3	4000	25	64	0.25	22.66	4.521
PV#2/PV#3	10000	200	160	2	23.16	6.906
PV#2/PV#3	20000	200	320	2	42.69	6.906

Installations

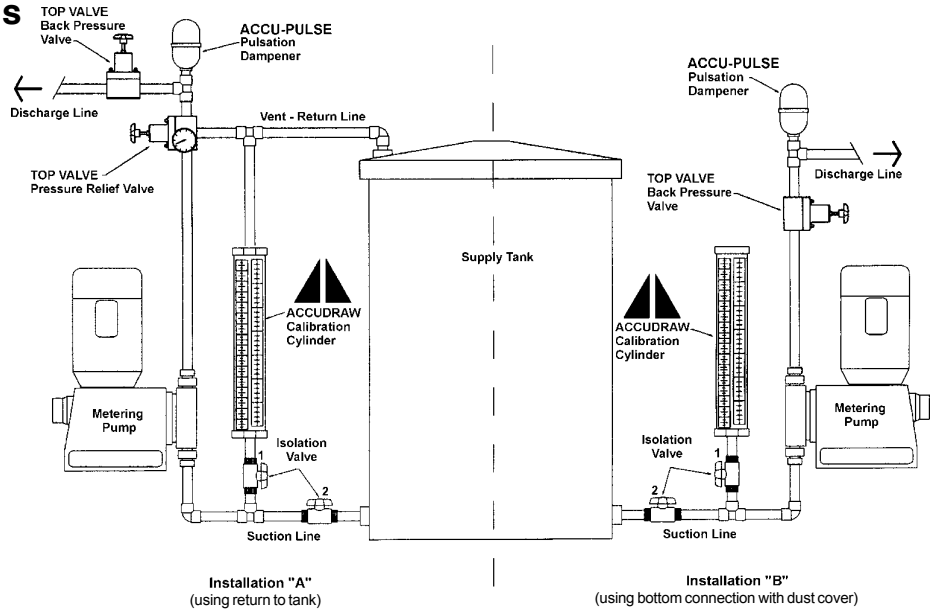

Installation "A"
(using return to tank)

Installation "B"
(using bottom connection with dust cover)

Conversion Factors

1 ml = 1 cc
1000 ml = 1 liter
ml/sec X 60 = ml/min
1 US gal/min X 0.063 = liters/sec
1 US gal = 3.786 liters

Distributed By:

PRIMARY FLUID SYSTEMS INC.

Call Toll Free 1-800-776-6580
Tel: (905) 333-8743
Fax: (905) 333-8746

E:Mail: primary@primaryfluid.com
www.primaryfluid.com

® Registered Trade Mark of Primary Fluid Systems

Distribution Territories Available

MasterCard VISA AMERICAN EXPRESS

CORPORATION STOPS

LEFT BLANK

PFS Corporation Stops



PFS Corporation Stops have been designed to inject chemical into the center stream of the flow.

- **isolation valve allows for ease of maintenance**
- **available in 6 materials of construction**
- **wetted components have comparable or greater chemical resistance than quill construction material**
- **standard and custom lengths available**
- **connection in NPT, metric or flanged**
- **standard 1/8" orifice discharge and optional 1/4" for higher flow**

For detailed product information visit our website: primaryfluid.com

PRIMARY FLUID SYSTEMS INC.

Call Toll Free 1-800-776-6580
Tel (905) 333-8743 Fax (905) 333-8746

E-Mail: primary@primary fluid.com
www.primaryfluid.com

PFS Corporation Stops

For detailed product information visit our website: www.primaryfluid.com

Sizing and Ordering Information

Model	Body Material	Valve Material	Gland Material	Gland Seal Material**	Ball Check Material	Check Spring Material	Pressure* Max. PSIG	Temperature Max.
CCS-56-PVC	PVC	PVC	PVC	VITON	Ceramic	316 S/S	150	140°F(60°C)
CCS-56-CPVC	CPVC	CPVC	CPVC	VITON	Ceramic	316 S/S	150	210°F(98°C)
CCS-56-PP	PP	PP	PVDF	VITON	Ceramic	316 S/S	150	195°F(90°C)
CCS-56-PVDF	PVDF	PVDF	PVDF	VITON	Ceramic	316 S/S	150	260°F(125°C)
CCS-56-316S/S	316S/S	316S/S	316 S/S	VITON	316 S/S	316 S/S	2000	350°F(176°C)
CCS-56-HastC	HASTC	HASTC	HASTC	VITON	HASTC	HASTC	2000	350°F(176°C)
CCS-58-PVC	PVC	PVC	PVC	VITON	Ceramic	316 S/S	150	140°F(60°C)
CCS-58-CPVC	CPVC	CPVC	CPVC	VITON	Ceramic	316 S/S	150	210°F(98°C)
CCS-58-PP	PP	PP	PVDF	VITON	Ceramic	316 S/S	150	195°F(90°C)
CCS-58-PVDF	PVDF	PVDF	PVDF	VITON	Ceramic	316 S/S	150	260°F(125°C)
CCS-58-316S/S	316S/S	316S/S	316S/S	VITON	316 S/S	316 S/S	2000	350°F(176°C)
CCS-58-HastC	HASTC	HASTC	HASTC	VITON	HASTC	HASTC	2000	350°F(176°C)

Notes:

* maximum pressure @ 70°F (21°C) working temperature; ** optional gland seal material available

Options:

Hastelloy C springs
Suffix Model number with -H for this option(e.g. CCS-56-PVC-H)

Hastelloy C ball check
Suffix Model number -I (e.g. CCS-56-PVC-I)

PVDF ball check
Suffix Model number -K (e.g. CCS-56-PVC-K)

TFE ball check
Suffix Model number -T (e.g. CCS-56-PVC-T)

BSPT Thread
Suffix Model -B

Flanged
Suffix Model -F

CRN certification available. Please contact factory.

Other materials of construction and bubble tight/resilient seat check valve available on request.

Dimensional Information

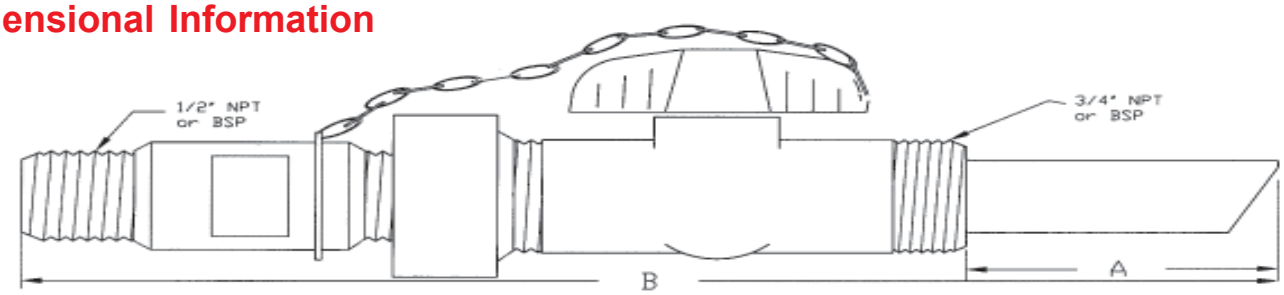

Dimensions *(* subject to change without notice)*

Model	A	B*	Model	A	B*
CCS-56-PVC	2-5/8"	10.50"	**CCS-58-PVC**	4-5/8"	12.50"
CCS-56-CPVC	2-5/8"	10.50"	**CCS-58-CPVC**	4-5/8"	12.50"
CCS-56-PP	2-5/8"	11.25"	**CCS-58-PP**	4-5/8"	13.25"
CCS-56-PVDF	2-5/8"	11.25"	**CCS-58-PVDF**	4-5/8"	13.25"
CCS-56-316S/S	2-5/8"	9.50"	**CCS-58-316S/S**	4-5/8"	11.50"
CCS-56-HastC	2-5/8"	9.50"	**CCS-58-HastC**	4-5/8"	11.50"

Note:
Corporation stops have standard 1/8" discharge orifice for high velocity discharge.
Optional 1/4" discharge orifice available for higher capacity flow.

Capacities at Given Pressure (US & Metric)

Pressure		Flow Rate			
psi	*kPa*	1/8" Bore		1/4" Bore	
		USGPM	*LPM*	*USGPM*	*LPM*
20	138	0.05	0.19	0.70	2.65
30	207	1.35	5.11	1.42	5.38
40	276	1.68	6.36	2.51	9.50
50	345	2.03	7.68	3.43	12.98
60	414	2.25	8.52	4.24	16.05
70	483	2.51	9.50	4.94	18.70
80	552	2.76	10.45	5.52	20.90
90	621	2.99	11.32	6.13	23.20
100	689	3.21	12.15	6.81	25.78

Distributed By:

PRIMARY FLUID SYSTEMS INC.

Distribution Territories Available

Call Toll Free 1-800-776-6580
Tel: (905) 333-8743
Fax: (905) 333-8746
E:Mail: primary@primaryfluid.com
www.primaryfluid.com

POLYMER DOSING

ST-052

LEFT BLANK

JOHN MEUNIER

NOMENCLATURE/ BILL OF MATERIALS

TITRE/ TITLE		Rev.	DESCRIPTION	PAR/ BY:	APPR:	DATE:	Affaire / Contract	Meadowbank Mining		
Polymer dosing		0	SUBMITTAL	Julie Trudel	J.T.	2009-03-26				
		1								
		2					REF. No.	NC01	Rev.	0
		3								
DESSIN /DWG #	ST-052	4					Date:	2009-03-26		

REV.	ITEM		QTE/QTY. Unit.	QTE/QTY. Total	DESCRIPTION	P&ID I.D./TAG	CAT. ACCPAC	SOURCE	FA/SA FI SITE	P / N
	NC01ST-052-	**1**	1	1	**AUTOMATIC POLYMER PREPARATION SYSTEM**	DF9-521	D48		FI	
					Model #					
					PolyRex 2.0					
					Supplier					
					Nortec SGS / Tomal					
					Description					
					Polymer make-up unit PolyRex, preparation capacity at 0,20% and 90 min maturing time is 26,7 kg/day . The system includes a multi- screw feeder 182P, an hydratation system (dissolver cone and ventury), an hopper of 100 liters, a maturing tank of 1000 litrers in SS 304 with pressure transmitter, a dosing tank of 1000 liters in SS 304 with pressure transmitter, agitator for the maturing tank and a control relay panel NEMA 4. Supply 575/3/60, control voltage is 110V 60Hz and 24VDC for the pressure transmitter.					
	NC01ST-052-	**2**	1	1	Powder hopper level switch:For alarm indication of low powder level. The level switch is located in the 30 dm³ powder hopper, integrated in the support stand. Including mounting and electrical installation with an alarm lamp on the control panel..					
	NC01ST-052-	**3**	1	1	Powder vacuum conveyor with 3m hose. Motor of 1.4 KW. Capacity of 10-15 Kg polymer powder/min.					
	NC01ST-052-	**4**	1	1	Viscosity > 2000 cps.					
	NC01ST-052-	**5**	1	1	CSA approval					

JOHN MEUNIER

NOMENCLATURE/ BILL OF MATERIALS

TITRE/ TITLE	Rev.	DESCRIPTION	PAR/ BY:	APPR:	DATE:	Affaire / Contract	Meadowbank Mining
Polymer dosing	0	SUBMITTAL	Julie Trudel	J.T.	2009-03-26		
	1						
	2					REF. No.	NC01 Rev. 0
	3						
DESSIN /DWG # ST-052	4					Date:	2009-03-26

REV.	ITEM	QTE/QTY. Unit.	QTE/QTY. Total	DESCRIPTION	P&ID I.D./TAG	CAT. ACCPAC	SOURCE	FA/SA FI SITE	P / N
	NC01ST-052-6	1	3	**POLYMER METERING PUMP**	P9-521	D48		SA	
				Model #	P9-522				
				MD 025-6L / A6-A7-A7-F0-GA-X	P9-523				
				Supplier					
				Seepex					
				Description					
				Progressive cavity pump : 26 - 260 L/H @ 2 bars, 271 rpm pump max speed. Progressive cavity pump in stainless steel construction with 1" NPT suction, 1/2" NPT discharge, stainless steel wetted casing parts and rotor, mechanical seal. Motor inverter duty, 0.5 HP, 1800 rpm, 575V/3ph/60Hz. Including a dry running protection and a 1 HP AC Tech/Jacmar drive, model ESV751N06TXC, Nema 4x.					
	NC01ST-052-7	1	3	**SAFETY RELIEF VALVE**	V9-525	D48		SA	
				Model #	V9-526				
				TVPR50-PVC-G	V9-527				
				Supplier					
				Primary Fluid					
				Description					
				Relief valve PVC, 1/2" FNPT c/w glycerine pressure gauge 0-60 psi with PVC Viton isolator.					
	NC01ST-052-8	1	1	**CALIBRATION TUBE**		D48		SA	
				Model #					
				PV#2-4000ml					
				Supplier					
				Primary Fluid					
				Description					
				Calibration tube; PVC; 4000 ml, connection 1" NPT at both ends					

AUTOMATIC PREPARATION SYSTEM

LEFT BLANK

TOMAL®
METERING SYSTEMS

ProMinent® Group

INSTRUCTION MANUAL

POLYMER MAKE-UP SYSTEM TYPE POLYREX 2.0

SAFETY INSTRUCTIONS	1
DESCRIPTION / FUNCTION	2
PART LIST / DRAWINGS	3
WIRING DIAGRAM	4
INSTALLATION	5
BEFORE FIRST START	6
START-UP / OPERATION	7
MAINTENANCE	8
TROUBLE SHOOTING	9
DATASHEETS	10
DOSING PUMP	11
QUALITY DOCUMENTS	12

PROJECT NAME:

Meadowbank Mining

TOMAL ORDER NO:

54473

DATE:

20-05-2009

TOMAL AB
S-310 58 VESSIGEBRO / SWEDEN

TELEPHONE +46 (0)346 71 31 00
TELEFAX +46 (0)346 71 31 39
E-MAIL info@tomal.se

TOMAL®
METERING SYSTEMS

ProMinent® Group

1

SAFETY INSTRUCTIONS

SAFETY INSTRUCTIONS

Read the instructions in this manual carefully before installing or starting the system. Tomal AB will accept no liability for damages due to non-observance of this manual.

Information in this manual is subject to change without notice and does not represent a commitment on the part of Tomal AB.

No part of this manual may be reproduced or transmitted in any form or by any means, electronic or mechanical, without the prior written permission of Tomal AB.

The following signs may occur within this manual or on the Polymer make-up unit:

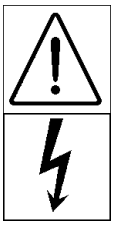

Electrical connections and maintenance must only be performed by qualified personnel !
Electrical elements have to be connected according to local regulations !



Attention ! / Important ! / Note !



Dangerous voltage !

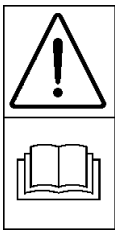

Prior to use, read operation manual and observe safety regulations !



Do not open or remove safety shields while machine is in operation !
Moving parts !

TOMAL®
METERING SYSTEMS

ProMinent® Group

2

DESCRIPTION / FUNCTION

DESCRIPTION / FUNCTION

DESCRIPTION

* Tomal PolyRex is a turnkey, automatic machine for batch preparation of polymer solutions.
* Through batch preparation, the so-called short circuit effect is avoided. The polymer grains cannot pass the process without maturing.
* The vacuum conveyor ensures a dust free filling of the powder hopper.
* Tomal's proven double screw feeder supplies a constant discharge without pulsation. This, combined with high feeding accuracy, ensures consistent batch composition.
* The highly tested dissolver cone guarantees a clear solution without ”fish-eyes”.
* Gentle agitation and pumping ensures the polymer chains remain undamaged.
* Each polymer unit is ”wet tested” prior to despatch from the factory.
* Our range of options/special equipment and our flexibility enable us to adapt machines to the individual requirements of customers.

Powder feeder - The feeder has a double screw type 182 Poly with a worm-geared motor. The feeder outlet has a gate, which effectively stops moisture from reaching the polymer powder.

Dissolver cone - The cone is designed for an optimal dissolving of polymer powder. At the cone's outlet there is an ejector which effectively sucks down, mixes and transports the solution into the preparation tank.

Water control - The armatures consist of a shut-off valve, a pressure switch, a manometer, a solenoid valve, and a reducing valve. If the water pressure drops, an alarm signal is given and the preparation cycle is shut off. When the water pressure rises, the preparation cycle continues automatically. If the required pressure (See chapter 6.) is not available, a water booster pump can be added.

Preparation/Maturing tank - The tank is provided with a slow rotating agitator with a worm-geared motor, which gently agitates the polymer solution, a pressure transmitter (high/low level) and an emptying solenoid valve. The tank is also provided with cover incl. inspection lid.

Stock/Dosing tank - The tank is provided with a pressure transmitter (low level/dry running protection for the dosing pump), shut-off valves for pump connection and bottom drain.

Electrical equipment - All electrical equipment and interconnecting cables are fitted in accordance with SS-EN60204-1.

Materials - The powder feeder, the support stand and the powder hopper are made of carbon steel SS1312 (equals Euronorm FE 360 BFN) painted with 40 µm alkydprimer and 80 µm acryl top coat. The tanks, the agitator and the dissolver cone are made of stainless steel SS2333 (equalsAISI 304) and blasted with glass pellets. The water armatures and the ejector are brass, whilst all pipework is in PVC.

FUNCTION

The low level in the preparation tank emits an impulse to start preparation, the solenoid valve for preparation water opens.

The pressure switch will stop the preparation if the inlet water pressure will be to low. When the water pressure rises, the preparation cycle continues automatically.

After a waterwhirl has formed in the dissolver cone the feeding starts. Polymer powder/(liquid polymer concentrate) is fed into the dissolver cone, after which the solution is mixed and transported to the preparation tank with help from the ejector.

The concentration required is achieved by adding the correct amount of polymer for each batch. This is controlled by the PLC.(in the front of the control cabinet)

When the high level in the preparation tank will be reached, the solenoid valve for preparation water closes.

The solution is kept in motion in the preparation tank. Once matured the batch is now ready to be transferred to the stock tank.

The low level in the stock tank will give a signal to the emptying solenoid valve in the preparation tank that will open.

When a batch is transferred, the low-level switch in the preparation tank will be reached and the emptying solenoid valve closes. At the same time a new preparation cycle starts.

The dry running level will protect the dosing pump from running dry.

The stock solution is pumped from the stock tank to the dosing point. The optional dilution water system can be set at a regulating valve and read at a flow meter.

The level switch in powder hopper will give an alarm at low level.
For PLC: The present preparation will finish. Next preparation will not start before the power hopper is filled and the alarm reset.

TOMAL®
METERING SYSTEMS

ProMinent® Group

3

PART LIST / DRAWINGS

PART LIST / DRAWINGS

Spare parts order
Only the use of original Tomal spare parts will ensure proper operation, reliability and long service life.
When ordering a spare part, always state:

1. Tomal order no. (front page of this manual).
2. Project name (front page of this manual).
3. Description from the part list below (item, quantity and type/size).



NOTE ! When ordering spare parts for the powder feeder or the agitator, see also the data sheets.

Part list belonging to flow diagram No. 008645-F-54473-A

ITEM	QTY.	DESCRIPTION	TYPE, SIZE	MANUFACTURER	REMARK
1	1	Vacuum unit	PV 350 D/T	Pullman	
1:1	1	Dustfilter	23/29	Pullman	
1:2	1	Vacuum hose	PC38	Pullman	
1:3	1	Suction nozzle	SM38-54	Pullman	
2	1	Powder hopper	100 dm^3	Tomal	
3	1	Powder level switch	Soliswitch FTE31-C5C111	Endress+Hauser	
4	1	Powder feeder	182-Poly	Tomal	See also sep. drawing
4:1	1	Motor	IEC 63 L/4 0,18kW	Nord	
4:2	1	Gearbox	SK1SI40AD H n=20	Nord	
4:3	1	Cylinder	RT/57240/M/40	Norgren	
5	1	Flow washer	Ø 18x6,5mm t=1,5mm	Tomal AB	Dissolver cone
6	1	Pressure reducing valve	VM 7685 ½" DN15	Ventim	
7	1	Solenoid valve 2/2	VM 8631, 1" DN25	Ventim	Preparation water
8	1	Water pressure switch	901.51 G ¼"	Becks	
9	1	Shut-off valve	VM 4320, 1¼" DN32	Ventim	Water connection
17	1	Dissolver cone	Ø 300 DK - 65°	Tomal	
18	1	Non-return valve	VM 6565, 1½" DN40	Ventim	Ejector
19	2	Shut-off valve	VM 4320, 1½" DN40	Ventim	Bottom drain
20	1	Ejector	RG5 No.: 3	BGV	
22	1	Dosing tank	PR 2.0- 1,0 m^3	Tomal	
23	1	Pressure transmitter	PL2658 0-200mbar / 4-20mA 1" – DN25	IFM	Low level/dry running protection

25	1	Pressure transmitter	PL2658 0-200mbar / 4-20mA 1" – DN25	IFM	High /Low level
26	1	Pressure gauge	VM 9706 ¼" Ø63mm 0-10 bar	Ventim	
27	1	Shut-off valve	VM 4320, 1¼" DN32	Ventim	Dosing pump
29	1	Cover	PP	Tomal	
32	1	Maturing tank	PR 2.0- 1,0 m^3	Tomal	
33	1	Agitator	PR 2.0	Tomal	See also sep. drawing
33:1	1	Motor	80L/4 - 0,75kW	Nord	
33:2	1	Gearbox	SK1SM 63 AF n=54	Nord	
34	1	Solenoid valve 3/2	VM 8651, ¼"	Ventim	Feeder outlet
35	1	Emptying valve	VM3001 DN50-Revo 006	Ventim	
37	1	Solenoid valve 3/2	M/49MAZ14J 110V AC	Norgrens	Butterfly valve (PR 3.0-8.4)

This drawing remains our property and may not be copied or passed on to a third party without our written permission.
We reserve the right for changes at any time without previous notice.

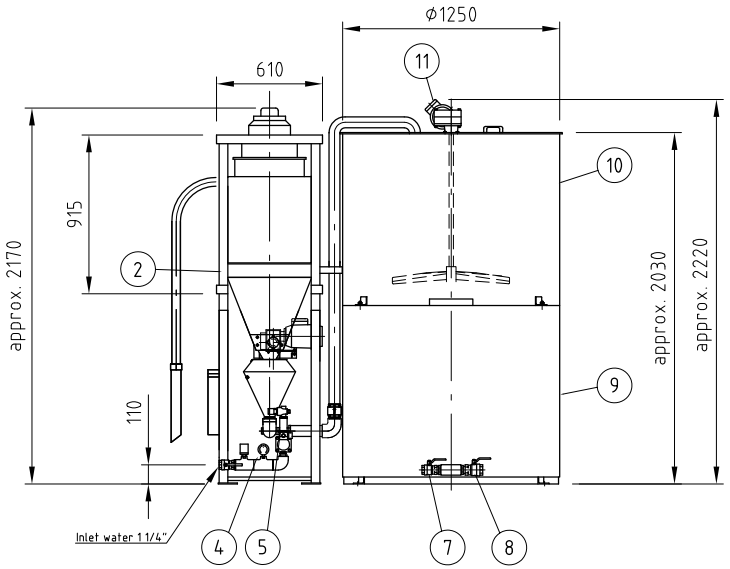

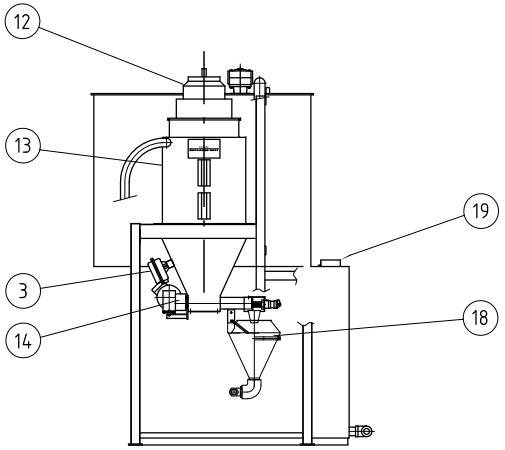

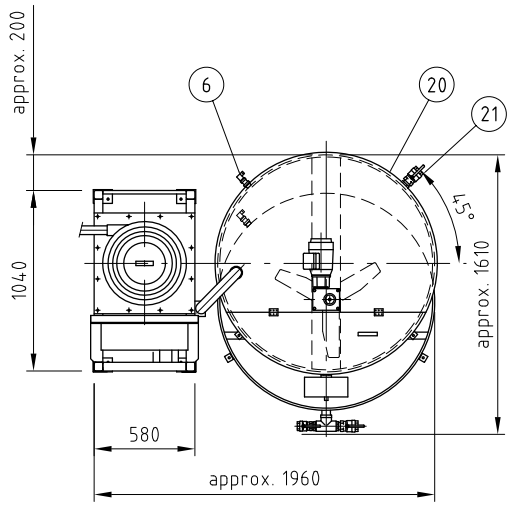

Det.No.	Qty	Denomination	Material	Modell or Dimension	Remark
21	1	Shut off valve		R 1 1/2"	Extra bottom drain
20	1	Cover			PP
19	1	Discharge valve			Stock solution
18	1	Dissolver cone			AISI 304
14	1	Feeder		182P	
13	1	Powder hopper		100 L	
12	1	Powder vacuum conveyor			
11	1	Agitator			AISI 304
10	1	Preparation tank		1.0 m3	AISI 304
9	1	Stock tank		1.0 m3	AISI 304
8	1	Shut off valve		R 1 1/2"	Bottom drain
7	1	Shut off valve		R 1 1/4"	Stock solution outlet
6	2	Pressure transmitter			
5	1	Water ejector			
4	1	Water control			Preparation system
3	1	Powder hopper level switch		1 1/2" NPT	E+H, installed by Nortec
2	1	Support			

Project:	Meadowbank Mining	Sign. ON	Datum 01-04-2009
Project No.	54473	Rev.	Datum

Constructed	Drawn	Copy	Controlled	Standard	Approved	Scale	Replaces	Replaced of
ON	ON		CK		CK	1:40		

TOMAL® METERING SYSTEMS

Polymer make-up unit
PolyRex 2.0
General assembly drawing

007893-A | Date 01-04-2009

Drawing No. 007893-A-54473

No.	Pcs.	Modification	Date	Intr.	Appr.

This drawing remains our property and may not be copied or passed on to a third party without our written permission.
We reserve the right for changes at any time without previous notice.

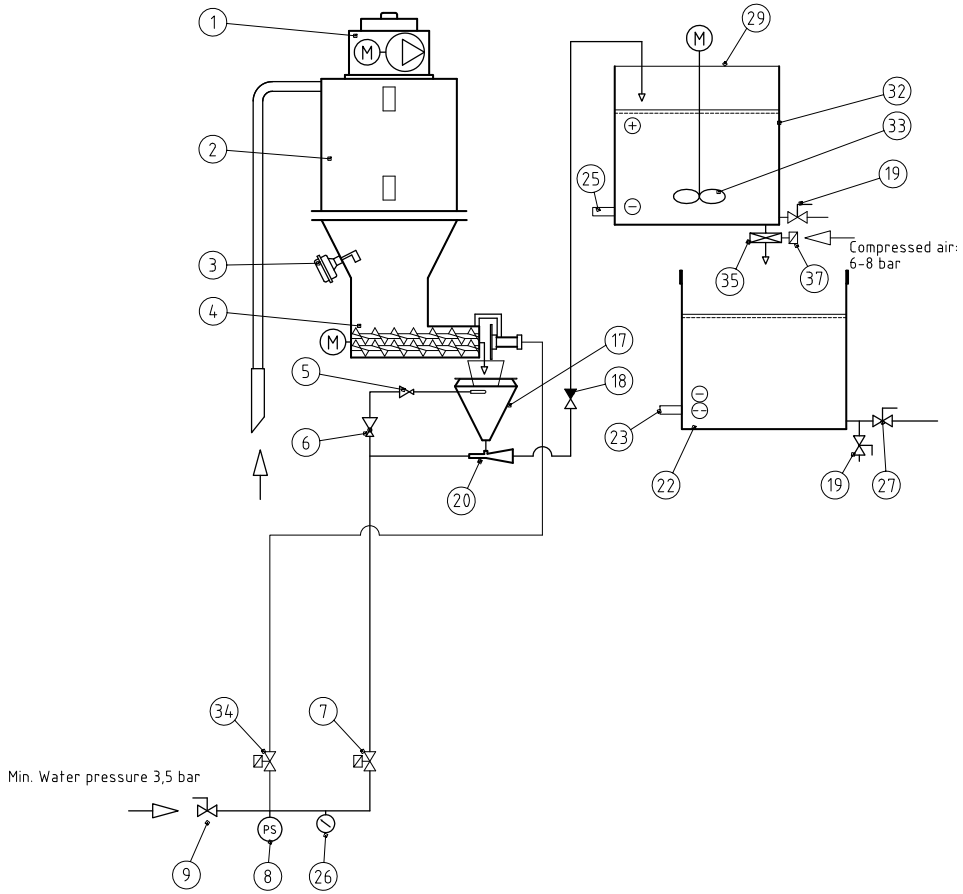

Project:	Meadowbank Mining
Project No.	54473

Sign.	Datum
ON	31-03-2009
Rev.	Datum
ON	20-05-2009

Det.No.	Qty	Denomination	Material	Modell or Dimension	Remark
37	1	Solenoid valve			For Butterfly valve pos.35
35	1	Discharge valve			Pneumatic actuator 24VDC
34	1	Solenoid valve			
33	1	Agitator			High viscosity kit
32	1	Preparation tank			
29	1	Cover			
27	1	Shut-off valve		1 1/4"	
26	1	Pressure gauge			
25	1	Pressure transmitter			
23	1	Pressure transmitter			
22	1	Stock tank			
20	1	Ejector			
19	2	Shut-off valve Bottomdrain		1 1/2"	
18	1	Non-return valve			
17	1	Dissolver cone			
9	1	Shut-off valve		1 1/4"	
8	1	Water pressure switch			
7	1	Solenoid valve			
6	1	Pressure reducing valve			
5	1	Flow washer			
4	1	Powder feeder		182 P	
3	1	Level indicator		1 1/2" NPT	E+H installed by Nortec
2	1	Powder hopper		100L	
1	1	Powder vacuum conveyor			

Constructed	Drawn	Copy	Controlled	Standard	Approved	Scale	Replaces	Replaced of
ON	ON		CK		CK			

TOMAL®
METERING SYSTEMS

Polymer make-up unit PolyRex 2,0
with Powder vaccum conveyor
Flowdiagram

008645-F	Date 31-03-2009

Drawing No. 008645-F-54473-A

No.	Pcs.	Modification	Date	Intr.	Appr.

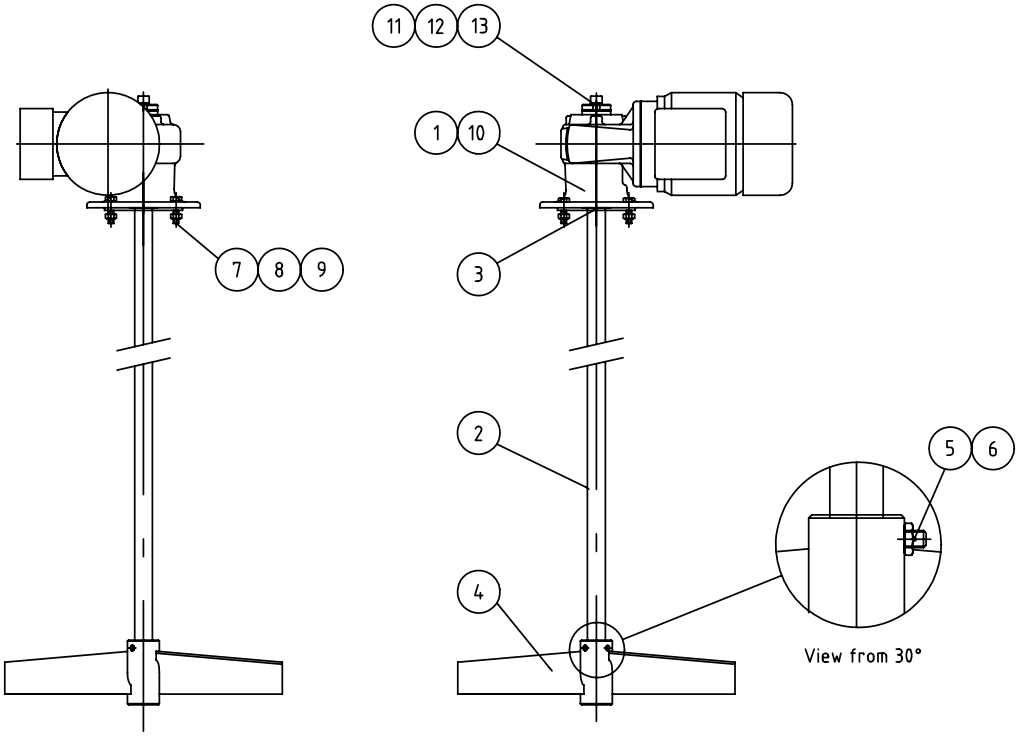

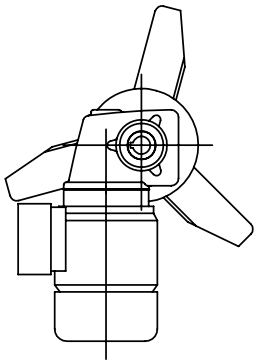

Det.No.	Qty	Denomination	Material	Modell or Dimension	Remark
13	1	Washer agitator			010937
12	1	Nordlock washer			010937
11	1	Screw			010937
10	1	Key			010937
9	4/8	Washer			010937
8	4	Nut			010937
7	4	Screw			010937
6	2	Nut			010937
5	2	Clamping screw			010937
4	1	Propeller			010937
3	1	Locking ring			010937
2	1	Agitator shaft			010937
1	1	Motor+gearbox		Nord	010937

Constructed	Drawn	Copy	Controlled	Standard	Approved	Scale	Replaces	Replaced of
JA	JA		CS		CS	1:10 - A4	005788-D	

TOMAL®
METERING SYSTEMS

Polymer make-up unit PR 0.6-8.4
Agitator, Gear Nord
Spare parts drawing

010938 | Date 2003-11-10

Drawing No. 010938

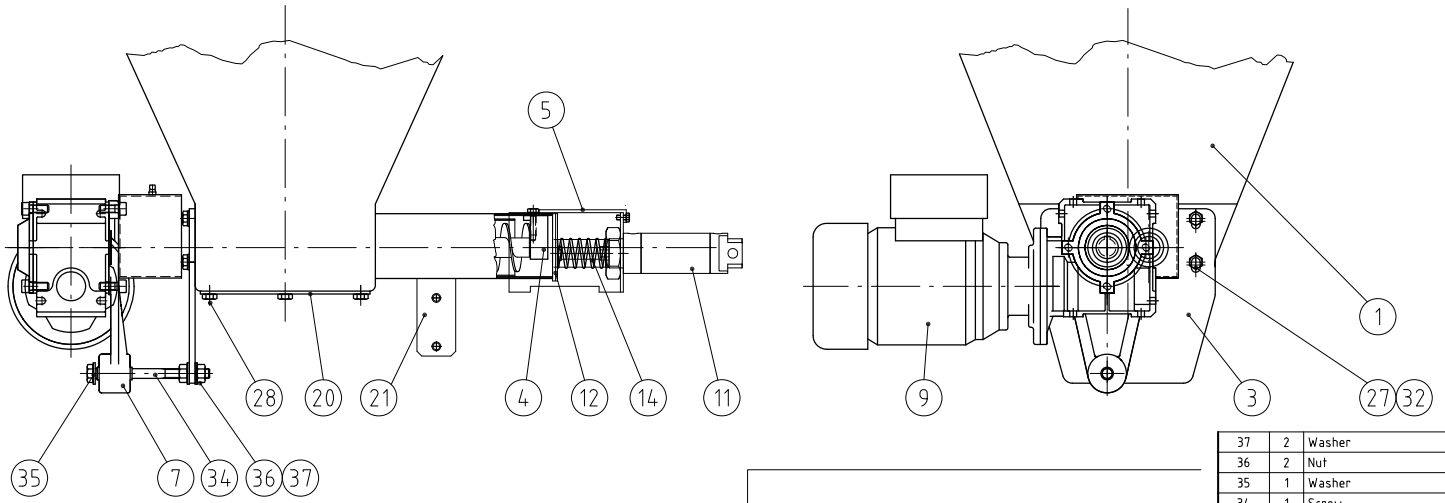

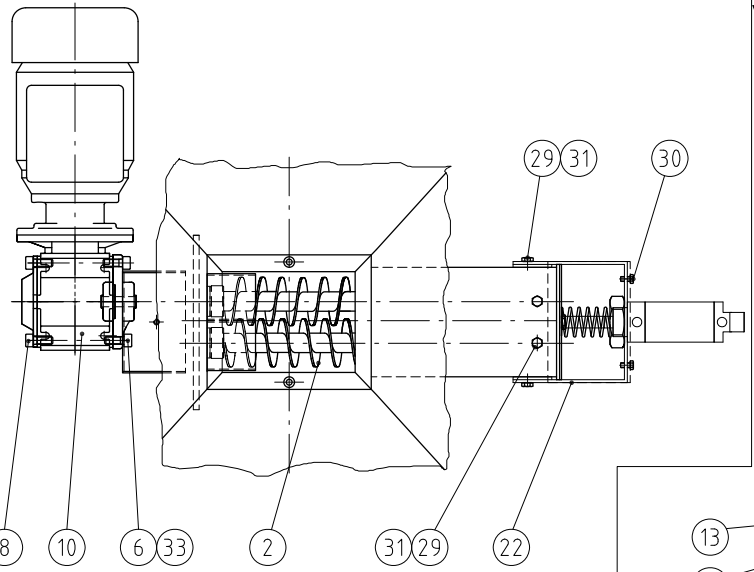

View without gear

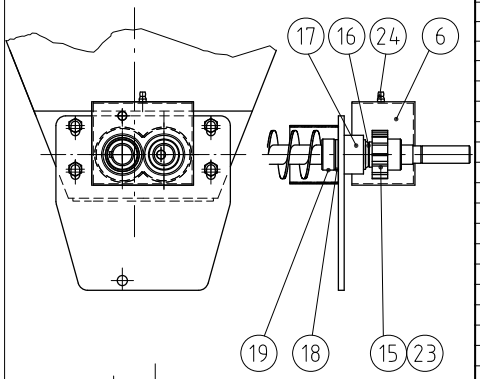

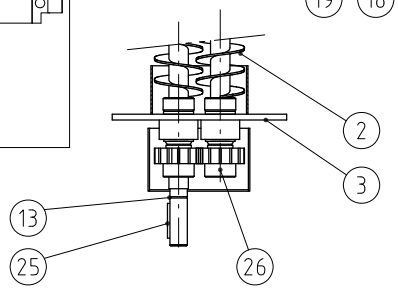

Det.No.	Qty	Denomination	Material	Modell or Dimension	Remark
37	2	Washer		FBH 10.2x18.1x1.8	
36	2	Nut		M6M 10	
35	1	Washer		BRB 10.5x22x2	
34	1	Screw		M6S 10x120	
33	8	Screw		MC6S 8x20	
32	4	Washer		BRB 8.4x16x1.5	
31	6	Washer		BRB 6.4x12x1.5	
30	2	Screw		M6S 5x10	
29	6	Screw		M6S 6x16	
28	4	Screw		M6S 6x20	
27	4	Screw		M6S 8x25	
26	2	Key		PK 6x6x28	210 602
25	1	Key		PK 6x6x36	
24	1	Lubricant nipple		Rak, M6	210 586
23	2	Stopscrew		SK6SS 6x6	
22	1	Outlet module			008959
21	1	Bracket for dissolver cone			008573-C
20	1	Clean-out damper			006926-B
19	2	Stop ring		DIN 705-20	212 131
18	2	Nylon bearing			002952
17	2	Nylon bearing			002951-B
16	2	Washer		SRB 21x36x3	
15	2	Cogwheel		m3, z=14, Φ20	212 758
14	1	Pressure spring		2,5x31x80x7,5	210 122
13	1	External retaining ring		SgA 18	
12	1	Outlet-damper			012627
11	1	Cylinder		RT/57240/M SL40	213258
10	1	Gearbox			See Motor & component list
9	1	Motor			See Motor & component list
8	1	Touch protection			
7	1	Torque Arm			
6	1	Safety cover			010925
5	1	Cover for outlet module			008990-B
4	1	Outlet bearing unit			011734
3	1	Front plate			010924
2	2	Feeding screw			010923-A
1	1	Feeder box			007887-C, 7918-C, 7924-C

Constructed	Drawn	Copy	Controlled	Standard	Approved	Scale	Replaces	Replaced of
JA	JA		DB		DB	1:5 - A3	009227-B	

TOMAL® METERING SYSTEMS

Feeder 182P DI, gear Nord
For wetting unit type DK 300
General assembly drawing

010922-B | Date 2003-11-05

Drawing No. 010922-B

No.	Pcs.	Modification	Date	Intr.	Appr.
B	1	pos 11 & 12	070919	AS	AO
A	1	pos 4	050905	CS	SF

This drawing remains our property and may not be copied or passed on to a third party without our written permission.
We reserve the right for changes at any time without previous notice.

TOMAL®
METERING SYSTEMS

ProMinent® Group

4

WIRING DIAGRAM

TOMAL® METERING SYSTEMS	**Motor and component list**	**Project name** Meadowbank Mining	**Project no** 54473	**Date** 2009-04-03	**Page** 1 (1)

Voltage			**Motors**	
PHASES:	3	No	TYPE:	AC
FREQUENCY:	60	Hz	AMBIENT TEMP:	20˚
CONTROL VOLTAGE:	**110**/24	VAC	PROTECTION:	IP55
SUPPLY VOLTAGE:	575	V	INSULATION CLASS:	F

Component			**Motor**					**Drive**				**P&I. dwg**
POS.	NO.	DESIGNATION	MANUFACT.	TYPE	kW	A(575V)	RPM (60Hz)	MANUFACT.	TYPE	RATIO	RPM (60Hz)	(pos. no)
1	1	Feeder	Nord	63L/4	0,18	0,46	1690	Nord	SK 1SI40AD	80:1	20	4
2	1	Agitator	Nord	80L/4	0,75	1,46	1350	Nord	SK 1SM63AF	25:1	54	33

Other electrical components

POS.	NO.	DESIGNATION	MODEL	TYPE	VOLT	REMARKS	(pos. no)
3	1	Powder vacuum conveyor	Pullman	PV350 modell:116352 100 dm^3	230V AC		1
4	1	Powder level indicator	E+H	FTE31-C5C111	110V AC		3
5	1	Solenoid valve, preparation water	Ventim	VM 8631, 1” (DN 25)	110V AC	2/2-way	7
6	1	Solenoid valve, feeder discharge valve	Ventim	VM 8651 - ¼”	110V AC	3/2-way	34
7	1	Pressure switch, preparation water	Becks	901.51 G ¼”	Pot.free	Stop at 2,0 bar, Start at 2,6 bar	8
8	1	Pressure transmitter	IFM	PY2658, 0-200mbar	24V DC	High/low level	23
9	1	Pressure transmitter	IFM	PY2658, 0-200mbar	24V DC	High/low/dry running protection level	25
10	1	Solenoid valve, discharge valve	Norgrens	M/49MAZ18J, NC, 1/8”	110V AC	3/2-way	37

TOMAL®
METERING SYSTEMS

ProMinent® Group

5

INSTALLATION

INSTALLATION

UNLOADING
The polymer machine is packed on pallets and is therefore possible to unload with a forklift. If an overhead crane is needed, straps shall be used, length = 3-4 m. The straps can only be fastened to the lifting eye on the tanks and the beams at support stand.

- PolyRex 0.6 – 3.0; both tanks are mounted upon each other.
- PolyRex 4.0 – 8.4; both tanks are 2 separate parts. They must be mounted on site. The maturing tank with agitator must be mounted upon the dosing tank.

NOTICE
- Lifting, handling or fastening during the installation, straps must be used according to the picture beside.

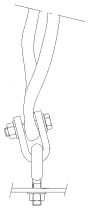

STORAGE
- During transport and later during storage the Polymer make-up unit must be protected against moisture, salt-water, rain, frost, dust, dirt and direct sunlight.
- The Polymer make-up unit can be stored for up to 2 years in dry and vented places without making any special arrangements.
- Storage outdoors is not recommended.

ERECTION



NOTE ! Everything shall be mounted according to the General Assembly Drawing

Fastening: Expansion shell bolt shall be used. Size: M10x90.

Mount the maturing tank on top of the dosing tank (when applicable).
Mount the powder hopper on the support stand (when applicable).
Mount the vacuum conveyor on top of the powder hopper (when applicable).
Mount the pipe from the ejector to the maturing tank.

ELECTRICAL CONNECTIONS

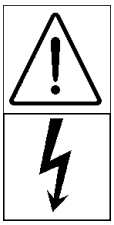

WARNING ! Electrical connections and maintenance must only be performed by qualified personnel !
Electrical elements have to be connected according to local regulations !

Connect: The agitator-motor to the electrical cabinet.
Connect: Cable contact for the emptying solenoid valve.
Connect: Supply voltage according to the electrical drawings.
Connect: Cable contacts for the pressure transmitters.
Connect: External protective conductor to an external noiseless earth conductor.

PIPE CONNECTIONS



NOTE ! See flow diagram and part list for all dimensions !

Connect: Water inlet.
Connect: The dosing pump to the pump connection on the dosing tank.
Connect: The dosing pump to the dilution water (when applicable).
Connect: The static mixer (when applicable) or the dosing pump to your dosing point.
Connect: Bottom drain valve to the sink.

TOMAL®
METERING SYSTEMS

ProMinent® Group

6

BEFORE FIRST START

BEFORE FIRST START

BEFORE START

1.0 Check that the dissolver cone, ejector, tanks and pipe work are completely clean and free from dirt or foreign objects.

1.1 Check that correct amount of oil is in the gearboxes.

1.2 Connect/check:

Voltage:	400/230 V
Water pressure:	Min. 3,5 bar Max. 6 bar
Water consumption:	Min. m^3/h

(Preparation water + dilution water, if included)

1.3 Capacity test

A capacity test of the feeding equipment for polymer has always to be carried out before start-up.
See chapter 7 for more information.

Powder feeder
The feeder is a volumetric double screw feeder.
The capacity of the feeder is set as [kg/time-unit] in the PLC-program.
Different types of polymer has different volume weight, therefor is it important that a capacity test is done before starting up or when changing type of polymer.

Note!
- Remember to adjust the polymer emulsion in the PLC program at start up or When changing type of polymer.

Attention!
The concentration of the stock solution can be set to maximum 1.0%.
To avoid major problems recommended maximum concentration is:
- 0.5% when using powder feeder.

The viscosity of the stock solution is never allowed to exceed 2000 cP.

TOMAL®
METERING SYSTEMS

ProMinent® Group

7

START-UP / OPERATION

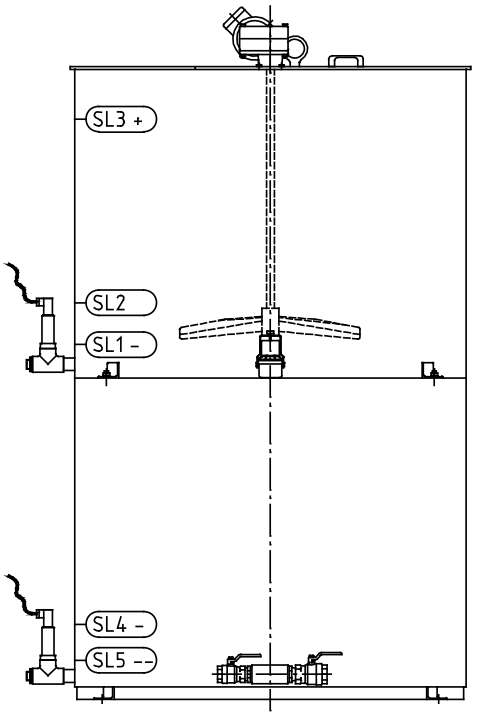

PolyRex	0,6	1,0	2,0	3,0	4,0	5,4	6,6	8,4
Batch volym (dm^3)	218	400	940	1229	1985	2698	3292	4317
SL 1- (mm)	80	80	80	80	80	80	80	100
SL 2 (mm)	200	250	250	250	250	250	250	300
SL 3+ (mm)	520	640	850	850	1080	1080	1300	1500
SL 4- (mm)	100	100	130	130	130	130	130	130
SL 5-- (mm)	80	80	110	110	110	110	110	110

TOMAL®
METERING SYSTEMS

ProMinent® Group

8

MAINTENANCE

MAINTENANCE

EQUIPMENT	WEEKLY	MONTHLY	BI-MONTHLY	1/2 YEARLY	NOTE
AGITATOR:					
GEARBOX				A	
MOTOR				A	
SHUT-OFF VALVES				A	
REDUCING VALVE			A		
PRESSURE SWITCH				A	
REGULATING VALVES				A	
DRAIN VALVES			A (B)		
CHECK VALVES				A	
SOLENOID VALVES				A	
FLOW METER				A	
METERING GAUGE				A	
DOSING PUMP					SPEC. INSTR.
DISSOLVER CONE	A (B)				
EJECTOR	A (B)				
PRESSURE TRANSMITTER					SEE DATASHEET
FEEDER 182-P:					
GEARBOX				A	
MOTOR				A	
BEARINGS		A			
GEARWHEELS		A		C	Molykote 165 LT 0,5 cm^3/half year, Lubricant nipple Pos. 24, 010922
FEEDER OUTLET	A B			A	
CYLINDER				A	

A: GENERAL OVERLOOK

B: CLEANING/WASHING

C: GREASING, OIL FILLING - GENERAL

TOMAL®
METERING SYSTEMS

ProMinent® Group

9

TROUBLE-SHOOTING

TROUBLE-SHOOTING

PROBLEM	POSSIBLE CAUSE	REMEDY
Reduction of the suction capacity at the vacuum filling of the polymer powder.	The suction nozzle is not mounted.	Mount the nozzle according to the commissioning/operation instructions.
	Clogging of the dust filter.	Remove the external filter and clean it according to the maintenance instructions for the vacuum conveyor (data sheets).
	Max level in the powder hopper is exceeded.	Stop the filling.
	The feeder shutter at the outlet of the feeder is not shut.	Filling must not be done while the feeder is operating. Wait until the feeder has stopped.
Clogging of the dissolver cone.	The feeder shutter at the outlet of the feeder is not shut.	Check the function of the solenoid valve to the feeder shutter, or clean the shutter from possible clogging polymer powder.
	The water whirl in the dissolver cone is too small.	
Flooding in the maturing- or dosing tank.	The function of the level indicator is not correct.	Replace the incorrect one with a new one.
Incorrect concentration of the stock solution.	The dosing time of the powder feeder is not correctly set.	Set the dosing time according to the operation instructions.
Leakage - emptying valve.	Foreign particles have got stuck in the valve.	Remove the foreign object and check for possible damages.
	Too high concentration of the stock solution. The valve manages up to 0,5%.	Adjust the concentration according to problem above.

TOMAL®
METERING SYSTEMS

ProMinent® Group

10

DATA SHEETS

Betriebs- und Wartungsanleitung
Operating and Maintenance Instruction
Instructions de conduite et d'entretien

B 1031
09/2000
D GB F

Diese Sicherheitshinweise sind aufzubewahren
These safety instructions must be kept available
Ces instructions de sécurité doivent être observées

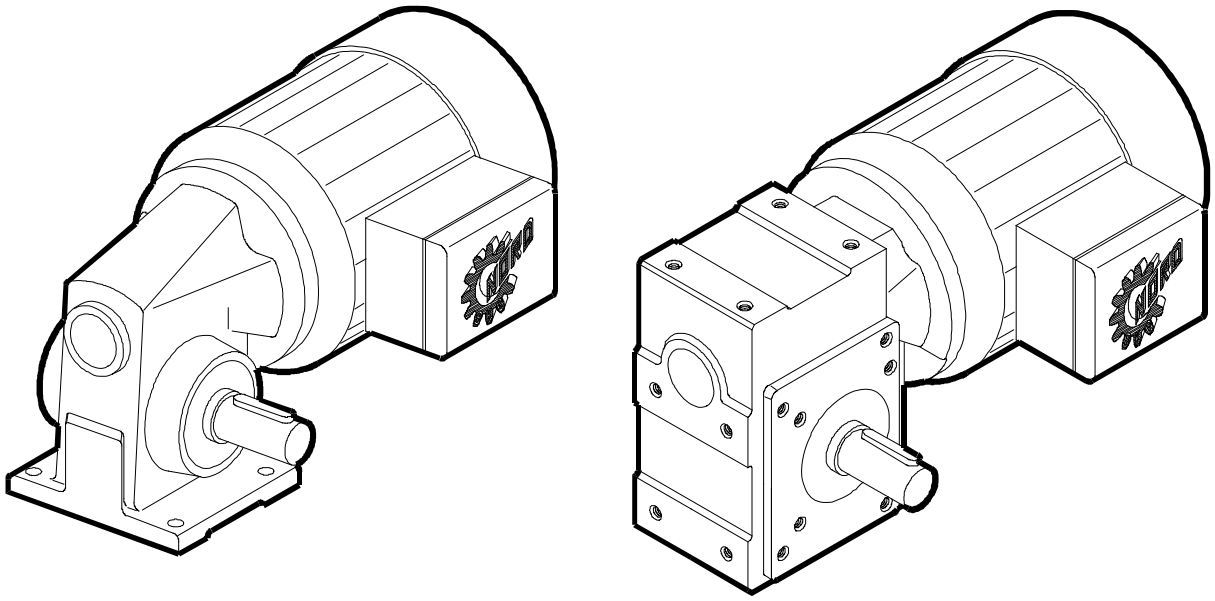

Minibloc – Schneckengetriebe

Minibloc - Worm Gear Units

Minibloc - Réducteurs à roue et vis sans fin

Getriebebau NORD
GmbH & Co. KG
D-22934 Bargteheide · P.O.Box 1262
D-22941 Bargteheide · Rudolf-Diesel-Straße 1
Tel. 0 45 32/4 01-0 · Telefax 0 45 32/40 15 55
NORD Internet: http://www.nord.com

Δ Warnung
Es wird vorausgesetzt, daß die grundsätzlichen Planungsarbeiten der Anlage sowie Transport, Montage, Installation, Inbetriebnahme, Wartung und Reparaturen von qualifiziertem Personal ausgeführt bzw. durch verantwortliche Fachkräfte kontrolliert werden. Bei Arbeiten am Getriebemotor muß garantiert sein, daß keinerlei Spannung anliegt, und dieser gegen Wiedereinschaltung gesichert ist.

Δ Caution
It is presumed that fundamental project work as well as all work with regard to transport, assembly, installation, starting-up, maintenance and repair is performed by qualified personnel or supervised by skilled labour taking overall responsibility. Make absolutely sure that no voltage is applied at all while work is being done on the geared motor. Drive must also be secured against switching on.

Δ Avertissement
Il est impératif que les travaux fondamentaux de l'installation, ainsi que tous les travaux de transport, montage, installation, mise en exploitation, entretien et réparation soient accomplis par du personnel qualifié et contrôlés par des techniciens spécialisés dans ce domaine. Avant toute intervention sur le motoréducteur, il faut s'assurer que celui-ci n'est plus sous tension et que la remise sous tension soit interdite.

Δ Warnung
Veränderungen gegenüber dem Normalbetrieb (höhere Leistungsaufnahme, Temperaturen, Schwingungen, Geräusche usw. oder Ansprechen der Überwachungseinrichtungen) lassen vermuten, daß die Funktion beeinträchtigt ist. Zur Vermeidung von Störungen, die ihrerseits mittelbar oder unmittelbar schwere Personen- oder Sachschäden bewirken könnten, muß das zuständige Wartungspersonal dann umgehend verständigt werden.

Δ Caution
Any deviation from normal operating conditions (increased power consumption, temperature, vibrations, noise etc.) or warning signals by monitoring equipment suggest malfunction. Inform the responsible maintenance personnel at once to prevent the trouble from getting worse and causing, directly or indirectly, serious physical injury or material damage.

Δ Avertissement
Si en utilisation normale, des modifications de fonctionnement apparaissent telles que puissance absorbée trop élevée, température élevée, vibrations fortes, bruit intense etc. ou en rapport avec les contrôles techniques, cela laisse supposer que différentes fonctions de l'appareil peuvent être détériorées. Pour éviter ensuite des problèmes, qui pourraient entraîner de graves accidents corporels ou de graves dégats matériels, le personnel d'entretien compétent doit immédiatement être informé.

Δ Im Zweifelsfall die entspechenden Betriebsmittel sofort abschalten!

Δ In case of doubt disconnect the machine immediately!

Δ Si vous êtes dans le doute, coupez immédiatement l'alimentation!

Aufstellung, Vorbereitung
- Transportösen am Getriebe sind für das Gewicht des Antriebs ausgelegt
- Fundamente ausreichend bemessen und schwingungsfrei ausführen
- Getriebe oder -motor fest und ohne Verspannung montieren
- ausreichende Belüftung vorsehen
- serienmäßiges Innengewinde nach DIN 332 zum Aufziehen von Verbindungselementen auf die Wellen benutzen
- Schläge auf die Wellen vermeiden (Lagerbeschädigung!)
- Maschine und Getriebe möglichst mit elastischen Kupplungen verbinden
- vor dem Einschalten Abtriebselemente aufziehen bzw. Paßfeder sichern
- bei Aufsteckgetrieben mit Drehmomentstütze Gummipuffer verwenden

Preparing and performing installation
- Lifting devices on the drive are designed to carry the drive weight
- the foundation (base) should be of adequate size and vibration-proof
- install gear unit or geared motor rigid and braceless
- ensure sufficient ventilation
- make use of tapped hole (DIN 332) to suit fastening to the shaft end
- avoid shocks on shafts (bearing damage!)
- preferably use flexible coupling between output shaft and driven machine
- fit output elements to shaft end or secure feather key before starting the motor
- use torque arm with rubber buffer on shaft mounting gearboxes

Mise en place, préparation
- Le matériel utilisé pour la manutention doit tenir compte du poids de l'équipement
- prendre largement les dimensions des embases et les réaliser exemptes de vibrations
- monter les réducteurs et motoréducteurs solidement et sans haubanage
- prévoir une aération suffisante
- prévoir le taraudage conforme à la norme DIN 332 pour monter des accouplements sur les arbres d'entrée et de sortie
- éviter de donner des coups sur les arbres (cela pourrait détériorer le roulement!)
- lier autant que possible la machine et le réducteur avec des accouplements élastiques
- avant la mise en service, enlever l'élément d'accouplement ou/et fixer la clavette
- utiliser pour l'exécution arbre creux avec bras de réaction une butée en caoutchouc

Elektrischer Anschluß
- Motoranschluß nach Schaltbild vornehmen
- Übereinstimmung von Netzspannung und Frequenz mit den Typenschild-Daten sicherstellen
- Sichere Schutzleiterverbindung herstellen
- evtl. falsche Drehrichtung korrigieren durch Vertauschen von 2 Phasen
- Nicht benötigte Kabeleinführungsöffnungen und den Kasten selbst staub- und wasserdicht verschließen
- Überbelastung und Phasenausfall durch Schutzschalter vorbeugen
- Einstellen des Motorschutzschalters auf Nennstrom
- Schaltbilder auf der letzten Seite

Connection of motor
- Connect motor according to diagram
- make sure that mains voltage/frequency are in accordance with nameplate information
- make secure protective conductor conection
- if motor is running in reverse direction, interchange two phases
- Close unused cable entrances holes and the box itself in a dust- and watertight manner.
- install protective switches to prevent overload and phase failure
- set motor protection switch to nominal current
- wiring diagrams on the last page

Branchements électriques
- brancher le moteur selon le schéma
- s'assurer que la tension du réseau et la fréquence correspondent aux données inscrites sur la plaque signalétique
- Le cable de raccordement doit être protégé
- corriger un éventuel mauvais sens de rotation par une inversion de deux phases
- Les entrées de câbles non utilisées doivent être obturées, la boîte elle-même devant être fermée de façon à être étanche à l'eau et à la poussiére
- prévoir une protection électrique contre les surcharges, court-circuit et défaut de phases
- régler la protection électrique suivant l'intensité nominale du moteur
- schéma de branchement à la derniére page

Inbetriebnahme
- bei längeren Lagerzeiten besondere Vorkehrungen treffen (siehe Werknormblatt "Langzeitlagerung")
- Luftgekühlte Motoren sind für Umgebungstemperaturen von - 20°C bis +40°C sowie Aufstellungshöhen â 1.000 m über NN ausgelegt
- Der Einsatz im Ex-Bereich ist nicht zulässig, sofern nicht ausdrücklich hierfür vorgesehen

Starting up
- in case of long-time storage take special precautions (as provided in works standard sheet "Extended Storage")
- air-cooled motors are designed for ambient temperautres between -20°C and +40°C and for installation at altitudes â 1.000 m above M.S.L.
- Their use in hazardous areas is prohibited unless they are expressly intended for such use (follow additional instructions)

Mise en fonctionnement
- si un stockage longue durée du réducteur est prévu, il faut prendre les dispositions nécessaires (voir spécification "Stockage longue durée")
- les moteurs autoventilés sont dimensionnés pour des températures ambiantes comprises entre -20°C et +40°C, ainsi que pour une altitude â 1000 mètres au-dessus du niveau de la mer
- Leur utilisation dans des atmosphères explosives est interdite, à moins qu'elles ne soient expressément prévues à cet effet (respecter les indications supplémentaires)

Wartung
GETRIEBE/MOTOR
Die Minibloc-Schneckengetriebe sind mit synthetischem Öl befüllt, dadurch ist über die gesamte Lebensdauer eine einwandfreie Funktion gewährleistet. Daher sind die Minibloc-Schneckengetriebe wartungsfrei.
Entlüftungsschrauben sind nicht erforderlich, die Minibloc-Schneckengetriebe sind vollkommen geschlossen.
Die Lager des Motors haben ebenfalls eine Lebensdauerschmierung.

Maintenance
GEARBOX/MOTOR
The Miniboc series of worm-gearboxes and the suitable motors are filled with synthetic lubricant/bearing-grease. This ensures proper operation throughout the full lifetime of the units. Therefore the Minibloc drives are maintenance-free.
No breather plugs are required because of synthetic lubricant used.
The minibloc drives are completely closed.

Entretien
DU REDUCTEUR/ DU MOTEUR
Les réducteurs et les motoréducteurs à roue et vis sans fin Minibloc sont remplis d'huile synthétique ce qui garantit un fonctionnement impeccable pendant toute la durée de vie. De ce fait, les réducteurs à roue et vis sans fin Minibloc ne nécessitent pas d'entretien.
Les vis d'évent ne sont pas non plus nécessiares et les réducteurs à roue vis sans fin sont livrés entièrement fermés.
Les roulements des moteurs sont également graissés à vie.

Wirkungsgrade

Da bei neuen Getrieben der Schneckenradsatz einlaufen muß, ist der Reibungsfaktor zunächst noch größer als nach dem Einlauf. Dadurch ist vor dem Einlauf auch der Wirkungsgrad etwas niedriger. Dieser Effekt verstärkt sich bei kleinerem Steigerungswinkel, also bei größerer Übersetzung.

Aus Erfahrung ist mit folgenden Abzügen zu rechnen:

1-gängig bis ca. 12%
2-gängig bis ca. 6%
3-gängig bis ca. 3%
6-gängig bis ca. 2%

Der Einlaufvorgang ist nach ca. 25 Stunden Betriebszeit bei maximaler Belastung abgeschlossen.

Für die in den Tabellen angegebenen Wirkungsgrade müssen folgende Voraussetzungen erfüllt sein:

- Getriebe vollständig eingelaufen
- Getriebe hat Beharrungstemperatur erreicht

Efficiencies

With new gearboxes however, an initially higher friction exists and the efficiency obtained before the gears are run-in will be somewhat reduced.This effect is increased with smaller angle of inclination (higher ratios).

Experience shows that initial efficiencies may be reduced by:

single start worm up to approx. 12%
two start worm up to approx. 6%
three start worm up to approx. 3%
six start worm up to approx. 2%

The gear unit will be run-in after a service period of 25 hours at full load.

The efficiencies shown in the selection tables can only be obtained when the gear unit:

- is fully run-in
- has achieved its operating temperature

Rendements

Etant donnè que dans les réducteurs neufs le couple roue et vis doit d'abord être rodé, l'angle de frottement sera avant le rodage un peu plus élevé et le rendement donc légèrement inférieur. Cet effit est accentué pur un angle d'inclinaison plus petit, donc pour des rapports plus importants.

L'expérience nous démontre qu'il faut compter avec les pertes suivantes:

Vis à 1 filet jusqu'à environ 12%
Vis à 2 filets jusqu'à environ 6%
Vis à 3 filets jusqu'à environ 3%
Vis à 6 filets jusqu'à environ 2%

Après environ 25 heures de fonctionnement, à charge maximale, le rodage est terminé:

Pour obtenir les rendements indiqués dans les tableaux, les conditions préalables suivantes doivent être remplies:

- réducteur parfaitement rodé
- réducteur ayant atteint la température de l'équilibre thermique

Schaltbilder / Wiring diagrams / Schémas de branchement

Drehstrom-Motor mit Kurzschlußanker
Three phase squirrel-cage motor
Moteur triphasé à cage d'écureull

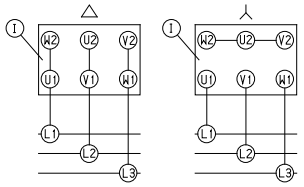

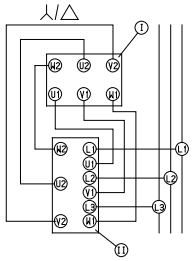

I) Klemmbrett
Terminal board
Plaque à bornes

II) Schalter
Switch
Démarreur

Drehstrom-Motor mit Kurzschlußanker, in Dahlander-Schaltung
Three phase squirrel-cage motor, Dahlander connection
Moteur triphasé à cage d'écrureull, couplage Dahlander

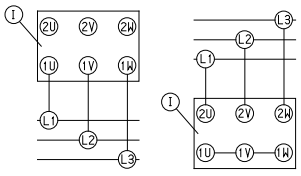

niedrige - Drehzahl - hohe
low - speed - high
inférieure - vitesse - supérieure

Drehstrom-Motor, polumschaltbar, zwei getrennte Wicklungen
Three phase motor, polechanging, two separate windings, two speeds
Moteur triphasé à commutation de pôles, deux bobinages séparés, deux vitesses

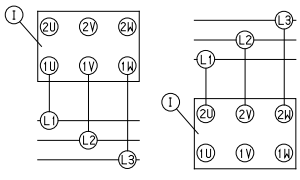

niedrige - Drehzahl - hohe
low - speed - high
inférieure - vitesse - supérieure

Roundline Cylinders
Magnetic Piston
Double Acting
∅ 8 to 63 mm

- **Very compact and shorter than the basic length of a corresponding ISO/VDMA and roundline cylinder.**
- **Magnetic piston as standard provides a wide range of control options.**
- **Comprehensive range of standard stroke lengths.**
- **International series available world-wide.**



Technical Data

Medium:
Compressed air, filtered, lubricated or non-lubricated

Operation:
Double acting with buffer cushioning

RT/57200/M	Side port, integral eye mounting (∅ 8 to 40 mm), fixing holes in the end cover (∅ 50 and 63 mm)
RT/57200/MC	Central rear port (∅ 8 to 40 mm)
RT/57200/MF	Flat rear cover (∅ 8 to 40 mm)

Operating Pressure:
1 to 10 bar

Operating Temperature:
-5°C* to +80˚C max.
*Consult our Technical Service for use below +2°C

Cylinder Diameters:
8, 10, 12, 16, 20, 25, 32, 40, 50, 63 mm

Standard Strokes:

10, 25, 40, 50, 80, 100 mm	∅ 8 and 10 mm
10, 25, 40, 50, 80, 100, 125, 160, 200 mm	∅ 12 and16 mm
10, 25, 40, 50, 80, 100, 125, 160, 200, 250, 320 mm	∅ 20 and 25 mm
25, 40, 50, 80, 100, 125, 160, 200, 250, 320 mm	∅ 32 to 63 mm

Materials:
Stainless steel (8 to 16 mm bore Austenitic, 20 to 63 mm bore Martensitic) piston rod, Stainless steel (Austenitic) barrel, aluminium end covers, polyurethane wiper, nitrile rubber seals and 'O'-rings.

Alternative Cylinders:
See page N **1.5.**041.02

Ordering Information

To order a basic 40 mm bore cylinder with a 50 mm stroke
quote: RT/57240/M/50

To order a basic 25 mm bore cylinder (central rear port in the end cover) with a 200 mm stroke
quote: RT/57225/MC/200

To order mounting brackets refer to appropriate cylinder and switch mounting table.
Order magnetically operated switches separately.

Accessories		See page
Switches	QM/45/RAP, QM/45/LAP QM/45/LSU	N **4.3.**045.01
Switch	QM/45/EAP	N **4.3.**047.01
Switches	QM/33, QM/34	N **4.3.**051.01
Switches	QM/134, QM/134/N	N **4.3.**055.01

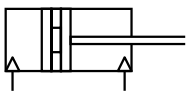
Magnetic piston

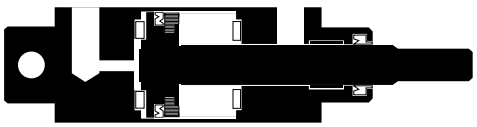

Our policy is one of continued research and development. We therefore reserve the right to amend, without notice, the specifications given in this document.

Alternative Cylinders

Symbol	Model (magnetic piston)	Description
	RT/57200/JM	Double ended piston rod (16 to 63 mm bore)

Weight of Cylinders • Theoretical Forces • Air Consumption

Model	Weight (kg) at 0 mm	Weight (kg) per 100 mm	Theoretical forces (N) at 6 bar Outstroke	Theoretical forces (N) at 6 bar Instroke	Air consumption (l/cm stroke) at 6 bar Instroke	Air consumption (l/cm stroke) at 6 bar Outstroke
57208	0,015	0,019	30	25,9	0,004	0,003
57210	0,020	0,027	46,8	39,6	0,005	0,004
57212	0,020	0,030	67,8	60	0,008	0,006
57216	0,040	0,048	120	103	0,014	0,013
57220	0,080	0,072	188	158	0,022	0,019
57225	0,120	0,110	294	247	0,035	0,028
57232	0,210	0,154	482	414	0,056	0,048
57240	0,330	0,201	754	661	0,087	0,074
57250	0,550	0,310	1178	1057	0,137	0,114
57263	0,890	0,437	1870	1680	0,218	0,195

Weights of Mountings (kg)

Model	 Style 'AK'	 Style 'C'	 Style 'F'	 Style 'H'	 Style 'L'	 Style 'M'	 Style 'N'	 Style 'N2'	 Style 'UF'	 Switch bracket
57208	-	0,005	0,003	-	0,003	0,006	0,003	0,001	-	0,001
57210	0,015	0,007	0,010	-	0,010	0,020	0,003	0,001	0,015	0,002
57212	0,015	0,007	0,010	-	0,010	0,020	0,003	0,001	0,015	0,002
57216	0,020	0,016	0,012	-	0,020	0,032	0,010	0,002	0,021	0,005
57220	0,050	0,030	0,020	-	0,020	0,040	0,009	0,003	0,045	0,005
57225	0,200	0,040	0,040	-	0,034	0,074	0,011	0,007	0,080	0,006
57232	0,200	0,060	0,048	-	0,040	0,088	0,017	0,007	0,080	0,007
57240	0,200	0,083	0,090	-	0,086	0,176	0,025	0,010	0,120	0,008
57250	0,200	0,175	0,130	0,050	0,198	0,328	-	0,010	0,120	0,010
57263	0,650	0,294	0,220	0,070	0,318	0,538	-	0,021	0,150	0,012

Warning

These products are intended for use in industrial compressed air systems only. Do not use these products where pressures and temperatures can exceed those listed under **'Technical Data'**.

Before using these products with fluids other than those specified, for non-industrial applications, life-support systems, or other applications not within published specifications, consult NORGREN.

Through misuse, age, or malfunction, components used in fluid power systems can fail in various modes.

The system designer is warned to consider the failure modes of all component parts used in fluid power systems and to provide adequate safeguards to prevent personal injury or damage to equipment in the event of such failure.
System designers must provide a warning to end users in the system instructional manual if protection against a failure mode cannot be adequately provided.
System designers and end users are cautioned to review specific warnings found in instruction sheets packed and shipped with these products.

Our policy is one of continued research and development. We therefore reserve the right to amend, without notice, the specifications given in this document.

Basic Dimensions RT/57200/M RT/57200/MC RT/57200/MF

∅ 8 to 12 mm bore

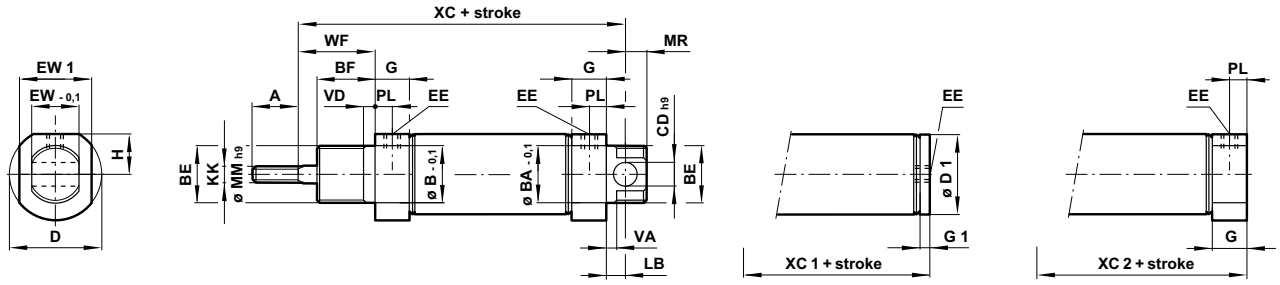

∅ 16 to 40 mm bore

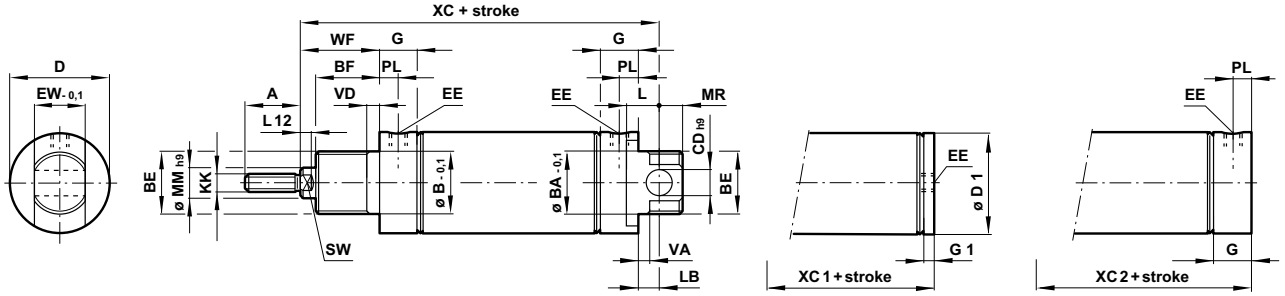

Double ended piston rod RT/57200/JM

∅ 16 to 40 mm bore

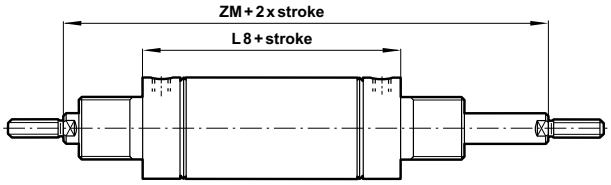

Model	57208	57210	57212	57216	57220	57225	57232	57240
∅	8	10	12	16	20	25	32	40
A	8	9	9	12	14	16	22	23
∅ B/∅ BA	10	10	10	12	16	18	22	30
BE	M 10 x 1	M 10 x 1	M 10 x 1	M 12 x 1,25	M 16 x 1,5	M 18 x 1,5	M 22 x 1,5	M 30 x 1,5
BF	7,5	8	8	10	12	12	15	15
∅ CD H9	3	4	4	5	6	8	8	10
∅ D	12	15	15	17,5	22	26,5	33,5	41,5
∅ D 1	9,5	11,5	13	17,5	21,5	26,5	33,5	41,5
EE	M 3	M 5	M 5	M 5	Rc 1/8	Rc 1/8	Rc 1/8	Rc 1/8
EW - 0,1	6	8	8	10	12	14	16	20
EW 1	10	12,5	-	-	-	-	-	-
G	7,5	9,5	9,5	11,5	15,5	15,5	17,5	18
G 1	3	4,5	4,5	4	8	8	5,5	5,5
H	5	6,5	6,5	-	-	-	-	
KK	M 3	M 4	M 4	M 6	M 8	M 10 x 1,25	M 10 x 1,25	M 12 x 1,25
L	-	-	-	-	-	-	12	14
LB	4,5	5	5	7	7	9	7	5
L 8	-	-	-	44	53	53	63	67
L 12	-	-	-	5	5	5	5	6
∅ MM h9	3	4	4	6	8	10	12	14
MR	3	4	4	5	6	8	8	10
PL	4	5,5	5,5	5,5	9	9	9	10
SW				5	7	9	10	12
VA/VD	1,5	1,5	1,5	2	3	3	3	3
WF	8,5	10	10	13,5	15,5	16,5	23	24
XC	48	54	54	64,5	75,5	78,5	93	96
XC 1	39	44	44	50	61	62	74	78,5
XC 2	43,5	49	49	57,5	68,5	69,5	86	91
ZM	-	-	-	71	84	86	109	115

Our policy is one of continued research and development. We therefore reserve the right to amend, without notice, the specifications given in this document.

VM 3001

Butterfly valve, cast iron body, disc and shafts in stainless steel, EPDM liner, DN 20-500, PN 16/3, wafer type



General description

Butterfly valve for general applications with liquids, air and gases. High neck for insulation. The valve body is externally Epoxy coated and internaly completely covered by an exchangeble EPDM liner. The liner has also the function of as flange gasket on both sides.
Centric disc design assures tightness in both directions.
Standard split two-piwce shaft design with priple shaft bearings.
Mounting flange according to ISO 5211.
Designed to be mounted between flanges acc. to DIN2631, DIN2632, DIN2633 and ANSI B 16.5.
Approvals by TÜV, Lloyds, Bureau Veritas and others on request.

Options

Different types of actuators.
Extra high stem.
Other body coatings.
Different materials in body, disc, shaft and liner.
SG iron body with DVGV gas approval
Shaft bearings in PTFE.
Vulcanised liner.
Different flange standards.
One-piece shaft
Larger sizes.
Different face-to-face dimensions.

Materials

DN		20	25	32	40	50	65	80	100	125	150	200	250	300	350	400	450	500
Body	GG 25	•	•	•	•	•	•	•	•	•	•	•	•	•	•	•	•	•
Disc	AISI 316	•	•	•	•	•	•	•	•	•	•	•	•	•	•	•	•	•
Shafts	AISI 304	•	•	•	•	•	•	•	•	•	•	•	•	•	•	•	•	•
Liner	EPDM	•	•	•	•	•	•	•	•	•	•	•	•	•	•	•	•	•
O-rings	NBR	•	•	•	•	•	•	•	•	•	•	•	•	•	•	•	•	•

Technical data

DN	20	25	32	40	50	65	80	100	125	150	200	250	300	350	400	450	500
Pressure rating Δp PN 16				•	•	•	•	•	•	•							
Pressure rating Δp PN 10	•	•	•								•	•	•				
Pressure rating Δp PN 6														•			
Presure rating Δp PN 3															•	•	•
Mounting flanges PN 10/16	•	•															
Mounting flanges PN 6/10/16			•	•	•	•	•	•	•	•	•	• [1]	• [1]	• [1]	• [1]	• [1]	• [1]
Temperature -10 to +130 °C	•	•	•	•	•	•	•	•	•	•	•	•	•	•	•	•	•
Kv-value, m^3/h	32	36	40	50	85	215	420	800	1010	2100	4000	6400	8500	11500	14500	20500	2100
Torque, Nm [2]	5	5	5	8	9	18	24	37	59	125	140	200	280	610	750	860	2255

(• = standard)

[1] Standard PN 10. On request also PN 6 och PN 16.
[2] At max. Δp as standard design

Kvalitets- & Miljöcertifierat enligt ISO 9002 och ISO 14001

Huvudkontor
KALMAR
Tel. 0480 - 42 91 00
Fax. 0480 - 42 91 20

Filialkontor
STOCKHOLM
Tel. 08 - 685 45 00
Fax. 08 - 685 45 19

GÄVLE
Tel. 026 - 54 36 00
Fax. 026 - 54 36 09

GÖTEBORG
Tel. 031 - 86 84 50
Fax. 031 - 86 84 59

HÄSSLEHOLM
Tel. 0451 - 38 83 50
Fax. 0451 - 38 83 54

www.ventim.se

Dimensional drawing

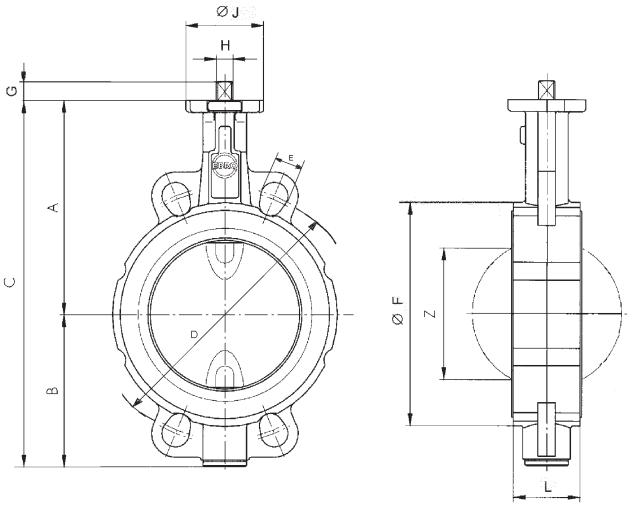

Dimensional data

DN	20	25	32	40	50	65	80	100	125	150	200	250	300	350	400	450	500
L	33	33	33	33	43	46	46	52	56	56	60	68	78	92	102	114	127
A	104	104	104	113	126	134	157	167	180	203	228	266	291	332	363	397	437
B	45	45	50	66	84	93	104	115	127	150	176	212	237	269	314	335	405
C	149	149	154	179	210	227	261	282	307	353	404	478	528	601	677	732	842
D	75	85	100	110	125	145	160	180	210	240	295	350	400	460	515	565	620
E	14	14	18	18	18	18	18	18	18	22	22	22	22	22	26	26	26
F	64	64	69	82	95	115	130	150	180	206	268	315	360	408	470	530	574
12	12	12	12	12	12	16	16	16	19	19	24	24	**	**	**	**	
H	11	11	11	11	11	11	14	14	14	17	17	22	22	**	**	**	**
J	54	54	54	54	54	54	65	65	65	90	90	125	125	150	150	210	210
Z	-	-	-	22	25	45	65	85	111	139	190	240	287	330	378	417	474
Mount.fl. ISO-5211	F04	F04	F04	F04	F04	F04	F05	F05	F05	F07	F07	F10	F10	F12	F12	F16	F16
Weight, kg *	1,3	1,3	1,4	1,8	2,2	2,9	4,0	5,2	6,9	9,5	13,2	22,5	31,5	39,4	58,7	91,0	107,0

G

* split two-piece shaft
Face-to.face acc. to DIN 3202-K1/ISO 5752 - Series 20

** Acc. to actuator demand

Markings
Valve body is marked with producer, DN, PN, materials and type.

Mounting
Optional, but horizontal shafts is recommended.

Maintenance
The valve is maintenance free.
For best function though, regulary exercise is recommended.

Ordering umbers for hand operated valves

DN	With hand lever VM 3090 Art.no		With hand lever VM 3093 Art.no		With worm gear VM 3099 Art.no	
20	30010203090		30010203093		30010203099	
25	30010253090		30010253093		30010253099	
32	30010323090		30010323093		30010323099	
40	30010403090		30010403093		30010403099	
50	30010503090		30010503093		30010503099	
65	30010653090		30010653093		30010653099	
80	30010803090		30010803093		30010803099	
100	30011003090		30011003093		30011003099	
125	30011253090		30011253093		30011253099	
150	30011503090		30011503093		30011503099	
200	30012003090		30012003093		30012003099	
250	30012503090		30012503093		30012503099	
300	30013003090		30013003093		30013003099	
350					30013503099	
400					30014003099	
450					30014003099	
500					30015003099	

Dimensions on levers and worm gears, please see separate data sheets VM 3090, VM 3093 andVM 3099.

Ordering no for valves with free shaft

DN	Artikelnummer
20	3001020
25	3001025
32	3001032
40	3001040
50	3001050
65	3001065
80	3001080
100	3001100
125	3001125
150	3001150
200	3001200
250	3001250
300	3001300
350	3001350
400	3001400
450	3001450
500	3001500

In the interest of technical progress, designs and
dimensions may be subject to modification

VENTIL & INSTRUMENT AB

VM REVO RS7 002 - RS2 380

Pneumatic single acting actuator, with spring return

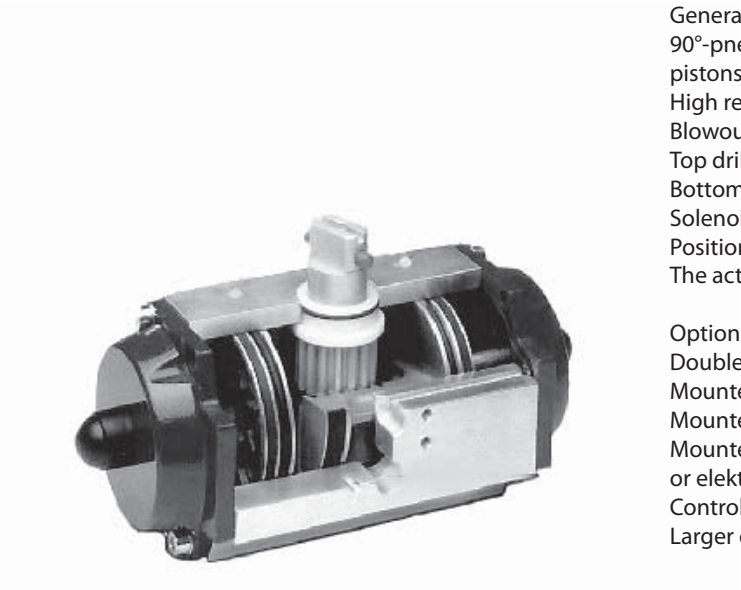

General
90°-pneumatic rack and pinion actuator with bearing supported pistons and a patented, balansed shaft.
High resistance wear and reliablility as well as long lifetime.
Blowout-proof design.
Top drilling and top of shaft according to Namur.
Bottom mounting according to ISO 5211.
Solenoid valve connection according to Namur.
Position indication in red polyamide.
The actuator is permanet greased and maintenance free.

Options
Double acting.
Mounted solenoid valve (bistable, monostable, Ex-design).
Mounted limit switches, mekanical or inductive, and Ex-design.
Mounted pneumatic positioner (20-100 kPa/3-15 Psi)
or elektropneumatic/digital positioner (4-20 mA).
Control block with Namur connection for adjustabel stroke time.
Larger dimensions.

Technical data

Torque* (Nm)at feeding pressure 6 bar (g).

	No of springs	Air 0°	Air 90°	Spring 0°	Spring 90°	Stroke time sek
RS7 002	10	11	6	4,8	9,8	<0,5
RS7 006	10	26	15	11,3	22,7	<0,5
RS5 012	12	49	24	25	50	<0,5
RS5 025	12	96	48	48	96	<0,5
RS5 050	12	178	88	88	178	0,8
RS5 090	12	346	170	160	336	1,0
RS5 130	12	526	264	244	506	1,0
RS5 180	12	692	347	320	665	1,2
RS2 205	12	1011	506	506	1011	1,2
RS2 380	12	1518	759	758	1517	2,1

* N.B. Stated valve torque should be increased with 30% for satisfactory safety margin.

At lower air pressure than 6 bar, please contact Ventim AB.

Air pressure	Filtered pressurised air, non aggressive gas. Feeding pressure 2-10 bar(e) (RD7: 1,5-7 bar)
Air consumption	Nl/stroke (0-90°) at 6 bar(e)

RD7 001	0,35	RD5 090	25,2
RD7 002	1,05	RD5 130	38,4
RD7 006	2,10	RD5 180	50,5
RD5 012	3,71	RD2 205	63,0
RD5 025	7,14	RD2 380	91,0
RD5 050	13,3		

Ambient temp.	-20°C to +80°C
Manual override	Sqare head of shaft for manual emergancy operation
Travel stops	End opsition tolerance +/- 1,5° RD7 has one adjustable travel stop as standard End position 90° can be adjusted -8°. For RD5 & RD2, adjustable travel stops is option (+4 / -8°).
Materials	
Body	Anodised aluminium
Shaft	Anodised aluminium
piston	RD2-RD5 Aluminium RD 7: Plastic
End cap screws	Stainless stel
End caps	Aluminium, painted RD7: Die cast plastic, painted
O-rings	Buna N (EPDM or Viton on request

Huvudkontor
KALMAR
Tel. 0480 - 42 91 00
Fax. 0480 - 42 91 20

Filialkontor
STOCKHOLM
Tel. 08 - 685 45 00
Fax. 08 - 685 45 19

GÄVLE
Tel. 026 - 54 36 00
Fax. 026 - 54 36 09

GÖTEBORG
Tel. 031 - 86 84 50
Fax. 031 - 86 84 59

HÄSSLEHOLM
Tel. 0451 - 38 83 50
Fax. 0451 - 38 83 54

www.ventim.se

Dimensions bottom side

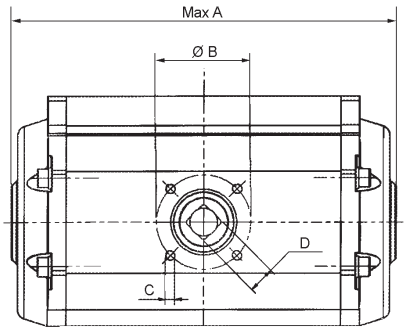

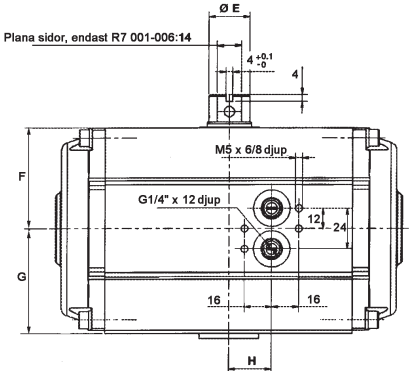

top end cap

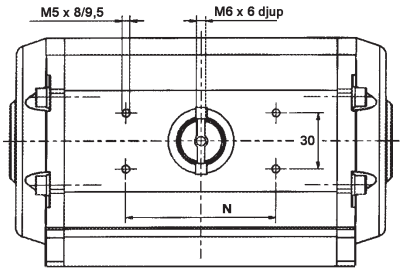

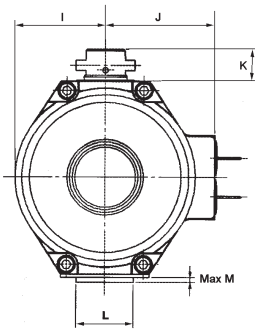

Dimensional data

	A	B	C	D	E	F	G	H	I	J	K	L	M	N	O	ISO 5211	Weight kg
RS7 002	167	42	M8x12,5/14	11H11x10	24	25,5	29	-	67	79	20	-	-	50	25	F04/V11	0,50
RS7 006	200	50	M6x10/11	14H11x10	24	35,5	39	-	34	41	20	-	-	80	30	F05/V14	0,95
RS5 012	207	50	M6x8,8/9,8	14H11x17	24	44,5	46,5	25,05	41	52,5	20	35	3	80	30	F05/V14	2,15
RS5 025	215	50	M6x8,8/9,8	14H11x17	24	59,5	61,5	25,15	55	67	20	35	3	80	30	F05/V14	3,50
RS5 050	270	70	M8x12,5/14	17H11x21	24	71,5	74,5	32,25	67	79	20	55	3	80	30	F07/V17	5,85
RS5 090	355	102	M10x16/18,5	22H11x25	24	81,5	84,5	46,85	78	94	30	70	4	130	30	F10/V22	10,40
RS5 130	415	102	M10x16/18,5	22H11x25	24	94	98	54,50	90	100	30	70	4	130	30	F10/V22	19,00
RS5 180	420	125	M12x18/22	27H11x30	24	106,5	111,5	54,50	102	114	30	85	4	130	30	F12/V27	22,50
RS2 205	490	140	M16x26/27,5	36H11x40	53	137	137	64,50	119	135,5	30	100	4	130	30	F14/V36	30,00
RS2 380	600	140	M16x26/27,5	36H11x40	53	137	137	92,90	119	135,5	30	100	4	130	30	F14/V36	37,00

Mounting
Optional mounting.

Maintenance
The actuator is maintenance free.
Lubricated with grease for minimum 500 000 strokes.
Spare parts list can be provided on request.

Testing
Every actuator is individually tested mand provided with a serial number for easy identification.

Ordering numbers DN	Art no	RSK-no
	RS7 002	
	RS7 006	
	RS5 012	
	RS5 025	
	RS5 050	
	RS5 090	
	RS5 130	
	RS5 180	
	RS2 205	
	RS2 380	

In the interest of technical progress, designs and dimensions may be subject to modification

Betriebs- und Wartungsanleitung
Operating and Maintenance Instruction
Notice de mise en service et d'entretien

B 1033
11/2005
DE GB FR

UNIVERSAL – Schneckengetriebe, Typ SD / SI
UNIVERSAL – Worm Gear Units, Typ SD / SI
UNIVERSAL – Réducteurs à roue et vis sans fin, Typ SD / SI

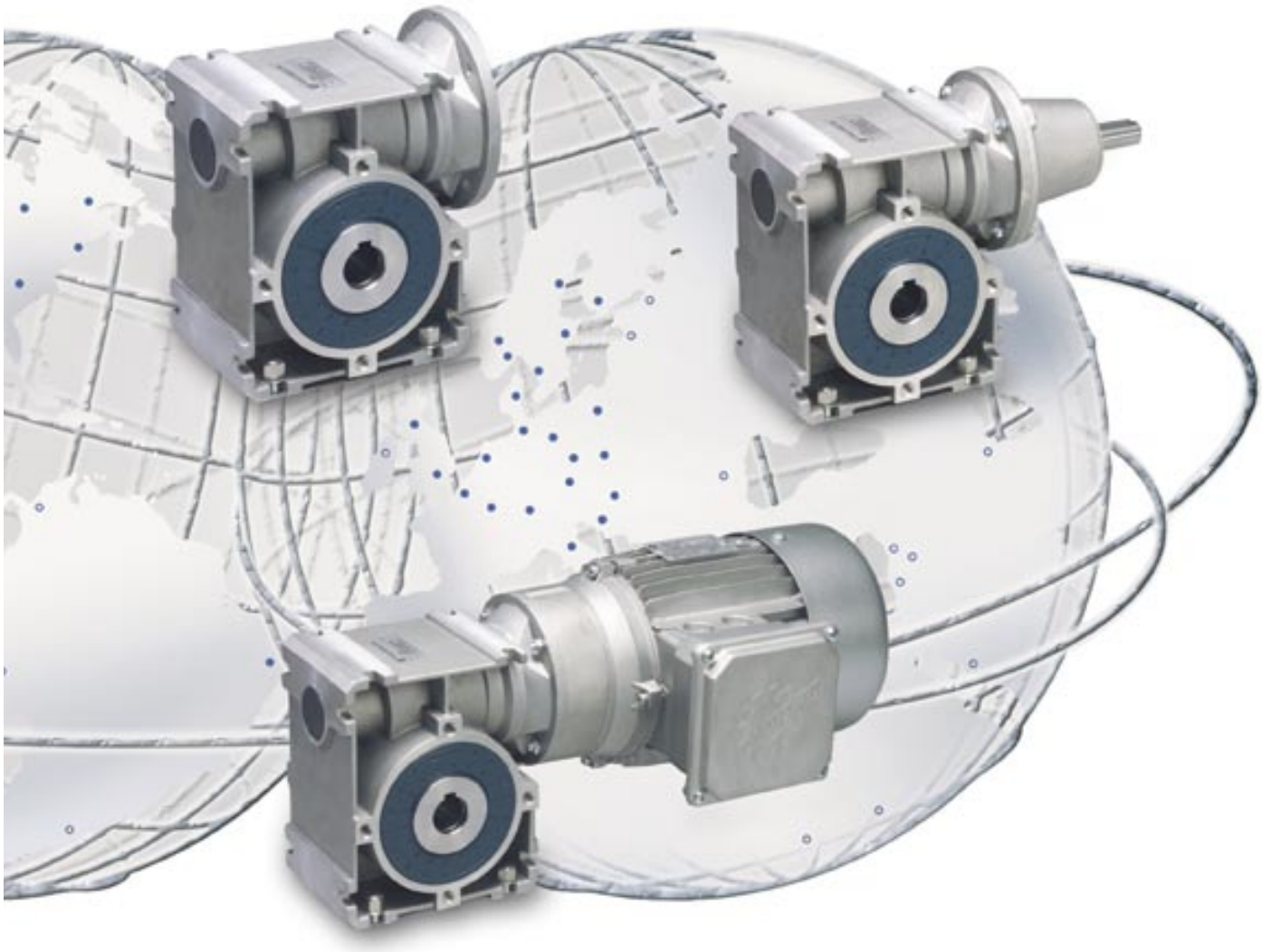

Diese Sicherheitshinweise sind aufzubewahren
These safety instructions must be kept available
Ces instructions de sécurité doivent être observées

Getriebebau NORD
GmbH & Co. KG
D-22934 Bargteheide · P.O.Box 1262, D-22941 Bargteheide · Rudolf-Diesel-Straße 1
Tel. 0-45-32-/-401-0 · Fax 0-45-32-/-401-253 · NORD Internet: http://www.nord.com

Δ Warnung
Es wird vorausgesetzt, daß die grundsätzlichen Planungsarbeiten der Anlage sowie Transport, Montage, Installation, Inbetriebnahme, Wartung und Reparaturen von qualifiziertem Personal ausgeführt bzw. durch verantwortliche Fachkräfte kontrolliert werden. Bei Arbeiten am Getriebemotor muß garantiert sein, daß keinerlei Spannung anliegt, und dieser gegen Wiedereinschaltung gesichert ist.

Δ Caution
It is presumed that fundamental project work as well as all work with regard to transport, assembly, installation, starting-up, maintenance and repair is performed by qualified personnel resp. supervised by skilled labour taking overall responsibility. Make absolutely sure that no voltage is applied at all while work is being done on the geared motor. Drive must also be secured against switching on while work is in progress.

Δ Avertissement
Il est impératif que les travaux fondamentaux de l'installation, ainsi que tous les travaux de transport, montage, installation, mise en exploitation, entretien et réparation soient accomplis par du personnel qualifié et contrôlés par des techniciens spécialisés dans ce domaine. Avant toute intervention sur le motoréducteur, il faut s'assurer que celui-ci n'est plus sous tension et que la remise sous tension soit interdite.

Δ Warnung
Veränderungen gegenüber dem Normalbetrieb (höhere Leistungsaufnahme, Temperaturen, Schwingungen, Geräusche usw. oder Ansprechen der Überwachungseinrichtungen) lassen vermuten, daß die Funktion beeinträchtigt ist. Zur Vermeidung von Störungen, die ihrerseits mittelbar oder unmittelbar schwere Personen- oder Sachschäden bewirken könnten, muß das zuständige Wartungspersonal dann umgehend verständigt werden.

Δ Caution
Any deviation from normal operating conditions (increased power consumption, temperature, vibrations, noise etc.) or warning signals by monitoring equipment suggest malfunction. Inform the responsible maintenance personnel at once to prevent the trouble from getting worse and causing, directly or indirectly, serious physical injury or material damage.

Δ Avertissement
Si en utilisation normale, des modifications de fonctionnement apparaissent telles que puissance absorbée trop élevée, température élevée, vibrations fortes, bruit intense etc. ou en rapport avec les contrôles techniques, cela laisse supposer que différentes fonctions de l'appareil peuvent être détériorées. Pour éviter ensuite des problèmes, qui pourraient entraîner de graves accidents corporels ou de graves dégats matériels, le personnel d'entretien compétent doit immédiatement être informé.

Δ Im Zweifelsfall die entsprechenden Betriebsmittel sofort abschalten!

Δ In case of doubt switch-off the machine immediately!

Δ Si vous êtes dans le doute, coupez immédiatement l'alimentation!

Aufstellung, Vorbereitung
- Fundamente ausreichend bemessen und schwingungsfrei ausführen
- Getriebe oder -motor fest und ohne Verspannung montieren
- ausreichende Belüftung vorsehen
- serienmäßiges Innengewinde nach DIN 332 zum Aufziehen von Verbindungselementen auf die Wellen benutzen
- Schläge auf die Wellen vermeiden (Lagerbeschädigung!)
- Maschine und Getriebe möglichst mit elastischen Kupplungen verbinden
- vor dem Einschalten Abtriebselemente aufziehen bzw. Paßfeder sichern
- bei Aufsteckgetrieben mit Drehmomentstütze Gummipuffer verwenden
- die EU-Maschinenrichtlinie ist zu beachten
- bei Anwendungen bei denen der Ausfall eines Getriebe oder –motors zu einer Personengefährdung führen könnte, sind entsprechende Sicherheitsmaßnahmen vorzusehen

Preparing and performing installation
- the foundation (base) should be of adequate size and vibration-proof
- install gear unit or geared motor rigid and braceless
- ensure sufficient ventilation
- make use of tapped hole (DIN 332) to fit transmission element to the shaft end
- avoid shocks on shafts (bearing damage!)
- preferably use flexible coupling between output shaft and driven machine
- fit transmission element to shaft end or secure feather key before starting the motor
- use rubber buffer on shaft mounting gearboxes with torque arm
- the EC-machinery directive must be observed
- in applications where the failure of the gearbox or motor could be hazardous for personnel, appropriate safety measures must be taken

Mise en place, préparation
- prendre largement les dimensions des embases et les réaliser exemptes de vibrations
- monter les réducteurs et motoréducteurs solidement et sans haubanage
- prévoir une aération suffisante
- prévoir le taraudage conforme à la norme DIN 332 pour monter des accouplements sur les arbres d'entrée et de sortie
- éviter de donner des coups sur les arbres (cela pourrait détériorer le roulement!)
- lier autant que possible la machine et le réducteur avec des accouplements élastiques
- avant la mise en service, enlever l'élément d'accouplement ou/et fixer la clavette
- utiliser pour l'exécution arbre creux avec bras de réaction une butée en caoutchouc
- La directive machine EU est à prendre en considération
- pour les applications où la défaillance d'un réducteur ou d'un moteur pourrait blesser des personnes, des mesures de sécurité doivent être prises

Elektrischer Anschluß
- Motoranschluß nach Schaltbild vornehmen
- Übereinstimmung von Netzspannung und Frequenz mit den Typenschild-Daten sicherstellen
- Sichere Schutzleiterverbindung herstellen
- evtl. falsche Drehrichtung korrigieren durch Vertauschen von 2 Phasen
- Nicht benötigte Kabeleinführungsöffnungen und den Kasten selbst staub- und wasserdicht verschließen
- Überbelastung und Phasenausfall durch Schutzschalter vorbeugen
- Einstellen des Motorschutzschalters auf Nennstrom
- Schaltbilder auf der letzten Seite
- Bei Bremsmotoren ist die Betriebs- und Wartungsanleitung B1090 zu beachten.

Connection of motor
- Connect motor according to diagram
- make sure that mains voltage/frequency are in accordance with nameplate information
- make secure protective conductor connection
- if motor is running in reverse direction, interchange two phases
- Close unused cable entrance holes and the box itself in a dust- and watertight manner.
- install protective switches to prevent overload and phase failure
- set motor protection switch to nominal current
- wiring diagrams on the last page
- When using brakemotors observe the O&M manual B1090

Branchements électriques
- brancher le moteur selon le schéma
- s'assurer que la tension du réseau et la fréquence correspondent aux données inscrites sur la plaque signalétique
- Le cable de raccordement doit être protégé
- corriger un éventuel mauvais sens de rotation par une inversion de deux phases
- Les entrées de câbles non utilisées doivent être obturées, la boîte elle-même devant être fermée de façon à être étanche à l'eau et à la poussiére
- prévoir une protection électrique contre les surcharges, court-circuit et défaut de phases
- régler la protection électrique suivant l'intensité nominale du moteur
- schéma de branchement à la derniére page
- Pour les moteurs frein veuillez vous reporter à la notice de mise en service et d'entretien B1090

Wirkungsgrade
Da bei neuen Getrieben der Schneckenradsatz einlaufen muß, ist die Reibung zunächst noch größer als nach dem Einlauf.

Efficiencies
New worm gearsets in gearboxes must be run-in for an initial phase before reaching their maximum rated efficiency. During the initial run-in phase the coefficient of friction is higher than after completing the run-in phase.

Rendements
Le couple roue et vis d'un réducteur neuf doit fonctionner pendant quelques heures avant d'obtenir son rendement maximum. Pendant cette phase de rodage les rendements sont inférieurs aux rendements indiqués dans le catalogue.

Wartung
GETRIEBE/MOTOR
Die UNIVERSAL-Schneckengetriebe sind mit synthetischem Öl befüllt, dadurch ist über die gesamte Lebensdauer eine einwandfreie Funktion gewährleistet. Daher sind die UNIVERSAL-Schneckengetriebe wartungsfrei.
Entlüftungsschrauben sind nicht erforderlich, die UNIVERSAL-Schneckengetriebe sind vollkommen geschlossen.
Die Lager des Motors haben ebenfalls eine Lebensdauerschmierung.
Bei Bremsmotoren ist die Betriebs- und Wartungsanleitung B1090 zu beachten.

Maintenance
GEARBOX/MOTOR
The UNIVERSAL series of worm-gearboxes are filled with synthetic lubricant/bearing-grease. This ensures proper operation throughout the full lifetime of the units. Therefore UNIVERSAL drives are maintenance-free. No breather plugs are required.
UNIVERSAL drives are completely sealed.
The motor bearings are also lifetime lubricated.
When using brakemotors observe the O&M manual B1090.

Entretien
DU REDUCTEUR/ DU MOTEUR
Les réducteurs et les motoréducteurs à roue et vis sans fin UNIVERSAL sont remplis d'huile synthétique ce qui garantit un bon fonctionnement pendant toute la durée de vie. De ce fait, les réducteurs à roue et vis sans fin UNIVERSAL ne nécessitent pas d'entretien.
Les vis d'évent ne sont pas non plus nécessiares et les réducteurs à roue vis sans fin sont livrés entièrement fermés.
Les roulements des moteurs sont également graissés à vie. Pour les moteurs frein veuillez vous reporter à la notice de mise en service et d'entretien B1090.

Zusammenbau von Modulen und Anbau eines Motors
- Montageanleitungen der Anbau-Module beachten
- Eventuelle Hinweise des Motor-lieferanten beachten
- Schläge auf die Motorwelle beim Aufstecken der Kupplungshülse vermeiden (Lagerbeschädigung)
- Bei Außenaufstellung oder feuchter Umgebung sind die Fugen zwischen Motor und Getriebe mit geeigneter Dichtpaste gegen Eindringen von Feuchtigkeit abzudichten.

Assembly of modules and fitting of a motor
- observe the assembly instructions of the optional modules
- observe instructions of the motor supplier if any
- avoid shocks onto the motorshaft when fitting the coupling-sleeve (bearing damage !)
- For outdoor operation or in other humid/wet environment seal the gap between motor and gearbox with suitable sealant against the ingress of humidity.

Assemblage des modules et montage du moteur
- prendre en considération la notice de montage
- éventuellement tenir compte des recommandations du fournisseur du moteur
- éviter les coups sur l'arbre du moteur lors du montage de l'accouplement (endommagement des roulements)
- Pour des installations à l'extérieur ou dans un milieu humide, il faut appliquer de la pâte à joint sur les plans de joint entre le moteur et le réducteur, ou entre les modules, pour éviter la pénétration d'humidité.

Inbetriebnahme
- bei längeren Lagerzeiten besondere Vorkehrungen treffen (siehe Werknormblatt "Langzeitlagerung")
- Luftgekühlte Motoren sind für Umgebungstemperaturen von - 20°C bis +40°C sowie Aufstellungshöhen bis 1.000 m über NN ausgelegt
- Der Einsatz im Ex-Bereich ist nicht zulässig, sofern nicht ausdrücklich von NORD geprüft und schriftlich freigegeben.
- Getriebe oder –motor nur mit den zulässigen Leistungsdaten betreiben

Starting up
- in case of long-time storage take special precautions (as provided in works standard sheet "Extended Storage")
- air-cooled motors are designed for ambient temperatures between -20°C and +40°C and for installation at altitudes up to 1.000 m a.m.s.l.
- The use in hazardous areas is prohibited unless explicitly checked by NORD and confirmed in writing.
- Use gearbox or motor only within the permissible performance data

Mise en fonctionnement
- si un stockage longue durée du réducteur est prévu, il faut prendre les dispositions nécessaires (voir spécification "Stockage longue durée")
- les moteurs autoventilés sont dimensionnés pour des températures ambiantes comprises entre -20°C et +40°C, ainsi que pour une altitude â 1000 mètres au-dessus du niveau de la mer
- Leur utilisation dans des atmosphères explosives Ex est interdite, à moins que ces moteurs ne soient expressément prévus à cet effet et avec accord écrit de NORD
- Les réducteurs et les moteurs ne doivent fonctionner qu'avec les caractéristiques de puissance indiquées.

Schaltbilder / Wiring diagrams / Schémas de branchement

Drehstrommotor
Three phase motor
Moteur triphasé

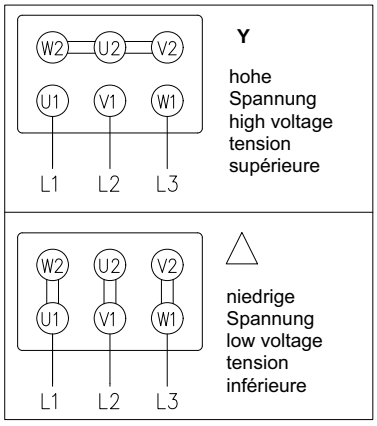

Drehstrommotor, polumschaltbar Dahlanderschaltung
Three phase motor, polechanging, Dahlander connection
Moteur triphasé à commutation de pôles, couplage Dahlander

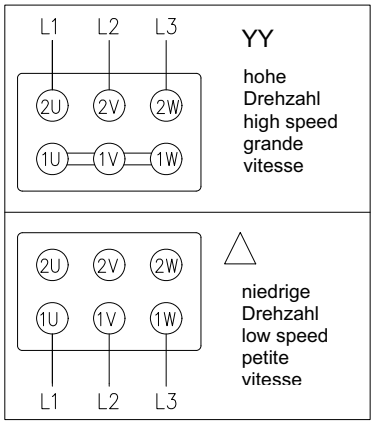

Drehstrommotor, polumschaltbar getrennte Wicklungen
Three phase motor, polechanging, separate windings
Moteur triphasé à commutation de pôles, bobinages séparés

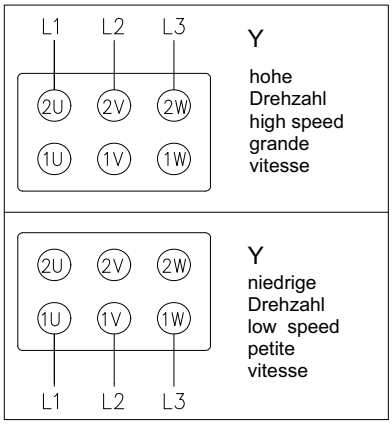

www.nord.com

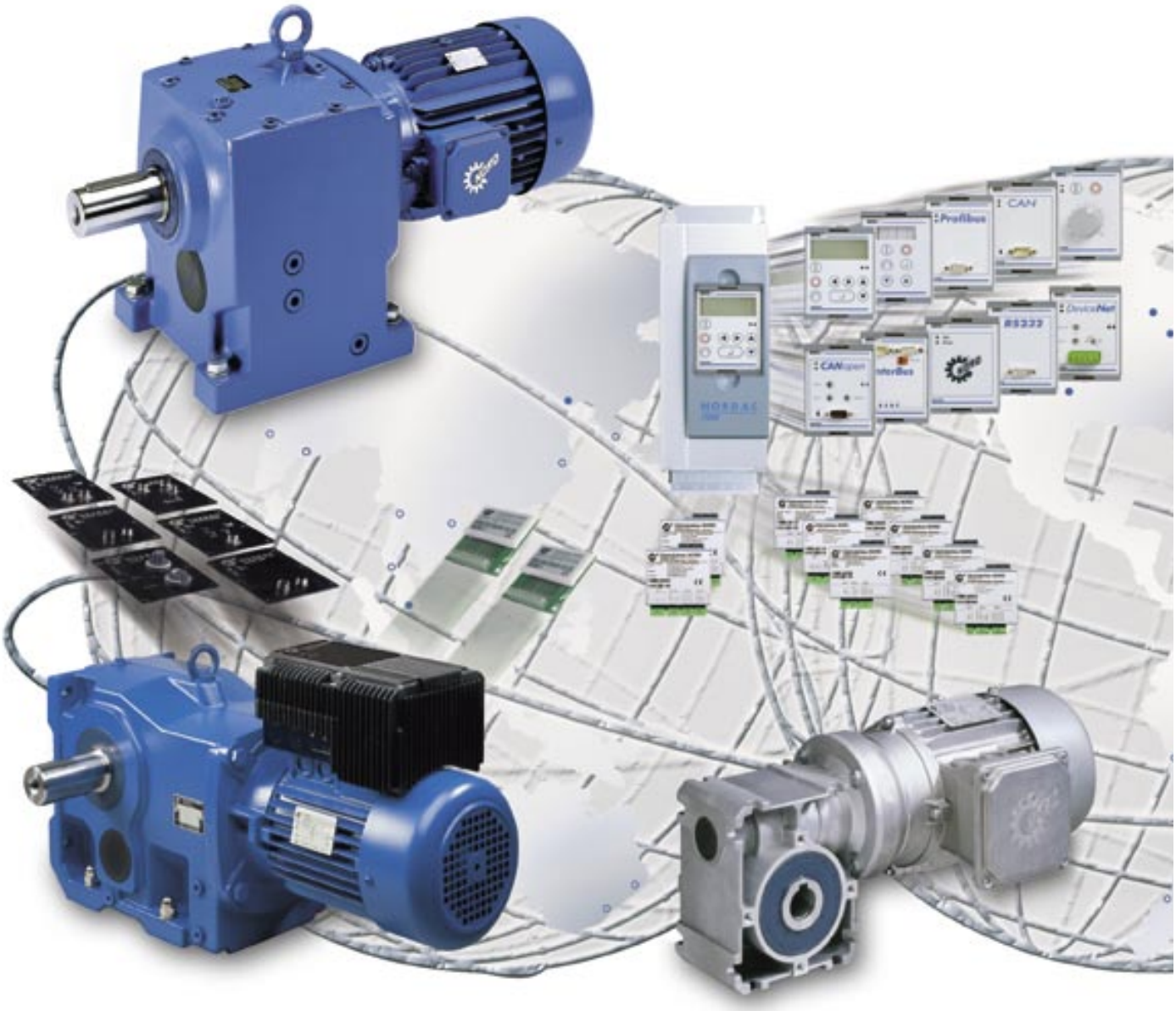

Mat.-Nr. 605 06 99 / 46 05

SED Ventilsysteme GmbH

Type 785/786

The Flowmeter Type 785 is based on the variable area principle.

The position of the top of the float against the scale on the tube shows the flow rate level.
In addition to the visual readout, this flowmeter may be fitted with minimum and maximum limit switches, or with a transmitter.

Technical Data:

Temperature range:

Tube Material Trogamid	= 60° C
Tube Material Polysulfon	= 60° C
End Connections uPVC	= 100° C
End Connections Malleable Iron	= 100° C
End Connections Stainless Steel	= 100° C

'O' Ring Seals
EPDM or FPM.

Float Material
Stainless Steel or PVC.

Accuracy Class
2,5 according to VDE/VDI 3513 Sheet 2 e.g.
± 0,625 % of end-scale, ± 1,875 % of measured value, inaccuracy in l/hr resp. m³/hr.

Maximum Pressure
10 bar bei Trogamid with PVC end connections
16 bar bei Polysulfon with metal end connections.

Standard Scales
l/hr and m³/hr based on water at 20° C or % scale.
Special scales available on request.

Limit Switches (K) and Transmitter (FG)
Limit switches or a continuous transmitter may be fitted to the flowmeter tube.
When these accessories are used a magnetic floater must also be used.

Installation Details: Controlled System
When the flowmeter is used in a system with valve control the following criteria must be observed:
1) With liquid flows the valve can be fitted before or after the flowmeter;
2) With gases, the valve must be fitted after the flowmeter.

Important!
The floater in the flowmeter reacts very sensitively to any change in flow rate, therefore any valve setting adjustment must be gradual and slow.

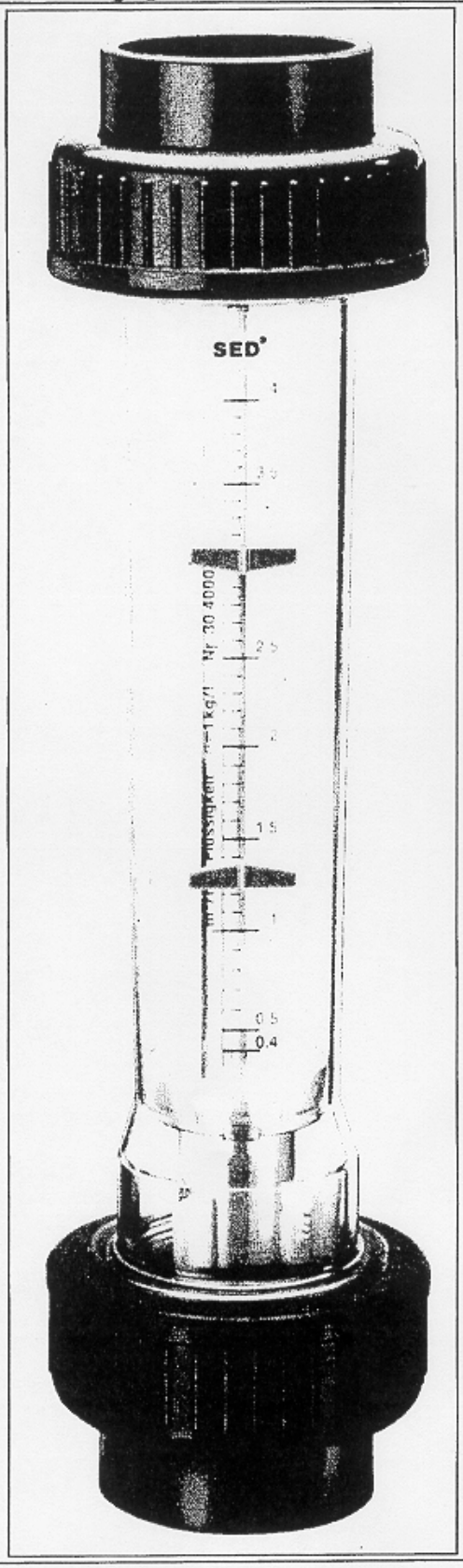

Beck.

The factory-set pressure switches.

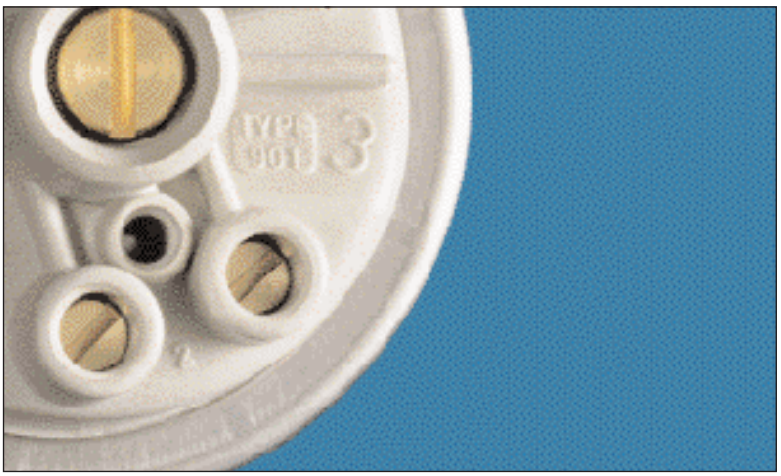

Pressure switch 901

with factory-set pressure setting

Application

Factory-set pressure switch monitoring overpressure, vacuum or differential pressure of liquid and gaseous – also aggressive – media.

Pressure setting and switching differential are factory-set by the manufacturer.

Temperature range

Ambient temperature from –20° C to 85° C.
Temperature of media up to 85° C or 130° C depending on material of pressure connection and diaphragm.

Diaphragm material

Depending on media NBR, Silicone, Viton®, EPDM.
For 901.30 Silicone, others upon request.

Electrical rating

Values indicated for resistive load

AgCdO-contacts:	6 (1.5) A/250 VAC
	2 A/24 VDC
Gold-plated contacts:	100 mA/24 VAC
	30 mA/24 VDC

AgCdO-contacts up to 10 A/250 VAC can be supplied upon request.

Electrical connection

AMP connection 6.3 mm x 0.8 mm DIN 46244.

Arrangement of contacts

for 901.1x, 901.30, 901.41, 901.51

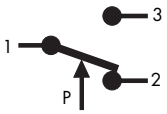

only for 901.2x

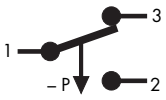

Approvals

CE conformance according to EC Low Voltage Directive 73/23/EEC. Product types tested by TÜV Südwest.

Life

Minimum 10^6 cycles.

Damping

Restrictors alternatively with 0.3/0.5/0.8 mm diameter.

Accessories

Various mounting brackets and protection caps with IP 44, IP 54 and IP 65.

Mounting position

Mounting in any position, to be specified for settings below 100 mbar.

Pressure connection

Type	Tube connection			Threaded connection					
	5.0 mm FS	6.5 mm FS	10.0 mm FS	M 10 x1	G 1/8	M 10 x1	G 1/8	G 1/4	G 1/2
901.1x	PA	PA PPS	PA PPS	PA PVDF	PA PVDF	CuZn40	CuZn40	CuZn40 PVDF	CuZn40
901.2x	PA	PA PPS	PA PPS	PA PVDF	PA PVDF	CuZn40	CuZn40	CuZn40 PVDF	CuZn40
901.30		PA							
901.41						CuZn40	CuZn40	CuZn40 PVDF	CuZn40
901.51						CuZn40	CuZn40	CuZn40 PVDF	CuZn40

PA = polyamide, PVDF = polyvinyldifluoride, PPS = polyphenylensulfide, CuZn40 = brass, FS = fastening spring

For temperature above 85° C brass, PVDF or PPS pressure connection is required. Upon request pressure connections of other sizes, other plastics or stainless steel are available.

Viton® is a registered trademark of DuPont Dow Elastomers.



Overpressure range

Type	Factory-set trip pressure		Standard switching differential		Tolerance band in % of trip pressure	Maximum positive working pressure	Maximum negative working pressure
	between	and	lower end of range	upper end of range		standard/ extended	standard/ extended
901.1x	5 mbar	200 mbar	2.5 mbar	50 mbar	10 %	0.5/4 bar	–/–1 bar
	200 mbar	1.000 mbar	50 mbar	150 mbar	10 %	1/4 bar	–/–1 bar
901.41	500 mbar	3.000 mbar	200 mbar	600 mbar	10 %	7 bar	–1 bar
901.51	1.0 bar	12 bar	0.2 – 0.5 bar	1.0 – 2.0 bar	10 %	25 bar	–1 bar

Vacuum range

Type	Factory-set trip pressure		Standard switching differential		Tolerance band in % of trip pressure	Maximum positive working pressure	Maximum negative working pressure
	between	and	lower end of range	upper end of range		standard/ extended	standard/ extended
901.2x	– 5 mbar	– 200 mbar	2.5 mbar	50 mbar	10 %	0.5/4 bar	–1 bar
	– 200 mbar	– 900 mbar	50 mbar	150 mbar	10 %	1/4 bar	–1 bar

Differential pressure range

Type	Factory-set trip pressure		Standard switching differential		Tolerance band in % of trip pressure	Maximum positive working pressure	Maximum negative working pressure
	between	and	lower end of range	upper end of range		standard/ extended	standard/ extended
901.30	5 mbar	50 mbar	2.5 mbar	25 mbar	10 %	100 mbar	–100 mbar

Pressure switch 901

with factory-set pressure setting

901.10/20

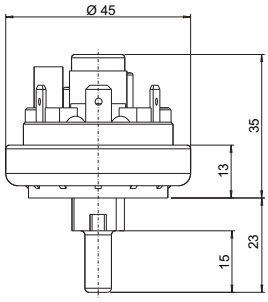

901.30

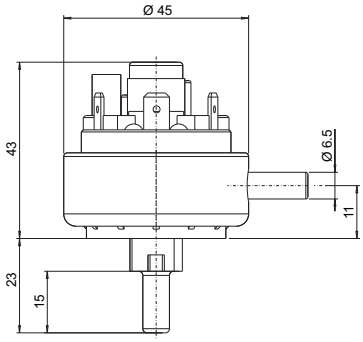

Protection caps
6321 IP 10

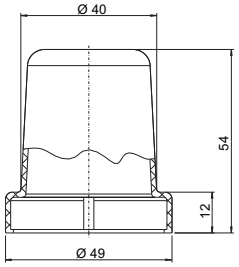

6329 IP 44

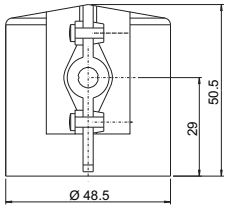

901.11/21/41

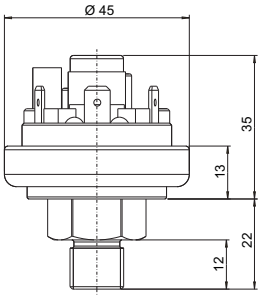

901.51

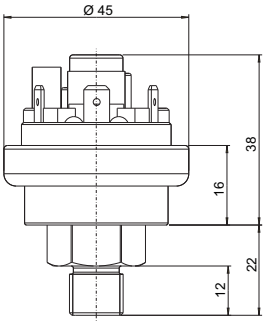

6371 IP 54 / 6372 IP 65

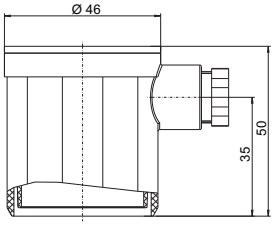

Mounting brackets

6403

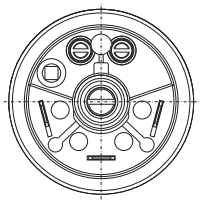

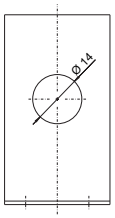

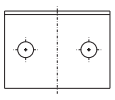

6404

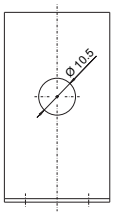

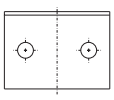

6405

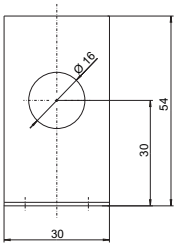

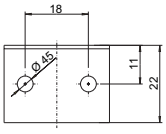

6374 IP 54 / 6375 IP 65

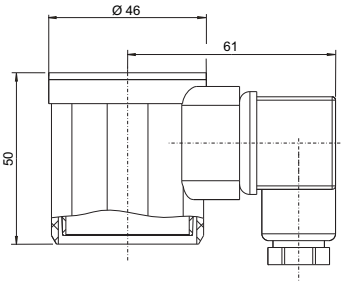

Beck GmbH
Druckkontrolltechnik
P.O.Box 10 01 36
D-70745 Leinfelden, Germany
Phone +49 711 7 90 83-0
Fax +49 711 7 90 83-83
e-mail sales@beck-sensors.com
http://www.beck-sensors.com

DB 901F ENG 04/01

VENTIL & INSTRUMENT AB

VM 7685

Pressure Reducing Valve, 1/2'' - 4'', PN 25.



Beskrivning

Pressure Reducing Valve for water and pressure air.
Compensated operation.
Outlet pressure gauge connections 1/4'' on both sides.
Outlet pressure can be adjusted between 0.5 and 6 bar.
Factory preadjustment: 3 bar.

Accessories

Pressure Gauge with body diameter 2'', connection DN 1/4'', 0-10 bar (VM 9710).

Material

Body	Nickel-plated brass

Technical data

Size, inches	1/2	3/4	1	1 1/4	1 1/2	2	2 1/2	3	4
Maximum inlet pressure	25	25	25	25	25	25	25	25	25
Min and Max working teperatures 0°C-130°C	•	•	•	•	•	•	•	•	•

(• = standard)

Valve Sizing Chart

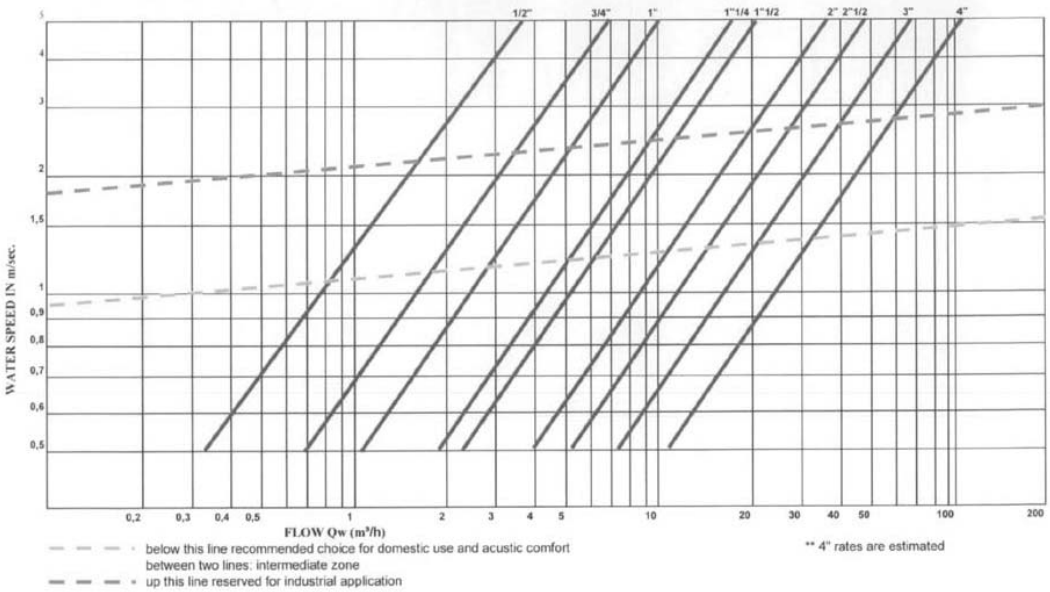

Head Quarter
KALMAR
Tel. 0480 - 42 91 00
Fax. 0480 - 42 91 20

Sales Offices
STOCKHOLM
Tel. 08 - 685 45 00
Fax. 08 - 685 45 19

GÄVLE
Tel. 026 - 54 36 00
Fax. 026 - 54 36 09

SUNDSVALL
Tel. 060 - 61 79 77
Fax. 060 - 61 79 77

GÖTEBORG
Tel. 031 - 86 84 50
Fax. 031 - 86 84 59

HÄSSLEHOLM
Tel. 0451 - 38 83 50
Fax. 0451 - 38 83 54

www.ventim.se

Dimension Sk

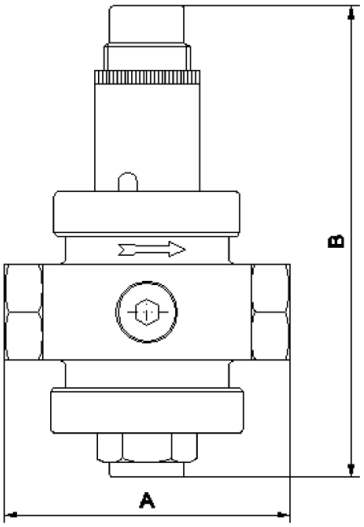

Dimension Table

Size, inches	1/2	3/4	1	1 1/4	1 1/2	2	2 1/2	3	4
A (mm)	77	85	89	125	130	138	148	177	190
B (mm)	120	150	160	220	220	250	256	285	310

Mounting
Can be installed in any position: vertical, horizontal, oblique.

Maintenance
The valve is maintenance free.

Order Information

Size	Art nr
1/2	7685015
3/4	7685020
1	7685025
1 1/4	7685032
1 1/2	7685040
2	7685050
2 1/2	7685065
3	7685080
4	7685100

In the interest of technical progress: designs and dimensions may be subject to modification.

KA 094R/09/a3/04.00
No.: 510 00917

FTE 31

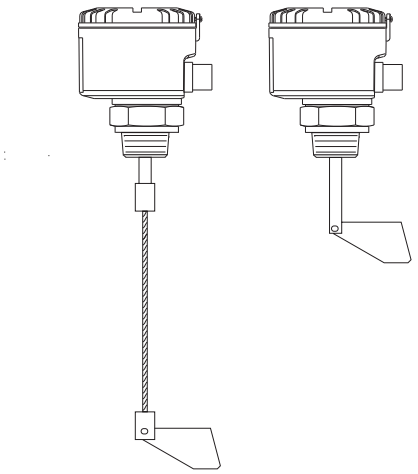

d **Füllstandgrenzschalter**
e **Level Limit Switch**
f **Détecteur de niveau**

Endress+Hauser
The Power of Know How

d	Inhalt	Seite
	Sicherheitshinweise	3
	Einbaubeispiele	4
	Funktion	7
	Anschluss	8
	Wartung	10
	Technische Daten	11
	Abmessungen und Werkstoffe	13
	Geräteidentifikation	14
	Ergänzende Dokumentation	16

e	Contents	Page
	Notes on safety	3
	Mounting examples	4
	Function	7
	Connection	8
	Maintenance	10
	Technical data	11
	Dimensions and materials	13
	Device identification	14
	Supplementary documentation	16

f	Sommaire	Page
	Conseils de sécurité	3
	Exemples d'implantation	4
	Fonction	7
	Raccordement	8
	Entretien	10
	Caractéristiques techniques	11
	Dimensions et matériaux	13
	Dénomination	14
	Documentation complémentaire	16

d Sicherheitshinweise

Der FTE 31 darf nur als Füllstandsgrenzschalter für spezifizierte Schüttgüter eingesetzt werden. Bei unsachgemäßem Gebrauch können Gefahren von ihm ausgehen.

Das Gerät darf nur von **qualifiziertem und autorisiertem Fachpersonal unter besonderer Beachtung dieser Betriebsanleitung**, der gesetzlichen Vorschriften und der Zertifikate (je nach Anwendung) eingebaut, angeschlossen, in Betrieb genommen und gewartet werden.



Achtung!
= verboten - führt zu fehlerhaftem Betrieb oder Zerstörung.

e Notes on safety

The FTE 31 paddle switch is a level limit switch, designed for use in fine-grained bulk solids in non-hazardous areas.
If used incorrectly it is possible that application-related dangers may arise.
The FTE 31 paddle switch may be installed, connected, commissioned, operated and maintained **by qualified and authorised personnel only,** under strict observance of these operating instructions, any relevant standards, legal requirements, and, where appropriate, the certificate.



Caution!
= forbidden - leads to incorrect operation or destruction.

f Conseils de sécurité

Le FTE 31 est un détecteur de niveau à palette rotative pour produits solides en vrac de faible granulométrie, utilisable en zones non explosibles. Il peut être source de danger en cas d´utilisation non conforme aux prescriptions. L´appareil ne doit être installé, raccordé, mis en service et maintenu **que par un personnel qualifié et autorisé,** qui tiendra compte des indications contenues dans la présente mise en service, des normes en vigueur et des certificats disponibles (selon l´application).



Attention!
= interdit - peut provoquer des dysfonctionnements ou la destruction.

d **Einbaubeispiele**
* Schutzdach

e **Mounting examples**
* Protective roof

f **Exemples d´implantation**
* Déflecteur

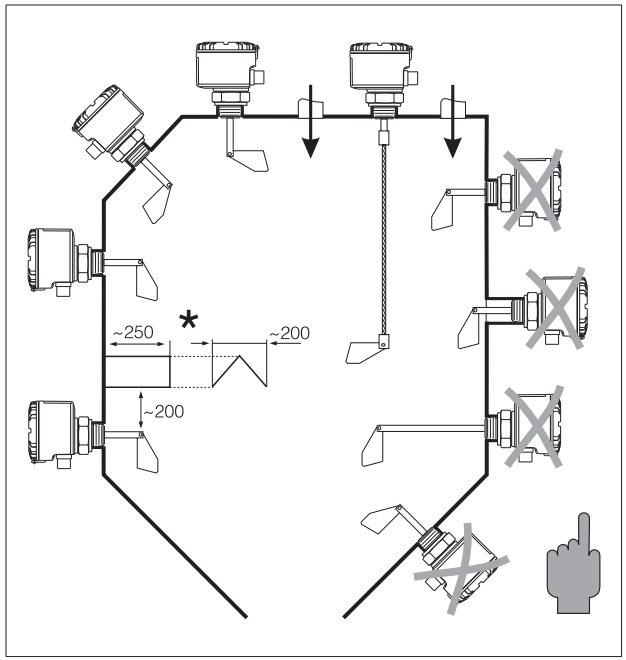

d Füllstandgrenzschalter FTE 31 einschrauben
Nicht am Gehäuse drehen!

e Screw the FTE 31 paddle switch into the process connection
Don´t use housing to turn!

f Visser le détecteur à palette rotative FTE 31
Ne pas se servir du boîtier!

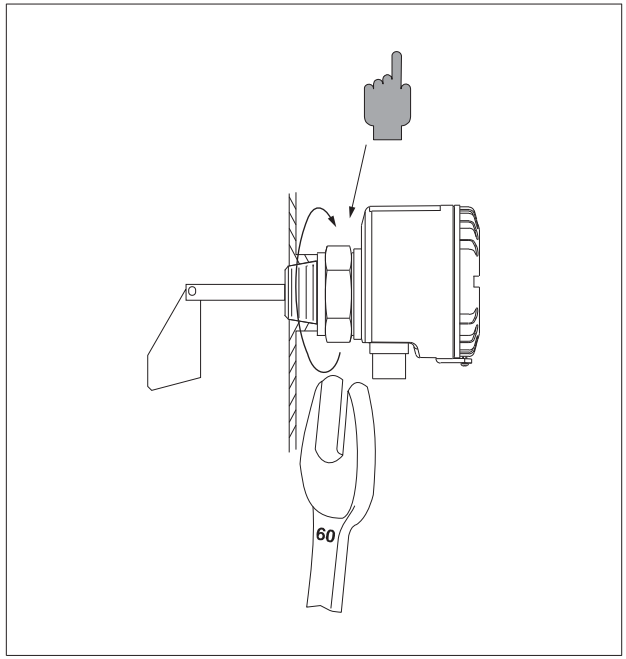

d Gehäuse in richtige Position drehen.

e Screw the housing to the correct position.

f Positionner le boîtier.

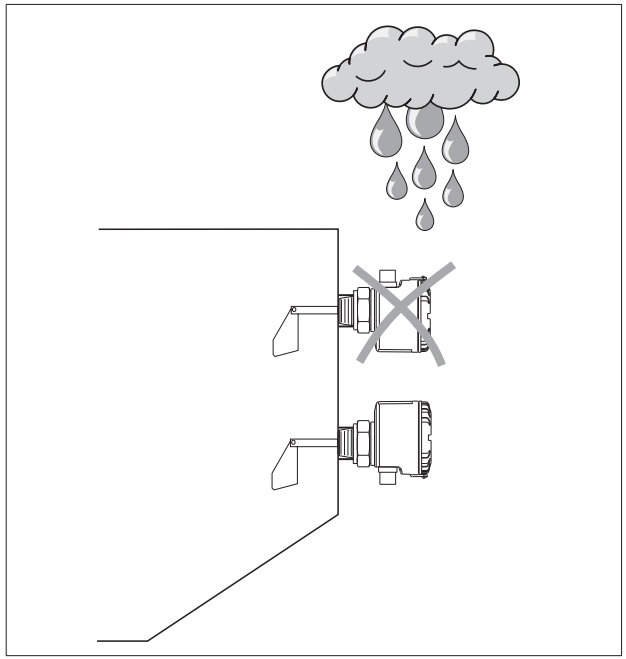

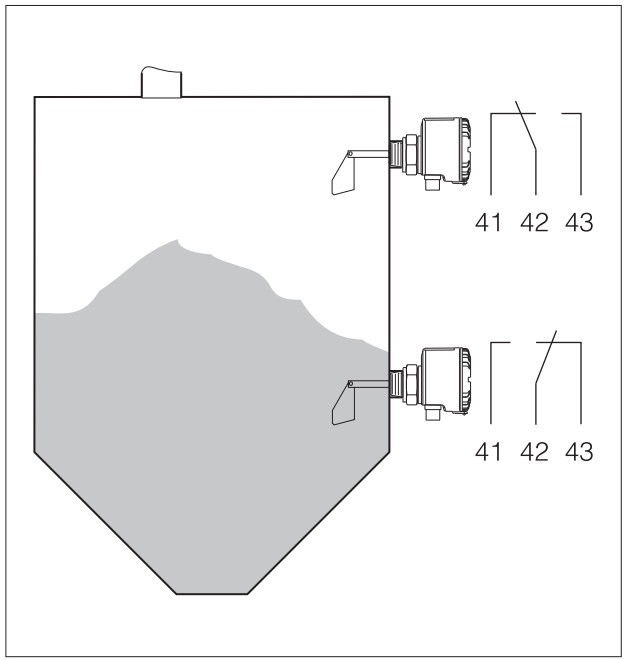

d **Funktion**

e **Function**

f **Fonction**

d **Anschluss FTE 31**

e **Connection FTE 31**

f **Raccordement FTE 31**

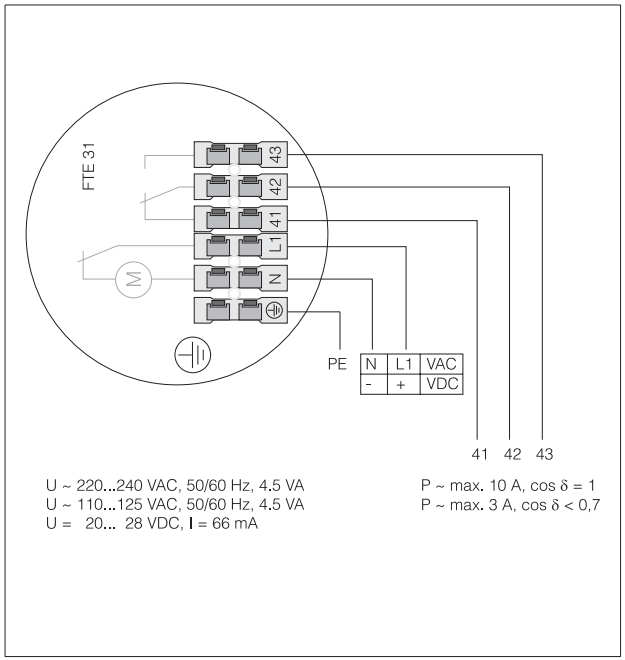

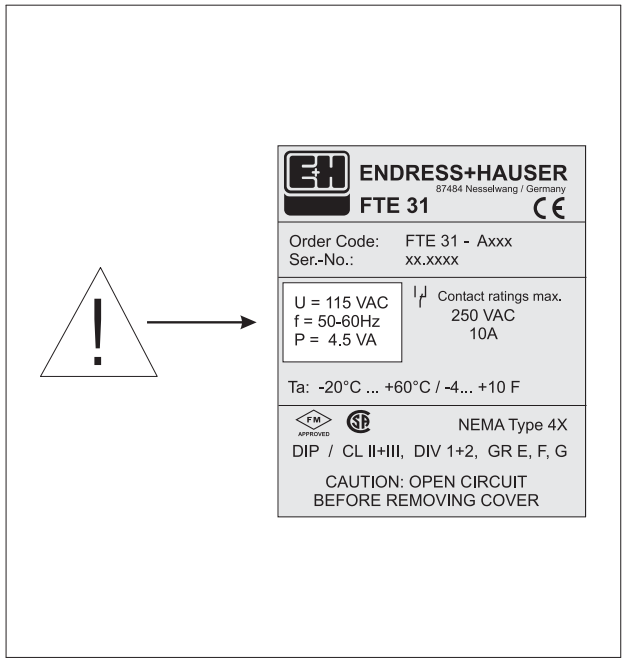

d Beachten Sie die Anschluss-spannung auf dem Typen-schild

e Take note of the power supply indicated on the legend plate

f Tenir complete de la tension indiquée sur la plaque signalétique

d **Wartung**
Anbackungen entfernen

e **Maintenance**
Build up removal

f **Entretien**
Enlever les incrustations

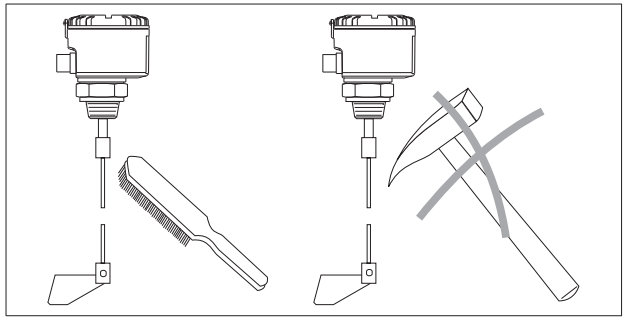

d **Nicht** besteigen!

e **Don´t** use as a step!

f **Ne pas** marcher sur les lames vibrantes!

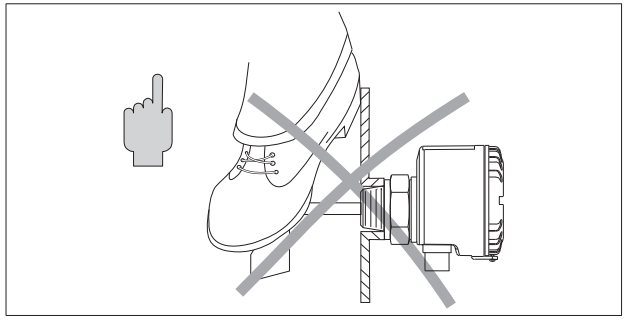

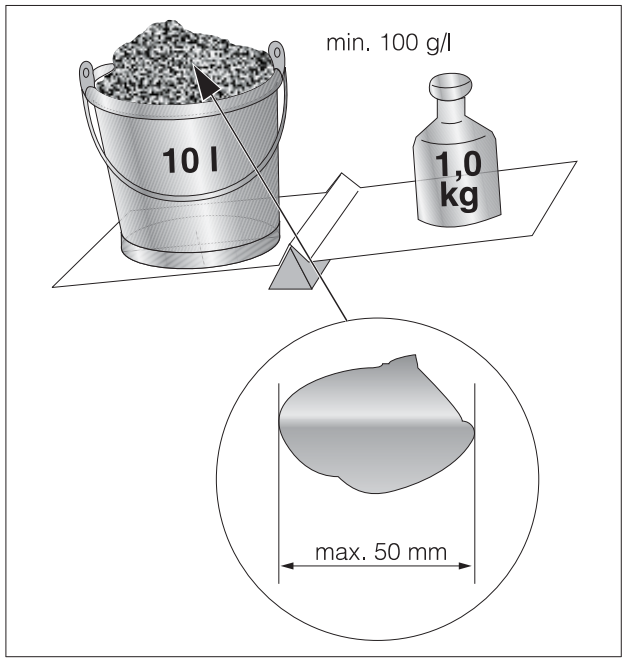

d **Technische Daten**
Schüttgröße und
Korngewicht

e **Technical data**
Solids density
and grain size in mm.

f **Caractéristiques techniques**
Densité apparente
et granulométrie en mm.

d Umgebungstemperatur T_a
Betriebstemperatur T_M
Betriebsdruck p_e

e Ambient temperature T_a
Operating temperature T_M
Operating pressure p_e

f Température ambiante T_a
Température de service T_M
Pression de service p_e

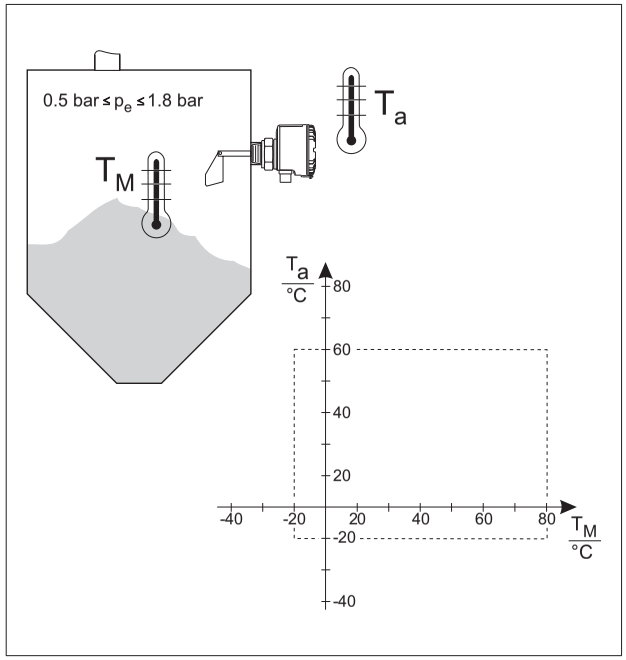

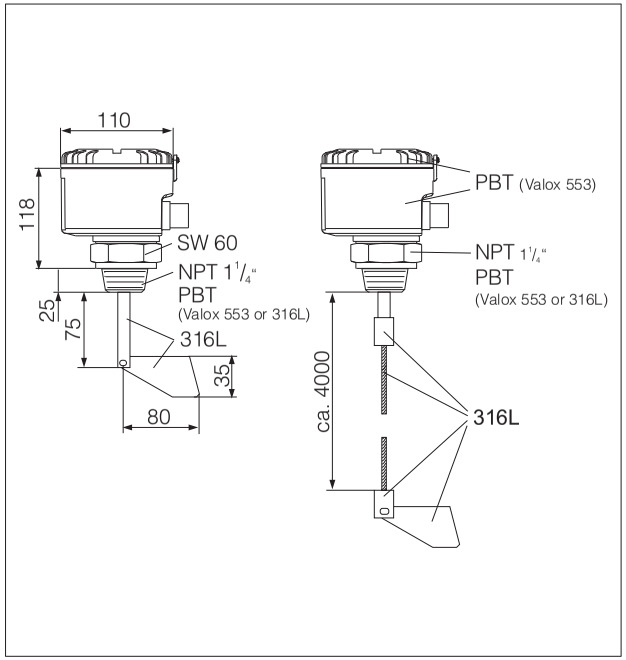

d **Abmessungen in mm und Werkstoffe**

e **Dimensions in mm and materials**

f **Dimensions en mm et matériaux**

d **Geräte Identifikation**

e **Device identification**

f **Dénomination**

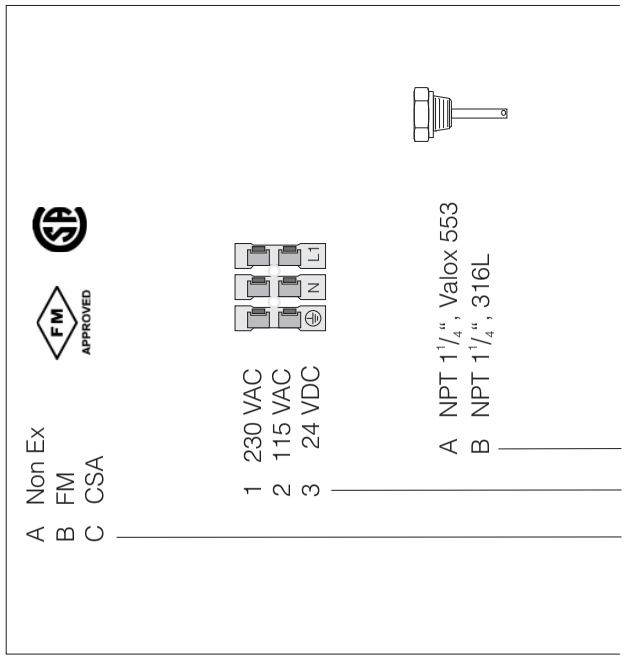

FTE31-
⇐ Order-Code
1 Standard (316L)
2 fold-down paddle (316L)
1
2
1 75 mm
2 4 m, 1.4571
A-F 100 mm - 600 mm
1,2/A-F = 316L
A-F

d	**Ergänzende Dokumentation**	TI 068R/09/de	Technische Information Füllstandgrenzschalter FTE 31
e	**Supplementary documentation**	TI 068R/09/en	Technical information Paddle limit switch FTE 31
f	**Documentation complémentaire**		

d **Notizen:**

e **Notes:**

f **Notes:**

d **Notizen:**

e **Notes:**

f **Notes:**

Austria
Endress+Hauser Ges.m.b.H.
Wien
Tel. (0222) 88056-0, Fax (0222) 88056-35

Belgium, Luxembourg
Endress+Hauser S.A./N.V.
Brussels
Tel. (02) 2480600, Fax (02) 2480553

Canada
Endress+Hauser Ltd.
Burlington, Ontario
Tel. (905) 6819292, Fax (905) 6819444

Denmark
Endress+Hauser A/S
Søborg
Tel. 70 13 11 32, Fax 70 13 21 33

Finland
Endress+Hauser Oy
Espoo
Tel. (90) 8596155, Fax (90) 8596055

France
Endress+Hauser
Huningue
Tel. 89696768, Fax 89694802

Germany
Endress+Hauser Messtechnik GmbH+Co.
Weil am Rhein
Tel. (07621) 97501, Fax (07621) 975555

Great Britain
Endress+Hauser Ltd.
Manchester
Tel. (0161) 2865000, Fax (0161) 9981841

Hong Kong
Endress+Hauser (H.K.) Ltd.
Hong Kong
Tel. 25283120, Fax 28654171

Italy
Endress+Hauser Italia S.p.A.
Cernusco s/N Milano
Tel. (02) 92106421, Fax (02) 92107153

Japan
Sakura Endress Co., Ltd.
Tokyo
Tel. (0422) 540611, Fax (0422) 550275

Malaysia
Endress+Hauser (M) Sdn. Bhd.
Petaling Jaya, Selangor Darul Ehsan
Tel. (03) 7334848, Fax (03) 7338800

Netherlands
Endress+Hauser B.V.
Naarden
Tel. (035) 6958611, Fax (035) 6958825

Norway
Endress+Hauser A/S
Lierskogen
Tel. (032) 859850, Fax (032) 859851

Singapore
Endress+Hauser (S.E.A.) Pte., Ltd.
Singapore
Tel. 5 66 82 22, Fax 5 66 68 48

South Africa
Endress+Hauser Pty. Ltd.
Sandton
Tel. (011) 4441386, Fax (011) 4441977

Spain
Endress+Hauser S.A.
Barcelona
Tel. (93) 4 80 33 66, Fax (93) 4 73 38 39

Sweden
Endress+Hauser AB
Sollentuna
Tel. (08) 6261600, Fax (08) 6269477

Switzerland
Endress+Hauser AG
Reinach/BL 1
Tel. (061) 7157575, Fax (061) 7111650

Thailand
Endress+Hauser Ltd.
Bangkok
Tel. (2) 9 96 78 11 -20, Fax (2) 9 96 78 10

USA
Endress+Hauser Inc.
Greenwood, Indiana
Tel. (317) 535-7138, Fax (317) 535-1489

International
Endress+Hauser GmbH+Co.
Instruments International
Weil am Rhein
Tel. (07621) 97502, Fax (07621) 975345

http://www.endress.com

Endress+Hauser
The Power of Know How

KA 094R/09/a3/04.00 Mat-Nr.: 510 00917 SS/CV5

- **Miniature, 22 mm normally closed and normally open models**
- **Sub-base mounted and manifold mounted**
- **Manual override as standard**
- **Encapsulated coils with very rapid fitting**

3/2 Poppet Valves
Electrically Actuated
G1/8

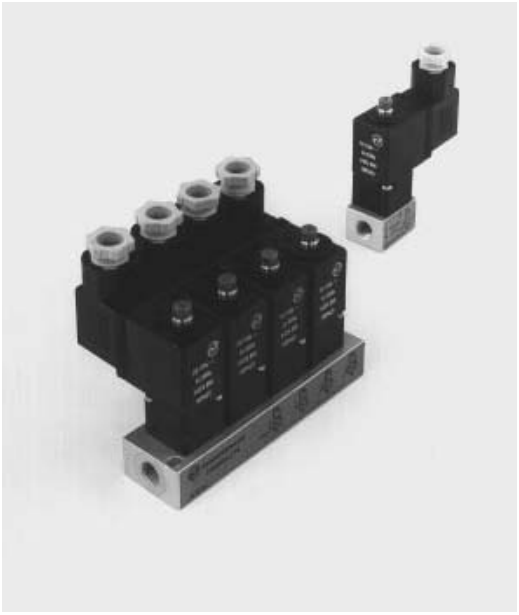

Technical Data

Medium:
Compressed air, filtered, lubricated and non-lubricated

Operation:
Poppet valve, directly actuated with spring return

Mounting:
Through-holes with thread in sub-base

Port Size:
G1/8

Operating Pressure:
0 - 10 bar M/49, DM/49
0 - 7 bar M/149, DM/149

Flow (to CETOP RP50P):
Conductance $dm^3/s/bar$ 0,25 M/49, DM/49
Conductance $dm^3/s/bar$ 0,297 M/149, DM/149
Critical pressure ratio 0,43 M/49, DM/49
Critical pressure ratio 0,117 M/149, DM/149
Cv 0,067
Cv 0,04 -/127

Operating Temperature:
-5°C* to +50°C supply air
+5°C to +50°C ambient

*Consult our Technical Service for use below +2°C

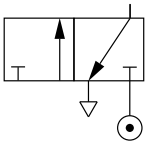

Materials

Plastic encapsulated coil, moulded plastic manual override base, stainless steel armature tube and spring, aluminium sub-base, nitrile rubber seals.

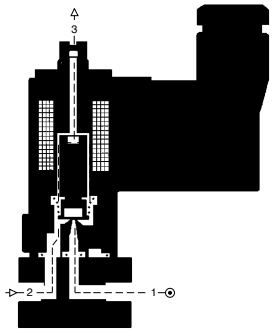

Ordering Information

To order, quote model number followed by voltage code shown in the tables overleaf, e.g. M/49/167 for a normally closed low power model suitable for a 220V 50Hz electrical supply. Replacement coil and terminal box assemblies can also be supplied, quote required model number with 'Q' prefix before the 'M' and '/28' suffix after the voltage code as shown in the table overleaf. For manifold models order the required number as indicated by the 'T' suffix in the model number, e.g. 4 off QM/48/10/28 for DM/149/10/T4.

General Information

Model	Operation	Manifold Models - Number of valves	Weight (Kg)	Coil and Terminal Box Assembly	Spares kit
M/49	Normally closed	–	0,14	QM/48/*/28	QM/48/00
DM/49/T2	Normally closed	2	0,31	QM/48/*/28	QM/48/T2/00
DM/49/T3	Normally closed	3	0,45	QM/48/*/28	QM/48/T3/00
DM/49/T4	Normally closed	4	0,60	QM/48/*/28	QM/48/T4/00
M/149	Normally open	–	0,14	QM/48/*/28	QM/48/00

*Insert voltage code, e.g. QM/48/173/28 for the low power 24V d.c. model.

Electrical Details for M/49 and M/149 Valves

Voltage	Codes	Availability
12 V d.c.	160	M/49, DM/49
24 V d.c. (low power)	173	M/49, DM/49
24 V d.c.	127	M/49, DM/49, M/149,
24 V 50/60Hz	164	M/49, DM/49, M/149
48 V 50/60Hz	165	M/49, DM/49, M/149
110/120 V 50/60Hz	166	M/49, DM/49, M/149
220/240 V 50/60Hz	167	M/49, DM/49, M/149

Note: DC version of M/149 available on request.

Voltage Tolerances:	d.c.: +10/–15% a.c.: +10/–15%
Power:	d.c.: 2 W (low power - 0,5 W on 24 V)
Inrush/Hold:	a.c.: 4/2,5 VA (9/5 VA on 220/240 V) 100%% E.D.
Inlet Orifice:	1,0 mm
Operating Pressure:	0 - 10 bar
Terminal Box:	3 pin plug with cable grip (DIN 43650 Form B) May be rotated 180˚
Cable Entry:	Pg9
Solenoid Coil:	May be rotated at 90˚ intervals
Manual Override:	Standard, turn 180˚ anti-clockwise to operate, turn clockwise to release
Protection Class:	IP65 (DIN 40050)
Typical Response Times:	12 ms on 15 ms off

Warning

These products are intended for use in industrial compressed air systems only. Do not use these products where *pressures* and *temperatures* can exceed those listed under **'Technical Data'**.
Before using these products with fluids other than those specified, for non-industrial applications, life-support systems, or other applications not within published specifications, consult NORGREN MARTONAIR.
Through misuse, age, or malfunction, components used in fluid power systems can fail in various modes. The system designer is warned to consider the failure modes of all component parts used in fluid power systems and to provide adequate safeguards to prevent personal injury or damage to equipment in the event of such failure.
System designers must provide a warning to end users in the system instructional manual if protection against a failure mode cannot be adequately provided.
System designers and end users are cautioned to review specific warnings found in instruction sheets packed and shipped with these products.

VENTIL & INSTRUMENT AB

VM 8631

2-way/2-position solenoid valve, normally closed, DN 15-50, type 21WAKB - 21W7KB

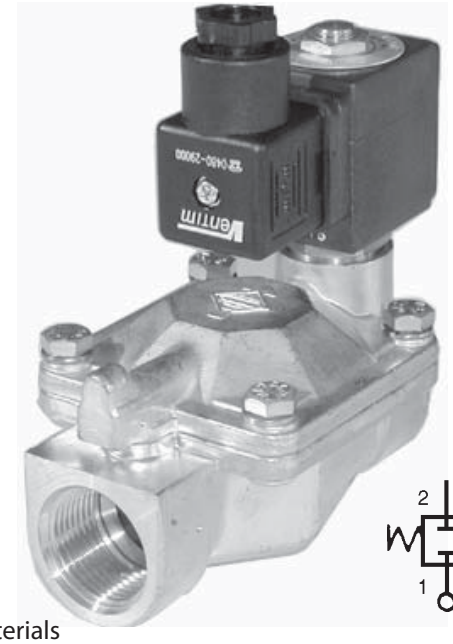

General
Soft acting servo controlled diaphragm valve for water, air and neutral gases.
Viscosity max ca 12 mm^2/s.
Standard voltages: 24, 110, 230 V / 50 Hz, 24 V DC.

Options
Manual override and adjustable closing time
5W-coil
Different voltages: 12-380 V AC/DC.
Sealing materials: EPDM -10°C to +140°C
Viton -10°C to+140°C

Normally open
Explosion proof
Stainless steel design - VM 8641

Materials

G	1/2	3/4	1	11/4	11/2	2
DN	15	20	25	32	40	50
Valve body in brass	•	•	•	•	•	•
Internal parts in stainless steel	•	•	•	•	•	•
Sealings in Buna -10°C to +90°C	•	•	•	•	•	•

Tecnichal data

G	1/2	3/4	1	11/4	11/2	2
DN	15	20	25	32	40	50
Pressure range 0,2-16 bar AC/DC	•	•	•			
Pressure range 0,2-10 bar AC/DC				•	•	•
Kv-value m^3/h vatten	4,2	8,4	11,4	24,0	31,2	45,0
QNn-value l/min (air)	4527	9000	12300	25900	33600	48500
Bore size (Ø mm)	13	19	25	35	40	50
Ambient temp with cable contact max 55°C	•	•	•	•	•	•
Protection class with cable contact IP65	•	•	•	•	•	•
Coil 8 W - 100% ED	•	•	•	•	•	•
Power consumption [1]: AC 25 VA (start), 14,5 VA (hold)	•	•	•	•	•	•
DC 8 W	•	•	•	•	•	•

[1]) in duty

(• = standard)

Voltage tolerance: DC +10% -5%
AC +10% -15%

Kvalitets- & Miljöcertifierat enligt ISO 9002 och ISO 14001

Huvudkontor
KALMAR
Tel. 0480 - 42 91 00
Fax. 0480 - 42 91 20

Filialkontor
STOCKHOLM
Tel. 08 - 685 45 00
Fax. 08 - 685 45 19

GÄVLE
Tel. 026 - 54 36 00
Fax. 026 - 54 36 09

GÖTEBORG
Tel. 031 - 86 84 50
Fax. 031 - 86 84 59

HÄSSLEHOLM
Tel. 0451 - 38 83 50
Fax. 0451 - 38 83 54

www.ventim.se

Dimensional drawing

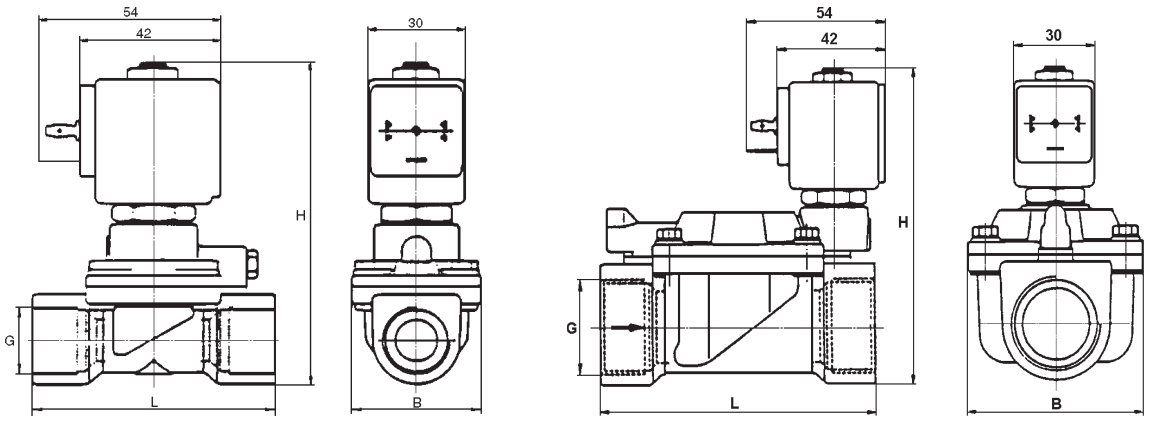

Dimensional data

G	1/2	3/4	1	11/4	11/2	2
DN	15	20	25	32	40	50
L	66	104	104	144	144	172
H	97	105	112	125	125	141
B	40	65	65	98	98	118
Weight, kg	0,52	1,03	1,17	2,65	2,65	4,80

Mounting
Optional (vertical magnet system is recommended). If polluted fluid, strainer type VM 6381 is recommended.
When mounted direct to control system, use transient protection or low effect coil.

Ordering:
Please specify desired voltage. 24, 110, 230 V / 50 Hz, 24 V DC are standard voltages. Other voltage on request.

Cable contact should be ordered separately, type VM 8700.

Ordering numbers

DN	Art no	RSK-no
15	863121WA4KOB130	452 0923
20	863121W3KB190	452 0924
25	863121W4KB250	452 0925
32	863121W5KB350	
40	863121W6KB400	
50	863121W7KB500	

In the interest of technical progress, designs and dimensions may be subject to modification

VENTIL & INSTRUMENT AB

VM 8651

3/2-way solenoid valve, normally closed, DN 6-8, type 31A3AB - 31A2AB

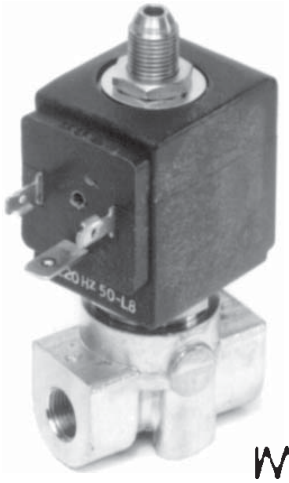

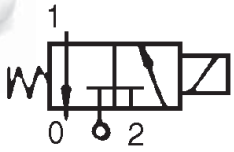

General
Direct controlled solenoid valve for water, air and gases.
Viscosity max ~20 mm^2/s.
Standard voltage: 24, 110, 230 V / 50 Hz, 24 V DC.

Options
Different voltage 12-380 V AC/DC.
Universal function (for ex. normally open - VM 8652).
5W-design - VM 8653.
Coil with integrated cable.
Manual override.
Different sealing materials Viton -10°C till +140°C,
Ruby -40°C till +180°C.

Materials

G	1/8	1/4
DN	6	8
Valve body in brass	•	•
Internal parts in stainless steel	•	•
Sealings in NBR -10°C till +90°C	•	•

Technical data

G	1/8	1/4
DN	6	8
Max pressure, bar Ø 1,0 mm Rport Ø 2,5 mm	20	20
Max pressure, Ø 1,5 mm Rport Ø 2,5 mm	15	15
Max pressure, Ø 2,0 mm Rport Ø 2,5 mm	10	10
Max pressure, Ø 2,5 mm Rport Ø 2,5 mm	6	6
Max pressure, Ø 3,0 mm Rport Ø 2,5 mm	5	5
Kv-value m^3/h, water Ø 1,0 mm	0,048	0,048
Kv-value m^3/h, water Ø 1,5 mm	0,084	0,084
Kv-value m^3/h, water Ø 2,0 mm	0,12	0,12
Kv-value m^3/h, water Ø 2,5 mm	0,19	0,19
Kv-value m^3/h, water Ø 3,0 mm	0,24	0,24
Ambient temp. with cable head, max 55°C	•	•
Coil 8 W 100% ED	•	•
Protection class IP65	•	•
Power consumption [1]: AC 25 VA (start), 14,5 VA (hold)	•	•
DC8 W	•	•

[1]) in duty (• =standard)

Voltage tolerance: DC +10% -5%
AC +10% -15%

Kvalitets- & Miljöcertifierat enligt ISO 9002 och ISO 14001

Huvudkontor
KALMAR
Tel. 0480 - 42 91 00
Fax. 0480 - 42 91 20

Filialkontor
STOCKHOLM
Tel. 08 - 685 45 00
Fax. 08 - 685 45 19

GÄVLE
Tel. 026 - 54 36 00
Fax. 026 - 54 36 09

GÖTEBORG
Tel. 031 - 86 84 50
Fax. 031 - 86 84 59

HÄSSLEHOLM
Tel. 0451 - 38 83 50
Fax. 0451 - 38 83 54

www.ventim.se

Dimensional drawing

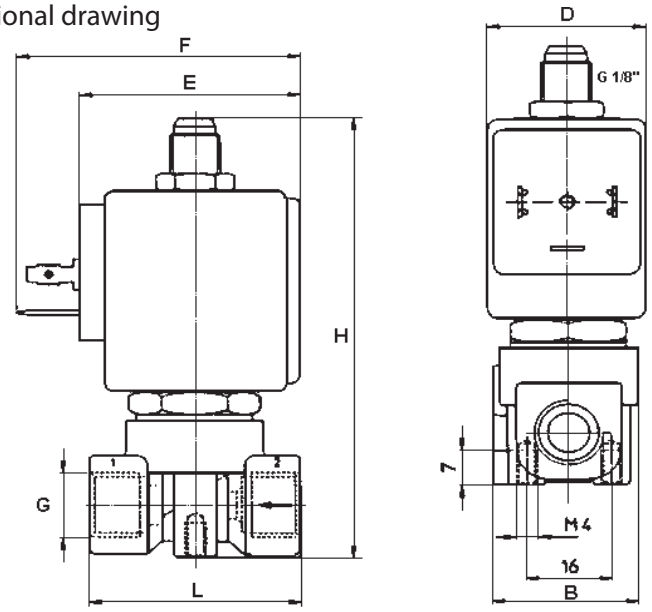

Dimensional data

G	1/8	1/4
DN	6	8
L	40	40
H	87	87
B	27	27
D	30	30
E	42	42
F	54	54
Weight,kg	0,30	0,30

Mounting
Optional (vertical magnet system is recomended).
If polluted fluids, strainer is recommended - type VM 6381.
When mounted direct to process control ystem, transient protection is recommended.

Ordering:
Please specify desired voltage 24, 110, 230 V / 50 Hz, 24 V DC.
Different voltages on request.

Please specify desired bore.

Cable head should be ordered separately, type VM 8700.

Ordering numbers		
DN	Art no	RSK-no
6	865131A3AB	
8	865131A2AB	

In the interest of technical progress, designs
and dimensions may be subject to modification

efectorsoo ifm electronic

Pressure sensors

PL2658

Electronic pressure sensor
PL26

Process connection G1 A

flush mounting
Zero and span adjustable
Programmable via EPS interface

Analogue output

Measuring range
-12.5...250 mbar
-5.0...100.4 inH2O
-1.25...25.00 kPa

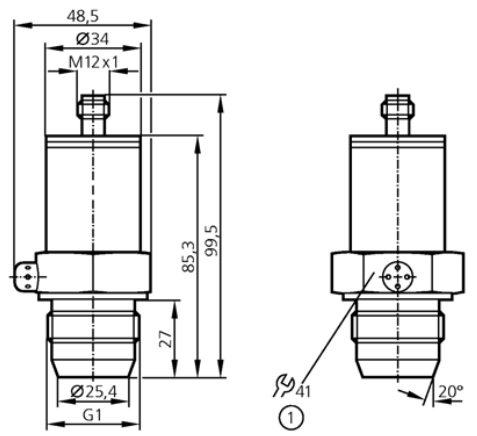

1: tightening torque 20 Nm

Application	**Type of pressure: relative pressure Hygienic systems, viscous media and liquids with suspended particles**		
Electrical design	**3-wire DC; 2-wire DC**		
Output	**4...20 mA analogue**		
Operating voltage [V]	14...30 DC		
Reverse polarity protection	yes		
Overload protection	yes		
Analogue output	4...20 mA		
Load for analogue output [ohms]	max. (Ub - 13 V) x 50; 550 at Ub = 24 V		
Pressure rating	10000 mbar	4000 inH2O	1000 kPa
Bursting pressure min.	30000 mbar	12000 inH2O	3000 kPa
Factory setting	ASP = 0 mbar; AEP = 250 mbar COF = 0.0; dAA = 0; Uni = mbar		
Setting range			
Analogue start point, ASP	-12.5...100.0 mbar	-5.0...40.2 inH2O	-1.25...10.00 kPa
Analogue end point, AEP	50.0...250.0 mbar	20.2...100.4 inH2O	5.00...25.00 kPa
in steps of	0.5 mbar	0.2 inH2O	0.05 kPa
Accuracy / deviations (in % of the span) Turn down 1:1			
Characteristics deviation *)	< ± 0.6		
Linearity	< ± 0.5		
Hysteresis	< ± 0.1		
Repeatability **)	< ± 0.1		
Long-term stability ***)	< ± 0.1		
Temperature coefficients (TEMPCO) in the temperature range 0...80° C (in% of the span per 10 K)			
greatest TEMPCO of the zero point	< ± 0.1		
greatest TEMPCO of the span	< ± 0.4		

efectorsoo ifm electronic

PL2658

Response time analogue output [ms]	3
Operating temperature [°C]	-25...80
Medium temperature [°C]	-25...80
Storage temperature [°C]	-40...100
Protection	IP 67, III
Insulation resistance [MΩ]	> 100 (500 V DC)
Shock resistance	DIN IEC 68-2-27:50 g (11 ms)
Vibration resistance	DIN IEC 68-2-6:20 g (10...2000 Hz)
Min. pressure cycles	100 million
EMC	EN 61000-4-2 ESD: 4 kV CD / 8 kV AD EN 61000-4-3 HF radiated: 10 V/m EN 61000-4-4 Burst: 2 kV EN 61000-4-6 HF conducted: 10 V
Housing material	stainless steel (316S12); PEI; FPM (Viton)
Materials (wetted parts)	stainless steel (316S12); ceramics (99.9 % Al2 O3); PTFE
Connection	M12 connector
Remarks	*) linearity, incl. hysteresis and repeatability; (limit value setting to DIN 16086) **) with temperature fluctuations < 10 K ***) in % of the span per year The 3A approval is only valid if adapters with 3A approval are used for installation.

Wiring

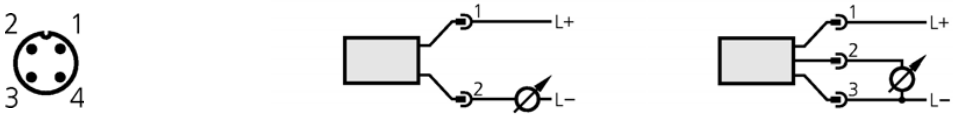

Pullman

OPERATING AND MAINTENANCE INSTRUCTIONS FOR PULLMAN MODEL PV350

We congratulate You on Your choice of a Pullman suction apparatus and thank You for the confidence You have thus shown us.

Take a few minutes to read through these instructions, which will give you some advice on how to use and maintain your new workmate.
If you use and maintain ypur suction apparatus correctly, it will continue to perform its work tasks for many years into the future.

Please always state the the type designation and serial number when ordering accessories and spare parts and in connection with technical questions concerning the suction apparatus.

This suction apparatur has type designation:.....

with serial number:.....

Model	Voltage	Power	Vacuum	Airflow	Sound-level
	Volt	Watt	kPa	l/min	dB(A)
PV350	230	1200	25	3200	79

SAFETY REGULATIONS

Pullman Scandinavian AB cannot be held liable, as the manufacturer, for damage caused by negligence or incorrect use.
Do not suck up liquids and chemicals, which can release toxic or explosive gases, and particles which can cause ignition as a result of being charged with static electricity.

IMPORTANT NOTE REGARDING ELECTRICAL DETAILS

Before carrying out all cleanig and service work on the suction apparatus, the plug on the electrical main cable must be removed from the electrical outlet/wall socket. Check that the electrical cable and plug are whole and clean. Electrical details must always be serviced by specialist electricians or a qualified service workshop. During work and in connection with cleaning, no electrical details may be exposed to direct flushing. This can cause water to penetrate into electrical parts and cause damage.

WARRANTY

All Pullman suction devises and accessories have a 12-month factory warranty for material and manufacturing defects. Do not attempt to repair the suction apparatus without the consent of the manufactur.
The warranty does not cover defects which are the result of normal wear and tear, negligence, defective use, unauthorised repair or the suction apparatus being connected to the incorrect voltage.
In the event of any complaint, the suction apparatus or an agreed part of it must be returned to us or our authorised representative for warranty examination and for any warranty repair or replacement.

STARTING

Connect the electric plug of the suction apparatus to an electrical outlet with the correct voltage (see the designation plate). Start the suction apparatus with the switch.

AFTER USE

Switch off the suction apparatus with the switch. Remove the plug on the electrical cable from the electrical outlet. Do not pull the electrical cable!

Good luck with Your new workmate; we hope that it will function to Your full satisfaction for many years.

SAVE THESE INSTRUCTIONS!

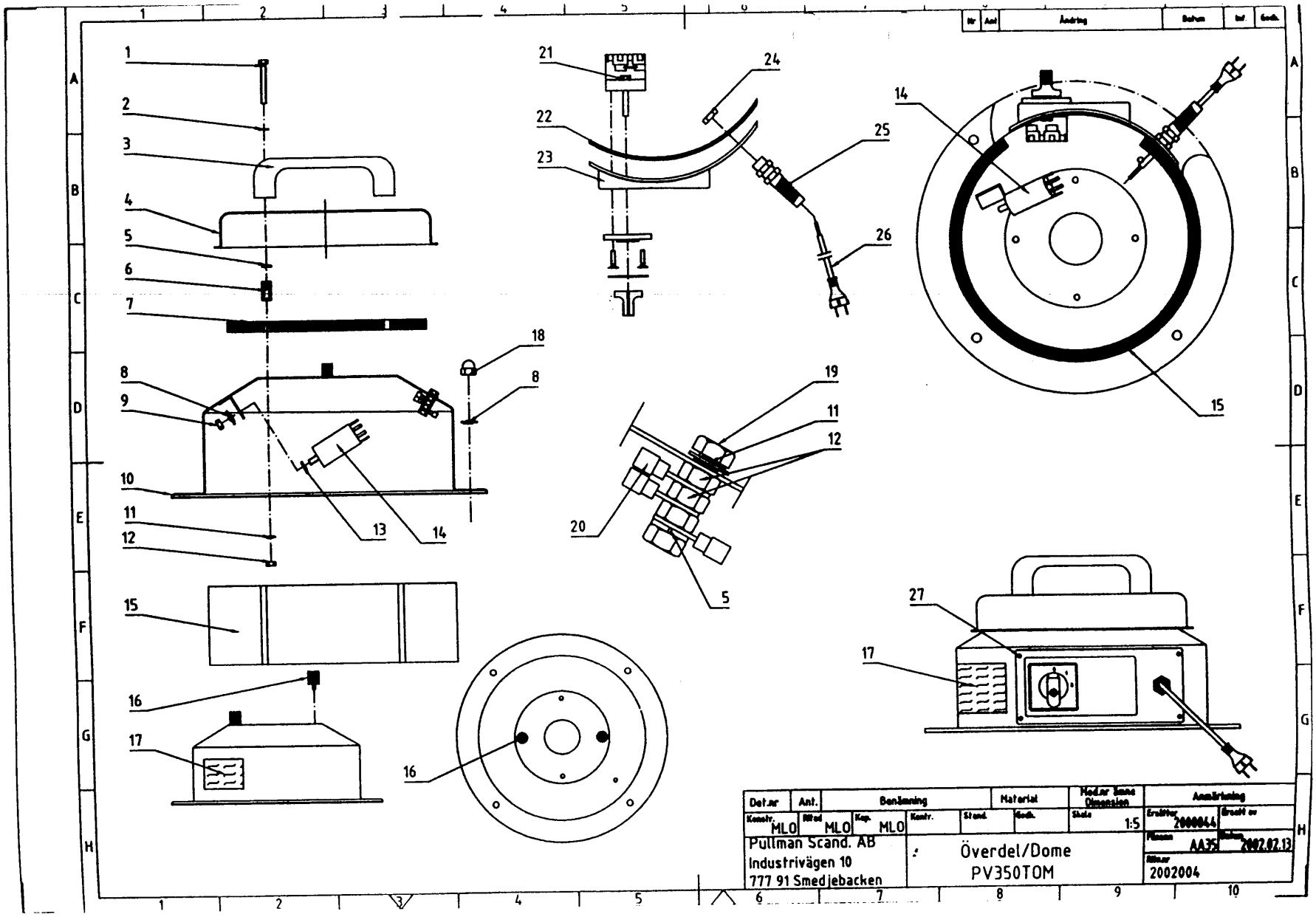
Nr
Ant
Ändring
Datum
Inf.
Godk.
Det.nr
Ant.
Benämning
Material
Mod.nr ämne Dimension
Anmärkning
Konstr. MLO
Rited MLO
Kop. MLO
Kontr.
Stand.
Godk.
Skala 1:5
Ersätter 2000044
Ersatt av
Pullman Scand. AB
Industrivägen 10
777 91 Smedjebacken
Överdel/Dome
PV350TOM
Filnamn AA35
Datum 2002.02.13
Ritnr 2002004

DETALJSPECIFIKATION

SPARE PARTS LIST
ERSATZTEILLISTE

PRODUKT/PRODUCT: PV350TOM (2002004) NR./N0. 1204026

DET.NR. ITEM INDEX	ARTIKEL PART TEIL	BENÄMNING DESCRIPTION BEZEICHNUNG	ART.NR. PART.NO. TEIL NR.	ANTAL QTY ANZAHL
1	MCS5X40	SKRUV/Screw/Schraube	1360208	2
2	A6016	BRICKA/Washer/Scheibe	1360149	2
3	WN130	HANDTAG/Handle/Handgriff	1345009	1
4	350-1	TOPPLOCK/Can Cap/Deckel	1350116	1
5	FBB5	LÅSBRICKA/Locking Washer/Sicherungsscheibe	1360056	2
6	8LG20	DISTANSMUTTER/Spacer/Mutter	1360111	2
7	350-5	LJUDISOLERING/Sound Insulation/Isolierung	1351154	1
8	ITS8	TANDBRICKA/Toothed Washer/Sicherungsscheibe	1360210	5
9	M6M8	MUTTER/Nut/Mutter	1360113	5
10	350-2B	MOTORKÅPA/Dome/Gehäuse	1350143	1
11	ITS5	TANDBRICKA/Toothed Washer/Sicherungsscheibe	1360055	2
12	M6M5	MUTTER/Nut/Mutter	1360047	3
13	FBB8	LÅSBRICKA/Locking Washer/Sicherungsscheibe	1360118	1
14	FP250	AVSTÖRNINGSFILTER/Filter/Filter	1362165	1
15	350-7	LJUDISOLERING/Sound Insulation/Isolierung	1351156	1
16	350-12	LOCKDISTANS/Spacer/Abstand	1357052	2
18	HM8	HATTMUTTER/Acorn Nut/Mutter	1360115	4
19	MCS5X25	SKRUV/Screw/Schraube	1360073	1
20	A1553	RINGKABELSKO/Eyelet Terminal/Kabelklemme	1362036	3
21	PR1211	STRÖMSTÄLLARE/Switch/Schalter	1362135	1
22	350-11	TÄTNING/Sealing/Dichtung	1351159	1
23	350-9	ELKÅPA/Cover/Panel	1362136	1
24	E12.191.18	KONTRAMUTTER/Jam Nut/Mutter	1362055	1
25	350044	KABELFÖRSKRUVNING/Cable Inlet/Kabeldurchführ.	1362132	1
26	RDV12.5	SLADDSTÄLL/Cord Set/Kabel 5M	1361023	1
27	TAP410S	POPNIT/Rivet/Niet	1359014	4

EL-SCHEMA/Wiring Diagram/Elektrische Schema - RITNING/Drawing /Zeichnung
NR./No. 2002006

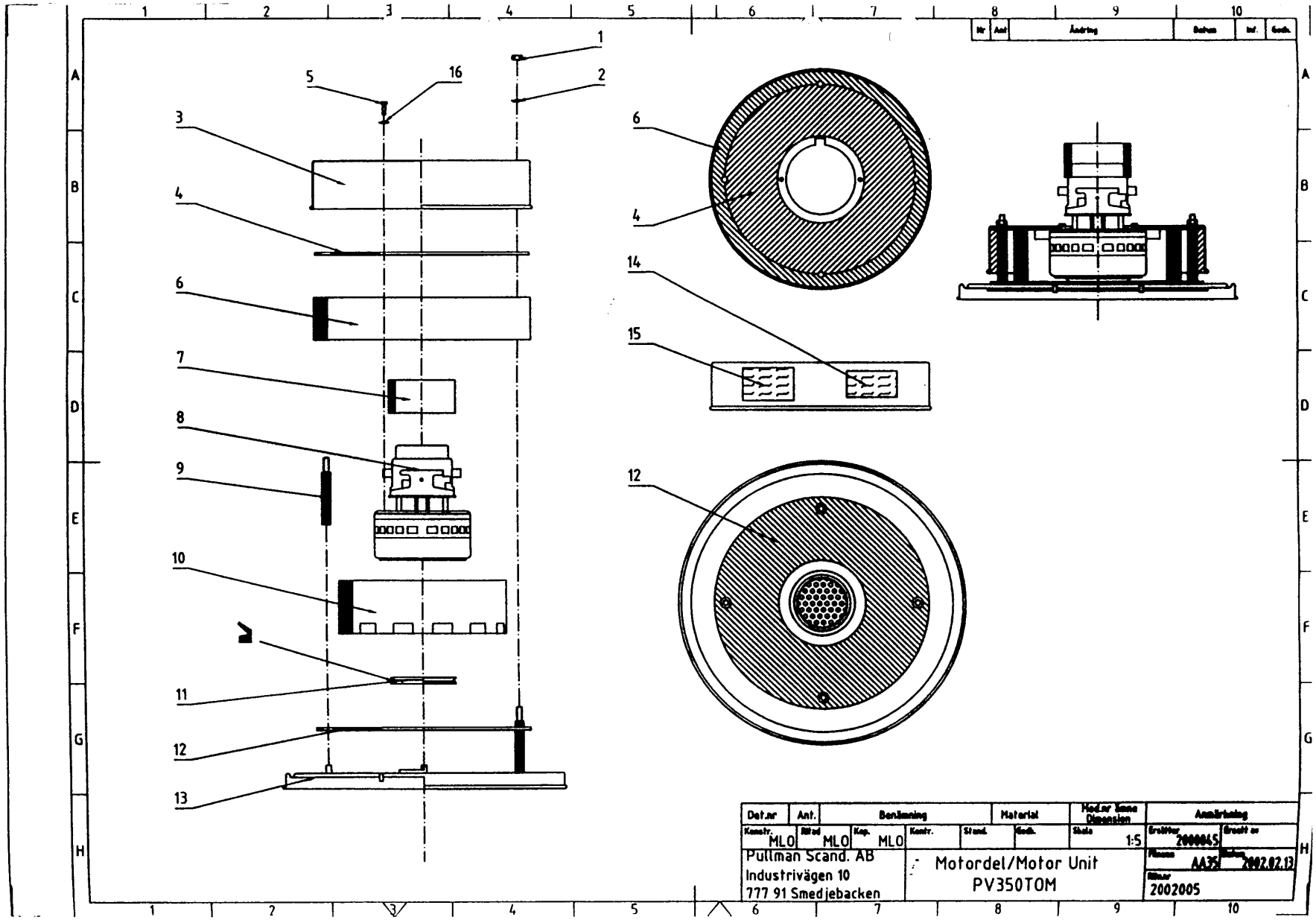

Nr	Ant	Ändring	Datum	Init.	Godk.

Def.nr	Ant.	Benämning	Material	Mod.nr Sasso Dimension	Anmärkning
Konstr. MLO	Ritad MLO	Kop. MLO	Kontr.	Stand.	Godk.	Skala 1:5	Ersätter 2000045	Ersatt av
Pullman Scand. AB Industrivägen 10 777 91 Smedjebacken		Motordel/Motor Unit PV350TOM					Filnamn AA35	Ritningsdatum 2002.02.13
							Ritnr 2002005	

DETALJSPECIFIKATION

SPARE PARTS LIST
ERSATZTEILLISTE

PRODUKT/PRODUCT: PV350TOM (2002005) NR./NO. 1204026

DET.NR. ITEM INDEX	ARTIKEL PART TEIL	BENÄMNING DESCRIPTION BEZEICHNUNG	TEIL NR.	ART.NR. PART.NO.	ANTAL QTY ANZAHL
1	M6M8	MUTTER/Nut/Mutter		1360113	4
2	ITS8	TANDBRICKA/Toothed Washer/Sicherungsscheibe		1360210	4
3	350-3B	MELLANKÅPA/Chamber/Gehäuse		1350144	1
4	350-14	PACKNING/Sealing/Dichtung		1351166	1
5	RXSB10X10	SKRUV/Screw/Schraube		1360168	2
6	350-13	LJUDISOLERING/Sound Insulation/Schallisolierung		1351165	1
7	2000125	KYLPACKNING/Sealing/Dichtung		1351189	1
8	116352	MOTOR/Motor/motor		1352013	1
9	DSM878	DISTANSSKRUV/Screw/Schraube		1360207	4
10	350-8	LJUDISOLERING/Sound Insulation		1351157	1
11	V85A	V-RING/V-ring/V-ring		1351158	1
12	350-14	PACKNING/Sealing/Dichtung		1351166	1
13	350-4	BOTTENPLATTA/Can Cap/Platte		1350119	1
14	NS49	SKYLT/Name Plate/Schildt		1365049	1
15	DEK8	DEKAL/Label/Abziehbild		1364006	1
16	ITS5	TANDBRICKA/Toothed Washer/Sicherungsscheibe		1360055	2

EL-SCHEMA/Wiring Drawing RITNING/Drawing NR./No. 2002006
ELEKTRISCHE SCHEMA, ZEICHNUNG NR.2002006

Nr	Ant	Ändring	Datum	Inf.	Godk.

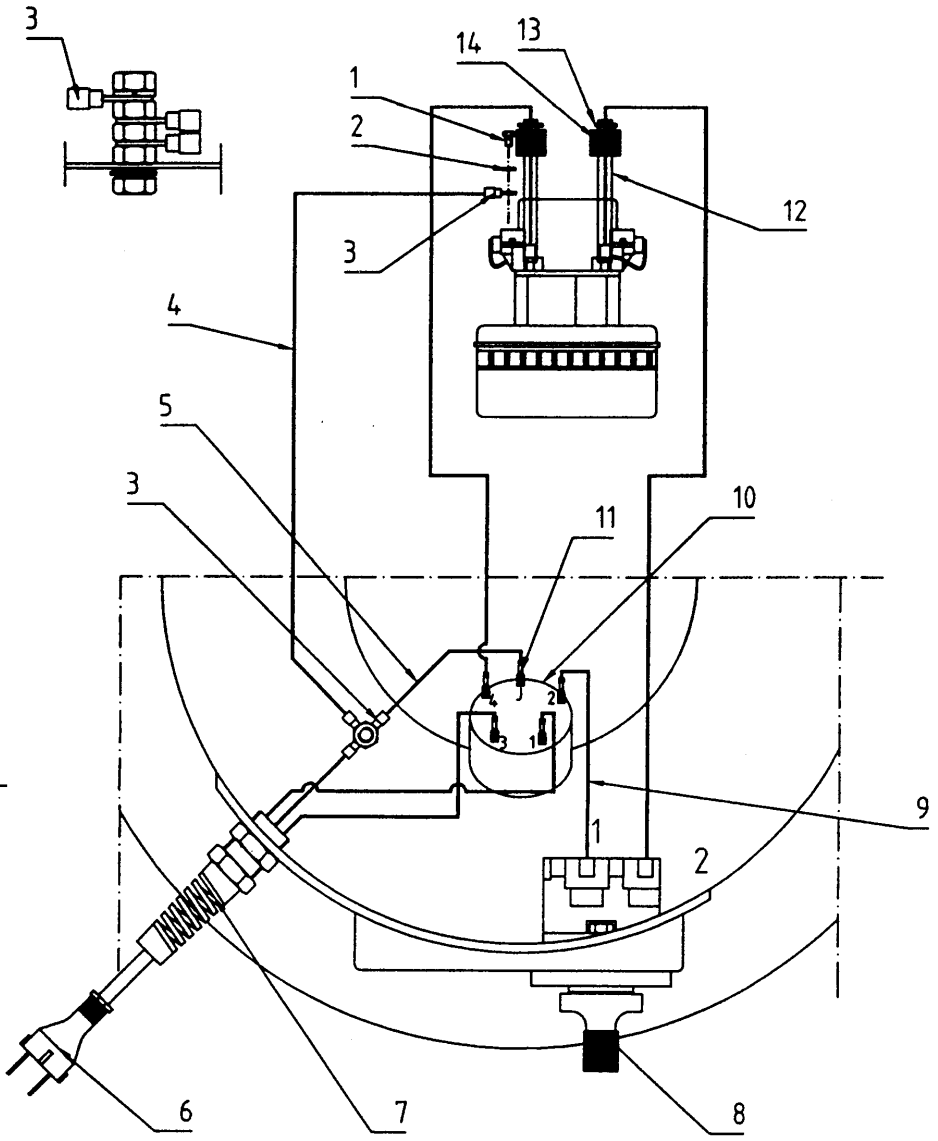

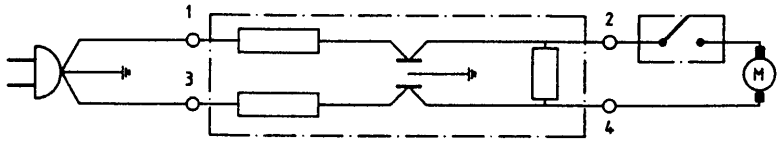

Det.nr	Ant.	Benämning	Material	Mod.nr ämne Dimension	Anmärkning

Konstr.	Ritad	Kop.	Kontr.	Stand.	Godk.	Skala	Ersätter	Ersatt av
MLO	MLO	MLO				1:5		

Pullman Scand. AB
Industrivägen 10
777 91 Smedjebacken

WIRING PV350TOMAL

Filnamn

Datum 2002.02.13

Ritn.nr 2002006

DETALJSPECIFIKATION
SPARE PARTS LIST

PRODUKT/PRODUCT: PV350TOMAL (2002006) NR. 1204026

DET.NR. ITEM INDEX	ARTIKEL PART TEIL	BENÄMNING DESCRIPTION BEZEICHNUNG	ART.NR. PART.NO. TEIL NR	ANTAL QTY ANZAHL
1	MCS5X8	SKRUV/Screw/Schraube	1360058	1
2	FBB5	LÅSBRICKA/Washer/Sicherungsscheibe	1360056	1
3	A1553	RINGKABELSKO/Cable Clip/Kabelklemme	1362036	3
4	RK92	KABEL-GUL/GRÖN/Cable yellow/green/Kabel	1361016	0.3
5	RK92	KABEL-GUL/GRÖN/Cable yellow/green/Kabel	1361016	0.1
6	RDV12.5	SLADDSTÄLL/Cord set/Kabel 5m	1361023	1
7	350044	KABELFÖRSKRUVN./Cable Inlet/Kabeldurchführung	1362132	1
8	PR1211	STRÖMSTÄLLARE/Switch/Schalter	1362135	1
9	RK82	KABEL-BRUN/Cable-brown/Kabel-Braun	1361015	0.15
10	FP250	AVSTÖRNINGSFILTER/Filter/Filter	1362165	1
11	A1507	FLATSTIFTSHYLSA/Cable Clip/Kabelklemme	1362118	5
12	E19.360.47	SLANG/Hose/Schlauch	1362075	0.6
13	L418	BUNTBAND/Cable tie/Band	1362113	2
14	fb243	ferritblock/Ferrite block/Ferrite Block	1362166	2

FÖRSÄKRAN OM ÖVERENSSTÄMMELSE
DECLARATION OF CONFORMITY
DECLARATION DE CONFORMITÉ
ERKLÄRUNG DER ÜBERSTIMMUNG
SAMSVARSERKLÆRING

Pullman Scandinavian AB
Industrivägen 10
S-777 91 SMEDJEBACKEN

Försäkrar under eget ansvar att maskinen
Declare under our sole responsibility that the machine
Certifie sous sa propre responsabilité que le produit ciaprès
Versichern auf eigener verantwortung, dass das Produkt
Forsikrer under eget ansvar at maskinen

PV350TOM
Nr./No: 020001 - 029999
Tillv.år/Manufact.year/Baujahr: 2002

som omfattas av denna försäkring är i överensstämmelse med standarder:
included in this declaration, follows the provisions of the:
est conforme aux aux normes suivantes:
den folgenden Normen entspricht:
er i overensstemmelse med standarder:

SS-EN 60 204-1 (1993.11.30)
SS-EN 55011:1989
SS-EN 50082-1
SS-EN 60335-1, SS-EN 60335-2-2

enligt villkoren i/according to/*selon*/laut/*i henhold til vilkårene i*
Machine Directive 89/392/EEC , 91/368/EEC
Low Voltage Directive 73/23/EEC
EMC Directive 89/336/EEC

SMEDJEBACKEN 2002.01.01

Mats Lennmo
Kvalitetssamordnare
Quality Manager
Responsable de qualité

TOMAL®
METERING SYSTEMS

ProMinent®
Group

11

DOSING PUMP

TOMAL®
METERING SYSTEMS

ProMinent® Group

12

QUALITY DOCUMENTS

CE DECLARATION OF MANUFACTURE - 2 B

MANUFACTURER TOMAL AB
ADDRESS S-310 58 VESSIGEBRO, SWEDEN
TELEPHONE + 46 (0)346-71 31 00 **FAX** + 46 (0)346-71 31 39

WE HEREBY DECLARE THAT THE DESIGN OF THE FOLLOWING EQUIPMENT HAS BEEN MANUFACTURED IN ACCORDANCE WITH THE MACHINERY DIRECTIVE–98/37/EC, ANNEX-2 B.

EQUIPMENT DESCRIPTION: Polymer make-up unit PolyRex 2.0 according to flowdiagram 008645-F-54473-A

ORDER NO: 54473 PROJECT NAME: Meadowbank Mining

AND CAN BE INCORPORATED INTO A MACHINE / THE ASSEMBLY WITH OTHER MACHINES AND THAT THE COMMISSIONING OF SUCH MACHINES AS A WHOLE IS IN COMPLIANCE WITH THE APPROPRIATE REQUIREMENT OF EC MACHINE LAW 98/37/EC. IT IS NOT ALLOWED TO PUT THIS EQUIPMENT INTO SERVICE UNTIL THE MACHINERY INTO WHICH IT IS INCORPORATED HAS BEEN DECLARED TO BE IN CONFORMITY WITH THE MACHINERY DIRECTIVES.

APPLIED STANDARDS:
SS EN ISO 12100-1-2

DATE 20-05-2009 POSITION Sales engineer

SIGNED

For and on behalf of Tomal AB

ENCLOSURE NEMA 4/12 CARBON STEEL
RITTAL WM362410NC
36"H x 24"L x 10"P

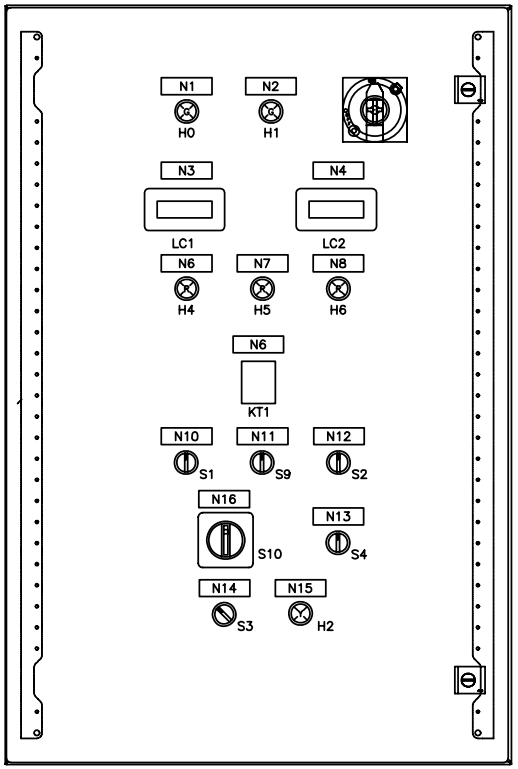

NAME PLATES

N1 = CONTROL VOLTAGE 24 VDC

N2 = CONTROLE VOLTAGE 110 VAC

N3 = PREPARATION TANK

N4 = STOCK TANK

N6 = WATER LOW PRESSURE

N7 = PUMP PROTECTION

N8 = LOW POWDER LEVEL

N9 = POLYMER FEEDING TIME

N10 = AGITATOR MAN OFF AUTO

N11 = WATER PREPARATION MAN OFF AUTO

N12 = POLYMER FEEDING MAN OFF AUTO

N13 = DISCHARGE VALVE MAN OFF AUTO

N14 = FEEDER MAN SETTING NORMAL CALIBRATION

N15 = CALIBRATION MODE ACTIVATED

N16 = POWDER VACUUM CONVEYOR START STOP

MOUNTING PLATE

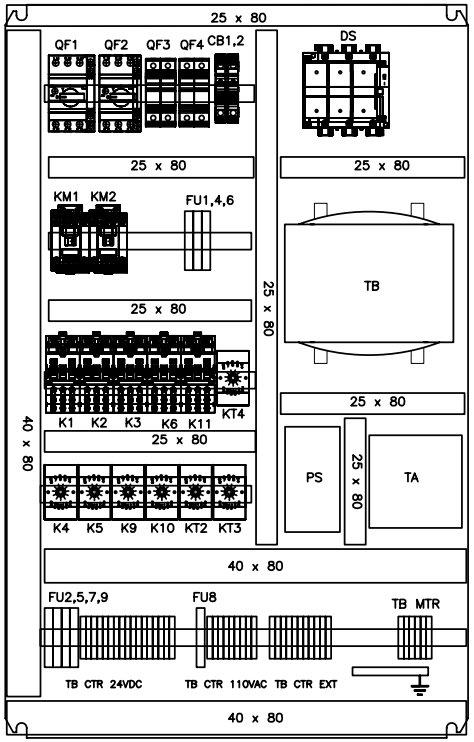

TB MTR

TB WDU4
1T1
1T2
1T3
2T1
2T2
2T3
3T1
3T2
L1
L2
L3

TB CTR 24VDC

TB WSI6
FU2 ABC-1/2
FU5 ABC-1/20
FU7 ABC-1/20
FU8 ABC-1/2

TB WDU2.5
24V
24V
24V
24V
0V
0V
0V
0V
28
29
67
69
SHD
SHD
SHD

TB CTR 110VAC

TB WSI6
FU9 ABC-1/2

TB WDU2.5
L6
L6
L6
N6
N6
N6
77
79
81A

TB CTR EXT

TB WDU2.5
91
91A
92
93
94
95
96
96A
96B
98
98A

REV.	DATE	DESCRIPTION
0	2009-03	ISSUED FOR APPROVAL

This drawing is the property of GENIRO SYSTEMS Inc. It is loaned upon the express condition that it shall not be copied or reproduced in any manner, that it shall not be submitted to others for examination without the written consent of GENIRO SYSTEMS Inc., that it shall not be used in any other way detrimental to the interests of GENIRO SYSTEMS Inc., and that it shall be returned to GENIRO SYSTEMS Inc. upon demand.

NORTEC S.G.S INC.

MEADOWBANK MINING CORP.

POLYREX 2.0
CONTROL PANEL
GENERAL VIEW

PLOT = 1 : 1		DATE:	2009-03-31
BY:	V.S.		
VERIF:	I.D.	PROJECT:	C08-5362
DRAWING No.:	C08-5362-B101	PAGE:	01
		NEXT:	01

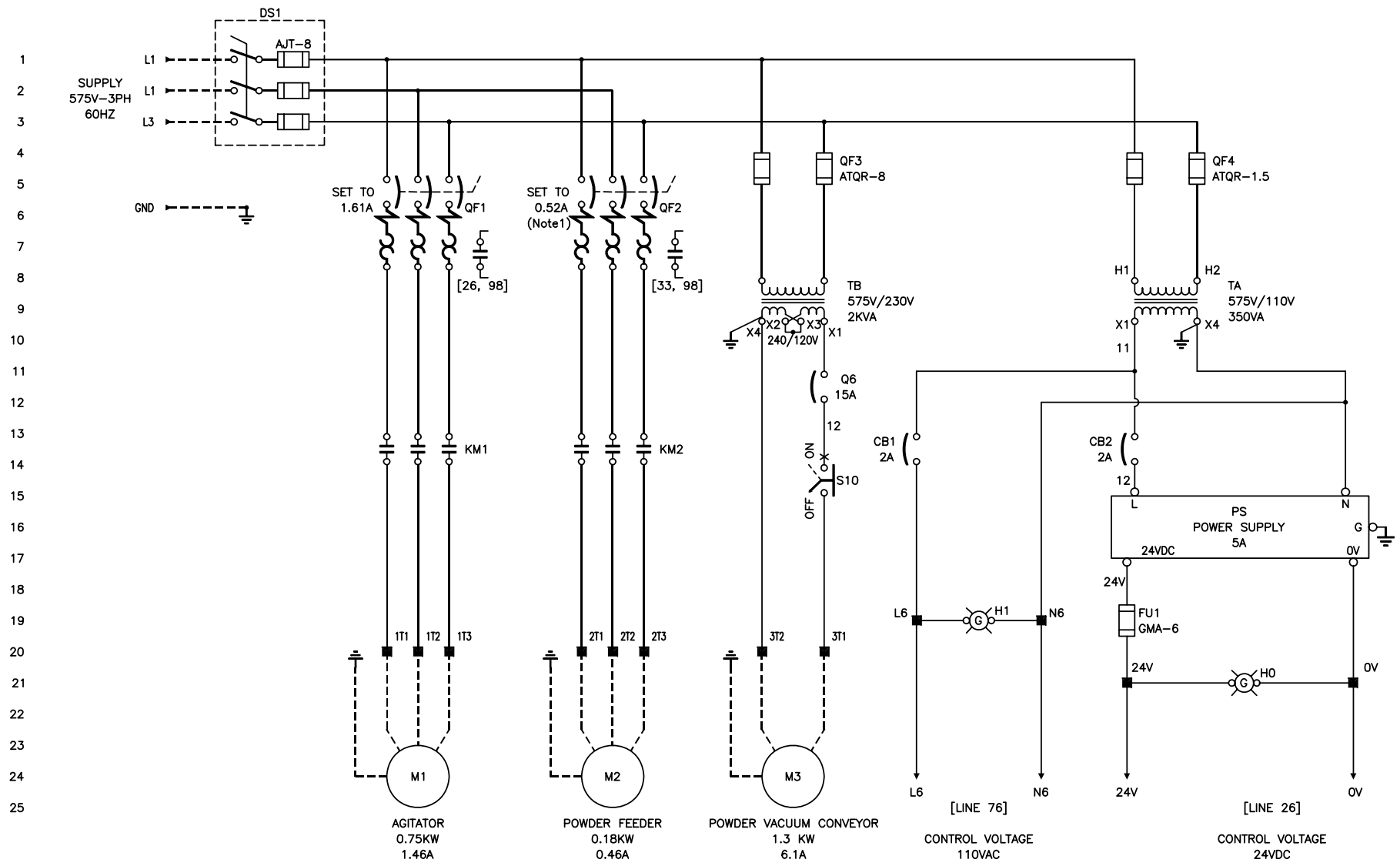

REV.	DATE	DESCRIPTION
0	2009-03	ISSUED FOR APPROVAL

This drawing is the property of GENIRO SYSTEMS Inc. It is loaned upon the express condition that it shall not be copied or reproduced in any manner, that it shall not be submitted to others for examination without the written consent of GENIRO SYSTEMS Inc., that it shall not be used in any other way detrimental to the interests of GENIRO SYSTEMS Inc., and that it shall be returned to GENIRO SYSTEMS Inc. upon demand.

NORTEC S.G.S INC.

MEADOWBANK MINING CORP.

POLYREX 2.0
CONTROL PANEL
SCHEMATIC DIAGRAM

PLOT = 1 : 1		DATE:	2009-03-31
BY:	V.S.		
VERIF:	I.D.	PROJECT:	C08-5362
DRAWING No.:	C08-5362-D101	PAGE:	01
		NEXT:	02

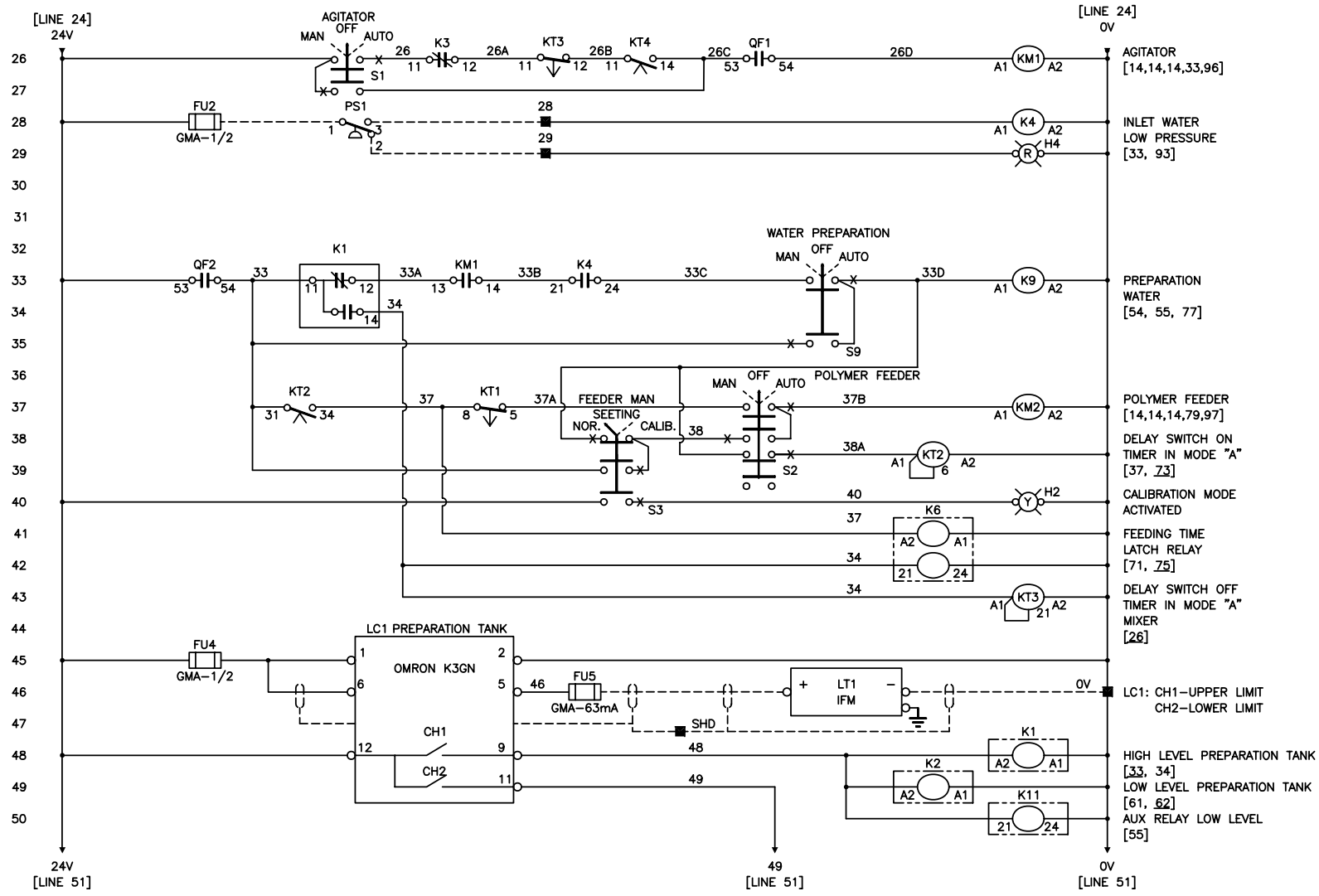

REV.	DATE	DESCRIPTION
0	2009-03	ISSUED FOR APPROVAL

This drawing is the property of GENIRO SYSTEMS Inc. It is loaned upon the express condition that it shall not be copied or reproduced in any manner, that it shall not be submitted to others for examination without the written consent of GENIRO SYSTEMS Inc., that it shall not be used in any other way detrimental to the interests of GENIRO SYSTEMS Inc., and that it shall be returned to GENIRO SYSTEMS Inc. upon demand.

NORTEC S.G.S INC.

MEADOWBANK MINING CORP.

POLYREX 2.0
CONTROL PANEL
SCHEMATIC DIAGRAM

PLOT = 1 : 1 DATE: 2009-03-31
BY: V.S.
VERIF: D.I. PROJECT: C08-5362
DRAWING No.: C08-5362-D102
PAGE: 02
NEXT: 03

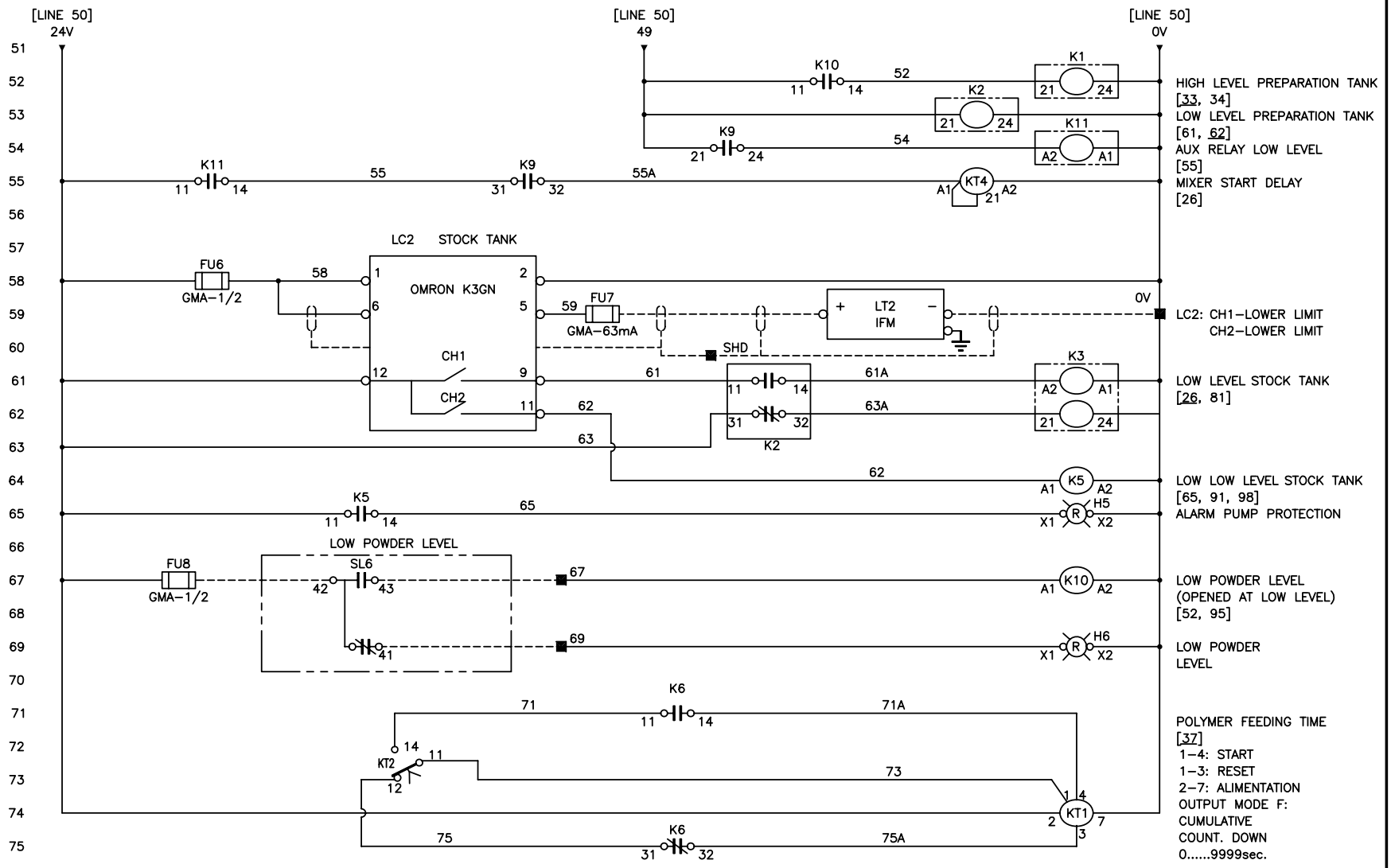

			This drawing is the property of GENIRO SYSTEMS Inc. It is loaned upon the express condition that it shall not be copied or reproduced in any manner, that it shall not be submitted to others for examination without the written consent of GENIRO SYSTEMS Inc., that it shall not be used in any other way detrimental to the interests of GENIRO SYSTEMS Inc., and that it shall be returned to GENIRO SYSTEMS Inc. upon demand.	**NORTEC S.G.S INC.**	**MEADOWBANK MINING CORP.**	PLOT = 1 : 1 DATE: 2009–03–31
					POLYREX 2.0 CONTROL PANEL SCHEMATIC DIAGRAM	BY: V.S.
						VERIF: I.D. PROJECT: C08–5362
0	2009–03	ISSUED FOR APPROVAL				DRAWING No.: C08–5362–D103 PAGE: 03 NEXT: 04
REV.	DATE	DESCRIPTION				

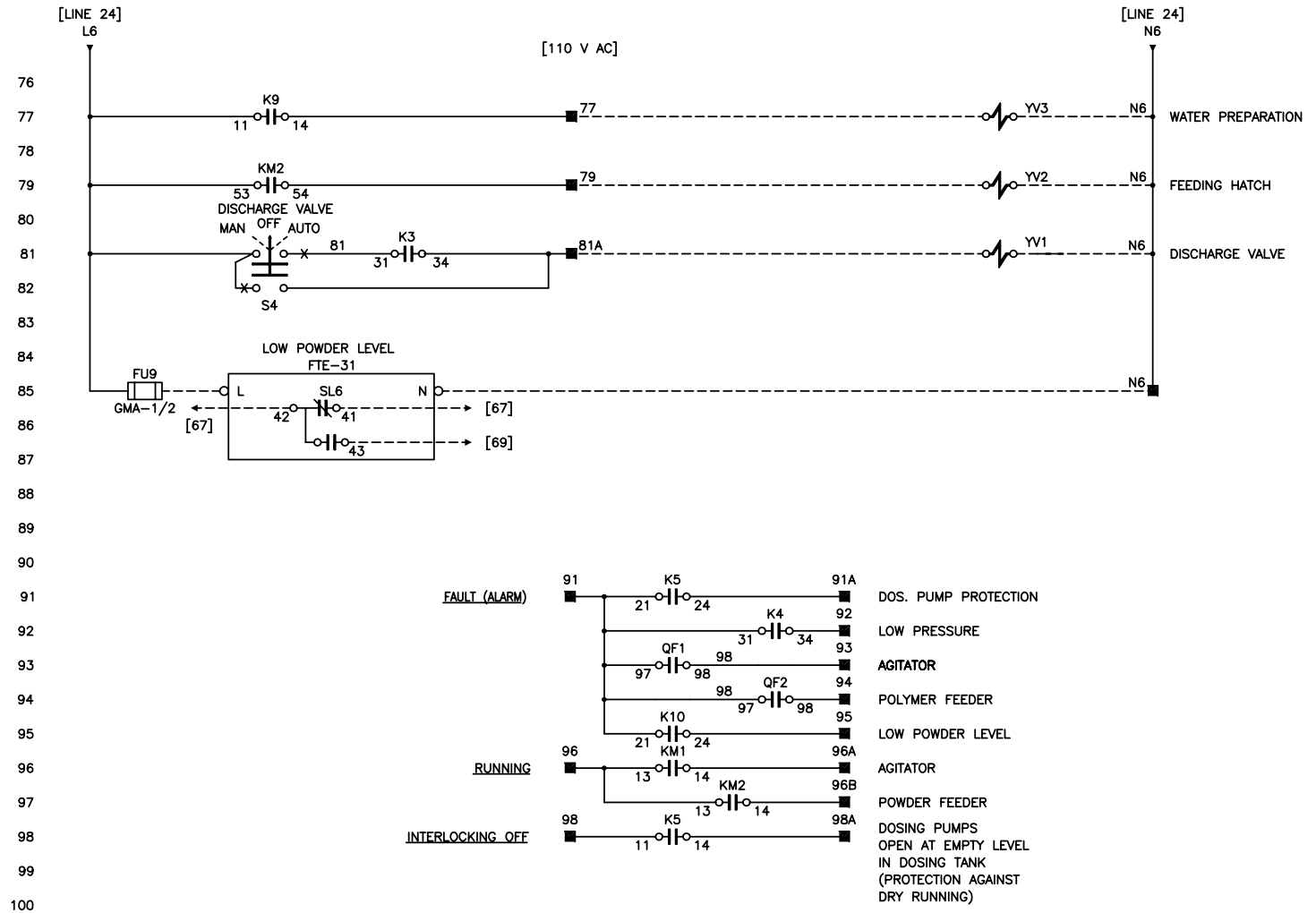

REV.	DATE	DESCRIPTION
0	2009-03	ISSUED FOR APPROVAL

This drawing is the property of GENIRO SYSTEMS Inc. It is loaned upon the express condition that it shall not be copied or reproduced in any manner, that it shall not be submitted to others for examination without the written consent of GENIRO SYSTEMS Inc., that it shall not be used in any other way detrimental to the interests of GENIRO SYSTEMS Inc., and that it shall be returned to GENIRO SYSTEMS Inc. upon demand.

NORTEC S.G.S INC.

MEADOWBANK MINING CORP.

POLYREX 2.0
CONTROL PANEL
SCHEMATIC DIAGRAM

PLOT = 1 : 1		DATE:	2009-03-31
BY:	V.S		
VERIF:	I.D.	PROJECT:	C08-5362
DRAWING No.:	C08-5362-D104	PAGE:	04
		NEXT:	END

DOSING PUMP

LEFT BLANK

seepex.com

seepex
Inc.
511 Speedway Drive
Enon, Ohio 45323
Tel +1 (937) 864-71 50
Fax+1 (937) 864-71 57
sales@seepex.net
www.seepex.com

Operating and Maintenance Instructions
Progressive Cavity Pump

range | size | pressure stage | 17.01.2006

MD

commission-No.

Job#

2109552

This operating and maintenance instruction includes important safety information and instructions for installation, commissioning, operating and maintenance of the seepex machinery. It is essential therefore, that the responsible specialist refers to it before starting any work on the machinery as well as prior to commissioning. Futhermore, this instruction must always be available on site.

seepex.com



Offer No. 5357/0500/09-MA

John Meunier Inc/Veolia Water Water Treatment, Saint-Laurent

03/16/2009 **Item 2**

qty. 1 **seepex progressive cavity pump**
MD 025-6L / A6-A7-A7-F0-GA-X
X= 0802, 17T, 20A7

General remarks

PROJECT: Meadowbank
Delivery Period :4 to 5 weeks
Terms of Delivery:FOB Enon, Ohio
Terms of Payment:30 days net; Terms are per the "seepex, Inc. - Terms and Conditions of Sales and/or Repair" or as negotiated at time of purchase
Resale discount:Prices are at a End User pricing levels

Shipping charges are not included in pricing.

Application data

Pumped liquid	polymer
Viscosity	no advice
Solids content	no advice
Size of solids	no advice
Spec. gravity	no advice
Temperature	32 to 113F
pH value	no advice
Composition/Concentr.	no advice
Kind of operation	24h/day
Site of installation	indoors

Performance data

	Flow rate	**Pressure**	**Speed**	
	26 l/h	2 bar	27 rpm	min
	260 l/h	2 bar	271 rpm	max
Starting torque	9 lb.ft			
Max. power absorbed	0.11 hp			
NPSH required	6.89 ft			
Suction pressure	ass. flooded			
Discharge pressure	2 bar			

Materials and executions

Installation	horizontal
Rotation	counter clockwise (left)
Lantern / drive casing	lantern, standard
Lantern / drive casing material	1.0037 (St 37-2) / A 283 C
Wetted casing parts	standard
Wetted casing parts material	1.4408 / A 743 CF8M
Joint execution	encapsulated (closed) joints with universal joint sleeve
Joints material	standard
Universal joint sleeve material	NBR - Perbunan
Coupling rod	standard
Coupling rod material	1.6582 encapsulated
Rotor	standard

Offer No. 5357/0500/09-MA

John Meunier Inc/Veolia Water Water Treatment, Saint-Laurent

Rotor material	1.4571 / 316 TI SS
Rotor coating	without
Stator	stator in TSE-design sensor sleeve 1.4571 / 316 TI SS
Stator material	NBR - Perbunan
Shaft sealing	mechanical seal, single acting elastomer bellows, either sense of rotation, unbalanced
Shaft seal casing material	1.4571 / 316 TI SS
Shaft seal material	rotating seal face: carbon graphite stationary seal face: SiC solid elastomers: FPM spring: 1.4571 / 316 TI SS metal parts: 1.4571 / 316 TI SS
Plug-in shaft	standard
Plug-in shaft material	1.4571 / 316 TI SS
Pump screw fitting	bolting entirely in stainless steel inclusive tie rods
Painting	standard RAL 5013 (blue)

Connections

Branch / hopper position	branch / hopper position 1
Casing parts connections	Suction connection NPT thread: NPT 1" discharge connection NPT thread: NPT 1/2"

Drive

Type	**gear box for mounting of a NEMA motor**		
Manufacturer	Nord		
Model	SK02F-56C		
Design	B3/B5		
Gear ratio	i = 9.28		
	Nom.	**Min.**	**Max.**
Output speed (rpm)	194	27	271
Motor speed (rpm)	1800	251	2515
Frequency (Hz)	60	8	84

Electr. motor

Type	**NEMA Motor**
Manufacturer	Marathon - BLACK MAX
Model	Y555 (56H17T5311)
Rated output	0.5 hp
Rated speed	1800 rpm
Starting	direct on frequency inverter
Voltage	3 x 575
Frequency	60 Hz

Offer No. 5357/0500/09-MA

John Meunier Inc/Veolia Water Water Treatment, Saint-Laurent

Dry-running protection device

Dry running protection device	TSE 115AC consisting of: - sensor sleeve fitted to the stator of the pump with installed NTC temperature sensor in IP55 connection head inst. in pump stator - TSE control device for installation in a control panel - 110-115V / 50-60 Hz

Price composition

pump with flanged drive, dry running protection device

General remarks

Prices are valid for 60 days after the quotation and for 365 days after receipt of the purchase order. seepex reserves the right to renegotiate prices for any job delayed by the customer for more than 365 days after receipt of the purchase order.

Commissioning and Training performed by seepex Sales personnel or Distributors.

If seepex personnel from factory are required for commissioning or training, the following rates apply:
Daily rate: $800.00 (US) /8 hr day plus all expenses including but not limited to airfare, standard mileage rate*, lodging, meal, rental car, and etc. Billing is in whole day segments, only. Exceptions to this will negotiated as needed. Minimum two (2) days will be invoiced.

*Mileage rate will be calculated based on the U.S. General Services Administration Privately Owned Vehicle (POV) Mileage Reimbursement Rates.

Copyright: This drawing is our property and patented for us according to the law of copyright and associated rights !

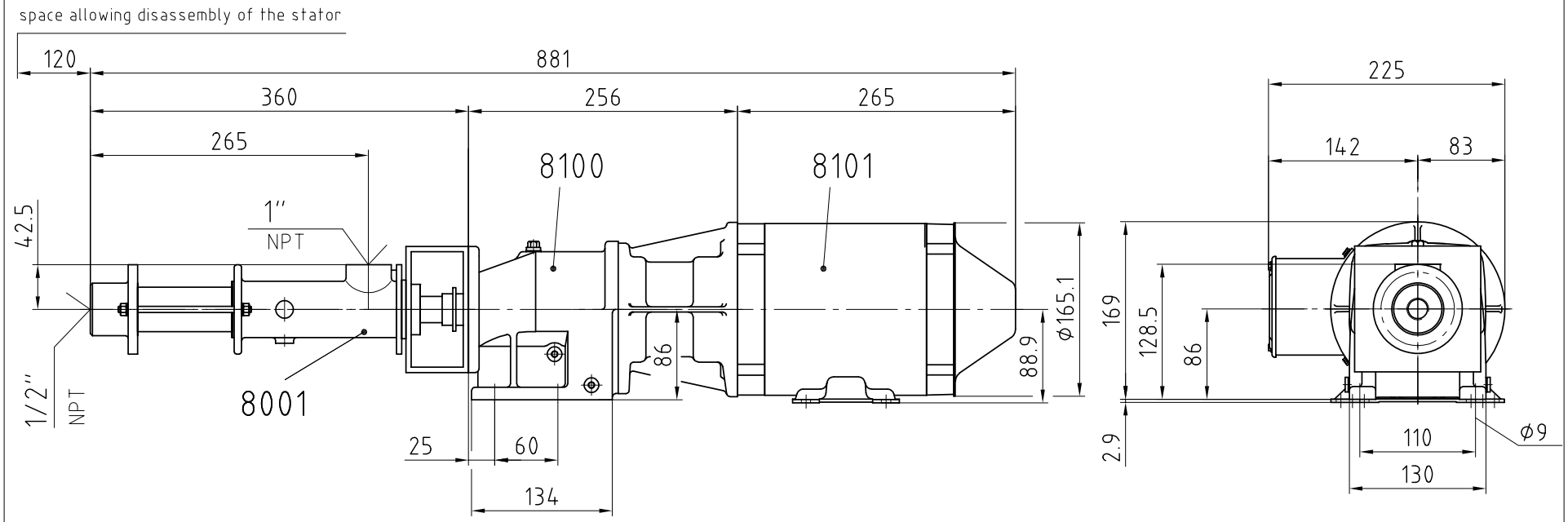

✳ design see pump data sheet

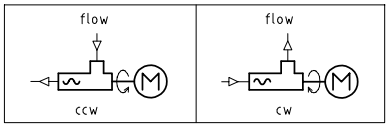

Quant.	Denomination	Item	Material	Note	Weight / kg
1	motor : Marathon Y555	8101			18
1	gear: SK02XF-56C B3/B5	8100			20
1	pump: MD / MDP 012-12 / 025-6L / 025-12T/ 05-6LT	8001			4

		Name	Day	Scale	Weight	Denomination
2008	Drawn	sbe	03.07.	◎▷ 1:5	42 kg	dimensional drawing
	Checked	goe	03.07.	EDP–No. 93514.dwg		Drawing–no. 103-C37/M120-C-247A4

seepex.com

seepex, Inc.
511 Speedway Drive
Enon, OH 45323
www.seepex.com

changes of dimensions reserved

Characteristic Curves
Size
025–6L

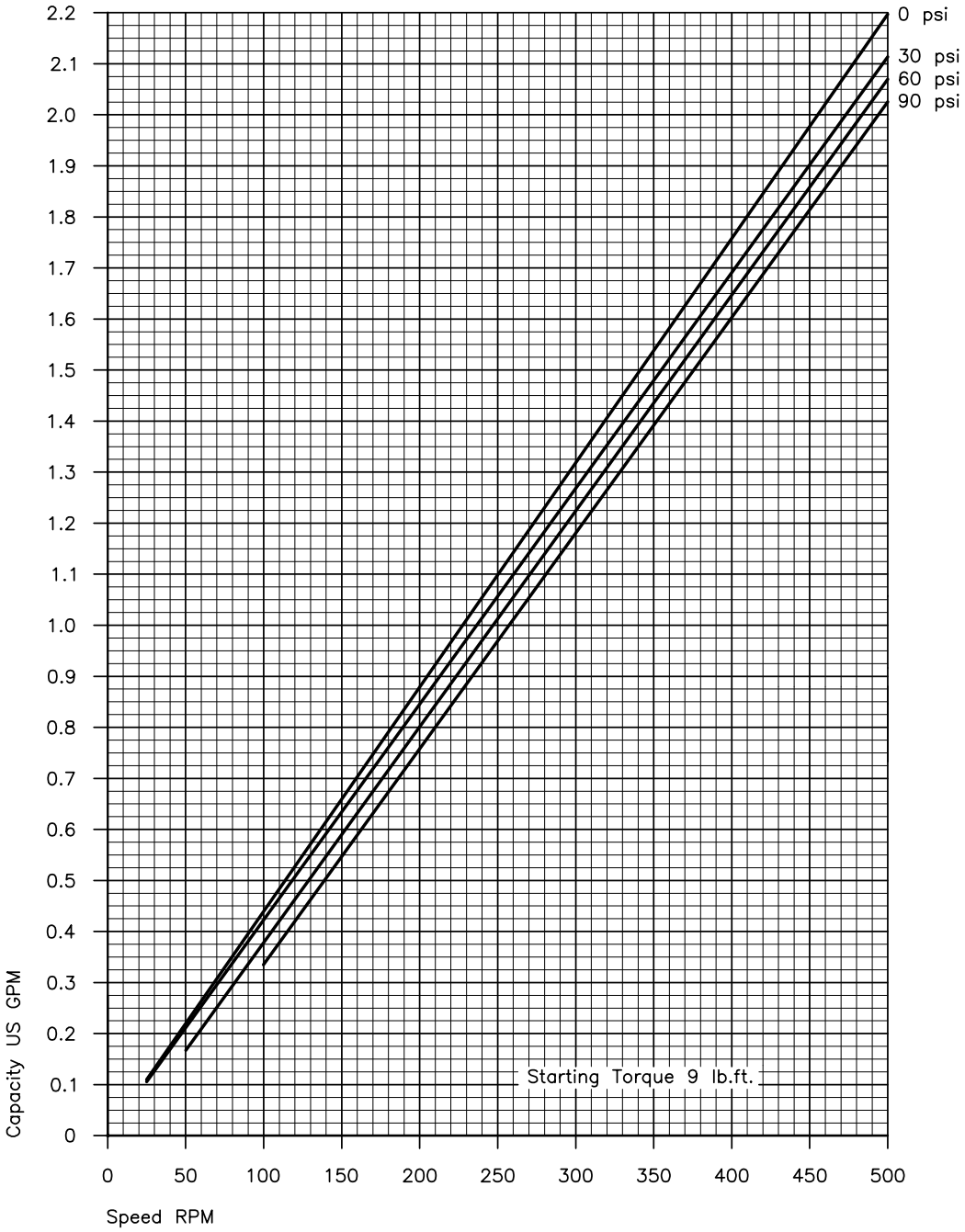

Values based upon water 68°F

CHA.025–6L B 01.03us

1.0
General

1.1
Application

These operating instructions contain basic information on the installation, commissioning and maintenance of seepex machines. Compliance with the work steps described in the individual sections is essential.

1.2
Details of the seepex machines

1.2.1
Operating Instructions

The Commission Number (comm. no) assigns the operating instructions to a particular seepex machine. The operating instructions are produced in relation to a specific job/commission and are valid only for the machine whose comm. no. is identical with that indicated on the cover sheet and possessing the associated data sheet, Point 9.

1.2.2
Manufacturer

The machines were manufactured by seepex.

1.2.3
Range, Size, Version

of the machines are stated in the appended data sheet, Point 9.

1.2.4
Machine Comm. No. and Year of Construction

are stated on the type plate at the machine.

1.2.5
Release Date of the Operating Instructions

is stated on the cover sheet of the operating instructions.

1.2.6
Modifications, Notes of Modification

If modifications to the machines are carried out in agreement with seepex, a new set of operating instructions will be provided, or the existing operating instructions will be supplemented by an additional sheet together with a new cover sheet. The date of modification and modification index will be noted on the new cover sheet.

1.2.7
EEC Machine Directive

1.2.7.1
Manufacturer's Declaration

seepex Manufacturer's Declaration as required by the EEC Machine Directive 89/392/EEC, Appendix II B:

The seepex machines delivered in accordance with our design are intended to be fitted in one machine or assembled together with other machines to form one machine/plant. The commissioning of the machine is forbidden until such a time as has been established that the entire machine/plant satisfies the requirements of the EEC Directive for Machines as amended 91/368/EEC and 93/44/EEC.

Particular attention must be paid to the safety requirements specified in EN809 (s and Equipment for Fluids) as well as the information in these operating instructions.

1.2.7.2
Declaration of Conformity

seepex machines possessing no safety accessories do not fulfill the requirements of the EEC Machine Directive 89/392/EEC as amended 91/368/EEC and 93/44/EEC.

For this reason, no Declaration of Conformity as required by the EEC Machine Directive 89/392/EEC, Appendix IIA can be issued before appropriate safety devices have been installed/mounted on the machine and/or plant with due regard to the information given in these operating instructions.

The following harmonized standards are particularly applicable:
EN 809, EN292T1, EN292T2
Applicable national standards and specifications must be taken into consideration.

Following assessment of the conformity of the machine/plant with the EEC Machine Directive, customers may on their own initiative place on the full machine/plant the EEC symbol 'CE' as defined in Identification Directive 93/68/EEC.

CAUTION

This documentation must be kept available for at least 10 years.

1.2.8
Copyright and Industrial Property Rights

These operating instructions are copyrighted. The reproduction, in particular by photocopying, of these instructions is not permitted (§§ 54, 54 UrhG) and constitutes a criminal offence (§ 106 UrhG). Proceedings will be instituted if the copyright is violated.

1.2.9
Specifications Required for Inquiries and Orders

The following information must be included when inquiring about replacement parts or placing orders:
- comm. no.
- / machine type
This information is given on the type plate mounted the machine.

1.2.10
Technical Data Sheet
see Point 9.

1.2.11
Performance Data, Load Index, Power Consumption

are indicated in the associated data sheet, Point 9.

1.2.12
Sound Pressure Level

The sound pressure level and/or noise characteris-tics of the seepex machines are ascertained in accordance with DIN 45635. The measuring guidelines are largely identical with the international standards ISO 3740-1980 and ISO 3744-1981.

1.2.13
Operating Range

Employment of the machine is not permissible for purposes other than those stated in the data sheet, see Point 9. seepex cannot accept liability for damage arising through failure to comply with this operating range.

1.3
Supplementary Information

1.3.1
Accessories, Optional Extras

Please refer to the data sheet, Point 9.

1.3.2
Company Address, Service Addresses

see Point 11

2.0
Safety

These operating instructions contain basic requirements to be observed during the installation, operation and maintenance of the machine. Therefore, the instructions must be read by the mechanical fitter and by the technical personnel/operator responsible for the machine prior to assembly and commissioning, and kept available at the operating site of the machine/plant at all times.

Compliance is required not only with the general safety instructions given in this section but also with the detailed instructions, e.g. for private usage, given under the other main headings in these operating instructions.

2.1
Labeling of Advice in the Operating Instructions

In these operating instructions safety advice whose non-observance could lead to danger for life or limb is labeled with the following general hazard symbol:



safety symbol acc. to ISO 3864 - B.3.1

Warnings regarding electric power are labeled with:



safety symbol acc. to ISO 3864 - B.3.6

Safety instructions whose non-observance could jeopardize the machine and its functions are labeled by the word

CAUTION

Always comply with instructions mounted directly on the machine, e.g.
- rotational direction arrow
- fluid connection indicators

and ensure that the information remains legible.

2.2
Personnel Qualifications and Training

Personnel charged with operation, maintenance, inspection and assembly must be in possession of the appropriate qualifications for the tasks. The company operating the machine must define exact areas of responsibility, accountabilities and personnel supervision schemes. Personnel lacking the required skills and knowledge must receive training and instruction. If necessary, the opera-ting company may commission the manufacturer/ supplier to conduct these training courses. Furthermore, the operating company must ensure that the personnel fully understand the contents of the operating instructions.

2.3
Dangers Resulting from Failure to Observe Safety Instructions

Failure to comply with the safety instructions may lead to hazards to life and limb as well as dangers for the environment and the machine. Non-observance of safety instructions can invalidate the right of claim to damages.

The following are just some **examples** of possible dangers resulting from failure to comply with the safety instructions:

- Failure of important machine/plant functions
- Failure of prescribed methods of service and maintenance
- Danger to life and limb due to electrical, mechanical and chemical influences
- Danger to the environment due to the leakage of hazardous substances

2.4
Safety-conscious Working

Always comply with the safety instructions listed in this document, the existing national accident prevention regulations and any company-internal work, operating and safety rules.

2.5
Safety Instructions for the Operating Company/Machine Operator

- Any potentially hazardous hot or cold machine parts must be provided with protection against accidental contact at the customer´s premises.

- Protective guards for moving parts (e.g. coupling) must never be removed while the machine is in operation.

- Leakages (e.g. in the shaft seal) of hazardous conveying liquids (e.g. explosive, toxic, hot) must be drained in such a way that no danger arises for persons or for the environment. Always observe the relevant statutory requirements.

- The risk of exposure to electrical power must be eliminated (for details, see the VDE regulations, for example, or those of the local power supply company).

2.6
Safety Instructions for Maintenance, Inspection and Assembly Work

The operator must ensure that all maintenance, inspection and assembly tasks are carried out by authorized and qualified personnel who have studied the operating instructions closely and become sufficiently familiar with the machine.

As a basic rule, the machine must be brought to a standstill before work is carried out. Always comply with the de-commissioning procedure described in this document.

Any machiness or assemblies conveying media that are detrimental to health must be decontaminated.

Immediately following completion of work, all safety and protective devices must be replaced in position and, where applicable, re-activated.

Before re-starting the machine, observe the points listed under the heading "Initial Startup".

2.7
Unauthorized Modification and Manufacture of Replacement Parts

Conversions or modifications of the machine are permissible only in consultation with the manufacturers. Original manufacturer replacement parts and manufacturer-approved accessories enhance the operational safety of the machine. The usage of unauthorized parts may lead to the nullification of the manufacturer's liability for any resultant damages.

2.8
Impermissible Modes of Operation

The operational safety of the machines supplied is warranted only for employment in accordance with the intended use as defined in Section 1 - General - of these operating instructions. Never allow the threshold values specified in the data sheet to be exceeded.

3.0
Transport and Intermediate Storage

3.1
Safety Precautions

Employ appropriate transport means, hoists and tools when transporting and storing the machine, always observing the safety instructions.

3.2
Transport

Depending on its weight, the seepex machine must be transported manually or with appropriate transport means. Comply with the transport instructions on the packing.

3.3
Unpacking

The design of the packing is such that the equip-ment can be removed manually or, if demanded by the weight, by means of appropriate hoists.

Any screw fittings between the machine and the packing must be undone. Comply with the attached information notices and symbols.

3.4
Intermediate Storage/Preservation

Unless otherwise indicated in the data sheet, seepex machines are provided with preservation only for the duration of transport. If a long period of intermediate storage is foreseen before the machine is commissioned, it is necessary to pro-vide supplementary preservation. If necessary, the appropriate measures should be drawn up in consultation with seepex.

Intermediate storage in extreme climatic conditions is permissible only for machine whose design is appropriate to the circumstances. If necessary, seepex must be consulted.

CAUTION

Pumps of the range MAP
If the period from supply and subsequent storage until the commissioning is more than 4 weeks, the hoses should be dismantled, refer to Point 7.

3.5
Protection against Environmental Influences

To afford protection against environmental influences, the intermediate storage location must be dry, enclosed and free from frost.

4.
Description of the seepex Progressive Cavity Pump and Accessories

4.1
General Description, Design and Mode of Operation

Like all progressive cavity pumps, seepex pumps belong to the rotating positive-displacement pump family. The characteristic attribute of these pumps is the special formation and arrangement of the two conveying elements, namely the rotor and the stator.

The difference in the number of threads possessed respectively by the rotor and stator produces a chamber that opens and closes alternately in line with the constant turning motion of the rotor, effecting the continuous transportation of the conveying product from the suction side to the pressure side.

The geometrical formation of the two conveying elements combined with the constant contact that exists between them result in sealing lines that effect an airtight seal between the suction and pressure side in every position of the eccentric screw, even when the pump is stationary. The pump owes its high suction capacity to this
sealing between the suction and pressure sides.

4.2
Mechanical Design

Please consult the sectional drawing, Point 9, for the mechanical design of the pump. The data sheet, Point 9, gives information on the design of the pump housing, stator, rotor and rotating components.

Refer to document OM. SEA. __, for information on the design of the shaft seal.

The data sheet, specifies details of the design of the drive engine. Further details are
given in the appended manufacturer's documents, Point 10.

4.3
Accessories

Consult the data sheet for information.

4.4
Dimensions, Weight

Consult the appended dimensional drawing,

4.5
Design Variants

Refer to the data sheet, Point 9, for the design of the seepex progressive cavity pump. Other design variants are possible, whereby seepex must first check whether a particular pump is suitable for the intended purpose.

4.6
Operating Site Specifications

Operating site specifications are listed in the data sheet, Point 9. Details of the space required for installation, operation and maintenance are given in Point 5.2.1.

5.0
Assembly / Installation

5.1
Mounting Tools / Hoists

No special tools are required for the assembly and installation of the pump.

The customer must check the dimensions and weight of the seepex progressive cavity pump to ascertain whether the available hoisting apparatus is sufficient for the assembly and fitting of the pump.

5.2
Initial Assembly

5.2.1
Inspection Prior to Commencement of Assembly

5.2.1.1
Location

The place of installation for the pump must con-form with the site stated in the data sheet in Point 9. Any change of location must be checked and approved by seepex.

5.2.1.2
Space Requirements

Customers are responsible for determining the space requirements; the following factors must be taken into consideration:

- dimensions and weight of the machine
- required transport and hoisting equipment
- possible piping layout with allowance for the space allowing disassembly of the rotor as defined in 5.2.1.3
- freedom of movement to:
  operate the drive /
  speed regulation
  read speed and pressure indicators
  adjust a stator retensioning device, if fitted
  operate a buffer fluid supply unit, if fitted
- space required for lubrication / renewal of lubricants
- disassembly of mechanical protective devices, e.g. V-belt or coupling protection
- space required for handling the mounting tools, e.g. sufficient wall clearance

5.2.1.3
Space Allowing Disassembly of Stator P

A specific space must be allowed for exchanging the stator. The required dimension "P" is indicated in the index of these operating instructions or in the appended dimensional drawing, Point 9.

CAUTION

Ensure also that the pipe work can be dismounted at this location too.

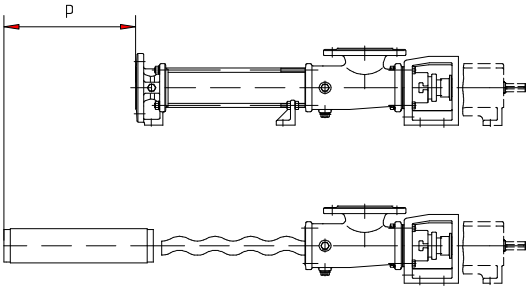

5.2.2
Installation of the Fully Assembled Pump

- Installation in conformity with data sheet
  Installation of the pump is permissible only in accordance with the data sheet specifications and the associated basic drawing, see Point 9. Any change in the position must be checked and approved by seepex.

- Tension-free mounting of pump
  This rule applies to pumps with and without drives, to versions with and without baseplate, for mounting on the foundation or other bearing elements. The entire area of all bearing surfaces of the machine must rest on the ground. Any unevenness must be corrected by appropriate supports.

- Correct seating of drives
  All drives have been aligned ready for operation and mounted by seepex. However, displace-ments may occur during transport or installation. For this reason, check that the alignment and fastening of the drive and coupling are correct.

- Protective devices
  On completion of the assembly and installation work, immediately mount all safety and protective devices in their proper locations and set them in operation.



5.2.3
Protective and Controlling Equipment

Information on equipment of this nature, where fitted, is provided in the data sheet, Point 9. Consult the attached manufacturer's specifications, Point 10, for instructions on assembly and installation.

5.2.4
Electric Connection of Electric Motor and Frequency Converter

The electric connections must be established in accordance with the manufacturer's specifications, Point 10, as well as the safety specifications applying at the installation site. The mains voltage and frequency must match the ratings indicated on the type and rating plates.



- Switch on electric motor „direct-on-line“

CAUTION

An increased starting torque is necessary due to the clamping between the rotor and stator conveying elements. This means the electric motors that drive the progressive cavity pumps must always be switched on directly. As a rule, star-delta startup is not possible unless special arrangements have been made with seepex.

Three-phase cage motor

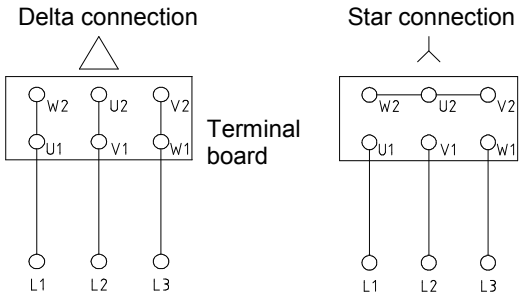

low . . . high . . .
. . . voltage indicated on rating plate

- Speed regulation via frequency inverter
  When progressive cavity pumps with frequency-controlled drives are started up problems may occur due to unsuitable or wrongly set frequency inverters. For this reason we recommend the purchase of the complete drive, including frequency inverter, from seepex, so that the frequency inverter can be tuned on the seepex test field along with a trial run.

  Ensure that customer-supplied frequency inverters comply with the starting torque and running power specified in the appended data sheet, Point 9.

CAUTION

Consult the appended document TI.FRU.01, see Point 9, for further information on the electric connection and the setting of frequency inverter and variable-speed motor.

5.2.5
Piping

5.2.5.1
Suction and Pressure Flanges

The position, nominal width and standard of the suction and pressure flange of the progressive cavity pump are specified in the dimension drawing, Point 9, and data sheet, Point 9. Always observe the rotational direction and flow direction defined in Point 6.2.5.

5.2.5.2
Piping Dimensioning

CAUTION

The pipe diameters on the suction and pressure sides must be dimensioned in accordance with the customer's pressure-loss calculation in such a way that the pressures specified in the data sheet, Point 9, are not exceeded. The nominal width of the suction pipe should at least match that of the pump suction flange.

5.2.5.3
Residue-free Piping

CAUTION

Prior to starting up the pump, ensure that all pipelines are free from foreign bodies. Installation residues (such as weld spatter, screws, steel chips etc.) will lead to damage of the **seepex** pump for which guarantee claims will not be accepted.

5.2.5.4
Tension-free Mounting

CAUTION

Pipelines and other components requiring to be connected with the pump must be mounted without stresses.

5.2.5.5
Fluid Connections for Optional Extras

Consult the data sheets, Point 9, for information regarding the optional extras, if any, that are fitted. The technical description is given under Point 9.

6.0
Commissioning/De-commissioning

6.1
Engineering Data

Details regarding all technical specifications and operating conditions are given in these operating instructions together with the data sheet, Point 9.

To guarantee the correct assignment of documentation to pump, the commission number on the
- cover sheet
- and data sheet of these operating instructions must match the commission number stated on
- the nameplate of the pump.

6.1.1
See Point 7.2.2 for Lubricant Chart

6.2
Preparation for Operation

6.2.1
Bearing

6.2.1.1
See Point 7.2.1.4 for pump bearing.

6.2.1.2
See manufacturer's documents, Point 10, for drive bearings.

6.2.2
Shaft Sealing

See document OM.SEA.__,.

6.2.3
Filling Up of Suction Side to Avoid Dry Running at Startup

CAUTION

Before switching on the pump, fill the suction-sided pump casing with fluid so that the first rotations will lubricate the conveying elements immediately. A small quantity of fluid is sufficient for lubrication; the subsequent operation of the pump is self-priming, even if an air column up to the liquid level remains.

6.2.4
Electric/Hydraulic Connections



The connections are listed in the appended manufacturer's documents, Point 10.



The risk of exposure to electrical hazards must be ruled out. Always observe the safety regulations valid at the site of installation.

6.2.5
Checking Direction of Rotation



The rotational direction of the pump determines the flow direction of the conveying medium.

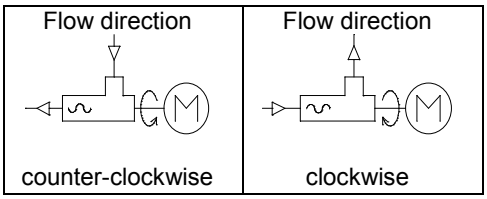

Prior to commissioning the rotational direction of the pump must be checked for compliance with the data sheet specification and the rotational direction arrow on the type plate of the pump.

6.3
Control and Monitoring Equipment

Where applicable, please refer to the associated documents, Point 10, for information on commissioning.

6.3.1
Performance Check

Any optional extras must be subjected to a performance check in conformity with the specifications by seepex or other manufacturers, see manufacturer's documents.

6.3.2
Setting

Unless already performed in the factory, setting must be carried out in accordance with the appended manufacturer's specifications, Point 10. Pay attention to the operating specifications in the data sheet.

6.4
Equipment for Protection of Persons

Machines must be fitted with mechanical protective devices complying with DIN EN 809.

- Moving or working parts must be protected against accidental contact.
- However, safety considerations demand it be possible at all times to check without hindrance whether the shaft seal is fully functional. A protective guard is necessary in this area only if components are mounted on the rotating, smooth shaft.



- If pumps are operated with an open suction flange/feed hopper, a suitable protective guard complying with DIN EN 294 must be mounted.
- Country-specific protective regu-lations must be observed at the site of installation. Prior to activation of the pump, check the proper function of all protective equipment.

6.5
Commissioning

6.5.1
Initial Startup/Re-starting

CAUTION

Every seepex progressive cavity pump is designed for the specific operating conditions documented in the data sheet. Commissioning is permissible only if the operating conditions conform with those indicated in the data sheet. Although the potential usages of the seepex pump are not confined to the specified operating conditions, any change in the original conditions must be checked and approved by seepex.

The right to make claims under the warranty agreement will be annulled if operating conditions are changed without prior approval by seepex.

6.5.2
Avoid Dry Running of Pump

CAUTION

The dry running of a pump increases the friction between rotor and stator, quickly causing an unacceptably high temperature to develop on the inner surface of the stator. This overheating leads to burning of the stator material and the total failure of the pump.

For this reason it is necessary to ensure that the suction-sided flow never dries up completely. If a continuous flow cannot be guaranteed for the plant, it is essential to fit the seepex dry running protection device TSE, available as an optional accessory.

6.5.3
Check Pressure at Suction and Pressure Flanges

6.5.3.1
Safeguard Pump Against Excessive Pressure at the Suction Flange

The seepex pump is designed to operate with the pressure at the suction flange (suction head or inlet pressure) specified in the data sheet. Deviating pressure conditions may lead to the failure and/or destruction of the shaft seal or entire pump.



For this reason the suction pressure specified in the data sheet must be guaranteed. Appropriate monitoring devices are oil-filled contact mano-meters that deactivate the pump.

6.5.3.2
Safeguard Pump Against Excessive Pressure at the Pressure Flange

The seepex pump operates according to the positive displacement principle. Operation of the pump against an excessive pressure caused by closed valves, by high pressure losses in the piping or by product sedimentation will lead to the destruction of the pump, drive, pipe work and/or downstream equipment. Every progressive cavity pump must therefore be protected against overpressure. Safety valves with bypass pipes or oil-filled contact manometers that disactivate the pump are appropriate protective devices.



6.5.4
Drive Engine

Consult the attached manufacturer's operating instructions, Point 10, for information on commissioning the drive engine.



6.5.5
Establish Clear Passage Through Pipelines

CAUTION

To prevent damage to the pump the unhindered flow of liquid must be guaranteed between the points of entry to and exit from the pipeline. For this reason, open all relevant valves etc. prior to activation of the pump.

6.6
De-commissioning

6.6.1
De-activation

The electric connections must be switched off and protected against accidental re-activation. Observe the safety regulations applying to the plants.



6.6.2
Stationary Pump

The pump and all optional equipment must be provided with the following protection modes while at a standstill:

- Frost protection
- Protection against solid particle deposits
- Protection against sedimentation of the medium
- Corrosion protection for parts in contact with the medium

We recommend that the pipeline and pump be emptied for the duration of the plant standstill. Following evacuation, the pump should be preserved.

6.6.3
Evacuation of the Pump

The pipeline must be evacuated on the suction and pressure side or shut-off directly behind the pump connections. Drain any residual liquid in the pump casing by opening/ removing the screwed sealing plugs (705) and (502), sealing rings (706) and (503). Casings without screwed plug must be evacuated by the connection branch (SAG and DRS). Refer to the data sheet and the sectional drawing of the associated operating instruction, Point 9, for information on the pump design. Conveying medium residues always remain in the rotor/ stator chambers and may run out during transport or disassembly of the pump. If conveying aggressive or hazardous media, therefore, wear appropriate protective gear during all installation work.



6.6.4
Disassembling the Pump

Dismantle the pipe work by removing the flange bolts (SCH) and flange seals (DFL) or the threaded connections (G).

Disassemble the pump together with the baseplate (GPU) or, as applicable, without the baseplate (GPU) following removal of the bolts (SCH) at the pump feet.

Block-design pumps with direct flange-mounted drive engine are liable to become unstable during disassembly. Stability can be restored by propping up the drive engine.



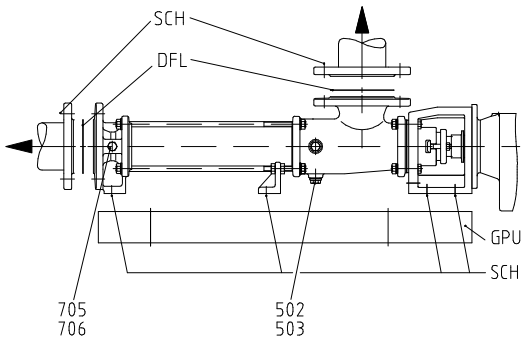

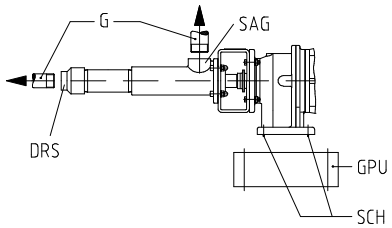

6.6.5
Preservation/Storage

The pump must be preserved prior to storage. Appropriate preservation measures must be agreed with **seepex**. Always state the pump commission number when making inquiries.

These operating instructions are valid for range MD (stainless steel-design) size 0015-24 to 012-24

7.0
Service and Maintenance

Contents
7.1 General Instructions
7.2 Service and Inspection
7.3 Dismantling
7.4 Re-assembly

The sectional drawing and parts list relevant for Points 7.3 and 7.4 can be found in Point 9.

7.1
General Instructions

A requirement for the reliable operation of any pump is service and maintenance in compliance with instructions. Maintenance personnel must therefore have access to these operating instructions and adhere to them meticulously. seepex will accept no liability for damages arising through non-observance of these operating instructions.

7.2
Maintenance and Inspection

7.2.1
Lubrication

7.2.1.1
Rotor and Stator

The rotor and stator are lubricated by the conveying medium.

7.2.1.2
Shaft Sealing

Consult document OM.SEA.__ for information on lubricating the shaft seal.

7.2.1.3
Pin Joint

The pin joints are filled with special grease and lubricated for the expected duration of service. The seepex joint grease specified in the index of these operating instructions should be used exclusively for any required maintenance work.

CAUTION

Usage of other grease types will lead to premature joint failure and render invalid any right to claims under guarantee.

7.2.1.4
Bearing of the Pump/Drive Engine

The bearing of the rotating pump parts is effected by the drive engine. Lubrication instructions are therefore included in the appended drive engine operating instructions.

7.2.2
Lubricant Filling Levels

Details are specified in the index.

7.2.3
Drives and Optional Extras



For maintenance and inspection specifications, see the appended manufacturer's documents.

7.2.4
Supervision during Operation

7.2.4.1
Shaft Sealing

See document OM.SEA.__.

7.2.4.2
Optional Extras

These must be monitored in accordance with the separate documents, Point 9/Point 10.

7.2.4.3
Drive Engines

These must be monitored in accordance with the separate manufacturer's documents, Point 10.

7.2.5
Preventive Measures

To avoid the expenses incurred by lengthy stop periods of the pump, seepex recommends the acquisition of a set of wearing parts and a set of gaskets. The contents are listed in the document OM.WPS.40.

7.3
Dismantling the seepex Progressive Cavity Pump

Tools are required for dismantling and re-assembly. These tools are listed in Point 9 of the document OM.SPT.01.

The stator (601) and the rotating pump parts can be exchanged in site. The rotating pump parts can be dismantled as a complete rotating unit (RTE) (Point 7.3.4) or as individual components (Point 7.3.5).

Before commencing the dismantling of pump parts, safeguard the pump against tipping over or falling down by fastening it at the drive (ANT).

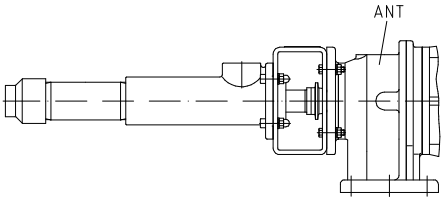

7.3.1
Pressure Flange (700) - Dismantling

Prior to dismantling see Point 7.3.2

CAUTION

Pressure branch (700) is glued in place with an adhesive of medium strength.
Therefore, to break the seal / adhesive compound it is recommended to heat upto a maximum of 80 °C.

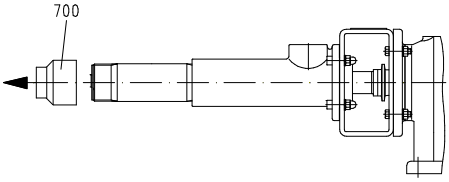

7.3.2
Stator (601) - Dismantling

- Maintenance tip:
  Disassembly of the stator can be made considerably easier by first moistening the inner surface of the stator with antiseize agent (soft or liquid soap). Before removing the pressure flange (700), pour the antiseize agent into the opening between rotor and stator on the pressure flange side. Several clockwise (see Point 6.2.5) revolutions of the rotor will then distribute the antiseize agent over the inner surface of the stator and reduce the friction between rotor and stator considerably.
- Lock drive shaft against rotation.

CAUTION

Stator (601) is glued in place with an adhesive of medium strength. Therefore, to break the seal / adhesive compound it is recommended to heat upto a maximum of 80 °C. Dismantling the stator (601) with tool (W13/see Point 9).

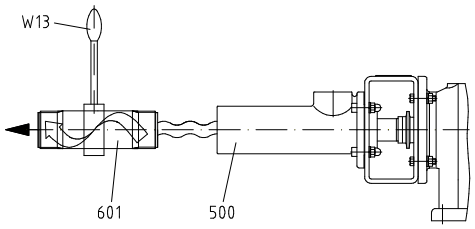

7.3.3
Suction Casing (500), Casing Gasket (501) - Dismantling

Fit the rotor (600) with a protective cover (SH).

CAUTION

Suction casing (500) with reducing unit (529)
Reducing unit (529) is glued in place with an adhesive of medium strength.
Therefore, to break the seal /adhesive compound it is recommended to heat upto a maximum of 80°C.

Suction casing (500) **without** reducing unit (529)

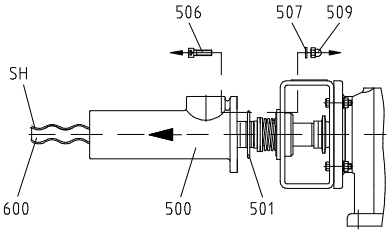

Suction casing (500) **with** reducing unit (529)

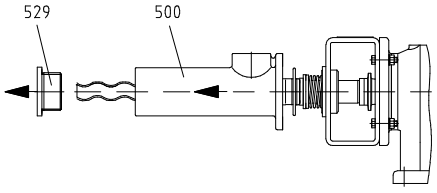

7.3.4
Rotating Unit (RTE) - Dismantling

CAUTION

Before dismantling the rotating unit it is essential to comply with the specifications in document OM.SEA.__ Shaft Seal Dismantling, see Point 9..

- Remove flushing connections at shaft seal housing (SEA).
- Raise/shift splash ring (310) and eject plug-in shaft pin (309) in horizontal direction.
- Remove rotating unit (RTE)/plug-in shaft (307), together with shaft seal (SEA) from output shaft of the drive (ANT). See Document OM.SPT.01, in Point 9 for tool (W10) used for pulling off.
- See in document OM.SEA.__ for removal of the shaft seal (SEA) from the plug-in shaft (307).

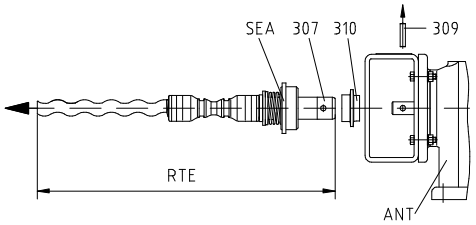

7.3.5
Rotating Pump Parts - Dismantling

7.3.5.1
Rotor (600), Coupling Rod (400)

Detach the rotor (600) and coupling rod (400) from the plug-in shaft (307) by dismantling the joint (G) in accordance with Point 7.3.6.

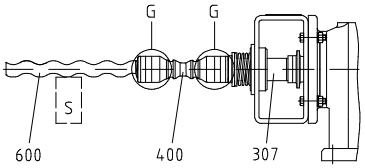

7.3.5.2
Plug-in Shaft (307)

The plug-in shaft (307) is removed in the same way as the rotating unit (RTE), see Point 7.3.4.

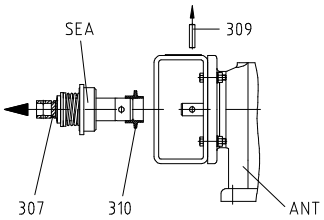

7.3.6
Dismantling of Joint

see document OM.PJT.04 Point 1.

7.3.7
Shaft Sealing

See document OM.SEA.__ for information on dismantling the shaft sealing.

7.3.8
Lantern (200)/Drive (ANT) - Dismantling

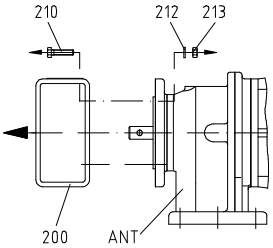

7.4
Re-assembly

Before commencing the re-assembly, fasten the drive (ANT) in such a way that it cannot tip over or fall down during the re-assembly of the drive and all pump components.



7.4.1
Lantern (200)/Drive (ANT) - Assembly

Clean flange bearing surfaces (FLS), centering diameter and output pivot of the drive (ANT).

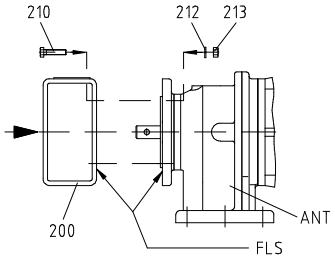

7.4.2
Rotating Unit (RTE) - Re-assembly

The rotating unit (RTE) has been assembled in accordance with the description in document OM.PJT.04

- Mount shaft seal (SEA) on plug-in shaft (307) in the way described in document OM.SEA.__, see Point 9.

- Moisten splash ring (310) and plug-in shaft (307) with joint grease (see index for type) and slide splash ring (310) onto plug-in shaft (307), observing the fitting position of the splash ring, (see lettering on the splash ring).
- Apply antiseize graphite petroleum to the output pivot of the drive (ANT) and slide on the rotating unit (RTE). Insert plug-in shaft pin (309) horizontally.
- Splash ring position (310)
  Outer edge of splash ring (310) has to occlude with outer edge of plug-in shaft (309).

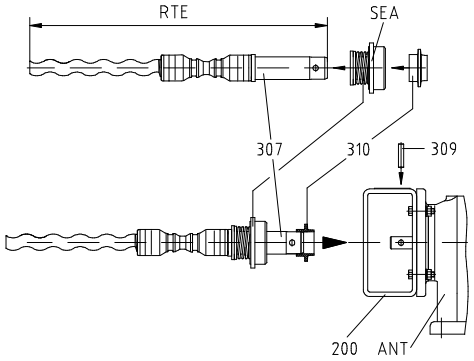

7.4.3
Rotating Pump Parts - Re-assembly

Prepare main components:
Prepare rotor (600), coupling rod (400) and plug-in shaft (307) as described in document OM.PJT.04 Point 2. to 2.3
Joint (G) re-assembly as described in document OM.PJT.04 Point 3.

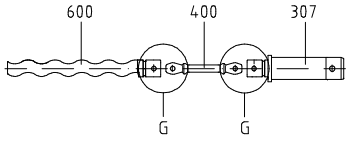

7.4.4
Suction Casing (500), Casing Gasket (501) - Re-assembly

Fit protective cover (SH) on rotor (600).
Assemble casing gasket (501) and suction casing (500).

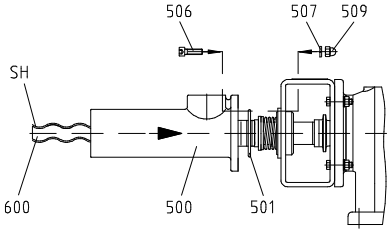

CAUTION

Install reducing unit (529) to suction casing (500) with an adhesive of medium strength

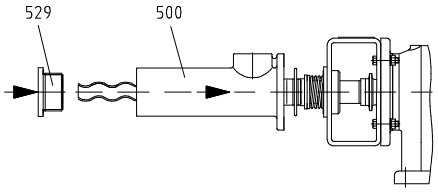

7.4.5
Stator (601) - Assembly / Re-assembly

Maintenance tip:
Disassembly of the stator can be facilitated considerably by first moistening the inner surface of the stator with antiseize agent (soft or liquid soap).
Before removing the pressure flanges (700), pour the antiseize agent into the opening between rotor and stator on the pressure flange side. Several clockwise (see Point 6.2.5) revolutions of the rotor will then distribute the antiseize agent over the inner surface of the stator and reduce the friction between rotor and stator considerably
Lock drive (ANT) shaft against rotation.

CAUTION

Install external thread of stator (601) with an adhesive of medium strength. Turn stator (601) to the right using a tool (W13/see Point 9), slip it onto rotor (600) and screw it into the suction casing (500) at the same time.

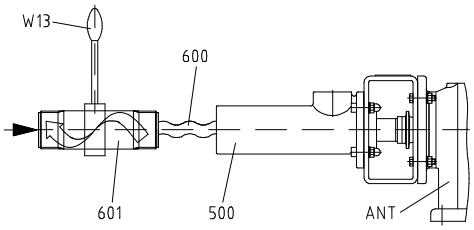

7.4.6
Pressure Flange (700) - Assembly

CAUTION

Install pressure branch (700) with an adhesive of medium strength

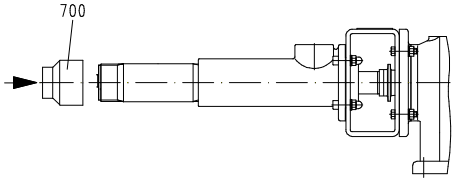

1.0
Dismantling of Joint

1.1
Holding Band (406) - Dismounting

Cut through loop (SCL) of the holding band (406) with a metal saw.

Wear protective goggles when squeezing out the two halves of the holding band loop (SCL).



Remove holding band (406).

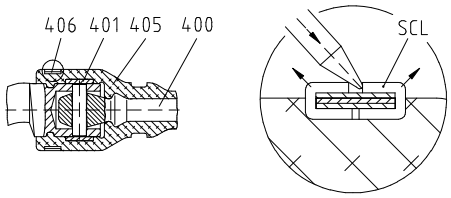

1.2
Rotor (600) - Dismantling

Withdraw universal joint sleeve (405) with retaining sleeve (401) in coupling rod direction and fix it by using a special maintenance tool (W15/see document OM.SPT.01)

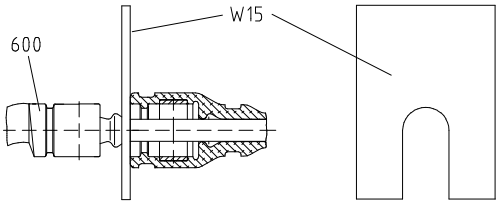

- **Separation of Joint**

  Eject coupling rod pins (402). Pull coupling rod (400) out of joint top.

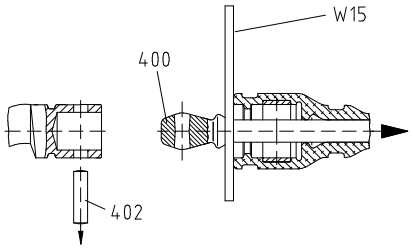

1.3
Universal Joint Sleeve (405)

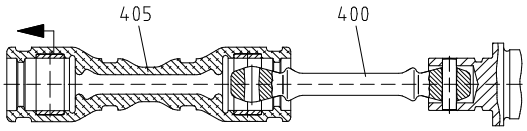

1.4
Coupling Rod (400)

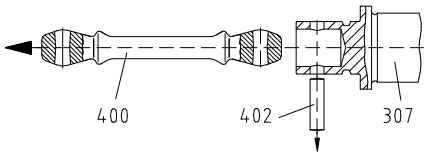

1.5
Retaining Sleeve (401)

Remove retaining sleeve (401) from universal joint sleeve (405).

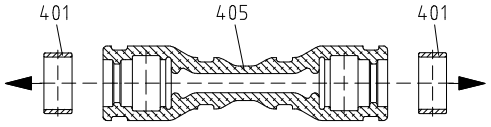

2.0
Prepare main components for Re-assembly

2.1
Rotor (600) - Preparation for Joint Assembly

First remove any burr, flaws or similar defects from the rotor, then clean it.
If the hole for the coupling rod pin (402) has worn out, a new rotor (600) has to be installed.

2.2
Coupling Rod (400) - Preparation for the Joint Assembly

Clean coupling rod and check top drilling regarding wear.

CAUTION

If the top drilling shows wear, a new coupling rod will have to be used.

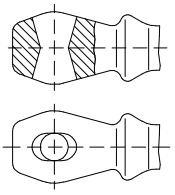

Correct top drilling

2.3
Plug-in Shaft (307) - Preparation for Joint Assembly

Remove any burr, flaws or similar defects from the plug-in shaft (307), then clean it.
If the hole for the coupling rod pin (402) has worn out, a new plug-in shaft (307) has to be installed.

3.0
Joint - Re-assembly

CAUTION

To ensure a perfect operation of the joints, coupling rod pins (402) and coupling rods (400) showing wear should be replaced. Refer to Point 2.2

3.1
Joint Grease (098)

Joint head at rotor (600) and plug-in shaft (307)
Fill joint head with joint grease (098).
(Regarding joint grease (098) refer to index of operating instruction)

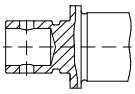

3.2
Coupling Rod (400)

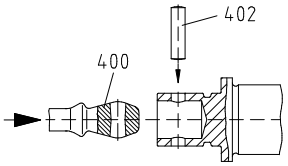

3.3
Retaining Sleeve (401)

Moisten both sides of retaining sleeve (401) with joint grease and insert this unit in universal joint sleeve (405).

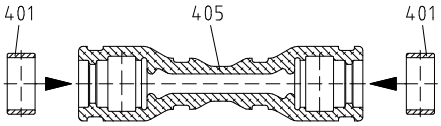

3.4
Universal Joint Sleeve (405)

Moisten surface of coupling rod (400) and inner surface of universal joint sleeve with joint grease Regarding joint grease (098) refer to index of operating instruction.
Slip universal joint sleeve (405) with fitted retaining sleeves (401) onto coupling rod (400) and joint head.

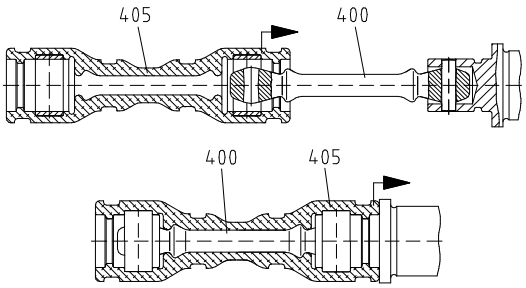

3.5
Rotor (600)

Push back universal joint sleeve (405) at rotor side towards coupling rod (400) and fix it using the relevant tool (W15/refer to document OM.SPT.01).

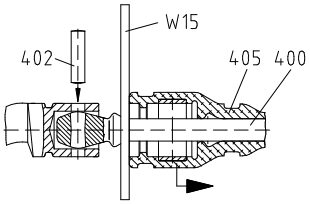

Slip universal joint sleeve (405) onto joint head.

3.6
Universal Joint Sleeve - Deaeration

Deaerate interior space of joint at the side of plug-in shaft and rotor using relevant tool/screw driver (WS)

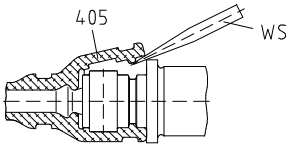

3.7
Holding Band Re-assembly

Mount holding band (406) using tool (W3/OM:SPT.01) as described in document OM.HBD.01.

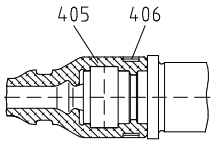

Holding Band (HBD) - Assembly

Tools required for the re-assembly, see document OM.SPT.01.

- Prepare holding band

  Only prefabricated double-band holding bands should be used. The diameter (∅) and in particular the breadth (b) of the holding band is matched to the universal joint sleeve.

- Test holding band

  The bent holding band (HBD) must fit against the holding band loop (SCL), if necessary apply pressure with the tool/pliers (WZ).

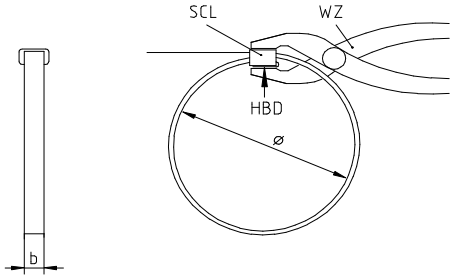

- Assembly of holding band

  Insert holding band in tool (W3/ see Point 9). Hold free end of holding band with control lever (EX), turn crank (KU) until the holding band is strained and fitting against the holding band loop (SCL). Carefully contract holding band until it fits inside the circular groove of the universal joint sleeve.

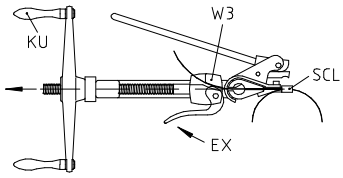

- Correct holding band tension (HBD)

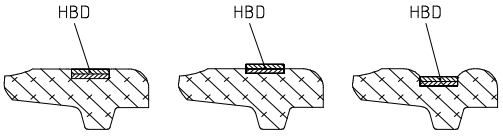

Correct
Holding band (HBD) has slightly con-tracted outer form of univers-al joint sleeve and is stuck in position.

Incorrect
Holding band (HBD) is too slack and liable to slip.

Incorrect
Holding band (HBD) is too tight. Universal joint sleeve will be damaged/sheared off.

- Folding back the holding band (HBD)

  Slowly swivel mounting tool upward by 60°, at the same time slackening the crank (KU) by approximately one half revolution. Swivel cutting lever (SH) forward until the pressure plate fits against the holding band loop (SCL).

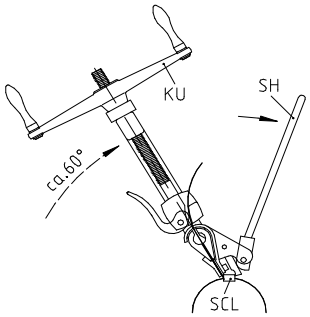

- Shearing off holding band (HBD) made of material AISI 304 and AISI 316

  A blow with the palm of the hand against the cutting lever (SH) causes the end of the holding band behind the loop (SCL) to be folded back and sheared off. If the holding band on the sheared off side is slightly raised as a result, it must be straightened carefully.

  CAUTION

  Never tap or hammer against the loop of the holding band (SCL), otherwise damage to the universal joint sleeve may occur.

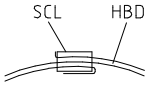

- Shearing off holding band (HBD) made of Hastelloy C

  The high strength of this material makes it impossible to shear off the holding band (HBD) with the cutting lever (SH). Once the end of the holding band is folded back, cut off the holding band (HBD), file off projecting edges and remove burr.

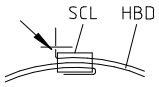

- Check after mounting of holding band

  The holding band must run all the way round the groove of the universal joint sleeve.

  The holding band (HBD) must be bent back and sheared off at the holding band loop (SCL) in such a way that the holding band (HBD) is unable to slip back through the holding band loop (SCL). If this has not been accomplished, then the holding band (HBD) must be replaced by a new one.

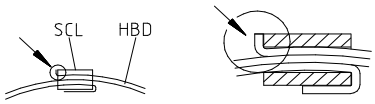

Breakdown											
pump has no suction	pump conveys irregularly	the conveying capacity is not achieved	pressure is not achieved	pump does not start	pump has seized or has stopped conveying	pump operates noisily	motor becomes too warm	the stator wears out early	shaft sealing leaks	seepex progressive cavity pumps will operate trouble-free if they are used in accordance with our data sheet (see item 9) and our operating and maintenance instructions:	
1	2	3	4	5	6	7	8	9	10		Reasons / Remedies
				X			X			a	Adhesion between rotor and stator excessive (as delivered). Lubricate (soft soap, genuine soap) between stator and rotor. Then turn the pump by means of the tool W2 .
X										b	Check rotational direction of the pump per data sheet and nameplate. In case of wrong direction, change wiring of motor.
X	X	X			X	X				c	Suction pipe or shaft sealing leak. Eliminate the leakage.
X	X	X				X				d	Suction head too high (item 6.5.3.1). Check suction head with vacuum gauge. Increase the suction pipe diameter and fit larger filters. Open the suction valve fully.
X	X	X								e	Viscosity of the liquid too high. Check and accommodate per data sheet.
		X		X			X			f	Wrong pump speed. Correct pump speed per data sheet.
	X	X								g	Avoid inclusions of air in the conveying liquid.
		X		X	X		X	X		h	Pressure head too high (point 6.5.3.2). Check pressure head with manometer. Reduce the pressure head by increasing the pressure pipe diameter or by shortening the pressure pipe.
X	X	X			X			X		i	Pump runs partially or completely dry (point 6.5.2). Check flow in the suction chamber. Install dry running protection TSE.
						X	X			j	Check coupling, possibly pump shaft is misaligned to drive. Check whether coupling gear is worn. Realign coupling. The coupling gear has perhaps to be replaced.
X		X								k	Speed too low. Increase the speed when high suction performances are required and when the liquid is very thin.
X	X					X				l	Speed too high. Reduce the speed when pumping products with high viscosities - danger of cavitation.
						X				m	Check the axial play in the coupling rod linkage. Check that the bush has been installed correctly see document OM.PJT.__.
X		X		X	X			X		n	Check for foreign substances in the pump. Dismantle the pump, remove foreign substances and replace worn parts.
X		X	X		X					o	Stator or rotor worn. Dismantle the pump and replace defective parts.
X		X			X	X				p	Joint parts worn. Replace worn parts and fill with special pin joint grease .
X		X			X			X		q	Suction pipework partially or completely blocked. Clean suction pipework.
X				X	X		X	X		r	Temperature of the pumping liquid too high. Excessive expansion of the stator. Check temperature and install rotor with diameter smaller than specified.
X		X		X			X		X	s	Gland packing too strongly tightened or worn. Ease or tighten stuffing box. Replace defective packing rings.
X				X	X			X		t	Solid contents and/or size of solids too large. Reduce pump speed and install perhaps a screen with suitable meshes. Increase fluid share.
X				X				X	X	u	When the pump is non operational the solids settle out and become hard. Clear and flush the pump immediately.
X				X	X			X	X	v	The liquid becomes hard when temperature falls below a certain limit. Heat the pump.
				X	X		X	X		w	Stator swollen and unsuitable for the pumped liquid. Select a suitable stator material. Use perhaps rotor with diameter smaller than specified.
						X			X	x	The bearing in the drive casing of the pump or in the drive engine is defective. Replace bearing.
									X	y	Mechanical seal defective. Check seal faces and O-rings. If necessary replace corresponding defective parts.

9.0
Auxiliary seepex documentation

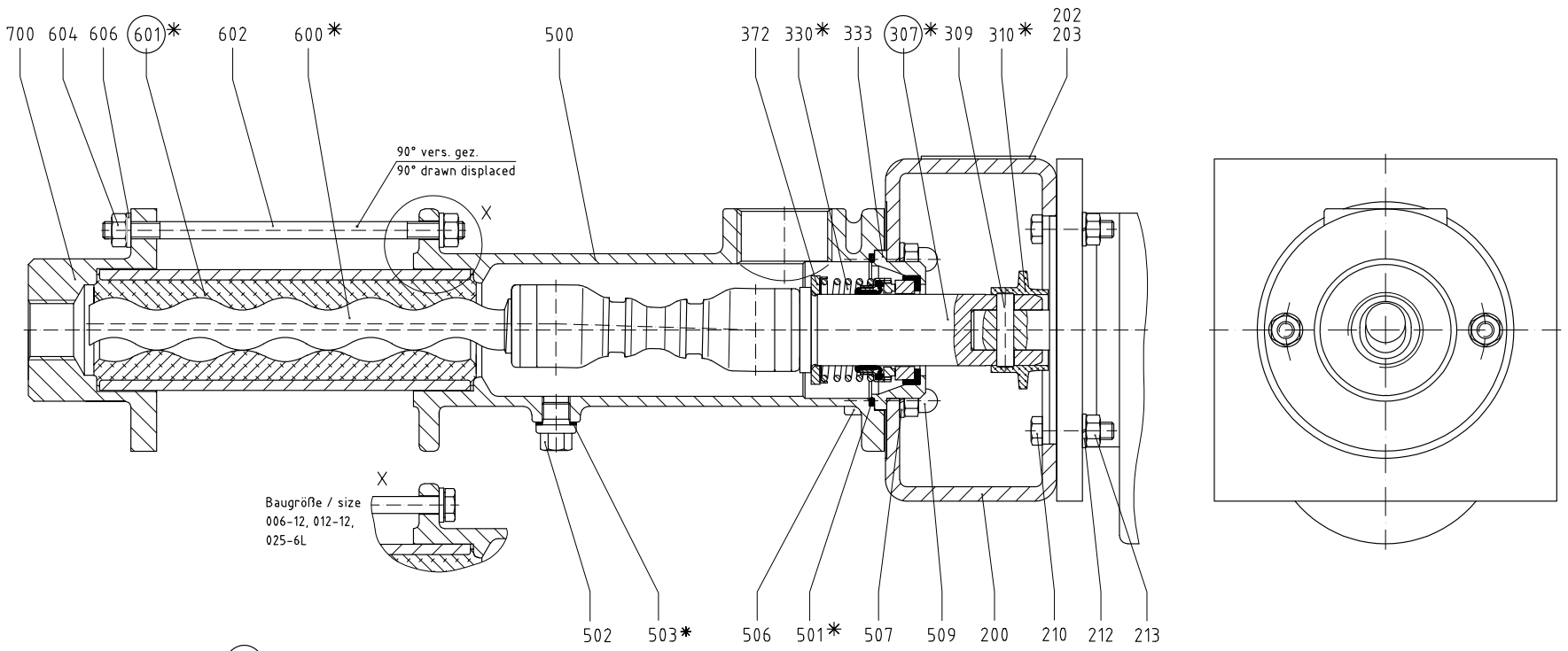

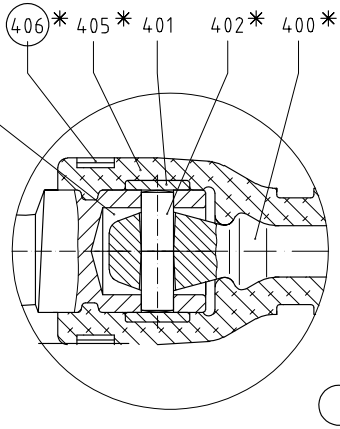

seepex Gelenkfett

Typ und Füllmenge:
Betriebs- und Wartungsanleitung entnehmen

seepex joint grease

type and filling quantity:
see operating and maintenance instruction

Werkzeug
Betriebs- und Wartungsanleitung entnehmen

tool
see operating and maintenance instruction

* Verschleißteile und Dichtungen
Betriebs- und Wartungsanleitung entnehmen

Wearing parts and sealings
see operating and maintenance instruction

Werkstoff-Ausführung 4440-,
material-construction 4440-,

Stück Unit	Norm Standard	Pos./Item	Benennung/Denomination Zeichnungs-Nummer/Drawing-Number	Werkstoff/Material	Bemerkung/Remark	Gewicht Weight kg

seepex.com

seepex
GmbH + Co KG
Schornhölzstraße 344
46240 Bottrop
www.seepex.com

Allgemeintoleranzen für Maße ohne einzelne Toleranzeintragung DIN ISO 2768-mittel	Ausgabe Issue	Änderung Modification	Name Name	Datum Date
General tolerances for mass without individual tolerance entry DIN ISO 2768-average				
Rauheit für Oberflächenzeichen DIN ISO 1302 Reihe 2				
Roughness for surface finish indication DIN ISO 1302 Reihe 2				

Maßstab/Scale: %

Werkstoff/Material

Gewicht/Weight

Bezeichnung/Denomination
Schnittzeichnung Baureihe "MD"
sectional drawing range "MD"
mit 2 Spannschrauben
with 2 tie bolts

	Name Name	Datum Date
Bearbeitet/Drawn	ov	18.08.1997
Geprüft/Checked	hue	18.08.1997
Normiert/Standard		
Gedruckt/Printed		

Zeichnungs-Nummer/Drawing-Number
103-007A2

EDV-Nr./EDP-No. L:\LFDZCHNG.245\24646

Ersatz für/Replacement for:

Ersetzt durch/Replacement by:

Urheberrechtsschutz: Diese Zeichnung ist unser Eigentum und uns nach dem Gesetz über Urheberrecht und verwandte Schutzrechte geschützt.
Protection of Copyright: This drawing is our property and is protected acc. to the law referring to copyright and related protective laws.

Stückliste
Parts List
Liste des pièces

Stck.	Pos.	DE **Baureihe MD** **Schnittzeichnung Nr. 103-007_2** **Benennung Stck. / Pos.**	GB **range MD** **sectional drawing No. 103-007_2** **denomination Qty. / item**	FR **série MD** **plan no. 103-007_2** **désignation Qté. / Poste**
1	200	Laterne	lantern	lanterne
2	202	Halbrundkerbnägel	round head grooved pin	rivet
1	203	Typenschild	type plate	plaque signalitique
4	210	6kt-Schraube	hexagon bolt	vis
4	212	Federring	spring washer	rondelle frein
4	213	6kt-Mutter	hexagon nut	écrou
1	307	Steckwelle	plug-in shaft	arbre à broche
1	309	Steckwellenbolzen	plug-in shaft pin	cheville pour arbre à broche
1	310	Spritzring	splash ring	bague de projection
1	330	Gleitringdichtung	mechanical seal	garniture mécanique
1	333	Gleitringdichtungsgehäuse	mechanical seal casing	carter de la garniture mécanique
1	372	Stützring	support ring	bague d'appui
1	400	Kuppelstange	coupling rod	barre d'accouplement
2	401	Gelenkhülse	retaining sleeve	douille d'articulation
2	402	Kuppelstangenbolzen	coupling rod pin	axe d'articulation
1	405	Manschette	universal joint sleeve	manchette
2	406	Halteband	holding band	collier de serrage
1	500	Sauggehäuse	suction casing	carter d'aspiration
1	501	Sauggehäusedichtung	casing gasket	étanchéité du carter d'aspiration
4	506	Zylinderschraube	socket screw	vis à tête cylindrique
4	507	Federring	spring washer	rondelle frein
4	509	6kt-Mutter	hexagon nut	écrou
1	600	Rotor	rotor	rotor
1	601	Stator	stator	stator
2	602	6kt-Schraube	hexagon bolt	vis
2	604	6kt-Mutter	hexagon nut	écrou
2	606	Scheibe	washer	rondelle
1	700	Druckstutzen	pressure branch	bride de refoulement
	098	seepex Gelenkfett Typ und Füllmenge: Betriebs- und Wartungsanleitung entnehmen	seepex joint grease type and filling quantity: see Operating and Maintenance Instruction	seepex graisse d' articulations sommaire pour type et quantité: voir Instructions de service et d'entretien
		Verschleißteile und Dichtungen: Betriebs- und Wartungsanleitung entnehmen	Wear parts and sealings: see Operating and Maintenance Instruction	pièces d'usure et étanchéités: voir Instructions de service et d'entretien
		Werkzeuge: Betriebs- und Wartungsanleitung entnehmen	Tools: see Operating and Maintenance Instruction	Outils: voir Instructions de service et d'entretien
		versetzt gezeichnet	drawn displaced	plan separé

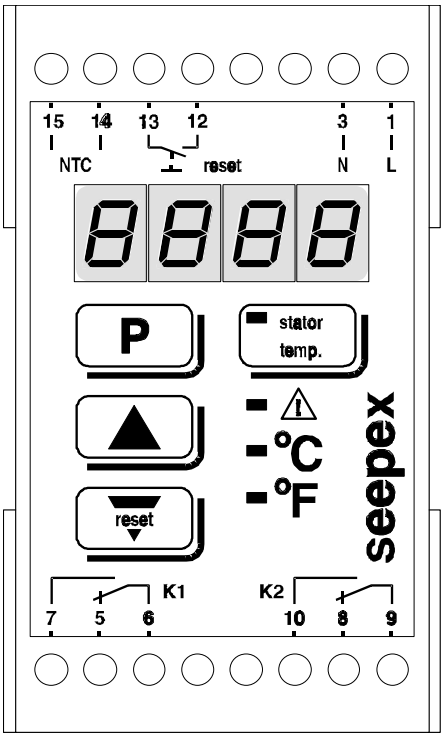

CONTENTS:

1.0 General

1.1 Introduction
1.2 Function

2.0 Technical Data

2.1 Temperature Sensor
2.2 TSE Control Device for Installation in Control Panel

3.0 Electrical Connection of the TSE

3.1 Installation Instructions
3.2 Connection Diagram of TSE Control Device
3.3 Relay Function

4.0 Procedures prior to Commissinong

4.1 Check Position of the Temperature Measuring Point at the Pump
4.2 Function Check
4.3 Approximate Adjustment of Trip Temperature

5.0 Commissioning and Operation

5.1 Fine Adjustment of Trip Temperature
5.2. Resetting of the Control Device after Dry-Running
5.3 Changeover of Display from ºC to ºF

6.0 Replacement of Stator

6.1 Order of Replacement Stator
6.2 Dismantling and Re-Assembly of Connection Head and Temperature Sensor

7.0 Malfunction

7.1 General
7.2 Function Check of Sensor Circuit
7.3 Function Check of TSE Control Device

8.0 Enclosures

. 8.1 Drawing 702-000/0000-0-009 __ for sizes 006-12 and 025-6L
. 8.2 Drawing 702-000/0000-0-008 __ for Sizes 025-12 up to 500-6LA
. 8.3 Additional Information ZU.TSE.02 for TSE Motor Control
. 8.4 Additional Information ZU.TSE.03 for TSE in Explosion Proof Construction

1.0 General

1.1 Introduction

Progressive cavity pumps should generally be protected against dry-running. Due to the increased friction between the main conveying elements ie. rotor and stator, which occurs in the event of dry-running the pump, the temperature at the internal surface of the stator can quickly rise depending on the pump speed.
When exceeding the max. permissible operating temperature the internal surface of the stator will burn and cease operation. If this occurs the stator needs to be replaced. The possible malfunction of an progressive cavity pump can be easily avoided by using the patented dry-running protection device TSE.

1.2 Function

The general operating principle of the dry-running protection device TSE is to continuously monitor the temperature in the stator and to trip the pump when reaching a limit temperature. The temperature in the pump stator is compared with the pre-set trip temperature via a NTC temperature sensor, which is fitted in the stator of the pump as well as the TSE control device, which is positioned in the control panel. In case of dry-running of the pump and a temperature increase in the stator up to the pre-set switch-off value, two relays will switch.

The drive motor of the pump will be switched-off via the potential-free changeover contacts and a fault message will be released. After rectification of the cause of the dry-running and the cooling down of the stator, the fault message at the TSE device can be acknowledged and the pump can be switched on again.

By acknowledging the fault message an automatic re-connection without inspection and correction of the cause of the dry-running is avoided.

2. 0 Technical Data

2.1 Temperature Sensor

The NTC thermister is installed in a stainless steel protection sleeve in the stator of the pump.
Permissible Temperature Range: 0-150 ºC
Standard Resistance: 10 kOhm at 25 ºC

Temp. °C	Resistance Ohm	Temp. °C	Resistance Ohm
0	32.650	70	1.752
10	19.900	80	1.255
20	12.490	90	915
25	**10.000**	100	678
30	8.057	110	510
40	5.327	120	389
50	3.603	130	301
60	2.488	140	235

2.2 TSE Control Device for Installation in Control Panel

2.2.1 Technical Data

Type:	SGRTSE 230 AC, SGRTSE 115 AC, SGRTSE 24 AC, SGRTSE 24 DC
Temperature Range:	0-150 ºC
Input:	NTC temperature sensor 10 kOhm (at 25 ºC) with sensor breaking protection at - 25 ºC.
Relay Output: changeover	2 potential-free contacts (K1,K2), breaking capacity 500 VA at 110/230 V Ohmic load.
Deliverable Operating Voltage:	24V, 115V, 230V AC; 24V DC
Power Consumption:	max. 4VA
Sensor Circuit:	No load voltage max. 2.5 VDC Short circuit current 0.5 mA DC
Display at Device:	Fault/Dry Running Trip temperature Stator temperature
Operation at Device:	Adjustment of trip temperature. Reset of fault message.
Casing Material:	ABS
Fastening:	Mounting on standard rail 35 mm acc. to standards or screw fixings acc. to standards
Kind of Protection:	Casing IP 40 Terminals IP 20
Ambient Temperature:	0-50 ºC
Dimension:	45x75x110 mm (WxHxD)
EMV (89/336/EEC)	CE conform acc. to standards

2.2.2
Dimensions and Wall Mounting

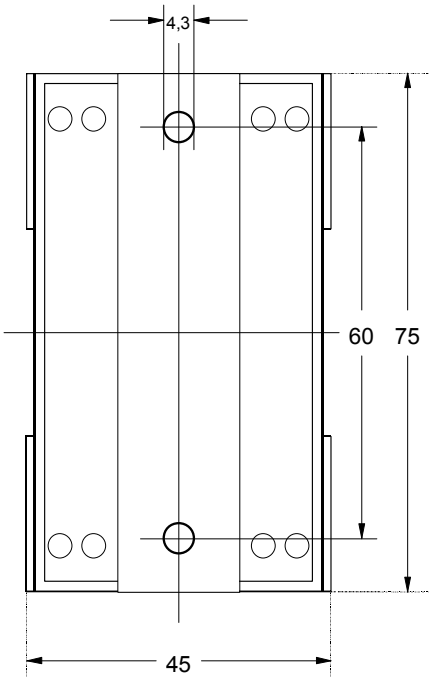

Installation Depth = 110 mm

3.0
Electrical Connection of the TSE

3.1
Installation Instructions

Prior to the connection and the commissioning of the device it has to be ensured that the supply voltage corresponds to the nominal voltage shown on the name plate. Nominal voltage fluctuations are permissible in the range of +/- 10 % of the device's nominal voltage.

The electrical connections have to be carried out in accordance with the wiring diagram and the regulation of the local EVV or the VDE directions.

In case of power fluctuations which lead to a malfunction of the device, adequate procedures have to be taken to avoid its reoccurrence. Alternatively these errors could be filtered out by an external supply filter. The device has to be provided with an internal supply filter.

Sensor leads have to be shielded. The shield has to be earthed at one end.

3.2
Connection Diagram of TSE Control Device

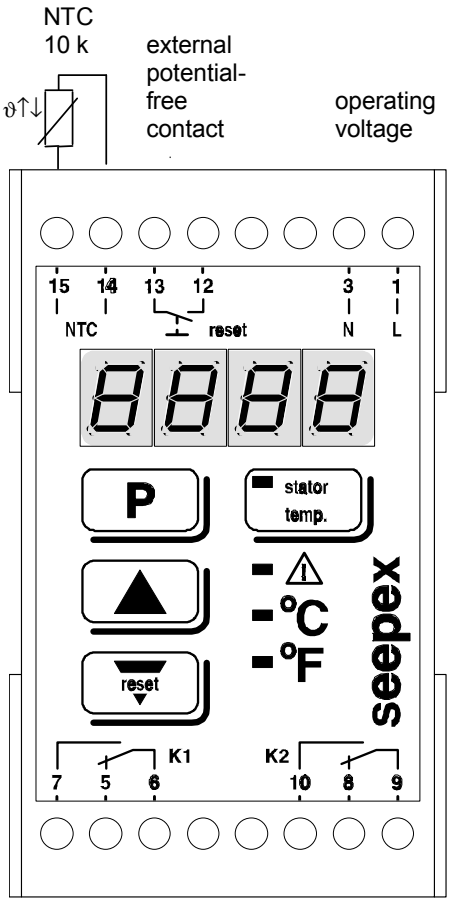

Should the TSE control device be reset after a dry-running from the control panel door or another remote position, a button ("make contact") at the terminals 12 +13 can be used.

3.3.
Relay Function

Actual temperature ‹ trip temperature
(trouble free operation)
Contacts 6 to 7 and 9 to 10 closed
Contacts 6 to 5 and 9 to 8 open

Actual temperature › trip temperature
(Malfunction/Dry Running)
Contacts 6 to 5 and 9 to 8 closed
Contacts 6 to 7 and 9 to 10 open

Relays K1 and K2 are switched parallel to each other and operate simultaneously. K1 is integrated in the motor contactor control serving as a switch-off provision. K 2 is optional as stand by for additional connection to a fault indicator or as a reserve to the process control computer.

4.0
Procedures prior to Commissioning

4.1
Check Position of the Temperature Measuring Point at the Pump

Considering the rotating direction and thus the conveying direction of the pump, the temperature sensor is fitted in our factory as per the following figures.

When changing direction of the pump and when replacing the stator the specified installation position of the temperature measuring point has to be checked. The temperature sensor must always be installed at the product entry side of the stator as the quickest temperature increase in case of dry-running will arise at this point.

4.1.1
Pump "counter clockwise rotation" - standard construction

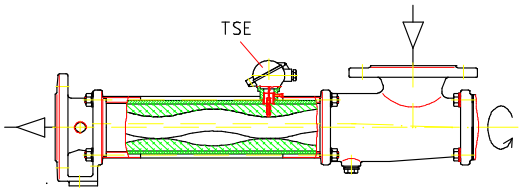

4.1.2
Pump "clockwise rotation" special construction

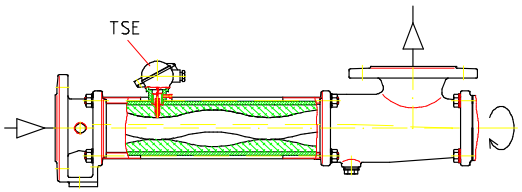

4.2
Function Check

After the electrical connection of the TSE and prior to the initial operation of the pump the following function check has to be carried out.

Switch-on control voltage at terminals 1 and 3 (Digital display at the TSE control device illuminates).

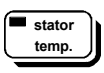

Press and hold button "stator temp" and read the temperature value.

If the shown temperature correspond to the ambient temperature in the pump the TSE is functioning correctly. In case of deviation proceed as per paragraph 7 - Malfunctioning.



4.3
Approximate Adjustment of Trip Temperature

The TSE control device is pre-set to a trip temperature of 50 ºC prior to leaving our factory. In order to achieve the shortest trip time after a dry-run and thus the max. protection of the pump stator, the trip temperature at the TSE control device has to be set as low as possible.

For the initial commissioning the temperature value pre-set in our factory should be maintained. Should the product have higher temperatures the value has to be adjusted to 20 to 30 ° C above the temperature of the conveying product.

Switch on control voltage. After self-check of the control device the actual pre-set temperature will show at the display.



Press and release button. Adjusting Mode is activated. The displays shows alternately "set" and the last set trip temperature.



Increasing the trip temperature - press button and release.
The adjusted temperature increases by + 1ºC. Press button and hold approx. 3 seconds in + 10 ° C steps.



Decreasing of trip temperature - press button and release.
The adjusted temperature decreases by - 1º C. Press button and hold approx. 3 sec. in - 10º C steps.



Press and release button. Return the unit to the operating mode. The adjusted trip temperature is transferred to a continuous memory and shown on the display.

Note: During the adjusting mode, if a button is not pressed within 10 seconds the controller automatically returns to the operating mode and disregards any previous adjustment.

Following the above approximate instruction, the seepex pump can operate for a limited period of time (approx. 1 hour). Then a correction of the adjustment according to paragraph 5 - Fine Adjustment - has to be carried out.



5.0 Commissioning and Operation

5.1 Fine Adjustment of the Trip Temperature

Following the instruction for approximate adjustment in paragraph 4.3 the seepex pump has to operate for at least 30 to 60 minutes to allow the operating temperature in the stator become stable.

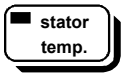

While the pump is in operation the temperature of the pump is shown on the display of the TSE controller by continuously pressing the button.

The final trip temperature has now to be set 10 ºC higher then the indicated operating temperature according to the instructions in paragraph 4.3.

Attention

For all adjustments the max. product temperature occurring during operation has always to be considered. In case of a product temperature higher than 40 ºC, it always has to be checked if this is mentioned in the data sheet of the pump and has therefore been considered in the rotor/stator design. If the temperature shown on the data sheet does not correspond to the actual temperature, please contact seepex.

5.2 Resetting of the Control Device after Dry-Running

In the event of dry-running of the pump and temperature increase in the stator above the pre-set limit value, the installed relays trip and maintain locked in this position. After the pump has cooled down the remaining fault message (red LED) has to be acknowledged using one of the following procedures, so that the relay will be reset.

5.2.1

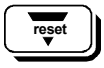

Press at the TSE control device for at least 1 sec.

5.2.2

Switch-off operating voltage at TSE control device (terminals 1-3).

5.2.3

With external contact (reset button, closed for at least 1 sec.)

5.3 Changeover of the Display from ºC to ºF.



Press and hold button for 10 secs. until display changes over.

The selected temperature units are shown via an LED next to the Symbol ºC or ºF.

6.0 Replacement of Stator

6.1 Order of Replacement Stator

When ordering a replacement stator for a seepex pump, please quote:

Stator drilled for TSE fitted with sensor sleeve in 1.4571.

If the pump is used to convey highly corrosive products where 1.4571 material is not resistant, a sensor sleeve made of 2.4610 (Hastelloy C4) has to be ordered.



Attention

The sensor sleeve is fitted in our factory. It is pre-set for operation and may not be adjusted.

6.2 Dismantling/Re-Assembly of the Connection Head and Temperature Sensor.

The following drawings apply:

- For TSE in elastic stators:
  Drawing No. 702-000/0000-0-009 __
  for pump sizes 006-12 and 025-6L.

  Drawing No. 702-000/0000-0-008 __
  for pump sizes 025-12 to 500-6LA.

- For TSE in fixed stators:
  Drawing No. 702-000/0000-0-005 __

6.2.1 Dismantling

Lift the cover of the connection head and disconnect wires of the temperature sensor. After having loosened the side screw slide the connection head off the threaded sleeve. Remove threaded sleeve from the stator and remove clamping ring, rubber ring and temperature sensor from sensor sleeve. The temperature sensor cannot be re-used and can thus be disposed off with the damaged stator.

6.2.2
Re-Assembly

The items mentioned in paragraph 6.2.1 have to be re-installed into the new stator. It is vital to consider the temperature measuring point when installing the stator (refer to paragraph 4.1).

Do not further adjust or change the sensor sleeve setting as this has already been done in our factory.

Remove protective pipe (protective transport packaging).

Push the thermistor sensor with clamping screws and rubber ring to the bottom of the sensor sleeve and adjust.

Screw the threaded sleeve with 2 O-Rings in the tapped hole at the stator.

When installing the connection head, the connection wires of the thermistor sensor must be threaded through the hole in the junction box. After fastening the connection head on the threaded stator barred, recannect wires and put the cover back onto the connection head.

7.0
Malfunction

7.1
General

Fault messages and switch-off of the pump without actual dry-running or overload might be caused by a defect in the temperature sensor wire, the TSE control device or other electrical switch devices.



The following reasons might have caused this error alarm at the TSE control device:

break of sensor or line
short circuit of sensor or line
measuring range (-25 ...150°C) is exceeded or remained under

The following procedure is recommended to check the TSE control device and the sensor circuit including temperature sensor:

7.2
Function Check of Sensor Circuit

Disconnect the temperature sensor wire at the TSE control device terminals 14 and 15 and connect a resistance measuring device (Multimeter or Ohmmeter). The measured electrical resistance must conform with the value in the table shown in paragraph 2.1 in accordance with the pump temperature. In case of deviations of the resistance value of more than 10% of the set value, measure the resistance at the connection head of the TSE at the pump. To do this the wire to the control device at the connection head of the pump needs to be removed. If the same deviations occur when measuring the resistance at the temperature sensor
directly at the pump, the temperature sensor is damaged and needs to be replaced (refer to paragraph 6.2 and 6.3).

Should the resistance check at the temperature sensor show correct values, then damage to the connection cable or the connection terminal is the cause of malfunction.

7.3
Function Check of TSE Control Device

If an trouble-free sensor circuit has been determined during the testing according to paragraph 7.2, damage to the TSE control device is most likely. In order to carry out the check, remove the sensor wires at terminals 14 and 15 and connect a commercial deposited carbon or metal film resistor as per the following list.:

Resistance (Ohm)	Switching Temp. °C
10.000	25
5.600	39
2.200	63
1.000	87
560	107
220	143

Switch-on control voltage at terminal 1+3
(Digital Display at the TSE device illuminates)

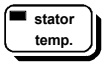

Press and hold button “stator temp.” and read the temperature value.

The shown value must correspond to the switch temperature, which applies to the resistance used. Should the shown value deviate by more than 5-10 ºC or should the value be absent at all, the TSE control device must be sent to seepex for repair.

TSE Control Unit

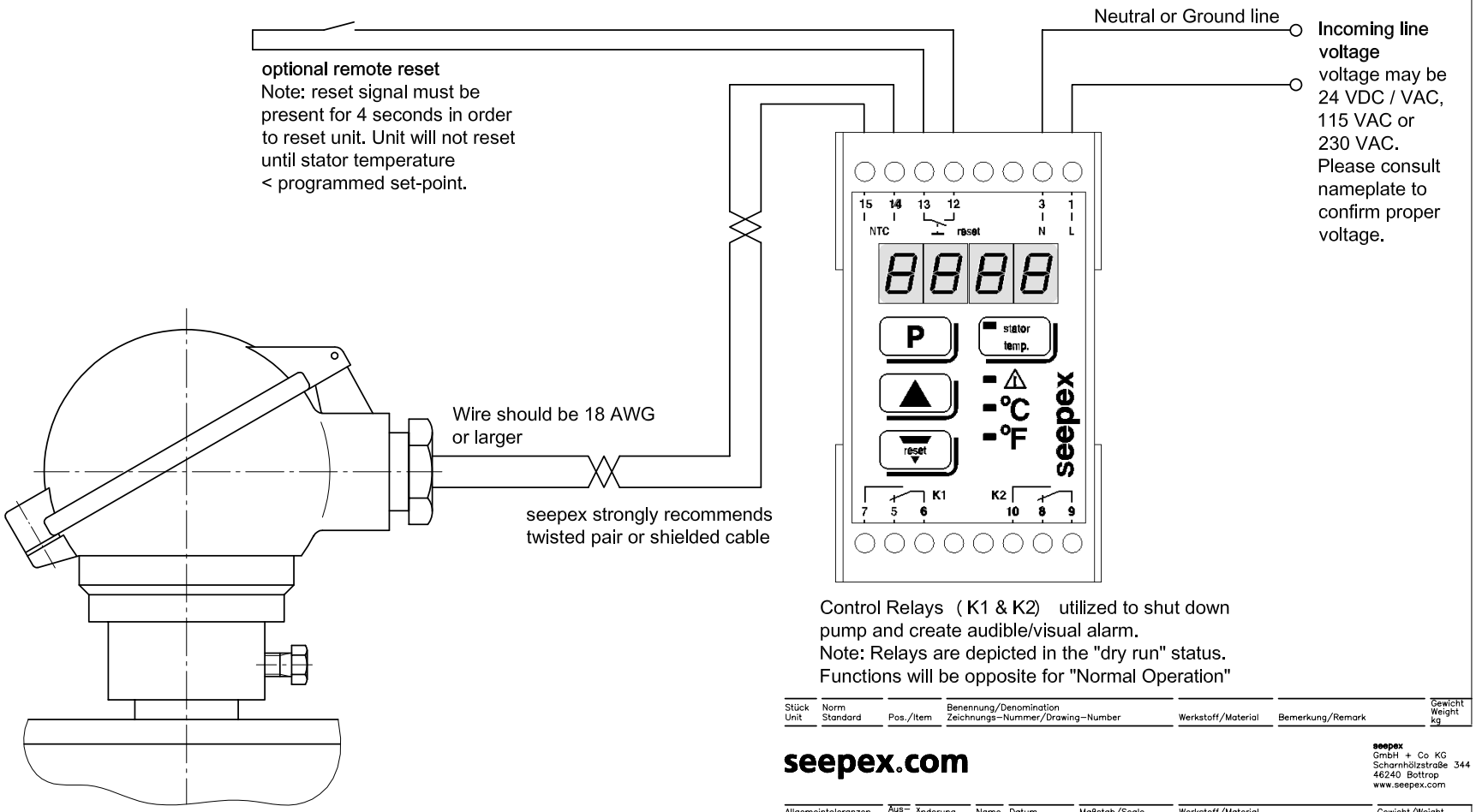

Control Relays (K1 & K2) utilized to shut down pump and create audible/visual alarm.
Note: Relays are depicted in the "dry run" status.
Functions will be opposite for "Normal Operation"

Stück Unit	Norm Standard	Pos./Item	Benennung/Denomination Zeichnungs-Nummer/Drawing-Number	Werkstoff/Material	Bemerkung/Remark	Gewicht Weight kg

seepex.com

seepex
GmbH + Co KG
Scharnhölzstraße 344
46240 Bottrop
www.seepex.com

Allgemeintoleranzen für Maße ohne einzelne Toleranzeintragung DIN ISO 2768-mittel	Ausgabe Issue	Änderung Modification	Name Name	Datum Date	Maßstab/Scale %	Werkstoff/Material	Gewicht/Weight
General tolerances for mass without individual tolerance entry DIN ISO 2768-average					Bezeichnung/Denomination: Simplified wiring instruction for seepex TSE dry running protection (seepex Inc.)		
Rauheit für Oberflächenzeichen DIN ISO 1302 Reihe 2			Name Name	Datum Date	Zeichnungs-Nummer/Drawing-Number: 711-TSE/0000-0-005A3		
Roughness for surface finish indication DIN ISO 1302 Reihe 2	Bearbeitet/Drawn		hof	20.03.2006	EDV-Nr./EDP-No. 75657.dwg		
	Geprüft/Checked		ham	20.03.2006	Ersatz für/Replacement for:	Ersetzt durch/Replacement by:	
	Normiert/Standard						
	Gedruckt/Printed						

Urheberrechtsschutz: Diese Zeichnung ist unser Eigentum und uns nach dem Gesetz über Urheberrecht und verwandte Schutzrechte geschützt.
Protection of Copyright: This drawing is our property and is protected acc. to the law referring to copyright and related protective laws.

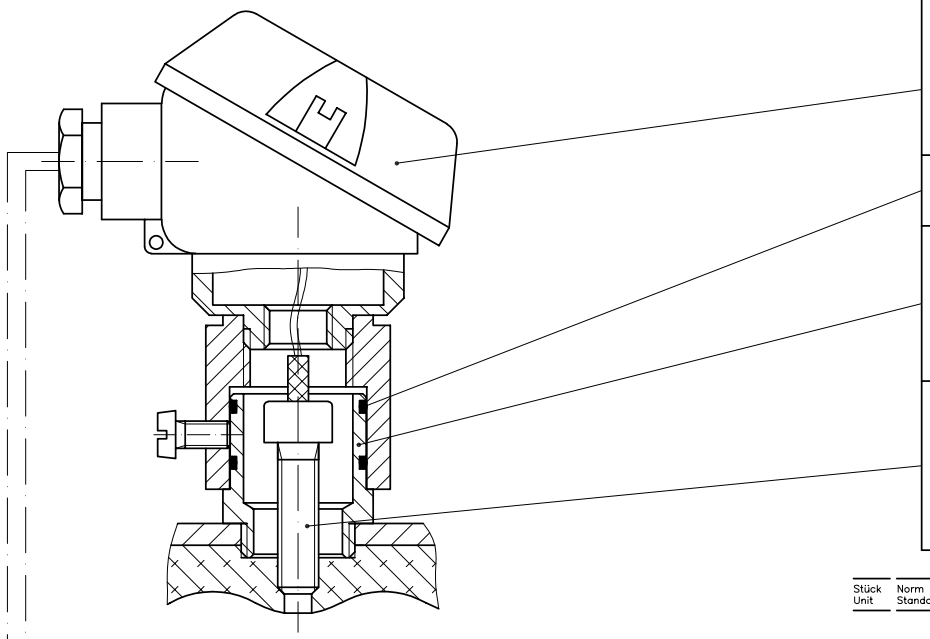

Elektrischer Anschluß siehe TSE-Betriebs- und Montageanleitung
Electric connection see TSE operating and assembly instructions

			Pumpen-Baugröße pumpe size
			006-12 006-24 012-12 012-24 025-6L
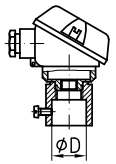	Anschlußkopf connection head	Pos. item	650
		Typ type	MA
		ØD	20.1+0.2
	O-ring o-ring	Pos. item	651
		Größe size	ø16x1.5
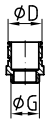	Gewindehülse screw socket	Pos. item	652
		ØD	ø19.9-0.1
		ØG	G3/8"
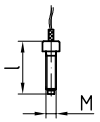	Thermistor- Fühlerschraube thermistor sensor screw	Pos. item	653
		Größe size	F6-25
		M	M6
		l	31

Stück Unit	Norm Standard	Pos./Item	Benennung/Denomination Zeichnungs-Nummer/Drawing-Number	Werkstoff/Material	Bemerkung/Remark	Gewicht Weight kg

seepex.com

seepex
GmbH + Co KG
Scharnhölzstraße 344
D-46240 Bottrop
www.seepex.com

Allgemeintoleranzen für Maße ohne einzelne Toleranzeintragung DIN ISO 2768-mittel

General tolerances for mass without individual tolerance entry DIN ISO 2768-average

Rauheit für Oberflächenzeichen DIN ISO 1302 Reihe 2

Roughness for surface finish indication DIN ISO 1302 Reihe 2

Ausgabe Issue	Änderung Modification	Name Name	Datum Date
B	überarbeitet	hof	17.06.1996
C	Baugröße 01-48	ov	23.09.1998
D	01-48 entfällt	hof	15.12.1998
E	Nachtrag 025-6L	hof	06.01.1999
F	025-12T,05-6LT	hof	29.04.2002
G	025-12,05-6LT raus	hof	18.02.2003

	Name Name	Datum Date
Bearbeitet/Drawn	hof	17.06.1996
Geprüft/Checked	wgr	18.06.1996
Normiert/Standard		
Gedruckt/Printed		

Maßstab/Scale 1:1

Werkstoff/Material

Gewicht/Weight

Bezeichnung/Denomination

TSE / Pumpenseitige Teile
TSE / pumpsided parts
für elastische Statoren / for elastic stators

Zeichnungs-Nummer/Drawing-Number

702-000/0000-0-009G3

EDV-Nr./EDP-No. 14998.dwg

Ersatz für/Replacement for: A2428-4

Ersetzt durch/Replacement by:

Urheberrechtsschutz: Diese Zeichnung ist unser Eigentum und uns nach dem Gesetz über Urheberrecht und verwandte Schutzrechte geschützt.
Protection of Copyright: This drawing is our property and is protected acc. to the law referring to copyright and related protective laws.

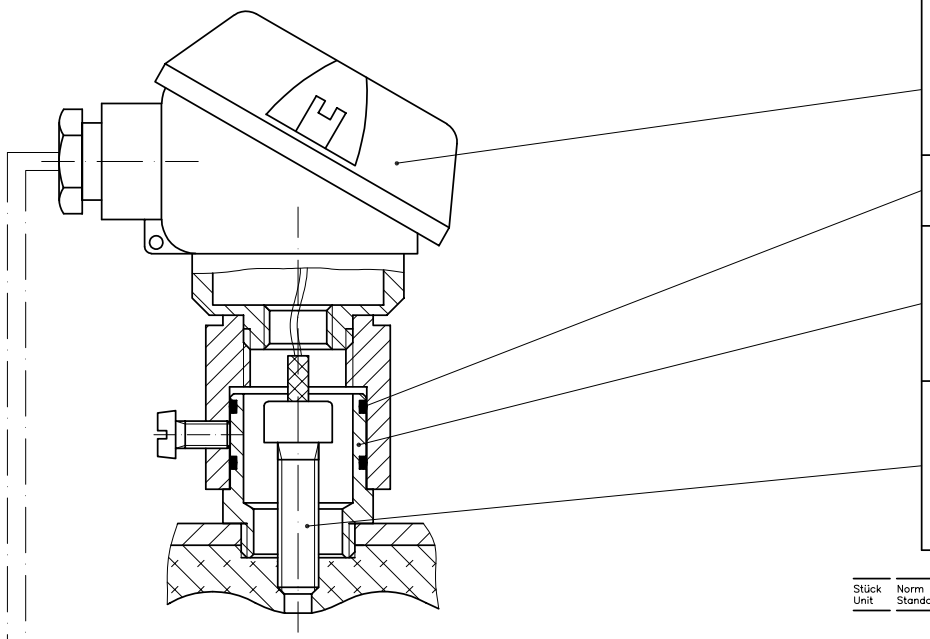

Elektrischer Anschluß siehe TSE-Betriebs- und Montageanleitung
Electric connection see TSE operating and assembly instructions

			Pumpen-Baugröße pumpe size
			006-12 006-24 012-12 012-24 025-6L
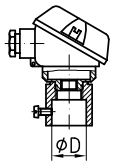	Anschlußkopf connection head	Pos. item	650
		Typ type	MA
		ØD	20.1+0.2
	O-ring o-ring	Pos. item	651
		Größe size	ø16x1.5
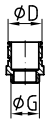	Gewindehülse screw socket	Pos. item	652
		ØD	ø19.9-0.1
		ØG	G3/8"
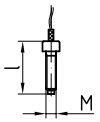	Thermistor- Fühlerschraube thermistor sensor screw	Pos. item	653
		Größe size	F6-25
		M	M6
		l	31

Stück Unit	Norm Standard	Pos./Item	Benennung/Denomination Zeichnungs-Nummer/Drawing-Number	Werkstoff/Material	Bemerkung/Remark	Gewicht Weight kg

seepex.com

seepex
GmbH + Co KG
Scharnhölzstraße 344
D-46240 Bottrop
www.seepex.com

Allgemeintoleranzen für Maße ohne einzelne Toleranzeintragung DIN ISO 2768-mittel

General tolerances for mass without individual tolerance entry DIN ISO 2768-average

Rauheit für Oberflächenzeichen DIN ISO 1302 Reihe 2

Roughness for surface finish indication DIN ISO 1302 Reihe 2

Ausgabe Issue	Änderung Modification	Name Name	Datum Date
B	überarbeitet	hof	17.06.1996
C	Baugröße 01-48	ov	23.09.1998
D	01-48 entfällt	hof	15.12.1998
E	Nachtrag 025-6L	hof	06.01.1999
F	025-12T,05-6LT	hof	29.04.2002
G	025-12,05-6LT raus	hof	18.02.2003

	Name Name	Datum Date
Bearbeitet/Drawn	hof	17.06.1996
Geprüft/Checked	wgr	18.06.1996
Normiert/Standard		
Gedruckt/Printed		

Maßstab/Scale 1:1

Werkstoff/Material

Gewicht/Weight

Bezeichnung/Denomination

TSE / Pumpenseitige Teile
TSE / pumpsided parts
für elastische Statoren / for elastic stators

Zeichnungs-Nummer/Drawing-Number

702-000/0000-0-009G3

EDV-Nr./EDP-No. 14998.dwg

Ersatz für/Replacement for: A2428-4

Ersetzt durch/Replacement by:

Urheberrechtsschutz: Diese Zeichnung ist unser Eigentum und uns nach dem Gesetz über Urheberrecht und verwandte Schutzrechte geschützt.
Protection of Copyright: This drawing is our property and is protected acc. to the law referring to copyright and related protective laws.

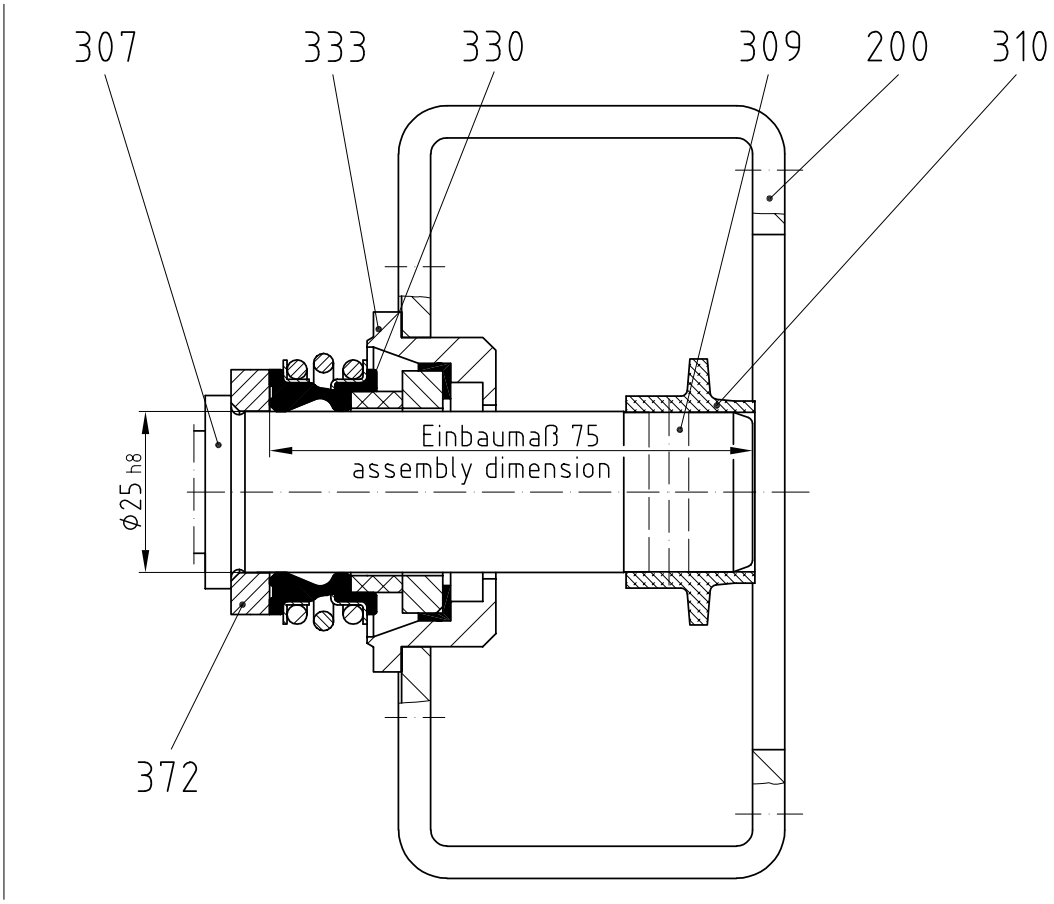

Stück Unit	Norm Standard	Pos./Item	Benennung/Denomination Zeichnungs-Nummer/Drawing-Number	Werkstoff/Material	Bemerkung/Remark	Gewicht Weight kg
1		372	Stützring / support ring 062-372/M120-0-060A4			
1		333	GLRD-Gehäuse / mechanical seal casing 103-333/M120-0-005A4			
1		330	GLRD / mechanical seal MG1/ϕ25-G60		Fabrikat / make : Burgmann	
1		310	Spritzring / splash ring 062-310/M120-0-001A4			
1		309	Steckwellenbolzen / plug-in shaft pin 062-309/M120-0-001A4			
1		307	Steckwelle / plug-in shaft 103-307/M120-0-304E4			
1		200	Laterne / lantern 103-200/M120-0-____			

seepex.com

seepex
GmbH + Co KG
Scharnhölzstraße 344
46240 Bottrop
www.seepex.com

Allgemeintoleranzen für Maße ohne einzelne Toleranzeintragung DIN ISO 2768-mittel

General tolerances for mass without individual tolerance entry DIN ISO 2768-average

Rauheit für Oberflächenzeichen DIN ISO 1302 Reihe 2

Roughness for surface finish indication DIN ISO 1302 Reihe 2

Ausgabe Issue	Änderung Modification	Name Name	Datum Date

	Name Name	Datum Date
Bearbeitet/Drawn	hgg	28.05.2004
Geprüft/Checked	kno	28.04.2004
Normiert/Standard		
Gedruckt/Printed		

Maßstab/Scale: 1:1

Werkstoff/Material:

Gewicht/Weight:

Bezeichnung/Denomination

GLRD Schnittzeichnung
mechanical seal sectional drawing

Burgmann MG1/ϕ25/G60 für Sondermaterial / for special material
mit erhöhter Vorspannung/ with increased pre-clamping

Zeichnungs-Nummer/Drawing-Number: 103-0GB/M120-0-129A4

EDV-Nr./EDP-No. 62810.dwg

Ersatz für/Replacement for:

Ersetzt durch/Replacement by:

Urheberrechtsschutz: Diese Zeichnung ist unser Eigentum und uns nach dem Gesetz über Urheberrecht und verwandte Schutzrechte geschützt.
Protection of Copyright: This drawing is our property and is protected acc. to the law referring to copyright and related protective laws.

1.
General

- Please take the appertaining drawing from respective pump data sheet.

- The mechanical seal is suitable for the operating conditions indicated in the pump data sheet. Modifications are only admissible after the customer has consulted with **seepex**. Additionally, attention must be paid to the manufacturer's operating manual.

2.
Safety

Any mode of operation impairing the operating safety of the mechanical seal has to be avoided.

The operator is advised to consider the possible effects on the environment which could be caused by a defective mechanical seal and what additional measures must be taken to protect the environment and the public.

The pump must be mounted and operated in such a way that operation with a defective mechanical seal will not result in injury or harm to the public and that any leakage can be safely and properly dealt with.

Mechanical seals are often used to seal hazardous material (chemicals, drugs, etc.). It is essential that rules pertaining to the handling of hazardous materials are adhered to.

Modifications effected by the customer himself and changes influencing the safety of the mechanical seal are not allowed.

3.
Emissions

A mechanical seal is a dynamic seal and leakage is unavoidable.

ATTENTION

Components that may contact leakage must be resistant to corrosion or be protected accordingly.

Mechanical seal leakage must be drained in a safe and proper manner.

1.0
General

- Please take the appertaining drawing from respective pump data sheet.
- The mechanical seal is suitable for the operating conditions indicated in the pump data sheet. Modifications are only admissible after the customer has consulted with seepex. Additionally, attention must be paid to the manufacturer's operating manual.

2.0
Safety

Any mode of operation impairing the operating safety of the mechanical seal has to be avoided.

The operator is advised to consider the possible effects on the environment which could be caused by a defective mechanical seal and what additional measures must be taken to protect the environment and the public.

The pump must be mounted and operated in such a way that operation with a defective mechanical seal will not result in injury or harm to the public and that any leakage can be safely and properly dealt with.

Mechanical seals are often used to seal hazardous material (chemicals, drugs, etc.). It is essential that rules pertaining to the handling of hazardous materials are adhered to.

Modifications effected by the customer himself and changes influencing the safety of the mechanical seal are not allowed.

3.0
Emissions

A mechanical seal is a dynamic seal and leakage is unavoidable.

ATTENTION

Components that may contact leakage must be resistant to corrosion or be protected accordingly.

Mechanical seal leakage must be drained in a safe and proper manner.

4.0
Flushing or circulation of single-acting mechanical seals

Single-acting mechanical seals contacting the conveying liquid require no additional flushing or a circulation pipe because sufficient flushing and heat exchange occurs around the seal due to the conveying liquid.

However, in particular cases, a direct flushing pipe can be installed into the flushing connection on the mechanical seal housing.

5.0
Commissioning

Regardless of the pump's operating status, the conveying medium to be sealed must always be in liquid form at the mechanical seal. This particularly applies to the pump's commissioning and its placing out of service.

6.0
Maintenance

When operating the pump according to the instructions, no maintenance is required.

**7.0
Disassembly / Reassembly**

**7.1
Disassembly**

- Remove flushing connections at shaft seal housing (SEA).
- Lift / displace splash ring (310) and eject plug-in shaft pin (309) horizontally.
- Withdraw rotating unit (RTE) together with shaft seal parallel from output shaft of drive and avoid chocking.
- Clean plug-in shaft (307) and remove burrs etc., which may damage sealing elements. Moisten plug-in shaft (307) with slip additive (diluted fluid soap).
- Loosen axial safety device of mechanical seal (330 or 372) and withdraw mechanical seal (330) from plug-in shaft (307).
- Remove mechanical seal housing (333) from lantern (200).
- Press counter-ring of mechanical seal with o-ring out of mechanical seal housing (333).

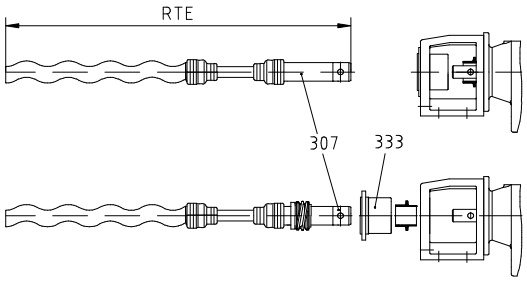

**7.2
Reassembly**

ATTENTION

Mechanical seals are precision parts of high quality. Therefore, the installation must be effected with care. Gentle handling and extreme neatness are essential.

- Clean mechanical seal housing (333)
- Evenly press counter-ring with o-ring into mechanical seal housing (333). To facilitate assembly, the o-ring should be moistened with a lubricant (diluted fluid soap).

ATTENTION

- Oil or grease must not be used to facilitate assembly.
- Install mechanical seal housing (333) to lantern (200) and onsure correct position of flushing connections.
- Remove plug-in shaft (307), burrs and roughness and clean the unit.
- Check / adjust set dimension of mechanical seal on plug-in shaft (307). Moisten plug-in shaft (307) and elastomer parts of mechanical seal with lubricant (diluted fluid soap).
- Slip mechanical seal onto plug-in shaft (307) as far as set ring.
- Lubricate drive shaft (ANT) with antiseize graphite petroleum.
- Moisten splash ring (310) and plug-in shaft (307) with pin joint grease, (for type, please see index) and slip splash ring (310) onto output shaft of drive. Note installating position of splash ring and refer to description on splash ring.
- Move rotating unit (RTE) through mechanical seal housing (333) and splash ring (310) and slip splash ring (310) onto output shaft of drive (ANT). Push in plug-in shaft pin (309) in horizontal position.
- Position of splash ring:
  Collar of splash ring shall be fitted in a distance of about 0.5 mm to lantern (200).

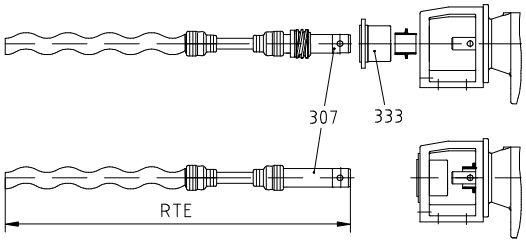

Range: MD, MDF

To avoid the expenses incurred by lengthy stop periods of the pump, seepex recommend the acquisition of a set of wearing parts and a set of gaskets.
The table below shows the contents of these sets.

Part designation	small set of wearing parts	big set of wearing parts	set of gaskets	Item number acc. to sectional drawing of pump and parts list
	Number			
Rotor		1		600
Stator 2)	1	1		601
Universal joint sleeve		1		405
Coupling rod pin		2		402
Guide bush 2)		-		-
Coupling rod		1		400
Coupling rod bush 2)		-		-
Casing gasket			1	501
Holding band, small 2)		-		-
Holding band, large 2)		2		406
Packing ring set 2) 3)	1	1		301
Mechanical seal 3)			1	330
Sealing ring			4	571, 726
Splash ring			1	310
O-ring			1	572
Plug-in shaft 2)		1		307
Special joint grease				098 1 cart. 300 gr (c. 315cm³) grease quantity per pin joint, see tech.
Tool				Essential for assembly, see Point 9, document OM.SPT.01

2) see tools Point 9., document OM.SPT.01
3) Item 330 and item 301 (as an alternative) depend on the pump design. With regard to the pump design, refer to the appertaining data sheet and the sectional drawing. See Point 9.

	Allgemeine normierte Werkzeuge / Standardized tools						
Werkzeug Nr. tool No.	W1	W2	W5	W6	W9	W11	W13
zur Montage von: tool for mounting of:	Packung packing	Stator stator	Gelenk joint	Lager bearing	allgemein general	Mutter für Teflon-manschette nut for teflon universal joint sleeve	Stator Stator 1)
Benennung: denomination:	Packungszieher packing lever	Ketten-Rohrzange + Ersatzkette chain pipe wrench +replacement chain	Durchschlag drift	Bolzen pin	Montierhebel mounting lever	Bandschlüssel strap wrench	Bandschlüssel strap wrench
Baugröße **size**	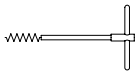					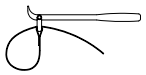	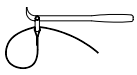
0005-24, 0015-24 003-12/-24 006-12/-24 012-12/-24 025-6L 025-12T, 05-6LT	PKZ XX 000 0000 0 X35M0	**Siehe W 13** **see W 13**					WKZ BDS 027 0 430
025-12, 025-24 05-12, 1-6L	PKZ XX 000 0000 0 X0FQ0	KRZ XX Z55 0250 0 00000 KEZ XX Z55 0250 0 00000	DHS XX 020 0000 0 A2620		2 Stück 2 pieces MHL XX SA 610		
05-24, 01-48, 025-48, 1-12, 2-6L 1-24, 1-12V 2-12, 5-6L			DHS XX 050 0000 0 A2620	BLZ XX 020 0008 0 A2619		WKZ BDS 027 0 430	
2-24, 2-12V 5-12, 8-12T 10-6L, 15-6LT 05-48	PKZ XX 000 0000 0 XOHV0		DHS XX 050 0000 0 A2620	BLZ XX 020 0010 0 A2619			
5-24, 5-12V 10-12, 17-6L, 30-6LT, 15-12T, 10-24R, 1-48		KRZ XX Z55 0300 6 00000 KEZ XX Z55 0300 6 00000	DHS XX 100 0000 0 A2620	BLZ XX 020 0010 0 A2619			
14-12, 26-6L, 40-6LT 10-24, 10-12V 17-12, 35-6L, 26-12, 52-6L, 55-6LT, 75-6LT 30-12T, 10-24, 17-24R 2-48	PKZ XX 000 0000 0 XA01A		DHS XX 120 0000 0 A2620	BLZ XX 025 0012 0 A2619			
17-24, 17-12V 35-12, 52-12, 70-6L, 100-6L, 110-6LT, 55-12T 34-24R 5-48		KRZ XX Z55 0300 8 00000 KEZ XX Z55 0300 8 00000	DHS XX 160 0200 0 A2620	BLZ XX 030 0012 0 A2619			
35-24, 35-12V 70-12, 130-6L, 200-6L, 110-12T 70-24R, 10-48 200-6L			DHS XX 200 0200 0 A2620	BLZ XX 035 0012 0 A2619			
130-12, 202-6L, 300-6L, 200-12T 70-18, 100-18, 130-18 70-24, 70-12V 130-24R 17-48		KRZ XX Z55 0301 2 00000 KEZ XX Z55 0301 2 00000	DHS XX 240 0250 0 A2620	BLZ XX 040 0015 0 A2619			
240-12, 300-12T 130-18, 130-24 35-48/70-48							

1) Gilt nur für Pumpen in Edelstahl Ausführung / only valid for pumps in special steel design

	Empfohlene seepex Werkzeuge Aufgrund der Ausführung für bestimmte Montagen empfohlen, durch allgemeine normierte Werkzeuge bedingt ersetzbar. **Recommended seepex tools** Due to the design recommended for certain repairs, these tools partially replace the standardized tools.							
Werkzeug Nr. tool No.	W4	W7	W8	W10	W12	W14	W15	W16
zur Montage von: tool for mounting of:	Gelenk joint	Lager bearing	Schmier-nippel lubrication nipple	Steckwelle plug-in shaft	Teflon-manschette teflon universal joint sleeve	Kuppelstangen-buchsen coupling rod bushing	Manschette universal joint sleeve	Lippendichtung lip seal
Benennung: denomination:	Montagedorn assembly mandrel	Montage-hülse mounting sleeve	Einschlag-hülse drive-in sleeve	Demontage-werkzeug dismantling tool	Montage-werkzeug mounting tool	Presswerkzeug pressing tool	Montageplatte mounting plate	Montagehülse Mounting sleeve
Baugröße **size**	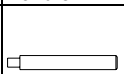			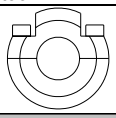		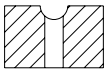	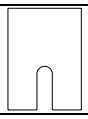	
0005-24, 0015-24 003-12/-24 006-12/-24 012-12/-24 025-6L 025-12T, 05-6LT	MTD L2 060 M120 0 XXXXX 2)						MTP A7 703 M500 0 002XX	MTH B7 703 M120 0 W0260
025-12, 025-24 05-12, 1-6L	MTD L2 060 M500 0 XXXXX	MTH M8 060 M500 0 XXXXX		AZV B2 262 M500 0 XXXXX			MTP A7 703 M500 0 002XX	
05-24, 01-48, 025-48, 1-12, 2-6L 1-24, 1-12V 2-12, 5-6L	MTD L2 060 0020 0 XXXXX	MTH M8 060 0020 0 XXXXX		AZV B2 262 0020 0 XXXXX	MMT M8 060 0020 0 XXXXX	PWZ C6 060 0020 0 XXXXX		
2-24, 2-12V 5-12, 8-12T 10-6L, 15-6LT 05-48	MTD L2 060 0050 0 XXXXX	MTH M8 060 0050 0 XXXXX		AZV B2 262 0050 0 XXXXX	MMT M8 060 0050 0 XXXXX	PWZ C6 060 0050 0 XXXXX		
5-24, 5-12V 10-12, 17-6L, 30-6LT, 15-12T, 10-24R, 1-48	MTD L2 060 0100 0 XXXXX	MTH M8 060 0100 0 XXXXX		AZV B2 262 0100 0 XXXXX	MMT M8 060 0100 0 XXXXX	PWZ C6 060 0100 0 XXXXX		
14-12, 26-6L, 40-6LT	MTD L2 060 0140 0 XXXXX	MTH M8 060 0140 0 XXXXX		AZV B2 262 0170 0 XF5XX		PWZ C6 060 1400 0 XXXXX		
10-24, 10-12V 17-12, 35-6L, 26-12, 52-6L, 55-6LT, 75-6LT 30-12T, 10-24, 17-24R 2-48	MTD L2 060 0170 0 XXXXX	MTH M8 060 0170 0 XXXXX	ESH N0 000 0000 0 A01A4	AZV B2 262 0170 0 XG0XX	MMT M8 060 0170 0 XXXXX	PWZ C6 060 0170 0 XXXXX		
17-24, 17-12V 35-12, 52-12, 70-6L, 100-6L, 110-6LT, 55-12T 34-24R, 5-48	MTD L2 060 0350 0 XXXXX	MTH M8 060 0350 0 XXXXX		AZV B2 262 0350 0 XH0XX		PWZ C6 060 0350 0 XXXXX		
35-24, 35-12V 70-12, 130-6L, 200-6L, 110-12T 70-24R, 10-48, 200-6L	MTD L2 060 0700 0 XXXXX	MTH M8 060 0700 0 XXXXX		AZV L7 703 0700 0 XK0XX		PWZ C6 060 0700 0 XXXXX		
130-12, 202-6L, 300-6L, 200-12T 70-18, 100-18, 130-18 70-24, 70-12V 130-24R 17-48	MTD L2 060 1300 0 XXXXX	MTH M8 060 1300 0 XXXXX				PWZ C6 060 1300 0 XXXXX		
240-12, 300-12T 130-18, 130-24 35-48/70-48						PWZ C6 060 2400 0 XXXXX		

2) entfällt ab Pumpen-Herstellungsdatum 01.04.93 / can be omitted as from 01.04.93 (pump manufacturing date)

	Empfohlene seepex Werkzeuge Aufgrund der Ausführung für bestimmte Montagen empfohlen, durch allgemeine normierte Werkzeuge bedingt ersetzbar. **Recommended seepex tools** Due to the design recommended for certain repairs, these tools partially replace the standardized tools.								**Spezial-werkzeuge** **Special tools**
Werkzeug Nr. tool No.	W17	W18	W19	W20	W22	W23	W24	W25	W3
zur Montage von: tool for mounting of:	Lippendichtung lip seal	Gleitlager-buchse plain bearing bush	Wellen-schonhülse shaft securing sleeve	Cartridge-Einheit cartridge-unit	Wellen-dichtring lip seal	Wellen-dichtring lip seal	Antriebs-gehäuse drive casing	Steckwellen-bolzen plug-in shaft pin	Halteband holding band
Benennung: denomination:	Schlagzylinder Zentrierdorn Montagebolzen cylinder centering mandrel mounting pin	Montagedorn mounting mandrel	Montagehülse mounting sleeve	Aufnahme intake	Montage-werkzeug mounting tool	Montage-werkzeug mounting tool	Aufhänge-vorrichtung suspension device	Montagedorn mounting mandrel	Montage-werkzeug mounting tool
Baugröße **size**	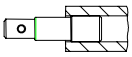	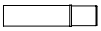	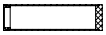						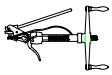
0005-24, 0015-24 003-12/-24 006-12/-24 012-12/-24 025-6L, 025-12T, 05-6LT	ZSH B7 703 M120 0 W0171 ZDR B7 703 M120 0 W0172 MBL A7 703 M120 0 W0173								MHB WH A00 1WHV 0 01000
025-12, 025-24 05-12, 1-6L									
05-24, 01-48, 025-48, 1-12, 2-6L 1-24, 1-12V 2-12, 5-6L								MTD L8 703 0050 0 SXX0J	
2-24, 2-12V									
5-12, 8-12T 10-6L, 15-6LT 05-48									
5-24, 5-12V									
10-12, 17-6L, 30-6LT, 15-12T, 10-24R, 1-48								MTD L8 703 0170 0 SXX0J	
14-12, 26-6L, 40-6LT									
10-24, 10-12V									
17-12, 35-6L, 26-12, 52-6L, 55-6LT, 75-6LT 30-12T, 10-24, 17-24R, 2-48			SPT B4 703 0170 0 01000	SPT M8 703 0170 0 00900	SPT B4 703 0170 0 01100				
17-24, 17-12V									
35-12, 52-12, 70-6L, 100-6L, 110-6LT, 55-12T 34-24R, 5-48								MTD L8 703 0350 0 SXX0J	
35-24, 35-12V									
70-12, 130-6L, 200-6L, 110-12T 70-24R, 10-48, 200-6L		SPT M8 703 1300 0 01000	SPT M8 703 1300 0 01100	SPT M8 703 1300 0 00900	SPT B4 703 1300 0 0A200	SPT B4 703 1300 0 0A300		MTD L8 703 0700 0 SXX0J	
130-12, 202-6L, 300-6L, 200-12T 70-18, 100-18, 130-18 70-24, 70-12V 130-24R 17-48								MTD L8 703 1300 0 SXX0J	
240-12, 300-12T 130-18, 130-24 35-48/70-48							SPT M8 703 2400 0 01400		

10.0
Manufacturer's documents from sub-supplier

Burgmann
INDUSTRIES

OPERATING MANUAL

This document was drawn up observing the EC directives
"Machinery" 98/37/EC, EN ISO 12100-2 and the German Standard VDI 4500



In case of this mechanical seal is operated in **explosion area an appropriate additional operating manual,** following EC directives 94/9/EC (ATEX 95), has to be observed **by all means**! If required this could be ordered at BURGMANN.

BURGMANN MECHANICAL SEAL (M.S.)

Type MG1/dw-00 and versions

applies to all mechanical seals of the same series

dw = specified shaft diameter

These instructions are intended for the assembly, operating and control personnel and should be kept at hand on site.

PLEASE READ this manual carefully and OBSERVE the information contained as to:

- **Safety**
- **Installation**
- **Transport / Storage**
- **Operation**
- **Information about the product**
- **Servicing**

If there are any unclear points please contact BURGMANN by all means!

Table of Contents

Keywords and Symbols 3

GENERAL SAFETY NOTES 4

Instructions for worker's protection 5

TRANSPORT / STORAGE 6

Transport 6
Packing and storage 6

INFORMATION ABOUT THE PRODUCT 8

Manufacturer and country of origin 8
Declaration by the manufacturer 8
Type designation 8
Designated use 8
Operating limits 9
Materials 9
Drawings, diagrams 9
Versions 10
Seat Versions 10
Description and function 11
Required space, connecting dimensions 11
Supply of M.S. 11
Emissions 12

INSTALLATION 13

Assembly utilities 13
Preparation for assembly 13
Assembly / installation 14

OPERATION 16

Instructions for safe operation 16
Instructions for start up 16

SERVICING 17

Maintenance 17
Directives in case of failure 17
After-sales service by BURGMANN 18
Reconditioning (repair) 18
Disassembly / removal 18
Spare parts 19
Required details for enquiries and orders 19
Disposal of the BURGMANN mechanical seal 20
Copyright 20

Keywords and Symbols

Following symbols for particularly important information are used:



"Attention, please pay special attention to these sections of text"

DANGER! Draws attention to a direct hazard that will lead to injury or death of persons

WARNING! Draws attention to the risk that a hazard could lead to serious injury or death of persons

CAUTION! Draws attention to a hazard or unsafe method of working that could lead to personal injury or damage to equipment

ATTENTION! Identifies a potentially dangerous situation. If it is not avoided the product or something in its vicinity could be damaged

IMPORTANT! Identifies tips for use and other particularly useful information.

GENERAL SAFETY NOTES



Any person being involved in assembly, disassembly, start up, operation and maintenance of the BURGMANN Mechanical Seal must have read and understood this Instruction Manual and in particular the safety notes. We recommend the user to have this confirmed.

BURGMANN Mechanical Seals are manufactured on a **high quality level** (quality management EN ISO 9001: 2000) and they keep a **high working reliability**. Yet, if they are **not operated** within their **intended purpose** or handled **inexpertly** by untrained personnel they may cause **risks**.

The machine has to be set up in such a way that seal leakage can be led off and disposed properly and that any personal injury caused by spurting product in the event of a seal failure is avoided.

Any operation mode that affects the **operational safety** of the mechanical seal is not permitted.

Unauthorised modifications or alterations are **not permitted** as they affect the **operational safety** of the mechanical seal.

BURGMANN mechanical seals must be installed, operated, maintained, removed or repaired by **authorised**, **trained and instructed personnel only.**

The **responsibilities** for the respective jobs to be done **have to be determined clearly and observed** in order to prevent unclear competencies from the point of **security**.

Any work to be done on the mechanical seal is **generally** only **permitted** when the seal is **neither operating nor pressurised**.

WARNING! Seals that have been used with **hazardous substances must be properly cleaned** so that there is no possible **danger** to people or to the environment.

Apart from the notes given in this manual the general **regulations for worker's protection and those for prevention of accidents** have to be observed.

Instructions for worker's protection



WARNING! If the **medium to be sealed** and/or the **supply liquid** is subject to the **Hazardous Substances Regulation** (GefStoffV), the **instructions for handling dangerous substances** (safety data sheets to EU Directive 91/155/EEC) and the **accident prevention regulations** have be observed.

Medium to be sealed and/or **supply medium may escape** if the seal **fails**. Injury of persons and environment may be **prevented by the user** providing for splash protection and wearing safety goggles. Care has to be taken by the user for **proper disposal** of the leakage. The user has to control these measures.

The **user** has to **check** what **effects a failure** of the mechanical seal might have and what safety measures have to be taken to prevent **personal** injury or damage to the environment.

TRANSPORT / STORAGE

Transport

If not specified differently by contract the BURGMANN standard packing is used which is suitable for dry transport by truck, train or plane. The warning signs and notes on the packing must be observed.

In addition seaworthy packing may become necessary.

Notes for income inspection:
- Check packaging for visible damages.
- Open packaging carefully. Do not damage or lose parts supplied separately.
- Check if consignment is complete (delivery note). Inform the supplier immediately in writing if parts are damaged or missing.

The mechanical seal has to be protected from damage during transport and storage. The transport case in which the seal is supplied is well suited for this purpose and should be kept for a possible return transport.

ATTENTION! If the machine as well as the mechanical seal installed into the machine are transported together the shaft has to be protected from deflection and shocks.

Packing and storage

The following recommendations apply to all BURGMANN mechanical seals which have been supplied and stored in their **undamaged original packaging**, as well as to seals which have been installed in a machine (e.g. pump, compressor, agitator, etc.) but have not yet been put into operation.

BURGMANN mechanical seals and spare parts are super finished and repeatedly tested machine elements. For the storage special conditions have to be followed.

Sliding materials and elastomers are subject to material-specific and time-based alterations (distortion, ageing) which might reduce the full efficiency of the mechanical seals. Yet, this may be avoided by observing the storage instructions.

For the stock keeping of elastomers special conditions are required. For all rubber-elastic parts the rules of DIN 7716 resp. of ISO 2230-1973 (E) are valid.

Conveniences for storing of mechanical seals
- dust free
- moderately ventilated
- constantly tempered
  - relative air humidity below 65 %,
  - temperature between 15 °C and 25 °C.

Protect the seal from
- direct exposure to heat (sun, heating)
- **ultraviolet light** (halogen or fluorescent lamps, sunlight, arc welding)
- presence or development of **ozone** (arc welding, mercury vapour lamps, high-voltage devices, electric motors)

➢ **risk of embrittlement** of elastomeric materials

It has to be differentiated between:
- **M.S. stored** in the stock room
- **M.S. installed** in the machine, but not yet in operation.

☐ **M.S. in the stock**

IMPORTANT! Store the **seal in the original packing** lying on a **flat surface**.

- Check the packaging periodically for damages.
- Plastic sheet packagings with humidity indicators have to be checked every 8 weeks. The check has to be recorded.

➢ Packings **exceeding 50 % rel. humidity** values have to be sent to the manufacturer or the **nearest BURGMANN service centre** for inspection and new packaging.

Duly stored mechanical seal:
- Latest 3 years after delivery of the mechanical seal
- For reasons of safety shipment of the M.S. to BURGMANN resp. nearest BURGMANN service centre for

➢ Exchange of all secondary seals and springs
➢ Verification of the flatness of the faces
➢ Perhaps static pressure test.

☐ **M.S. installed into the machine:**

ATTENTION! A **preservation** of the BURGMANN mechanical seals is **not allowed**.

Check in case of a preservation of complete machines with mechanical seals installed BURGMANN has to be contacted.
- **Do not** use corrosion protection agents.

➢ Risk of deposition and possibly chemical attack of the secondary seals.

Due to longer erecting times of new designed plants the period between delivery of the mechanical seal and on the other hand its installation and start up may exceed the period of 2-3 years.

Latest after 3 years and in time before the planned start-up of the plant the seal has to be dismantled and to be sent to the manufacturer or the nearest BURGMANN service centre where it can be checked and reconditioned, if necessary.

Damages caused by **improper** storage may **not** be claimed with reference to the **warranty** on the BURGMANN company**.**

INFORMATION ABOUT THE PRODUCT

All technical information given is based on the results of extensive testing and on BURGMANN's long term practical experience. However, in view of the great diversity of possible applications the technical data can only be taken as being of approximate nature. We can only guarantee the safe and efficient functioning in individual cases if we have been comprehensively informed of the operating conditions to which they will be subject, and if this has been confirmed in a separate agreement.

Manufacturer and country of origin

Burgmann Industries GmbH & Co. KG
Äußere Sauerlacher Str. 6-10
D - 82515 Wolfratshausen

Germany

Declaration by the manufacturer

within the meaning of the EC-directive "MACHINERY" 98/37/EG

A mechanical seal does **not function independently**. It is intended to be incorporated into or assembled with machinery.

Type designation

BURGMANN Mechanical Seal **MG1/dw-00**

Designated use

This mechanical seal is **exclusively** designed for the use in the specified application. A **different utilisation** or a utilisation going beyond the specification is considered **contrary to its designated use** and excludes a liability by the manufacturer.

Operation under conditions lying **outside** those limits stated in paragraph **"Operating limits"** is considered **contrary to its designated use**.

Should the seal be **operated under different conditions or at a different application** BURGMANN has to be asked for **recognition as safe in advance**.
- **Changes** to operating conditions **have to** be documented.

Operating limits

ATTENTION! Operating limits depend on the materials, the media to be sealed and the diameter of the sealing. (If there are any unclear points please contact BURGMANN.)

Shaft diameter	(dw)	:	10 - 100 mm
Pressure to be sealed	(p1)	:	12 bar g
Temperature to be sealed	(t1)	:	-20 ... 120° C
Max. sliding speed	(vg)	:	10 m/s

Operation under several limit values **simultaneously** should be **avoided** as higher loads (pressure, temperature, speed) can increase wear or lead to **damage** of sliding faces or elastomers. This could result in a shorter service life and in the **risk** of a sudden seal failure **endangering** men and environment.

The **selection** of the mechanical seal (type, suitability, materials) should be done **by BURGMANN staff** or other **authorised** persons. A wrong selection by unauthorised persons is **not covered by** BURGMANN's **warranty**.

Further information about the operating conditions can be found in the BURGMANN assembly drawing MG1/dw-00 or in the specification sheets of the machine manufacturer.

Materials

The materials of the mechanical seal depend on the application and are fixed in the order.

Drawings, diagrams

Assembly drawing MG1/dw-00

The original assembly drawing in its latest edition (latest revision) only is decisive for both the design of M.S. as well as the utilisation of this manual.

In the following description all figures in parentheses, e.g. (2) define the respective part item no. in fig. 1. The part item no. may vary from those stated in the assembly drawing.

Versions

- **MG12/…**
- **MG13/…**
- **MG1S20/…**
- **RMG12/…**
- **MG1 MULTIPLE M.S.**

The mechanical seal type MG1 can also be used as **multiple mechanical seal** (also in combination with seal types of other series) in **tandem arrangement** with quench (API, plan 52) or as **dual mechanical seal** with barrier fluid (API, plan 53). Consultation with the BURGMANN company is recommended.

ATTENTION! PTFE o-rings or double-PTFE-wrapped o-rings **may** not be used at seat versions **without torsion lock**.

This operating manual applies also to the mentioned seal versions with slight modifications and/or to combinations with seats not stated in this manual.

Seat Versions

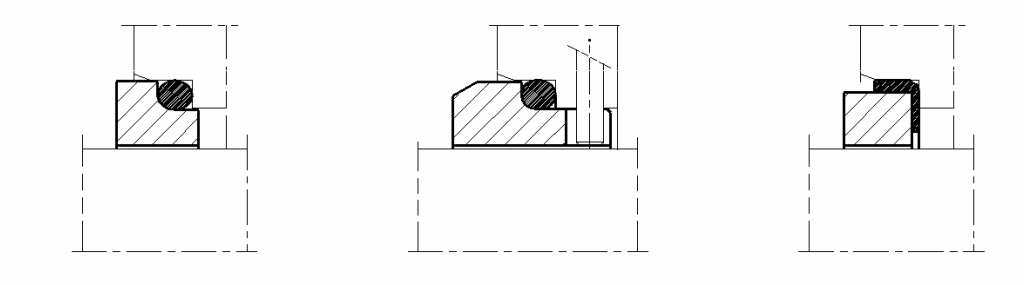

Description and function

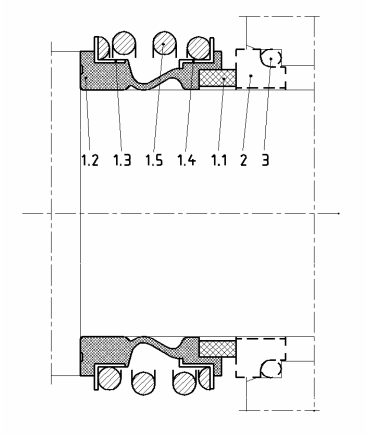

- **single seal**
- **unbalanced**
- **bi-directional**
- **stationary seat** (2)
- **o-ring** (3)
- **rotating seal face** (1.1)
- **elastomeric bellow** (1.2)
- **cylindrical single spring** (1.5)
- **no glued joints**
- **materials of the sliding parts replaceable**
- **for media containing solids** (e.g. sewage applications)
- **rotating, torsion-free elastomeric bellows** serving as
  - face housing
  - secondary sealing element
  - drive collar
- **torque transmission** from the seal face by means of "L"-rings and a rotating, cylindrical single spring
- **axial movability**
  d_w: 10 … 12 mm ±0,5 mm
  d_w: 14 … 18 mm ±1,0 mm
  d_w: 20 … 26 mm ±1,5 mm
  d_w: 28 … 100 mm ±2,0 mm

Required space, connecting dimensions

The required mounting space for the mechanical seal is decisive for the design of the housing parts by the machine manufacturer. The connecting dimensions have to be checked by the machine manufacturer by means of the BURGMANN drawing before mounting the mechanical seal.

Supply of M.S.

The mechanical seal has to be constantly wetted by liquid medium. The medium to be sealed must not damage the M.S. neither chemically (e.g. corrosion, embrittlement) nor physically (e.g. erosion, abrasion).

For a safe operation of the mechanical seal we recommend to apply **at inboard** the most suitable **type of circulation** described in **API 610 / 682**. This measure protects the seal cavity from deposition of solids.

To operate multiple seals special supply systems are required. Please contact BURGMANN.

Emissions

A mechanical seal is a **dynamic seal** that **cannot be free of leakage** due to physical and technical reasons. Seal design, manufacture tolerances, operating conditions, running quality of the machine, etc. mainly define the leakage value. In fact, compared to other sealing systems there is **few leakage**.

WARNING! If the **medium to be sealed** and/or the **supply liquid** is subject to the **Hazardous Substances Regulation** (GefStoffV), the **instructions for handling dangerous substances** (safety data sheets to EU Directive 91/155/EEC) and the **accident prevention regulations** have be observed.

A possibly increased leakage during start-up will decrease to a normal quantity after the running-in period of the sliding faces.

If this is not the case or if there are other malfunctions the mechanical seal has to be shut down, removed and checked for reasons of safety.

The leakage can be liquid or gaseous. Its aggressiveness corresponds to that of the medium to be sealed.

Leakage of mechanical seal at outboard side has to be drained and disposed properly.

IMPORTANT! Components which may get in contact with the leakage have to be corrosion-resistant or have to be adequately protected.

INSTALLATION

Assembly utilities

- ethyl alcohol
- cellulose-tissue (no rag, no cloth!)
- o-ring lifter
- water and washing up liquid
- cardboard discs

Preparation for assembly

ATTENTION! The seal should remain **packed** until the following working steps have been completely **terminated**.

Check the parts of the machine for:

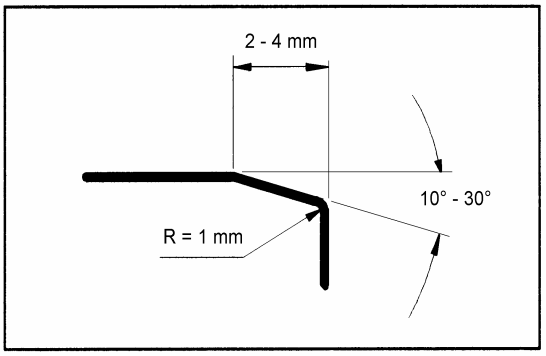

- **chamfered edges**
  (sliding cones i.e. 2 mm / 30° or in accordance with EN 12756)
- radiused transitions
- **mating fits** and o-ring surfaces:
  fine finished **Rz 10 µm** (= N7 = CLA 63)

- **Shaft surface** in the area of the mechanical seal finished according to EN 12756: **Ra = 0.8 µm** (= N6 = CLA 32).
- **Shoulder** or stop device for the bellows of the mech. seal to take up axial forces

Check at the machine:
- damage of connecting surfaces to the M.S.
- mating dimensions, rectangularity and concentricity to the shaft axis.

Run-out accuracy of the shaft (acc. to DIN ISO 5199):
- Shaft diameters up to 50 mm: max. 0.05 mm
- Shaft diameters 50 mm - 100 mm: max. 0.08 mm

- Prepare the place of assembly, take away any not required tool, cuttings, dirty cleaning wool etc.

- Cover the work bench with a piece of clean, non-fibrous cardboard.

Assembly / installation

BURGMANN mechanical seals are super-finished and repeatedly tested machine elements whose handling during assembly in particular of sliding materials and elastomers requires special care during several procedures.

For installation the assembly drawing of mechanical seal has to be observed.

IMPORTANT! The mechanical seal has to be installed under the cleanest conditions and very carefully.

- Unpack the seal and check seal face, seat and elastomer bellows for possible damages.
- ➢ Never place the seal faces or seats on their sliding faces without having covered them adequately.

- Check before starting assembly:
  - ▫ complete availability of all components by means of the drawing
  - ▫ all components have to be clean and in perfect condition.

- Sprinkle the elastomer bellows and the shaft with low-surface-tension water (add washing up liquid) or ethyl alcohol to decrease frictional force during assembly of the seal.

⚠

Oil or grease as assembly agent is not permitted in any case.

ATTENTION! **Do never force** during installation.

ATTENTION! **Avoid unnecessary rotation** of the shaft (damage of the sliding faces is possible).

ATTENTION! **Avoid knocking the seal!** Damage to mechanical seals has an adverse effect on their safe operation.

Possible installation order:

- Feed the **degreased** sealing element (o-ring, rubber cup) onto the seat.

If present:
- At the seat mark the position of the rear slot beside the sliding face.
- Align the seat with the torque transmission pin.

- Cover the sliding face of the seat with a cardboard washer
- Press the seat slowly and without interruption into its position.
  - ➢ Use plenty of water or alcohol as lubricant.
  - ➢ Use a distance sleeve, if necessary.
- Remove the cardboard washer from the sliding face.
- Check the rectangular position of the seat to the shaft axis.

- Mount the seal cover with the seat installed before.
- Clean the sliding faces thoroughly with ethyl alcohol and paper tissues (**no fabric, no cloths!**).
  - ➢ In case of material **"BUKO"** (carbon graphite) wipe it until the paper tissues stay clean.
  - ➢ Do not touch the sliding faces any more with bare fingers.
  - ➢ Mount the sliding faces absolutely dry, dust-free and clean. Do not use any lubricants!

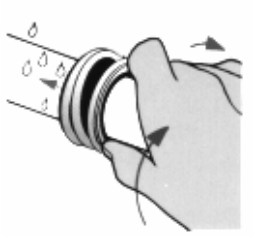

- Push rotating seal unit (bellows unit) with a slow clockwise turn onto the shaft.
- Stick to the dimensions in the assembly drawing!
  - ➢ If necessary use a mounting sleeve.
  - ➢ For long pushing distances add liquid several times.

- Check "L" rings, spring and seal face for correct fit.

- Mount stop device for bellows unit to take up axial forces.
  - ➢ Stick to the dimensions in the assembly drawing **by all means!**

- Further assembly of the machine in accordance with the instructions of the machine manufacturer.

OPERATION

Instructions for safe operation

For a single mechanical seal the **pressure in the seal chamber** (stuffing box pressure) has to be **higher** than the ambient pressure at the machine at any time. Otherwise the machine will **suck in air** via the sliding faces, which will result in **dry-running** and consequent **failure** of the mechanical seal.

Damages due to dry-running are excluded from the warranty.

During every state of operation the mechanical seal has to be constantly wetted by the **medium** to be sealed **in its liquid form**, in particular when the machine is **started** or **stopped**. The machine design has to be such as to take this necessity into consideration.

If the medium to be pumped builds deposits or tends to solidify during cooling down or standstill of the machine the stuffing box has to be flushed with suitable clean liquid. The flow and the liquid should be determined by the user.

If the operation limit values and the instructions given in this manual are followed a trouble-free operation of the mechanical seal can be expected.

Instructions for start up

Safety checks before start up

- Torque transmission between mechanical seal and shaft duly installed
- Supply connections tightened pressure-sealed
- Disposal connections installed environmentally safe

For a safe operation of the mechanical seal we recommend to apply **at inboard** the most suitable **type of circulation** described in **API 610 / 682**. This measure protects the seal cavity from deposition of solids.

- Flood machine and seal cavity (stuffing box) with medium and vent thoroughly.

▫ Now the seal is ready for operation.

SERVICING

Maintenance

A correctly operated mechanical seal needs **low maintenance**. Wear parts, however, have to be replaced, if necessary.

A duly operation includes a regular check of the following parameters:
- Temperature
- Leakage (drainage) rate of the mechanical seal

An inspection of the mechanical seal should be carried out during a revision of the complete plant. We recommend to have this inspection be performed by responsible BURGMANN personnel.

If the mechanical seal is removed during a revision of the plant it has to be replaced by a new one.

Directives in case of failure

Try to define the kind of failure and record it.

- In the event of **excessive leakage**, note changes in the leakage amount and switch the pump off if necessary.
- ➢ If a constant amount is leaking in a steady flow, the mechanical seal is damaged.
- In the event of a **inadmissible temperature rise**, the machine **has to** be stopped for safety reasons.

If there is a **malfunction** which you cannot correct on your own, or if the cause of malfunction is not clearly recognisable please immediately contact the nearest **BURGMANN agency**, a BURGMANN service centre or the BURGMANN headquarters.

During the **warranty period** the BURGMANN mechanical seal must only be disassembled with approval of the manufacturer or when a representative is present.

After-sales service by BURGMANN

BURGMANN's customer service department offers a comprehensive service package covering consultancy, engineering, standardisation, installation, commissioning as well as damage analysis right through to seminars on sealing technology.

Addresses are listed in the known BURGMANN Design Manuals as well as in various other BURGMANN brochures.

Address of headquarters:

Burgmann Industries GmbH & Co. KG
Postfach 1240
D - 82515 Wolfratshausen

Germany

☎ +49 (0) 81 71-23 0
Fax +49 (0) 81 71-23 12 14
www.burgmann.com

Reconditioning (repair)

If **reconditioning** is necessary, the complete **seal** should be sent **to the manufacturer**, as this is the best way to find out which components can be reconditioned or which parts must be replaced in order to ensure an optimum tightness.

If, **for compelling reasons**, **a reconditioning** has to be carried out **on site** (e.g. no. spare seal on stock, long transport, problems with customs) the seal may be repaired in a clean room by **trained** personnel of the user under the direction of **BURGMANN mechanics**.

Disassembly / removal



- Stop the machine as instructed, allow to cool, depressurise and ensure that pressure cannot build up again.
- Work on the M.S. is only permitted when the machine is at a standstill and depressurised.
- There must be no product on the M.S. ⇒ if necessary drain the machine and rinse it out.
- Isolate the machine to prevent it starting up unexpectedly.
- Comply with the safety notes (safety data sheets).

IMPORTANT! When removing, please observe **by all means**:

- current **accident prevention regulations**
- **regulations for handling hazardous substances**

WARNING! Seals that have been used with **hazardous substances must be properly cleaned** so that there is no possible **danger** to people or to the environment.

IMPORTANT! The packaging used to transport the seal must

- be **identified** with the relevant **hazard symbol** and
- **include** the **safety data sheet** for the product and/or supply medium

The order of disassembly to remove the mechanical seal out of the machine depends on the design of the machine and should be determined by the machine manufacturer.

- Remove the seal in the reverse sequence as described for assembly (set up).

Spare parts

- Only BURGMANN original spare parts must be used. Otherwise
  - **Risks** of a seal failure, **endangering** persons and environment.
  - The BURGMANN guarantee for the mechanical seal **lapses**.
- For a quick exchange a complete **spare seal** should be on stock.

Required details for enquiries and orders

For enquiries and orders the following details are required:

- BURGMANN commission no.
- Drawing no. of M.S. **MG1/dw-00**
  dw = specified shaft diameter
- Part item no., designation, material, number of pieces with reference to the drawing.

Address of headquarters product field **FA**
Standard Mechanical Seals

Burgmann Industries GmbH & Co. KG
Postfach 1240
D - 82502 Wolfratshausen

Germany

☎ +49 (0) 81 71 - 23 0
Fax +49 (0) 81 71 - 23 14 44

Disposal of the BURGMANN mechanical seal

Usually, the BURGMANN mechanical seals can be easily disposed after a thorough cleaning.

- Metal parts (steels, stainless steels, non-ferrous heavy metals) divided into the different groups belong to scrap metal waste.
- Ceramic materials (synthetic carbons, ceramics, carbides) belong to waste products. They can be separated from their housing materials, as are physiologically recognised as safe.
- Synthetic materials/plastics (elastomers, PTFE) belong to special waste.

CAUTION! Material containing fluorine must not be burnt.

IMPORTANT! Some of the synthetic materials, divided into the different groups can be recycled.

Copyright

The **Burgmann Industries GmbH & Co. KG** (Germany) holds the copyright to this document. Customers and operators of mechanical seals are free to use this document in the preparation of their own documentation. No claims of any type or form can be derived in such instance.

We reserve the right to carry out technical modifications of the product, even if they have not yet been considered in this manual.

June 13, 2006
Department Technical Documentation

UNICASE® Helical Inline Gearboxes
Installation and Maintenance Instructions

BIM 1010

USA

CDN

Retain These Safety Instructions For Future Use

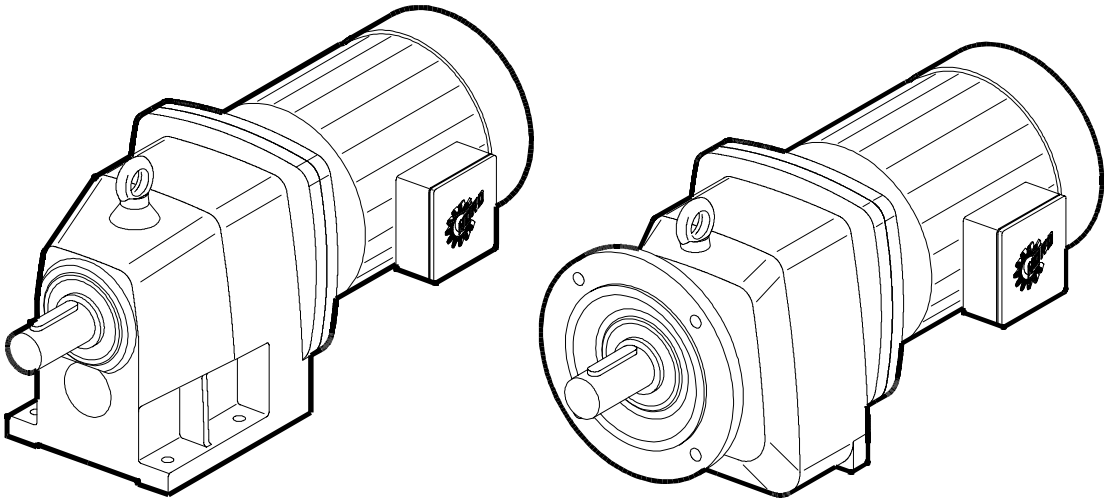

INSPECTION OF UNIT

Thoroughly inspect the equipment for any shipping and handling damage before accepting shipment from the freight company. If any of the goods called for in the bill of lading or express receipt are damaged or the quantity is short, do not accept until the freight or express agent makes an appropriate notation on your freight bill or express receipt. If any concealed loss or damage is discovered later, notify your freight carrier or express agent at once and request him to make an inspection. We will be very happy to assist you in collecting claims for loss or damage during shipment; however, this willingness on our part does not remove the transportation company's responsibility in reimbursing you for collection of claims or replacement of material. Claims for loss or damage in shipment must not be deducted from the NORD Gear invoice, nor should payment of the NORD Gear invoice be withheld awaiting adjustment of such claims, as the carrier guarantees safe delivery.

If considerable damage has been incurred and the situation is urgent, contact the nearest NORD Gear Sales Office for assistance. Please keep a written record of all communications.

RECORD NAMEPLATE DATA

Locate the gear reducer nameplate and record all nameplate data for future reference.

SK _____ S/N _____

RATIO _____ MAX TORQUE _____ RPM _____ MTG. POS _____

STORAGE

PROPER STORAGE UNTIL INSTALLED

Keep unit in a dry, temperature controlled area. If stored other than said, long term storage methods must be applied to the unit including complete fill with lubricant. Protect machined surfaces and rotate shafts periodically. Prior to putting unit into service, drain lubricant and refill to proper level as determined by the mounting position.

PROPER HANDLING OF THE UNIT

Exercise care to prevent damage to the unit when moving. Lift only at designed lifting points. Do not attach other machinery and lift by the unit lifting points. The lifting points are to be used to lift the unit only. Insure that adequate safety measures are taken to protect personnel during transportation. Protect the mounting surface from damage.

INSTALLATION OF UNIT

To ensure long service and dependable performance, an enclosed gear drive must be rigidly supported and the shafts accurately aligned. The following describes the minimum precautions required to accomplish this end.

FOUNDATION
The responsibility for the design and construction of the foundation lies with the user. The foundation must be adequate to withstand normal operating loads and possible overloads while maintaining alignment to attached system components under such loads.

MOUNTING POSITION
Unless a unit is specifically ordered for inclined mounting, the foundation must be level and flat. The lubrication system may not operate properly if the unit is not mounted in the position for which it is designed. It may be desirable to elevate the foundation to facilitate oil drainage.

CONCRETE FOUNDATION
If a concrete foundation is used, steel mounting pads and bolts of sufficient size to distribute the stress into the concrete should be grouted into the foundation.

STEEL FOUNDATION
If a structural steel foundation is used (i.e. wide flange beams or channels), a base plate or sole plate of suitable thickness should be used and should extend under the entire unit.

FOOT MOUNTED UNITS
Use shims under the feet of the unit to align the output shaft to the driven equipment. Make sure that all feet are supported so that the housing will not distort when it is bolted down. Improper shimming will reduce the life of the unit and may cause failure. Dowel pins may be installed to prevent misalignment and ensure proper realignment if removed for service.

FLANGE MOUNTED UNITS
If a structural steel foundation is used (i.e. wide flange beams or channels), a base plate or sole plate of suitable thickness should be used and should extend under the entire unit. If a bulk head plate is used it should be of proper strength to minimize buckling distortions.

Flange Pilot 'AK' or 'AK1' tolerance
Metric (mm)

> ∅ 50 ≤ ∅ 80 = +0.012/-0.007
> ∅ 80 ≤ ∅ 120 = +0.013/-0.009
> ∅ 120 ≤ ∅ 180 = +0.014/-0.011
> ∅ 180 ≤ ∅ 230 = +0.016/-0.013
> ∅ 230 ≤ ∅ 315 = +0.000-0.032
> ∅ 315 ≤ ∅ 400 = +0.000/-0.036
> ∅ 400 ≤ ∅ 500 = +0.000/-0.040

Inch

> ∅ 1.969 ≤ ∅ 3.150 = +0.005/-0.0003
> ∅ 3.150 ≤ ∅ 4.724 = +0.005/-0.0004
> ∅ 4.724 ≤ ∅ 7.087 = +0.006/-0.0004
> ∅ 7.087 ≤ ∅ 9.055 = +0.006/-0.0005
> ∅ 9.055 ≤ ∅ 12.402 = +0.000/-0.0013
> ∅ 12.402 ≤ ∅ 15.748 = +0.000/-0.0014
> ∅ 15.748 ≤ ∅ 19.685 = +0.000/-0.0016

BOLT STRENGTH
Bolt size, strength and quantity should be verified to insure proper torque reaction capacity whatever the mounting arrangement.

PRIME MOVER MOUNTING
Align the prime mover to the reducer-input shaft using shims under the feet. Make sure that the feet are supported. Dowel the prime mover to its foundation.

SHAFT CONNECTIONS
When connecting shafts to either the input or output of the reducer, consider the following instructions.

FITS
Clearance or interference fits for coupling hubs should be in accordance with ANSI/AGMA 9002-A86 or as follows.

Output and Input shaft Diameter tolerance
Metric (mm)

≤ ∅ 18 = +0.012/+0.001
> ∅ 18 ≤ ∅ 30 = +0.015/+0.002
> ∅ 30 ≤ ∅ 50 = +0.018/+0.002
> ∅ 50 ≤ ∅ 80 = +0.030/+0.011
> ∅ 80 ≤ ∅ 120 = +0.035/+0.013
> ∅ 120 ≤ ∅ 180 = +0.040/+0.015

Inch

≤ ∅ 1.750 = +0.0000/-0.0005
> ∅ 1.750 = +0.0000/-0.0010

Output and Input shaft Drill and tap shaft end
Metric (mm)

≤ ∅ 16 = M5
> ∅ 16 ≤ ∅ 21 = M6
> ∅ 21 ≤ ∅ 24 = M8
> ∅ 24 ≤ ∅ 30 = M10
> ∅ 30 ≤ ∅ 38 = M12
> ∅ 38 ≤ ∅ 50 = M16
> ∅ 50 ≤ ∅ 85 = M20
> ∅ 85 ≤ ∅ 130 = M24

Inch

≤ ∅ 0.438 = #10-24 x 0.4 deep
> ∅ 0.438 ≤ ∅ 0.813 = ¼-20 x 0.6 deep
> ∅ 0.813 ≤ ∅ 0.938 = 5/16-18 x 0.7 deep
> ∅ 0.938 ≤ ∅ 1.125 = 3/8-16 x 0.9 deep
> ∅ 1.125 ≤ ∅ 1.375 = 1/2-13 x 1.1 deep
> ∅ 1.375 ≤ ∅ 1.875 = 5/8-11 x 1.4 deep
> ∅ 1.875 ≤ ∅ 3.250 = 3/4-10 x 1.7 deep
> ∅ 3.250 = 1-8 x 2.2 deep

Outboard pinion and sprocket fits should be as recommended by the pin sprockets with interference fits should be heated according to the manufacturer's recommendations, generally 250°F to 300°F, (120°C to 150° C) before assembling to the shaft.

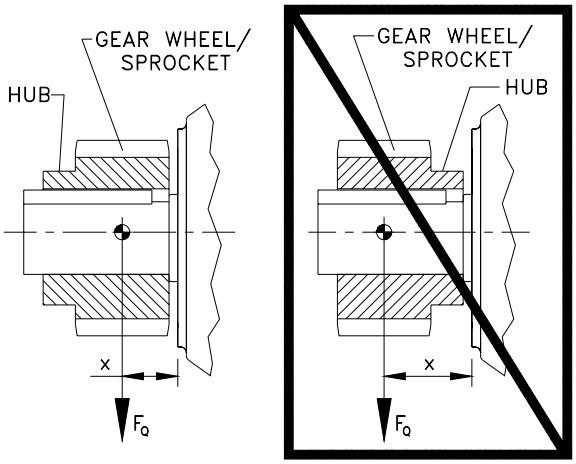

LOCATION
Coupling hubs should be mounted flush with the shaft ends, unless specifically ordered for overhung mounting. Pinions, sprockets and sheaves should be mounted as close as possible to the unit housing to minimize bearing loads and shaft deflections.

COUPLING ALIGNMENT
Shaft couplings should be installed according to the coupling manufacturer's recommendations for gap, angular and parallel alignment. In many installations, it is necessary to allow for thermal and mechanical shaft movement when determining shaft alignment. The coupling manufacturer's recommendations should be followed.

AXIAL DISPLACEMENT
The gap between shaft ends should be the same as the specified coupling gap unless overhung mounting of the coupling hub is specified. The coupling gap and shaft gap must be sufficient to accommodate any anticipated thermal or mechanical axial movement.

ANGULAR ALIGNMENT
Insert a spacer or shim stock equal to the required coupling gap between the coupling hub faces and measure the clearance using feeler gauges. Repeat this at the same depth at 90-degree intervals to determine the amount of angular misalignment.

PARALLEL ALIGNMENT
Mount a dial indicator to one coupling hub, and rotate this hub, sweeping the outside diameter of the other hub. The parallel misalignment is equal to one-half of the total indicator reading. Another method is to rest a straight edge squarely on the outside diameter of the hubs at 90-degree intervals and measure any gaps with feeler gauges. The maximum gap measurement is the parallel misalignment.

CHECKING ALIGNMENT
After both angular and parallel alignments are within specified limits, tighten all foundation bolts securely and repeat the above procedure to check alignment. If any of the specified limits for alignment are exceeded, realign the coupling.

SPROCKET OR SHEAVE ALIGNMENT
Align the sheaves or sprockets square and parallel by placing a straight edge across their faces. Alignment of bushed sheaves and sprockets should be checked after bushings have been tightened. Check horizontal shaft alignment by placing a level vertically against the face of the sheave or sprocket. Adjust belt or chain tension per the manufacturer's specified procedure.

OUTBOARD PINION ALIGNMENT
Align the pinion by adjusting the gear tooth clearance according to the manufacturer's recommendations and checking for acceptable outboard pinion tooth contact. The foundation bolts may have to be loosened and the unit moved slightly to obtain this contact. When the unit is moved to correct tooth contact, the prime mover should be realigned.

RECHECK ALIGNMENT
After a period of operation, recheck alignment and adjust as required.

1. Properly install unit on a rigid foundation
   - adequately supported
   - securely bolted into place
   - leveled so as not to distort the gear case
2. Properly install couplings suitable for the application and connected equipment.
3. Ensure accurate alignment with other equipment.
4. Furnish and install adequate machinery guards as needed to protect operating personnel and as required by the applicable standards of the Occupational Safety and Health Administration (OSHA), and by other applicable safety regulations;
5. Ensure that driving equipment is running in the correct direction before coupling to reducers with backstops (designed to operate only in a specific direction) or machinery designed to operate only in one direction.

CHANGES IN PERFORMANCE SPECIFICATIONS
Owner has the responsibility to consult with NORD GEAR if such items such as applied loads, operating speeds or other operating conditions have changed.

WARNING:
LOCK OUT POWER before any maintenance is performed. Make absolutely sure that no voltage is applied while work is being done on the gearbox.

START-UP
1. Ensure that switches, alarms, heaters, coolers and other safety and protection devices are installed and operational for their intended purpose.
2. Verify that the installed mounting position is the same as the nametag mounting position. If not, adjust the oil level accordingly and relocate the vent plug, fill plug and drain plug according to the mounting position. See following.

AUTOVENT PLUG
The Autovent plug is brass in color and will be located at the highest point on the gearbox. It operates like a check-valve to allow the reducer to relieve internal pressure while preventing lubricant contamination during cooling. A spring presses a ball or plunger against a machined orifice until pressure exceeds 2 psi. Above 2 psi the air is allowed to escape depressurizing the gearcase. When internal pressure drops below 2 psi, the autovent re-seals closing the unit to the outside environment. After shutdown, the reducer cools along with the air inside the reducer. The unit will temporarily maintain a slight vacuum until normalization occurs. NORD Gear supplies an Autovent as a standard feature.

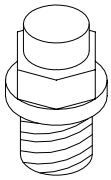
AUTOVENT PLUG

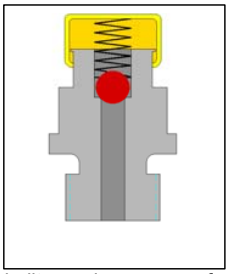

The Autovent releases built-up air pressure from inside the gearbox (Max. pressure 2 psi).

FILL LEVEL & DRAIN PLUGS
The drain plugs are metric socket head cap screws. They will be located at the lowest part of the gearbox for ease of draining. The fill level plug is a hex head cap screw. It will be located between the Autovent and drain plug. Both types of plugs will have gaskets included to prevent oil from leaking.

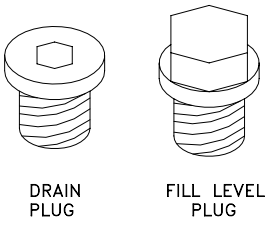

Two types of plugs for maintenance

LUBRICANT
All NORD reducers are shipped from the factory properly filled with lubricant and all plugs are installed according to the mounting position given on the reducer nametag. Acceptable oil fill level is within ½ inch of the bottom of the fill plug threads.

OPERATION AND MAINTENANCE CHECKLIST
1. Operate the equipment as it was intended to be operated
2. Do not overload.
3. Run at correct speed.
4. Maintain lubricant in good condition and at proper level.
5. Dispose of used lubricant in accordance with applicable laws and regulations.
6. Apply proper maintenance to attached equipment at prescribed intervals recommended by the manufacturer.
7. Perform periodic maintenance of the gear drive as recommended by NORD.

MOUNTING POSITIONS

These charts detail the mounting positions for horizontal and vertical mounting. The Autovent, oil fill plug and drain plug are indicated on each mounting position picture. The factory set mounting position and plug locations match that shown on the gearbox nametag. For mounting orientations other than shown consult NORD Gear.

VERTICAL POSITION

	SK 11E - SK 51 E	SK 02 - SK 52	SK 03 - SK 53	SK 62 - SK 103
V1 *	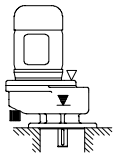	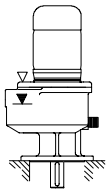	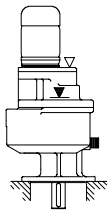	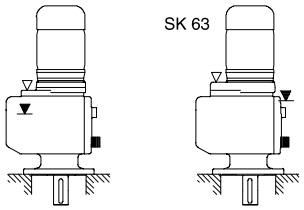
V3	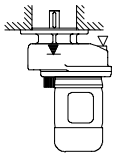	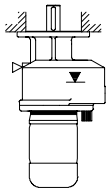	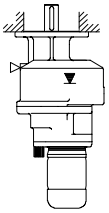	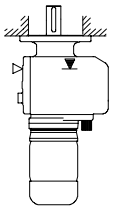
V5 *	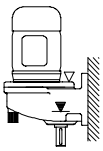	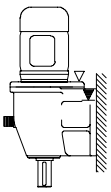	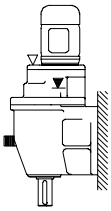	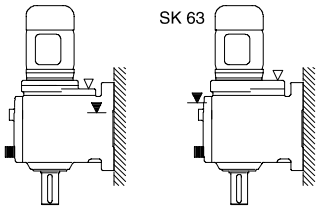
V6	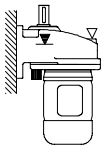	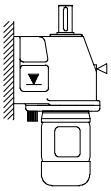	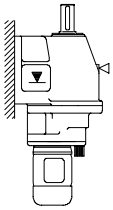	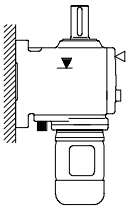

Symbols: ▽ Vent plug ▼ Oil level ■ Drain plug ▨ Mounting surface

* Mounting position V1 or V5 with lubricant expansion unit

HORIZONTAL POSITION

	SK 11 E - SK 51 E	SK 02 - SK 52 SK 03 - SK 53	SK 62 - SK 103
B3	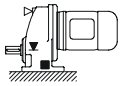	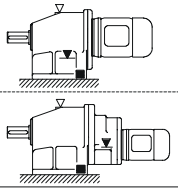	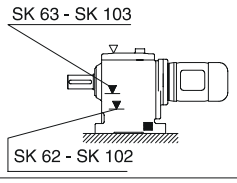
B6	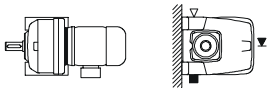	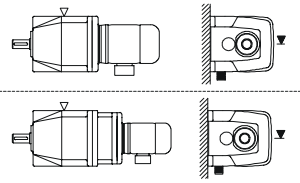	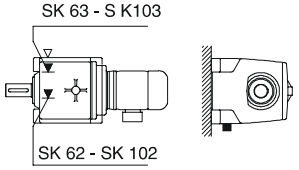
B7	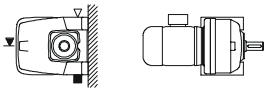	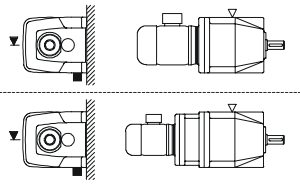	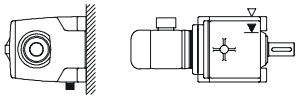
B8	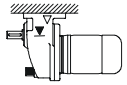	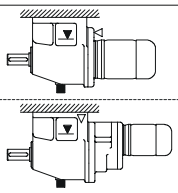	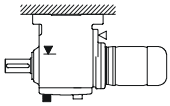
B5	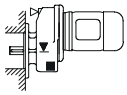	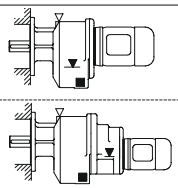	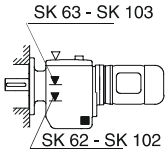
B5I	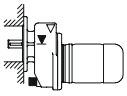	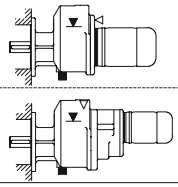	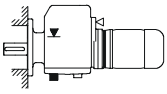
B5II	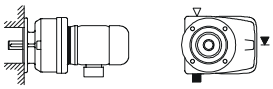	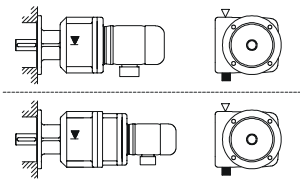	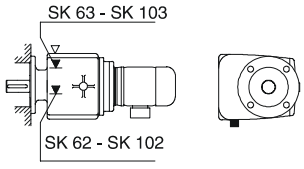
B5III	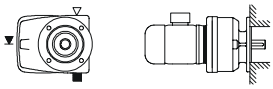	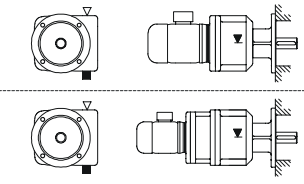	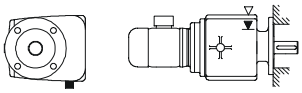

Symbols: ▽ Vent plug ▼ Oil level ■ Drain plug ▨ Mounting surface

MAINTENANCE

Mineral lubricant should be changed every 10,000 service hours or after two years. For synthetic oils, the lube should be changed every 20,000 service hours or after four years. In case of extreme operating (e.g. high humidity, aggressive environment or large temperature variations), shorter intervals between changes are recommended.

OIL SPECIFICATIONS

NORD supplies all reducers filled with oil from the factory. Consult the sticker adjacent to the fill plug to determine the type of lubricant installed at the factory. Standard lubricant is ISO VG220 mineral-based oil. However, some units have special lubricants designed to operate in certain environments or to extend the service life of the lubricant. If in doubt about which lubricant is needed, contact NORD Gear.

STANDARD OIL – ISO VG220

Ambient Temperature	Formulation
20 to 104°F (-5 to 40°C)	Mineral

TYPICAL OILS

Viscosity ISO NLGI	Formulation	Service Temperature Range	Mobil	Shell	Castrol	KLÜBER LUBRICATION	bp	Tribol
VG 460	Conventional Mineral	20°C to +50°C 68F to +122°F	Mobilgear 634	Omala 460	7EP	Klüberoil GEM 1-460	Energol GR-XP 460	Tribol 1100/460
	Synthetic PAO	-30°C to +80°C -22°F to +176°F	Mobil SHC 634	Omala 460 HD	Isolube EP 460	Klübersynth EG 4-460	N/A	Tribol 1510/460
VG 320	Conventional Mineral	0°C to +30°C 32°F to +86°F	Mobilgear 632	Omala 320	6EP	Klüberoil GEM 1-320	Energol GR-XP 320	Tribol 1100/320
	Synthetic PAO	-35°C to +80°C -31°F to +176°F	Mobil SHC 632	Omala 320 HD	Isolube EP 460	Klübersynth EG 4-320	N/A	Tribol 1510/320
VG 220	Conventional Mineral	-5°C to +40°C +20°F to +104°F	Mobilgear 630	Omala 220	5EP	Klüberoil GEM 1-220	Energol GR-XP 220	Tribol 1100/220
	Synthetic PAO	-34°C to +80°C -30°F to +176°F	Mobil SHC 630	Omala 220 HD	Isolube EP 220	Klübersynth EG 4-220	N/A	Tribol 1510/220
VG 150 & VG 100	Conventional Mineral	-15°C to +25°C 5°F to +77°F	Mobilgear 629	Omala 100	4EP	Klüberoil GEM 1-150	Energol GR-XP 100	Tribol 1100/100
	Synthetic PAO	-37°C to +10°C -35°F to +50°F	Mobil SHC 629	Omala 150 HD	Isolube EP 150	Klübersynth EG 4-150	N/A	N/A
VG 68	Conventional Mineral	-15°C to +25°C 5°F to +77F	Mobilgear 626	Omala 68	2EP	Klüberoil GEM 1-68	Energol GR-XP 68	Tribol 1100/68
	Synthetic PAO	-40°C to +10°C -40°F to +50F	Mobil SHC 626	N/A	Isolube EP 68	N/A	N/A	N/A
VG 32	Synthetic PAO	-40°C to +10°C -40°F to +50°F	Mobil SHC 624	N/A	N/A	Klüber-Summit HySyn FG-32	N/A	N/A

PAO = Poly Alpha Olefin

SPECIAL PURPOSE LUBRICANTS

Ambient Temperature	Formulation	Manufacturer	Oil Brand Name
20 to 104°F (-5 to 40°C)	*Food Grade* Oil - Synthetic	Chevron	FM ISO 220
20 to 104°F (-5 to 40°C)	*Food Grade* Oil - Synthetic	OilJAX	Magnaplate 85W140-FG
5 to 125°F (-20 to 50°C)	Fluid Grease	Mobil	Mobilux EP023
-30 to 140°F (-35 to 60°C)	Fluid Grease - Synthetic	Mobil	Mobilith SHC 007
-30 to 140°F (-35 to 60°C)	Fluid Grease - Synthetic	Shell	Albida LC

STANDARD BEARING GREASE – NLGI 2EP Lithium

Ambient Temperature	Formulation
-20 to 140°F (-30 to 60°C)	Mineral

OPTIONAL BEARING GREASES

Ambient Temperature	Formulation	Manufacturer	Grease Brand Name
-40 to 230°F (-40 to 110°C)	Synthetic	Shell	Aeroshell 6
-40 to 230°F (-40 to 110°C)	*Food Grade* - Synthetic	Lubriplate	SFL1

LUBRICANT CAPACITY

Each reducer has the oil level and oil quantity adjusted according to the mounting position shown in the tables. When replacing the oil, consult the tables below to determine the proper amount of oil to be installed according to the reducer size and mounting position. Note that this is approximate and the final level will be adjusted when the reducer is installed. Acceptable oil fill level is within ½ inch of the bottom of the fill plug threads.

LUBRICATION CAPACITY – HELICAL INLINE GEARBOXES

Mounting position		*Horizontal position*								*Vertical position*			
		single reduction											
		B 3	**B 6**	**B 7**	**B 8**	**B 5**	**B 5I**	**B 5II**	**B 5III**	**V 1**	**V 3**	**V 5**	**V 6**
SK 11E	quarts	0.26	0.37	0.37	0.58	0.32	0.53	0.42	0.42	0.32	0.37	0.42	0.53
	liters	0.25	0.35	0.35	0.55	0.30	0.50	0.40	0.40	0.30	0.35	0.40	0.50
SK 21E	quarts	0.63	1.06	1.06	1.27	0.53	1.16	0.95	0.95	0.74	1.48	1.06	1.27
	liters	0.60	1.00	1.00	1.20	0.50	1.10	0.90	0.90	0.70	1.40	1.00	1.20
SK 31E	quarts	1.16	1.80	1.80	2.32	0.85	1.74	2.11	2.11	1.16	1.37	2.43	2.85
	liters	1.10	1.70	1.70	2.20	0.80	1.65	2.00	2.00	1.10	1.30	2.30	2.70
SK 41E	quarts	1.80	2.75	2.75	3.49	1.06	2.96	3.49	3.49	1.69	2.75	2.64	2.75
	liters	1.70	2.60	2.60	3.30	1.00	2.80	3.30	3.30	1.60	2.60	2.50	2.60
SK 51E	quarts	2.32	3.59	3.59	4.97	1.90	4.33	4.02	4.02	3.17	3.70	4.23	4.65
	liters	2.20	3.40	3.40	4.70	1.80	4.10	3.80	3.80	3.00	3.50	4.00	4.40
Mounting position		**double reduction**											
		B 3	**B 6**	**B 7**	**B 8**	**B 5**	**B 5I**	**B 5II**	**B 5III**	**V 1**	**V 3**	**V 5**	**V 6**
SK 02	quarts	0.16	0.42	0.42	0.74	0.26	0.63	0.53	0.53	0.63	0.63	0.63	0.63
	liters	0.15	0.40	0.40	0.70	0.25	0.60	0.50	0.50	0.60	0.60	0.60	0.60
SK 12	quarts	0.26	0.53	0.53	0.90	0.37	0.95	0.63	0.63	0.95	0.90	0.79	0.79
	liters	0.25	0.50	0.50	0.85	0.35	0.90	0.60	0.60	0.90	0.85	0.75	0.75
SK 22	quarts	0.53	1.43	1.43	2.11	0.74	2.11	1.64	1.64	1.90	2.11	1.90	1.90
	liters	0.50	1.35	1.35	2.00	0.70	2.00	1.55	1.55	1.80	2.00	1.80	1.80
SK 32	quarts	0.95	2.11	2.11	3.17	1.37	3.49	2.54	2.54	3.28	3.06	3.06	2.64
	liters	0.90	2.00	2.00	3.00	1.30	3.30	2.40	2.40	3.10	2.90	2.90	2.50
SK 42	quarts	1.37	3.38	3.38	4.76	1.90	4.76	3.91	3.91	4.23	4.65	4.54	6.13
	liters	1.30	3.20	3.20	4.50	1.80	4.50	3.70	3.70	4.00	4.40	4.30	5.80
SK 52	quarts	2.64	5.39	5.39	7.19	3.17	6.55	5.92	5.92	7.82	7.19	7.19	7.40
	liters	2.50	5.10	5.10	6.80	3.00	6.20	5.60	5.60	7.40	6.80	6.80	7.00
SK 62	quarts	6.87	15.85	15.85	13.74	7.40	14.79	16.91	16.91	19.55	15.85	16.91	15.85
	liters	6.50	15.00	15.00	13.00	7.00	14.00	16.00	16.00	18.50	15.00	16.00	15.00
SK 72	quarts	9.51	24.30	24.30	19.02	10.57	19.55	24.30	24.30	29.59	24.30	27.47	24.30
	liters	9.00	23.00	23.00	18.00	10.00	18.50	23.00	23.00	28.00	23.00	26.00	23.00
SK 82	quarts	14.79	33.81	33.81	28.53	15.85	30.64	36.46	36.46	47.55	39.10	46.49	36.98
	liters	14.00	32.00	32.00	27.00	15.00	29.00	34.50	34.50	45.00	37.00	44.00	35.00
SK 92	quarts	26.42	54.95	54.95	49.66	27.47	49.66	54.95	54.95	82.42	77.14	80.31	77.14
	liters	25.00	52.00	52.00	47.00	26.00	47.00	52.00	52.00	78.00	73.00	76.00	73.00
SK 102	quarts	38.04	75.02	75.02	69.74	42.27	69.74	76.08	76.08	109.90	85.59	107.78	83.48
	liters	36.00	71.00	71.00	66.00	40.00	66.00	72.00	72.00	104.00	81.00	102.00	79.00
Mounting position		**triple reduction**											
		B 3	**B 6**	**B 7**	**B 8**	**B 5**	**B 5I**	**B 5II**	**B 5III**	**V 1**	**V 3**	**V 5**	**V 6**
SK 03	quarts	0.32	0.63	0.63	0.85	0.53	0.95	0.85	0.85	1.16	0.86	0.95	1.32
	liters	0.30	0.60	0.60	0.80	0.50	0.90	0.80	0.80	1.10	0.81	0.90	1.25
SK 13	quarts	0.63	0.74	0.74	1.16	0.85	1.27	1.00	1.00	1.27	1.27	1.27	1.32
	liters	0.60	0.70	0.70	1.10	0.80	1.20	0.95	0.95	1.20	1.20	1.20	1.25
SK 23	quarts	1.37	1.69	1.69	2.43	2.64	1.59	2.96	2.96	2.96	2.75	2.48	2.54
	liters	1.30	1.60	1.60	2.30	2.50	1.50	2.80	2.80	2.80	2.60	2.35	2.40
SK 33	quarts	1.69	2.43	2.43	3.38	2.01	3.70	2.75	2.75	4.65	3.59	4.44	3.06
	liters	1.60	2.30	2.30	3.20	1.90	3.50	2.60	2.60	4.40	3.40	4.20	2.90
SK 43	quarts	3.17	3.80	3.80	5.49	3.70	5.28	4.33	4.33	6.45	6.02	6.97	5.92
	liters	3.00	3.60	3.60	5.20	3.50	5.00	4.10	4.10	6.10	5.70	6.60	5.60
SK 53	quarts	4.76	6.34	6.34	8.14	5.49	7.40	7.08	7.08	9.40	8.88	9.19	9.19
	liters	4.50	6.00	6.00	7.70	5.20	7.00	6.70	6.70	8.90	8.40	8.70	8.70
SK 63	quarts	10.57	13.74	13.74	11.62	11.62	12.68	14.79	14.79	19.02	14.79	16.91	15.32
	liters	10.00	13.00	13.00	11.00	11.00	12.00	14.00	14.00	18.00	14.00	16.00	14.50
SK 73	quarts	14.79	21.13	21.13	18.49	14.79	19.02	21.13	21.13	29.06	23.78	28.53	21.13
	liters	14.00	20.00	20.00	17.50	14.00	18.00	20.00	20.00	27.50	22.50	27.00	20.00
SK 83	quarts	23.25	34.87	34.87	27.47	24.30	28.53	35.93	35.93	42.27	35.93	39.10	32.76
	liters	22.00	33.00	33.00	26.00	23.00	27.00	34.00	34.00	40.00	34.00	37.00	31.00
SK 93	quarts	42.27	51.78	51.78	46.49	42.27	46.49	51.78	51.78	78.19	73.97	76.08	73.97
	liters	40.00	49.00	49.00	44.00	40.00	44.00	49.00	49.00	74.00	70.00	72.00	70.00
SK 103	quarts	58.12	70.80	70.80	58.12	58.12	62.34	70.80	70.80	104.61	82.42	102.50	75.02
	liters	55.00	67.00	67.00	55.00	55.00	59.00	67.00	67.00	99.00	78.00	97.00	71.00

Note: Filling quantities are approximate figures. Oil level must be checked according to oil level plug after final installation. Acceptable oil fill level is within ½ inch of the bottom of the fill plug threads For mounting angles not shown, consult factory.

PARTS LIST

SK 11 E - SK 51 E

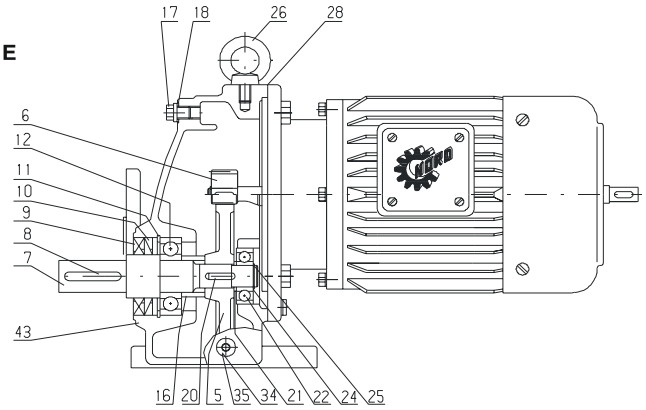

SK 02 - SK 52

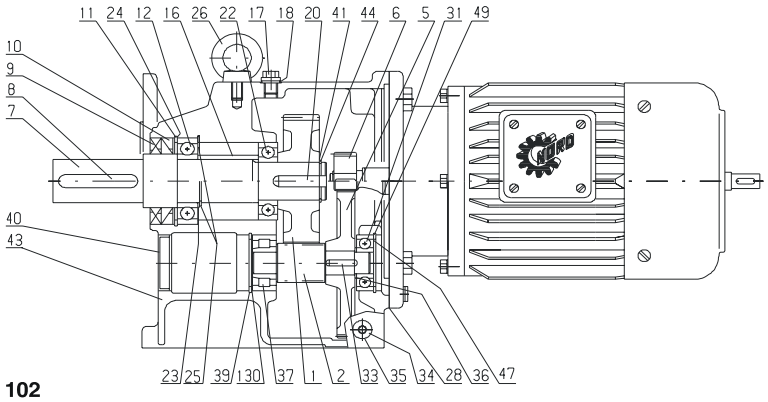

SK 62 - SK 102

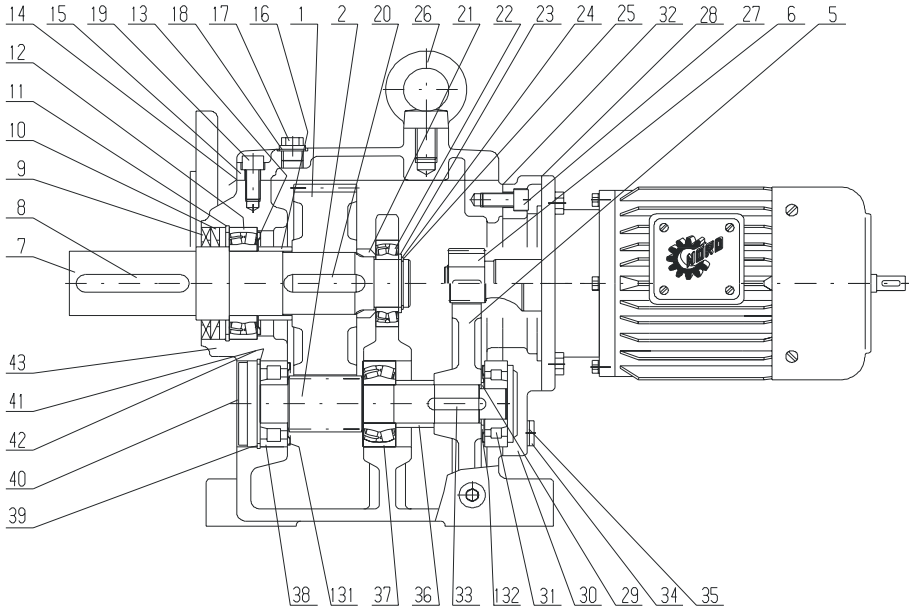

1	Driven gear
2	Pinion shaft
5	Driving gear
6	Driving pinion
7	Output shaft
8	Key
9	Shaft seal
10	Shaft seal
11	Circlip
12	Output shaft bearing
13	NILOS ring
14	Seal
15	Gearcase cover
16	Spacer
17	Vent plug
18	Seal
19	Socket head screw
20	Key
21	Spacer
22	Output shaft bearing
23	Supporting disc
24	Shim
25	Circlip
26	Flanged eye bolt
27	Bolt
28	Seal
29	Spacer
30	Gearbox cover
31	Pinion shaft bearing
32	Seal
33	Key
34	Drain plug
35	Seal
36	Spacer
37	Pinion shaft bearing
38	Pinion shaft bearing
39	Circlip
40	Locking cap
41	Shim
42	Supporting disc
43	Gear case
44	Circlip
47	Shim
49	Circlip
130	Shim
131	NILOS ring
132	NILOS ring

RECOMMENDED SPARE PARTS

Bearings – *all* Gaskets – *all* Shims – *all*
Seals – *all* Seal Plugs – *all*

IMPORTANT!

When ordering parts, it is necessary to have the ***NORD SERIAL NUMBER*** from the unit the parts are for. The serial number will dictate the correct parts for that particular unit. The gearbox nameplate will have the serial number on it.

PARTS LIST

SK 03 - SK 53

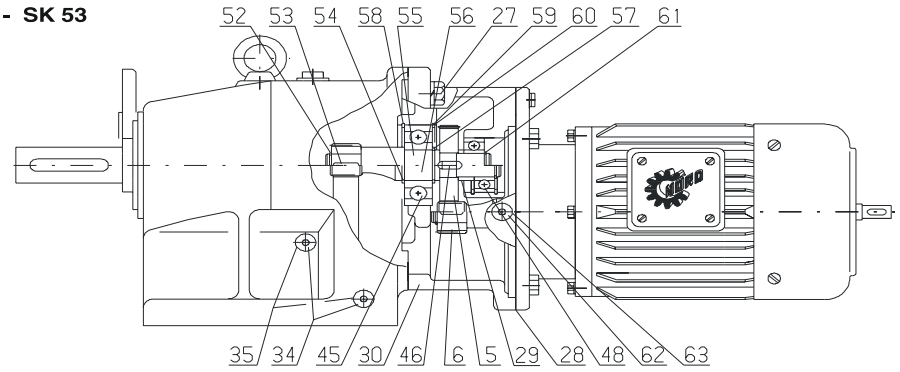

SK 63 - SK 103

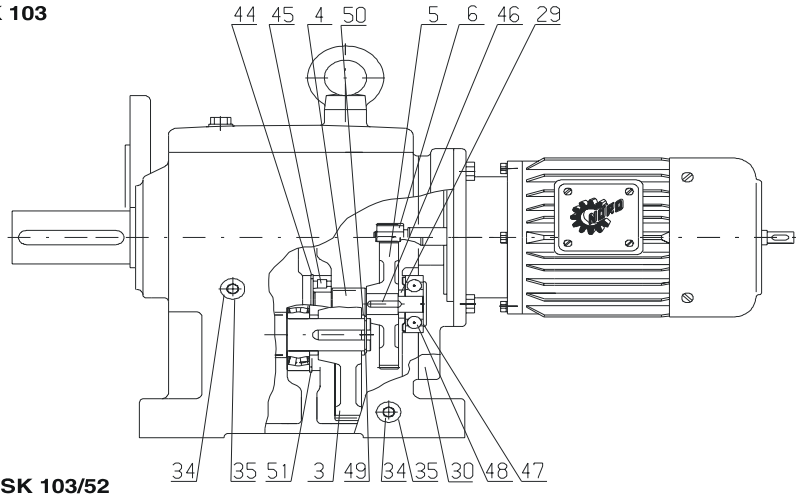

SK 12/02 - SK 103/52

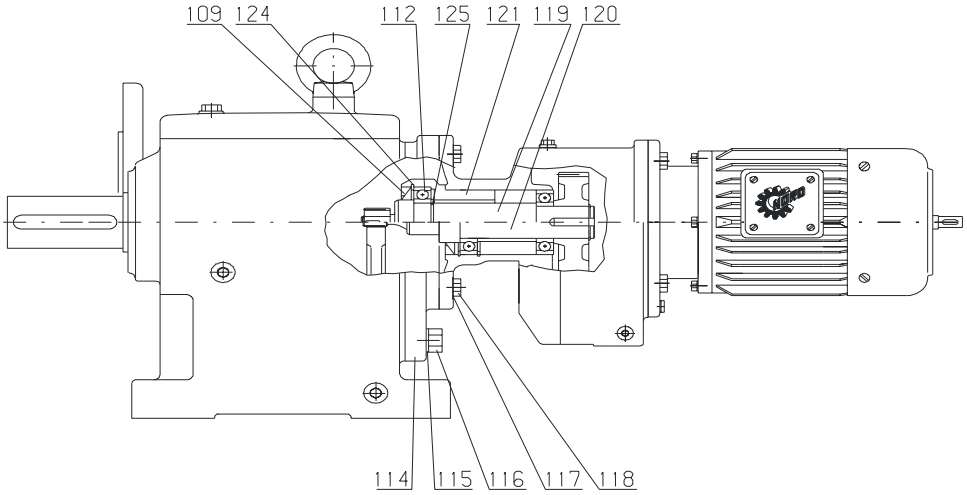

3	Driven gear
4	Pinion shaft SK 63 - SK 103
5	Driving gear
6	Driving pinion
27	Fixing bolt
28	Seal
29	Spacer
30	Third reduction gearcase
34	Drain plug
35	Seal
44	Circlip
45	Ball bearing
46	Key
47	Shim
48	Ball bearing
49	Circlip
50	Supporting disc
51	Circlip
52	Circlip
53	Key
54	Circlip
55	Intermediate shaft, plain
56	Intermediate shaft, gearcut
57	Circlip
58	Circlip
59	Shim
60	Circlip
61	Circlip
62	Oil-plug
63	Seal
109	Shaft seal
112	Ball bearing
114	Intermediate flange
115	Spring washer
116	Bolt
118	Bolt
119	Intermediate shaft, plain
120	Intermediate shaft, gearcut
121	Bearing sleeve
124	Circlip
125	Circlip

NOTES

TROUBLE SHOOTING

PROBLEM WITH THE REDUCER		POSSIBLE CAUSES	SUGGESTED REMEDY
Runs Hot	Overloading	Load exceeds the capacity of the reducer	Check rated capacity of reducer, replace with unit of sufficient capacity or reduce load
	Improper lubrication	Insufficient lubrication	Check lubricant level and adjust up to recommended levels
		Excessive lubrication	Check lubricant level and adjust down to recommended levels
		Wrong lubrication	Flush out and refill with correct lubricant as recommended
Runs Noisy	Loose foundation bolts	Weak mounting structure	Inspect mounting of reducer. Tighten loose bolts and/ or reinforce mounting and structure
		Loose hold down bolts	Tighten bolts
	Worn RV Disc	Overloading unit may result in damage to disc	Disassemble and replace disc. Recheck rated capacity of reducer.
	Failure of Bearings	May be due to lack of lubricant	Replace bearing. Clean and flush reducer and fill with recommended lubricant.
		Overload	Check rated capacity of reducer.
	Insufficient Lubricant	Level of lubricant in the reducer not properly maintained.	Check lubricant level and adjust to factory recommended level.
Output Shaft Does Not Turn	Internal parts are broken	Overloading of reducer can cause damage.	Replace broken parts. Check rated capacity of reducer.
		Key missing or sheared off on input shaft.	Replace key.
		Coupling loose or disconnected.	Properly align reducer and coupling. Tighten coupling.
Oil Leakage	Worn Seals	Caused by dirt or grit entering seal.	Replace seals. Autovent may be clogged. Replace or clean.
		Overfilled reducer.	Check lubricant level and adjust to recommended level.
		Autovent clogged.	Clean or replace, being sure to prevent any dirt from falling into the reducer.
		Improper mounting position, such as wall or ceiling mount of horizontal reducer.	Check mounting position. Name tag & verify with mounting chart in manual.

NORD Gear Corporation
National Customer Service Toll Free 888-314-6673

www.nord.com

NORD Gear Limited
Toll Free in Canada 800-668-4378

WEST
1121 Railroad Street
Building 101
Corona, CA 92882
Phone 951-279-2600
Fax 888-408-6673

MIDWEST
PO Box 367
800 Nord Drive
Waunakee, WI 53597
Phone 608-849-7300
Fax 800-373-6673

SOUTH
100 Forsyth Hall Dr.
Building 100B
Charlotte, NC 28273
Phone 704-529-1255
Fax 888-259-6673

CANADA
41 West Drive
Brampton, Ontario L6T 4A1
Phone 905-796-3606
Fax 905-796-8130

Installation, Operation and Maintenance Instructions

for AC Induction Motors
56- 6800 Frames (NEMA)
63 – 280 Frames (IEC)



MARATHON ELECTRIC
Contact Motor Customer Service at:
Phone: (715) 675-3311
www.marathonelectric.com

Form 5554E

INSTALLER: PLEASE LEAVE THIS MANUAL FOR THE OWNER'S USE
OWNER: READ AND SAVE THESE INSTRUCTIONS

SAFETY INSTRUCTIONS

⚠ This is the safety alert symbol. It is used to alert you to potential personal injury hazards. Obey all safety messages that follow this symbol to avoid possible injury or death.

⚠ WARNING
Before installing, using, or servicing this product, carefully read and fully understand the instructions including all warnings, cautions, & safety notice statements. To reduce risk of personal injury, death and/or property damage, follow all instructions for proper motor installation, operation and maintenance.

These instructions are not intended as a complete listing of all details for installation, operation, and maintenance. If you have any questions concerning any of the procedures, STOP, and call the appropriate Regal-Beloit motor company.

Table of Contents

1.0 INSTALLER / OWNER / OPERATOR RESPONSIBILITY
- 1.1 Electrical Safety
- 1.2 Mechanical Safety
- 1.3 Environmental Safety

2.0 RECEIVING & INSPECTION
- 2.1 Initial Inspection
  - 2.1.1 Packing List & Inspect
  - 2.1.2 Turn Motor Shaft
  - 2.1.3 Check Nameplate
- 2.2 Handling
  - 2.2.1 Correct Lifting Angles
- 2.3 Storage
  - 2.3.1 Bearing Lubrication
  - 2.3.2 Shaft Rotation
  - 2.3.3 Damp or Humid Storage Locations

3.0 INSTALLATION AND OPERATION
- 3.1 Location
  - 3.1.1 Selecting a Location
  - 3.1.2 Ambient Temperature Limits
  - 3.1.3 Construction Selection per Location
    - 3.1.3.1 Dripproof
    - 3.1.3.2 Totally Enclosed
    - 3.1.3.3 Hazardous Locations Motors
- 3.2 Mounting Motor
  - 3.2.1 Rigid Base (Footed)
  - 3.2.2 Rigid Base Hole Selection -6 or 8 Hole Bases
  - 3.2.3 Vertical
- 3.3 Application Assembly to Motor
  - 3.3.1 General: Proper Alignment
  - 3.3.2 Direct Coupling
  - 3.3.3 Direct Connected
  - 3.3.4 Belted
  - 3.3.5 VFD Operation
  - 3.3.6 Accessories
    - 3.3.6.1 General
    - 3.3.6.2 Brake Motors
    - 3.3.6.3 Space Heaters
    - 3.3.6.4 Thermal Protection General, Thermostats, Thermisters & RTDs
    - 3.3.6.5 RTD Alarm & Trip Settings
  - 3.3.7 Guards
- 3.4 Electrical Connections
  - 3.4.1 Power Supply / Branch Circuit
    - 3.4.1.1 Branch Circuit Supply
    - 3.4.1.2 Fuses, Breakers, Overload Relays
    - 3.4.1.3 AC Power Supply Limits
  - 3.4.2 Terminal Box
    - 3.4.2.1 Conduit opening
    - 3.4.2.2 Hazardous Locations
  - 3.4.3 Lead Connections
    - 3.4.3.1 Wire Size Requirements (Single Phase)
    - 3.4.3.2 Extension Cords (Single Phase)
  - 3.4.4 Ground Connections
  - 3.4.5 Start Up
    - 3.4.5.1 Start Up – No Load Procedure
    - 3.4.5.2 Start Up – Load Connected Procedure
    - 3.4.5.3 Jogging and/or repeated starts

4.0 MAINTENANCE
- 4.1 General Inspection

4.1.1 Ventilation
4.1.2 Insulation
4.1.3 Electrical Connections
4.2 Lubrication and Bearings
4.2.1 Grease Type
4.2.2 Bearing Operating Temperature
4.2.3 Lubrication Interval
4.2.4 Lubrication Procedure
4.2.5 Lubrication Example
4.3 Trouble Shooting
4.3.1 General Trouble-Shooting Warnings
4.3.2 Trouble-Shooting Cause / Corrective Action

motor is suitable for use on Pulse Width Modulated (PWM) type VFD power. In addition, the nameplate must be marked with the inverter rating; for example, "2:1 CT", "2 to 1 Constant Torque", etc.

1.0 INSTALLER/OWNER/OPERATOR RESPONSIBILITY:

1.1 ELECTRICAL SAFETY

WARNING: ELECTRICAL SHOCK HAZARD

Electrical connections shall be made by a qualified electrical personnel in accordance with all applicable codes, ordinances and sound practices. Failure to follow these instructions could result in serious personal injury, death and/or property damage. Only qualified personnel who are familiar with the applicable National Code (USA = NEC) and local codes should install or repair electrical motors and their accessories.

WARNING: ELECTRICAL LIVE CIRCUIT HAZARD

Do not touch electrically live parts. Disconnect, lockout and tag input power supply before installing or servicing motor (includes accessory devices). Use a voltmeter to verify that power is off before contacting conductors.

WARNING: ELECTRICAL GROUNDING HAZARD

Failure to properly ground motors, per the National Electrical Code (NEC) Article 430 and local codes may cause serious injury or death to personnel. For general information on grounding refer to NEC Article 250. (Also see "Ground Connections section 3.4.4").

WARNING: AUTOMATIC RESET PROTECTOR HAZARD

Do not use automatic reset protectors if automatically restarting the motor will place personnel or equipment at risk. . Failure to follow this instruction could result in serious personal injury, death and/or property damage

WARNING: MANUAL RESET PROTECTOR HAZARD

If a tripped manual reset thermal protector is exposed to a temperature less than –7°C (20°F) it may reset and restart the motor automatically. If an application requires a motor with a manual reset thermal protector that will be operated at temperatures less than –7°C (20°F) contact the manufacturer to review the application / motor requirements. Failure to follow this instruction could result in serious personal injury, death and/or property damage

1.2 MECHANICAL SAFETY

WARNING: LOOSE PARTS HAZARD

Before starting the motor, remove all unused shaft keys and loose rotating parts to prevent them from flying off. Failure to follow these instructions could result in serious personal injury, death and/or property damage.

WARNING: ROTATING PARTS HAZARD

Keep extremities, hair, jewelry and clothing away from moving parts. Failure to follow these instructions could result in serious personal injury, death and/or property damage.

1.3 ENVIRONMENTAL SAFETY

WARNING: HAZARDOUS LOCATIONS

(1) The NEC and the local authority having jurisdiction must be consulted concerning the installation and suitability of motors for use in Hazardous Locations. The local authority having jurisdiction must make the final determination of what type of motor is required. The application and operation is beyond the control of the motor manufacturer.

(2) Division 1 Hazardous Locations motors can only be modified or reworked by the manufacturer or a facility that is Listed under UL's category "Motors and Generators, Rebuilt for use in Hazardous Locations". Failure to follow these instructions could result in serious personal injury, death and/or property damage.

(3) Do not use a Hazardous Locations motor with a Variable Frequency Drive (VFD) unless the motor nameplate specifically states that the

2.0 RECEIVING AND INSPECTION

2.1 INITIAL INSPECTIONS

2.1.1 CHECK PACKING LIST AND INSPECT the packaging to make certain no damage has occurred in shipment. If there is visible damage to the packaging, unpack and inspect the motor immediately. Claims for any damage done in shipment must be made by the purchaser against the transportation company.

2.1.2 TURN MOTOR SHAFT by hand to be certain that it rotates freely. Note: Shaft seals and bearing seals may add drag.

2.1.3 CHECK NAMEPLATE for conformance with purchase order requirements and compliance with power supply and control equipment requirements.

2.2 HANDLING:

WARNING: FALLING OBJECT HAZARD

Eyebolts or lifting lugs, where provided, are intended for lifting only the motor and accessories mounted by the motor manufacturer (unless specifically stated otherwise on the motor). Utilizing the motor lifting provision to lift other components such as pumps and gear boxes could result in serious personal injury, death and/or property damage.

WARNING: FALLING OBJECT HAZARD

Before using the lifting provision, check the eyebolts and/or other lifting means to assure they are not bent or damaged and are completely threaded, seated & secured to the motor. Equipment to lift motor must have adequate lifting capacity. While lifting the motor DO NOT stand under or in the vicinity of the motor. Failure to follow these instructions could result in serious personal injury, death and/or property damage.

2.2.1 LIFTING ANGLE LIMITATIONS

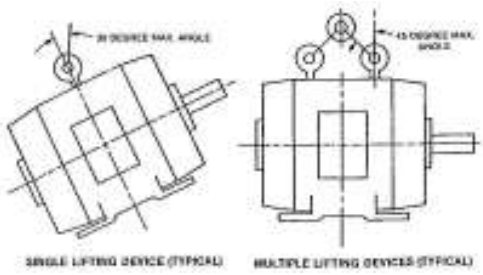

2.3 STORAGE: Motors, not put into service immediately, must be stored indoors in a clean, dry location. Avoid locations with large temperature swings that will result in condensation. Motors must be covered to eliminate airborne dust and dirt. If the storage location exhibits high vibration, place isolation pads under motor to minimize damage to motor bearings.

2.3.1 BEARING LUBRICATION: Bearings are grease packed at the factory; relubrication upon receipt of motor or while in storage is not necessary. If stored more than one year, add grease per lubrication instructions (Table 4-4) before start-up.

2.3.2 SHAFT ROTATION: It is recommended that the motor shaft be rotated 5 to 10 rotations every three months to distribute the grease in the bearings. This will reduce the chance for corrosion to form on the bearing rolling elements and raceways. Note: Shaft seals and bearing seals may add drag.

2.3.3 DAMP OR HUMID STORAGE LOCATIONS: Treat unpainted flanges, shafts, and fittings with a rust inhibitor. Apply appropriate power to the motor's space heaters (if so equipped)

3.0 INSTALLATION AND OPERATION

⚠ **WARNING:** Only qualified personnel who are familiar with the appropriate national code, local codes and sound practices should install or repair electrical motors and their accessories. Installation should conform to the appropriate national code as well as local codes and sound practices. Failure to follow these instructions could result in serious personal injury, death and/or property damage.

⚠ **WARNING: ELECTRICAL LIVE CIRCUIT HAZARD**
Do not touch electrically live parts. Disconnect, Lockout and Tag input power supply before installing or servicing motor (includes accessory devices). Use a voltmeter to verify that power is off before contacting conductors.

3.1 LOCATION

3.1.1 SELECTING A LOCATION: Consideration should be given to environment and ventilation. Motors should be installed in an area that is protected from direct sunlight, corrosives, harmful gases or liquids, dust, metallic particles, and vibration. A motor with the proper enclosure for the expected operating condition should be selected. Provide accessible clearance for cleaning, repair, service, and inspections (See section 3.1.3 for construction clearances). The location should be considered for possible future motor removal / handling. The free flow of air around the motor should not be obstructed.

3.1.2 AMBIENT TEMPERATURE LIMITS: The ambient temperatures of the air inlet to the motor should not exceed 40°C (104°F) or be less than -30°C (-22°F) unless the motor nameplate specifically states an ambient temperature outside of these limits. The ambient inside an enclosure built around the motor shall not exceed the nameplate ambient. For ambient temperatures outside of these limits consult the motor manufacturer.

⚠ **CAUTION: INSULATION DEGRADATION WARNING**
Insulation at high temperatures ages at an accelerated rate. Each 10°C increase in temperature reduces the insulation life by one half.

⚠ **WARNING: HAZARDOUS LOCATIONS AMBIENT LIMIT:** Division 1 Hazardous Locations motors shall **NOT** be operated below –25°C (-13°F) ambient. (Low temperatures reduce the component mechanical properties.)

3.1.3 CONSTRUCTION SELECTION per LOCATION:

3.1.3.1 DRIPPROOF (OPEN) MOTORS are intended for use indoors where the atmosphere is relatively clean, dry, and non-corrosive. Recommended a minimum clearance of ½ the shaft height between vent openings and the nearest obstruction.

3.1.3.2 TOTALLY ENCLOSED MOTORS are suitable for indoor or outdoor standard service applications.

TEAO or AOM (Totally Enclosed Air Over) motors must be mounted in the air stream. When the motor nameplate states a minimum airflow the motor must be mounted in an air stream meeting this minimum value.

TEFC (Totally Enclosed Fan Cooled) motors must meet a minimum distance of ½ the shaft height between the fan guard grill openings and the nearest obstruction.

3.1.3.3 HAZARDOUS LOCATIONS MOTORS: Hazardous Locations motors are intended for installations in accordance with NEC Article 500. For all installations involving Hazardous Locations motors, consult the applicable national codes, local codes, and the authority having jurisdiction.

Division 1 Installations – includes Class I & II: Use only motors that are UL Listed and CSA Certified or UL Listed and UL Certified for Canada. These motors bear a separate nameplate that includes the UL Listing Mark and CSA Certification Mark or includes the UL Listing Mark and the UL Mark for Canada. This plate also bears the phrase: " Electric motor for Hazardous Locations" and is marked with the Class, Group and Operating Temperature Code.

Division 2 Installations – Class I only: Use only motors that are CSA Certified and bear the CSA Certification Mark. These motors include a phrase on the main motor nameplate that indicates the motor is CSA Certified for Class I, Division 2 / Zone 2 locations.

Division 2 Installation – Class II only: Use only Class II motors as described above under "Division I Installations".

⚠ **WARNING: EXPLOSION HAZARD**
A motor should never be placed in an area with a hazardous process or where flammable gases or combustible materials may be present unless it is specifically designed and nameplated for this type of service. Hazardous Locations motors are intended for installations in accordance with NEC Article 500. For all installations involving Hazardous Locations motors, consult the NEC, local codes, and the authority having jurisdiction. Failure to follow these instructions could result in serious personal injury, death and/or property damage. (For other limitations see section 1.3)

3.2 MOUNTING MOTOR:

3.2.1 RIGID BASE (FOOTED): The motor must be securely installed to a rigid foundation or a mounting surface to minimize vibration and maintain alignment between the motor shaft and the load's shaft. The mounting surfaces of the four mounting pads must be flat within 0.01 inches for 210 frame & smaller; 0.015 inches for 250 frame & larger. [IEC 0.25 mm for 130 frame & smaller, 0.38 mm for 160 frame & larger]. This may be accomplished by shims under the motor feet. For special isolation mounting, contact manufacturer for assistance

3.2.2 RIGID BASE HOLE SELECTION -6 OR 8 HOLES

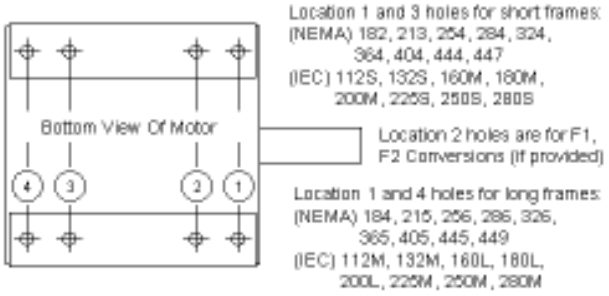

3.2.3 VERTICAL MOUNTING:

CAUTION: ENCLOSURE PROTECTION CAUTION: Most Dripproof rigid base (footed) motors do **NOT** meet "Dripproof" requirements when mounted vertically. If the motor is located in unprotected environments, the addition of a drip cover may be available. Drip covers not available for cast iron rigid base motors.

⚠ **WARNING: FALLING OBJECT HAZARD**
The lifting provision on standard horizontal footed motors is not designed for lifting the motor in a vertical shaft up or shaft down position. (see 2.2.1 lifting angles). Lifting method / provisions for

mounting a rigid base (footed) motor vertically is the responsibility of the installer.

VERTICAL SHAFT DOWN: Most standard horizontal motors thru 449 Fr. (excluding brake motors) can be mounted in a vertical shaft down orientation. For vertical brake motors see section 3.3.6.2.

VERTICAL SHAFT UP:

WARNING: HAZARDOUS LOCATIONS VERTICAL MOUNT: Hazardous locations motors must **NOT** be mounted vertically shaft up without approval by the motor manufacturer. Without proper retaining provisions the rotor may move axially and contact components, creating a spark hazard.

Belted or Radial Load when mounted vertically: The following frame sizes / constructions with applied (axial) down loads within the limit stated are acceptable when mounted vertical shaft up.

Table 3-1 Belted or Radial Load Applications (All speeds)

Frame Size	Enclosure	Construction	Shaft Up OK	Max Applied Down Load[3]
56	TEFC & ODP	Steel	Yes	25 lbs
140	TEFC	Steel & Cast Iron	Yes	25 lbs
	ODP	Steel	Yes	25 lbs
180	TEFC	All	Yes	35 lbs
	ODP	Steel	Yes	35 lbs
210	TEFC	All	Yes	40 lbs
	ODP	Steel	Yes	40 lbs
250	TEFC	All	Yes	40 lbs
	ODP	Steel	Yes	40 lbs
		Cast Iron	No[2]	N/A
280-320	320 TTFC models	Cast Iron	Eng[1]	N/A
	All Other TEFC	Cast Iron & Aluminum	Yes	30 lbs
	ODP	Cast Iron	No[2]	N/A
	TEFC & ODP	Steel	Build Up Only[4]	N/A
360 & Up	TEFC	Cast Iron	Build Up Only[4]	N/A
	ODP	Cast Iron	No[2]	N/A
	TEFC & ODP	Steel	Build Up Only[4]	N/A

Notes:

1 For TEFC model numbers beginning with 324TTFC or 326TTFC consult the motor manufacturer to determine if a build up motor is required.

2 The max applied down load is any applied load external to the motor, including such things as sheave weight, fan loads, axial belt force, pump load, etc. If the application is direct drive with no applied radial load, consult the motor manufacturer.

3 "Build-up only", refers to motors that are specifically ordered and built for shaft up applications. It does not imply that all build-up motors are suitable for shaft up applications.

3.3 APPLICATION ASSEMBLY TO MOTOR:

CAUTION: EQUIPMENT DAMAGE:
Do not connect or couple motor to load until correct rotational direction is established.

3.3.1 GENERAL: PROPER ALIGNMENT of the motor and driven equipment minimizes vibration levels, maximizes bearing life, and extends the overall life of the machinery. Consult the drive or equipment manufacturer for more information.

CAUTION: BEARING FAILURE
During assembly do NOT force components onto the shaft. Striking or hammering the component may result in bearing damage.

3.3.2 DIRECT COUPLING: Use flexible couplings if possible. For applications that apply radial, axial or moment loading on the motor shaft see section 3.3.3.

CAUTION: BEARING FAILURE
Unless approved by the motor manufacturer do **NOT** direct couple a vertical shaft up or roller bearing motor. Direct coupling a vertical shaft up motor or a motor with a roller bearing may result in bearing damage.

3.3.3 DIRECT CONNECTED: Radial loading for direct connected equipment (gears, fans etc.) must be approved by the motor manufacturer unless within the maximum overhung load limits (Table 3-2). Combined loading (axial, radial and/or moments) must be approved by motor manufacturer. For belted loads see section 3.3.4.

Table 3-2 Maximum Radial Load (lbf) @ Middle of the Shaft Extension Length

Frame Number	Motor Rated RPM			
	3600	1800	1200	900
143T	106	166	193	210
145T	109	170	199	218
182T	187	230	261	287
184T	193	237	273	301
213T	319	317	470	510
215T	327	320	480	533
254T	500	631	729	793
256T	510	631	736	820
284T	-	866	990	1100
286T	-	871	1005	1107
324T	-	950	1100	1215
326T	-	950	1113	1230
364T	-	1078	1365	1515
365T	-	1078	1380	1540
404T	-	1388	1590	1762
405T	-	1400	1610	1780
444T	-	1580	1795	2005
445T	-	1520	1795	1985
447T	-	1455	1765	1985
449T	-	1640	1885	2130

Values based on 26,280 hrs B-10 Life
For "End of Shaft" Load multiply value by 0.88
To convert from lbf to N multiply value by 4.4482.

3.3.4 BELTED:

The goal of any belted system is to efficiently transmit the required torque while minimizing the loads on the bearings and shafts of the motor and driven equipment. This can be accomplished by following four basic guidelines:

1. Use the largest practical sheave diameter.
2. Use the fewest number of belts possible.
3. Keep sheaves as close as possible to support bearings.
4. Tension the belts to the lowest tension that will still transmit the required torque without slipping. It is normal for V-belts to squeal initially when line starting a motor

3.3.4.1 Sheave Diameter Guidelines:

In general, smaller sheaves produce greater shaft stress and shaft deflection due to increased belt tension. See Table 3-3 for recommended minimum sheave diameters. Using larger sheaves increases the contact with belts which reduces the number of belts required. It also increases the belt speed, resulting in higher system efficiencies. When selecting sheaves, do not exceed the manufacturer's recommended maximum belt speed, typically 6,500 feet per minute for cast iron sheaves. Determine belt speed by the following formula:

Figure 1



$$\textbf{BELT SPEED (Ft/min)} = \frac{Shaft\ RPM\ x\ 3.14\ x\ Sheave\ Dia\ (inches)}{12}$$

3.3.4.2 Number of Belts

In general, use the fewest number of belts that will transmit the required torque without slipping. See Table 3-3 for recommended maximum number of belts. Each belt adds to the tension in the system, which increases load on the shafts and bearings. Belts are most efficient when operated at or near their rated horsepower.
If the sheaves have more grooves than the number of belts required, use the grooves closest to the motor.

3.3.4.3 Sheave Location

Install sheaves as close to the housing as possible to increase the bearing life of the motor and driven equipment

Figure 2

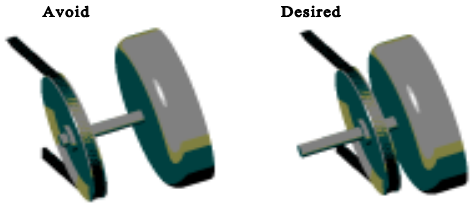

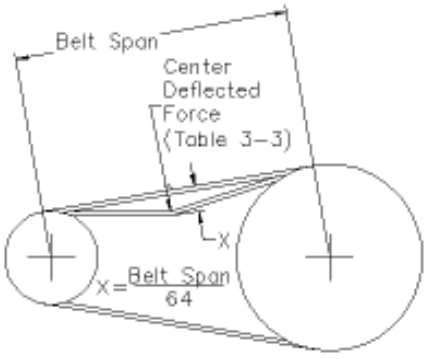

3.3.4.4 Belt Tension

CAUTION: Equipment Failure Caution
Belt tensioning by feel is **NOT** acceptable. Tensioning by "feel" can be very misleading, and can damage motor and equipment.
It is normal for V-belts to squeal initially when line starting a motor.

In general, belt tensions should be kept as loose as possible while still transmitting the required torque without slipping. Belt tensions must be measured with a belt tension gage. These inexpensive gages may be obtained through belt manufacturers, or distributors.

Proper belt tension is determined by measuring the force required to deflect the center of the belt a given distance. The proper deflection (in inches) is determined by dividing the belt span in inches by 64. Calculate the proper deflection and then see Table 3-3 for the required “Deflected Force” to achieve that deflection.
After tensioning the belt, rotate the sheaves for several rotations or operate the system for a few minutes to seat belts into the grooves, then re-tension the belts. New belts will stretch during use, and should be retensioned after the first eight hours of use.

Table 3-3 Recommended Minimum Sheave Diameters, Belt Type, Number of Belts and Deflected Force

Motor Hp	1200 rpm				1800 rpm				3600 rpm			
	Min Sheave Dia (in)	Belt Type	Max # of Belts	Avg. Deflected Force (lbs)	Min Sheave Dia (in)	Belt Type	Max # of Belts	Avg. Deflected Force (lbs)	Min Sheave Dia (in)	Belt Type	Max # of Belts	Avg. Deflected Force (lbs)
0.75	2.2	3VX	1	3.4	2.2	3VX	1	2.2	2.2	3VX	1	1.3
1	2.4	3VX	1	4.0	2.2	3VX	1	3.1	2.2	3VX	1	1.6
1.5	2.4	3VX	2	3.1	2.4	3VX	2	2.1	2.2	3VX	1	2.5
2	2.4	3VX	3	2.8	2.4	3VX	2	2.9	2.4	3VX	1	2.7
3	3.0	3VX	2	3.3	2.4	3VX	3	2.9	2.4	3VX	2	2.3
5	3.0	3VX	3	4.0	3.0	3VX	3	3.7	2.4	3VX	3	2.5
7.5	3.8	3VX	4	4.7	3.0	3VX	4	4.1	3.0	3VX	2	4.2
10	4.4	3VX	4	5.4	3.8	3VX	4	4.3	3.0	3VX	3	3.8
15	4.4	3VX	5	5.4	4.4	3VX	4	5.4	3.8	3VX	3	4.4
20	5.2	3VX	6	6.0	4.4	3VX	6	4.8	4.4	3VX	3	5.0
25	6.0	3VX	7	5.6	4.4	3VX	7	5.2	4.4	3VX	4	4.7
30	6.8	3VX	7	5.9	5.2	3VX	7	5.3				
40	6.8	5VX	4	11.6	6.0	3VX	7	6.0				
50	8.2	5VX	4	14.6	6.8	3VX	8	5.9				
60	8.2	5VX	5	14.1	7.4	5VX	4	13.3				
75	10.0	5VX	5	14.5	8.6	5VX	4	14.3				
100	10.0	5VX	6	16.0	8.6	5VX	6	13				
125	12.0	5V	7	14.1	10.5	5V	6	13.1				
150	13.2	5V	7	15.4	10.5	5V	7	13.4				
200	15.0	5V	8	16.0	13.2	5V	8	13.1				
250	15.0	8V	6	27.6	14.0	5V	9	13.8				
300	16.0	8V	7	27.1	14.0	5V/**8V**	11 / **7**	23.4				
350	16.5	8V	7	30.3	14.5	5V/**8V**	12 / **7**	26.0				
400	17.5	8V	8	29.1	15.0	5V/**8V**	13 / **8**	25.7				
450	18	8V	8	31.6	16.0	5V/**8V**	14 / **9**	25.2				
500	18.5	8V	9	30.7	16.5	5V/**8V**	15 / **9**	26.9				
600					17.5	8V	11	26.3				
700					19.0	8V	12	27.3				
800					20.0	8V	13	28.2				

Contact Motor Manufacturer when Belting 3600 rpm Motors Greater than 25 HP

Notes:

1. Horsepower is the nameplate motor horsepower, and RPM is the motor (driver) speed.
2. Minimum sheave diameters are from NEMA standards where applicable.
3. **For variable speed applications or values outside these recommendations, consult motor manufacturer.**
4. Selections are based on a 1.4 service factor, 5 to 1 speed ratio and various Power Transmission Manufacturers' catalogs.
5. These selections are for Narrow V-belt sections only. Consult manufacturer for details on conventional V-belt sections (A, B, C, D and E), or other belt types.
6. "Average Deflected Force is per section 3.3.4.4 of this document and is the force required to deflect the center of a belt 1/64 of the belt span distance. Tolerance on this force is ±1 lbf for forces ≤10 lbs, and ±2 lbs for forces >10 lbs as measured utilizing a belt tension gage.
7. When more than one belt is required the belts must be a matched set (matched for length).
8. If possible, the lower side of the belt should be the driving side to increase the length of wrap on the sheave).
9. For belted loads do not exceed 125% of 60 Hz operating RPM.

3.3.5 VFD (Variable Frequency Drives) OPERATION:

⚠ WARNING: VFD Motors with Reset Thermal Protectors
UL Recognition, UL Listing, or CSA certification does not apply to motors that are equipped with a manual or automatic reset thermal protector when the motor is operated on VFD power.

⚠ WARNING: Power Factor Correction Capacitors:
Power factor correction capacitors should never be installed between the drive and the motor.

⚠ CAUTION: VFD / Motor Setup:
It is the responsibility of the startup personnel during set up of the VFD / motor system to properly tune the drive to the motor for the specific application per the VFD user manual. The correct voltage boost and volts per hertz settings are application dependent and unique to each motor design. Failure to connect over temperature devices (when provided) will void the warranty.

3.3.5.1 Overspeed Capability:

Belted loads: Do not exceed 125% of 60 Hz operating RPM.

Table 3-4 Maximum Safe Continuous Speed (RPM) For Coupled and Direct Connected Loads

NEMA / [IEC] Frame Size	2-Pole	4, 6, or 8 Pole
56-180 [80-110]	7200 *	5400 *
210-250 [130-160]	5400 *	4200*
280 [180]	5400 *	3600
320 [200]	4500 *	3600
360 [225]	4500 *	2700
400-440 [250-280]	3600	2700
>440 [>280]	3600	1800

* = Fan cooled motors (Totally Enclosed & Hazardous Locations Motors) are limited to a maximum safe continuous speed of 4000 RPM **For higher speeds or shortened duty cycle contact motor manufacturer**

3.3.5.2 Cable Lengths: For optimum insulation life, limit VFD to motor cable lengths of general purpose motors

to Table 3-5 values. Definite purpose VFD motors may accommodate longer cable lengths. For additional information contact motor manufacturer.

Table 3-5 Max Cable Lengths General Purpose Motors
These values are based on 3 kHz carrier frequency. Add suitable VFD output-side filters when exceeding the listed values.

Frame Size	230V	460 V	575 V
NEMA 56-320	600 ft.	125 ft.	40 ft.
NEMA 360-5011	1000 ft.	225 ft.	60 ft.
IEC 80-200	180 m.	40 m.	12 m.
IEC 225-280.	300 m.	70 m.	18 m.

3.3.5.3 VFD Grounding: Equipment grounding conductors may be run in the same conduit as the AC motor power leads. This wire must be used as the equipment ground for the motor and not as the fourth current carrying wire of a "WYE" motor circuit. The grounded metal conduit carrying the output power conductors can provide EMI shielding, but the conduit does not provide an adequate ground for the motor; a separate grounding conductor must be used. Grounding the motor neutral (WYE) of a VFD powered motor may result in a VFD ground fault trip. Improper grounding of an inverter fed motor may result in frame voltages in excess of 500 Volts. Refer to Grounding section 3.4.4

3.3.5.4 VFD – Single Phase:

CAUTION: SINGLE PHASE MOTOR FAILURE:
Single Phase motors are **NOT** suitable for use on VFD power. Connecting a Single Phase Motor to a VFD voids the warranty.

3.3.5.5 Stray Voltage on Accessory Leads:

VFD's will couple stray (common-mode) voltage to motor-mounted RTDs, thermistors, thermostats and space heaters. The leads of these elements must be properly insulated and control input circuits must be designed to withstand this common-mode voltage.

3.3.6 ACCESSORIES / PROVISIONS:

3.3.6.1 General: Carefully read and understand the accessory manufacturer's instructions, supplied with motor. Contact the manufacturer for additional information.

3.3.6.2 Brake Motors:

CAUTION: Vertical Motor Premature Brake Failure
Motors with brakes that are designed for vertical applications are equipped with springs to support the brake pressure plate. Mounting a horizontal brake motor vertically shaft up or down may require a pressure plate spring modification. Failure to modify the brake for the vertical application may result in premature brake failure. If in question, consult brake literature or brake manufacturer.

Brake Solenoid Wiring: Do NOT connect the brake solenoid to the output of a VFD. The brake solenoids must be wired to 50/60 Hz line power

3.3.6.3 Space Heaters:

Motors provided with space heaters have two leads that are brought into the conduit box or into an auxiliary box. These leads are marked "H1", "H2" ("H3", "H4" if a second space heater is supplied). See the space heater nameplate on motor for heater rating.

WARNING: DIVISION 2 EXPLOSION HAZARD
The space heater temperature rating when used in Class I, Division 2 motors shall **NOT** exceed 80% of the auto ignition temperature of the hazardous gas or vapor. See the space heater nameplate on motor for heater Temperature Code and heater rating. Failure to follow this instruction could result in serious personal injury, death and/or property damage

3.3.6.4 Thermal Protection:

General Information: When thermal protection is provided, one of the following will be stamped on the nameplate:

1. **"THERMALLY PROTECTED"** This motor has built in thermal protection. Thermal protectors open the motor circuit electrically when the motor overheats or is overloaded. The protector cannot be reset until the motor cools. If the protector is automatic, it will reset itself. If the protector is manual, disconnect motor from power supply. After protector cools (five minutes or more) press the reset button and reapply power to the motor. In some cases a motor is marked "Auto" and the connection diagram on the motor will identify T'Stat leads – see "2 " below. (See warnings on Manual and Automatic reset protectors - section 1.1)

2. **"WITH OVERHEAT PROTECTIVE DEVICE"**: This motor is provided with an overheat protective device that does not directly open the motor circuit. Motors nameplated with this phrase have either thermostats, thermisters or RTD's. The leads to these devices are routed into the motor conduit box or into an auxiliary box. The lead markings are defined on the nameplate (normally "P1", "P2") . The circuit controlled by the overheat protection device must be limited to a maximum of 600 volts and 360 volt-amps. See connection decal provided inside the terminal box cover. Failure to connect these over temperature devices (when provided) will void the warranty.

   WARNING: EXPLOSION HAZARD
   For Hazardous Locations motors provided with thermostats UL and the NEC require connection of thermostat leads into the control portion of a manual reset start circuit. Failure to follow this instruction could result in serious personal injury, death and/or property damage

Resistance Temperature Detectors (RTD): When winding and/or bearing RTDs are provided the RTD lead markings are defined on the nameplate. (Normally "R1", "R2", "R3" etc.)

3.3.6.5 RTD Alarm & Trip Settings:

Tables 3-6 & 3-7 are suggested initial RTD alarm and trip settings. For motors found to operate significantly below these values the settings may be reduced accordingly.

Table 3-6 Winding RTD – Temperature Limit (°C) 40 °C Max Ambient

Motor Load	Class B Temp Rise≤ 80°C		Class F Temp Rise≤ 105°C	
	Alarm	Trip	Alarm	Trip
Up to 1.0 SF	130	140	155	165
>1.0 to 1.15 SF	140	150	160	165

Table 3-7 Bearing RTD – Temperature Limit (°C) 40 °C Max Ambient

Ambient	Alarm	Trip
Up to 40**°C**	95	100
> 40**°C**	110	115
Bearings that are Heat Stabilized to 150 **°C**	130	135

3.3.7 GUARDS:

WARNING: ROTATING PARTS HAZARD
When devices are assembled to the motor shaft, be sure to install protective devices such as belt guards, chain guards, and shaft covers. These devices must protect against accidental contact with extremities, hair, and clothing. Consider the application and provide guarding to protect personnel. Remove all unused shaft keys and loose rotating parts to prevent them from flying off and causing bodily injury. Failure to follow this warning could result in serious personal injury, death and/or property damage.

3.4 ELECTRICAL CONNECTIONS:

WARNING: ELECTRICAL HAZARDS

Before proceeding read Section 1-1 on Electrical Safety. Failure to follow the instructions in Section 1-1 could result in serious personal injury, death and/or property damage

3.4.1 POWER SUPPLY / BRANCH CIRCUIT

WARNING: POWER SUPPLY INCOMPATIBILITY HAZARD

Check power supply to make certain that voltage, frequency and current carrying capacity are in accordance with the motor nameplate. Failure to match motor nameplate values could result in serious personal injury, death and/or property damage

WARNING: BRANCH CIRCUIT SUPPLY HAZARD

Motor and control wiring, fusing, overload protection, disconnects, accessories and grounding must always conform to the applicable electrical codes as well as local codes and sound practices.

3.4.1.1 Branch Circuit Supply to a motor should include a disconnect switch, short circuit current fuse or breaker protection, motor starter (controller) and correctly sized thermal elements or overload relay protection.

3.4.1.2 Fuses, Breakers, Overload Relays

Short Circuit Current Fuses or Breakers are for the protection of the branch circuit. Starter or motor controller overload relays are for the protection of the motor. Each of these should be properly sized and installed per the applicable electrical codes as well as local codes and practices.

WARNING: PROTECTIVE DEVICE DISABLED HAZARD

DO NOT bypass or disable protective devices. Protection removal could result in serious personal injury, death and/or property damage

3.4.1.3 AC Power Supply Limits

Motors are designed to operate within the following limits at the motor terminals:

1- AC power is within +/- 10 % of rated voltage with rated frequency applied. (Verify with nameplate ratings) **OR**

2- AC power is within +/- 5% of rated frequency with rated voltage **OR**

3- A combined variation in voltage and frequency of +/- 10% (sum of absolute values) of rated values, provided the frequency variation does not exceed +/-5% of rated frequency.

4- For 3 phase motors the line to line full load voltage must be balanced within 1%.

5- If the motor is rated 208-230V, the voltage deviations must be calculated from 230V.

CAUTION: Reduced Motor Performance

Operation outside of these limits will degrade motor performance and increase operating temperature.

3.4.2 TERMINAL BOX:

3.4.2.1 Conduit Opening: For ease of connections, motors are typically provided with large terminal boxes. Most motors have conduit access in 90 degree increments, the terminal box conduit opening is typically provided via knockouts, holes with covers, or the terminal box is rotate-able. Fabricated conduit boxes may have a removable plate for the installer to provide correctly sized hole(s).

3.4.2.2 Hazardous Locations Motors:

WARNING: EXPLOSION HAZARDS

(1) Terminal Boxes mounted to motor with a pipe nipple: If a pipe nipple mounted terminal box is removed or rotated it must be reassembled with a minimum of five full threads of engagement.

(2) Component Removal: Do not set a terminal box component on its machined surfaces. Prior to component reassembly wipe clean all machined surfaces.

(3) Machined Surface Gap (Hazardous Locations Terminal Boxes): The gap between mating surfaces with the machined terminal box MUST BE LESS THAN 0.002 inches. This gap must be checked with a feeler gage along the entire perimeter. If there is visible damage to the mating surfaces, or if the gap between these surfaces exceeds 0.002 inches, DO NOT complete the installation and contact the motor manufacturer. Failure to follow these instructions could result in serious personal injury, death and/or property damage

3.4.3 LEAD CONNECTIONS

Electrical connections to be made per nameplate connection diagram or separate connection plate. In making connections follow the applicable electrical code as well as local codes and practices.

WARNING: ELECTRICAL CONNECTION HAZARD

Failure to correctly connect the motor leads and grounding conductor can result in injury or death. Motor lead connections can short and cause damage or injury if not well secured and insulated.

3.4.3.1 Wire Size (Single Phase) Requirements

The minimum wire size for Single Phase, 115 & 230 Volt Circuits must meet table 3-8 for a given distance between motor and either Fuse or Meter Box.

Table 3-8 Minimum Wire Gage Size Single Phase 115 & 230 Volt Circuits

Distance (Feet) - Motor to Fuse or Meter Box								
Motor	100 Ft.		200 Ft.		300 Ft.		500 Ft.	
HP	115	230	115	230	115	230	115	230
1/4	14	14	10	12	8	10	6	8
1/3	12	14	10	12	6	10	4	8
1/2	10	12	8	10	6	8	4	6
3/4	10	12	6	10	4	8	2	6
1	8	10	6	8	4	6		4
1 1/2	4	10	0	8		6		4
2		8		6		4		2
3		8		6		4		2
5		6		4		2		0

3.4.3.2 Extension Cords (Single Phase Motors):

Where an extension cord(s) is utilized to provide power to the motor the extension cord(s) must be…(1) the proper gauge size per table 3-8, (2) in good working condition (3) properly grounded.

3.4.4 GROUND CONNECTION(S):

WARNING: ELECTRICAL GROUNDING HAZARD

For general information on grounding (USA) refer to NEC Article 250. Improper grounding of an inverter fed motor may result in frame voltages in excess of 500 Volts. In making the ground connection, the installer must make certain that a good electrical connection is obtained between motor and grounding lead. Failure to properly ground motors, per the applicable national code (such as NEC Article 430) and local codes may cause serious injury or death to personnel.

Primary "Internal" Ground: A grounding conductor must be connected to the grounding terminal provided in the terminal housing. This grounding terminal is either a ground screw, ground lug, or a tapped hole to be used with a separately provided ground screw. The internal grounding feature is accessible inside the terminal housing and must be used as the primary grounding connection.

Secondary "External" Ground: Some motors are provided with a supplemental grounding terminal located on the external surface of the motor frame or feet. This external terminal is for supplemental bonding connections where local codes permit or require such connection

3.4.5 START UP:

WARNING: ELECTRICAL SHOCK HAZARD:

Be certain that all connections are secure and the conduit box cover is fastened in place before electrical power is connected. Failure to follow these instructions could result in serious personal injury, death, and/or property damage.

⚠ WARNING: LOOSE & ROTATING PARTS HAZARD
Before proceeding read Section 1-2 on Mechanical Safety. Failure to follow the instructions in Section 1-2 could result in serious personal injury, death and/or property damage

⚠ WARNING: EXCESSIVE SURFACE TEMPERATURE HAZARD
Motors with the temperature code stated on the nameplate are designed to operate within this limit. Improper application or operation can cause the maximum surface temperature to be exceeded. A motor operated in a Hazardous Location that exceeds this surface temperature limit increases the potential of igniting hazardous materials. *Therefore, motor selection, installation, operation, and maintenance must be carefully considered to ensure against the following conditions:* (1) Motor load exceeds service factor value, (2) Ambient temperature above nameplate value, (3) Voltages outside of limits (3.4.1.3), (4) Loss of proper ventilation, (5) VFD operation exceeding motor nameplate rating, (6) Altitude above 3300 feet / 1000 meters, (7) Severe duty cycles, (8) Repeated starts, (9) Motor stall, (10) Motor reversing, and (10) Single phase operation. Failure to follow these instructions could result in serious personal injury, death and/or property damage.

⚠ CAUTION: HOT SURFACE
Normal motor surface temperatures may exceed 90 ° C (194° F). Touching the motor frame may cause discomfort or injury. Surface temperatures should only be measured with suitable instruments and not estimated by hand touch.

3.4.5.1 Start Up - No Load Procedure

1. **Check Instructions:** Before startup carefully read and fully understand these instructions including all warnings, cautions, and safety notice statements.
2. **Motor out of storage after more than three months:** Check winding insulation integrity with a Megger. If winding resistance to ground is less than 1.5 Meg-ohms consult the local authorized service shop before energizing the motor.
3. **Check Installation: Mechanical** - Check tightness of all bolts and nuts. Manually rotate the motor shaft to ensure motor shaft rotates freely. Note: Shaft & bearing seals will add drag.
   Electrical - Inspect all electrical connections for proper terminations, clearance, mechanical tightness and electrical continuity. Be sure to verify connections are made per the nameplate connection diagram or separate connection plate. Replace all panels and covers that were removed during installation before energizing the motor.
4. **Energize Motor: Check Rotation**
   If practical check motor rotation before coupling to the load. Unlock the electrical system. Momentarily provide power to motor to verify direction of rotation. If opposite rotation is required, lock out power before reconnecting motor. If motor has a rotational arrow only operate the motor in the rotation identified. Reapply power to ensure proper operation.
5. **Record No Load Amps, Watts & Voltage:**
   Recommend - To establish a baseline value check and record the no load amps, watts, and voltage.

3.4.5.2 Start Up – Load Connected Procedure

1. **Check Instructions:** Before startup carefully read and fully understand these instructions including all warnings, cautions, & safety notice statements.
2. **Coupling Installation:** Check that the connected equipment is properly aligned and not binding. Check that all guards and protective devices are properly installed.
3. **Energize Motor:** When all personnel are clear of the machine, apply power and verify that the load is not transmitting excessive vibration back to the motor though the shaft or the foundation. Verify that motor amps are within nameplate rating. For repeated starts see 3.4.5.3. The equipment can now be fully loaded and operated within specified limits as stated on the nameplate.

3.4.5.3 Jogging and/or Repeated Starts

Do not start more than twice in succession under full load. Repeated starts and/or jogs of induction motors can cause overheating and immediate failure. Contact the motor manufacturer if it is necessary to repeatedly start or jog the motor.

4.0 MAINTENANCE:

⚠ WARNING: Hazardous Locations Motor Repair HAZARD:
Division 1 Hazardous Locations motors can only be modified or repaired by the manufacturer or a facility that is Listed under UL's category "Motors and Generators, Rebuilt for use in Hazardous Locations". Failure to follow these instructions could result in serious personal injury, death and/or property damage.

⚠ WARNING: ELECTRICAL SHOCK HAZARD
Electrical connections are to be made by qualified electrical personnel in accordance with all applicable codes, ordinances and sound practices. Failure to follow these instructions could result in serious personal injury, death and/or property damage. Only qualified personnel who are familiar with the applicable national codes, local codes and sound practices should install or repair electric motors and their accessories.

⚠ WARNING: ELECTRICAL LIVE CIRCUIT HAZARD
Do not touch electrically live parts. Disconnect, lockout and tag input power supply before installing or servicing motor (includes accessory devices).

4.1 GENERAL INSPECTION

Inspect the motor approximately every 500 hours of operation or every three months, whichever occurs first. Keep the motor clean and the ventilation and fin openings clear. The following steps should be performed at each inspection:

4.1.1 VENTILATION: Check that the ventilation openings and/or exterior of the motor is free of dirt, oil, grease, water, etc, which can accumulate and block motor ventilation. If the motor is not properly ventilated, overheating can occur and cause early motor failure.

4.1.2 INSULATION: Use a "Megger" periodically to ensure that the integrity of the winding insulation has been maintained. Record the Megger readings. If winding resistance to ground is less than 1.5 Meg-ohms consult the local authorized service shop before re-energizing the motor.

4.1.3 ELECTRICAL CONNECTIONS: Check all electrical connectors to be sure that they are tight.

4.2 LUBRICATION & BEARINGS:

The lubricating ability of grease (over time) depends primarily on the type of grease, the size of the bearing, the speed at which the bearing operates and the severity of the operating conditions. Longer bearing life can be obtained if the listed recommendations are followed:

NOTE: If lubrication instructions are provided on the motor nameplate, the nameplate instructions will supersede these instructions. Motors marked "Permanently Lubricated" do not require additional service.

⚠ CAUTION: BEARING / MOTOR DAMAGE WARNING
Lubricant should be added at a steady moderate pressure. If added under heavy pressure bearing shield(s) may collapse. Over greasing bearings greatly increases bearing friction and can cause premature bearing and/or motor failure.

4.2.1 GREASE TYPE (unless nameplate states otherwise):
Nameplate Ambient Temperature between -30°C (-22°F) to 65°C (150°F) inclusive: Recommended grease for standard service conditions is Mobil Polyrex ® EM. Equivalent and compatible greases include: Texaco Polystar RB, Rykon Premium #2, Pennzoil Pen 2 Lube, Chevron SRI & Mobil SHC 100.

Nameplate Ambient Temperature below -30°C (-22°F): Special low temperature grease is recommended, such as Aeroshell 7 or Beacon 325 for ball bearings and Mobil SHC 100 for roller bearings.

Nameplate Ambient Temperature above 65°C (150°F): Dow Corning DC44 or equivalent, a special high temperature grease is required. Note that Dow Corning DC44 grease does not mix with other grease types.

4.2.2 BEARING OPERATING TEMPERATURE:

⚠ CAUTION: HOT SURFACE

The external surface temperature of the end shield (bracket) bearing hub may reach 100° C (212° F) during normal operation. Touching this surface may cause discomfort or injury. Surface temperatures should only be measured with suitable instruments and not estimated by hand touch.

For RTD settings see Table 3-7.

4.2.3 LUBRICATION INTERVALS: (For motors with regreasing provisions)

Eq. 4.2 Lubrication Interval = [(Table 4-1) hrs] x [Interval Multiplier (Table 4-2)] x [Construction Multiplier (Table 4-3)]

Table 4-1 Lubrication Intervals (Hours) These values are based on average use.

NEMA / [IEC] Frame Size	Operating Speed – RPM (See Table 3.4 for Maximum Operating Speed)					
	<7200	<5400	<4500	<3600	<1800	<1200
56-180 [80-110]	2500 Hrs.	4000 Hrs	5000 Hrs	6000 Hrs.	17000 Hrs.	20000 Hrs.
210-250 [130-160]		2500 Hrs	4000 Hrs	5000 Hrs.	12000 Hrs.	16000 Hrs.
280 [180]		2000 Hrs	3000 Hrs	4000 Hrs.	10000 Hrs.	14000 Hrs.
320 [200]			2000 Hrs	3000 Hrs.	9000 Hrs.	12000 Hrs.
360 [225]			1500 Hrs	2000 Hrs.	8000 Hrs.	10000 Hrs.
400-440 [250 – 280]				1500 Hrs.	4000 Hrs.	7000 Hrs.
>440 [>280]				1000 Hrs.	3000 Hrs.	5000 Hrs.

Seasonal Service: If motor remains idle for more than six months, Lubricate at the beginning of the season, then follow lubrication interval.

Do not exceed maximum safe operating speed Table 3-4 without manufacturer's approval

Table 4-2 Service Conditions

Use highest level Multiplier: Maximum Ambient Temperature and Contamination are independent factors

Severity of Service	Maximum Ambient Temperature	Atmospheric Contamination	Multiplier
Standard	Less than 40° C (104° F)	Clean, Slight Corrosion, indoors, less than 16 hrs per day	1.0
Severe	Above 40° C (104° F) to 50° C	Moderate dirt or Corrosion or outdoors or more than 16 hrs per day	0.5
Extreme	Greater than 50° C or Class H Insulation	Severe dirt or Abrasive dust or Corrosion	0.2

Table 4-3 Construction Multiplier

Construction	Multiplier
Angular Contact or Roller Bearing	0.5
Vertical Motor	0.5
All others	1.0

Table 4-4 Relubrication Amounts

Frame Size		Volume		
NEMA	IEC	Cu. In.	Fluid oz	ml
48-56	80	0.25	0.14	4.0
143-145	90	0.25	0.14	4.0
182-184	110	0.50	0.28	8.0
213-215	130	0.75	0.42	12.5
254-256	160	1.00	0.55	16.0
284-286	180	1.50	0.83	25.0
324-326	200	2.00	1.11	33.0
364-365	225	3.00	1.66	50.0
404-405	250	3.80	2.11	62.0
444-449	280	4.10	2.27	67.0
>449	>280	4.50	2.50	74.0

For regreasing while operating multiply volume by 125%.

4.2.4 LUBRICATION PROCEDURE: (For Motors with Regreasing Provisions)

CAUTION: BEARING DAMAGE WARNING
Added grease must be compatible with the original equipment's grease. If a grease other than those stated in 4.2.1 is to be utilized contact the motor manufacturer. Nameplate information supersedes section 4.2.1 (GREASE TYPE). New grease must be free of dirt. Failure to follow these instructions and procedure below may result in bearing and/or motor damage.

For an extremely dirty environment, contact the motor manufacturer for additional information.

LUBRICATION PROCEDURE:

1. Clean the grease inlet plug or zerk fittings prior to regreasing.
2. (If present) Remove grease drain plug and clear outlet hole blockage.

CAUTION: GREASE DRAIN PLUGGED:
Old grease may completely block the drain opening and must be mechanically removed prior to regreasing. Forcing a blocked drain open by increased greasing pressure may collapse bearing shields and / or force excess grease through the bearings and into the motor.

3. Add grease per Table 4-4
4. Re-install grease inlet and drain plugs (if removed).

WARNING: EXPLOSION HAZARD
Do NOT energize a Hazardous Locations motor without all grease fittings properly installed.

4.2.5 EXAMPLE: LUBRICATION

Assume - NEMA 286T (IEC 180), 1750 RPM Vertical motor driving an exhaust fan in an ambient temperature of 43° C and the atmosphere is moderately corrosive.

1. Table 4-1 list 10,000 hours for standard conditions.
2. Table 4-2 classifies severity of service as "Severe" with a multiplier of 0.5.
3. Table 4-3 lists a multiplier value of 0.5 for "Vertical"
4. (Eq. 4.2) Interval = 10,000 hrs x 0.5 x 0.5 = 2500 hrs

Table 4-4 shows that 1.5 in^3 of grease is to be added.

Relubricate every 2,500 hrs of service with 1.5 in^3 of recommended grease.

4.3 TROUBLE-SHOOTING

WARNING: READ INSTRUCTIONS:
Before trouble-shooting a motor, carefully read and fully understand the warnings, cautions, *&* safety notice statements in this manual.

WARNING: Hazardous Locations Motor Repair:
Motors nameplated for use in Division 1 Hazardous Locations can only be disassembled, modified or repaired by the plant of manufacturer or a facility that is Listed under UL's category "Motors and Generators, Rebuilt for use in Hazardous Locations". Failure to follow these instructions could result in serious personal injury, death and/or property damage

CAUTION: DISASSEMBLY APPROVAL REQUIRED:
Motor disassembly must be performed by a party approved by the motor manufacturer. To disassemble the motor without approval voids the warranty.

4.3.1 GENERAL TROUBLE-SHOOTING WARNINGS

1. **DISCONNECT POWER TO THE MOTOR BEFORE PERFORMING SERVICE OR MAINTENANCE.**
2. **Discharge all capacitors before servicing motor.**
3. **Always keep hands and clothing away from moving parts.**
4. **Be sure required safety guards are in place before starting equipment.**
5. **If the problem persists contact the manufacturer.**

4.3.2 Motor Trouble-shooting Cause / Corrective Action - Table 4-5

Issue:	Likely Cause:	Corrective Action:
Motor fails to start upon initial installation:		
A.)	Supply voltage is too low or is severely unbalanced (one phase is low or missing).	(1) Check power supply fuses (2) Match motor lead wiring to nameplate connection diagram and supply voltage (3) Ensure that steady state supply voltage at motor terminals is within limits (see section 3.4.1.3). Correct as needed (4) Obtain correct motor to match actual supply voltage.
B.)	Motor leads are miswired at conduit box.	
C.)	Driven load exceeds motor capacity	(1) Verify that motor & load turn freely (2) Disconnect motor from load & ensure motor turns freely. Note: Roller bearings make noise when motor is uncoupled and shaft is rotated (3) Verify that motor starts when disconnected from load (4) Remove excessive / binding load if present.
D.)	Load is jammed.	
E.)	Fan guard is bent and making contact with fan	Replace fan guard & fan (if blades are damaged)
F.)	VFD with power factor capacitors installed	Remove power factor correction capacitors if equipped
G.)	VFD with motor neutral lead grounded	Ensure that motor neutral lead is ungrounded
H.)	VFD programmed incorrectly	(1) Repeat checks listed above (2) Verify that VFD current limit and starting boost are set correctly (5) Double-check motor and feedback parameter settings and VFD permissives (6) Repeat autotune (for vector drives) procedure (7) Consult VFD supplier.
Motor has been running, then slow down, stalls, or fails to restart:		
A.)	Supply voltage has drooped or has become severely unbalanced	(1) Replace fuse or reset circuit breaker. Allow motor to cool down before resetting manual protector on motor. **Warnings** - See section 1.1 for automatic and manual reset protector warnings (2) Verify that rated and balanced supply voltage has been restored before restarting motor. Measure voltage during restart. Ensure that steady state supply voltage at motor terminals is within limits (see section 3.4.1.3).
B.)	Motor is overloaded	(1) Verify that motor & load turn freely. Repair binding components as needed (2) Reduce driven load to match motor capacity or increase motor size to match load requirements.
C.)	Motor bearings are seized	
D.)	Load Is jammed.	
E.)	VFD will not restart motor after tripping	(1) Check fault codes on VFD and follow VFD troubleshooting procedures (2) Verify that VFD input voltage is balanced and within limits (3) Remove excessive mechanical load if present.
F.)	Capacitor failure on single phase motor (if equipped)	**Warning: Potential Shock Hazard**: Contact service shop to check capacitor.
Motor takes too long to accelerate:		
A.)	Motor leads are not connected correctly	Match motor lead wiring to nameplate diagram.
B.)	Supply voltage has drooped or become severely unbalanced.	(1) Ensure that steady state supply voltage at motor terminals is within limits (see section 3.4.1.3). Correct as needed (2) Obtain correct motor to match actual supply voltage.
C.)	Load exceeds motor capability	Determine correct motor size and contact motor representative to obtain replacement motor.
D.)	Faulty start capacitor (Single Phase)	Motor may be too small for load. Record acceleration time. Start capacitors may fail if acceleration time exceeds 3 seconds.
E.)	Mechanical Failure	(1) Check to make sure motor & load turn freely (2) Disconnect motor from load & ensure motor turns freely
Motor rotates in the wrong direction:		
A.)	Incorrect wiring connection at motor	[Single Phase] Reconnect motor according to wiring schematic provided. Note: Some motors are non-reversible
		[Three Phase] Interchange any two power supply (phase) leads.
Motor overheats or overload protector repeatedly trips		
A.)	Driven Load is excessive	(1) If motor current exceeds nameplate value, ensure that driven load has not increased. Correct as needed. (2) If new motor is a replacement, verify that the rating is the same as the old motor. If previous motor was a special design, a general purpose motor may not have the correct performance.
B.)	Ambient temperature too high	Most motors are designed to operate in an ambient up to 40 °C. (See section 4.2.2 Hot Surface Caution)
C.)	Motor cooling fins and/or vent openings blocked	Remove foreign materials – clear vent openings, fan guard air inlets and frame fins (TEFC motors)
D.)	Insufficient Air Flow	TEAO (Totally Enclosed Air Over) motors: Measure airflow next to motor surface and obtain minimum requirements from motor manufacturer.

	E.)	Motor is started too frequently	See section 3.4.5.3
	F.)	Supply voltage too low, too high, or unbalanced	(1) Ensure that steady state supply voltage at motor terminals is within limits (see section 3.4.1.3) Correct as needed (2) Reconnect motor per input voltage (3) Obtain correct motor to match power supply.
Motor Vibrates			
	A.)	Motor misaligned to load.	Realign load
	B.)	Load out of balance (Direct drive application)	(1) Ensure that load is dynamically balanced: (2) Remove motor from load and inspect motor by itself. Verify that motor shaft is not bent. Rule of thumb is 0.002" runout for shafts extension lengths up to 3.00". Add 0.0005" per every additional inch of shaft length beyond 3.00".
	C.)	Uneven tension on multiple belts	Mixing new with used belts. Replace multiple belt applications with a complete set of matched belts.
	D.)	Driven load operating at resonant point / natural frequency.	(1) De-energize motor and record vibration as load coasts from 100% speed to 0 RPM. If vibration drops immediately, vibration source is electrical. If levels do not drop immediately, source is mechanical (2) Redesign system to operate below the resonant point (3) On VFD-driven loads, program skip frequencies to bypass resonant points (4) Increase carrier frequency to obtain <3% THD current (5) On variable torque loads reduce volts/hertz below base speed.
	E.)	VFD torque pulsations	(1) Adjust VFD to obtain <3% THD current @ rated motor current (2) Adjust VFD stability for smooth operation. Vector drives may be unstable at light load.
	F.)	Motor miswired at terminal box	Match motor lead wiring to nameplate connection diagram.
	G.)	Uneven, weak or loose mounting support.	Shim, strengthen or tighten where required.
	H.)	Motor bearings defective	Test motor by itself. If bearings are bad, you will hear noise or feel roughness. Roller bearings are normally noisy when operated without load. If sleeve bearing, add oil per nameplate instructions. For motors with regreasing provisions, add grease per relubricating instructions (see section 4.2.3). If noise persists contact warranty service.
	I.)	Motor out of balance	Disconnect from load. Set motor on rubber pads on solid floor. Secure a ½ height key in shaft keyway and energize from balanced power supply @ rated voltage. Record vibration levels and compare with appropriate standards. If excessive vibration persists contact motor manufacturer.

Bearings repeatedly fail.			
	A.)	Load to motor may be excessive or unbalanced	(1) If belt drive check system per section 3.3.4. (2) Other than belting, check loading on motor shaft. An unbalanced load will also cause the bearings to fail. (3) Check runouts of mating components, such as a C-face and pump flange.
	B.)	Bearings contaminated.	Motor enclosure not suitable for environment. Replace with correct enclosure construction
	C.)	Incorrect grease or bearings for ambient extremes.	See section 4.2.1
	D.)	VFD bearing damage	Ground brush, common mode filter, or insulated bearings must be added. Contact motor manufacturer.
Motor, at start up, makes a loud rubbing, grinding, or squealing noise.			
	A.)	Contact between rotating and stationary components	Belt squeal during across the line starting is normal: (1) Verify that supply voltage is within limits (see section 3.4.1.3). (2) Ensure that motor lead wiring matches nameplate connection diagram: (3) Isolate motor from load. (4) To locate point of contact turn motor shaft by hand. (5) If point of contact is not located contact motor service shop.
Start capacitors repeatedly fail.			
	A.)	The motor acceleration time is too long	Motor may be too small for load. Record acceleration time. Start capacitors may fail if acceleration time exceeds 3 seconds.
	B.)	Motor is being started too frequently	Excessive starting will damage motor capacitors. Contact motor manufacturer if motor is started more than 20 times/hour or if acceleration time exceeds 3 seconds.
	C.)	Motor voltage low	Verify that voltage at the motor terminals is within limits (see section 3.4.1.3).
	D.)	Defective start switch inside motor	Motor internal switch failure overheats start capacitor. Contact service shop or motor manufacturer.
Run capacitor fails.			
	A.)	High ambient temperature	Verify that the ambient does not exceed motor's nameplate value

	B.)	Input voltage exceeds limit	Verify that voltage to the motor terminals is within limits (see section 3.4.1.3).
	C.)	Power surge to motor (caused by lightning strike or other high transient voltage).	If a common problem, install surge protector.

104043

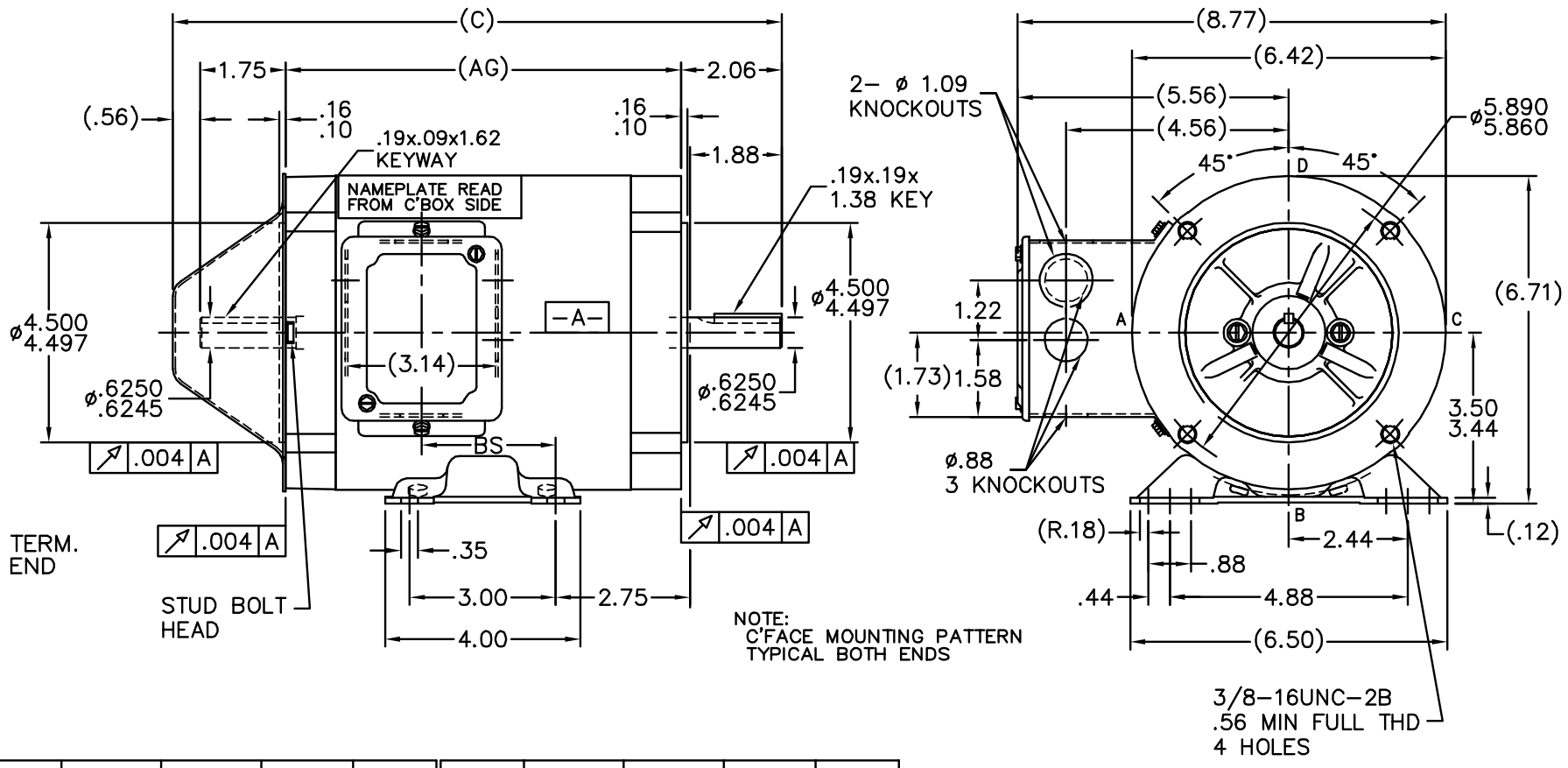

NOTE:
C'FACE MOUNTING PATTERN
TYPICAL BOTH ENDS

DASH	FR.	C	AG	BS	DASH	FR.	C	AG	BS
606	56-60	12.48	8.11	2.75	756	56-75	13.98	9.61	4.25
656	56-65	12.98	8.61	3.25	806	56-80	14.48	10.11	4.75
706	56-70	13.48	9.11	3.75	856	56-85	14.98	10.61	5.25

NOTES:
1- REMOVABLE BASE
2- CONDUIT BOX CAN BE ROTATED 180°

NO.	REVISION	BY & DATE	CHK
5	REDRAWN IN AUTOCAD	TAT 07-06-2004	ML
4	ADDED KEYWAY TO FRONT EXT. CN 27200-169	CAV 02-21-2000	
3	REMOVED KEYWAY FROM FRONT EXT. CN 27400-442	CAV 10-08-1999	
2	REV. BLACK MAX 56 FR. -706 WAS -856 CN27400-264	BLR 07-14-1999	

TOLERANCES UNLESS SPECIFIED	
DEC.	INCHES
.X	±.1
.XX	±.03
.XXX	±.005
.XXXX	±.0005
ANG	±7'30"

MARATHON ELECTRIC

TITLE OUTLINE
56 FR. - TENV - BB - DBL. C' FACE

MAT'L.

FINISH

CAD FILE 104043

RFP

DIST WP

DRAWN	CEB 08-16-1995
CHK	DA 08-18-1995
APPD	EAB 08-21-1995
SCALE	5=16
REF	
FMF	
PREV	

SIZE A | DRAWING NO. 104043 | PAGE OF | REV. 5

THIS DRAWING IN DESIGN AND DETAIL IS OUR PROPERTY AND MUST NOT BE USED EXCEPT IN CONNECTION WITH OUR WORK ALL RIGHTS OF DESIGN AND INVENTION ARE RESERVED
THIS IS AN ELECTRONICALLY GENERATED DOCUMENT - DO NOT SCALE THIS PRINT

EE7300T

THREE PHASE – SINGLE VOLTAGE
MOTOR – CONDUIT BOX @ 'A'

TO REVERSE ROTATION:
INTERCHANGE ANY TWO LINE
LEAD CONNECTIONS

NOTE FOR FACTORY USE ONLY:
TO SURGE TEST:
FOR 3 LEAD COMMON CONNECT:
CONNECT P1 TO T1 THEN P2 TO L1
FOR 6 LEAD COMMON CONNECT:
CONNECT P1 TO BOTH T1
THEN P2 TO L1

IF MOTOR HAS MULTIPLE
T'S PER LEAD CONNECT
TOGETHER LIKE T'S

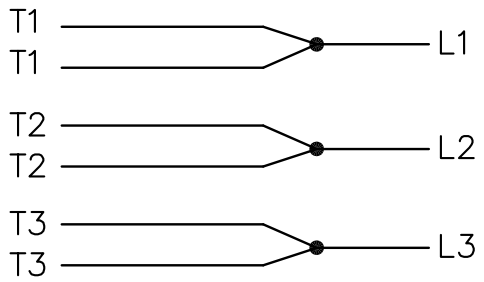

A–9806 DECAL

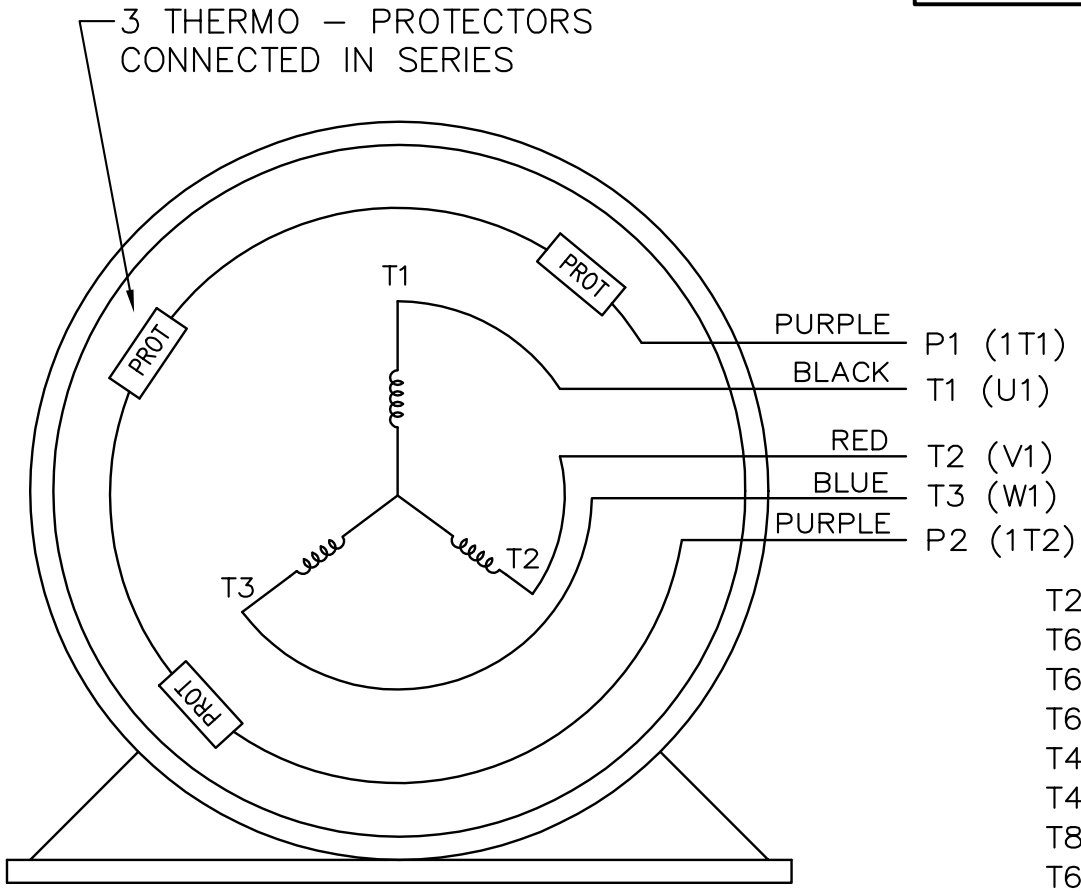

VIEW OF TERMINAL END

T2BM
T6AW
T6AL
T6Z
T4EG
T4BF
T8A
T6H
T6A
T4AX
T4A
T2A
T2F

NO.	REVISION	BY & DATE	CHK
17	ADDED LEAD COLORS CN 40472	TAT 08-01-2006	ML
16	ADDED FEC TERM MARKINGS MU72670	DRS	
15	REVISED "IF MOTOR HAS MULTIPLE		
	T'S PER LEAD... NOTE CN26568	MRB 10-16-1998	
14	ADDED SURGE TESTER NOTE – FOR		
	FACTORY USE ONLY CN24255	MH 03-13-1997	

TOLERANCES UNLESS SPECIFIED
DEC. INCHES
.X ± –
.XX ± –
.XXX ± –
.XXXX ± –
ANG ± –

MARATHON ELECTRIC

DRAWN LZ 01-04-1994
CHK ML 01-20-1994
APPD GK 01-20-1994
SCALE 1=1
REF
FMF
PREV

TITLE CONNECTION DIAGRAM
3ø – SINGLE VOLT – MOTOR WITH PROTECTOR
MAT'L.
FINISH

THIS DRAWING IN DESIGN AND DETAIL IS OUR PROPERTY AND MUST NOT BE USED EXCEPT IN CONNECTION WITH OUR WORK ALL RIGHTS OF DESIGN AND INVENTION ARE RESERVED
THIS IS AN ELECTRONICALLY GENERATED DOCUMENT – DO NOT SCALE THIS PRINT

RFP
DIST WA-LB-SB
CAD FILE EE7300T

SIZE	DRAWING NO.	PAGE	OF	REV.
A	EE7300T			17

Warranty Card

Complete and return to validate warranty

Please complete this card and return it to **seepex** Inc. By using this card, the valid warranty period will commence at the pump "start-up" date. If this card is not completed the warranty coverage period will commence on the date the pump is shipped from the **seepex** factory. This card must be completed and mailed no later than one year from the date of shipment.

User Entity: _____

Mailing Address: _____

_____

_____

Contact Person: _____

Phone Number: _____

Fax Number: _____

Pump Model # _____

Pump Commission #: _____

Pumped Product: _____

Diff. Pressure: _____ Flow Rate: _____

Temperature: _____ Visosity: _____

Solids Size: _____ Solids %: _____

Was the pump delivered as scheduled? __ Yes __ No

Was the appearance of the pump acceptable? __ Yes __ No

Did the pump suffer any freight damage? __ Yes __ No

Did the pump perform as expected? __ Yes __ No

Did you receive: - Data Sheets? __ Yes __ No

-O&M Manuals? __ Yes __ No

Did you local seepex distributor contact you to arrange a start-up? __ Yes __ No

Other Comments: _____

_____

Name of person completing card (please print): _____

Date: _____ Signature: _____

seepex, Inc.
511 Speedway Drive
Enon, OH 45323
Phone (937) 864-7150
Fax (937) 864-7157
www.seepex.com
sales@seepex.net

TERMS & CONDITIONS OF SALES AND/OR REPAIR

The following terms and conditions shall apply to an order for all or any part the articles covered by this quotation unless specifically excepted therein:

Prices
Any prices quoted shall only be valid for orders placed within 30 days from the date of issue of the quotation. Prices are F.O.B. our plant in U.S. or Canadian dollars. We reserve the right to correct typographical or clerical errors.

Terms
All orders are subject to approval by our Credit Department. Unless otherwise stated, if payment for the invoice due is not made within thirty (30) days after shipment, administration fees of eighteen percent (18%) per year (equivalent to a nominal monthly interest rate of 1½%) will be applied on overdue accounts. The terms and conditions herein set forth are based upon tariffs, taxes, foreign exchange rates, delivery, and other conditions in effect on the date of this contract. In the event changed conditions, legislations, regulations, or other matters shall become applicable to any quotation, contract, or delivery hereunder, any increased exchange, duties, taxes, ocean freight, or other charges resulting from such action shall be for the customer's account and **seepex**, Inc. may charge such increased duties, taxes, or charges to the customer.

Unless the order includes the appropriate exemption certificates and/or licenses, duties, and taxes levied by Federal, State, or other governments are required to be charged automatically at the rate imposed at time of importation/shipment. Any change in law, regulations, or Government Department practice which causes a variation of any kind in the applicable charges from the amounts allowed for the quotation, shall result in an equivalent change in the price quoted.

Until payment is made in full, **seepex**, Inc. shall retain the right, without notice, to repossess and/or retain the items, and/or dispose of them, for its benefit and hold the customer responsible for any loss. Customer agrees to enter into any agreements, contracts, or notices required to confirm such rights.

Security
In order to secure any obligations due to **seepex**, Inc. from the customer (whether or not under this contract) the customer grants and confirms in **seepex**, Inc. a security interest in:

a) the merchandise covered by this contract, and
b) in all property and funds of the customer now or hereafter in **seepex**, Inc. possession, whether or not arising out of this contract, and in all additions, accessions, and proceeds of such merchandise and/or property. The customer hereby authorizes **seepex**, Inc. to sign alone any financing statement or statements and to do all and any other things which may be necessary to perfect such security interest.

Cancellation
After acceptance, orders may be canceled only with our approval and payment in accordance with contract by the customer for work performed and/or material expenses incurred by us to date of cancellation. We reserve the right to cancel the order if the customer's financial condition, in our sole judgment, places the payment in jeopardy.

Return
No credit will be allowed for returns unless our authorization in writing for such returns has been obtained beforehand. A copy of this authorization is to be returned with the item as the packing slip.

Shipment

a) Handling Charge: Customer shall be responsible for making all arrangements for shipment of the order with a suitable carrier. In the event that customer requests that seepex make arrangements for shipment, then customer agrees to pay to seepex, in addition to the applicable shipping charges, a handling charge in the amount of 10% of the shipping charges with a minimum $5.00 to a maximum charge of $150.00, with special services requiring additional charges.
b) New Articles: Where shipping instructions indicate no exact routing, our best judgement will be used in determining routing but we shall not be liable for any charges beyond F.O.B. point. If changes are made at customer's request in a) F.O.B. point, b) in our normal routing from either the manufacturers' or our own plants and in these changes involve extra costs, such costs shall be for the customer's account, unless otherwise noted on the **seepex** price quotation.
c) Repair Work: Defined as work and services performed by **seepex**, Inc. All orders shall be delivered to and picked up from our plant unless otherwise specified. All costs of delivery shall be for the customer's account unless otherwise agreed to in writing prior to shipment.
d) All Orders: On collect freight shipments, cartage charges from plant to carrier are for customer's account. Title to articles passes to customer upon delivery to carrier acting as customer's agent subject to any right of retention by us. All claims for shortage in, and damages in, shipment or otherwise must be reported to carrier immediately upon receipt with copy or report to ourselves within five (5) days.

Guarantee

a) New Articles: We guarantee articles of our manufacture against defects in material and/or workmanship for a period of three (3) years from date of acceptance, providing that the articles have been installed, maintained, and operated in accordance with our recommendations and instructions.
b) Repair Work: Defined herein as work and services performed by **seepex**, Inc. We guarantee all work and services performed by us against defect arising from workmanship and/or materials provided by us for a period of ninety (90) calendar days from the date of shipment to customer.
c) All Orders: Claims shall be submitted promptly in writing to **seepex**, Inc. Replacement and/or repair under guarantee shall be made F.O.B. our plant. Our liability under these guarantees is limited to the replacement and/or repair only of defective material or workmanship and in no event shall **seepex**, Inc. be liable for any loss or damage of whatever kind of nature out of defects in material and/or workmanship, or resulting from delay, or loss of use of articles, or any installation into which the article may be installed, or arising out, of the contract of the work or service or from negligence.

seepex, Inc. shall not be liable for any loss or damage resulting from delay and/or late delivery due to causes beyond our reasonable control. In no event shall seepex, Inc. be liable for any claim exceeding the amount of this order. Our guarantee on products of other than our own manufacture is limited to the guarantee extended to us by the original manufacturer. On any claims for repairs and/or replacement under such guarantee, all costs incurred by us which are not underwritten by the original manufacturers shall be for the claimant's account. Except as stated above no representations, conditions, or warranties are made with respect to products, work, or services, express or implied verbal or otherwise, including warranties of merchantability and fitness. Our guarantee and warranty shall not apply to materials or workmanship which have been subject to misuse, neglect, or accident.
seepex, Inc. shall be held free and harmless from any dispute or claim anywhere arising relating to infringement of patent, design, trademark, or copyright of items, sold or repaired under this contract.

Property **rights and risks**
The customer's property at all times shall remain at the risk of the customer while being worked on by our personnel or on our premises and shall not be responsible for any loss or damage to the customer's property resulting from any cause whatsoever.

Title to and rights in relation to item sold under this contract/quotations shall remain with **seepex**, Inc. until such items are paid for, subject to risk on products sold passing to the customer upon acceptance by a carrier or other, which shall constitute good delivery.

Deutschland

seepex
GmbH + Co KG
Postfach 10 15 64
D-46215 Bottrop
Tel +49.2041.9 96-0
Fax +49.2041.9 96-400
info**@seepex**.com
www.**seepex**.com

Deutschland

seepex
Werksbüro West
Scharnhölzstrasse 344
D-46240 Bottrop
Tel +49.700.73 37 39 04
Fax+49.20 41.996-279
bwickermann**@seepex**.com

Deutschland

seepex
Werksbüro Nord
Albert-Einstein-Str. 4
D-30926 Seelze
Tel +49.700.73 37 39 02
Fax +49.511.4 00 80 99 23
bgschulz**@seepex**.com

Deutschland

seepex
Werksbüro Rhein-Main
Dr. Hermann-Künanz-Str. 14
D-63683 Ortenberg-Selters
Tel +49.700.73 37 39 07
Fax+49.60 46.9 60 43 14
hkoch**@seepex**.com

Deutschland

seepex
Werksbüro Südwest
Schwetzinger Strasse 25
D-68519 Viernheim
Tel +49.700.73 37 39 08
Fax+49.62 04.91 12 704
tdufner**@seepex**.com

Deutschland

seepex
Werksbüro Süd
Johann-Karg-Str. 25
D-85540 Haar/München
Tel +49.700.73 37 39 05
Fax+49.89.90 46 87 24
arohrmueller**@seepex**.com

Deutschland

seepex
Werksbüro Ost
Zur Wetterwarte 10, Haus 104
D-01109 Dresden
Tel +49.700.73 37 39 03
Fax+49.351.89 08 36 7
olibnow**@seepex**.com

Österreich

seepex
Vertriebsbüro Österreich
Obermüllergasse 18
3003 Gablitz
Tel. +43.2231 61085
Fax +43.2231.6 10 85-20
hfriedl**@seepex**.com

Niederlande

seepex
Bureau Nederland
Maagdenburgstraat 22c
7421 ZC Deventer
Tel +31.570.516644
Fax +31.570.516077
seepex.nl**@seepex**.com

Belgien

seepex
Bureau België
Dorp 8
B-2288 Bouwel
Tel +32.14.50 14 71
Fax+32.14.50 14 61
seepex.be**@seepex**.com

Dänemark

seepex
Nordic AS
Bakkegårdsvej 411
DK-3050 Humlebæk
Tel +45.49 19 22 00
Fax+45.49 19 32 00
info**@seepex**.dk

Schweden

seepex
Nordic AS
Skogsvägen 39
61634 Åby
Tel +46.11 66 940
Fax +46.11 66 941
info**@seepex**.dk

Grossbritannien

seepex
UK Ltd.
3 Armtech Row
Houndstone Business Park
Yeovil, Somerset BA 22 8RW
Tel +44.19 35.47 23 76
Fax+44.19 35.47 98 36
sales**@seepex**.co.uk

Grossbritannien

seepex
UK Ltd., Northern Office
Dane Mill Business Centre
Broadhurst Lane Congleton
Cheshire CW12 1LA
Tel +44.12 60 27 10 01
Fax+44.12 60 27 40 04
northernoffice**@seepex**.co.uk

Grossbritannien

seepex
UK Ltd. Midlands Office
15 Tudor Close
Hollywood, Birmingham
West Midlands B14 4TL
Tel +44.121.6 03 11 91
Fax +44.121.6 03 21 82
jcashmore**@seepex**.co.uk

Irland

seepex
Dublin Office
61 Clonkeen Road
Deansgrange
Dublin
Tel +353.1.2 89 43 93
Fax +353.1.2 89 44 96
dublinoffice**@seepex**.co.uk

Frankreich

seepex
France SARL
1, Rue Pelloutier
77183 Croissy Beaubourg
Tel +33.1.64 11 44 50
Fax +33.1.64 11 44 69
info**@seepex**.com

Frankreich

seepex
France SARL
Agence Rhône Alpes
15, rue des Sports
F-69210 Lentilly
Tel +33.474.01 87 20
Fax+33.474 01 88 30
lnouel**@seepex**.com

Frankreich

seepex
France SARL
Agence Pays de
Loire-Bretagne
Le Clos Rellan
F-35380 Treffendel
Tel +33.2.99 61 88 10
Fax+33.2.99 61 88 13
mrousseau**@seepex**.com

Frankreich

seepex
France SARL
Agence Aquitaine
28, Chemin de Facteurs
F-33260 La Teste de Buch
Tel +33.5.56 54 68 86
Fax +33.5.57 52 65 47
jose.enrique@free.com

Frankreich

seepex
France SARL
Agence Est
7, rue des Terres Blanches
F-54300 Lunéville
Tel +33.3.83 73 32 59
Fax+33.3.83 73 91 36
tlefloch**@seepex**.com

USA

seepex
Inc.
511 Speedway Drive
Enon, Ohio 45323
Tel +1 (937) 864-71 50
Fax+1 (937) 864-71 57
sales@**seepex**.net

USA

seepex
Inc.
1249 Tilton Park Drive
Rochelle, IL 61068
Tel +1 (815) 562-63 04
Fax+1 (815) 562-83 04
arenick@**seepex**.net

USA

seepex
Inc.
135 Dennis Drive
Glenshaw PA 15116-3003
Tel +1(412) 487-1144
Fax +1(412) 487-6116
lbeatty@**seepex**.net

USA

seepex
Inc.
12374 S.E. 93rd Court Road
P.O. Box 690
Summerfield FL 34492-0690
Tel +1 (352) 245-9405
Fax +1 (352) 245-9446
rbraidich@**seepex**.net

USA

seepex
Inc.
40 Bel Flora
Los Flores, CA 92688
Tel +1 (949) 589-60 23
Fax+1 (949) 589-64 59
bstark@**seepex**.net

USA

seepex
Inc.
7136 Sample Drive
The Colony, TX 75056
Tel +1(469) 287-2042
Fax +1(469) 287-2568
slong@**seepex**.net

USA

seepex
Inc.
2904 Southhurst Drive
Huntsville, AL 35803
Tel +1(256) 650-7236
Fax +1 (256) 650-0288
dheigl@**seepex**.net

USA

seepex
Inc.
1110 East, 1525 North
Layton, UT 84040
Tel +1 (801) 593-1606
Fax +1 (801) 593-1608
kthomas@**seepex**.net

USA

seepex
Inc.
8761 Denison Drive
Columbia, IL 62236-0527
Tel +1(618) 977-3229
Fax +1(618) 939-5874
rbiby@**seepex**.net

USA

seepex
Inc.
411 Lorwood Drive
Shelby, OH 44875-1716
Tel +1 (937) 232-6563
Fax +1 (937) 864-7157
dwalsh@**seepex**.net

China

seepex
Pumps (Shanghai) Co., Ltd.
No. 21, Lane 1365
Kangqiao Dong Road
Shanghai, 201 315
Tel +86.21.3810 8888
Fax +86.21.3810 8899
info.cn@**seepex**.com

China

seepex
Beijing Office
No. 1 (A) Gao Bei Dian Cun
Chaoyang District,
Beijing 100022,
Tel +86.10.8774 3092
Fax +86.10.8774 2997
seepex.bjo@**seepex**.com

China

seepex
Guangzhou Office
501 Linjanf Dadao
Tianhe District
Guangzhou, 510655
Tel. +86.20.3193 5308
Fax +86.20.3889 0479
seepex.gzo@**seepex**.com

China

seepex
Qingdao Office
Shandong Province
Tel +86.138 5329 9850
Fax +86.532 508 5358
seepex.qdo@**seepex**.com

China

seepex
Lanzhou Office
Room 1214, Jinyu Mansion
No. 3 West Jiangong Street
Qilihe District
Lanzhou 730050
Tel +86.931.260 4039
Fax +86.931.260 4239
szhang@**seepex**.com

Malaysia

seepex
(M) Sdn. Bhd.
59-1, Jalan PJU 1/37,
Dataran Prima
47301 Petaling Jaya,
Selangor Darul Ehsan
Tel +60.3.78 80 69 51
Fax+60.3.78 80 69 59
seepex.m@**seepex**.com

Vertretungen:

Europa:

Finnland
Griechenland
Island
Italien
Norwegen
Polen
Portugal
Rumänien
Russland
Schweiz
Spanien
Tschechische Republik
Ungarn

Amerika:

Argentinien
Chile
Equador
Kanada
Kolumbien
Mexiko
Panama
Peru
Puerto Rico
Venezuela

Asien:

Brunei
Indien
Indonesien
Iran
Israel
Japan
Kasachstan
Korea
Kuwait
Pakistan
Philippinen
Saudi Arabien
Singapur
Taiwan
Thailand
V.A.E

Afrika:

Ägypten
Südafrika

Ozeanien:

Australien
Neuseeland

Ihre **seepex** Vertretung

SAFETY RELIEF VALVE

LEFT BLANK

TOP VALVE * PAT

Back Pressure & Pressure Relief Valves

Designed to Enhance the ACCURACY and SAFETY of Metering Pumps



Back Pressure/Anti-Siphon and Pressure Relief Valves

- Long life diaphragm
- Range to 350 PSIG
- Built-in air release and optional gauge port
- Available in PVC, CPVC, PVDF, polypropylene, Teflon, stainless steel, Alloy 20 and Hastelloy C
- 7 sizes (1/4" - 2" threaded, flanged or socket)
- Color coded handles indicate size at a glance
- High temperature valves available to (300°F/149°C)

For detailed product information visit our website: primaryfluid.com

PRIMARY FLUID SYSTEMS INC.

Call Toll Free 1-800-776-6580
Tel (905) 333-8743 Fax (905) 333-8746

E-Mail: primary@primary fluid.com
www.primaryfluid.com

TOP VALVE*PAT

For detailed product information visit our website: primaryfluid.com

Back Pressure/Anti-Siphon and Pressure Relief Valves

Description

This line of diaphragm style, back pressure/anti-siphon and pressure relief valves features a completely adjustable pressure range to 350 PSIG and a built-in air release to reduce priming difficulties. The valves are available in sizes from 1/4" through 2", eight materials of construction, offer a three year warranty and are available with socket weld, flanged or special threaded connections. High temperature to (300°F/149°C) valves are available. *CRN certification available. Please contact factory.*

Ordering Information e.g. Part # TVBP50-S/S-V-S

TV - B - P - 50 - S/S - V - S

TOP VALVE

Valve Type:
B = Backpressure
P = Pressure Relief
P2 = Pressure Relief (2 port)

Valve Style or Connection:
P = Backpressure, FNPT thr'd
R = Pressure Relief, FNPT thr'd
FW = Welded Flange
FT = Thr'd Companion Flanged
F = Flanged Non-Metallic
S = Socket
B = BSP thread
T = High Temperature (300°F/149°C)
H = High Pressure (to 350 psig)

Valve Port Connection Size:
25 = 1/4" 10 = 1"
45 = 1/4" X 1/2" 15 = 1 1/2"
50 = 1/2" 20 = 2"
75 = 3/4"

Standard Top: PVC/CPVC
Top Options:
A = Aluminum Top
S = 316L S/S Top
C = CPVC Top
P = Polycarbonate Top

Miscellaneous Options:
E = EPDM Diaphragm
P = PVC Diaphragm
V = Viton Diaphragm
G = Gauge Port

Body Material of Construction:
PVC = polyvinylchloride
CPVC= Corzan
PP = polypropylene
TFE = 24% glass filled Teflon
PVDF= polyvinylfluoride
S/S = 316L Stainless Steel
ALL20= Alloy 20
Hast = Hastelloy C 276

Flow Rates

Flow capacity through TOP VALVE back pressure/anti-siphon and pressure relief valves under continuous flow conditions **@ 50 PSIG** with ambient temperature water.

Size	1/4"	1/4" / 1/2"	1/2"	3/4"	1"	1 1/2"	2"
Flow rate USGPM	4	4	6	8	14	25	40

Note: Capacities will increase with pressure. If pressure is doubled, flow rate wll approximately double. For capacities of valves with pulsating flow, use approximately 1/3 of the given flow rates.

Typical Installations

The installations below are typical installation examples only. Consult your engineering department for the appropriate installation of your application or call Primary Fluid Systems Inc. for advice.

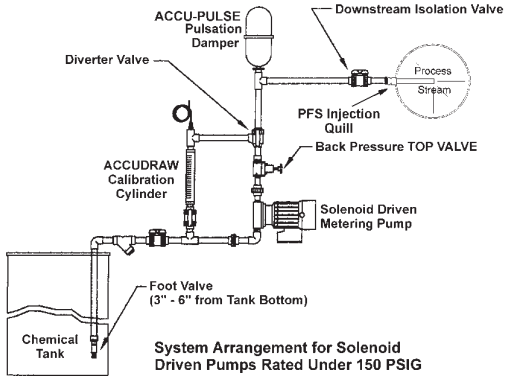

System Arrangement for Solenoid Driven Pumps Rated Under 150 PSIG

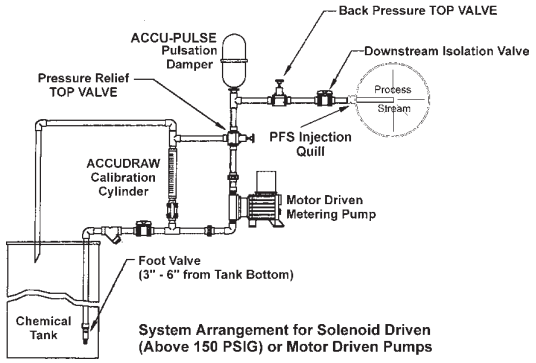

System Arrangement for Solenoid Driven (Above 150 PSIG) or Motor Driven Pumps

Distributed By:

PRIMARY FLUID SYSTEMS INC.

Distribution Territories Available

Call Toll Free 1-800-776-6580
Tel: (905) 333-8743
Fax: (905) 333-8746

E:Mail: primary@primaryfluid.com
www.primaryfluid.com

® Registered Trade Mark of Primary Fluid Systems
*PAT 5,857,486/5,944,050

CALIBRATION CYLINDER

LEFT BLANK

ACCUDRAW® Calibration Cylinders



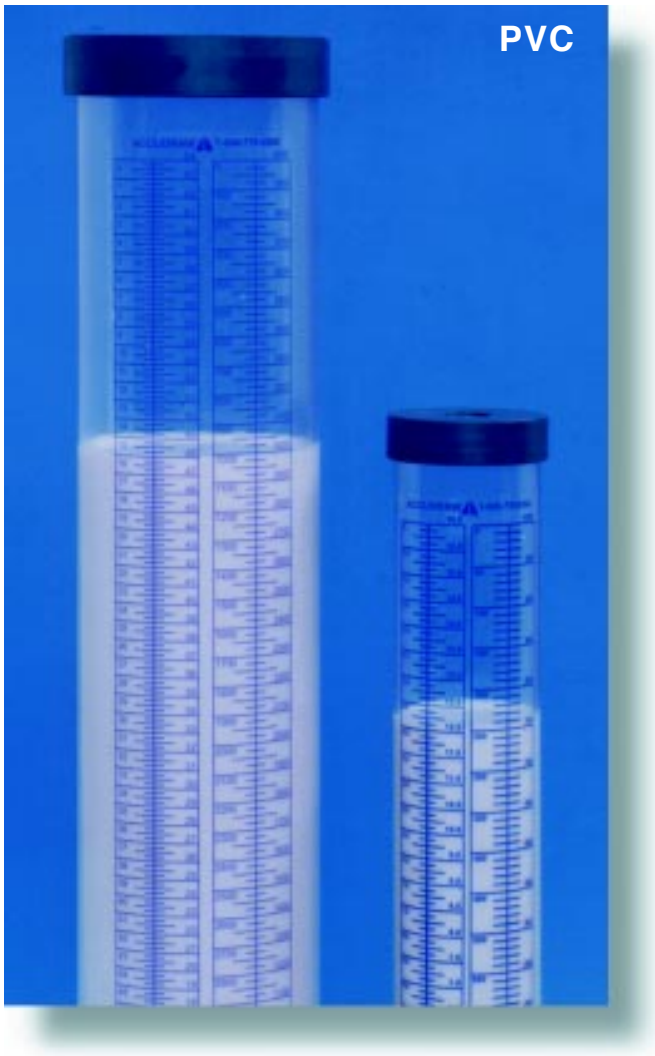

ACCUDRAW® ***has been developed for the accurate calibration of metering pumps. Standard features include:***

- translucent
- chemical resistant
- break resistant
- threaded or socket
- colored graduations and lettering

- PVC has dual scale USGPH & ml
- PVC sizes 100 - 20000 ml
- POLY sizes 100 - 4000 ml
- POLY meets ISO standards
- custom sizes and other materials (acrylic, glass) on request

PRIMARY FLUID SYSTEMS INC.
Call Toll Free 1-800-776-6580
Tel (905) 333-8743 Fax (905) 333-8746
E-Mail: primary@primaryfluid.com
www.primaryfluid.com

ACCUDRAW® Calibration Cylinders

POLYMER

"For Accuracy That Counts"

Sizing and Ordering Information

Polypropylene Construction

Size	*Conn.*	*BC*	*BTC*	*BDC*
100 ml	1/2" NPT	AC#1-100	AC#2-100	AC#3-100
250 ml	1/2" NPT	AC#1-250	AC#2-250	AC#3-250
500 ml	1/2" NPT	AC#1-500	AC#2-500	AC#3-500
1000 ml	1/2" NPT	AC#1-1000	AC#2-1000	AC#3-1000
2000 ml	1.0" NPT	AC#1-2000	AC#2-2000	AC#3-2000
4000 ml	1.0" NPT	AC#1-4000	AC#2-4000	AC#3-4000

BC = bottom connection only, open top
BTC= bottom and top connections
BDC= bottom connection and dust cover top

PVC Construction

Size/Scale	*Conn*	*BC*	*BTC*	*BDC*
100 ml/ 1.6 GPH	1/2" NPT	PV#1-100	PV#2-100	PV#3-100
250 ml/ 4 GPH	1/2" NPT	PV#1-250	PV#2-250	PV#3-250
500 ml/ 8 GPH	1/2" NPT	PV#1-500	PV#2-500	PV#3-500
1000 ml/ 16 GPH	1/2" NPT	PV#1-1000	PV#2-1000	PV#3-1000
2000 ml/ 32 GPH	1.0" NPT	PV#1-2000	PV#2-2000	PV#3-2000
4000 ml/ 64 GPH	1.0" NPT	PV#1-4000	PV#2-4000	PV#3-4000
10000 ml/ 160 GPH	2.0" NPT	PV#1-10000	PV#2-10000	PV#3-10000
20000 ml/ 320 GPH	2.0" NPT	PV#1-20000	PV#2-20000	PV#3-20000

Note: PVC cylinders available with socket weld connections.
Add suffix "S" to model # e.g. PV#3-100S
For BSP threads, add suffix "B" to model # e.g. PV#3-100B

Dimensional Information

Polypropylene Construction

Model	Size (ml)	Dev (ml)	A (inches)	B (inches)
AC#1	100	1	9.88	1.38
AC#1	250	2	12.44	1.75
AC#1	500	5	14.1	2.33
AC#1	1000	10	17.19	2.63
AC#1	2000	20	20.88	3.38
AC#1	4000	50	23.56	4.38
AC#2/AC#3	100	1	9.25	1.38
AC#2/AC#3	250	2	11.63	1.75
AC#2/AC#3	500	5	13	2.32
AC#2/AC#3	1000	10	16.5	2.69
AC#2/AC#3	2000	20	19.5	3.38
AC#2/AC#3	4000	50	22.13	4.38

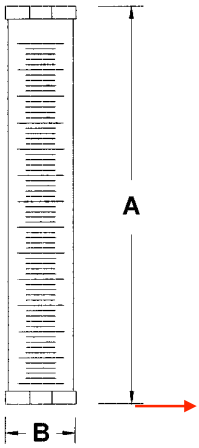

PVC Construction

Model	Size (ml)	Divisions (ml)	Size (GPH)	Divisions (GPH)	A (inches)	B (inches)
PV#1	100	1	1.6	0.02	10.24	1.388
PV#1	250	2	4	0.05	11.04	1.888
PV#1	500	5	8	0.05	12.25	2.388
PV#1	1000	10	16	0.125	16.24	2.765
PV#1	2000	20	32	0.25	20.16	3.517
PV#1	4000	25	64	0.25	22.16	4.521
PV#1	10000	200	160	2	22.64	6.906
PV#1	20000	200	320	2	42.19	6.906
PV#2/PV#3	100	1	1.6	0.02	10.75	1.388
PV#2/PV#3	250	2	4	0.05	11.51	1.888
PV#2/PV#3	500	5	8	0.05	12.75	2.388
PV#2/PV#3	1000	10	16	0.125	16.76	2.765
PV#2/PV#3	2000	20	32	0.25	20.67	3.517
PV#2/PV#3	4000	25	64	0.25	22.66	4.521
PV#2/PV#3	10000	200	160	2	23.16	6.906
PV#2/PV#3	20000	200	320	2	42.69	6.906

Installations

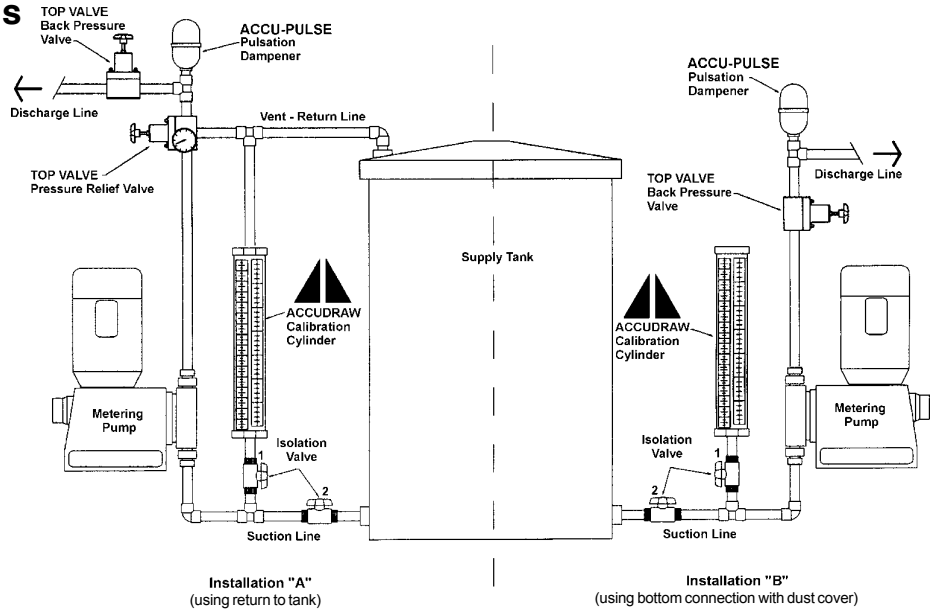

Installation "A"
(using return to tank)

Installation "B"
(using bottom connection with dust cover)

Conversion Factors

1 ml = 1 cc
1000 ml = 1 liter
ml/sec X 60 = ml/min
1 US gal/min X 0.063 = liters/sec
1 US gal = 3.786 liters

Distributed By:

PRIMARY FLUID SYSTEMS INC.

Call Toll Free 1-800-776-6580
Tel: (905) 333-8743
Fax: (905) 333-8746

E:Mail: primary@primaryfluid.com
www.primaryfluid.com

® Registered Trade Mark of Primary Fluid Systems

Distribution Territories Available

CAUSTIC SODA DOSING

ST-054

LEFT BLANK

JOHN MEUNIER

NOMENCLATURE/ BILL OF MATERIALS

TITRE/ TITLE	Rev.	DESCRIPTION	PAR/ BY:	APPR:	DATE:	Affaire / Contract	Meadowbank Mining
Caustic soda dosing	0	SUBMITTAL	Julie Trudel	J.T.	2009-05-15		
	1						
	2					REF. No.	NC01 Rev. 0
	3						
DESSIN /DWG # ST-054	4					Date:	2009-05-15

REV.	ITEM	QTE/QTY. Unit.	QTE/QTY. Total	DESCRIPTION	P&ID I.D./TAG	CAT. ACCPAC	SOURCE	FA/SA FI SITE	P / N
				MANUAL CAUSTIC SODA PREPARATION SYSTEM					
				Model #					
	NC01ST-054-1	1	1	OT-75	T9-541	D64		SA	
				Supplier					
				Plastique PV / ACO					
				Description					
				Open top polyethylene tank. Capacity 75 gallons imp., 24 inches diameter x 47 inches height (with lid); material LLPE 1,5SG					
				Model #					
	NC01ST-054-2	1	1	Lid OT-75		D64		SA	
				Supplier					
				Plastique PV / ACO					
				Description					
				Lid OT-75					
				Model #					
	NC01ST-054-3	1	1	Grad. OT-75		D64		SA	
				Supplier					
				ACO					
				Description					
				Self adhesive metric graduation for OT-75 tank					
				Model #					
	NC01ST-054-4	1	1	OT-15	T9-542	D64		SA	
				Supplier					
				Plastique PV / ACO					
				Description					
				Open top polyethylene tank. Capacity 15 gallons imp., 16 inches diameter x 23 inches height (with lid); material HDPE 1,9SG					

JOHN MEUNIER

NOMENCLATURE/ BILL OF MATERIALS

TITRE/ TITLE	Rev.	DESCRIPTION	PAR/ BY:	APPR:	DATE:	Affaire / Contract	Meadowbank Mining
Caustic soda dosing	0	SUBMITTAL	Julie Trudel	J.T.	2009-05-15		
	1						
	2					REF. No.	NC01 Rev. 0
	3						
DESSIN /DWG # ST-054	4					Date:	2009-05-15

REV.	ITEM	QTE/QTY. Unit.	QTE/QTY. Total	DESCRIPTION	P&ID I.D./TAG	CAT. ACCPAC	SOURCE	FA/SA FI SITE	P / N
				Model #					
	NC01ST-054-5	1	1	Lid OT-15		D64		SA	
				Supplier					
				Plastique PV / ACO					
				Description					
				Lid OT-15					
				Model #					
	NC01ST-054-6	1	1	Grad. OT-15		D64		SA	
				Supplier					
				ACO					
				Description					
				Self adhesive metric graduation for OT-15 tank					
				MIXER					
				Model #					
	NC01ST-054-7	1	1	EV5Q-50	M9-541	D64		SA	
				Supplier					
				NORTEC S.G.S/ LIGHTNIN					
				Description					
				Mechanical mixer, 1/2 HP, 350 RPM, 575V/3/60Hz, one propeller of 11,2" dia, shaft 56" x ¾". Fix mounted. Including angle riser					

JOHN MEUNIER

NOMENCLATURE/ BILL OF MATERIALS

TITRE/ TITLE	Rev.	DESCRIPTION	PAR/ BY:	APPR:	DATE:	Affaire / Contract	Meadowbank Mining
Caustic soda dosing	0	SUBMITTAL	Julie Trudel	J.T.	2009-05-15		
	1						
	2					REF. No.	NC01 Rev. 0
	3						
DESSIN /DWG # ST-054	4					Date:	2009-05-15

REV.	ITEM	QTE/QTY. Unit.	QTE/QTY. Total	DESCRIPTION	P&ID I.D./TAG	CAT. ACCPAC	SOURCE	FA/SA FI SITE	P / N
	NC01ST-054-8	1	3	**CAUSTIC SODA METERING PUMP**	P9-541	D64		SA	
				Model #	P9-542				
				MD 006-12 / A6-A7-A7-R0-GA-X	P9-543				
				Supplier					
				Seepex					
				Description					
				Progressive cavity pump : 3,3 - 50 L/H @ 7 bars, 307 rpm pump max speed. Progressive cavity pump in stainless steel construction with 1" NPT suction, 1/2" NPT discharge, stainless steel wetted casing parts and rotor, mechanical seal. Motor inverter duty, 0.5 HP, 1800 rpm, 575V/3ph/60Hz. Including a dry running protect and a 1 HP AC Tech/Jacmar drive, model ESV751N06TXC, Nema 4x.					
	NC01ST-054-9	1	3	**SAFETY RELIEF VALVE**	V9-545	D64		SA	
				Model #	V9-546				
				TVPR50-PVC-G	V9-547				
				Supplier					
				Primary Fluid					
				Description					
				Relief valve PVC, 1/2" FNPT c/w glycerine pressure gauge 0-160 psi with PVC Teflon isolator.					
	NC01ST-054-10	1	1	**CALIBRATION TUBE**		D64		SA	
				Model #					
				PV#2-500ml					
				Supplier					
				Primary Fluid					
				Description					
				Calibration tube; PVC; 500 ml, connection 1/2" NPT at both ends					

JOHN MEUNIER

NOMENCLATURE/ BILL OF MATERIALS

TITRE/ TITLE	Rev.	DESCRIPTION	PAR/ BY:	APPR:	DATE:	Affaire / Contract	Meadowbank Mining
Caustic soda dosing	0	SUBMITTAL	Julie Trudel	J.T.	2009-05-15		
	1						
	2					REF. No.	NC01 Rev. 0
	3						
DESSIN /DWG # ST-054	4					Date:	2009-05-15

REV.	ITEM	QTE/QTY. Unit.	QTE/QTY. Total	DESCRIPTION	P&ID I.D./TAG	CAT. ACCPAC	SOURCE	FA/SA FI SITE	P / N
	NC01ST-054-11	1	2	**CORPORATION STOPS**		D64		FI	
				Model #					
				CCS-56-PVC					
				Supplier					
				Primary Fluid System					
				Description					
				QUILL 6", Body PVC, Ball Check ceramic Check, spring in SS 316 and gland seal in EPDM					

ACO CONTAINER

LEFT BLANK

Portable Bulk Containers and Bins

catalogue









ACO Container Systems Ltd.

ISO 9002 CERTIFIED

Corporate Profile

Portable Bulk Containers and Bins



ACO Container Systems

For more than 20 years, ACO has been recognized as one of the leading manufacturers of quality rotationally moulded products.

ACO tanks, moulded in premium grade linear or crosslinked polyethylene, provide a wide range of sizes and capacities to suit all applications.

ACO tanks, moulded products are made under a tough quality control standard to ensure that you get a reliable and consistent product.

ACO tanks provide the toughest tanks available today, capable of withstanding the most stringent tests of strength, reliability and chemical resistance. Polyethylene offers chemical resistance which is superior to FRP, stainless steel and mild steel.

ACO manufactures a complete line of storage tanks, specialty tanks, Transport Canada and United Nations approved shipping containers as well as hopper systems for powder/granular applications. Our tank systems have been serving the chemical process industry, oils/lubricant market, adhesive companies, food and beverage industry and many others successfully over the past 20 years.

ACO also can custom design a system to suit your needs, our staff is here to help you. To get more in-depth answers to your questions please contact your local ACO representative.

794 McKay Road, Pickering, Ontario L1W 2Y4
T (905) 683-8222, 1-800-542-9942
F (905) 683-2969, 1-800-542-4722

open top storage tanks



- Excellent chemical & corrosion resistance
- Narrow diameters for economical in-plant use
- U.V. stablized for sunlight protection
- Custom accessories to your specifications

Code No.	Capacity		Dimension	Wall	Weight	LID
	Imp. Gallons	Litres	in Dia.x Height	Thickness		Available
OT-5	5	22	11"x 18"	.125"	4.4 lbs.	Yes
OT-9	9	40	15"x 16"	.125"	5.5 lbs.	No
OT-15	15	68	16"x 23"	.125"	6.6 lbs.	Yes

Call us at **(905) 683-8222, 1-800-542-9942** for more information.

open top storage tanks

- All dimensions are in inches (approx.)
- Manufactured from LLDPE (linear Polyethylene) XLPE - (cross-linked Polyethylene) available

Code No.	Capacity		Dimension	Wall	Weight	LID
	Imp. Gallons	Litres	in Dia.x Height	Thickness		Available
OT-17	17	77	18"x 21"	.188"	10 lbs.	No
OT-25	25	110	16"x 36"	.188"	11 lbs.	Yes
OT-30	30	136	18"x 37"	.188"	12 lbs.	Yes
OT-36	36	160	18"x 39"	.188"	13 lbs.	Yes
OT-45	45	200	22"x 36"	.188"	22 lbs.	Yes
OT-50	50	220	22"x 40"	.188"	24 lbs.	Yes
OT-60	60	270	22"x 44"	.188"	26 lbs.	Yes
OT-66	66	300	26"x 38"	.188"	30 lbs.	Yes
OT-75	75	340	24"x 47"	.250"	30 lbs.	Yes
OT-100	100	450	30"x 45"	.250"	38.5 lbs.	Yes
OT-125	125	560	30"x 49"	.250"	44 lbs.	Yes
OT-150	150	680	37"x 45"	.250"	52 lbs.	Yes
OT-175	175	790	36"x 49"	.250"	65 lbs.	Yes
OT-178	178	800	30"x 73"	.250"	68 lbs.	Yes
OT-220	220	1000	55"x 34"	.250"	100 lbs.	Yes
OT-240	240	1080	43"x 50"	.250"	95 lbs.	Yes
OT-300A	300	1360	48"x 50"	.375"	110 lbs.	Yes
OT-300B	300	1360	55"x 41"	.375"	125 lbs.	Yes
OT-400	400	1800	55"x 50"	.375"	143 lbs.	Yes
OT-500	500	2200	55"x 62"	.375"	150 lbs.	Yes
OT-750	750	3400	70"x 58"	.375"	247 lbs.	Yes
OT-1000	1000	4500	70"x 78"	.375"	280 lbs.	Yes
OT-1250	1250	5600	70"x 93"	.375"	350 lbs.	Yes

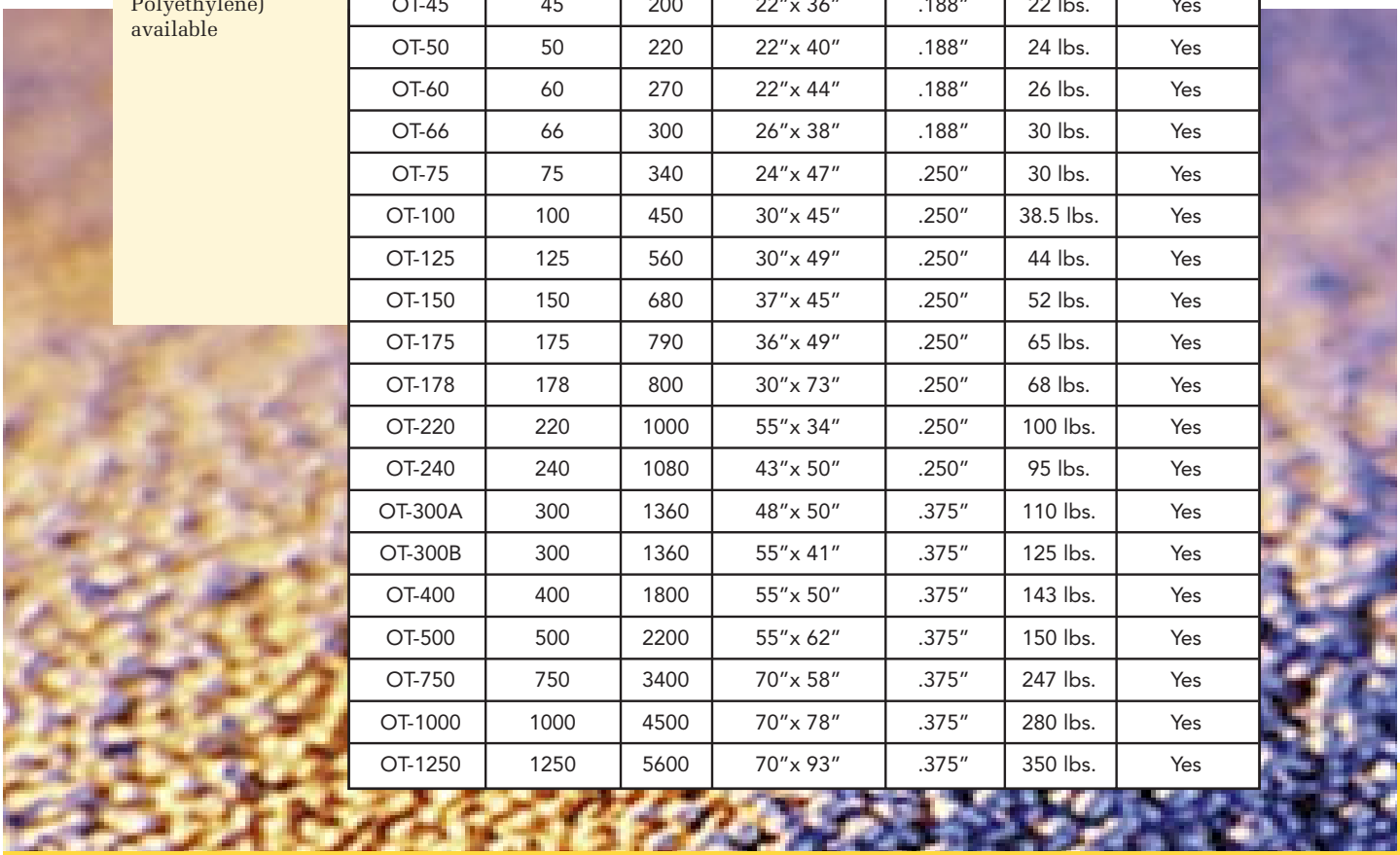

All dimensions and measurements are approximate.

tote barrels

PTB Series Tanks are designed to mount pumping equipment.



Code No.	Litres	Imp. Gallons	Diameter Ins.	Height Ins.
PTB-60	60	13	15″	28″
PTB-100	100	22	18″	29″
PTB-200	200	44	22″	39″
PTB-300	300	66	26″	44″
PTB-400	400	88	30″	43″

All dimensions and measurements are approximate.

round tanks

ACO Round Tanks for custom applications.



Code No.	Litres	Imp. Gallons	Diameter Ins.	Length Ins.	Height Ins.
RT-40	40	9	15″	18″	16″
RT-100	100	22	20″	27″	18″
RT-300	300	66	27″	37″	27″
RT-500	500	110	30″	45″	32″

All dimensions and measurements are approximate.



ACO Container Systems Ltd.

794 McKay Road
Pickering, Ontario L1W 2Y4

Tel (905) 683-8222, 1-800-542-9942
Fax (905) 683-2969, 1-800-542-4722
e-mail: custserv@acotainers.on.ca
See us on line at **www.acotainers.on.ca**

PREPARATION SYSTEM MIXER

LEFT BLANK

LIGHTNIN

MIXER MANUAL

INSTRUCTIONS

INSTALLATION

OPERATION

MAINTENANCE

Ship To Customer:	JOHN MEUNIER INC
Bill To Customer:	JOHN MEUNIER INC
PO Number:	015488
Model:	Lightnin Mixer Model EV5Q50
Order Number:	0001125100
Line Number:	000010

Tagging:

INSTRUCTION MANUAL

LIGHTNIN SALES ORDER 0001125100

LIGHTNIN LINE ITEM 000010

TABLE OF CONTENTS

TITLE	DOCUMENT NO.
Safety Check List	IT-2144
GENERAL ARRANGEMENT DRAWING	1125100000010-A
Machine Assembly Drawing	L-17637
General Instructions	IT-3815
Motor Electric Instructions	IT-2588
Spare Parts - Mixer	IT-3796
Sales Offices	IT-3839

LIGHTNIN

SAFETY CHECK LIST

IMPORTANT WARNINGS

All *LIGHTNIN* Mixers and Aerators are provided with properly designed lifting devices and safety covers to avoid potential injury and/or equipment damage. The following SAFETY CHECK LIST should be THOROUGHLY REVIEWED AND ADHERED TO before installing, operating or performing maintenance on the mixer. FAILURE TO FOLLOW THESE INSTRUCTIONS COULD RESULT IN SERIOUS INJURY. Ensure the use of qualified, quality trained and safety conscious personnel.

1. Use only the lifting device, if provided, on your unit to install the mixer. Use shouldered eyebolts and tighten securely to handle component parts. We strongly recommend that the hoist rings be of safety swivel type with 360° rotational capability. Lift per instructions in the instruction manual.

2. DO NOT connect the motor to the power source until all components are assembled, the mixer is installed, and all hardware is tightened to the proper torque which is specified in the operation and maintenance manuals supplied by *LIGHTNIN*.

3. DO NOT operate shaft sealing devices at temperatures or pressures higher than those specified in the manual or on the nameplates.

4. DO NOT service the mixer until you have followed your "Control of Hazardous Energy Sources" (lockout, tagout procedure) as required by OSHA 29 CFR Part 1910.

5. DO NOT touch rotating mixer parts or any part of mixer that has the potential of having a hot surface including motor, gear drive housing, seal, shafting and flange.

6. DO NOT operate mixer for service other than its intended use, that being fluid mixing with the mixer attached to a rigid structure and connected to a power source appropriate to operate the drive motor.

7. DO NOT make any field changes or modifications (horsepower, seal material components, output speed, shaft lengths, impellers, etc.) without reviewing the changes with your *LIGHTNIN* Sales Representative or the *LIGHTNIN* Customer Service Department.

8. DO NOT install an aftermarket Variable Frequency Drive without first consulting your *LIGHTNIN* Sales Representative or the *LIGHTNIN* Customer Service Department to determine the compatibility of the existing motor with the Variable Frequency Drive.

9. DO NOT operate mixer until you have checked the following items:
   - A. Make sure the mixer is properly grounded.
   - B. Ensure all protective guards and covers are installed. Guarding of the mixer shaft below mixer mounting surface is the responsibility of the customer.
   - C. Ensure all detachable components are securely coupled to the mixer.
   - D. Thoroughly REVIEW and ADHERE TO the mixer operating instructions supplied by *LIGHTNIN*.
   - E. Ensure the mixer output shaft rotates freely by hand.
   - F. Ensure all personnel and equipment are clear of rotating parts.
   - G. Ensure all external connections (electrical, hydraulic, pneumatic, etc.) have been completed in accordance with all applicable codes and regulations.

10. DO NOT enter the mixing vessel UNLESS:
    - A. The mixer power supply is locked out (follow Item number 4).
    - B. The mixer shaft is firmly attached to the mixer drive or the shaft is supported securely from below.
    - C. You have followed applicable confined space regulations.

CE COMPLIANCE

If mixer nameplate has a CE marking on it, then the equipment furnished conforms to the following directives:

98/37/EC Machinery Directive
89/336/EEC Electro–Magnetic Compatibility
73/23/EEC Low Voltage

Any CE marking and/or associated documentation applies to the mixer only. This has been supplied on the basis that the mixer is a unique system. When the mixer is installed, it becomes an integral part of a larger system which is not within the scope of supply and CE marking is the responsibility of others.



CAUTION: CE Compliance does not imply that the mixer satisfies PED (Pressure Equipment 97/23/EC) or ATEX (Potential
Explosive Atmospheres 94/9/EC) unless marking is clearly shown on mixer.

‘

NOISE LEVELS

SOUND PRESSURE LEVELS
Portable Series: ECL, EV – maximum 80 Dba @ 1 meter
Heavy Series: S10, 70/80, 500/600 – maximum 85 Dba @ 1 meter

THIS PRODUCT MAY BE COVERED BY ONE OR MORE OF THE FOLLOWING U. S. PATENTS:

5006283	5046245	5118199	5152934	5152606	5203630
5344235	5364184	5368390	5378062	5427450	5454986
5470152	5478149	5480228	5501523	5511881	5560709
5568975	5568985	5655780	5720286	5746536	5758965
5779359	5842377	5925293	5951162	5972661	5988604
6089748	6109449	6142458	6158722	6250797	6299776
6334705	6386753	6457853	6634784	6715913	6742923
6746147	6789314	6796707	6796770	6808306	6843612
6860474	6877750	6935771	6986507	6997444	7001063
	7056095	7168641	7168848	7168849	

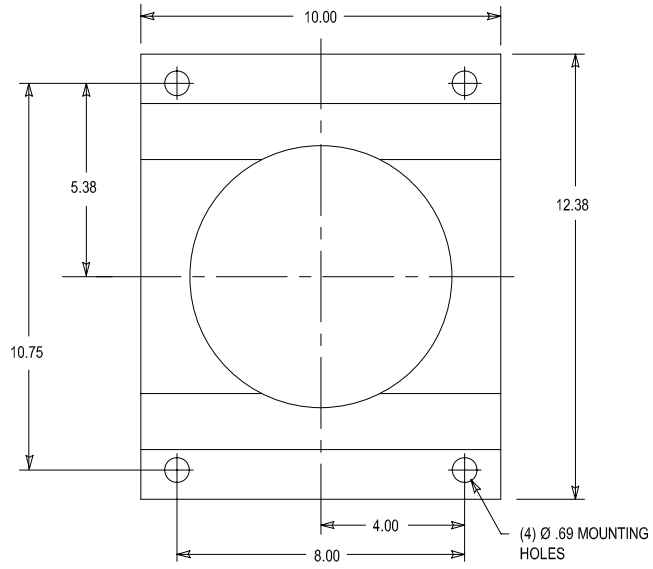

NOTES:

1. DIMENSIONS ARE IN INCHES AND ARE MAXIMUM.
2. WEIGHT (LESS SHAFT AND IMPELLERS): 68 LBS.
3. MATERIAL OF MIXER PARTS IN CONTACT WITH TANK CONTENTS IS 316 STAINLESS STEEL.
4. MOTOR DATA:
   H.P.: 0.50 R.P.M.: 1725 DUTY: STANDARD DUTY
   VOLTS: 575 PHASE: 3 Hz: 60
   ENCLOSURE: TEFC IMPELLER R.P.M.: 350

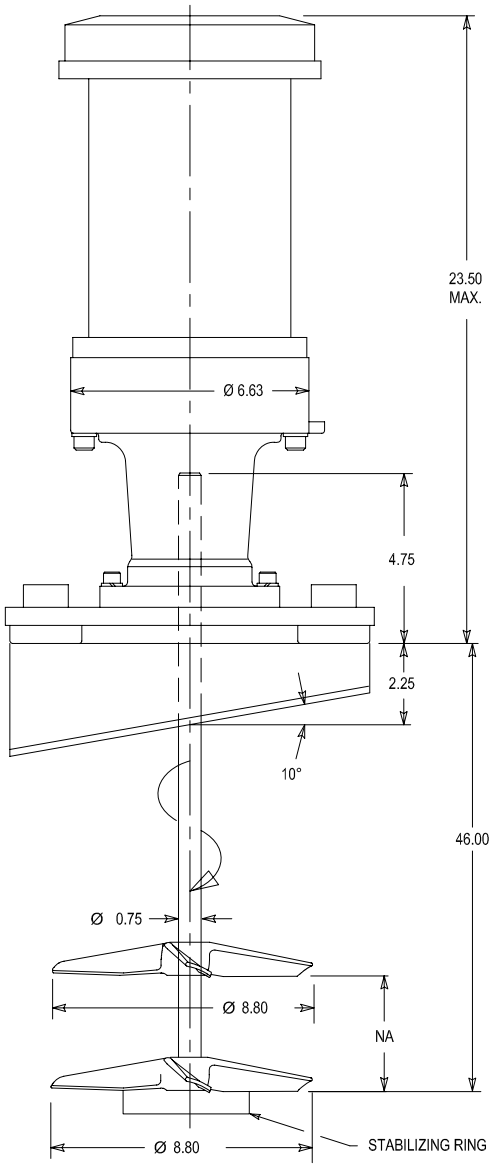

ALL EQUIPMENT DESIGN AND APPLICATION DATA SHOWN HEREIN AND RELATED KNOW-HOW ARE CONFIDENTIAL AND PROPRIETARY AND REMAIN THE PROPERTY OF SPX CORPORATION. NO USE OR DISCLOSURE THEREOF MAY BE MADE WITHOUT THE WRITTEN PERMISSION OF SPX CORPORATION.

ISO 9001 CERTIFIED

LIGHTNIN®
AN SPX BRAND

GENERAL ARRANGEMENT

FOR: JOHN MEUNIER INC.

S.O. NO.: 1125100 LINE NO.: 000010
MIXER MODEL: EV5Q50 QUANTITY: 1
CUST. P.O. NO.: 015488 RATIO: 5:1
TAG NO.: NONE
SERIAL NO.: 1000002424756

DRAWING NO.: 1125100000010-A

REVISION:		BY:		DATE:	

CERTIFIED DRAWING

© LIGHTNIN 2009

BY:
DATE: 6/1/2009

WHEN ORDERING PARTS SPECIFY DRAWING NUMBER, PART NAME, ITEM NUMBER, UNIT MODEL, AND SERIAL NUMBER.

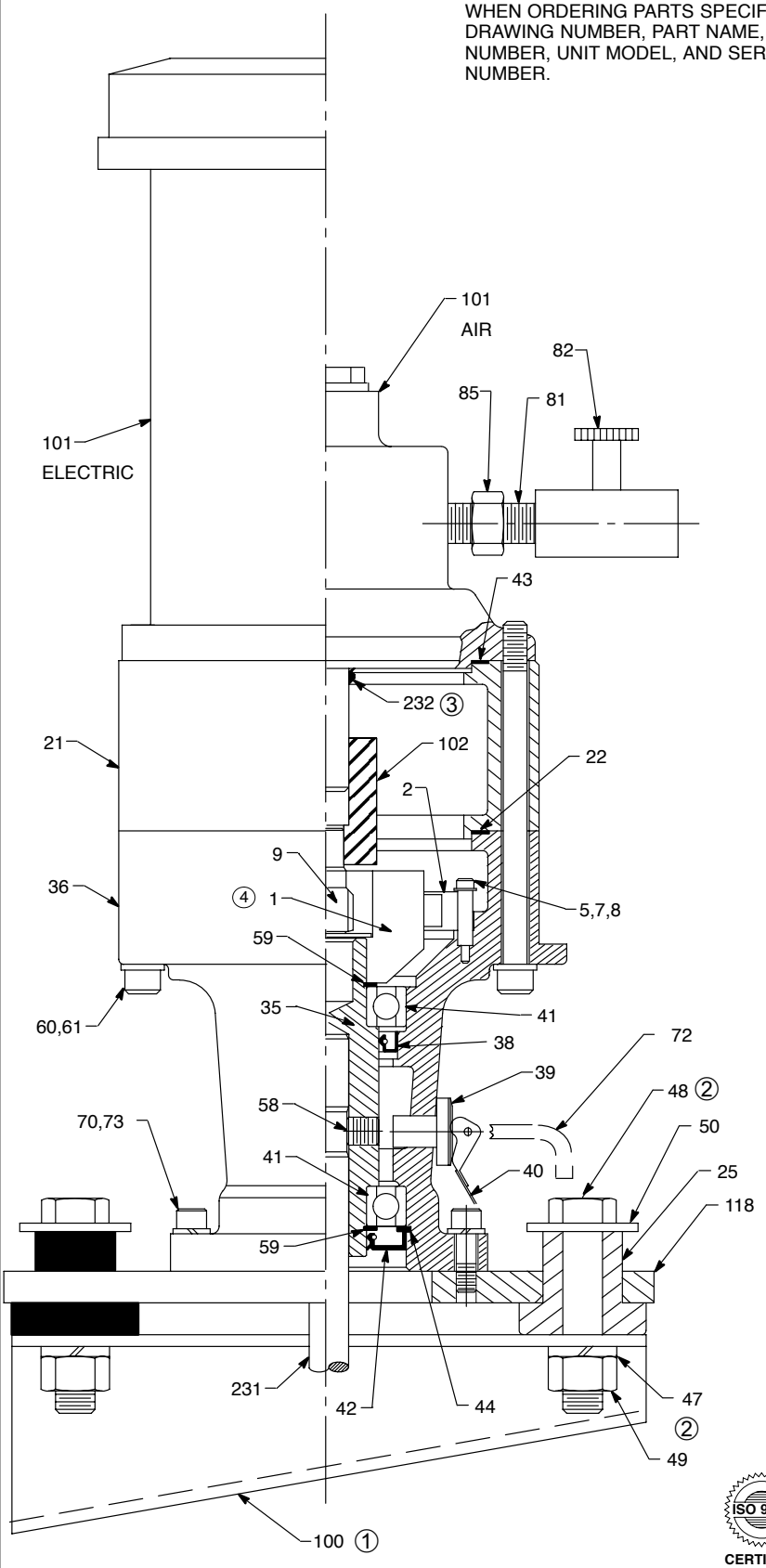

ITEM	PART NAME
1	GEAR CARRIER ASSEMBLY ④
2	RING GEAR
5	HOLLOW PIN(4)
7	SOC HD CAP SCREW(4)
8	FLATWASHER(4)
9	SUN GEAR
21	SPACER
22	GASKET
25	FLEXIBLE MOUNT(4)
35	DRIVE QUILL
36	HOUSING
38	OIL SEAL
39	EXPANSION PLUG
40	LANYARD
41	BALL BEARING(2)
42	OIL SEAL
43	GASKET
44	RETAINING RING
47	LOCKWASHER(4)
48	HEX HD CAP SCREW(4)
49	HEX NUT(4)
50	PLAIN WASHER(4)
58	HEX SOC SET SCREW(NYLOK)
59	RETAINING RING(2)
60	SOC HD CAP SCREW(4)
61	FLAT WASHER(4)
70	SOC HD CAP SCREW(4)
72	HEX WRENCH
73	LOCKWASHER(4)
81	CLOSE NIPPLE
82	NEEDLE VALVE
85	REDUCER ADAPTER
100	ANGLE RISER ASSEMBLY
101	MOTOR
102	COUPLING
118	MOUNTING PLATE
231	MIXER SHAFT
232	V–RING

NOTES:

① ANGLE RISER ASSEMBLY (100) FURNISHED ONLY FOR UNITS WITH ANGULAR OFFSET MOUNTING.

② ITEMS 47, 48, 49, AND 50 FURNISHED ONLY WITH ANGLE RISERS.

③ V–RING (232) REQUIRED ONLY WITH GEAR DRIVE/ELECTRIC MOTORS. NOT REQUIRED WITH AIR MOTORS OR DIRECT DRIVE UNITS.

④ GEAR CARRIER ASSEMBLY (CONSISTING OF ITEMS 9, 11, 12, 13, 14, 15 & 24) IS SOLD AS A SET. INDIVIDUAL ITEMS ARE NOT AVAILABLE.

ALL EQUIPMENT DESIGN AND APPLICATION DATA SHOWN HEREIN AND RELATED KNOW-HOW IS **CONFIDENTIAL** AND THE PROPERTY OF THE LIGHTNIN GROUP OF COMPANIES. NO USE OR DISCLOSURE THEREOF MAY BE MADE WITHOUT OUR WRITTEN PERMISSION.

LIGHTNIN ®
MIXERS AND AERATORS

ISO 9001 CERTIFIED

© LIGHTNIN 2001

ASSEMBLY DRAWING

EV "Q" SERIES MIXER GEAR DRIVE PLATE MOUNT

DRAWING NO. L–17637B

GENERAL INSTRUCTIONS
EV "Q" SERIES MIXERS
GEAR DRIVE

SECTION 1 – INITIAL INSPECTION, SHIPPING ARRANGEMENTS

1. 1 Check the shipping crates and your ***LIGHTNIN*** equipment for possible shipping damage. Report any damage immediately to the carrier and our factory.

1. 2 The mixer and impellers are packed together. The mixer shaft, if over 48 inches long, is packed in a separate container.

1. 3 Do not remove any protective coatings or wrappings until the mixer is ready to be put into service. If the mixer is to be stored, store only in an indoor, clean, dry location with controlled temperatures of 15° C to 40° C (59° F to 104° F). When gear drive models have been stored for more than one year, the gear lubricant should be replaced (see Lubrication instructions).

SECTION 2 – MIXER INSTALLATION

WARNING: EYE PROTECTION MUST BE WORN AT ALL TIMES WHILE SERVICING THIS MIXER.

2. 1 Refer to Installation drawing and Table 1 for:

a. Proper mixer mounting and location.

b. Proper minimum impeller off–bottom and relative spacing for dual impeller applications.

2. 2 Lock–out power before positioning mixer, and review safety instructions before starting mixer.

2. 3 This mixer can be mounted either vertically or angular offset with optional angle risers.

2. 4 BOLT TIGHTENING TORQUE RECOMMENDATIONS

a. Inadequately or improperly tightened hardware can loosen due to vibration or the reactions imposed by fluid forces. This can result in reduced equipment service life or damage and failure.

b. Recommended torques for tightening the bolts and screws on your ***LIGHTNIN*** mixer are listed with assembly instructions. Use of a torque wrench is recommended to ensure compliance with torque recommendations.

c. The amount of torque required to maintain a tight connection can vary considerably for bolts of the same size under different operating conditions. Variations such as basic joint design, compression factors, type and strength of base and hardware material, surface finish of mating parts and lubrication are only some of the factors that influence the tightness of bolted connections for given torque values.

d. All bolts should be coated with oil, grease, or an anti–seize compound whenever possible. The threads and bearing face of bolt heads and/or nuts should be lubricated.

e. **ALL BOLTS SHOULD BE RETIGHTENED AFTER THE UNIT HAS BEEN RUN UNDER LOAD FOR TWO (2) WEEKS, AND AT EACH SCHEDULED SHUT–DOWN THEREAFTER.**

f. Unless otherwise specified, it is recommended that metric commercial standard class 8.8 bolts and screws, and class 8 nuts be used for all bolted connections. For inch hardware use GR5.

© 1996

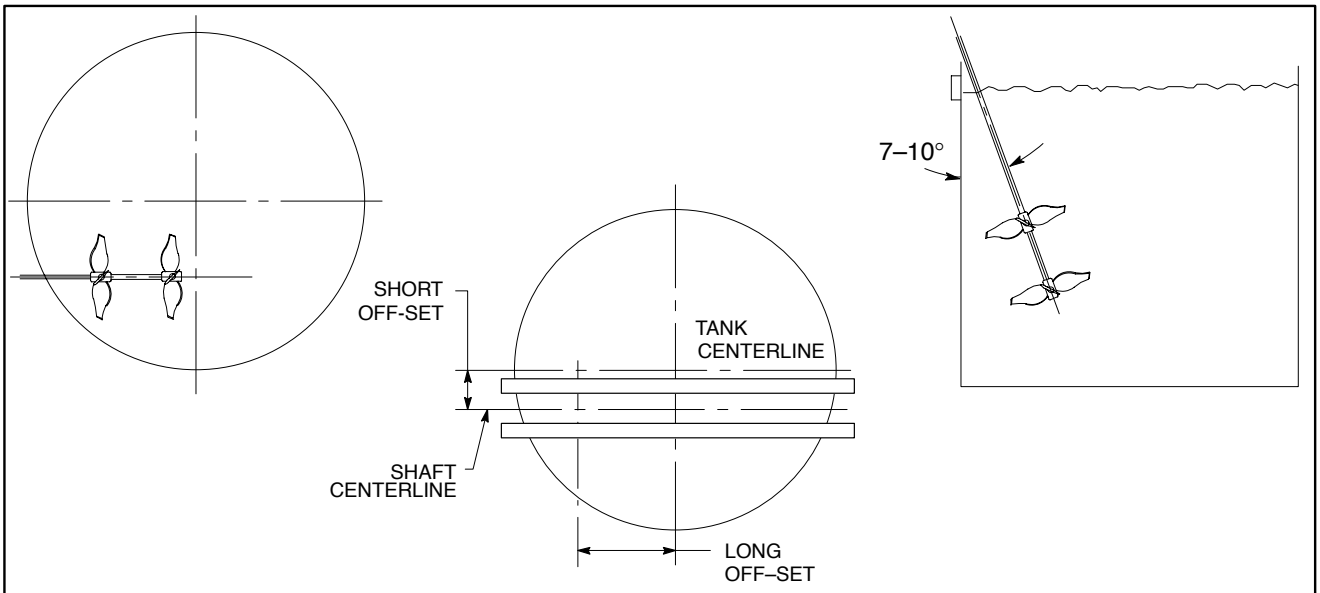

OPEN TANK UNITS

TANKS WITH AN OVERALL HGT. TO DIA. RATIO LESS THAN 1.5

10° Mounting Angle

TANK DIA.		OVERALL TANK HEIGHT		LONG OFF–SET		SHORT OFF–SET	
mm	inches	mm	inches	mm	inches	mm	inches
381	15	572	23	112	4.41	65	2.54
457	18	686	27	132	5.19	76	3.00
533	21	800	32	152	5.97	88	3.45
610	24	914	36	171	6.75	99	3.90
686	27	1029	41	191	7.53	110	4.35
762	30	1143	45	211	8.31	122	4.80
914	36	1372	54	251	9.88	145	5.70
1067	42	1600	63	291	11.44	168	6.60
1219	48	1829	72	330	13.00	191	7.51
1372	54	2057	81	370	14.57	214	8.41
1524	60	2286	90	410	16.13	237	9.31
1676	66	2515	99	449	17.69	259	10.21
1829	72	2743	108	489	19.25	282	11.12
1981	78	2972	117	529	20.82	305	12.02
2134	84	3200	126	568	22.38	328	12.92
2286	90	3429	135	608	23.94	351	13.82
2438	96	3658	144	648	25.51	374	14.73
2591	102	3886	153	688	27.07	397	15.63
2743	108	4115	162	727	28.63	420	16.53
2896	114	4343	171	767	30.19	443	17.43
3048	120	4572	180	807	31.76	466	18.33

TANKS WITH AN OVERALL HGT. TO DIA. RATIO BETWEEN 1.5 AND 2.0

7° Mounting Angle

TANK DIA.		OVERALL TANK HEIGHT		LONG OFF–SET		SHORT OFF–SET	
mm	inches	mm	inches	mm	inches	mm	inches
381	15	762	30	106	4.16	84	3.30
457	18	914	36	124	4.89	99	3.90
533	21	1067	42	143	5.62	114	4.50
610	24	1219	48	161	6.35	130	5.10
686	27	1372	54	180	7.08	145	5.70
762	30	1524	60	198	7.81	160	6.30
914	36	1829	72	236	9.27	191	7.51
1067	42	2134	84	273	10.74	221	8.71
1219	48	2438	96	310	12.20	252	9.91
1372	54	2743	108	347	13.66	282	11.12
1524	60	3048	120	384	15.12	313	12.32
1676	66	3353	132	421	16.59	343	13.52
1829	72	3658	144	458	18.05	374	14.73
1981	78	3962	156	496	19.51	405	15.93
2134	84	4267	168	533	20.97	435	17.13
2286	90	4572	180	570	22.44	466	18.33
2438	96	4877	192	607	23.90	496	19.54
2591	102	5182	204	644	25.36	527	20.74
2743	108	5486	216	681	26.82	557	21.94
2896	114	5791	228	718	28.29	588	23.15
3048	120	6096	240	756	29.75	618	24.35

© 1996

SECTION 3 – SHAFT AND IMPELLER INSTALLATION

3. 1 Install the impeller(s) on the mixer shaft (231) by tightening the set screws in the impeller hub. Refer to the installation drawing for recommended dual impeller spacing if two impellers are supplied. Refer to Impeller Assembly drawing for general impeller orientation.

3. 2 Clean the mixer shaft (231) end and drive quill (35) thoroughly.

3. 3 Orient the drive quill so that the set screw (58) aligns with the hole in the bearing housing (36). Align quill shaft by inserting mixer shaft (231) into quill and rotate quill manually.

3. 4 Grasp mixer shaft approximately 20 inches below the shaft top and insert the mixer shaft completely into the drive quill, until it contacts the top of the quill bore. Tighten set screw (58).

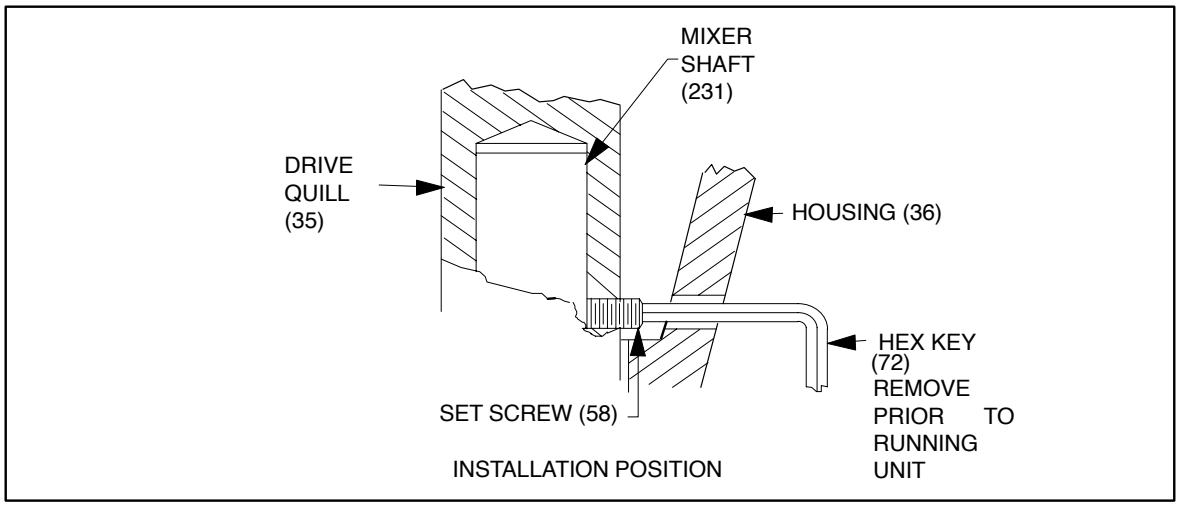

Figure 1 – Shaft Installation

3. 5 DRIVE QUILL ORIENTATION

a. NORMAL LIGHT CONDITIONS – Rotate the drive quill until the set screw (58) aligns with the access hole in the housing (36). Rotate drive quill by inserting lower shaft into drive quill and rotating by hand.

b. LOW LIGHT CONDITIONS – If the mixer shaft is being installed in low light conditions, the drive quill can be oriented by feel. Insert lower shaft into drive quill and rotate the drive quill (35) by hand until the set screw (58) can be felt with the hex wrench through the access opening.

3. 6 With the drive quill oriented, insert the 7/32" hex key (72) provided into the housing opening and tighten the set screw (58) to (15–30 ft–lbs). **DO NOT IMPACT THE WRENCH OR USE AN EXTENSION.**

3. 7 Check for free movement of all components by rotating the mixer shaft.

SECTION 4 – SHAFT REMOVAL

CAUTION: THE UPPER PORTION OF THE MIXER SHAFT (231) MAY BE HOT TO THE TOUCH. ONCE REMOVED FROM THE DRIVE QUILL (35), DO NOT GRASP THE UPPER 20" OF THE MIXER SHAFT.

It is recommended that the mixer be removed from the tank before shaft or shaft and impeller are removed.

a. Make sure all electrical power is disconnected.

b. Grasp impeller by hand (or shaft with a strap wrench) and rotate mixer shaft (231) until the drive quill set screw (58) aligns with the access hole in the housing (36). See Caution above.

c. With hex key (72) loosen set screw (58) and back out two (2) turns. See Figure 2.

d. Remove mixer shaft from quill. See Caution above.

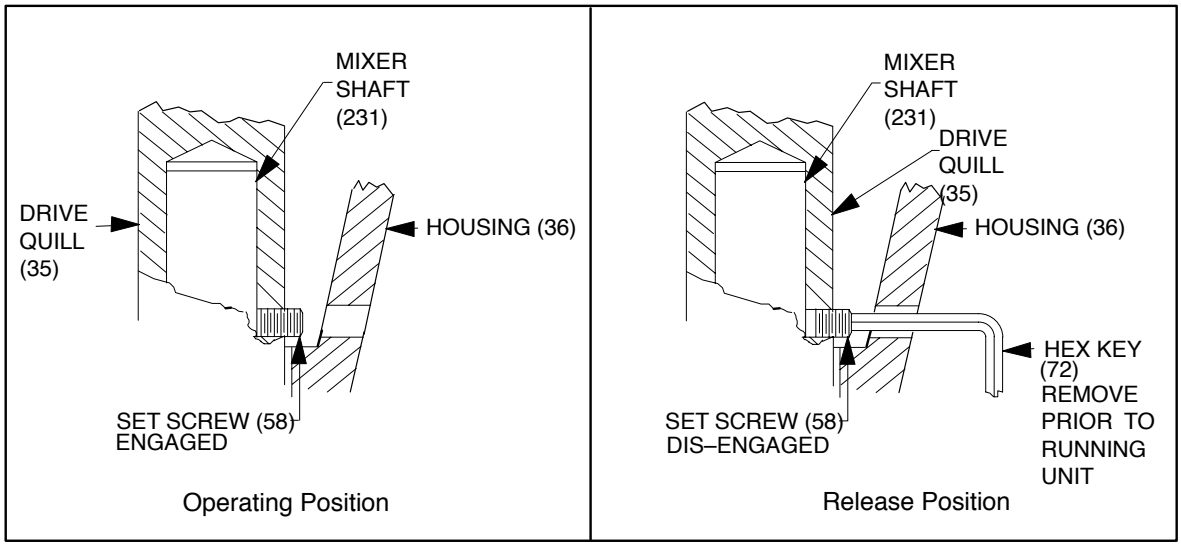

Figure 2 – Shaft Removal

SECTION 5 – MIXER OPERATION

5. 1 This ***LIGHTNIN*** mixer is designed for continuous operation and normally needs no additional maintenance.

5. 2 Variable speed air drive units should not be operated at the lower shafts natural frequency. At this speed the lower shaft will have excessive runout (± 2" T.I.R.) at the end of the shaft while operating in air. Vary the speed ± 5% to avoid this speed range.

CAUTION: IT IS NOT RECOMMENDED TO OPERATE THE MIXER WITH EXTREME VORTEXING OR SURGING OF THE LIQUID BEING MIXED.

5. 3 At the end of two weeks service, check all hardware for tightness.

WARNING: AT THE END OF THE MIXING CYCLE, IT IS GOOD PRACTICE TO TURN OFF THE MIXER BEFORE THE TANK HAS BEEN DRAINED TO A LEVEL WHICH WILL RESULT IN EXCESSIVE SPLASHING. THIS MAY RESULT IN SHAFT DAMAGE.

SECTION 6 – LUBRICATION

6. 1 Your ***LIGHTNIN*** mixer has been lubricated at the factory with the correct type and amount of high quality lubricants. Lubricant cleanliness is protected by properly designed closures.

6. 2 All mixer bearings are the sealed type and are pre–packed with lubricant. Relubrication of these bearings is not necessary.

6. 3 The gear chamber of this ***LIGHTNIN*** mixer has been factory filled with a grease suitable for ambient temperature ranges of –20° C to +50° C (–4° F to +122° F). Under normal operating conditions, this lubricant need not be changed until the unit has been dismantled for some reason. Refer to Table 2 for lubricant specifications.

6. 4 Under adverse operating conditions, periodic changes of lubricant may be necessary. Adverse conditions are defined as operating in very humid, dust laden, chemical atmospheres, or where wide variations in ambient temperatures occurs. Such adverse conditions can lead to deterioration of lubricant compounds and additives and it is recommended that the condition of the grease be checked within six months of start–up.

Refer to Section 7 for instructions on disassembling the gear unit.

NOTE: THE BEARING HOUSING SHOULD BE FILLED 1/2 INCH FROM THE TOP OF THE BEARING HOUSING. ALL GASKETS SHOULD BE CHECKED FOR INTEGRITY AND REPLACED IF THEY ARE DEFORMED, CUT OR DETERIORATED.

Recommended Grease		Gear Housing Capacity
Manufacturer	Products	Pounds
MOBIL OIL CO.	MOBILITH SHC 1500	.8

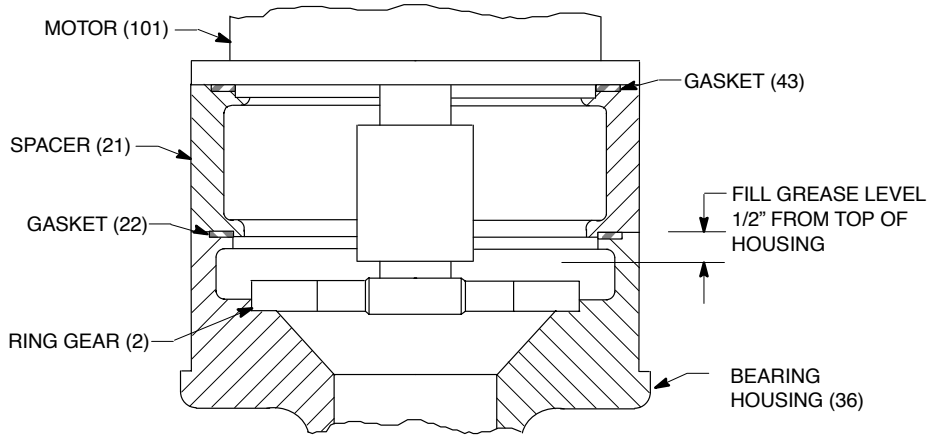

Table 2 – Lubricant Recommendations & Capacity

6. 5 CHANGING GEAR LUBRICANT

a. Remove all old grease from the gear chamber and wipe clean.

b. Pack the chamber with fresh grease. See Table 2. Paddle the grease to fill voids and remove air pockets, rotating the shaft and shaking the housing while paddling.

c. Check for free movement of all components by rotating the drive shaft.

SECTION 7 – DISASSEMBLY INSTRUCTIONS

WARNING: DISCONNECT MOTOR LEADS OR OTHERWISE LOCK–OUT POWER SUPPLY BEFORE SERVICING THE MIXER. EYE PROTECTION MUST BE WORN.

7. 1 This mixer is precision manufactured and assembled to provide long trouble free service when properly maintained. If it becomes necessary to disassemble the unit, careful precise reassembly is necessary.

7. 2 Refer to the assembly drawings for location of parts.

7. 3 Equipment that will be required to service the mixer, in addition to standard mechanics tools is, a rubber mallet, retaining ring pliers, metric and ”inch” allen wrenches, arbor press and torque wrench.

© 1996

7. 4 Disassemble mixer on a clean work surface to prevent dirt from entering the housing.

7. 5 It is recommended that oil seals and gaskets be replaced when the mixer is disassembled.

7. 6 SEAL REPLACEMENT

Inspect oil seals and gaskets for nicks, gouges and deformities. When replacing seals:

a. Coat the lips of seals with bearing grease.

b. Install oil seal with lip facing up as shown in Figure 3.

c. Coat the section of shaft sealing surface with oil.

7. 7 BEARING REPLACEMENT

a. Remove old bearings with either a puller or an arbor press.

b. Press new bearings on shaft. Be careful to apply load only to the inner race.

c. Make sure the bearings are tightly seated against the shaft or housing shoulders with no clearance.

7. 8 SHAFT REMOVAL

Loosen set screw (58) and remove mixer shaft (231) as outlined in Section 4.

7. 9 MOTOR REMOVAL

a. Remove the mixer from the tank.

b. Set the mixer upright on a clean work surface.

c. Remove the (4) socket head cap screws (60) holding the bearing housing (36) and spacer (21) to the motor (101).

d. Lift the motor (101), motor coupling assembly (102) and sun gear (9) (Figure 4) off the spacer (21). It may be necessary to tap the bearing housing (36) gently with a rubber mallet to get the bearing housing to separate from the spacer and motor.

e. Remove the sun gear (9) from the motor coupling (102) and examine for wear. If ”reuseable” replace sun gear in gear mesh.

f. Remove the drive coupling (102) from the motor if necessary.

7. 10 BEARING HOUSING DISASSEMBLY

a. Remove grease from gear chamber of bearing housing (36).

b. Remove sun gear (9) and gear carrier assembly (1) as an assembly. Tape these parts together to prevent the sun gear from accidental removal. Remove any remaining old lubricant.

c. Remove hardware (7,8) and remove ring gear (2) from bearing housing (36).

d. Remove upper retaining ring (59).

e. Place housing motor end down and remove oil seal (42) from drive quill (35). This seal will be damaged and must be replaced.

f. Remove lower retaining ring (44).

g. Place the bearing housing upright in a press, and press out drive quill (35) and lower bearing (41).

h. Remove lower retaining ring (59) and bearing (41) from the drive quill (35).

i. Remove upper bearing (41) and oil seal (38) from bearing housing (36).

j. Inspect bearing (41) for excessive wear. Replace if necessary.

SECTION 8 – ASSEMBLY INSTRUCTIONS

8. 1 QUILL ASSEMBLY

Insert the set screw (58) into the drive quill (35) until it is flush with the bore of the quill.

8. 2 BEARING HOUSING ASSEMBLY

a. Press the lower bearing (41) onto the drive quill (35) bearing journal. The bearing must seat against the drive quill shaft shoulder with no visible gap.

b. Install the lower external retaining ring (59).

c. Press the drive quill assembly into the bearing housing (36) from the bottom until the bearing seats on the housing shoulder.

d. Install lower retaining ring (44).

e. Press oil seal (42) in place as shown in Figure 3. Make sure the oil seal has the internal spring removed. This is a non–lubricated seal, and will run hot and have a shortened life if the spring is not removed.

f. Turn the bearing housing over, support the assembly on the quill shaft (35) and install the upper bearing (41) by pressing it into the bearing housing and onto the quill shaft.

g. Install the upper retaining ring (59).

h. Support the bearing housing assembly in an upright position and press the drive quill downward until the bearing (41) shoulders on the retaining ring (59). This will relieve any locked in axial load on the bearing created during assembly.

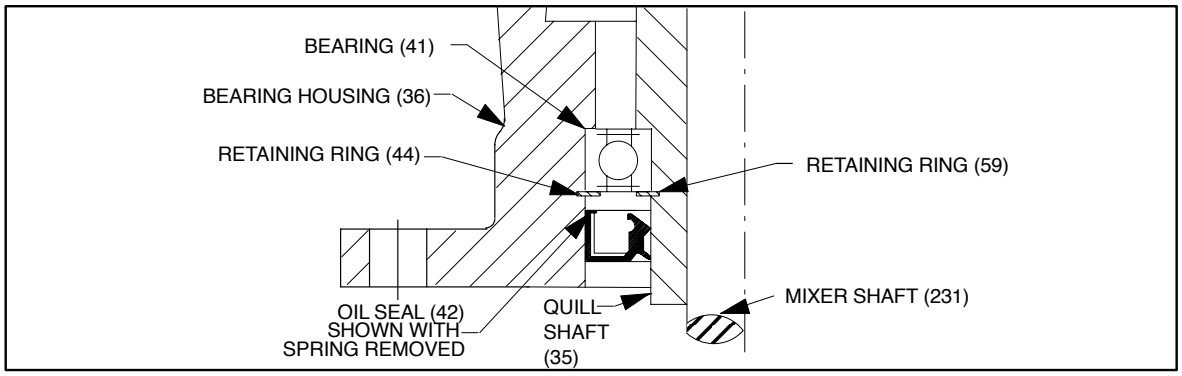

Figure 3 – Oil Seal Installation

i. **PACK THE GEAR CARRIER** (1) with grease and rotate the gears several times to distribute the grease to the needle bearings. Refer to Section 6 for lubricant recommendations.

j. Align the flats on the inside of the gear carrier (1) with the flats on the drive quill (35). Place the gear carrier and sun gear (9) assembly onto the drive quill.

k. Install the ring gear (2), hollow pins (5), and hardware (7,8) in bearing housing (36).

l. Install gasket (22) in its groove on the bearing housing, and gasket (43) in its groove in the spacer.

m. Remove the sun gear (9) from the gear carrier (1).

n. Replace v–ring (232) on motor shaft (if removed). Press v–ring on shaft until lips contact face of motor. V–rings are required only on electric motors used on gear drive models. V–rings are not required on direct drive models or on air motors. Refer to Figure 4.

o. Place the drive coupling (102) on the motor shaft if necessary.

p. Install the sun gear (9) into the drive coupling (102) until it shoulders against the drive coupling. Tighten the two set screws to 7 ft–lbs.

© 1996

q. Set the elevation of the sun gear to the dimension shown in Figure 4 and tighten the remaining two coupling set screws to 7 ft–lbs.

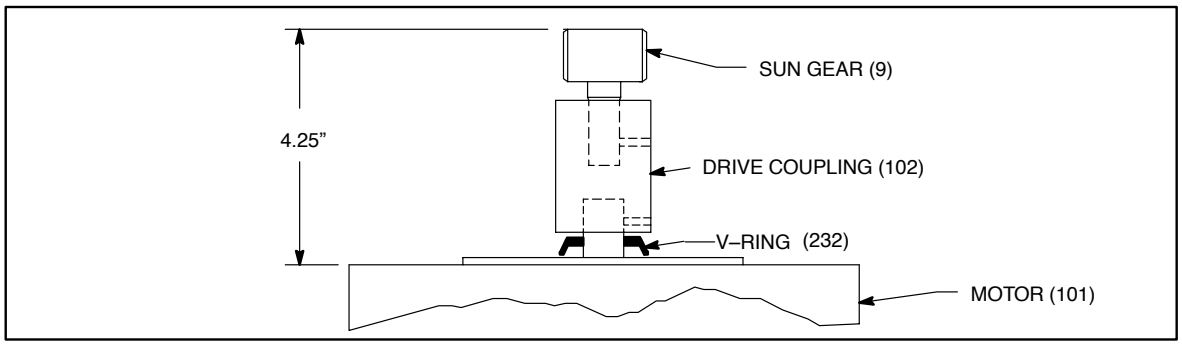

Figure 4 – Sun Gear Placement

r. Fill the bearing housing with lubricant to approximately 1/2” from the top. Refer to Section 6 for lubricant recommendations.

8. 3 FINAL ASSEMBLY (REFER TO ASSEMBLY DRAWING)

a. Bolt the bearing housing (36) and spacer (21) to the motor (101), using socket head cap screws (60) and washers (61). Alternately tighten the hardware to 9 ft–lbs to ensure that all components are drawn evenly together.

b. Install mixer shaft (231) as outlined in Section 3.

SECTION 9 – AIR MOTOR REQUIREMENTS

Be sure your compressor has capacity for both pressure and the proper cubic feet per minute air displacement. Wet air, and low pressure will cause sticking of the motor, requiring hand starting. It is important to use an air filter and moisture trap near the motor for removal of foreign matter. Maximum recommended operating pressure is 100 P.S.I.

AIR PRESSURE / AIR CONSUMPTION GUIDE
FOR AIR MOTOR DRIVEN MIXER
(AIR MOTOR OPERATING AT 1800 RPM)

			PRESSURE CONSUMPTION REQUIRED	
H.P.	GAST MOTOR #	SHAFT RPM	* (PSIG)	** (CFM FREE AIR)
1/3	#2	1800	60	15
1/3	#2	360	60	15
1	#4	1800	85	30
1	#4	360	85	30

* Live pressure should be approximately 1–1/2 times the operating pressure of the air motor. The full line pressure will then be available for overloads and startup.

** CFM free air refers to air at atmospheric conditions measured at the inlet of the compressor.

Table 3

SECTION 10 – AIR MOTOR LUBRICATION

10. 1 Use only a high detergent lubricant of the recommended viscosity. Recommended oils are shown in Table 4.

10. 2 For continuous duty or high speed operation, it is recommended that an automatic lubricating device in the air line be provided to feed 1 to 3 drops per minute to the motor. If required request optional air–line lubricator (part # 151030psp).

10. 3 For manual oiling, remove the oil cap at the top of the motor, and add one squirt of oil at the end of each 8 hours of operation.

RECOMMENDED LUBRICANT	AMBIENT TEMPERATURE	GRADE OF OIL
GAST AD 220 (SAE #10) OR A HIGH DETERGENT AUTOMOTIVE ENGINE OIL DESIGNED FOR ANY ONE OR MORE OF THE FOLLOWING API SERVICE RATINGS SB, SC, SD, SE, CB, CC, CD.	BELOW 32° F	DILUTE SAE #10 OIL WITH 25% KEROSENE
	32° F TO 100° F	SAE #10 OIL
A HIGH DETERGENT AUTOMOTIVE ENGINE OIL DESIGNATED FOR ANY ONE OR MORE OF THE FOLLOWING API SERVICE RATINGS – SB, SC, CD, CE, CB, CC, CD.	101° F TO 200° F	SAE #20 OIL

Table 4 – Motor Lubrication

SECTION 11 – FLEX MOUNT REPLACEMENT

11. 1 The flex mounts can be removed with a long bolt and two pieces of tubing as shown in Figure 5.

11. 2 Tighten the hex nut until the flex mount is free of the housing.

11. 3 To install the new flex mounts use a long bolt and a piece of tubing as shown in Figure 5.

11. 4 Lubricate the flex mount with a natural rubber lubricant or liquid hand soap.

11. 5 Tighten the hex nut until the flex mount is tight with mounting plate (118).

11. 6 Replace all mounts if one is replaced.

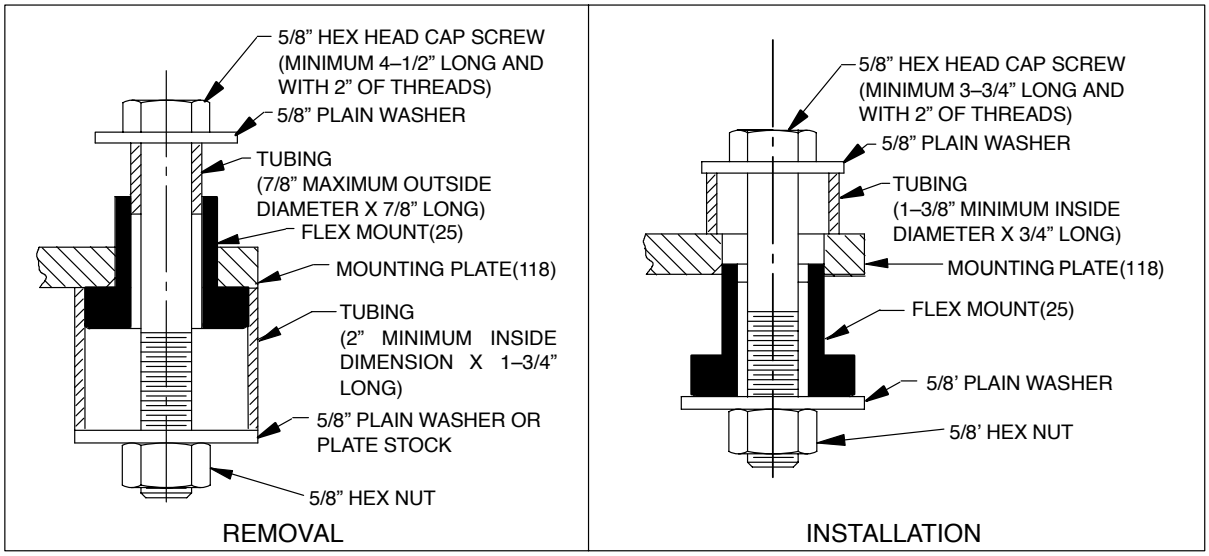

Figure 5 – Flex Mount Removal and Installation

© 1996

ELECTRIC MOTOR INSTRUCTIONS

SECTION 1 - INITIAL INSPECTION

1.1 Care is taken at the factory to assure that the motor arrives at its destination in first class condition. If there is evidence of rough handling or damage in shipment, file a claim at once with the carrier and notify our factory.

Examine the outside of the motor carefully for damage, with particular attention to the conduit box, fans and covers. Check nameplate for correct speed, kilowatt, voltage, hertz and phase for conformance with power supply. See Section 1.3 for warning on explosion-proof motors.

1.2 GENERAL DATA:

a .Single phase totally enclosed motors are wired at our factory for correct rotation.

b .All three phase and explosion-proof motors must be field wired for proper rotation. If rotation does not agree with nameplate, reverse any two line leads.

c .Dual voltage motors must be wired for the desired voltage. Refer to the connection diagrams provided on the motor nameplate, inside the conduit box cover or in this manual.

d .Refer to Section 2 for motor maintenance and storage instructions.

1.3 WARNING

• EXPLOSION-PROOF MOTORS - These motors are constructed to comply with the U.L. Label Service Procedure manual. When repairing and reassembling a motor that has an Underwriter's Label, it is imperative that the unit be reinspected and;

a .All original fits and tolerances must be maintained

b .All plugs and hardware to be securely fastened

c .Any part replacements, including hardware, be accurate duplicates of the originals

REPAIR WORK ON EXPLOSION-PROOF MOTORS CAN ONLY BE DONE BY THE ORIGINAL MANUFACTURER. VIOLATIONS OF ANY OF THE ABOVE ITEMS WILL INVALIDATE THE SIGNIFICANCE OF THE U.L. LABEL.

- **EXPLOSION-PROOF MOTORS ARE EQUIPPED WITH AN INTERNAL CIRCUIT INTERRUPTING DEVICE WHICH TRIPS WHEN OVER HEATING OCCURS. THIS THERMAL PROTECTION CIRCUIT WILL RESET AUTOMATICALLY WHEN UNIT COOLS.**
- If the thermal protector continues to trip, some abnormal condition exists. This condition must be corrected before motor will operate normally.
- **ALWAYS DISCONNECT POWER LINE BEFORE SERVICING ANY PART OF THE MIXER**. Unexpected motor start-up may occur after the thermal protection circuit trips.

1.4 After unpacking and inspection to see that all parts are in good condition, turn the shaft by hand to be sure there are no obstructions to free rotation. Equipment which has been in storage should be tested prior to being put into service.

a .It is best to check the insulation resistance of the stator winding with a megohmeter. If resistance is lower than one megaohm, consult ***LIGHTNIN***®.

b .Motors are shipped from the factory with sealed, shielded bearings properly packed with grease and ready to operate. Bearings are not regreaseable.

1.5 WIRING - Examine the nameplate data to see that it agrees with the power circuit to which the motor is to be connected. The motor is guaranteed to operate successfully with frequency not more than 5% and voltage not more than 10% above or below the nameplate data, or combined variation of voltage and frequency of not more than 10% above or below nameplate data. Efficiency, power factor and current may vary from nameplate data.

1.6 Connect the motor leads to a power source that matches the line voltage and wiring diagram specified on the motor nameplate.

1.7 Check impeller shaft rotation by jogging the motor until it is determined that rotation is correct.

1.8 **CAUTION**

Repeated trial starts can overheat the motor (particularly for across-the-line starting). If repeated trial starts are made, allow sufficient time between trials to permit heat to dissipate from the windings or rotor to prevent overheating. Starting currents are several times running currents, and heating varies as the square of the current. Do not exceed 12 starts per hour.

1.9 **WARNING**

The frames and other metal exteriors of motors should be grounded to limit their potential to ground in the event of accidental connection or contact between live electrical parts and the metal exteriors. All motors should be grounded through the conduit box. Explosion-proof motors have an integral ground lead for grounding.

1.10 **WARNING**

Before starting motor, remove all unused shaft keys and loose rotating parts to prevent them from flying off.

1.11 Start motor and operate at minimum load prior to filling the tank or basin. Look for any unusual condition.

The motor should run smoothly with little noise. If the motor should fail to start and produces a decided hum, it may be that the load is too great for the motor or that it has been connected improperly. Shut down immediately and investigate for trouble.

SECTION 2 - MOTOR MAINTENANCE AND STORAGE

Electric motors or other prime movers are not prepared by ***LIGHTNIN***® for indoor storage beyond 12 months in a dry ambient atmosphere with controlled temperatures, or 6 months in a dry ambient atmosphere with no temperature control. OUTDOOR STORAGE OF ELECTRIC MOTORS IS NOT RECOMMENDED BY ANY MOTOR MANUFACTURER. For information on storage periods beyond those shown, consult ***LIGHTNIN***®.

2.1 To insure continued reliable operation of electric motors, the following basic rule applies: **KEEP THE MOTOR CLEAN AND DRY.** Motors should be inspected, and output shaft rotated, at a minimum of 6 month intervals with increased frequency as needed depending upon the type of motor and the service.

2.2 Terminal connections and assembly hardware may loosen from vibration during service and should be tightened.

2.3 Insulation resistance should be checked at operative temperature and humidity conditions to determine possible deterioration of insulation due to excessive moisture or extremes in operating environment. If wide variations are detected, motors should be reconditioned.

2.4 LUBRICATION - The ball bearing has deep grooved, double shielded sealed bearings with sufficient lubricant packed into the bearings by the manufacturer for “life lubrication”. The initial lubricant is supplemented by a supply packed into larger reservoirs in the end shield at time of assembly. No grease fittings are provided, as the initial lubrication is adequate for up to 10 years of operation under normal conditions.

2.5 **STORAGE REQUIREMENTS FOR MOTORS –** These extended storage requirements must be followed to allow the submission of a valid warranty claim.

a .The motors, if not mounted, are to be stored in the original containers in a clean, dry, protected warehouse.

b .The storage area is to be free from any vibration and from extremes in temperature.

c .Windings to be megged at the time equipment is put in storage. At the time of removal from storage, the resistance reading must not have dropped more than 50% from the initial reading. Any drop below this point, consult ***LIGHTNIN***®.

d .All external parts and motors subjected to corrosion should be protected by a corrosive resistant coating.

MIXER PARTS **UNIT SIZE: EV "Q"** **GEAR DRIVE UNIT**

For service and repair, call 1-888-MIX BEST (1-888-649-2378)

ITEM NO.	IDENT. CODE ♦		DESCRIPTION	QTY.	PART NO.	PRICE (EACH)	SHIPMENT (WEEKS)
NOTE: See mixer nameplate or spec. sheet for unit size & ratio. See Assembly Drawing for item no. identifier							
			DRAWING: L-17637				
1			GEAR CARRIER ASSEMBLY - 5:1 RATIO (Includes item 9)	1	869616PSP		
			GEAR CARRIER ASSEMBLY - 6:1 RATIO (Includes item 9)		869617PSP		
2			RING GEAR	1	290901PSP		
5			HOLLOW PIN	4	291612STL		
7			SOCKET HEAD CAP SCREW	4	291556PSP		
8			FLAT WASHER	4	291613STL		
21			SPACER	1	271751ALF		
22*			GASKET	1	271795PSP		
25*			FLEX MOUNT	4	138317PSP		
35			DRIVE QUILL	1	271781316		
36			HOUSING	1	271853ALF		
38*			OIL SEAL	1	290706PSP		
39*			EXPANSION PLUG	1	271868PSP		
40			LANYARD	1	271869PSP		
41*			BALL BEARING	2	290151PSP		
42*			OIL SEAL	1	290701PSP		
43*			GASKET	1	271795PSP		
44*			RETAINING RING	1	270822PSP		
47			LOCKWASHER	4	112207CPS		
48			HEX HEAD CAP SCREW	4	100159CPS		
49			HEX NUT	4	107010CPS		
50			WASHER	4	112012CPS		
58			SET SCREW - NYLOK	1	271757STL		
59*			RETAINING RING	2	291592PSP		
60			SOCKET HEAD CAP SCREW	4	271758CPS		
61			FLAT WASHER	4	112005316		
70			SOCKET HEAD CAP SCREW	4	102506316		
72			HEX WRENCH	1	127210BPF		
73			LOCKWASHER	4	112204316		
81		A	CLOSE NIPPLE	1	122022BRS		

♦ **IDENTITY CODE:**

A = Air Motor

Blank code denotes common parts

* Recommended spare parts

MIXER PARTS **UNIT SIZE: EV "Q"** **GEAR DRIVE UNIT**

For service and repair, call 1-888-MIX BEST (1-888-649-2378)

ITEM NO.	IDENT. CODE ♦		DESCRIPTION		QTY.	PART NO.	PRICE (EACH)	SHIPMENT (WEEKS)
82		A	NEEDLE VALVE		1	122911BRS		
85		A	REDUCER ADAPTER		1	122312BRS		
100			ANGLE RISER ASSEMBLY (CONSISTING OF		1	802062PSP		
			LEFT HAND AND RIGHT HAND ANGLE RISERS, AND					
			ITEMS 47, 48, 49 & 50)					
			ANGLE RISER (LEFT HAND)		1	130015STL		
			ANGLE RISER (RIGHT HAND)		1	130016STL		
101			MOTOR		Contact ***LIGHTNIN*** Representative			
102			COUPLING		1	292248PSP		
118			MOUNTING PLATE		1	271855STL		
231			MIXER SHAFT		Contact ***LIGHTNIN*** Representative			
232*			V-RING		Contact ***LIGHTNIN*** Representative			
			LUBRICANT	STANDARD - 2 LB CAN (1)	1	123620PSP		
				FOOD GRADE - 14 OZ TUBE	1	275255PSP		

♦ **IDENTITY CODE:**

A = Air Motor

1) = Ambient temperature 50 - 200 Deg. F

Blank code denotes common parts

* Recommended spare parts

FOR AN UP TO DATE REPRESENTATIVE LIST

PLEASE GO TO: www.lightnin-mixers.com

-OR-

CALL: 1-888-649-2378

1-888-MIX-BEST

©*LIGHTNIN 2005*

LIGHTNIN

REPAIR & SERVICE GUIDE

LIGHTNIN Process Equipment Services (LPES): The fastest route to uptime.

Expertise: LPES technicians are the backbone of our dedicated service organization. They're uniquely qualified to keep your LIGHTNIN mixers running right.

Lightnin Certified Technicians: All LPES technicians are certified via training courses to ensure that the work they do meets the highest standards for consistency and reliability.

Genuine LIGHTNIN Parts: All LPES repairs follow original design specs and use only factory-authorized replacement parts.

Full LIGHTNIN Factory Warranty: We're so confident we'll do the job right that all LPES repair and service work is covered by a full factory warranty. What we repair, we guarantee – 100%.

Repair Services: *LIGHTNIN provides quick, reliable repair services – using only certified technicians and factory-authorized replacement parts – on gearboxes, mechanical seals (seal cartridge and seal assembly), steady bearings, machine assemblies, impellers, shafts and all portable units. This service can be provided either at your site or at a LIGHTNIN Service Center location. All work is backed by LIGHTNIN's full warranty on all parts and service.*

Exchange Services: *By eliminating repair time, LIGHTNIN Exchange Services offer the fastest way to get up and running when a breakdown occurs. LPES keeps selected speed reducers, portable units and mixer subassemblies in stock – and available for immediate exchange – at regional service centers. Simply call and we will configure the appropriate assembly and ship it to you within 24 hours. Then send the damaged assembly back to us within 30 days – to ensure you receive a discounted price.*

Equipment Upgrade Services: *Preventive maintenance is your best defense against costly unplanned downtime and repairs associated with old or obsolete equipment. The full range of LPES upgrade services give you a convenient and cost-efficient way to address problems before they happen by converting older equipment to the latest, most reliable LIGHTNIN designs.*

Additional LPES Services: *In addition to minimizing downtime and repair costs when equipment failure occurs, LPES offers a comprehensive range of services for maximizing productivity through every stage of the equipment life cycle.*

- **Installation and Start-up**
- **Maintenance and Repair**
- **Asset Management**

LIGHTNIN Process Equipment Services Warranty

When repairs to your LIGHTNIN mixer are needed, we guarantee the results for one full year. This exclusive warranty covers all parts and labor. Talk to your LIGHTNIN sales representative for more information.

Call:

The LIGHTNIN Experts

When your need is urgent and after normal business hours call our 24-hour response team hotline at 1-888-MIX-BEST (U.S. and Canada). Your request will be promptly processed and directed to your nearest LPES team member. For more information visit our website at: www.lightninmixers.com.

Factory Service Center Locations

Chicago, Illinois
Houston, Texas
Mulberry, Florida
Reading, Pennsylvania
Rochester, New York
San Francisco, California
Wytheville, Virginia

Authorized Service Center Locations

Baton Rouge, Louisiana
Concord, Ontario, Canada
East Hanover, New Jersey
Macon, Pooler, Roswell, Georgia

DOSING PUMP

LEFT BLANK

seepex.com

seepex
Inc.
511 Speedway Drive
Enon, Ohio 45323
Tel +1 (937) 864-71 50
Fax+1 (937) 864-71 57
sales@seepex.net
www.seepex.com

Operating and Maintenance Instructions
Progressive Cavity Pump

range | size | pressure stage | 17.01.2006

MD

commission-No.

Job#

2109552

This operating and maintenance instruction includes important safety information and instructions for installation, commissioning, operating and maintenance of the seepex machinery. It is essential therefore, that the responsible specialist refers to it before starting any work on the machinery as well as prior to commissioning. Futhermore, this instruction must always be available on site.

seepex.com

Offer No. 5357/0556/09-MA

John Meunier Inc/Veolia Water Water Treatment, Saint-Laurent

05/11/2009 **Item 1**

qty. 1 **seepex progressive cavity pump**
MD 006-12 / A6-A7-A7-R0-GA-X
X= 0802, 11R0, 20A7

Application data

Pumped liquid	Sodium Hydroxide
Viscosity	78 cPs
Solids content	no advice
Size of solids	no advice
Spec. gravity	1.27 kg/L
Temperature	32 to 113F
pH value	no advice
Composition/Concentr.	25%
Kind of operation	8h/day
Site of installation	indoors

Performance data

	Flow rate	Pressure	Speed	
	3.3 l/h	100 psi	27 rpm	min
	50 l/h	100 psi	307 rpm	max
Starting torque	3 lb.ft			
Max. power absorbed	0.03 hp			
NPSH required	6.73 ft			
Suction pressure	ass. flooded			
Discharge pressure	100 psi			
Differential pressure	100 psi			

Materials and executions

Installation	horizontal
Rotation	counter clockwise (left)
Lantern / drive casing	lantern, standard
Lantern / drive casing material	1.0037 (St 37-2) / A 283 C
Wetted casing parts	standard
Wetted casing parts material	1.4408 / A 743 CF8M
Joint execution	encapsulated (closed) joints with universal joint sleeve
Joints material	standard
Universal joint sleeve material	EPDM - ethylene-propylene diene
Coupling rod	standard
Coupling rod material	1.6582 encapsulated
Rotor	standard
Rotor material	1.4571 / 316 TI SS
Rotor coating	without
Stator	standard
Stator material	EPDM - ethylene-propylene-diene
Shaft sealing	mechanical seal, single acting elastomer bellows, either sense of rotation, unbalanced
Shaft seal casing material	1.4571 / 316 TI SS

Offer No. 5357/0556/09-MA

John Meunier Inc/Veolia Water Water Treatment, Saint-Laurent

Shaft seal material	rotating seal face: SiC solid stationary seal face: SiC solid elastomers: EPDM spring: 1.4571 / 316 TI SS metal parts: 1.4571 / 316 TI SS
Plug-in shaft	standard
Plug-in shaft material	1.4571 / 316 TI SS
Pump screw fitting	bolting entirely in stainless steel inclusive tie rods
Painting	standard RAL 5013 (blue)

Connections

Branch / hopper position	branch / hopper position 1
Casing parts connections	Suction connection NPT thread: NPT 1" discharge connection NPT thread: NPT 1/2"

Drive

Type	**gear box for mounting of a NEMA motor**		
Manufacturer	Nord		
Model	SK02F-56C		
Design	B3/B5		
Gear ratio	i = 6.89		
	Nom.	**Min.**	**Max.**
Output speed (rpm)	261	27	307
Motor speed (rpm)	1800	186	2115
Frequency (Hz)	60	6	71

Electr. motor

Type	**NEMA Motor**
Manufacturer	Baldor
Model	VEM3581T-5
Rated output	1 hp
Rated speed	1800 rpm
Starting	direct on frequency inverter
Voltage	3 x 575 VAC
Frequency	60 Hz Premium Efficient Super-E Motor 20:1 Variable Speed

Dry-running protection device

Dry running protection device	TSE 115AC consisting of: - sensor sleeve fitted to the stator of the pump with installed NTC temperature sensor in IP55 connection head inst. in pump stator - TSE control device for installation in a control panel - 110-115V / 50-60 Hz

<< Back to curves main

12 Pumps

003–12 (low)
003–12 (high)
006–12 (low)
006–12 (high)
012–12 (low)
012–12
025–12 (low)
025–12 (high)
05–12 (low)
05–12 (high)
1–12 (low)
1–12 (high)
2–12 (low)
2–12 (high)
5–12
10–12
14–12
17–12
26–12
35–12
52–12
70–12
130–12
240–12

Characteristic Curves
Size
006–12

006–12.s

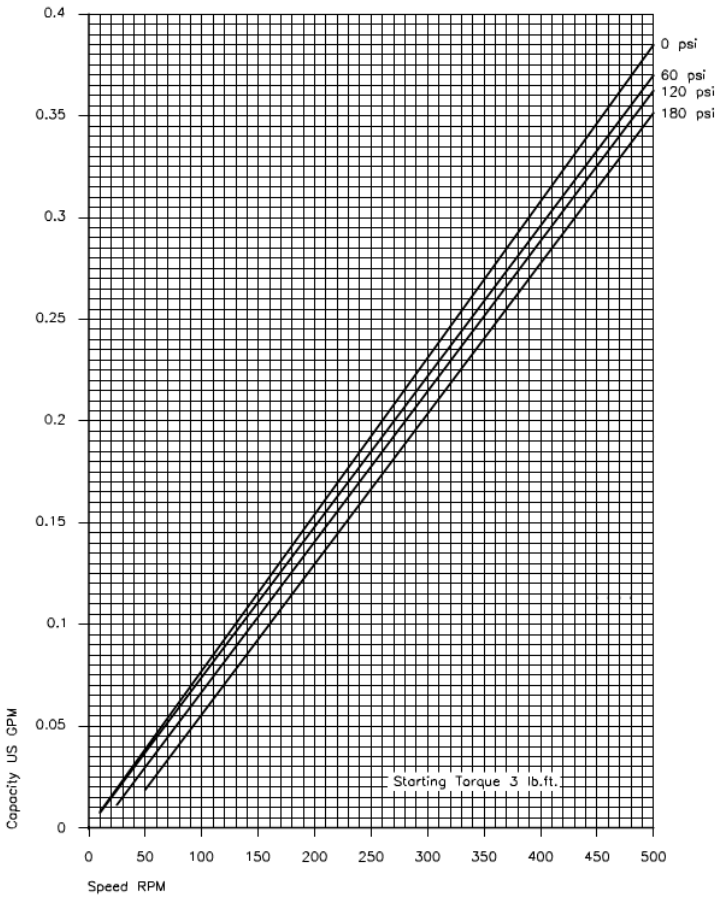

Values based upon water 68°F

CHA.006–12.s B 01.03us

1.0
General

1.1
Application

These operating instructions contain basic information on the installation, commissioning and maintenance of seepex machines. Compliance with the work steps described in the individual sections is essential.

1.2
Details of the seepex machines

1.2.1
Operating Instructions

The Commission Number (comm. no) assigns the operating instructions to a particular seepex machine. The operating instructions are produced in relation to a specific job/commission and are valid only for the machine whose comm. no. is identical with that indicated on the cover sheet and possessing the associated data sheet, Point 9.

1.2.2
Manufacturer

The machines were manufactured by seepex.

1.2.3
Range, Size, Version

of the machines are stated in the appended data sheet, Point 9.

1.2.4
Machine Comm. No. and Year of Construction

are stated on the type plate at the machine.

1.2.5
Release Date of the Operating Instructions

is stated on the cover sheet of the operating instructions.

1.2.6
Modifications, Notes of Modification

If modifications to the machines are carried out in agreement with seepex, a new set of operating instructions will be provided, or the existing operating instructions will be supplemented by an additional sheet together with a new cover sheet. The date of modification and modification index will be noted on the new cover sheet.

1.2.7
EEC Machine Directive

1.2.7.1
Manufacturer's Declaration

seepex Manufacturer's Declaration as required by the EEC Machine Directive 89/392/EEC, Appendix II B:

The seepex machines delivered in accordance with our design are intended to be fitted in one machine or assembled together with other machines to form one machine/plant. The commissioning of the machine is forbidden until such a time as has been established that the entire machine/plant satisfies the requirements of the EEC Directive for Machines as amended 91/368/EEC and 93/44/EEC.

Particular attention must be paid to the safety requirements specified in EN809 (s and Equipment for Fluids) as well as the information in these operating instructions.

1.2.7.2
Declaration of Conformity

seepex machines possessing no safety accessories do not fulfill the requirements of the EEC Machine Directive 89/392/EEC as amended 91/368/EEC and 93/44/EEC.

For this reason, no Declaration of Conformity as required by the EEC Machine Directive 89/392/EEC, Appendix IIA can be issued before appropriate safety devices have been installed/mounted on the machine and/or plant with due regard to the information given in these operating instructions.

The following harmonized standards are particularly applicable:
EN 809, EN292T1, EN292T2
Applicable national standards and specifications must be taken into consideration.

Following assessment of the conformity of the machine/plant with the EEC Machine Directive, customers may on their own initiative place on the full machine/plant the EEC symbol 'CE' as defined in Identification Directive 93/68/EEC.

CAUTION

This documentation must be kept available for at least 10 years.

1.2.8
Copyright and Industrial Property Rights

These operating instructions are copyrighted. The reproduction, in particular by photocopying, of these instructions is not permitted (§§ 54, 54 UrhG) and constitutes a criminal offence (§ 106 UrhG). Proceedings will be instituted if the copyright is violated.

1.2.9
Specifications Required for Inquiries and Orders

The following information must be included when inquiring about replacement parts or placing orders:
- comm. no.
- / machine type
This information is given on the type plate mounted the machine.

1.2.10
Technical Data Sheet
see Point 9.

1.2.11
Performance Data, Load Index, Power Consumption

are indicated in the associated data sheet, Point 9.

1.2.12
Sound Pressure Level

The sound pressure level and/or noise characteris-tics of the seepex machines are ascertained in accordance with DIN 45635. The measuring guidelines are largely identical with the international standards ISO 3740-1980 and ISO 3744-1981.

1.2.13
Operating Range

Employment of the machine is not permissible for purposes other than those stated in the data sheet, see Point 9. seepex cannot accept liability for damage arising through failure to comply with this operating range.

1.3
Supplementary Information

1.3.1
Accessories, Optional Extras

Please refer to the data sheet, Point 9.

1.3.2
Company Address, Service Addresses

see Point 11

2.0
Safety

These operating instructions contain basic requirements to be observed during the installation, operation and maintenance of the machine. Therefore, the instructions must be read by the mechanical fitter and by the technical personnel/operator responsible for the machine prior to assembly and commissioning, and kept available at the operating site of the machine/plant at all times.

Compliance is required not only with the general safety instructions given in this section but also with the detailed instructions, e.g. for private usage, given under the other main headings in these operating instructions.

2.1
Labeling of Advice in the Operating Instructions

In these operating instructions safety advice whose non-observance could lead to danger for life or limb is labeled with the following general hazard symbol:



safety symbol acc. to ISO 3864 - B.3.1

Warnings regarding electric power are labeled with:



safety symbol acc. to ISO 3864 - B.3.6

Safety instructions whose non-observance could jeopardize the machine and its functions are labeled by the word

CAUTION

Always comply with instructions mounted directly on the machine, e.g.
- rotational direction arrow
- fluid connection indicators

and ensure that the information remains legible.

2.2
Personnel Qualifications and Training

Personnel charged with operation, maintenance, inspection and assembly must be in possession of the appropriate qualifications for the tasks. The company operating the machine must define exact areas of responsibility, accountabilities and personnel supervision schemes. Personnel lacking the required skills and knowledge must receive training and instruction. If necessary, the opera-ting company may commission the manufacturer/ supplier to conduct these training courses. Furthermore, the operating company must ensure that the personnel fully understand the contents of the operating instructions.

2.3
Dangers Resulting from Failure to Observe Safety Instructions

Failure to comply with the safety instructions may lead to hazards to life and limb as well as dangers for the environment and the machine. Non-observance of safety instructions can invalidate the right of claim to damages.

The following are just some **examples** of possible dangers resulting from failure to comply with the safety instructions:

- Failure of important machine/plant functions
- Failure of prescribed methods of service and maintenance
- Danger to life and limb due to electrical, mechanical and chemical influences
- Danger to the environment due to the leakage of hazardous substances

2.4
Safety-conscious Working

Always comply with the safety instructions listed in this document, the existing national accident prevention regulations and any company-internal work, operating and safety rules.

2.5
Safety Instructions for the Operating Company/Machine Operator

- Any potentially hazardous hot or cold machine parts must be provided with protection against accidental contact at the customer´s premises.

- Protective guards for moving parts (e.g. coupling) must never be removed while the machine is in operation.

- Leakages (e.g. in the shaft seal) of hazardous conveying liquids (e.g. explosive, toxic, hot) must be drained in such a way that no danger arises for persons or for the environment. Always observe the relevant statutory requirements.

- The risk of exposure to electrical power must be eliminated (for details, see the VDE regulations, for example, or those of the local power supply company).

2.6
Safety Instructions for Maintenance, Inspection and Assembly Work

The operator must ensure that all maintenance, inspection and assembly tasks are carried out by authorized and qualified personnel who have studied the operating instructions closely and become sufficiently familiar with the machine.

As a basic rule, the machine must be brought to a standstill before work is carried out. Always comply with the de-commissioning procedure described in this document.

Any machiness or assemblies conveying media that are detrimental to health must be decontaminated.

Immediately following completion of work, all safety and protective devices must be replaced in position and, where applicable, re-activated.

Before re-starting the machine, observe the points listed under the heading "Initial Startup".

2.7
Unauthorized Modification and Manufacture of Replacement Parts

Conversions or modifications of the machine are permissible only in consultation with the manufacturers. Original manufacturer replacement parts and manufacturer-approved accessories enhance the operational safety of the machine. The usage of unauthorized parts may lead to the nullification of the manufacturer's liability for any resultant damages.

2.8
Impermissible Modes of Operation

The operational safety of the machines supplied is warranted only for employment in accordance with the intended use as defined in Section 1 - General - of these operating instructions. Never allow the threshold values specified in the data sheet to be exceeded.

3.0
Transport and Intermediate Storage

3.1
Safety Precautions

Employ appropriate transport means, hoists and tools when transporting and storing the machine, always observing the safety instructions.

3.2
Transport

Depending on its weight, the seepex machine must be transported manually or with appropriate transport means. Comply with the transport instructions on the packing.

3.3
Unpacking

The design of the packing is such that the equip-ment can be removed manually or, if demanded by the weight, by means of appropriate hoists.

Any screw fittings between the machine and the packing must be undone. Comply with the attached information notices and symbols.

3.4
Intermediate Storage/Preservation

Unless otherwise indicated in the data sheet, seepex machines are provided with preservation only for the duration of transport. If a long period of intermediate storage is foreseen before the machine is commissioned, it is necessary to pro-vide supplementary preservation. If necessary, the appropriate measures should be drawn up in consultation with seepex.

Intermediate storage in extreme climatic conditions is permissible only for machine whose design is appropriate to the circumstances. If necessary, seepex must be consulted.

CAUTION

Pumps of the range MAP
If the period from supply and subsequent storage until the commissioning is more than 4 weeks, the hoses should be dismantled, refer to Point 7.

3.5
Protection against Environmental Influences

To afford protection against environmental influences, the intermediate storage location must be dry, enclosed and free from frost.

4.
Description of the seepex Progressive Cavity Pump and Accessories

4.1
General Description, Design and Mode of Operation

Like all progressive cavity pumps, seepex pumps belong to the rotating positive-displacement pump family. The characteristic attribute of these pumps is the special formation and arrangement of the two conveying elements, namely the rotor and the stator.

The difference in the number of threads possessed respectively by the rotor and stator produces a chamber that opens and closes alternately in line with the constant turning motion of the rotor, effecting the continuous transportation of the conveying product from the suction side to the pressure side.

The geometrical formation of the two conveying elements combined with the constant contact that exists between them result in sealing lines that effect an airtight seal between the suction and pressure side in every position of the eccentric screw, even when the pump is stationary. The pump owes its high suction capacity to this
sealing between the suction and pressure sides.

4.2
Mechanical Design

Please consult the sectional drawing, Point 9, for the mechanical design of the pump. The data sheet, Point 9, gives information on the design of the pump housing, stator, rotor and rotating components.

Refer to document OM. SEA. __, for information on the design of the shaft seal.

The data sheet, specifies details of the design of the drive engine. Further details are
given in the appended manufacturer's documents, Point 10.

4.3
Accessories

Consult the data sheet for information.

4.4
Dimensions, Weight

Consult the appended dimensional drawing,

4.5
Design Variants

Refer to the data sheet, Point 9, for the design of the seepex progressive cavity pump. Other design variants are possible, whereby seepex must first check whether a particular pump is suitable for the intended purpose.

4.6
Operating Site Specifications

Operating site specifications are listed in the data sheet, Point 9. Details of the space required for installation, operation and maintenance are given in Point 5.2.1.

5.0
Assembly / Installation

5.1
Mounting Tools / Hoists

No special tools are required for the assembly and installation of the pump.

The customer must check the dimensions and weight of the seepex progressive cavity pump to ascertain whether the available hoisting apparatus is sufficient for the assembly and fitting of the pump.

5.2
Initial Assembly

5.2.1
Inspection Prior to Commencement of Assembly

5.2.1.1
Location

The place of installation for the pump must con-form with the site stated in the data sheet in Point 9. Any change of location must be checked and approved by seepex.

5.2.1.2
Space Requirements

Customers are responsible for determining the space requirements; the following factors must be taken into consideration:

- dimensions and weight of the machine
- required transport and hoisting equipment
- possible piping layout with allowance for the space allowing disassembly of the rotor as defined in 5.2.1.3
- freedom of movement to:
  operate the drive /
  speed regulation
  read speed and pressure indicators
  adjust a stator retensioning device, if fitted
  operate a buffer fluid supply unit, if fitted
- space required for lubrication / renewal of lubricants
- disassembly of mechanical protective devices, e.g. V-belt or coupling protection
- space required for handling the mounting tools, e.g. sufficient wall clearance

5.2.1.3
Space Allowing Disassembly of Stator P

A specific space must be allowed for exchanging the stator. The required dimension "P" is indicated in the index of these operating instructions or in the appended dimensional drawing, Point 9.

CAUTION

Ensure also that the pipe work can be dismounted at this location too.

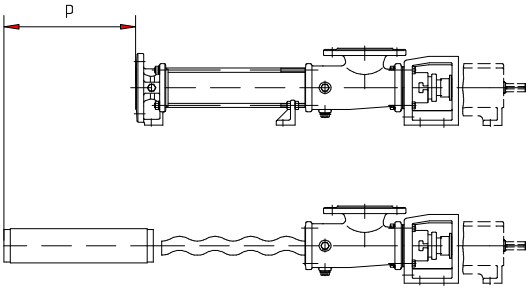

5.2.2
Installation of the Fully Assembled Pump

- Installation in conformity with data sheet
  Installation of the pump is permissible only in accordance with the data sheet specifications and the associated basic drawing, see Point 9. Any change in the position must be checked and approved by seepex.

- Tension-free mounting of pump
  This rule applies to pumps with and without drives, to versions with and without baseplate, for mounting on the foundation or other bearing elements. The entire area of all bearing surfaces of the machine must rest on the ground. Any unevenness must be corrected by appropriate supports.

- Correct seating of drives
  All drives have been aligned ready for operation and mounted by seepex. However, displace-ments may occur during transport or installation. For this reason, check that the alignment and fastening of the drive and coupling are correct.

- Protective devices
  On completion of the assembly and installation work, immediately mount all safety and protective devices in their proper locations and set them in operation.



5.2.3
Protective and Controlling Equipment

Information on equipment of this nature, where fitted, is provided in the data sheet, Point 9. Consult the attached manufacturer's specifications, Point 10, for instructions on assembly and installation.

5.2.4
Electric Connection of Electric Motor and Frequency Converter

The electric connections must be established in accordance with the manufacturer's specifications, Point 10, as well as the safety specifications applying at the installation site. The mains voltage and frequency must match the ratings indicated on the type and rating plates.



- Switch on electric motor „direct-on-line“

CAUTION

An increased starting torque is necessary due to the clamping between the rotor and stator conveying elements. This means the electric motors that drive the progressive cavity pumps must always be switched on directly. As a rule, star-delta startup is not possible unless special arrangements have been made with seepex.

Three-phase cage motor

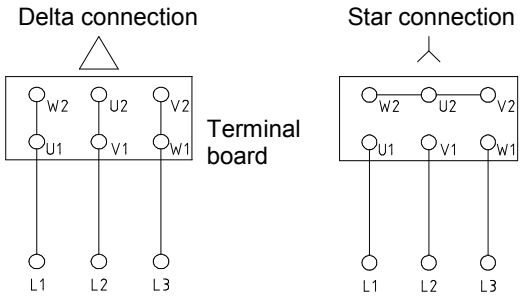

low . . . high . . .
. . . voltage indicated on rating plate

- Speed regulation via frequency inverter
  When progressive cavity pumps with frequency-controlled drives are started up problems may occur due to unsuitable or wrongly set frequency inverters. For this reason we recommend the purchase of the complete drive, including frequency inverter, from seepex, so that the frequency inverter can be tuned on the seepex test field along with a trial run.

  Ensure that customer-supplied frequency inverters comply with the starting torque and running power specified in the appended data sheet, Point 9.

CAUTION

Consult the appended document TI.FRU.01, see Point 9, for further information on the electric connection and the setting of frequency inverter and variable-speed motor.

5.2.5
Piping

5.2.5.1
Suction and Pressure Flanges

The position, nominal width and standard of the suction and pressure flange of the progressive cavity pump are specified in the dimension drawing, Point 9, and data sheet, Point 9. Always observe the rotational direction and flow direction defined in Point 6.2.5.

5.2.5.2
Piping Dimensioning

CAUTION

The pipe diameters on the suction and pressure sides must be dimensioned in accordance with the customer's pressure-loss calculation in such a way that the pressures specified in the data sheet, Point 9, are not exceeded. The nominal width of the suction pipe should at least match that of the pump suction flange.

5.2.5.3
Residue-free Piping

CAUTION

Prior to starting up the pump, ensure that all pipelines are free from foreign bodies. Installation residues (such as weld spatter, screws, steel chips etc.) will lead to damage of the **seepex** pump for which guarantee claims will not be accepted.

5.2.5.4
Tension-free Mounting

CAUTION

Pipelines and other components requiring to be connected with the pump must be mounted without stresses.

5.2.5.5
Fluid Connections for Optional Extras

Consult the data sheets, Point 9, for information regarding the optional extras, if any, that are fitted. The technical description is given under Point 9.

6.0
Commissioning/De-commissioning

6.1
Engineering Data

Details regarding all technical specifications and operating conditions are given in these operating instructions together with the data sheet, Point 9.

To guarantee the correct assignment of documentation to pump, the commission number on the
- cover sheet
- and data sheet of these operating instructions must match the commission number stated on
- the nameplate of the pump.

6.1.1
See Point 7.2.2 for Lubricant Chart

6.2
Preparation for Operation

6.2.1
Bearing

6.2.1.1
See Point 7.2.1.4 for pump bearing.

6.2.1.2
See manufacturer's documents, Point 10, for drive bearings.

6.2.2
Shaft Sealing

See document OM.SEA.__,.

6.2.3
Filling Up of Suction Side to Avoid Dry Running at Startup

CAUTION

Before switching on the pump, fill the suction-sided pump casing with fluid so that the first rotations will lubricate the conveying elements immediately. A small quantity of fluid is sufficient for lubrication; the subsequent operation of the pump is self-priming, even if an air column up to the liquid level remains.

6.2.4
Electric/Hydraulic Connections



The connections are listed in the appended manufacturer's documents, Point 10.



The risk of exposure to electrical hazards must be ruled out. Always observe the safety regulations valid at the site of installation.

6.2.5
Checking Direction of Rotation



The rotational direction of the pump determines the flow direction of the conveying medium.

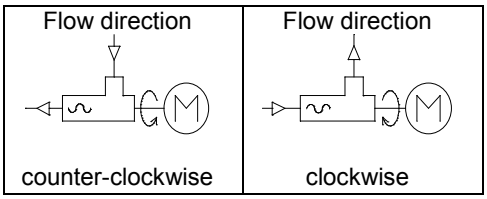

Prior to commissioning the rotational direction of the pump must be checked for compliance with the data sheet specification and the rotational direction arrow on the type plate of the pump.

6.3
Control and Monitoring Equipment

Where applicable, please refer to the associated documents, Point 10, for information on commissioning.

6.3.1
Performance Check

Any optional extras must be subjected to a performance check in conformity with the specifications by seepex or other manufacturers, see manufacturer's documents.

6.3.2
Setting

Unless already performed in the factory, setting must be carried out in accordance with the appended manufacturer's specifications, Point 10. Pay attention to the operating specifications in the data sheet.

6.4
Equipment for Protection of Persons

Machines must be fitted with mechanical protective devices complying with DIN EN 809.

- Moving or working parts must be protected against accidental contact.
- However, safety considerations demand it be possible at all times to check without hindrance whether the shaft seal is fully functional. A protective guard is necessary in this area only if components are mounted on the rotating, smooth shaft.



- If pumps are operated with an open suction flange/feed hopper, a suitable protective guard complying with DIN EN 294 must be mounted.
- Country-specific protective regu-lations must be observed at the site of installation. Prior to activation of the pump, check the proper function of all protective equipment.

6.5
Commissioning

6.5.1
Initial Startup/Re-starting

CAUTION

Every seepex progressive cavity pump is designed for the specific operating conditions documented in the data sheet. Commissioning is permissible only if the operating conditions conform with those indicated in the data sheet. Although the potential usages of the seepex pump are not confined to the specified operating conditions, any change in the original conditions must be checked and approved by seepex.

The right to make claims under the warranty agreement will be annulled if operating conditions are changed without prior approval by seepex.

6.5.2
Avoid Dry Running of Pump

CAUTION

The dry running of a pump increases the friction between rotor and stator, quickly causing an unacceptably high temperature to develop on the inner surface of the stator. This overheating leads to burning of the stator material and the total failure of the pump.

For this reason it is necessary to ensure that the suction-sided flow never dries up completely. If a continuous flow cannot be guaranteed for the plant, it is essential to fit the seepex dry running protection device TSE, available as an optional accessory.

6.5.3
Check Pressure at Suction and Pressure Flanges

6.5.3.1
Safeguard Pump Against Excessive Pressure at the Suction Flange

The seepex pump is designed to operate with the pressure at the suction flange (suction head or inlet pressure) specified in the data sheet. Deviating pressure conditions may lead to the failure and/or destruction of the shaft seal or entire pump.



For this reason the suction pressure specified in the data sheet must be guaranteed. Appropriate monitoring devices are oil-filled contact mano-meters that deactivate the pump.

6.5.3.2
Safeguard Pump Against Excessive Pressure at the Pressure Flange

The seepex pump operates according to the positive displacement principle. Operation of the pump against an excessive pressure caused by closed valves, by high pressure losses in the piping or by product sedimentation will lead to the destruction of the pump, drive, pipe work and/or downstream equipment. Every progressive cavity pump must therefore be protected against overpressure. Safety valves with bypass pipes or oil-filled contact manometers that disactivate the pump are appropriate protective devices.



6.5.4
Drive Engine

Consult the attached manufacturer's operating instructions, Point 10, for information on commissioning the drive engine.



6.5.5
Establish Clear Passage Through Pipelines

CAUTION

To prevent damage to the pump the unhindered flow of liquid must be guaranteed between the points of entry to and exit from the pipeline. For this reason, open all relevant valves etc. prior to activation of the pump.

6.6
De-commissioning

6.6.1
De-activation

The electric connections must be switched off and protected against accidental re-activation. Observe the safety regulations applying to the plants.



6.6.2
Stationary Pump

The pump and all optional equipment must be provided with the following protection modes while at a standstill:

- Frost protection
- Protection against solid particle deposits
- Protection against sedimentation of the medium
- Corrosion protection for parts in contact with the medium

We recommend that the pipeline and pump be emptied for the duration of the plant standstill. Following evacuation, the pump should be preserved.

6.6.3
Evacuation of the Pump

The pipeline must be evacuated on the suction and pressure side or shut-off directly behind the pump connections. Drain any residual liquid in the pump casing by opening/ removing the screwed sealing plugs (705) and (502), sealing rings (706) and (503). Casings without screwed plug must be evacuated by the connection branch (SAG and DRS). Refer to the data sheet and the sectional drawing of the associated operating instruction, Point 9, for information on the pump design. Conveying medium residues always remain in the rotor/ stator chambers and may run out during transport or disassembly of the pump. If conveying aggressive or hazardous media, therefore, wear appropriate protective gear during all installation work.



6.6.4
Disassembling the Pump

Dismantle the pipe work by removing the flange bolts (SCH) and flange seals (DFL) or the threaded connections (G).

Disassemble the pump together with the baseplate (GPU) or, as applicable, without the baseplate (GPU) following removal of the bolts (SCH) at the pump feet.

Block-design pumps with direct flange-mounted drive engine are liable to become unstable during disassembly. Stability can be restored by propping up the drive engine.



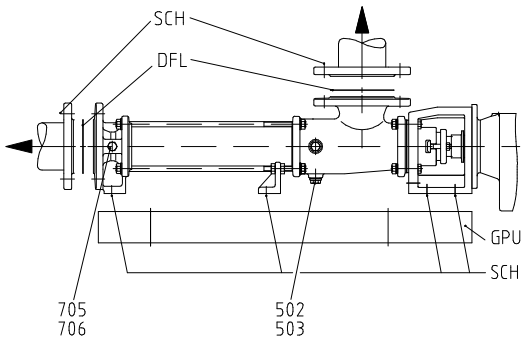

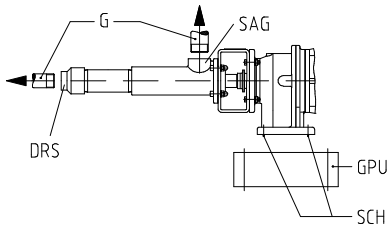

6.6.5
Preservation/Storage

The pump must be preserved prior to storage. Appropriate preservation measures must be agreed with **seepex**. Always state the pump commission number when making inquiries.

These operating instructions are valid for range MD (stainless steel-design) size 0015-24 to 012-24

7.0
Service and Maintenance

Contents
7.1 General Instructions
7.2 Service and Inspection
7.3 Dismantling
7.4 Re-assembly

The sectional drawing and parts list relevant for Points 7.3 and 7.4 can be found in Point 9.

7.1
General Instructions

A requirement for the reliable operation of any pump is service and maintenance in compliance with instructions. Maintenance personnel must therefore have access to these operating instructions and adhere to them meticulously. seepex will accept no liability for damages arising through non-observance of these operating instructions.

7.2
Maintenance and Inspection

7.2.1
Lubrication

7.2.1.1
Rotor and Stator

The rotor and stator are lubricated by the conveying medium.

7.2.1.2
Shaft Sealing

Consult document OM.SEA.__ for information on lubricating the shaft seal.

7.2.1.3
Pin Joint

The pin joints are filled with special grease and lubricated for the expected duration of service. The seepex joint grease specified in the index of these operating instructions should be used exclusively for any required maintenance work.

CAUTION

Usage of other grease types will lead to premature joint failure and render invalid any right to claims under guarantee.

7.2.1.4
Bearing of the Pump/Drive Engine

The bearing of the rotating pump parts is effected by the drive engine. Lubrication instructions are therefore included in the appended drive engine operating instructions.

7.2.2
Lubricant Filling Levels

Details are specified in the index.

7.2.3
Drives and Optional Extras



For maintenance and inspection specifications, see the appended manufacturer's documents.

7.2.4
Supervision during Operation

7.2.4.1
Shaft Sealing

See document OM.SEA.__.

7.2.4.2
Optional Extras

These must be monitored in accordance with the separate documents, Point 9/Point 10.

7.2.4.3
Drive Engines

These must be monitored in accordance with the separate manufacturer's documents, Point 10.

7.2.5
Preventive Measures

To avoid the expenses incurred by lengthy stop periods of the pump, seepex recommends the acquisition of a set of wearing parts and a set of gaskets. The contents are listed in the document OM.WPS.40.

7.3
Dismantling the seepex Progressive Cavity Pump

Tools are required for dismantling and re-assembly. These tools are listed in Point 9 of the document OM.SPT.01.

The stator (601) and the rotating pump parts can be exchanged in site. The rotating pump parts can be dismantled as a complete rotating unit (RTE) (Point 7.3.4) or as individual components (Point 7.3.5).

Before commencing the dismantling of pump parts, safeguard the pump against tipping over or falling down by fastening it at the drive (ANT).

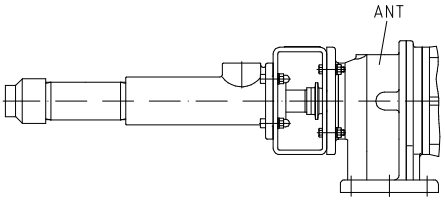

7.3.1
Pressure Flange (700) - Dismantling

Prior to dismantling see Point 7.3.2

CAUTION

Pressure branch (700) is glued in place with an adhesive of medium strength.
Therefore, to break the seal / adhesive compound it is recommended to heat upto a maximum of 80 °C.

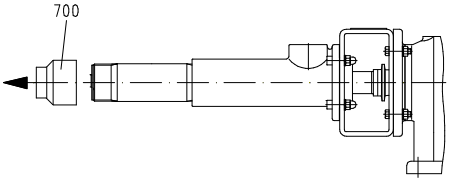

7.3.2
Stator (601) - Dismantling

- Maintenance tip:
  Disassembly of the stator can be made considerably easier by first moistening the inner surface of the stator with antiseize agent (soft or liquid soap). Before removing the pressure flange (700), pour the antiseize agent into the opening between rotor and stator on the pressure flange side. Several clockwise (see Point 6.2.5) revolutions of the rotor will then distribute the antiseize agent over the inner surface of the stator and reduce the friction between rotor and stator considerably.
- Lock drive shaft against rotation.

CAUTION

Stator (601) is glued in place with an adhesive of medium strength. Therefore, to break the seal / adhesive compound it is recommended to heat upto a maximum of 80 °C. Dismantling the stator (601) with tool (W13/see Point 9).

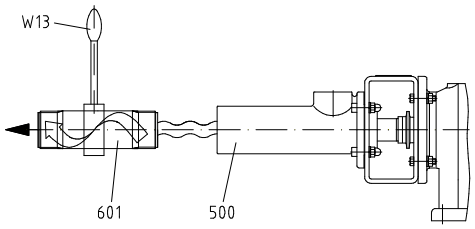

7.3.3
Suction Casing (500), Casing Gasket (501) - Dismantling

Fit the rotor (600) with a protective cover (SH).

CAUTION

Suction casing (500) with reducing unit (529)
Reducing unit (529) is glued in place with an adhesive of medium strength.
Therefore, to break the seal /adhesive compound it is recommended to heat upto a maximum of 80°C.

Suction casing (500) **without** reducing unit (529)

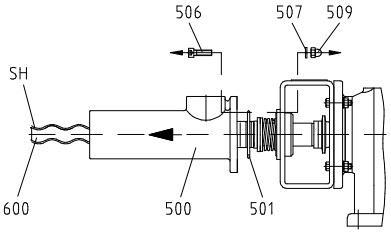

Suction casing (500) **with** reducing unit (529)

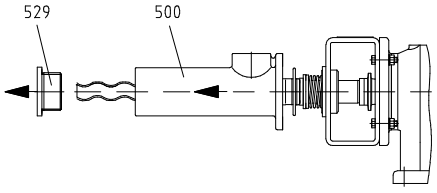

7.3.4
Rotating Unit (RTE) - Dismantling

CAUTION

Before dismantling the rotating unit it is essential to comply with the specifications in document OM.SEA.__ Shaft Seal Dismantling, see Point 9..

- Remove flushing connections at shaft seal housing (SEA).
- Raise/shift splash ring (310) and eject plug-in shaft pin (309) in horizontal direction.
- Remove rotating unit (RTE)/plug-in shaft (307), together with shaft seal (SEA) from output shaft of the drive (ANT). See Document OM.SPT.01, in Point 9 for tool (W10) used for pulling off.
- See in document OM.SEA.__ for removal of the shaft seal (SEA) from the plug-in shaft (307).

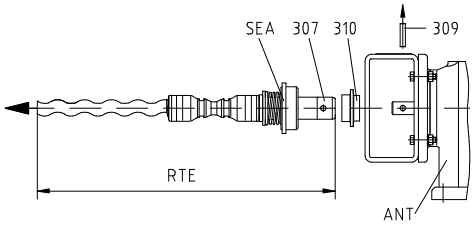

7.3.5
Rotating Pump Parts - Dismantling

7.3.5.1
Rotor (600), Coupling Rod (400)

Detach the rotor (600) and coupling rod (400) from the plug-in shaft (307) by dismantling the joint (G) in accordance with Point 7.3.6.

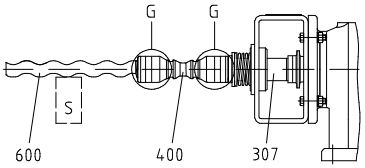

7.3.5.2
Plug-in Shaft (307)

The plug-in shaft (307) is removed in the same way as the rotating unit (RTE), see Point 7.3.4.

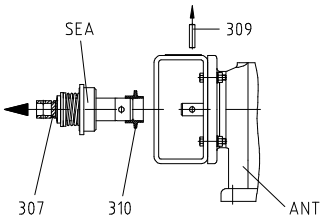

7.3.6
Dismantling of Joint

see document OM.PJT.04 Point 1.

7.3.7
Shaft Sealing

See document OM.SEA.__ for information on dismantling the shaft sealing.

7.3.8
Lantern (200)/Drive (ANT) - Dismantling

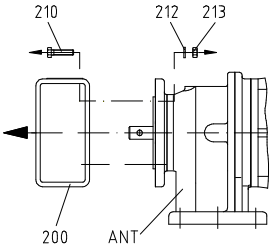

7.4
Re-assembly

Before commencing the re-assembly, fasten the drive (ANT) in such a way that it cannot tip over or fall down during the re-assembly of the drive and all pump components.



7.4.1
Lantern (200)/Drive (ANT) - Assembly

Clean flange bearing surfaces (FLS), centering diameter and output pivot of the drive (ANT).

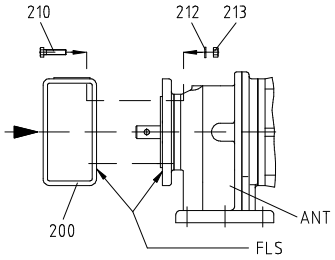

7.4.2
Rotating Unit (RTE) - Re-assembly

The rotating unit (RTE) has been assembled in accordance with the description in document OM.PJT.04

- Mount shaft seal (SEA) on plug-in shaft (307) in the way described in document OM.SEA.__, see Point 9.

- Moisten splash ring (310) and plug-in shaft (307) with joint grease (see index for type) and slide splash ring (310) onto plug-in shaft (307), observing the fitting position of the splash ring, (see lettering on the splash ring).
- Apply antiseize graphite petroleum to the output pivot of the drive (ANT) and slide on the rotating unit (RTE). Insert plug-in shaft pin (309) horizontally.
- Splash ring position (310)
  Outer edge of splash ring (310) has to occlude with outer edge of plug-in shaft (309).

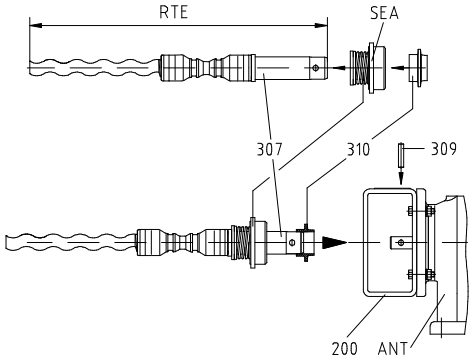

7.4.3
Rotating Pump Parts - Re-assembly

Prepare main components:
Prepare rotor (600), coupling rod (400) and plug-in shaft (307) as described in document OM.PJT.04 Point 2. to 2.3
Joint (G) re-assembly as described in document OM.PJT.04 Point 3.

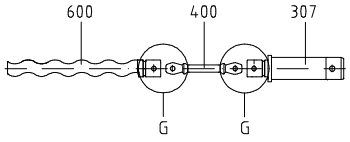

7.4.4
Suction Casing (500), Casing Gasket (501) - Re-assembly

Fit protective cover (SH) on rotor (600).
Assemble casing gasket (501) and suction casing (500).

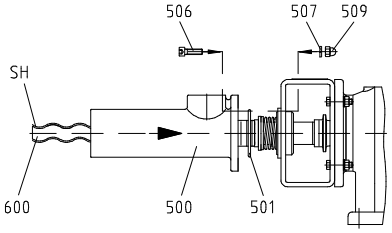

CAUTION

Install reducing unit (529) to suction casing (500) with an adhesive of medium strength

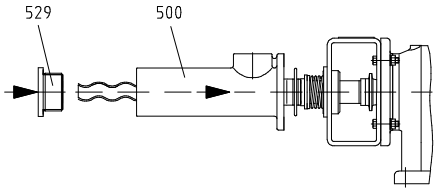

7.4.5
Stator (601) - Assembly / Re-assembly

Maintenance tip:
Disassembly of the stator can be facilitated considerably by first moistening the inner surface of the stator with antiseize agent (soft or liquid soap).
Before removing the pressure flanges (700), pour the antiseize agent into the opening between rotor and stator on the pressure flange side. Several clockwise (see Point 6.2.5) revolutions of the rotor will then distribute the antiseize agent over the inner surface of the stator and reduce the friction between rotor and stator considerably
Lock drive (ANT) shaft against rotation.

CAUTION

Install external thread of stator (601) with an adhesive of medium strength. Turn stator (601) to the right using a tool (W13/see Point 9), slip it onto rotor (600) and screw it into the suction casing (500) at the same time.

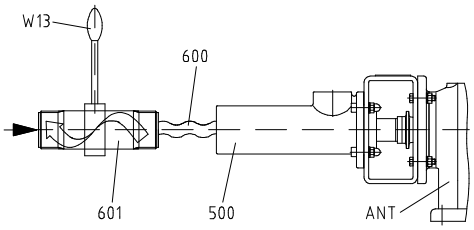

7.4.6
Pressure Flange (700) - Assembly

CAUTION

Install pressure branch (700) with an adhesive of medium strength

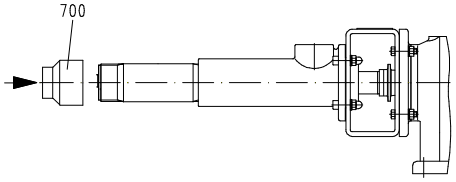

1.0
Dismantling of Joint

1.1
Holding Band (406) - Dismounting

Cut through loop (SCL) of the holding band (406) with a metal saw.

Wear protective goggles when squeezing out the two halves of the holding band loop (SCL).



Remove holding band (406).

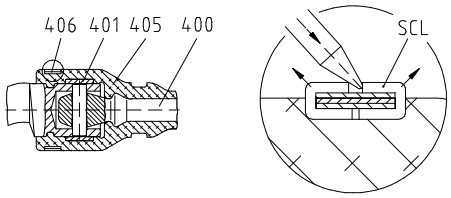

1.2
Rotor (600) - Dismantling

Withdraw universal joint sleeve (405) with retaining sleeve (401) in coupling rod direction and fix it by using a special maintenance tool (W15/see document OM.SPT.01)

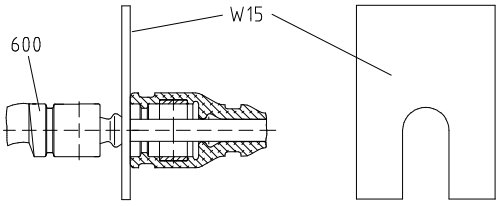

- **Separation of Joint**

  Eject coupling rod pins (402). Pull coupling rod (400) out of joint top.

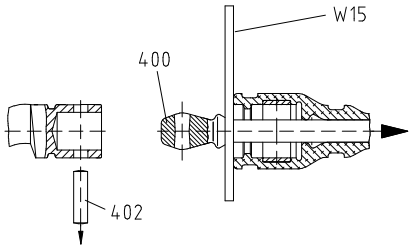

1.3
Universal Joint Sleeve (405)

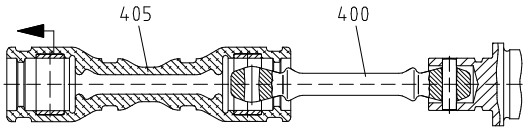

1.4
Coupling Rod (400)

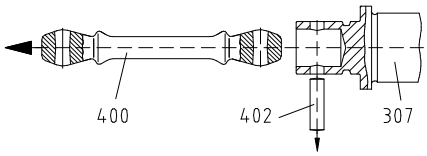

1.5
Retaining Sleeve (401)

Remove retaining sleeve (401) from universal joint sleeve (405).

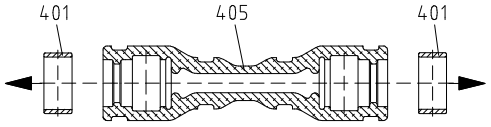

2.0
Prepare main components for Re-assembly

2.1
Rotor (600) - Preparation for Joint Assembly

First remove any burr, flaws or similar defects from the rotor, then clean it.
If the hole for the coupling rod pin (402) has worn out, a new rotor (600) has to be installed.

2.2
Coupling Rod (400) - Preparation for the Joint Assembly

Clean coupling rod and check top drilling regarding wear.

CAUTION

If the top drilling shows wear, a new coupling rod will have to be used.

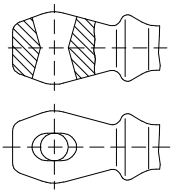

Correct top drilling

2.3
Plug-in Shaft (307) - Preparation for Joint Assembly

Remove any burr, flaws or similar defects from the plug-in shaft (307), then clean it.
If the hole for the coupling rod pin (402) has worn out, a new plug-in shaft (307) has to be installed.

3.0
Joint - Re-assembly

CAUTION

To ensure a perfect operation of the joints, coupling rod pins (402) and coupling rods (400) showing wear should be replaced. Refer to Point 2.2

3.1
Joint Grease (098)

Joint head at rotor (600) and plug-in shaft (307)
Fill joint head with joint grease (098).
(Regarding joint grease (098) refer to index of operating instruction)

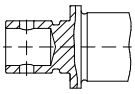

3.2
Coupling Rod (400)

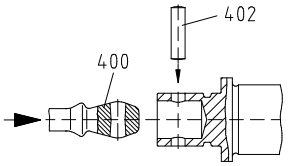

3.3
Retaining Sleeve (401)

Moisten both sides of retaining sleeve (401) with joint grease and insert this unit in universal joint sleeve (405).

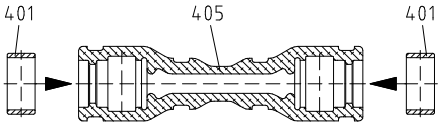

3.4
Universal Joint Sleeve (405)

Moisten surface of coupling rod (400) and inner surface of universal joint sleeve with joint grease Regarding joint grease (098) refer to index of operating instruction.
Slip universal joint sleeve (405) with fitted retaining sleeves (401) onto coupling rod (400) and joint head.

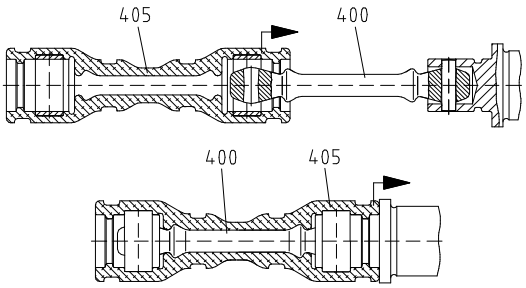

3.5
Rotor (600)

Push back universal joint sleeve (405) at rotor side towards coupling rod (400) and fix it using the relevant tool (W15/refer to document OM.SPT.01).

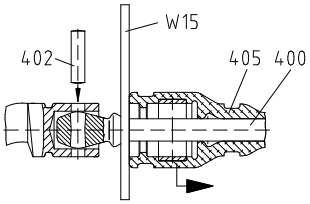

Slip universal joint sleeve (405) onto joint head.

3.6
Universal Joint Sleeve - Deaeration

Deaerate interior space of joint at the side of plug-in shaft and rotor using relevant tool/screw driver (WS)

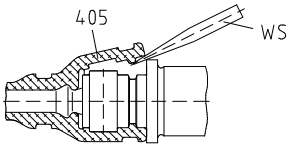

3.7
Holding Band Re-assembly

Mount holding band (406) using tool (W3/OM:SPT.01) as described in document OM.HBD.01.

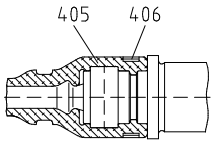

Holding Band (HBD) - Assembly

Tools required for the re-assembly, see document OM.SPT.01.

- Prepare holding band

  Only prefabricated double-band holding bands should be used. The diameter (∅) and in particular the breadth (b) of the holding band is matched to the universal joint sleeve.

- Test holding band

  The bent holding band (HBD) must fit against the holding band loop (SCL), if necessary apply pressure with the tool/pliers (WZ).

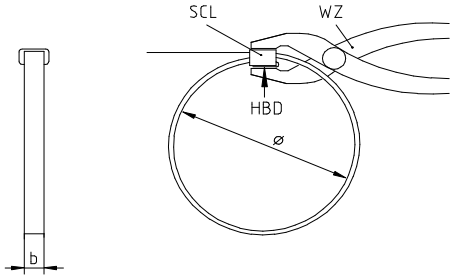

- Assembly of holding band

  Insert holding band in tool (W3/ see Point 9). Hold free end of holding band with control lever (EX), turn crank (KU) until the holding band is strained and fitting against the holding band loop (SCL). Carefully contract holding band until it fits inside the circular groove of the universal joint sleeve.

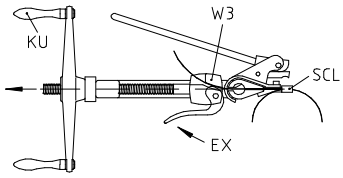

- Correct holding band tension (HBD)

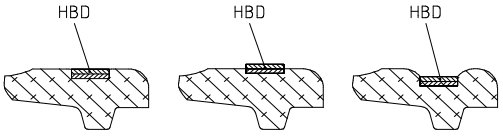

Correct
Holding band (HBD) has slightly con-tracted outer form of univers-al joint sleeve and is stuck in position.

Incorrect
Holding band (HBD) is too slack and liable to slip.

Incorrect
Holding band (HBD) is too tight. Universal joint sleeve will be damaged/sheared off.

- Folding back the holding band (HBD)

  Slowly swivel mounting tool upward by 60°, at the same time slackening the crank (KU) by approximately one half revolution. Swivel cutting lever (SH) forward until the pressure plate fits against the holding band loop (SCL).

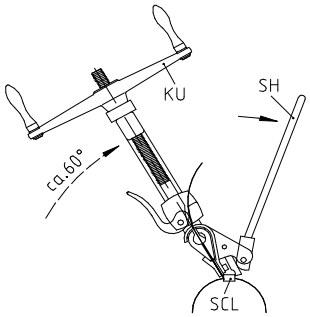

- Shearing off holding band (HBD) made of material AISI 304 and AISI 316

  A blow with the palm of the hand against the cutting lever (SH) causes the end of the holding band behind the loop (SCL) to be folded back and sheared off. If the holding band on the sheared off side is slightly raised as a result, it must be straightened carefully.

  CAUTION

  Never tap or hammer against the loop of the holding band (SCL), otherwise damage to the universal joint sleeve may occur.

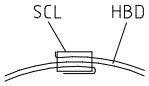

- Shearing off holding band (HBD) made of Hastelloy C

  The high strength of this material makes it impossible to shear off the holding band (HBD) with the cutting lever (SH). Once the end of the holding band is folded back, cut off the holding band (HBD), file off projecting edges and remove burr.

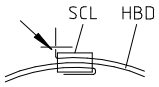

- Check after mounting of holding band

  The holding band must run all the way round the groove of the universal joint sleeve.

  The holding band (HBD) must be bent back and sheared off at the holding band loop (SCL) in such a way that the holding band (HBD) is unable to slip back through the holding band loop (SCL). If this has not been accomplished, then the holding band (HBD) must be replaced by a new one.

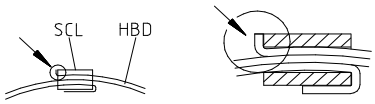

Breakdown											
pump has no suction	pump conveys irregularly	the conveying capacity is not achieved	pressure is not achieved	pump does not start	pump has seized or has stopped conveying	pump operates noisily	motor becomes too warm	the stator wears out early	shaft sealing leaks	seepex progressive cavity pumps will operate trouble-free if they are used in accordance with our data sheet (see item 9) and our operating and maintenance instructions:	
1	2	3	4	5	6	7	8	9	10		Reasons / Remedies
				X			X			a	Adhesion between rotor and stator excessive (as delivered). Lubricate (soft soap, genuine soap) between stator and rotor. Then turn the pump by means of the tool W2 .
X										b	Check rotational direction of the pump per data sheet and nameplate. In case of wrong direction, change wiring of motor.
X	X	X			X	X				c	Suction pipe or shaft sealing leak. Eliminate the leakage.
X	X	X				X				d	Suction head too high (item 6.5.3.1). Check suction head with vacuum gauge. Increase the suction pipe diameter and fit larger filters. Open the suction valve fully.
X	X	X								e	Viscosity of the liquid too high. Check and accommodate per data sheet.
		X		X			X			f	Wrong pump speed. Correct pump speed per data sheet.
	X	X								g	Avoid inclusions of air in the conveying liquid.
		X		X	X		X	X		h	Pressure head too high (point 6.5.3.2). Check pressure head with manometer. Reduce the pressure head by increasing the pressure pipe diameter or by shortening the pressure pipe.
X	X	X			X			X		i	Pump runs partially or completely dry (point 6.5.2). Check flow in the suction chamber. Install dry running protection TSE.
						X	X			j	Check coupling, possibly pump shaft is misaligned to drive. Check whether coupling gear is worn. Realign coupling. The coupling gear has perhaps to be replaced.
X		X								k	Speed too low. Increase the speed when high suction performances are required and when the liquid is very thin.
X	X					X				l	Speed too high. Reduce the speed when pumping products with high viscosities - danger of cavitation.
						X				m	Check the axial play in the coupling rod linkage. Check that the bush has been installed correctly see document OM.PJT.__.
X		X		X	X			X		n	Check for foreign substances in the pump. Dismantle the pump, remove foreign substances and replace worn parts.
X		X	X		X					o	Stator or rotor worn. Dismantle the pump and replace defective parts.
X		X			X	X				p	Joint parts worn. Replace worn parts and fill with special pin joint grease .
X		X			X			X		q	Suction pipework partially or completely blocked. Clean suction pipework.
X				X	X		X	X		r	Temperature of the pumping liquid too high. Excessive expansion of the stator. Check temperature and install rotor with diameter smaller than specified.
X		X		X			X		X	s	Gland packing too strongly tightened or worn. Ease or tighten stuffing box. Replace defective packing rings.
X				X	X			X		t	Solid contents and/or size of solids too large. Reduce pump speed and install perhaps a screen with suitable meshes. Increase fluid share.
X				X				X	X	u	When the pump is non operational the solids settle out and become hard. Clear and flush the pump immediately.
X				X	X			X	X	v	The liquid becomes hard when temperature falls below a certain limit. Heat the pump.
				X	X		X	X		w	Stator swollen and unsuitable for the pumped liquid. Select a suitable stator material. Use perhaps rotor with diameter smaller than specified.
						X			X	x	The bearing in the drive casing of the pump or in the drive engine is defective. Replace bearing.
									X	y	Mechanical seal defective. Check seal faces and O-rings. If necessary replace corresponding defective parts.

9.0
Auxiliary seepex documentation

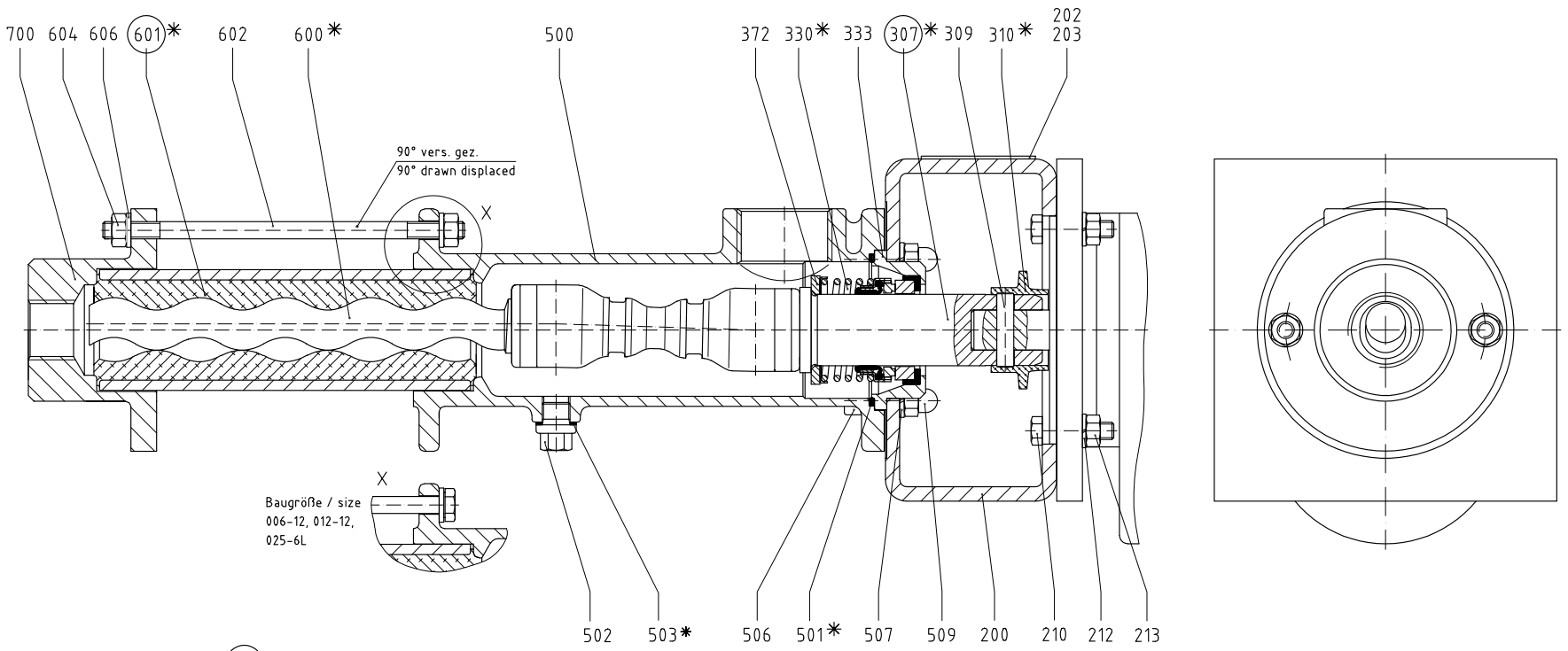

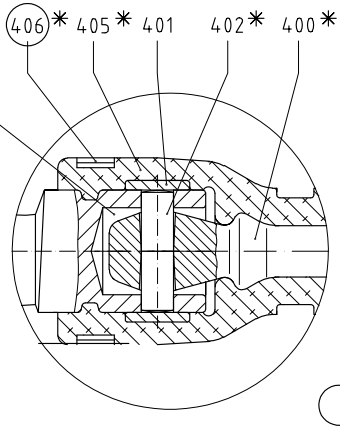

seepex Gelenkfett

Typ und Füllmenge:
Betriebs- und Wartungsanleitung entnehmen

seepex joint grease

type and filling quantity:
see operating and maintenance instruction

Werkzeug
Betriebs- und Wartungsanleitung entnehmen

tool
see operating and maintenance instruction

* Verschleißteile und Dichtungen
Betriebs- und Wartungsanleitung entnehmen

Wearing parts and sealings
see operating and maintenance instruction

Werkstoff-Ausführung 4440-,
material-construction 4440-,

Stück Unit	Norm Standard	Pos./Item	Benennung/Denomination Zeichnungs-Nummer/Drawing-Number	Werkstoff/Material	Bemerkung/Remark	Gewicht Weight kg

seepex.com

seepex
GmbH + Co KG
Schornhölzstraße 344
46240 Bottrop
www.seepex.com

Allgemeintoleranzen für Maße ohne einzelne Toleranzeintragung DIN ISO 2768-mittel	Ausgabe Issue	Änderung Modification	Name Name	Datum Date
General tolerances for mass without individual tolerance entry DIN ISO 2768-average				
Rauheit für Oberflächenzeichen DIN ISO 1302 Reihe 2				
Roughness for surface finish indication DIN ISO 1302 Reihe 2				

Maßstab/Scale: %

Werkstoff/Material

Gewicht/Weight

Bezeichnung/Denomination
Schnittzeichnung Baureihe "MD"
sectional drawing range "MD"
mit 2 Spannschrauben
with 2 tie bolts

	Name Name	Datum Date
Bearbeitet/Drawn	ov	18.08.1997
Geprüft/Checked	hue	18.08.1997
Normiert/Standard		
Gedruckt/Printed		

Zeichnungs-Nummer/Drawing-Number
103-007A2

EDV-Nr./EDP-No. L:\LFDZCHNG.245\24646

Ersatz für/Replacement for:

Ersetzt durch/Replacement by:

Urheberrechtsschutz: Diese Zeichnung ist unser Eigentum und uns nach dem Gesetz über Urheberrecht und verwandte Schutzrechte geschützt.
Protection of Copyright: This drawing is our property and is protected acc. to the law referring to copyright and related protective laws.

Stückliste
Parts List
Liste des pièces

Stck.	Pos.	DE **Baureihe MD** **Schnittzeichnung Nr. 103-007_2** **Benennung Stck. / Pos.**	GB **range MD** **sectional drawing No. 103-007_2** **denomination Qty. / item**	FR **série MD** **plan no. 103-007_2** **désignation Qté. / Poste**
1	200	Laterne	lantern	lanterne
2	202	Halbrundkerbnägel	round head grooved pin	rivet
1	203	Typenschild	type plate	plaque signalitique
4	210	6kt-Schraube	hexagon bolt	vis
4	212	Federring	spring washer	rondelle frein
4	213	6kt-Mutter	hexagon nut	écrou
1	307	Steckwelle	plug-in shaft	arbre à broche
1	309	Steckwellenbolzen	plug-in shaft pin	cheville pour arbre à broche
1	310	Spritzring	splash ring	bague de projection
1	330	Gleitringdichtung	mechanical seal	garniture mécanique
1	333	Gleitringdichtungsgehäuse	mechanical seal casing	carter de la garniture mécanique
1	372	Stützring	support ring	bague d'appui
1	400	Kuppelstange	coupling rod	barre d'accouplement
2	401	Gelenkhülse	retaining sleeve	douille d'articulation
2	402	Kuppelstangenbolzen	coupling rod pin	axe d'articulation
1	405	Manschette	universal joint sleeve	manchette
2	406	Halteband	holding band	collier de serrage
1	500	Sauggehäuse	suction casing	carter d'aspiration
1	501	Sauggehäusedichtung	casing gasket	étanchéité du carter d'aspiration
4	506	Zylinderschraube	socket screw	vis à tête cylindrique
4	507	Federring	spring washer	rondelle frein
4	509	6kt-Mutter	hexagon nut	écrou
1	600	Rotor	rotor	rotor
1	601	Stator	stator	stator
2	602	6kt-Schraube	hexagon bolt	vis
2	604	6kt-Mutter	hexagon nut	écrou
2	606	Scheibe	washer	rondelle
1	700	Druckstutzen	pressure branch	bride de refoulement
	098	seepex Gelenkfett Typ und Füllmenge: Betriebs- und Wartungsanleitung entnehmen	seepex joint grease type and filling quantity: see Operating and Maintenance Instruction	seepex graisse d' articulations sommaire pour type et quantité: voir Instructions de service et d'entretien
		Verschleißteile und Dichtungen: Betriebs- und Wartungsanleitung entnehmen	Wear parts and sealings: see Operating and Maintenance Instruction	pièces d'usure et étanchéités: voir Instructions de service et d'entretien
		Werkzeuge: Betriebs- und Wartungsanleitung entnehmen	Tools: see Operating and Maintenance Instruction	Outils: voir Instructions de service et d'entretien
		versetzt gezeichnet	drawn displaced	plan separé

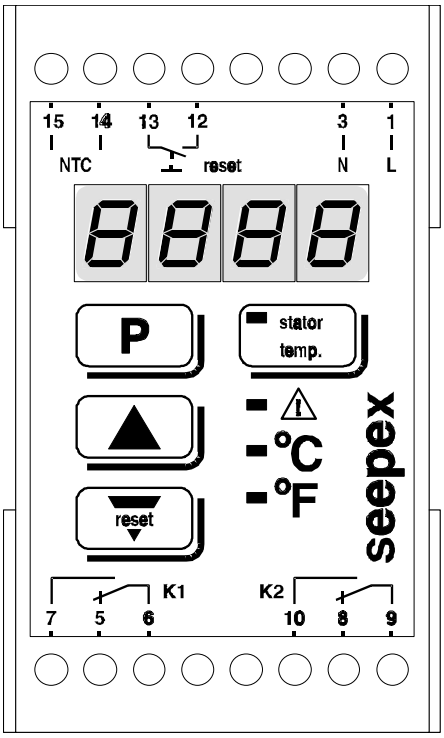

CONTENTS:

1.0 General

1.1 Introduction
1.2 Function

2.0 Technical Data

2.1 Temperature Sensor
2.2 TSE Control Device for Installation in Control Panel

3.0 Electrical Connection of the TSE

3.1 Installation Instructions
3.2 Connection Diagram of TSE Control Device
3.3 Relay Function

4.0 Procedures prior to Commissinong

4.1 Check Position of the Temperature Measuring Point at the Pump
4.2 Function Check
4.3 Approximate Adjustment of Trip Temperature

5.0 Commissioning and Operation

5.1 Fine Adjustment of Trip Temperature
5.2. Resetting of the Control Device after Dry-Running
5.3 Changeover of Display from ºC to ºF

6.0 Replacement of Stator

6.1 Order of Replacement Stator
6.2 Dismantling and Re-Assembly of Connection Head and Temperature Sensor

7.0 Malfunction

7.1 General
7.2 Function Check of Sensor Circuit
7.3 Function Check of TSE Control Device

8.0 Enclosures

. 8.1 Drawing 702-000/0000-0-009 __ for sizes 006-12 and 025-6L
. 8.2 Drawing 702-000/0000-0-008 __ for Sizes 025-12 up to 500-6LA
. 8.3 Additional Information ZU.TSE.02 for TSE Motor Control
. 8.4 Additional Information ZU.TSE.03 for TSE in Explosion Proof Construction

1.0 General

1.1 Introduction

Progressive cavity pumps should generally be protected against dry-running. Due to the increased friction between the main conveying elements ie. rotor and stator, which occurs in the event of dry-running the pump, the temperature at the internal surface of the stator can quickly rise depending on the pump speed.
When exceeding the max. permissible operating temperature the internal surface of the stator will burn and cease operation. If this occurs the stator needs to be replaced. The possible malfunction of an progressive cavity pump can be easily avoided by using the patented dry-running protection device TSE.

1.2 Function

The general operating principle of the dry-running protection device TSE is to continuously monitor the temperature in the stator and to trip the pump when reaching a limit temperature. The temperature in the pump stator is compared with the pre-set trip temperature via a NTC temperature sensor, which is fitted in the stator of the pump as well as the TSE control device, which is positioned in the control panel. In case of dry-running of the pump and a temperature increase in the stator up to the pre-set switch-off value, two relays will switch.

The drive motor of the pump will be switched-off via the potential-free changeover contacts and a fault message will be released. After rectification of the cause of the dry-running and the cooling down of the stator, the fault message at the TSE device can be acknowledged and the pump can be switched on again.

By acknowledging the fault message an automatic re-connection without inspection and correction of the cause of the dry-running is avoided.

2. 0 Technical Data

2.1 Temperature Sensor

The NTC thermister is installed in a stainless steel protection sleeve in the stator of the pump.
Permissible Temperature Range: 0-150 ºC
Standard Resistance: 10 kOhm at 25 ºC

Temp. °C	Resistance Ohm	Temp. °C	Resistance Ohm
0	32.650	70	1.752
10	19.900	80	1.255
20	12.490	90	915
25	**10.000**	100	678
30	8.057	110	510
40	5.327	120	389
50	3.603	130	301
60	2.488	140	235

2.2 TSE Control Device for Installation in Control Panel

2.2.1 Technical Data

Type:	SGRTSE 230 AC, SGRTSE 115 AC, SGRTSE 24 AC, SGRTSE 24 DC
Temperature Range:	0-150 ºC
Input:	NTC temperature sensor 10 kOhm (at 25 ºC) with sensor breaking protection at - 25 ºC.
Relay Output: changeover	2 potential-free contacts (K1,K2), breaking capacity 500 VA at 110/230 V Ohmic load.
Deliverable Operating Voltage:	24V, 115V, 230V AC; 24V DC
Power Consumption:	max. 4VA
Sensor Circuit:	No load voltage max. 2.5 VDC Short circuit current 0.5 mA DC
Display at Device:	Fault/Dry Running Trip temperature Stator temperature
Operation at Device:	Adjustment of trip temperature. Reset of fault message.
Casing Material:	ABS
Fastening:	Mounting on standard rail 35 mm acc. to standards or screw fixings acc. to standards
Kind of Protection:	Casing IP 40 Terminals IP 20
Ambient Temperature:	0-50 ºC
Dimension:	45x75x110 mm (WxHxD)
EMV (89/336/EEC)	CE conform acc. to standards

2.2.2
Dimensions and Wall Mounting

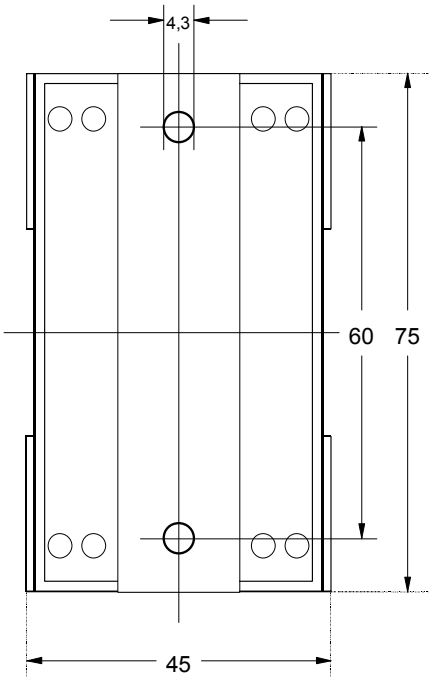

Installation Depth = 110 mm

3.0
Electrical Connection of the TSE

3.1
Installation Instructions

Prior to the connection and the commissioning of the device it has to be ensured that the supply voltage corresponds to the nominal voltage shown on the name plate. Nominal voltage fluctuations are permissible in the range of +/- 10 % of the device's nominal voltage.

The electrical connections have to be carried out in accordance with the wiring diagram and the regulation of the local EVV or the VDE directions.

In case of power fluctuations which lead to a malfunction of the device, adequate procedures have to be taken to avoid its reoccurrence. Alternatively these errors could be filtered out by an external supply filter. The device has to be provided with an internal supply filter.

Sensor leads have to be shielded. The shield has to be earthed at one end.

3.2
Connection Diagram of TSE Control Device

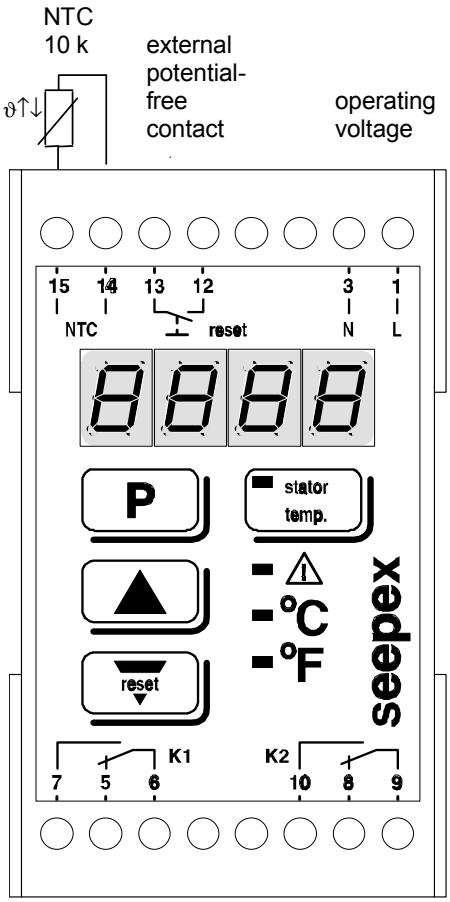

Should the TSE control device be reset after a dry-running from the control panel door or another remote position, a button ("make contact") at the terminals 12 +13 can be used.

3.3.
Relay Function

Actual temperature ‹ trip temperature
(trouble free operation)
Contacts 6 to 7 and 9 to 10 closed
Contacts 6 to 5 and 9 to 8 open

Actual temperature › trip temperature
(Malfunction/Dry Running)
Contacts 6 to 5 and 9 to 8 closed
Contacts 6 to 7 and 9 to 10 open

Relays K1 and K2 are switched parallel to each other and operate simultaneously. K1 is integrated in the motor contactor control serving as a switch-off provision. K 2 is optional as stand by for additional connection to a fault indicator or as a reserve to the process control computer.

4.0
Procedures prior to Commissioning

4.1
Check Position of the Temperature Measuring Point at the Pump

Considering the rotating direction and thus the conveying direction of the pump, the temperature sensor is fitted in our factory as per the following figures.

When changing direction of the pump and when replacing the stator the specified installation position of the temperature measuring point has to be checked. The temperature sensor must always be installed at the product entry side of the stator as the quickest temperature increase in case of dry-running will arise at this point.

4.1.1
Pump "counter clockwise rotation" - standard construction

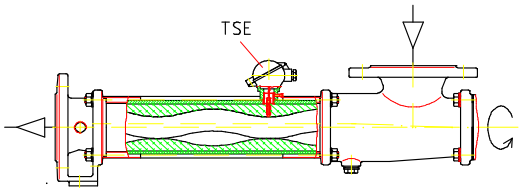

4.1.2
Pump "clockwise rotation" special construction

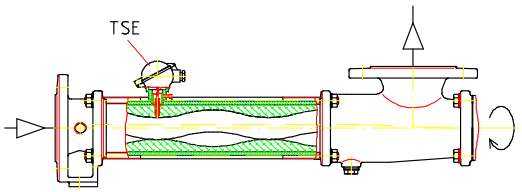

4.2
Function Check

After the electrical connection of the TSE and prior to the initial operation of the pump the following function check has to be carried out.

Switch-on control voltage at terminals 1 and 3 (Digital display at the TSE control device illuminates).

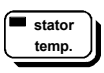

Press and hold button "stator temp" and read the temperature value.

If the shown temperature correspond to the ambient temperature in the pump the TSE is functioning correctly. In case of deviation proceed as per paragraph 7 - Malfunctioning.



4.3
Approximate Adjustment of Trip Temperature

The TSE control device is pre-set to a trip temperature of 50 ºC prior to leaving our factory. In order to achieve the shortest trip time after a dry-run and thus the max. protection of the pump stator, the trip temperature at the TSE control device has to be set as low as possible.

For the initial commissioning the temperature value pre-set in our factory should be maintained. Should the product have higher temperatures the value has to be adjusted to 20 to 30 ° C above the temperature of the conveying product.

Switch on control voltage. After self-check of the control device the actual pre-set temperature will show at the display.



Press and release button. Adjusting Mode is activated. The displays shows alternately "set" and the last set trip temperature.



Increasing the trip temperature - press button and release.
The adjusted temperature increases by + 1ºC. Press button and hold approx. 3 seconds in + 10 ° C steps.



Decreasing of trip temperature - press button and release.
The adjusted temperature decreases by - 1º C. Press button and hold approx. 3 sec. in - 10º C steps.



Press and release button. Return the unit to the operating mode. The adjusted trip temperature is transferred to a continuous memory and shown on the display.

Note: During the adjusting mode, if a button is not pressed within 10 seconds the controller automatically returns to the operating mode and disregards any previous adjustment.

Following the above approximate instruction, the seepex pump can operate for a limited period of time (approx. 1 hour). Then a correction of the adjustment according to paragraph 5 - Fine Adjustment - has to be carried out.



5.0 Commissioning and Operation

5.1 Fine Adjustment of the Trip Temperature

Following the instruction for approximate adjustment in paragraph 4.3 the seepex pump has to operate for at least 30 to 60 minutes to allow the operating temperature in the stator become stable.

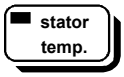

While the pump is in operation the temperature of the pump is shown on the display of the TSE controller by continuously pressing the button.

The final trip temperature has now to be set 10 ºC higher then the indicated operating temperature according to the instructions in paragraph 4.3.

Attention

For all adjustments the max. product temperature occurring during operation has always to be considered. In case of a product temperature higher than 40 ºC, it always has to be checked if this is mentioned in the data sheet of the pump and has therefore been considered in the rotor/stator design. If the temperature shown on the data sheet does not correspond to the actual temperature, please contact seepex.

5.2 Resetting of the Control Device after Dry-Running

In the event of dry-running of the pump and temperature increase in the stator above the pre-set limit value, the installed relays trip and maintain locked in this position. After the pump has cooled down the remaining fault message (red LED) has to be acknowledged using one of the following procedures, so that the relay will be reset.

5.2.1

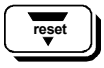

Press at the TSE control device for at least 1 sec.

5.2.2

Switch-off operating voltage at TSE control device (terminals 1-3).

5.2.3

With external contact (reset button, closed for at least 1 sec.)

5.3 Changeover of the Display from ºC to ºF.



Press and hold button for 10 secs. until display changes over.

The selected temperature units are shown via an LED next to the Symbol ºC or ºF.

6.0 Replacement of Stator

6.1 Order of Replacement Stator

When ordering a replacement stator for a seepex pump, please quote:

Stator drilled for TSE fitted with sensor sleeve in 1.4571.

If the pump is used to convey highly corrosive products where 1.4571 material is not resistant, a sensor sleeve made of 2.4610 (Hastelloy C4) has to be ordered.



Attention

The sensor sleeve is fitted in our factory. It is pre-set for operation and may not be adjusted.

6.2 Dismantling/Re-Assembly of the Connection Head and Temperature Sensor.

The following drawings apply:

- For TSE in elastic stators:
  Drawing No. 702-000/0000-0-009 __
  for pump sizes 006-12 and 025-6L.

  Drawing No. 702-000/0000-0-008 __
  for pump sizes 025-12 to 500-6LA.

- For TSE in fixed stators:
  Drawing No. 702-000/0000-0-005 __

6.2.1 Dismantling

Lift the cover of the connection head and disconnect wires of the temperature sensor. After having loosened the side screw slide the connection head off the threaded sleeve. Remove threaded sleeve from the stator and remove clamping ring, rubber ring and temperature sensor from sensor sleeve. The temperature sensor cannot be re-used and can thus be disposed off with the damaged stator.

6.2.2
Re-Assembly

The items mentioned in paragraph 6.2.1 have to be re-installed into the new stator. It is vital to consider the temperature measuring point when installing the stator (refer to paragraph 4.1).

Do not further adjust or change the sensor sleeve setting as this has already been done in our factory.

Remove protective pipe (protective transport packaging).

Push the thermistor sensor with clamping screws and rubber ring to the bottom of the sensor sleeve and adjust.

Screw the threaded sleeve with 2 O-Rings in the tapped hole at the stator.

When installing the connection head, the connection wires of the thermistor sensor must be threaded through the hole in the junction box. After fastening the connection head on the threaded stator barred, recannect wires and put the cover back onto the connection head.

7.0
Malfunction

7.1
General

Fault messages and switch-off of the pump without actual dry-running or overload might be caused by a defect in the temperature sensor wire, the TSE control device or other electrical switch devices.



The following reasons might have caused this error alarm at the TSE control device:

break of sensor or line
short circuit of sensor or line
measuring range (-25 ...150°C) is exceeded or remained under

The following procedure is recommended to check the TSE control device and the sensor circuit including temperature sensor:

7.2
Function Check of Sensor Circuit

Disconnect the temperature sensor wire at the TSE control device terminals 14 and 15 and connect a resistance measuring device (Multimeter or Ohmmeter). The measured electrical resistance must conform with the value in the table shown in paragraph 2.1 in accordance with the pump temperature. In case of deviations of the resistance value of more than 10% of the set value, measure the resistance at the connection head of the TSE at the pump. To do this the wire to the control device at the connection head of the pump needs to be removed. If the same deviations occur when measuring the resistance at the temperature sensor
directly at the pump, the temperature sensor is damaged and needs to be replaced (refer to paragraph 6.2 and 6.3).

Should the resistance check at the temperature sensor show correct values, then damage to the connection cable or the connection terminal is the cause of malfunction.

7.3
Function Check of TSE Control Device

If an trouble-free sensor circuit has been determined during the testing according to paragraph 7.2, damage to the TSE control device is most likely. In order to carry out the check, remove the sensor wires at terminals 14 and 15 and connect a commercial deposited carbon or metal film resistor as per the following list.:

Resistance (Ohm)	Switching Temp. °C
10.000	25
5.600	39
2.200	63
1.000	87
560	107
220	143

Switch-on control voltage at terminal 1+3
(Digital Display at the TSE device illuminates)

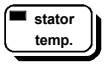

Press and hold button “stator temp.” and read the temperature value.

The shown value must correspond to the switch temperature, which applies to the resistance used. Should the shown value deviate by more than 5-10 ºC or should the value be absent at all, the TSE control device must be sent to seepex for repair.

TSE Control Unit

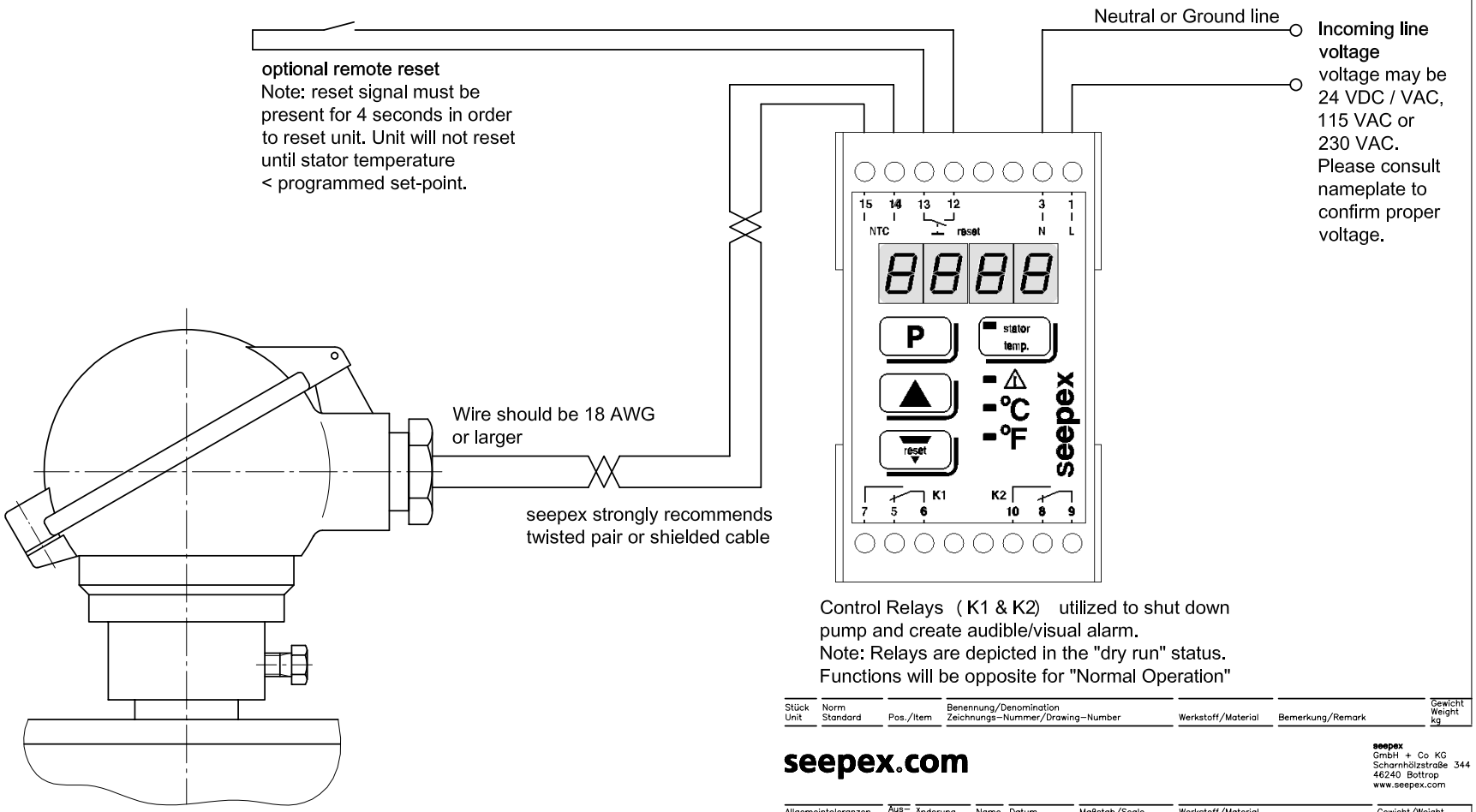

Control Relays (K1 & K2) utilized to shut down pump and create audible/visual alarm.
Note: Relays are depicted in the "dry run" status.
Functions will be opposite for "Normal Operation"

Stück Unit	Norm Standard	Pos./Item	Benennung/Denomination Zeichnungs-Nummer/Drawing-Number	Werkstoff/Material	Bemerkung/Remark	Gewicht Weight kg

seepex.com

seepex
GmbH + Co KG
Scharnhölzstraße 344
46240 Bottrop
www.seepex.com

Allgemeintoleranzen für Maße ohne einzelne Toleranzeintragung DIN ISO 2768-mittel	Ausgabe Issue	Änderung Modification	Name Name	Datum Date	Maßstab/Scale %	Werkstoff/Material	Gewicht/Weight
General tolerances for mass without individual tolerance entry DIN ISO 2768-average					Bezeichnung/Denomination: Simplified wiring instruction for seepex TSE dry running protection (seepex Inc.)		
Rauheit für Oberflächenzeichen DIN ISO 1302 Reihe 2			Name Name	Datum Date	Zeichnungs-Nummer/Drawing-Number: 711-TSE/0000-0-005A3		
Roughness for surface finish indication DIN ISO 1302 Reihe 2	Bearbeitet/Drawn		hof	20.03.2006	EDV-Nr./EDP-No. 75657.dwg		
	Geprüft/Checked		ham	20.03.2006	Ersatz für/Replacement for:	Ersetzt durch/Replacement by:	
	Normiert/Standard						
	Gedruckt/Printed						

Urheberrechtsschutz: Diese Zeichnung ist unser Eigentum und uns nach dem Gesetz über Urheberrecht und verwandte Schutzrechte geschützt.
Protection of Copyright: This drawing is our property and is protected acc. to the law referring to copyright and related protective laws.

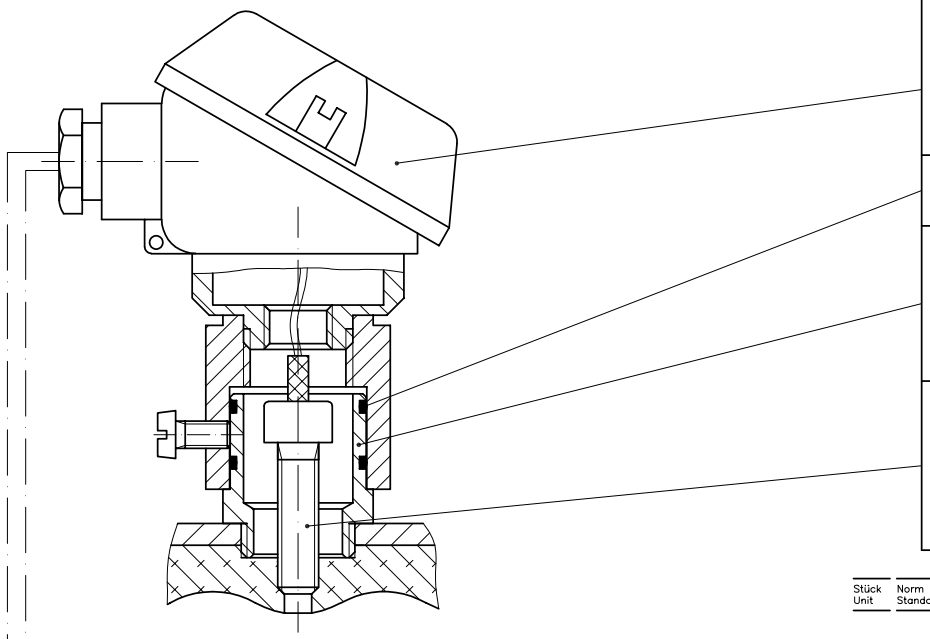

Elektrischer Anschluß siehe TSE-Betriebs- und Montageanleitung
Electric connection see TSE operating and assembly instructions

			Pumpen-Baugröße pumpe size
			006-12 006-24 012-12 012-24 025-6L
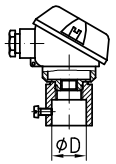	Anschlußkopf connection head	Pos. item	650
		Typ type	MA
		ØD	20.1+0.2
	O-ring o-ring	Pos. item	651
		Größe size	ø16x1.5
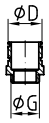	Gewindehülse screw socket	Pos. item	652
		ØD	ø19.9-0.1
		ØG	G3/8"
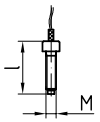	Thermistor- Fühlerschraube thermistor sensor screw	Pos. item	653
		Größe size	F6-25
		M	M6
		l	31

Stück Unit	Norm Standard	Pos./Item	Benennung/Denomination Zeichnungs-Nummer/Drawing-Number	Werkstoff/Material	Bemerkung/Remark	Gewicht Weight kg

seepex.com

seepex
GmbH + Co KG
Scharnhölzstraße 344
D-46240 Bottrop
www.seepex.com

Allgemeintoleranzen für Maße ohne einzelne Toleranzeintragung DIN ISO 2768-mittel

General tolerances for mass without individual tolerance entry DIN ISO 2768-average

Rauheit für Oberflächenzeichen DIN ISO 1302 Reihe 2

Roughness for surface finish indication DIN ISO 1302 Reihe 2

Ausgabe Issue	Änderung Modification	Name Name	Datum Date
B	überarbeitet	hof	17.06.1996
C	Baugröße 01-48	ov	23.09.1998
D	01-48 entfällt	hof	15.12.1998
E	Nachtrag 025-6L	hof	06.01.1999
F	025-12T,05-6LT	hof	29.04.2002
G	025-12,05-6LT raus	hof	18.02.2003

	Name Name	Datum Date
Bearbeitet/Drawn	hof	17.06.1996
Geprüft/Checked	wgr	18.06.1996
Normiert/Standard		
Gedruckt/Printed		

Maßstab/Scale 1:1

Werkstoff/Material

Gewicht/Weight

Bezeichnung/Denomination

TSE / Pumpenseitige Teile
TSE / pumpsided parts
für elastische Statoren / for elastic stators

Zeichnungs-Nummer/Drawing-Number

702-000/0000-0-009G3

EDV-Nr./EDP-No. 14998.dwg

Ersatz für/Replacement for: A2428-4

Ersetzt durch/Replacement by:

Urheberrechtsschutz: Diese Zeichnung ist unser Eigentum und uns nach dem Gesetz über Urheberrecht und verwandte Schutzrechte geschützt.
Protection of Copyright: This drawing is our property and is protected acc. to the law referring to copyright and related protective laws.

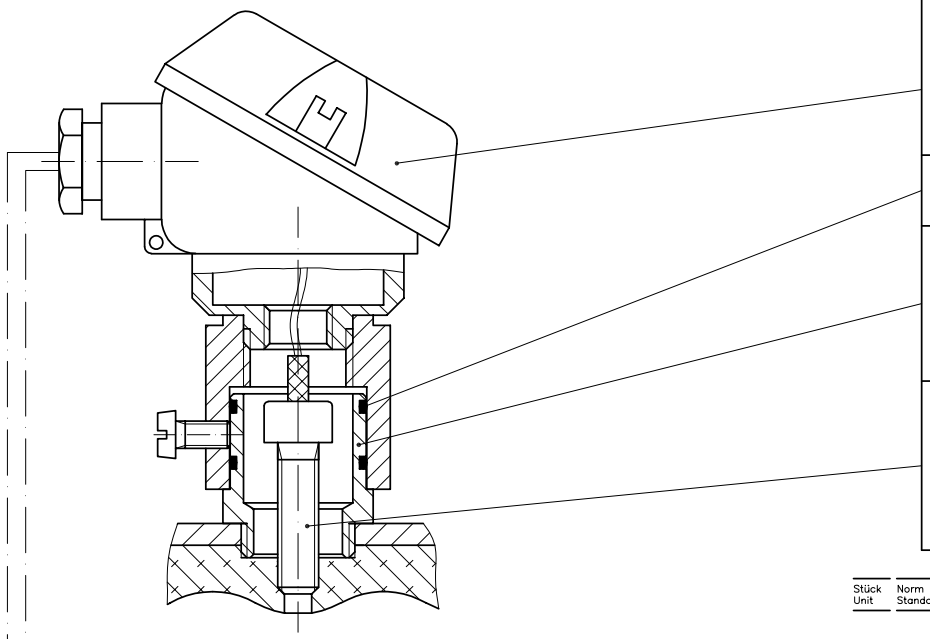

Elektrischer Anschluß siehe TSE-Betriebs- und Montageanleitung
Electric connection see TSE operating and assembly instructions

			Pumpen-Baugröße pumpe size
			006-12 006-24 012-12 012-24 025-6L
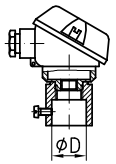	Anschlußkopf connection head	Pos. item	650
		Typ type	MA
		ØD	20.1+0.2
	O-ring o-ring	Pos. item	651
		Größe size	ø16x1.5
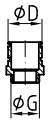	Gewindehülse screw socket	Pos. item	652
		ØD	ø19.9-0.1
		ØG	G3/8"
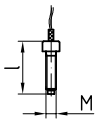	Thermistor- Fühlerschraube thermistor sensor screw	Pos. item	653
		Größe size	F6-25
		M	M6
		l	31

Stück Unit	Norm Standard	Pos./Item	Benennung/Denomination Zeichnungs-Nummer/Drawing-Number	Werkstoff/Material	Bemerkung/Remark	Gewicht Weight kg

seepex.com

seepex
GmbH + Co KG
Scharnhölzstraße 344
D-46240 Bottrop
www.seepex.com

Allgemeintoleranzen für Maße ohne einzelne Toleranzeintragung DIN ISO 2768-mittel

General tolerances for mass without individual tolerance entry DIN ISO 2768-average

Rauheit für Oberflächenzeichen DIN ISO 1302 Reihe 2

Roughness for surface finish indication DIN ISO 1302 Reihe 2

Ausgabe Issue	Änderung Modification	Name Name	Datum Date
B	überarbeitet	hof	17.06.1996
C	Baugröße 01-48	ov	23.09.1998
D	01-48 entfällt	hof	15.12.1998
E	Nachtrag 025-6L	hof	06.01.1999
F	025-12T,05-6LT	hof	29.04.2002
G	025-12,05-6LT raus	hof	18.02.2003

	Name Name	Datum Date
Bearbeitet/Drawn	hof	17.06.1996
Geprüft/Checked	wgr	18.06.1996
Normiert/Standard		
Gedruckt/Printed		

Maßstab/Scale 1:1

Werkstoff/Material

Gewicht/Weight

Bezeichnung/Denomination

TSE / Pumpenseitige Teile
TSE / pumpsided parts
für elastische Statoren / for elastic stators

Zeichnungs-Nummer/Drawing-Number

702-000/0000-0-009G3

EDV-Nr./EDP-No. 14998.dwg

Ersatz für/Replacement for: A2428-4

Ersetzt durch/Replacement by:

Urheberrechtsschutz: Diese Zeichnung ist unser Eigentum und uns nach dem Gesetz über Urheberrecht und verwandte Schutzrechte geschützt.
Protection of Copyright: This drawing is our property and is protected acc. to the law referring to copyright and related protective laws.

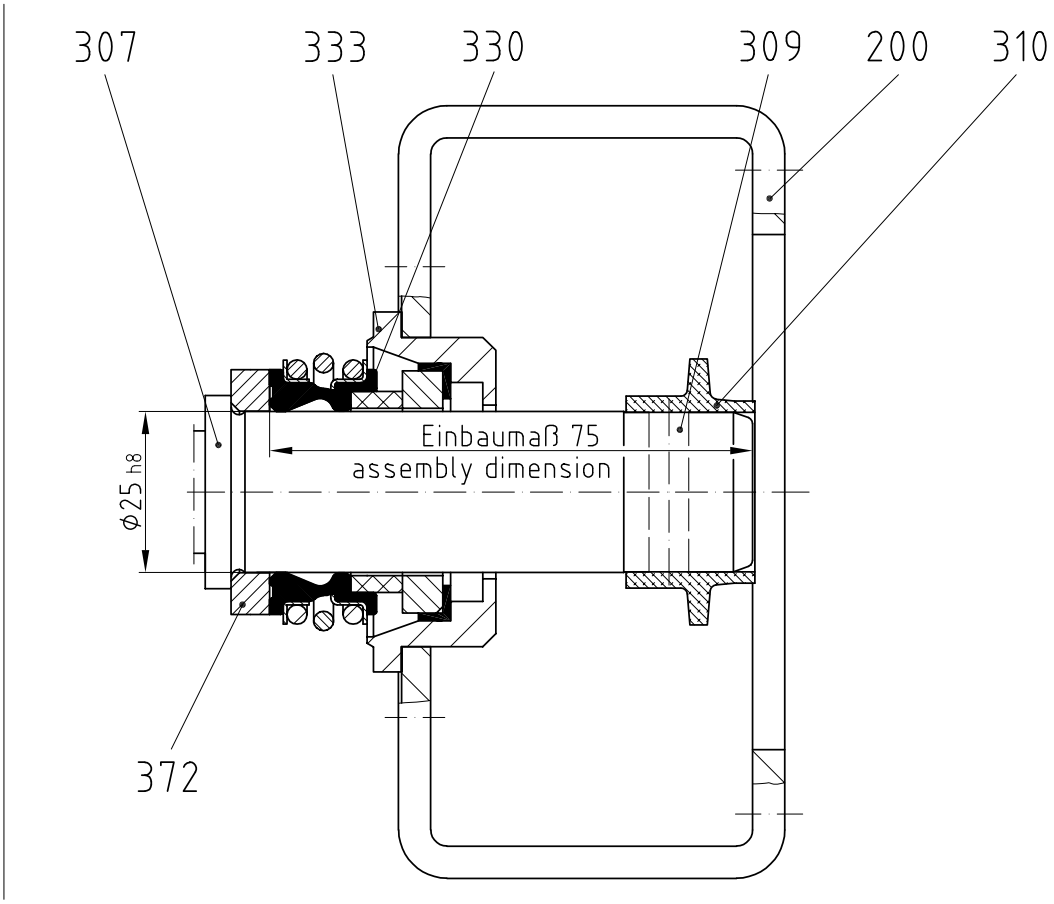

Stück Unit	Norm Standard	Pos./Item	Benennung/Denomination Zeichnungs-Nummer/Drawing-Number	Werkstoff/Material	Bemerkung/Remark	Gewicht Weight kg
1		372	Stützring / support ring 062-372/M120-0-060A4			
1		333	GLRD-Gehäuse / mechanical seal casing 103-333/M120-0-005A4			
1		330	GLRD / mechanical seal MG1/ϕ25-G60		Fabrikat / make : Burgmann	
1		310	Spritzring / splash ring 062-310/M120-0-001A4			
1		309	Steckwellenbolzen / plug-in shaft pin 062-309/M120-0-001A4			
1		307	Steckwelle / plug-in shaft 103-307/M120-0-304E4			
1		200	Laterne / lantern 103-200/M120-0-____			

seepex.com

seepex
GmbH + Co KG
Scharnhölzstraße 344
46240 Bottrop
www.seepex.com

Allgemeintoleranzen für Maße ohne einzelne Toleranzeintragung DIN ISO 2768-mittel

General tolerances for mass without individual tolerance entry DIN ISO 2768-average

Rauheit für Oberflächenzeichen DIN ISO 1302 Reihe 2

Roughness for surface finish indication DIN ISO 1302 Reihe 2

Ausgabe Issue	Änderung Modification	Name Name	Datum Date

	Name Name	Datum Date
Bearbeitet/Drawn	hgg	28.05.2004
Geprüft/Checked	kno	28.04.2004
Normiert/Standard		
Gedruckt/Printed		

Maßstab/Scale: 1:1

Werkstoff/Material:

Gewicht/Weight:

Bezeichnung/Denomination

GLRD Schnittzeichnung
mechanical seal sectional drawing

Burgmann MG1/ϕ25/G60 für Sondermaterial / for special material
mit erhöhter Vorspannung/ with increased pre-clamping

Zeichnungs-Nummer/Drawing-Number: 103-0GB/M120-0-129A4

EDV-Nr./EDP-No. 62810.dwg

Ersatz für/Replacement for:

Ersetzt durch/Replacement by:

Urheberrechtsschutz: Diese Zeichnung ist unser Eigentum und uns nach dem Gesetz über Urheberrecht und verwandte Schutzrechte geschützt.
Protection of Copyright: This drawing is our property and is protected acc. to the law referring to copyright and related protective laws.

1.
General

- Please take the appertaining drawing from respective pump data sheet.

- The mechanical seal is suitable for the operating conditions indicated in the pump data sheet. Modifications are only admissible after the customer has consulted with **seepex**. Additionally, attention must be paid to the manufacturer's operating manual.

2.
Safety

Any mode of operation impairing the operating safety of the mechanical seal has to be avoided.

The operator is advised to consider the possible effects on the environment which could be caused by a defective mechanical seal and what additional measures must be taken to protect the environment and the public.

The pump must be mounted and operated in such a way that operation with a defective mechanical seal will not result in injury or harm to the public and that any leakage can be safely and properly dealt with.

Mechanical seals are often used to seal hazardous material (chemicals, drugs, etc.). It is essential that rules pertaining to the handling of hazardous materials are adhered to.

Modifications effected by the customer himself and changes influencing the safety of the mechanical seal are not allowed.

3.
Emissions

A mechanical seal is a dynamic seal and leakage is unavoidable.

ATTENTION

Components that may contact leakage must be resistant to corrosion or be protected accordingly.

Mechanical seal leakage must be drained in a safe and proper manner.

1.0
General

- Please take the appertaining drawing from respective pump data sheet.
- The mechanical seal is suitable for the operating conditions indicated in the pump data sheet. Modifications are only admissible after the customer has consulted with seepex. Additionally, attention must be paid to the manufacturer's operating manual.

2.0
Safety

Any mode of operation impairing the operating safety of the mechanical seal has to be avoided.

The operator is advised to consider the possible effects on the environment which could be caused by a defective mechanical seal and what additional measures must be taken to protect the environment and the public.

The pump must be mounted and operated in such a way that operation with a defective mechanical seal will not result in injury or harm to the public and that any leakage can be safely and properly dealt with.

Mechanical seals are often used to seal hazardous material (chemicals, drugs, etc.). It is essential that rules pertaining to the handling of hazardous materials are adhered to.

Modifications effected by the customer himself and changes influencing the safety of the mechanical seal are not allowed.

3.0
Emissions

A mechanical seal is a dynamic seal and leakage is unavoidable.

ATTENTION

Components that may contact leakage must be resistant to corrosion or be protected accordingly.

Mechanical seal leakage must be drained in a safe and proper manner.

4.0
Flushing or circulation of single-acting mechanical seals

Single-acting mechanical seals contacting the conveying liquid require no additional flushing or a circulation pipe because sufficient flushing and heat exchange occurs around the seal due to the conveying liquid.

However, in particular cases, a direct flushing pipe can be installed into the flushing connection on the mechanical seal housing.

5.0
Commissioning

Regardless of the pump's operating status, the conveying medium to be sealed must always be in liquid form at the mechanical seal. This particularly applies to the pump's commissioning and its placing out of service.

6.0
Maintenance

When operating the pump according to the instructions, no maintenance is required.

**7.0
Disassembly / Reassembly**

**7.1
Disassembly**

- Remove flushing connections at shaft seal housing (SEA).
- Lift / displace splash ring (310) and eject plug-in shaft pin (309) horizontally.
- Withdraw rotating unit (RTE) together with shaft seal parallel from output shaft of drive and avoid chocking.
- Clean plug-in shaft (307) and remove burrs etc., which may damage sealing elements. Moisten plug-in shaft (307) with slip additive (diluted fluid soap).
- Loosen axial safety device of mechanical seal (330 or 372) and withdraw mechanical seal (330) from plug-in shaft (307).
- Remove mechanical seal housing (333) from lantern (200).
- Press counter-ring of mechanical seal with o-ring out of mechanical seal housing (333).

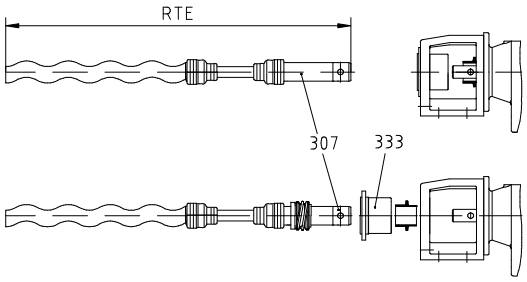

**7.2
Reassembly**

ATTENTION

Mechanical seals are precision parts of high quality. Therefore, the installation must be effected with care. Gentle handling and extreme neatness are essential.

- Clean mechanical seal housing (333)
- Evenly press counter-ring with o-ring into mechanical seal housing (333). To facilitate assembly, the o-ring should be moistened with a lubricant (diluted fluid soap).

ATTENTION

- Oil or grease must not be used to facilitate assembly.
- Install mechanical seal housing (333) to lantern (200) and onsure correct position of flushing connections.
- Remove plug-in shaft (307), burrs and roughness and clean the unit.
- Check / adjust set dimension of mechanical seal on plug-in shaft (307). Moisten plug-in shaft (307) and elastomer parts of mechanical seal with lubricant (diluted fluid soap).
- Slip mechanical seal onto plug-in shaft (307) as far as set ring.
- Lubricate drive shaft (ANT) with antiseize graphite petroleum.
- Moisten splash ring (310) and plug-in shaft (307) with pin joint grease, (for type, please see index) and slip splash ring (310) onto output shaft of drive. Note installating position of splash ring and refer to description on splash ring.
- Move rotating unit (RTE) through mechanical seal housing (333) and splash ring (310) and slip splash ring (310) onto output shaft of drive (ANT). Push in plug-in shaft pin (309) in horizontal position.
- Position of splash ring:
  Collar of splash ring shall be fitted in a distance of about 0.5 mm to lantern (200).

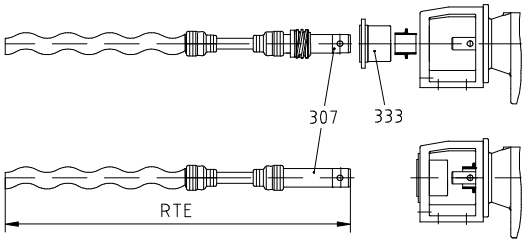

Range: MD, MDF

To avoid the expenses incurred by lengthy stop periods of the pump, seepex recommend the acquisition of a set of wearing parts and a set of gaskets.
The table below shows the contents of these sets.

Part designation	small set of wearing parts	big set of wearing parts	set of gaskets	Item number acc. to sectional drawing of pump and parts list
	Number			
Rotor		1		600
Stator 2)	1	1		601
Universal joint sleeve		1		405
Coupling rod pin		2		402
Guide bush 2)		-		-
Coupling rod		1		400
Coupling rod bush 2)		-		-
Casing gasket			1	501
Holding band, small 2)		-		-
Holding band, large 2)		2		406
Packing ring set 2) 3)	1	1		301
Mechanical seal 3)			1	330
Sealing ring			4	571, 726
Splash ring			1	310
O-ring			1	572
Plug-in shaft 2)		1		307
Special joint grease				098 1 cart. 300 gr (c. 315cm³) grease quantity per pin joint, see tech.
Tool				Essential for assembly, see Point 9, document OM.SPT.01

2) see tools Point 9., document OM.SPT.01
3) Item 330 and item 301 (as an alternative) depend on the pump design. With regard to the pump design, refer to the appertaining data sheet and the sectional drawing. See Point 9.

	Allgemeine normierte Werkzeuge / Standardized tools						
Werkzeug Nr. tool No.	W1	W2	W5	W6	W9	W11	W13
zur Montage von: tool for mounting of:	Packung packing	Stator stator	Gelenk joint	Lager bearing	allgemein general	Mutter für Teflon-manschette nut for teflon universal joint sleeve	Stator Stator 1)
Benennung: denomination:	Packungszieher packing lever	Ketten-Rohrzange + Ersatzkette chain pipe wrench +replacement chain	Durchschlag drift	Bolzen pin	Montierhebel mounting lever	Bandschlüssel strap wrench	Bandschlüssel strap wrench
Baugröße **size**	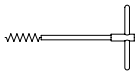					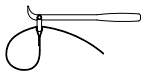	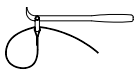
0005-24, 0015-24 003-12/-24 006-12/-24 012-12/-24 025-6L 025-12T, 05-6LT	PKZ XX 000 0000 0 X35M0	**Siehe W 13** **see W 13**					WKZ BDS 027 0 430
025-12, 025-24 05-12, 1-6L	PKZ XX 000 0000 0 X0FQ0	KRZ XX Z55 0250 0 00000 KEZ XX Z55 0250 0 00000	DHS XX 020 0000 0 A2620		2 Stück 2 pieces MHL XX SA 610		
05-24, 01-48, 025-48, 1-12, 2-6L 1-24, 1-12V 2-12, 5-6L			DHS XX 050 0000 0 A2620	BLZ XX 020 0008 0 A2619		WKZ BDS 027 0 430	
2-24, 2-12V 5-12, 8-12T 10-6L, 15-6LT 05-48	PKZ XX 000 0000 0 XOHV0		DHS XX 050 0000 0 A2620	BLZ XX 020 0010 0 A2619			
5-24, 5-12V 10-12, 17-6L, 30-6LT, 15-12T, 10-24R, 1-48		KRZ XX Z55 0300 6 00000 KEZ XX Z55 0300 6 00000	DHS XX 100 0000 0 A2620	BLZ XX 020 0010 0 A2619			
14-12, 26-6L, 40-6LT 10-24, 10-12V 17-12, 35-6L, 26-12, 52-6L, 55-6LT, 75-6LT 30-12T, 10-24, 17-24R 2-48	PKZ XX 000 0000 0 XA01A		DHS XX 120 0000 0 A2620	BLZ XX 025 0012 0 A2619			
17-24, 17-12V 35-12, 52-12, 70-6L, 100-6L, 110-6LT, 55-12T 34-24R 5-48		KRZ XX Z55 0300 8 00000 KEZ XX Z55 0300 8 00000	DHS XX 160 0200 0 A2620	BLZ XX 030 0012 0 A2619			
35-24, 35-12V 70-12, 130-6L, 200-6L, 110-12T 70-24R, 10-48 200-6L			DHS XX 200 0200 0 A2620	BLZ XX 035 0012 0 A2619			
130-12, 202-6L, 300-6L, 200-12T 70-18, 100-18, 130-18 70-24, 70-12V 130-24R 17-48		KRZ XX Z55 0301 2 00000 KEZ XX Z55 0301 2 00000	DHS XX 240 0250 0 A2620	BLZ XX 040 0015 0 A2619			
240-12, 300-12T 130-18, 130-24 35-48/70-48							

1) Gilt nur für Pumpen in Edelstahl Ausführung / only valid for pumps in special steel design

	Empfohlene seepex Werkzeuge Aufgrund der Ausführung für bestimmte Montagen empfohlen, durch allgemeine normierte Werkzeuge bedingt ersetzbar. **Recommended seepex tools** Due to the design recommended for certain repairs, these tools partially replace the standardized tools.							
Werkzeug Nr. tool No.	W4	W7	W8	W10	W12	W14	W15	W16
zur Montage von: tool for mounting of:	Gelenk joint	Lager bearing	Schmier-nippel lubrication nipple	Steckwelle plug-in shaft	Teflon-manschette teflon universal joint sleeve	Kuppelstangen-buchsen coupling rod bushing	Manschette universal joint sleeve	Lippendichtung lip seal
Benennung: denomination:	Montagedorn assembly mandrel	Montage-hülse mounting sleeve	Einschlag-hülse drive-in sleeve	Demontage-werkzeug dismantling tool	Montage-werkzeug mounting tool	Presswerkzeug pressing tool	Montageplatte mounting plate	Montagehülse Mounting sleeve
Baugröße **size**	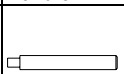			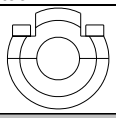		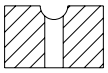	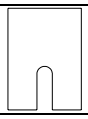	
0005-24, 0015-24 003-12/-24 006-12/-24 012-12/-24 025-6L 025-12T, 05-6LT	MTD L2 060 M120 0 XXXXX 2)						MTP A7 703 M500 0 002XX	MTH B7 703 M120 0 W0260
025-12, 025-24 05-12, 1-6L	MTD L2 060 M500 0 XXXXX	MTH M8 060 M500 0 XXXXX		AZV B2 262 M500 0 XXXXX			MTP A7 703 M500 0 002XX	
05-24, 01-48, 025-48, 1-12, 2-6L 1-24, 1-12V 2-12, 5-6L	MTD L2 060 0020 0 XXXXX	MTH M8 060 0020 0 XXXXX		AZV B2 262 0020 0 XXXXX	MMT M8 060 0020 0 XXXXX	PWZ C6 060 0020 0 XXXXX		
2-24, 2-12V 5-12, 8-12T 10-6L, 15-6LT 05-48	MTD L2 060 0050 0 XXXXX	MTH M8 060 0050 0 XXXXX		AZV B2 262 0050 0 XXXXX	MMT M8 060 0050 0 XXXXX	PWZ C6 060 0050 0 XXXXX		
5-24, 5-12V 10-12, 17-6L, 30-6LT, 15-12T, 10-24R, 1-48	MTD L2 060 0100 0 XXXXX	MTH M8 060 0100 0 XXXXX		AZV B2 262 0100 0 XXXXX	MMT M8 060 0100 0 XXXXX	PWZ C6 060 0100 0 XXXXX		
14-12, 26-6L, 40-6LT	MTD L2 060 0140 0 XXXXX	MTH M8 060 0140 0 XXXXX		AZV B2 262 0170 0 XF5XX		PWZ C6 060 1400 0 XXXXX		
10-24, 10-12V 17-12, 35-6L, 26-12, 52-6L, 55-6LT, 75-6LT 30-12T, 10-24, 17-24R 2-48	MTD L2 060 0170 0 XXXXX	MTH M8 060 0170 0 XXXXX	ESH N0 000 0000 0 A01A4	AZV B2 262 0170 0 XG0XX	MMT M8 060 0170 0 XXXXX	PWZ C6 060 0170 0 XXXXX		
17-24, 17-12V 35-12, 52-12, 70-6L, 100-6L, 110-6LT, 55-12T 34-24R, 5-48	MTD L2 060 0350 0 XXXXX	MTH M8 060 0350 0 XXXXX		AZV B2 262 0350 0 XH0XX		PWZ C6 060 0350 0 XXXXX		
35-24, 35-12V 70-12, 130-6L, 200-6L, 110-12T 70-24R, 10-48, 200-6L	MTD L2 060 0700 0 XXXXX	MTH M8 060 0700 0 XXXXX		AZV L7 703 0700 0 XK0XX		PWZ C6 060 0700 0 XXXXX		
130-12, 202-6L, 300-6L, 200-12T 70-18, 100-18, 130-18 70-24, 70-12V 130-24R 17-48	MTD L2 060 1300 0 XXXXX	MTH M8 060 1300 0 XXXXX				PWZ C6 060 1300 0 XXXXX		
240-12, 300-12T 130-18, 130-24 35-48/70-48						PWZ C6 060 2400 0 XXXXX		

2) entfällt ab Pumpen-Herstellungsdatum 01.04.93 / can be omitted as from 01.04.93 (pump manufacturing date)

	Empfohlene seepex Werkzeuge Aufgrund der Ausführung für bestimmte Montagen empfohlen, durch allgemeine normierte Werkzeuge bedingt ersetzbar. **Recommended seepex tools** Due to the design recommended for certain repairs, these tools partially replace the standardized tools.								**Spezial-werkzeuge** **Special tools**
Werkzeug Nr. tool No.	W17	W18	W19	W20	W22	W23	W24	W25	W3
zur Montage von: tool for mounting of:	Lippendichtung lip seal	Gleitlager-buchse plain bearing bush	Wellen-schonhülse shaft securing sleeve	Cartridge-Einheit cartridge-unit	Wellen-dichtring lip seal	Wellen-dichtring lip seal	Antriebs-gehäuse drive casing	Steckwellen-bolzen plug-in shaft pin	Halteband holding band
Benennung: denomination:	Schlagzylinder Zentrierdorn Montagebolzen cylinder centering mandrel mounting pin	Montagedorn mounting mandrel	Montagehülse mounting sleeve	Aufnahme intake	Montage-werkzeug mounting tool	Montage-werkzeug mounting tool	Aufhänge-vorrichtung suspension device	Montagedorn mounting mandrel	Montage-werkzeug mounting tool
Baugröße **size**	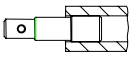	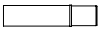	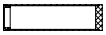						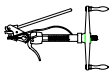
0005-24, 0015-24 003-12/-24 006-12/-24 012-12/-24 025-6L, 025-12T, 05-6LT	ZSH B7 703 M120 0 W0171 ZDR B7 703 M120 0 W0172 MBL A7 703 M120 0 W0173								MHB WH A00 1WHV 0 01000
025-12, 025-24 05-12, 1-6L									
05-24, 01-48, 025-48, 1-12, 2-6L 1-24, 1-12V 2-12, 5-6L								MTD L8 703 0050 0 SXX0J	
2-24, 2-12V									
5-12, 8-12T 10-6L, 15-6LT 05-48									
5-24, 5-12V									
10-12, 17-6L, 30-6LT, 15-12T, 10-24R, 1-48								MTD L8 703 0170 0 SXX0J	
14-12, 26-6L, 40-6LT									
10-24, 10-12V									
17-12, 35-6L, 26-12, 52-6L, 55-6LT, 75-6LT 30-12T, 10-24, 17-24R, 2-48			SPT B4 703 0170 0 01000	SPT M8 703 0170 0 00900	SPT B4 703 0170 0 01100				
17-24, 17-12V									
35-12, 52-12, 70-6L, 100-6L, 110-6LT, 55-12T 34-24R, 5-48								MTD L8 703 0350 0 SXX0J	
35-24, 35-12V									
70-12, 130-6L, 200-6L, 110-12T 70-24R, 10-48, 200-6L		SPT M8 703 1300 0 01000	SPT M8 703 1300 0 01100	SPT M8 703 1300 0 00900	SPT B4 703 1300 0 0A200	SPT B4 703 1300 0 0A300		MTD L8 703 0700 0 SXX0J	
130-12, 202-6L, 300-6L, 200-12T 70-18, 100-18, 130-18 70-24, 70-12V 130-24R 17-48								MTD L8 703 1300 0 SXX0J	
240-12, 300-12T 130-18, 130-24 35-48/70-48							SPT M8 703 2400 0 01400		

10.0
Manufacturer's documents from sub-supplier

Burgmann
INDUSTRIES

OPERATING MANUAL

This document was drawn up observing the EC directives
"Machinery" 98/37/EC, EN ISO 12100-2 and the German Standard VDI 4500



In case of this mechanical seal is operated in **explosion area an appropriate additional operating manual,** following EC directives 94/9/EC (ATEX 95), has to be observed **by all means**! If required this could be ordered at BURGMANN.

BURGMANN MECHANICAL SEAL (M.S.)

Type MG1/dw-00 and versions

applies to all mechanical seals of the same series

dw = specified shaft diameter

These instructions are intended for the assembly, operating and control personnel and should be kept at hand on site.

PLEASE READ this manual carefully and OBSERVE the information contained as to:

- **Safety**
- **Installation**
- **Transport / Storage**
- **Operation**
- **Information about the product**
- **Servicing**

If there are any unclear points please contact BURGMANN by all means!

Table of Contents

Keywords and Symbols 3

GENERAL SAFETY NOTES 4

Instructions for worker's protection 5

TRANSPORT / STORAGE 6

Transport 6
Packing and storage 6

INFORMATION ABOUT THE PRODUCT 8

Manufacturer and country of origin 8
Declaration by the manufacturer 8
Type designation 8
Designated use 8
Operating limits 9
Materials 9
Drawings, diagrams 9
Versions 10
Seat Versions 10
Description and function 11
Required space, connecting dimensions 11
Supply of M.S. 11
Emissions 12

INSTALLATION 13

Assembly utilities 13
Preparation for assembly 13
Assembly / installation 14

OPERATION 16

Instructions for safe operation 16
Instructions for start up 16

SERVICING 17

Maintenance 17
Directives in case of failure 17
After-sales service by BURGMANN 18
Reconditioning (repair) 18
Disassembly / removal 18
Spare parts 19
Required details for enquiries and orders 19
Disposal of the BURGMANN mechanical seal 20
Copyright 20

Keywords and Symbols

Following symbols for particularly important information are used:



"Attention, please pay special attention to these sections of text"

DANGER! Draws attention to a direct hazard that will lead to injury or death of persons

WARNING! Draws attention to the risk that a hazard could lead to serious injury or death of persons

CAUTION! Draws attention to a hazard or unsafe method of working that could lead to personal injury or damage to equipment

ATTENTION! Identifies a potentially dangerous situation. If it is not avoided the product or something in its vicinity could be damaged

IMPORTANT! Identifies tips for use and other particularly useful information.

GENERAL SAFETY NOTES



Any person being involved in assembly, disassembly, start up, operation and maintenance of the BURGMANN Mechanical Seal must have read and understood this Instruction Manual and in particular the safety notes. We recommend the user to have this confirmed.

BURGMANN Mechanical Seals are manufactured on a **high quality level** (quality management EN ISO 9001: 2000) and they keep a **high working reliability**. Yet, if they are **not operated** within their **intended purpose** or handled **inexpertly** by untrained personnel they may cause **risks**.

The machine has to be set up in such a way that seal leakage can be led off and disposed properly and that any personal injury caused by spurting product in the event of a seal failure is avoided.

Any operation mode that affects the **operational safety** of the mechanical seal is not permitted.

Unauthorised modifications or alterations are **not permitted** as they affect the **operational safety** of the mechanical seal.

BURGMANN mechanical seals must be installed, operated, maintained, removed or repaired by **authorised**, **trained and instructed personnel only.**

The **responsibilities** for the respective jobs to be done **have to be determined clearly and observed** in order to prevent unclear competencies from the point of **security**.

Any work to be done on the mechanical seal is **generally** only **permitted** when the seal is **neither operating nor pressurised**.

WARNING! Seals that have been used with **hazardous substances must be properly cleaned** so that there is no possible **danger** to people or to the environment.

Apart from the notes given in this manual the general **regulations for worker's protection and those for prevention of accidents** have to be observed.

Instructions for worker's protection



WARNING! If the **medium to be sealed** and/or the **supply liquid** is subject to the **Hazardous Substances Regulation** (GefStoffV), the **instructions for handling dangerous substances** (safety data sheets to EU Directive 91/155/EEC) and the **accident prevention regulations** have be observed.

Medium to be sealed and/or **supply medium may escape** if the seal **fails**. Injury of persons and environment may be **prevented by the user** providing for splash protection and wearing safety goggles. Care has to be taken by the user for **proper disposal** of the leakage. The user has to control these measures.

The **user** has to **check** what **effects a failure** of the mechanical seal might have and what safety measures have to be taken to prevent **personal** injury or damage to the environment.

TRANSPORT / STORAGE

Transport

If not specified differently by contract the BURGMANN standard packing is used which is suitable for dry transport by truck, train or plane. The warning signs and notes on the packing must be observed.

In addition seaworthy packing may become necessary.

Notes for income inspection:
- Check packaging for visible damages.
- Open packaging carefully. Do not damage or lose parts supplied separately.
- Check if consignment is complete (delivery note). Inform the supplier immediately in writing if parts are damaged or missing.

The mechanical seal has to be protected from damage during transport and storage. The transport case in which the seal is supplied is well suited for this purpose and should be kept for a possible return transport.

ATTENTION! If the machine as well as the mechanical seal installed into the machine are transported together the shaft has to be protected from deflection and shocks.

Packing and storage

The following recommendations apply to all BURGMANN mechanical seals which have been supplied and stored in their **undamaged original packaging**, as well as to seals which have been installed in a machine (e.g. pump, compressor, agitator, etc.) but have not yet been put into operation.

BURGMANN mechanical seals and spare parts are super finished and repeatedly tested machine elements. For the storage special conditions have to be followed.

Sliding materials and elastomers are subject to material-specific and time-based alterations (distortion, ageing) which might reduce the full efficiency of the mechanical seals. Yet, this may be avoided by observing the storage instructions.

For the stock keeping of elastomers special conditions are required. For all rubber-elastic parts the rules of DIN 7716 resp. of ISO 2230-1973 (E) are valid.

Conveniences for storing of mechanical seals
- dust free
- moderately ventilated
- constantly tempered
  - relative air humidity below 65 %,
  - temperature between 15 °C and 25 °C.

Protect the seal from
- direct exposure to heat (sun, heating)
- **ultraviolet light** (halogen or fluorescent lamps, sunlight, arc welding)
- presence or development of **ozone** (arc welding, mercury vapour lamps, high-voltage devices, electric motors)

➢ **risk of embrittlement** of elastomeric materials

It has to be differentiated between:
- **M.S. stored** in the stock room
- **M.S. installed** in the machine, but not yet in operation.

☐ **M.S. in the stock**

IMPORTANT! Store the **seal in the original packing** lying on a **flat surface**.

- Check the packaging periodically for damages.
- Plastic sheet packagings with humidity indicators have to be checked every 8 weeks. The check has to be recorded.

➢ Packings **exceeding 50 % rel. humidity** values have to be sent to the manufacturer or the **nearest BURGMANN service centre** for inspection and new packaging.

Duly stored mechanical seal:
- Latest 3 years after delivery of the mechanical seal
- For reasons of safety shipment of the M.S. to BURGMANN resp. nearest BURGMANN service centre for

➢ Exchange of all secondary seals and springs
➢ Verification of the flatness of the faces
➢ Perhaps static pressure test.

☐ **M.S. installed into the machine:**

ATTENTION! A **preservation** of the BURGMANN mechanical seals is **not allowed**.

Check in case of a preservation of complete machines with mechanical seals installed BURGMANN has to be contacted.
- **Do not** use corrosion protection agents.

➢ Risk of deposition and possibly chemical attack of the secondary seals.

Due to longer erecting times of new designed plants the period between delivery of the mechanical seal and on the other hand its installation and start up may exceed the period of 2-3 years.

Latest after 3 years and in time before the planned start-up of the plant the seal has to be dismantled and to be sent to the manufacturer or the nearest BURGMANN service centre where it can be checked and reconditioned, if necessary.

Damages caused by **improper** storage may **not** be claimed with reference to the **warranty** on the BURGMANN company**.**

INFORMATION ABOUT THE PRODUCT

All technical information given is based on the results of extensive testing and on BURGMANN's long term practical experience. However, in view of the great diversity of possible applications the technical data can only be taken as being of approximate nature. We can only guarantee the safe and efficient functioning in individual cases if we have been comprehensively informed of the operating conditions to which they will be subject, and if this has been confirmed in a separate agreement.

Manufacturer and country of origin

Burgmann Industries GmbH & Co. KG
Äußere Sauerlacher Str. 6-10
D - 82515 Wolfratshausen

Germany

Declaration by the manufacturer

within the meaning of the EC-directive "MACHINERY" 98/37/EG

A mechanical seal does **not function independently**. It is intended to be incorporated into or assembled with machinery.

Type designation

BURGMANN Mechanical Seal **MG1/dw-00**

Designated use

This mechanical seal is **exclusively** designed for the use in the specified application. A **different utilisation** or a utilisation going beyond the specification is considered **contrary to its designated use** and excludes a liability by the manufacturer.

Operation under conditions lying **outside** those limits stated in paragraph **"Operating limits"** is considered **contrary to its designated use**.

Should the seal be **operated under different conditions or at a different application** BURGMANN has to be asked for **recognition as safe in advance**.
- **Changes** to operating conditions **have to** be documented.

Operating limits

ATTENTION! Operating limits depend on the materials, the media to be sealed and the diameter of the sealing. (If there are any unclear points please contact BURGMANN.)

Shaft diameter	(dw)	:	10 - 100 mm
Pressure to be sealed	(p1)	:	12 bar g
Temperature to be sealed	(t1)	:	-20 ... 120° C
Max. sliding speed	(vg)	:	10 m/s

Operation under several limit values **simultaneously** should be **avoided** as higher loads (pressure, temperature, speed) can increase wear or lead to **damage** of sliding faces or elastomers. This could result in a shorter service life and in the **risk** of a sudden seal failure **endangering** men and environment.

The **selection** of the mechanical seal (type, suitability, materials) should be done **by BURGMANN staff** or other **authorised** persons. A wrong selection by unauthorised persons is **not covered by** BURGMANN's **warranty**.

Further information about the operating conditions can be found in the BURGMANN assembly drawing MG1/dw-00 or in the specification sheets of the machine manufacturer.

Materials

The materials of the mechanical seal depend on the application and are fixed in the order.

Drawings, diagrams

Assembly drawing MG1/dw-00

The original assembly drawing in its latest edition (latest revision) only is decisive for both the design of M.S. as well as the utilisation of this manual.

In the following description all figures in parentheses, e.g. (2) define the respective part item no. in fig. 1. The part item no. may vary from those stated in the assembly drawing.

Versions

- **MG12/…**
- **MG13/…**
- **MG1S20/…**
- **RMG12/…**
- **MG1 MULTIPLE M.S.**

The mechanical seal type MG1 can also be used as **multiple mechanical seal** (also in combination with seal types of other series) in **tandem arrangement** with quench (API, plan 52) or as **dual mechanical seal** with barrier fluid (API, plan 53). Consultation with the BURGMANN company is recommended.

ATTENTION! PTFE o-rings or double-PTFE-wrapped o-rings **may** not be used at seat versions **without torsion lock**.

This operating manual applies also to the mentioned seal versions with slight modifications and/or to combinations with seats not stated in this manual.

Seat Versions

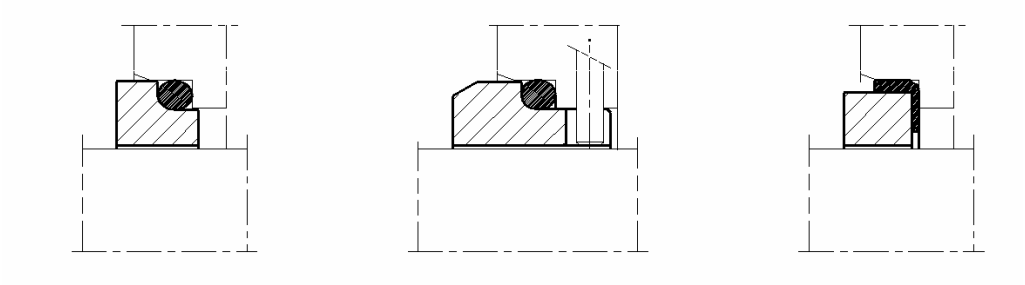

Description and function

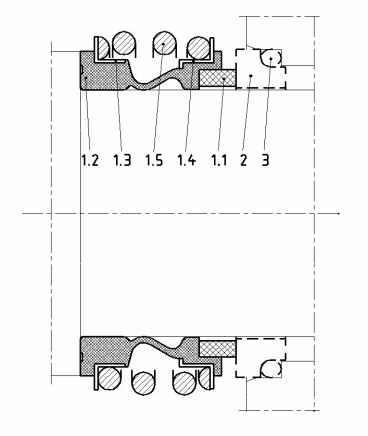

- **single seal**
- **unbalanced**
- **bi-directional**
- **stationary seat** (2)
- **o-ring** (3)
- **rotating seal face** (1.1)
- **elastomeric bellow** (1.2)
- **cylindrical single spring** (1.5)
- **no glued joints**
- **materials of the sliding parts replaceable**
- **for media containing solids** (e.g. sewage applications)
- **rotating, torsion-free elastomeric bellows** serving as
  - face housing
  - secondary sealing element
  - drive collar
- **torque transmission** from the seal face by means of "L"-rings and a rotating, cylindrical single spring
- **axial movability**
  d_w: 10 … 12 mm ±0,5 mm
  d_w: 14 … 18 mm ±1,0 mm
  d_w: 20 … 26 mm ±1,5 mm
  d_w: 28 … 100 mm ±2,0 mm

Required space, connecting dimensions

The required mounting space for the mechanical seal is decisive for the design of the housing parts by the machine manufacturer. The connecting dimensions have to be checked by the machine manufacturer by means of the BURGMANN drawing before mounting the mechanical seal.

Supply of M.S.

The mechanical seal has to be constantly wetted by liquid medium. The medium to be sealed must not damage the M.S. neither chemically (e.g. corrosion, embrittlement) nor physically (e.g. erosion, abrasion).

For a safe operation of the mechanical seal we recommend to apply **at inboard** the most suitable **type of circulation** described in **API 610 / 682**. This measure protects the seal cavity from deposition of solids.

To operate multiple seals special supply systems are required. Please contact BURGMANN.

Emissions

A mechanical seal is a **dynamic seal** that **cannot be free of leakage** due to physical and technical reasons. Seal design, manufacture tolerances, operating conditions, running quality of the machine, etc. mainly define the leakage value. In fact, compared to other sealing systems there is **few leakage**.

WARNING! If the **medium to be sealed** and/or the **supply liquid** is subject to the **Hazardous Substances Regulation** (GefStoffV), the **instructions for handling dangerous substances** (safety data sheets to EU Directive 91/155/EEC) and the **accident prevention regulations** have be observed.

A possibly increased leakage during start-up will decrease to a normal quantity after the running-in period of the sliding faces.

If this is not the case or if there are other malfunctions the mechanical seal has to be shut down, removed and checked for reasons of safety.

The leakage can be liquid or gaseous. Its aggressiveness corresponds to that of the medium to be sealed.

Leakage of mechanical seal at outboard side has to be drained and disposed properly.

IMPORTANT! Components which may get in contact with the leakage have to be corrosion-resistant or have to be adequately protected.

INSTALLATION

Assembly utilities

- ethyl alcohol
- cellulose-tissue (no rag, no cloth!)
- o-ring lifter
- water and washing up liquid
- cardboard discs

Preparation for assembly

ATTENTION! The seal should remain **packed** until the following working steps have been completely **terminated**.

Check the parts of the machine for:

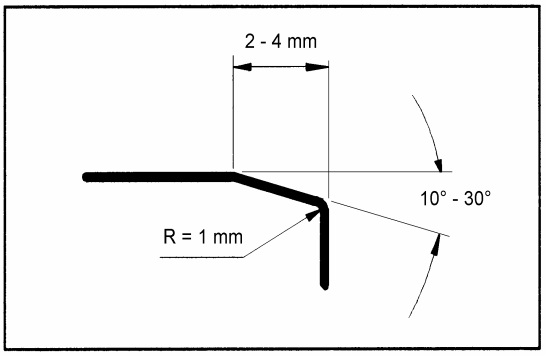

- **chamfered edges**
  (sliding cones i.e. 2 mm / 30° or in accordance with EN 12756)
- radiused transitions
- **mating fits** and o-ring surfaces:
  fine finished **Rz 10 µm** (= N7 = CLA 63)

- **Shaft surface** in the area of the mechanical seal finished according to EN 12756: **Ra = 0.8 µm** (= N6 = CLA 32).
- **Shoulder** or stop device for the bellows of the mech. seal to take up axial forces

Check at the machine:
- damage of connecting surfaces to the M.S.
- mating dimensions, rectangularity and concentricity to the shaft axis.

Run-out accuracy of the shaft (acc. to DIN ISO 5199):
- Shaft diameters up to 50 mm: max. 0.05 mm
- Shaft diameters 50 mm - 100 mm: max. 0.08 mm

- Prepare the place of assembly, take away any not required tool, cuttings, dirty cleaning wool etc.

- Cover the work bench with a piece of clean, non-fibrous cardboard.

Assembly / installation

BURGMANN mechanical seals are super-finished and repeatedly tested machine elements whose handling during assembly in particular of sliding materials and elastomers requires special care during several procedures.

For installation the assembly drawing of mechanical seal has to be observed.

IMPORTANT! The mechanical seal has to be installed under the cleanest conditions and very carefully.

- Unpack the seal and check seal face, seat and elastomer bellows for possible damages.
- ➢ Never place the seal faces or seats on their sliding faces without having covered them adequately.

- Check before starting assembly:
  - ▫ complete availability of all components by means of the drawing
  - ▫ all components have to be clean and in perfect condition.

- Sprinkle the elastomer bellows and the shaft with low-surface-tension water (add washing up liquid) or ethyl alcohol to decrease frictional force during assembly of the seal.

⚠

Oil or grease as assembly agent is not permitted in any case.

ATTENTION! **Do never force** during installation.

ATTENTION! **Avoid unnecessary rotation** of the shaft (damage of the sliding faces is possible).

ATTENTION! **Avoid knocking the seal!** Damage to mechanical seals has an adverse effect on their safe operation.

Possible installation order:

- Feed the **degreased** sealing element (o-ring, rubber cup) onto the seat.

If present:
- At the seat mark the position of the rear slot beside the sliding face.
- Align the seat with the torque transmission pin.

- Cover the sliding face of the seat with a cardboard washer
- Press the seat slowly and without interruption into its position.
  - ➢ Use plenty of water or alcohol as lubricant.
  - ➢ Use a distance sleeve, if necessary.
- Remove the cardboard washer from the sliding face.
- Check the rectangular position of the seat to the shaft axis.

- Mount the seal cover with the seat installed before.
- Clean the sliding faces thoroughly with ethyl alcohol and paper tissues (**no fabric, no cloths!**).
  - ➢ In case of material **"BUKO"** (carbon graphite) wipe it until the paper tissues stay clean.
  - ➢ Do not touch the sliding faces any more with bare fingers.
  - ➢ Mount the sliding faces absolutely dry, dust-free and clean. Do not use any lubricants!

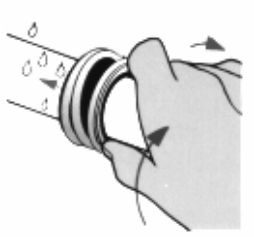

- Push rotating seal unit (bellows unit) with a slow clockwise turn onto the shaft.
- Stick to the dimensions in the assembly drawing!
  - ➢ If necessary use a mounting sleeve.
  - ➢ For long pushing distances add liquid several times.

- Check "L" rings, spring and seal face for correct fit.

- Mount stop device for bellows unit to take up axial forces.
  - ➢ Stick to the dimensions in the assembly drawing **by all means!**

- Further assembly of the machine in accordance with the instructions of the machine manufacturer.

OPERATION

Instructions for safe operation

For a single mechanical seal the **pressure in the seal chamber** (stuffing box pressure) has to be **higher** than the ambient pressure at the machine at any time. Otherwise the machine will **suck in air** via the sliding faces, which will result in **dry-running** and consequent **failure** of the mechanical seal.

Damages due to dry-running are excluded from the warranty.

During every state of operation the mechanical seal has to be constantly wetted by the **medium** to be sealed **in its liquid form**, in particular when the machine is **started** or **stopped**. The machine design has to be such as to take this necessity into consideration.

If the medium to be pumped builds deposits or tends to solidify during cooling down or standstill of the machine the stuffing box has to be flushed with suitable clean liquid. The flow and the liquid should be determined by the user.

If the operation limit values and the instructions given in this manual are followed a trouble-free operation of the mechanical seal can be expected.

Instructions for start up

Safety checks before start up

- Torque transmission between mechanical seal and shaft duly installed
- Supply connections tightened pressure-sealed
- Disposal connections installed environmentally safe

For a safe operation of the mechanical seal we recommend to apply **at inboard** the most suitable **type of circulation** described in **API 610 / 682**. This measure protects the seal cavity from deposition of solids.

- Flood machine and seal cavity (stuffing box) with medium and vent thoroughly.

▫ Now the seal is ready for operation.

SERVICING

Maintenance

A correctly operated mechanical seal needs **low maintenance**. Wear parts, however, have to be replaced, if necessary.

A duly operation includes a regular check of the following parameters:
- Temperature
- Leakage (drainage) rate of the mechanical seal

An inspection of the mechanical seal should be carried out during a revision of the complete plant. We recommend to have this inspection be performed by responsible BURGMANN personnel.

If the mechanical seal is removed during a revision of the plant it has to be replaced by a new one.

Directives in case of failure

Try to define the kind of failure and record it.

- In the event of **excessive leakage**, note changes in the leakage amount and switch the pump off if necessary.
- ➢ If a constant amount is leaking in a steady flow, the mechanical seal is damaged.
- In the event of a **inadmissible temperature rise**, the machine **has to** be stopped for safety reasons.

If there is a **malfunction** which you cannot correct on your own, or if the cause of malfunction is not clearly recognisable please immediately contact the nearest **BURGMANN agency**, a BURGMANN service centre or the BURGMANN headquarters.

During the **warranty period** the BURGMANN mechanical seal must only be disassembled with approval of the manufacturer or when a representative is present.

After-sales service by BURGMANN

BURGMANN's customer service department offers a comprehensive service package covering consultancy, engineering, standardisation, installation, commissioning as well as damage analysis right through to seminars on sealing technology.

Addresses are listed in the known BURGMANN Design Manuals as well as in various other BURGMANN brochures.

Address of headquarters:

Burgmann Industries GmbH & Co. KG
Postfach 1240
D - 82515 Wolfratshausen

Germany

☎ +49 (0) 81 71-23 0
Fax +49 (0) 81 71-23 12 14
www.burgmann.com

Reconditioning (repair)

If **reconditioning** is necessary, the complete **seal** should be sent **to the manufacturer**, as this is the best way to find out which components can be reconditioned or which parts must be replaced in order to ensure an optimum tightness.

If, **for compelling reasons**, **a reconditioning** has to be carried out **on site** (e.g. no. spare seal on stock, long transport, problems with customs) the seal may be repaired in a clean room by **trained** personnel of the user under the direction of **BURGMANN mechanics**.

Disassembly / removal



- Stop the machine as instructed, allow to cool, depressurise and ensure that pressure cannot build up again.
- Work on the M.S. is only permitted when the machine is at a standstill and depressurised.
- There must be no product on the M.S. ⇒ if necessary drain the machine and rinse it out.
- Isolate the machine to prevent it starting up unexpectedly.
- Comply with the safety notes (safety data sheets).

IMPORTANT! When removing, please observe **by all means**:

- current **accident prevention regulations**
- **regulations for handling hazardous substances**

WARNING! Seals that have been used with **hazardous substances must be properly cleaned** so that there is no possible **danger** to people or to the environment.

IMPORTANT! The packaging used to transport the seal must

- be **identified** with the relevant **hazard symbol** and
- **include** the **safety data sheet** for the product and/or supply medium

The order of disassembly to remove the mechanical seal out of the machine depends on the design of the machine and should be determined by the machine manufacturer.

- Remove the seal in the reverse sequence as described for assembly (set up).

Spare parts

- Only BURGMANN original spare parts must be used. Otherwise
  - **Risks** of a seal failure, **endangering** persons and environment.
  - The BURGMANN guarantee for the mechanical seal **lapses**.
- For a quick exchange a complete **spare seal** should be on stock.

Required details for enquiries and orders

For enquiries and orders the following details are required:

- BURGMANN commission no.
- Drawing no. of M.S. **MG1/dw-00**
  dw = specified shaft diameter
- Part item no., designation, material, number of pieces with reference to the drawing.

Address of headquarters product field **FA**
Standard Mechanical Seals

Burgmann Industries GmbH & Co. KG
Postfach 1240
D - 82502 Wolfratshausen

Germany

☎ +49 (0) 81 71 - 23 0
Fax +49 (0) 81 71 - 23 14 44

Disposal of the BURGMANN mechanical seal

Usually, the BURGMANN mechanical seals can be easily disposed after a thorough cleaning.

- Metal parts (steels, stainless steels, non-ferrous heavy metals) divided into the different groups belong to scrap metal waste.
- Ceramic materials (synthetic carbons, ceramics, carbides) belong to waste products. They can be separated from their housing materials, as are physiologically recognised as safe.
- Synthetic materials/plastics (elastomers, PTFE) belong to special waste.

CAUTION! Material containing fluorine must not be burnt.

IMPORTANT! Some of the synthetic materials, divided into the different groups can be recycled.

Copyright

The **Burgmann Industries GmbH & Co. KG** (Germany) holds the copyright to this document. Customers and operators of mechanical seals are free to use this document in the preparation of their own documentation. No claims of any type or form can be derived in such instance.

We reserve the right to carry out technical modifications of the product, even if they have not yet been considered in this manual.

June 13, 2006
Department Technical Documentation

UNICASE® Helical Inline Gearboxes
Installation and Maintenance Instructions

BIM 1010

USA

CDN

Retain These Safety Instructions For Future Use

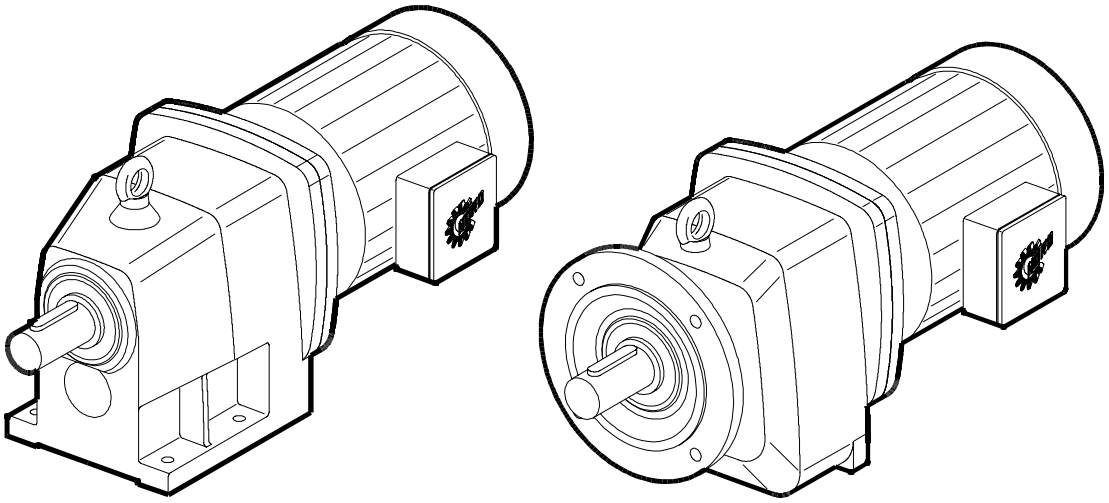

INSPECTION OF UNIT

Thoroughly inspect the equipment for any shipping and handling damage before accepting shipment from the freight company. If any of the goods called for in the bill of lading or express receipt are damaged or the quantity is short, do not accept until the freight or express agent makes an appropriate notation on your freight bill or express receipt. If any concealed loss or damage is discovered later, notify your freight carrier or express agent at once and request him to make an inspection. We will be very happy to assist you in collecting claims for loss or damage during shipment; however, this willingness on our part does not remove the transportation company's responsibility in reimbursing you for collection of claims or replacement of material. Claims for loss or damage in shipment must not be deducted from the NORD Gear invoice, nor should payment of the NORD Gear invoice be withheld awaiting adjustment of such claims, as the carrier guarantees safe delivery.

If considerable damage has been incurred and the situation is urgent, contact the nearest NORD Gear Sales Office for assistance. Please keep a written record of all communications.

RECORD NAMEPLATE DATA

Locate the gear reducer nameplate and record all nameplate data for future reference.

SK _____ S/N _____

RATIO _____ MAX TORQUE _____ RPM _____ MTG. POS _____

STORAGE

PROPER STORAGE UNTIL INSTALLED

Keep unit in a dry, temperature controlled area. If stored other than said, long term storage methods must be applied to the unit including complete fill with lubricant. Protect machined surfaces and rotate shafts periodically. Prior to putting unit into service, drain lubricant and refill to proper level as determined by the mounting position.

PROPER HANDLING OF THE UNIT

Exercise care to prevent damage to the unit when moving. Lift only at designed lifting points. Do not attach other machinery and lift by the unit lifting points. The lifting points are to be used to lift the unit only. Insure that adequate safety measures are taken to protect personnel during transportation. Protect the mounting surface from damage.

INSTALLATION OF UNIT

To ensure long service and dependable performance, an enclosed gear drive must be rigidly supported and the shafts accurately aligned. The following describes the minimum precautions required to accomplish this end.

FOUNDATION
The responsibility for the design and construction of the foundation lies with the user. The foundation must be adequate to withstand normal operating loads and possible overloads while maintaining alignment to attached system components under such loads.

MOUNTING POSITION
Unless a unit is specifically ordered for inclined mounting, the foundation must be level and flat. The lubrication system may not operate properly if the unit is not mounted in the position for which it is designed. It may be desirable to elevate the foundation to facilitate oil drainage.

CONCRETE FOUNDATION
If a concrete foundation is used, steel mounting pads and bolts of sufficient size to distribute the stress into the concrete should be grouted into the foundation.

STEEL FOUNDATION
If a structural steel foundation is used (i.e. wide flange beams or channels), a base plate or sole plate of suitable thickness should be used and should extend under the entire unit.

FOOT MOUNTED UNITS
Use shims under the feet of the unit to align the output shaft to the driven equipment. Make sure that all feet are supported so that the housing will not distort when it is bolted down. Improper shimming will reduce the life of the unit and may cause failure. Dowel pins may be installed to prevent misalignment and ensure proper realignment if removed for service.

FLANGE MOUNTED UNITS
If a structural steel foundation is used (i.e. wide flange beams or channels), a base plate or sole plate of suitable thickness should be used and should extend under the entire unit. If a bulk head plate is used it should be of proper strength to minimize buckling distortions.

Flange Pilot 'AK' or 'AK1' tolerance
Metric (mm)

> ∅ 50 ≤ ∅ 80 = +0.012/-0.007
> ∅ 80 ≤ ∅ 120 = +0.013/-0.009
> ∅ 120 ≤ ∅ 180 = +0.014/-0.011
> ∅ 180 ≤ ∅ 230 = +0.016/-0.013
> ∅ 230 ≤ ∅ 315 = +0.000-0.032
> ∅ 315 ≤ ∅ 400 = +0.000/-0.036
> ∅ 400 ≤ ∅ 500 = +0.000/-0.040

Inch

> ∅ 1.969 ≤ ∅ 3.150 = +0.005/-0.0003
> ∅ 3.150 ≤ ∅ 4.724 = +0.005/-0.0004
> ∅ 4.724 ≤ ∅ 7.087 = +0.006/-0.0004
> ∅ 7.087 ≤ ∅ 9.055 = +0.006/-0.0005
> ∅ 9.055 ≤ ∅ 12.402 = +0.000/-0.0013
> ∅ 12.402 ≤ ∅ 15.748 = +0.000/-0.0014
> ∅ 15.748 ≤ ∅ 19.685 = +0.000/-0.0016

BOLT STRENGTH
Bolt size, strength and quantity should be verified to insure proper torque reaction capacity whatever the mounting arrangement.

PRIME MOVER MOUNTING
Align the prime mover to the reducer-input shaft using shims under the feet. Make sure that the feet are supported. Dowel the prime mover to its foundation.

SHAFT CONNECTIONS
When connecting shafts to either the input or output of the reducer, consider the following instructions.

FITS
Clearance or interference fits for coupling hubs should be in accordance with ANSI/AGMA 9002-A86 or as follows.

Output and Input shaft Diameter tolerance
Metric (mm)

≤ ∅ 18 = +0.012/+0.001
> ∅ 18 ≤ ∅ 30 = +0.015/+0.002
> ∅ 30 ≤ ∅ 50 = +0.018/+0.002
> ∅ 50 ≤ ∅ 80 = +0.030/+0.011
> ∅ 80 ≤ ∅ 120 = +0.035/+0.013
> ∅ 120 ≤ ∅ 180 = +0.040/+0.015

Inch

≤ ∅ 1.750 = +0.0000/-0.0005
> ∅ 1.750 = +0.0000/-0.0010

Output and Input shaft Drill and tap shaft end
Metric (mm)

≤ ∅ 16 = M5
> ∅ 16 ≤ ∅ 21 = M6
> ∅ 21 ≤ ∅ 24 = M8
> ∅ 24 ≤ ∅ 30 = M10
> ∅ 30 ≤ ∅ 38 = M12
> ∅ 38 ≤ ∅ 50 = M16
> ∅ 50 ≤ ∅ 85 = M20
> ∅ 85 ≤ ∅ 130 = M24

Inch

≤ ∅ 0.438 = #10-24 x 0.4 deep
> ∅ 0.438 ≤ ∅ 0.813 = ¼-20 x 0.6 deep
> ∅ 0.813 ≤ ∅ 0.938 = 5/16-18 x 0.7 deep
> ∅ 0.938 ≤ ∅ 1.125 = 3/8-16 x 0.9 deep
> ∅ 1.125 ≤ ∅ 1.375 = 1/2-13 x 1.1 deep
> ∅ 1.375 ≤ ∅ 1.875 = 5/8-11 x 1.4 deep
> ∅ 1.875 ≤ ∅ 3.250 = 3/4-10 x 1.7 deep
> ∅ 3.250 = 1-8 x 2.2 deep

Outboard pinion and sprocket fits should be as recommended by the pin sprockets with interference fits should be heated according to the manufacturer's recommendations, generally 250°F to 300°F, (120°C to 150° C) before assembling to the shaft.

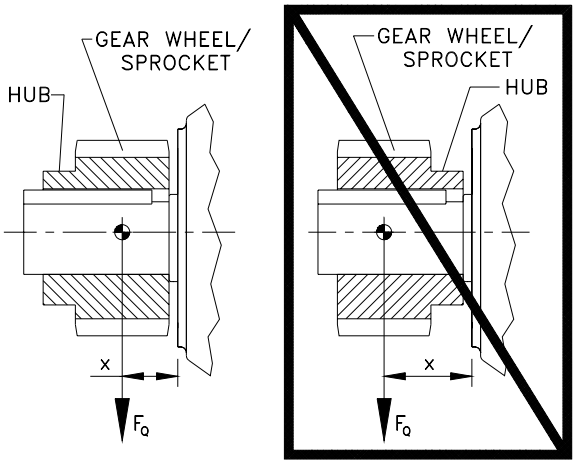

LOCATION
Coupling hubs should be mounted flush with the shaft ends, unless specifically ordered for overhung mounting. Pinions, sprockets and sheaves should be mounted as close as possible to the unit housing to minimize bearing loads and shaft deflections.

COUPLING ALIGNMENT
Shaft couplings should be installed according to the coupling manufacturer's recommendations for gap, angular and parallel alignment. In many installations, it is necessary to allow for thermal and mechanical shaft movement when determining shaft alignment. The coupling manufacturer's recommendations should be followed.

AXIAL DISPLACEMENT
The gap between shaft ends should be the same as the specified coupling gap unless overhung mounting of the coupling hub is specified. The coupling gap and shaft gap must be sufficient to accommodate any anticipated thermal or mechanical axial movement.

ANGULAR ALIGNMENT
Insert a spacer or shim stock equal to the required coupling gap between the coupling hub faces and measure the clearance using feeler gauges. Repeat this at the same depth at 90-degree intervals to determine the amount of angular misalignment.

PARALLEL ALIGNMENT
Mount a dial indicator to one coupling hub, and rotate this hub, sweeping the outside diameter of the other hub. The parallel misalignment is equal to one-half of the total indicator reading. Another method is to rest a straight edge squarely on the outside diameter of the hubs at 90-degree intervals and measure any gaps with feeler gauges. The maximum gap measurement is the parallel misalignment.

CHECKING ALIGNMENT
After both angular and parallel alignments are within specified limits, tighten all foundation bolts securely and repeat the above procedure to check alignment. If any of the specified limits for alignment are exceeded, realign the coupling.

SPROCKET OR SHEAVE ALIGNMENT
Align the sheaves or sprockets square and parallel by placing a straight edge across their faces. Alignment of bushed sheaves and sprockets should be checked after bushings have been tightened. Check horizontal shaft alignment by placing a level vertically against the face of the sheave or sprocket. Adjust belt or chain tension per the manufacturer's specified procedure.

OUTBOARD PINION ALIGNMENT
Align the pinion by adjusting the gear tooth clearance according to the manufacturer's recommendations and checking for acceptable outboard pinion tooth contact. The foundation bolts may have to be loosened and the unit moved slightly to obtain this contact. When the unit is moved to correct tooth contact, the prime mover should be realigned.

RECHECK ALIGNMENT
After a period of operation, recheck alignment and adjust as required.

1. Properly install unit on a rigid foundation
   - adequately supported
   - securely bolted into place
   - leveled so as not to distort the gear case
2. Properly install couplings suitable for the application and connected equipment.
3. Ensure accurate alignment with other equipment.
4. Furnish and install adequate machinery guards as needed to protect operating personnel and as required by the applicable standards of the Occupational Safety and Health Administration (OSHA), and by other applicable safety regulations;
5. Ensure that driving equipment is running in the correct direction before coupling to reducers with backstops (designed to operate only in a specific direction) or machinery designed to operate only in one direction.

CHANGES IN PERFORMANCE SPECIFICATIONS
Owner has the responsibility to consult with NORD GEAR if such items such as applied loads, operating speeds or other operating conditions have changed.

WARNING:
LOCK OUT POWER before any maintenance is performed. Make absolutely sure that no voltage is applied while work is being done on the gearbox.

START-UP
1. Ensure that switches, alarms, heaters, coolers and other safety and protection devices are installed and operational for their intended purpose.
2. Verify that the installed mounting position is the same as the nametag mounting position. If not, adjust the oil level accordingly and relocate the vent plug, fill plug and drain plug according to the mounting position. See following.

AUTOVENT PLUG
The Autovent plug is brass in color and will be located at the highest point on the gearbox. It operates like a check-valve to allow the reducer to relieve internal pressure while preventing lubricant contamination during cooling. A spring presses a ball or plunger against a machined orifice until pressure exceeds 2 psi. Above 2 psi the air is allowed to escape depressurizing the gearcase. When internal pressure drops below 2 psi, the autovent re-seals closing the unit to the outside environment. After shutdown, the reducer cools along with the air inside the reducer. The unit will temporarily maintain a slight vacuum until normalization occurs. NORD Gear supplies an Autovent as a standard feature.

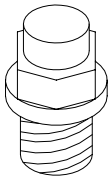
AUTOVENT PLUG

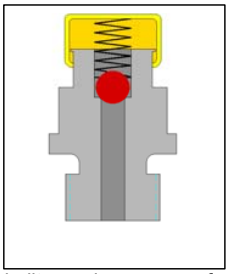

The Autovent releases built-up air pressure from inside the gearbox (Max. pressure 2 psi).

FILL LEVEL & DRAIN PLUGS
The drain plugs are metric socket head cap screws. They will be located at the lowest part of the gearbox for ease of draining. The fill level plug is a hex head cap screw. It will be located between the Autovent and drain plug. Both types of plugs will have gaskets included to prevent oil from leaking.

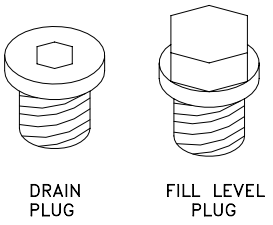

Two types of plugs for maintenance

LUBRICANT
All NORD reducers are shipped from the factory properly filled with lubricant and all plugs are installed according to the mounting position given on the reducer nametag. Acceptable oil fill level is within ½ inch of the bottom of the fill plug threads.

OPERATION AND MAINTENANCE CHECKLIST
1. Operate the equipment as it was intended to be operated
2. Do not overload.
3. Run at correct speed.
4. Maintain lubricant in good condition and at proper level.
5. Dispose of used lubricant in accordance with applicable laws and regulations.
6. Apply proper maintenance to attached equipment at prescribed intervals recommended by the manufacturer.
7. Perform periodic maintenance of the gear drive as recommended by NORD.

MOUNTING POSITIONS

These charts detail the mounting positions for horizontal and vertical mounting. The Autovent, oil fill plug and drain plug are indicated on each mounting position picture. The factory set mounting position and plug locations match that shown on the gearbox nametag. For mounting orientations other than shown consult NORD Gear.

VERTICAL POSITION

	SK 11E - SK 51 E	SK 02 - SK 52	SK 03 - SK 53	SK 62 - SK 103
V1 *	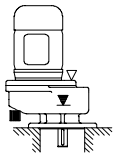	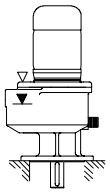	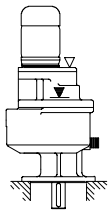	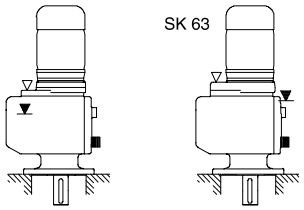
V3	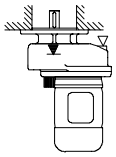	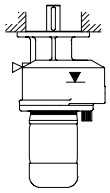	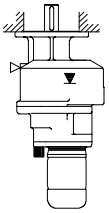	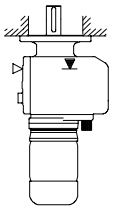
V5 *	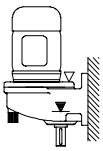	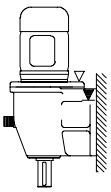	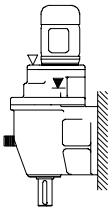	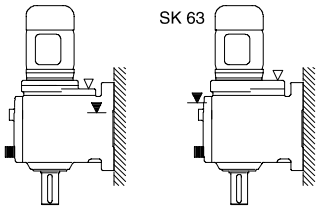
V6	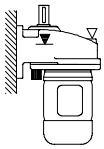	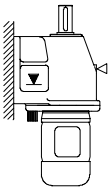	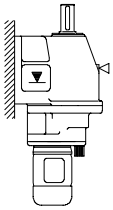	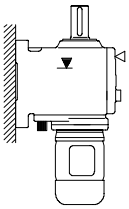

Symbols: ▽ Vent plug ▼ Oil level ■ Drain plug ▨ Mounting surface

* Mounting position V1 or V5 with lubricant expansion unit

HORIZONTAL POSITION

	SK 11 E - SK 51 E	SK 02 - SK 52 SK 03 - SK 53	SK 62 - SK 103
B3	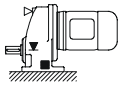	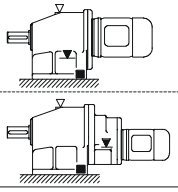	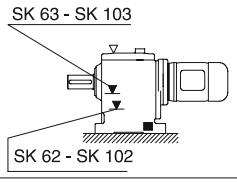
B6	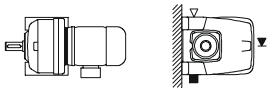	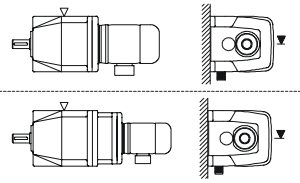	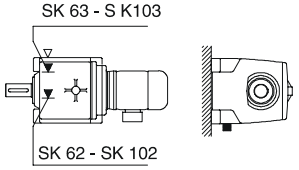
B7	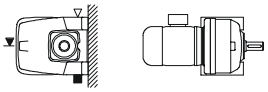	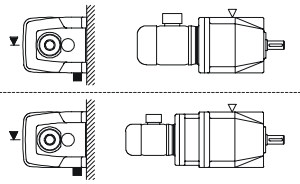	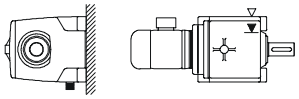
B8	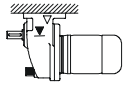	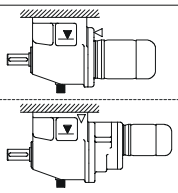	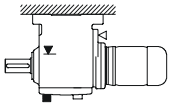
B5	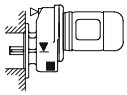	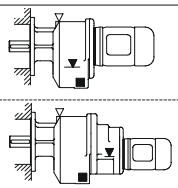	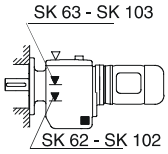
B5I	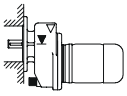	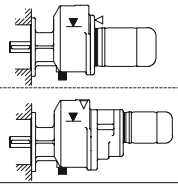	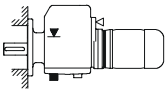
B5II	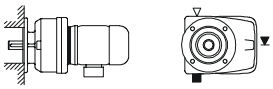	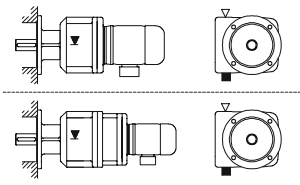	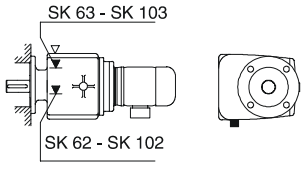
B5III	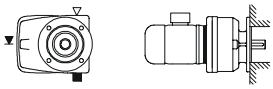	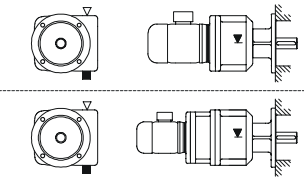	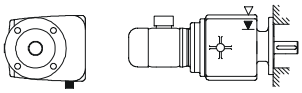

Symbols: ▽ Vent plug ▼ Oil level ■ Drain plug ▨ Mounting surface

MAINTENANCE

Mineral lubricant should be changed every 10,000 service hours or after two years. For synthetic oils, the lube should be changed every 20,000 service hours or after four years. In case of extreme operating (e.g. high humidity, aggressive environment or large temperature variations), shorter intervals between changes are recommended.

OIL SPECIFICATIONS

NORD supplies all reducers filled with oil from the factory. Consult the sticker adjacent to the fill plug to determine the type of lubricant installed at the factory. Standard lubricant is ISO VG220 mineral-based oil. However, some units have special lubricants designed to operate in certain environments or to extend the service life of the lubricant. If in doubt about which lubricant is needed, contact NORD Gear.

STANDARD OIL – ISO VG220

Ambient Temperature	Formulation
20 to 104°F (-5 to 40°C)	Mineral

TYPICAL OILS

Viscosity ISO NLGI	Formulation	Service Temperature Range	Mobil	Shell	Castrol	KLÜBER LUBRICATION	bp	Tribol
VG 460	Conventional Mineral	20°C to +50°C 68F to +122°F	Mobilgear 634	Omala 460	7EP	Klüberoil GEM 1-460	Energol GR-XP 460	Tribol 1100/460
	Synthetic PAO	-30°C to +80°C -22°F to +176°F	Mobil SHC 634	Omala 460 HD	Isolube EP 460	Klübersynth EG 4-460	N/A	Tribol 1510/460
VG 320	Conventional Mineral	0°C to +30°C 32°F to +86°F	Mobilgear 632	Omala 320	6EP	Klüberoil GEM 1-320	Energol GR-XP 320	Tribol 1100/320
	Synthetic PAO	-35°C to +80°C -31°F to +176°F	Mobil SHC 632	Omala 320 HD	Isolube EP 460	Klübersynth EG 4-320	N/A	Tribol 1510/320
VG 220	Conventional Mineral	-5°C to +40°C +20°F to +104°F	Mobilgear 630	Omala 220	5EP	Klüberoil GEM 1-220	Energol GR-XP 220	Tribol 1100/220
	Synthetic PAO	-34°C to +80°C -30°F to +176°F	Mobil SHC 630	Omala 220 HD	Isolube EP 220	Klübersynth EG 4-220	N/A	Tribol 1510/220
VG 150 & VG 100	Conventional Mineral	-15°C to +25°C 5°F to +77°F	Mobilgear 629	Omala 100	4EP	Klüberoil GEM 1-150	Energol GR-XP 100	Tribol 1100/100
	Synthetic PAO	-37°C to +10°C -35°F to +50°F	Mobil SHC 629	Omala 150 HD	Isolube EP 150	Klübersynth EG 4-150	N/A	N/A
VG 68	Conventional Mineral	-15°C to +25°C 5°F to +77F	Mobilgear 626	Omala 68	2EP	Klüberoil GEM 1-68	Energol GR-XP 68	Tribol 1100/68
	Synthetic PAO	-40°C to +10°C -40°F to +50F	Mobil SHC 626	N/A	Isolube EP 68	N/A	N/A	N/A
VG 32	Synthetic PAO	-40°C to +10°C -40°F to +50°F	Mobil SHC 624	N/A	N/A	Klüber-Summit HySyn FG-32	N/A	N/A

PAO = Poly Alpha Olefin

SPECIAL PURPOSE LUBRICANTS

Ambient Temperature	Formulation	Manufacturer	Oil Brand Name
20 to 104°F (-5 to 40°C)	*Food Grade* Oil - Synthetic	Chevron	FM ISO 220
20 to 104°F (-5 to 40°C)	*Food Grade* Oil - Synthetic	OilJAX	Magnaplate 85W140-FG
5 to 125°F (-20 to 50°C)	Fluid Grease	Mobil	Mobilux EP023
-30 to 140°F (-35 to 60°C)	Fluid Grease - Synthetic	Mobil	Mobilith SHC 007
-30 to 140°F (-35 to 60°C)	Fluid Grease - Synthetic	Shell	Albida LC

STANDARD BEARING GREASE – NLGI 2EP Lithium

Ambient Temperature	Formulation
-20 to 140°F (-30 to 60°C)	Mineral

OPTIONAL BEARING GREASES

Ambient Temperature	Formulation	Manufacturer	Grease Brand Name
-40 to 230°F (-40 to 110°C)	Synthetic	Shell	Aeroshell 6
-40 to 230°F (-40 to 110°C)	*Food Grade* - Synthetic	Lubriplate	SFL1

LUBRICANT CAPACITY

Each reducer has the oil level and oil quantity adjusted according to the mounting position shown in the tables. When replacing the oil, consult the tables below to determine the proper amount of oil to be installed according to the reducer size and mounting position. Note that this is approximate and the final level will be adjusted when the reducer is installed. Acceptable oil fill level is within ½ inch of the bottom of the fill plug threads.

LUBRICATION CAPACITY – HELICAL INLINE GEARBOXES

Mounting position		*Horizontal position*								*Vertical position*			
		single reduction											
		B 3	**B 6**	**B 7**	**B 8**	**B 5**	**B 5I**	**B 5II**	**B 5III**	**V 1**	**V 3**	**V 5**	**V 6**
SK 11E	quarts	0.26	0.37	0.37	0.58	0.32	0.53	0.42	0.42	0.32	0.37	0.42	0.53
	liters	0.25	0.35	0.35	0.55	0.30	0.50	0.40	0.40	0.30	0.35	0.40	0.50
SK 21E	quarts	0.63	1.06	1.06	1.27	0.53	1.16	0.95	0.95	0.74	1.48	1.06	1.27
	liters	0.60	1.00	1.00	1.20	0.50	1.10	0.90	0.90	0.70	1.40	1.00	1.20
SK 31E	quarts	1.16	1.80	1.80	2.32	0.85	1.74	2.11	2.11	1.16	1.37	2.43	2.85
	liters	1.10	1.70	1.70	2.20	0.80	1.65	2.00	2.00	1.10	1.30	2.30	2.70
SK 41E	quarts	1.80	2.75	2.75	3.49	1.06	2.96	3.49	3.49	1.69	2.75	2.64	2.75
	liters	1.70	2.60	2.60	3.30	1.00	2.80	3.30	3.30	1.60	2.60	2.50	2.60
SK 51E	quarts	2.32	3.59	3.59	4.97	1.90	4.33	4.02	4.02	3.17	3.70	4.23	4.65
	liters	2.20	3.40	3.40	4.70	1.80	4.10	3.80	3.80	3.00	3.50	4.00	4.40
Mounting position		**double reduction**											
		B 3	**B 6**	**B 7**	**B 8**	**B 5**	**B 5I**	**B 5II**	**B 5III**	**V 1**	**V 3**	**V 5**	**V 6**
SK 02	quarts	0.16	0.42	0.42	0.74	0.26	0.63	0.53	0.53	0.63	0.63	0.63	0.63
	liters	0.15	0.40	0.40	0.70	0.25	0.60	0.50	0.50	0.60	0.60	0.60	0.60
SK 12	quarts	0.26	0.53	0.53	0.90	0.37	0.95	0.63	0.63	0.95	0.90	0.79	0.79
	liters	0.25	0.50	0.50	0.85	0.35	0.90	0.60	0.60	0.90	0.85	0.75	0.75
SK 22	quarts	0.53	1.43	1.43	2.11	0.74	2.11	1.64	1.64	1.90	2.11	1.90	1.90
	liters	0.50	1.35	1.35	2.00	0.70	2.00	1.55	1.55	1.80	2.00	1.80	1.80
SK 32	quarts	0.95	2.11	2.11	3.17	1.37	3.49	2.54	2.54	3.28	3.06	3.06	2.64
	liters	0.90	2.00	2.00	3.00	1.30	3.30	2.40	2.40	3.10	2.90	2.90	2.50
SK 42	quarts	1.37	3.38	3.38	4.76	1.90	4.76	3.91	3.91	4.23	4.65	4.54	6.13
	liters	1.30	3.20	3.20	4.50	1.80	4.50	3.70	3.70	4.00	4.40	4.30	5.80
SK 52	quarts	2.64	5.39	5.39	7.19	3.17	6.55	5.92	5.92	7.82	7.19	7.19	7.40
	liters	2.50	5.10	5.10	6.80	3.00	6.20	5.60	5.60	7.40	6.80	6.80	7.00
SK 62	quarts	6.87	15.85	15.85	13.74	7.40	14.79	16.91	16.91	19.55	15.85	16.91	15.85
	liters	6.50	15.00	15.00	13.00	7.00	14.00	16.00	16.00	18.50	15.00	16.00	15.00
SK 72	quarts	9.51	24.30	24.30	19.02	10.57	19.55	24.30	24.30	29.59	24.30	27.47	24.30
	liters	9.00	23.00	23.00	18.00	10.00	18.50	23.00	23.00	28.00	23.00	26.00	23.00
SK 82	quarts	14.79	33.81	33.81	28.53	15.85	30.64	36.46	36.46	47.55	39.10	46.49	36.98
	liters	14.00	32.00	32.00	27.00	15.00	29.00	34.50	34.50	45.00	37.00	44.00	35.00
SK 92	quarts	26.42	54.95	54.95	49.66	27.47	49.66	54.95	54.95	82.42	77.14	80.31	77.14
	liters	25.00	52.00	52.00	47.00	26.00	47.00	52.00	52.00	78.00	73.00	76.00	73.00
SK 102	quarts	38.04	75.02	75.02	69.74	42.27	69.74	76.08	76.08	109.90	85.59	107.78	83.48
	liters	36.00	71.00	71.00	66.00	40.00	66.00	72.00	72.00	104.00	81.00	102.00	79.00
Mounting position		**triple reduction**											
		B 3	**B 6**	**B 7**	**B 8**	**B 5**	**B 5I**	**B 5II**	**B 5III**	**V 1**	**V 3**	**V 5**	**V 6**
SK 03	quarts	0.32	0.63	0.63	0.85	0.53	0.95	0.85	0.85	1.16	0.86	0.95	1.32
	liters	0.30	0.60	0.60	0.80	0.50	0.90	0.80	0.80	1.10	0.81	0.90	1.25
SK 13	quarts	0.63	0.74	0.74	1.16	0.85	1.27	1.00	1.00	1.27	1.27	1.27	1.32
	liters	0.60	0.70	0.70	1.10	0.80	1.20	0.95	0.95	1.20	1.20	1.20	1.25
SK 23	quarts	1.37	1.69	1.69	2.43	2.64	1.59	2.96	2.96	2.96	2.75	2.48	2.54
	liters	1.30	1.60	1.60	2.30	2.50	1.50	2.80	2.80	2.80	2.60	2.35	2.40
SK 33	quarts	1.69	2.43	2.43	3.38	2.01	3.70	2.75	2.75	4.65	3.59	4.44	3.06
	liters	1.60	2.30	2.30	3.20	1.90	3.50	2.60	2.60	4.40	3.40	4.20	2.90
SK 43	quarts	3.17	3.80	3.80	5.49	3.70	5.28	4.33	4.33	6.45	6.02	6.97	5.92
	liters	3.00	3.60	3.60	5.20	3.50	5.00	4.10	4.10	6.10	5.70	6.60	5.60
SK 53	quarts	4.76	6.34	6.34	8.14	5.49	7.40	7.08	7.08	9.40	8.88	9.19	9.19
	liters	4.50	6.00	6.00	7.70	5.20	7.00	6.70	6.70	8.90	8.40	8.70	8.70
SK 63	quarts	10.57	13.74	13.74	11.62	11.62	12.68	14.79	14.79	19.02	14.79	16.91	15.32
	liters	10.00	13.00	13.00	11.00	11.00	12.00	14.00	14.00	18.00	14.00	16.00	14.50
SK 73	quarts	14.79	21.13	21.13	18.49	14.79	19.02	21.13	21.13	29.06	23.78	28.53	21.13
	liters	14.00	20.00	20.00	17.50	14.00	18.00	20.00	20.00	27.50	22.50	27.00	20.00
SK 83	quarts	23.25	34.87	34.87	27.47	24.30	28.53	35.93	35.93	42.27	35.93	39.10	32.76
	liters	22.00	33.00	33.00	26.00	23.00	27.00	34.00	34.00	40.00	34.00	37.00	31.00
SK 93	quarts	42.27	51.78	51.78	46.49	42.27	46.49	51.78	51.78	78.19	73.97	76.08	73.97
	liters	40.00	49.00	49.00	44.00	40.00	44.00	49.00	49.00	74.00	70.00	72.00	70.00
SK 103	quarts	58.12	70.80	70.80	58.12	58.12	62.34	70.80	70.80	104.61	82.42	102.50	75.02
	liters	55.00	67.00	67.00	55.00	55.00	59.00	67.00	67.00	99.00	78.00	97.00	71.00

Note: Filling quantities are approximate figures. Oil level must be checked according to oil level plug after final installation. Acceptable oil fill level is within ½ inch of the bottom of the fill plug threads For mounting angles not shown, consult factory.

PARTS LIST

SK 11 E - SK 51 E

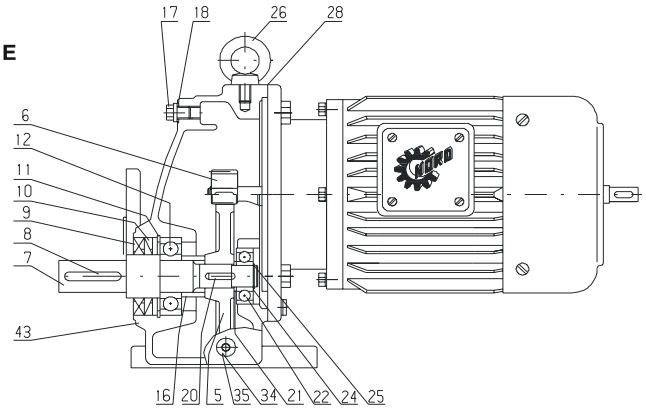

SK 02 - SK 52

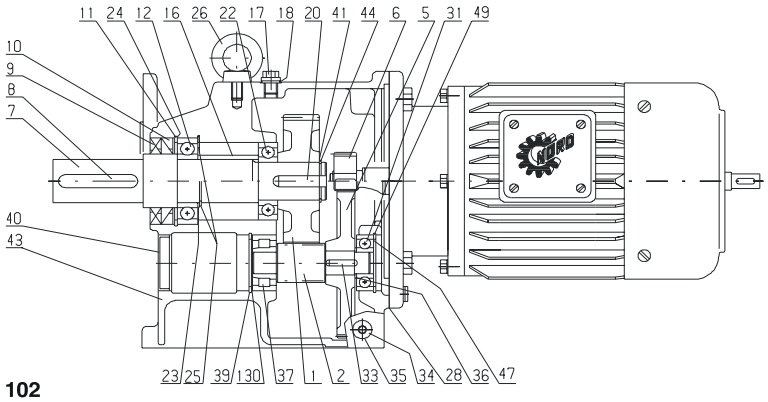

SK 62 - SK 102

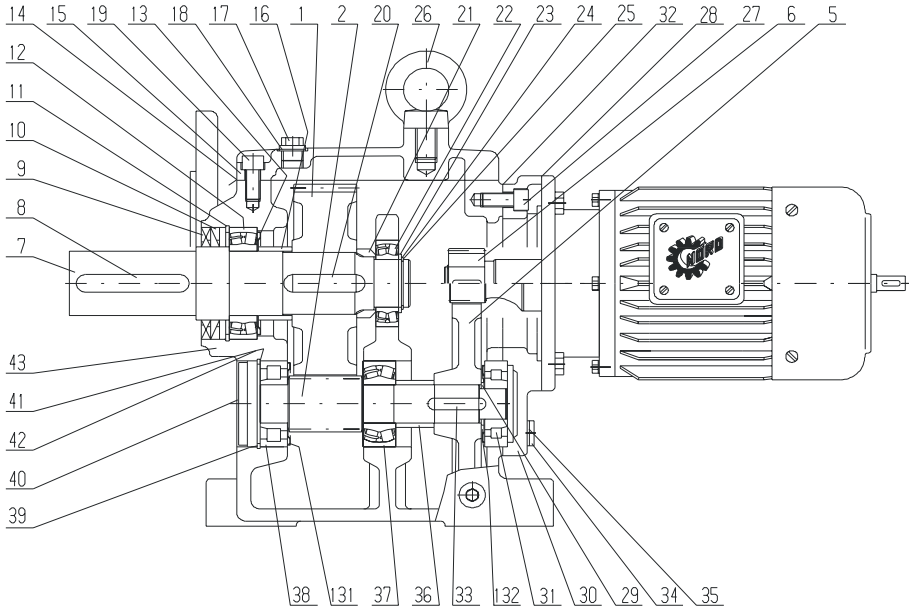

1	Driven gear
2	Pinion shaft
5	Driving gear
6	Driving pinion
7	Output shaft
8	Key
9	Shaft seal
10	Shaft seal
11	Circlip
12	Output shaft bearing
13	NILOS ring
14	Seal
15	Gearcase cover
16	Spacer
17	Vent plug
18	Seal
19	Socket head screw
20	Key
21	Spacer
22	Output shaft bearing
23	Supporting disc
24	Shim
25	Circlip
26	Flanged eye bolt
27	Bolt
28	Seal
29	Spacer
30	Gearbox cover
31	Pinion shaft bearing
32	Seal
33	Key
34	Drain plug
35	Seal
36	Spacer
37	Pinion shaft bearing
38	Pinion shaft bearing
39	Circlip
40	Locking cap
41	Shim
42	Supporting disc
43	Gear case
44	Circlip
47	Shim
49	Circlip
130	Shim
131	NILOS ring
132	NILOS ring

RECOMMENDED SPARE PARTS

Bearings – *all* Gaskets – *all* Shims – *all*
Seals – *all* Seal Plugs – *all*

IMPORTANT!

When ordering parts, it is necessary to have the ***NORD SERIAL NUMBER*** from the unit the parts are for. The serial number will dictate the correct parts for that particular unit. The gearbox nameplate will have the serial number on it.

PARTS LIST

SK 03 - SK 53

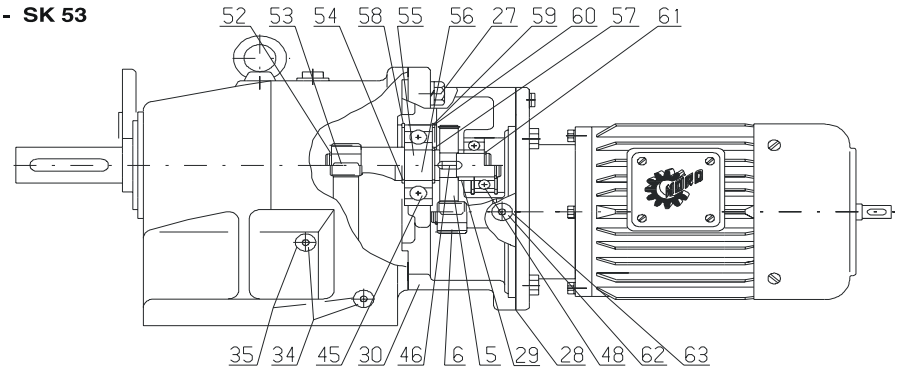

SK 63 - SK 103

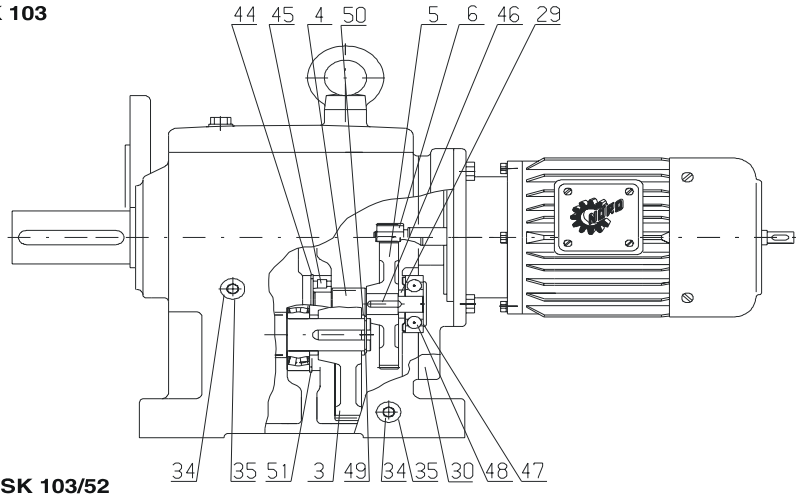

SK 12/02 - SK 103/52

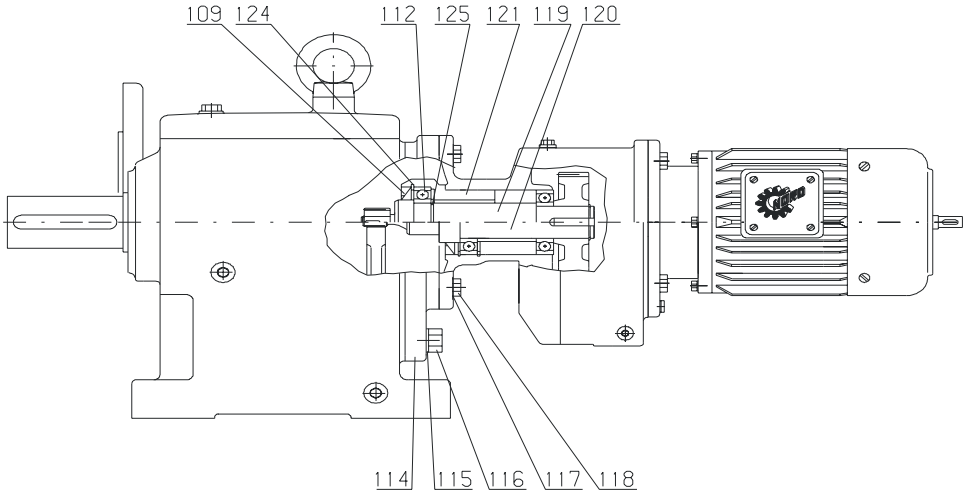

3	Driven gear
4	Pinion shaft SK 63 - SK 103
5	Driving gear
6	Driving pinion
27	Fixing bolt
28	Seal
29	Spacer
30	Third reduction gearcase
34	Drain plug
35	Seal
44	Circlip
45	Ball bearing
46	Key
47	Shim
48	Ball bearing
49	Circlip
50	Supporting disc
51	Circlip
52	Circlip
53	Key
54	Circlip
55	Intermediate shaft, plain
56	Intermediate shaft, gearcut
57	Circlip
58	Circlip
59	Shim
60	Circlip
61	Circlip
62	Oil-plug
63	Seal
109	Shaft seal
112	Ball bearing
114	Intermediate flange
115	Spring washer
116	Bolt
118	Bolt
119	Intermediate shaft, plain
120	Intermediate shaft, gearcut
121	Bearing sleeve
124	Circlip
125	Circlip

NOTES

TROUBLE SHOOTING

PROBLEM WITH THE REDUCER		POSSIBLE CAUSES	SUGGESTED REMEDY
Runs Hot	Overloading	Load exceeds the capacity of the reducer	Check rated capacity of reducer, replace with unit of sufficient capacity or reduce load
	Improper lubrication	Insufficient lubrication	Check lubricant level and adjust up to recommended levels
		Excessive lubrication	Check lubricant level and adjust down to recommended levels
		Wrong lubrication	Flush out and refill with correct lubricant as recommended
Runs Noisy	Loose foundation bolts	Weak mounting structure	Inspect mounting of reducer. Tighten loose bolts and/ or reinforce mounting and structure
		Loose hold down bolts	Tighten bolts
	Worn RV Disc	Overloading unit may result in damage to disc	Disassemble and replace disc. Recheck rated capacity of reducer.
	Failure of Bearings	May be due to lack of lubricant	Replace bearing. Clean and flush reducer and fill with recommended lubricant.
		Overload	Check rated capacity of reducer.
	Insufficient Lubricant	Level of lubricant in the reducer not properly maintained.	Check lubricant level and adjust to factory recommended level.
Output Shaft Does Not Turn	Internal parts are broken	Overloading of reducer can cause damage.	Replace broken parts. Check rated capacity of reducer.
		Key missing or sheared off on input shaft.	Replace key.
		Coupling loose or disconnected.	Properly align reducer and coupling. Tighten coupling.
Oil Leakage	Worn Seals	Caused by dirt or grit entering seal.	Replace seals. Autovent may be clogged. Replace or clean.
		Overfilled reducer.	Check lubricant level and adjust to recommended level.
		Autovent clogged.	Clean or replace, being sure to prevent any dirt from falling into the reducer.
		Improper mounting position, such as wall or ceiling mount of horizontal reducer.	Check mounting position. Name tag & verify with mounting chart in manual.

NORD Gear Corporation
National Customer Service Toll Free 888-314-6673

www.nord.com

NORD Gear Limited
Toll Free in Canada 800-668-4378

WEST
1121 Railroad Street
Building 101
Corona, CA 92882
Phone 951-279-2600
Fax 888-408-6673

MIDWEST
PO Box 367
800 Nord Drive
Waunakee, WI 53597
Phone 608-849-7300
Fax 800-373-6673

SOUTH
100 Forsyth Hall Dr.
Building 100B
Charlotte, NC 28273
Phone 704-529-1255
Fax 888-259-6673

CANADA
41 West Drive
Brampton, Ontario L6T 4A1
Phone 905-796-3606
Fax 905-796-8130

Installation, Operation and Maintenance Instructions

for AC Induction Motors
56- 6800 Frames (NEMA)
63 – 280 Frames (IEC)



MARATHON ELECTRIC
Contact Motor Customer Service at:
Phone: (715) 675-3311
www.marathonelectric.com

Form 5554E

INSTALLER: PLEASE LEAVE THIS MANUAL FOR THE OWNER'S USE
OWNER: READ AND SAVE THESE INSTRUCTIONS

SAFETY INSTRUCTIONS

⚠ This is the safety alert symbol. It is used to alert you to potential personal injury hazards. Obey all safety messages that follow this symbol to avoid possible injury or death.

⚠ WARNING
Before installing, using, or servicing this product, carefully read and fully understand the instructions including all warnings, cautions, & safety notice statements. To reduce risk of personal injury, death and/or property damage, follow all instructions for proper motor installation, operation and maintenance.

These instructions are not intended as a complete listing of all details for installation, operation, and maintenance. If you have any questions concerning any of the procedures, STOP, and call the appropriate Regal-Beloit motor company.

Table of Contents

1.0 INSTALLER / OWNER / OPERATOR RESPONSIBILITY
- 1.1 Electrical Safety
- 1.2 Mechanical Safety
- 1.3 Environmental Safety

2.0 RECEIVING & INSPECTION
- 2.1 Initial Inspection
  - 2.1.1 Packing List & Inspect
  - 2.1.2 Turn Motor Shaft
  - 2.1.3 Check Nameplate
- 2.2 Handling
  - 2.2.1 Correct Lifting Angles
- 2.3 Storage
  - 2.3.1 Bearing Lubrication
  - 2.3.2 Shaft Rotation
  - 2.3.3 Damp or Humid Storage Locations

3.0 INSTALLATION AND OPERATION
- 3.1 Location
  - 3.1.1 Selecting a Location
  - 3.1.2 Ambient Temperature Limits
  - 3.1.3 Construction Selection per Location
    - 3.1.3.1 Dripproof
    - 3.1.3.2 Totally Enclosed
    - 3.1.3.3 Hazardous Locations Motors
- 3.2 Mounting Motor
  - 3.2.1 Rigid Base (Footed)
  - 3.2.2 Rigid Base Hole Selection -6 or 8 Hole Bases
  - 3.2.3 Vertical
- 3.3 Application Assembly to Motor
  - 3.3.1 General: Proper Alignment
  - 3.3.2 Direct Coupling
  - 3.3.3 Direct Connected
  - 3.3.4 Belted
  - 3.3.5 VFD Operation
  - 3.3.6 Accessories
    - 3.3.6.1 General
    - 3.3.6.2 Brake Motors
    - 3.3.6.3 Space Heaters
    - 3.3.6.4 Thermal Protection General, Thermostats, Thermisters & RTDs
    - 3.3.6.5 RTD Alarm & Trip Settings
  - 3.3.7 Guards
- 3.4 Electrical Connections
  - 3.4.1 Power Supply / Branch Circuit
    - 3.4.1.1 Branch Circuit Supply
    - 3.4.1.2 Fuses, Breakers, Overload Relays
    - 3.4.1.3 AC Power Supply Limits
  - 3.4.2 Terminal Box
    - 3.4.2.1 Conduit opening
    - 3.4.2.2 Hazardous Locations
  - 3.4.3 Lead Connections
    - 3.4.3.1 Wire Size Requirements (Single Phase)
    - 3.4.3.2 Extension Cords (Single Phase)
  - 3.4.4 Ground Connections
  - 3.4.5 Start Up
    - 3.4.5.1 Start Up – No Load Procedure
    - 3.4.5.2 Start Up – Load Connected Procedure
    - 3.4.5.3 Jogging and/or repeated starts

4.0 MAINTENANCE
- 4.1 General Inspection

4.1.1 Ventilation
4.1.2 Insulation
4.1.3 Electrical Connections
4.2 Lubrication and Bearings
4.2.1 Grease Type
4.2.2 Bearing Operating Temperature
4.2.3 Lubrication Interval
4.2.4 Lubrication Procedure
4.2.5 Lubrication Example
4.3 Trouble Shooting
4.3.1 General Trouble-Shooting Warnings
4.3.2 Trouble-Shooting Cause / Corrective Action

motor is suitable for use on Pulse Width Modulated (PWM) type VFD power. In addition, the nameplate must be marked with the inverter rating; for example, "2:1 CT", "2 to 1 Constant Torque", etc.

1.0 INSTALLER/OWNER/OPERATOR RESPONSIBILITY:

1.1 ELECTRICAL SAFETY

WARNING: ELECTRICAL SHOCK HAZARD

Electrical connections shall be made by a qualified electrical personnel in accordance with all applicable codes, ordinances and sound practices. Failure to follow these instructions could result in serious personal injury, death and/or property damage. Only qualified personnel who are familiar with the applicable National Code (USA = NEC) and local codes should install or repair electrical motors and their accessories.

WARNING: ELECTRICAL LIVE CIRCUIT HAZARD

Do not touch electrically live parts. Disconnect, lockout and tag input power supply before installing or servicing motor (includes accessory devices). Use a voltmeter to verify that power is off before contacting conductors.

WARNING: ELECTRICAL GROUNDING HAZARD

Failure to properly ground motors, per the National Electrical Code (NEC) Article 430 and local codes may cause serious injury or death to personnel. For general information on grounding refer to NEC Article 250. (Also see "Ground Connections section 3.4.4").

WARNING: AUTOMATIC RESET PROTECTOR HAZARD

Do not use automatic reset protectors if automatically restarting the motor will place personnel or equipment at risk. . Failure to follow this instruction could result in serious personal injury, death and/or property damage

WARNING: MANUAL RESET PROTECTOR HAZARD

If a tripped manual reset thermal protector is exposed to a temperature less than –7°C (20°F) it may reset and restart the motor automatically. If an application requires a motor with a manual reset thermal protector that will be operated at temperatures less than –7°C (20°F) contact the manufacturer to review the application / motor requirements. Failure to follow this instruction could result in serious personal injury, death and/or property damage

1.2 MECHANICAL SAFETY

WARNING: LOOSE PARTS HAZARD

Before starting the motor, remove all unused shaft keys and loose rotating parts to prevent them from flying off. Failure to follow these instructions could result in serious personal injury, death and/or property damage.

WARNING: ROTATING PARTS HAZARD

Keep extremities, hair, jewelry and clothing away from moving parts. Failure to follow these instructions could result in serious personal injury, death and/or property damage.

1.3 ENVIRONMENTAL SAFETY

WARNING: HAZARDOUS LOCATIONS

(1) The NEC and the local authority having jurisdiction must be consulted concerning the installation and suitability of motors for use in Hazardous Locations. The local authority having jurisdiction must make the final determination of what type of motor is required. The application and operation is beyond the control of the motor manufacturer.

(2) Division 1 Hazardous Locations motors can only be modified or reworked by the manufacturer or a facility that is Listed under UL's category "Motors and Generators, Rebuilt for use in Hazardous Locations". Failure to follow these instructions could result in serious personal injury, death and/or property damage.

(3) Do not use a Hazardous Locations motor with a Variable Frequency Drive (VFD) unless the motor nameplate specifically states that the

2.0 RECEIVING AND INSPECTION

2.1 INITIAL INSPECTIONS

2.1.1 CHECK PACKING LIST AND INSPECT the packaging to make certain no damage has occurred in shipment. If there is visible damage to the packaging, unpack and inspect the motor immediately. Claims for any damage done in shipment must be made by the purchaser against the transportation company.

2.1.2 TURN MOTOR SHAFT by hand to be certain that it rotates freely. Note: Shaft seals and bearing seals may add drag.

2.1.3 CHECK NAMEPLATE for conformance with purchase order requirements and compliance with power supply and control equipment requirements.

2.2 HANDLING:

WARNING: FALLING OBJECT HAZARD

Eyebolts or lifting lugs, where provided, are intended for lifting only the motor and accessories mounted by the motor manufacturer (unless specifically stated otherwise on the motor). Utilizing the motor lifting provision to lift other components such as pumps and gear boxes could result in serious personal injury, death and/or property damage.

WARNING: FALLING OBJECT HAZARD

Before using the lifting provision, check the eyebolts and/or other lifting means to assure they are not bent or damaged and are completely threaded, seated & secured to the motor. Equipment to lift motor must have adequate lifting capacity. While lifting the motor DO NOT stand under or in the vicinity of the motor. Failure to follow these instructions could result in serious personal injury, death and/or property damage.

2.2.1 LIFTING ANGLE LIMITATIONS

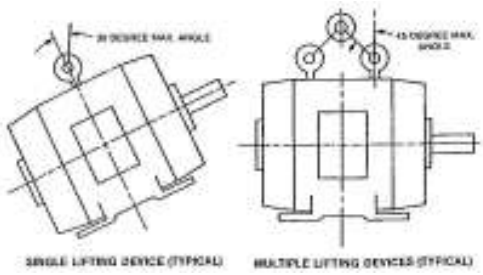

2.3 STORAGE: Motors, not put into service immediately, must be stored indoors in a clean, dry location. Avoid locations with large temperature swings that will result in condensation. Motors must be covered to eliminate airborne dust and dirt. If the storage location exhibits high vibration, place isolation pads under motor to minimize damage to motor bearings.

2.3.1 BEARING LUBRICATION: Bearings are grease packed at the factory; relubrication upon receipt of motor or while in storage is not necessary. If stored more than one year, add grease per lubrication instructions (Table 4-4) before start-up.

2.3.2 SHAFT ROTATION: It is recommended that the motor shaft be rotated 5 to 10 rotations every three months to distribute the grease in the bearings. This will reduce the chance for corrosion to form on the bearing rolling elements and raceways. Note: Shaft seals and bearing seals may add drag.

2.3.3 DAMP OR HUMID STORAGE LOCATIONS: Treat unpainted flanges, shafts, and fittings with a rust inhibitor. Apply appropriate power to the motor's space heaters (if so equipped)

3.0 INSTALLATION AND OPERATION

⚠ **WARNING:** Only qualified personnel who are familiar with the appropriate national code, local codes and sound practices should install or repair electrical motors and their accessories. Installation should conform to the appropriate national code as well as local codes and sound practices. Failure to follow these instructions could result in serious personal injury, death and/or property damage.

⚠ **WARNING: ELECTRICAL LIVE CIRCUIT HAZARD**
Do not touch electrically live parts. Disconnect, Lockout and Tag input power supply before installing or servicing motor (includes accessory devices). Use a voltmeter to verify that power is off before contacting conductors.

3.1 LOCATION

3.1.1 SELECTING A LOCATION: Consideration should be given to environment and ventilation. Motors should be installed in an area that is protected from direct sunlight, corrosives, harmful gases or liquids, dust, metallic particles, and vibration. A motor with the proper enclosure for the expected operating condition should be selected. Provide accessible clearance for cleaning, repair, service, and inspections (See section 3.1.3 for construction clearances). The location should be considered for possible future motor removal / handling. The free flow of air around the motor should not be obstructed.

3.1.2 AMBIENT TEMPERATURE LIMITS: The ambient temperatures of the air inlet to the motor should not exceed 40°C (104°F) or be less than -30°C (-22°F) unless the motor nameplate specifically states an ambient temperature outside of these limits. The ambient inside an enclosure built around the motor shall not exceed the nameplate ambient. For ambient temperatures outside of these limits consult the motor manufacturer.

⚠ **CAUTION: INSULATION DEGRADATION WARNING**
Insulation at high temperatures ages at an accelerated rate. Each 10°C increase in temperature reduces the insulation life by one half.

⚠ **WARNING: HAZARDOUS LOCATIONS AMBIENT LIMIT:** Division 1 Hazardous Locations motors shall **NOT** be operated below –25°C (-13°F) ambient. (Low temperatures reduce the component mechanical properties.)

3.1.3 CONSTRUCTION SELECTION per LOCATION:

3.1.3.1 DRIPPROOF (OPEN) MOTORS are intended for use indoors where the atmosphere is relatively clean, dry, and non-corrosive. Recommended a minimum clearance of ½ the shaft height between vent openings and the nearest obstruction.

3.1.3.2 TOTALLY ENCLOSED MOTORS are suitable for indoor or outdoor standard service applications.

TEAO or AOM (Totally Enclosed Air Over) motors must be mounted in the air stream. When the motor nameplate states a minimum airflow the motor must be mounted in an air stream meeting this minimum value.

TEFC (Totally Enclosed Fan Cooled) motors must meet a minimum distance of ½ the shaft height between the fan guard grill openings and the nearest obstruction.

3.1.3.3 HAZARDOUS LOCATIONS MOTORS: Hazardous Locations motors are intended for installations in accordance with NEC Article 500. For all installations involving Hazardous Locations motors, consult the applicable national codes, local codes, and the authority having jurisdiction.

Division 1 Installations – includes Class I & II: Use only motors that are UL Listed and CSA Certified or UL Listed and UL Certified for Canada. These motors bear a separate nameplate that includes the UL Listing Mark and CSA Certification Mark or includes the UL Listing Mark and the UL Mark for Canada. This plate also bears the phrase: " Electric motor for Hazardous Locations" and is marked with the Class, Group and Operating Temperature Code.

Division 2 Installations – Class I only: Use only motors that are CSA Certified and bear the CSA Certification Mark. These motors include a phrase on the main motor nameplate that indicates the motor is CSA Certified for Class I, Division 2 / Zone 2 locations.

Division 2 Installation – Class II only: Use only Class II motors as described above under "Division I Installations".

⚠ **WARNING: EXPLOSION HAZARD**
A motor should never be placed in an area with a hazardous process or where flammable gases or combustible materials may be present unless it is specifically designed and nameplated for this type of service. Hazardous Locations motors are intended for installations in accordance with NEC Article 500. For all installations involving Hazardous Locations motors, consult the NEC, local codes, and the authority having jurisdiction. Failure to follow these instructions could result in serious personal injury, death and/or property damage. (For other limitations see section 1.3)

3.2 MOUNTING MOTOR:

3.2.1 RIGID BASE (FOOTED): The motor must be securely installed to a rigid foundation or a mounting surface to minimize vibration and maintain alignment between the motor shaft and the load's shaft. The mounting surfaces of the four mounting pads must be flat within 0.01 inches for 210 frame & smaller; 0.015 inches for 250 frame & larger. [IEC 0.25 mm for 130 frame & smaller, 0.38 mm for 160 frame & larger]. This may be accomplished by shims under the motor feet. For special isolation mounting, contact manufacturer for assistance

3.2.2 RIGID BASE HOLE SELECTION -6 OR 8 HOLES

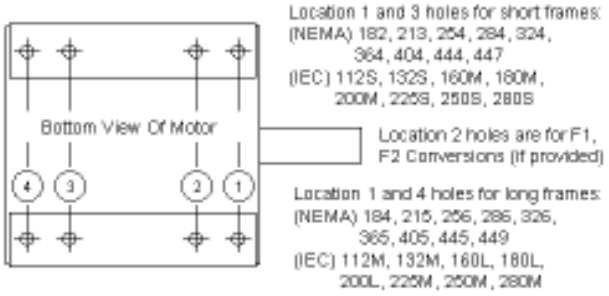

3.2.3 VERTICAL MOUNTING:

CAUTION: ENCLOSURE PROTECTION CAUTION: Most Dripproof rigid base (footed) motors do **NOT** meet "Dripproof" requirements when mounted vertically. If the motor is located in unprotected environments, the addition of a drip cover may be available. Drip covers not available for cast iron rigid base motors.

⚠ **WARNING: FALLING OBJECT HAZARD**
The lifting provision on standard horizontal footed motors is not designed for lifting the motor in a vertical shaft up or shaft down position. (see 2.2.1 lifting angles). Lifting method / provisions for

mounting a rigid base (footed) motor vertically is the responsibility of the installer.

VERTICAL SHAFT DOWN: Most standard horizontal motors thru 449 Fr. (excluding brake motors) can be mounted in a vertical shaft down orientation. For vertical brake motors see section 3.3.6.2.

VERTICAL SHAFT UP:

WARNING: HAZARDOUS LOCATIONS VERTICAL MOUNT: Hazardous locations motors must **NOT** be mounted vertically shaft up without approval by the motor manufacturer. Without proper retaining provisions the rotor may move axially and contact components, creating a spark hazard.

Belted or Radial Load when mounted vertically: The following frame sizes / constructions with applied (axial) down loads within the limit stated are acceptable when mounted vertical shaft up.

Table 3-1 Belted or Radial Load Applications (All speeds)

Frame Size	Enclosure	Construction	Shaft Up OK	Max Applied Down Load[3]
56	TEFC & ODP	Steel	Yes	25 lbs
140	TEFC	Steel & Cast Iron	Yes	25 lbs
	ODP	Steel	Yes	25 lbs
180	TEFC	All	Yes	35 lbs
	ODP	Steel	Yes	35 lbs
210	TEFC	All	Yes	40 lbs
	ODP	Steel	Yes	40 lbs
250	TEFC	All	Yes	40 lbs
	ODP	Steel	Yes	40 lbs
		Cast Iron	No[2]	N/A
280-320	320 TTFC models	Cast Iron	Eng[1]	N/A
	All Other TEFC	Cast Iron & Aluminum	Yes	30 lbs
	ODP	Cast Iron	No[2]	N/A
	TEFC & ODP	Steel	Build Up Only[4]	N/A
360 & Up	TEFC	Cast Iron	Build Up Only[4]	N/A
	ODP	Cast Iron	No[2]	N/A
	TEFC & ODP	Steel	Build Up Only[4]	N/A

Notes:

1 For TEFC model numbers beginning with 324TTFC or 326TTFC consult the motor manufacturer to determine if a build up motor is required.

2 The max applied down load is any applied load external to the motor, including such things as sheave weight, fan loads, axial belt force, pump load, etc. If the application is direct drive with no applied radial load, consult the motor manufacturer.

3 "Build-up only", refers to motors that are specifically ordered and built for shaft up applications. It does not imply that all build-up motors are suitable for shaft up applications.

3.3 APPLICATION ASSEMBLY TO MOTOR:

CAUTION: EQUIPMENT DAMAGE:
Do not connect or couple motor to load until correct rotational direction is established.

3.3.1 GENERAL: PROPER ALIGNMENT of the motor and driven equipment minimizes vibration levels, maximizes bearing life, and extends the overall life of the machinery. Consult the drive or equipment manufacturer for more information.

CAUTION: BEARING FAILURE
During assembly do NOT force components onto the shaft. Striking or hammering the component may result in bearing damage.

3.3.2 DIRECT COUPLING: Use flexible couplings if possible. For applications that apply radial, axial or moment loading on the motor shaft see section 3.3.3.

CAUTION: BEARING FAILURE
Unless approved by the motor manufacturer do **NOT** direct couple a vertical shaft up or roller bearing motor. Direct coupling a vertical shaft up motor or a motor with a roller bearing may result in bearing damage.

3.3.3 DIRECT CONNECTED: Radial loading for direct connected equipment (gears, fans etc.) must be approved by the motor manufacturer unless within the maximum overhung load limits (Table 3-2). Combined loading (axial, radial and/or moments) must be approved by motor manufacturer. For belted loads see section 3.3.4.

Table 3-2 Maximum Radial Load (lbf) @ Middle of the Shaft Extension Length

Frame Number	Motor Rated RPM			
	3600	1800	1200	900
143T	106	166	193	210
145T	109	170	199	218
182T	187	230	261	287
184T	193	237	273	301
213T	319	317	470	510
215T	327	320	480	533
254T	500	631	729	793
256T	510	631	736	820
284T	-	866	990	1100
286T	-	871	1005	1107
324T	-	950	1100	1215
326T	-	950	1113	1230
364T	-	1078	1365	1515
365T	-	1078	1380	1540
404T	-	1388	1590	1762
405T	-	1400	1610	1780
444T	-	1580	1795	2005
445T	-	1520	1795	1985
447T	-	1455	1765	1985
449T	-	1640	1885	2130

Values based on 26,280 hrs B-10 Life
For "End of Shaft" Load multiply value by 0.88
To convert from lbf to N multiply value by 4.4482.

3.3.4 BELTED:

The goal of any belted system is to efficiently transmit the required torque while minimizing the loads on the bearings and shafts of the motor and driven equipment. This can be accomplished by following four basic guidelines:

1. Use the largest practical sheave diameter.
2. Use the fewest number of belts possible.
3. Keep sheaves as close as possible to support bearings.
4. Tension the belts to the lowest tension that will still transmit the required torque without slipping. It is normal for V-belts to squeal initially when line starting a motor

3.3.4.1 Sheave Diameter Guidelines:

In general, smaller sheaves produce greater shaft stress and shaft deflection due to increased belt tension. See Table 3-3 for recommended minimum sheave diameters. Using larger sheaves increases the contact with belts which reduces the number of belts required. It also increases the belt speed, resulting in higher system efficiencies. When selecting sheaves, do not exceed the manufacturer's recommended maximum belt speed, typically 6,500 feet per minute for cast iron sheaves. Determine belt speed by the following formula:

Figure 1



$$\textbf{BELT SPEED (Ft/min)} = \frac{Shaft\ RPM\ x\ 3.14\ x\ Sheave\ Dia\ (inches)}{12}$$

3.3.4.2 Number of Belts

In general, use the fewest number of belts that will transmit the required torque without slipping. See Table 3-3 for recommended maximum number of belts. Each belt adds to the tension in the system, which increases load on the shafts and bearings. Belts are most efficient when operated at or near their rated horsepower.
If the sheaves have more grooves than the number of belts required, use the grooves closest to the motor.

3.3.4.3 Sheave Location

Install sheaves as close to the housing as possible to increase the bearing life of the motor and driven equipment

Figure 2

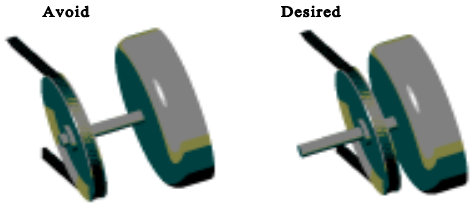

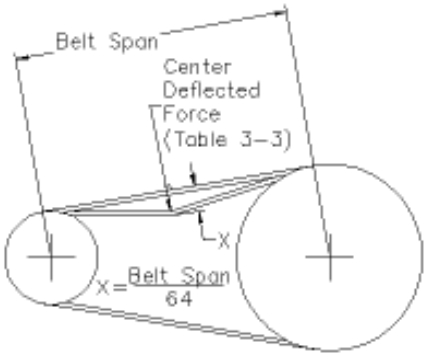

3.3.4.4 Belt Tension

CAUTION: Equipment Failure Caution
Belt tensioning by feel is **NOT** acceptable. Tensioning by "feel" can be very misleading, and can damage motor and equipment.
It is normal for V-belts to squeal initially when line starting a motor.

In general, belt tensions should be kept as loose as possible while still transmitting the required torque without slipping. Belt tensions must be measured with a belt tension gage. These inexpensive gages may be obtained through belt manufacturers, or distributors.

Proper belt tension is determined by measuring the force required to deflect the center of the belt a given distance. The proper deflection (in inches) is determined by dividing the belt span in inches by 64. Calculate the proper deflection and then see Table 3-3 for the required “Deflected Force” to achieve that deflection.
After tensioning the belt, rotate the sheaves for several rotations or operate the system for a few minutes to seat belts into the grooves, then re-tension the belts. New belts will stretch during use, and should be retensioned after the first eight hours of use.

Table 3-3 Recommended Minimum Sheave Diameters, Belt Type, Number of Belts and Deflected Force

Motor Hp	1200 rpm				1800 rpm				3600 rpm			
	Min Sheave Dia (in)	Belt Type	Max # of Belts	Avg. Deflected Force (lbs)	Min Sheave Dia (in)	Belt Type	Max # of Belts	Avg. Deflected Force (lbs)	Min Sheave Dia (in)	Belt Type	Max # of Belts	Avg. Deflected Force (lbs)
0.75	2.2	3VX	1	3.4	2.2	3VX	1	2.2	2.2	3VX	1	1.3
1	2.4	3VX	1	4.0	2.2	3VX	1	3.1	2.2	3VX	1	1.6
1.5	2.4	3VX	2	3.1	2.4	3VX	2	2.1	2.2	3VX	1	2.5
2	2.4	3VX	3	2.8	2.4	3VX	2	2.9	2.4	3VX	1	2.7
3	3.0	3VX	2	3.3	2.4	3VX	3	2.9	2.4	3VX	2	2.3
5	3.0	3VX	3	4.0	3.0	3VX	3	3.7	2.4	3VX	3	2.5
7.5	3.8	3VX	4	4.7	3.0	3VX	4	4.1	3.0	3VX	2	4.2
10	4.4	3VX	4	5.4	3.8	3VX	4	4.3	3.0	3VX	3	3.8
15	4.4	3VX	5	5.4	4.4	3VX	4	5.4	3.8	3VX	3	4.4
20	5.2	3VX	6	6.0	4.4	3VX	6	4.8	4.4	3VX	3	5.0
25	6.0	3VX	7	5.6	4.4	3VX	7	5.2	4.4	3VX	4	4.7
30	6.8	3VX	7	5.9	5.2	3VX	7	5.3				
40	6.8	5VX	4	11.6	6.0	3VX	7	6.0				
50	8.2	5VX	4	14.6	6.8	3VX	8	5.9				
60	8.2	5VX	5	14.1	7.4	5VX	4	13.3				
75	10.0	5VX	5	14.5	8.6	5VX	4	14.3				
100	10.0	5VX	6	16.0	8.6	5VX	6	13				
125	12.0	5V	7	14.1	10.5	5V	6	13.1				
150	13.2	5V	7	15.4	10.5	5V	7	13.4				
200	15.0	5V	8	16.0	13.2	5V	8	13.1				
250	15.0	8V	6	27.6	14.0	5V	9	13.8				
300	16.0	8V	7	27.1	14.0	5V/**8V**	11 / **7**	23.4				
350	16.5	8V	7	30.3	14.5	5V/**8V**	12 / **7**	26.0				
400	17.5	8V	8	29.1	15.0	5V/**8V**	13 / **8**	25.7				
450	18	8V	8	31.6	16.0	5V/**8V**	14 / **9**	25.2				
500	18.5	8V	9	30.7	16.5	5V/**8V**	15 / **9**	26.9				
600					17.5	8V	11	26.3				
700					19.0	8V	12	27.3				
800					20.0	8V	13	28.2				

Contact Motor Manufacturer when Belting 3600 rpm Motors Greater than 25 HP

Notes:

1. Horsepower is the nameplate motor horsepower, and RPM is the motor (driver) speed.
2. Minimum sheave diameters are from NEMA standards where applicable.
3. **For variable speed applications or values outside these recommendations, consult motor manufacturer.**
4. Selections are based on a 1.4 service factor, 5 to 1 speed ratio and various Power Transmission Manufacturers' catalogs.
5. These selections are for Narrow V-belt sections only. Consult manufacturer for details on conventional V-belt sections (A, B, C, D and E), or other belt types.
6. "Average Deflected Force is per section 3.3.4.4 of this document and is the force required to deflect the center of a belt 1/64 of the belt span distance. Tolerance on this force is ±1 lbf for forces ≤10 lbs, and ±2 lbs for forces >10 lbs as measured utilizing a belt tension gage.
7. When more than one belt is required the belts must be a matched set (matched for length).
8. If possible, the lower side of the belt should be the driving side to increase the length of wrap on the sheave).
9. For belted loads do not exceed 125% of 60 Hz operating RPM.

3.3.5 VFD (Variable Frequency Drives) OPERATION:

⚠ WARNING: VFD Motors with Reset Thermal Protectors
UL Recognition, UL Listing, or CSA certification does not apply to motors that are equipped with a manual or automatic reset thermal protector when the motor is operated on VFD power.

⚠ WARNING: Power Factor Correction Capacitors:
Power factor correction capacitors should never be installed between the drive and the motor.

⚠ CAUTION: VFD / Motor Setup:
It is the responsibility of the startup personnel during set up of the VFD / motor system to properly tune the drive to the motor for the specific application per the VFD user manual. The correct voltage boost and volts per hertz settings are application dependent and unique to each motor design. Failure to connect over temperature devices (when provided) will void the warranty.

3.3.5.1 Overspeed Capability:

Belted loads: Do not exceed 125% of 60 Hz operating RPM.

Table 3-4 Maximum Safe Continuous Speed (RPM) For Coupled and Direct Connected Loads

NEMA / [IEC] Frame Size	2-Pole	4, 6, or 8 Pole
56-180 [80-110]	7200 *	5400 *
210-250 [130-160]	5400 *	4200*
280 [180]	5400 *	3600
320 [200]	4500 *	3600
360 [225]	4500 *	2700
400-440 [250-280]	3600	2700
>440 [>280]	3600	1800

* = Fan cooled motors (Totally Enclosed & Hazardous Locations Motors) are limited to a maximum safe continuous speed of 4000 RPM **For higher speeds or shortened duty cycle contact motor manufacturer**

3.3.5.2 Cable Lengths: For optimum insulation life, limit VFD to motor cable lengths of general purpose motors

to Table 3-5 values. Definite purpose VFD motors may accommodate longer cable lengths. For additional information contact motor manufacturer.

Table 3-5 Max Cable Lengths General Purpose Motors
These values are based on 3 kHz carrier frequency. Add suitable VFD output-side filters when exceeding the listed values.

Frame Size	230V	460 V	575 V
NEMA 56-320	600 ft.	125 ft.	40 ft.
NEMA 360-5011	1000 ft.	225 ft.	60 ft.
IEC 80-200	180 m.	40 m.	12 m.
IEC 225-280.	300 m.	70 m.	18 m.

3.3.5.3 VFD Grounding: Equipment grounding conductors may be run in the same conduit as the AC motor power leads. This wire must be used as the equipment ground for the motor and not as the fourth current carrying wire of a "WYE" motor circuit. The grounded metal conduit carrying the output power conductors can provide EMI shielding, but the conduit does not provide an adequate ground for the motor; a separate grounding conductor must be used. Grounding the motor neutral (WYE) of a VFD powered motor may result in a VFD ground fault trip. Improper grounding of an inverter fed motor may result in frame voltages in excess of 500 Volts. Refer to Grounding section 3.4.4

3.3.5.4 VFD – Single Phase:

CAUTION: SINGLE PHASE MOTOR FAILURE:
Single Phase motors are **NOT** suitable for use on VFD power. Connecting a Single Phase Motor to a VFD voids the warranty.

3.3.5.5 Stray Voltage on Accessory Leads:

VFD's will couple stray (common-mode) voltage to motor-mounted RTDs, thermistors, thermostats and space heaters. The leads of these elements must be properly insulated and control input circuits must be designed to withstand this common-mode voltage.

3.3.6 ACCESSORIES / PROVISIONS:

3.3.6.1 General: Carefully read and understand the accessory manufacturer's instructions, supplied with motor. Contact the manufacturer for additional information.

3.3.6.2 Brake Motors:

CAUTION: Vertical Motor Premature Brake Failure
Motors with brakes that are designed for vertical applications are equipped with springs to support the brake pressure plate. Mounting a horizontal brake motor vertically shaft up or down may require a pressure plate spring modification. Failure to modify the brake for the vertical application may result in premature brake failure. If in question, consult brake literature or brake manufacturer.

Brake Solenoid Wiring: Do NOT connect the brake solenoid to the output of a VFD. The brake solenoids must be wired to 50/60 Hz line power

3.3.6.3 Space Heaters:

Motors provided with space heaters have two leads that are brought into the conduit box or into an auxiliary box. These leads are marked "H1", "H2" ("H3", "H4" if a second space heater is supplied). See the space heater nameplate on motor for heater rating.

WARNING: DIVISION 2 EXPLOSION HAZARD
The space heater temperature rating when used in Class I, Division 2 motors shall **NOT** exceed 80% of the auto ignition temperature of the hazardous gas or vapor. See the space heater nameplate on motor for heater Temperature Code and heater rating. Failure to follow this instruction could result in serious personal injury, death and/or property damage

3.3.6.4 Thermal Protection:

General Information: When thermal protection is provided, one of the following will be stamped on the nameplate:

1. **"THERMALLY PROTECTED"** This motor has built in thermal protection. Thermal protectors open the motor circuit electrically when the motor overheats or is overloaded. The protector cannot be reset until the motor cools. If the protector is automatic, it will reset itself. If the protector is manual, disconnect motor from power supply. After protector cools (five minutes or more) press the reset button and reapply power to the motor. In some cases a motor is marked "Auto" and the connection diagram on the motor will identify T'Stat leads – see "2 " below. (See warnings on Manual and Automatic reset protectors - section 1.1)

2. **"WITH OVERHEAT PROTECTIVE DEVICE"**: This motor is provided with an overheat protective device that does not directly open the motor circuit. Motors nameplated with this phrase have either thermostats, thermisters or RTD's. The leads to these devices are routed into the motor conduit box or into an auxiliary box. The lead markings are defined on the nameplate (normally "P1", "P2") . The circuit controlled by the overheat protection device must be limited to a maximum of 600 volts and 360 volt-amps. See connection decal provided inside the terminal box cover. Failure to connect these over temperature devices (when provided) will void the warranty.

   WARNING: EXPLOSION HAZARD
   For Hazardous Locations motors provided with thermostats UL and the NEC require connection of thermostat leads into the control portion of a manual reset start circuit. Failure to follow this instruction could result in serious personal injury, death and/or property damage

Resistance Temperature Detectors (RTD): When winding and/or bearing RTDs are provided the RTD lead markings are defined on the nameplate. (Normally "R1", "R2", "R3" etc.)

3.3.6.5 RTD Alarm & Trip Settings:

Tables 3-6 & 3-7 are suggested initial RTD alarm and trip settings. For motors found to operate significantly below these values the settings may be reduced accordingly.

Table 3-6 Winding RTD – Temperature Limit (°C) 40 °C Max Ambient

Motor Load	Class B Temp Rise≤ 80°C		Class F Temp Rise≤ 105°C	
	Alarm	Trip	Alarm	Trip
Up to 1.0 SF	130	140	155	165
>1.0 to 1.15 SF	140	150	160	165

Table 3-7 Bearing RTD – Temperature Limit (°C) 40 °C Max Ambient

Ambient	Alarm	Trip
Up to 40**°C**	95	100
> 40**°C**	110	115
Bearings that are Heat Stabilized to 150 **°C**	130	135

3.3.7 GUARDS:

WARNING: ROTATING PARTS HAZARD
When devices are assembled to the motor shaft, be sure to install protective devices such as belt guards, chain guards, and shaft covers. These devices must protect against accidental contact with extremities, hair, and clothing. Consider the application and provide guarding to protect personnel. Remove all unused shaft keys and loose rotating parts to prevent them from flying off and causing bodily injury. Failure to follow this warning could result in serious personal injury, death and/or property damage.

3.4 ELECTRICAL CONNECTIONS:

WARNING: ELECTRICAL HAZARDS

Before proceeding read Section 1-1 on Electrical Safety. Failure to follow the instructions in Section 1-1 could result in serious personal injury, death and/or property damage

3.4.1 POWER SUPPLY / BRANCH CIRCUIT

WARNING: POWER SUPPLY INCOMPATIBILITY HAZARD

Check power supply to make certain that voltage, frequency and current carrying capacity are in accordance with the motor nameplate. Failure to match motor nameplate values could result in serious personal injury, death and/or property damage

WARNING: BRANCH CIRCUIT SUPPLY HAZARD

Motor and control wiring, fusing, overload protection, disconnects, accessories and grounding must always conform to the applicable electrical codes as well as local codes and sound practices.

3.4.1.1 Branch Circuit Supply to a motor should include a disconnect switch, short circuit current fuse or breaker protection, motor starter (controller) and correctly sized thermal elements or overload relay protection.

3.4.1.2 Fuses, Breakers, Overload Relays

Short Circuit Current Fuses or Breakers are for the protection of the branch circuit. Starter or motor controller overload relays are for the protection of the motor. Each of these should be properly sized and installed per the applicable electrical codes as well as local codes and practices.

WARNING: PROTECTIVE DEVICE DISABLED HAZARD

DO NOT bypass or disable protective devices. Protection removal could result in serious personal injury, death and/or property damage

3.4.1.3 AC Power Supply Limits

Motors are designed to operate within the following limits at the motor terminals:

1- AC power is within +/- 10 % of rated voltage with rated frequency applied. (Verify with nameplate ratings) **OR**

2- AC power is within +/- 5% of rated frequency with rated voltage **OR**

3- A combined variation in voltage and frequency of +/- 10% (sum of absolute values) of rated values, provided the frequency variation does not exceed +/-5% of rated frequency.

4- For 3 phase motors the line to line full load voltage must be balanced within 1%.

5- If the motor is rated 208-230V, the voltage deviations must be calculated from 230V.

CAUTION: Reduced Motor Performance

Operation outside of these limits will degrade motor performance and increase operating temperature.

3.4.2 TERMINAL BOX:

3.4.2.1 Conduit Opening: For ease of connections, motors are typically provided with large terminal boxes. Most motors have conduit access in 90 degree increments, the terminal box conduit opening is typically provided via knockouts, holes with covers, or the terminal box is rotate-able. Fabricated conduit boxes may have a removable plate for the installer to provide correctly sized hole(s).

3.4.2.2 Hazardous Locations Motors:

WARNING: EXPLOSION HAZARDS

(1) Terminal Boxes mounted to motor with a pipe nipple: If a pipe nipple mounted terminal box is removed or rotated it must be reassembled with a minimum of five full threads of engagement.

(2) Component Removal: Do not set a terminal box component on its machined surfaces. Prior to component reassembly wipe clean all machined surfaces.

(3) Machined Surface Gap (Hazardous Locations Terminal Boxes): The gap between mating surfaces with the machined terminal box MUST BE LESS THAN 0.002 inches. This gap must be checked with a feeler gage along the entire perimeter. If there is visible damage to the mating surfaces, or if the gap between these surfaces exceeds 0.002 inches, DO NOT complete the installation and contact the motor manufacturer. Failure to follow these instructions could result in serious personal injury, death and/or property damage

3.4.3 LEAD CONNECTIONS

Electrical connections to be made per nameplate connection diagram or separate connection plate. In making connections follow the applicable electrical code as well as local codes and practices.

WARNING: ELECTRICAL CONNECTION HAZARD

Failure to correctly connect the motor leads and grounding conductor can result in injury or death. Motor lead connections can short and cause damage or injury if not well secured and insulated.

3.4.3.1 Wire Size (Single Phase) Requirements

The minimum wire size for Single Phase, 115 & 230 Volt Circuits must meet table 3-8 for a given distance between motor and either Fuse or Meter Box.

Table 3-8 Minimum Wire Gage Size Single Phase 115 & 230 Volt Circuits

Distance (Feet) - Motor to Fuse or Meter Box								
Motor	100 Ft.		200 Ft.		300 Ft.		500 Ft.	
HP	115	230	115	230	115	230	115	230
1/4	14	14	10	12	8	10	6	8
1/3	12	14	10	12	6	10	4	8
1/2	10	12	8	10	6	8	4	6
3/4	10	12	6	10	4	8	2	6
1	8	10	6	8	4	6		4
1 1/2	4	10	0	8		6		4
2		8		6		4		2
3		8		6		4		2
5		6		4		2		0

3.4.3.2 Extension Cords (Single Phase Motors):

Where an extension cord(s) is utilized to provide power to the motor the extension cord(s) must be…(1) the proper gauge size per table 3-8, (2) in good working condition (3) properly grounded.

3.4.4 GROUND CONNECTION(S):

WARNING: ELECTRICAL GROUNDING HAZARD

For general information on grounding (USA) refer to NEC Article 250. Improper grounding of an inverter fed motor may result in frame voltages in excess of 500 Volts. In making the ground connection, the installer must make certain that a good electrical connection is obtained between motor and grounding lead. Failure to properly ground motors, per the applicable national code (such as NEC Article 430) and local codes may cause serious injury or death to personnel.

Primary "Internal" Ground: A grounding conductor must be connected to the grounding terminal provided in the terminal housing. This grounding terminal is either a ground screw, ground lug, or a tapped hole to be used with a separately provided ground screw. The internal grounding feature is accessible inside the terminal housing and must be used as the primary grounding connection.

Secondary "External" Ground: Some motors are provided with a supplemental grounding terminal located on the external surface of the motor frame or feet. This external terminal is for supplemental bonding connections where local codes permit or require such connection

3.4.5 START UP:

WARNING: ELECTRICAL SHOCK HAZARD:

Be certain that all connections are secure and the conduit box cover is fastened in place before electrical power is connected. Failure to follow these instructions could result in serious personal injury, death, and/or property damage.

⚠ WARNING: LOOSE & ROTATING PARTS HAZARD
Before proceeding read Section 1-2 on Mechanical Safety. Failure to follow the instructions in Section 1-2 could result in serious personal injury, death and/or property damage

⚠ WARNING: EXCESSIVE SURFACE TEMPERATURE HAZARD
Motors with the temperature code stated on the nameplate are designed to operate within this limit. Improper application or operation can cause the maximum surface temperature to be exceeded. A motor operated in a Hazardous Location that exceeds this surface temperature limit increases the potential of igniting hazardous materials. *Therefore, motor selection, installation, operation, and maintenance must be carefully considered to ensure against the following conditions:* (1) Motor load exceeds service factor value, (2) Ambient temperature above nameplate value, (3) Voltages outside of limits (3.4.1.3), (4) Loss of proper ventilation, (5) VFD operation exceeding motor nameplate rating, (6) Altitude above 3300 feet / 1000 meters, (7) Severe duty cycles, (8) Repeated starts, (9) Motor stall, (10) Motor reversing, and (10) Single phase operation. Failure to follow these instructions could result in serious personal injury, death and/or property damage.

⚠ CAUTION: HOT SURFACE
Normal motor surface temperatures may exceed 90 ° C (194° F). Touching the motor frame may cause discomfort or injury. Surface temperatures should only be measured with suitable instruments and not estimated by hand touch.

3.4.5.1 Start Up - No Load Procedure

1. **Check Instructions:** Before startup carefully read and fully understand these instructions including all warnings, cautions, and safety notice statements.
2. **Motor out of storage after more than three months:** Check winding insulation integrity with a Megger. If winding resistance to ground is less than 1.5 Meg-ohms consult the local authorized service shop before energizing the motor.
3. **Check Installation: Mechanical** - Check tightness of all bolts and nuts. Manually rotate the motor shaft to ensure motor shaft rotates freely. Note: Shaft & bearing seals will add drag.
   Electrical - Inspect all electrical connections for proper terminations, clearance, mechanical tightness and electrical continuity. Be sure to verify connections are made per the nameplate connection diagram or separate connection plate. Replace all panels and covers that were removed during installation before energizing the motor.
4. **Energize Motor: Check Rotation**
   If practical check motor rotation before coupling to the load. Unlock the electrical system. Momentarily provide power to motor to verify direction of rotation. If opposite rotation is required, lock out power before reconnecting motor. If motor has a rotational arrow only operate the motor in the rotation identified. Reapply power to ensure proper operation.
5. **Record No Load Amps, Watts & Voltage:**
   Recommend - To establish a baseline value check and record the no load amps, watts, and voltage.

3.4.5.2 Start Up – Load Connected Procedure

1. **Check Instructions:** Before startup carefully read and fully understand these instructions including all warnings, cautions, & safety notice statements.
2. **Coupling Installation:** Check that the connected equipment is properly aligned and not binding. Check that all guards and protective devices are properly installed.
3. **Energize Motor:** When all personnel are clear of the machine, apply power and verify that the load is not transmitting excessive vibration back to the motor though the shaft or the foundation. Verify that motor amps are within nameplate rating. For repeated starts see 3.4.5.3. The equipment can now be fully loaded and operated within specified limits as stated on the nameplate.

3.4.5.3 Jogging and/or Repeated Starts

Do not start more than twice in succession under full load. Repeated starts and/or jogs of induction motors can cause overheating and immediate failure. Contact the motor manufacturer if it is necessary to repeatedly start or jog the motor.

4.0 MAINTENANCE:

⚠ WARNING: Hazardous Locations Motor Repair HAZARD:
Division 1 Hazardous Locations motors can only be modified or repaired by the manufacturer or a facility that is Listed under UL's category "Motors and Generators, Rebuilt for use in Hazardous Locations". Failure to follow these instructions could result in serious personal injury, death and/or property damage.

⚠ WARNING: ELECTRICAL SHOCK HAZARD
Electrical connections are to be made by qualified electrical personnel in accordance with all applicable codes, ordinances and sound practices. Failure to follow these instructions could result in serious personal injury, death and/or property damage. Only qualified personnel who are familiar with the applicable national codes, local codes and sound practices should install or repair electric motors and their accessories.

⚠ WARNING: ELECTRICAL LIVE CIRCUIT HAZARD
Do not touch electrically live parts. Disconnect, lockout and tag input power supply before installing or servicing motor (includes accessory devices).

4.1 GENERAL INSPECTION

Inspect the motor approximately every 500 hours of operation or every three months, whichever occurs first. Keep the motor clean and the ventilation and fin openings clear. The following steps should be performed at each inspection:

4.1.1 VENTILATION: Check that the ventilation openings and/or exterior of the motor is free of dirt, oil, grease, water, etc, which can accumulate and block motor ventilation. If the motor is not properly ventilated, overheating can occur and cause early motor failure.

4.1.2 INSULATION: Use a "Megger" periodically to ensure that the integrity of the winding insulation has been maintained. Record the Megger readings. If winding resistance to ground is less than 1.5 Meg-ohms consult the local authorized service shop before re-energizing the motor.

4.1.3 ELECTRICAL CONNECTIONS: Check all electrical connectors to be sure that they are tight.

4.2 LUBRICATION & BEARINGS:

The lubricating ability of grease (over time) depends primarily on the type of grease, the size of the bearing, the speed at which the bearing operates and the severity of the operating conditions. Longer bearing life can be obtained if the listed recommendations are followed:

NOTE: If lubrication instructions are provided on the motor nameplate, the nameplate instructions will supersede these instructions. Motors marked "Permanently Lubricated" do not require additional service.

⚠ CAUTION: BEARING / MOTOR DAMAGE WARNING
Lubricant should be added at a steady moderate pressure. If added under heavy pressure bearing shield(s) may collapse. Over greasing bearings greatly increases bearing friction and can cause premature bearing and/or motor failure.

4.2.1 GREASE TYPE (unless nameplate states otherwise):
Nameplate Ambient Temperature between -30°C (-22°F) to 65°C (150°F) inclusive: Recommended grease for standard service conditions is Mobil Polyrex ® EM. Equivalent and compatible greases include: Texaco Polystar RB, Rykon Premium #2, Pennzoil Pen 2 Lube, Chevron SRI & Mobil SHC 100.

Nameplate Ambient Temperature below -30°C (-22°F): Special low temperature grease is recommended, such as Aeroshell 7 or Beacon 325 for ball bearings and Mobil SHC 100 for roller bearings.

Nameplate Ambient Temperature above 65°C (150°F): Dow Corning DC44 or equivalent, a special high temperature grease is required. Note that Dow Corning DC44 grease does not mix with other grease types.

4.2.2 BEARING OPERATING TEMPERATURE:

⚠ CAUTION: HOT SURFACE

The external surface temperature of the end shield (bracket) bearing hub may reach 100° C (212° F) during normal operation. Touching this surface may cause discomfort or injury. Surface temperatures should only be measured with suitable instruments and not estimated by hand touch.

For RTD settings see Table 3-7.

4.2.3 LUBRICATION INTERVALS: (For motors with regreasing provisions)

Eq. 4.2 Lubrication Interval = [(Table 4-1) hrs] x [Interval Multiplier (Table 4-2)] x [Construction Multiplier (Table 4-3)]

Table 4-1 Lubrication Intervals (Hours) These values are based on average use.

NEMA / [IEC] Frame Size	Operating Speed – RPM (See Table 3.4 for Maximum Operating Speed)					
	<7200	<5400	<4500	<3600	<1800	<1200
56-180 [80-110]	2500 Hrs.	4000 Hrs	5000 Hrs	6000 Hrs.	17000 Hrs.	20000 Hrs.
210-250 [130-160]		2500 Hrs	4000 Hrs	5000 Hrs.	12000 Hrs.	16000 Hrs.
280 [180]		2000 Hrs	3000 Hrs	4000 Hrs.	10000 Hrs.	14000 Hrs.
320 [200]			2000 Hrs	3000 Hrs.	9000 Hrs.	12000 Hrs.
360 [225]			1500 Hrs	2000 Hrs.	8000 Hrs.	10000 Hrs.
400-440 [250 – 280]				1500 Hrs.	4000 Hrs.	7000 Hrs.
>440 [>280]				1000 Hrs.	3000 Hrs.	5000 Hrs.

Seasonal Service: If motor remains idle for more than six months, Lubricate at the beginning of the season, then follow lubrication interval.

Do not exceed maximum safe operating speed Table 3-4 without manufacturer's approval

Table 4-2 Service Conditions

Use highest level Multiplier: Maximum Ambient Temperature and Contamination are independent factors

Severity of Service	Maximum Ambient Temperature	Atmospheric Contamination	Multiplier
Standard	Less than 40° C (104° F)	Clean, Slight Corrosion, indoors, less than 16 hrs per day	1.0
Severe	Above 40° C (104° F) to 50° C	Moderate dirt or Corrosion or outdoors or more than 16 hrs per day	0.5
Extreme	Greater than 50° C or Class H Insulation	Severe dirt or Abrasive dust or Corrosion	0.2

Table 4-3 Construction Multiplier

Construction	Multiplier
Angular Contact or Roller Bearing	0.5
Vertical Motor	0.5
All others	1.0

Table 4-4 Relubrication Amounts

Frame Size		Volume		
NEMA	IEC	Cu. In.	Fluid oz	ml
48-56	80	0.25	0.14	4.0
143-145	90	0.25	0.14	4.0
182-184	110	0.50	0.28	8.0
213-215	130	0.75	0.42	12.5
254-256	160	1.00	0.55	16.0
284-286	180	1.50	0.83	25.0
324-326	200	2.00	1.11	33.0
364-365	225	3.00	1.66	50.0
404-405	250	3.80	2.11	62.0
444-449	280	4.10	2.27	67.0
>449	>280	4.50	2.50	74.0

For regreasing while operating multiply volume by 125%.

4.2.4 LUBRICATION PROCEDURE: (For Motors with Regreasing Provisions)

CAUTION: BEARING DAMAGE WARNING
Added grease must be compatible with the original equipment's grease. If a grease other than those stated in 4.2.1 is to be utilized contact the motor manufacturer. Nameplate information supersedes section 4.2.1 (GREASE TYPE). New grease must be free of dirt. Failure to follow these instructions and procedure below may result in bearing and/or motor damage.

For an extremely dirty environment, contact the motor manufacturer for additional information.

LUBRICATION PROCEDURE:

1. Clean the grease inlet plug or zerk fittings prior to regreasing.
2. (If present) Remove grease drain plug and clear outlet hole blockage.

CAUTION: GREASE DRAIN PLUGGED:
Old grease may completely block the drain opening and must be mechanically removed prior to regreasing. Forcing a blocked drain open by increased greasing pressure may collapse bearing shields and / or force excess grease through the bearings and into the motor.

3. Add grease per Table 4-4
4. Re-install grease inlet and drain plugs (if removed).

WARNING: EXPLOSION HAZARD
Do NOT energize a Hazardous Locations motor without all grease fittings properly installed.

4.2.5 EXAMPLE: LUBRICATION

Assume - NEMA 286T (IEC 180), 1750 RPM Vertical motor driving an exhaust fan in an ambient temperature of 43° C and the atmosphere is moderately corrosive.

1. Table 4-1 list 10,000 hours for standard conditions.
2. Table 4-2 classifies severity of service as "Severe" with a multiplier of 0.5.
3. Table 4-3 lists a multiplier value of 0.5 for "Vertical"
4. (Eq. 4.2) Interval = 10,000 hrs x 0.5 x 0.5 = 2500 hrs

Table 4-4 shows that 1.5 in^3 of grease is to be added.

Relubricate every 2,500 hrs of service with 1.5 in^3 of recommended grease.

4.3 TROUBLE-SHOOTING

WARNING: READ INSTRUCTIONS:
Before trouble-shooting a motor, carefully read and fully understand the warnings, cautions, *&* safety notice statements in this manual.

WARNING: Hazardous Locations Motor Repair:
Motors nameplated for use in Division 1 Hazardous Locations can only be disassembled, modified or repaired by the plant of manufacturer or a facility that is Listed under UL's category "Motors and Generators, Rebuilt for use in Hazardous Locations". Failure to follow these instructions could result in serious personal injury, death and/or property damage

CAUTION: DISASSEMBLY APPROVAL REQUIRED:
Motor disassembly must be performed by a party approved by the motor manufacturer. To disassemble the motor without approval voids the warranty.

4.3.1 GENERAL TROUBLE-SHOOTING WARNINGS

1. **DISCONNECT POWER TO THE MOTOR BEFORE PERFORMING SERVICE OR MAINTENANCE.**
2. **Discharge all capacitors before servicing motor.**
3. **Always keep hands and clothing away from moving parts.**
4. **Be sure required safety guards are in place before starting equipment.**
5. **If the problem persists contact the manufacturer.**

4.3.2 Motor Trouble-shooting Cause / Corrective Action - Table 4-5

Issue:	Likely Cause:	Corrective Action:
Motor fails to start upon initial installation:		
A.)	Supply voltage is too low or is severely unbalanced (one phase is low or missing).	(1) Check power supply fuses (2) Match motor lead wiring to nameplate connection diagram and supply voltage (3) Ensure that steady state supply voltage at motor terminals is within limits (see section 3.4.1.3). Correct as needed (4) Obtain correct motor to match actual supply voltage.
B.)	Motor leads are miswired at conduit box.	
C.)	Driven load exceeds motor capacity	(1) Verify that motor & load turn freely (2) Disconnect motor from load & ensure motor turns freely. Note: Roller bearings make noise when motor is uncoupled and shaft is rotated (3) Verify that motor starts when disconnected from load (4) Remove excessive / binding load if present.
D.)	Load is jammed.	
E.)	Fan guard is bent and making contact with fan	Replace fan guard & fan (if blades are damaged)
F.)	VFD with power factor capacitors installed	Remove power factor correction capacitors if equipped
G.)	VFD with motor neutral lead grounded	Ensure that motor neutral lead is ungrounded
H.)	VFD programmed incorrectly	(1) Repeat checks listed above (2) Verify that VFD current limit and starting boost are set correctly (5) Double-check motor and feedback parameter settings and VFD permissives (6) Repeat autotune (for vector drives) procedure (7) Consult VFD supplier.
Motor has been running, then slow down, stalls, or fails to restart:		
A.)	Supply voltage has drooped or has become severely unbalanced	(1) Replace fuse or reset circuit breaker. Allow motor to cool down before resetting manual protector on motor. **Warnings** - See section 1.1 for automatic and manual reset protector warnings (2) Verify that rated and balanced supply voltage has been restored before restarting motor. Measure voltage during restart. Ensure that steady state supply voltage at motor terminals is within limits (see section 3.4.1.3).
B.)	Motor is overloaded	(1) Verify that motor & load turn freely. Repair binding components as needed (2) Reduce driven load to match motor capacity or increase motor size to match load requirements.
C.)	Motor bearings are seized	
D.)	Load Is jammed.	
E.)	VFD will not restart motor after tripping	(1) Check fault codes on VFD and follow VFD troubleshooting procedures (2) Verify that VFD input voltage is balanced and within limits (3) Remove excessive mechanical load if present.
F.)	Capacitor failure on single phase motor (if equipped)	**Warning: Potential Shock Hazard**: Contact service shop to check capacitor.
Motor takes too long to accelerate:		
A.)	Motor leads are not connected correctly	Match motor lead wiring to nameplate diagram.
B.)	Supply voltage has drooped or become severely unbalanced.	(1) Ensure that steady state supply voltage at motor terminals is within limits (see section 3.4.1.3). Correct as needed (2) Obtain correct motor to match actual supply voltage.
C.)	Load exceeds motor capability	Determine correct motor size and contact motor representative to obtain replacement motor.
D.)	Faulty start capacitor (Single Phase)	Motor may be too small for load. Record acceleration time. Start capacitors may fail if acceleration time exceeds 3 seconds.
E.)	Mechanical Failure	(1) Check to make sure motor & load turn freely (2) Disconnect motor from load & ensure motor turns freely
Motor rotates in the wrong direction:		
A.)	Incorrect wiring connection at motor	[Single Phase] Reconnect motor according to wiring schematic provided. Note: Some motors are non-reversible
		[Three Phase] Interchange any two power supply (phase) leads.
Motor overheats or overload protector repeatedly trips		
A.)	Driven Load is excessive	(1) If motor current exceeds nameplate value, ensure that driven load has not increased. Correct as needed. (2) If new motor is a replacement, verify that the rating is the same as the old motor. If previous motor was a special design, a general purpose motor may not have the correct performance.
B.)	Ambient temperature too high	Most motors are designed to operate in an ambient up to 40 °C. (See section 4.2.2 Hot Surface Caution)
C.)	Motor cooling fins and/or vent openings blocked	Remove foreign materials – clear vent openings, fan guard air inlets and frame fins (TEFC motors)
D.)	Insufficient Air Flow	TEAO (Totally Enclosed Air Over) motors: Measure airflow next to motor surface and obtain minimum requirements from motor manufacturer.

	E.)	Motor is started too frequently	See section 3.4.5.3
	F.)	Supply voltage too low, too high, or unbalanced	(1) Ensure that steady state supply voltage at motor terminals is within limits (see section 3.4.1.3) Correct as needed (2) Reconnect motor per input voltage (3) Obtain correct motor to match power supply.
Motor Vibrates			
	A.)	Motor misaligned to load.	Realign load
	B.)	Load out of balance (Direct drive application)	(1) Ensure that load is dynamically balanced: (2) Remove motor from load and inspect motor by itself. Verify that motor shaft is not bent. Rule of thumb is 0.002" runout for shafts extension lengths up to 3.00". Add 0.0005" per every additional inch of shaft length beyond 3.00".
	C.)	Uneven tension on multiple belts	Mixing new with used belts. Replace multiple belt applications with a complete set of matched belts.
	D.)	Driven load operating at resonant point / natural frequency.	(1) De-energize motor and record vibration as load coasts from 100% speed to 0 RPM. If vibration drops immediately, vibration source is electrical. If levels do not drop immediately, source is mechanical (2) Redesign system to operate below the resonant point (3) On VFD-driven loads, program skip frequencies to bypass resonant points (4) Increase carrier frequency to obtain <3% THD current (5) On variable torque loads reduce volts/hertz below base speed.
	E.)	VFD torque pulsations	(1) Adjust VFD to obtain <3% THD current @ rated motor current (2) Adjust VFD stability for smooth operation. Vector drives may be unstable at light load.
	F.)	Motor miswired at terminal box	Match motor lead wiring to nameplate connection diagram.
	G.)	Uneven, weak or loose mounting support.	Shim, strengthen or tighten where required.
	H.)	Motor bearings defective	Test motor by itself. If bearings are bad, you will hear noise or feel roughness. Roller bearings are normally noisy when operated without load. If sleeve bearing, add oil per nameplate instructions. For motors with regreasing provisions, add grease per relubricating instructions (see section 4.2.3). If noise persists contact warranty service.
	I.)	Motor out of balance	Disconnect from load. Set motor on rubber pads on solid floor. Secure a ½ height key in shaft keyway and energize from balanced power supply @ rated voltage. Record vibration levels and compare with appropriate standards. If excessive vibration persists contact motor manufacturer.

Bearings repeatedly fail.			
	A.)	Load to motor may be excessive or unbalanced	(1) If belt drive check system per section 3.3.4. (2) Other than belting, check loading on motor shaft. An unbalanced load will also cause the bearings to fail. (3) Check runouts of mating components, such as a C-face and pump flange.
	B.)	Bearings contaminated.	Motor enclosure not suitable for environment. Replace with correct enclosure construction
	C.)	Incorrect grease or bearings for ambient extremes.	See section 4.2.1
	D.)	VFD bearing damage	Ground brush, common mode filter, or insulated bearings must be added. Contact motor manufacturer.
Motor, at start up, makes a loud rubbing, grinding, or squealing noise.			
	A.)	Contact between rotating and stationary components	Belt squeal during across the line starting is normal: (1) Verify that supply voltage is within limits (see section 3.4.1.3). (2) Ensure that motor lead wiring matches nameplate connection diagram: (3) Isolate motor from load. (4) To locate point of contact turn motor shaft by hand. (5) If point of contact is not located contact motor service shop.
Start capacitors repeatedly fail.			
	A.)	The motor acceleration time is too long	Motor may be too small for load. Record acceleration time. Start capacitors may fail if acceleration time exceeds 3 seconds.
	B.)	Motor is being started too frequently	Excessive starting will damage motor capacitors. Contact motor manufacturer if motor is started more than 20 times/hour or if acceleration time exceeds 3 seconds.
	C.)	Motor voltage low	Verify that voltage at the motor terminals is within limits (see section 3.4.1.3).
	D.)	Defective start switch inside motor	Motor internal switch failure overheats start capacitor. Contact service shop or motor manufacturer.
Run capacitor fails.			
	A.)	High ambient temperature	Verify that the ambient does not exceed motor's nameplate value

	B.)	Input voltage exceeds limit	Verify that voltage to the motor terminals is within limits (see section 3.4.1.3).
	C.)	Power surge to motor (caused by lightning strike or other high transient voltage).	If a common problem, install surge protector.

104043

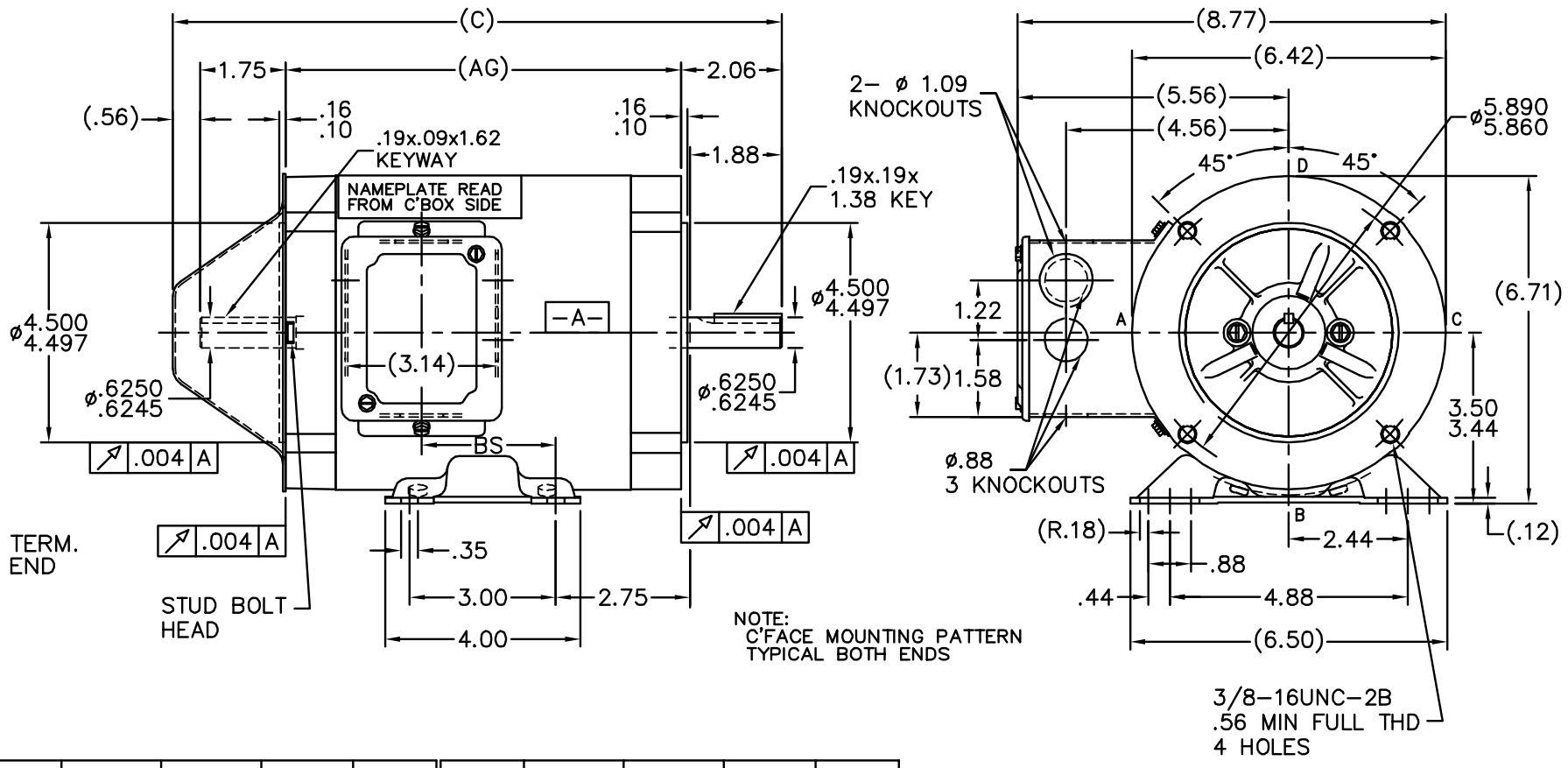

NOTE:
C'FACE MOUNTING PATTERN
TYPICAL BOTH ENDS

DASH	FR.	C	AG	BS	DASH	FR.	C	AG	BS
606	56-60	12.48	8.11	2.75	756	56-75	13.98	9.61	4.25
656	56-65	12.98	8.61	3.25	806	56-80	14.48	10.11	4.75
706	56-70	13.48	9.11	3.75	856	56-85	14.98	10.61	5.25

NOTES:
1- REMOVABLE BASE
2- CONDUIT BOX CAN BE ROTATED 180°

NO.	REVISION	BY & DATE	CHK
5	REDRAWN IN AUTOCAD	TAT 07-06-2004	ML
4	ADDED KEYWAY TO FRONT EXT. CN 27200-169	CAV 02-21-2000	
3	REMOVED KEYWAY FROM FRONT EXT. CN 27400-442	CAV 10-08-1999	
2	REV. BLACK MAX 56 FR. -706 WAS -856 CN27400-264	BLR 07-14-1999	

TOLERANCES UNLESS SPECIFIED	
DEC.	INCHES
.X	±.1
.XX	±.03
.XXX	±.005
.XXXX	±.0005
ANG	±7'30"

MARATHON ELECTRIC

TITLE OUTLINE
56 FR. - TENV - BB - DBL. C' FACE

MAT'L.

FINISH

CAD FILE 104043

RFP

DIST WP

DRAWN	CEB 08-16-1995
CHK	DA 08-18-1995
APPD	EAB 08-21-1995
SCALE	5=16
REF	
FMF	
PREV	

SIZE A | DRAWING NO. 104043 | PAGE OF | REV. 5

THIS DRAWING IN DESIGN AND DETAIL IS OUR PROPERTY AND MUST NOT BE USED EXCEPT IN CONNECTION WITH OUR WORK ALL RIGHTS OF DESIGN AND INVENTION ARE RESERVED
THIS IS AN ELECTRONICALLY GENERATED DOCUMENT - DO NOT SCALE THIS PRINT

EE7300T

THREE PHASE – SINGLE VOLTAGE
MOTOR – CONDUIT BOX @ 'A'

TO REVERSE ROTATION:
INTERCHANGE ANY TWO LINE
LEAD CONNECTIONS

NOTE FOR FACTORY USE ONLY:
TO SURGE TEST:
FOR 3 LEAD COMMON CONNECT:
CONNECT P1 TO T1 THEN P2 TO L1
FOR 6 LEAD COMMON CONNECT:
CONNECT P1 TO BOTH T1
THEN P2 TO L1

IF MOTOR HAS MULTIPLE
T'S PER LEAD CONNECT
TOGETHER LIKE T'S

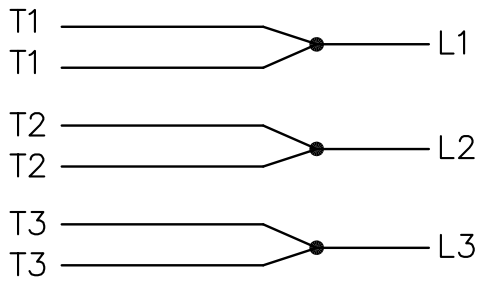

A–9806 DECAL

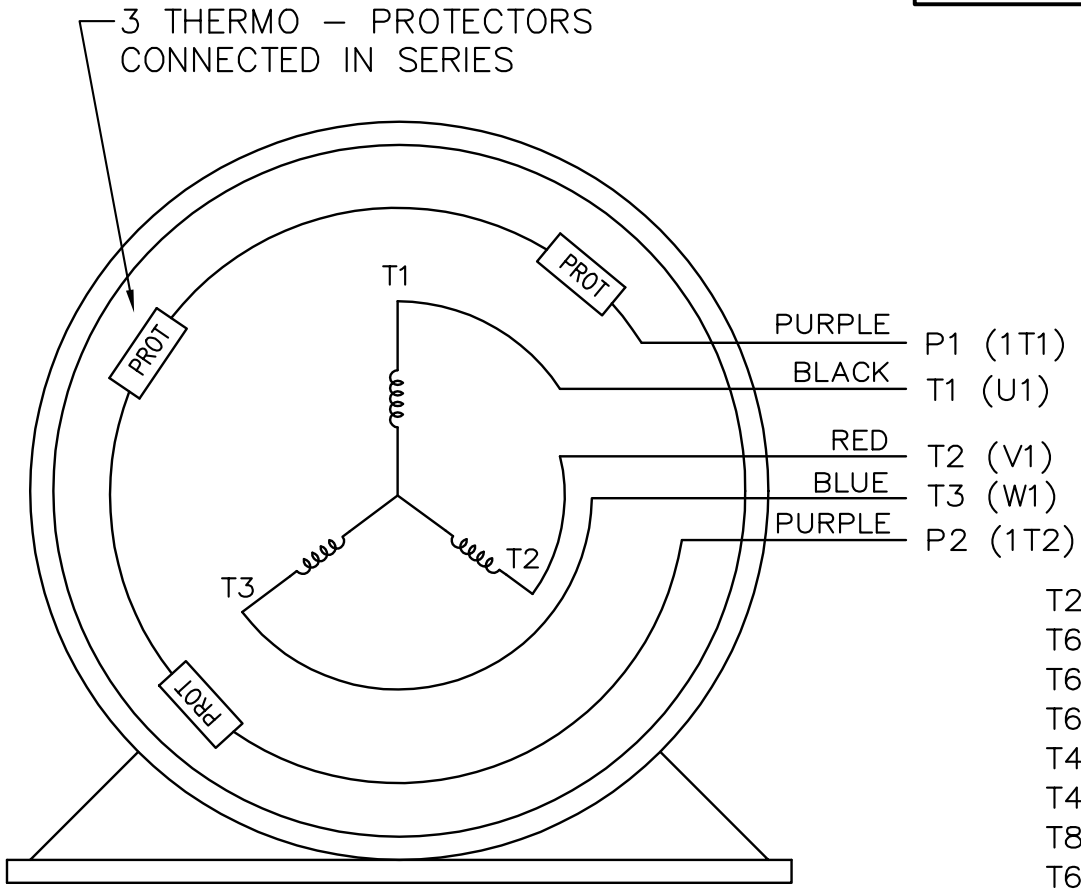

VIEW OF TERMINAL END

T2BM
T6AW
T6AL
T6Z
T4EG
T4BF
T8A
T6H
T6A
T4AX
T4A
T2A
T2F

NO.	REVISION	BY & DATE	CHK
17	ADDED LEAD COLORS CN 40472	TAT 08-01-2006	ML
16	ADDED FEC TERM MARKINGS MU72670	DRS	
15	REVISED "IF MOTOR HAS MULTIPLE		
	T'S PER LEAD... NOTE CN26568	MRB 10-16-1998	
14	ADDED SURGE TESTER NOTE – FOR		
	FACTORY USE ONLY CN24255	MH 03-13-1997	

TOLERANCES UNLESS SPECIFIED
DEC. INCHES
.X ± –
.XX ± –
.XXX ± –
.XXXX ± –
ANG ± –

MARATHON ELECTRIC

DRAWN LZ 01-04-1994
CHK ML 01-20-1994
APPD GK 01-20-1994
SCALE 1=1
REF
FMF
PREV

TITLE CONNECTION DIAGRAM
3ø – SINGLE VOLT – MOTOR WITH PROTECTOR
MAT'L.
FINISH

THIS DRAWING IN DESIGN AND DETAIL IS OUR PROPERTY AND MUST NOT BE USED EXCEPT IN CONNECTION WITH OUR WORK ALL RIGHTS OF DESIGN AND INVENTION ARE RESERVED
THIS IS AN ELECTRONICALLY GENERATED DOCUMENT – DO NOT SCALE THIS PRINT

RFP
DIST WA-LB-SB
CAD FILE EE7300T

SIZE	DRAWING NO.	PAGE	OF	REV.
A	EE7300T			17

Warranty Card

Complete and return to validate warranty

Please complete this card and return it to **seepex** Inc. By using this card, the valid warranty period will commence at the pump "start-up" date. If this card is not completed the warranty coverage period will commence on the date the pump is shipped from the **seepex** factory. This card must be completed and mailed no later than one year from the date of shipment.

User Entity: _____

Mailing Address: _____

_____

_____

Contact Person: _____

Phone Number: _____

Fax Number: _____

Pump Model # _____

Pump Commission #: _____

Pumped Product: _____

Diff. Pressure: _____ Flow Rate: _____

Temperature: _____ Visosity: _____

Solids Size: _____ Solids %: _____

Was the pump delivered as scheduled? __ Yes __ No

Was the appearance of the pump acceptable? __ Yes __ No

Did the pump suffer any freight damage? __ Yes __ No

Did the pump perform as expected? __ Yes __ No

Did you receive: - Data Sheets? __ Yes __ No

-O&M Manuals? __ Yes __ No

Did you local seepex distributor contact you to arrange a start-up? __ Yes __ No

Other Comments: _____

_____

Name of person completing card (please print): _____

Date: _____ Signature: _____

seepex, Inc.
511 Speedway Drive
Enon, OH 45323
Phone (937) 864-7150
Fax (937) 864-7157
www.seepex.com
sales@seepex.net

TERMS & CONDITIONS OF SALES AND/OR REPAIR

The following terms and conditions shall apply to an order for all or any part the articles covered by this quotation unless specifically excepted therein:

Prices
Any prices quoted shall only be valid for orders placed within 30 days from the date of issue of the quotation. Prices are F.O.B. our plant in U.S. or Canadian dollars. We reserve the right to correct typographical or clerical errors.

Terms
All orders are subject to approval by our Credit Department. Unless otherwise stated, if payment for the invoice due is not made within thirty (30) days after shipment, administration fees of eighteen percent (18%) per year (equivalent to a nominal monthly interest rate of 1½%) will be applied on overdue accounts. The terms and conditions herein set forth are based upon tariffs, taxes, foreign exchange rates, delivery, and other conditions in effect on the date of this contract. In the event changed conditions, legislations, regulations, or other matters shall become applicable to any quotation, contract, or delivery hereunder, any increased exchange, duties, taxes, ocean freight, or other charges resulting from such action shall be for the customer's account and **seepex**, Inc. may charge such increased duties, taxes, or charges to the customer.

Unless the order includes the appropriate exemption certificates and/or licenses, duties, and taxes levied by Federal, State, or other governments are required to be charged automatically at the rate imposed at time of importation/shipment. Any change in law, regulations, or Government Department practice which causes a variation of any kind in the applicable charges from the amounts allowed for the quotation, shall result in an equivalent change in the price quoted.

Until payment is made in full, **seepex**, Inc. shall retain the right, without notice, to repossess and/or retain the items, and/or dispose of them, for its benefit and hold the customer responsible for any loss. Customer agrees to enter into any agreements, contracts, or notices required to confirm such rights.

Security
In order to secure any obligations due to **seepex**, Inc. from the customer (whether or not under this contract) the customer grants and confirms in **seepex**, Inc. a security interest in:

a) the merchandise covered by this contract, and
b) in all property and funds of the customer now or hereafter in **seepex**, Inc. possession, whether or not arising out of this contract, and in all additions, accessions, and proceeds of such merchandise and/or property. The customer hereby authorizes **seepex**, Inc. to sign alone any financing statement or statements and to do all and any other things which may be necessary to perfect such security interest.

Cancellation
After acceptance, orders may be canceled only with our approval and payment in accordance with contract by the customer for work performed and/or material expenses incurred by us to date of cancellation. We reserve the right to cancel the order if the customer's financial condition, in our sole judgment, places the payment in jeopardy.

Return
No credit will be allowed for returns unless our authorization in writing for such returns has been obtained beforehand. A copy of this authorization is to be returned with the item as the packing slip.

Shipment

a) Handling Charge: Customer shall be responsible for making all arrangements for shipment of the order with a suitable carrier. In the event that customer requests that seepex make arrangements for shipment, then customer agrees to pay to seepex, in addition to the applicable shipping charges, a handling charge in the amount of 10% of the shipping charges with a minimum $5.00 to a maximum charge of $150.00, with special services requiring additional charges.
b) New Articles: Where shipping instructions indicate no exact routing, our best judgement will be used in determining routing but we shall not be liable for any charges beyond F.O.B. point. If changes are made at customer's request in a) F.O.B. point, b) in our normal routing from either the manufacturers' or our own plants and in these changes involve extra costs, such costs shall be for the customer's account, unless otherwise noted on the **seepex** price quotation.
c) Repair Work: Defined as work and services performed by **seepex**, Inc. All orders shall be delivered to and picked up from our plant unless otherwise specified. All costs of delivery shall be for the customer's account unless otherwise agreed to in writing prior to shipment.
d) All Orders: On collect freight shipments, cartage charges from plant to carrier are for customer's account. Title to articles passes to customer upon delivery to carrier acting as customer's agent subject to any right of retention by us. All claims for shortage in, and damages in, shipment or otherwise must be reported to carrier immediately upon receipt with copy or report to ourselves within five (5) days.

Guarantee

a) New Articles: We guarantee articles of our manufacture against defects in material and/or workmanship for a period of three (3) years from date of acceptance, providing that the articles have been installed, maintained, and operated in accordance with our recommendations and instructions.
b) Repair Work: Defined herein as work and services performed by **seepex**, Inc. We guarantee all work and services performed by us against defect arising from workmanship and/or materials provided by us for a period of ninety (90) calendar days from the date of shipment to customer.
c) All Orders: Claims shall be submitted promptly in writing to **seepex**, Inc. Replacement and/or repair under guarantee shall be made F.O.B. our plant. Our liability under these guarantees is limited to the replacement and/or repair only of defective material or workmanship and in no event shall **seepex**, Inc. be liable for any loss or damage of whatever kind of nature out of defects in material and/or workmanship, or resulting from delay, or loss of use of articles, or any installation into which the article may be installed, or arising out, of the contract of the work or service or from negligence.

seepex, Inc. shall not be liable for any loss or damage resulting from delay and/or late delivery due to causes beyond our reasonable control. In no event shall seepex, Inc. be liable for any claim exceeding the amount of this order. Our guarantee on products of other than our own manufacture is limited to the guarantee extended to us by the original manufacturer. On any claims for repairs and/or replacement under such guarantee, all costs incurred by us which are not underwritten by the original manufacturers shall be for the claimant's account. Except as stated above no representations, conditions, or warranties are made with respect to products, work, or services, express or implied verbal or otherwise, including warranties of merchantability and fitness. Our guarantee and warranty shall not apply to materials or workmanship which have been subject to misuse, neglect, or accident.
seepex, Inc. shall be held free and harmless from any dispute or claim anywhere arising relating to infringement of patent, design, trademark, or copyright of items, sold or repaired under this contract.

Property **rights and risks**
The customer's property at all times shall remain at the risk of the customer while being worked on by our personnel or on our premises and shall not be responsible for any loss or damage to the customer's property resulting from any cause whatsoever.

Title to and rights in relation to item sold under this contract/quotations shall remain with **seepex**, Inc. until such items are paid for, subject to risk on products sold passing to the customer upon acceptance by a carrier or other, which shall constitute good delivery.

Deutschland

seepex
GmbH + Co KG
Postfach 10 15 64
D-46215 Bottrop
Tel +49.2041.9 96-0
Fax +49.2041.9 96-400
info**@seepex**.com
www.**seepex**.com

Deutschland

seepex
Werksbüro West
Scharnhölzstrasse 344
D-46240 Bottrop
Tel +49.700.73 37 39 04
Fax+49.20 41.996-279
bwickermann**@seepex**.com

Deutschland

seepex
Werksbüro Nord
Albert-Einstein-Str. 4
D-30926 Seelze
Tel +49.700.73 37 39 02
Fax +49.511.4 00 80 99 23
bgschulz**@seepex**.com

Deutschland

seepex
Werksbüro Rhein-Main
Dr. Hermann-Künanz-Str. 14
D-63683 Ortenberg-Selters
Tel +49.700.73 37 39 07
Fax+49.60 46.9 60 43 14
hkoch**@seepex**.com

Deutschland

seepex
Werksbüro Südwest
Schwetzinger Strasse 25
D-68519 Viernheim
Tel +49.700.73 37 39 08
Fax+49.62 04.91 12 704
tdufner**@seepex**.com

Deutschland

seepex
Werksbüro Süd
Johann-Karg-Str. 25
D-85540 Haar/München
Tel +49.700.73 37 39 05
Fax+49.89.90 46 87 24
arohrmueller**@seepex**.com

Deutschland

seepex
Werksbüro Ost
Zur Wetterwarte 10, Haus 104
D-01109 Dresden
Tel +49.700.73 37 39 03
Fax+49.351.89 08 36 7
olibnow**@seepex**.com

Österreich

seepex
Vertriebsbüro Österreich
Obermüllergasse 18
3003 Gablitz
Tel. +43.2231 61085
Fax +43.2231.6 10 85-20
hfriedl**@seepex**.com

Niederlande

seepex
Bureau Nederland
Maagdenburgstraat 22c
7421 ZC Deventer
Tel +31.570.516644
Fax +31.570.516077
seepex.nl**@seepex**.com

Belgien

seepex
Bureau België
Dorp 8
B-2288 Bouwel
Tel +32.14.50 14 71
Fax+32.14.50 14 61
seepex.be**@seepex**.com

Dänemark

seepex
Nordic AS
Bakkegårdsvej 411
DK-3050 Humlebæk
Tel +45.49 19 22 00
Fax+45.49 19 32 00
info**@seepex**.dk

Schweden

seepex
Nordic AS
Skogsvägen 39
61634 Åby
Tel +46.11 66 940
Fax +46.11 66 941
info**@seepex**.dk

Grossbritannien

seepex
UK Ltd.
3 Armtech Row
Houndstone Business Park
Yeovil, Somerset BA 22 8RW
Tel +44.19 35.47 23 76
Fax+44.19 35.47 98 36
sales**@seepex**.co.uk

Grossbritannien

seepex
UK Ltd., Northern Office
Dane Mill Business Centre
Broadhurst Lane Congleton
Cheshire CW12 1LA
Tel +44.12 60 27 10 01
Fax+44.12 60 27 40 04
northernoffice**@seepex**.co.uk

Grossbritannien

seepex
UK Ltd. Midlands Office
15 Tudor Close
Hollywood, Birmingham
West Midlands B14 4TL
Tel +44.121.6 03 11 91
Fax +44.121.6 03 21 82
jcashmore**@seepex**.co.uk

Irland

seepex
Dublin Office
61 Clonkeen Road
Deansgrange
Dublin
Tel +353.1.2 89 43 93
Fax +353.1.2 89 44 96
dublinoffice**@seepex**.co.uk

Frankreich

seepex
France SARL
1, Rue Pelloutier
77183 Croissy Beaubourg
Tel +33.1.64 11 44 50
Fax +33.1.64 11 44 69
info**@seepex**.com

Frankreich

seepex
France SARL
Agence Rhône Alpes
15, rue des Sports
F-69210 Lentilly
Tel +33.474.01 87 20
Fax+33.474 01 88 30
lnouel**@seepex**.com

Frankreich

seepex
France SARL
Agence Pays de
Loire-Bretagne
Le Clos Rellan
F-35380 Treffendel
Tel +33.2.99 61 88 10
Fax+33.2.99 61 88 13
mrousseau**@seepex**.com

Frankreich

seepex
France SARL
Agence Aquitaine
28, Chemin de Facteurs
F-33260 La Teste de Buch
Tel +33.5.56 54 68 86
Fax +33.5.57 52 65 47
jose.enrique@free.com

Frankreich

seepex
France SARL
Agence Est
7, rue des Terres Blanches
F-54300 Lunéville
Tel +33.3.83 73 32 59
Fax+33.3.83 73 91 36
tlefloch**@seepex**.com

USA

seepex
Inc.
511 Speedway Drive
Enon, Ohio 45323
Tel +1 (937) 864-71 50
Fax+1 (937) 864-71 57
sales@**seepex**.net

USA

seepex
Inc.
1249 Tilton Park Drive
Rochelle, IL 61068
Tel +1 (815) 562-63 04
Fax+1 (815) 562-83 04
arenick@**seepex**.net

USA

seepex
Inc.
135 Dennis Drive
Glenshaw PA 15116-3003
Tel +1(412) 487-1144
Fax +1(412) 487-6116
lbeatty@**seepex**.net

USA

seepex
Inc.
12374 S.E. 93rd Court Road
P.O. Box 690
Summerfield FL 34492-0690
Tel +1 (352) 245-9405
Fax +1 (352) 245-9446
rbraidich@**seepex**.net

USA

seepex
Inc.
40 Bel Flora
Los Flores, CA 92688
Tel +1 (949) 589-60 23
Fax+1 (949) 589-64 59
bstark@**seepex**.net

USA

seepex
Inc.
7136 Sample Drive
The Colony, TX 75056
Tel +1(469) 287-2042
Fax +1(469) 287-2568
slong@**seepex**.net

USA

seepex
Inc.
2904 Southhurst Drive
Huntsville, AL 35803
Tel +1(256) 650-7236
Fax +1 (256) 650-0288
dheigl@**seepex**.net

USA

seepex
Inc.
1110 East, 1525 North
Layton, UT 84040
Tel +1 (801) 593-1606
Fax +1 (801) 593-1608
kthomas@**seepex**.net

USA

seepex
Inc.
8761 Denison Drive
Columbia, IL 62236-0527
Tel +1(618) 977-3229
Fax +1(618) 939-5874
rbiby@**seepex**.net

USA

seepex
Inc.
411 Lorwood Drive
Shelby, OH 44875-1716
Tel +1 (937) 232-6563
Fax +1 (937) 864-7157
dwalsh@**seepex**.net

China

seepex
Pumps (Shanghai) Co., Ltd.
No. 21, Lane 1365
Kangqiao Dong Road
Shanghai, 201 315
Tel +86.21.3810 8888
Fax +86.21.3810 8899
info.cn@**seepex**.com

China

seepex
Beijing Office
No. 1 (A) Gao Bei Dian Cun
Chaoyang District,
Beijing 100022,
Tel +86.10.8774 3092
Fax +86.10.8774 2997
seepex.bjo@**seepex**.com

China

seepex
Guangzhou Office
501 Linjanf Dadao
Tianhe District
Guangzhou, 510655
Tel. +86.20.3193 5308
Fax +86.20.3889 0479
seepex.gzo@**seepex**.com

China

seepex
Qingdao Office
Shandong Province
Tel +86.138 5329 9850
Fax +86.532 508 5358
seepex.qdo@**seepex**.com

China

seepex
Lanzhou Office
Room 1214, Jinyu Mansion
No. 3 West Jiangong Street
Qilihe District
Lanzhou 730050
Tel +86.931.260 4039
Fax +86.931.260 4239
szhang@**seepex**.com

Malaysia

seepex
(M) Sdn. Bhd.
59-1, Jalan PJU 1/37,
Dataran Prima
47301 Petaling Jaya,
Selangor Darul Ehsan
Tel +60.3.78 80 69 51
Fax+60.3.78 80 69 59
seepex.m@**seepex**.com

Vertretungen:

Europa:

Finnland
Griechenland
Island
Italien
Norwegen
Polen
Portugal
Rumänien
Russland
Schweiz
Spanien
Tschechische Republik
Ungarn

Amerika:

Argentinien
Chile
Equador
Kanada
Kolumbien
Mexiko
Panama
Peru
Puerto Rico
Venezuela

Asien:

Brunei
Indien
Indonesien
Iran
Israel
Japan
Kasachstan
Korea
Kuwait
Pakistan
Philippinen
Saudi Arabien
Singapur
Taiwan
Thailand
V.A.E

Afrika:

Ägypten
Südafrika

Ozeanien:

Australien
Neuseeland

Ihre **seepex** Vertretung

SAFETY RELIEF VALVE

LEFT BLANK

TOP VALVE * PAT

Back Pressure & Pressure Relief Valves

Designed to Enhance the ACCURACY and SAFETY of Metering Pumps



Back Pressure/Anti-Siphon and Pressure Relief Valves

- Long life diaphragm
- Range to 350 PSIG
- Built-in air release and optional gauge port
- Available in PVC, CPVC, PVDF, polypropylene, Teflon, stainless steel, Alloy 20 and Hastelloy C
- 7 sizes (1/4" - 2" threaded, flanged or socket)
- Color coded handles indicate size at a glance
- High temperature valves available to (300°F/149°C)

For detailed product information visit our website: primaryfluid.com

PRIMARY FLUID SYSTEMS INC.

Call Toll Free 1-800-776-6580
Tel (905) 333-8743 Fax (905) 333-8746

E-Mail: primary@primary fluid.com
www.primaryfluid.com

TOP VALVE*PAT

For detailed product information visit our website: primaryfluid.com

Back Pressure/Anti-Siphon and Pressure Relief Valves

Description

This line of diaphragm style, back pressure/anti-siphon and pressure relief valves features a completely adjustable pressure range to 350 PSIG and a built-in air release to reduce priming difficulties. The valves are available in sizes from 1/4" through 2", eight materials of construction, offer a three year warranty and are available with socket weld, flanged or special threaded connections. High temperature to (300°F/149°C) valves are available. *CRN certification available. Please contact factory.*

Ordering Information e.g. Part # TVBP50-S/S-V-S

TV - B - P - 50 - S/S - V - S

TOP VALVE

Valve Type:
B = Backpressure
P = Pressure Relief
P2 = Pressure Relief (2 port)

Valve Style or Connection:
P = Backpressure, FNPT thr'd
R = Pressure Relief, FNPT thr'd
FW = Welded Flange
FT = Thr'd Companion Flanged
F = Flanged Non-Metallic
S = Socket
B = BSP thread
T = High Temperature (300°F/149°C)
H = High Pressure (to 350 psig)

Valve Port Connection Size:
25 = 1/4" 10 = 1"
45 = 1/4" X 1/2" 15 = 1 1/2"
50 = 1/2" 20 = 2"
75 = 3/4"

Standard Top: PVC/CPVC
Top Options:
A = Aluminum Top
S = 316L S/S Top
C = CPVC Top
P = Polycarbonate Top

Miscellaneous Options:
E = EPDM Diaphragm
P = PVC Diaphragm
V = Viton Diaphragm
G = Gauge Port

Body Material of Construction:
PVC = polyvinylchloride
CPVC= Corzan
PP = polypropylene
TFE = 24% glass filled Teflon
PVDF= polyvinylfluoride
S/S = 316L Stainless Steel
ALL20= Alloy 20
Hast = Hastelloy C 276

Flow Rates

Flow capacity through TOP VALVE back pressure/anti-siphon and pressure relief valves under continuous flow conditions **@ 50 PSIG** with ambient temperature water.

Size	1/4"	1/4" / 1/2"	1/2"	3/4"	1"	1 1/2"	2"
Flow rate USGPM	4	4	6	8	14	25	40

Note: Capacities will increase with pressure. If pressure is doubled, flow rate wll approximately double. For capacities of valves with pulsating flow, use approximately 1/3 of the given flow rates.

Typical Installations

The installations below are typical installation examples only. Consult your engineering department for the appropriate installation of your application or call Primary Fluid Systems Inc. for advice.

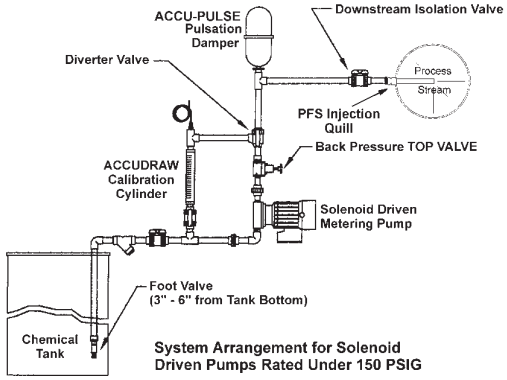

System Arrangement for Solenoid Driven Pumps Rated Under 150 PSIG

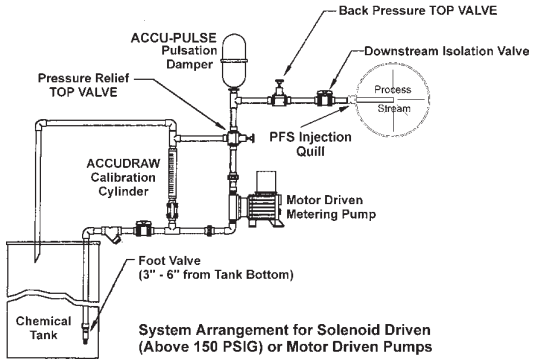

System Arrangement for Solenoid Driven (Above 150 PSIG) or Motor Driven Pumps

Distributed By:

PRIMARY FLUID SYSTEMS INC.

Distribution Territories Available

Call Toll Free 1-800-776-6580
Tel: (905) 333-8743
Fax: (905) 333-8746

E:Mail: primary@primaryfluid.com
www.primaryfluid.com

® Registered Trade Mark of Primary Fluid Systems
*PAT 5,857,486/5,944,050

CALIBRATION CYLINDER

LEFT BLANK

ACCUDRAW® Calibration Cylinders



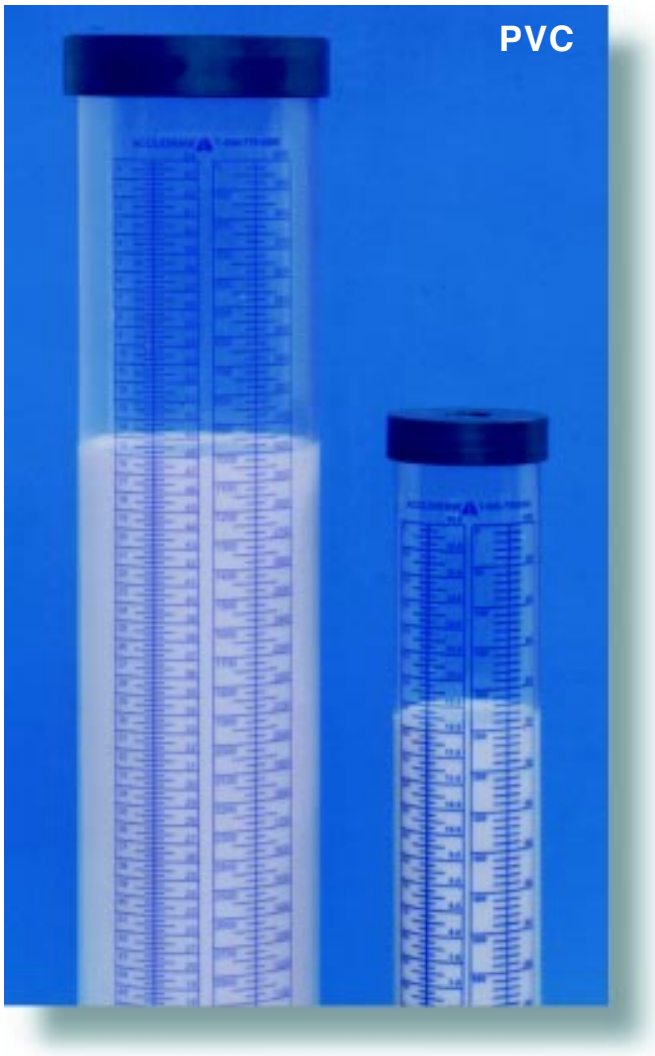

ACCUDRAW® ***has been developed for the accurate calibration of metering pumps. Standard features include:***

- translucent
- chemical resistant
- break resistant
- threaded or socket
- colored graduations and lettering

- PVC has dual scale USGPH & ml
- PVC sizes 100 - 20000 ml
- POLY sizes 100 - 4000 ml
- POLY meets ISO standards
- custom sizes and other materials (acrylic, glass) on request

PRIMARY FLUID SYSTEMS INC.
Call Toll Free 1-800-776-6580
Tel (905) 333-8743 Fax (905) 333-8746
E-Mail: primary@primaryfluid.com
www.primaryfluid.com

ACCUDRAW® Calibration Cylinders

"For Accuracy That Counts"

caustic soda

Sizing and Ordering Information

Polypropylene Construction

Size	*Conn.*	*BC*	*BTC*	*BDC*
100 ml	1/2" NPT	AC#1-100	AC#2-100	AC#3-100
250 ml	1/2" NPT	AC#1-250	AC#2-250	AC#3-250
500 ml	1/2" NPT	AC#1-500	AC#2-500	AC#3-500
1000 ml	1/2" NPT	AC#1-1000	AC#2-1000	AC#3-1000
2000 ml	1.0" NPT	AC#1-2000	AC#2-2000	AC#3-2000
4000 ml	1.0" NPT	AC#1-4000	AC#2-4000	AC#3-4000

BC = bottom connection only, open top
BTC= bottom and top connections
BDC= bottom connection and dust cover top

PVC Construction

Size/Scale	*Conn*	*BC*	*BTC*	*BDC*
100 ml/ 1.6 GPH	1/2" NPT	PV#1-100	PV#2-100	PV#3-100
250 ml/ 4 GPH	1/2" NPT	PV#1-250	PV#2-250	PV#3-250
500 ml/ 8 GPH	1/2" NPT	PV#1-500	PV#2-500	PV#3-500
1000 ml/ 16 GPH	1/2" NPT	PV#1-1000	PV#2-1000	PV#3-1000
2000 ml/ 32 GPH	1.0" NPT	PV#1-2000	PV#2-2000	PV#3-2000
4000 ml/ 64 GPH	1.0" NPT	PV#1-4000	PV#2-4000	PV#3-4000
10000 ml/ 160 GPH	2.0" NPT	PV#1-10000	PV#2-10000	PV#3-10000
20000 ml/ 320 GPH	2.0" NPT	PV#1-20000	PV#2-20000	PV#3-20000

Note: PVC cylinders available with socket weld connections.
Add suffix "S" to model # e.g. PV#3-100S
For BSP threads, add suffix "B" to model # e.g. PV#3-100B

Dimensional Information

Polypropylene Construction

Model	Size (ml)	Dev (ml)	A (inches)	B (inches)
AC#1	100	1	9.88	1.38
AC#1	250	2	12.44	1.75
AC#1	500	5	14.1	2.33
AC#1	1000	10	17.19	2.63
AC#1	2000	20	20.88	3.38
AC#1	4000	50	23.56	4.38
AC#2/AC#3	100	1	9.25	1.38
AC#2/AC#3	250	2	11.63	1.75
AC#2/AC#3	500	5	13	2.32
AC#2/AC#3	1000	10	16.5	2.69
AC#2/AC#3	2000	20	19.5	3.38
AC#2/AC#3	4000	50	22.13	4.38

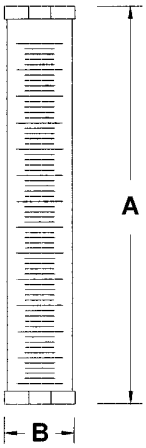

PVC Construction

Model	Size (ml)	Divisions (ml)	Size (GPH)	Divisions (GPH)	A (inches)	B (inches)
PV#1	100	1	1.6	0.02	10.24	1.388
PV#1	250	2	4	0.05	11.04	1.888
PV#1	500	5	8	0.05	12.25	2.388
PV#1	1000	10	16	0.125	16.24	2.765
PV#1	2000	20	32	0.25	20.16	3.517
PV#1	4000	25	64	0.25	22.16	4.521
PV#1	10000	200	160	2	22.64	6.906
PV#1	20000	200	320	2	42.19	6.906
PV#2/PV#3	100	1	1.6	0.02	10.75	1.388
PV#2/PV#3	250	2	4	0.05	11.51	1.888
PV#2/PV#3	500	5	8	0.05	12.75	2.388
PV#2/PV#3	1000	10	16	0.125	16.76	2.765
PV#2/PV#3	2000	20	32	0.25	20.67	3.517
PV#2/PV#3	4000	25	64	0.25	22.66	4.521
PV#2/PV#3	10000	200	160	2	23.16	6.906
PV#2/PV#3	20000	200	320	2	42.69	6.906

Installations

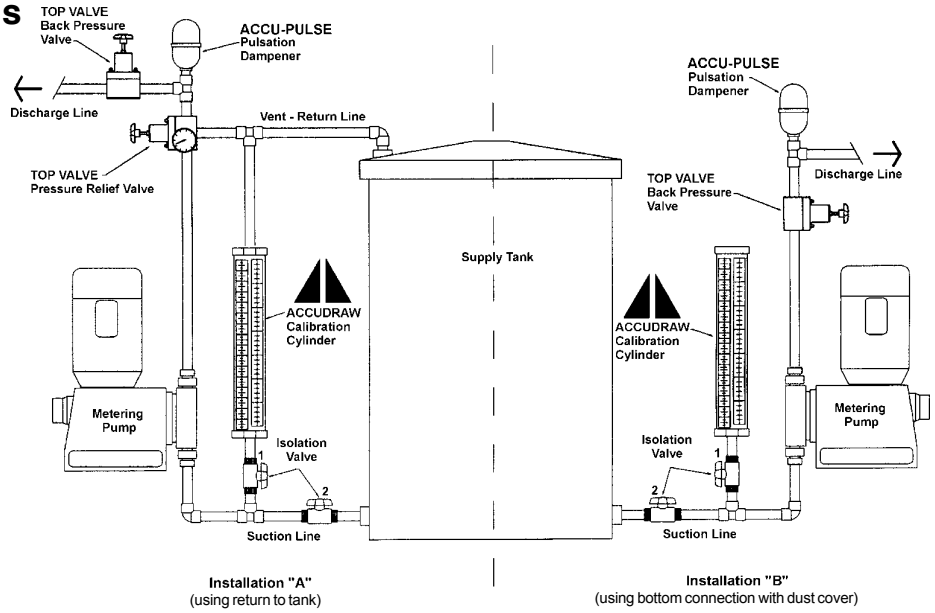

Installation "A"
(using return to tank)

Installation "B"
(using bottom connection with dust cover)

Conversion Factors

1 ml = 1 cc
1000 ml = 1 liter
ml/sec X 60 = ml/min
1 US gal/min X 0.063 = liters/sec
1 US gal = 3.786 liters

Distributed By:

PRIMARY FLUID SYSTEMS INC.

Call Toll Free 1-800-776-6580
Tel: (905) 333-8743
Fax: (905) 333-8746

E:Mail: primary@primaryfluid.com
www.primaryfluid.com

® Registered Trade Mark of Primary Fluid Systems

Distribution Territories Available

CORPORATION STOPS

LEFT BLANK

PFS Corporation Stops



PFS Corporation Stops have been designed to inject chemical into the center stream of the flow.

- **isolation valve allows for ease of maintenance**
- **available in 6 materials of construction**
- **wetted components have comparable or greater chemical resistance than quill construction material**
- **standard and custom lengths available**
- **connection in NPT, metric or flanged**
- **standard 1/8" orifice discharge and optional 1/4" for higher flow**

For detailed product information visit our website: primaryfluid.com

PRIMARY FLUID SYSTEMS INC.

Call Toll Free 1-800-776-6580
Tel (905) 333-8743 Fax (905) 333-8746

E-Mail: primary@primary fluid.com
www.primaryfluid.com

PFS Corporation Stops

For detailed product information visit our website: www.primaryfluid.com

Sizing and Ordering Information

Model	Body Material	Valve Material	Gland Material	Gland Seal Material**	Ball Check Material	Check Spring Material	Pressure* Max. PSIG	Temperature Max.
CCS-56-PVC	PVC	PVC	PVC	VITON	Ceramic	316 S/S	150	140°F(60°C)
CCS-56-CPVC	CPVC	CPVC	CPVC	VITON	Ceramic	316 S/S	150	210°F(98°C)
CCS-56-PP	PP	PP	PVDF	VITON	Ceramic	316 S/S	150	195°F(90°C)
CCS-56-PVDF	PVDF	PVDF	PVDF	VITON	Ceramic	316 S/S	150	260°F(125°C)
CCS-56-316S/S	316S/S	316S/S	316 S/S	VITON	316 S/S	316 S/S	2000	350°F(176°C)
CCS-56-HastC	HASTC	HASTC	HASTC	VITON	HASTC	HASTC	2000	350°F(176°C)
CCS-58-PVC	PVC	PVC	PVC	VITON	Ceramic	316 S/S	150	140°F(60°C)
CCS-58-CPVC	CPVC	CPVC	CPVC	VITON	Ceramic	316 S/S	150	210°F(98°C)
CCS-58-PP	PP	PP	PVDF	VITON	Ceramic	316 S/S	150	195°F(90°C)
CCS-58-PVDF	PVDF	PVDF	PVDF	VITON	Ceramic	316 S/S	150	260°F(125°C)
CCS-58-316S/S	316S/S	316S/S	316S/S	VITON	316 S/S	316 S/S	2000	350°F(176°C)
CCS-58-HastC	HASTC	HASTC	HASTC	VITON	HASTC	HASTC	2000	350°F(176°C)

Notes:

* maximum pressure @ 70°F (21°C) working temperature; ** optional gland seal material available

Options:

Hastelloy C springs
Suffix Model number with -H for this option(e.g. CCS-56-PVC-H)

Hastelloy C ball check
Suffix Model number -I (e.g. CCS-56-PVC-I)

PVDF ball check
Suffix Model number -K (e.g. CCS-56-PVC-K)

TFE ball check
Suffix Model number -T (e.g. CCS-56-PVC-T)

BSPT Thread
Suffix Model -B

Flanged
Suffix Model -F

CRN certification available. Please contact factory.

Other materials of construction and bubble tight/resilient seat check valve available on request.

Dimensional Information

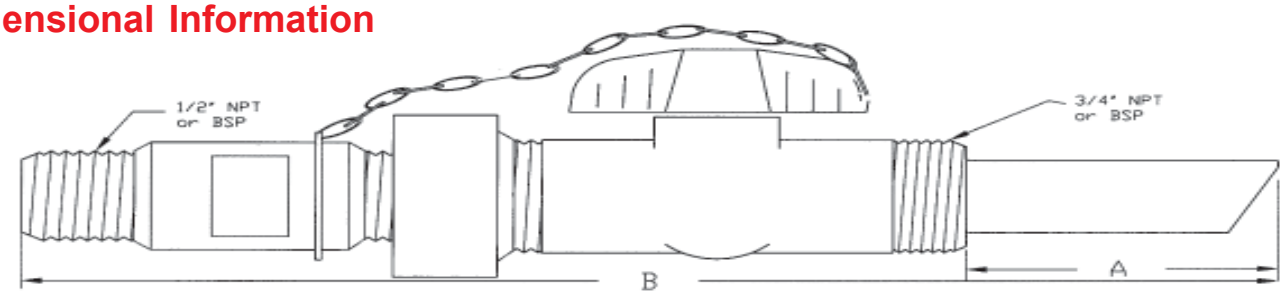

Dimensions *(* subject to change without notice)*

Model	A	B*	Model	A	B*
CCS-56-PVC	2-5/8"	10.50"	**CCS-58-PVC**	4-5/8"	12.50"
CCS-56-CPVC	2-5/8"	10.50"	**CCS-58-CPVC**	4-5/8"	12.50"
CCS-56-PP	2-5/8"	11.25"	**CCS-58-PP**	4-5/8"	13.25"
CCS-56-PVDF	2-5/8"	11.25"	**CCS-58-PVDF**	4-5/8"	13.25"
CCS-56-316S/S	2-5/8"	9.50"	**CCS-58-316S/S**	4-5/8"	11.50"
CCS-56-HastC	2-5/8"	9.50"	**CCS-58-HastC**	4-5/8"	11.50"

Note:
Corporation stops have standard 1/8" discharge orifice for high velocity discharge.
Optional 1/4" discharge orifice available for higher capacity flow.

Capacities at Given Pressure (US & Metric)

Pressure		Flow Rate			
psi	*kPa*	1/8" Bore		1/4" Bore	
		USGPM	*LPM*	*USGPM*	*LPM*
20	138	0.05	0.19	0.70	2.65
30	207	1.35	5.11	1.42	5.38
40	276	1.68	6.36	2.51	9.50
50	345	2.03	7.68	3.43	12.98
60	414	2.25	8.52	4.24	16.05
70	483	2.51	9.50	4.94	18.70
80	552	2.76	10.45	5.52	20.90
90	621	2.99	11.32	6.13	23.20
100	689	3.21	12.15	6.81	25.78

Distributed By:

PRIMARY FLUID SYSTEMS INC.

Distribution Territories Available

Call Toll Free 1-800-776-6580
Tel: (905) 333-8743
Fax: (905) 333-8746
E:Mail: primary@primaryfluid.com
www.primaryfluid.com

SERVICE WATER PUMPS

ST-090

LEFT BLANK

JOHN MEUNIER

NOMENCLATURE/ BILL OF MATERIALS

TITRE/ TITLE	Rev.	DESCRIPTION	PAR/ BY:	APPR:	DATE:	Affaire / Contract	Meadowbank Mining
Service water pumps	0	SUBMITTAL	Julie Trudel	J.T.	2009-03-26		
	1						
	2					REF. No.	NC01 Rev. 0
	3						
DESSIN /DWG # ST-090	4					Date:	2009-03-26

REV.	ITEM	QTE/QTY. Unit.	QTE/QTY. Total	DESCRIPTION	P&ID I.D./TAG	CAT. ACCPAC	SOURCE	FA/SA FI SITE	P / N
	NC01ST-090 1	1	2	**SERVICE WATER PUMPS**	P7-011	140		FI	
				Manufacturer:	P7-021				
				Aurora					
				Model:					
				PVMI8-60					
				Type:					
				Vertical multi-stage					
				Material:					
				Stainless steel 304					
				Suction diameter:					
				2" 250# flange					
				Discharge diameter:					
				2" 250# flange					
				Operation speed:					
				3500 rpm					
				Capacity:					
				52 usgpm @ 225 FT					
				NPSHr:					
				8 FT					
				Motor:					
				5 HP, 3500 rpm, 575/3/60, TEFC, frame 184TC					
				Note:					
				A foot check valve is required (by others)					

LEFT BLANK

AURORA®
Pentair Water

OWNER'S MANUAL

INSTALLATION AND OPERATING INSTRUCTIONS
PVM (IX) 2 - PVM (IX) 16

VERTICAL MULTISTAGE PUMPS

Single and Three Phase 60 Cycle

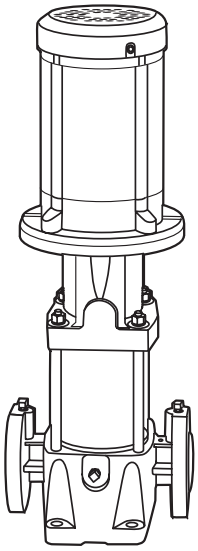

Record the following information from the motor and pump nameplates for future reference:

Pump Model No. _____

Bill of Material No. _____

Motor Model No. _____

Motor Serial No. _____

H.P. _____ Volts/Hz/Ph _____

Rated Amp Draw _____

Aurora Pump, 800 Airport Road, North Aurora, IL 60542

TABLE OF CONTENTS

Safety Instructions.....2
Applications and Operating Ranges.....2-4
Installation.....5
Electrical 6-7
Operation.....7-8
Maintenance 9-12
Troubleshooting Guide.....13
Repair Parts 14-17

Carefully read and follow all safety instructions in this manual or on pump.

This is the safety-alert. When you see this symbol on your pump or in this manual, look for one of the following signal words and be alert to the potential for personal injury.

⚠ DANGER warns about hazards that **will** cause serious personal injury, death or major property damage if ignored.

⚠ WARNING warns about hazards that **can** cause serious personal injury, death or major property damage if ignored.

⚠ CAUTION warns about hazards that **will** or **can** cause minor personal injury or property damage if ignored.

The word **NOTICE** indicates special instructions which are important but not related to hazards.

To avoid serious or fatal personal injury and possible property damage, carefully read and follow the safety instructions.

1. **Install pump according to all code requirements.**
2. **Compare pump nameplate data with desired operating range.**
3. **Pump only liquids compatible with pump component materials (that is, liquids that will not attack the pump).**
4. **Make sure plumbing is adequate to handle system pressure.**
5. **Periodically perform maintenance inspection on pump and system components.**
6. **Wear safety glasses at all times when working on pumps.**

INSPECT THE SHIPMENT

The vertical multistage centrifugal inline pump has been carefully inspected and packaged to assure safe delivery. Inspect the pump and fittings and report to the carrier any items which are damaged or missing.

CONFIRM THAT YOU HAVE THE RIGHT PUMP

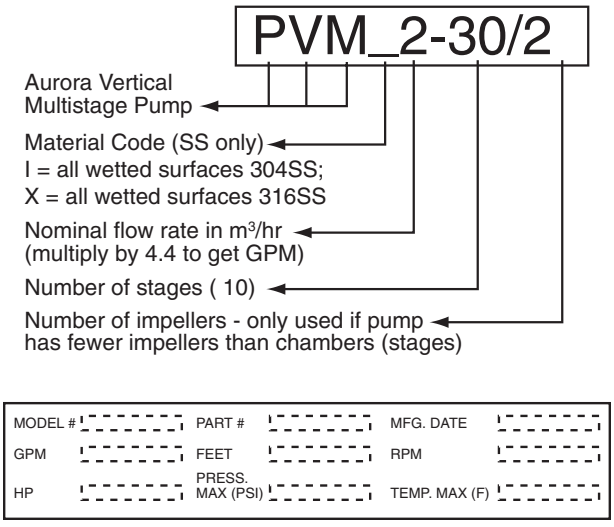

FIGURE 1 - Model Plate Information

APPLICATIONS AND OPERATING RANGES

Aurora multistage in-line centrifugal pumps are designed for liquid transfer, circulation, and pressure boosting of hot or cold clean water or other thin, non-explosive liquids, not containing solid particles or fibers, which will not chemically attack the pump materials.

Typical applications include:

- Municipal water supply and pressure boosting
- Boiler feed and condensate systems
- Cooling water systems
- Irrigation
- Fire fighting

Maximum Ambient Temperature.....104° F(40° C)

Liquid Temperature Range .....5° F to 250° F (-15° C to +121° C)

Maximum Permissible Operating Pressure Curves.....See Figure 4

Maximum Inlet Pressure: ..... Table II shows the maximum permissible inlet pressure. However, the actual inlet pressure plus the pressure when the pump is running against a closed valve must always be lower than the *"Maximum Permissible Operating Pressure".*

Electrical Data: .....See Motor Nameplate

Dimensions and Port to Port Lengths : .....See Figures 2A, 2B, 3A and 3B, Pages 3 and 4

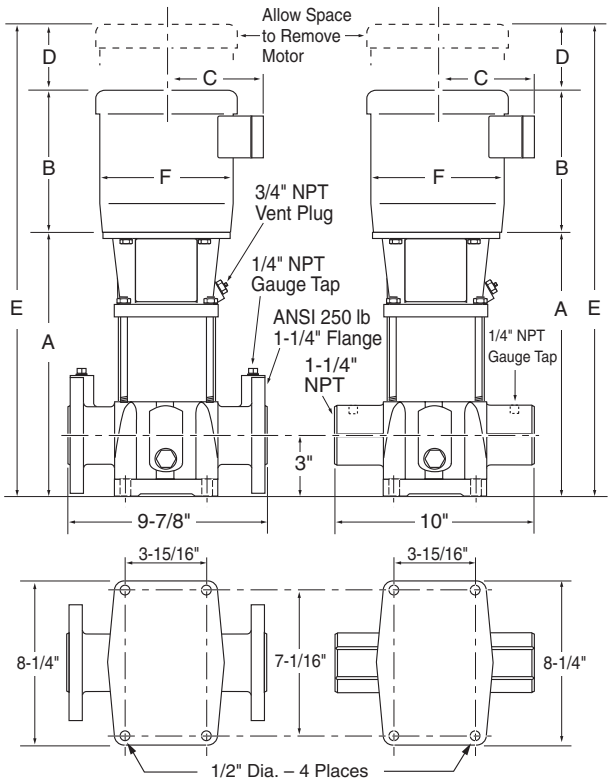

FIGURE 2A - Height, width and baseplate dimensions for PVM2 and PVM4 Series pumps

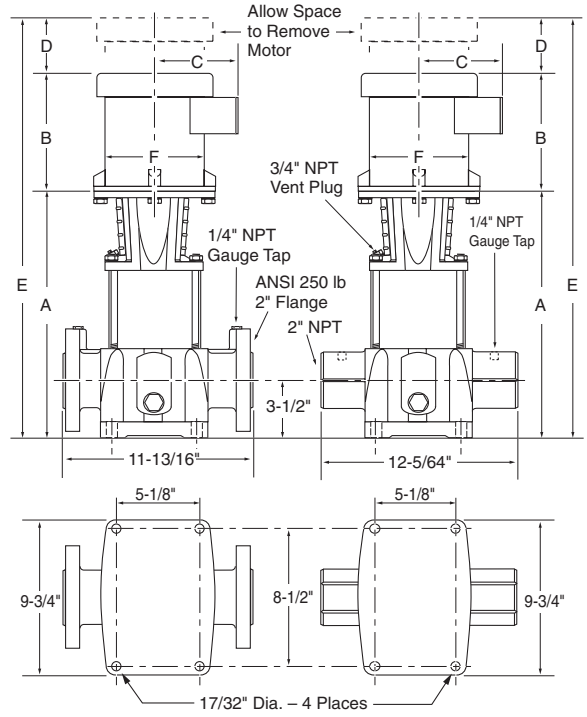

FIGURE 2B - Height, width, and baseplate dimensions for PVM8 and PVM16 Series pumps

TABLE I – Maximum Height and Width Dimensions*

Model Number	Dimension in Inches					
	A	B	C	D	E	F
PVM2-30/2	11-3/8	9-1/4	4-7/8	2	22-5/8	6
PVM2-30	11-3/8	9-7/8	4-7/8	2	23-1/4	6
PVM2-40	12	11-1/8	5-1/4	2	25-1/4	7-1/8
PVM2-50	12-3/4	11-1/8	5-3/4	2-1/8	26	7-1/4
PVM2-60	13-1/2	11-1/8	5-3/4	2-1/8	26-5/8	7-1/4
PVM2-70	14-1/8	12-1/8	5-3/4	2-1/8	28-1/4	7-1/4
PVM2-80	14-7/8	12-1/8	5-3/4	2-1/8	29	7-1/4
PVM2-90	15-15/16	12-5-16	6-7/8	2-7/8	31-1/8	8-1/2
PVM2-100	16-5/8	13-5/8	2-7/8	2-7/8	33-1/4	8-1/2
PVM2-110	17-3/8	12-5/16	6-7/8	2-7/8	32-17/32	8-1/2
PVM2-120	18-1/8	13-5/8	6-7/8	2-7/8	34-5/8	8-1/2
PVM2-130	18-13/16	12-5/16	6-7/8	2-7/8	34	8-1/2
PVM2-140	19-1/2	15-9/32	8	3-3/8	38-5/32	10-9/16
PVM2-150	20-1/4	15-1/4	8	3-3/8	38-7/8	10-5/8
PVM2-160	20-15/16	15-1/4	8	3-3/8	39-9/16	10-5/8
PVM2-170	21-9/16	15-1/4	8	3-3/8	40-9/32	10-5/8
PVM2-180	22-3/8	15-1/4	8	3-3/8	41	10-5/8
PVM4-20/1	11-3/8	9-1/4	4-7/8	2	22-5/8	6
PVM4-20	11-3/8	9-7/8	4-7/8	2	23-1/4	6
PVM4-30	12-3/8	11-1/8	5-1/4	2	25-5/8	7-1/8
PVM4-40	13-1/2	11-1/8	5-3/4	2-1/8	26-5/8	7-1/4
PVM4-50	14-1/2	12	5-3/4	2-1/8	28-5/8	7-1/4
PVM4-60	16	13-5/8	6-7/8	2-7/8	32-1/2	8-1/2
PVM4-80/7	18-1/8	13-5/8	6-7/8	2-7/8	34-5/8	8-1/2
PVM4-80	18-1/8	13-5/8	6-7/8	2-7/8	34-5/8	8-1/2
PVM4-90	19-5/32	15-1/4	8	3-3/8	37-13/16	10-5/8
PVM4-100	20-1/4	15-1/4	8	3-3/8	38-7/8	10-5/8
PVM4-110	21-1/4	15-1/4	8	3-3/8	39-15/16	10-5/8
PVM4-120	22-3/8	15-1/4	8	3-3/8	41	10-5/8
PVM4-130	23-13/32	15-1/4	8	3-3/8	42	10-5/8
PVM4-140	24-1/2	15-1/4	8	3-3/8	43-1/8	10-5/8
PVM4-150	25-1/2	15-1/4	8	3-3/8	44-3/16	10-5/8
PVM4-160	26-5/8	15-1/4	8	3-3/8	45-1/4	10-5/8
PVM8-20/1	15	9-7/8	4-7/8	2	27	6
PVM8-20	15	11-1/8	5-3/4	2-1/8	28-1/4	7-1/4
PVM8-30	17-3/4	13-5/8	6-7/8	2-7/8	34-1/4	8-1/2
PVM8-40	18-7/8	13-5/8	6-7/8	2-7/8	35-1/2	8-1/2
PVM8-50	20-1/8	15-1/4	8	3-3/8	38-3/4	10-5/8
PVM8-60	21-1/4	15-1/4	8	3-3/8	40	10-5/8
PVM8-70	21-5/16	15-1/4	8	3-3/8	39-15/16	10-5/8
PVM8-80	23-5/8	15-1/4	8	3-3/8	42-1/4	10-5/8
PVM8-90	26	15-1/4	8	3-3/8	44-21/32	10-5/8
PVM8-100	26	15-1/4	8	3-3/8	44-5/8	10-5/8
PVM8-110	27-3/16	16-3/8	8-3/4	3-3/8	47	10-5/8
PVM8-120	28-3/8	16-1/2	8-3/4	3-3/8	48-1/4	10-5/8
PVM8-130	29-9/16	16-3/8	8-3/4	3-3/8	49-5/16	10-5/8
PVM8-140	30-3/4	16-3/8	8-3/4	3-3/8	50-1/2	10-5/8
PVM8-150	33-9/16	19-21/32	9-1/2	4-1/4	57-9/16	12-15/16
PVM8-160	33-5/8	19-5/8	9-1/2	4-1/4	57-1/2	13
PVM16-30/2	19-1/2	15-1/4	8	3-3/8	38-1/4	10-5/8
PVM16-30	19-1/2	15-1/4	8	3-3/8	38-1/4	10-5/8
PVM16-40	21-3/8	15-1/4	8	3-3/8	40	10-5/8
PVM16-50	23-1/8	16-3/8	8-3/4	3-3/8	42-7/8	10-5/8
PVM16-60	25-3/8	19-5/8	9-1/2	4-1/4	49-1/4	13
PVM16-70	27-1/8	19-5/8	9-1/2	4-1/4	51	13
PVM16-80	28-7/8	19-5/8	9-1/2	4-1/4	52-7/8	13
PVM16-90	30-3/16	21-3/4	9-3/16	4	55-15/16	11-1/2
PVM16-100	32	21-3/4	9-1/8	4	57-3/4	11-1/2
PVM16-110	33-9/16	21-3/4	9-1/2	3-1/4	58-9/16	12-15/16
PVM16-120	35-3/8	21-3/4	9-1/2	3-1/4	60-3/8	13

* Measurements represent the largest number possible for each Model.

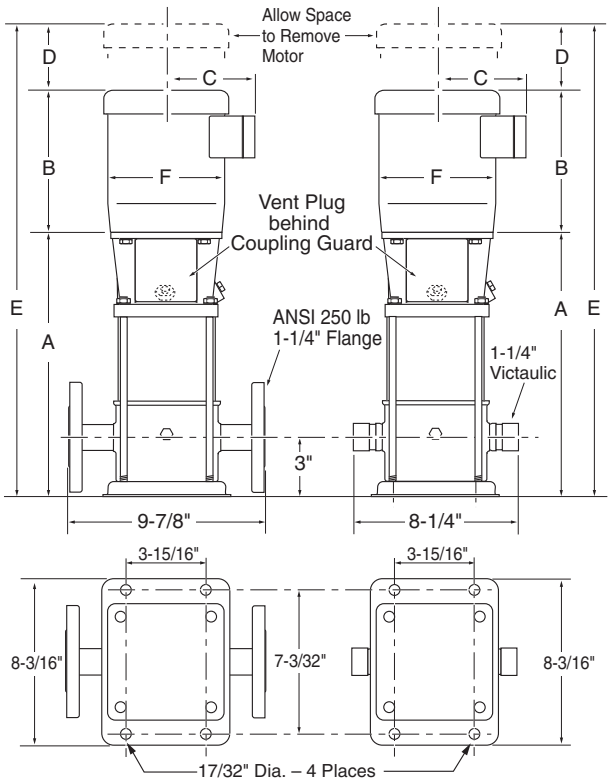

FIGURE 3A - Height, width and baseplate dimensions for PVMI/X2 and PVMI/X4 Series pumps

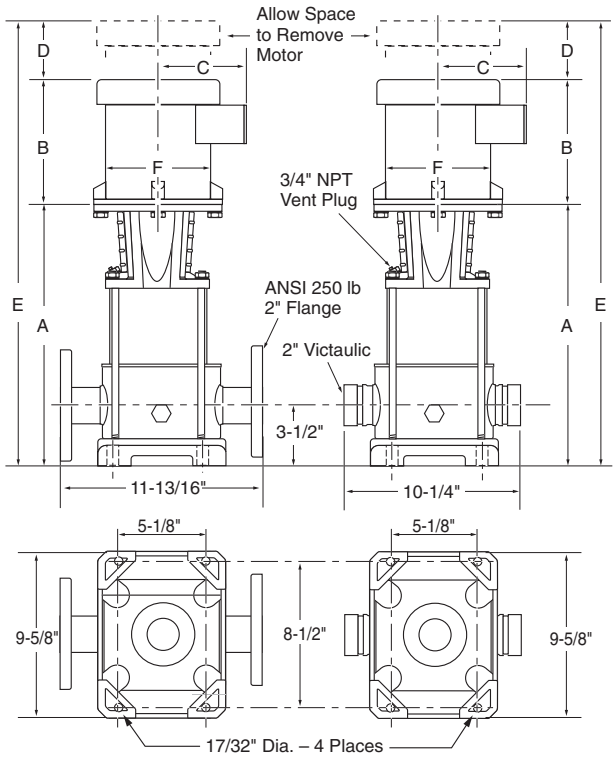

FIGURE 3B - Height, width, and baseplate dimensions for PVMI/X8 and PVMI/X16 Series pumps

TABLE II – Maximum Height and Width Dimensions*

Model Number	Dimension in Inches					
	A	B	C	D	E	F
PVMI/X2-30/2	11-3/4	9-1/4	4-7/8	2	23	6
PVMI/X2-30	11-3/4	9-7/8	4-7/8	2	23-5/8	6
PVMI/X2-40	12-3/8	11-1/8	5-1/4	2	25-5/8	7-1/8
PVMI/X2-50	13-1/8	11-1/8	5-3/4	2-1/8	26-3/8	7-1/4
PVMI/X2-60	13-7/8	11-1/8	5-3/4	2-1/8	27	7-1/4
PVMI/X2-70	14-1/2	12-1/8	5-3/4	2-1/8	28-5/8	7-1/4
PVMI/X2-80	15-1/4	12-1/8	5-3/4	2-1/8	29-3/8	7-1/4
PVMI/X2-90	16-3/8	12-5/16	6-7/8	2-7/8	31-17/32	8-1/2
PVMI/X2-100	17	13-5/8	2-7/8	2-7/8	33-5/8	8-1/2
PVMI/X2-110	17-3/4	12-5/16	6-7/8	2-7/8	33	8-1/2
PVMI/X2-120	18-1/2	13-5/8	6-7/8	2-7/8	35	8-1/2
PVMI/X2-130	19-3/16	12-5/16	6-7/8	2-7/8	34-3/8	8-1/2
PVMI/X2-140	19-15/16	15-1/4	8-1/16	3-3/8	38-9/16	10-5/8
PVMI/X2-150	20-5/8	15-1/4	8	3-3/8	39-1/4	10-5/8
PVMI/X2-160	21-5/16	15-1/4	8-1/16	3-3/8	40	10-5/8
PVMI/X2-170	22-1/32	15-1/4	8-1/16	3-3/8	40	10-5/8
PVMI/X2-180	22-3/4	15-1/4	8	3-3/8	41-3/8	10-5/8
PVMI/X4-20/1	11-3/4	9-1/4	4-7/8	2	23	6
PVMI/X4-20	11-3/4	9-7/8	4-7/8	2	23-5/8	6
PVMI/X4-30	12-3/4	11-1/8	5-1/4	2	26	7-1/8
PVMI/X4-40	13-7/8	11-1/8	5-3/4	2-1/8	27	7-1/4
PVMI/X4-50	14-7/8	12	5-3/4	2-1/8	29	7-1/4
PVMI/X4-60	16-3/8	13-5/8	6-7/8	2-7/8	32-7/8	8-1/2
PVMI/X4-80/7	18-1/2	13-5/8	6-7/8	2-7/8	35	8-1/2
PVMI/X4-80	18-1/2	13-5/8	6-7/8	2-7/8	35	8-1/2
PVMI/X4-90	19-17/32	15-1/4	8-1/16	3-3/8	38-3/16	10-5/8
PVMI/X4-100	20-5/8	15-1/4	8	3-3/8	39-1/4	10-5/8
PVMI/X4-110	21-9/16	15-1/4	8-1/16	3-3/8	40-3/16	10-5/8
PVMI/X4-120	22-3/4	15-1/4	8	3-3/8	41-3/8	10-5/8
PVMI/X4-130	23-13/16	15-1/4	8-1/16	3-3/8	42-1/2	10-5/8
PVMI/X4-140	24-7/8	15-1/4	8	3-3/8	43-1/2	10-5/8
PVMI/X4-150	25-15/16	15-1/4	8-1/16	3-3/8	44-17/32	10-5/8
PVMI/X4-160	27	15-1/4	8	3-3/8	45-3/8	10-5/8
PVMI/X8-20/1	15	9-7/8	4-7/8	2	27	6
PVMI/X8-20	15	11-1/8	5-3/4	2-1/8	28-1/4	7-1/4
PVMI/X8-30	17-3/4	13-5/8	6-7/8	2-7/8	34-1/4	8-1/2
PVMI/X8-40	18-7/8	13-5/8	6-7/8	2-7/8	35-1/2	8-1/2
PVMI/X8-50	20-1/8	15-1/4	8	3-3/8	38-3/4	10-5/8
PVMI/X8-60	21-1/4	15-1/4	8	3-3/8	40	10-5/8
PVMI/X8-70	21-3/8	15-1/4	8-1/16	3-3/8	40	10-5/8
PVMI/X8-80	23-5/8	15-1/4	8	3-3/8	42-1/4	10-5/8
PVMI/X8-90	26-1/8	15-1/4	8-1/16	3-3/8	44-3/4	10-5/8
PVMI/X8-100	26	15-1/4	8	3-3/8	44-5/8	10-5/8
PVMI/X8-110	28-1/2	16-3/8	8-7/8	3-3/8	48-1/4	10-5/8
PVMI/X8-120	28-3/8	16-1/2	8-3/4	3-3/8	48-1/4	10-5/8
PVMI/X8-130	28-1/2	16-3/8	8-7/8	3-3/8	48-1/4	10-5/8
PVMI/X8-140	30-3/4	16-3/8	8-3/4	3-3/8	50-1/2	10-5/8
PVMI/X8-150	33-3/4	19-11/16	9-1/2	4-1/4	57-5/8	12-15/16
PVMI/X8-160	33-5/8	19-5/8	9-1/2	4-1/4	57-1/2	13
PVMI/X16-30/2	19-1/2	15-1/4	8	3-3/8	38-1/4	10-5/8
PVMI/X16-30	19-1/2	15-1/4	8	3-3/8	38-1/4	10-5/8
PVMI/X16-40	21-3/8	15-1/4	8	3-3/8	40	10-5/8
PVMI/X16-50	23-1/8	16-3/8	8-3/4	3-3/8	42-7/8	10-5/8
PVMI/X16-60	25-3/8	19-5/8	9-1/2	4-1/4	49-1/4	13
PVMI/X16-70	27-1/8	19-5/8	9-1/2	4-1/4	51	13
PVMI/X16-80	28-7/8	19-5/8	9-1/2	4-1/4	52-7/8	13
PVMI/X16-90	30-5/16	21-3/4	9-3/16	4	56	11-1/2
PVMI/X16-100	32	21-3/4	9-1/8	4	57-3/4	11-1/2
PVMI/X16-110	33-11/16	21-3/4	9-1/2	3-1/4	58-11/16	12-15/16
PVMI/X16-120	35-3/8	21-3/4	9-1/2	3-1/4	60-3/8	13

* Measurements represent the largest number possible for each Model.

NOTE: PVMI models are 304 stainless steel; PVMX models are 316 stainless steel.

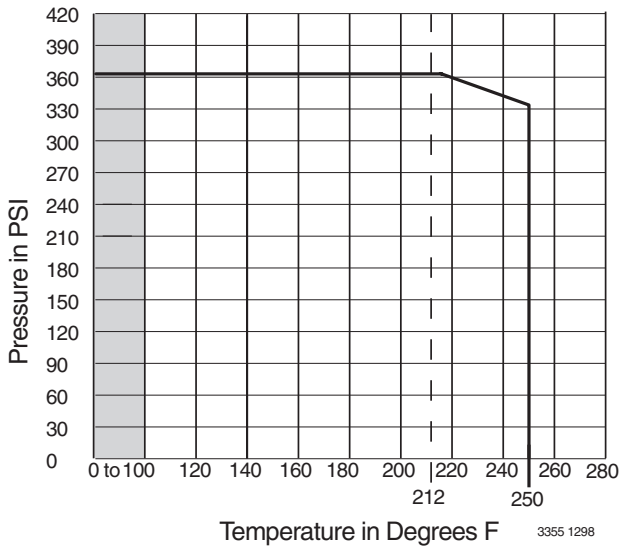

FIGURE 4 - Maximum Permissible Operating Pressure

TABLE III – Permissible Operating Pressures

PVM2-30/2 to PVM2-180
PVM4-20/1 to PVM4-160
PVM8-20/1 to PVM8-160
PVM16-30/2 to PVM16-120

Model Number		Maximum Inlet Pressure (PSI)
PVM2	30/2 - 60	145
	70 - 180	220
PVM4	20/1 - 20	90
	30 - 80/7	145
	80 - 160	220
PVM8	20/1 - 40	90
	50 - 160	145
PVM16	30/2 - 30	90
	40 - 120	145

INSTALLATION

⚠WARNING **Hazardous voltage. Voltage can shock, burn, or cause death.** Ground pump motor correctly before connecting to power supply, per article 250-80 of the National Electrical Code (NEC) in the U.S., or the Canadian Electrical Code (CEC), as applicable.

Location

Locate pump in a dry, well-ventilated area, not subject to freezing or extreme variations in temperature.

Mount pump a minimum of 6" from any obstruction or hot surface. Install the pump with the motor shaft vertical. Make sure that an adequate supply of cool air reaches the motor cooling fan. Maximum ambient air temperature is 104° F (40° C).

For open systems requiring suction lift, locate the pump as close to the water source as possible.

Foundation

Foundation should be concrete or a similarly rigid foundation to provide a secure, stable mounting base for the pump.

Secure pump to foundation using all bolt holes. Refer to Figures 2 and 3 for bolt plate dimensions. Be sure that all four pads on the base are properly supported.

Shim pump base to make sure that pump is level.

Piping

⚠WARNING **Explosion and burn hazard. Do not run pump with discharge valve closed; the water in the pump may boil, with risk of explosion and steam burns to anyone near.** If there is any danger of the pump running against a closed discharge valve, install a pressure relief or bypass valve in the discharge pipe to allow for minimum liquid flow through the pump. Minimum liquid flow through the pump is needed for cooling and lubrication of the pump (See Table IV). Run the bypass/relief valve and discharge pipe to a floor drain or a tank for collection.

Suction pipe should be adequately sized (See Table V) and run as straight and as short as possible to keep friction losses to a minimum. Pipes, valves, and fittings must have a pressure rating equal to or greater than the maximum system pressure.

TABLE IV – Minimum Pumping Rates

Type	Liquid Temperature +5° F to +250° F
PVM2	1 GPM
PVM4	2 GPM
PVM8	4 GPM
PVM16	8 GPM

TABLE V – Minimum Suction Pipe Sizes

Type	Pipe Size
PVM2	1-1/4" Nominal Diameter, Schedule 40 Pipe
PVM4	1-1/4" Nominal Diameter, Schedule 40 Pipe
PVM8	2" Nominal Diameter, Schedule 40 Pipe
PVM16	2" Nominal Diameter, Schedule 40 Pipe

Pressure check the discharge piping as required by codes or local regulations.

"Inlet" and "Outlet" are marked on the pump base to show the direction of the liquid flow through the pump.

Install anti-vibration mountings on either side of the pump if a minimum noise level is desired.

Install isolation valves in both inlet and outlet pipes near the pump (see Figure 5). This allows for removal of pump for service without draining the system and isolation of the pump in case of a flooded suction condition.

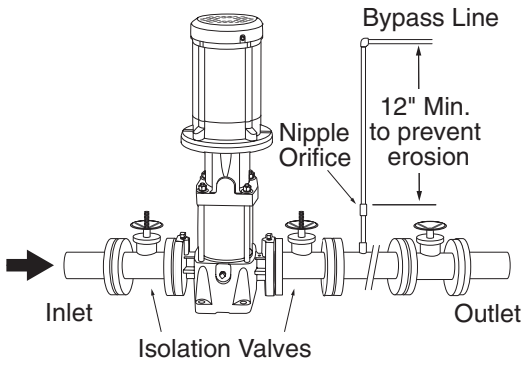

FIGURE 5 - Bypass required if pump might operate with discharge valve closed. See Table IV for minimum required flow through pump to prevent overheating and to ensure lubrication.

If the system pressure is greater than the pumps maximum inlet pressure the limits of the pump can be exceeded if the discharge pressure backs up to the inlet side of the pump. Installation of a check valve in the discharge pipe is recommended to prevent this condition.

Make sure, especially on the inlet side of the pump, that there are no airlocks in the system. See Figure 6 for correct pipe work to avoid airlocks. The suction pipe should be level or slightly rising.

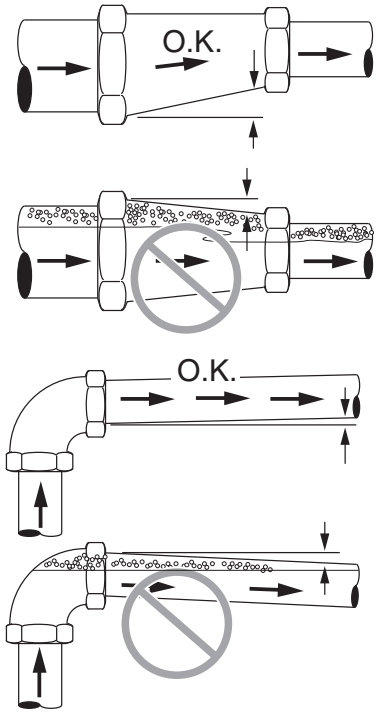

FIGURE 6 - Install Pipe Correctly to Prevent Air Locks

Support all piping independently of the pump so the weight of the piping system does not strain the pump case. Make sure that the expansion and contraction of the piping system from temperature variations cannot put a strain on the pump.

If the system or pump must be drained periodically (especially if the discharge pipe is horizontal or slopes downward away from the pump), install a loop and vacuum valve as shown in Figure 7 to protect the pump against running dry. The highest point of the loop should be at least as high as the lowest point of the motor. This loop/valve combination will allow the pump and the system to be drained independently of one another.

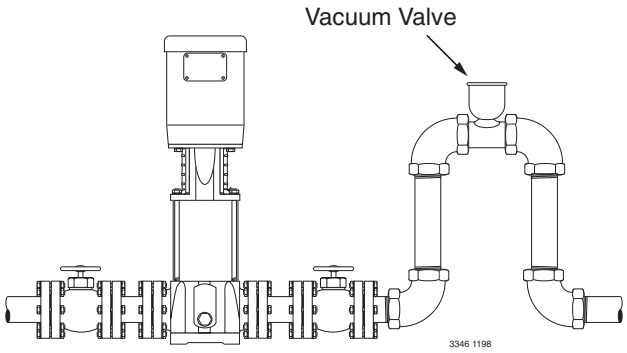

FIGURE 7 - Loop and Vacuum Valve Installation

ELECTRICAL

⚠WARNING **Hazardous voltage. Can shock, burn or cause death.** All electrical work should be performed by a qualified electrician in accordance with the National Electrical Code and all local codes and regulations. Make sure that the motor voltage, phase, and frequency match the incoming electrical supply. The proper operating voltage and other electrical information can be found on the motor nameplate. These motors are designed to run up to ±10% of the nameplate-rated voltage. The wiring connection diagram can be found on either a plate attached to the motor or on a diagram inside the terminal box cover.

- **If voltage variations are greater than ±10% do not operate the pump.**
- Incorrect voltage can cause fire or serious damage to the motor and voids warranty.
- Ground the pump motor correctly before connecting it to the power supply.
- Follow the wiring instructions when connecting the motor to the power lines.

Position of Terminal Box

To turn the motor so that the terminal box faces the right direction, proceed as follows:

1. Disconnect the power to the pump motor.

2. Remove the coupling guards (use a screwdriver).
3. Remove the couplings.
4. Remove the bolts that fasten the motor to the pump.
5. Turn the motor to the required position (in quarter-turn increments).
6. Follow steps 10 - 20 under "Motor Replacement", on Page 9.

Field Wiring

All wiring connections and wiring sizes must meet National Electrical Code and local requirements.

Motor Protection

See the motor nameplate for electrical connection/wiring diagram.

Aurora pumps must be used with the proper size and type of motor starter to ensure protection against damage from low voltage, phase failure, current imbalances and overloads. The overload should be sized to trip at the full-load current rating of the motor.

OPERATION

Priming

⚠WARNING **Hazardous pressure.** Do not run the pump with the discharge valve closed; the water in the pump may boil, causing risk of explosion and steam burns to anyone nearby.

⚠WARNING **Hazardous voltage.** Disconnect all power to the pump before servicing or working on the pump. Make sure that the power is locked out and that the pump cannot be accidentally started.

NOTICE: Under no circumstances should the pump be operated without flow through the pump. **Never** operate the pump dry.

Operation of closed systems or open systems with the liquid level above the pump priming plug:

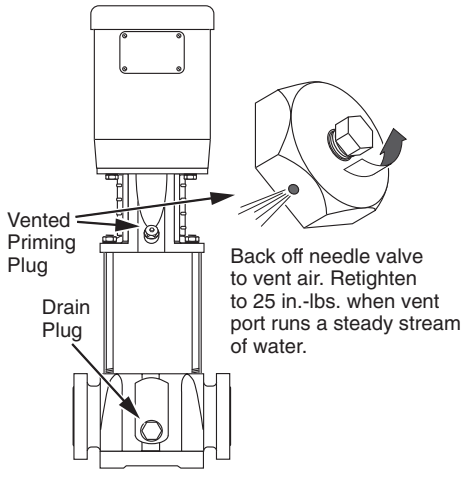

FIGURE 8 - Priming and Drain Plugs

1. Close the discharge isolating valve and loosen the needle valve located in the assembly in the pump head (Figure 8). Do not remove the needle valve.

NOTICE: On PVMI(X)2/4 models, remove the coupling guard for access to the vent plug.

⚠WARNING **Risk of water damage and injury. Watch the direction of the priming plug and make sure that the liquid escaping from it does not injure persons nearby or damage the motor or other components. In hot water installations, pay particular attention to the risk of injury from scalding hot water.**

2. Slowly open the isolation valve in the suction pipe until a steady stream of liquid runs out the vent in the priming port.
3. Tighten needle valve to 25 inch-pounds. Completely open isolation valves.

NOTICE: Please turn to "Starting", Page 8, before proceeding any further.

Operation of open systems with the liquid level below the top of the pump:

NOTICE: The suction pipe requires a check valve or isolation valve.

1. Close the discharge isolation valve.
2. Remove the vented priming plug.
3. Pour liquid through the priming port until the suction pipe and the pump are completely filled with liquid.
4. Replace the vented priming plug and tighten it securely.
5. Repeat steps 1-4 until the pump is primed.

NOTICE: Please turn to "Starting", Page 8, before proceeding any further.

Checking Direction of Rotation

NOTICE: Do not disconnect the motor from the shaft to check the direction of rotation. If you remove the coupling, then you must adjust the shaft position when you reinstall it. This must be done before starting the pump.

Arrows on the pump head show the correct direction of rotation. When seen from the motor fan, the pump should rotate *counterclockwise* (↶). For pump motors without a fan remove one of the coupling guards and look at the coupling to determine the direction of rotation. Turn off the pump and replace coupling guard.

NOTICE: Do not check the direction of rotation until the pump has been filled with liquid. See "Priming", at left and above.

1. Switch power off.
2. Remove the coupling guard and rotate the pump shaft to be certain it can turn freely. Replace the coupling guard.
3. Verify that the electrical connections are in accordance with the wiring diagram on the motor.
4. If the fan is visible, turn on and off to verify rotation.
5. To reverse the direction of rotation, first switch OFF the power supply.

6. On three-phase motors, switch 2 of the 3 power leads on the load side of the starter. On single-phase motors, see the connection diagram on the motor nameplate. Change the wiring as indicated.

⚠WARNING **Hazardous voltage.** Voltage can shock, burn or cause death. Ground the pump motor correctly before connecting to power supply per article 250-80 of National Electrical Code (NEC) in the U.S., or the Canadian Electrical Code (CEC), as applicable.

7. Switch on the power supply and recheck the direction of motor rotation.

Starting

1. If a suction line isolation valve has been installed, check to be sure that it is completely opened.
2. For initial starting, the isolation valve in the discharge pipe should be almost closed.
3. Start the pump.
4. When the piping system has been filled with liquid, slowly open the discharge isolation valve until it is completely open. Opening the valve too fast may result in water hammer in the discharge pipe. If the pump or system start to rattle, the pump is cavitating; to avoid damage to the pump, reduce the flow through the discharge isolation valve until the rattling stops. If this does not give adequate flow for your installation, call your installer or system designer.
5. Record the voltage and amperage of the motor. Adjust the motor overloads if required.
6. If pressure gauges have been installed, check and record operating pressures.
7. Check all controls for proper operation.

Motor Bearings

For the greasing schedule and greasing procedure of the motor bearings follow the motor manufacturers recommendations.

Calculating Minimum Inlet Pressure:

Minimum inlet pressure is required to avoid cavitation in the pump and is calculated as follows:

$H = Pb - NPSHR - H_f - H_V - H_S$

H = Minimum Inlet Pressure in Feet of Head

Pb = Barometric Pressure in Feet

1 Bar = 29.53 inches of Mercury (Hg)

1 PSI = 2.31 Ft of Head

1 Bar = 33.5 Ft. of Head

NPSHR = Net Positive suction head required. To be read from the NPSHR curve, Figure 9, at the highest flow the pump will be delivering.

H_f = Friction Loss in suction pipe in ft of head

H_V = Vapor pressure in feet of head (See Table VI).

H_S = A safety margin of 1.64 ft of head

Example for PVM8:

If: Flow = 60 GPM

Pb = 1 Bar = 29.53 Inches of Mercury*

(Convert from Bar to Feet of Head)

1 Inch of mercury = 1.13′ feet of water

T = 100° F

NPSHR = 10′ (See Figure 9)

H_f = 10′ of 2″ Steel Pipe @ 11.9′ of loss per 100′ of Pipe (H_f = 11.9′/10′ = 1.19′)

H_V = 2.195′ (from Table VI)

H_S = 1.64′ (safety factor from above)

Then: $H = 33.5' * - NPSHR ** - H_f - H_V - H_S$

H = 33.5′ - 10′ - 1.19′ - 2.195′ - 1.64 = 18.475′

H = 18.475′ = Minimum Inlet Pressure

* 1 Bar = 14.5 PSI x 2.31 Ft of Head = 33.5′

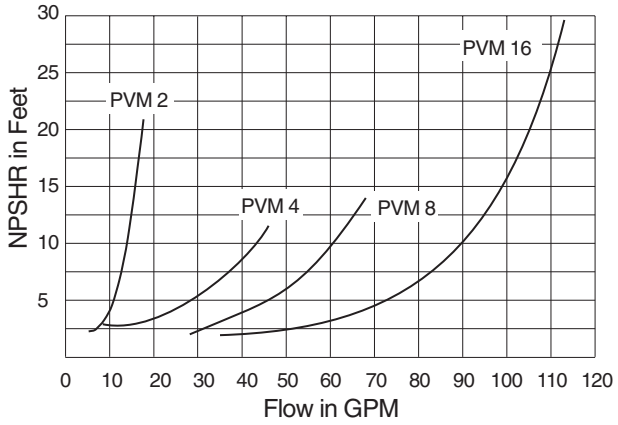

FIGURE 9 - PVM2 through PVM16
Net Positive Suction Head Requirement (NPSHR)

TABLE VI – Vapor Pressure of Water

Temperature in °F (°C)	Vapor Pressure in PSIA (kPa)	Absolute Pressure in Feet (M) of Water
32 (0)	0.089 (.61)	0.205 (.062)
40 (4.4)	0.122 (.84)	0.281 (.086)
60 (15.6)	0.256 (1.77)	0.592 (.180)
80 (26.7)	0.507 (3.50)	1.172 (.358)
100 (37.8)	0.95 (6.55)	2.195 (.669)
120 (48.9)	1.695 (11.69)	3.914 (1.193)
140 (60.0)	2.892 (19.94)	6.681 (2.036)
160 (71.1)	4.745 (32.72)	10.961 (3.341)
180 (82.2)	7.515 (51.84)	17.36 (5.291)
200 (93.3)	11.529 (79.49)	26.632 (8.117)
210 (98.9)	14.125 (97.39)	32.629 (9.945)
212 (100)	14.698 (101.34)	33.952 (10.349)
220 (104.4)	17.188 (118.51)	39.704 (12.102)
230 (110.0)	20.78 (143.28)	48.002 (14.631)
240 (115.6)	24.97 (172.17)	57.681 (17.581)
248 (120.0)	28.79 (188.51)	66.505 (20.271)

MAINTENANCE

Motor Replacement

For Key Numbers, refer to the Exploded View, Figure 14, Page 14 for PVM2 and PVM4 Series Models, Figure 16, Page 16 for PVMI/X2 and PVMI/X4 Models, Figure 15, Page 15 for PVM8 and PVM16 Series Models, and Figure 17, Page 17 for PVMI/X8 and PVMI/X16 Series Models.

⚠WARNING **Hazardous voltage.** Disconnect all power to the pump before servicing or working on pump. Make sure that power is locked out and that pump cannot be accidentally started.

1. Disconnect the power to the pump motor.
2. Close the nearest suction and discharge valves.
3. Remove the coupling guards (Key No. 4) by prying them loose with a screw driver.
4. Remove the socket head screws (Key No. 3) and the coupling halves (Key No. 2) from the shaft (Key No. 16A). For additional reference, see Figure 12, Page 10.

   NOTICE: Socket head screws are metric. See Table VIII on Page 12 for specific metric driver sizes.
5. Remove the shaft pin (Key No. 5).
6. Remove the capscrews (Key No. 12), flatwashers (Key No.10), and lockwashers (Key No.11) that hold the motor (Key No. 1) and the motor bracket (Key No. 7) together.
7. Pull the old motor up and off of the motor bracket. **NOTICE:** Note the location of the conduit box on the motor.
8. Thoroughly clean the surfaces of the mounting flanges on the new motor and the pump end.
9. Install the new motor on the pump with the conduit box in the desired position.
10. Lubricate the capscrews (Key No. 12) with oil.
11. Reinstall the lockwashers, flatwashers, and capscrews that hold the motor and the motor bracket together, then tighten evenly and diagonally. See Table VIII, Page 12 for torque specifications.
12. Reinstall the shaft pin (Key No. 5) in the shaft.
13. Reinstall the coupling halves (Key No. 2) on the pump and motor shaft. Make sure to engage the shaft pin (Key No. 5).

    NOTICE: Be sure coupling surfaces are thoroughly clean prior to assembly.
14. Snug up the socket head screws (Key No. 3) until the coupling begins to bind and then loosen 1/2 turn.
15. Draw up the capscrews evenly so the gap between the coupling halves is equal on both sides (See Figure 10A).

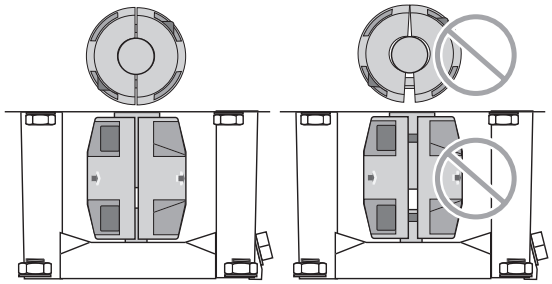

FIGURE 10A - Make Sure that the Coupling Halves are Evenly Tightened

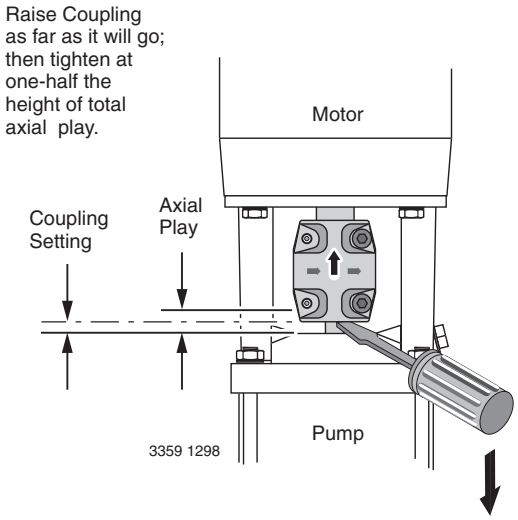

FIGURE 10B - Vertically (axial) Centering the Coupling

16. Insert a screw driver under the coupling (See Figure 10B).
17. Raise the pump shaft to its highest point.
18. Lower the shaft halfway back down the distance you just raised it and retighten the capscrews. See Figure 10.

    NOTICE: Torque settings are critical to prevent coupling movement. Refer to Table VIII, Page 12 for torque specifications.
19. Rotate the shaft to make sure that there is no interference. If rubbing is noted repeat steps 16, 17, and 18 above and readjust pump shaft height.
20. Reinstall the coupling guards by snapping them into place.

    NOTICE: The guards should be in place before the unit is run.
21. Open the suction and discharge valves. Turn the power back on.

Replacing Pump Stack

For Key Numbers, refer to the Exploded View, Figure 14 on Page 14, for the PVM2 and PVM4 Series Models and Figure 15 on Page 15 for PVM8 and PVM16 Series Models.

⚠WARNING Hazardous pressure. Do not run pump with discharge valve closed; the water in the pump may boil, causing risk of explosion and steam burns to anyone nearby.

1. Follow steps 1-8 under "Motor Replacement" section on Page 9; then proceed with step 2 below.
2. Remove the four staybolt nuts, flatwashers, and lockwashers (Key Nos. 8, 9A, and 9B) from the staybolts (Key No. 19).

   NOTICE: It is not necessary to remove the staybolts when replacing the stack.
3. Lift the motor bracket (Key No. 7) off of the pump body.

   NOTICE: Note the position of the priming plug. The priming plug must be returned to its original position during reassembly.
4. Remove and discard upper sleeve gasket (Key No. 17).
5. Clean gasket seat.
6. Remove and replace round spring ring (PVM2 and PVM4) or stack spring (PVM8 and PVM16) (Key No. 13).
7. Pull the old stack (16A through 16L) out of the stainless steel sleeve (Key No. 18) by pulling straight up on the pump shaft (Key No. 16A).
8. Remove the stainless steel sleeve (Key No. 18).
9. Remove and discard the bottom sleeve gasket (Key No. 17).
10. Clean the gasket seat.
11. Remove and discard the O-Ring (Key No. 21A) from the suction/discharge (Key No. 21 PVM2 and PVM4 only).
12. Cast Iron Models Only: Clean the O-Ring seat and install a new O-Ring (Key No. 21A).
13. Install a new lower sleeve gasket.
14. Install the new stack without the stainless steel sleeve.

    NOTICE: Be sure to align either the small priming hole or the suction interconnector pin hole (located on the bottom stage of the stack) properly in the base of the Suction/Discharge (Key No. 21). See Figure 11 (not necessary on PVMI/X models).
15. Use a rubber mallet to tap the stainless steel sleeve (Key No. 18) into place.
16. Install a new mechanical shaft seal (Key Nos. 14A and 14B, or Key Nos 15A through 15G). Refer to "Mechanical Seal Disassembly and Mechanical Seal Reassembly" sections, Pages 11 and 12.
17. Install a new upper sleeve gasket (Key No. 17).
18. Install a new round spring ring or stack spring (Key No. 13).
19. Reinstall the motor bracket (Key No. 7) on the pump body. Align the priming plug (Key No. 6) to its original position.
20. Oil the threads on the staybolts (Key No. 19).
21. Replace the lockwashers, flatwashers, and staybolt nuts (Key Nos. 8, 9A and 9B) and cross-torque the staybolts. See Table VIII, Page 12, for torque specifications.
22. Reinstall the motor (Key No. 1) on the motor bracket (Key No. 7) and turn the motor to the desired terminal box position.
23. Follow steps 10 - 21 under "Motor Replacement", Page 9. You have now finished changing out the impeller stack.

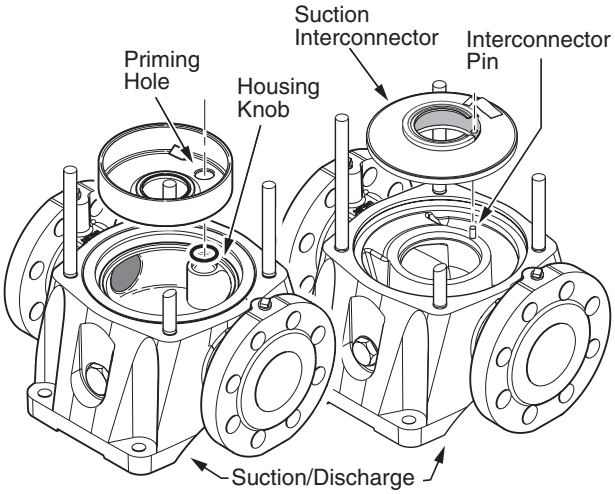

FIGURE 11 - PVM2, PVM4 – Align Small Priming Port. PVM8, PVM16 – Align Interconnector Pin. No alignment is necessary on PVMI/X models.

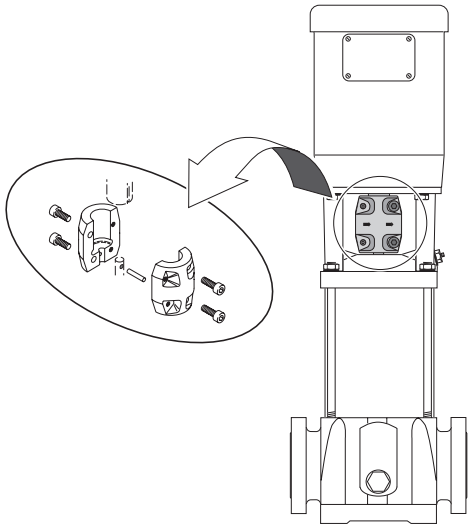

FIGURE 12 - Remove the Socket Head Screws and the Coupling Halves

Seven Part Mechanical Seal/Disassembly:

See Figure 13 for Seal Key Numbers.

See Figures 14 through 17 for Pump Key Numbers.

⚠WARNING Hazardous voltage. Can Shock, burn or cause death. Disconnect power to pump before disassembly.

1. Follow Steps 1-8 under "Motor Replacement" Page 9, and proceed with step 2 below.
2. Remove the four nuts, lockwashers and washers (Key Nos. 8, 9A, and 9B) from the staybolts (Key No. 19).
3. The shaft seal consists of an O-Ring (Key No. 15A), the stationary half of the mechanical seal (Key No. 15B), the rotating half of the mechanical seal (Key No. 15C), a second O-Ring (Key No. 15D - inside No. 15C), a flat washer (Key No. 15E), a spring (Key No. 15F), and a mechanical drive ring (Key No. 15G), in that order, see Figure 13, below. Turn the pump head upside down and remove the stationary part of the seal (Key No. 15B) from the seal seat in the base of the motor bracket.

   NOTICE: Use care not to chip or scratch the seal seat during disassembly and assembly.

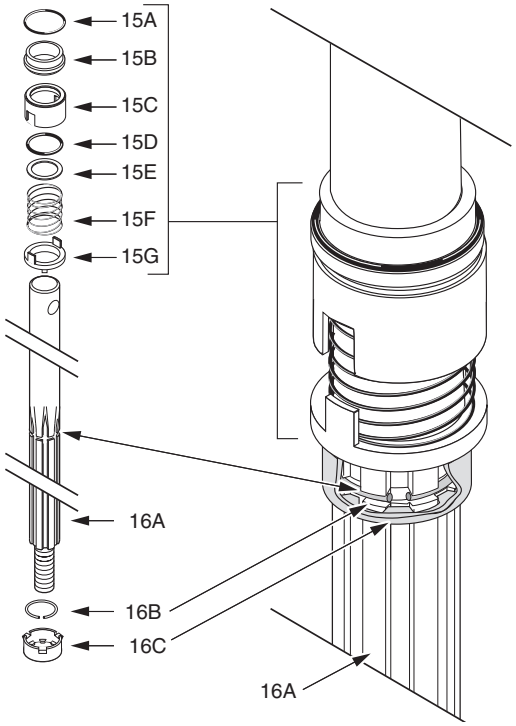

FIGURE 13

4. Clean the seal seat with a wet cloth.
5. Remove the rotating parts of the seal by twisting and pulling up on them until they come off of the shaft (Key Nos.15C and 15D, 15E, 15F, and 15G). Discard the old seal.

Seven Part Mechanical Seal Reassembly:

NOTICE: Before assembly check and clean all sealing and gasket surfaces with a clean wet cloth. Replace all seals, gaskets and O-Rings.

1. Turn the motor bracket (Key No.6) upside down.
2. Moisten the seal seat (in the motor bracket) with a small amount of water.
3. Lubricate the larger diameter O-Ring (Key No. 15A) with a small amount of water and install it on the stationary half of mechanical seal (Key No. 15B).
4. Press the stationary half of the shaft seal (Key No. 15B) with O-Ring (Key Nos. 15A and 15B) into the seal seat of the motor bracket. Use finger pressure only. If a tool is used, protect the seal face from tools with a clean cloth.

   NOTICE: Be sure the seal is installed evenly to avoid pinching the O-Ring.
5. Lubricate smaller diameter O-Ring (Key No. 15D) with water and press it into the rotating half of the mechanical seal (Key No.15C).
6. Install the mechanical drive ring (Key No. 15G) on the shaft (Key No. 16A). Be sure the drive ring butts up against the mechanical seal spacer (Key No. 16C).
7. Install the spring (Key No.15F) up against the drive ring on the shaft .
8. Install the flatwasher (Key No.15E) on the shaft, against the spring.
9. Install the rotating half of the mechanical seal (Key No.15C) on the shaft. Align the grooves on the rotating half of the mechanical seal with the teeth on the mechanical drive ring (Key No. 15G).
10. Follow Steps 11 - 23 under "Replacing Pump Stack", Page 10.

Frequency of Starts and Stops

Check pump cycling frequency and make sure that the pump is not starting more than:

TABLE VII – Maximum Number of Cycles

Cycles	Motor HP Rating
20 times per hour	1/2 - 5 HP motors
15 times per hour	7- 1/2 - 15 HP motors
10 times per hour	20 and 25 HP motors

Frost Protection

1. If you do not use your pump during seasons of frost, drain it and add a glycol based antifreeze (50/50 mixture) to avoid damage.

⚠ CAUTION **Risk of water damage and injury. Watch the direction of the priming plug and make sure that liquid escaping from it does not injure persons nearby or damage the motor or other components. In hot water installations, pay particular attention to the risk of injury from scalding hot water.**

2. Upon restart dispose of spent antifreeze properly.
3. Do not replace the drain plug or tighten the priming plug until you put the pump back in service again.

Regular Maintenance Checks

The following checks should be made at regular intervals:

1. The pump meets required performance and is operating smoothly and quietly.
2. There are no leaks.
3. The motor is not overheating.
4. Remove and clean all strainers and filters in the system.
5. Verify amp draw – check motor amperage.
6. Pump wear rings and shaft require no regular maintenance.

TABLE VIII – Torque Specifications (foot-lbs.) For Cast Iron and Stainless Steel Models

	Coupling			Motor		Staybolt		Stack Nut	
Pump Model Number	Socket Head Screw M6 x 20	Socket Head Screw M8 x 25	Socket Head Screw M10 x 25	Capscrew Hex Head 3/8 x 1-1/2	Capscrew Hex Head 1/2 x 1-1/2	Hex Nut 1/2 - 13	Hex Nut 5/8 - 11	Hex Nut M8	Hex Nut M12
PVM2 Series	15	20	–	30	35	45	–	10	–
PVM4 Series	15	20	–	30	35	45	–	10	–
PVM8 Series	15	20	45	30	35	–	75	–	30
PVM16 Series	–	20	45	–	35	–	75	–	30

TROUBLESHOOTING GUIDE

⚠WARNING Hazardous voltage and risk of sudden starts. Disconnect all power to the pump before servicing or working on pump. Make sure that power is locked out and that pump cannot be accidentally started.

PROBLEM	CAUSE
1. Motor does not run when started	A. Power failure B. Fuses blown C. Motor starter overload has tripped out D. Main contacts in motor starter are not making contact or the coil is faulty E Control circuit fuses are defective F. Motor is defective
2. Motor starter overload trips out immediately when power supply is switched on	A. One fuse has blown B. Contacts in motor overload relay are faulty C. Cable connections are loose or faulty D. Motor winding is defective E. Pump mechanically blocked F. Overload setting is too low
3. Motor starter overload trips out occasionally	A. Overload setting is too low B. Low voltage at peak times
4. Motor starter has not tripped out but the motor does not run	A. Check 1 A), B), D,) and E)
5. Pump capacity is not constant	A. Pump inlet pressure is too low B. Suction pipe/pump partly blocked C. Pump is sucking air
6. Pump runs but gives no water	A. Suction pipe/pump blocked B. Foot or non-return valve is blocked in closed position C. Leakage in suction pipe D. Air in suction pipe or pump E. Motor rotates in the wrong direction
7. Pump runs backwards when switched off	A. Leakage in suction pipe B. Foot or non-return valve is defective C. Foot valve is blocked in open or partly open position D. Non return valve leaks or is blocked in open or partly open position E. Discharge valve is defective
8. Leakage from shaft seal	A. Pump shaft position is incorrect B. Shaft seal is defective
9. Noise	A. Cavitation is occurring in the pump B. Pump does not rotate freely (That is, there is increased frictional resistance) because of incorrect shaft position

PVM2
PVM4

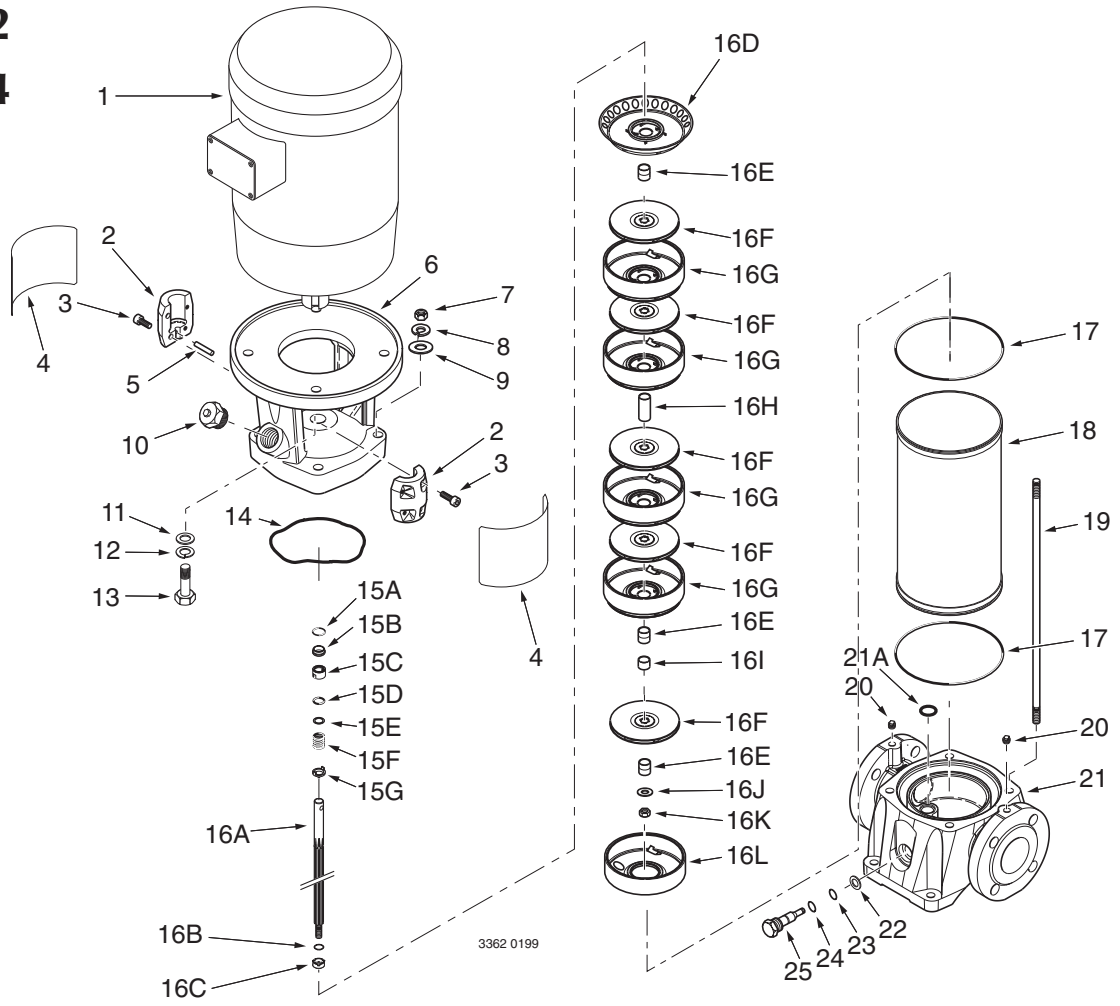

FIGURE 14 - Exploded View PVM2 and PVM4

SEE KIT SECTION FOR STACK KITS, SEAL KITS, GASKETS AND FLANGE KITS

Key No.	Description	Key No.	Description
1	Motor	15G	Mechanical Drive Ring
2	Coupling Half	16	Replacement Stack Kit (Incl. Key Nos. 16A thru 16L)
3	Socket Head Screw	16A	Shaft
4	Coupling Guard	16B	Stop Ring
5	Coupling Pin	16C	Mechanical Seal Spacer
6	Vented Priming Plug	16D	Upper Intermediate Chamber
7	Motor Bracket	16E	Spacer
8	Staybolt Nut	16F	Impeller
9A	Staybolt Lockwasher	16G	Diffuser
9B	Staybolt Flat Washer	16H	Spacer
10	Flatwasher	16I	Bearing
11	Lockwasher	16J	Shaft Washer
12	Capscrew	16K	Nut
13	Spring Ring	16L	Chamber without Diffuser
14	Two part Mechanical Seal (Includes 14A and 14B)	17	Sleeve Gasket
14A	Stationary Half of Mechanical Seal	18	Stainless Steel Sleeve
14B	Rotating Half of Mechanical Seal	19	Staybolt
15	Seven Part Mechanical Seal (Includes 15A thru 15G)	20	Pipe Plug
15A	O-Ring, Larger Diameter	21	Suction/Discharge
15B	Stationary Half of Mechanical Seal	21A	O-Ring (Bottom Chamber)
15C	Rotating Half of Mechanical Seal	22	Drain Plug Gasket
15D	O-Ring, Smaller Diameter	23	O-Ring
15E	Flat Washer	24	O-Ring
15F	Spring	25	Drain Plug

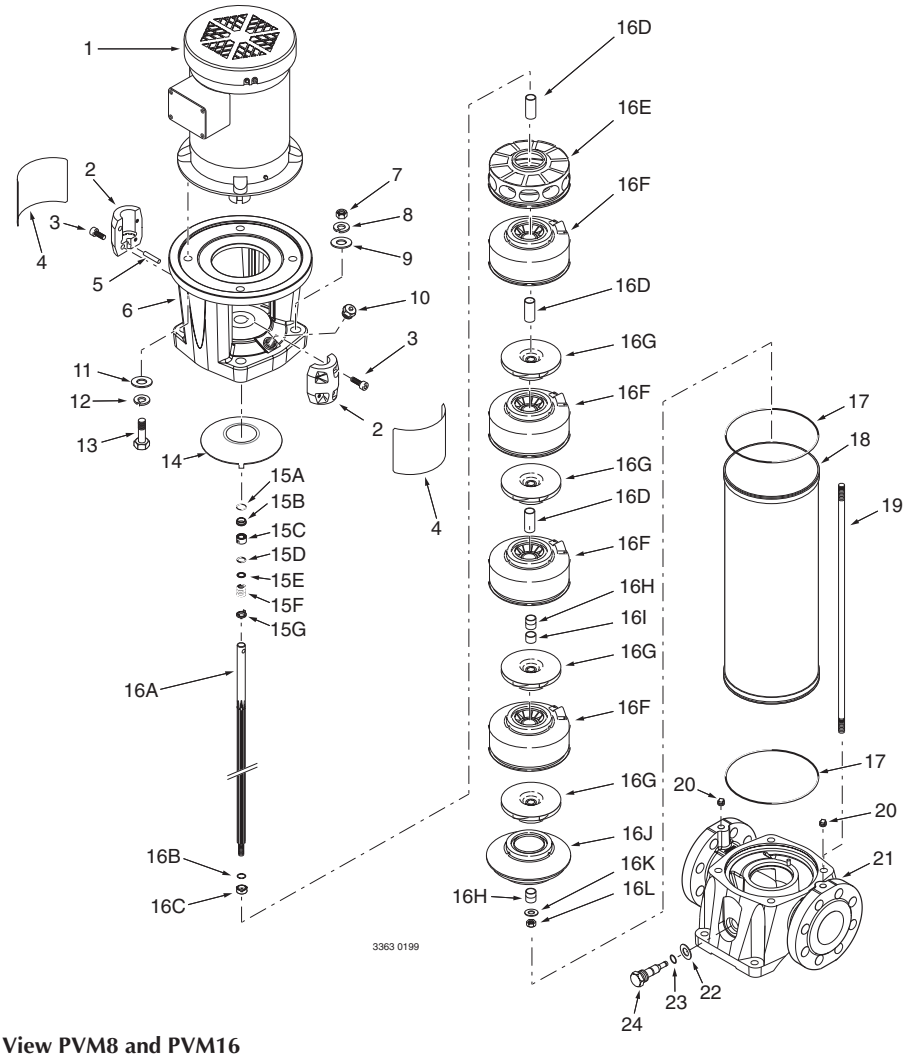

Figure 15 - Exploded View PVM8 and PVM16

SEE KIT SECTION FOR STACK KITS, SEAL KITS, GASKETS AND FLANGE KITS

Key No.	Description	Key No.	Description
1	Motor	15G	Mechanical Drive Ring
2	Coupling Half	16	Replacement Stack Kit (Incl.16A thru 16L)
3	Socket Head Screw	16A	Shaft
4	Coupling Guard	16B	Stop Ring
5	Coupling Pin	16C	Mechanical Seal Spacer
6	Vented Priming Plug	16D	Upper Intermediate Chamber
7	Motor Bracket	16E	Spacer
8	Staybolt Nut	16F	Impeller
9A	Staybolt Lockwasher	16G	Diffuser
9B	Staybolt Flat Washer	16H	Spacer
10	Flat Washer	16I	Bearing
11	Lock Washer	16J	Shaft Washer
12	Capscrew	16K	Nut
13	Spring Ring	16L	Chamber without Diffuser
14	Two Part Mechanical Seal (Includes 14A and 14B)	17	Sleeve Gasket
14A	Stationary Half of Shaft Seal	18	Stainless Steel Sleeve
14B	Rotating Half of Shaft Seal	19	Staybolt
15	Seven Part Mechanical Seal (Includes 15A thru 15G)	20	Pipe Plug
15A	O-Ring, Larger Diameter	21	Suction/Discharge
15B	Stationary Half of Mechanical Seal	21A	O-Ring (Bottom Chamber)
15C	Rotating Half of Mechanical Seal	22	Drain Plug Gasket
15D	O-Ring, Smaller Diameter	23	O-Ring
15E	Flat Washer	24	O-Ring
15F	Spring	25	Drain Plug

PVMI/X2
PVMI/X4

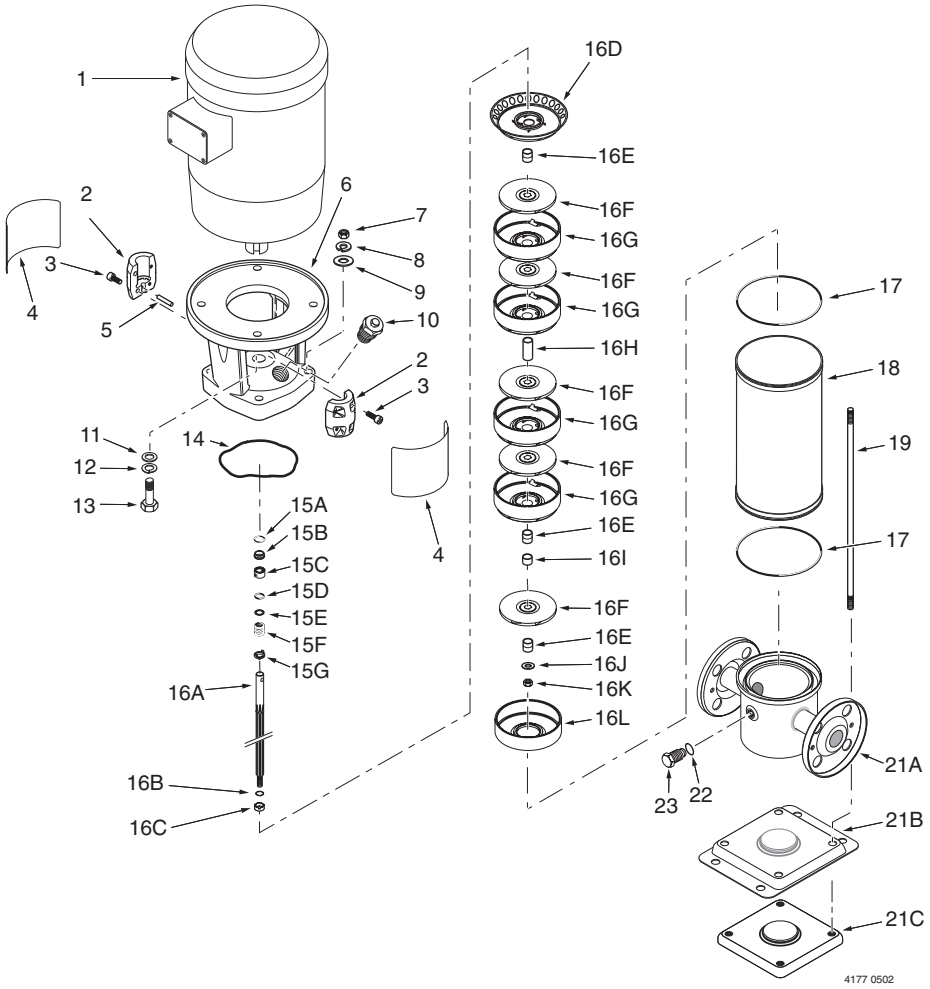

FIGURE 16 - Exploded View PVMI/X2 and PVMI/X4

SEE KIT SECTION FOR STACK KITS, SEAL KITS, GASKETS AND FLANGE KITS

Key No.	Description	Key No.	Description
1	Motor	15G	Mechanical Drive Ring
2	Coupling Half	16	Replacement Stack Kit (Incl. Key Nos. 16A thru 16L)
3	Socket Head Screw	16A	Shaft
4	Coupling Guard	16B	Stop Ring
5	Coupling Pin	16C	Mechanical Seal Spacer
6	Motor Bracket	16D	Upper Intermediate Chamber
7	Staybolt Nut	16E	Spacer
8A	Staybolt Lockwasher	16F	Impeller
8B	Staybolt Flat Washer	16G	Diffuser
9	Vented Priming Plug	16H	Spacer
10	Flatwasher	16I	Bearing
11	Lockwasher	16J	Shaft Washer
12	Capscrew	16K	Nut
13	Spring Ring	16L	Chamber without Diffuser
14	Two part Mechanical Seal (Includes 14A and 14B)	17	Sleeve Gasket
14A	Stationary Half of Mechanical Seal	18	Stainless Steel Sleeve
14B	Rotating Half of Mechanical Seal	19	Staybolt
15	Seven Part Mechanical Seal (Includes 15A thru 15G)	21A	Suction/Discharge
15A	O-Ring, Larger Diameter	21B	Base
15B	Stationary Half of Mechanical Seal	21C	Base Reinforcement
15C	Rotating Half of Mechanical Seal	22	O-Ring
15D	O-Ring, Smaller Diameter	23	O-Ring
15E	Flat Washer	24	Drain Plug (Low Pressure Side)
15F	Spring	25	Drain Plug (High Pressure Side)

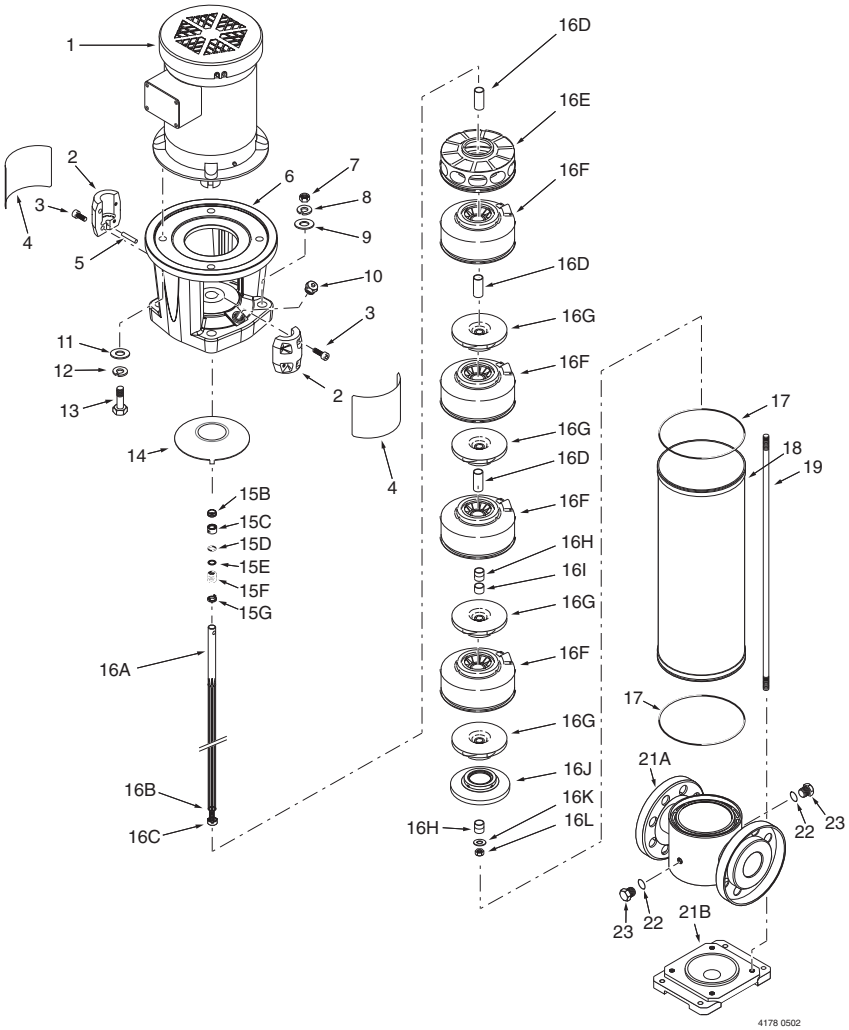

Figure 17 - Exploded View PVMI/X8 and PVMI/X16

SEE KIT SECTION FOR STACK KITS, SEAL KITS, GASKETS AND FLANGE KITS

Key No.	Description	Key No.	Description
1	Motor	15G	Mechanical Drive Ring
2	Coupling Half	16	Replacement Stack Kit (Incl.16A thru 16L)
3	Socket Head Screw	16A	Shaft
4	Coupling Guard	16B	Stop Ring
5	Coupling Pin	16C	Mechanical Seal Spacer
6	Vented Priming Plug	16D	Spacer
7	Motor Bracket	16E	Top Diffuser
8	Staybolt Nut	16F	Diffuser
9A	Staybolt Lockwasher	16G	Impeller
9B	Staybolt Flat Washer	16H	Spacer
10	Flat Washer	16I	Bearing
11	Lock Washer	16J	Suction Interconnector
12	Capscrew	16K	Washer
13	Spring Ring	16L	Lock Nut
14	Two Part Mechanical Seal (Includes 14A and 14B)	17	Sleeve Gasket
14A	Stationary Half of Shaft Seal	18	Stainless Steel Sleeve
14B	Rotating Half of Shaft Seal	19	Staybolt
15	Seven Part Mechanical Seal (Includes 15A thru 15G)	21A	Suction/Discharge
15A	O-Ring, Larger Diameter	21B	Base
15B	Stationary Half of Mechanical Seal	22	O-Ring
15C	Rotating Half of Mechanical Seal	23	O-Ring
15D	O-Ring, Smaller Diameter	24	Drain Plug (Low Pressure Side)
15E	Flat Washer	25	Drain Plug (High Pressure Side)
15F	Spring		

Sect.6-Item PVM2-16

JOHN MEUNIER

Meadowbank mining Corp.
ACP-700R
Technical Data Sheet
Reference : NC01

MIXERS

ST-100

VEOLIA WATER
Solutions & Technologies

LEFT BLANK

JOHN MEUNIER

NOMENCLATURE/ BILL OF MATERIALS

TITRE/ TITLE	Rev.	DESCRIPTION	PAR/ BY:	APPR:	DATE:	Affaire / Contract	Meadowbank Mining
Mixers	0	SUBMITTAL	P.Ste-Marie	P.S.M.	2009-03-26		
	1						
	2					REF. No.	NC01 | | 0
	3						
DESSIN /DWG # ST-100	4					Date:	2009-03-26

REV.	ITEM	QTE/QTY. Unit.	QTE/QTY. Total	DESCRIPTION	P&ID I.D./TAG	CAT. ACCPAC	SOURCE	FA/SA FI SITE	P / N
	NC01ST-100-1	1	2	**COAGULATION MIXER**	M2-011	B44		SA	
				Application:	M2-021				
				Coagulation tank					
				Manufacturer					
				ENVIREQUIP W.T.E.M. INC					
				Model					
				MIX-TECH EVGX 4-3,0					
				Variable speed					
				no					
				Weight					
				568 lb (258 kg)					
				MIXING CHARACTERISTICS					
				Power number (Np)					
				0.45 s.u.					
				Pumping number (Nq)					
				0.72 s.u.					
				Rotational speed					
				67.23 rpm					
				Dissipated power					
				2,48 HP					
				IMPULSER					
				Number					
				1					
				Type					
				axial (F-4) 13,5 degrees					
				Diameter					
				49,3 in (1252,2 mm)					
				Distance from bottom					
				36,975 in (939 mm)					
				Rotation direction					
				cw down					
				Material					
				S.S. 304L					

JOHN MEUNIER

NOMENCLATURE/ BILL OF MATERIALS

TITRE/ TITLE	Rev.	DESCRIPTION	PAR/ BY:	APPR:	DATE:	Affaire / Contract	Meadowbank Mining
Mixers	0	SUBMITTAL	P.Ste-Marie	P.S.M.	2009-03-26		
	1						
	2					REF. No.	NC01 | 0
	3						
DESSIN /DWG # ST-100	4					Date:	2009-03-26

REV.	ITEM	QTE/QTY. Unit.	QTE/QTY. Total	DESCRIPTION	P&ID I.D./TAG	CAT. ACCPAC	SOURCE	FA/SA FI SITE	P / N
				COAGULATION MIXER (CONT'D)					
				SHAFT					
				Length					
				106,72 in (2711 mm)					
				Diameter					
				2,25 in (57,1mm)					
				Material					
				S.S. 304L					
				REDUCER					
				Manufacturer					
				NORD					
				Model					
				SK4282 AHZ/VL111					
				Type					
				Parallel shaft AGMA11 (LS) and AGMA 13 (HS)					
				Ratio					
				26,25:1					
				Service factor					
				1,21 on motor name plate					

JOHN MEUNIER

NOMENCLATURE/ BILL OF MATERIALS

TITRE/ TITLE	Rev.	DESCRIPTION	PAR/ BY:	APPR:	DATE:	Affaire / Contract	Meadowbank Mining
Mixers	0	SUBMITTAL	P.Ste-Marie	P.S.M.	2009-03-26		
	1						
	2					REF. No.	NC01 | 0
	3						
DESSIN /DWG # ST-100	4					Date:	2009-03-26

REV.	ITEM	QTE/QTY. Unit.	QTE/QTY. Total	DESCRIPTION	P&ID I.D./TAG	CAT. ACCPAC	SOURCE	FA/SA FI SITE	P / N
				COAGULATION MIXER (CONT'D)					
				MOTOR					
				Manufacturer/Model					
				Nord - frame size 100LH/4 outdoor protection					
				Type					
				Squirrel cage					
				Efficiency					
				87.5%					
				Enclosure					
				Isolation Class F / IP55					
				Speed					
				1765 rpm					
				Power					
				3 HP					
				Electrical feed					
				575 Vac / 3 ph / 60 Hz					
				Paint protection					
				Manufacturer standard					
				Lubrificant:					
				c/w food grade oil fill					

JOHN MEUNIER

NOMENCLATURE/ BILL OF MATERIALS

TITRE/ TITLE	Rev.	DESCRIPTION	PAR/ BY:	APPR:	DATE:	Affaire / Contract	Meadowbank Mining
Mixers	0	SUBMITTAL	P.Ste-Marie	P.S.M.	2009-03-26		
	1						
	2					REF. No.	NC01 | 0
	3						
DESSIN /DWG # ST-100	4					Date:	2009-03-26

REV.	ITEM	QTE/QTY. Unit.	QTE/QTY. Total	DESCRIPTION	P&ID I.D./TAG	CAT. ACCPAC	SOURCE	FA/SA FI SITE	P / N
	NC01ST-100-2	1	2	**INJECTION MIXER**	M2-012	B44		SA	
				Application:	M2-022				
				Injection tank					
				Manufacturer					
				ENVIREQUIP W.T.E.M. INC					
				Model					
				MIX-TECH EVGX 4-3,0					
				Variable speed					
				no					
				Weight					
				568 lb (258 kg)					
				MIXING CHARACTERISTICS					
				Power number (Np)					
				0.45 s.u.					
				Pumping number (Nq)					
				0.72 s.u.					
				Rotational speed					
				67.23 rpm					
				Dissipated power					
				2,48 HP					
				IMPULSER					
				Number					
				1					
				Type					
				axial (F-4) 13,5 degrees					
				Diameter					
				49,3 in (1252,2 mm)					
				Distance from bottom					
				36,975 in (939 mm)					
				Rotation direction					
				ccw up					
				Material					
				S.S. 304L					

JOHN MEUNIER

NOMENCLATURE/ BILL OF MATERIALS

TITRE/ TITLE	Rev.	DESCRIPTION	PAR/ BY:	APPR:	DATE:	Affaire / Contract	Meadowbank Mining
Mixers	0	SUBMITTAL	P.Ste-Marie	P.S.M.	2009-03-26		
	1						
	2					REF. No.	NC01 | 0
	3						
DESSIN /DWG # ST-100	4					Date:	2009-03-26

REV.	ITEM	QTE/QTY. Unit.	QTE/QTY. Total	DESCRIPTION	P&ID I.D./TAG	CAT. ACCPAC	SOURCE	FA/SA FI SITE	P / N
				INJECTION MIXER (CONT'D)					
				SHAFT					
				Length					
				106,72 in (2711 mm)					
				Diameter					
				2,25 in (57,1mm)					
				Material					
				S.S. 304L					
				REDUCER					
				Manufacturer					
				NORD					
				Model					
				SK4282 AHZ/VL111					
				Type					
				Parallel shaft AGMA11 (LS) and AGMA 13 (HS)					
				Ratio					
				26,25:1					
				Service factor					
				1,21 on motor name plate					

JOHN MEUNIER

NOMENCLATURE/ BILL OF MATERIALS

TITRE/ TITLE	Rev.	DESCRIPTION	PAR/ BY:	APPR:	DATE:	Affaire / Contract	Meadowbank Mining
Mixers	0	SUBMITTAL	P.Ste-Marie	P.S.M.	2009-03-26		
	1						
	2					REF. No.	NC01 | 0
	3						
DESSIN /DWG # ST-100	4					Date:	2009-03-26

REV.	ITEM	QTE/QTY. Unit.	QTE/QTY. Total	DESCRIPTION	P&ID I.D./TAG	CAT. ACCPAC	SOURCE	FA/SA FI SITE	P / N
				INJECTION MIXER (CONT'D)					
				MOTOR					
				Manufacturer/Model					
				Nord - frame size 100LH/4 outdoor protection					
				Type					
				Squirrel cage					
				Efficiency					
				87.5%					
				Enclosure					
				Isolation Class F / IP55					
				Speed					
				1765 rpm					
				Power					
				3 HP					
				Electrical feed					
				575 Vac / 3 ph / 60 Hz					
				Paint protection					
				Manufacturer standard					
				Lubrificant:					
				c/w food grade oil fill					

JOHN MEUNIER

NOMENCLATURE/ BILL OF MATERIALS

TITRE/ TITLE		Rev.	DESCRIPTION	PAR/ BY:	APPR:	DATE:	Affaire / Contract	Meadowbank Mining
Mixers		0	SUBMITTAL	P.Ste-Marie	P.S.M.	2009-03-26		
		1						
		2					REF. No.	NC01 / 0
		3						
DESSIN /DWG #	ST-100	4					Date:	2009-03-26

REV.	ITEM	QTE/QTY. Unit.	QTE/QTY. Total	DESCRIPTION	P&ID I.D./TAG	CAT. ACCPAC	SOURCE	FA/SA FI SITE	P / N
	NC01ST-100-3	1	2	**MATURATION MIXER**	M2-013	B44		SA	
				Application:	M2-023				
				Maturation tank					
				Manufacturer					
				ENVIREQUIP W.T.E.M. INC					
				Model					
				MIX-TECH EVGX 6-5					
				Variable speed					
				yes (byt others)					
				Weight					
				1393 lb (633 kg)					
				MIXING CHARACTERISTICS					
				Power number (Np)					
				0.733 s.u.					
				Pumping number (Nq)					
				0.72 s.u.					
				Rotational speed					
				22,03 rpm					
				Dissipated power					
				2,99 HP					
				IMPULSER					
				Number					
				1					
				Type					
				axial (F-4) 22 degrees					
				Diameter					
				89,68 in (2277,9 mm)					
				Distance from bottom					
				44,84 in (1139 mm)					
				Rotation direction					
				cw down					
				Material					
				S.S. 304L					

JOHN MEUNIER

NOMENCLATURE/ BILL OF MATERIALS

TITRE/ TITLE	Rev.	DESCRIPTION	PAR/ BY:	APPR:	DATE:	Affaire / Contract	Meadowbank Mining
Mixers	0	SUBMITTAL	P.Ste-Marie	P.S.M.	2009-03-26		
	1						
	2					REF. No.	NC01 | 0
	3						
DESSIN /DWG # ST-100	4					Date:	2009-03-26

REV.	ITEM	QTE/QTY. Unit.	QTE/QTY. Total	DESCRIPTION	P&ID I.D./TAG	CAT. ACCPAC	SOURCE	FA/SA FI SITE	P / N
				MATURATION MIXER (CONT'D)					
				SHAFT					
				Length					
				98,86 in (2511 mm)					
				Diameter					
				3 in (76,2 mm)					
				Material					
				S.S. 304L					
				REDUCER					
				Manufacturer					
				NORD					
				Model					
				SK6282 AHZ/VL111					
				Type					
				Parallel shaft AGMA11 (LS) and AGMA 13 (HS)					
				Ratio					
				80,33:1					
				Service factor					
				1,68 on motor HP					

JOHN MEUNIER

NOMENCLATURE/ BILL OF MATERIALS

TITRE/ TITLE	Rev.	DESCRIPTION	PAR/ BY:	APPR:	DATE:	Affaire / Contract	Meadowbank Mining
Mixers	0	SUBMITTAL	P.Ste-Marie	P.S.M.	2009-03-26		
	1						
	2					REF. No.	NC01 | 0
	3						
DESSIN /DWG # ST-100	4					Date:	2009-03-26

REV.	ITEM	QTE/QTY. Unit.	QTE/QTY. Total	DESCRIPTION	P&ID I.D./TAG	CAT. ACCPAC	SOURCE	FA/SA FI SITE	P / N
				MATURATION MIXER (CONT'D)					
				MOTOR					
				Manufacturer/Model					
				Nord - frame size 112MH/4 outdoor protection					
				Type					
				Squirrel cage					
				Efficiency					
				87,5%					
				Enclosure					
				Isolation Class F / IP55					
				Speed					
				1770 rpm					
				Power					
				5 HP					
				Electrical feed					
				575 Vac / 3 ph /60 Hz					
				Paint protection					
				Manufacturer standard					
				Lubrificant:					
				c/w food grade oil fill					

LEFT BLANK

MIXERS

MIXERS

LEFT BLANK

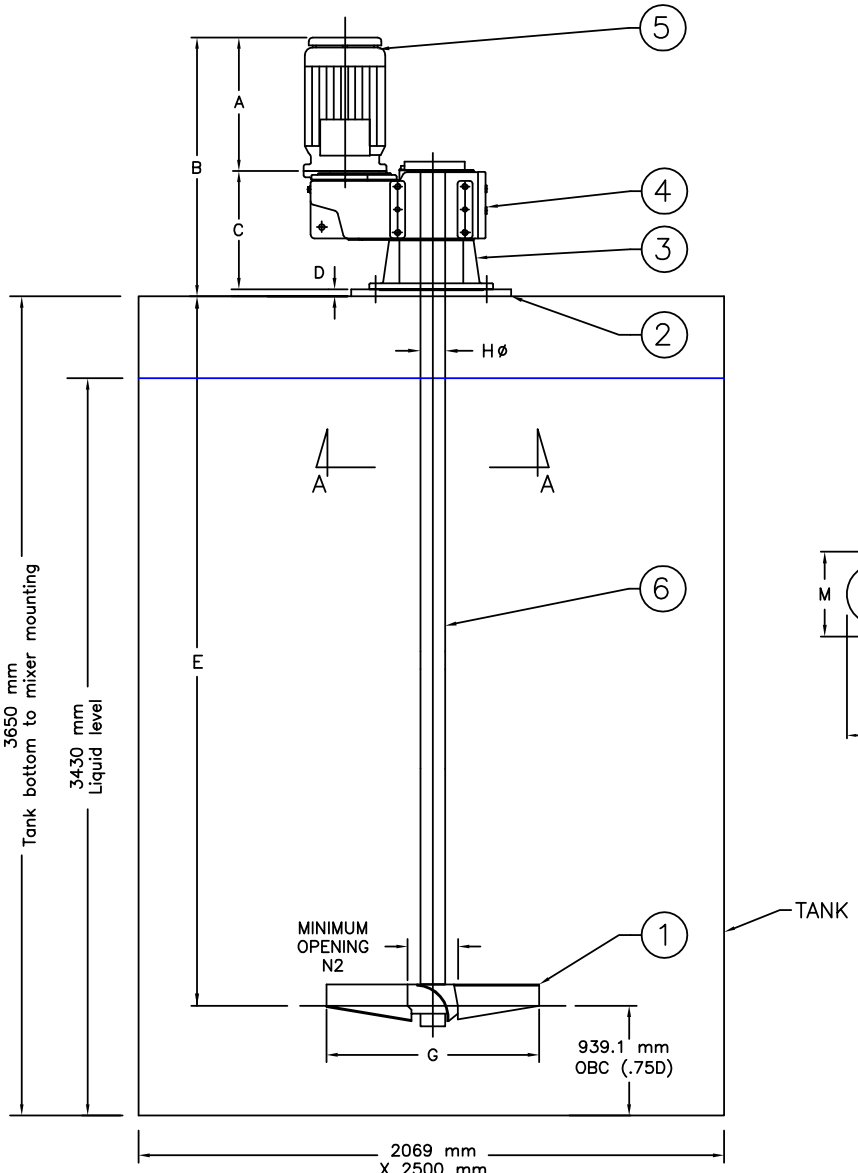

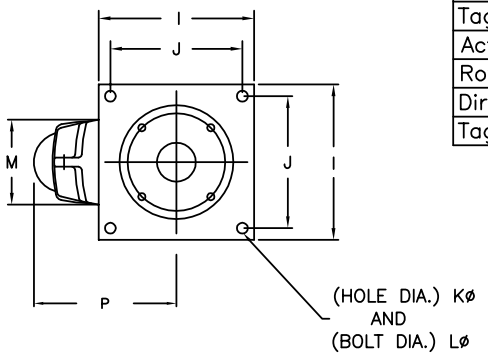

"A–A"

ITEM	DESCRIPTION	MATERIAL
1	Envirofoil Impeller 1252.2 mm (49.3") ø @13.5°	304
2	Base 419.1 mm x 419.1 mm (16.5" x 16.5")	STEEL
3	Pedestal complete with dry well (open tank)	
4	NORD reducer 67.23 RPM	
5	3.0 Hp NORD integral motor 575/3/60	
6	Shaft in (1) section 2710.7 mm (106.72") @ 2.25"ø	304

APPL'N: COAGULATION (QTY 1)
MIX–TECH MIXERS
MODEL: EVGX4–3.0
2.24 kW @ 67.23 RPM
S/N 03317–1, –4
Actiflo # 1
Rotation: Clockwise
Direction of thrust: Down
Tag #: M2–011
Actiflo # 2
Rotation: Clockwise
Direction of thrust: Down
Tag #: M2–021

MOUNTING LOADS:
TORQUE REACTION: 7031 In/Lbs
BENDING MOMENT: 18,882 In/Lbs
WEIGHT: 566 Lbs

Dimensions: Inches

MOD.:	A	B	C	D	E	E2	F	Gø	Hø SHAFT	I	J	Kø	Lø	M	N2	P
EVGX4	12.68	24.44	11.14	.625	106.72	–	–	49.3	2.25	16.5	14.0	.875	.75	10.0	14.0	13.03

Dimensions: mm

MOD.:	A	B	C	D	E	E2	F	Gø	Hø SHAFT	I	J	Kø	Lø	M	N2	P
EVGX4	322.0	620.8	283.0	15.9	2710.8	–	–	1252.2	57.1	419.1	355.6	22.2	19.0	254.0	355.6	331.0

Ce dessin et l'information qu'il contient est la propriété de ENVIREQUIP WTEM Inc. Il est interdit de le copier, le photographier, l'imprimer, le prêter ou de l'utiliser sans la permission de ENVIREQUIP WTEM Inc.

This drawing and the information contained thereon is the property of ENVIREQUIP WTEM Inc. It is not to be printed, photographed, copied, loaned or used without the permission of ENVIREQUIP WTEM Inc.

NO	DATE	REVISION	P/B

PROJET/PROJECT

MEADOW CREEK

ENVIREQUIP WTEM INC.
490 Bord du Lac – Suite 2
Dorval, QC H9S 2A8
Montreal Tel: (514) 338–1043
RR1 (21494 Little Russia Rd.)
Glen Robertson, Ont K0B 1H0
Ontario Tel: (613) 874–2616
Fax: (613) 874–2629
E–mail: envireqp@glen–net.ca

TITRE/TITLE

"MIX–TECH" Mixers
JOHN MEUNIER
EVGX SERIES

DESSINÉ PAR: DRAWN BY: PJ	DATE March 16 2009
DESS. NO: DWG NO: EVGX	ÉCH./SCALE N.T.S
VÉRIFIÉ PAR: CHECKED BY: PJ	PROJ.NO: 03317
APPROUVÉ PAR: APPROVED BY: RJ	REV. 00

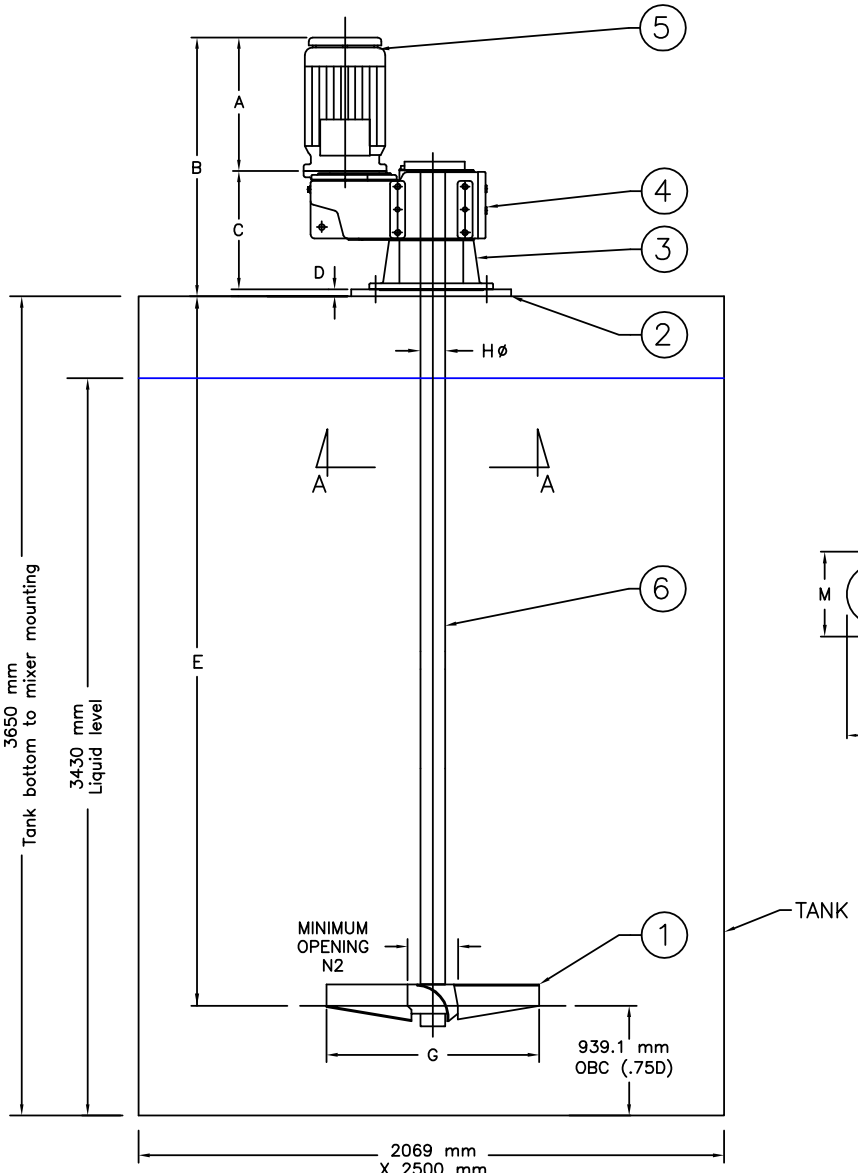

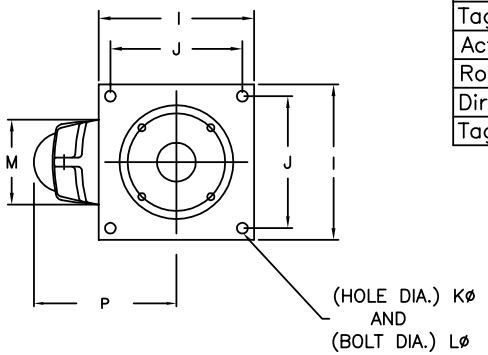

"A–A"

ITEM	DESCRIPTION	MATERIAL
1	Envirofoil Impeller 1252.2 mm (49.3") ø @13.5°	304
2	Base 419.1 mm x 419.1 mm (16.5" x 16.5")	STEEL
3	Pedestal complete with dry well (open tank)	
4	NORD reducer 67.23 RPM	
5	3.0 Hp NORD integral motor 575/3/60	
6	Shaft in (1) section 2710.7 mm (106.72") @ 2.25"ø	304

APPL'N: INJECTION (QTY: 1)
MIX–TECH MIXERS
MODEL: EVGX4–3.0
2.24 kW @ 67.23 RPM
S/N 03317–2, –5
Actiflo # 1
Rotation: Counter clockwise
Direction of thrust: Up
Tag #: M2–012
Actiflo # 2
Rotation: Counter clockwise
Direction of thrust: Up
Tag #: M2–022

MOUNTING LOADS:
TORQUE REACTION: 7031 In/Lbs
BENDING MOMENT: 18,882 In/Lbs
WEIGHT: 566 Lbs

Dimensions: Inches

MOD.:	A	B	C	D	E	E2	F	Gø	Hø SHAFT	I	J	Kø	Lø	M	N2	P
EVGX4	12.68	24.44	11.14	.625	106.72	–	–	49.3	2.25	16.5	14.0	.875	.75	10.0	14.0	13.03

Dimensions: mm

MOD.:	A	B	C	D	E	E2	F	Gø	Hø SHAFT	I	J	Kø	Lø	M	N2	P
EVGX4	322.0	620.8	283.0	15.9	2710.8	–	–	1252.2	57.1	419.1	355.6	22.2	19.0	254.0	355.6	331.0

Ce dessin et l'information qu'il contient est la propriété de ENVIREQUIP WTEM Inc. Il est interdit de le copier, le photographier, l'imprimer, le prêter ou de l'utiliser sans la permission de ENVIREQUIP WTEM Inc.

This drawing and the information contained thereon is the property of ENVIREQUIP WTEM Inc. It is not to be printed, photographed, copied, loaned or used without the permission of ENVIREQUIP WTEM Inc.

NO	DATE	REVISION	P/B

PROJET/PROJECT

MEADOW CREEK

ENVIREQUIP WTEM INC.
490 Bord du Lac – Suite 2
Dorval, QC H9S 2A8
Montreal Tel: (514) 338–1043
RR1 (21494 Little Russia Rd.)
Glen Robertson, Ont K0B 1H0
Ontario Tel: (613) 874–2616
Fax: (613) 874–2629
E–mail: envireqp@glen–net.ca

TITRE/TITLE

"MIX–TECH" Mixers
JOHN MEUNIER
EVGX SERIES

DESSINÉ PAR: DRAWN BY: PJ	DATE March 16 2009
DESS. NO: DWG NO: EVGX	ÉCH./SCALE N.T.S
VÉRIFIÉ PAR: CHECKED BY: PJ	PROJ.NO: 03317
APPROUVÉ PAR: APPROVED BY: RJ	REV. 00

ITEM	DESCRIPTION	MATERIAL
1	Envirofoil Impeller 2277.9 mm (89.68") ø @22.0°	304
2	Base 533.4 mm x 533.4 mm (21.0" x 21.0")	STEEL
3	Pedestal complete with dry well (open tank)	
4	NORD reducer 22.03 RPM	
5	5.0 Hp NORD integral motor 480/3/60, drip cover	
6	Shaft in (1) section 2511.0 mm (98.86") @ 3.0"ø	304
7	Three pos'n adjustment: 1/2D, 3/4D and 1D	

APPL'N: MATURATION (QTY 1)
MIX-TECH MIXERS
MODEL: EVGX6-5.0
3.74 kW @ 22.03 RPM
S/N 03317-3, -6
Actiflo # 1
Rotation: Clockwise
Direction of thrust: Down
Tag #: M2-013
Actiflo # 1
Rotation: Clockwise
Direction of thrust: Down
Tag #: M2-023

MOUNTING LOADS:
TORQUE REACTION: 35,761 In/Lbs
BENDING MOMENT: 40,123 In/Lbs
WEIGHT: 1,393 Lbs

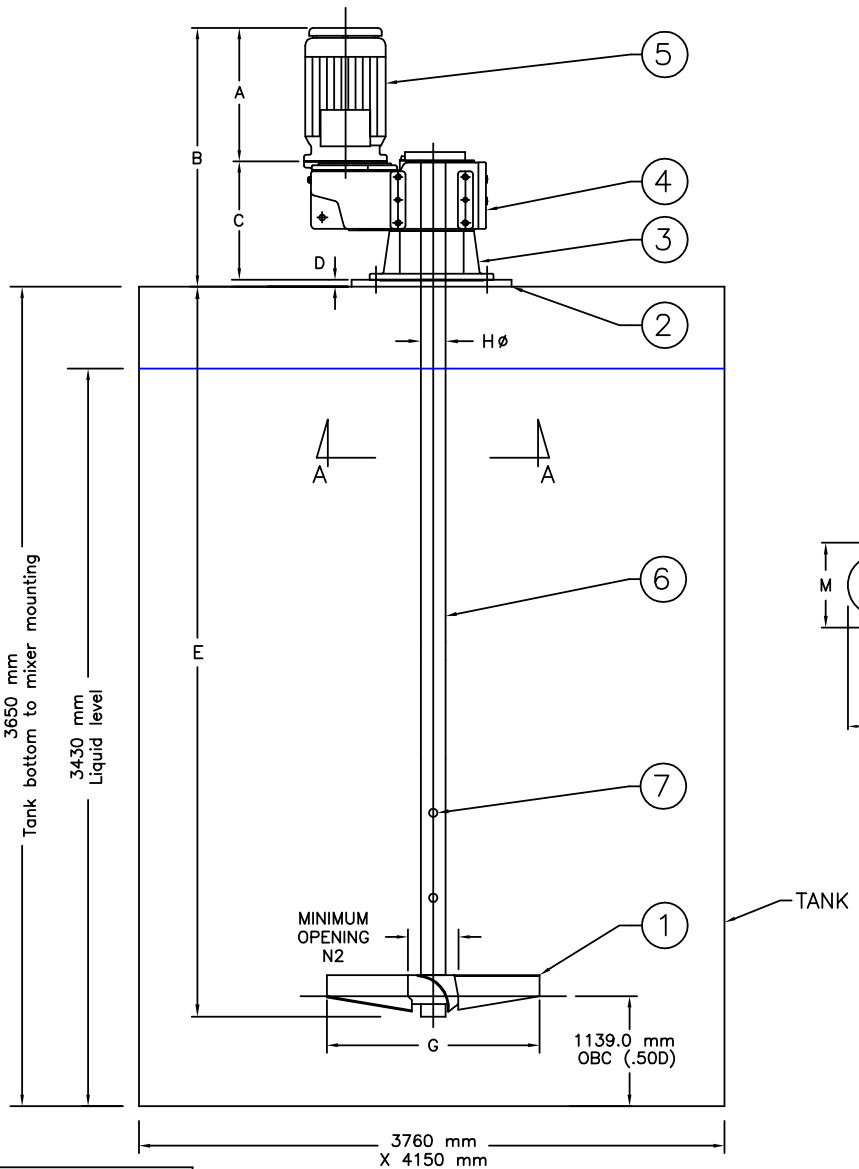

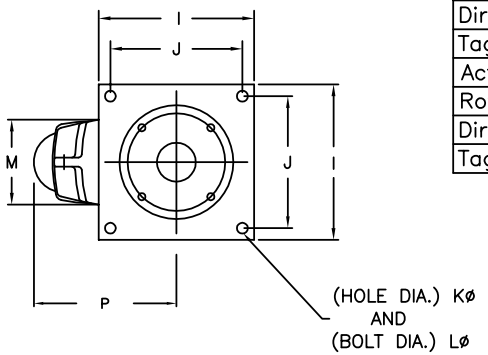

"A-A"

Dimensions: Inches																
MOD.:	A	B	C	D	E	E2	F	Gø	Hø SHAFT	I	J	Kø	Lø	M	N2	P
EVGX6	14.61	31.54	16.05	.875	98.86	–	–	89.68	3.0	21.0	18.0	1.0	.875	13.8	16.0	16.02

Dimensions: mm																
MOD.:	A	B	C	D	E	E2	F	Gø	Hø SHAFT	I	J	Kø	Lø	M	N2	P
EVGX6	371.1	801.0	407.7	22.2	2511.0	–	–	2277.9	76.2	533.4	457.2	25.4	22.2	350.5	406.4	406.9

Ce dessin et l'information qu'il contient est la propriété de ENVIREQUIP WTEM Inc. Il est interdit de le copier, le photographier, l'imprimer, le prêter ou de l'utiliser sans la permission de ENVIREQUIP WTEM Inc.

This drawing and the information contained thereon is the property of ENVIREQUIP WTEM Inc. It is not to be printed, photographed, copied, loaned or used without the permission of ENVIREQUIP WTEM Inc.

NO	DATE	REVISION	P/B

PROJET/PROJECT

MEADOW BROOK

ENVIREQUIP WTEM INC.

490 Bord du Lac -- Suite 2
Dorval, QC H9S 2A8
Montreal Tel: (514) 338-1043

RR1 (21494 Little Russia Rd.)
Glen Robertson, Ont K0B 1H0
Ontario Tel: (613) 874-2616
Fax: (613) 874-2629
E-mail: envireqp@glen-net.ca

TITRE/TITLE

"MIX-TECH" Mixers
JOHN MEUNIER
EVGX SERIES

DESSINÉ PAR: DRAWN BY: PJ	DATE March 16 2009
DESS. NO: DWG NO: EVGX	ÉCH./SCALE N.T.S
VÉRIFIÉ PAR: CHECKED BY: PJ	PROJ.NO: 03317
APPROUVÉ PAR: APPROVED BY: RJ	REV. 00

E N V I R E Q U I P **(Division 6445772 Canada Inc)**
MIX-TECH DYNAMIC MIXERS
490, Bord du Lac - Suite 2, ***toll free:*** 1.866.819.6123
Dorval, QC, Canada H9S 2A8 ***mobile:*** 514.386.1043
RR1, (21494 Little Russia Rd), ***tel:*** 613.874.2616
Glen Robertson, ON, Canada K0B 1H0 ***fax:*** 613.874.2629
e-mail: envireqp@glen-net.ca
internet: http://www.envirequip.com

INSTRUCTION & OPERATING MANUAL

MIX-TECH MIXERS

SEE SECTION FOR AGITATOR / GEAR REDUCER DESIGN: (at end of Manual)

EVG	**(Parallel Shafts with Hollow Output Shafts & Tapered Roller Bearings)**
EVGX	**(Parallel Shafts with Hollow Output Shafts & High Capacity Upper Cylindrical & Lower (2) - Row Spherical Roller Bearings**
EHG	**(Worm drives for Small Top Entry & Portable Mixers with Hollow Output Shafts)**
EHGB	**Helical / Bevel gearing with Hollow Output Shafts & Tapered Roller Bearings)**
EVGFS	**Helical in-line gears with Solid Output Shaft Tapered Roller or Spherical Roller Bearings - Refer to Nord Installation & Operation Manual**

NOTE: For Units with Solid Output Shafts, Refer to the Nord Manual

Oct/2006

ENVIREQUIP / MIX-TECH MIXERS - INDEX I.O.M.

– For mixer(s) installed in OPEN TANKS -

– See Section for Mechanical seals & Packing (Stuffing boxes) at end of I.O.M. PAGE (S)

PAGE / DRAWING		MIX-TECH MIXER (SECTION)	Rev 0
SECTION	1	INSPECTION	1
SECTION	2	INSTALLATION	1, 2, 3 & 4
SECTION	3	MIXER ASSEMBLY	4
SECTION	4	MOTORS	5 & 6
SECTION	5	PEDESTALS: SHAFT & GEAR REDUCER REMOVAL	6 & 7
SECTION	6	SHAFTS, IMPELLERS & COUPLINGS Note: Shaft & Gear Reducer Removal - Section/Page 7	7, 8 & 9
SECTION	7	GEAR DRIVE MAINTENANCE	9, 10 & 11
SECTION	8	BOLTS	11 & 12
SECTION	9	OPERATION	12
SECTION	10	MOTOR REMOVAL & INSTALLATION	13
SECTION	11	TROUBLE-SHOOTING / MIXER PERFORMANCE	13 & 14
SECTION	12	WARRANTY	15
PAGE		USEFUL CONVERSIONS	16
PAGE		MAINTENANCE LOG	19
PAGES		IMPELLER BLADE INSTALLATION	A, B C & D

NORD	BIM 1020	I.O.M. PARALLEL SHAFT REDUCERS	(pdf)
NORD	DM 006	DIS-ASSEMBLY MANUAL SK6282 to SK11282 for DOUBLE reduction)	(pdf)
NORD	DM 007	as above but for TRIPPLE reduction drives.	(pdf)
PARTS LIST(S)	(to suit)		(Pdf)

E N V I R E Q U I P **(Division 6445772 Canada Inc)** **Page 1**
MIX-TECH DYNAMIC MIXERS
490 Bord du Lac - Suite 2, ***toll free:*** 1.866.819.6123
Dorval, QC, Canada H9S 2A8 ***mobile:*** 514.386.1043
RR1, (21494 Little Russia Rd), ***tel:*** 613.874.2616
Glen Robertson, ON, CanadaK0B 1H0 ***fax:*** 613.874.2629
e-mail: envireqp@glen-net.ca
internet: http://www.envirequip.com

INSTALLATION & OPERATION MANUAL
MIX-TECH MIXERS

S E C T I O N 1 - INSPECTION

- Make sure that all mixer parts have been removed from the crate(s) before discarding.
- Each mixer should be carefully checked for any possible shipping damage. Any shipping damage should be reported to the TRANSPORT COMPANY immediately.
- Check the paint and make any necessary touch-ups.

S E C T I O N 2 - INSTALLATION

- Most mixer problems can be avoided by following proper installation and operation instructions. The following is a list of hints to help insure proper installation and therefore satisfactory mixer service.
- Please read all appropriate instruction manuals prior to proceeding with the installation of the mixers.

C AU T I O N

- Lock-out the motor starter if any person is in the tank.
- Remove wick from the breather vent plug.
- DO NOT Paint breather / vent plug

MOST COMMON PROBLEMS: Mixer Shaft(s) not vertical; Impeller going through liquid level

- Make sure the impeller blades have been installed onto the hubs in the proper position with regards Rotation and Direction of flow. Please also note that the impellers blades are installed with the hubs ears always backing the blade into the flow. Also be sure that the leading edge and not the trailing edge is presented into the flow and that the angle at the impeller tip (angle of attack) from the horizontal is closer to 15° rather than to 75°.

C A U T I O N

- If the angle of attack (at the impeller tip is closer to 75°, either an incorrect hub in combination with the correct impeller blade (OR VICE VERSA) has been incorrectly assembled to make an incorrect matching of possible hub and blade combinations. For help in determining what the correct combination should be, Please refer to the mixer nameplate that will have the Rotation and direction of thrust written. Once you know the combination, refer to the pictorial guide of impeller / hub installation positions A, B, C or D.

- Depending on whether the concave or the convex surface is facing the fluid, if the angle of attach at the impeller is closer to 75°, the HP drawn will be 2 to 3 times greater than what it should be. This could result in overloading the motor and damaging the mixer.

- Make sure that the impeller blades are installed in the correct position for the required rotation. e.g. if the impeller blades are installed up-side-down, the pumping capacity will be reduced by about 65%. Check the mixer nameplate for the flow direction and install the impeller blades to suit.

C A U T I O N

POTENTIALLY DAMAGING SITUATIONS FOR MIXERS

- Prolonged operation of the mixer (impeller) at the liquid interface causes increased stress on the shaft & impeller for which the system was not designed to accommodate. Damage could result.
- Installations where there is a large hydraulic flow (or Velocity) in the mixer reservoir. : Make sure that if should such a flow is present, that the flow is baffled or dispersed over a larger area (as opposed to directed flow via a pipe), or that the flow be re-directed away form the impeller/shaft assembly, or is introduced evenly e.g via a weir. If this cannot be done, this external hydraulic flow will exert additional un-designed for stress loads and deflection on the mixer shaft and impeller which could result in component failure.

C A U T I O N

- Before permanently wiring the motor, check for the correct rotation of the low speed shaft. Normal is Clock-wise looking down from the top of the tank, although the reverse may also be required. Please check mixer nameplate for other instructions. (e.g. Letters A, B, C or D)

- Read and follow the instructions of all tags and nameplates before operating.
- Check the mixer full load motor amperage and voltage before operating any mixer.
- It is recommended that the mixer impeller be rotated by hand in order to check for smooth operation. **N.B**: For crown & worm drives, remove the fan cover and rotate the fan manually.
- Always operate the mixer in a fluid which had a specific gravity and viscosity less than or equal to the design specific gravity and viscosity.
- Do not dump the contents of large bags of chemicals directly onto the rotating mixer impeller(s); but add the contents into the reservoir gradually. This will also promote better mixing.
- Before starting the mixer, make sure the impeller is not buried in solids or a "set-up" fluid Note: If solids have settled-out, then dilute or jog the mixer clockwise then counterclockwise
- Please check that there is no directed flow from an external source at the impeller or shaft unless the mixer was specifically designed to accommodate these additional stress loads, as mixers could be damaged.
- During START-UP, please listen for unusual noises and check for excessive vibration.
- Check the temperature of the motor and gear reducer. The temperature should not exceed 180º F. (82ºC) If they are too hot, please stop the operation of the mixer and contact MIX-TECH immediately.
- Measure the motor amperage. The measured amperage must be less than the nameplate rating nameplate value. If the amps are over, please check the rotational speed of the gear reducer/mixer output shaft. Place a piece of tape onto the shaft (or use an RPM counter if available, and count the number of revolutions for a period of e.g. 10 seconds using your watch second hand. Multiply the result by (6) for 60 Hz operation and this will provide you with the rotational speed of the mixer. Check Rotation, & impeller blade installation to be sure they are correct. If the power draw remains high, please check with MIX-TECH

Note: - Record the full load motor amperage (FLA) and measure them every (3) months.
- Some motor amperage readings are poor indicators at low loads

C A U T I O N:

- **DO NOT STAY IN THE TANK DURING MIXER ROTATION**
- Never use the mixer impeller as a foot stand or support for body weight - as such actions could damage the mixer as well as result in serious bodily injury.

- As with any rotating equipment, in order to avoid injury, extreme care should be taken to avoid contacting the rotating parts including not connecting the motors to the electrical power source until the mixer is completely assembled. Then, vacate the tank prior to operating the mixer.

- Before making field changes of motor horsepower, mixer speed, shaft length, impeller diameter or width, etc. be sure to consult with ENVIREQUIP, MIX TECH DIVISION.

- After any plant electrical work has been done, check that the mixer(s) rotation(s) are correct as power lines may have been reversed**.**

S E C T I O N 3 - MIXER ASSEMBLY: - Closed tanks are Flange Mounted

- Open tank models usually are mounted on a steel structure. Level the drive as closely as possible. This assures that the shaft will turn in a true vertical position. Incorrect mounting is often a cause of mechanical difficulty with a mixer. Unless specified on the mixer assembly drawing, the mixer extension shaft is designed to run in a true vertical position. Never angle or side mount the mixers.

- While operating, there is random fluid motion in the vessel that exerts great forces on the extension shaft of the mixer. The mixer accommodates these forces since they are transmitted directly to the support mounting(s). Therefore, the mounting system must be rigid. It must support the static mixer weight as well as live mixer reactions that result from Torque and Bending Moment. It is not enough to design the support system for acceptable levels of stress. It must be rigid enough to take care of Start-up torque load (2.5 times the Torque), and preclude large deflections that may result in mixer vibration.

- When designing the support structure to accommodate bending moments, be sure that the structure is sufficiently rigid so that the mixer extension shaft will not move more than 1/32" per (10) feet (0.8 m per 3.05 meters) of shaft length due to deflection of the support structure.

- After the gear drive (with the motor already flange mounted onto the drive) has been properly installed, the mixer extension shaft should be installed into the gear drive's hollow output shaft (quill shaft) and fastened in the quill shaft with the thrust plate and secured in position with the threaded bolt provided - use Locktite Blue (or equivalent), or in the case of an output shaft coupling, bolt the mating flanges together.

- Mixer blades over 20" in diameter are generally bolted to a welded hub. Check the welds on the hub on your yearly overall inspection.

- These mixers are supplied with the finest electric motors available. They are manufactured by a nationally known manufacturer, (e.g. NORD, WEG, Brook etc). Under normal operating conditions, within specified temperatures, proper installation and maintenance, these motors are guaranteed to deliver rated output.

- In order to get top performance from any electric motor, be sure that there is plenty of air circulation and a minimum of obstructions. On fan cooled motors, be sure not to choke off the suction inlets, also be sure to check the allowable temperature that's indicated on the motor nameplate. Don't decrease the service life of a motor by operating it at excessively high ambient temperature.

- In order to avoid damage to the motor during temporary overloads, jams, etc. be sure that correctly sized overload protection is provided. Starter overload heater elements can be sized from the full load current of the motor as shown on the motor nameplate. It is advisable to consult a supplier of motor control equipment when selecting thermal overload heaters.

- Before the motor is permanently wired, check to be sure that the output shaft rotation is correct (Normally clockwise looking down from the mixer drive, but sometimes counterclockwise depending on the process requirements)

C A U T I O N:

- Make sure to check rotation of the mixer before it is operated. To reverse the rotation of standard 3 phrase electric motors, simply switch any two power leads.

M O T O R S P E C I F I C A T I O N S: 1800 RPM - (4) pole

- NORD motors carry the CE mark in accordance with the Low Voltage Directive
- NORD motors are designed to operate at elevations up to 1000 m (3300 ft) above sea level

Altitude: up to 1000 m	= 100% output	Ambient Temp = 40° C
Above 1000 up to 2000 m	= 92% output	Ambient Temp.= 32° C
Above 2000 up to 3000 m	= 83% output	Ambient Temp = 24° C
Above 3000 up to 4000 m	= 74% output	Ambient Temp = 16° C

- NORD motors are designed to operate with a maximum ambient temperature of 40° C (104°F) - for higher temperatures, motors have to be de-rated or an upgraded insulation used.

Ambient Temperature:	(104°F)	40° C = 100%
		45° C = 95%
		50° C = 89%
		55° C = 83%
		60° C = 67%
		70° C = 64%

EXAMPLE: A motor designed for an output of 100 HP to operate in the mining area of Bolivia (altitude 4000 m above sea level). **NOTE**: 1000 meters = 3281 Feet
Output reduction: the maximum allowable output of the motor would be 74% (74 HP)

Ambient temperature limit: the motor may operate at its rated output of 100 HP provided that the ambient temperature does not exceed 16° C

Note: You can operate over 3300 feet, but you have to de-rate the motor

- Voltages: Canada 575/3/60,TEFC; USA 460/3/60, TEFC; Europe 400/3/50, IP55 ; Australia 415/3/50
- **Tolerances Voltage & Frequency**: ± 10% based on rated voltage; Line frequency tolerance ± 5%. Combined **MAXIMUM** variation in voltage and frequency ± 10%
- MG1 Part 31 suitable for inverter service
- Insulation Class is Class F (non organic)
- High-efficiency design for motors 1 HP and up
- Service Factor 1.15
- The Standard Nord motor fan is a non-sparking
- Each Nord motor uses a terminal block
- Integral Nord motor (unless Nema motor with "C" flange)

S E C T I O N 5 - Pedestals: Shaft & Gearbox Removal - EVG SERIES

- Series EVG standard design of the dry-well pedestal and shaft catcher is one where the flinger (for the dry well) and the shaft catcher are one-in-the-same part serving both purposes.

SHAFT REMOVAL AND / OR TO REMOVE THE GEAR REDUCER:- **See assembly dwg**

i) Lock-out electrical power to the electric motor.
ii) If the electrical wiring is not long enough to allow removal of the gear reducer, dis-connect the motor wiring.
iii) Remove the safety cover located on top of the gear reducer exposing the bolt (# 3) and top plate (# 4) which holds the shaft (# 12).
iv) Slowly remove the top bolt.(# 3).
v) As the bolt is loosened, the shaft and impeller assembly will be lowered a distance of about 0.125" (3.175 mm).
vi) After the bolt has been loosened sufficiently, the flinger (# 8) will come into contact with the Pedestal to the inner support pipe (# 11) and stop there.
vii) Remove the bolts holding together the Adaptor plate Reducer to Pedestal top plate (# 7).
viii) Lift-off the complete gear reducer unit the gearbox clears the shaft.
ix) Inside of the Pedestal (# 10), you can now see the flinger (#8) which rests on the Collar / Clamp (2) Bolts / Shaft catcher (# 9).
x) Prior to un-doing the set screws on the collar / Clamp, make preparation to handle the shaft which will now fall through the dry well (# 11) and into the tank.
xi) Once the shaft is secured loosen the set screws on the Flinger assembly or Clamp bolts (# 9).
xii) **To Reinstall the shaft** (et al) follow the above procedure in Reverse.

Note: In older designs, the flinger was welded-onto the shaft. In that case, the shaft can only be removed vertically through the top of the Pedestal.

C A U T I O N:

- Prior to loosening the (3) set screws on the flinger/shaft-catcher, please ensure that there is some means of holding the shaft in-place (if no Clamp supplied, use (2) pieces of wood 4" x 4" or 6" x 6" with tightening bolts to hold the shaft in place via friction) IF NOT, THE SHAFT WILL DROP INTO THE TANK possible causing damage to the equipment or vessel and bodily injury. Shafts are often of sufficient weight to cause serious bodily injury or even death were it not properly secured.

- You may want to install a plastic hose in the pedestal so that you can monitor if the gear reducer is losing oil and collecting in the dry-well pedestal.

A Split Collar is used to prevent the shaft from accidentally falling from the gear reducer:

NOTE: On older Series EVG, there may not be a Split Ring but rather a flinger that rests on the dry well seal to hold the shaft in-place

- (i) Insert eye-bolt in top centre of the impeller shaft.
  (ii) Slowly lift up the complete impeller shaft assembly a distance of 6 mm (0.25").
  (iii) Remove the split collar that rests against the top of the quill shaft of the gearbox.
  (iv) Slowly lower the complete shaft/impeller assembly a distance of 10 to 12 mm (0.375"to 0.50".
  (v) At this point, the flinger/clamp ass'y will come into contact with the pedestal top inner support pipe/Dry-well
  (vi) Remove bolts.
  (vii) Lift off the complete gear reducer until the gearbox clears the shaft and eye-bolt.
  (viii) The reinstall the gear drive, follow the above procedure in reverse

---

S E C T I O N 5 - SHAFTS, IMPELLERS & FLANGED COUPLINGS

SHAFT - STRAIGHTNESS:

- When shipped, the mixer extension shaft was straight to within 0.003" per foot (0.25 mm per meter) of shaft length for mixers equipped with centre-less ground shafts (Special Order/ uncommonly used). If the shaft does not appear to be damaged, but the run-out is greater than the above standard, the shafting supplied may have been "smooth-turn" (more commonly used), which might not be dimensionally
  the same over the entire length of the shaft. This is probably still acceptable. In such cases, or where it might be difficult to obtain an accurate shaft run-out value, we may apply another rule: 0.25 to 0.50% of the impeller diameter = the maximum shaft run-out at the bottom of the shaft. e.g:

50" diameter impeller	0.14 to 0.28"
100" diameter impeller	0.26 to 0.53"
150"diameter impeller	0.40 to 0.67"

S E C T I O N 5 - SHAFTS, IMPELLERS & FLANGED COUPLINGS

- Flanges are used as shaft couplings when shaft extensions exceed approx 12'-0" (3.65 m) Ensure that the bolts are tightened and that a product like Never Seize (or equivalent) is used. Refer to the table (in this manual) for torque tightening values

  Recheck bolt tightness after 1500 hours (or (3 months)

These couplings are welded onto the shafts with (4 to 6) gussets and are not removable.

C A U T I O N:

- Handle the shaft carefully to be sure that it is not bent.

- After the shaft has been installed, check it for straightness. Storage and handling may have resulted in a bend. To check it, an indicator is placed at the end of the shaft, and the high speed shaft is then rotated by hand. Runout of the total shaft should not be greater than the above \references values. If the runout is greater than the above values, the shaft can be re-straightened in the field. To re-straighten the shaft, follow this procedure:

- Where the maximum, positive readout is found, place the indicator on that side of the shaft.

- Heat the shaft at a point of 180° from the indicator, (and just below the first in-tank coupling if applicable), apply heat just below the mounting nozzle.

- The shaft will grow toward the indicator as heat is applied to it. However, DO NOT permit the surface temperature to go over 500° F (260° C). Use Tempilstics or equivalent

- The shaft will straighten since it will draw more than it grows.

- After each heating process, rotate the shaft and recheck until the straightness is within tolerance to meet the allowable tolerance

- To install any impeller, simply slide the impeller hub onto the extension shaft above the shaft keyway. Install Hook type (Gib) key into the keyway making sure that the pin is inserted into the

  correct hole for proper impeller location. Lower the hub (with or without blades bolted-on) down onto the key. Tighten set screw. Bolt -on blades if not already done.

NOTE: All MIX-TECH Portable mixers operate at least 35% below the 1st Critical speed or harmonic frequency - There is no danger of "hitting-on" or approaching the 1st Critical speed - (Unless specifically mentioned otherwise)

- Please refer to the specific manufacturer's installation and operating manual.
- Correct lubrication practices are essential to long life and satisfactory performance of a gear drive. Be sure to use the right lubricants as recommended. With proper lubrication

maintenance, the gear drive will carry its rated design load and provide years of satisfactory operation.

S E C T I O N 6 - SHAFTS, IMPELLERS & COUPLINGS

IMPELLERS

- Make sure that the impeller blades have been installed onto the hubs in the proper position with regard Rotation and Direction of flow. Please also note that the impellers blades are installed with the hubs ears always backing the blade into the flow. Also be sure that the leading edge and not the trailing edge is presented into the flow and that the angle at the impeller tip (angle of attack) from the horizontal is closer to 15º rather than to 75º.

C A U T I O N

- If the angle of attack (at the impeller tip is closer to 75º, either an incorrect hub in combination with the correct impeller blade (OR VICE VERSA) has been incorrectly assembled to make an incorrect matching of possible hub and blade combinations. For help in determining what the correct combination should be, please refer to the mixer nameplate that will have the Rotation and direction of thrust written. Once you know the combination, refer to the pictorial guide of impeller / hub installation positions A, B, C or D.

- Depending on whether the concave or the convex surface is facing the fluid, if the angle of attach at the impeller is closer to 75º, the HP drawn will be 2 to 3 times greater than what it should be. This could result in overloading the motor and damaging the mixer.

- Make sure that the impeller blades are installed in the correct position for the required rotation. e.g. if the impeller blades are installed up-side-down, the pumping capacity will be reduced by about 65%. Check the mixer nameplate for the flow direction and install the blades to suit.

S E C T I O N 7 - GEAR DRIVE MAINTENANCE

C A U T I O N:

- By following instructions, many premature gear and bearing failures can be avoided.

- Keeping a maintenance log is highly recommended.

- Lubricant used in the gear case must be free of dirt, metal particles and other contaminants. Use only new oil. Strain the oil if there is any possibility that it contains contaminants.

- To equalize pressure inside and outside the gear case, a breather vrnt is installed on top of the unit. This breather normally requires no maintenance, and must not be blocked. Check hole for free breathing.

PORTABLE MIXERS:

Lubrication For PORTABLE MIXERS (**Series "EHG"**), the Crown & worm gear reducers are filled for life (20,000 hours or (4) years) with synthetic oil

C A U T I O N:

- For shipment, the gear-case is drained of oil (EXCEPT FOR NORD drives) - Be sure to fill the gear case with the proper lubricant to the proper level. Install breather. DO NOT OVERFILL - N.B: if the reducer is already filled, (as is the case with NORD drives), Do not forget to install the breather(s) or the seals may fail.

- **RECOMMENDED LUBRICANTS FOR NORD HELICAL GEARING**:
  These Nord Gear reducers are factory-filled with Shell Omala 220 mineral oil or with Chevron ISO FM 220 food grade oil (if required), or equivalent:
  or with Shell Omala 220 regular mineral oil fill when the mixer is provided with a dry well seal unless otherwise specified:

  N.B: A reducer previously filled with Shell Omala 220 mineral can be drained (as much as practical to achieve), and Chevron ISO FM 220 substituted without any harmful chemical reactions or reduction to the lubricating quality of the new (or old) oil.

- Please note that the gear reducers for MIX-TECH'S "EVG" series are Nord Parallel shaft drives. The top output bearing is grease packed although there is not grease nipple. Please remove the seal and re-pack the bearing with grease. (please refer to NORD instruction attached)

- The output shaft seals are "Quadrilip" having (2) discrete grease filled pockets

---

S E C T I O N 7 - GEAR DRIVE MAINTENANCE FOR SERIES EVG & EVGX parallel Shaft design gear reducers:

- **RECOMMENDED OIL CHANGE INTERVALS IN NORD IOM: -**
  Synthetic lubricants should be changed every 20,000 service hours or (4) years;
  Mineral oils should be changed every 10,000 service hours or after (2) years. See gear reducer service manual (IOM).

C A U T I O N:

Units should be checked out periodically for increased noise, surface temperature, vibration, shaft

movement, and amperage draw. Units with inspection covers should not be operated with the inspection covers removed.

PROCEDURE FOR RE-GREASING THE UPPER OUTPUT BEARING equipped with Tapered roller bearing option:

- Remove upper output shaft seal(s).
- Inspect bearing cavity for presence of grease. The bearing cavity should be packed to approximately 1/3 full with grease.
- If required, inject grease into the taper roller bearing until the cavity is filled to 1/3. A Needle Nozzle is generally required on the grease gun, because the shim(s) partially cover the access to the bearing cavity**.**
- Install new upper output seals**.**

Note: The other bearings in these gearboxes are open and are submerged in oil.

The recommended interval for changing the gearbox oil is every 10,000 hours of operation.

- The standard ambient temperature selected is 15 to 125° F (9 to 52° C) for the gear reducer**.**
- Some Gear reducers are equipped with bulls-eye oil level indicators**, others have a plug.**

S E C T I O N 8 - BOLTS

- Impeller blades & other in-tank fasteners are supplied as standard with lock-washers.

C A U T I O N:

- Extreme care should be taken to see that locking devices are properly installed and to be sure that the bolts/studs are properly tightened and lubricated.

It is recommended that all in-tank fasteners (and all other bolts), be rechecked for tightness after the first 1500 hours of operation and subsequently, at each scheduled shut-down and that a suitable lubricant be used e.g. Never seize or equivalent.

RECOMMENDED BOLT TORQUE VALUES:

BOLT SIZE	TIGHTENING TORQUE (Foot Pounds)		
½" - 13	50	1.25" - 7	580
5/8" - 11	100	7/8" - 9	190
3/4" - 10	190	1.50" - 6	1000
1" - 8	290		

NOTE: Tighten all bolts as specified. Lubricate all fasteners with an anti-seize product. If no lubrication is used when tightening the bolts as specified, multiply the table values by 1.3

GEAR REDUCER & MOUNTING PLATE BOLTS:

These bolts are also subject to high loads and should be properly torqued to prevent bolt stretch and/or reducer wobble. For situations with large reducers or long shafts with large reducers, use additional care to make sure that these bolts are installed and torqued properly

This "Turn of the nut Method" can be summed up in one sentence: "Turn the Nut ½ to 2/3 turns beyond the snug tight position, "this applies to any bolt of any size. However, fasteners should be clean, rust free and lightly oiled.

In cases where the nut is not accessible, the bolt may be turned ½ to 3/4 turn beyond snug tight.

LEVER ARM SYSTEM	Bolt size	Lever Arm
	1/4 - 3/8"	6" handle
	7/16" - 5/8"	12" handle
	3/4" - 1.125"	24" handle
	1.25" and over	36" handle

Note: This lever arm system should be used with or without lock-washers. If lock-washers show sign of splitting or fatigue, they must be replaced

S E C T I O N 9 - OPERATION

- The mixers that you have purchased have been designed to accommodate all the loads that will be encountered in the normal course of operation.

C A U T I O N:

- Care must be taken to avoid prolonged operation of the mixer impeller(s) at liquid interface. These mixers were not designed to operate under those severe conditions and could become damaged.

S E C T I O N 10 - MOTOR REMOVAL & INSTALLATION OF MOTORS:

- For Nema "C " Flanged motors (not integral motors)
  The motors supplied have been installed onto the reducers. In the event of motor maintenance, remove the bolts which hold the gear reducer's Nema "C" flange adaptor to the motor's "C" face. Remove the coupling half and service the standard NEMA motor as required. INSTALLATION: reverse the procedure. Please refer to **"COUPLING ENCLOSED"** cross sectional drawing which shows the mounting distance 1 13/16" (46.03 mm). Note that the coupling is keyed onto the motor shaft (key provided).

- In the case of NORD integral motors, remove the bolts. The motor can then be removed exposing the high speed pinion gear mounted on the motor shaft. The motor can then be serviced as required.

S E C T I O N 11 - TROUBLE-SHOOTING / MIXER PERFORMANCE

- **PERFORMANCE**: If you find that the mixer is not performing according to your expectations, one of the things that directly affects mixer performance is Baffles (or lack thereof)

Note: Also check that the impeller blades are in the correct configuration A, B, C or D, that the correct blades are matched to the correct hubs and that the rotation is correct.(Please refer to Section 6 Pages 7, 8 & 9 for more information.

N.B: Baffles always help any mixer application by providing the means to convert rotational motion into to top-to-bottom- pumping/mixing.

- If the viscosity of the fluid is over 25,000 cp, then baffles are not necessary.

- If the vessel is rectangular in shape, baffles may not be necessary.

- In circular or square vessels, the use of baffles is mandatory.

- OTHER METHODS of achieving top-to-bottom motion without using baffles:
  - Off-centering the mixer by 20% (uses the vessel as a baffle)
  - Angle mounting (into a quadrant)- often seen on Portable mixers. If you want to angle-mount a larger mixer, please check to be sure that the shaft was designed to accept these additional stress loads.

- **OIL LEAK(S)** problems with Nord Gear reducers: In order to be able to address the

- **OIL LEAK(S)** For Series EVG supplied with a flinger / shaft Catcher & dry well seal:

NOTE: For Series **EVGX**, There is an oil overflow plastic pipe indicating oil leak>

- If one of the (2) output oil seals were to fail (very rare), then the oil would migrate down the output shaft, and be pumped by the flinger into the moat surrounding the dry well pipe. Any such leak would be contained by our sealed pedestal. (access to it is by a plug). Any other oil leak will be visible on the outside of the gear reducer

SYMPTOM	REASON(S)	SOLUTION
Oil leak on the reducer	Vent plug not installed Vent plug painted over Vent plug failure	Clean up oil and remove the vent plug If this stops the leak, change the vent plug
Oil leak on top of the reducer	Motor and/or top bolts not tightened	Use Teflon tape and tighten bolts
Oil leak on top of reducer	Too much oil in the reducer will be forced out of the vent	Check oil level and adjust to site glass
Oil leak on end plate	Bolts loose	Tighten bolts
Oil leak on top of the reducer	Gasket between motor and the reducer failed	Replace gasket and silicone dealant
Sign of oil on the reducer	Drain pipe & valve damaged	Use Teflon tape /sealant to try to reseal
Oil leaking on reducers with "C" flanged motor(s)	if the vent was not installed, plugged or faulty, the oil presure in the reducer might have exceeded 2 psi causing the input oil seal to "blow-out"	Change the input oil seal

- **NOISE**: Under normal circumstances, Mix-Tech mixers operate quietly and without vibration. If there is a metal-on-metal noise, check to see if the top bolt # 3 is properly tightened to the shaft. If the bolt is not, the shaft will lower than it should be and the flinger/shaft catcher may be touching the dry well pipe

- **HEAT**: Check the temperature of the Reducer and motor. If hot, check the oil level.

NOTE: On Series EVG & EVGX, an oil expansion chamber is supplied to minimize problems with over-filling of oil into the gearcase

- These mixers should provide long and satisfactory service. Only the finest materials were employed in their manufacture. However, if any defects in materials or workmanship occur, the defective part(s) must be returned to ENVIREQUIP (div 6335772 Canada Inc), **MIX TECH Division**, freight prepaid. ENVIREQUIP reserves the right to repair or replace, at its discretion, any part that proves to have been defective in materials or workmanship.

- ENVIREQUIP is not responsible for the warranties on components purchased, e.g. motors, but will endeavour to help to obtain resolution of any problem(s) with any of our sub-supplier(s) as regards their warranties.

- ENVIREQUIP specifically excludes any liability as to loss of production, improper use of the equipment, abuse, any other liability expressed or implied that exceed the limited warranty given as applies to the equipment being free of defects in materials and/or workmanship.

- ENVIREQUIP's warranty is for (2) years against defects in materials or workmanship and also includes a process warranty.

- This Process warranty only applies to the actual conditions that were specified at the time of bidding.

- Please refer to the terms and conditions as well as to the warranty for complete details.

CONVERSION FACTORS

1 inch	=	25.4 mm
1 kilogram	=	2.205 lbs
1 U.S. gallon	=	3.785 litres
U.S. gallons x 0.2642	=	litres
1 m^3	=	264.2 U.S. gal
1 ft^3	=	7.481 usg
1 ft^3 of water	=	62.4 lbs
1 foot	=	0.3048 meters
1 psi	=	6.895 Kpa
1 Kpa	=	0.145 psi
1 K Cal	=	3.967 BTU
1 HP	=	0.7457 kW
1 kW	=	1.341 HP
1 Bar	=	14.5 psi
1 kg /m^2	=	14.22 psi
1 Newton	=	0.2248 pounds (force)
1 lb in	=	0.1129 Newton-meter (Nm) force
1 lb in	=	1.1519 kg-cm
1 kg/cm^2	=	14.23 psi

MAINTENANCE LOG

TASK	BY: DATE:				Signed
CHECK OIL					
CHANGE OIL					
CHECK PEDESTAL for OIL LEAKAGE					
CHECK FOR HEAT					
CHECK FOR NOISE					
CHECK FOR VIBRATION					
CHECK BOLT TIGHTNESS: Top bolt & Pedestal bolts Base bolts Clamp Coupling Hub & blades Reducer end cover bolts					
CHECK MOTOR AMPERAGE					
CHECK ROTATION AFTER ELECTRICAL WORK					
OTHER					

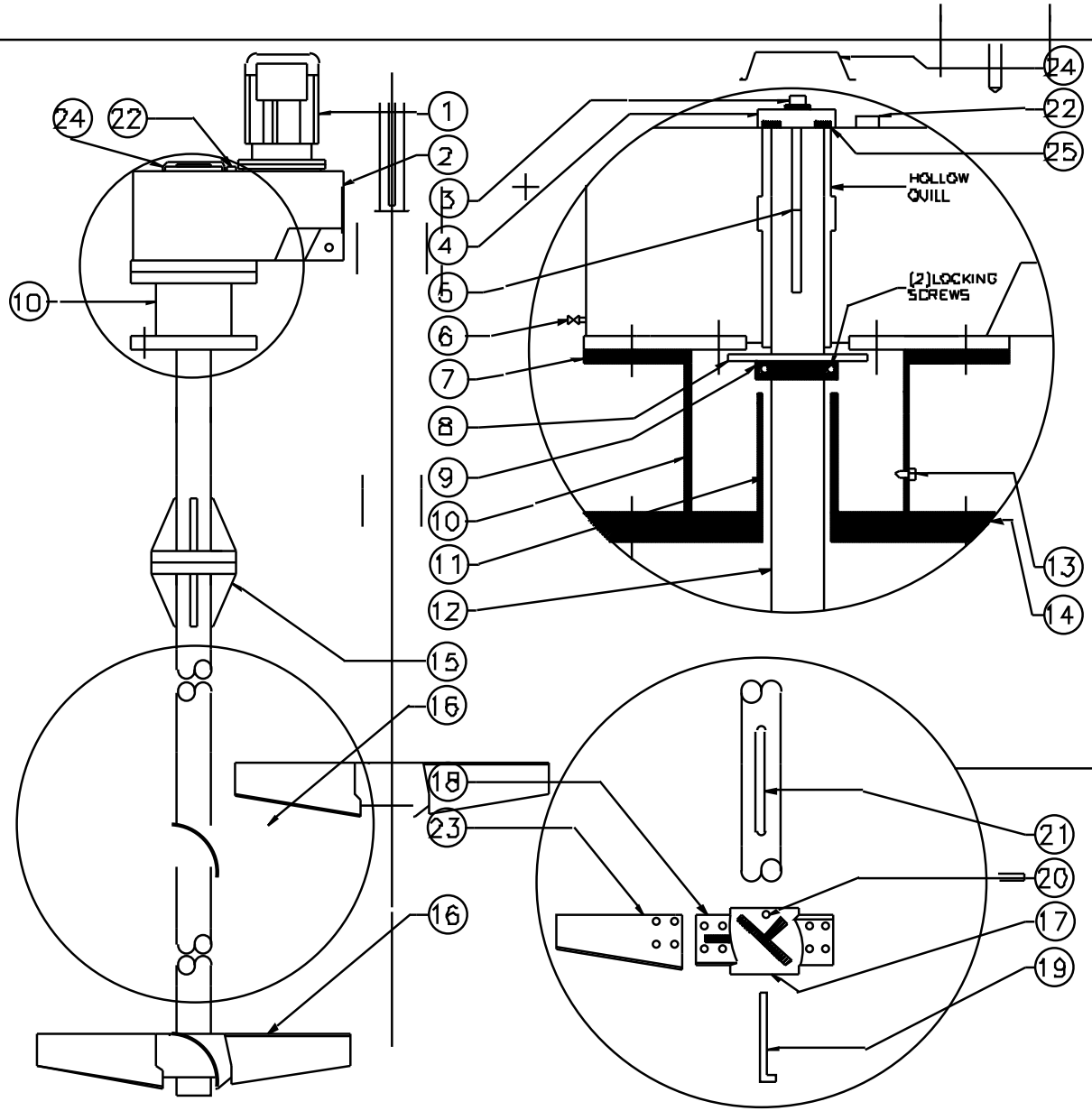

ITEM No:	DESCRIPTION
1	MOTOR
2	NORD GEAR REDUCER
3	BOLT AND WASHER/LOCKTITE
4	THRUST PLATE
5	KEYS (2)
6	OIL DRAIN
7	ADAPTOR/REDUCER TO PEDESTAL
8	FLINGER
9	CLAMP - SHAFT CATCHER CLAMP
10	SEALED PEDESTAL
11	DRY-WELL
12	SHAFT
13	DRAIN PLUG
14	BASE PLATE/MOUNTING FLANGE
15	IN-TANK COUPLING WITH GUSSETS
16	ENVIROFOIL IMPELLER
17	IMPELLER HUB
18	HUB WINGS (EARS)
19	GIB (HOOK) KEY
20	SET SCREWS (2)
21	KEY WAY'S IN SHAFT FOR IMPELLER HUB(S)
22	GEAR REDUCER BREATHER
23	ENVIROFOIL IMPELLER BLADE
24	DUST/SAFETY COVER
25	SPLIT RING

NOTE:
IMPELLER/HUB CONFIG "A" SHOWN (STANDARD)
CHECK NAME PLATE FOR OTHER IMPELLER CONFIGURATION REQUIREMENTS.

TITLE	REVISION #
MIX-TECH MIXER SECTION SIZES 8-12	1

ENVIREQUIP WTEN INC.
490, Bord du Lac - Suite 2,Dorval, QC H9S 2A8
toll free: 1.866.819.6123 mobile: 514.386.1043
RR1,(21494 Little Russia Rd),Glen Robertson,ON K0B 1H0
tel: 613.874.2616 fax: 613.874.2629
e-mail: envireqp@glen-net.ca
internet: http://www.envirequip-wtem.com/

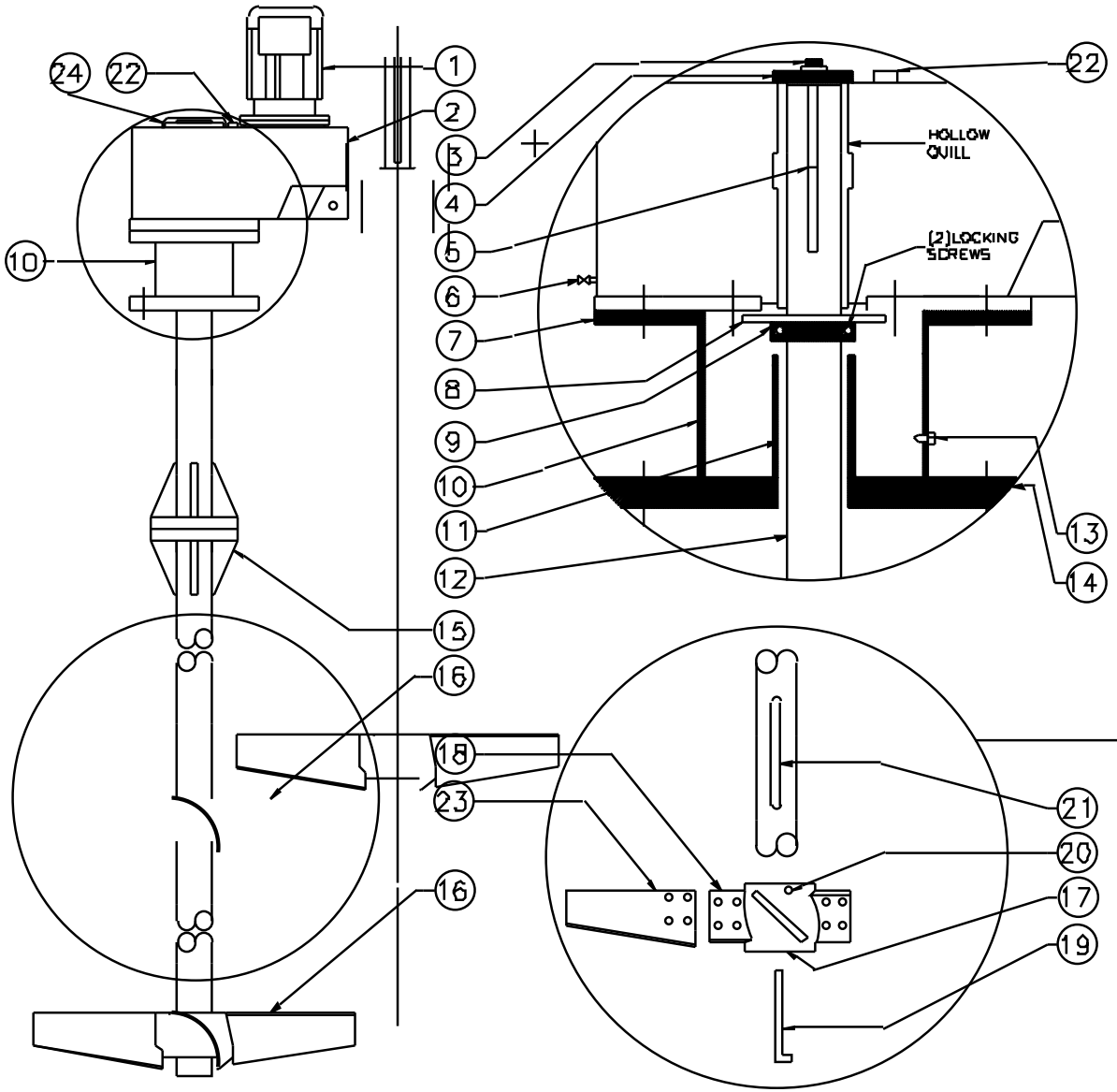

ITEM No:	DESCRIPTION
1	MOTOR
2	NORD GEAR REDUCER
3	BOLT AND WASHER/LOCKTITE
4	THRUST PLATE
5	KEYS (2)
6	OIL DRAIN
7	ADAPTOR/REDUCER TO PEDESTAL
8	FLINGER
9	CLAMP - SHAFT CATCHER CLAMP
10	SEALED PEDESTAL
11	DRY-WELL
12	SHAFT
13	DRAIN PLUG
14	BASE PLATE/MOUNTING FLANGE
15	IN-TANK COUPLING WITH GUSSETS
16	ENVIROFOIL IMPELLER
17	IMPELLER HUB
18	HUB WINGS (EARS)
19	GIB (HOOK) KEY
20	SET SCREWS (2)
21	KEY WAYS IN SHAFT FOR IMPELLER HUB(S)
22	GEAR REDUCER BREATHER
23	ENVIROFOIL IMPELLER BLADE
24	DUST COVER

NOTE.
IMPELLER/HUB CONFIG "A" SHOWN (STANDARD)
CHECK NAME PLATE FOR OTHER IMPELLER CONFIGURATION REQUIREMENTS.

TITLE	REVISION #
MIX-TECH MIXER SECTION	2

ENVIREQUIP WTEM INC.
490, Bord du Lac - Suite 2,Dorval, QC H9S 2A8
toll free: 1.866.819.6123 mobile: 514.386.1043
RR1,(21494 Little Russia Rd),Glen Robertson,ON K0B 1H0
tel: 613.874.2616 fax: 613.874.2629
e-mail: envireqp@glen-net.ca
internet: http://www.envirequip-wtem.com/

IMPELLER BLADE INSTALLATION (A)

Please check the mixer nameplate for Rotation and Direction of Thrust

▶ CLOCKWISE / DOWN (Standard)

Blade fixed on the left side of the wing

Leading edge above

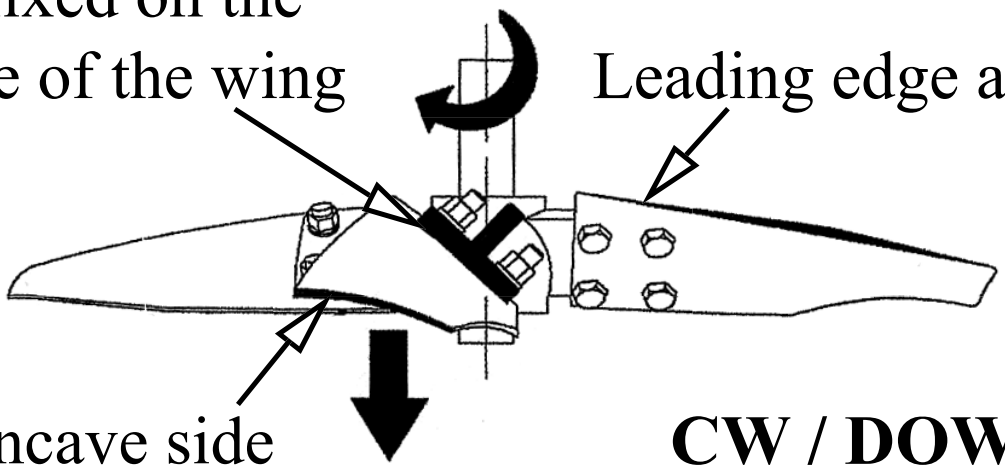

The concave side facing downwards

CW / DOWN

INCORRECT

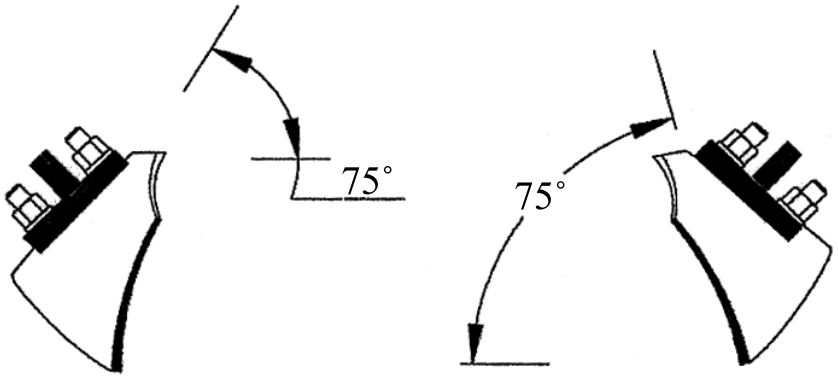

IMPELLER BLADE INSTALLATION Ⓑ

Please check the mixer nameplate for Rotation and Direction of Thrust

▶ COUNTER-CLOCKWISE / DOWN (Mirror)

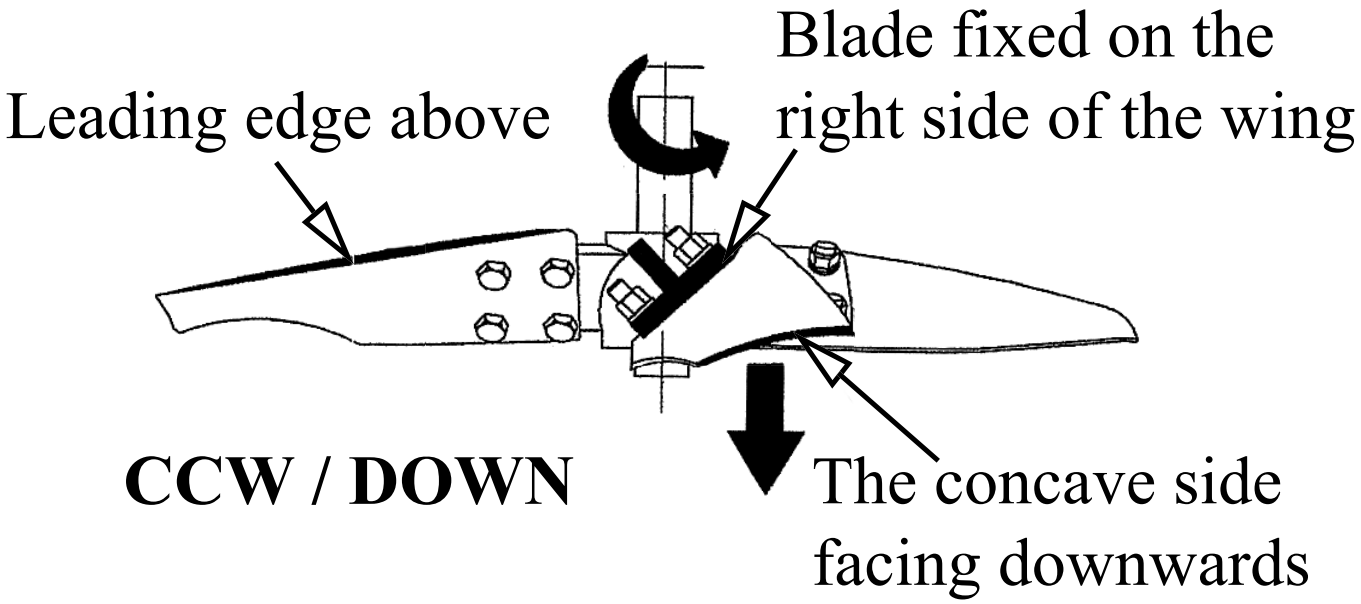

INCORRECT

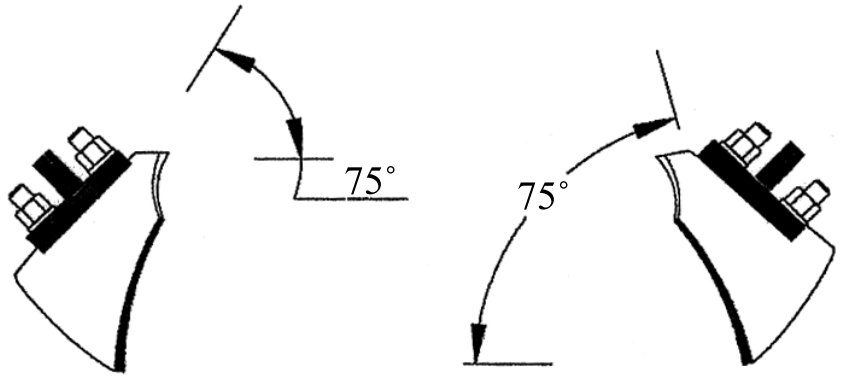

IMPELLER BLADE INSTALLATION ©

Please check the mixer nameplate for Rotation and Direction of Thrust

▶ CLOCKWISE / UP (Mirror)

The concave side facing upwards

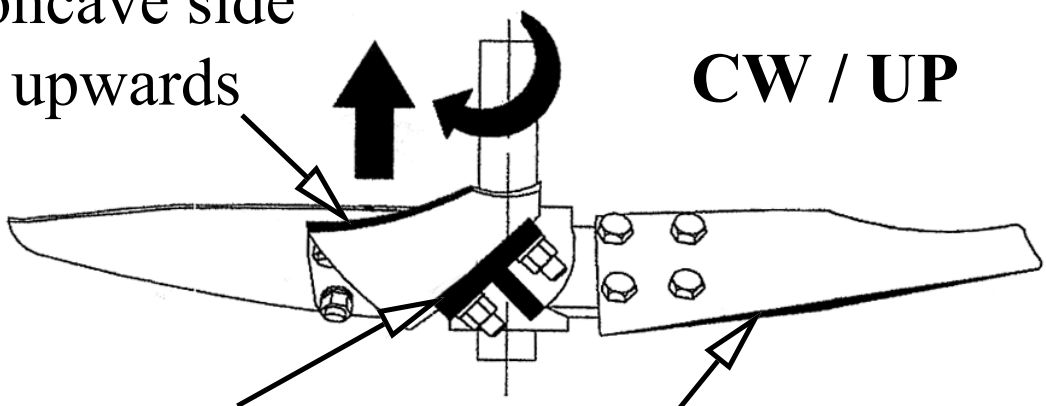

Blade fixed on the left side of the wing

Leading edge below

INCORRECT

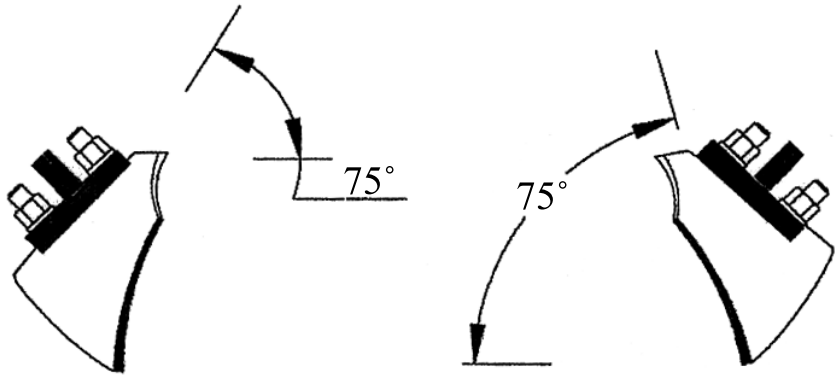

IMPELLER BLADE INSTALLATION Ⓓ

Please check the mixer nameplate for Rotation and Direction of Thrust

▶ COUNTER-CLOCKWISE / UP (Standard)

CCW / UP

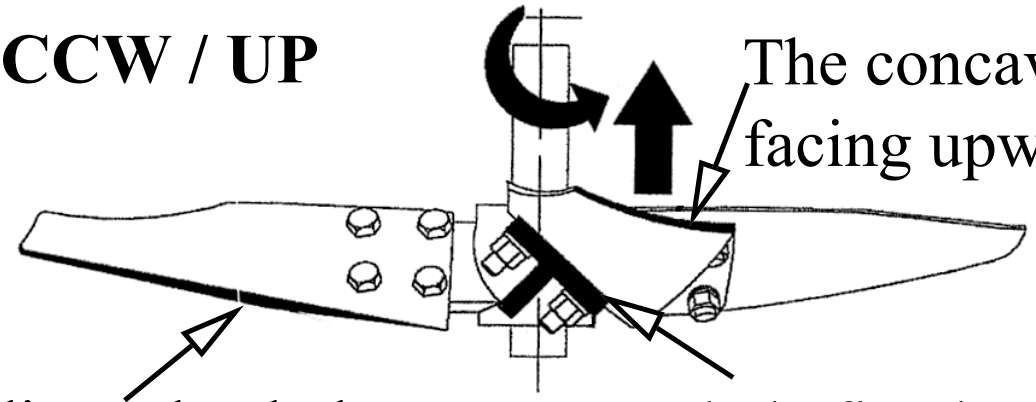

INCORRECT

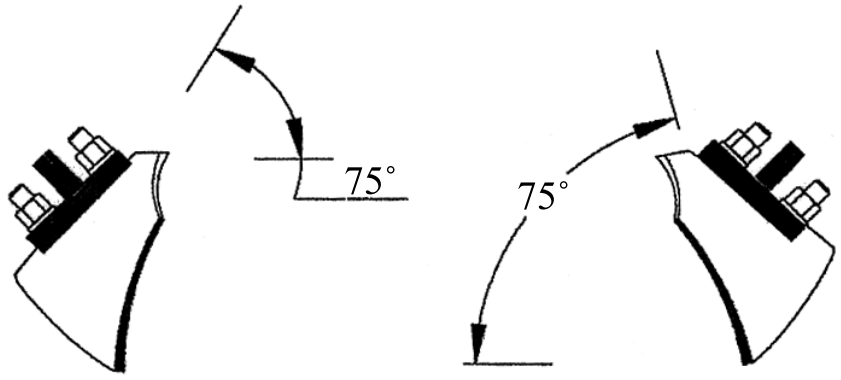

CONVERSION FACTORS

1 inch	=	25.4 mm
1 kilogram	=	2.205 lbs
1 U.S. gallon	=	3.785 litres
U.S. gallons x 0.2642	=	litres
1 m^3	=	264.2 U.S. gal
1 ft^3	=	7.481 usg
1 ft^3 of water	=	62.4 lbs
1 foot	=	0.3048 meters
1 psi	=	6.895 Kpa
1 Kpa	=	0.145 psi
1 K Cal	=	3.967 BTU
1 HP	=	0.7457 kW
1 kW	=	1.341 HP
1 Bar	=	14.5 psi
1 kg /m^2	=	14.22 psi
1 Newton	=	0.2248 pounds (force)
1 lb in	=	0.1129 Newton-meter (Nm) force
1 lb in	=	1.1519 kg-cm
1 kg/cm^2	=	14.23 psi

MAINTENANCE LOG BY:
DATE:

TASK

CHECK OIL

CHANGE OIL

CHECK PEDESTAL FOR OIL LEAKAGE

CHECK FOR HEAT

CHECK FOR NOISE

CHECK FOR VIBRATION

CHECK BOLT TIGHTNESS:
Top bolt & Pedestal bolts
Base bolts
Clamp
Coupling
Hub & blades
Reducer end cover bolts

CHECK MOTOR AMPERAGE

CHECK ROTATION AFTER ELECTRICAL WORK

OTHER

ENVIREQUIP

MIX-TECH

DYNAMIC MIXERS



ENVIREQUIP

WTEM INC.

MIX-TECH... GOOD PEOPLE TO MIX WITH

ENVIREQUIP

MIX-TECH MIXERS - WARRANTY - SERVICE

WARRANTY

ENVIREQUIP offers a 2 Year warranty against defects on materials and workmanship and a process warranty providing that the process information provided at the time on which the mixer selection was based is correct.

SERVICE

MIX-TECH have shipped mixers to many parts of the world. MIX-TECH provide sales and service in North America through our own staff and through our network of distributors and representatives. For the MIX-TECH Series EVG mixers, the drives are Nord Gear. Because MIX-TECH do not remove the nameplates from the original Nord drive, our clients have the original serial numbers of the drive(s). For any problems or for new applications, please contact us directly toll free at 1-866-819-6123 or fax us at 1-613-874-2629.

Additionally, Nord provide sales and service in hundreds of locations in most countries worldwide. You are never far from service anywhere in the world.

CONTACT US

From all of us at **ENVIREQUIP**, we thank our clients very much for your interest in our equipment and for your patronage. We promise to continue to manufacture top quality, rugged equipment, that is energy-efficient, feature-packed, at a reasonable price. Contact us toll free at 1-866-819-6123, fax us at 1-613-874-2629, send e-mails to : envireqp@glen-net.ca or visit our web site at www.envirequip-wtem.com

Or contact Vivendi one of our licensees for water and waste water applications at 1-514-334-7230.

For a mixer selection and quotation, please call, fax, e-mail, check our web site, or write to us, and we will be pleased to provide you with a prompt energy-efficient mixer quotation.

REPRESENTED BY :

ENVIREQUIP

WTEM INC.

MIX-TECH

DYNAMIC MIXERS

EVG & EVG-FP SERIES

1/4 TO 200 HP

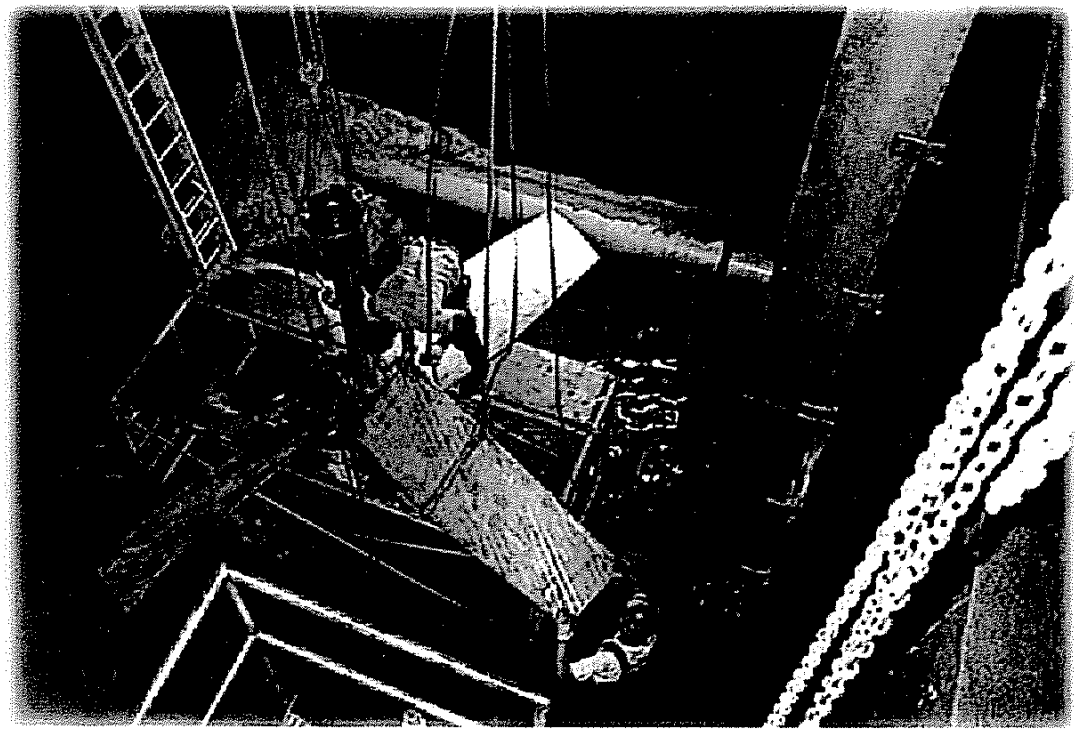

MIX-TECH FEATURES:

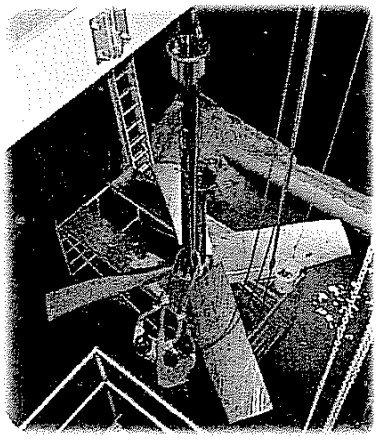

- Large service factors on gear drives - minimum 2.5.
- Shaft stress to 9000 psi maximum.
- Impeller / Hub / Coupling 6000 psi maximum.
- All drives are capable of reverse rotation.
- Optional pedestal with shaft catcher design, that allows removal of the gear drive without disturbing the wet end.
- "FP" Option: The reducer is totally isolated from the random hydraulic loads imposed by the shaft & impeller assembly.
- Large shaft capability operating at 65% of the shaft's 1st Harmonic frequency or Critical Speed.
- Mounting options: Steel base, pedestals and custom.
- Seal options: HPLRSB, LPSB, Lip seals, Single, Double, Dry-Running or Cartridge seals.
- Motor options: Nord integral Standard; Nema motors, hydraulic & pneumatic motors also available.
- Full range of impellers including **ENVIROFOIL**.

MIX-TECH... GOOD PEOPLE TO MIX WITH

ENVIREQUIP

MIX-TECH MIXERS - WARRANTY - SERVICE

WARRANTY

ENVIREQUIP offers a 2 Year warranty against defects on materials and workmanship and a process warranty providing that the process information provided at the time on which the mixer selection was based is correct.

SERVICE

MIX-TECH have shipped mixers to many parts of the world. MIX-TECH provide sales and service in North America through our own staff and through our network of distributors and representatives. For the MIX-TECH Series EVG mixers, the drives are Nord Gear. Because MIX-TECH do not remove the nameplates from the original Nord drive, our clients have the original serial numbers of the drive(s). For any problems or for new applications, please contact us directly toll free at 1-866-819-6123 or fax us at 1-613-874-2629.

Additionally, Nord provide sales and service in hundreds of locations in most countries worldwide. You are never far from service anywhere in the world.

CONTACT US

From all of us at ENVIREQUIP, we thank our clients very much for your interest in our equipment and for your patronage. We promise to continue to manufacture top quality, rugged equipment, that is energy-efficient, feature-packed, at a reasonable price. Contact us toll free at 1-866-819-6123, fax us at 1-613-874-2629, send e-mail to : envireqp@glen-net.ca or visit our web site at www.envirequip-wtem.com

Or contact Vivendi one of our licensees for water and waste water applications at 1-514-334-7230.

For a mixer selection and quotation, please call, fax, e-mail, check our web site, or write to us, and we will be pleased to provide you with a prompt energy-efficient mixer quotation.

REPRESENTED BY :

ENVIREQUIP
WTEM INC.

MIX-TECH... GOOD PEOPLE TO MIX WITH

JOHN MEUNIER

Meadowbank mining Corp.
ACP-700R
Technical Data Sheet
Reference : NC01

MIXERS

GEAR REDUCERS

VEOLIA WATER
Solutions & Technologies

LEFT BLANK

Betriebs- und Wartungsanleitung
Operating and Maintenance Instruction
Instructions de conduite et d'entretien

B 1021

08/2000

Diese Sicherheitshinweise sind aufzubewahren.
These safety instructions must be kept available.
Ces instructions de sécurité doivent être observées.

D GB F

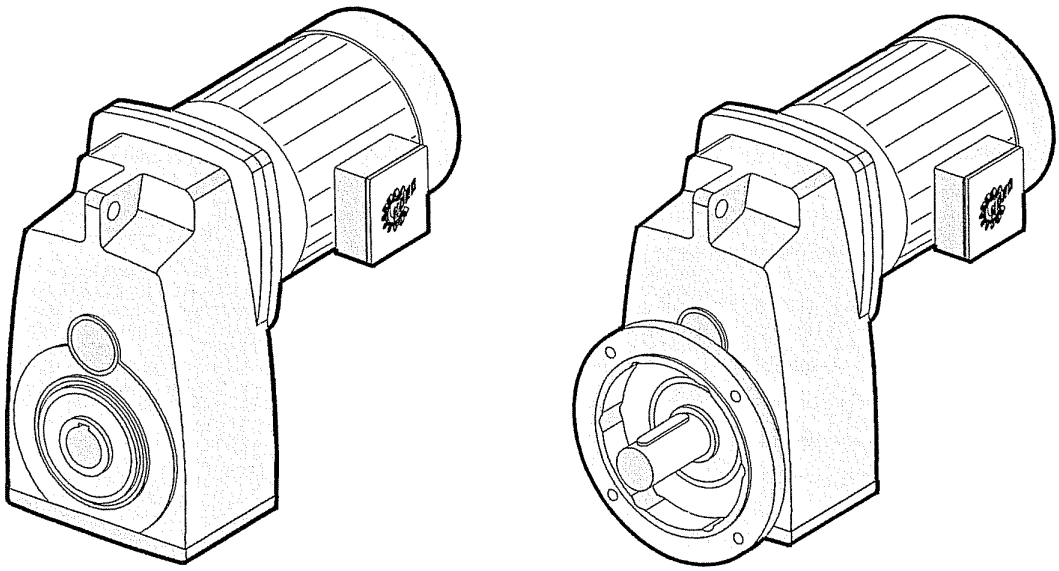

Flachgetriebe und NORDBLOC-Flachgetriebe

Helical Shaft Mounting Gearboxes and NORDBLOC Helical Shaft Mounting Gearboxes

Réducteurs à arbres parallèles et NORDBLOC Réducteurs à parallèles

Δ Warnung
Es wird vorausgesetzt, daß die grundsätzlichen Planungsarbeiten der Anlage sowie Transport, Montage, Installation, Inbetriebnahme, Wartung und Reparaturen von qualifiziertem Personal ausgeführt bzw. durch verantwortliche Fachkräfte kontrolliert werden. Bei Arbeiten am Getriebemotor muß garantiert sein, daß keinerlei Spannung anliegt, und dieser gegen Wiedereinschaltung gesichert ist.

Δ Warnung
Veränderungen gegenüber dem Normalbetrieb (höhere Leistungsaufnahme, Temperaturen, Schwingungen, Geräusche usw. oder Ansprechen der Überwachungseinrichtungen) lassen vermuten, daß die Funktion beeinträchtigt ist. Zur Vermeidung von Störungen, die ihrerseits mittelbar oder unmittelbar schwere Personen- oder Sachschäden bewirken könnten, muß das zuständige Wartungspersonal dann umgehend verständigt werden.

Δ Im Zweifelsfall die entspechenden Betriebsmittel sofort abschalten!

Aufstellung, Vorbereitung
- Transportösen am Getriebe sind für das Gewicht des Antriebs ausgelegt
- Fundamente ausreichend bemessen und schwingungsfrei ausführen
- Getriebe oder -motor fest und ohne Verspannung montieren
- ausreichende Belüftung vorsehen
- serienmäßiges Innengewinde nach DIN-EN 332 zum Aufziehen von Verbindungselementen auf die Wellen benutzen
- Schläge auf die Wellen vermeiden (Lagerbeschädigung!)
- Maschine und Getriebe möglichst mit elastischen Kupplungen verbinden
- vor dem Einschalten Abtriebselemente aufziehen bzw. Paßfeder sichern
- bei Aufsteckgetrieben mit Drehmomentstütze Gummipuffer verwenden

Elektrischer Anschluß
- Motoranschluß nach Schaltbild vornehmen
- Übereinstimmung von Netzspannung und Frequenz mit den Typenschild-Daten sicherstellen
- Sichere Schutzleiterverbindung herstellen
- evtl. falsche Drehrichtung korrigieren durch Vertauschen von 2 Phasen
- Nicht benötigte Kabeleinführungsöffnungen und den Kasten selbst staub- und wasserdicht verschließen
- Überbelastung und Phasenausfall durch Schutzschalter vorbeugen
- Einstellen des Motorschutzschalters auf Nennstrom
- Schaltbilder auf der letzten Seite

Inbetriebnahme
- bei längeren Lagerzeiten besondere Vorkehrungen treffen (siehe Werknormblatt "Langzeitlagerung")
- Lage der Ölstandschraube nach Bauformtabellen des entsprechenden Kataloges feststellen
- Prüfen des Ölstandes
- Entfernen des Verschlußstopfens vor Inbetriebnahme (Überdruck!), ggf. Druckentlüftungsschraube montieren
- Normale Erstbefüllung: siehe Schmierstofftabelle
- Luftgekühlte Motoren sind für Umgebungstemperaturen von - 20°C bis +40°C sowie Aufstellungshöhen â 1.000 m über NN ausgelegt
- Der Einsatz im Ex-Bereich ist nicht zulässig, sofern nicht ausdrücklich hierfür vorgesehen

Δ Caution
It is presumed that fundamental project work as well as all work with regard to transport, assembly, installation, starting-up, maintenance and repair is performed by qualified personnel or supervised by skilled labour taking overall responsibility. Make absolutely sure that no voltage is applied at all while work is being done on the geared motor. Drive must also be secured against switching on.

Δ Caution
Any deviation from normal operating conditions (increased power consumption, temperature, vibrations, noise etc.) or warning signals by monitoring equipment suggest malfunction. Inform the responsible maintenance personnel at once to prevent the trouble from getting worse and causing, directly or indirectly, serious physical injury or material damage.

Δ In case of doubt disconnect the machine immediately!

Preparing and performing installation
- Lifting devices on the drive are designed to carry the drive weight
- the foundation (base) should be of adequate size and vibration-proof
- install gear unit or geared motor rigid and braceless
- ensure sufficient ventilation
- make use of tapped hole (DIN-EN 332) to suit fastening to the shaft end
- avoid shocks on shafts (bearing damage!)
- preferably use flexible coupling between output shaft and driven machine
- fit output elements to shaft end or secure feather key before starting the motor
- use torque arm with rubber buffer on shaft mounting gearboxes

Connection of motor
- Connect motor according to diagram
- make sure that mains voltage/frequency are in accordance with nameplate information
- make secure protective conductor conection
- if motor is running in reverse direction, interchange two phases
- Close unused cable entrances holes and the box itself in a dust- and watertight manner.
- install protective switches to prevent overload and phase failure
- set motor protection switch to nominal current
- wiring diagrams on the last page

Starting up
- in case of long-time storage take special precautions (as provided in works standard sheet "Extended Storage")
- check position of oil-level plug with help of mounting position tables in applicable catalogue
- check oil-level
- prior to starting-up, remove vent plug from vent screw if necessary
- if not specified otherwise, first oil filling as is shown in list of lubricants
- air-cooled motors are designed for ambient temperautres between -20°C and +40°C and for installation at altitudes â 1.000 m above M.S.L.
- Their use in hazardous areas is prohibited unless they are expressly intended for such use (follow additional instructions)

Δ Avertissement
Il est impératif que les travaux fondamentaux de l'installation, ainsi que tous les travaux de transport, montage, installation, mise en exploitation, entretien et réparation soient accomplis par du personnel qualifié et contrôlés par des techniciens spécialisés dans ce domaine. Avant toute intervention sur le motoréducteur, il faut s'assurer que celui-ci n'est plus sous tension et que la remise sous tension soit interdite.

Δ Avertissement
Si en utilisation normale, des modifications de fonctionnement apparaissent telles que puissance absorbée trop élevée, température élevée, vibrations fortes, bruit intense etc. ou en rapport avec les contrôles techniques, cela laisse supposer que différentes fonctions de l'appareil peuvent être détériorées. Pour éviter ensuite des problèmes, qui pourraient entraîner de graves accidents corporels ou de graves dégats matériels, le personnel d'entretien compétent doit immédiatement être informé.

Δ Si vous êtes dans le doute, coupez immédiatement l'alimentation!

Mise en place, préparation
- Le matériel utilisé pour la manutention doit tenir compte du poids de l'équipement
- prendre largement les dimensions des embases et les réaliser exemptes de vibrations
- monter les réducteurs et motoréducteurs solidement et sans haubanage
- prévoir une aération suffisante
- prévoir le taraudage conforme à la norme DIN-EN 332 pour monter des accouplements sur les arbres d'entrée et de sortie
- éviter de donner des coups sur les arbres (cela pourrait détériorer le roulement!)
- lier autant que possible la machine et le réducteur avec des accouplements élastiques
- avant la mise en service, enlever l'élément d'accouplement ou/et fixer la clavette
- utiliser pour l'exécution arbre creux avec bras de réaction une butée en caoutchouc

Branchements électriques
- brancher le moteur selon le schéma
- s'assurer que la tension du réseau et la fréquence correspondent aux données inscrites sur la plaque signalétique
- Le cable de raccordement doit être protégé
- corriger un éventuel mauvais sens de rotation par une inversion de deux phases
- Les entrées de câbles non utilisées doivent être obturées, la boîte elle-même devant être fermée de façon à être étanche à l'eau et à la poussiére
- prévoir une protection électrique contre les surcharges, court-circuit et défaut de phases
- régler la protection électrique suivant l'intensité nominale du moteur
- schéma de branchement à la derniére page

Mise en fonctionnement
- si un stockage longue durée du réducteur est prévu, il faut prendre les dispositions nécessaires (voir spécification "Stockage longue durée")
- vérifier que la vis de niveau d'huile corresponde à la position de montage du réducteur (voir catalogue)
- contrôler le niveau d'huile
- enlever la mèche de la vis d'évent avant la mise en route (pour éviter une surpression) ou fixer le clapet d'évent sur le réducteur
- pour le premier remplissage voir le tableau des lubrifiants
- les moteurs autoventilés sont dimensionnés pour des températures ambiantes comprises entre -20°C et +40°C, ainsi que pour une altitude â 1000 mètres au-dessus du niveau de la mer
- Leur utilisation dans des atmosphères explosives est interdite, à moins qu'elles ne soient expressément prévues à cet effet (respecter les indications supplémentaires)

Wartung
MOTOR
- Staubablagerungen entfernen (Überhitzung!)
- Wälzlager ausbauen, reinigen und einfetten
- Es ist zu beachten, daß der gesamte Freiraum um das Lager ca. 1/3 mit Fett gefüllt ist
- Schmierstoffsorten siehe nächste Seite

GETRIEBE
- regelmäßige Ölstandskontrolle
- Wechseln des Schmierstoffes alle 10.000 Betriebsstunden oder spätestens nach 2 Jahren.
- Doppelte Fristen bei synthetischen Produkten
- Verkürzung der Schmierstoffwechselintervalle bei extremen Betriebsbedingungen (hohe Luftfeuchtigkeit, aggressive Umgebung und hohe Temperaturschwankungen)
- Verbinden des Schmierstoffwechsels mit gründlicher Reinigung des Getriebes

Bei den Getrieben SK 0282 NB und SK 1382 NB mit Lebensdauerschmierung sind diese Arbeiten nicht notwendig.

Δ Synthetische und mineralische Schmierstoffe nicht miteinander mischen! Das gilt auch für die Entsorgung der Schmierstoffe!

Maintenance
MOTOR
- remove dust deposit (overheating)
- dismount anti-friction bearings for cleaning and refill with grease
- ensure that the bearing cage is packed to about 1/3 with grease, distribute evenly
- select proper type of lubricating grease from following table

GEARBOX
- regular oil level check
- change lubricant every 10.000 working hours or after two years at the latest.
- combine the lubricant change with thorough cleaning of gear unit
- lubricant changing intervals will be twice as long if synthetic products are used
- extreme working conditions (high air humidity, aggressive media and large temperature variations) call for reduced lubricant changing intervals

The gearboxes SK 0282 NB and SK 1382 NB are supplied with lifetime-lubrication. Therefore they do not require the a.m. maintenance for gearboxes.

Δ Synthetic and mineral lubricants must not be mixed either for filling or for disposal!

Entretien
DU MOTEUR
- enlever la poussière du moteur (échauffement)
- démonter les roulements, les nettoyer et les regraisser
- la cage des roulements doit être remplie au 1/3 environ
- lubrifiant voir tableau ci-après

DU REDUCTEUR
- vérifier régulièrement le niveau d'huile
- vidanger le lubrifiant après 10.000 heures de fonctionnement ou au plus tard après 2 ans d'utilisation.
- profiter de la vidange pour effectuer un nettoyage approfondi du réducteur
- pour des lubrifiants synthétiques, ce délai peut être doublé
- réduire les intervalles entre les vidanges dans des conditions d'utilisation extrêmes (hygrométrie élevée, ambiance agressive ou variations importantes des températures)

Pour le réducteurs SK 0282 NB et SK 1382 NB lubrifiés à vie, ces préconisations d'entretien ne sont pas nécessaires.

Δ Des lubrifiants synthétiques et minéraux ne doivent pas être mélangés! Ceci s'applique également pour le retraitement des lubrifiants!

ÖLFÜLLMENGE [cm³]	CAPACITY [cm³]							QUANTITE DE LUBRIFIANT [cm³]				
Bauform Mounting position Positions de montage	**Waagerechte Anordnung Horizontal position Position horizontale**											
	Flachgetriebe zweistufig Helical Shaft Mounting Gearboxes double reduction Réducteurs à arbres parallèles à deux trains d'engrenages											
	0282NB	**1282**	**2282**	**3282**	**4282**	**5282**	**6282**	**7282**	**8282**	**9282**	**10282***	**11282***
H1	700	900	1.650	3.150	4.700	7.500	17.000	25.000	37.000	74.000	90.000	165.000
H2	800	900	1.900	3.250	4.750	7.500	12.000	20.000	30.000	55.000	40.000	145.000
H3	900	950	1.800	3.150	4.700	7.200	14.000	21.000	31.000	59.000	82.000	140.000
H4	900	950	1.800	3.150	4.700	7.200	10.000	16.000	31.000	69.000	60.000	100.000
Bauform Mounting position Positions de montage	**Senkrechte Anordnung Vertical position Position verticale**											
	Flachgetriebe zweistufig Helical Shaft Mounting Gearboxes double reduction Réducteurs à arbres parallèles à deux trains d'engrenages											
	0282NB	**1282**	**2282**	**3282**	**4282**	**5282**	**6282**	**7282**	**8282**	**9282**	**10282***	**11282***
H5	1.100	1.200	2.000	4.100	5.400	8.800	17.500	27.000	41.000	72.000	90.000	195.000
H6	1.000	1.300	2.400	4.100	6.100	8.800	14.000	21.000	33.000	70.000	90.000	160.000
Bauform Mounting position Positions de montage	**Waagerechte Anordnung Horizontal position Position horizontale**											
	Flachgetriebe dreistufig Helical Shaft Mounting Gearboxes triple reduction Réducteurs à arbres parallèles à trois trains d'engrenages											
	1382NB	**1382**	**2382**	**3382**	**4382**	**5382**	**6382**	**7382**	**8382**	**9382**	**10382***	**11382***
H1	1.300	1.450	1.700	4.100	5.900	12.500	16.500	22.000	34.000	73.000	85.000	160.000
H2	1.400	1.150	1.900	3.300	4.900	6.700	9.600	16.000	25.000	45.000	38.000	140.000
H3	1.900	1.100	1.500	3.300	4.900	8.300	12.500	19.000	30.000	60.000	80.000	135.000
H4	2.000	1.100	1.500	3.300	4.900	8.300	14.000	23.000	35.000	65.000	80.000	155.000
Bauform Mounting position Positions de montage	**Senkrechte Anordnung Vertical position Position verticale**											
	Flachgetriebe dreistufig Helical Shaft Mounting Gearboxes triple reduction Réducteurs à arbres parallèles à trois trains d'engrenages											
	1382NB	**1382**	**2382**	**3382**	**4382**	**5382**	**6382**	**7382**	**8382**	**9382**	**10382***	**11382***
H5	2.100	1.700	3.100	5.600	8.300	14.000	18.000	25.000	38.000	74.000	80.000	210.000
H6	2.300	1.600	2.600	4.100	6.800	12.000	13.000	20.000	32.000	70.000	80.000	155.000

* Die Getriebetypen **SK 10282 / SK 10382** und **SK 11282 / SK 11382** werden im Normalfall ohne Öl geliefert.
* Types **SK 10282 / SK 10382** and **SK 11282 / SK 11382** are supplied without lubricant as a standard.
* Les réducteurs **SK 10282 / SK 10382** et **SK 11282 / SK 11382** sont livrés sant huile.

Die Normalbefüllung der Getriebe ist Mineralöl. Synthetisches Öl ist gegen Mehrpreis lieferbar.
Standard lubricant for the gearboxes is mineral-oil. Synthetic oil is available at a surcharge.
Les réducteurs sont remplis d'huile minérale. Ils peuvent être remplis d'huile synthétique contre supplément de prix.

HINWEIS / REMARK / REMARQUE:
Ölfüllmengen sind ca.Angaben. Ölniveau anhand der Ölkontrollschrauben prüfen.
Filling quantities are approx. figures. Oil level must be checked according to oil-level plugs.
Les quantités d'huile sont données à titre indicatif. Vérifier la quantité d'huile grâce à la vis de niveau d'huile.

Hinweis:
Diese Tabelle stellt vergleichbare Schmierstoffe unterschiedlicher Hersteller dar. Innerhalb einer Viskosität und Schmierstoffsorte kann der Ölhersteller gewechselt werden. Beim Wechsel der Viskosität bzw. der Schmierstoffsorte muß Rücksprache mit uns gehalten werden, da sonst keine Gewährleistung für die Funktionstüchtigkeit unserer Getriebe übernommen werden kann.

Note:
This table lists compatible lubricants of different suppliers. Within the same viscosity class and type of lubricant the supplier can be chosen freely. In case you change the viscosity class resp. the type of lubricant you should contact us in advance as otherwise we cannot assure the proper function of our drive and the warranty becomes void.

Indication:
Ce tableau présente les lubrifiants comparables des différents fabricants. Si l'on respecte les critères de viscosité et le type de lubrifiant, on peut uiliser n'importe quelle marque d'huile après ne vidange. Afin de pouvoir garantir un bon fonctionnement de nos réducteurs, veuillez nous consulter avant de remplacer un lubrifiant par un autre possédant des caractéristiques différentes de viscosité et de type.

Schmierstoffarten / Type of lubricant / Type de lubrifiant

Schmierstoffart **Type of lubricant** **Type de lubrifiant**	**Umgebungstemp.** **Ambient temp.** **Temp. ambiante**	ARAL	BP	Castrol	DEA	ESSO	FUCHS	KLÜBER LUBRICATION	Mobil	Optimol	Shell	Tribol
Mineralöl Mineral oil Huile minérale	Schneckengetriebe 0 ... 40°C ISO VG 680	Degol BG 680 Degol BG 680 plus	--	Alpha SP 680	Falcon CLP 680	--	Renolin CLP 680 CLP 680 Plus	Klüberoil GEM 1-680	Mobilgear: - 636 - XMP 680	Optigear BM 680	Shell Omala 680	Tribol 1100/680
	ISO VG 220 - 5 ... 40°C (normal)	Degol BG 220 BG 220 plus	Energol GR-XP 220	Alpha SP 220 Alpha MW220 Alpha MAX 220	Falcon CLP 220	Spartan EP 220	Renolin CLP 220 Renolin CLP 220 Plus	Klüberoil GEM 1-220	Mobilgear 630 Mobilgear XMP 220	Optigear BM 220	Shell Omala 220	Tribol 1100 / 220
	ISO VG 100 - 15 ... 25°C	Degol BG 100 BG 100 plus	Energol GR-XP 100	Alpha SP 100 Alpha MW 100 Alpha MAX 100	Falcon CLP 100	Spartan EP 100	Renolin CLP 100 Renolin CLP 100 Plus	Klüberoil GEM 1-100	Mobilgear: - 627 - XMP 110	Optigear BM 100	Shell Omala 100	Tribol 1100 / 100
	ISO VG 15 - 45 ... - 15°C *	Vitamol 1010	Bartran HV 15	Hyspin AWS 15 Hyspin SP 15 Hyspin ZZ 15	Astron HVLP 15	Univis J13	Renolin B 15 HVI	Isoflex MT 30 rot	Mobil DTE 11 M	Ultra 10	Shell Tellus T 15	Tribol 943 AW 22
Synthetisches Öl Synthetic oil Huile synthétique	Schneckengetriebe -5 ... 60°C ISO VG 680	Degol GS 680	Energol SG-XP 680	--	--	--	Renolin PG 680	Klübersynth GH-6-680	Glygoyle HE 680	Optiflex A 680	Shell Tivela S 680	Tribol 800 / 680
	ISO VG 220 -25 ... 80°C *	Degol GS 220	Enersyn SG-XP 220	Alphasyn PG 220	Polydea PGLP 220	Glycolube 220	Renolin PG 220	Klübersynth GH-6-220	Glygoyle HE 220	Optiflex A 220	Shell Tivela WB Tivela S 220	Tribol 800/ 220
Biologisch abbaubares Öl Biodegradable oil Huiles biodégradables	Schneckengetriebe ISO VG 680 -5 ... 40°C	--	--	--	--	--	Plantogear CLP 680	--	--	--	--	--
	ISO VG 220 -5 ... 40°C	Degol BAB 220	Biogear SE 220	Carelub GES 220	Ergon ELP 220	--	Plantogear CLP 220	Klüberbio GM2-220	--	Optisynt BS 220	--	Tribol BioTop 1418 / 220
Lebensmittel-verträgliches Öl [1] Food-grad oil [1] Huiles pour environnement alimentaire [1]	Schneckengetriebe -5 ... 40°C ISO VG 680	--	--	--	--	--	Bel-Ray No-Tox Synt.Worm Gear Oil 680	Klüberoil 4 UH1-680 Klübersynth UH1 6-680	--	Optileb GT 680	Shell Cassida Fluid GL680	Tribol FoodProof 1800 / 680
	ISO VG 220 -25 ... 40°C	Eural Gear 220	--	Vitalube GS 220	--	Gear Oil FM 220	Bel-Ray No-Tox Gear Oil 90 Synt.Gear Oil 220	Klüberoil 4 UH1-220 Klübersynth UH1 6-220	Mobil DTE FM 220	Optileb GT 220	Shell Cassida Fluid GL220	Tribol FoodProof 1810 / 220 oder 1800 / 220
Synth. Fließfett Synth. fluid grease Graisse fluide synthétique	- 25 ... 60°C	Aralub BAB EP0	Enersyn GSF	Alpha Gel 00	--	Fließfett S 420	Renolit LX-PG 00	Klübersynth GE 46-1200 Klübersynth UH1 14-1600 [1]	Glygoyle Grease 00	Obeen UF 00	Tivela Comp. A Tivela GL 00	Tribol 800 / 1000

Schmierstoffarten für Wälzlager / Type of lubricant for anti friction bearings / Type de librifiant pour roulements à rouleaux												
Schmierstoffart Type of lubricant Type de lubrifiant	**Umgebungstemp. Ambient temp. Temp. ambiante**	ARAL	BP	Castrol	DEA	ESSO	FUCHS	KLÜBER LUBRICATION	Mobil	Optimol	Shell	Tribol
Fett (Mineralölbasis) Grease (mineral oil basis) Graisse (base huile minérale)	- 30 ... 60°C (normal)	Aralub HL 2	Ener-grease LS 2	Spheerol AP 2 LZV-EP	Glissando 20	Mehr-zweckfett Beacon2	Renolit FWA 160	Klüberplex BEM 41-132	Mobilux 2	Longtime PD 2	Shell Alvania R2	Tribol 4020/220-2
	* - 50 ... 40°C	Aralub SEL 2	--	Spheerol EPL2	--	--	Renolit JP 1619	--	--	Longtime PD 1	Shell Alvania RL 2	Tribol 3785
Synthetisches Fett Synthetic grease Graisse synthétique	* - 25 ... 80°C	Aralub SKL 2	--	Product 783/46	Discor B EP 2 LF	Beacon 325	Renolit S 2 Renolit HLT 2	Isoflex Topas NCA 52 Isoflex Topas NB 52	Mobiltemp SHC 32	Optitemp LG 2	Aero Shell Grease 16 oder 7	Tribol 3499
Biologisch abbaubares Fett Biodegradable Grease Graisse biodégradables	- 25 ... 40°C	Aralub BAB EP 2	BP Bio-grease EP 2	Biotec	Dolon E EP 2	--	Plantogel 2 S	Klüberbio M 32-82	Schmierfett UE 100 B	EF 584	Shell Alvania RLB 2	Molub-Alloy BioTop 9488
Lebensmittelver-trägliches Fett [1] Food-grade grease[1] Graisse pour environnement alimentaire [1]	- 25 ... 40°C	Eural Grease EP 2	BP Energreas e FM 2	Vitalube HT Grease 2	Tamix FRA 1	Carum 330	Renolit G 7 FG 1	Klübersynth UH1 14-151	Mobil-grease FM 102	Obeen UF 2	Shell Cassida RLS 2	Molub-Alloy Food-Proof 823-2 FM

* Bei Umgebungstemperaturen unterhalb -30°C und oberhalb 60°C sind Wellendichtringe in besonderer Werkstoffqualität einzusetzen
* With ambient temperatures below -30°C and above approx. 60°C shaft sealing rings of a special material quality must be used
* Lors d'une température ambiante inférieure à -30°C ou supérieure à environ 60°C, il y a lieu d'utiliser des joints d'étanchéité spéciaux

[1] Lebensmittelverträgliche Öle + Fette nach Vorschrift H1 / FDA 178.3570
[1] Food grade lubricants with USDA-H1 approval FDA 178.3570
[1] Huiles pour environnement alimentaire + graisses suivant prescription H1 / FDA 178.3570

Hohlwelle mit Schrumpfscheibe - Montage - Demontage und Wartungshinweise
Hollow shaft with shrink-discs - Assembly - Dismantling suggestions and maintenance
Exécution des arbres creux avec frette de serrage - Montage - Démontage et entretien

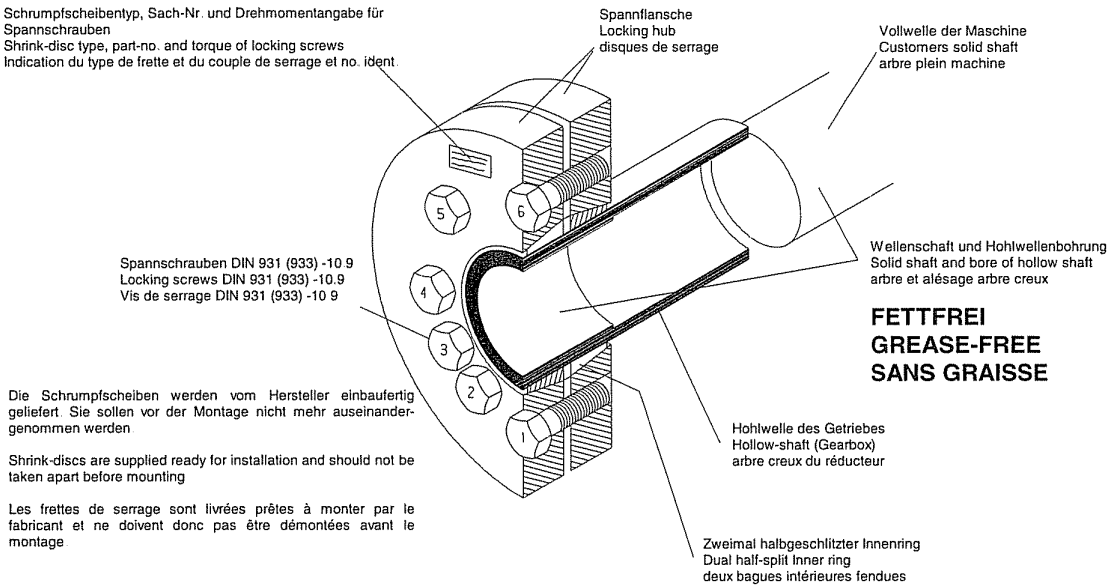

Montageablauf:

1. Entfernen der Transportsicherung zwischen den Flanschen, falls vorhanden.
2. Anziehen der Spannschrauben (leicht von Hand) bis das Spiel zwischen den Flanschen und dem Innenring beseitigt ist. Der Innenring muß noch leicht drehbar sein.
3. Einfetten der Bohrung des Innenringes, dadurch leichte Montage der Schrumpfscheibe auf die Getriebehohlwelle.
4. Aufsetzen der Getriebehohlwelle auf die Maschinenwelle.

Maschinenwellenschaft und Hohlwellenbohrung müssen im Bereich der Schrumpfverbindung absolut fettfrei sein.
Die Maschinenwelle vor der Montage im Bereich, welche später Kontakt mit der Bronzebuchse der Hohlwelle hat, einfetten. Die Bronzebuchse nicht einfetten, um bei der Montage eine Befettung des Schrumpfsitzes zu vermeiden.

5. Durch leichtes Anziehen der Spannschrauben positionieren sich die Spannflansche automatisch.
6. Festziehen der Spannschrauben der Reihe nach im Uhrzeigersinn über mehrere Umläufe - nicht überkreuz - 1/4 bis 1/2 Schraubenumdrehung pro Umlauf.Die Spannschrauben mit einem Drehmoment- schlüssel bis zu dem auf der Schrumpfscheibe oder in der Maßtabelle angegebenen Anzugsdrehmoment anziehen.

Demontageablauf:

1. Spannschrauben der Reihe nach über mehrere Umläufe lösen, pro Umlauf ca. 1/4 Umdrehung. Spannschrauben nicht aus ihrem Gewinde entfernen - **Unfallgefahr!!**
2. Die Spannflansche sind vom Konus des Innenringes zu lösen.
3. Abnehmen des Getriebes von der Maschinenvollwelle.

Wartung der Schrumpfscheiben:
Eine montierte Schrumpfscheibe ist wartungsfrei. War eine Schrumpfscheibe längere Zeit im Einsatz und wurde demontiert, dann ist sie vor der erneuten Montage zu zerlegen und zu reinigen. Nach der Reinigung sind die Kegelflächen (Konus) der Spannflansche und des Innenringes mit Molykote G-Rapid Plus oder vergleichbarem Schmierstoff einzustreichen. Die Schrauben sind im Gewinde und Kopfauflage mit normalem Fett zu behandeln.

Installation instructions:

1. Remove transportation spacers (if provided) located between outer collars.
2. Lightly handtighten locking screws to eliminate play between outer collars and inner ring. You should still be able to easily turn inner ring.
3. Lightly lubricate the bore of the shrink-disc to facilitate easy mounting onto hollow-shaft of reducer.
4. Fit shrink-disc onto hollow-shaft and mount hollow-shaft reducer onto solid shaft.

Hollow- and solid shaft must be clean and free from any lubricant.
Exception: Grease solid shaft at end where it will make contact with bronze bushing of the hollow-shaft when it is mounted. Never grease the front of the solid shaft which makes contact under the shrink-disc. Tighten locking screws only after mounting the hollowshaft onto the solid shaft.

5. Now tighten locking screws only lightly to position outer collars.
6. Use torque wrench and equally tighten all screws one after another (never cross wise) in a clockwise or counter clockwise sequence by approximately 1/4 to 1/2 turn until specified tightening torque (per table) is reached.

Removal:

1. Loosen locking screws in sequence in several steps by using approximately 1/4 turns. **Danger** - Do not remove locking screws completely.
2. Loosen the outer collars from the double tapered inner ring.
3. Remove hollow-shaft reducer from solid shaft.

Maintenance:
An installed shrink-disc is maintenance free. Before reinstalling (after prolonged use) it should be taken apart and thorougly cleaned. Relubricate the taper of the outer collars and of the inner ring with Molycote G-Rapid plus or equivalent. Regrease screw threads and head contact area with mulitpurpose grease.

Procédure de Montage:

1. Les éventuelles protections de transport placées entre les surfaces de serrage doivent être retirées.
2. Les vis de serrage doivent être légèrement serrées à la main, jusqu'à ce qu'il n'y ait plus de jeu entre les surfaces de serrage. L'anneau intérieur doit toutefois pouvoir encore être tourné aisément.
3. L'alésage (D1) de la bague intérieure de la frette doit être légèrement graissé. De la sorte, le montage de la frette sur l'arbre creux est facilité.
4. Positionner l'arbre creux réducteur sur l'arbre machine.

L'arbre machine et l'arbre creux doivent absolument être exempt - de - graisse - au niveau de la liaison par frette.
Préalablement au montage, l'arbre machine doit être graissé à l'endroit du position-nement prévu de la bague bronze de l'arbre creux. Ne pas graisser la bague bronze, pour éviter un graissage du siège de la frette lors du montage.

5. Serrer légèrement les vis de serrage de la frette, afin que les surfaces de serrage se positionnent automatiquement.
6. Serrer les vis dans le sens des aiguilles d'une montre les unes après les autres, en plusieurs fois, en faisant à chague fois d' 1/4 à 1/2 tour de vis. Ne pas serrer en diagonale! Utiliser une clef dynamométrique pour le serrage. Les couples de serrage sont indiqués sur les frettes, ou doivent être relevés sur les plans.

Procédure de démontage:

1. Les vis de serrage doivent être desserrées dans l'ordre, les unes après les autres, en plusieures fois, avec environ 1/4 de tour par vis à chaque fois. Ne pas sortir les vis du filetage. **Risque d'accident!!**
2. Le plan de serrage doit être écarté du cône de la bague intérieure.
3. Retirer le réducteur de l'arbre machine.

Entretien des frettes de serrage:
Une frette de serrage montée ne nécessite aucun entretien. Si une frette utilisée depuis un certain temps est demontée, un nettoyage préalable à toute nouvelle utilisation est nécessaire. Après nettoyage, les surfaces coniques de serrage et la bague intérieure doivent être enduites de Molykote G-Rapid Plus ou d'un type de graisse analogue. Les filetages et têtes de vis doivent être graissés normalement.

BAUFORMEN
MONTING POSITIONS
POSITIONS DE MONTAGE

Waagerechte Anordnung — Horizontal position — Position horizontale

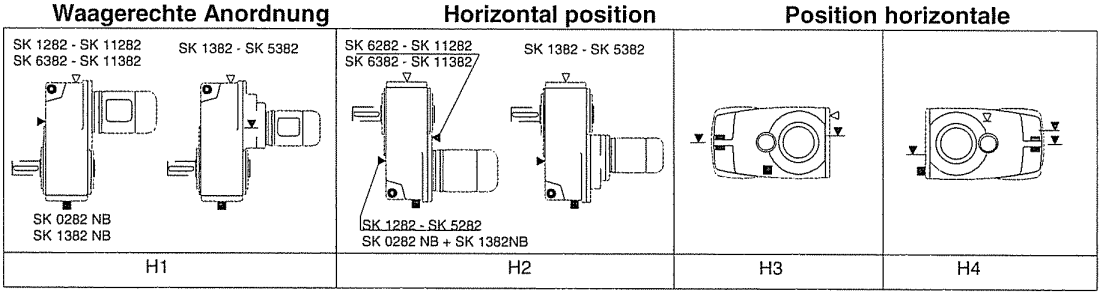

H1	H2	H3	H4

Senkrechte Anordnung — Vertical Position — Position verticale

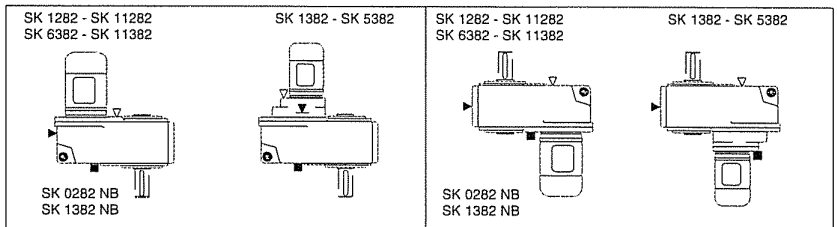

H5 *	H6

Symbole: / Symbols: / Symboles:
Entlüftung / Vent plug / Event
Ölstand / Oil level / Niveau d'huile
Ölablaß / Drain plug / Vidange
Gummipuffer / Rubber buffer / Butées caoutchouc

*** Bauform H5 mit Ölausgleichsbehälter (siehe Katalog G1000)**
*** Mounting position H5 with lubricant expansion unit (see catalogue G1000)**
*** Position de montage H5 avec réservoir de compensation de niveau d'huile (voir catalogue G1000)**

Die Getriebe **SK 0282 NB und SK 1382 NB** sind mit mineralischen Ölen befüllt. Es gibt keine Entlüftungs- oder Ölablaßschrauben.
Die Getriebe **SK 1282 – SK 11382** sind ebenfalls mit Mineralöl befüllt. Diese Getriebe haben Entlüftungs-, Ölstand- und Ölablaßschrauben. (siehe Bauformen)

The Gear Units **SK 0282 NB and SK 1382 NB** are lubricated with mineral-oil. There are no vent or drain plug.
The standard-lubrication for sizes **SK 1282 – SK 11382** is also mineral-oil. There are vent and drain plugs (see mounting positions).

Les réducteurs **SK 0282 NB** sont remplis d'huile minérale. Il n'y a aucune vis ni clapet d'évent.
Les réducteurs **SK 1282 – SK 11382** sont remplis d'huile minérale (voir positions de montage).

Schaltbilder / Wiring diagrams / Schémas de branchement

Drehstrom-Motor mit Kurzschlußanker
Three phase squirrel-cage motor
Moteur triphasé à cage d'écureull

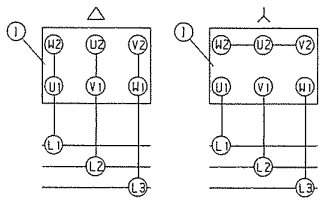

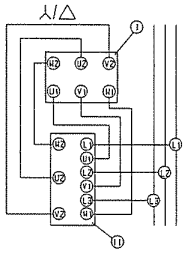

I) Klemmbrett
Terminal board
Plaque à bornes

II) Schalter
Switch
Démarreur

Drehstrom-Motor mit Kurzschlußanker, in Dahlander-Schaltung
Three phase squirrel-cage motor, Dahlander connection
Moteur triphasé à cage d'écrureull, couplage Dahlander

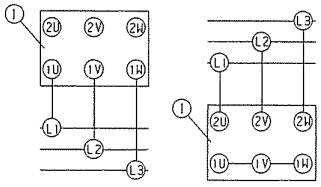

niedrige - Drehzahl - hohe
low - speed - high
inférieure - vitesse - supérieure

Drehstrom-Motor, polumschaltbar, zwei getrennte Wicklungen
Three phase motor, polechanging, two separate windings, two speeds
Moteur triphasé à commutation de pôles, deux bobinages séparés, deux vitesses

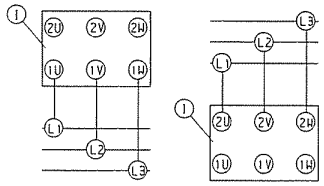

niedrige - Drehzahl - hohe
low - speed - high
inférieure - vitesse - supérieure

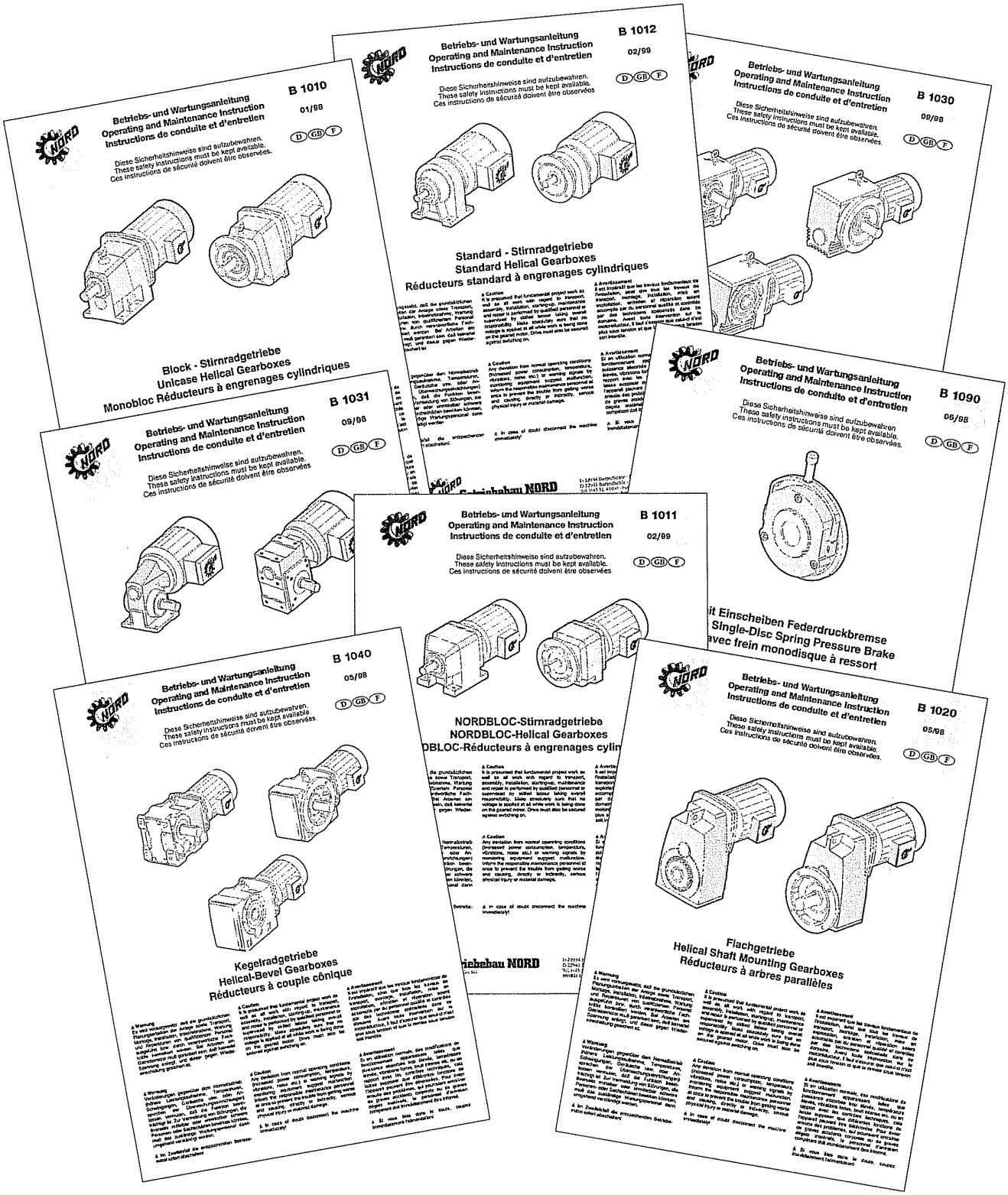

Getriebebau NORD
GmbH & Co. KG
D-22934 Bargteheide · P.O.Box 1262
D-22941 Bargteheide · Rudolf-Diesel-Straße 1
Tel. 0 45 32/4 01-0 · Fax 0 45 32/40 12 53
NORD Internet: http://www.nord.com

Art.-Nr. 06062100 08.00

LEFT BLANK

MIXERS

MOTORS

LEFT BLANK

BIM 1004

USA

CDN

MOTORS
AC Induction, Single and Polyphase
Installation and Maintenance Instructions

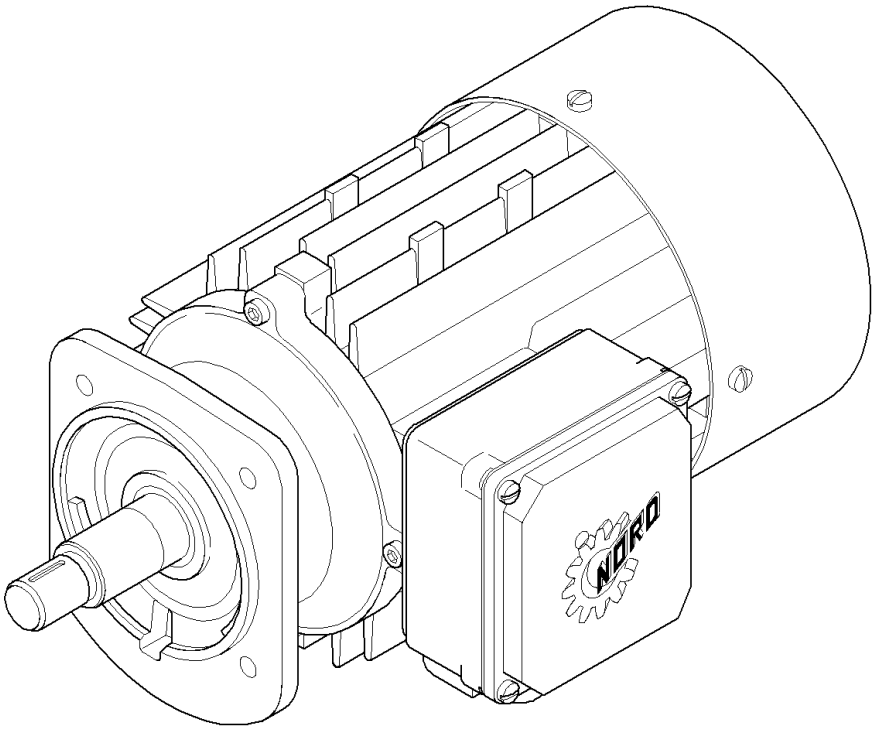

Copyright © 2005, NORD Gear Corporation

All rights reserved. No part of this book covered by the copyright hereon may be reproduced or copied in any form or by any means without the written permission of the NORD Gear Corporation.

NOTES

TABLE OF CONTENTS

Subject	Page
Introduction	4
Description and Operation	4
Inspection	6
Testing and Fault Isolation	7
Lubrication	9
Removal, Installation, and Handling	9
Connection Diagrams	12
Repair	13
Parts List	14
Motor Options & Nomenclature	17

LIST OF ILLUSTRATIONS

Figure No.	Figure Title	Page
Figure 1	Motor Nameplates	5
Figure 2	Motor & Options Connection Diagrams	12
Figure 3	General Motor Exploded View and Generic Parts List (2 pages)	15

LIST OF TABLES

Table No.	Table Title	Page
Table 1	Related Publications	4
Table 2	Nameplate Data	5
Table 3	Motor Inspection Criteria	6
Table 4	Motor Fault Isolation	8
Table 5	Motor Option Codes & Nomenclature	17
Table 6	Space Heater Data	19
Table 7	Encoder Wiring Designations	19
Table 8	Blower Cooling Fan Data	20

INTRODUCTION

1. General

   This manual includes general motor description and operation, inspection, testing and fault isolation procedures and information, general lubrication instructions and materials, general installation, removal, and handling instructions, and general repair and parts information.

2. Related Publications

   The related publications listed in Table 1 provide additional information to support maintenance and fault isolation of the motor and its installation.

Publication Number	Publication Title
BIM 1001	Hollow Shrink Disc Shaft
BIM 1002	Hollow Keyed Shaft and Fixing Element
BIM 1003	Expansion Chambers
BIM 1004	Motors AC Induction, Single Phase and Polyphase
BIM 1009	NORD Gearbox Inputs (Motor Adapters and Couplings)
BIM 1010	UNICASE® Helical Gearboxes
BIM 1011	NORDBLOC® Helical Gearboxes
BIM 1012	Standard Helical Inline Gearboxes
BIM 1020	UNICASE® Shaft Mount Gearboxes
BIM 1030	UNICASE® Helical Worm Gearboxes
BIM 1031	MINICASE® Worm Gearboxes
BIM 1033	SI Design UNIBLOC® Worm Gearboxes
BIM 1040	UNICASE® 90.1 Helical Bevel Gearboxes
BIM 1090	Motor Brakes
BIM 1142	NORDBLOC® 92 Series Helical Bevel Gearboxes
BIM 4010	Titan Mechanical Adjustable Speed Drives
BIM 4020	NORDISC® Friction Disc Mechanical Adjustable Speed Drives

Table 1. Related Publications

DESCRIPTION AND OPERATION

1. General

   This manual provides general installation and maintenance information for the NORD family of motors described in this section.

2. Description

   The NORD motors covered in this manual are single phase and poly-phase motors (refer to Table 2), can be single speed or two-speed, and may include the options listed in the Motor Options Section. Motor options, electrical requirements, performance characteristics, and motor data are identified on the motor nameplate. The nameplate drawing is provided in Figure 1. Definition of each entry field is provided in Table 2.

3. Operation

   The motors described in this manual are alternating current (AC) induction motors, single speed or two-speed, and convection-cooled, fan cooled, or blower cooled. The motors may use single phase or three phase alternating current.

   Cooling options include convection cooling (TENV), fan cooling (TEFC), and blower cooling (TEFB). Because the fan is mounted on the motor shaft, the fan speed is identical to the motor speed, and the cooling capacity varies with the motor speed. The blower uses its own motor and a separate power supply to provide a specific airflow and cooling capacity. The blower power data are provided in Table 8.

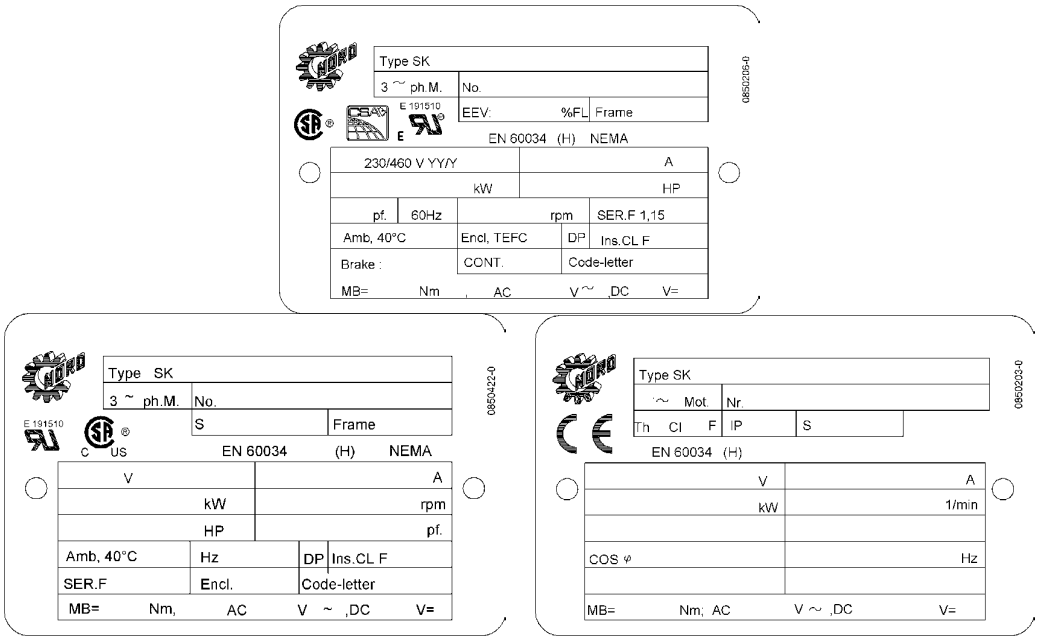

Figure 1. Motor Nameplates

Field	Definition	Field	Definition
Type	Model Number	DP	Drip Proof
3~ph.M.	Number of Motor Phases	Ins. Cl	Insulation Class
No.	Motor Number	SER. F	Service Factor (allowable horsepower loading)
S	Duty Cycle (i.e. S1, S3-40%)	Encl.	Enclosure Description
Frame	Motor Frame Size	Code	NEMA Code Letter
V	Motor Voltage	EEV	
A	Motor Full-Load Amperage	COS φ	Power Factor
HP	Motor Horsepower	MB=	Motor Brake Force (Newton Meters)
rpm	Motor Speed	AC	Alternating Current
pf.	Power Factor	V~	AC Voltage
Amb	Maximum Ambient Temperature	V=	DC Voltage
Hz	Motor Power Frequency		

Table 2. Nameplate Data

INSPECTION

1. Inspection Interval
   Inspect the motor after every 500 operating hours.

2. Inspection Criteria
   Inspect the motor according to the criteria in Table 3.

CAUTION: IF IT IS NECESSARY TO CLEAN THE MOTOR EXTERIOR, DO NOT USE SHOP AIR. SHOP AIR CAN FORCE CONTAMINANTS INTO THE MOTOR, AND CAN CAUSE THE BLOWN CONTAMINANTS TO AFFECT OTHER COMPONENTS.

Inspect	Check	Action
Motor exterior	Check the external surfaces for contamination. Accumulation of dirt and fibrous deposits must be removed.	Clean the motor external surfaces using clean, lint-free cloths. Clean deposits from between cooling fins using a vacuum cleaner and a stiff-bristled nylon brush.
	Check the external surfaces for oil film and greasy deposits.	Clean the oil film and greasy deposits from the motor surface using clean, lint-free cloths. If necessary, moisten the cloth with an approved non-flammable, residue-free solvent. Do not pour solvent on the motor.
	Check for evidence of damage or overheating.	If the motor has physical damage, replace the motor.
Motor mountings	Make sure the mounting hardware is secure.	If the mounting hardware is not secure, check the motor/gearbox alignment, and tighten the mounting hardware.
Motor electrical connections	Check that all electrical connections are secure.	If the electrical connections are not secure, tighten them.
	Check the electrical connections for evidence of arcing.	Loose electrical connections can cause arcing, which is evident by discoloration and charring. If you find evidence of arcing, replace the damaged connections.
Insulation resistance	Using an ohmmeter, check and record the resistance of motor winding insulation.	Compare the current resistance reading to previous readings. If the resistance drops significantly, perform an internal inspection for insulation damage or deterioration.
Motor Brake	On motors that have a brake, use a feeler gauge to check the air gap in between the brake pad and the rotor according to NORD Gear Corporation Manual BIM-1090, Motor Brakes Installation and Maintenance Instructions.	If the air gap exceeds the maximum allowed for that brake configuration provided in the manual, adjust the air gap or replace the brake pad according to the instructions in NORD Gear Corporation Manual BIM-1090, Motor Brakes Installation and Maintenance Manual.

Table 3. Motor Inspection Criteria

TESTING AND FAULT ISOLATION

1. General

NOTE: NORD electric motors do not require periodic testing. However, if a motor is removed from its installation, NORD recommends that the motor be checked according to the static and dynamic testing provided below before it is reinstalled. Finding a condition that will require future repair before the motor is reinstalled decreases the overall maintenance time.

This section provides general test information and functional checks for the types of motors covered by this manual. All tests provided below may not apply to all motor types and models. Read and understand the tests and checks before performing them on your motor. Understand how the test or check is to be performed and the pass/fail criteria.

Record and date all measurements taken. Retain the measurements in a file. Comparing current and previous measurements is useful in tracking motor condition and brake wear, if the motor is equipped with a brake.

If the motor fails any of the test procedures provided below, use the fault isolation procedures to determine the motor problem. Refer to the REPAIR section to determine if the failure is a repairable failure.

2. Testing

A. Static Testing

1. The motor can only be static tested if it is disconnected from the component it drives and securely mounted on a fixture or mounting plate. These tests are usually conducted when a motor has been removed for any reason other than failure
2. Turn the motor shaft slowly by hand. Feel and listen for evidence of a failed bearing, which is indicated by a rough feel as the shaft rotates, and by noise.
3. Check for smooth rotation, with no evidence of binding or catching. If the shaft does not rotate smoothly, or binds or catches, the bearings are worn or failing, lack lubrication, or are contaminated.
4. Check the motor shaft for side play by applying pressure at right angles to the shaft in several places around the circumference. If the shaft moves perceptibly, the front bearing is worn.
5. If the motor shaft feels rough as it is turned or makes unusual noise, the motor bearings are failing, lack lubrication, or are contaminated. Replace the motor bearings, or clean and re-lubricate the bearings, as applicable. Refer to the REPAIR section.
6. If the bearing shaft shows play in the bearing, the bearing is worn or failing. Replace the motor bearings according to the REPAIR section.

B. Dynamic Testing

1. Find the motor voltage and rated load current values as listed on the motor nameplate.
2. Using a volt-ohmmeter, verify that the motor power supply is in the correct range.
3. Run the motor with no load. As the motor is operating, listen for unusual motor noise and check for excessive vibration. Vibration and motor noise are indications of bearing contamination, lack of lubrication, damage, or failure.
4. Use an ammeter to measure the no-load current. Record the no-load current for comparison with previous readings, and for reference during future testing.
5. If the motor passes the no-load test, operate the motor at rated load and check and record the current.
6. Check the motor operating temperature at rated load. If the motor operates at a higher than normal temperature, the motor is failing.
7. If the motor has an integral brake, check the brake operating temperature. If the brake operates at a higher than normal temperature, the brake is not releasing completely. Refer to the REPAIR section.

3. Fault Isolation

If the motor has failed or does not meet the requirements of any of the tests described above, use the fault isolation procedures provided in Table 4, Motor Fault Isolation. The table is based on the assumption that the motor has been operating correctly, and that a problem has occurred. If a newly installed motor does not operate correctly, the problem is an installation problem.

Fault	Check	Corrective Action
Motor doesn't operate	Check the circuit breaker.	The breaker has tripped. Reset the breaker. If the breaker trips immediately, the motor windings have shorted. Replace the motor.
	Check the motor and the gearbox separately to determine which has failed.	Replace the motor or the gearbox, as applicable.
	If the breaker has not tripped, check the power circuitry to the motor.	If the power circuitry has opened, repair the power circuitry.
	Check for an open in the motor windings.	If the motor windings have an open circuit, replace the motor.
Motor is noisy	Separate the motor from its gearbox and check the shaft bearings by hand according to the TEST instructions.	If the bearings feel rough, replace the bearings according to the instructions in REPAIR.
Motor thermal protection trips	Check the motor exterior for an excessive accumulation of oil and dirt that can inhibit cooling.	If the motor exterior is excessively dirty, clean the motor surface using clean, lint-free cloths. If the motor has a finned casing, use a vacuum cleaner and a stiff-bristled nylon brush to remove dirt and debris from between the fins.
	If the motor has a vented enclosure, check the vent openings to make sure they are clear.	If necessary, clean the vent openings.
	Visually check for heat-discolored paint, which is evidence of a motor overheat.	If the motor casing shows heat discoloration, the motor is failing. Replace the motor.
	Check the system load.	If the load applied to the system is above rated load, it should be reduced, if possible, to avoid affecting motor life.
Motor slows during operation	Check for increased load.	If the load has increased beyond rated load, correct the overload condition to prevent damage to the motor.
	Check for supply voltage drop.	Supply voltage must be within 10 percent of nominal voltage. If the supply voltage is less than 90 percent of rated voltage, correct the supply voltage to avoid damage to the motor.
	Check the gearbox and the motor bearings for wear and drag that increases as the system temperature rises.	If the gearbox drag increases during operation, repair the gearbox. If the motor bearing drag increases as the motor operates, replace the bearings according to REPAIR.

Table 4. Motor Fault Isolation

LUBRICATION

1. General

NORD motor frame sizes 63 up to and including 225 are prelubricated, therefor require no lubrication during normal operation.

Frame sizes 250 and larger will have grease fittings for regreasing the motor bearings. Relubricate bearings every six months (more often if conditions require) using a polyurea base grease, No. 2 consistency & stabilized against oxidation.

REMOVAL, INSTALLATION, AND HANDLING

1. General

Removing, installing, and handling any NORD electric motor follow the same general procedures. Follow the general procedures provided below. Observe all WARNINGs and CAUTIONs.

If you have any questions about the procedure to use to handle, install, or remove a specific motor, call NORD Gear Corporation. Please read the following WARNINGS & CAUTIONS prior to any work on the motor.

WARNING: **IF THE MOTOR HAS AN INTEGRAL BRAKE, VERIFY THAT THERE IS NO LOAD ON THE GEARBOX BEFORE RELEASING THE BRAKE. THIS WILL PREVENT POSSIBLE INJURY AND POTENTIAL EQUIPMENT DAMAGE FROM A DROPPED LOAD.**



WARNING: **THE MOTOR ELECTRICAL POWER HAS DANGEROUS CURRENT LEVELS. TO PREVENT SERIOUS INJURY, SHUT DOWN THE POWER TO THE MOTOR AT ITS CIRCUIT BREAKER OR POWER SWITCH BEFORE REMOVING OR INSTALLING ANY MOTOR. LOCK OUT THE BREAKER OR SWITCH AND POST IT WITH AN "OUT OF SERVICE" PLACARD.**



WARNING: **LARGE MOTORS ARE HEAVY, EASY TO UNBALANCE, AND ARE AWKWARD TO LIFT AND MOVE. EVEN SMALLER MOTORS ARE HEAVY. HAVE ASSISTANCE WHEN LIFTING AND MOVING HEAVY MOTORS. IF NECESSARY, USE APPROPRIATE LIFTING DEVICES TO LIFT AND MOVE HEAVY MOTORS.**



CAUTION: **TO PREVENT DAMAGE TO THE MOTORSHAFT, BEARINGS, AND THE MATING HUB/SHEAVE IN THE GEARBOX, MAINTAIN SHAFT ALIGNMENT WHILE REMOVING THE MOTOR FROM ITS GEARBOX.**

2. Removal

A. Drain the oil from the mating gearbox, or rotate the motor/gearbox assembly so that the motor is up, to prevent oil from spilling from the gearbox when the motor is removed.
B. Shut down the power to the motor at the main circuit breaker or power switch. Lock out the breaker or switch and place an "OUT OF SERVICE" placard on the breaker or switch.
C. Disconnect the wiring to the motor. Tag each wire as it is disconnected.
D. Prepare the motor for removal by supporting the motor appropriately. For smaller motors, use assistance to steady the motor or support it. For larger motors, use mechanical lifting or support devices to steady and support the motor.
E. Remove the bolts and washers securing the motor to the its mounting.
F. Maintain motor shaft alignment, and move the motor away from its mounting pad until the motor shaft clears its mating hub/sheave or gearmesh. If the motor shaft is a keyed shaft, keep the drive key with the motor.
G. Remove and discard the flange gasket. Clean the gasket material from the flange.

3. Installation with NEMA and IEC Flanges

Refer to NORD Gearbox Inputs Installation and Maintenance Instructions in BIM1009.

A. Make sure the flanges are clean and free of gasket material. Install a new gasket between the mating flanges, if applicable.
B. Carefully move the motor to insert the motor shaft and its hub/sheave into the adapter spline, making sure the shaft key enters the mating keyway.
C. Seat the motor flange against the mating flange. Install the mounting bolts and tighten them securely.
D. Reconnect the wiring to the motor. Refer to Figure 2 for the motor and options connection diagrams.

4. Removing and Replacing C-Face Motors

A. Shut off the power to the motor and post the shutoff with an "OUT OF SERVICE" placard. Disconnect the wiring to the motor. Tag each wire as it is disconnected.
B. Support the motor. Remove four bolts securing the motor to the NEMA or IEC adapter.

NOTE: The bolts securing the motor to the adapter are retained using a medium strength thread locker such as blue Loctite.

C. Pull the motor straight out from the adapter.
D. Measure and record the dimension from the coupling to the motor flange. Use this dimension to locate the coupling on the replacement motor.
E. Install a new drive key in the keyway, staking the key or using Loctite to retain the key in the keyway, according to the following instructions:

1) If the drive key is not trapped in the keyway (the keyway is open at both ends), stake and install the drive key as follows:

a. Make sure the keyway is free of contamination so that the drive key will seat properly.
b. Add a few drops of an approved lubricant to the keyway.
c. Place the drive key on an appropriate surface with the shaft side of the drive key up. Stake the key in two places near each long edge to deform the edge outward.

CAUTION: SUPPORT THE MOTOR SHAFT BEFORE STAKING THE KEY TO PREVENT DAMAGE TO THE MOTOR BEARINGS.

d. Support the motor shaft in V-blocks. Place the key with the staked surface down over the key slot. Place a sheet of copper shimstock, or equivalent, on the drive key and tap it into the keyway using a hammer.
e. Check the key to make sure it is fully seated and securely retained.

2) Install and Loctite the drive key as follows:

a. Make sure the keyway is clean of old Loctite and is free of oil film.
b. Apply Loctite primer and medium strength (blue) Loctite to the surface of the key and keyway according to the Loctite instructions.

CAUTION: IF THE DRIVE KEY IS TO BE LOCTITED IN PLACE, CLEAN ALL THE LOCTITE FROM THE SURFACE OF THE DRIVE KEY AND THE MOTOR SHAFT TO PREVENT POSSIBLE BONDING OF THE COUPLING AND SPLINE SHAFT TO THE DRIVE KEY.

c. Install the drive key and center it in the keyway. Cure the Loctite according to Loctite instructions.

F. Clean all contamination and corrosion from the mating flanges.
G. Support the motor and mount it to the adapter.
H. Apply a medium strength thread locking compound such as blue Loctite to the bolt threads according to the instructions. Install the bolts and tighten them securely.
I. Reconnect the wiring to the motor. Refer to Figure 2 for the motor and options connection diagrams.

5. Removing and Replacing Integral Motors

A. Shut off the power to the motor and post the shutoff with OUT OF SERVICE. Disconnect the wiring to the motor. Tag each wire as it is disconnected.
B. Support the motor and remove the bolts securing the motor to the gearbox.

NOTE: Most integral motor installations have mounting bolts accessible from the motor exterior. If the bolts are not visible, unbolt the input flange from the gearbox. Remove four bolts that mount the motor. Remove and discard the Dubo gaskets from the bolts.

C. Remove the motor from the gearbox.
D. Clean the gasket faces on the motor and gearbox, making sure no cleaning debris enters the gearbox.
E. Check the replacement motor to make sure the motor flange, motor shaft, and motor pinion are identical to the motor that was removed.
F. Place a new gasket between the gearbox and new motor.
G. Position the motor on the gearbox, making sure the input pinion meshes with the input gear. Rotate the motor as necessary to align the bolt holes and seat the motor flange. Make sure the gasket remains properly aligned and seated.
H. Apply a medium strength thread locking compound such as blue Loctite to the bolt threads according to the instructions. Install the bolts and tighten them securely.

NOTE: If the motor/gearbox installation uses an input flange, mount the input flange to the motor using four mounting bolts and new Dubo gasket. Tighten the bolts securely.

CAUTION: DO NOT TO MIX TYPES OF OIL.

I. Check the gearbox oil level. If necessary fill the gearbox or add oil to bring the gearbox oil to the correct level. Check the installation and maintenance manual for your gearbox to find the correct oil for the gearbox.
J. Reconnect the wiring to the motor. Refer to Figure 2 for the motor and options connection diagrams.

6. Handling and Lifting

A. Before lifting any motor, disconnect all electrical connections. Tag each wire as it is disconnected.
B. Disconnect the motor from the gearbox. Do not lift the motor while it has other equipment attached to it.
C. If the motor has provisions for a lifting eye, turn in an appropriately sized lifting eye and lock it in place with the locking nut. Lift the motor by the lifting eye using an appropriate lifting device.
D. If the motor does not have provisions for a lifting eye, seek assistance or use appropriate lifting devices as necessary.

7. Storage

If the motor is not in service, store it according to the following conditions:

A. Cover the motor and store it in a clean warehouse environment protected from dust and fluids.
B. If the motor has internal heaters, power the heaters during storage if the storage environment is extremely humid. The heaters will prevent moisture buildup in the motor interior.
C. Before placing the motor in service, visually inspect the motor exterior for evidence of deterioration during storage. Turn the motor shaft by hand to make sure the shaft turns smoothly and freely.

CONNECTION DIAGRAMS

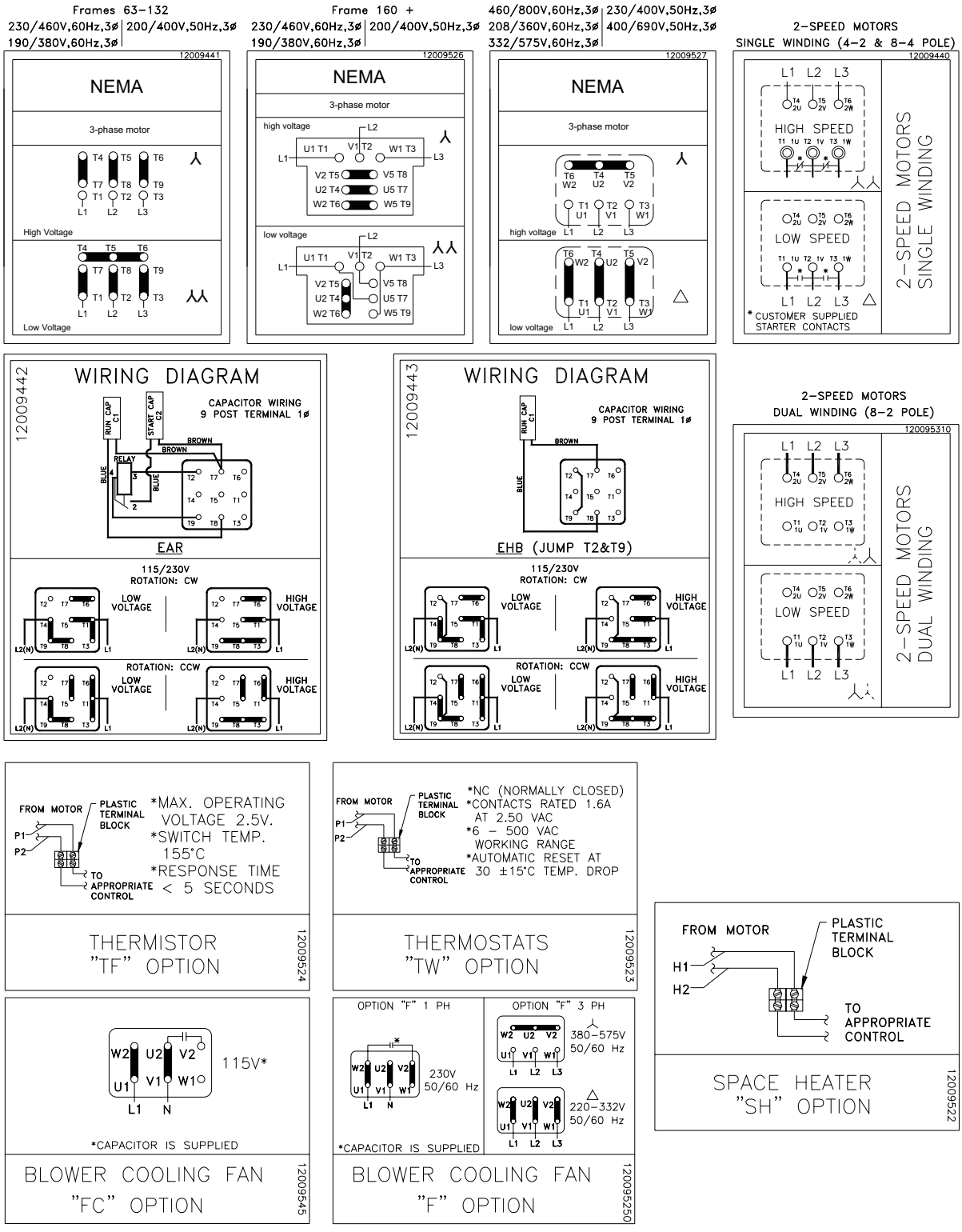

Figure 2. Motor Connection and Wiring Diagrams

REPAIR

1. General

These instructions can be generally applied to NORD motor applications. The exploded view provided in the PARTS INFORMATION section shows the parts orientation for NORD motors.

To procure replacement parts from NORD, contact NORD's customer service department (refer to INTRODUCTION). Provide NORD with the motor part number and serial number, and the item reference number and nomenclature from the parts information figure, which will identify the part for your motor application.

A. The following parts must be replaced if they are removed:

- Oil seal (904), Oil seal (933)
- Gasket (909), Gasket (910), Gasket (921)
- Gasket on plug (961)
- Self-locking screws (907-1, 908-1, 923, 932-1, 940-1)

B. If the following parts are removed, inspect them, and replace them if they are deformed:

- Retaining ring (919), Retaining ring (947), Retaining ring (948)
- Fan clip (952)

C. Disassemble the motor according to the general exploded view in PARTS INFORMATION. Disassemble only as far as necessary to replace the failed parts.

D. Whenever the motor is disassembled, clean all dust and contamination from the motor interior using a vacuum cleaner and a soft-bristled nylon brush.

PARTS LIST

1. General

Refer to Figure 4 for parts information. If you are ordering a part, provide the model and serial number of your motor. This will determine the part number you need.

Part Number	Part Description	Qty per Assembly
900	Rotor Assembly	1
902	A-Endbell	1
904	Oil Seal	1
905	Bearing	1
906	Preload Spring	1
907	T-Box Frame	1
907-1	Screw	4
908	T-Box Cover	1
908-1	Screw	4
909	T-Box Frame Gasket	1
910	T-Box Cover Gasket	1
916	Stator Assembly	1
918	Drive Key	1
919	Retaining Ring	1
920	Oil Plug	1
921	Gasket	1
923	Screw	4
929	Bearing	1
932	B-Endbell	1
932-1	Screw	4
933	Oil Seal	1
939	Fan	1
940	Fan Cowl	1
940-1	Screw	4
947	Retaining Ring	1
948	Retaining Ring	1
952	Fan Clip	1
960	NPT Thread Adapter	1
961	Plug (includes O-ring)	1
***	Spur Drive Gear (alternate to integral bevel gear)	AR
TBLK	Terminal Block	1
TBLK-1	Screw, Terminal Block Mounting	2
ø ø ø	Jumper Bar (not illustrated)	AR

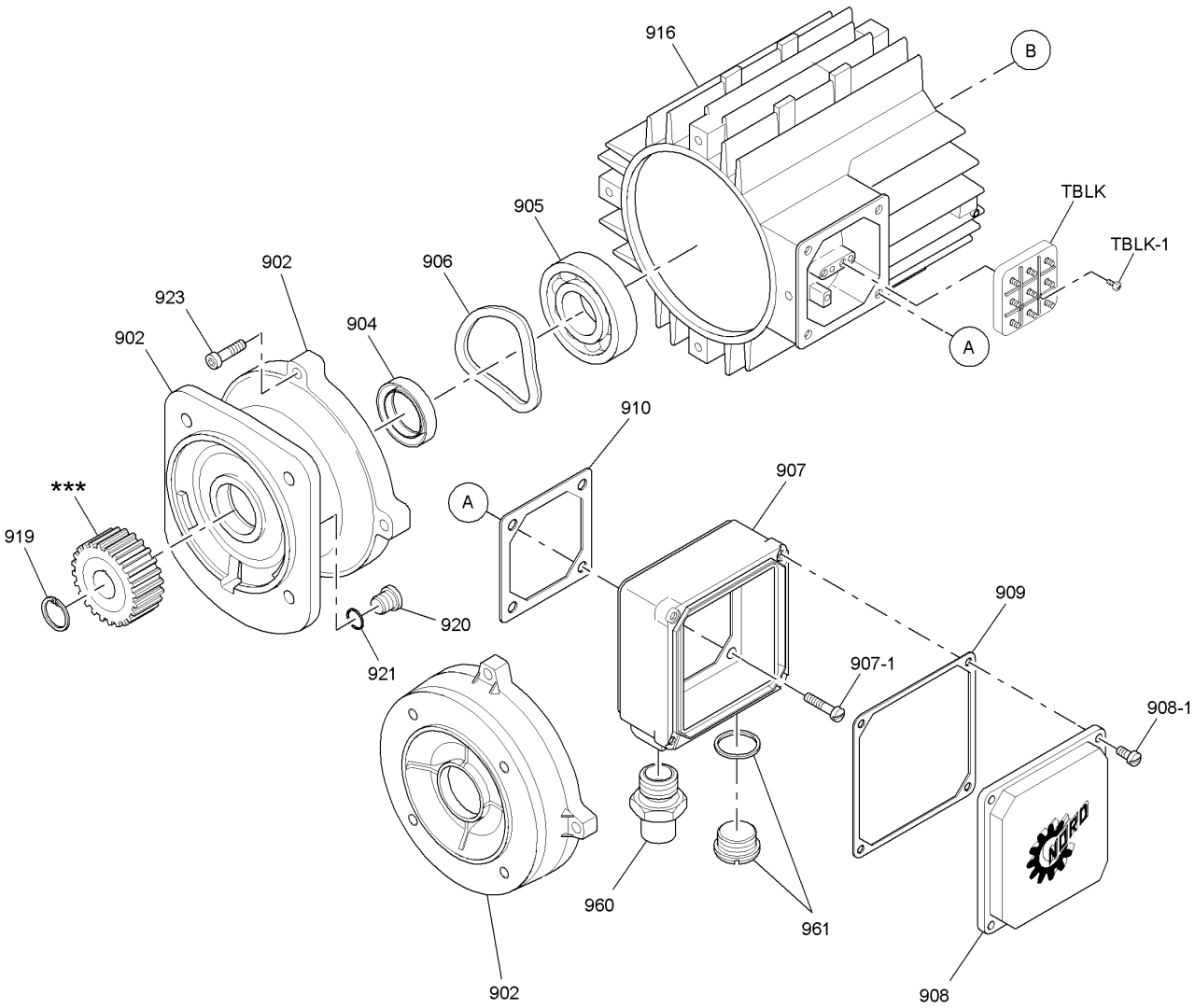

Figure 3. General Motor Exploded View and Generic Parts List (Sheet 1 of 2)

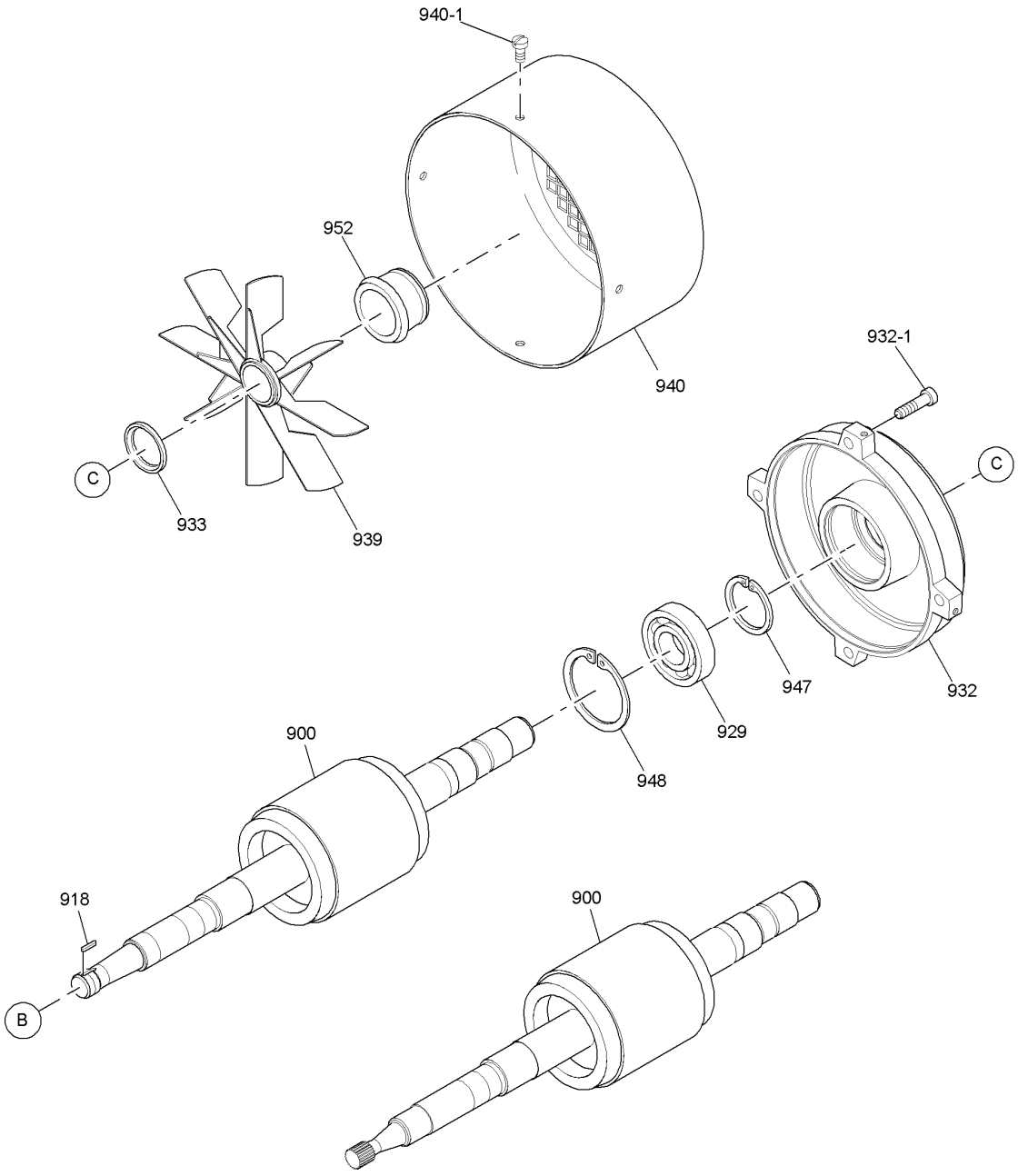

Figure 3. General Motor Exploded View and Generic Parts List (Sheet 2 of 2)

MOTOR OPTIONS & NOMENCLATURE

1. General

NORD offers many options for its motors. The option code will be shown in the motor nomenclature. Below are the available options

Code	Description		Code	Description
BRE	See Brake BIM1090	With Brake	**OL**	TENV Motor – Without Fan
RG		Brake – Corrosion Protected	**OL/H**	TENV Motor - Without Fan & Cover
SR		Brake – Dust Protected	**RD**	Canopy Cover
HL		Brake – Manual Hand Release	**RDD**	Double Canopy Cover
FHL		Brake – Lockable Manual Release	**RLS**	Backstop
MIK		Brake – Microswitch	**SH**	Motor Space Heater
IR		Brake – Current Sensing Relay	**TF**	Thermistor
KD	Condensation Holes		**TW**	Thermostat
KB	Condensation Holes - Plugged		**WE**	2nd Motor Shaft End
MS	Power Plug Connector		**WU**	High Slip Rotor
NSD+	NORD Severe Duty Plus Protection		**Z**	High Inertia Motor Ran
EHBU	Single Phase, Run Capacitor		**H**	Energy Efficient
EARU	Single Phase, Start Cap/Run Cap		**IP66**	IP66 Environmental Protection
F	Blower Cooling Fan - 3ph & 1ph		**ISO H**	Class H Insulation
FC	Blower Cooling Fan - 1ph		**EP**	Epoxy Dipped Windings
IG	Incremental Encoder		**FK**	Over Running Clutch
VR	5:1 Constant Torque Rated Motor		**VN**	10:1 Constant Torque Rated Motor
VW	20:1 Constant Torque Rated Motor		**VZ-F**	1000+:1 Constant Torque Rated Motor

Table 5. Motor Option Codes

Motor Nomenclature					
Motor			Motor Options		
100L	/	4	BRE	40	…
Frame Size		No. of Poles	Brake	Brake size Nm	Other Options

Examples

90SH/4 IG SH
Energy Efficient, 1 Speed, Encoder & Space Heater

100L/4-2 WE RDD
2 speed, 2nd Motor Shaft & Double Canopy Cover

132M/4 BRE100 HL IR TW
Brake, Hand Release, Current Sensor & Thermostat

Technical information follows for THERMISTORS, THERMOSTATS, SPACE HEATERS (Table 6), ENCODERS (Table 7) & BLOWER COOLING FAN (Table 8).

Thermistors (Option TF)

- Connection Diagram shown on Page 12
- Three PTC (Positive Temperature Coefficient) temperature sensitive resistors are wired in series
- One PTC on each phase of the stator winding
- The leads will be labeled P1 and P2 in the terminal box
- This unit must be connected to a Motor Control Protection module such as a Kriwan INT69 or a Variable Frequency Drive with PTC inputs

All wiring must be done by qualified personnel and adhere to all local codes.

WARNING: Thermistors will automatically reset.

Thermistor Ratings:

- Switching temperature 310°F(155°C)
- Maximum operating voltage 2.5 volts
- Resistance at 25°C less than or equal to 300 Ohms
- Response time < 5 seconds

Thermostats (Option TW)

- Connection Diagram shown on Page 12
- Three temperature sensitive, bimetallic switches with normally closed contacts wired in series
- One switch on each phase of the stator winding
- The leads will be labeled P1 and P2 in the terminal box

All wiring must be done by qualified personnel and adhere to all local codes.

WARNING: Thermistors will automatically reset.

Thermostat Ratings:

- Switching temperature 310°F (155°C)
- Switch contacts 1.6A at 250 VAC
- Permissible working 6 to 500 VAC
- Automatically resetting with 30 ± 15°C drop below switching temperature
- Resistance less than 50 mΩ
- Switch rebound less than 1 millisecond
- 10g shock in all directions
- 2,000 VAC Insulation rating
- 10,000 cycles
- Normally closed

Space Heaters (Option SH)

- Connection Diagram shown on Page 12
- Space Heaters are mounted directly on the motor winding
- The leads are brought into the terminal box and labeled H1 and H2
- They require a separate voltage supply and must not be energized when the motor is energized
- The heaters will keep the winding of the motor approximately 5°C above the surrounding ambient

FRAME SIZE	WATTAGE	VOLTAGES	HEATER P/N	HEATER STRIPS/MTR
63 & 71	18W	110V	18900770	1
		230V	18900780	
		460V	18900790	
80	25W	110V	18900820	1
		230V	18900800	
		460V	18900810	
90 – 112	50W	110V	18900820	2
		230V	18900800	
		460V	18900810	
132-180	100W	110V	18900830	2
		230V	18900840	
		460V	18900850	
200 & 225	120W	110V	18900860	2
		230V	18900870	
		460V	18900880	

Table 6. Space Heater Data

Encoder (Option IG)

- Standard encoder manufacturer is Heidenhain (www.heidenhain.com)
- All encoders will be enclosed inside the fan shroud
- Incremental, Quadrature, Differential, Marker Channel
- IP 64 Protection
- IG1 = 1024PPR, IG2 = 2048PPR, IG4 = 4096PPR
- RS422 & Push/Pull available
- 5V or 10-30V available

Color	Signal		Pin (optional mating plug)	Heidenhain Callouts	Explanation
	Push-pull	RS 422			
Pink	---	$\overline{B}$ (B-)	1	$\overline{U_{a2}}$	Signal line
Blue	---	Sensor (+)	2	U_P	Sense Supply Voltage
Red	R (R+)	R (R+)	3	U_{a0}	Signal line (Marker)
Black	---	R-	4	$\overline{U_{a0}}$	Signal line
Brown	A (A+)	A (A+)	5	U_{a1}	Signal line
Green	---	$\overline{A}$ (A-)	6	U_{a1}	Signal line
Violet	---	Spare	7	$\overline{U_{aS}}$	Spare
Gray	B (B+)	B (B+)	8	U_{a2}	Signal line
Yellow	---	---	9	Shield	Spare
White/ Green	0 V	0 V	10	0 V / U_N	Common
White	0 V	Sensor (–)	11	0 V / Sensor	Sense Common
Brown/ Green	V_S	V_S	12	U_P	Supply Voltage

Table 7. Encoder Wiring Designations

BLOWER COOLING FAN (Option F & FC)

- Connection Diagram shown on Page 12
- Option FC is 1 phase 115V only
- Option F has capability of 1 phase or 3 phase by connecting a supplied capacitor

		60 Hz Ratings			50 Hz Ratings		
Motor Frame		Voltage [V]	Current [A]	Power [W]	Voltage [V]	Current [A]	Power [W]
Single Phase Connection - 1~ Δ	FC63	100-135	0.23	42	100-135	0.30	42
	FC71	100-135	0.23	47	100-135	0.30	44
	FC80	100-135	0.27	57	100-135	0.30	43
	FC90	100-135	0.46	102	100-135	0.57	78
	FC100	100-135	0.53	105	100-135	0.54	78
	FC112	100-135	0.60	115	100-135	0.55	80
Single Phase Connection 1~ Δ	F63	230-332	0.11	38	230-277	0.10	27
	F71	230-332	0.12	41	230-277	0.10	28
	F80	230-332	0.13	44	230-277	0.11	29
	F90	230-332	0.25	88	230-277	0.26	72
	F100	230-332	0.28	88	230-277	0.26	70
	F112	230-332	0.31	107	230-277	0.26	73
	F132	230-332	0.27	89	230-277	0.29	82
Three-Phase Low Voltage Connection 3~Δ	F63	230-332	0.08	23	230-290	0.10	27
	F71	230-332	0.08	24	230-290	0.10	28
	F80	230-332	0.08	25	230-290	0.10	29
	F90	230-332	0.21	64	230-290	0.28	86
	F100	230-332	0.21	66	230-290	0.27	86
	F112	230-332	0.23	70	230-290	0.27	85
	F132	230-332	0.25	74	230-290	0.32	96
	F160	230-332	0.49	165	230-290	0.53	155
	F180	230-332	0.49	165	230-290	0.53	155
	F200	230-332	0.49	165	230-290	0.53	155
	F225	230-332	0.49	165	230-290	0.53	155
Three-Phase High Voltage Connection 3~Y	F63	380-575	0.04	23	380-500	0.05	29
	F71	380-575	0.04	25	380-500	0.05	30
	F80	380-575	0.04	26	380-500	0.05	29
	F90	380-575	0.12	62	380-500	0.16	82
	F100	380-575	0.12	66	380-500	0.16	83
	F112	380-575	0.13	70	380-500	0.16	82
	F132	380-575	0.14	75	380-500	0.18	96
	F160	380-575	0.28	165	380-500	0.30	155
	F180	380-575	0.28	165	380-500	0.30	155
	F200	380-575	0.28	165	380-500	0.30	155
	F225	380-575	0.28	165	380-500	0.30	155

Table 8. Blower Cooling Fan Data

MOTOR

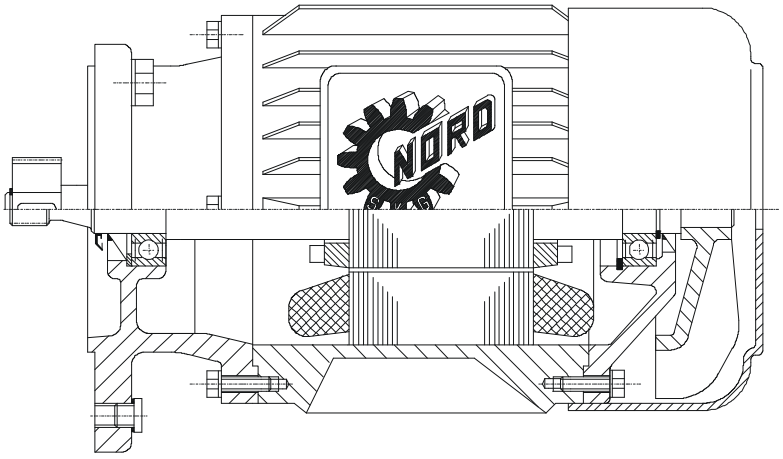

Standards

All motors are in accordance with existing standards and regulations, such as the electrical characteristics in accordance with NEMA MG 1 and IEC 34.1, part 5, 6, 7, 8, and 9.

CE	NORD motors carry the CE mark in accordance with the Low Voltage Directive and if installed properly the Electromagnetic Compatibility Directive (EMC). The CE mark is required for instillation in European Union (EU) member states.
	NORD motors from frame size 63 to 132M are an Underwriters Laboratories Recognized component per UL standard 1004. Motors from frame size 160 and larger will be UL recognized components in the future.
	NORD motors are Canadian Standards Association approved according to CSA Standard C22.2 No. 100-92. This approval is necessary for most installations in Canada. CSA is also a Nationally Recognized Testing Laboratory (NRTL) in the United States.

EPAct

The NORD high efficiency line of motors conform to the efficiency levels as defined in The Energy Policy and Conservation Act (EPAct) of 1992. The NORD high efficiency line of motors also conforms to the required efficiency levels in Canada as defined in Canada's Energy Efficiency Regulations.

Inverter/Vector Duty

NORD motors are Inverter/Vector Duty. The construction of the NORD motors insulating system takes into account the non-sinusoidal waveforms produced by variable frequency drives. NORD uses high grade insulating components and the uses extra first turn protection to ensure long service life when connected to inverters. NORD motors can produce full torque at zero speed if properly sized, selected, and controlled.

Low Inertia

The motor inertia in all NORD motors is extremely low. This allows for a much more dynamic motor control. NORD motors can cycle more frequently and require less mechanical energy to start than standard NEMA frame motors. This leaves more energy to start the load. Low motor inertia is a particularly advantage when using NORD motors with inverters or vector controllers.

MOTOR

High Torque

The NORD motor design produces higher motor starting torque. This is achieved through improved rotor design and construction.

Non Sparking Fan

The standard NORD motors fan is a non-sparking design. The fan will also provide proper airflow in either direction of rotation.

Terminal Block

Each NORD motor uses a terminal block. A terminal block is a superior method of wire termination as compared to pigtail leads. A terminal block ensures long term reliability of the power connections.

Insulation Class

NORD motors are constructed with a thermal class F insulating system. The motors are also designed for a class B temperature rise (80 °C). The use of class F insulation with a class B temperature rise provides increased operating life. Motors constructed with class H insulation are also available as an option.

Ambient Temperature

NORD motors are designed to operate as standard with a maximum ambient temperature of 40°C (104°F). If the motors operating environment exceeds 40°C the motor either needs to be de-rated (see table below) or use an upgraded insulation.

Elevation

NORD motors are designed to operate at an elevation of up to 3300-ft (1000 m) above sea level. If the motors installation elevation exceeds this the motor either needs to be de-rated (see table below) or use an upgraded insulation.

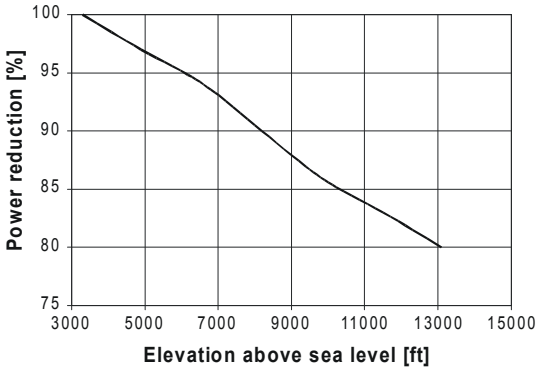

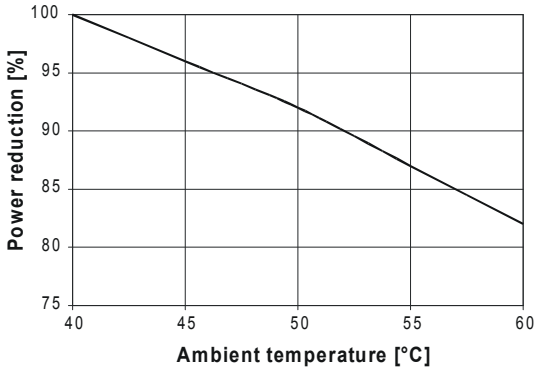

Duty Classes

All motor ratings in this catalog are based on continuous duty operation (S1), i.e. operation with a constant load state whose duration is sufficient to reach the thermal steady state condition. S2 is a short-time operation, meaning operation with a constant load for a specified limited time followed by a pause until the motor is completely cooled down to ambient.

S3 is a periodic operation not under the influence of the start-up, consisting of repeated similar cycles each comprised of a period with constant load and a pause. The starting current should not noticeably affect the warming-up. For duty types S2 and S3 it is necessary to determine the duration of the operation time and the cycle time, moments of inertia of driven machine and its speed required torque on starting breaking method.

If a motor is designed for 100% continuous duty, S1, and shorter cycle duration factor is required; the motor power can be increased according to the table:

Duty class		Power increase factor
S2	Operation time: 60 min	1.1
	30 min	1.2
Short-time	10 min	1.4
S3	Duty cycle, ED: 60%	1.1
	40%	1.15
	25%	1.3
Periodic	15%	1.4

$$\%ED = \frac{Sum\ of\ operation\ periods}{Cycle\ time} \times 100$$

Service Factor

Motors rated 230/460V-60Hz and 330/575V-60Hz have a service factor of 1.15. All other motors have a service factor of 1.0.

Available Voltages

Standard voltages for North America:
230/460V-60Hz
330/575V-60Hz
Standard international voltages:
230/400V-50Hz (3hp and smaller) – usable on 380-415V supply voltages
400/690V-50Hz (larger than 3hp) – usable on 380-415V supply voltages
Other voltages are available

Tolerances Voltage and Frequency

Voltage tolerance ±10% based on rated voltage. Line frequency tolerance of ±5%. Combined variation in voltage and frequency of ±10%. In accordance with NEMA standard MG 1.

Enclosure

Standard enclosure type: Totally Enclosed Fan Cooled (TEFC) with an IP55 enclosure rating. Other enclosure ratings are available including Totally Enclosed Non-Ventilated (TENV), Totally Enclosed Blower Cooled (TEBC), and IP65.

NORD Severe Duty (NSD) – optional

NORD offers a protection package for the motors know as NORD Severe Duty (NDS). This additional motor protection is for wet and corrosive environments. The additional motor protection will ensure that the motor has a long trouble free service life in harsh operating environments. The following additional protections are provide with the NDS package:

- Internal coating for additional electrical insulation and moisture protection (windings, rotor and internal surfaces)
- Condensation weep holes in motor and conduit box low points
- Corrosion resistant hardware
- Additional top coat of Stainless Steel Paint

Epoxy Dipped Windings – optional

For additional protection in extremely wet environments the motor windings can be dipped in epoxy for improved moisture protection. The motor is also treated with the standard NORD Severe Duty (NSD) protection package.

Tropical Protection – optional

For hot tropical wet environments the motor can be treated to prevent fungus from growing inside the motor. This treatment includes an anti-fungal epoxy dip and the NORD Severe Duty (NSD) treatment

Overload Protection

Current-controlled motor-protection must be set according to rated current shown on the motor nameplate. Operation involving high starting frequency, short-term duty or large temperature-differences should be covered by internal motor thermal measuring devices.

Thermostat (TW) – optional

Upon reaching the limit temperature this device automatically cuts the control-circuit. After the temperature has fallen below the trip limit the thermostat switch will re-set. Contact-rating: 250 VAC, 1.6 A.

Thermistor Sensors (TF) – optional

Thermistors require external tripping-device. Upon reaching the limit temperature the thermistors change their resistance suddenly. In connection with a tripping device this property is employed to monitor the motor temperature. The relay built into the tripping-device has a make-and-break-contact, which is used in the control wiring.

High Inertia Fan (Z) – optional

An optional cast iron motor cooing fan is available. This fan is used as a mechanical soft start and/or soft stop. This fan adds inertial to the motor. The high inertial fan can also be used for a flywheel effect, to store mechanical energy. This can be helpful where the are rapid load changes that need to be smoothed. The cast iron fan replaces the standard plastic motor fan.

Canopy Drip Cover (RD) – optional

For installations where the fan end of the motor is mounted up allowing water to fall into the motor's fan guard, NORD offers a canopy drip cover to block this falling water.

Starting Frequency

One major advantage of NORD motors and brakemotors is the ability to operating in high start-stop applications. Due to the motors optimized design, NORD motors can, under some conditions, cycle thousands of times an hour. This means that a NORD brake motor can often be used to replace a clutch brake system.

If the motor or brakemotor is used with an Inverter or Vector drive the motors cycling capacity can be increased even more.

Following factors have to be considered when calculating the permissible starting frequency:

- Z_O no-load starting frequency [starts/hour]
- Z_{zul} permissible starting frequency [starts/hour]
- J_{mot} moment of inertia of motor [Lb-in^2]
- J_{red} external moment of inertia reduced to motor shaft [Lb-in^2]
- T_a required starting torque [Lb-in]
- T_l load torque after starting [Lb-in]

The permissible frequency of switching may be calculated as follows.

$$Z_{zul} = \frac{1 - \frac{T_l}{T_a}}{1 + \frac{J_{red}}{J_{mot}}}$$

Blower Cooling Fan– optional

MOTOR

Energy efficient, 1.15 Service factor
Inverter duty, TEFC
Synchronous speed 1800rpm @ 60Hz, 4-pole
Voltages: 230/460 & 330/575 – 60Hz, Three-phase
Continuos Duty, 40°C Ambient, up to 3300ft Elevation
Class B temperature rise, Class F insulation

/ 60Hz / EE

Frame Size	HP	kW	n_n Full Load rpm	Full-load current I_n 230V A	460V A	575V A	I_a/I_n %	Code Letter	T_n lb-in	T_a/T_n	T_k/T_n	pf	Eff. %	J_m Inertia lb-ft^2
80LH/4	1.0	0.75	1750	3.88	1.94	1.50	600	L	36.0	4.6	4.3	0.59	82.5	0.0489
90SH/4	1.5	1.1	1740	4.3	2.15	1.75	630	J	54.3	3.5	3.8	0.76	84.0	0.0817
90LH/4	2.0	1.5	1745	6.3	3.15	2.45	670	K	72.4	4.3	4.5	0.71	84.0	0.0929
100LH/4	3.0	2.2	1765	8.6	4.30	3.4	790	L	107	3.6	4.7	0.73	87.5	0.1781
112LH/4	5.0	3.7	1770	14.4	7.20	5.6	810	L	179	4.4	4.3	0.74	87.5	0.3491
132SH/4	7.5	5.5	1780	20.9	10.5	8.3	820	L	266	4.3	4.6	0.74	89.5	0.7529
132MH/4	10	7.5	1770	27.0	13.5	10.8	730	J	356	3.2	4.0	0.78	89.5	0.8408
160MH/4 *	15	11	1765	35.8	17.9	14.3	930	K	536	2.6	3.2	0.85	91	1.235
160LH/4 *	20	15	1765	49.0	24.5	19.6	960	L	714	2.8	3.5	0.85	91	1.354
180MH/4 *	25	18.5	1770	61	30.5	24.0	910	K	890	2.8	3.6	0.83	92.4	3.563
180LH/4 *	30	22	1770	72	36	28.8	990	L	1068	3.1	3.9	0.83	92.4	4.513
200LH/4 *	40	30	1770	94	47	37.6	910	K	1424	3.0	3.6	0.86	93	7.600
225SH/4 *	50	37	1778	118	59	47.2	800	J	1772	2.9	3.6	0.85	93	10.45
225MH/4 *	60	45	1780	142	71	57	810	J	2124	3.0	3.7	0.85	93.6	12.35
250MH/4 *	75	55	1784	174	87	70	760	H	2650	3.0	2.8	0.86	94.1	18.76
280SH/4 *	100	75	1784	228	114	91	730	H	3530	2.4	2.8	0.87	94.5	33.25
280MH/4 *	125	90	1786	288	144	115	770	H	4410	2.8	3.1	0.86	94.5	38.00
315SH/4 *	150	110	1790	352	176	141	780	J	5280	2.7	2.8	0.84	95	52.3
315MH/4 *	175	132	1792	414	207	166	820	J	6150	3.4	3.1	0.83	95	64.1
315LH/4 *	200	160	1792	462	231	185	800	J	7030	3.3	2.7	0.85	95	76.0

* - Underwriter Laboratories Recognition - pending

Abbreviations

- **n_n** - Full-load speed
- **I_n** - Full-load current
- **I_a/I_n** - Locked-rotor current ratio (percentage)
- **T_n** - Full-load torque
- **T_a/T_n** - Locked-rotor torque ratio
- **T_k/T_n** - Break-down torque ratio
- **pf** - Power factor
- **Eff.** - Nominal efficiency
- **J_m** - Motor inertia

MOTOR

Standard efficiency, 1.15 Service factor
Inverter duty, TEFC
Synchronous speed 1800rpm @ 60Hz, 4-pole
Voltages: 230/460 & 330/575 – 60Hz, Three-phase
Continuos Duty, 40°C Ambient, up to 3300ft Elevation
Class B temperature rise, Class F insulation

Frame Size	HP	kW	n_n Full Load rpm	Full-load current I_n 230V A	460V A	575V A	I_a/I_n %	Code Letter	T_n lb-in	T_a/T_n	T_k/T_n	pf	Eff. %	J_m Inertia lb-ft^2
63S/4	0.16	0.12	1700	0.88	0.44	0.35	300	H	5.93	2.7	3.5	0.66	52	0.00499
63L/4	0.25	0.18	1680	1.12	0.56	0.45	300	G	9.38	2.3	2.5	0.71	57	0.00665
71S/4	0.33	0.25	1710	1.56	0.78	0.62	340	H	12.3	2.3	3.0	0.64	63	0.0133
71L/4	0.50	0.37	1720	1.90	0.95	0.76	400	G	18.3	2.2	2.7	0.69	71	0.0173
80S/4	0.75	0.55	1710	2.70	1.35	1.08	400	H	27.6	2.2	2.3	0.71	72	0.0304
80L/4	1.0	0.75	1650	3.65	1.83	-	280	D	38.2	2.1	2.2	0.64	70	0.0623
90S/4	1.5	1.1	1660	4.83	2.42	-	320	D	57.0	2.6	2.5	0.68	73	0.0887
90L/4	2.0	1.5	1660	6.33	3.17	-	340	D	75.9	2.5	2.4	0.70	74	0.1182
100L/4	3.0	2.2	1700	9.04	4.52	-	350	D	111	2.2	2.5	0.70	75	0.1699
100L/40	5.0	3.7	1725	15.2	7.62	-	510	G	183	2.7	3.1	0.75	81	0.2831
132S/4	7.5	5.5	1730	19.8	9.91	-	380	C	273	2.2	2.6	0.71	85	0.8796
132M/4	10	7.5	1730	25.7	12.9	-	440	E	364	2.7	3.0	0.73	87	1.197
160M/4 *	15	11	1760	36.8	18.4	-	820	K	537	2.8	3.3	0.85	88	1.187
160L/4 *	20	15	1760	49	24.5	-	800	J	716	2.8	3.3	0.86	89	1.661
180M/4 *	25	18.5	1750	60	30.0	-	740	H	900	2.6	3.0	0.87	89	3.085
180L/4 *	30	22	1755	71	35.5	-	800	J	1080	2.9	3.3	0.87	89.5	3.560
200L/4 *	40	30	1755	91	45	-	580	F	1440	2.6	2.6	0.89	92	10.68
225S/4 *	50	37	1755	124	62	-	670	H	1800	2.2	2.2	0.83	91	13.29
225M/4 *	60	45	1760	143	71	-	700	H	2150	2.8	2.8	0.86	91	16.85
250M/4 *	75	55	1760	170	85	-	700	H	2690	2.6	2.6	0.89	90	19.93
280S/4 *	100	75	1770	223	111	-	670	G	3560	2.6	2.6	0.87	91	37.02
280M/4 *	125	90	1775	290	145	-	650	G	4440	2.6	2.6	0.86	91	42.71
315S/4 *	150	110	1775	345	173	-	750	H	5330	3.1	3.1	0.87	90	80.68
315M/40 *	200	150	1775	445	223	-	750	H	7100	3.2	3.2	0.86	93	125.8

* - Underwriter Laboratories Recognition - pending

Abbreviations

- **n_n** - Full-load speed
- **I_n** - Full-load current
- **I_a/I_n** - Locked-rotor current ratio (percentage)
- **T_n** - Full-load torque
- **T_a/T_n** - Locked-rotor torque ratio
- **T_k/T_n** - Break-down torque ratio
- **pf** - Power factor
- **Eff.** - Nominal efficiency
- **J_m** - Motor inertia

MOTOR

Dimensions

Connection diagrams

Options
- Canopy
- 2WE
- Space heaters
- Epoxy dipped windings
- IEEE 45
- Harting plug connector

Vents

Brakes (& connections)

Backstop
- Backstop
- Overrunning clutch

Encoders

Inverter selections / thermals

JOHN MEUNIER

Meadowbank mining Corp.
ACP-700R
Technical Data Sheet
Reference : NC01

MICROSAND RECIRCULATION PUMP

ST-101

VEOLIA WATER
Solutions & Technologies

LEFT BLANK

JOHN MEUNIER

NOMENCLATURE/ BILL OF MATERIALS

TITRE/ TITLE	Rev.	DESCRIPTION	PAR/ BY:	APPR:	DATE:	Affaire / Contract	Meadowbank Mining
Microsand recirculation pump	0	SUBMITTAL	P.Ste-Marie	P.S.M.	2009-03-26		
	1						
	2					REF. No.	NC01 | | 0
	3						
DESSIN /DWG # ST-101	4					Date:	2009-03-26

REV.	ITEM	QTE/QTY. Unit.	QTE/QTY. Total	DESCRIPTION	P&ID I.D./TAG	CAT. ACCPAC	SOURCE	FA/SA FI SITE	P / N
	NC01ST-101-1	2	4	**MICROSAND RECIRCULATION PUMP**	P2-011	B56		FI	
				Type:	P2-012				
				Dry seal, Vertical, Centrifugal	P2-021				
				Manufacturer:	P2-022				
				Linatex					
				Model:					
				Linapump lllr 50X50					
				Pump weight:					
				326 kg (718 lb)					
				Pump + motor Weight					
				156 kg (344 lb)					
				Base:					
				Painted steel					
				PUMP PERFORMANCES AT OPERATION POINT					
				Capacity					
				34 m³/h at 17 m (24 psi)					
				Absorbed power(BHP):					
				4,66 kW (6,26 Hp)					
				Rotational pump speed					
				1759 rpm					

JOHN MEUNIER

NOMENCLATURE/ BILL OF MATERIALS

TITRE/ TITLE	Rev.	DESCRIPTION	PAR/ BY:	APPR:	DATE:	Affaire / Contract	Meadowbank Mining
Microsand recirculation pump	0	SUBMITTAL	P.Ste-Marie	P.S.M.	2009-03-26		
	1						
	2					REF. No.	NC01 | | 0
	3						
DESSIN /DWG # ST-101	4					Date:	2009-03-26

REV.	ITEM	QTE/QTY. Unit.	QTE/QTY. Total	DESCRIPTION	P&ID I.D./TAG	CAT. ACCPAC	SOURCE	FA/SA FI SITE	P / N
				IMPELLER					
				Type:					
				Linatex					
				Diameter					
				200 mm (7.9 in)					
				Material					
				Field remplaceable molded Linatex					
				PUMP CASING					
				Casing					
				Cast iron					
				Wetted parts					
				Field remplaceable molded Linatex					
				Suction:					
				50 mm (2 in), flange #150					
				Discharge					
				50 mm (2 in), flange #150					
				Drive:					
				pulleys and belts complete with safeguard					
				Packing:					
				« Dry Gland » Type D					

JOHN MEUNIER

NOMENCLATURE/ BILL OF MATERIALS

TITRE/ TITLE	Rev.	DESCRIPTION	PAR/ BY:	APPR:	DATE:	Affaire / Contract	Meadowbank Mining
Microsand recirculation pump	0	SUBMITTAL	P.Ste-Marie	P.S.M.	2009-03-26		
	1						
	2					REF. No.	NC01 | 0
	3						
DESSIN /DWG # ST-101	4					Date:	2009-03-26

REV.	ITEM	QTE/QTY. Unit.	QTE/QTY. Total	DESCRIPTION	P&ID I.D./TAG	CAT. ACCPAC	SOURCE	FA/SA FI SITE	P / N
				MOTOR					
				Manufacturer:					
				Weg					
				Type:					
				Squirrel cage					
				Service:					
				continuous					
				Efficiency					
				92,4%					
				Frame					
				TEFC / 215T					
				Speed					
				1765 rpm					
				Power					
				10 HP					
				Electrical feed					
				575 V / 3 ph / 60 Hz					
				Enclosure:					
				IP55 with Class F insulation tropical protection					
				Paint protection					
				Manufacturer standard					

LEFT BLANK

200 Wall Street,
Hollidaysburg
PA 16648 USA
Tel: 814-695-9807
Fax: 814-695-6684

McLanahan CORPORATION

585 Airport Road
Gallatin
TN 37066 USA
Tel: 615-451-4440
Fax: 615-451-4461

May 15, 2009

John Meunier Inc.
4105 Rue Sartelon
Ville St-Laurent, QC H4S 2B3
Canada

To Whom It May Concern:

Thank you for your recent purchase. Please find the following Installation & Operations Manuals for your purchase order # NC01-042950 referencing our Sales Order # 61395. If you have any questions or concerns, please give our office a call at the phone number provided below.

Sincerely,

Karen Fleming
Administrative Assistant
McLanahan Corporation
(615) 451-4440

ref: 2X2D-McL

This Manual Covers the

2” x 2” LPT Pump

with Dry Gland

P/N 09101002011

Supplied to:	John Meunier Inc.
Date:	05.15.09
Order Number:	61395
Customer P.O. Number:	NC01-042950
Serial Numbers:	20093041, 20093042, 20093043, 20093044

Should you have any questions regarding the installation and/or operation of the equipment you have purchased, please contact our Process Equipment Department at (615) 451-4440.

ref: 2X2D-McL

Dear Gentlemen:

The accompanying manual and parts lists are for the **2" x 2" LPT Pump with Dry Gland** you recently purchased. We suggest you become familiar with the enclosed literature to assure the proper installation of this equipment.

We also recommend you purchase the replacement parts listed on the enclosed proposal. Having these recommended spare parts at your plant will assure minimum down time in order to perform periodic maintenance and will also eliminate the expense of air freight of critical parts. Should you require other parts not listed, they are available for immediate shipment from our inventory.

If any additional information regarding your LPT equipment is required, please feel free to call.

Sincerely,

McLanahan Corporation

LPT FINES RECOVERY EQUIPMENT

EQUIPMENT FURNISHED:

(1) 2” x 2” LPT Pump complete with:

- Field replaceable molded rubber casing liners and impeller
- Dry Gland
- Grease lubricated bearing housing assembly
- Adjustable overhead motor table

ref: 2X2D-McL

RECOMMENDED SPARE PARTS

2” x 2” LPT

PUMP WITH DRY GLAND

Description	Item #	Part #	Quantity
Gland Repair Kit	GD13	09110002321	1.00
Suction Casing Liner	04	09110002106	1.00
Gland Casing Liner	06	09110002109	1.00
Impeller	08	09110002110	1.00
End Bearing	B05	09110002205	1.00
Front Bearing	B06	09110002206	1.00
Tab Washer	B07	09110002207	1.00
Lock Nut	B08	09110002208	1.00
End Grease Seal	B09	09110002209	1.00
Front Grease Seal	B10	09110002210	1.00

LPT PUMP MANUAL – APPENDIX I
Long Term Storage

General:

The following are recommendations in reference to long term storage of LPT Pumps and Drives, LPT does not accept liability for components under these conditions. Documentation and photographic evidence is necessary for warranties to apply.

Preventive Maintenance for Stored Rotating Spares

In the absence of data on premature bearing failures and armature/shaft sag and imbalance, we recommend a general procedure as follows:

The motor shaft targets should generally be used on any motor of 50 HP or higher. They also should be used on fans and any other large rotating equipment that sits in storage for lengthy periods of time. By rotating these shafts monthly (or more depending on the floor vibrations), you are preventing armature and shaft sag as well as false brinelling of the bearings into the races.

You may also find some other smaller motors that have premature bearing failures after prolonged storage in your facility. This would be evidence to apply the shaft targets and rotation to smaller motors.

The motor shaft targets should be attached to the shafts with double-stick foam tape. A monthly color chart should be hung on the wall in the equipment storage area to indicate the "color of the month."

What is False Brinelling?

"This condition can occur whenever a non-rotating bearing is subjected to external vibration. (Note: There is another type of brinelling called true brinelling that occurs in rotating bearings.) When the bearing isn't turning, a protective oil film cannot form between the races and the rotating elements. Thus, there can be metal-to-metal contact between the races and rotating elements, and the small, relative motion between these parts causes wear marks on both races at the location of each rotating element. False brinelling can occur during transportation (typically truck or rail) and during motor storage if the storage area is subject to vibration. False brinelling occurs frequently with the bearings of motors installed on "spare" or "backup" systems in the plant. A typical example of this is parallel motor/pumps where one system is considered to be the primary system and the other system only a backup. The primary system may run for weeks, months, or even longer before the backup system is ever energized. The problem is that even though the backup is not running, it is actually "piped" into the system. Vibrations associated with the running system are being constantly transmitted to the backup system. Thus, severe false brinelling can occur on both the backup motor and pump bearings."

- *Extract from Office of Industrial Technologies Web Site*

Pump:

It is recommended that the Pump is stored in a clean, dry, vibration free environment. The shaft should be manually rotated every 3 months (or at the same interval as recommended by the electric motor manufacturer). The natural rubber linings and components should be protected in keeping with the recommendations below.

LPT PUMP MANUAL – APPENDIX I
Long Term Storage

Electric Motor

The following information is reprinted from the WEG "Installation and Maintenance Manual for NEMA low Voltage Electric Motors"

2.3 Storage

Motors should be raised by their eyebolts and never by their shafts. It is important that high rating three-phase motors be raised by their eyebolts. Raising and lowering must be steady and joltless, otherwise bearings may be harmed. When motors are not immediately installed, they should be stored in their normal upright position in a dry even temperature place, free of dust, gases and corrosive atmosphere. Other objects should not be placed on or against them. Motors stored over long periods are subject to loss of insulation resistance and oxidation of bearings.

Bearings and lubricant deserve special attention during prolonged periods of storage. Depending on the length and conditions of storage it may be necessary to regrease or change rusted bearings. The weight of the rotor in an inactive motor tends to expel grease from between the bearing surfaces thereby removing the protective film that impedes metal-to-metal contact. As a preventive measure against the formation of corrosion by contact, motors should not be stored near machines which cause vibrations, and every 3 month their shafts should be rotated manually.

Insulation resistance fluctuates widely with temperature and humidity variations and the cleanliness of components. When a motor is not immediately put into service it should be protected against moist, high temperatures and impurities, thus avoiding damage to insulation resistance. If the motor has been in storage more than six month or has been subjected to adverse moisture conditions, it is best to check the insulation resistance of the stator winding with a megohmeter. If the resistance is lower than ten megohms the windings should be dried in one of the two following ways:
1) Bake in oven at temperatures not exceeding 194 degrees F until insulation resistance becomes constant.
2) With rotor locked, apply low voltage and gradually increase current through windings until temperature measured with thermometer reaches 194 degrees F. Do not exceed this temperature.
If the motor is stored for an extensive period, the rotor must be periodically rotated.
Should the ambient conditions be very humid, a periodical inspection is recommended during storage. It is difficult to prescribe rules for the true insulation resistance value of a machine as resistance varies according to the type, size and rated voltage and the state of the insulation material used, method of construction and the machine's insulation antecedents. A lot of experience is necessary in order to decide when a machine is ready or not to be put into service. Periodical records are useful in making this decision.

The following guidelines show the approximate values that can be expected of a clean and dry motor, at 40°C test voltage in applied during one minute.

Insulation resistance Rm is obtained by the formula:

$$Rm = Vn + 1$$

Where: Rm - minimum recommended insulation resistance in MΩ with winding at 40°C
Vn - rated machine voltage in kV

In case the test is carried out at a temperature other than 40°C, the value must be corrected to 40°C using an approximated curve of insulation resistance v.s temperature of the winding with the aid of Figure 2.1; it's possible verify that resistance practically doubles every 10°C that insulating temperature is lowered.

Example:
Ambient temperature = 50°C
Motor winding resistence at 50°C = 1.02 MΩ
Correction to 40°C

LPT PUMP MANUAL – APPENDIX I
Long Term Storage

$R_{40°C} = R_{50°C} \times K_{50°C}$
$R_{40° C} = 1.02 \times 1.3$
$R_{40° C} = 1.326$ M&

The minimum resistance Rm will be:
Rm = Vn + 1
Rm = 0.440 + 1
Rm = 1.440 MΩ

On new motors, lower values are often attained due to solvents present in the insulating varnishes that later evaporate during normal operation.
This does not necessarily mean that the motor is not operational, since insulating resistance will increase after a period of service. On motors which have been in service for a period of time much larger values are often attained. A comparison of the values recorded in previous tests on the same motor under similar load, temperature and humidity conditions, serves as a better indication of insulation condition than that of the value derived from a single test. Any substantial or sudden reduction is suspect and the cause determined and corrective action taken.
Insulation resistance is usually measured with a MEGGER.
In the event that insulation resistance is inferior to the values derived from the above formula, motors should be subjected to a drying process.

2.3.1 Drying the windings

This operation should be carried out with maximum care, and only by qualified personnel. The rate of temperature rise should not exceed 5°C per hour and the temperature of the winding should not exceed 105°C. An overly high final temperature as well as a fast temperature increase rate can each generate vapour harmful to the insulation.

Temperature should be accurately controlled during the drying process and the insulation resistance measured at regular intervals. During the early stages of the drying process, insulation resistance will decrease as a result of the temperature increase, but the resistance will increase again when the insulation becomes dryer.

The drying process should be extended until successive measurements of insulation resistance indicate that a constant value above the minimum acceptable value has been attained. It is extremely important that the interior of the motor be well ventilated during the drying operation to ensure that the dampness is really removed.

Heat for drying can be obtained from outside sources (an oven), energization of the space heater (optional), or introducing a current through the actual winding of the motor being dried.

Electric machines should be installed in order to allow an easy access for inspection and maintenance. Should the surrounding atmosphere be humid, corrosive or contain flammable substances or particles, it is essential to ensure an adequate degree of protection. The installation of motors in environments where there are vapours, gases or dusts, flammable or combustible materials, subject to fire or explosion, should be undertaken according to appropriate and governing codes, such as NEC Art. 500 (National Electrical Code) and UL-674 (Underwriters Laboratories, Inc.) Standards.

Under no circumstances can motors be enclosed in boxes or covered with materials which may impede or reduce the free circulation of ventilating air. Machines fitted with external ventilation should be at least 50cm from the wall to permit the passage of air. The opening for the entry and exit of air flow should never be obstructed or reduced by conductors, pipes or other objects. The place of installation should allow for air renewal at a rate of 700 cubic feet per minute for each 75 HP motor capacity.

LPT PUMP MANUAL – APPENDIX I
Long Term Storage

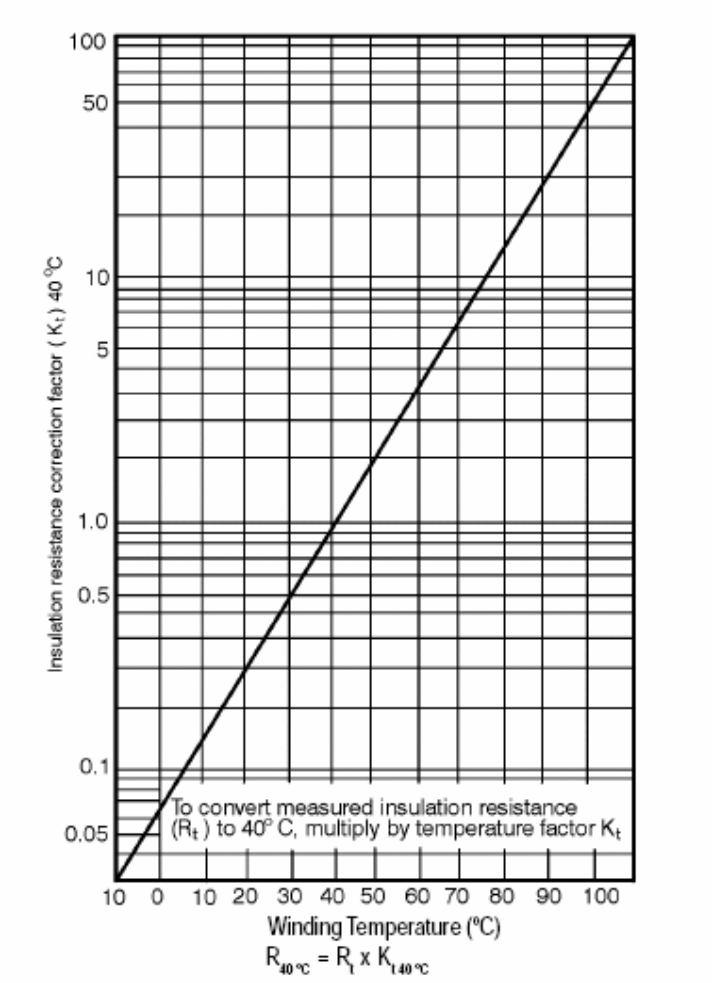

Figure 2.1

- *- Extract from WEG Manual*

Rubber Products:

Rubber products in storage can be adversely affected by the following: temperature, humidity, ozone, sunlight, oils, solvents, corrosive liquids and fumes, insects and rodents, and radiation.

The warehousing area should be relatively cool, dark, and free from dampness and mildew. All rubber products should be used on a first-in, first-out basis since even under these conditions an unusual length of time in storage can result in the deterioration of certain products.

The ideal storage temperature for rubber products is 50 to 70 degrees F (10 to 21 degrees C) with a maximum limit of 100 degrees F (38 degrees C.) If stored below 32 degrees F (0 degrees C) some products may become stiff and should be warmed before being placed in service. Rubber products should not be stored near sources of heat, such as radiators and base heaters.

LPT PUMP MANUAL – APPENDIX I
Long Term Storage

Rubber products should not be stored under conditions of high or low humidity.

To protect against the adverse effects of ozone, rubber products should not be stored near electrical equipment that may generate ozone and should not be stored for any lengthy period in geographical areas of known high ozone concentrations. Exposure to direct and reflected sunlight should also be avoided.

Whenever feasible, rubber products should be stored in their original shipping containers, especially when such containers are wooden crates or cardboard cartons, since this will provide protection against the deteriorating effects of oils, solvents, and corrosive liquids and will also afford some protection against ozone and sunlight.

Since certain rodents and insects thrive on rubber products, adequate protection should be provided against them.

ATTENTION PLANT OPERATORS

HANG NEAR YOUR PUMP

LPT Model IIIr Centrifugal Pump

fitted with

Dry Gland "D" Type

---

1. BEFORE STARTING THE PUMP:

The belts are not installed at the factory. Make sure that the motor has been wired to provide the correct direction of rotation. Bump the motor with **the belts removed** when running for the first time or after electrical work to ensure correct direction of rotation. **Failure to remove the belts can result in the impeller unscrewing and damaging the pump if rotation is in wrong direction.**

2. STARTING UP AND RUNNING THE PUMP:

With the pump full of water, start the pump. The pump should immediately start pumping. UNDER NO CIRCUMSTANCE SHOULD THE PUMP BE ALLOWED TO CONTINUE RUNNING IF THERE IS NO PUMPED DISCHARGE, DUE TO THE HEAT BUILD UP THAT CAN RESULT.

If by accident the pump has run without pumped discharge for more than two or three minutes, it must be stopped immediately and the cause of the problem investigated. Should the pump wet end be opened up after such an occurrence, care must be exercised as there could be high temperatures present in the pump casing.

3. PRIMING:

The LPT centrifugal pump is NOT self priming. For this reason the pump must be installed with a flooded suction, or with the appropriate system for suction lift.

4. ADJUSTING THE "D" TYPE DRY GLAND:

Adjustment of the gland should be done with the pump in operation, when first installed or after new gland parts have been fitted. On starting, it is common for the gland to leak. In fact, if it does not leak, back off the Adjusting Nuts slightly until it does leak with a generous flow and then retighten the Adjusting Nuts until the leak reduces to a few drips a minute. (2 to 5 drops per minute is

normal.) Care must be exercised not to over tighten, which could damage the face seal.

5. STOPPING THE PUMP:

Before stopping the pump, it is advisable to run the pump on clear water before turning it off, to prevent solids from settling out in the pump casing.

6. LUBRICATION

Comes from the factory fully greased. The Shaft Bearings should be greased with the correct grade of grease
(i.e. "Shell Alvania Grease 3" or equivalent). Every 1000 hours of operation, inject grease by six strokes of a regular size (2" diameter body) grease gun.

7. MAINTENANCE:

Except for attention to the gland while the pump is in operation, there is no daily maintenance required on the pump. It is essential, however, that routine inspections be carried out, with the first such inspection taking place approximately three months from startup. This inspection should provide some idea of the wear rate, which will be a guide for scheduling future inspections and maintenance. For dismantling and reassembly of the pump, see the Instruction Manual supplied with the pump.

8. SPARES:

Recommended spare parts are listed in the Instruction Manual. It is recommended that a supply of the wear parts listed be kept in stock so as to minimize down time in the event of failure of the part.

Assembly of Dry Gland - Hard Wear Face & Gland Adjuster (2” x 2” shown)



1. Check all components



2. Extrude epoxy from package & mix thoroughly



3. Apply epoxy to outer rim of Hard Wear Face (D11)



4. Place ‘O’ Ring (D10) on outer rim of Hard Wear Face (D11). Position ‘O’ Ring at leading edge.



5. Position Hard Wear Face & ‘O’ Ring into Gland Adjuster (D03U)



6. Using a slight twisting motion Carefully push Hard Wear Face into Adjuster



7. Wipe off excess epoxy



8. Place a heavy object on top of the assembly until dry (min 30 minutes)

www.maskapulleys.com
www.pouliesmaska.com

Poulies Maska Inc.
180,Boul. Gagnon
Ste-Claire, Qc
G0R 2V0
(418) 883-3322
(418) 883-5015
sales@maskapulleys.com

Project #

Q2603

BEST MANAGED PRIVATE COMPANIES

Selection Parameter

Driver	Driven
Rpm: 1765	**Rpm Minimum** 1706
Horsepower: 10.00	**Rpm Maximum** 1812
Shaft diameter :	**Shaft diameter:**
1.3750 Inch	40.0000 mm

Pitch Diameter Limits	Minimum	Maximum
Driver	1.55	71.00
Driven	1.55	71.00

Service Factor:	1.6
Center Distance Minimum:	13.00
Center Distance Maximum:	13.70

Max. Hub Load:	9999
Min. Nbr of Grooves:	2
Max. Nbr of Grooves:	15
Min. Rim Speed (FPM):	900
Max. Rim Speed (FPM):	6500
Belts:	B, BX,

Actual Drive Values:

Rpm Driven 1765 **Center Distance:** 13.4 **Deflection (in):0.21** ***Deflection Force (lbs):3.5** ***Hub Loads (lbs):169**
Service Factor: 1.62 **H.P. / Belts:** 8.12

Driver

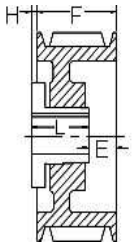

Driver Sheave: 2B70
Weight: 9.05 Lb
P.D.:7.35
D.D.:7
Price: 72.00$
E: 1/4"
F: 1 3/4"
H: 3/8"
L: 1 7/8"
O. D.: 7.35"

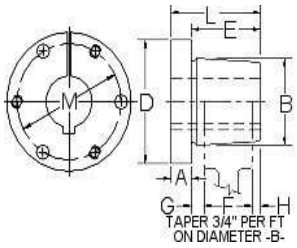

Driver Bushing: SKX1-3/8
Weight: 3 Lb
Price: 26.80$
Bolt Circle - M: 3 5/16"
A: 1/2"
B: 2 13/16"
D: 3 7/8"
E: 1 3/8"
F: 1 1/4"
G: 5/16"
H: -3/16"
L: 1 7/8"

Driven

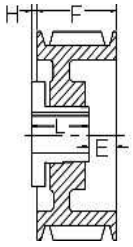

Driven Sheave: 2B70
Weight: 9.05 Lb
P.D.:7.35
D.D.:7
Price: 72.00$
E: 1/4"
F: 1 3/4"
H: 3/8"
L: 1 7/8"
O. D.: 7.35"

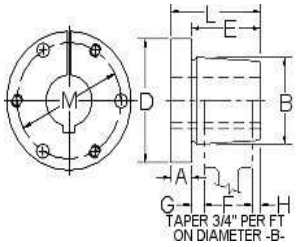

Driven Bushing: SKX40MM
Weight: 2.8 Lb
Price: 26.80$
Bolt Circle - M: 3 5/16"
A: 1/2"
B: 2 13/16"
D: 3 7/8"
E: 1 3/8"
F: 1 1/4"
G: 5/16"
H: -3/16"
L: 1 7/8"

Recommended Drive Selections are designed for use with Maska components (sheaves, bushings and V-belts) which meet or exceed MPTA & RMA standards. The use of lesser quality products could affect life expectancy of drive.Selections and Pricing are as accurate as possible; Maska is not responsible for ANY pricing or design errors. Price shown are for standard products only. For non-standard products or products that need dynamic balancing, contact Maska for pricing.
Selections and Pricing are as accurate as possible, but Maska is not responsible for ANY pricing or design errors.

Version 2.5.5

www.maskapulleys.com
www.pouliesmaska.com

Poulies Maska Inc.
180,Boul. Gagnon
Ste-Claire, Qc
G0R 2V0
(418) 883-3322
(418) 883-5015
sales@maskapulleys.com

Project #

Q2603

BEST MANAGED PRIVATE COMPANIES

Selection Parameter

Driver	Driven
Rpm: 1765	**Rpm Minimum** 1706
Horsepower: 10.00	**Rpm Maximum** 1812
Shaft diameter :	**Shaft diameter:**
1.3750 Inch	40.0000 mm

Pitch Diameter Limits	Minimum	Maximum
Driver	1.55	71.00
Driven	1.55	71.00

Service Factor:	1.6
Center Distance Minimum:	13.00
Center Distance Maximum:	13.70

Max. Hub Load:	9999
Min. Nbr of Grooves:	2
Max. Nbr of Grooves:	15
Min. Rim Speed (FPM):	900
Max. Rim Speed (FPM):	6500
Belts:	B, BX,

Actual Drive Values:

Rpm Driven 1765 **Center Distance:** 13.4 **Deflection (in):0.21** ***Deflection Force (lbs):3.5** ***Hub Loads (lbs):169**
Service Factor: 1.62 **H.P. / Belts:** 8.12

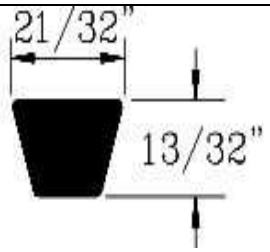

Belts: VBB47
Weight: 0.5 Lb
Qty: 2

*Deflection Force (lbs):3.5
Deflection (in):0.21
*Hub Loads (lbs):169
Note: This Hub Loads value is calculated after 24 hours of utilisation.
(*These values are calculated with a service factor equal to 1.0)

Recommended Drive Selections are designed for use with Maska components (sheaves, bushings and V-belts) which meet or exceed MPTA & RMA standards. The use of lesser quality products could affect life expectancy of drive.Selections and Pricing are as accurate as possible; Maska is not responsible for ANY pricing or design errors. Price shown are for standard products only. For non-standard products or products that need dynamic balancing, contact Maska for pricing.
Selections and Pricing are as accurate as possible, but Maska is not responsible for ANY pricing or design errors.

Version 2.5.5

McLanahan CORPORATION

Date / /

Ref Q2560 REV 2

LP III r 50/50

1759 RPM

Flow	34 m^3/hr	Power Abs	6.263 hp	Stages	1
Head	17 m	Efficiency	38.73 %	Max Spd	2600 RPM
SG	1.150	BEP Effic.	52 %	Qbep	94 %
d50	0.1 in.	Tip Speed	18.42 m/s	Head Corr	0.974
NPSHr	2.862 m	Imp Diam	7.874 in.	Eff Corr	0.974

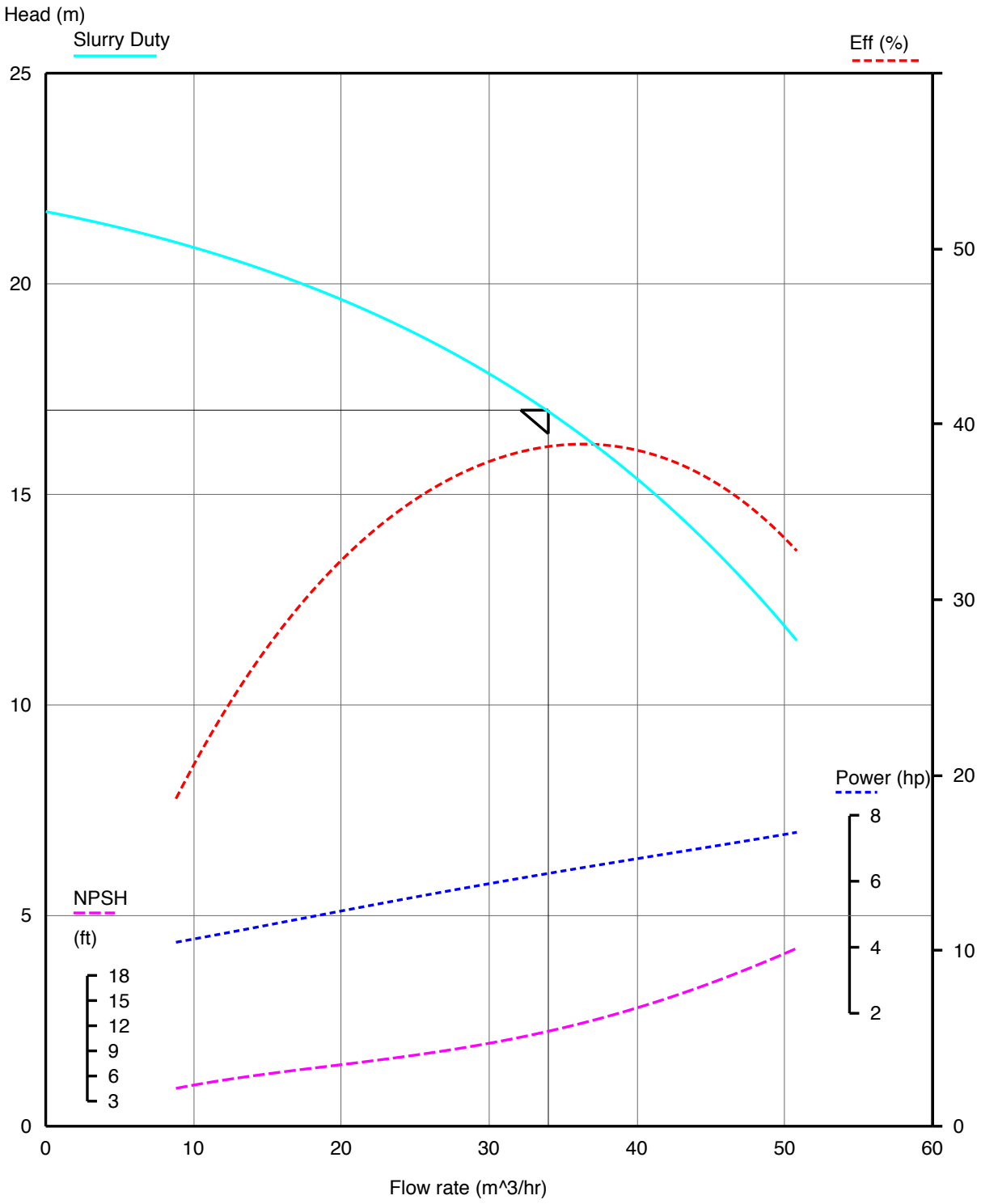

Pump Selection Technical Report
Quote Ref No : Q2560 REV2 Date : / /

Project Name JMI Thompson Creek
Customer
Address

Telephone
Fax

Flow rate	34.0 m^3/hr		
Head	17.0 m		
Speed Head	17.5 m		
SG Solid	2.700	Solids Flow	9.10 Tons/hr
SG Liquid	1.000	% Solid Wt	20.7 %
SG Slurry	1.150	% Solid Vol	8.8 %
Head Ratio	0.97	D50 Size	0.1000 mm
Eff Ratio	1.00	Max Size	0.0500 in.

No of pumps 1

Pump Model	50/50	Supplier	McLanahan
Flow rate	34.0 m^3/hr	Power Abs	6.26 hp
Head	17.0 m	Power Req	7.20 hp
Pump speed	1759 RPM	Motor size	10 hp
NPSHr	2.9 ft	Efficiency	38.7 %
Impeller D	7.874 in.	BEP	38.8 %

INSTALLATION AND MAINTENANCE MANUAL FOR NEMA LOW VOLTAGE ELECTRIC MOTORS

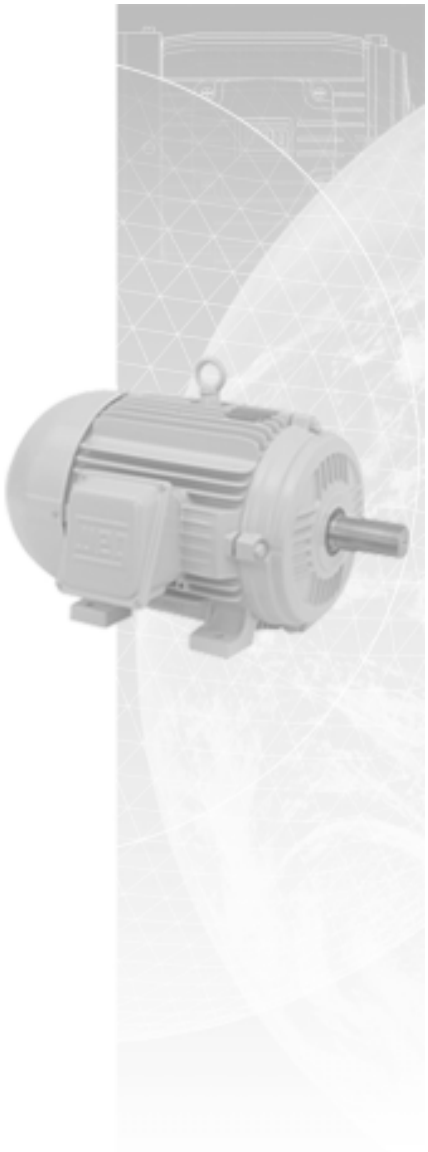

The electric motor is the item of equipment most widely used by man in his pursuit of progress, as virtually all machines and many renowned inventions depend upon it.
By virtue of the prominent role the electric motor plays in the comfort and welfare of mankind, it must be regarded and treated as a prime power unit embodying features that merit special attention, including its installation and maintenance.
This means that the electric motor should receive proper attention.
Its installation and routine maintenance require specific care to ensure perfect operation and longer life of the unit.
THE WEG ELECTRIC MOTOR INSTALLATION AND MAINTENANCE MANUAL provides the necessary information to properly install, maintain and preserve the most important component of all equipment:

THE ELECTRIC MOTOR!

WEG

Contents

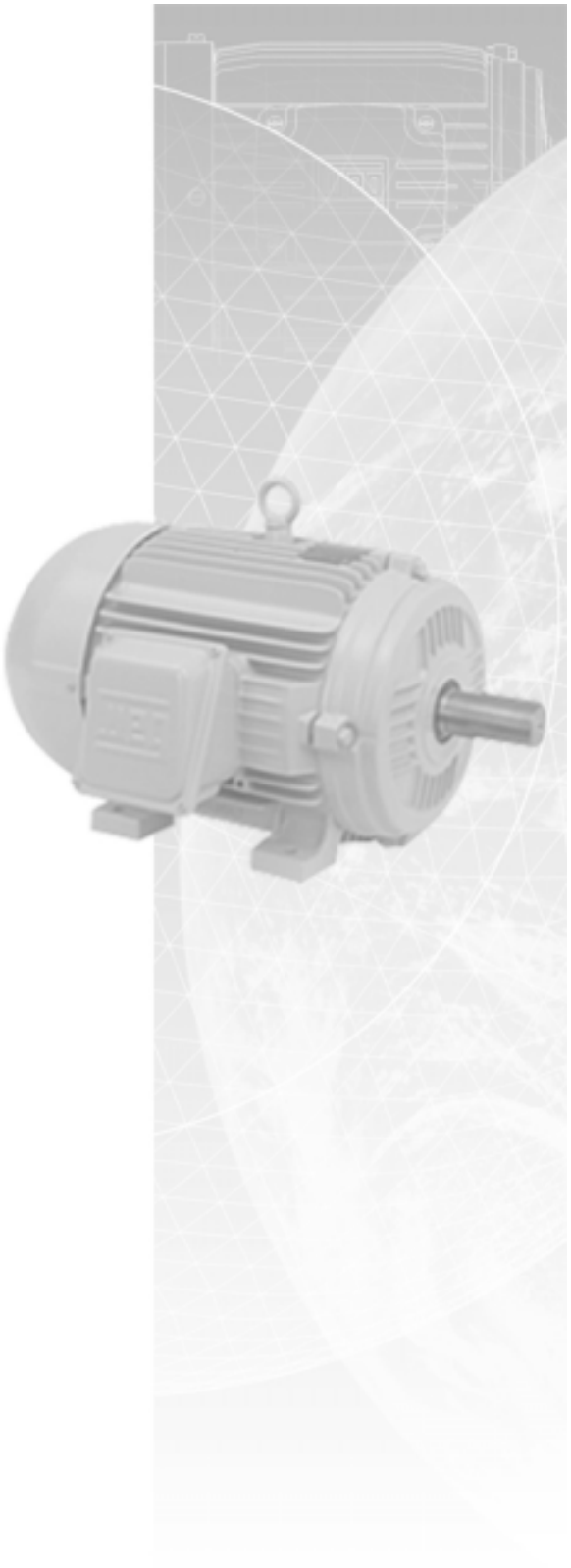

1 - Introduction 04

2 - Basic Instructions 05
2.1 Safety Instructions 05
2.2 Delivery 05
2.3 Storage 05
2.3.1 Drying the Windings 06

3 - Installation 07
3.1 Mechanical Aspects 07
3.1.1 Foundation 07
3.1.2 Types of bases 07
3.1.3 Alignment 08
3.1.4 Coupling 08
3.2 Electrical Aspects 16
3.2.1 Feed System 16
3.2.2 Starting of Electric Motors 16
3.2.3 Motor Protection 18
3.3 Start-up 18
3.3.1 Preliminary Inspection 18
3.3.2 The First Start-up 18
3.3.3 Operation 18
3.3.4 Stopping 18

4 - Maintenance 23
4.1 Cleanliness 23
4.2 Lubrication 23
4.2.1 Periodical Lubrication 23
4.2.2 Quality and Quantity of Grease 23
4.2.3 Lubricating Instructions 23
4.2.4 Replacement of Bearings 24
4.3 Air Gap Checking 24
4.4 Explosion Proof Motor Repair Steps 24
4.4.1 Objective 24
4.4.2 Repair Procedure and Precautions 24
4.4.3 Miscellaneous Recommendations 25

5 - Malfunctioning 26
5.1 Standard Three-phase Motor Failures 26
5.1.1 Short Circuits Between Turns 26
5.1.2 Winding Failures 26
5.1.3 Rotor Failures 27
5.1.4 Bearing Failures 27
5.1.5 Shaft Fractures 27
5.1.6 Unbalanced V-Belt Drives 27
5.1.7 Damage Arising from Poorly Fitted Transmission Parts or Improper Motor Alignment 27
5.2 Troubleshooting Chart 28

6 - Spare Parts and Component Terminology 29

1. Introduction

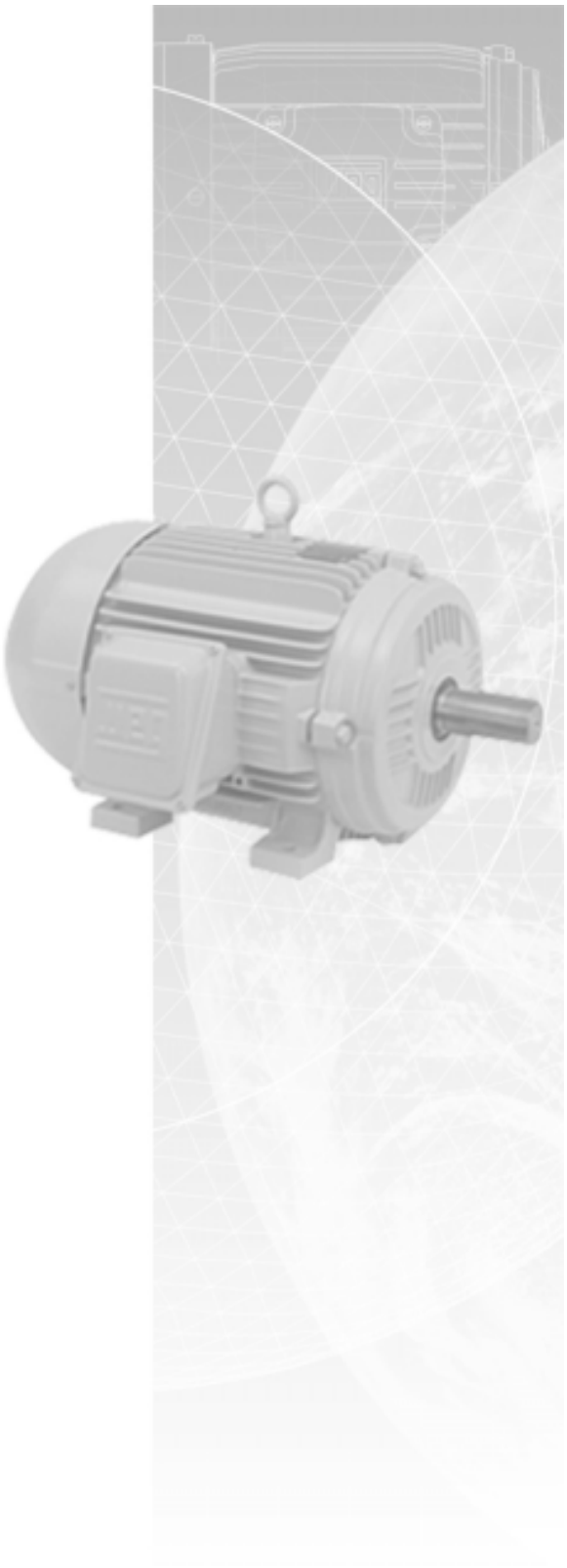

This manual covers all the three-phase and single-phase asynchronous squirrel-cage induction motors, from 140T to 580T frame sizes.

The motors described in this manual are subject to continuous improvement and all information is subject to change without notice.
For further details, please consult WEG.

2. Basic Instructions

2.1 Safety Instructions

All personnel involved with electrical installations, either handling, lifting, operation and maintenance, should be well-informed and up-to-date concerning the safety standards and principles that govern the work and carefully follow them.
Before work commences, it is the responsibility of the person in charge to ascertain that these have been duly complied with and to alert his personnel of the inherent hazards of the job in hand.
It is recommended that these tasks be undertaken only by qualified personnel and they should be instructed to:

- avoid contact with energized circuits or rotating parts,
- avoid by-passing or rendering inoperative any safeguards or protective devices,
- avoid extended exposure in close proximity to machinery with high noise levels,
- use proper care and procedures in handling, lifting, installing, operating and maintaining the equipment, and
- follow consistently any instructions and product documentation supplied when they do such work.

Before initiating maintenance procedures, be sure that all power sources are disconnected from the motor and accessories to avoid electric shock.
Fire fighting equipment and notices concerning first aid should not be lacking at the job site; these should be visible and accessible at all times.

2.2 Delivery

Prior to shipment, motors are factory-tested and balanced. They are packed in boxes or bolted to a wooden base.
Upon receipt, we recommend careful handling and a physical examination for damage which may have occurred during transportation.
In the event of damage and in order to guaranty insurance coverage, both the nearest WEG sales office and the carrier should be notified without delay.

2.3 Storage

Motors should be raised by their eyebolts and never by their shafts. It is important that high rating three-phase motors be raised by their eyebolts. Raising and lowering must be steady and joltless, otherwise bearings may be harmed.
When motors are not immediately installed, they should be stored in their normal upright position in a dry even temperature place, free of dust, gases and corrosive atmosphere.
Other objects should not be placed on or against them.
Motors stored over long periods are subject to loss of insulation resistance and oxidation of bearings.

Bearings and lubricant deserve special attention during prolonged periods of storage. Depending on the length and conditions of storage it may be necessary to regrease or change rusted bearings. The weight of the rotor in an inactive motor tends to expel grease from between the bearing surfaces thereby removing the protective film that impedes metal-to-metal contact.
As a preventive measure against the formation of corrosion by contact, motors should not be stored near machines which cause vibrations, and every 3 month their shafts should be rotated manually.

Insulation resistance fluctuates widely with temperature and humidity variations and the cleanliness of components. When a motor is not immediately put into service it should be protected against moist, high temperatures and impurities, thus avoiding damage to insulation resistance.
If the motor has been in storage more than six month or has been subjected to adverse moisture conditions, it is best to check the insulation resistance of the stator winding with a megohmeter.
If the resistance is lower than ten megohms the windings should be dried in one of the two following ways:

1) Bake in oven at temperatures not exceeding 194 degrees F until insulation resistance becomes constant.
2) With rotor locked, apply low voltage and gradually increase current through windings until temperature measured with thermometer reaches 194 degrees F. Do not exceed this temperature.

If the motor is stored for an extensive period, the rotor must be periodically rotated.
Should the ambient conditions be very humid, a periodical inspection is recommended during storage. It is difficult to prescribe rules for the true insulation resistance value of a machine as resistance varies according to the type, size and rated voltage and the state of the insulation material used, method of construction and the machine's insulation antecedents. A lot of experience is necessary in order to decide when a machine is ready or not to be put into service. Periodical records are useful in making this decision.

The following guidelines show the approximate values that can be expected of a clean and dry motor, at 40°C test voltage in applied during one minute.

Insulation resistance Rm is obtained by the formula:

$$Rm = Vn + 1$$

Where: Rm - minimum recommended insulation resistance in MΩ with winding at 40°C
Vn - rated machine voltage in kV

In case the test is carried out at a temperature other than 40°C, the value must be corrected to 40°C using an approximated curve of insulation resistance v.s temperature of the winding with the aid of Figure 2.1; it's possible verify that resistance practically doubles every 10°C that insulating temperature is lowered.

Example:

Ambient temperature = 50°C
Motor winding resistence at 50°C = 1.02 MΩ
Correction to 40°C

$$R_{40°C} = R_{50°C} \times K_{50°C}$$

$$R_{40°C} = 1.02 \times 1.3$$

$$R_{40°C} = 1.326\ M\Omega$$

The minimum resistence Rm will be:

$$Rm = Vn + 1$$

$$Rm = 0.440 + 1$$

$$Rm = 1.440\ M\Omega$$

On new motors, lower values are often attained due to solvents present in the insulating varnishes that later evaporate during normal operation. This does not necessarily mean that the motor is not operational, since insulating resistance will increase after a period of service.
On motors which have been in service for a period of time much larger values are often attained. A comparison of the values recorded in previous tests on the same motor under similar load, temperature and humidity conditions, serves as a better indication of insulation condition than that of the value derived from a single test. Any substantial or sudden reduction is suspect and the cause determined and corrective action taken.
Insulation resistance is usually measured with a MEGGER.
In the event that insulation resistance is inferior to the values derived from the above formula, motors should be subjected to a drying process.

2.3.1 Drying the windings

This operation should be carried out with maximum care, and only by qualified personnel. The rate of temperature rise should not exceed 5°C per hour and the temperature of the winding should not exceed 105°C. An overly high final temperature as well as a fast temperature increase rate can each generate vapour harmful to the insulation.
Temperature should be accurately controlled during the drying process and the insulation resistance measured at regular intervals.
During the early stages of the drying process, insulation resistance will decrease as a result of the temperature increase, but the resistance will increase again when the insulation becomes dryer.
The drying process should be extended until sucessive measurements of insulation resistance indicate that a constant value above the minimum acceptable value has been attained. It is extremely important that the interior of the motor be well ventilated during the drying operation to ensure that the dampness is really removed.
Heat for drying can be obtained from outside sources (an oven), energization of the space heater (optional), or introducing a current through the actual winding of the motor being dried.

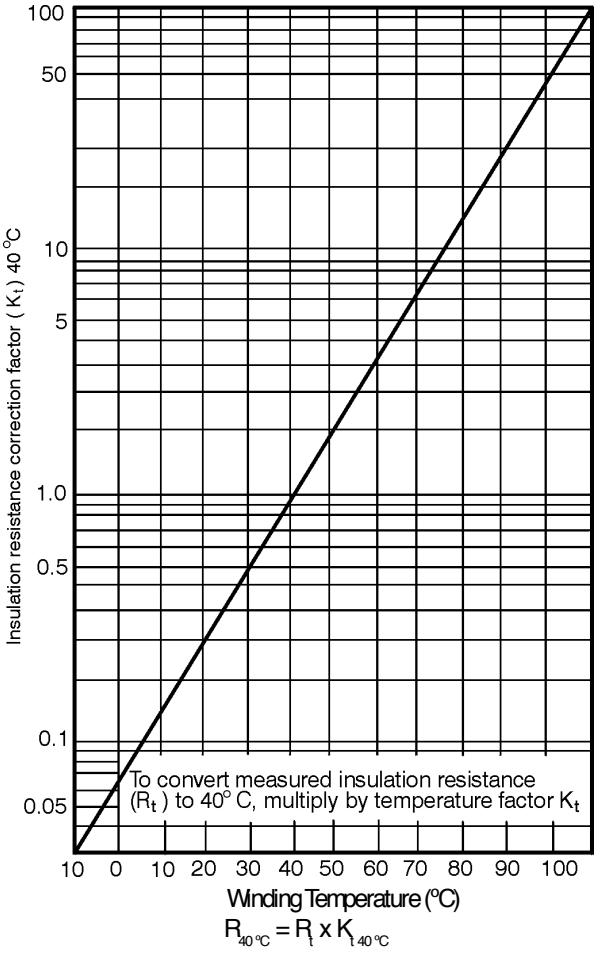

Figure 2.1

3. Installation

Electric machines should be installed in order to allow an easy access for inspection and maintenance. Should the surrounding atmosphere be humid, corrosive or contain flammable substances or particles, it is essential to ensure an adequate degree of protection.
The installation of motors in environments where there are vapours, gases or dusts, flammable or combustible materials, subject to fire or explosion, should be undertaken according to appropriate and governing codes, such as NEC Art. 500 (National Electrical Code) and UL-674 (Underwriters Laboratories, Inc.) Standards.
Under no circumstances can motors be enclosed in boxes or covered with materials which may impede or reduce the free circulation of ventilating air. Machines fitted with external ventilation should be at least 50cm from the wall to permit the passage of air.
The opening for the entry and exit of air flow should never be obstructed or reduced by conductors, pipes or other objects.
The place of installation should allow for air renewal at a rate of 700 cubic feet per minute for each 75 HP motor capacity.

3.1 Mechanical Aspects

3.1.1 Foundation

The motor base must be levelled and as far as possible free of vibrations. A concrete foundation is recommended for motors over 100 HP. The choice of base will depend upon the nature of the soil at the place of erection or of the floor capacity in the case of buildings.
When dimensioning the motor base, keep in mind that the motor may occasionally be run at a torque above that of the rated full load torque.
Based upon Figure 3.1, foundation stresses can be calculated by using the following formula:

$$F1 = 0.2247\ (0.009 \times g \times G - 213\ Tmáx/A)$$

$$F2 = 0.2247\ (0.009 \times g \times G + 213\ Tmax/A)$$

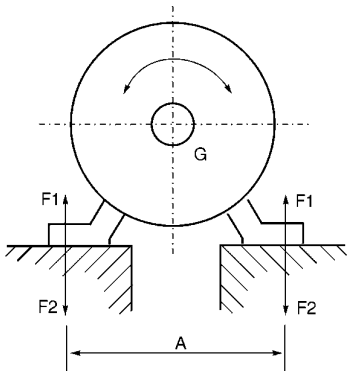

Figure 3.1 - Base stresses

Where:

F1 and F2 - Lateral stress (Lb)
g - Force of gravity (32.18 ft/s²)
G - Weight of motor (Lb)
Tmax - Maximum torque (Lb . Ft)
A - Obtained from the dimensional drawing of the motor (in)

Sunken bolts or metallic base plates should be used to secure the motor to the base.

3.1.2 Types of Bases

a) Slide Rails

When motor drive is by pulleys the motor should be mounted on slide rails and the lower part of the belt should be pulling.
The rail nearest the drive pulley is positioned in such a manner that the adjusting bolt be between the motor and the driven machine.
The other rail should be positioned with the bolt in the opposite position, as shown in Figure 3.2.
The motor is bolted to the rails and set on the base. The drive pulley is aligned such that its center is on a plane with the center of the driven pulley and the motor shaft and that of the machine be parallel.

The belt should not be overly stretched, see Figure 3.11.
After the alignment, the rails are fixed.

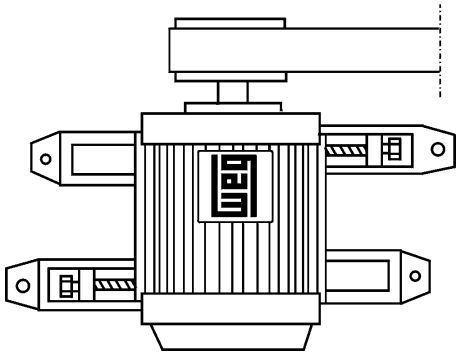

Figure 3.2 - Positioning of slide rails for motor alignment

b) Foundation Studs

Very often, particularly when drive is by flexible coupling the motor is anchored directly to the base with foundation studs.
It is recommended that shim plates of approximately 0.8 inches be used between the foundation studs and the feet of the motor for replacement purposes. These shim plates are useful when exchanging one motor for another of larger shaft height due to variations allowed by standard tolerances.
Foundation studs should neither be painted nor rusted as both interfere with to the adherence of the concrete, and bring about loosening.
After accurate alignment and levelling of the motor, the foundation studs are cemented and their screws tightened to secure the motor.

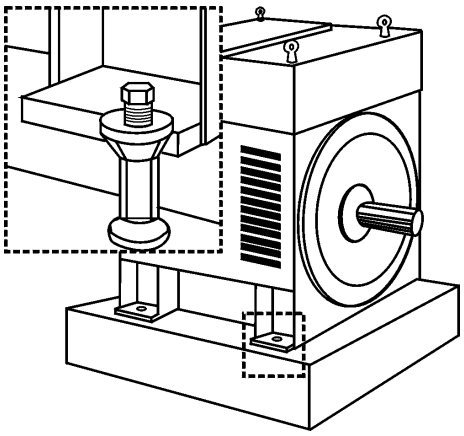

Figure 3.3 - Motor mounted on a concrete base with foundation studs

3.1.3 Alignment

The electric motor should be accurately aligned with the driven machine, particularly in cases of direct coupling. An incorrect alignment can cause bearing failure vibrations and even shaft rupture.
The best way to ensure correct alignment is to use dial gauges placed on each coupling half, one reading radially and the other exially - Figure 3.5.

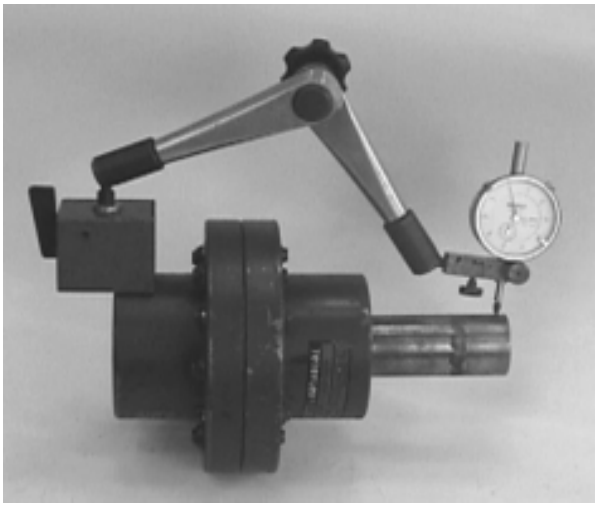

Figure 3.5 - Alignment with dial gauges

Thus, simultaneous readings are possible and allow for checking for any parallel (Figure 3.6a) and concentricity deviations (Figure 3.6b) by rotating the shafts one turn.
Gauge readings should not exceed 0.02 inches. If the installer is sufficiently skilled, he can obtain alignment with feeler gauges and a steel ruler, providing that the couplings are perfect and centered - Figure 3.6c.

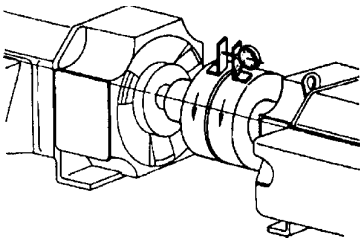

Figure 3.6a - Deviation from parallel

Figure 3.6b - Deviation from concentricity

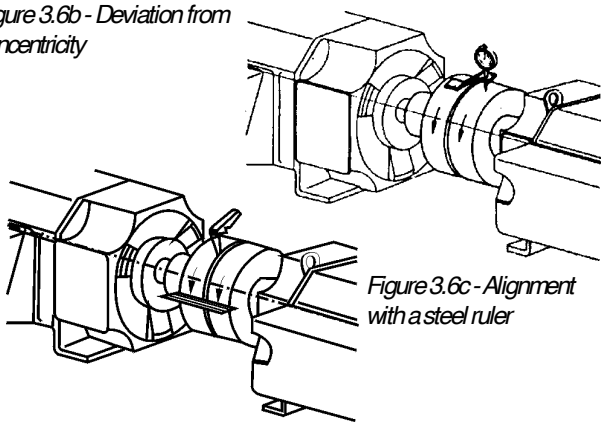

Figure 3.6c - Alignment with a steel ruler

3.1.4 Coupling

a) Direct Coupling

Direct coupling is always preferable due to its lower cost, space economy, no belt slippage and lower accident risk.
In the case of speed ratio drives, it is also common to use a direct coupling with a reducer (gear box).

CAUTION: Carefully align the shaft ends using, whenever feasible, a flexible coupling.

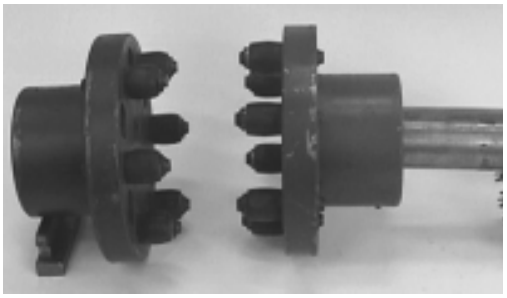

Figure 3.7 - A type of direct coupling

b) Gear Coupling

Poorly aligned gear couplings are the cause of jerking motions which bring about the vibration of the actual drive and vibrations within the motor.

Therefore, due care must be given to perfect shaft alignment: exactly parallel in the case of straight gears, and at the correct angle for bevel or helical gears.
Perfect gear engagement can be checked by the insertion of a strip of paper on which the teeth marks will be traced after a single rotation.

c) Belt and Pulley Coupling

Belt coupling is most commonly used when a speed ratio is required.
Assembly of Pulleys: To assemble pulleys on shaft ends with a keyway and threaded end holes the pulley should be inserted halfway up the keyway merely by manual pressure.
On shafts without threaded end holes the heating of the pulley to about 80°C is recommended, or alternatively, the devices illustrated in Figure 3.8 may be employed.

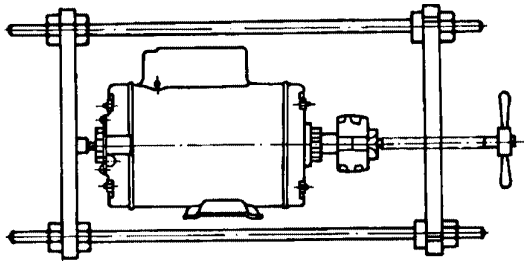

Figure 3.8 - Pulley mounting device

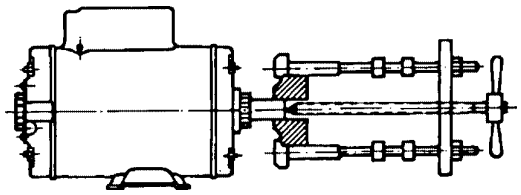

Figure 3.8a - Pulley extractor

Hammers should be avoided during the fitting of pulleys and bearings. The fitting of bearings with the aid of hammers leaves blemishes on the bearing races. These initially small flaws increase with usage and can develop to a stage that completely impairs the bearing.
The correct positioning of a pulley is shown in Figure 3.9.

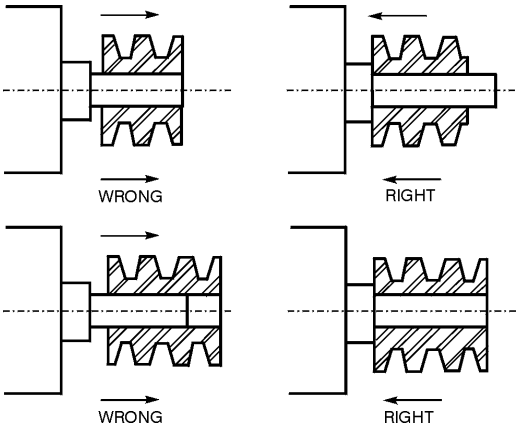

Figure 3.9 - Correct positioning of pulley on the shaft

RUNNING: To avoid needless radial stresses on the bearings it is imperative that shafts are parallel and the pulleys perfectly aligned. (Figure 3.10).

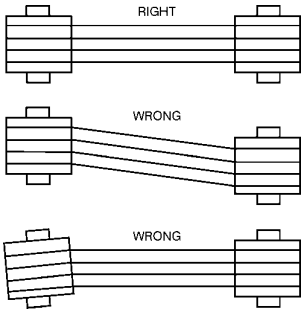

Figure 3.10 - Correct pulley alignment

Laterally misaligned pulleys, when running, transmit alternating knocks to the rotor and can damage the bearing housing. Belt slippage can be avoided by applying a resin (rosin for example).
Belt tension should be sufficient to avoid slippage during operation (Figure 3.11).
Pulleys that are too small should be avoided; these cause shaft flexion because belt traction increases in proportion to a decrease in the pulley size. Table 1 determines minimum pulley diameters, and Tables 2 and 3 refer to the maximum stresses acceptable on motor bearings up to frame 580. Beyond frame size 600, an analysis should be requested from the WEG engineering.

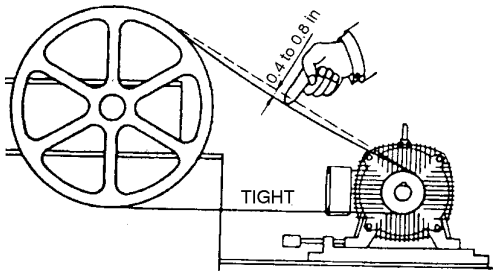

Figure 3.11 - Belt tensions

***Table 1** - Minimum pitch diameter of pulleys*

Frame	Ball bearings						
	Bearing	Size X Inches					
		0.79	1.57	2.36	3.15	3.94	4.72
140	6205-Z	1.7	1.85	2			
W180	6206-Z	3.03	3.23	3.46			
180	6307-Z	1.69	1.81	1.93			
W210	6308-Z		2.86	3.00	3.16		
210	6308-Z		2.90	3.06	3.22		
W250	6309 C3		4.37	4.54	4.72	4.92	
250	6309 C3		4.41	4.59	4.77	4.97	
280	6311 C3			5.08	5.19	5.47	5.65
320	6312 C3			7.44	7.76	7.94	8.18
360	6314 C3			8.73	9.00	9.28	9.57

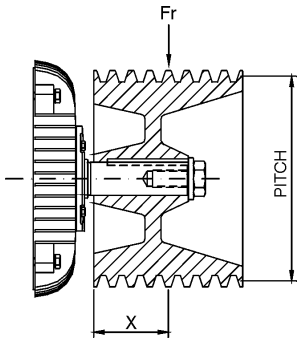

Frame	Poles	Ball Bearing					Roller Bearing						
		Bearing	Size X Inches				Bearing	Size X Inches					
			1.97	3.15	4.33	5.51		1.97	3.15	4.33	5.51	6.69	8.27
400	II	6314 C3	7.3	7.62	7.94	8.24		-	-	-	-	-	-
	IV-VI-VII	6314 C3					NU 316	4.13	4.31	4.49	4.67	4.85	-
440	II	6314 C3	11.75	12.16	12.61	13.08		-	-	-	-	-	-
	IV-VI-VIII	6319 C3					NU 319	4.02	4.17	4.32	4.47	4.62	4.82
500	II	6314 C3	23.54	24.34	25.12	25.87		-	-	-	-	-	-
	IV-VI-VIII	6319 C3					NU 319	6.52	6.73	6.95	7.17	7.39	7.67
5008	II	6314 C3	44.66	45.79	46.98	48.23		-	-	-	-	-	-
	IV-VI-VIII	6322 C3					NU 322	8.73	8.95	9.96	11.34	12.87	14.82
580	II	6314 C3	57	58	59	60		-	-	-	-	-	-
	IV-VI-VIII	6322 C3					NU 322	10.72	10.91	11.11	11.31	11.50	11.76

Important: 1) Peripheral speeds for solid grey cast iron pulleys FC 200 is V = 115 ft/s.
2) Use steel pulleys when peripheral speed is higher than 115 ft/s.
3) V-belt speed should not exceed 115 ft/s.

***Table 2** - Maximum acceptable radial load (Lbf)*

Nema 56 Motors				
Frame	Radial Force (Lbf)			
	Poles	Distance X		
		1	1,18	2
56A	II	88	-	59
	IV	88	-	59
56B	II	88	-	59
	IV	86	-	59
56D	II	127	-	70
	IV	141	-	70

Saw Arbor Motors				
80 LMS	II	-	355	-
80 MMS	II	-	359	-
80 SMS	II	-	357	-
90 LMS	II		427	-
	IV	-	555	-

Table 3 *- Maximum acceptable axial load (Lbf)*

IP55 Totally Enclosed Motors - 60Hz Position / Construction Form																
FRAME	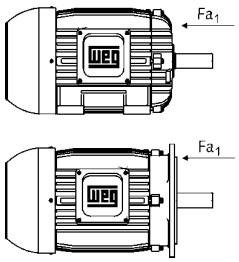				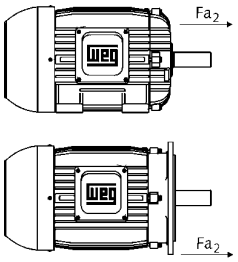				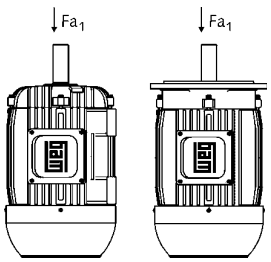				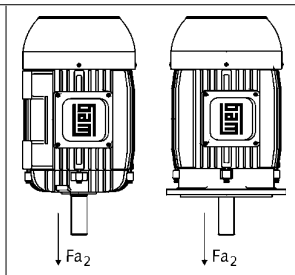			
	II	IV	VI	VIII	II	IV	VI	VIII	II	IV	VI	VIII	II	IV	VI	VIII
140	103	141	167	187	112	152	185	207	99	132	158	178	105	143	174	198
W 180	108	145	180	202	154	209	255	286	94	130	165	183	141	194	240	269
180	149	207	249	286	269	370	443	500	136	189	229	266	253	352	421	480
W 210	196	264	326	368	329	447	544	610	176	238	297	339	310	421	518	582
210	189	257	315	357	324	443	533	599	160	220	275	310	295	405	493	553
W 250	282	372	443	485	471	620	734	811	240	317	394	414	430	564	685	743
250	273	368	436	485	463	615	727	813	220	310	379	421	410	557	672	749
280	355	480	551	624	621	826	959	1,082	275	388	427	502	540	736	838	961
320	374	498	588	668	703	930	1,091	1,232	266	366	432	511	597	793	937	1,078
360	890	1,181	1,144	1,323	890	1,181	1,375	1,552	745	985	1,144	1,323	745	985	1,144	1,323
400	877	1,148	1,347	1,521	877	1,148	1,347	1,521	705	890	1,060	1,241	705	890	1,060	1,241
440	842	1,303	1,563	1,821	842	1,303	1,563	1,821	568	884	1,109	1,488	568	884	1,109	1,488
500	769	1,250	1,481	1,728	769	1,250	1,481	1,728	355	721	844	1,190	355	721	844	1,109
5008	791	1624	1909	2137	791	1624	1909	2137	728	1548	1808	2029	728	1548	1808	2029
580	679	1,406	1,649	1,865	679	1,406	1,649	1,865	033	474	549	597	033	474	549	597

Open Motors - NEMA 56 Frames - 60Hz Position / Construction Form								
FRAME	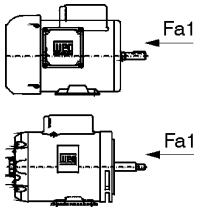		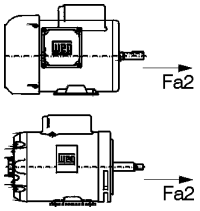		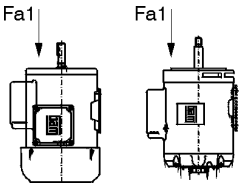		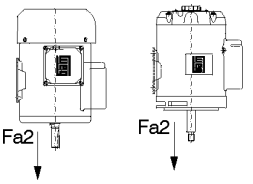	
	II	IV	II	IV	II	IV	II	IV
56 A	68	90	83	112	63	85	79	108
56 B	66	90	81	110	63	83	77	105
56 D	63	88	105	145	59	81	101	138

The maximum radial load for each frame are determined, by graphs.

INSTRUCTIONS ON HOW TO USE THE GRAPHS

1 - Maximum radial load on shaft.
2 - Maximum radial load on bearings.

Where: X - Half of pulley width (inches)
Fr- Maximum radial load in relation to the diameter and pulley width.

Example:
Verify whether a 2HP motor, II Pole, 60Hz withstands a radial load of 110Lb, considering a pulley width of 4 inches.

Frame: 145T
Fr: 110Lb
X: 2 inches

1 - Mark the distance X
2 - Find out line N = 3600 for bearing
Based on the above, this bearing withstands a radial load of 130Lb.

Frame 180T

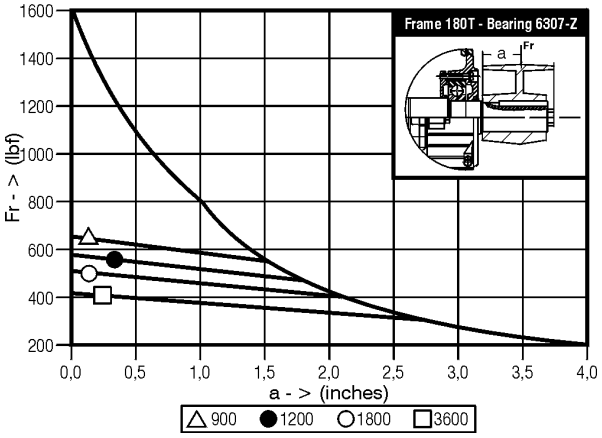

Frame 140T

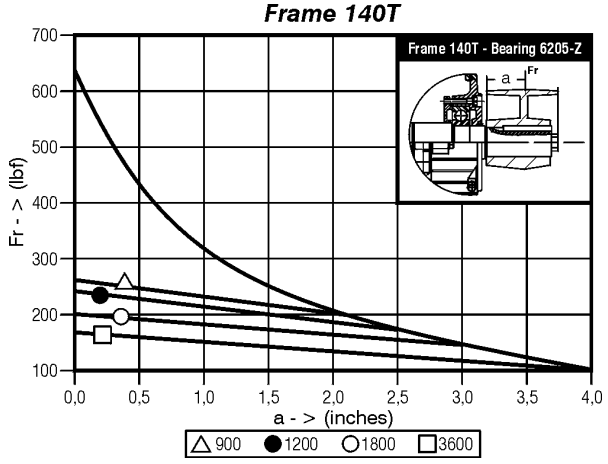

Frame W210T

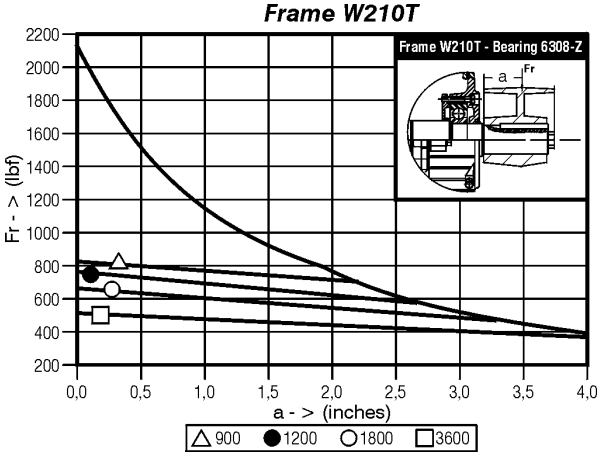

Frame W180T

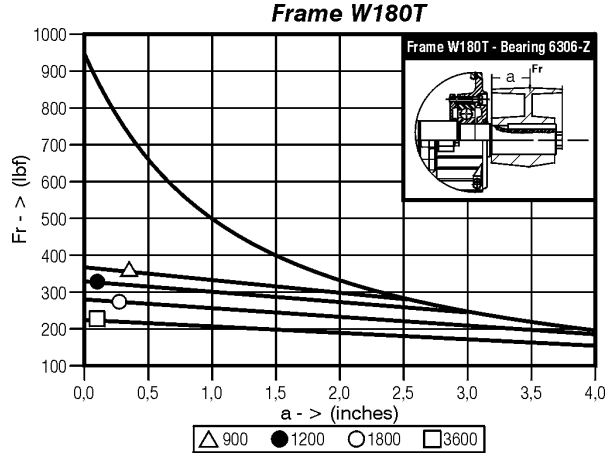

Frame 210T

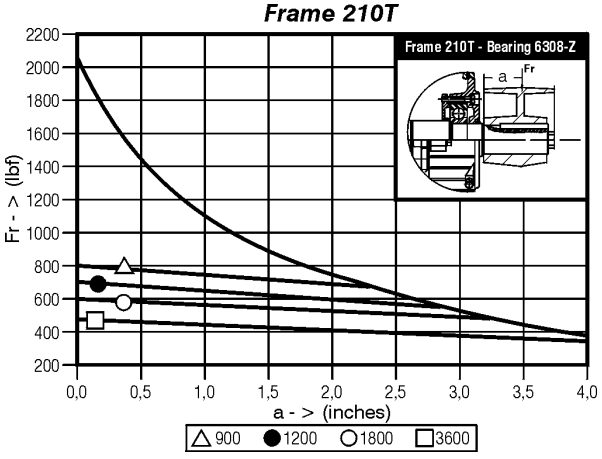

Frame W250T

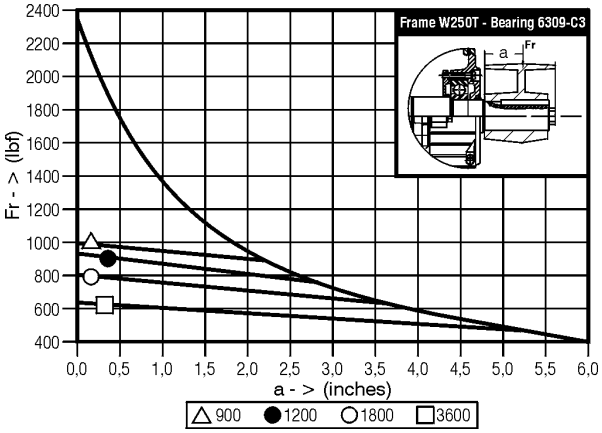

Frame 280T

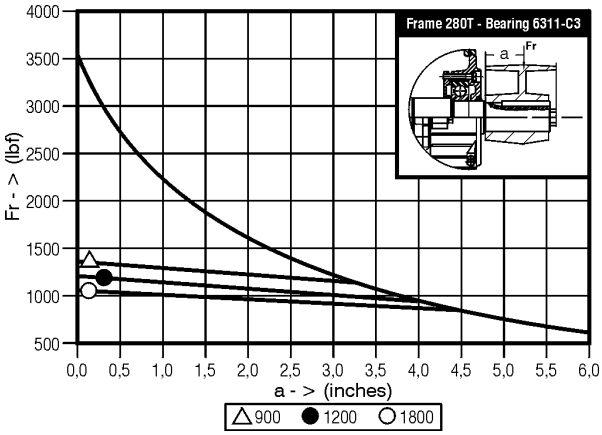

Frame 250T

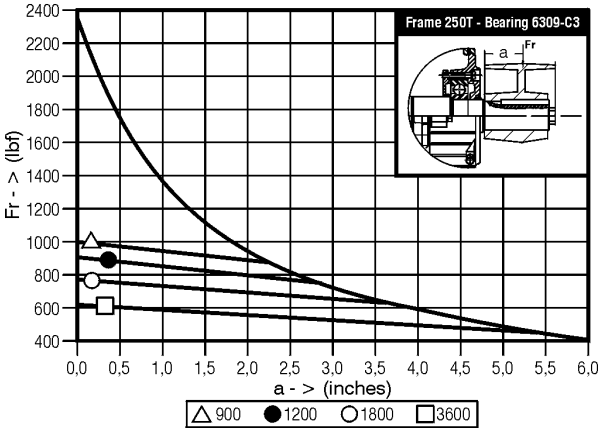

Frame 320TS

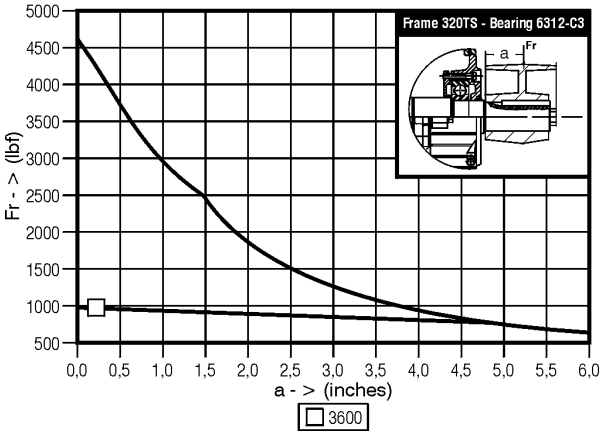

Frame 280TS

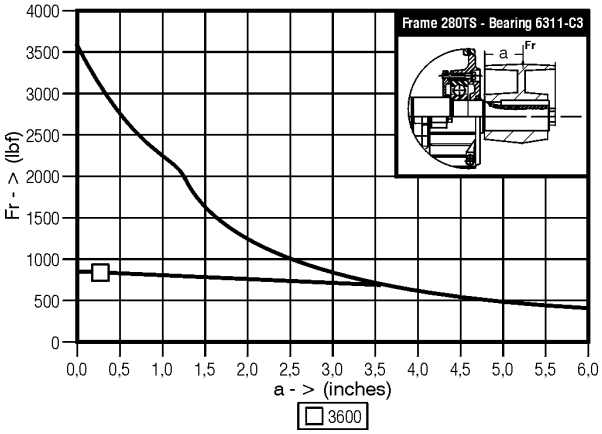

Frame 320T

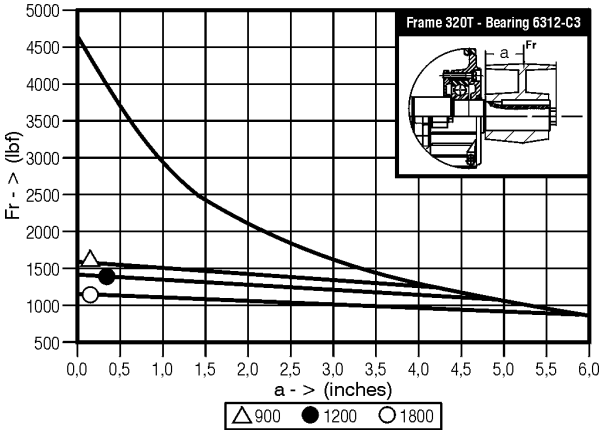

Frame 360TS

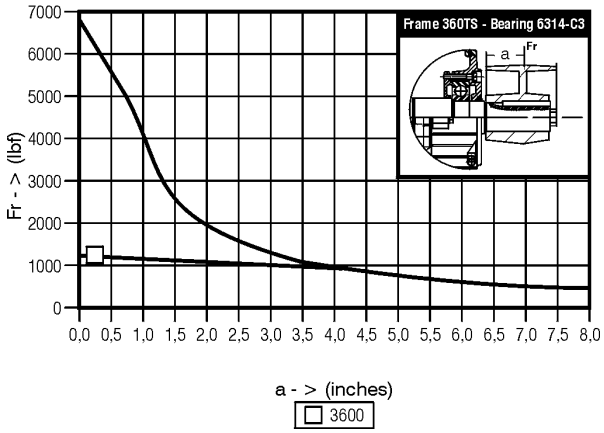

Frame 400T

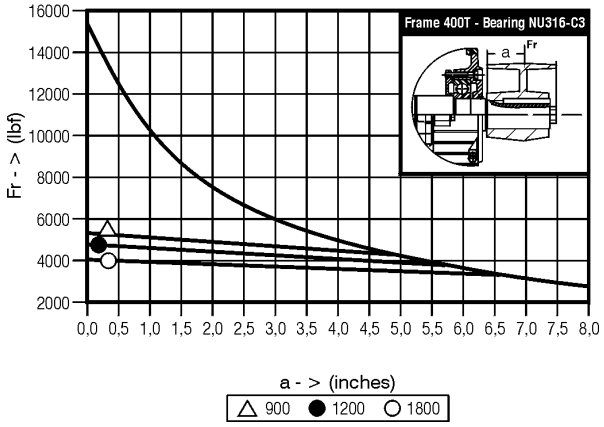

Frame 360T

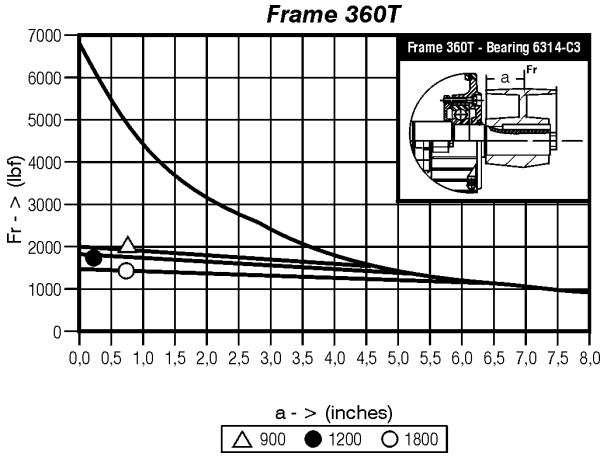

Frame 440TS

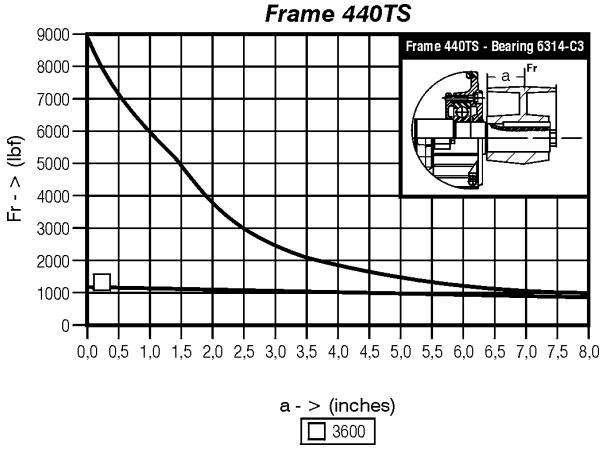

Frame 400TS

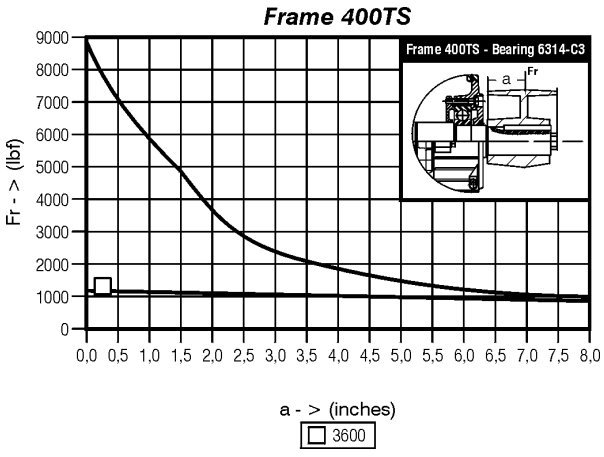

Frame 440T

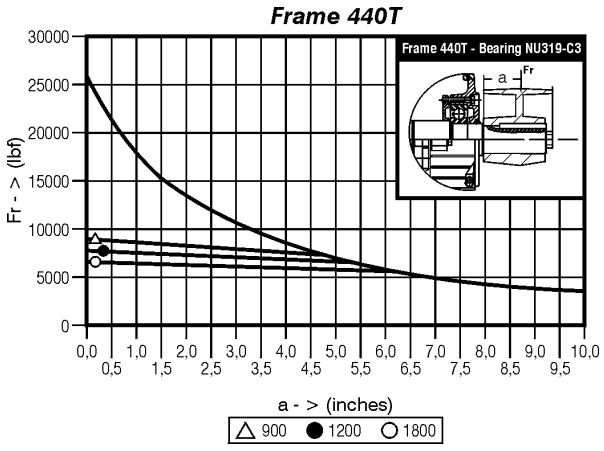

Frame 500TS

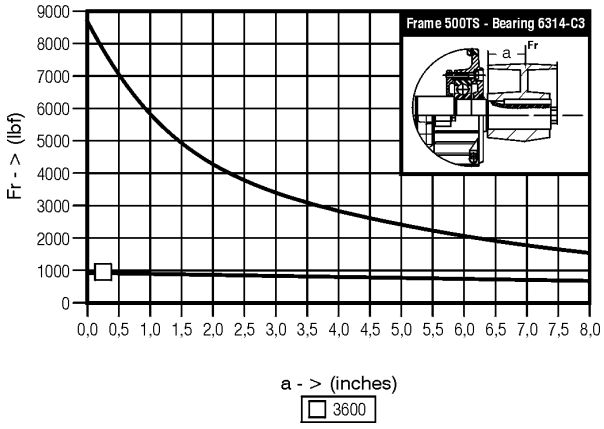

Frame 5008T

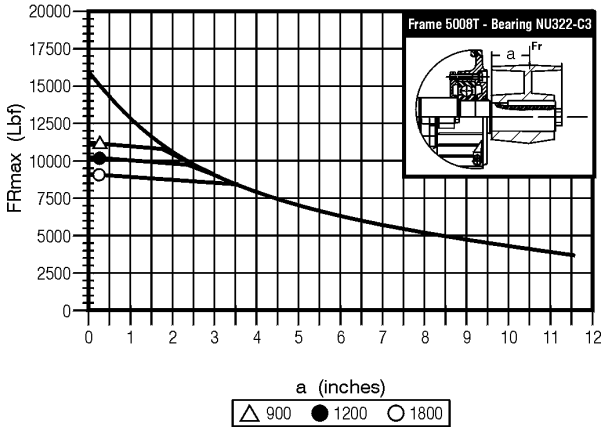

Frame 500T

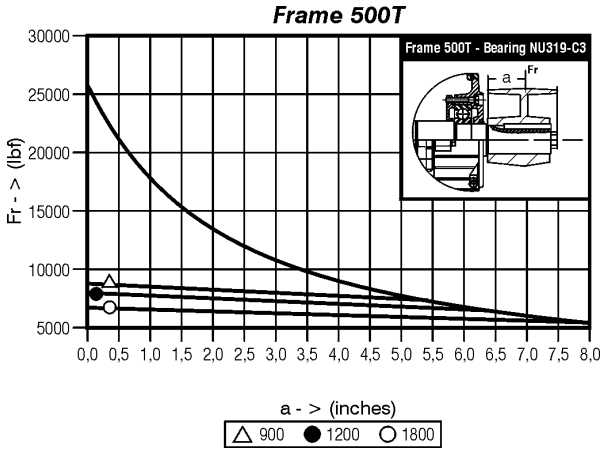

Frame 580TS

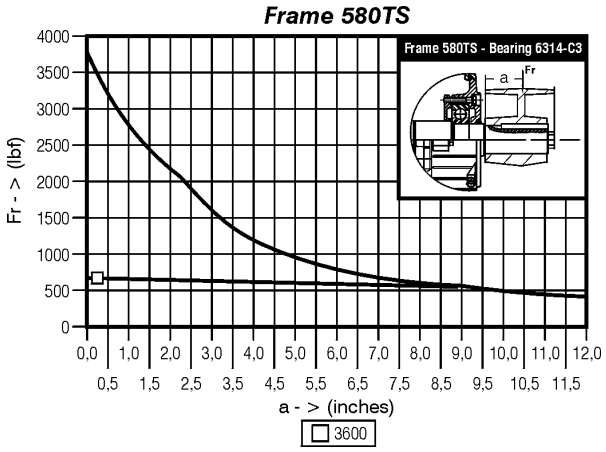

Frame 5008TS

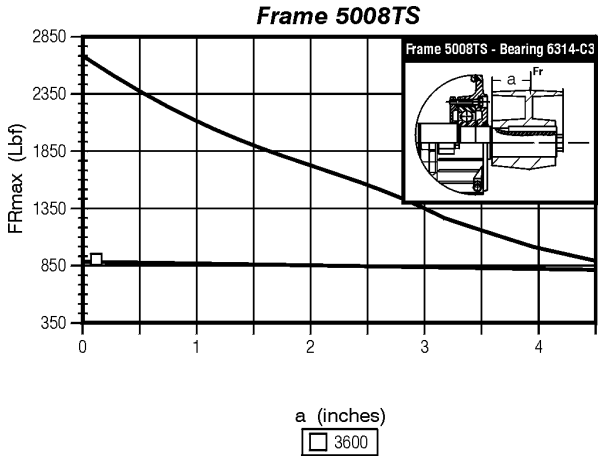

Frame 580T

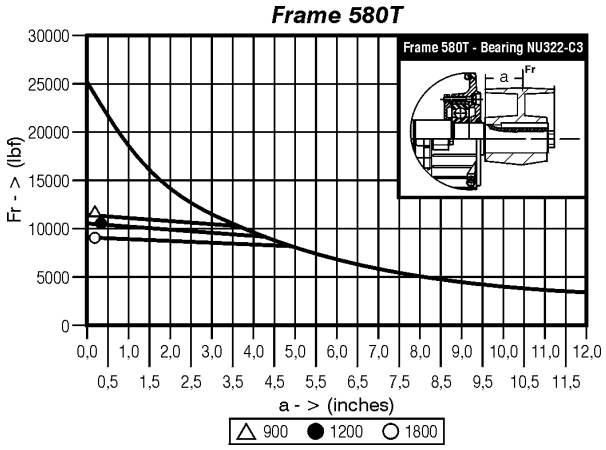

Note: For frames 600 and above, consult your engineering representative.

3.2 Electrical Aspects

3.2.1 Feed System

Proper electric power supply is very important. The choice of motor feed conductors, whether branch or distribution circuits, should be based on the rated current of the motors as per NFPA-70 Standard article 430.
Tables 4, 5 and 6 show minimum conductor gauges sized according to maximum current capacity and maximum voltage drop in relation to the distance from the distribution center to the motor, and to the type of installation (Overhead or in ducts).

To determine the conductor gauge proceed as follows:

a) Determine the current by multiplying the current indicated on the motor nameplate by 1.25 and then locate the resulting value on the corresponding table.
If the conductor feeds more than one motor, the value to be sought on the table should be equal 1.25 times the rated current of the largest motor plus the rated current of the other motors.
In the case of variable speed motors, the highest value among the rated currents should be considered.
When motor operation is intermittent, the conductors should have a current carrying capacity equal or greater, to the product of the motor rated current times the running cycle factor shown on Table 7.

***Table 7** - Running cycle factor*

Motor Short

Motor short time rating / Duty Classification	5min	15min	30 at 60min	Continuos
Short (operating valves, activating contacts etc)	1.10	1.20	1.50	-
Intermittent (passenger or freight elevators, tools, pumps, rolling bridges etc)	0.85	0.85	0.90	1.40
Cyclic (rolling mills,mining machines etc)	0.85	0.90	0.95	1.40
Variable	1.10	1.20	1.50	2.00

b) Locate the rated voltage of the motor and the feed network distance in the upper part of the corresponding table. The point of intersection of the distance column and the line referring to current will indicate the minimum required gauge of the conductor.

Example:
Size the conductors for a 15 HP, three-phase, 230V, 42A, motor located 200 feet from the main supply with cables laid in conduits.

a) Current to be located: 1.25 x 42A = 52.5A
b) Closest value on table 6:55A
c) Minimum gauge: 6 AWG

3.2.2 Starting of Electric Motor

Induction motors can be started by the following methods:

Direct Starting

Whenever possible a three-phase motor with a squirrel cage rotor should be started directly at full supply voltage by means of a contactor (Connection diagram a). This method is called Direct-on-Line (DOL) starting.
There are DOL starter assemblies available combining a three-pole contactor, a bimetal relay (overload protection device), and a fuse (short circuit protection on branch circuit).
DOL starting is the simplest method, only feasible however, when the locked rotor current (LRC) does not influence the main electric supply lines.
Initial locked rotor current (LRC) in induction motors reach values six to eight times the value of the full load current. During starting by the DOL method, starting current can reach these high levels. The main electrical supply should be rated sufficiently, such that during the starting cycle no supply disturbance to others on the power network is caused by the voltage drop in the main supply.
This can be achieved under one of the following situations:

a) The rated main supply current is high enough for the locked rotor current not to be proportionally high.
b) Motor locked rotor current is low with no effect on the networks.
c) The motor is started under no-load conditions with a short starting cycle and, consequently, a low locked rotor current with a transient voltage drop tolerable to other consumers.

Starting with a compensating switch (auto-transformer starting)

Should direct on line starting not be possible, either due to restrictions imposed by the power supply authority or due to the installation itself, reduced voltage indirect starting methods can be employed to lower the locked rotor current. The single line connection diagram (C) shows the basic components of a compensating switch featuring a transformer (usually an auto-transformer) with a series of taps corresponding to the different values of the reduced voltage. Only three terminals of the motor are connected to the switch, the other being interconnected as per diagram, for the indicated voltage.

Star-Delta starting

It is fundamental to star-delta starting that the three-phase motor has the necessary numbers of leads for both connections:

6 leads for Y/Δ
or 12 leads for YY/ΔΔ

All the connections for the various voltages are made through terminals in the terminal box in accordance with the wiring diagram that accompanies the motor. This diagram may be shown on the nameplate or in the terminal box.
The star-delta connection is usually used only in low-voltage motors due to normally available control and protection devices. In this method of starting the locked rotor current is approximately 30% of the original LRC. The locked rotor torque is reduced proportionally as well. For this reason, it is very important before deciding to use

***Table 4** - Wire and cable gauges for single-phase motor installation (voltage drop < 5%) (in conduits)*

Supply Voltage	Distance of motor from distribution centre (feet)													
115	34	51	69	85	102	137	171	205	240	273	308	342	428	514
230	69	102	138	170	204	274	342	410	480	546	616	684	856	1028
460	138	204	276	340	408	548	684	820	960	1092	1232	1368	1712	2056
575	170	250	338	420	501	670	840	1010	1181	1342	1515	1680	2105	2530
Current (A)	Cable gauge (conductor)													
5	14	14	14	14	14	14	14	12	12	12	12	10	10	8
10	14	14	14	14	12	12	10	10	10	8	8	8	6	6
15	12	12	12	12	12	10	8	8	6	6	6	6	4	2
20	12	12	12	10	10	8	8	6	6	6	4	4	4	2
30	10	10	10	8	8	6	6	6	4	4	2	2	2	1/0
40	8	8	8	8	6	6	4	4	2	2	2	2	1/0	2/0
55	6	6	6	6	6	4	4	2	2	1/0	1/0	1/0	1/0	2/0
70	4	4	4	4	4	2	2	2	1/0	1/0	2/0	2/0	2/0	2/0
95	2	2	2	2	2	2	1/0	1/0	1/0	2/0	3/0	3/0	4/0	250M

***Table 5** - Wire and cable gauges for three-phase motor installation - aerial conductors with 25cm spacing (voltage drop < 5%)*

Supply Voltage	Distance of motor from distribution centre (feet)													
115	51	69	85	102	137	171	205	240	273	308	342	428	514	685
230	102	138	170	204	274	342	410	480	546	616	684	856	1028	1370
460	204	276	340	408	547	684	820	960	1092	1232	1368	1712	2056	2740
575	250	338	420	501	670	840	1010	1181	1342	1515	1680	2105	2530	3350
Current (A)	Cable gauge (conductor)													
15	14	14	14	12	12	10	10	10	8	8	8	6	6	4
20	14	14	12	12	10	10	8	8	8	6	6	4	4	2
30	14	12	10	8	8	8	6	6	4	4	4	2	2	1/0
40	12	10	10	8	8	6	4	4	4	2	2	2	1/0	2/0
55	10	10	8	8	6	4	4	2	2	2	1/0	2/0	3/0	--
70	8	8	6	6	4	2	2	2	1/0	1/0	2/0	3/0	--	--
100	6	6	4	4	2	2	1/0	2/0	3/0	4/0	4/0	--	--	--
130	4	4	4	2	1/0	1/0	2/0	4/0	--	--	--	--	--	--
175	2	2	2	1/0	2/0	3/0	--	--	--	--	--	--	--	--
225	1/0	1/0	1/0	2/0	3/0	--	--	--	--	--	--	--	--	--
275	2/0	2/0	2/0	4/0	--	--	--	--	--	--	--	--	--	--
320	3/0	3/0	3/0	4/0	--	--	--	--	--	--	--	--	--	--

***Table 6** - Wire and cable gauges for three-phase motor installation (voltage drop < 5%) (in conduits)*

Supply Voltage	Distance of motor from distribution centre (feet)											
115	85	102	120	137	171	205	240	273	308	342	428	514
230	170	204	240	274	342	410	480	546	616	684	856	1028
460	340	408	480	548	684	820	960	1092	1232	1368	1712	2056
575	420	501	590	670	840	1010	1181	1342	1515	1680	2105	2530
Current (A)	Cable gauge (conductor)											
15	12	12	12	10	10	8	8	8	6	6	6	4
20	12	10	10	10	8	8	6	6	6	6	4	4
30	10	8	8	8	6	6	6	4	4	4	2	2
40	8	8	6	6	6	4	4	4	2	2	2	1/0
55	6	6	6	4	4	4	2	2	2	1/0	1/0	1/0
70	4	4	4	4	2	2	2	1/0	1/0	1/0	2/0	2/0
95	2	2	2	2	2	1/0	1/0	1/0	1/0	2/0	3/0	4/0
125	1/0	1/0	1/0	1/0	1/0	1/0	2/0	2/0	3/0	3/0	4/0	250M
145	2/0	2/0	2/0	2/0	2/0	2/0	2/0	3/0	3/0	4/0	250M	300M
165	3/0	3/0	3/0	3/0	3/0	3/0	3/0	3/0	4/0	4/0	250M	350M
195	4/0	4/0	4/0	4/0	4/0	4/0	4/0	4/0	250M	250M	300M	350M
215	250M	250M	250M	250M	250M	250M	250M	250M	250M	300M	350M	400M
240	300M	300M	300M	300M	300M	300M	300M	300M	300M	300M	400M	500M
265	350M	350M	350M	350M	350M	350M	350M	350M	350M	350M	500M	500M
280	400M	400M	400M	400M	400M	400M	400M	400M	400M	400M	400M	--
320	500M	500M	500M	500M	500M	500M	500M	500M	500M	500M	500M	--

Note: The above indicated values are orientative. For guaranteed values, contact the Local Power Company.

star-delta starting to verify if the reduced locked rotor torque in "STAR" connection is enough to accelerate the load.

3.2.3 Motor Protection

Motor circuits have, in principle, two types of protection: motor overload, locked rotor and protection of branch circuit from short circuits. Motors in continuous use should be protected from overloading by means of a device incorporated into the motor, or by an independent device, usually a fixed or adjustable thermal relay equal or less than to the value derived from multiplying the rated feed current at full load by:

- 1.25 for motors with a service factor equal or superior to 1.15 or;

- 1.15 for motors with service factor equal to 1.0.

Some motors are optionally fitted with overheating protective detectors (in the event of overload, locked rotor, low voltage, inadequate motor ventilation) such as a thermostat (thermal probe), thermistor (PTC), RTD type resistance which dispense with independent devices.

THERMOSTAT (THERMAL PROBE)**:** Bimetallic thermal detectors with normally closed silver contacts. These open at pre-determined temperatures. Thermostats are series connected directly to the contactor coil circuit by two conductors.

THERMISTORS: Semi-conductor heat detectors positive temperature coeficient (PTC) that sharply change their resistance upon reaching a set temperature. Thermistors, depending upon the type, are series or parallel-connected to a control unit that cuts out the motor feed, or actuates an alarm system, in response to the thermistors reaction.

RESISTANCE TEMPERATURE DETECTORS (RTD) - PT 100: The resistance type heat detector (RTD) is a resistance element usually manufactured of copper or platinum.
The RTD operates on the principle that the electrical resistance of a metallic conductor varies linearly with the temperature. The detector terminals are connected to a control panel, usually fitted with a temperature gauge, a test resistance and a terminal changeover switch.

Subject to the desired degree of safety and the client's specification, three (one per phase) or six (two per phase) protective devices can be fitted to a motor for the alarm stems, circuit breaker or combined alarm and circuit breaker, with two leads from the terminal box to the alarm or circuit breaker system and four for the combined system (alarm and circuit breaker).
Table 9 compares the two methods of protection.

3.3 Start-up

3.3.1 Preliminary Inspection

Before starting a motor for the first time, it will be necessary to:

a) Remove all locking devices and blocks used in transit and check that the motor rotates freely;

b) Check that the motor is firmly secured and that coupling elements are correctly mounted and aligned.;

c) Ascertain that voltage and frequency correspond to those indicated on the nameplate. Motor performance will be satisfactory with main supply voltage fluctuation within ten per cent of the value indicated on the nameplate or a frequency fluctuation within five per cent or, yet, with a combined voltage and frequency variance within ten per cent;

d) Check that connections are in accordance with the connection diagram shown on the nameplate and be sure that all terminal screws and nuts are tight;

e) Check the motor for proper grounding. Providing that there are no specifications calling for ground-insulated installation, the motor must be grounded in accordance with prevalent standard for grounding electrical machines. The screw identified by the symbol ⏚ should be used for this purpose.
This screw is generally to be found in the terminal box or on one foot of the frame;

f) Check that motor leads connecting with the mains, as well as the control wires and the overload protection device, are in accordance with Nema Standards;

g) If the motor has been stored in a damp place, or has been stopped for some time, measure the insulating resistance as recommended under the item covering storage instructions;

h) Start the motor uncoupled to ascertain that it is turning in the desired direction. To reverse the rotation of a three-phase motor, invert two terminal leads of the mains supply.
High voltage motors bearing an arrow on the frame indicating rotation direction can only turn in the direction shown.

3.3.2 The First Start-up

Three-Phase Motor with Cage Rotor:
After careful examination of the motor, follow the normal sequence of starting operations listed in the control instructions for the initial start-up.

3.3.3 Operation

Drive the motor coupled to the load for a period of at least one hour while watching for abnormal noises or signs of overheating.
Compare the line current with the value shown on the nameplate.
Under continuous running conditions without load fluctuations this should not exceed the rated current times the service factor, also shown on the nameplate.
All measuring and control instruments and apparatus should be continuously checked for anomalies, and any irregularities corrected.

3.3.4 Stopping

Warning:

To touch any moving part of a running motor, even though

disconnected, is a danger to life and limb.

Three-phase motor with cage rotor:
Open the stator circuit switch. With the motor at a complete stop, reset the auto-transformer, if any, to the "start" position.

Caption: ◯ unprotected
◑ partially protected
● totally protected

***Table 9** - Comparison between motor protection system*

Causes of overheating	Current-based protection		Protection with probe thermistor in motor
	Fuse only	Fuse and thermal protector	
	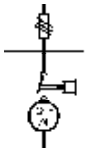	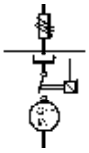	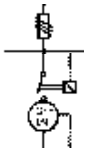
1. Overload with 1.2 times rated current	◯	●	●
2. Duty cycles S1 to S8 IEC 34, EB 120	◯	◑	●
3. Brakings, reversals and frequent starts	◯	◑	●
4. Operating with more than 15 starts p/hour	◯	◑	●
5. Locked rotor	◑	◑	●
6. Fault on one phase	◯	◑	●
7. Execessive voltage fluctuation	◯	●	●
8. Frequency fluctuation on main supply	◯	●	●
9. Excessive ambient temperature	◯	●	●
10. External heating caused by bearings, belts, pulleys etc.	◯	◯	●
11. Obstructed ventilation	◯	◯	●

CONNECTION DIAGRAMS

a) Direct starting

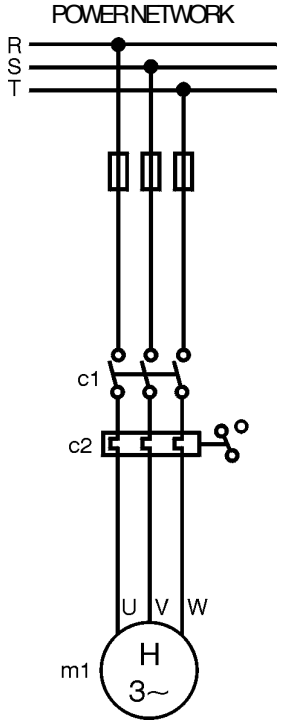

b) Star-Delta starting

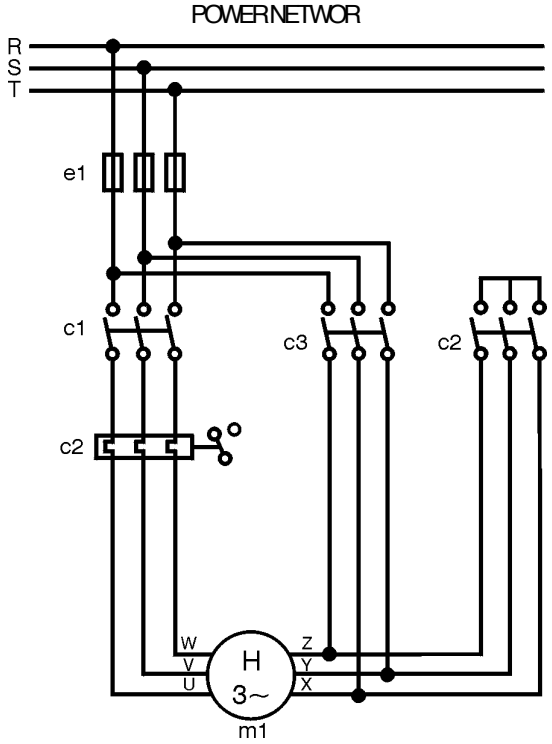

c) Auto-transformer starting

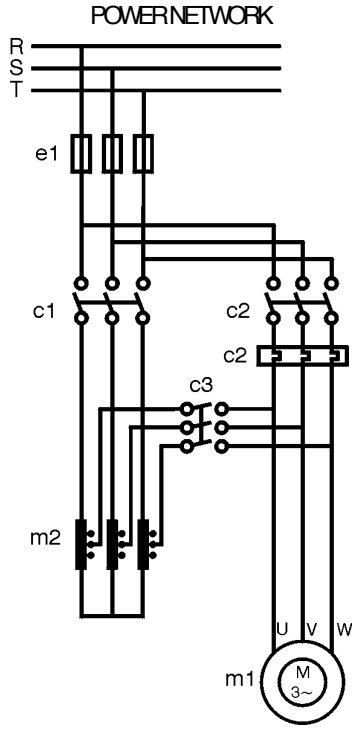

Table 11 *- Bearing specifications by type of motor*

NEMA Frames	Mounting	Bearings	
		Front (D.E.)	Rear (O.D.E.)
Open drip proof motors			
B48 and C48	ALL FORMS	6203Z	6202Z
56 and A56		6203Z	6202Z
B56 and C56		6203Z	6202Z
D56 and F56H/G56H		6204Z	6202Z / 6203Z
Totally enclosed fan cooled motors			
143T	ALL FORMS	6205ZZ	6204ZZ
145T		6205ZZ	6204ZZ
182T		6307ZZ	6206ZZ
184T		6307ZZ	6206ZZ
W182T		6206ZZ	6205ZZ
W184T		6206ZZ	6205ZZ
213T		6308ZZ	6207ZZ
215T		6308ZZ	6207ZZ
W213T		6308ZZ	6207ZZ
W215T		6308ZZ	6207ZZ
254T		6309-C3	6209Z-C3
256T		6309-C3	6209Z-C3
W254T		6309-C3	6209Z-C3
W256T		6309-C3	6209Z-C3
284T and TS		6311-C3	6211Z-C3
286T and TS		6311-C3	6211Z-C3
324T and TS		6312-C3	6212Z-C3
326T and TS		6312-C3	6212Z-C3
364T and TS		6314-C3	6314-C3
365T and TS		6314-C3	6314-C3
404T		NU 316-C3	6314-C3
404TS		6314-C3	6314-C3
405T		NU 316-C3	6314-C3
405TS		6314-C3	6414-C3
444T		NU 319-C3	6316-C3
444TS		6314-C3	6314-C3
445T		NU 319-C3	6316-C3
445TS		6314-C3	6314-C3
447T		NU 319-C3	6316-C3
447TS		6314-C3	6314-C3
449T		NU 322-C3	6319-C3
449TS		6314-C3	6314-C3
504T		NU 319-C3	6316-C3
504TS		6314-C3	6314-C3
505T		NU 319-C3	6316-C3
505TS		6314-C3	6314-C3
5008T		NU 322-C3	6319-C3
5008TS		6314-C3	6314-C3
586T		NU 322-C3	6319-C3
586TS		6314-C3	6314-C3
587T		NU 322-C3	6319-C3
587TS		6314-C3	6314-C3

Saw Arbor motor frame	Mounting	Bearings	
		Front (D.E.)	Rear (O.D.E.)
80 S MS	B3	6307ZZ	6207ZZ
80 M MS		6307ZZ	6207ZZ
80 L MS		6307ZZ	6207ZZ
90 L MS		6308ZZ	6208ZZ

ODP Motors Nema-T frames	Mounting	Bearings	
		Front (D.E.)	Rear (O.D.E.)
E143/5T	HORIZONTAL MOUNTING ONLY	6205ZZ	6204ZZ
F143/5T		6205ZZ	6204ZZ
182T		6206ZZ	6205ZZ
184T		6202ZZ	6205ZZ
213/5T		6208ZZ	6206ZZ
254T		6309Z-C3	6209Z-C3
256T		6309Z-C3	6209Z-C3
284T		6311Z-C3	6211Z-C3
284TS		6311Z-C3	6211Z-C3
286T		6311Z-C3	6211Z-C3
286TS		6311Z-C3	6211Z-C3
324T		6312Z-C3	6212Z-C3
324TS		6312Z-C3	6212Z-C3
326T		6312Z-C3	6212Z-C3
326TS		6312Z-C3	6212Z-C3
364T		6314 C3	6314 C3
364TS		6314 C3	6314 C3
365T		6314 C3	6314 C3
365TS		6314 C3	6314 C3
404T		NU 316 C3	6314 C3
404TS		6314 C3	6314 C3
405T		NU 316 C3	6314 C3
405TS		6314 C3	6314 C3
444T		NU 319 C3	6316 C3
444TS		6314 C3	6314 C3
445T		NU 319 C3	6316 C3
445TS		6314 C3	6314 C3

IEC frame	Mounting	Bearings	
		Front (D.E.)	Rear (O.D.E.)
Totally enclosed fan cooled motors			
63	B3	6201ZZ	6201ZZ
71		6203ZZ	6202ZZ
80		6204ZZ	6203ZZ
90 S - L		6205ZZ	6204ZZ
100 L		6206ZZ	6205ZZ
112 M		6307ZZ	6206ZZ
132 S - M		6308ZZ	6207ZZ
160 M - L		6309-C3	6209Z-C3
180 M - L		6311-C3	6211Z-C3
200 M - L		6312-C3	6212Z-C3
225 S/M		6314-C3	6314-C3
250 S/M		6314-C3	6314-C3
280 S/M		6314-C3	6314-C3
		6316-C3	6316-C3
315 S/M		6314-C3	6314-C3
		6319-C3	6316-C3
355 M/L		6314-C3	6314-C3
		NU 322-C3	6319-C3

***Table 12** – Bearing lubrication intervals and amount of grease*

BALL BEARINGS - Series 62/63													
Relubrication intervals (running hours – horizontal position)													
	II pole		IV pole		VI pole		VIII pole		X pole		XII pole		Amount of grease
Serie 62													
Bearing	60Hz	50Hz	60Hz	50Hz	60Hz	50Hz	60Hz	50Hz	60Hz	50Hz	60Hz	50Hz	(g)
6209	18400	20000	20000	20000	20000	20000	20000	20000	20000	20000	20000	20000	9
6211	14200	16500	20000	20000	20000	20000	20000	20000	20000	20000	20000	20000	11
6212	12100	14400	20000	20000	20000	20000	20000	20000	20000	20000	20000	20000	13
Serie 63													
Bearing	60Hz	50Hz	60Hz	50Hz	60Hz	50Hz	60Hz	50Hz	60Hz	50Hz	60Hz	50Hz	(g)
6309	15700	18100	20000	20000	20000	20000	20000	20000	20000	20000	20000	20000	13
6311	11500	13700	20000	20000	20000	20000	20000	20000	20000	20000	20000	20000	18
6312	9800	11900	20000	20000	20000	20000	20000	20000	20000	20000	20000	20000	21
6314	3600	4500	9700	11600	14200	16400	17300	19700	19700	20000	20000	20000	27
6316	-	-	8500	10400	12800	14900	15900	18700	18700	20000	20000	20000	34
6319	-	-	7000	9000	11000	13000	14000	17400	17400	18600	18600	20000	45
6322	-	-	5100	7200	9200	10800	11800	15100	15100	15500	15500	19300	60

***Table 13** – Bearing lubrication intervals and amount of grease*

BALL BEARINGS - Series NU3													
Relubrication intervals (running hours – horizontal position)													
	II pole		IV pole		VI pole		VIII pole		X pole		XII pole		Amount of grease
Bearing	60Hz	50Hz	60Hz	50Hz	60Hz	50Hz	60Hz	50Hz	60Hz	50Hz	60Hz	50Hz	(g)
NU 309	9800	13300	20000	20000	20000	20000	20000	20000	20000	20000	20000	20000	13
NU 311	6400	9200	19100	20000	20000	20000	20000	20000	20000	20000	20000	20000	18
NU 312	5100	7600	17200	20000	20000	20000	20000	20000	20000	20000	20000	20000	21
NU 314	1600	2500	7100	8900	11000	13100	15100	16900	16900	19300	19300	20000	27
NU 316	-	-	6000	7600	9500	11600	13800	15500	15500	17800	17800	20000	34
NU 319	-	-	4700	6000	7600	9800	12200	13700	13700	15700	15700	20000	45
NU 322	-	-	3300	4400	5900	7800	10700	11500	11500	13400	13400	17300	60
NU 324	-	-	2400	3500	5000	6600	10000	10200	10200	12100	12100	15000	72

Notes:
- The ZZ bearings from 6201 to 6307 do not require relubrication as its life time is about 20,000 hours.
- Tables 1 and 2 are intended for the lubrication period under bearing temperature of 70ºC (for bearings up to 6312 and NU 312) and temperature of 85ºC (for bearings 6314 and NU 314 and larger).
- For each 15ºC of temperature rise, the relubrication period is reduced by half.
- The relubrication periods given above are for those cases applying Polyrex® EM grease.
- When motors are used on the vertical position, their relubrication interval is reduced by half if compared to horizontal position motors.

Compatibility of Polyrex® EM grease with other types of grease:

Containing polyurea thickener and mineral oil, the Polyrex® EM grease is compatible with other types of grease that contain:
- Lithium base or complex of lithium or polyurea and highly refined mineral oil.
- Inhibitor additive against corrosion, rust and anti-oxidant additive.

Notes:
- Although Polyrex® EM is compatible with types of grease given above, we do no recommended to mix it with any other greases.
- If you intend to use a type of grease different than those recommended above , first contact WEG.
- On applications (with high or low temperatures, speed variation, etc), the type of grease and relubrification interval are given on an additional nameplate attached to the motor.

4. Maintenance

A well-designed maintenance program for electric motors can be summed up as: periodical inspection of insulation levels, temperature rise, wear, bearing lubrication and the occasional checking of fan air flow.
Inspection cycles depend upon the type of motor and the conditions under which it operates.

4.1 Cleanliness

Motors should be kept clean, free of dust, debris and oil. Soft brushes or clean cotton rags should be used for cleaning. A jet of compressed air should be used to remove non-abrasive dust from the fan cover and any accumulated grime from the fan and cooling fins.
Oil or damp impregnated impurities can be removed with rags soaked in a suitable solvent.
Terminal boxes fitted to motors with IP55 protection should be cleaned; their terminals should be free of oxidation, in perfect mechanical condition, and all unused space dust-free.
Motors with IPW 55 protection are recommended for use under unfavourable ambient conditions.

4.2 Lubrication

Proper lubrication extends bearing life.

Lubrication Maintenance Includes:

a) Attention to the overall state of the bearings;
b) Cleaning and lubrication;
c) Critical inspection of the bearings.

Motor noise should be measured at regular intervals of one to four months. A well-tuned ear is perfectly capable of distinguishing unusual noises, even with rudimentary tools such as a screw driver, etc., without recourse to sophisticated listening aids or stethescopes that are available on the market.
A uniform hum is a sign that a bearing is running perfectly. Bearing temperature control is also part of routine maintenance.
Constant temperature control is possible with the aid of external thermometers or by embedded thermal elements. WEG motors are normally equipped with grease lubricated ball or roller bearings.
Bearings should be lubricated to avoid metallic contact of the moving parts, and also for protection against corrosion and wear. Lubricant properties deteriorate in the course of time and mechanical operation: furthermore, all lubricants are subject to contamination under working conditions.
For this reason lubricants must be renewed and any lubricant consumed needs replacing from time to time.

4.2.1 Periodical Lubrication

WEG motors are supplied with sufficient grease for a long running period. Lubrication intervals, the amount of grease and the type of bearing used in frames 140T to 580T are to be found in Tables 11, 12 and 13.
Lubrication intervals depend upon the size of the motor, speed, working conditions and the type of grease used.

4.2.2 Quality and Quantity of Grease

Correct lubrication is important!
Grease must be applied correctly and in sufficient quantity as both insufficient or excessive greasing are harmful.
Excessive greasing causes overheating brought about by the greater resistance encountered by the rotating parts and, in particular, by the compacting of the lubricant and its eventual loss of lubricating qualities.
This can cause seepage with the grease penetrating the motor and dripping on the coils.

GREASES FOR MOTOR BEARINGS

For operating temperatures from -30 to 170ºC	
Type	**Supplier**
Polyrex® EM	Esso

4.2.3 Lubricating Instructions

a) Frame 140T to 210T motors
Frame 140T to 210T size motors are not fitted with grease nipples. Lubrication is carried out during periodical overhauls when the motor is taken apart.

Cleaning and Lubrication of Bearings

With the motor dismantled and without extracting the bearings from the shaft, all existing grease should be removed and the bearings cleaned with Diesel oil, kerosene or other solvent, until thoroughly clean.
Refill the spaces between the balls or rollers and the bearing cages with grease immediately after washing. Never rotate bearings in their dry state after washing.
For inspection purposes apply a few drops of machine oil. During these operations maximum care and cleanliness is recommended to avoid the penetration of any impurities or dust that could harm the bearings. Clean all external parts prior to reassembly.

b) Frame 360T to 580T Motors
Motors above 360T frame size are fitted with regreasable bearing system.
The lubrication system from this frame size upwards was designed to allow the removal of all grease from the bearing races through a bleeder outlet which at the same time impedes the entry of dust or other contaminants harmful to the bearing.
This outlet also prevents injury to the bearings from the well-known problem of over-greasing.

It is advisable to lubricate while the motor is running, to allow the renewal of grease in the bearing case.
Should this procedure not be possible because of rotating parts in the proximity of the nipple (pulleys, coupling sleeves, etc.) that are hazardous to the operator the following procedure should be followed:
- Inject about half the estimated amount of grease and run the motor at full speed for approximately a minute; switch off the motor and inject the remaining grease.
The injection of all the grease with the motor at rest could cause penetration of a portion of the lubricant through the internal seal of the bearing case and hence into the motor.

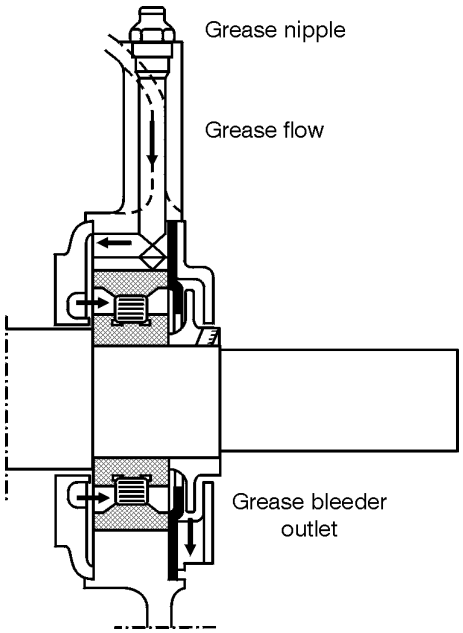

Figure 4.1 - Bearings and lubrication system

Nipples must be clean prior to introduction of grease to avoid entry of any alien bodies into the bearing.
For lubricating use only a manual grease gun.

Bearing Lubrication Steps

1. Cleanse the area around the grease nipples with clean cotton fabric.
2. With the motor running, add grease with a manual grease gun until the lubricant commences to be expelled from the bleeder outlet, or until the quantity of grease recommended in Tables 12 or 13 has been applied.
3. Allow the motor to run long enough to eject all excess grease.

4.2.4 Replacement of Bearings

The opening of a motor to replace a bearing should only be carried out by qualified personnel.
Damage to the core after the removal of the bearing cover can be avoided by filling the gap between the rotor and the stator with stiff paper of a proper thickness.

Providing suitable tooling is employed, disassembly of a bearing is not difficult.
The extractor grips should be applied to the sidewall of the inner ring to be stripped, or to an adjacent part.
To ensure perfect functioning and to prevent injury to the bearing parts, it is essential that the assembly be undertaken under conditions of complete cleanliness and by competent personnel.
New bearings should not be removed from their packages until the moment of assembly.
Prior to fitting a new bearing, ascertain that the shaft has no rough edges or signs of hammering.

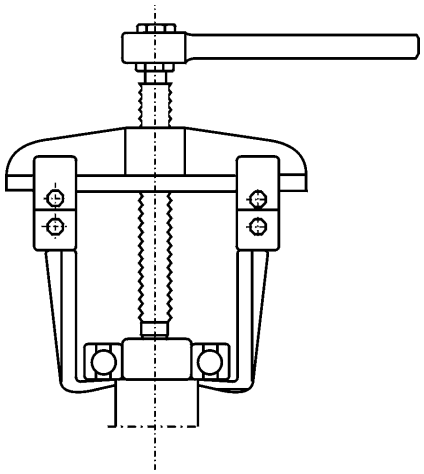

Figure 4.2 - A bearing extractor

During assembly bearings cannot be subjected to direct blows.
The aid used to press or strike the bearing should be applied to the inner ring.

4.3 Air Gap Checking (Large Rating Open Motors)

Upon the completion of any work on the bearings check the gap measurement between the stator and the rotor using the appropriate gazes.
The gap variation at any two vertically opposite points must be less than 10% of the average gap measurement.

4.4 Explosion Proof Motor Repair Steps

4.4.1 Objective

In view of the heavy liability associated with burning of motors of this type, this product has been designed and manufactured to high technical standards, under rigid controls. In addition, in many areas it is required that explosion proof motors ONLY be repaired by licensed personnel or in licensed facilities authorized to do this type of work.
The following general procedures, safeguards, and guidelines must be followed in order to ensure repaired explosion proof motors operate as intended.

4.4.2 Repair Procedure and Precautions

Dismantle the damaged motor with appropriate tools without hammering and/or pitting machined surfaces such as enclosure joints, fastening

holes, and all joints in general.
The position of the fan cover should be suitably marked prior to removal so as to facilitate reassembly later on.
Examine the motor's general condition and, if necessary, disassemble all parts and clean them with kerosene. Under no circumstances should scrapers, emery papers or tools be used that could affect the dimensions of any part during cleaning.
Protect all machined parts against oxidation by applying a coating of vaseline or oil immediately after cleaning.

STRIPPING OF WINDINGS
This step requires great care to avoid knocking and/or denting of enclosure joints and, when removing the sealing compound from the terminal box, damage or cracking of the frame.

IMPREGNATION
Protect all frame threads by inserting corresponding bolts, and the joint between terminal box and frame, by coating it with a non-adhesive varnish (ISO 287 - ISOLASIL).
Protective varnish on machined parts should be removed soon after treating with impregnating varnish. This operation should be carried out manually without using tools.

ASSEMBLY
Inspect all parts for defects, such as cracks, joint incrustations, damaged threads and other potential problems.
Assemble using a rubber headed mallet and a bronze bushing after ascertaining that all parts are perfectly fitted.
Bolts should be positioned with corresponding spring washers and evenly tightened.

TESTING
Rotate the shaft by hand while examining for any drag problems on covers or fastening rings.
Carry out running tests as for standard motors.

MOUNTING THE TERMINAL BOX
Prior to fitting the terminal box all cable outlets on the frame should be sealed with a sealing compound (Ist layer) and an Epoxy resin (ISO 340) mixed with ground quartz (2nd layer) in the following proportions:

340A resin	50 parts
340B resin	50 parts
Ground quartz	100 parts

Drying time for this mixture is two hours during which the frame should not be handled and cable outlets should be upwards.
When dry, see that the outlets and areas around the cables are perfectly sealed.
Mount the terminal box and paint the motor.

4.4.3 Miscellaneous Recommendations

- Any damaged parts (cracks, pittings in machined surfaces, defective threads) must be replaced and under no circumstances should attempts be made to recover them.
- Upon reassembling explosion proof motors IPW55 the substitution of all seals is mandatory.
- Should any doubts arise, consult WEG.

5. Malfunctioning

Most malfunctions affecting the normal running of electric motors can be prevented by maintenance and the appropriate precautions.
While ventilation, cleanliness and careful maintenance are the main factors ensuring long motor life, a further essential factor is the prompt attention to any malfunctioning as signalled by vibrations, shaft knock, declining insulation resistance, smoke or fire, sparking or unusual slip ring or brush wear, sudden changes of bearing temperatures.
When failures of an electric or mechanical nature arise, the first step to be taken is to stop the motor and subsequent examination of all mechanical and electrical parts of the installation.
In the event of fire, the installation should be isolated from the mains supply, which is normally done by turning off the respective switches.
In the event of fire within the motor itself, steps should be taken to restrain and suffocate it by covering the ventilation vents.
To extinguish a fire, dry chemical or $C0_2$ extinguishers should be used - never water.

5.1 Standard Three-Phase Motor Failures

Owing to the widespread usage of asynchronous three-phase motors in industry which are more often repaired in the plant workshops, there follows a summary of possible failures and their probable causes, detection and repairs.
Motors are generally designed to Class B or F insulation and for ambient temperatures up to 40°C.
Most winding defects arise when temperature limits, due to current overload, are surpassed throughout the winding or even in only portions thereof. These defects are identified by the darkening or carbonizing of wire insulation.

5.1.1 Short Circuits Between Turns

A short circuit between turns can be a consequent of two coinciding insulation defects, or the result of defects arising simultaneously on two adjacent wires. As wires are randomly tested, even the best quality wires can have weak spots. Weak spots can, on occasion, tolerate a voltage surge of 30% at the time of testing for shorting between turns, and later fail due to humidity, dust or vibration.
Depending on the intensity of the short, a magnetic hum becomes audible.
In some cases, the three-phase current imbalance can be so insignificant that the motor protective device fails to react. A short circuit between turns, and phases to ground due to insulation failure is rare, and even so, it nearly always occurs during the early stages of operation.

5.1.2 Winding Failures

a) One burnt winding phase

This failure arises when a motor runs wired in delta and current fails in one main conductor.
Current rises from 2 to 2.5 times in the remaining winding with a simultaneous marked fall in speed. If the motor stops, the current will increase from 3.5 to 4 times its rated value.
In most instances, this defect is due to the absence of a protective switch, or else the switch has been set too high.

b) Two burnt winding phases

This failure arises when current fails in one main conductor and the motor winding is star-connected. One of the winding phases remains currentless while the others absorb the full voltage and carry an excessive current.
The slip almost doubles.

c) Three burnt winding phases

Probable cause 1
Motor only protected by fuses; an overload on the motor will be the cause of the trouble.
Consequently, progressive carbonizing of the wires and insulation culminate in a short circuit between turns, or a short against the frame occurs.
A protective switch placed before the motor would easily solve this problem.

Probable cause 2
Motor incorrectly connected. For example: A motor with windings designed for 230/400V is connected through a star-delta switch to 400V connection.
The absorted current will be so high that the winding will burn out in a few seconds if the fuses or a wrongly set protective switch fail to react promptly.

Probable cause 3
The star-delta switch is not commutated and the motor continues to run for a time connected to the star under overload conditions.
As it only develops 1/3 of its torque, the motor cannot reach rated speed. The increased slip results in higher ohmic losses arising from the Joule effect. As the stator current, consistent with the load, may not exceed the rated value for the delta connection, the protective switch will not react.
Consequent to increased winding and rotor losses the motor will overheat and the winding burn out.

Probable cause 4
Failures from this cause arise from thermal overload, due to too many starts under intermittent operation or to an overly long starting cycle.
The perfect functioning of motor operating under these conditions is only assured when the following values are heeded:
a) number of starts per hour;
b) starting with or without load;
c) mechanical brake or current inversion;
d) acceleration of rotating masses connected to motor shaft;
e) load torque vs. speed during acceleration and braking.

The continuous effort exerted by the rotor during intermittent starting brings about heavier losses which provoke overheating.
Under certain circumstances with the motor idle there is a possibility that the stator winding is subjected to damage as a result of the

heating of the motor. In such a case, a slip ring motor is recommended as a large portion of the heat (due to rotor losses) is dissipated in the rheostat.

5.1.3 Rotor Failures

If a motor running under load conditions produces a noise of varying intensity and decreasing frequency while the load is increased, the reason, in most cases, will be an unsymmetrical rotor winding.
In squirrel-cage motors the cause will nearly always be a break in one or more of the rotor bars; simultaneously, periodical stator current fluctuations may be recorded. As a rule, this defect appears only in molded or die cast aluminum cages.
Failures due to spot heating in one or another of the bars in the rotor stack are identified by the blue coloration at the affected points.
Should there be failures in various contiguous bars, vibrations and shuddering can occur as if due to an unbalance, and are often interpreted as such. When the rotor stack acquires a blue or violet coloration, it is a sign of overloading.
This can be caused by overly high slip, by too many starts or overlong starting cycles. This failure can also arise from insufficient main voltage.

5.1.4 Bearing Failures

Bearing damage is a result of overloading brought about by an overly taut belt or axial impacts and stresses.
Underestimating the distance between the drive pulley and the driven pulley is a common occurrence.
The arc of contact of the belt on the drive pulley thus becomes inadmissibly small and thereby belt tension is insufficient for torque transmission.
In spite of this it is quite usual to increase belt tension in order to attain sufficient drive.
Admittably, this is feasible with the latest belt types reinforced by synthetic materials.
However, this practice fails to consider the load on the bearing and the result is bearing failure within a short time.
Additionally there is the possibility of the shaft being subjected to unacceptably high loads when the motor is fitted with a pulley that is too wide.

5.1.5 Shaft Fractures

Although bearings traditionally constitute the weaker part, and the shafts are designed with wide safety margins, it is not beyond the realm of possibility that a shaft may fracture by fatigue from bending stress brought about by excessive belt tension.
In most cases, fractures occur right behind the drive end bearing.
As a consequence of alternating bending stress induced by a rotating shaft, fractures travel inwards from the outside of the shaft until the point of rupture is reached when resistance of the remaining shaft cross-section no longer suffices.
Avoid additional drilling the shaft (fastening screw holes) as such operations tend to cause stress concentration.

5.1.6 Unbalanced V-Belt Drives

The substitution of only one of a number of other parallel belts on a drive is frequently the cause of shaft fractures, as well as being malpractice.
Any used, and consequently stretched belts retained on the drive, especially those closest to the motor, while new and unstretched belts are placed on the same drive turning farther from the bearing, can augment shaft stress.

5.1.7 Damage Arising from Poorly Fitted Transmission Parts or Improper Motor Alignment

Damage to bearing and fracture in shafts often ensue from inadequate fitting of pulleys, couplings or pinions. There parts “knock” when rotating. The defect is recognized by the scratches that appear on the shaft or the eventual scalelike flaking of the shaft end.
Keyways with edges pitted by loosely fitted keys can also bring about shaft failures.
Poorly aligned couplings cause knocks and radial and axial shaking to shaft and bearings.
Within a short while these malpractices cause the deterioration of the bearings and the enlargement of the bearing cover bracket located on the drive end side.
Shaft fracture can occur in more serious cases.

5.2 Troubleshooting chart

FAILURE	PROBABLE CAUSE	CORRECTIVE MEASURES
Motor fails to start	• No voltage supply • Low voltage supply • Wrong control connections • Loose connection at some terminal lug • Overload	• Check feed connections to control system and from this to motor. • Check voltage supply and ascertain that voltage remains within 10% of the rated voltage shown on the motor nameplate. • Compare connections with the wiring diagram on the motor nameplate. • Tighten all connections. • Try to start motor under no-load conditions. If it starts, there may be an overload condition or a blocking of the starting mechanism. Reduce load to rated load level and increase torque.
High noise level	• Unbalance • Distorted shaft • Incorrect alignment • Uneven air gap • Dirt in the air gap • Extraneous matter stuck between fan and motor casing • Loose motor foundation • Worn bearings	• Vibrations can be eliminated by balancing rotor. If load is coupled directly to motor shaft, the load can be unbalanced. • Shaft key bent; check rotor balance and eccentricity. • Check motor aligment with machine running. • Check shaft for warping or bearing wear. • Dismantle motor and remove dirt or dust with jet of dry air. • Dismantle motor and clean. Remove trash or debris from motor vicinity. • Tighten all foundation studs. If necessary, realign motor. • Check lubrication. Replace bearing if noise is excessive and continuous.
Overheating of bearings	• Excessive grease • Excessive axial or radial strain on belt • Deformed shaft • Rough bearing surface • Loose or poorly fitted motor end shields • Lack of grease • Hardened grease cause locking of balls • Foreign material in grease	• Remove grease bleeder plug and run motor until excess grease is expelled. • Reduce belt tension. • Have shaft straightened and check rotor balance. • Replace bearings before they damage shaft. • Check end shields for close fit and tightness around circumference. • Add grease to bearing. • Replace bearings. • Flush out housings and relubricate.
Intense bearing vibration	• Unbalanced rotor • Dirty or worn bearing • Bearing rings too tight on shaft and/or bearing housing • Extraneous solid particles in bearing	• Balance rotor statically and dynamically. • If bearing rings are in perfect condition, clean and relubricate the bearing, otherwise, replace bearing. • Before altering shaft or housing dimensions, it is advisable to ascertain that bearing dimensions correspond to manufacturer's specifications. • Take bearing apart and clean. Reassemble only if rotating and support surfaces are unharmed.
Overheating of motor	• Obstructed cooling system • Overload • Incorrect voltages and frequecies • Frequent inversions • Rotor dragging on stator • Unbalanced electrical load (burnt fuse, incorrect control)	• Clean and dry motor; inspect air vents and windings periodically. • Check application, measuring voltage and current under normal running conditions. • Compare values on motor nameplate with those of mains supply. Also check voltage at motor terminals under full load. • Exchange motor for another that meets needs. • Check bearing wear and shaft curvature. • Check for unbalanced voltages or operation under single-phase condition.

6. Spare Parts and Component Terminology

THREE-PHASE MOTORS IP55 NEMA
Frames 140T - W180T - 180T - 210T and W210T

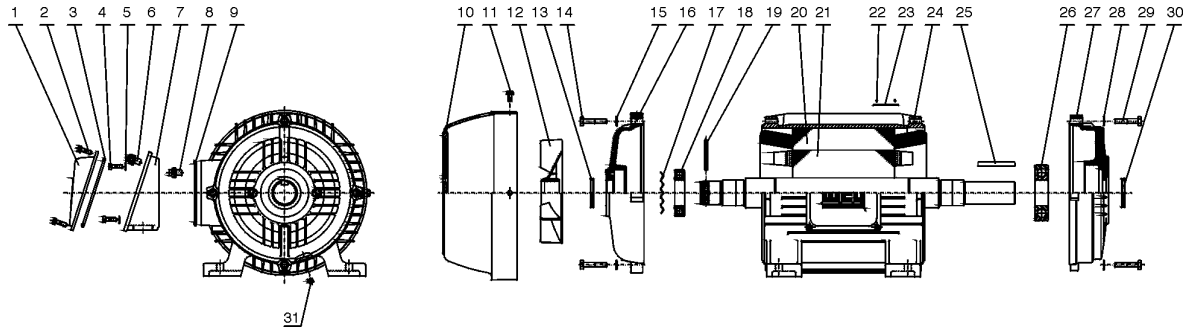

Part Nr.	Description
1	Terminal box cover
2	Terminal box cover fixing bolt
3	Terminal box cover gasket
4	Terminal box fixing bolt
5	Terminal box fixing washer
6	Terminal box grounding lug
7	Terminal box
8	Frame grounding lug
9	Terminal box o'ring gasket
10	Fan cover
11	Fan cover fixing bolt
12	Fan
13	V'Ring
14	Non-drive end endshield fixing bolt
15	Non-drive end endshield washer
16	Non-drive endshield
17	Spring washer
18	Non-drive bearing
19	Fan fixing pin
20	Wound stator
21	Rotor / shaft assembly
22	Nameplate fixing rivet
23	Nameplate
24	Frame
25	Shaft key
26	Drive end bearing
27	Drive endshield
28	Drive endshield washer
29	Drive end endshield fixing bolt
33	V'Ring
31	Drain plug

THREE-PHASE MOTORS IP55 NEMA
Frames 250T - W250T - 280T and 320T

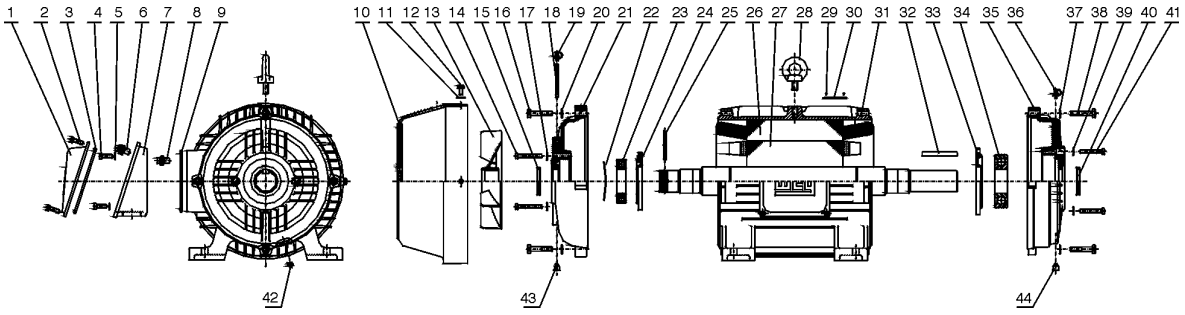

Part Nr.	Description
1	Terminal box cover
2	Terminal box cover fixing bolt
3	Terminal box cover gasket
4	Terminal box fixing bolt
5	Terminal box fixing washer
6	Terminal box grounding lug
7	Terminal box
8	Frame grounding lug
9	Terminal box o'ring gasket
10	Fan cover
11	Fan cover washer
12	Fan cover fixing bolt
13	Fan
14	Non-drive end bearing cap bolt
15	V'Ring
16	Non-drive end endshield fixing bolt
17	Non-drive end bearing cap washer
18	Non-drive end grease nipple
19	Non-drive end grease nipple cover
20	Non-drive end endshield washer
21	Non-drive endshield
22	Spring washer
23	Non-drive end bearing
24	Non-drive end bearing cap
25	Fan fixing pin
26	Wound stator
27	Rotor and shaft
28	Eyebolt
29	Nameplate fixing rivet
30	Nameplate
31	Frame
32	Shaft key
33	Drive end bearing cap
34	Drive end bearing
35	Drive andshield
36	Drive end grease nipple cover
37	Drive endshield washer
38	Drive end endshield fixing bolt
39	Drive end bearing cap washer
40	V'Ring
41	Drive end bearing cap fixing bolt
42	Drain plug
43	Non-drive and grease relief
44	Drive end grease relief

THREE-PHASE MOTORS IP55 NEMA T
Frames 360T - 400T - 440T - 500T and 580T

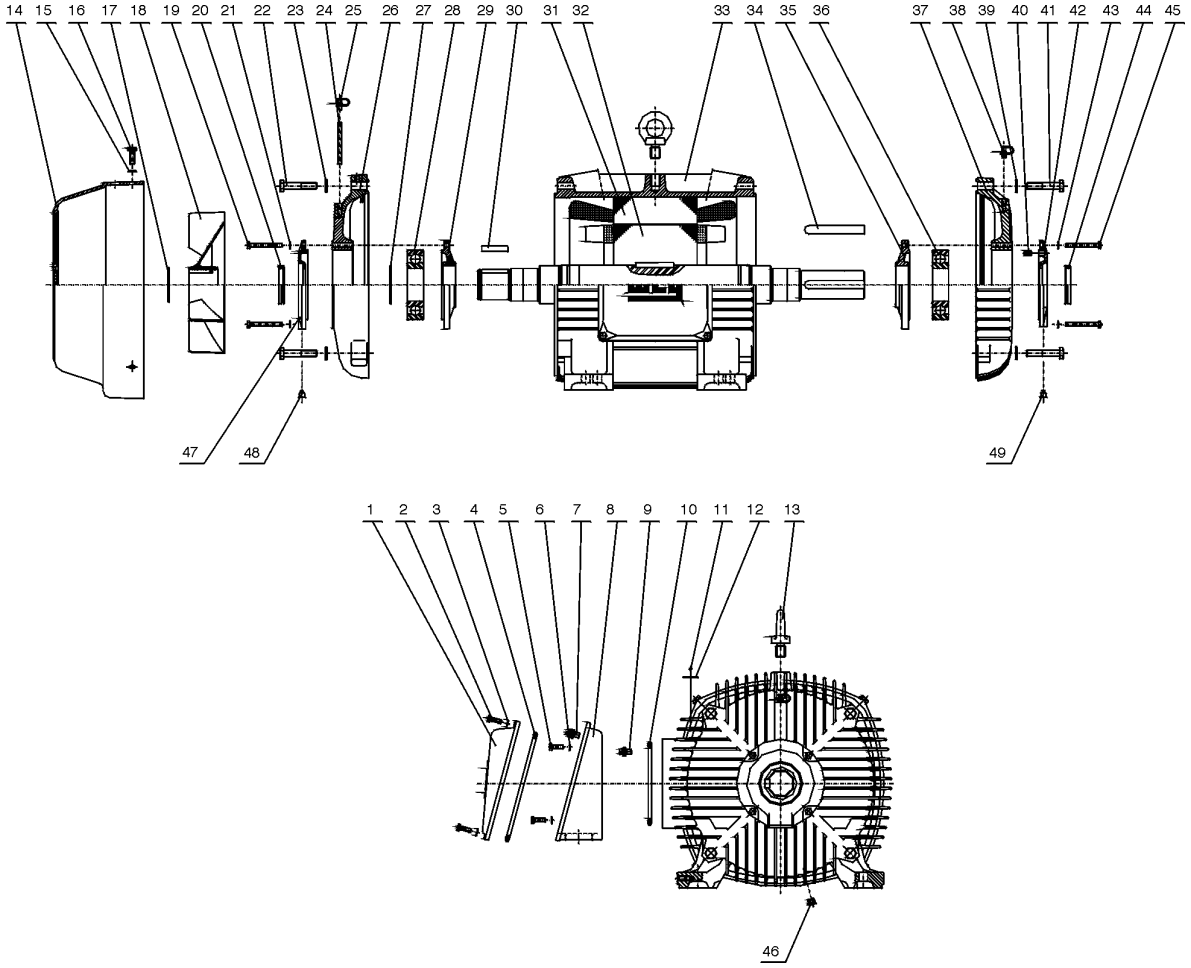

Part Nr.	Description
1	Terminal box cover
2	Terminal box cover fixing bolt
3	Terminal box cover washer
4	Terminal box cover gasket
5	Terminal box fixing bolt
6	Terminal box fixing washer
7	Terminal box grounding lug
8	Terminal box
9	Frame grounding lug
10	Terminal box o'ring gasket
11	Nameplate fixing rivet
12	Nameplate
13	Eyebolt
14	Fan cover
15	Fan cover washer
16	Fan cover fixing bolt
17	Fan fixing ring

Part Nr.	Description
18	Fan
19	Non-drive end bearing cap bolt
20	V'Ring
21	Non-drive end bearing cap washer
22	Non-drive end endshield fixing bolt
23	Non-drive end endshield washer
24	Non-drive end grease nipple
25	Non-drive end grease nipple cover
26	Non-drive enshield
27	Bearing cap
28	Non-drive bearing
29	Internal non-drive end bearing cap
30	Fan fixing key
31	Wound stator
32	Rotor / shaft assembly
33	Frame

Part Nr.	Description
34	Shaft key
35	Internal drive end bearing cap
36	Drive end bearing
37	Drive endshield
38	Drive end grease nipple cover
39	Drive endshield washer
40	Pre-load spring
41	Drive end endshield fixing bolt
42	External drive end bearing cap
43	Drive end bearing cap washer
44	V'Ring
45	Drive end bearing cap fixing bolt
46	Drain plug
47	External non-drive end bearing cap
48	Non drive end grease relief
49	Non-drive end grease relief

THREE-PHASE MOTORS NEMA 56
Frames A56 - B56 - D56 - F56H and G56H

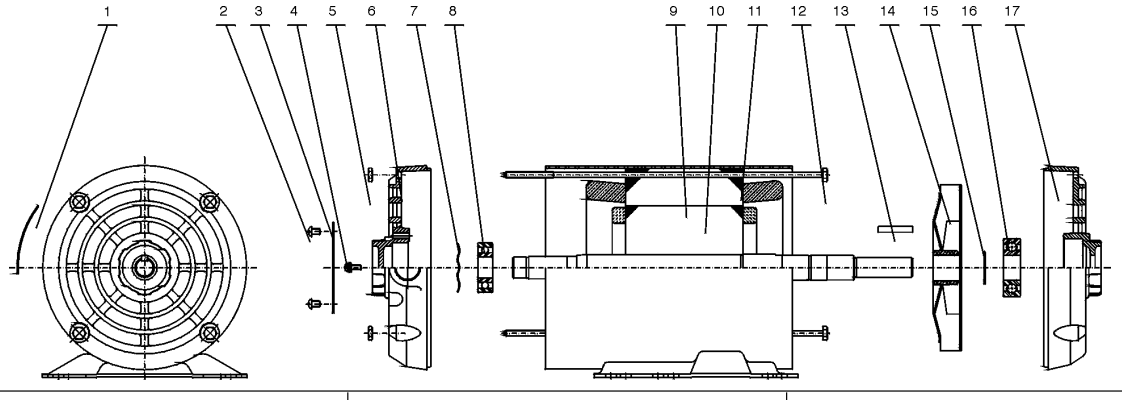

Part Nr.	Description
1	Sticker
2	Terminal box cover fixing bolt
3	Terminal box cover
4	Grounding lug
5	Through bolt fastening nut
6	Non-drive endshield
7	Spring washer
8	Non-drive end bearing
9	Wound stator
10	Rotor / shaft assembly
11	Frame
12	Through bolt
13	Shaft key
14	Fan
15	Drive end bearing fastening washer
16	Drive end bearing
17	Drive endshield

SINGLE-PHASE MOTORS NEMA 56
Frames B48 - C48 - C56 - A56 - B56 - D56 - F56H - G56H

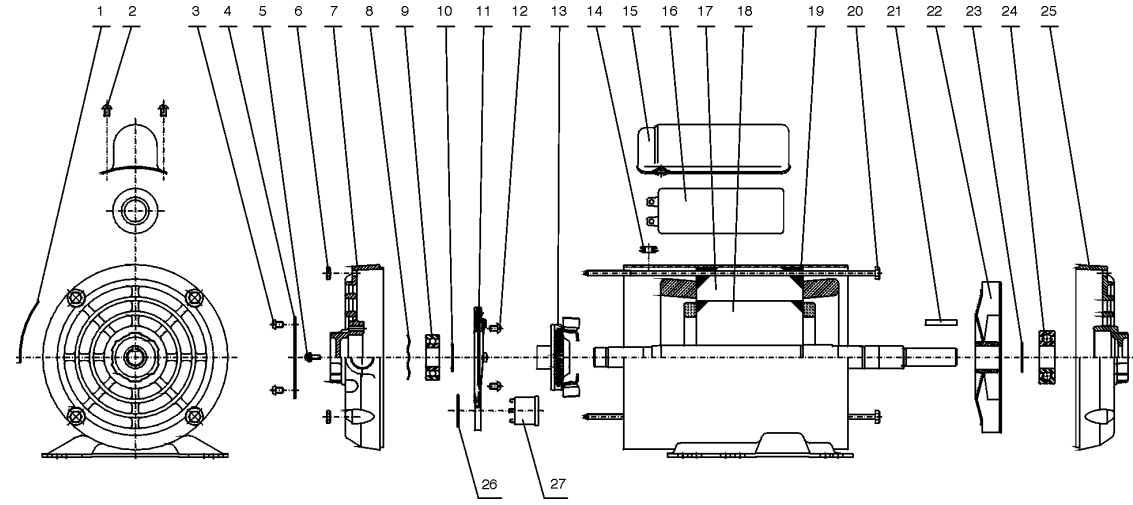

Part Nr.	Description
1	Sticker
2	Capacitor cover fixing bolt
3	Terminal box cover fixing bolt
4	Terminal box cover
5	Grounding lug
6	Through bolt fastening nut
7	Non-drive endshield
8	Spring washer
9	Non-drive and bearing
10	Non-drive and bearing fastening washer
11	Stationary switch
12	Stationary switch fastening bolt
13	Centrifugal switch
14	Rubber ring for lead passing hole to capacitor
15	Capacitor cover
16	Capacitor
17	Wound stator
18	Rotor / shaft assembly
19	Frame
20	Through bolt
21	Shaft key
22	Fan
23	Drive end bearing fastening washer
24	Drive end bearing
25	Drive endshield
26	Overload thermal protector fixing ring
27	Overload thermal protector

Note: *For F56H and G56H frame motors: 1) Part nr. 2 = 3 pieces; 2) Part nr. 15 and 16 = 2 pieces*

NOTES:

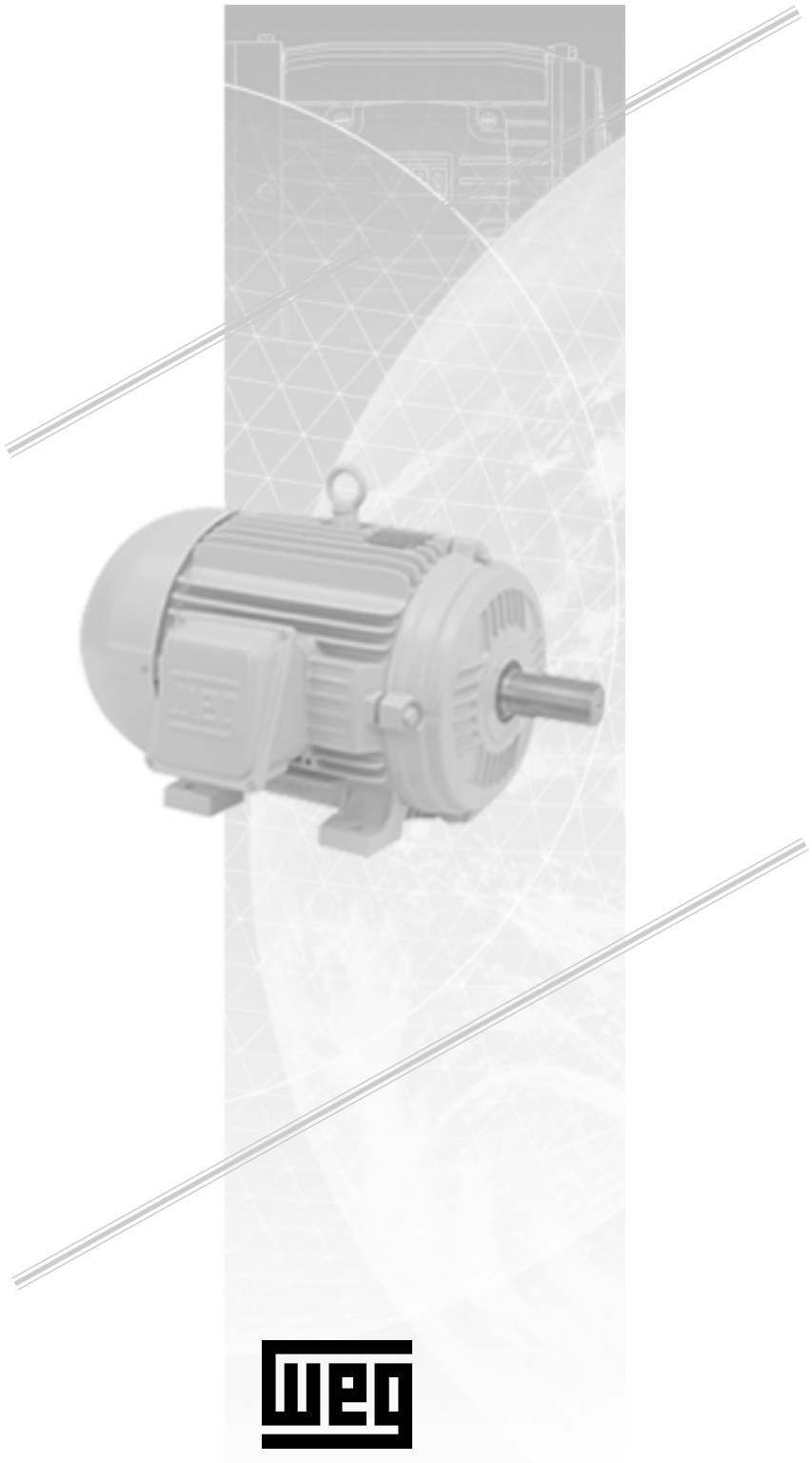

WEG EXPORTADORA S.A.
Av. Prefeito Waldemar Grubba, 3000
89256-900 - Jaraguá do Sul - SC - Brazil
Phone: + 55 (47) 372-4002 - Fax: + 55(47) 372-4060
www.weg.com.br

200 Wall Street,
Hollidaysburg
PA 16648 USA
Tel: 814-695-9807
Fax: 814-695-6684

McLanahan CORPORATION

AGGREGATE PROCESSING DIVISION

585 Airport Road
Gallatin
TN 37066 USA
Tel: 615-451-4440
Fax: 615-451-4461

LPT Model IIIr Pump

Operation and

Maintenance Manual

Contents

1. Introduction 3
2. Your Pump 4
3. Performance Curve – see Appendix 5
4. Pump Range – Typical Sectional Arrangements 6
5. Parts List and Part Reference Numbers 8
6. Pump Dimensions 11
7. Gland Options & Part Numbers 12
8. "Pumptec" Computer Software 14
9. General Pump Suction Requirements 15
10. Installation 15
11. Gland Services 18
12. Lubrication and Cooling 20
13. Start up Procedure 20
14. Shutdown Procedure 20
15. Disassembly Procedure 21
16. Assembly Procedure 22
17. Troubleshooting 24
18. Notes 35

1. Introduction

Aggregate Processing Division of McLanahan, is a major manufacturer of process plants for the minerals industry. The LPT Model IIIr is the latest generation of successful abrasion/corrosion resistant slurry handling Pumps.

This manual should be carefully read before attempting to install or operate this LPT Model IIIr Pump.

Service, Selection and Support

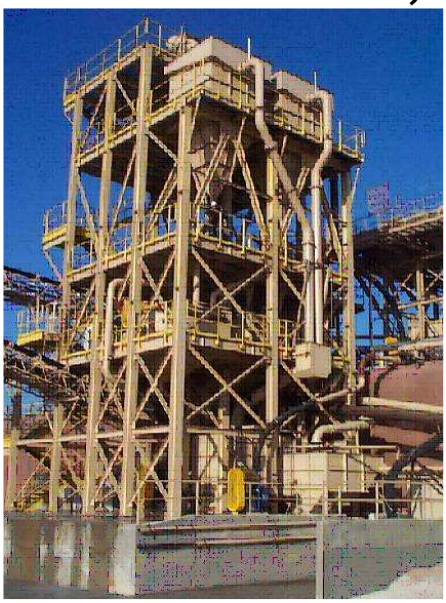

Total Service

From design to installation and beyond, McLanahan engineers are available to give advice on your slurry pumping needs and problems.

The LPT Model IIIr range has been designed to offer a wide choice of pump sizes to suit most slurry pumping applications. A standard questionnaire is available to ensure that the most complex installation, as well as the more straightforward pumping application, receives individual consideration.

McLanahan can also advise on the ancillary components within the pumping system. The provision of low head loss valves, gland feed pumps, priming devices and flexible bends, all incorporating application specific linings for trouble-free life, are an important aspect of ensuring a totally successful pump installation

Design Specifications and Options

The LPT Model lllr standard casing is designed for a maximum working pressure of 88 psi (6 bar). A high pressure casing is available, rated at 272 psi (18.5 bar). Please contact McLanahan for pressures higher than this.

The pump units in the LPT Model lllr range are designated by the size of suction and discharge ports. Units up to 4" (100mm) have equal size suction and discharge, above this the Model lllr has a larger suction than discharge. Size is given in inches (mm) i.e. 8"/6" (200/150) Model lllr has an 8" (200mm) suction port and a 6" (150mm) discharge port.

Suction and discharge flanges are universal and are available in ASA150 drilling patterns as standard. Other drilling patterns (metric & BS4504) are available to special order. Orientation of discharge to 4 positions according to installation requirements.

The LPT Model lllr pump components are designed and manufactured in accordance with appropriate International Quality Standards, such as lSO9000.

2. Your Pump

<table>
<tr><td colspan="3">Company Name:</td></tr>
<tr><td colspan="2" rowspan="2">Address:</td><td>Tel:</td></tr>
<tr><td>Fax:</td></tr>
<tr><td rowspan="3">Supplier:</td><td colspan="2">Type of Industry:</td></tr>
<tr><td>Pump Model:</td><td>Size:</td></tr>
<tr><td>Serial No:</td><td>Flange Type:</td></tr>
<tr><td>Contact Person:</td><td>Gland Size:</td><td>Drive Style:</td></tr>
<tr><td colspan="3">Start up date/remarks:</td></tr>
</table>

Important Notes

- **The maintenance of rotating machinery should be done by experienced mechanics.**
- **Protective clothing and proper tools and lifting equipment, all in good condition, must be used.**
- **Do not lift heavy weights without mechanical aids.**
- **Do not take any risks with your health and safety.**
- **If a pump has run without discharge, the fluid temperature and pressure may be dangerously high. Refer to paragraph 17.1 and 17.11 c.**
- **The casing suspension arm is fitted as a maintenance aid only. Refer to Note 3, page 17.**
- **The installer must ensure that guards are fitted in accordance with national & local regulations.**

2.1. Design Condition (To be filled in by distributor or owner)

The following data should be completed as a record of the duty for which the pump was originally sold. During its lifetime the pumping requirements may change, if so, the new speed and operating conditions must be carefully engineered. McLanahan engineers are able to assist you in doing this if required. US units are used unless otherwise noted

Details of Solids

Description of Solids = …….

Specific Gravity Solids: S =…… Quantity of Solids M =…….dry Tons/hr.

Particle Size : Topsize =……mesh.(mm) 50% passing size = mesh.(mm)

Details if Liquor

Description of Liquor =……..

Specific Gravity of Liquor: Sl =…….

Details of Slurry

Specific gravity of Slurry: Sm =……

% of solids by volume in slurry: Cv = ……..

% of solids by weight in slurry: Cm = ……

Flow rate of slurry :Q = ……gpm.(l/s, m^3/Hr)

Calculated Design Data

Total Head = … ft. (m) Maximum working Head = …… ft. (m)

NPSHa = …… ft. (m) NPSHr = …… ft. (m)

Pump Speed on Slurry = ……rpm. Derate factor for Slurry = ……

Motor Data

Motor Power rating = ……HP (kW)

Motor Frame size = ……

Motor Speed = ……..rpm.

Motor Shaft size = ……in. (mm)

Vee-Belt Drive Data

Motor pulley O.D. = ……..in. (mm) Pump pulley O.D. = ……in. (mm)

Taper lock Bush No = …… Taper lock Bush No = ……..

Vee-belt = ……..No off…… No of grooves/pulley =……..

Gland Water Requirements (H and P glands only)

Quantity: = ……..gpm (l/s)

Pressure: = ……psi (m)

Technical Data

Pump Mass = ……lbs. (kg)

Motor Mass = ……lbs. (kg)

Pump Shaft Size = ……mm

Noise level = ……..db(A) (see page 12)

3. Performance Curve – see Appendix

4. Pump Range – Typical Sectional Arrangements

4.1. Pump Assembly

The actual sectional arrangement drawing for your pump is to be found in the Appendix.

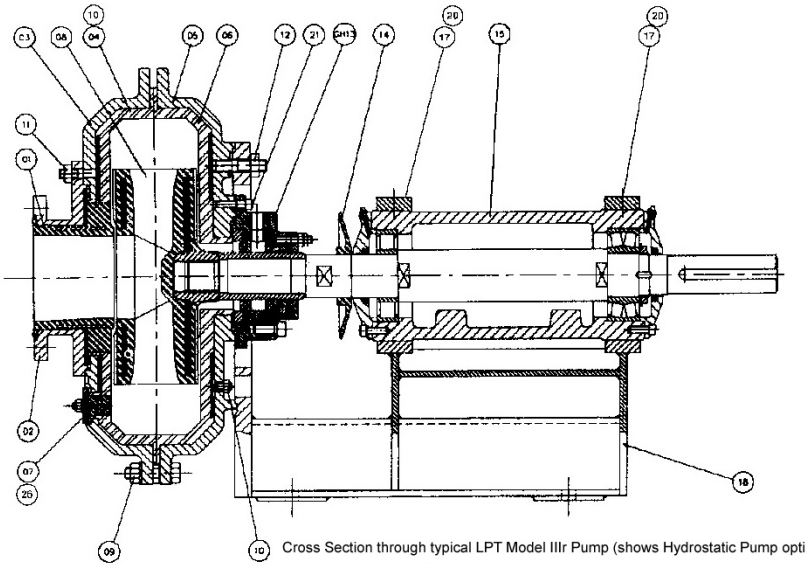

Cross Section through typical LPT Model IIIr Pump (shows Hydrostatic Pump option)

Pump Parts List	
Part No.	Description
*01	Suction Bush Liner
*02	Suction Bush
03	Suction Side Casing
04	Suction Side Liner
05	Gland Side Casing
06	Gland Side Liner
07	Drain Plug
08	Impeller
09	Casing Bolt Set
10	Liner Nut Set
11	Suction Bush Stud Set
12	Casing to Pedestal Stud Set
13	Gland Assembly ("H" Type shown)
14	Flinger
15	Bearing Assembly
16	Motor Platform Assembly (not shown)
17	Pedestal Caps
18	Pedestal
19	Axial Positioning Jack (not shown)
20	Pedestal Cap Screws
21	Gland Holding Screw Set
23	Eyebolt - Casing (not shown)
24	Inside Gland Cover (not shown)
25	S & D Flang Stud Set (not shown)
26	Drain Plug Stud Set (not shown)
31	Shaft Gland (not shown)

Optional Parts (not shown)		
Part No.		Description
28	C01	Suspension Arm
	C02	Crawl
	C03	Supporting Disc
	C04	Supporting Bracket
	C05	Eyebolt
16	M01	C01
	M02	C02
	03	C03
	M04	C04
	M05	Crossbar Support Collar
29		Belt Guard
30		Shaft Spanner

*Removable suction bush & liner from LP6x5 (150/125) upwards.

4.2. Bearing Housing Assembly

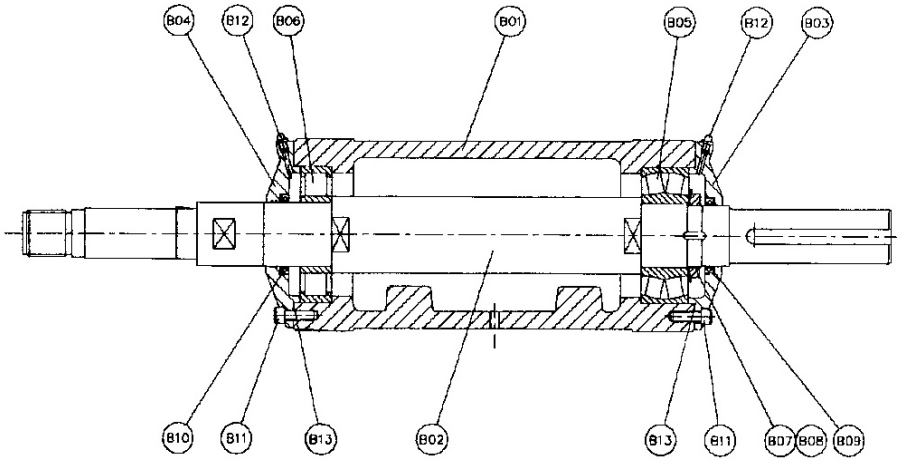

Cross Section Through Bearing Assembly

Bearing Assembly Parts List	
Part No.	Description
B01	Bearing Housing
B02	Shaft
B03	End Cover
B04	Front Cover
B05	End Bearing
15 B06	Front Bearing
B07	Tab Washer
B08	Lock Nut
B09	End Grease Seal
B10	Front Grease Seal
B11	Bearing Cover Set Screws
B12	Grease Nipples
B13	Bearing Housing Cover Seals

5. Parts List and Part Reference Numbers

Spare Parts

The part is fully identified by the number on the cross section drawing followed by the discharge branch size. For example an impeller for the 2"/2" (50/50) rubber pump is Part Number 08-050. The material description must also be given i.e. Linatex, nitrile, etc.

Description	1½x1½	2x2	3x3	4x4	6x5	8x6	10x8	12x10
General Pump Parts								
Suction Bush Liner	-	-	-	-	01-125	01-150	01-200	01-250
Suction Bush – MM	-	-	-	-	02-125	02-150	02-200	02-250
Suction Bush - UNC	-	-	-	-	02-125A	02-150A	02-200A	02-250A
Suction Side Casing - MM	03-035	03-050	03-080	03-100	03-125	03-150	03-200	03-250
Suction Side Casing - UNC	03-035A	03-050A	03-080A	03-100A	03-125A	03-150A	03-200A	03-250A
Suction Side Liner c/w Drain Plug	04-035	04-050	04-080	04-100	04-125	04-150	04-200	04-250
Gland Side Casing – MM	05-035	05-050	05-080	05-100	05-125	05-150	05-200	05-250
Gland Side Casing – UNC	05-035A	05-050A	05-080A	05-100A	05-125A	05-150A	05-200A	05-250A
Gland Side Liner	06-035	06-050	06-080	06-100	06-125	06-150	06-200	06-250
Drain Plug	07-050	07-050	07-080	07-100	07-125	07-150	07-200	07-250
Impeller	08-035	08-050	08-080	08-100	08-125	08-150	08-200	08-250
Casing Bolt Set	09-035	09-050	09-080	09-100	09-125	09-150	09-200	09-250
Suction Bush Stud Set	-	-	-	-	11-125	11-150	11-200	11-250
Casing to Pedestal Stud Set	12-050	12-050	12-080	12-100	12-125	12-150	12-200	12-250
Gland Assembly	13-050	13-050	13-080	13-100	13-125	13-150	13-200	13-250
Finger	14-050	14-050	14-080	14-100	14-125	14-150	14-200	14-250
Bearing Assembly	15-050	15-050	15-080	15-100	15-125	15-150	15-200	15-250
Motor Support Assembly	16-050	16-050	16-080	16-100	16-125	16-150	16-200	16-250
Pedestal Caps	17-050	17-050	17-080	17-100	17-125	17-150	17-200	17-250
Pedestal	18-050	18-050	18-080	18-100	18-125	18-150	18-200	18-250
Axial Positioning Jack	19-050	19-050	19-080	19-100	19-125	19-150	19-200	19-250
Pedestal Cap Screw Set	20-050	20-050	20-080	20-100	20-125	20-150	20-200	20-250
Gland Holding Screw Set	21-050	21-050	21-080	21-100	21-125	21-150	21-200	21-250
Eyebolt - Casing	-	-	23-080	23-100	23-125	23-150	23-200	23-250
Inside Gland Cover	-	-	-	-	-	-	24-200	24-250
Suct. & Disch. Flange Stud Set - MM	25-050	25-050	25-080	25-100	25-125	25-150	25-200	25-250
Suct. & Disch. Flange Stud Set -UNC	25-050A	25-050A	25-080A	25-100A	25-125A	25-150A	25-200A	25-250A
Drain Plug Stud Set	26-050	26-050	26-080	26-100	26-125	26-150	26-200	26-250
Crane & Crawl Assembly	-	-	28-080	28-100	28-125	28-150	28-200	-
Belt Guard	29-050	29-050	29-080	29-100	29-125	29-150	29-200	29-250
Shaft Spanner	-	-	30-080	30-100	30-125	30-150	30-200	30-250
Shaft Guard	31-050	31-050	31-080	31-100	31-125	31-150	31-200	31-250
Name Plate	32-050	32-050	32-080	32-100	32-125	32-150	32-200	32-250
Logo Plate	33-050	33-050	33-080	33-100	33-125	33-150	33-200	33-250

Description	1½x1½	2x2	3x3n	4x4	6x5	8x6	10x8	12x10
Bearing Assembly								
Bearing Housing	B01-050	B01-050	B01-080	B01-100	B01-125	B01-150	B01-200	B01-250
Shaft	B02-050	B02-050	B02-080	B02-100	B02-125	B02-150	B02-200	B02-250
End Cover	B03-050	B03-050	B03-080	B03-100	B03-125	B03-150	B03-200	B03-250
Front Cover	B04-050	B04-050	B04-080	B04-100	B04-125	B04-150	B04-200	B04-250
End Bearing	B05-050	B05-050	B05-080	B05-100	B05-125	B05-150	B05-200	B05-250
Front Bearing	B06-050	B06-050	B06-080	B06-100	B06-125	B06-150	B06-200	B06-250
Tab Washer	B07-050	B07-050	B07-080	B07-100	B07-125	B07-150	B07-200	B07-250
Lock Nut	B08-050	B08-050	B08-080	B08-100	B08-125	B08-150	B08-200	B08-250
End Grease Seal	B09-050	B09-050	B09-080	B09-100	B09-125	B09-150	B09-200	B09-250
Front Grease Seal	B10-050	B10-050	B10-080	B10-100	B10-125	B10-150	B10-200	B10-250
Bearing Cover Set Screws	B11-050	B11-050	B11-080	B11-100	B11-125	B11-150	B11-200	B11-250
Grease Nipples	B12-050	B12-050	B12-080	B12-100	B12-125	B12-150	B12-200	B12-250
Bearing Housing Cover Seals	B13-050	B13-050	B13-080	B13-100	B13-125	B13-150	B13-200	B13-250
Complete Assembly	15-050	15-050	15-080	15-100	15-125	15-150	15-200	15-250

Description	1½x1½	2x2	3x3n	4x4	6x5	8x6	10x8	12x10
Dry Gland Assembly								
Gland Housing	D01-050	D01-050	D01-080	D01-100	D01-125	D01-150	D01-200	D01-250
Gland Cover	D02-050	D02-050	D02-080	D02-100	D02-125	D02-150	-	-
Adjusting Sleeve	D03-050	D03-050	D03-080	D03-100	D03-125	D03-150	D03-200	D03-250
Linatex Washer	D04-050	D04-050	D04-080	D04-100	D04-125	D04-150	D04-200	D04-250
Gland Seal	D05-050	D05-050	D05-080	D05-100	D05-125	D05-150	D05-200	D05-250
Adjusting Stud Set	D06-050	D06-050	D06-080	D06-100	D06-125	D06-150	D06-200	D06-250
Sleeve O-Ring	D07-050	D07-050	D07-080	D07-100	D07-125	D07-150	D07-200	D07-250
Gland Sleeve	D08-050	D08-050	D08-080	D08-100	D08-125	D08-150	D08-200	D08-250
Linatex Face Seal	D09-035	D09-050	D09-080	D09-100	D09-125	D09-150	D09-200	D09-250
Face O-Ring	D10-050	D10-050	D10-080	D10-100	D10-125	D10-150	D10-200	D10-250
Wearing Face	D11-050	D11-050	D11-080	D11-100	D11-125	D11-150	D11-200	D11-250
Impeller O-Ring	D12-050	D12-050	D12-080	D12-100	D12-125	D12-150	D12-200	D12-250
Gland Locating Ring	-	-	-	D13-100	-	-	-	-
Gland Cover Set Screw	D14-050	D14-050	D14-080	-	D14-125	D14-150	D14-200	D14-250
Spacer Ring	-	-	-	-	-	-	D15-200	D15-250
Complete Assembly	GD13-035	GD13-050	GD13-080	GD13-100	GD13-125	GD13-150	GD13-200	GD13-250
Hydrostatic Gland Assembly								
Gland Housing	H01-050	H01-050	H01-080	H01-100	H01-125	H01-150	H01-200	H01-250
Gland Cover	H02-050	H02-050	H02-080	H02-100	H02-125	H02-150	-	-
Adjusting Gland	H03-050	H03-050	H03-080	H03-100	H03-125	H03-150	H03-200	H03-250
Resilient Gasket	H04-050	H04-050	H04-080	H04-100	H04-125	H04-150	H04-200	H04-250
Gland Seal	H05-050	H05-050	H05-080	H05-100	H05-125	H05-150	H05-200	H05-250
Adjusting Stud Set	H06-050	H06-050	H06-080	H06-100	H06-125	H06-150	H06-200	H06-250
Sleeve O-Ring	H07-050	H07-050	H07-080	H07-100	H07-125	H07-150	H07-200	H07-250
Gland Sleeve	H08-050	H08-050	H08-080	H08-100	H08-125	H08-150	H08-200	H08-250
Axial Expeller	-	-	H10-080	H10-100	H10-125	H10-150	-	H10-250
Lantern Ring	-	-	-	-	-	-	-	H11-250
Impeller O-Ring	H12-050	H12-050	H12-080	H12-100	H12-125	H12-150	H12-200	H12-250
Gland Locating Ring	H13-050	H13-050	H13-080	H13-100	H13-125	H13-150	H13-200	-
Gland Cover Set Screw	H14-050	H14-050	H14-080	H14-100	H14-125	H14-150	H14-200	H14-250
Complete Assembly	GH13-050	GH13-050	GH13-080	GH13-100	GH13-125	GH13-150	GH13-200	GH13-250

Description	1½x1½	2x2	3x3n	4x4	6x5	8x6	10x8	12x10
Packed Gland Assembly								
Gland Housing	P01-050	P01-050	P01-080	P01-100	P01-125	P01-150	P01-200	P01-250
Lantern Ring	P02-050	P02-050	P02-080	P02-100	P02-125	P02-150	P02-200	P02-250
Adjusting Gland	P03-050	P03-050	P03-080	P03-100	P03-125	P03-150	P03-200	P03-250
Packing Rings	P04-050	P04-050	P04-080	P04-100	P04-125	P04-150	P04-200	P04-250
Gland Seal	P05-050	P05-050	P05-080	P05-100	P05-125	P05-150	P05-200	P05-250
Adjusting Stud Set	P06-050	P06-050	P06-080	P06-100	P06-125	P06-150	P06-200	P06-250
Sleeve O-Ring	P07-050	P07-050	P07-080	P07-100	P07-125	P07-150	P07-200	P07-250
Gland Sleeve	P08-050	P08-050	P08-080	P08-100	P08-125	P08-150	P08-200	P08-250
Axial Expeller	-	-	P10-080	P10-100	P10-125	P10-150	-	P10-250
Backing Ring	-	-	-	-	-	-	P11-200	P11-250
Impeller O-Ring	P12-050	P12-050	P12-080	P12-100	P12-125	P12-150	P12-200	P12-250
Gland Locating Ring	-	-	P13-080	P13-100	P13-125	P13-150	P13-200	-
Gland Cover Set Screw	-	-	-	-	-	-	P14-200	P14-250
Complete Assembly	GP13-050	GP13-050	GP13-080	GP13-100	GP13-125	GP13-150	GP13-200	GP13-250
Motor Table & Others Parts								
Motor Platform	M01-050	M01-050	M01-080	M01-100	M01-125	M01-150	M01-200	M01-250
Motor Platform Stud	M02-050	M02-050	M02-080	M02-100	M02-125	M02-150	M02-200	M02-250
Motor Support Crossbar	M03-050	M03-050	M03-080	M03-100	M03-125	M03-150	M03-200	M03-250
Crossbar Support Stud	M04-050	M04-050	M04-080	M04-100	M04-125	M04-150	M04-200	M04-250
Crossbar Support Collar	M05-050	M05-050	M05-080	M05-100	M05-125	M05-150	M05-200	M05-250
Complete Assembly	16-050	16-050	16-080	16-100	16-125	16-150	16-200	16-250
Suspension Arm	-	-	C01-080	C01-100	C01-125	C01-150	C01-200	C01-250
Crawl Assy.	-	-	C02-080	C02-100	C02-125	C02-150	C02-200	C02-250
Supporting Disc	-	-	C03-080	C03-100	C03-125	C03-150	C03-200	C03-250
Supporting Bracket	-	-	C04-080	C04-100	C04-125	C04-150	C04-200	C04-250
Evebolt	-	-	C05-080	C05-100	C05-125	C05-150	C05-200	C05-250
Complete Assembly			28-080	28-100	28-125	28-150	28-200	28-250

6. Pump Dimensions

PUMP SIZE	MASS	ALL DIMENSIONS IN INCHES CONVERTED FROM METRIC																				W	
ins.	lbs	A	B	C	D	E	E1	F	G	H	J	K	L	M	N	P	Q	R	S	T	U	V	MIN	MAX
1½ 1½		3.425	5.394	8.819	1.949	12.205	-	1.811	2.756	28.543	18.346	4.370	0.787	11.220	0.709	0.669	9.843	8.504	1.693	1.575	0.472	8.661	6.496	8.661
2x2	344	3.642	5.197	8.839	1.949	12.205	-	1.811	2.756	28.543	19.331	4.744	0.787	11.220	0.709	0.669	9.843	9.488	1.693	1.575	0.472	8.661	6.496	8.661
3x3"	719	4.724	7.087	11.811	2.559	13.976	-	1.969	4.724	36.024	23.425	6.614	1.181	14.173	0.866	0.945	11.811	11.614	1.909	1.772	0.551	9.449	9.843	12.205
4x4"	971	5.197	6.654	11.850	2.244	18.110	-	1.575	5.000	39.311	25.984	7.244	1.181	15.748	0.945	0.866	13.228	12.756	2.520	2.362	0.709	10.236	10.709	14.646
6x5	1341	8.307	9.213	17.520	4.331	18.858	-	3.937	7.441	50.630	29.843	8.268	1.181	18.898	0.945	1.102	15.354	14.488	2.736	2.559	0.709	13.780	13.386	17.323
8x6	1623	8.563	8.780	15.768	3.543	18.425	-	2.598	6.850	51.673	32.362	8.740	1.378	19.291	0.945	1.102	16.850	15.512	2.933	2.756	0.787	17.323	13.583	17.520
10x8	2757	12.165	10.630	22.795	4.252	25.984	12.992	2.992	7.874	62.992	37.638	12.638	1.575	25.984	0.945	1.299	21.654	15.984	3.756	3.543	0.984	19.685	16.929	23.031
12x10	4313	12.500	11.220	23.720	2.756	25.197	12.598	2.756	7.874	66.831	42.638	14.488	1.575	29.528	1.102	1.181	23.622	19.016	4.173	3.937	1.102	25.984		

	ASA Inch					
		PCD	Stud Dia.	Hole Dia.	No. Off	Stud Lgth *
1½ x 1½	Suction	3 7/8	½		4	1-¾
	Discharge	3 7/8	½		4	1-¾
2x2	Suction	4 ¾	5/8	-	4	1-¾
	Discharge	4 ¾	5/8	-	4	1-¾
3x3	Suction	6	5/8	-	8	1-¾
	Discharge	6	5/8	-	8	1-¾
4x4	Suction	7 ½	5/8	-	8	2
	Discharge	7 ½	5/8	-	8	1-¾
6x5	Suction	9 ½	-	7/8	8	-
	Discharge	8 ½	¾	-	8	2
8x6	Suction	11 ¾	-	7/8	8	-
	Discharge	9 ½	¾	-	8	2
10x8	Suction	14 ¼	-	1	12	-
	Discharge	11 ¾	¾	-	8	2
12x10"	Suction	17	-	1	12	-
	Discharge	14.25	7/8	-	12	2 ¼

* stud length protruding

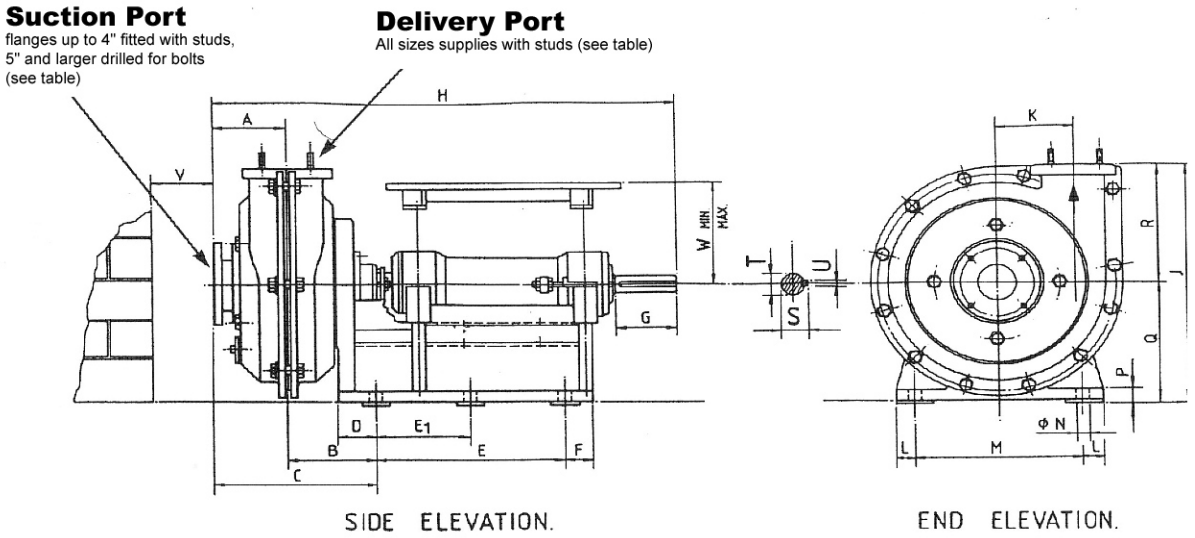

SIDE ELEVATION. END ELEVATION.

McLanahan CORPORATION

7. Gland Options & Part Numbers

Gland Seals

The Gland is usually the weakest point on any Pump and requires most attention and maintenance. All glands need cooling and lubrication between the sliding surfaces, so a drip from the glands is normal. All glands must be finally adjusted while the pump is running.

The LPT Glands have been developed to try to minimise the attention and service needed, but this depends on the pressure of the fluid being pumped, the size and shape of the solid particles and the concentration of the solid particles in the liquid. Three unique seal arrangements have been developed and McLanahan engineers can give advice regarding the optimum selection for a specific duty.

7.1. "H" and "P" Glands

The Slurry pressure at the gland is reduced by back pump out vanes on the impeller, and when fitted the Rubber axial expeller, which is a stretch fit on the shaft of the "H" and "P" glands.

The solids are restrained by the outward Centrifugal swirl behind the impeller, the axial expeller and the restricted path to the seal interface.

With the "H" Gland, the adjusting gland must be eased **outwards** to increase the sealing pressure. The geometric shape of the Gland Seal is carefully designed to give a good seal, while limiting the amount of "digging" onto the gland sleeve.

The gland sealing water must be as clean as possible and at a pressure of about 3 – 5 psi (2 – 4m water gauge) above the discharge pressure. With a high flushing water pressure you get greater water use and greater dilution of the pumped slurry without any benefit to the seal.

7.2. "D" Gland

This is a unique type of mechanical seal. The Face Seal runs against the hard Wearing Face.

The Face Seal acts as a spring and if any grit particles get between the rotating rubber and stationary Wear Face it is pressed into the Rubber. The Face Seal is a stretch fit on the shaft sleeve. As the gland pressure increases, so the rubber extends axially and increases the pressure at the rubbing interface. So great care must be taken not to over tighten the adjusting sleeve.

When the pump is first started, ensure that the adjusting nuts are finger tight. When the pump runs, adjust the gland nuts so that there are approximately 5 drops per minute from the gland. This should reduce to 1 drop occasionally, and run satisfactorily for up to a year without further attention in a good application.

7.3. Sectional Arrangement – "H" Gland Assembly

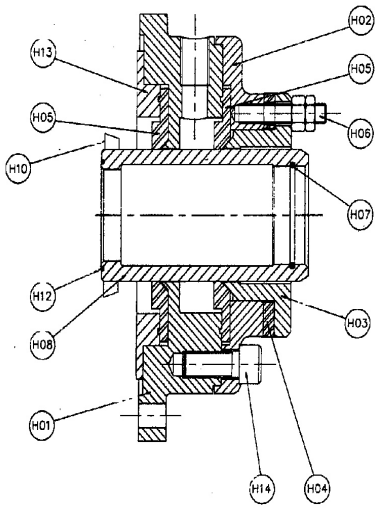

Note on operation:
Loosen H06 to increase sealing.

Hydrostatic Gland Assembly	
Part No.	Description
H01	Gland Housing Hose Connector
H02	Gland Cover
H03	Adjusting Gland
H04	Resilient Gasket
H05	Gland Seal
H06	Adjusting Stud Set
H07	Sleeve O-Ring
H08	Gland Sleeve
H10	Axial Expeller
H11	Lantern Ring (not shown) 12"/10" (300/250) only
H12	Impeller O-Ring
H13	Gland Locating Ring
H14	Gland Cover Set Screw

7.4. Sectional arrangement – "P" Gland Assembly

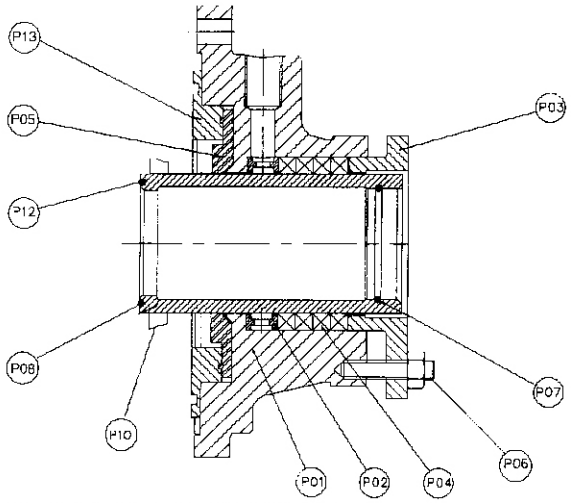

Note on operation: Tighten P03 to increase sealing

Packed Gland Assembly	
Part No.	Description
P01	Gland Housing Hose Connector
P02	Lantern Ring
P03	Adjusting Gland
P04	Packing Rings
P05	Gland Seal
P06	Adjusting Stud Set
P07	Sleeve O-Ring
P08	Gland Sleeve
P10	Axial Expeller
P11*	Backing Ring (not shown)
P12	Impeller O-Ring
P13	Gland Locating Ring
P14*	Gland Cover Set Screw Set

*used on 10x8 (250/200) and 12x10 (300/250)

7.5. Sectional Arrangement - "D" Gland Assembly

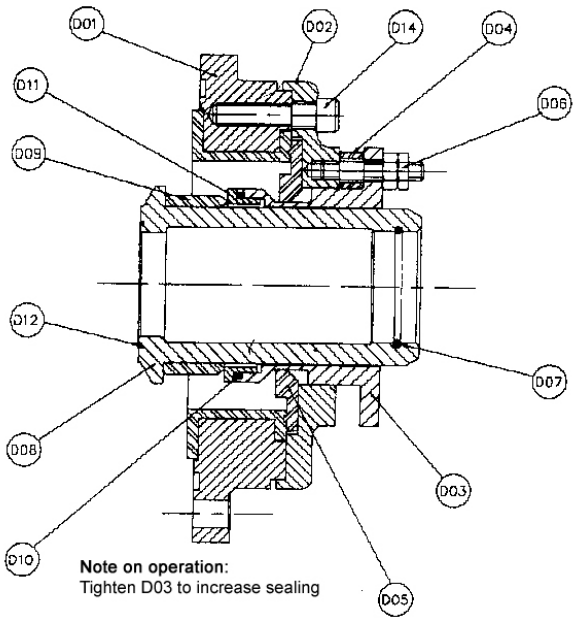

D Gland Assembly	
Part No.	Description
D01	Gland Housing
D02	Gland Cover
D03	Adjusting Sleeve
D04	Linatex Washer
D05	Gland Seal
D06	Adjusting Stud Set
D07	Sleeve O-Ring
D08	Gland Sleeve
D09	Linatex Face Seal
D10	Face O-Ring
D11	Wearing Face
D12	Impeller O-Ring
D13	Gland Locating Ring (not shown) only on (4”/4”
D14	(100/100)
D15	Gland Cover Set Screw Spacer Ring (not shown) Only on 10”/8” (250/200) and 12”/10” (300/250)

Do not overtighten the adjusting nuts part D06

8. "Pumptec" Computer Software

Many complex calculations are needed In order to

- size a pump
- establish the optimum pipeline carrying velocity
- de-rate the pump for a slurry duty
- calculate pipeline friction head losses
- calculate power absorbed,
- analyze the system head

To perform these calculations, McLanahan Corporation uses unique software named "Pumptec".

Where McLanahan Corporation has selected the Pump using Pumptec, a printout of the operating conditions; pipe configuration and curve is included in the Appendix of this manual.

When any change of duty is envisaged, the pump can usually accommodate it with a change of V-belt sheave ratios and a different speed, but it is essential to recalculate all the duty parameters and to check that the motor and drive will not be overloaded under any normal operating condition.

When making any change to your pump system, please refer these changes to McLanahan Corporation so the correct combination of speed and power is selected.

Input criteria required:

- Volume to be pumped
- Percent solids
- Gradation of solids (top size & 50% passing size)
- Specific Gravity of Solids
- Specific Gravity of Liquid
- Temperature of Liquid
- Elevation above sea level
- Height of liquid level in tank
  (if negative suction, height from liquid surface to centre line of pump inlet)
- Vertical height from Pump inlet to discharge point
- Pressure required at delivery point
- Pipe diameter (inside diameter important)
- Pipe material
- Pipe fittings – type and quantity

9. General Pump Suction Requirements

A pump does not “suck” as fluid has no tensile strength. The centrifugal expulsion of fluids creates a low pressure area at the eye of the impeller, and atmospheric pressure, plus any static head, pushes fluid into the pump. It is therefore essential that suction systems do not restrict flow from the sump into the pump. With slurries, this is even more important as the solids themselves can settle and cause obstructions to flow.

Short unobstructed pipelines with facilities for easy draining, removal and cleaning are essential.

A trap to remove tramp material is desirable.

Air entrained in the slurry reduces the pump’s capacity and head, and an air vent pipe on the suction pipe close to the pump inlet is often essential.

The pump will operate best if the flow velocity approaching the impeller is evenly distributed across the suction eye, and is sensibly axial and without swirl. Intake conditions in the sump, such as the formation of vortices, or in the suction pipeline, such as a sharp bend just before the pump, cause an uneven flow over the eye of the impeller, and impair pump performance.

The Desliming and Feed Regulating Sump shown below incorporates the best features in good sump design.

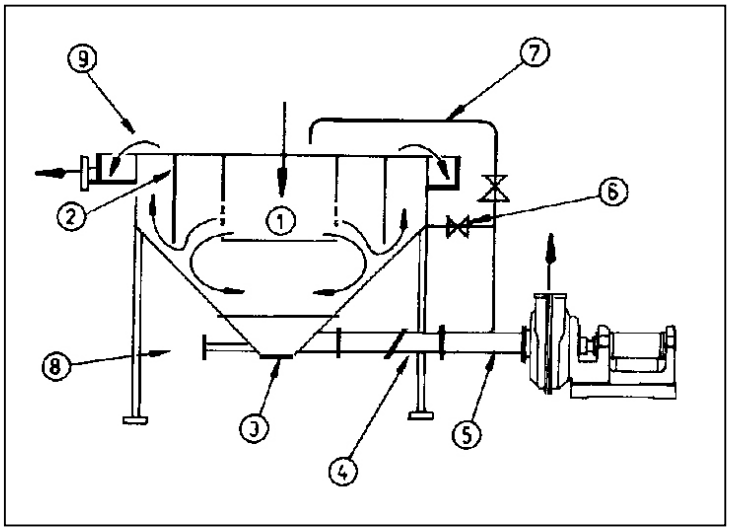

1. Feed Distribution Box/Tramp Material Trap.
2. Anti-Turbulence/Air Release Baffles.
3. Replaceable Lined Suction Box.
4. Removable Split Pipe or Flexible Hose to facilitate maintenance.
5. Short Simple Suction Piping.
6. Start Up Suction Line (Optional)
7. Air Vent Line (Optional).
8. Injection Water Line (Optional) or Drain/Dump Port.

10. Installation

The following notes cover most situations, but certain installations will require additional checks.

10.1. Noise

Because of its heavy construction, rigid bearing housing and the sound attenuation due to the rubber lining, the noise generated by a bare shaft LPT pump is low, less than 70dB(A).

The noise emission from a complete pump and drive unit will be dependent upon various factors including that from the motor, its fan and the V-belt drive. To obtain an indication of the noise level generated by a specific complete unit take the highest component noise level, generally the motor, and multiply by 1.15. I.e. dB (A) pump + dB (A) motor + dB (A) drive = 1.15 x dB (A) motor.

Other factors, including the piping system and hydraulically generated noise as well as any reflected noise, will affect the final installed figure.

10.2. Foundations

Holding down bolts, bolt holes in steel work or pockets in concrete must be checked for location and dimension to match the pump certified drawing. The foundations must be rigid.

The pump base must be set level in its final position, and be rigidly supported at each holding down bolt before the holding down bolts are tightened. It is unacceptable to twist the base by uneven tightening of the holding down bolts.

10.3. Pipe work

The suction and delivery pipe work must be independently supported, and the pump must not be used as an anchor to pull the pipes into position.

Provision for simple removal of suction and delivery pipe work to facilitate unblocking and servicing the pump, and dumping solids in an emergency situation should be checked.

Areas that could cause restriction on the suction side should be checked.

The possibility of thermal expansion in the pipe work causing undue loads on the pump should be checked.

Check that the pipe work matches up to the pump without strain.

The lining on the LPT Model IIIr is continued out to form gaskets on the suction and discharge flanges, therefore the use of joint rings or additional gaskets is not necessary. Connections to the pump should be made using flat faced flanges only.

When fitting LPT pumps to rubber-lined equipment such as valves, hose or lined pipe, a steel gasket must be used.

10.4. Power

Check that the motor voltage, power and starter rating and supply match.

10.5. Gland Services

If gland sealing water is required, the quantity, quality and availability should be checked.

10.6. Access

Crane capacity and access routes from the delivery point should be checked. Access for maintenance, protection from flooding, and ventilation for motor cooling must be checked.

10.7. Impeller Adjustment Axially

The position of the rotating element must be set so that there is a minimum running clearance, approximately 1mm, between the suction bush and the impeller, the bearing housing must then be locked in position. This clearance should be checked by bolting a dummy flange or stub pipe to the suction flange this ensures any movement of the rubber lining on connection is allowed for. Once connected to suction and delivery lines, the unit should be checked for free rotation.

10.8. Coupling Alignment

The pump and motor couplings must be aligned in accordance with good engineering practice and axial or radial run out must be less than 0.05 mm total indicated reading on a clock gauge. With Vee-belt pulleys, the faces of the couplings must be exactly in line, and the shafts must be parallel to each other. A check with a straight edge or string line across the pulley faces should have no visible gap.

10.9. Motor Rotation

Before the belts are fitted or the couplings are connected, the direction of rotation of the motor must be checked. Incorrect motor rotation can cause the impeller to screw off and destroy the pump.

10.10. Tension V-belts

When the motor's direction of rotation is correct, fit the V-belts and tension them in accordance with the maker's recommendation. In general, a quarter to a half twist of the belt will be possible at the centre of the belt using a finger and a thumb. Check the tension again after a few hours running.

10.11. Belt Guard

The belt guard provided with this pump unit is manufactured with the shaft aperture fully closed with mesh. On installation of the vee belt drive and determination of pulley centres, the shaft guard is offered up and the mesh relieved locally to allow the shafts to pass through. Allowance may be required for movement of shafts when belt tensioning.

The mesh should be relieved and a guard should be fitted in a manner which prevents accidental contact with the rotating parts of the drive assembly.

The installer must ensure the guard is installed in the accordance with national and local regulations.

10.12. Gland Service

Check that gland water supply and protection systems are working, when these are fitted.

10.13. Greased Bearings

The pump bearings will have been greased at the factory and over greasing can cause them to overheat, so check the bearings, but do not over grease them. Suitable grease types are Shell Alvania 3, Mobil EP2, Caltex LS3 or their equivalents.

10.14. Final Checks

Check that all nuts and bolts are tight; the gland adjusting nuts are finger tight; that no loose material is lying around the pump set; that the guards are securely fitted and the pump is safe to start.

THE RUNNING SPEED OF THE PUMP MUST NOT EXCEED THE FOLLOWING:

Pump	1½x1½	2x2	3x3n	4x4	6x5	8x6	10x8	12x10
MAX RPM.	2750	2400	2100	1600	1400	1200	1200	900

10.15. Electrical Installation

This equipment must be installed and controlled in accordance with applicable national and local regulations.

11. Gland Services

On the hydrostatic gland and also on the packed gland, it is usually necessary to have a clean water flushing supply to the gland.

The pressure should be 3 – 5 psi (2 – 4 m) water gauge above the pump discharge pressure (remember to include the S.G. of the slurry) and the flow rate should be approximately in accordance with the table below.

Pump	units	1½x1½	2x2	3x3n	4x4	6x5	8x6	10x8	12x10
Water flow.	USgpm	1	1	1	2	2	2	3	4
Water flow.	liter/sec	0.04	0.04	0.05	0.07	0.07	0.09	0.1	0.2

The gland flushing water should be clean. The life of the gland and gland sleeve is related to the cleanliness of the flushing water, and although a few particles will not do instant damage, the seal life will be reduced. Slurry must not be used.

There are many combinations of flow control devices which may be used, and a few of these are shown on the next diagram. The objective is to maintain a secure supply of clean flushing water to extend the gland life.

With pumps in series, there are three main ways of supplying gland service water.

- Individual dedicated pumps at the correct pressure and flow rate.
- One large pump at the highest pressure throttling down the supply to each pump in the series.
- One multi-stage pump tapping off a supply at a different stage to each pump in the series.

11.1. Gland Service Water Systems

Below are some typical Gland Service systems. Any selection of items may be combined.

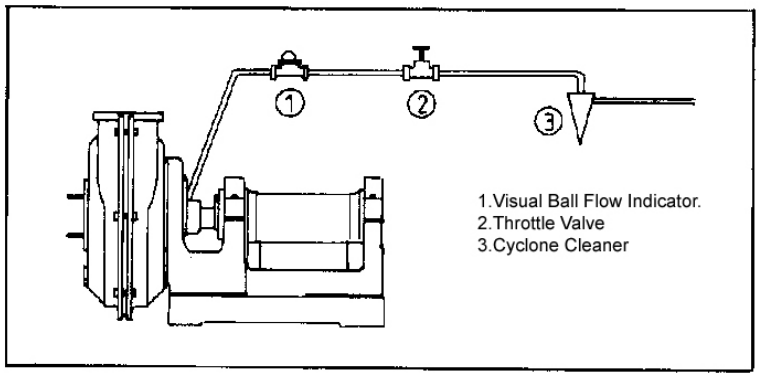

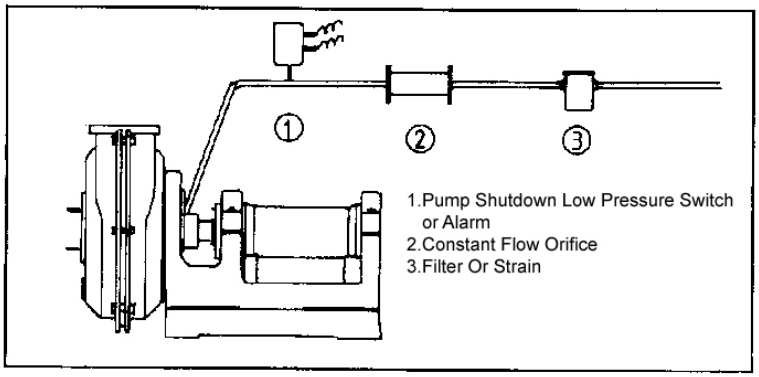

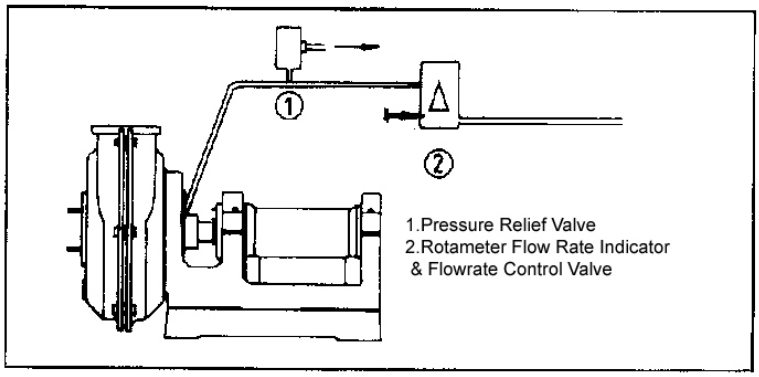

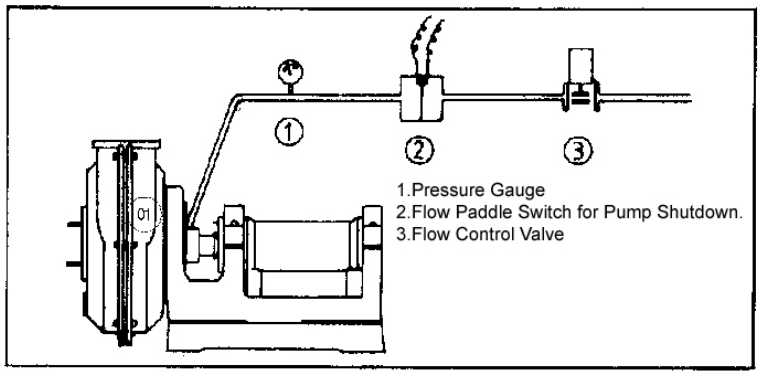

12. Lubrication and Cooling

The bearings are grease lubricated and additional grease need only be added about twice a year. Do not over grease the bearings.
The bearing assemblies are all checked in the factory to prove that they are correctly assembled

The bearings are designed to run at high temperatures, maximum 120° C, and the grease has to be compatible with this operating condition. Clean grease must be used.

If water gets into the bearings, the assembly must be stripped, thoroughly dried and regreased, and any seal failure corrected.

Recommended greases are Shell Alvania 3, Mobile EP2, Caltex LS3 or their equivalents.

13. Start up Procedure

It is recommended to follow this routine every time a pump is started although it is appreciated that many units will be operated remotely.

a. Check the free rotation of the pump.
b.
c. Check gland services water is running, if required.
d.
e. At first start, or after any work on the electric motor terminal box, check direction of rotation **WITH DRIVE BELTS REMOVED**
f.
g. Check the pump is primed.
h.
i. Check that all guards are in place and that the pump is safe to run.
j.
k. Start the pump.
l.
m. If the pipeline is empty and there is no discharge valve (i.e. due to abrasive nature of the product), the pump motor may be overloaded for a period and the pump may cavitate. This condition should be examined to evaluate the possible long term effect on the equipment.
n.
o. Check the pump for noise, vibration or any hot spots.
p.
q. Adjust the gland to maintain a drip, which is necessary for lubrication and for cooling.

14. Shutdown Procedure

This depends ultimately on the system and process flow requirements, but the following procedure is recommended.
a. Stop the flow of solids into the sump.
b. Turn the sluicing water or run system on water only to wash out the pump and delivery pipeline.
c. Shut down the pump.
d. Shut down the gland service water system

In cold weather, the pump and auxiliary equipment should be drained to prevent freezing damage.

15. Disassembly Procedure

Check that all power is switched off and isolated, and that it is safe electrically and mechanically to work the pump.

The following sequence is a general guide to stripping the pump for inspection. Refer to Cross Section drawings in Appendix. Where a gland part is mentioned the part for the H gland is referred to.

On sizes up to the 4x4 (100/100) there is no separate suction bush and liner.

a. Remove the suction pipe and inspect for wear.
b. Check the suction bush liner **01** for wear, noting any uneven wear pattern and position. Check the axial clearance
c. Between the suction bush liner **01** and the eye of the impeller **08** (or on smaller pumps between the casing liner and eye of the impeller.)
d. Remove nuts **11** and suction bush **02**. The suction bush liner **01** is pushed out of the suction bush **02** from the suction side. Some water spread under the lip of the suction bush liner **01** will lubricate its passage out of suction bush **02**.
e. Remove casing bolts **09** having supported the suction side casing **03**. Lift off the suction side casing **03**. A crane is necessary on the larger pumps.
f. Remove liner nuts **10** and inspect the suction side liner **04**. Note unusual wear patterns, cracks, tears or deterioration of the lining.
g. The impeller **08** is exposed for inspection. Hold the shaft **B02** using a spanner, which is a good fit, on the flats between the gland **13** and the flinger **14**. The impeller **08** is screwed onto the shaft **B02** with an Acme right hand thread. The impeller **08** may be very tightly locked onto the shaft **B02** and may need an impact force or a long lever to loosen it. If the impeller is to be used again, protect the rubber against damage. Inspect the impeller **08** and note unusual wear patterns in the flow passages and back or front pump out vanes. Check that the "O" ring behind the impeller **08** has sealed against the gland sleeve **H08** and slurry has not corroded the impeller or shaft thread. This "O" ring **H12** should be replaced at every strip-down.
h. Remove the axial expeller **H10,** which is a stretch fit on the gland sleeve **H08**. If 'D' gland is fitted the gland sleeve should be removed at this point.
i. Support the gland side casing **05**, undo the casing to pedestal nuts **12** and remove casing half along with the gland assembly **13**. Undo the gland holding screws **21** and remove the gland assembly **13**. Undo liner nuts **10**, the casing liner can now be removed for inspection, note any unusual wear patterns.
j. Remove bearing pedestal caps **17**, and fixings **20** and unfasten the axial positioning jack **19**, to enable bearing assembly to be removed.
k. To disassemble the bearing assembly, remove the gland sleeve **H08**, the flinger **14** and the bearing covers **B03** and **B04**. The bearings can be inspected at this stage. If there is no sign of damage, the bearings should not be disturbed, and the bearings should merely be washed out with mild solvent oil and regreased.
l. Press the shaft **B02** with the bearing **B05** still fitted out of the bearing housing **B01**. Push the shaft from the impeller side out of the bearing housing. The inner ring of front bearing **B06** will still be attached to the shaft and can be removed later.
m. The remainder of the front bearing **B06** can then be withdrawn from housing **B01.**
n. Loosen the tab washer B07 undo locknut B08 and pull the end bearing **B05** off the shaft.

Notes:

1. The 2x2 (50/50), 3x3 (80/80) and 4x4 (100/100) pumps do not have a loose suction bush liner **01** and suction bush **02**.
2. The 10x8 (250/200) and larger sizes have an Inside Gland Cover **24** which is held in position by **H14** / **P14** / **D14**. Undo **H14** and withdraw the Inside Gland Cover **24** from the impeller side.
3. The Casing Suspension Arm is fitted as a maintenance aid ONLY and as such may be used to support singularly, either of the Casing Halves and its associated liner, or the Impeller. It must not be used for any other purpose. (Suspension arm not fitted to 1½x1½ and 2x2 (50/50) pump.)

Wear and Replacement of Parts

To obtain the best service and performance from the pump, periodic routine inspections should be carried out and the pump has been particularly designed for this purpose. It is not possible to state at what intervals these inspections should be made because the rate of wear varies considerably from one application to the next. However, it is suggested that initially the pump be allowed to run for a period of say, three months, and an examination of the pump will then give some idea of the length of life which may be expected from the rubber covered parts.

16. Assembly Procedure

Before assembly, ensure all parts are clean and free of old grease and dirt. The new bearings or replacement bearings should be generously filled with grease between the rollers. Check the Neoprene grease seals **B09** and **B10** are sound, and not soft or distorted. Replace if necessary.

a. Clamp the shaft **B02** horizontally in a vice. Heat the spherical roller end bearing **B05** in an oil bath or induction heater to 240˚F (115˚C) and fit it to the drive end of the shaft **B02** using clean insulated gloves. Ensure the inner ring of the bearing **B05** is hard against its seat by tapping it with a brass pin. Fit the tab washer **B07** and the lock nut **B08.**

b. Fit the inner ring of the front bearing **B06** to the impeller end of the shaft **B02** ensuring that it is hard against its seat, by tapping with a brass pin.

c. Clamp bearing housing **B01** securely, grease bearing **B05**. Fit shaft **B02** and end bearing **B05** assembly into housing. Ensure outer race of bearing **B05** is hard against seat.

d. Fit neoprene seal **B09** and bearing cover seal **B13** to end cover **B03** and fix to bearing housing **B01** using set screws **B11**.

e. Mount bearing housing **B01** vertically with front end upwards and wedge shaft **B02** so it is central in the housing. Fill front bearing **B06** with grease and carefully tap outer ring into bearing housing **B01**.

f. Fit neoprene seal **B10** and bearing seal cover **B13** to front cover **B04** and fix to bearing housing **B01** using set screws **B11**. Fit V-Ring Seal **B17** to Shaft **B02** and place with slight tension against Front Cover **B04**. Fit Flinger Ring **14** to Shaft **B02** and locate in position using Screw Clamp supplied with Flinger Ring.

g. Set bearing housing assembly into pedestal **18** and loosely assemble bearing pedestal caps **17** with pedestal cap screws **20** and fit axial positioning jack **19**. Very occasionally, shims are required for shaft alignment; if factory fitted, the thickness of shim required will be stamped on the vertical face of the pedestal adjacent to the pedestal cap stud.

h. If 'D' gland is to be fitted – Loosely assemble gland components as shown on page 10 taking care not to damage the wearing face when fitting, leaving out at this stage the gland sleeve **D08**, 'O' rings **D12** and **D07** and face seal **D09**. Fit the gland side liner **06** into the gland side casing **05** securing with liner nuts **10**. Bolt the gland assembly loosely to the casing **05**. Fit the casing **05** and gland assembly to the pedestal **18** using fixings **12**, taking care not to damage the wearing face against the shaft **B02** on assembly. Fit the 'O' rings **D12**, **D07** and face seal **D09** to gland sleeve **D08** and slide home onto shaft, through casing and into the gland assembly. Carefully align gland components (specifically check concentricity of gland parts relative to the shaft) and tighten all fixings.

i. If 'H' or 'P' gland is to be fitted – Fit 'O' rings **H12** / **P12** and **H07** / **P07** to gland sleeve **H08** / **P08** and slide home on to the shaft. Loosely assemble gland components as shown on pages 9 and 10, slide over shaft **B01** and onto the gland sleeve. Fit the gland side liner **06** into the gland side casing **05** securing with liner nuts **10**. Fit the casing **05** to the pedestal **18** using fixings **12**. Carefully align the components of the gland assembly (specifically check concentricity of gland parts relative to the shaft) and fit to the casing **05**. The axial expeller **H10** / **P10** a stretch fit over the gland sleeve can then be fitted.

j. Smear the Impeller thread on the shaft **B02** with protective long life graphite grease before screwing on the impeller, ensuring that the Impeller 'O' ring is fitted into the Gland Sleeve.

k. Fit the suction side liner **04** in the suction side casing **03** using liner nuts **10**.

l. Fit the suction bush liner **01** inside the suction bush **02** (using soapy water assists this process) and bolt it to the suction side casing **03** using the bolts **11**. Match up the suction side casing to the gland side casing, and bolt the two side casings together. Check the two half liners match up, and press back the liners into the casings to ensure a minimum mismatch at the joint line and at the delivery flange.

m. Check the concentricity of the fit between suction bush liner **01** and the impeller **08**.

n. Using the axial positioning jack **19** adjust the impeller **08** towards the suction bush liner **01** keeping the holding down studs **20** loose. Check the axial clearance between the impeller and the suction bush liner **01**. A steel ring or dummy flange should be bolted to the suction flange to simulate any distortion in the suction bush liner **01** when connected to the suction pipe, before the axial clearance is checked. This clearance should be set at approximately 1/32" (1mm). Rotate the shaft to ensure effective clearance.

o. Tighten the bearing holding down nuts **20** and the axial positioning jack **19**.

17. Troubleshooting

IF A PUMP FAILS TO PUMP THROUGH A BLOCKAGE SWITCH OFF IMMEDIATELY AND READ THESE FAULT FINDING NOTES CAREFULLY TO RECTIFY THE SITUATION.

TAKE EXTREME CARE AS THE PUMP MAY BE FILLED WITH SCALDING STEAM AND SOLIDS AT A HIGH PRESSURE.

17.1. No Discharge When Pump Runs

THE PUMP MUST NOT BE ALLOWED TO RUN IF IT DOES NOT DISCHARGE. If by mischance the pump has been allowed to run for more than a few minutes without discharge then **STOP IT AT ONCE.**

TAKE EXTREME CARE IN DISMANTLING AFTER SUCH AN OCCURRENCE DUE TO HIGH TEMPERATURE AND PRESSURE WHICH MAY BE PRESENT IN THE PUMP CASING. DO NOT REMOVE THE DRAIN PLUG UNTIL THE FLUID TEMPERATURE IN THE PUMP HAS DROPPED. (SEE 17.11c).

a. Air Lock
The commonest cause of failure of a newly installed pump to discharge when run for the first time is an air lock in the casing. Even when a pump is well below water level, (drawing from a Feed Regulating Sump for instance), it may retain a large bubble inside the casing which prevents the start of pumping. This phenomenon is far more likely with horizontal undershot discharge branch arrangements than any other practical configuration. It is least likely with horizontal overshot arrangements.

If you suspect air lock as the cause of failure to pump, start and stop pump several times to drive the air out, a fraction at a time. When using this procedure ensure that you do not damage the motor starter or burn out the motor itself by trying too many starts in a short period of time. The number of permissible attempts will vary with the equipment installed but usually it is safe to try one start every three to four minutes.

b. Inadequate Prime
In installations where the pump has to be primed, either by jet or venturi effect in the suction pipe, or by vacuum pump on the delivery side, failure to pump may be caused by inadequate prime. This is usually rectified, by allowing more time for priming to occur.

It is possible when “jet priming” to have such a small amount of priming water that the pump will never prime, and in this case more water for the priming operation will be needed.

Usually, the diameter of the priming branch should be at least one third of the diameter of the suction pipe [2” (50mm) will prime 6” (150mm), 3” (80mm) will prime 8” (200mm) etc.], and the minimum water required is about 30% of the **Pump** capacity.

If priming is by vacuum pump there must be a valve or at least an air-lock on the delivery side and the vacuum pump must be able to “beat” the air leakage through the gland. To assist in this, always attempt to prime with the gland water running – no matter what style of priming is being attempted.

c. Installation Faults
Failure to discharge on start-up can be caused by installation faults of which the commonest is inadequate sump capacity. The result of installing a sump with inadequate capacity is to risk repeated air-locks of the pump. This can happen when the pump reduces the water level, either allowing a vortex to form – which air-locks the pump – or (when water is introduced to the sump) it entrains so much air that it produces the same effect.

A small sump can easily prevent any discharge reaching the end of the pump discharge line. The only remedy is to extend the sump capacity. We recommend sumps of at least one minute’s pumping time as a minimum. (This recommendation does not apply to feed regulating sumps in sand plants where greater capacity is required).

Other installation faults are more obvious – such as tramp material lodged over a pump suction or a kinked suction hose.

17.2. Brief Discharge Only

a. Air Lock

A pump with a suction lift and partial air lock will often start to pump at a greatly reduced rate after each start, then give up altogether. At the discharge end of the pipe this may appear as a brief surge followed by failure.

This problem can only be overcome by closer attention to the priming system.

b. Obstructed Suction

If the suction line is obstructed either by tramp material or a delaminated suction hose lining, the pump may start well but when the discharge rate rises the suction obstruction so throttles the pump that it quickly fails by gross cavitation.

Detection of this sort of condition is difficult, and generally the only certain way of finding out what is happening is the use of a vacuum gauge immediately before the pump suction. An obstructed suction line will be indicated by a sudden increase in vacuum reading immediately before the failure.

c. Lack of Delivery Resistance

A pump which is required to pump with a suction lift or with a fair length of suction pipe, but with practically no resistance on the delivery side, (e.g. short, open-ended, discharge branch or nozzle), may pump briefly then fail. The reason for this is that centrifugal pumps on open discharge need positive pressure on the suction eye to prevent gross cavitation. If the installation does not provide sufficient positive pressure on the suction side the pump will fail.

Usually, the easiest way to overcome this difficulty is to artificially create resistance on the delivery side, by extending the pipe work or introducing a valve or other resistance, such as an orifice.

17.3. Pumps Water But Not Solids

a. Air Leaks on Suction Side

Badly made joints in the suction line or air entrainment with feed into a sump may be insufficient in themselves, to prevent a pump from pumping water satisfactorily. However, when solids are introduced – particularly, coarse solids – the pump has a more arduous duty; it has to entrain the solids into the fast moving stream in the suction pipe. In effect it has to “dredge” the solids into the stream. Even if the solids were already moving in the right general direction, they must be accelerated up to the water velocity and thus they act as a suction resistance for the pump.

The result of the introduction of solids into an aerated system, which the pump can only marginally handle, when pumping water alone, will cause failure.

Air leaks can usually be detected as water leaks when the pump is not running; where water can get out air can get in. Air entrainment with the feed can sometimes be overcome by the use of baffles in the sump, such that the air bubbles have time to rise to the surface before being drawn down to the suction.

b. Poor Suction Line

A long suction line, or a line of too small a diameter, or a line with a restriction (sudden step-downs in diameter are the worst) may allow a pump to appear to handle water adequately, but not allow it to handle solids. The reasons for this are explained in 17.3(a) above.

Rework of the suction line is the only solution to this problem. If the line is increased in diameter it should be brought to the pump inlet diameter by a specially rolled flanged taper pipe. It must not be stepped down by a mismatch.

c. Electric Motor Wrongly Wired

Most Squirrel Cage Induction motors can be wired in two ways: “Star” or “Delta”. In order to reduce the surge in current when a motor is brought “on line”, some users start their motors in “Star” because this mode gives good starting torque and a reduced starting current surge, and then change to running their motors in “Delta” once smooth starting has been achieved. The “Delta” mode of powering the motor increases the speed close to synchronous speed – which is maximum – and maintains practically a constant speed under variations in load.

If a motor is left to run continuously in “Star” it will vary its speed dramatically with load. Hence, if a mistake has been made in the wiring of the motor it may well appear that the pump pumps water but will not pick up solids, the reason being that on “Star” the motor speed drops when the solids load comes on.

To detect this fault the easiest method is to check the speed of the motor shaft and compare it with the Nameplate rating. There should not be more than a few RPM difference between Nameplate RPM rating and actual speed – no matter what load the pump is pulling.

Correction of this fault is a matter for an electrician.

17.4. Overloads for Motor Trip Out

a. Wrong Pump Speed

The power drawn by a centrifugal pump discharging through a given delivery system is approximately proportional to the cube of its speed. If the speed is changed by, say 20% to 1.2 times the original speed, you can expect its power demand to rise by the cube of 1.2, i.e. 1.728, or nearly 73% above the original. Even a rise in speed of 10% to 1.1 times the original speed, will give a rise of 33% in power demanded by the pump.

The relationship is not exact but is close enough for field calculations purposes.

If a pump is run at the wrong speed it can make a very considerable difference to the load drawn from the motor.

Calculation of the correct pump speed is based on:

- Flow rate to be pumped;
- Difference in height between pump and discharge points;
- Length, diameter, and inner surface of pipeline through which pump must deliver;
- Number of elbows, bends, valves, other fittings in pipeline;
- Equipment at end of pipeline such as hydrocyclones, pressurised distributors, jets etc.;
- Grading, tonnage, and specific gravity of solids to be pumped;
- Pump performance curves.

As far as fault finding is concerned, the actual RPM of a pump should be compared with the RPM specified. Corrections to pump speed can be made by pulley changes.

b. Changed Pipeline System

It is not uncommon for a pump speed to be calculated on the basis of a pipeline system intended to be used at the time of the negotiations for the purchase of the pump, but to be commissioned into service with a very different pipeline system. A client may say “But, it’s not such a high lift so the pump does not have to work so hard”. Unfortunately, at a given pump speed a pump will pump a larger gallon age through a shorter pipeline, (or lesser vertical height), and will take more power – not less.

When confronted with this situation, the only thing to do is to calculate the correct Head and RPM and make a pulley change. The affinity rule explained under 17.4 a) can be used or the drive recalculated.

c. Low Voltage

The power consumed by an electric motor is the product of the voltage, amperage and power factor for the motor. Without going too deeply into the matter, if a pump demands a certain power from the motor, the motor in turn will demand corresponding amperage from the electric supply system. If, however, the voltage of the electric supply system happens to be lower than normal, then the motor will draw extra amps to meet the pump's power demand. In this way the power consumed by the motor, (the product of voltage, amperage and power factor) remains unchanged.

The sort of circumstances where lower than standard voltages might be encountered are:

- When power supply is from a generator set
- At the end of a long trailing cable;
- At the end of an electric supply system remote from the nearest transformer substation;
- In an area where very heavy start-up loads can occur, such as near large crusher stations or long conveyor installations.

Low voltage can readily cause a motor overload by drawing higher than expected amps, this being in no way related to the pump.

If low voltage is suspected as the cause of motor overload, a qualified electrician should be called in.

d. Wrongly Set Overload Protection

All motor starting equipment has some form of overload protection equipment built into the system so that a burnt out motor or locked-rotor motor does not cause more extensive damage. If a motor repeatedly drops out on overload, and there is no other readily apparent reason, the electrical overload protection equipment should be checked.

e. Mechanical Fault in Pump

The pump shaft should be free to turn by hand. Remove the Vee-belts and check the pump shaft for freedom to turn. If there is no resistance the fault must be in the motor. If a jarring or resistance can be felt when attempting to turn the pump shaft, drop off the suction pipe and check the clearance between the impeller and suction plate, and for blockages.

If this proves clear, then remove the suction bush and look for marks on the surface of the impeller which might indicate if the impeller has been rubbing. If this proves clear rotate the shaft again to ascertain if the resistance is still present and if it is then remove the impeller, and inspect the gland side liner. If there is still no evidence of rubbing, rotate the shaft by hand again to check that the resistance is still present, then remove the gland sleeve. If the resistance can still be felt by hand it can only be the bearings of the pump.

The remedy for the faults which may be revealed by this step-by-step approach are:

- Impeller rubs on suction bush: release bearing housing, set impeller to suction bush clearance by adjusting position of bearing housing until impeller runs free. Tighten bearing housing. Replace suction pipe. Realign belt drive.
- Impeller rubs on gland half lining; reset the suction bush clearance. Check for movement of casing liner.
- Seizure in the gland area. Strip and inspect.
- Shaft tight in bearings; there is no simple field remedy if the pump shaft is found to be tight in the bearings, the rotating assembly must be removed and stripped for inspection of the bearings and grease seals.

f. Air Entrainment

In sump-fed pump systems air entrainment with the pump feed can produce periodic overloads on the motor by the following sequence of events:

- Air entrainment with feed gives the pump a “spongy” pulp which reduces the pump throughput and power.
- Flow through the sump is reduced allowing air in the feed now entering the sump to escape to surface. Solids, of course, reach the pump suction.
- The pump now has a largely de-aired pulp of far greater percentage solids than intended, and the power demand rises. At this stage the pump may choke. This is a dangerous condition.
- Pump entrains the accumulated solids into suction pipeline and begins to pump normally again, increasing throughput through sump.
- Air entrainment begins to reach pump suction again and sequence repeats.
- Air entrainment can permanently reduce slurry throughput and make it appear as if the pump is not working.

In small installations this surge may be repeated at three minute intervals, and in large installations it may take as long as five minutes for the full cycle to be completed. If the cycle terminates at stage (3) the pump may explode, if allowed to run blocked.

12.1 Pump Handles Only A Limited Percentage Solids

g. Pump Speed Incorrect

With increasing solids feed into a pumping system three major factors will limit the percentage solids handled:

- Friction resistance increases leaving less pressure on the delivery side to maintain the velocity in the pipeline;
- Critical (settling) velocity for the pulp in the pipeline increases;
- Pump performance “drops” so that the total head generated by the pump diminishes.

Clearly if the pump speed has been calculated for water only, then increasing tonnages of solids are fed into the system, the combination of factors (1) & (3) above may soon produce a situation where the pipeline velocity is too low to maintain movement of the solids (factor 2). See 17.11c).

h. Air Entrainment

Under 17.3(a) above there is an explanation of how a pump can handle water, but fails when solids are introduced to the system, due to air entrainment. The same fault can sometimes explain why a pump performs apparently satisfactorily on pulp up to a certain percentage solids, then “gives up” when this is passed. See previous.

i. Poor Suction Line

A suction line layout as described in 17.3 b) is far worse as the percentage solids is increased and can become completely blocked. See 17.11c).

j. Cavitation

If a pump is expected to draw relatively coarse solids from a sump below the pump centreline, depending on the speed of the pump and its capacity in relation to the flow rate being handled, it may suffer from cavitation. When this happens, (and the onset is often quite sudden and sharp), the total head generated by the pump diminishes dramatically. As described previously, the conditions for blocking a line are suddenly created, namely; reduced delivery pressure for maintaining flow combined with increased requirement for velocity in the pipeline.

Generally, if cavitation is the source of the trouble there is ample evidence: audible cavitation “rattle” in the pump or from the bearings, sudden reduction in power demand, the gland leaks or draws air, and there is a dramatic drop in delivery pressure.

The solution to the problem is to make the suction arrangements as smooth as possible without restrictions, and to arrange for the feed to come gradually up to load without sudden surges of solids. If these measures do not overcome the problem it may be necessary to change the suction line to a size larger and fit a flat topped taper-piece to the pump suction. If trouble persists, a larger pump will have to be installed. Something effective must be done as the situation is potentially dangerous.

17.5. Gland Will Not Seal Adequately

a. Poor Adjustment

The outer seal of a Hydrostatic gland assembly must be allowed to rub lightly on the gland sleeve for an effective seal to be maintained. If the gland adjuster is pushed in too far this will lift the seal off the sleeve and the gland will leak profusely. Most people when seeing a leaking gland immediately think to "tighten it up". *With the Hydrostatic gland the gland adjuster must be moved outwards to reduce leakage*.

Type D and P glands, should be tightened for reduction of leakage in the same way as standard packed glands in water pumps. *Over tightening should be avoided, especially on 'D' glands* as a drip is always necessary to lubricate the rubber face seal.

b. Dry Running

The glands will not be damaged by a few seconds running without lubrication and cooling by water, but if either gland is run for any length of time without water in the pump there is danger of melting the rubber seals. If a Type D gland has been correctly adjusted this is a fairly remote danger because without hydraulic pressure to force the rubber seal against the gland seat, the seal should run without touching the seat. However, in general terms, do not run a Linatex pump in dry conditions because of the danger of damaging the gland seals.

Once seals have been damaged in this way they have to be replaced.

c. Too Much Sealing Pressure

Too much water pressure in either type of gland can make the glands almost impossible to seal reliably. With Hydrostatic glands the solution to the problem is to insert a pressure control in the gland water line. With Type D glands the problem usually only arises with pumps being run in series or as booster pumps. In either case, the only solution is to convert the pump over to H gland or P gland and provide suitably pressured gland water.

d. Inadequate Prime

The "snore" condition for operating a pump is very difficult to seal without unacceptable leakage. Under this condition a pump continuously receives a good proportion of air drawn in with the pulp from the sump, in which the level is too low, or the sump has inadequate capacity, or both. The sump should contain a minimum of one minute's pumping time.

17.6. Excessive Heat in Drive

a. Slack V-belts

The commonest cause for generation of heat in the drive to a newly installed pump is undoubtedly lack of tension in the V-belts. All V-belts should be tensioned periodically, and newly commissioned drives should be re-tensioned an hour or so after start up.

This fault is easily detected, (pulleys are the hottest part of the drive), as the belts will have been slipping.

b. Hot Pump Bearings

On high speed duties it is to be expected that the bearings will run hotter than on low speed duties. Providing the shaft is free spinning by hand, the heat generated while running under power is probably immaterial. At 150°F (65°C) the assembly will be uncomfortable to the hands for more than a second or two, but this is not unduly hot for the bearing assemblies. If the bearing is failing the shaft will not run free.

c. Inadequate Lubrication of Pump Bearings

The bearings will be charged with grease before despatch from the factory. Details of lubricants are given in this Manual. See section 12.

Addition of grease should be tried if bearings become very hot or noisy. Excess greasing should be avoided.

d. Motor Runs Hot

The usual reason for motors running hot is that they are intended to! With Continuous Maximum Rated motors the temperature rises are surprising and are allowed for in the design of the motor and the selection of the insulation in it.

Generally, heat from a motor can be safely ignored provided the amperage drawn is lower or equal to the nameplate rating. Many motors are fitted with Thermistors in the windings, which sense the temperature rise and are wired to operate a cut-out relay if the temperature exceeds a safe limit.

If a pump is choked when the motor starts the protection must trip out the supply to the motor.

Bearing troubles in motors are generally indicated by noise as well as heat, and can sometimes be detected by use of a long-stemmed screwdriver. The blade of the screwdriver is pushed against the bearing cover and the ear of the investigator pushed up to the handle. With a limited amount of experience bearing "rumble" can quite easily be detected.

17.7. Sudden Reduction in Discharge

a. Change in Feed Conditions

Operators do not always recognise a pump as simply one element in a complete system and any change in that system will bear on all the parts of it. For instance, if a screen, rejecting plus ¼" (6 mm) material is worn and passes 1" (25 mm) stones, this affects the pump performance. The suction resistance of the larger stones will cause the suction pressure to reduce and have less head available for pushing the pulp through the delivery side piping.

At the pump, the larger stones will make a significant difference to the pump performance, decreasing flow and potentially causing damage to Impeller and Linings.

In the pipeline, the large stones will probably progress by "saltation", that is, leaping along the bottom of the pipe. The rest of the pulp is fully in suspension and has to flow past these slow moving obstacles. Overall this means the resistance of the pipeline to flow has increased. Thus again reducing flow.

So a simple fault like a screen cloth with a hole in it can cause a sudden reduction in discharge. If it causes the pipeline to block, the condition is potentially dangerous. See 17.11 c).

Other changes in the feed conditions which must be investigated are; increased tonnage of solids, change of grading of solids, change in manner of introduction of solids to pump system. On this last count, a plant which was started up in summer, and is bin-fed via a vibrating feeder, will perform differently in winter, when the wetter feed "hangs up" in the feed bin and collapses down onto the feeder intermittently in larger dollops.

b. Air Leaks on the Suction Pipe

A pipe which has been steadily wearing away from the inside may break through to the open air near a flange, (in a welded area), at the bottom of the pipe, (where the coarsest solids run). In a suction pipe this will almost certainly allow air into the pipe with all the resultant ills described elsewhere

Frequently, a pinhole leak will not let enough air into a pump for any of the five faults listed to become critical. So operators, being human, postpone the repair or replacement of the worn pipe. The last chapter of the saga occurs surprisingly quickly and usually on nightshift – when fault produces a blocked pipeline.

c. Suction Blockage

In dredging applications there is always the danger that the pump suction will be suddenly submerged in collapsed solids from the surrounding pit contours. When pumping from a sump the same thing can happen when solids, which have been clinging precariously to the steel sides of the sump, subside and momentarily block the pump suction.

If the pump is feeding a fair length of delivery piping, it will not be possible for the long column of pulp in that piping to come instantly to rest when the suction gets blocked. It will be appreciated that the pulp in an 8" (200 mm) pipe, way 1000 ft (300 m) long, moving at 10ft/sec (3 m/sec) has considerable momentum. It just cannot be stopped dead in the same short length of time it takes to block the suction.

The result is a massive reduction in pressure throughout the system. It can cause a massive "water hammer" and surges that can split the pump casing, valves and piping. This can cause hoses to collapse – delivery as well as suction, and almost invariably leads to a great gulp of air being sucked through the pump gland. Usually this is sufficient to air lock the pump.

Often, operators attribute the pump failure to the gland, instead of to the conditions at the end of the suction pipe, and this seems the logical explanation to a person standing beside a pump, who heard the air hiss into gland, and then has to contend with the resultant air-lock. However, the trouble starts at the end of the suction pipe, the gland collapse occurs afterwards.

In dredging applications the answer is to exercise better control over the pit development. In sump-fed systems, the feed pulp can sometimes be directed to flush away any build-up of solids on the sides or valleys of the sump. If this is not possible, a larger capacity take-off box at the base of the sump must improve the situation. The blocked pipeline situation is potentially dangerous. See 17.11c)

d. Tramp Material

The simplest explanations of a fault should never be overlooked. If the complaint is a sudden reduction in discharge: drain the sump and before removing any pipe work or dismantling the pump in any way, have a look at the take-off box at the base of the sump. Loose rubber, house bricks, steel off-cuts have all been found at the outlet to the pump at one time or another. Plastic garden hose inside the impeller passages was found to have a dramatic effect on pump capacity, in an installation which had given satisfaction for the previous three years.

12.2 Sudden Increases in Power Demand

e. Damage Inside Pump

If a client has not had occasion to open his pump before he may not realise what can happen to the inside of his pump as it wears away day by day. The following list gives the results of abrasion which will give an increase in power demand, in order of frequency of occurrence.

- Excessive gap between impeller and suction bush.
- Cut or ripped rubber in suction bush or casing gland rubbing against impeller.
- Worn out cutwater.
- Worn out or broken casing liners.
- Impeller worn through back shroud.
- Impeller passages worn significantly wider than intended.

f. Change in Pipeline System

Clients may alter a discharge pipe layout so the static lift is reduced or the length of pipe shortened, thinking to themselves "the pump won't have to work so hard now". Actually, in these circumstances the pump pumps a larger gallonage and takes more power not less.

g. Low Voltage

A new installation near the pump site can make a significant difference to the voltage available, depending on the electric distribution system in the area. Lower volts mean higher current for the same power output of the motor.

h. Changed Pump Speed
It has been known for electricians who have been called in to do maintenance on a motor to dismount both pump and motor pulleys, then when reassembling the pumpset, to mistakenly interchange the pulleys. Depending on the pulley ratio this may have spectacular results.

i. Air Entrainment
In sump-fed pump systems air entrainment can produce cyclic pump overload as explained in 17.4f). This fault can be caused by a change in the gallonage fed to sump, or the direction in which it is fed to a sump. It can also be caused by a casual change to the feed type baffle arrangement in the sump.

17.8. Rapid Component Wear

a. Air Entrainment
As an experiment place some sand in an empty bottle, fill the bottle to the very top with water, place the palm of one hand over the top and shake the bottle. You will find it difficult to move the sand vigorously against your hand. Now tip out a third of the water, and repeat the test. You will undoubtedly feel the sand in the air-water froth hitting your palm.

The point of the experiment is to show how much more readily sand can move around in froth than it can in water without air bubbles. Therefore any air leaks in the suction side accelerate abrasion.

If air entrainment is severe enough to produce an air lock in the presence of solids and water, the result is an escalation of the abrasion rate.

Air entrainment can also cause severe abrasion indirectly. As explained in 17.2, with cyclic changes in pulp density due to air, the pump may have to handle, periodically, far denser pulp than intended. This also is an abrasive accelerator.

b. Properties of the Solids
Some solids have worse properties from the point of view of abrasion than others.

- Sharp edged particles are worse than round particles, so crushed materials are generally worse than natural sands.
- Course gradings are worse than fines.
- The specific gravity of the material makes a difference.

When confronted with a rapid abrasion problem, always reduce pump speed if possible. A larger pump with its larger diameter impeller will be rotating slower at the suction eye of the impeller for a given head than a smaller pump. So, if wear on the leading edge of the vanes is a problem, a larger pump would help.

c. Change in Feed Conditions
If a pump operates satisfactorily for some time then suddenly begins to wear out components in quick succession, look for some change in feed conditions. Extra tonnage, coarser grading, higher proportion of crushed material, and so on. Sometimes an operator is unaware that conditions have changed for the pump.

A case in point would be a rod mill circuit producing crushed sand minus 4 mesh (5 mm) from a feed which is minus 3/8" (10 mm). If a pump is used to pump the rod mill discharge to some screening equipment and the screen oversize returns to the mill, a reduction in capacity of this screening equipment will make a big change in the duty for the pump. However, to the operator, the same tonnage rate throughput is maintained by the circuit, so the pump duty is unchanged in his mind. In fact, a reduction in screen capacity (for instance, by partial blinding, of the screen cloth) will produce an increase in circulating load and a corresponding increase in pump pulp density.

Another less involved example would be the pumping of sand from a river deposit. These deposits are notoriously variable, so the proportion of crushed sand in relation to natural can vary widely. To the

operator however, sand is sand, and the fact that the pump is now handling, say 80% crushed material, while three months ago it was 60% natural sand may not appear significant.

If there is a permanent change in feed conditions which makes component life unsatisfactory, look into modifying the pump.

If there is no suitable pump selection, the pump duty may have to be split up, and a two stage pumpset installed. Each pump will run at about 70% of the speed of a single unit for the same duty and this speed reduction will make a very significant change to the abrasion rate.

d. Shaft Misalignment

After some years of service it occasionally happens that the saddles on the pedestal which support the bearing housing get worn and thus allow the shaft to point downwards. If this problem is severe enough the eccentricity of the shaft through the gland will be such that the gland will not seal properly. A further problem will be that there will be a misalignment between the eye of the impeller and the suction bush, which will detract from pump performance. If this happens, the best answer is to buy a new pedestal. This will almost certainly be cheaper and quicker than trying to build up the saddles and then remachining. A temporary expedient is to pack the saddles with shims, but inevitably these get lost during impeller adjustment.

17.9. Mechanical Failure

a. Broken Shaft

Typically, the only broken shafts in LPT pumps are those where there has been tramp material in the feed, or a bearing has seized, or slurry has worn through the gland sleeve and wear has weakened the shaft, in each case it is easy to see the cause.

b. Broken Pedestal or Casing

The front bracket of the pump pedestal although quite massive to look at can be broken from the box section of the pedestal by the simple expedient of starting the pump backwards. If this is done the impeller begins to unscrew from the shaft and, as it does so, strikes the suction bush. This is immovable, being trapped by the flange of the suction pipe work. So something has to give.

Occasionally, with older shafts, the thread in the shaft is stripped instead of the pedestal being broken.

We do not recommend attempting to weld broken pedestals, alignment problems are too difficult. The cheapest and quickest way out for a customer is to buy a new pedestal.

The running backwards of a pump is an electrical problem. It is very simply overcome and no electrician worth his salt will allow this to happen as they are supposed to check motor direction of rotation prior to fitting the V-belts onto the pulleys.

c. Pump Explodes

The centrifugal pump – LPT or any other – can potentially explode by running it with pulp, or water, in the casing but no discharge. An example of how this can happen is in a pump drawing pulp from a sump and pumping to a cyclone or through a rising pipeline. If the pump gets a sudden surge of solids, which blocks off the suction, flow will cease. In the delivery line the solids will settle in the rising pipe, but will be unable to enter the casing because the impeller is still spinning there.

We now have a plug in the suction pipe, and in the delivery pipe, with a spinning impeller in between. The pump goes on absorbing power as the impeller rotates and the power raises the fluid temperature. Ultimately, the water will boil and the pressure generated may be enough to explode the pump head or destroy the rubber.

This is an extremely dangerous situation, and if a pump head feels unusually warm and is not discharging, switch off the power, immediately. Under no circumstances approach the pump until the pump head has been relieved of pressure – preferably through the suction or discharge pipe work by flushing away the

solids plugs. If a pump is going to explode, there is almost certainly considerable leakage of steam from the gland.

Important Note: *Even if the pump does not feel hot, take extreme care when dismantling as the pump may be full of scalding water.*

Do not remove the drain plug until certain the fluid temperature in the pump has reduced. If in doubt carefully clear blockages in manner described above.

18. Notes

NOTE:
SUCTION & DISCHARGE CONNECTIONS ARE STD 150# DRILLING FLANGES.

NO.	DATE	REVISIONS	BY
4	6/16/97	ADD NEW PART NUMBERS	SP
5	6-29-00	REVISED ASS'Y GD13 TO GD13U	CW
5A	08/17/00	REV'D QTY. & DESC. PER BOM	CW
1	9/19/95	DRAWING NUMBER WAS B-2395	RGS
2	11/8/95	REVISED MOTOR PLATFORM ASSEMBLY	RGS
3	12/9/96	ADD ITEMS 27 & 34	DES

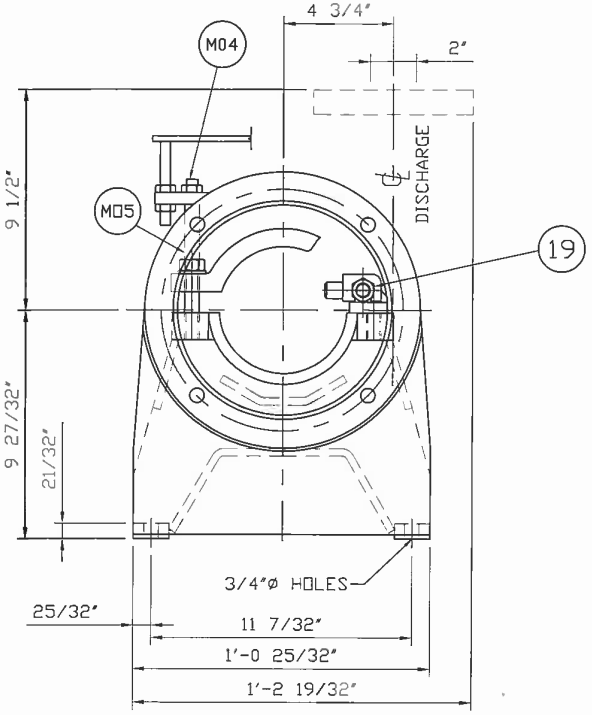

FRONT VIEW ON PEDESTAL

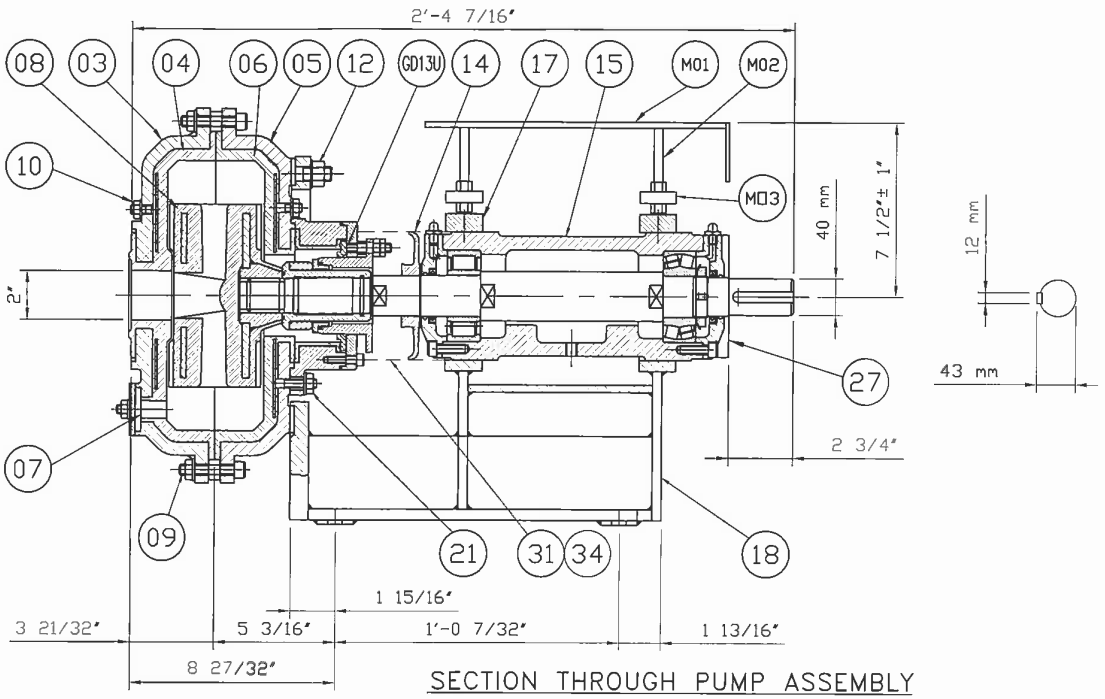

SECTION THROUGH PUMP ASSEMBLY

ITEM	QTY	DESCRIPTION	OLD PART#	NEW PART#
15	1	BEARING ASSEMBLY	15-050	09110002116
14	1	FLINGER	14-050	09110002115
GD13U	1	GLAND ASSEMBLY	GD13U-050	
12	1	CASING TO PEDESTAL STUD SET - SET (4)	12-050	09110002113
10	1	LINER NUT SET - SET (6)	10-050	
09	1	CASING BOLT SET - SET (5)	09-050	09110002111
08	1	IMPELLER	08-050	09110002110
07	1	DRAIN PLUG	07-050	
06	1	GLAND SIDE LINER	06-050	09110002109
05	1	GLAND SIDE CASING	05-050	09110002108
04	1	SUCTION SIDE LINER	04-050	09110002106
03	1	SUCTION SIDE CASING	03-050	09110002105

ITEM	QTY	DESCRIPTION	OLD PART#	NEW PART#
M05	4	CROSSBAR SUPPORT COLLAR	M05-050	
M04	4	CROSSBAR SUPPORT STUD	M04-050	
M03	2	MOTOR SUPPORT CROSSBAR	M03-050	
M02	4	MOTOR PLATFORM STUD	M02-050	
M01	1	MOTOR PLATFORM	M01-050	
34	2	PROTECTIVE STRIP	34-050	09110002137
31	1	SHAFT GUARD	31-050	09110002130
27	1	PULLEY SHAFT GUARD	27-050	09110002139
21	1	GLAND HOLDING SCREW SET - SET (3)	21-050	09110002121
19	1	AXIAL POSITIONING JACK	19-050	09110002120
18	1	PEDESTAL	18-050	09110002119
17	2	PEDESTAL CAPS	17-050	09110002118

THIS DRAWING IS THE PROPERTY OF LPT GROUP INC. AND MAY NOT BE USED OR COPIED EXCEPT AS EXPRESSLY AUTHORIZED BY THEM.

ALL TOLERANCES TO BE MAINTAINED UNLESS OTHERWISE NOTED.

FRACTION ±1/64
WELDMENTS ±1/16
CAST SURFACES ±1/16

ALL WELDING TO BE PER ANSI STANDARDS
SURFACE FINISH √125

McLanahan CORPORATION
200 WALL STREET
HOLLIDAYSBURG, PA 16648
(814)695-9807
(814)695-6684 FAX

DRAWN: SP
DATE: 11-7-94
CHECKED: AC

GENERAL ARRANGEMENT
50 X 50 (2"x 2") McLANAHAN PUMP WITH DRY GLAND

PART NUMBER	SCALE:	DRAWING NO.	REV.
09100002001	3/16" = 1"	GAD50/50A 1of1	5A

IF IN DOUBT REFER TO DRAWING OFFICE

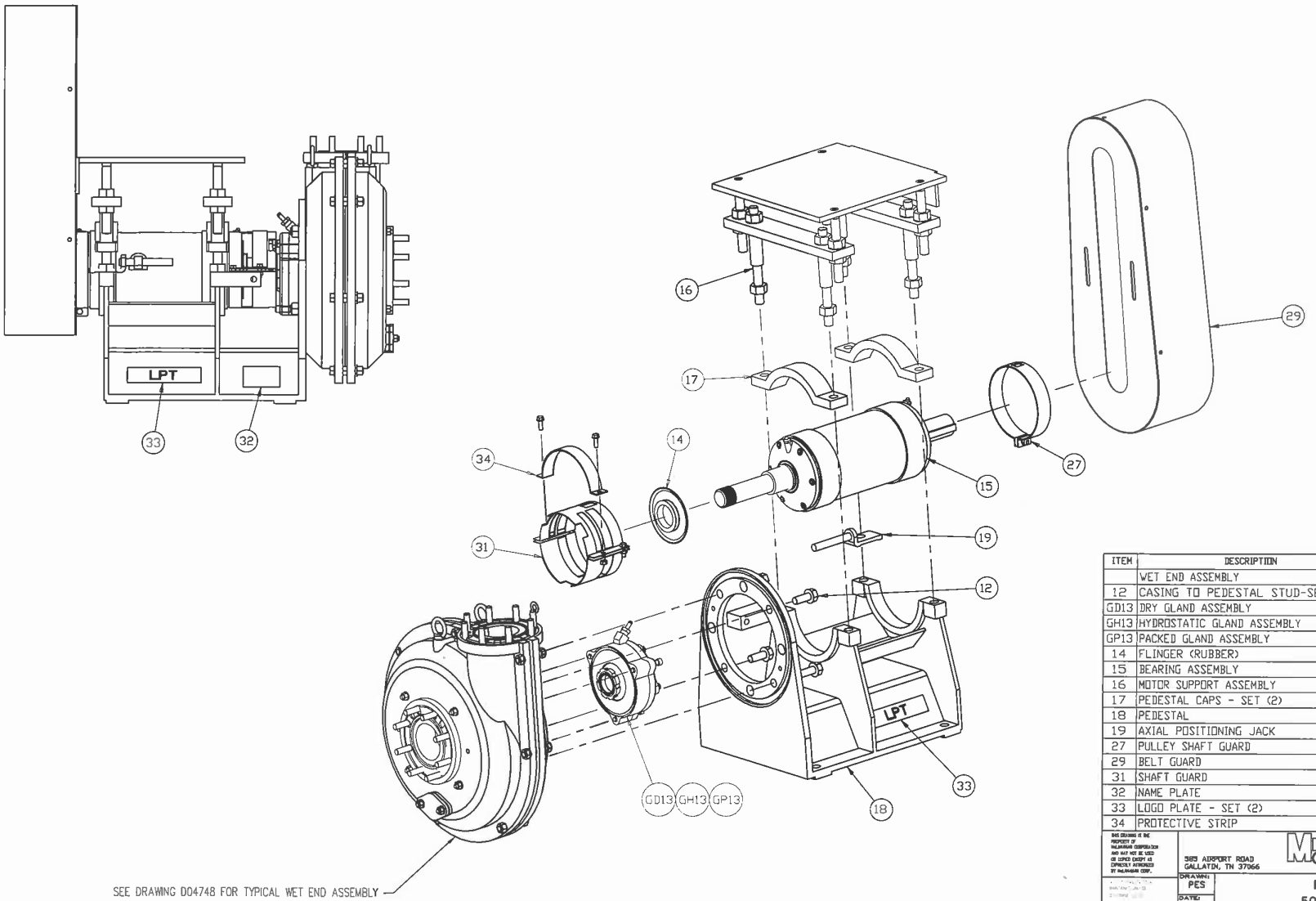

ITEM	DESCRIPTION	OLD PART #	USA PART #
	WET END ASSEMBLY		
12	CASING TO PEDESTAL STUD-SET(4)	12-50	09110002113
GD13	DRY GLAND ASSEMBLY	GD13U-50	
GH13	HYDROSTATIC GLAND ASSEMBLY	GH13-50	
GP13	PACKED GLAND ASSEMBLY	GP13-50	
14	FLINGER (RUBBER)	14-50	09110002115
15	BEARING ASSEMBLY	15-50	09110002116
16	MOTOR SUPPORT ASSEMBLY	16-50	09110002117
17	PEDESTAL CAPS - SET (2)	17-50	09110002118
18	PEDESTAL	18-50	09110002119
19	AXIAL POSITIONING JACK	19-50	09110002120
27	PULLEY SHAFT GUARD	27-50	09110002139
29	BELT GUARD	29-50	09110002128
31	SHAFT GUARD	31-50	09110002130
32	NAME PLATE	32-50	09110002131
33	LOGO PLATE - SET (2)	33-50	09110002132
34	PROTECTIVE STRIP	34-50	09110002137

THIS DRAWING IS THE PROPERTY OF McLANAHAN CORPORATION AND MAY NOT BE USED OR COPIED EXCEPT AS EXPRESSLY AUTHORIZED BY McLANAHAN CORP.

McLanahan CORPORATION
585 AIRPORT ROAD
GALLATIN, TN 37066
(615)451-4440
(615)451-4461 FAX

DRAWN: PES
DATE: 9-28-05
CHECKED:

PUMP ASSEMBLY
50 X 50 (2" X 2")
McLANAHAN PUMP

PART NUMBER	SCALE:	SIZE	DRAWING NO. 1of1	REV.
	N.T.S.	D	D04749	0

INFORMATION CONTAINED IN THIS DOCUMENT IS A TRADE SECRET AND ANY USE OF THE INFORMATION, EXCEPT AT ITS INTENDED RECEIVER, IS STRICTLY PROHIBITED AND REPRODUCTION OF THE INFORMATION SHALL BE THE MONITORED RECEIVER LIABLE FOR ANY AND ALL DAMAGES SUFFERED AS A RESULT BY McLANAHAN CORPORATION.

IF IN DOUBT REFER TO DRAWING OFFICE

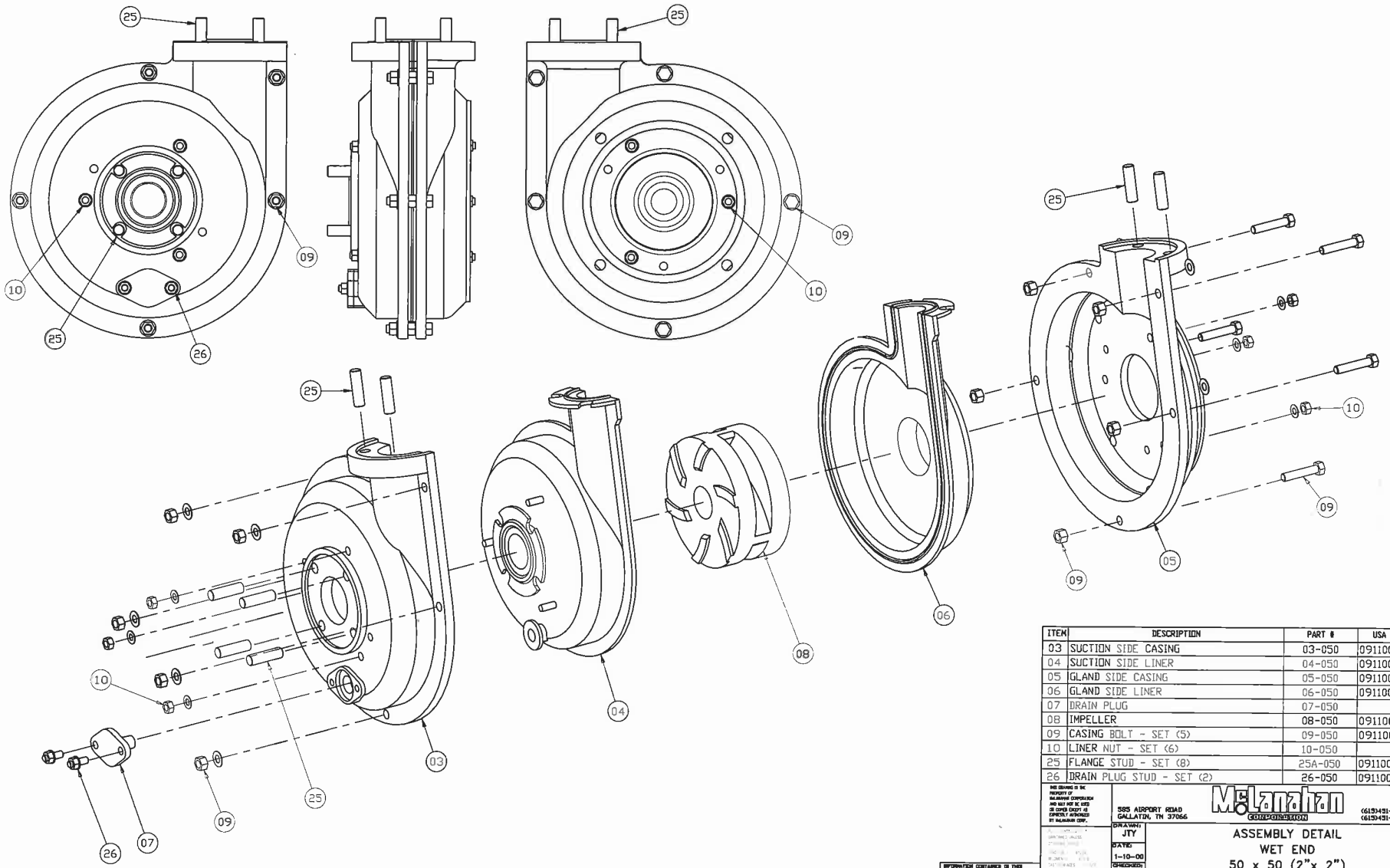

ITEM	DESCRIPTION	PART #	USA PART #
03	SUCTION SIDE CASING	03-050	09110002105
04	SUCTION SIDE LINER	04-050	09110002106
05	GLAND SIDE CASING	05-050	09110002108
06	GLAND SIDE LINER	06-050	09110002109
07	DRAIN PLUG	07-050	
08	IMPELLER	08-050	09110002110
09	CASING BOLT - SET (5)	09-050	09110002111
10	LINER NUT - SET (6)	10-050	
25	FLANGE STUD - SET (8)	25A-050	09110002125
26	DRAIN PLUG STUD - SET (2)	26-050	09110002126

THIS DRAWING IS THE PROPERTY OF McLANAHAN CORPORATION AND MAY NOT BE USED OR COPIED EXCEPT AS EXPRESSLY AUTHORIZED BY McLANAHAN CORP.

595 AIRPORT ROAD
GALLATIN, TN 37066
McLanahan CORPORATION
(615)451-4440
(615)451-4461 FAX

DRAWN: JTY
DATE: 1-10-00
CHECKED:

ASSEMBLY DETAIL
WET END
50 x 50 (2"x 2")
McLANAHAN PUMP

PART NUMBER	SCALE	SIZE	DRAWING NO. 1of1	REV.
	N.T.S.	D	D04748	0

INFORMATION CONTAINED IN THIS DRAWING IS A TRADE SECRET AND PROPRIETARY MATERIAL, EXCEPT BY ITS INTENDED RECEIVER, IS STRICTLY PROHIBITED AND REPRODUCTION OF THIS INFORMATION SHALL MAKE THE RECEIVING RECEIVER LIABLE FOR ANY AND ALL DAMAGES SUFFERED AS A RESULT BY McLANAHAN CORPORATION.

ITEM	QTY	DESCRIPTION	OLD PART#	NEW PART#	
D14	1	GLAND COVER SET SCREW - SET (3)	D14-050	09110002314	
D12	1	"O" RING-45 MM I.D. x 3 MM	D12-050	09110002312	*
D11	1	HARD WEARING FACE	D11-050	09110002311	*
D10	1	"O" RING-67 MM I.D. X 3.5 MM	D10-050	09110002310	#
D09	1	LINATEX FACE SEAL	D09-050	09110002309	*
D08	1	GLAND SLEEVE	D08-050	09110002308	*
D07	1	"O" RING-39 MM I.D. x 3 MM	D07-050	09110002307	*
D06	1	ADJUSTING STUD SET - SET (3)	D06-050	09110002306	*
D05U	1	GLAND SEAL	D05U-050	09110002305	*
D04	1	LINATEX WASHERS - SET (3)	D04-050	09110002304	*
D03U	1	ADJUSTING SLEEVE	D03U-050	09110002303	*
D02	1	GLAND COVER	D02-050	09110002302	
D01	1	GLAND HOUSING	D01-050	09110002301	

NOTE: 1. REPAIR KIT No. 09110002321 CONSISTS OF PARTS LABELED BY ASTERISK (*).
2. PART INCLUDED WITH HARD WEARING FACE IS LABELED BY POUND (#).

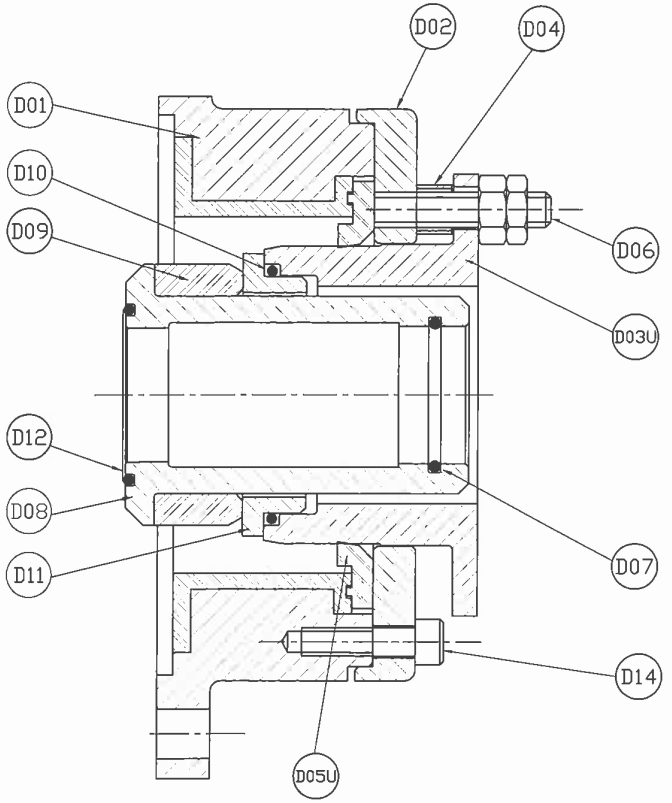

NO.	DATE	REVISION	BY
2A	08/17/00	REV'D QTY. & DESC. PER BOM	CW
2	6/28/00	REV'D ADJUST. SLEEVE & GLAND SEAL : ADDED NOTE	CW
1	6/16/97	ADD NEW PART NUMBERS	SP

McLanahan CORPORATION
200 WALL STREET
HOLLIDAYSBURG, PA 16648
(814)695-9807
(814)695-6684 FAX

DRY GLAND ASSEMBLY
50 x 50 McLANAHAN PUMP
(2" x 2")

MACHINED DIMENSIONS 1/64 EXCEPT WHERE NOTED, FINISH 125 EXCEPT WHERE NOTED

THIS DWG IS THE PROP OF LPT GROUP AND MAY NOT BE USED OR COPIED EXCEPT AS EXPR. AUTH. BY THEM

FILE:

PART NUMBER	DRAWN: DES	DATE: 12/11/96	DRAWING NO. 1 of 1	REV.
GD13U-050	CHECKED: AC	SCALE: 3/4"=1"	GD13U-50	2A

IF IN DOUBT REFER TO DRAWING OFFICE

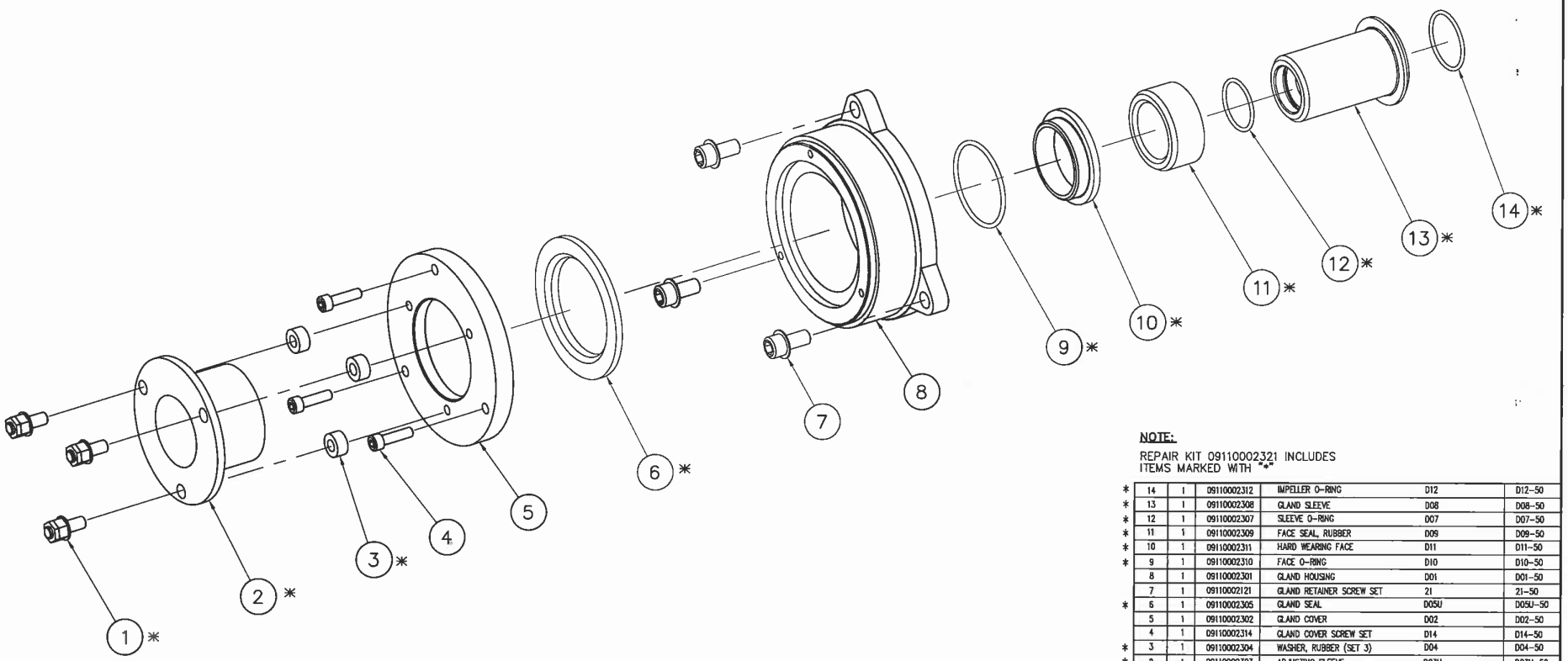

NOTE:

REPAIR KIT 09110002321 INCLUDES ITEMS MARKED WITH "*"

	ITEM	QTY.	PART NUMBER	DESCRIPTION		DWG.
*	14	1	09110002312	IMPELLER O-RING	D12	D12-50
*	13	1	09110002308	GLAND SLEEVE	D08	D08-50
*	12	1	09110002307	SLEEVE O-RING	D07	D07-50
*	11	1	09110002309	FACE SEAL, RUBBER	D09	D09-50
*	10	1	09110002311	HARD WEARING FACE	D11	D11-50
*	9	1	09110002310	FACE O-RING	D10	D10-50
	8	1	09110002301	GLAND HOUSING	D01	D01-50
	7	1	09110002121	GLAND RETAINER SCREW SET	21	21-50
*	6	1	09110002305	GLAND SEAL	D05U	D05U-50
	5	1	09110002302	GLAND COVER	D02	D02-50
	4	1	09110002314	GLAND COVER SCREW SET	D14	D14-50
*	3	1	09110002304	WASHER, RUBBER (SET 3)	D04	D04-50
*	2	1	09110002303	ADJUSTING SLEEVE	D03U	D03U-50
*	1	1	09110002306	ADJUSTING STUD SET (SET 3)	D06	D06-50

MATERIAL LIST

THIS DRAWING IS THE PROPERTY OF McLANAHAN CORPORATION AND MAY NOT BE USED OR COPIED EXCEPT AS EXPRESSLY AUTHORIZED BY McLANAHAN CORP.

525 AIRPORT ROAD
GALLATIN, TN 37066
McLanahan CORPORATION
(615)451-4440
(615)451-4461 FAX

DRAWN: JTY
DATE: 12-18-96
CHECKED:

DRY GLAND ASSEMBLY
50 X 50 McLANAHAN PUMP
(2" X 2")

PART NUMBER	SCALE	SIZE	DRAWING NO. 1of1	REV.
	N.T.S.	D	GD13U-50-EXP	0

INFORMATION CONTAINED IN THIS DOCUMENT IS A TRADE SECRET AND ANY USE OF THE INFORMATION, EXCEPT BY ITS INTENDED RECIPIENT, IS STRICTLY PROHIBITED AND REPRODUCTION OF THE INFORMATION SHALL RENDER THE REPRODUCED MATERIAL SUBJECT TO SEIZURE AND ALL LIABILITIES AS A RESULT BY McLANAHAN CORPORATION.

NO.	DATE	REVISIONS	BY
1	7/95	CHANGE DRAWING NUMBER	RGS
2	12/13/96	DELETE ITEM B13, ADD B14, B15, B16 & B17	DES
3	6/16/97	ADD NEW PART NUMBERS	SP
3A	08/03/00	REPLACED ITEM B16 WITH B13	CW
3B	08/17/00	REV'D QTY. & DESC. PER BOM	CW

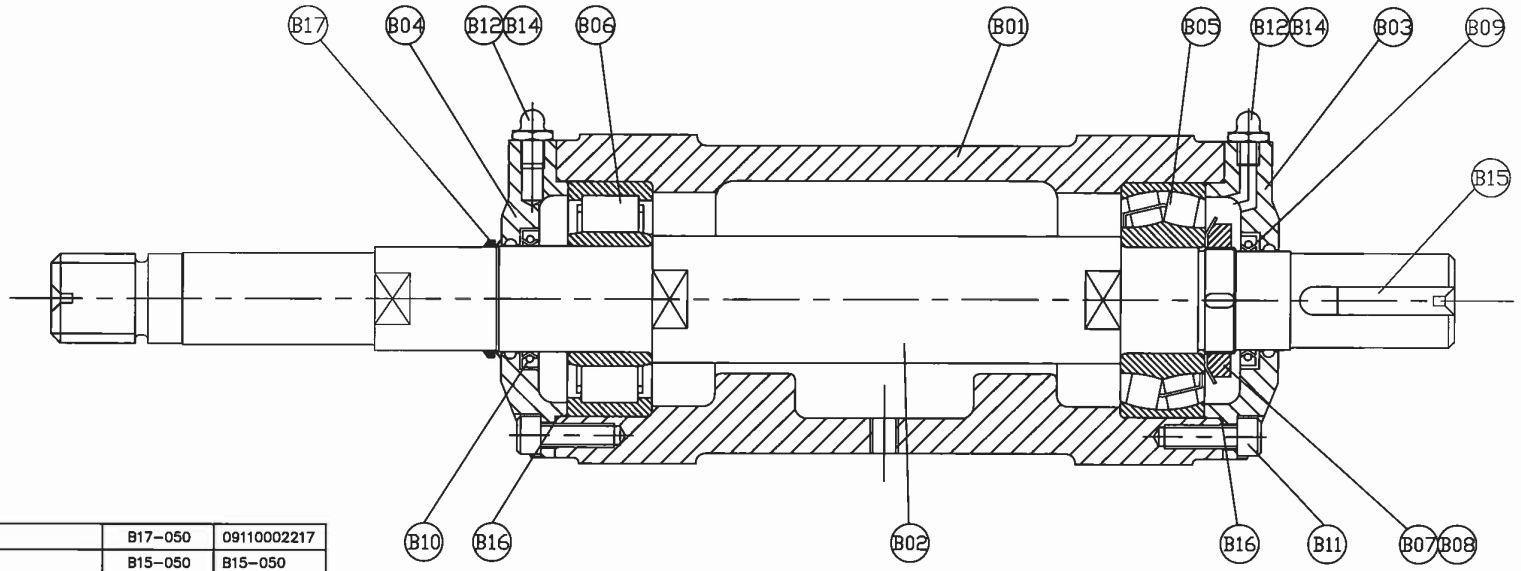

SECTION THROUGH BEARING ASSEMBLY

ITEM	QTY	DESCRIPTION	OLD PART#	NEW PART#
B17	1	V-RING SEAL	B17-050	09110002217
B15	1	SHAFT KEY	B15-050	B15-050
B14	1	GREASE	B14-050	
B13	2	BEARING COVER SEAL	B13-050	09110002213
B12	2	GREASE NIPPLES	B12-050	09110002212
B11	1	BEARING COVER SET SCREWS - SET (6)	B11-050	09110002211
B10	1	FRONT GREASE SEAL	B10-050	09110002210
B09	1	END GREASE SEAL	B09-050	09110002209
B08	1	LOCK NUT	B08-050	09110002208
B07	1	TAB WASHER	B07-050	09110002207
B06	1	FRONT BEARING	B06-050	09110002206
B05	1	END BEARING	B05-050	09110002205
B04	1	FRONT COVER	B04-050	09110002204
B03	1	END COVER	B03-050	09110002203
B02	1	PUMP SHAFT C/W KEY	B02-050	09110002202
B01	1	BEARING HOUSING	B01-050	09110002201

LPT GROUP, INC.
Division of McLanahan Corp.

DRAWN: SP
DATE: 11/8/94
CHECKED: AC

BEARING ASSEMBLY
LPT GROUP PUMP
2" x 2" (50 X 50) AND
1 1/2" X 1 1/2" (35 X 35)

PART NUMBER	SCALE:	SIZE	DRAWING NO.	REV.
09110002116	1/2"=1'	B	15-50 1of1	3B

IF IN DOUBT REFER TO DRAWING OFFICE

NO.	DATE	REVISIONS	BY
0	12/27/99	ORIGINAL DRAWING	JTY

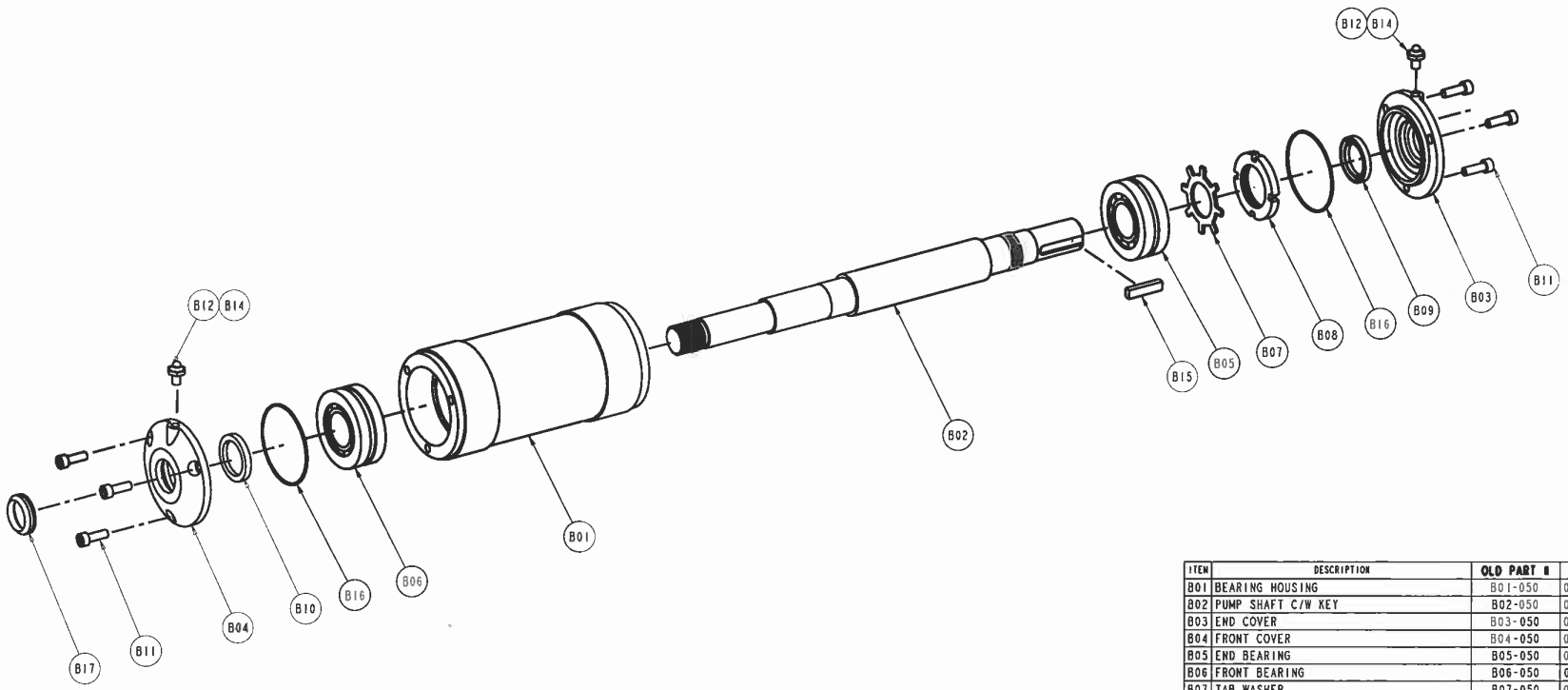

ITEM	DESCRIPTION	OLD PART #	USA PART #
B01	BEARING HOUSING	B01-050	09110002201
B02	PUMP SHAFT C/W KEY	B02-050	09110002202
B03	END COVER	B03-050	09110002203
B04	FRONT COVER	B04-050	09110002204
B05	END BEARING	B05-050	09110002205
B06	FRONT BEARING	B06-050	09110002206
B07	TAB WASHER	B07-050	09110002207
B08	LOCK NUT	B08-050	09110002208
B09	END GREASE SEAL	B09-050	09110002209
B10	FRONT GREASE SEAL	B10-050	09110002210
B11	BEARING COVER SET SCREW - SET (6)	B11-050	09110002211
B12	GREASE NIPPLES - SET (2)	B12-050	09110002212
B14	GREASE	B14-050	-
B15	SHAFT KEY	B15-050	
B16	BEARING HOUSING COVER SEAL - SET (2)	B16-050	09110002213
B17	V-RING SEAL	B17-050	09110002217

THIS DRAWING IS THE PROPERTY OF IPT GROUP, INC. AND MAY NOT BE USED OR COPIED EXCEPT AS EXPRESSLY AUTHORIZED BY THEM.

IPT GROUP, INC.
Division of McLanahan Corp.

DRAWN BY: JTY
DATE: 12/27/99
CHECKED: -

BEARING ASSEMBLY
50 X 50 (2" X 2") LINAPUMP IIIr

PART NUMBER	SCALE:	SIZE:	DRAWING NO.	SHEET	REV.
09110002116	3/8"=1"	D	B-50-IIIP	1 of 1	0

McLanahan CORPORATION

AGGREGATE PROCESSING DIVISION

CENTRIFUGAL SLURRY PUMPS

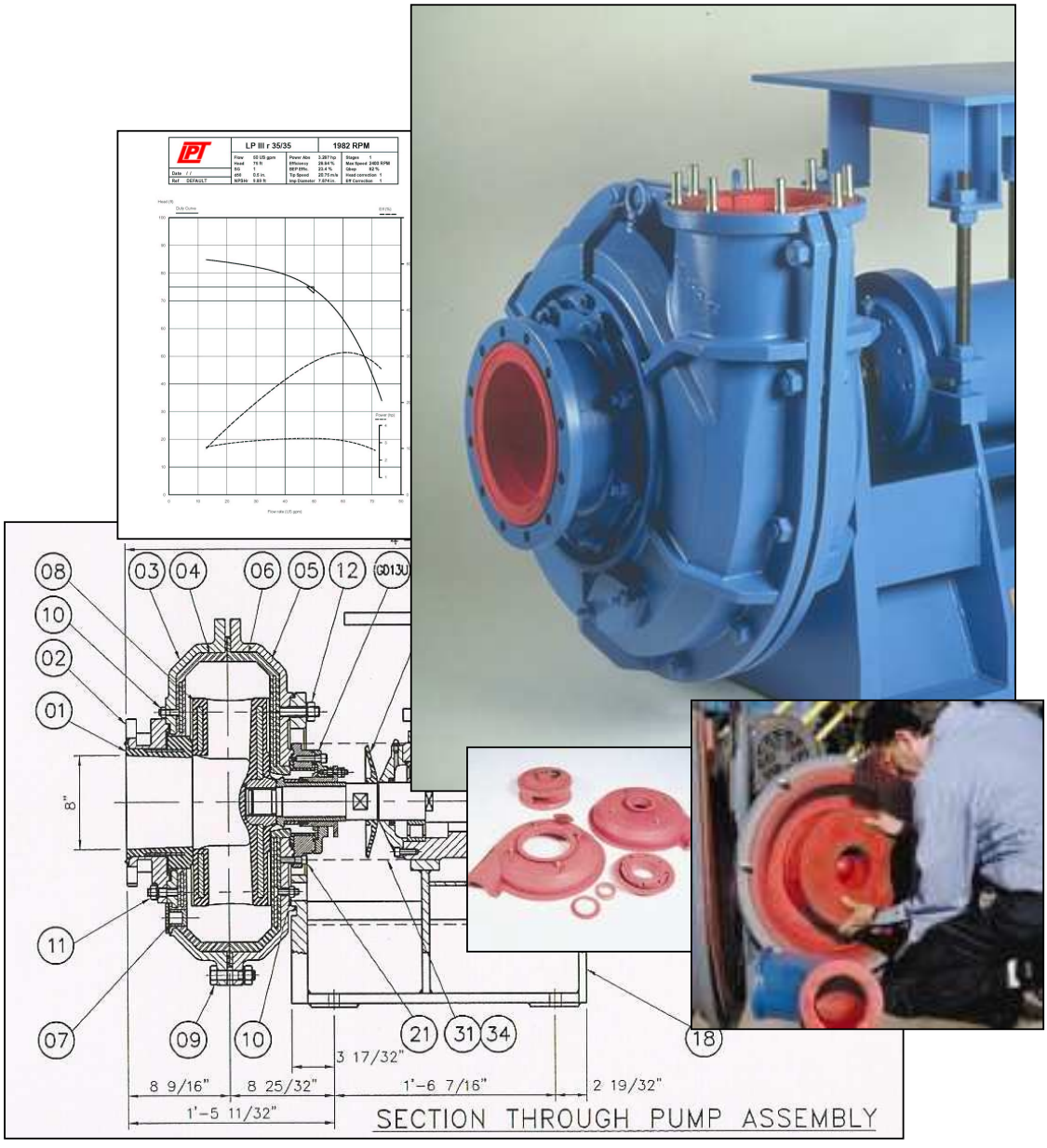

Equipment, systems & process innovation – since 1835

website: www.mclanahan.com e-mail: sales@mclanahan.com

McLanahan CORPORATION

AGGREGATE PROCESSING DIVISION

CENTRIFUGAL PUMPS



The McLanahan 'LPT' range of horizontal spindle, centrifugal slurry pumps are ruggedly designed for the most arduous duties. Vertical configuration on special order; Vortex Flow Impellers available for fibrous materials.



Linings:

Field replaceable, wet end linings are available in Natural Rubber, white Food Grade Rubber, Nitrile and High Chrome Iron.

Gland configurations include:

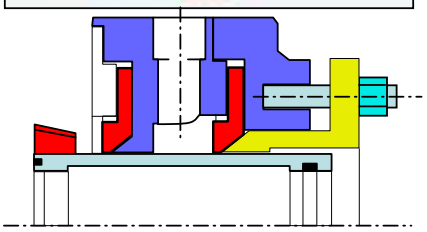

- **Dry Gland** – a unique self lubricating design that does not require an external water supply.

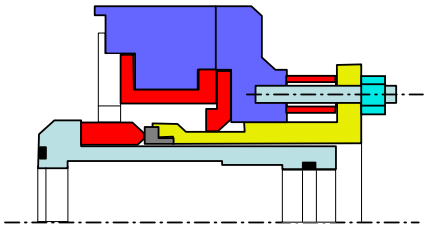

- **Hydrostatic Gland** – a simple, low maintenance design; requires minimal external flushing water.

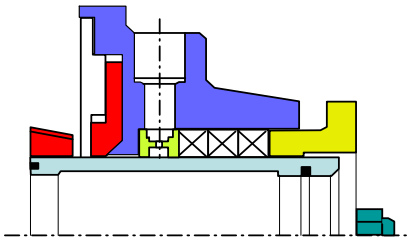

- **Packed Gland** – for the traditionalist; requires external flushing water

Equipment, systems & process innovation – since 1835

website: www.mclanahan.com

e-mail: sales@mclanahan.com

McLanahan CORPORATION

AGGREGATE PROCESSING DIVISION

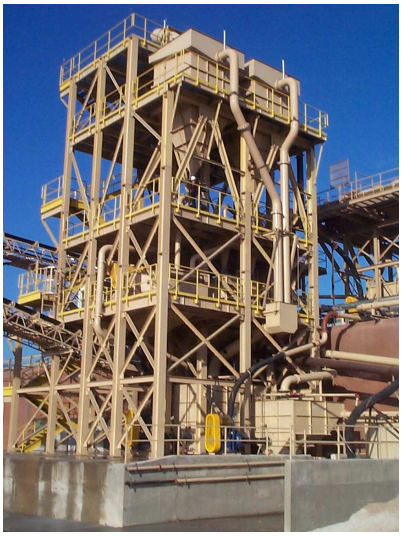

PUMP SERVICE

Total Service

From design to installation and beyond, McLanahan engineers are available to give advice on your slurry pumping needs and problems. The IIIr range has been designed to offer a wide choice of pump sizes to suit most slurry pumping applications.

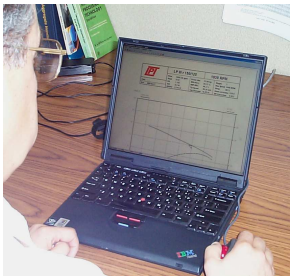

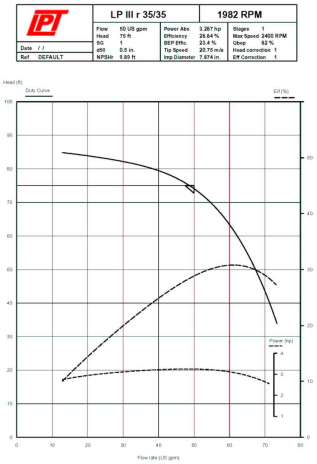

Pumptec: Computer Aided Support

To complement and facilitate optimum selection of your slurry system, LPT uses "Pumptec".

This unique computer program:

- Analyzes the effects of changing slurry density
- Calculates the P_{50} particle size from a sieve analysis
- Calculates settling velocities and select pipe sizes
- Calculates pipeline frictional losses in various pipe materials and pipe fittings
- Calculates the pump duty and selects a pump and drive based on input parameters
- Prints full application and selection data including NPSH, BEP, RPM, HP, etc.

Troubleshooting is made easier using Pumptec to evaluate different scenarios.

McLanahan CORPORATION

AGGREGATE PROCESSING DIVISION

LPT PUMP APPLICATIONS

Sand plants

Feeding sand and water to all types of classification and dewatering plants; effluent water transfer duties.

Coal preparation plants

For dense medium circuits; feeding hydrocyclones; filtrate pumping; handling the underflow from thickeners; disposal of effluent, etc.

Chemical manufacturing & Environmental applications

LPT pumps, by virtue of their various rubber linings, are suitable for pumping many chemical solutions, acid or alkaline, at moderate temperatures and for the disposal of effluent.

Cement manufacture

Slurry feed to : tube mill circuits; thickener feed and underflow; flotation plant circuits.

Metalliferous mining

Mill circuits; feeding hydrocyclones; cyanide plant filter residues; concentrates; tailings disposal and other pulp and slurry handling duties.

Irrigation systems and dredging

Silt removal in dams and canal sand traps.

Paper mills

China clay slurries; paper stock; effluent disposal.

Steel works and manufacturing applications

Pickling acid distribution circuits in plate and wire de-scaling plants; abrasive wet scrubber blow-down.

Power stations

Boiler house ash disposal; de-scaling plants.

China clay production

Feeding slurry to hydrocyclones and for general use in the preparation of china clay.

Glass manufacturing

Feeding polishing media; sand plants; handling effluent.

McLanahan CORPORATION

AGGREGATE PROCESSING DIVISION

'DRY' GLAND

a.k.a. 'D' type Gland

Is a unique proprietary design and is unlike conventional mechanical seals. A rotating rubber 'Face Seal' is adjusted against a static 'Hard Wear Face'; it is 'self-lubricating' in that pressure from inside the Pump head forces small amounts of liquid between the surfaces for lubrication.

Note: The term 'dry' is derived from the fact that the gland needs no external water source to lubricate the gland, small amounts of water and fines do exit the pump and accumulate at its base.

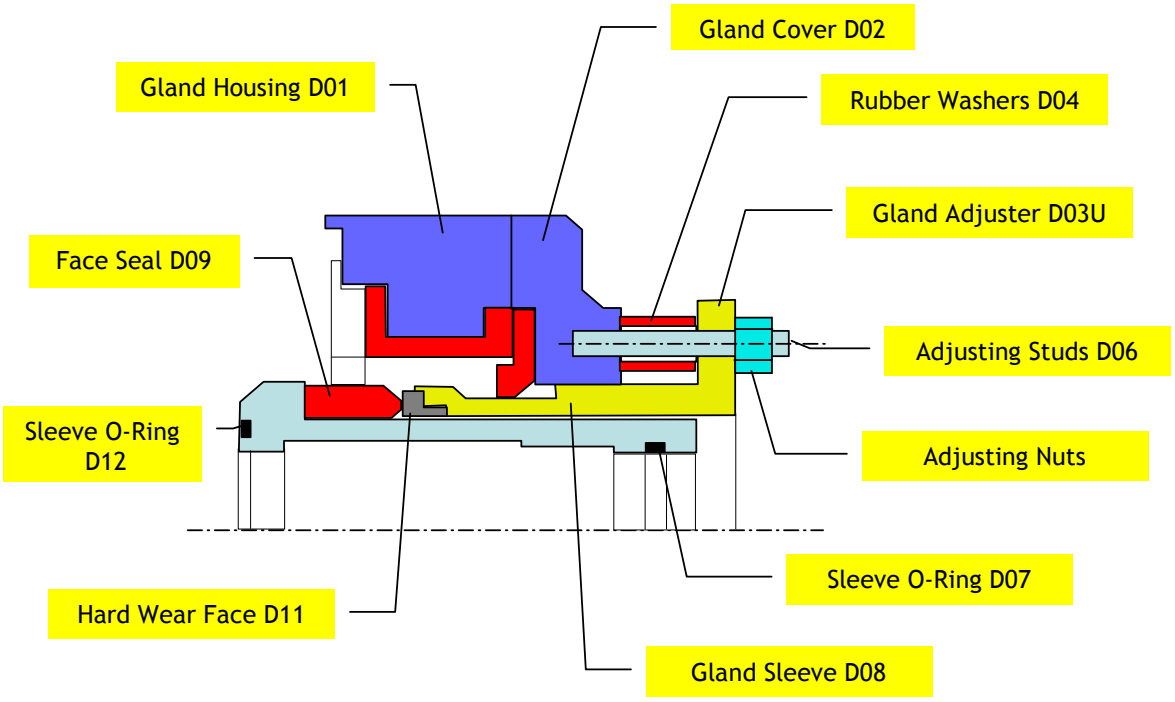

The Face Seal acts as a spring and if any grit particles get between the rotating rubber and stationary Wear Face it is pressed into the Rubber. The Face Seal is a stretch fit on the shaft sleeve. As the gland pressure increases, so the rubber extends axially and increases the pressure at the rubbing interface.

When the pump is running, adjust the gland nuts so that there are approximately 5 drops per minute from the gland. This should reduce to 1 drop occasionally, and run satisfactorily for up to a year without further attention in a typical application.

McLanahan CORPORATION

AGGREGATE PROCESSING DIVISION

HYDROSTATIC GLAND

a.k.a. 'H' type Gland

Is a unique proprietary design with the lowest maintenance and longest life, the unique rubber gland seal is designed to deflect inwards to provide and effective seal. The Slurry pressure at the gland is reduced by back pump out vanes on the impeller, and, when fitted, the Rubber axial expeller, which is a stretch fit on the shaft of the "H"Gland Sleeve.

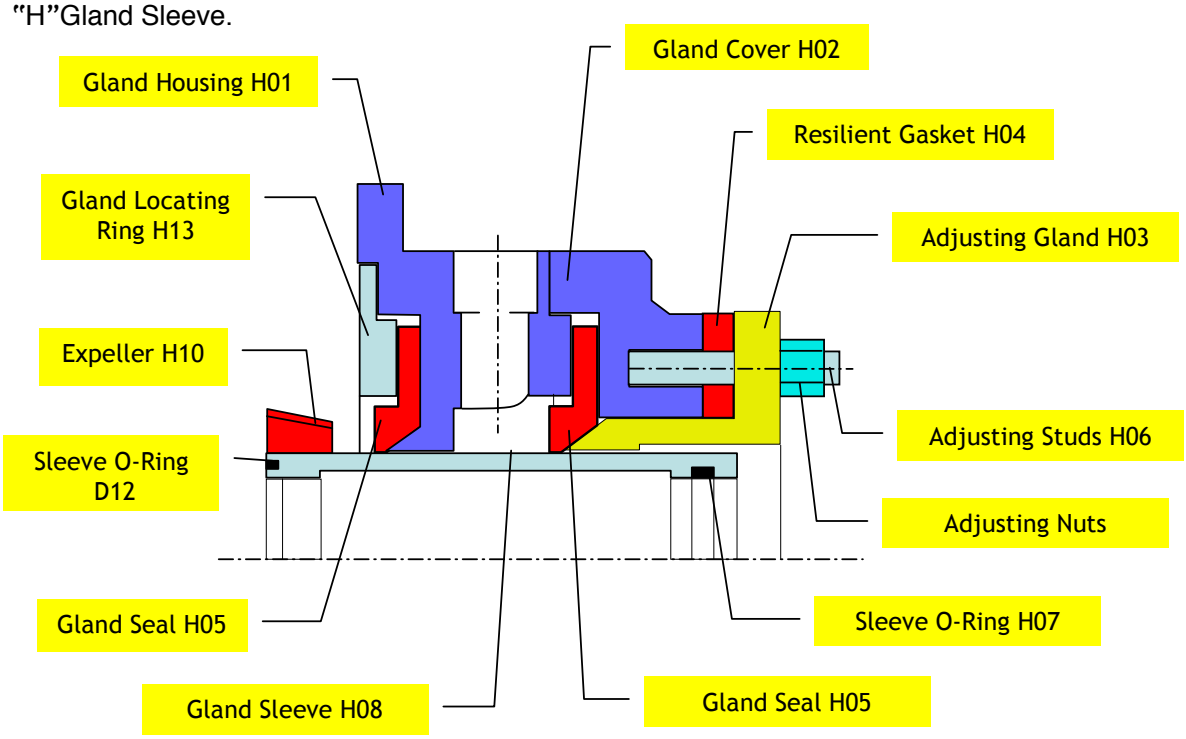

The solids are restrained by the outward centrifugal swirl behind the impeller, the axial expeller and the restricted path to the seal interface.

With the 'H' Gland, the adjusting gland must be eased outwards to increase the sealing pressure. The geometric shape of the Gland Seal is carefully designed to give a good seal, while limiting the amount of 'digging' onto the gland sleeve.

The gland sealing water must be as clean as possible at a pressure of about 5 psi (4m water gauge) above the discharge pressure and at a volume of between 1 to 5 gpm depending on pump size. With a high flushing water pressure you get greater water use and greater dilution of the pumped slurry without any benefit to the seal.

McLanahan CORPORATION

AGGREGATE PROCESSING DIVISION

PACKED GLAND

a.k.a. 'P' type Gland
Is a classic 'stuffing box' design where sealing is obtained by compressing the gland packing rings onto the shaft sleeve. The gland offers the capacity to seal the pump even at high pressures, for instance in series pumping.

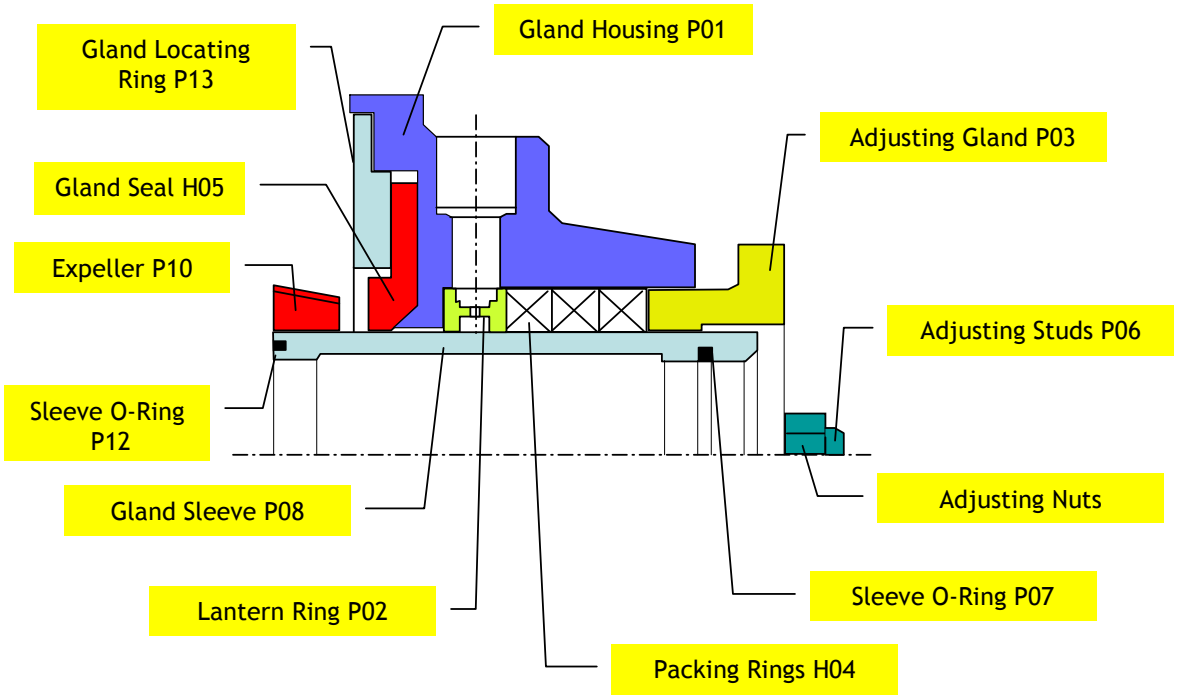

The solids are restrained by the outward centrifugal swirl behind the impeller, the axial expeller and the restricted path to the seal interface.

With the 'P' Gland, the adjusting gland must be adjusted inwards to increase the sealing pressure. The geometric shape of the Gland Seal is carefully designed to give a good seal, while limiting the amount of "digging" onto the gland sleeve.

The gland sealing water must be as clean as possible at a pressure of about psi (4m water gauge) above the discharge pressure and at a volume of between 1 to 5 gpm depending on pump size. With a high flushing water pressure you get greater water use and greater dilution of the pumped slurry without any benefit to the seal.

A pressure fed grease supply can be used with the 'P' gland, but then care must be taken to use synthetic rubber parts which are a special order.

JOHN MEUNIER

Meadowbank mining Corp.
ACP-700R
Technical Data Sheet
Reference : NC01

STEEL TANKS

ST-103

VEOLIA WATER
Solutions & Technologies

LEFT BLANK

JOHN MEUNIER

NOMENCLATURE/ BILL OF MATERIALS

TITRE/ TITLE	Rev.	DESCRIPTION	PAR/ BY:	APPR:	DATE:	Affaire / Contract	Meadowbank Mining
Project Summary	0	SUBMITTAL	P.Ste-Marie	P.S.M.	2009-03-26		
	1						
	2					REF. No.	NC01 | 0
	3						
DESSIN /DWG # ST-103	4					Date:	2009-03-26

REV.	ITEM	QTE/QTY. Unit.	QTE/QTY. Total	DESCRIPTION	P&ID I.D./TAG	CAT. ACCPAC	SOURCE	FA/SA FI SITE	P / N
	NC01ST-103-1			**ACTIFLO TANK**					
				GENERAL					
				Model:					
				ACTIFLO ACP- 700R					
				Material:					
				Carbon Steel, G40,21M-300W					
				SURFACE PREPARATION					
				Internal:					
				SSPC-SP-10					
				External:					
				SSPC-SP-6					
				COATING					
				Internal:					
				1 coat of Macropoxy 646 NSF, SHERWIN WILLIAMS					
				3 to 6 dry mils per coat - #B58LX600 Light blue					
				1 coat of Macropoxy 646 NSF, SHERWIN WILLIAMS					
				5 to 10 dry mils per coat - #B58WX610 Mill white					
				1 coat of Macropoxy 646 NSF, SHERWIN WILLIAMS					
				5 to 10 dry mils per coat - #B58LX600 Light blue					
				External:					
				1 coat of Macropoxy 646 NSF, SHERWIN WILLIAMS					
				5 to 10 dry mils per coat - #B58LX600 Light blue					
				1 coat of UV resistant Acrolon 218 HS, B65-650 Semi-Gloss					
				SHERWIN WILLIAMS, 3 to 6 dry mils per coat					
				color #B65TL0218712					

JOHN MEUNIER

NOMENCLATURE/ BILL OF MATERIALS

TITRE/ TITLE	Rev.	DESCRIPTION	PAR/ BY:	APPR:	DATE:	Affaire / Contract	Meadowbank Mining
Project Summary	0	SUBMITTAL	P.Ste-Marie	P.S.M.	2009-03-26		
	1						
	2					REF. No.	NC01 | 0
	3						
DESSIN /DWG # ST-103	4					Date:	2009-03-26

REV.	ITEM	QTE/QTY. Unit.	QTE/QTY. Total	DESCRIPTION	P&ID I.D./TAG	CAT. ACCPAC	SOURCE	FA/SA FI SITE	P / N
				GRATING					
				Quantity:					
				covering coagulation, injection and maturation tanks also give access to scraper drive					
				Material:					
				FRP					
				Manufacturer:					
				Fibergrate					
				Model:					
				Square Mesh color grey - finish grit top					
				Dimension:					
				1 1/2" x 1 1/2" x 1 1/2"					
				HANDRAIL					
				Quantity:					
				Surrounding grating except for opening for access					
				Material:					
				Galvanized Steel					
				STAIRS					
				Quantity:					
				1 set of stairs and 1 intermediate platform					
				Material:					
				Galvanized Steel with Fibergrate grating and stairs					

JOHN MEUNIER

NOMENCLATURE/ BILL OF MATERIALS

TITRE/ TITLE	Rev.	DESCRIPTION	PAR/ BY:	APPR:	DATE:	Affaire / Contract	Meadowbank Mining
Project Summary	0	SUBMITTAL	P.Ste-Marie	P.S.M.	2009-03-26		
	1						
	2					REF. No.	NC01 | 0
	3						
DESSIN /DWG # ST-103	4					Date:	2009-03-26

REV.	ITEM	QTE/QTY. Unit.	QTE/QTY. Total	DESCRIPTION	P&ID I.D./TAG	CAT. ACCPAC	SOURCE	FA/SA FI SITE	P / N
				COLLECTION TROUGHS					
				Quantity:					
				4 per unit					
				Material:					
				Stainless Steel 304					
				Manufacturer:					
				John Meunier inc.					
				collection trough have non-adjustable notch					
				SCRAPER					
				Quantity:					
				1 per unit					
				Material:					
				Scraper shaft, rake arms and discharge cone scraper are in galvanized steel					

LEFT BLANK

THE SHERWIN-WILLIAMS COMPANY

Industrial and Marine Coatings

Certified to ANSI/NSF 61

MACROPOXY® 646 NSF
FAST CURE EPOXY

PART A	B58WX610	MILL WHITE
PART A	B58LX600	LIGHT BLUE
PART B	B58VX600	HARDENER

INDUSTRIAL & MARINE COATINGS

PRODUCT INFORMATION

Revised 5/2002

PRODUCT DESCRIPTION

MACROPOXY 646 NSF FAST CURE EPOXY is a high solids, high build, fast drying, polyamide epoxy certified by NSF to Standard 61 as a tank lining for potable water storage tanks. The high solids content ensures adequate protection of sharp edges, corners, and welds.

- Approved by NSF to Standard 61 for potable water storage tanks of 1,500 gallons and larger and pipe interiors of 36" and greater
- Suitable for use in USDA inspected facilities

RECOMMENDED USES

- As an interior tank lining for potable storage water tanks
- Immersion service - potable water tanks: Meets NSF Standard 61 for use in potable water storage tanks
- Suitable for use with cathodic protection systems

PRODUCT CHARACTERISTICS

Finish: Semi-Gloss

Color: Mill White and Light Blue

Volume Solids: 72% ± 2%, mixed
Mill White

Weight Solids: 85% ± 2%, mixed
Mill White

VOC (EPA Method 24): Unreduced: 235 g/L; 1.96 lb/gal
mixed Reduced 10%: 290 g/L; 2.41 lb/gal

Mix Ratio: 1:1 by volume

Recommended Spreading Rate per coat:

Wet mils:	7.0 - 13.5
Dry mils:	5.0 - 10.0*
Coverage:	116 - 232 sq ft/gal approximate

NOTE: Brush or roll application may require multiple coats to achieve maximum film thickness and uniformity of appearance.

* See Recommended Systems

Drying Schedule @ 7.0 mils wet and 50% RH:

	@ 40°F	@ 77°F	@ 100°F
To touch:	4-5 hours	2 hours	1½ hours
To handle:	48 hours	8 hours	4½ hours
To recoat:			
minimum:	48 hours	8 hours	4½ hours
maximum:	3 months	3 months	3 months
Cure for			
service:	10 days	7 days	4 days
immersion:	14 days	7 days	4 days

If maximum recoat time is exceeded, abrade surface before recoating. Drying time is temperature, humidity and film thickness dependent.

Pot Life:	10 hours	4 hours	2 hours
Sweat-in-time:	30 minutes	30 minutes	15 minutes

Shelf Life: 36 months

Flash Point: 60°F, TCC, mixed

Reducer/Clean Up: Reducer, R7K15

PERFORMANCE CHARACTERISTICS

System Tested: (unless otherwise indicated)
Substrate: Steel
Surface Preparation: SSPC-SP10
1 ct. Macropoxy 646 NSF Fast Cure Epoxy @ 6.0 mils dft

Abrasion Resistance:
Method: ASTM D4060, CS17 wheel, 1000 cycles, 1 kg load
Result: 84 mg loss

Accelerated Weathering - QUV, Zinc Clad II HS Primer:
Method: ASTM D4587, QUV-A, 12,000 hours
Results: passes

Adhesion:
Method: ASTM D4541
Result: 830 psi

Corrosion Weathering, Zinc Clad II HS Primer:
Method: ASTM D5894, 36 cycles, 12,000 hours
Result: Rating 10 per ASTM D714 for blistering
Rating 9 per ASTM D610 for rusting

Direct Impact Resistance:
Method: ASTM D2794
Result: 30 in. lb.

Dry Heat Resistance:
Method: ASTM D2485
Result: 250°F

Exterior Durability:
Method: 1 year at 45° South
Result: Excellent, chalks

Flexibility:
Method: ASTM D522, 180° bend, 3/4" mandrel
Result: Passes

Immersion:
Method: 1 year fresh and salt water
Result: Passes, no rusting, blistering, or loss of adhesion

Irradiation-Effects on Coatings used in Nuclear Power Plants
Method: ANSI 5.12 / ASTM D4082-89
Result: Passes

Pencil Hardness:
Method: ASTM D3363
Result: 3H

Permeability Rating:
Method: ASTM D1653
Result: 0.154 mg/cm²

Salt Fog Resistance, Zinc Clad II HS Primer::
Method: ASTM B117, 6,500 hours
Result: Rating 10 per ASTM D610 for rusting
Rating 9 per ASTM D1654 for corrosion

Slip Coefficient, Mill White:
Method: AISC Specification for Structural Joints Using ASTM A325 or ASTM A490 Bolts
Result: Class A, 0.36

Epoxy coatings may darken or discolor following application and curing.

continued on back

THE SHERWIN-WILLIAMS COMPANY

INDUSTRIAL & MARINE COATINGS

Industrial and Marine Coatings

NSF®

Certified to ANSI/NSF 61

4.56

MACROPOXY® 646 NSF

FAST CURE EPOXY

PART A	B58WX610	MILL WHITE
PART A	B58LX600	LIGHT BLUE
PART B	B58VX600	HARDENER

PRODUCT INFORMATION

RECOMMENDED SYSTEMS

Immersion and atmospheric:

Steel:
2 cts. Macropoxy 646 NSF @ 5.0 - 10.0 mils dft/ct

Steel, Shop Applied System, New Construction, AWWA D102:
1 ct. Macropoxy 646 NSF @ 3.0 - 6.0 mils dft
1-2 cts. Macropoxy 646 NSF @ 5.0 - 10.0 milds dft/ct

Concrete/Masonry, smooth:
2 cts. Macropoxy 646 NSF @ 5.0 - 10.0 mils dft/ct

Concrete Block:
1 ct. Kem Cati-Coat HS Epoxy Filler/Sealer @ 10.0 - 20.0 mils dft, as needed to fill voids and provide a continuous substrate.
2 cts. Macropoxy 646 NSF @ 5.0 - 10.0 mils dft/ct

Maximum dry film thickness allowed by NSF for Macropoxy 646 NSF Fast Cure Epoxy is 20 mils for two coats.

Atmospheric:

Steel:
1 ct. Recoatable Epoxy Primer @ 4.0 - 6.0 mils dft
2 cts. Macropoxy 646 NSF @ 5.0 - 10.0 mils dft/ct

Steel:
2 cts. Macropoxy 646 NSF @ 5.0 - 10.0 mils dft/ct
1-2 cts. Acrolon 218 Polyurethane @ 3.0 - 6.0 mils dft/ct
or Hi-Solids Polyurethane @ 3.0 - 5.0 mils dft/ct

Steel:
2 cts. Macropoxy 646 NSF @ 5.0 - 10.0 mils dft/ct
1-2 cts. Tile-Clad HS Epoxy @ 2.5 - 4.0 mils dft/ct
or Armor-Tile HS @ 2.5 - 4.0 mils dft/ct

Steel:
1 ct. Zinc Clad II HS @ 3.0 - 6.0 mils dft
1 ct. Macropoxy 646 NSF @ 5.0 - 10.0 mils dft
1-2 cts. Acrolon 218 Polyurethane @ 3.0 - 6.0 mils dft/ct

Steel:
1 ct. Zinc Clad III HS @ 3.0 - 5.0 mils dft
or Zinc Clad IV HS @ 3.0 - 5.0 mils dft
1 ct. Macropoxy 646 NSF @ 5.0 - 10.0 mils dft
1-2 cts. Acrolon 218 Polyurethane @ 3.0 - 6.0 mils dft/ct

Aluminum:
2 cts. Macropoxy 646 NSF @ 5.0 - 10.0 mils dft/ct

Galvanizing:
2 cts. Macropoxy 646 NSF @ 5.0 - 10.0 mils dft/ct

The systems listed above are representative of the product's use. Other systems may be appropriate.

SURFACE PREPARATION

Surface must be clean, dry, and in sound condition. Remove all oil, dust, grease, dirt, loose rust, and other foreign material to ensure good adhesion.
Refer to product Application Bulletin for detailed surface preparation information.
Minimum recommended surface preparation:

Iron & Steel	
Atmospheric:	SSPC-SP2/3
Immersion:	SSPC-SP10, 2-3 mil profile
Aluminum:	SSPC-SP1
Galvanizing:	SSPC-SP1
Concrete & Masonry	
Atmospheric:	SSPC-SP13/NACE 6
Immersion:	SSPC-SP13/NACE 6-4.3.1 or 4.3.2

TINTING

Tinting is not recommended for immersion service.

APPLICATION CONDITIONS

Temperature:	40°F minimum, 110°F maximum (air, surface, and material) At least 5°F above dew point
Relative humidity:	85% maximum

Refer to product Application Bulletin for detailed application information.

ORDERING INFORMATION

Packaging:	
Part A:	1 and 5 gallon containers
Part B:	1 and 5 gallon containers
Weight per gallon:	12.7 ± 0.2 lb mixed, may vary by color

SAFETY PRECAUTIONS

Refer to the MSDS sheet before use.

Published technical data and instructions are subject to change without notice. Contact your Sherwin-Williams representative for additional technical data and instructions.

THE SHERWIN-WILLIAMS COMPANY

INDUSTRIAL & MARINE COATINGS

Industrial and Marine Coatings

NSF®

Certified to ANSI/NSF 61

4.56A

MACROPOXY® 646 NSF

FAST CURE EPOXY

PART A	B58WX610	MILL WHITE
PART A	B58LX600	LIGHT BLUE
PART B	B58VX600	HARDENER

APPLICATION BULLETIN

Revised 5/2002

SURFACE PREPARATION

Surface must be clean, dry, and in sound condition. Remove all oil, dust, grease, dirt, loose rust, and other foreign material to ensure adequate adhesion.

Iron & Steel, Atmospheric Service:
Minimum surface preparation is Hand Tool Clean per SSPC-SP2. Remove all oil and grease from surface by Solvent Cleaning per SSPC-SP1. For better performance, use Commercial Blast Cleaning per SSPC-SP6, blast clean all surfaces using a sharp, angular abrasive for optimum surface profile (2 mils). Prime any bare steel within 8 hours or before flash rusting occurs.

Iron & Steel, Immersion Service:
Remove all oil and grease from surface by Solvent Cleaning per SSPC-SP1. Minimum surface preparation is Near White Metal Blast Cleaning per SSPC-SP10. Blast clean all surfaces using a sharp, angular abrasive for optimum surface profile (2-3 mils). Remove all weld spatter and round all sharp edges by grinding. Prime any bare steel the same day as it is cleaned.

Aluminum
Remove all oil, grease, dirt, oxide and other foreign material by Solvent Cleaning per SSPC-SP1.

Galvanized Steel
Allow to weather a minimum of six months prior to coating. Solvent Clean per SSPC-SP1 (recommended solvent is VM&P Naphtha). When weathering is not possible, or the surface has been treated with chromates or silicates, first Solvent Clean per SSPC-SP1 and apply a test patch. Allow paint to dry at least one week before testing adhesion. If adhesion is poor, brush blasting per SSPC-SP7 is necessary to remove these treatments. Rusty galvanizing requires a minimum of Hand Tool Cleaning per SSPC-SP2, prime the area the same day as cleaned.

Concrete and Masonry, Atmospheric Service:
For surface preparation, refer to NACE 6/SSPC-SP13. Surfaces should be thoroughly clean and dry. Concrete and mortar must be cured at least 28 days @ 75°F. Remove all loose mortar and foreign material. Surface must be free of laitance, concrete dust, dirt, form release agents, moisture curing membranes, loose cement and hardeners. Fill bug holes, air pockets and other voids with a cement patching compound. Weathered masonry and soft or porous cement board must be brush blasted or power tool cleaned to remove loosely adhering contamination and to get to a hard, firm surface. Laitance must be removed by etching with a 10% muriatic acid solution and thoroughly neutralized with water.

Concrete and Masonry, Immersion Service:
For surface preparation, refer to SSPC-SP13/NACE 6, Section 4.3.1 or 4.3.2.

Previously Painted Surfaces
If in sound condition, clean the surface of all foreign material. Smooth, hard or glossy coatings and surfaces should be dulled by abrading the surface. Apply a test area, allowing paint to dry one week before testing adhesion. If adhesion is poor, or if this product attacks the previous finish, removal of the previous coating may be necessary. If paint is peeling or badly weathered, clean surface to sound substrate and treat as a new surface as above.

APPLICATION CONDITIONS

Temperature:	40°F minimum, 110°F maximum (air, surface, and material) At least 5°F above dew point
Relative humidity:	85% maximum

APPLICATION EQUIPMENT

The following is a guide. Changes in pressures and tip sizes may be needed for proper spray characteristics. Always purge spray equipment before use with listed reducer. Any reduction must be compatible with the existing environmental and application conditions.

Reducer/Clean Up ..... Reducer R7K15

Airless Spray
- Pump 30:1
- Pressure ..... 2800 - 3000 psi
- Hose ..... 1/4" ID
- Tip ..... .017" - .023"
- Filter ..... 60 mesh
- Reduction ..... as needed up to 10% by volume

Conventional Spray
- Gun ..... DeVilbiss MBC-510
- Fluid Tip ..... E
- Air Nozzle 704
- Atomization Pressure .... 60-65 psi
- Fluid Pressure ..... 10-20 psi
- Reduction ..... as needed up to 10% by volume
- Requires oil and moisture separators

Brush
- Brush..... Nylon/Polyester or Natural Bristle
- Reduction ..... as needed up to 10% by volume

Roller
- Cover ..... 3/8" woven with phenolic core
- Reduction ..... as needed up to 10% by volume

If specific application equipment is listed above, equivalent equipment may be substituted.

continued on back

THE SHERWIN-WILLIAMS COMPANY

INDUSTRIAL & MARINE COATINGS

Industrial and Marine Coatings

Certified to ANSI/NSF 61

4.56A

MACROPOXY® 646 NSF

FAST CURE EPOXY

PART A	B58WX610	MILL WHITE
PART A	B58LX600	LIGHT BLUE
PART B	B58VX600	HARDENER

APPLICATION BULLETIN

APPLICATION PROCEDURES

Surface preparation must be completed as indicated.

Mix contents of each component thoroughly with power agitation. Make certain no pigment remains on the bottom of the can. Then combine one part by volume of Part A with one part by volume of Part B. Thoroughly agitate the mixture with power agitation. Allow the material to sweat-in as indicated prior to application. Re-stir before using.

If reducer solvent is used, add only after both components have been thoroughly mixed, after sweat-in.

Apply paint to the recommended film thickness and spreading rate as indicated below:

Recommended Spreading Rate per coat:

Wet mils:	7.0 - 13.5
Dry mils:	5.0 - 10.0*
Coverage:	116 - 232 sq ft/gal approximate

NOTE Brush or roll application may require multiple coats to achieve maximum film thickness and uniformity of appearance.

* See Recommended Systems

Drying Schedule @ 7.0 mils wet and 50% RH:

	@ 40°F	@ 77°F	@ 100°F
To touch:	4-5 hours	2 hours	1½ hours
To handle:	48 hours	8 hours	4½ hours
To recoat:			
minimum:	48 hours	8 hours	4½ hours
maximum:	3 months	3 months	3 months
Cure for			
service:	10 days	7 days	4 days
immersion:	14 days	7 days	4 days

If maximum recoat time is exceeded, abrade surface before recoating. Drying time is temperature, humidity and film thickness dependent.

Pot Life:	10 hours	4 hours	2 hours
Sweat-in-time:	30 minutes	30 minutes	15 minutes

Application of coating above maximum or below minimum recommended spreading rate may adversely affect coating performance.

PERFORMANCE TIPS

Stripe coat all crevices, welds, and sharp angles to prevent early failure in these areas.

When using spray application, use a 50% overlap with each pass of the gun to avoid holidays, bare areas, and pinholes. If necessary, cross spray at a right angle

Spreading rates are calculated on volume solids and do not include an application loss factor due to surface profile, roughness or porosity of the surface, skill and technique of the applicator, method of application, various surface irregularities, material lost during mixing, spillage, overthinning, climatic conditions, and excessive film build.

Excessive reduction of material can affect film build, appearance, and adhesion.

Do not mix previously catalyzed material with new.

Do not apply the material beyond recommended pot life.

In order to avoid blockage of spray equipment, clean equipment before use or before periods of extended downtime with Reducer R7K15.

Tinting is not recommended for immersion service.

Quik-Kick Epoxy Accelerator is acceptable for atmospheric use. **Do not use Quik-Kick Epoxy Accelerator for immersion service when NSF certification is required.** See data page 4.99 for details.

Refer to Product Information sheet for additional performance characteristics and properties.

CLEAN UP INSTRUCTIONS

Clean spills and spatters immediately with Reducer R7K15. Clean tools immediately after use with Reducer R7K15. Follow manufacturer's safety recommendations when using any solvent.

SAFETY PRECAUTIONS

Refer to the MSDS sheet before use.

Published technical data and instructions are subject to change without notice. Contact your Sherwin-Williams representative for additional technical data and instructions.

MATERIAL SAFETY DATA SHEET

B58W610
08 00

Section 1 -- PRODUCT AND COMPANY IDENTIFICATION

PRODUCT NUMBER	DATE OF PREPARATION	HMIS CODES	
		Health	3*
B58W610	03-SEP-07	Flammability	3
		Reactivity	0

PRODUCT NAME
MACROPOXY® 646 Fast Cure Epoxy Coating (Part A), Mill White

MANUFACTURER'S NAME
THE SHERWIN-WILLIAMS COMPANY
101 Prospect Avenue N.W.
Cleveland, OH 44115

TELEPHONE NUMBERS and WEBSITES
Product Information
www.sherwin-williams.com
Regulatory Information
(216) 566-2902 www.paintdocs.com
Medical Emergency
(216) 566-2917
Transportation Emergency for Chemical Emergency ONLY (spill, leak,
(800) 424-9300 fire, exposure, or accident)

Section 2 -- COMPOSITION/INFORMATION ON INGREDIENTS

% by WT	CAS No.	INGREDIENT			UNITS	VAPOR PRESSURE
3	100-41-4	Ethylbenzene				
			ACGIH TLV	100	ppm	7.1 mm
			ACGIH TLV	125	ppm STEL	
			OSHA PEL	100	ppm	
			OSHA PEL	125	ppm STEL	
15	1330-20-7	Xylene				
			ACGIH TLV	100	ppm	5.9 mm
			ACGIH TLV	150	ppm STEL	
			OSHA PEL	100	ppm	
			OSHA PEL	150	ppm STEL	
11	68410-23-1	Polyamide				
			ACGIH TLV	Not Available		
			OSHA PEL	Not Available		
9	14807-96-6	Talc				
			ACGIH TLV	2	mg/m3 as Resp. Dust	
			OSHA PEL	2	mg/m3 as Resp. Dust	
31	13463-67-7	Titanium Dioxide				
			ACGIH TLV	10	mg/m3 as Dust	
			OSHA PEL	10	mg/m3 Total Dust	
			OSHA PEL	5	mg/m3 Respirable Fraction	

Continued on page 2

Section 3 -- HAZARDS IDENTIFICATION

ROUTES OF EXPOSURE

INHALATION of vapor or spray mist.

EYE or SKIN contact with the product, vapor or spray mist.

EFFECTS OF OVEREXPOSURE

EYES: Irritation.

SKIN: Prolonged or repeated exposure may cause irritation.

INHALATION: Irritation of the upper respiratory system.

May cause nervous system depression. Extreme overexposure may result in unconsciousness and possibly death.

SIGNS AND SYMPTOMS OF OVEREXPOSURE

Headache, dizziness, nausea, and loss of coordination are indications of excessive exposure to vapors or spray mists.

Redness and itching or burning sensation may indicate eye or excessive skin exposure.

MEDICAL CONDITIONS AGGRAVATED BY EXPOSURE

May cause allergic skin reaction in susceptible persons.

CANCER INFORMATION

For complete discussion of toxicology data refer to Section 11.

Section 4 -- FIRST AID MEASURES

EYES: Flush eyes with large amounts of water for 15 minutes. Get medical attention.

SKIN: Wash affected area thoroughly with soap and water. Remove contaminated clothing and launder before re-use.

INHALATION: If affected, remove from exposure. Restore breathing. Keep warm and quiet.

INGESTION: Do not induce vomiting. Get medical attention immediately.

Section 5 -- FIRE FIGHTING MEASURES

FLASH POINT	LEL	UEL
85 F PMCC	1.0	7.0

FLAMMABILITY CLASSIFICATION

RED LABEL -- Flammable, Flash below 100 F (38 C)

EXTINGUISHING MEDIA

Carbon Dioxide, Dry Chemical, Foam

UNUSUAL FIRE AND EXPLOSION HAZARDS

Closed containers may explode when exposed to extreme heat.

Application to hot surfaces requires special precautions.

During emergency conditions overexposure to decomposition products may cause a health hazard. Symptoms may not be immediately apparent. Obtain medical attention.

SPECIAL FIRE FIGHTING PROCEDURES

Full protective equipment including self-contained breathing apparatus should be used.

Water spray may be ineffective. If water is used, fog nozzles are preferable. Water may be used to cool closed containers to prevent pressure build-up and possible autoignition or explosion when exposed to extreme heat.

Continued on page 3

Section 6 -- ACCIDENTAL RELEASE MEASURES

STEPS TO BE TAKEN IN CASE MATERIAL IS RELEASED OR SPILLED

Remove all sources of ignition. Ventilate the area.

Remove with inert absorbent.

Section 7 -- HANDLING AND STORAGE

STORAGE CATEGORY

DOL Storage Class IC

PRECAUTIONS TO BE TAKEN IN HANDLING AND STORAGE

Contents are FLAMMABLE. Keep away from heat, sparks, and open flame.

During use and until all vapors are gone: Keep area ventilated - Do not smoke - Extinguish all flames, pilot lights, and heaters - Turn off stoves, electric tools and appliances, and any other sources of ignition.

Consult NFPA Code. Use approved Bonding and Grounding procedures.

Keep container closed when not in use. Transfer only to approved containers with complete and appropriate labeling. Do not take internally. Keep out of the reach of children.

Section 8 -- EXPOSURE CONTROLS/PERSONAL PROTECTION

PRECAUTIONS TO BE TAKEN IN USE

Use only with adequate ventilation.

Avoid contact with skin and eyes. Avoid breathing vapor and spray mist.

Wash hands after using.

This coating may contain materials classified as nuisance particulates (listed "as Dust" in Section 2) which may be present at hazardous levels only during sanding or abrading of the dried film. If no specific dusts are listed in Section 2, the applicable limits for nuisance dusts are ACGIH TLV 10 mg/m3 (total dust), 3 mg/m3 (respirable fraction), OSHA PEL 15 mg/m3 (total dust), 5 mg/m3 (respirable fraction).

VENTILATION

Local exhaust preferable. General exhaust acceptable if the exposure to materials in Section 2 is maintained below applicable exposure limits. Refer to OSHA Standards 1910.94, 1910.107, 1910.108.

RESPIRATORY PROTECTION

If personal exposure cannot be controlled below applicable limits by ventilation, wear a properly fitted organic vapor/particulate respirator approved by NIOSH/MSHA for protection against materials in Section 2.

When sanding or abrading the dried film, wear a dust/mist respirator approved by NIOSH/MSHA for dust which may be generated from this product, underlying paint, or the abrasive.

PROTECTIVE GLOVES

Wear gloves which are recommended by glove supplier for protection against materials in Section 2.

EYE PROTECTION

Wear safety spectacles with unperforated sideshields.

OTHER PRECAUTIONS

This product must be mixed with other components before use. Before opening the packages, READ AND FOLLOW WARNING LABELS ON ALL COMPONENTS.

Intentional misuse by deliberately concentrating and inhaling the contents can be harmful or fatal.

Continued on page 4

Section 9 -- PHYSICAL AND CHEMICAL PROPERTIES

PRODUCT WEIGHT	12.19 lb/gal	1460 g/l
SPECIFIC GRAVITY	1.47	
BOILING POINT	277 - 292 F	136 - 144 C
MELTING POINT	Not Available	
VOLATILE VOLUME	29 %	
EVAPORATION RATE	Slower than ether	
VAPOR DENSITY	Heavier than air	
SOLUBILITY IN WATER	N.A.	

VOLATILE ORGANIC COMPOUNDS (VOC Theoretical - As Packaged)

2.11 lb/gal	253 g/l	Less Water and Federally Exempt Solvents
2.11 lb/gal	253 g/l	Emitted VOC

Section 10 -- STABILITY AND REACTIVITY

STABILITY -- Stable

CONDITIONS TO AVOID

None known.

INCOMPATIBILITY

None known.

HAZARDOUS DECOMPOSITION PRODUCTS

By fire: Carbon Dioxide, Carbon Monoxide

HAZARDOUS POLYMERIZATION

Will not occur

Section 11 -- TOXICOLOGICAL INFORMATION

CHRONIC HEALTH HAZARDS

Ethylbenzene is classified by IARC as possibly carcinogenic to humans (2B) based on inadequate evidence in humans and sufficient evidence in laboratory animals. Lifetime inhalation exposure of rats and mice to high ethylbenzene concentrations resulted in increases in certain types of cancer, including kidney tumors in rats and lung and liver tumors in mice. These effects were not observed in animals exposed to lower concentrations. There is no evidence that ethylbenzene causes cancer in humans.

Prolonged overexposure to solvent ingredients in Section 2 may cause adverse effects to the liver, urinary and reproductive systems.

IARC's Monograph No. 93 reports there is sufficient evidence of carcinogenicity in experimental rats exposed to titanium dioxide but inadequate evidence for carcinogenicity in humans and has assigned a Group 2B rating. In addition, the IARC summary concludes, "No significant exposure to titanium dioxide is thought to occur during the use of products in which titanium is bound to other materials, such as paint."

Reports have associated repeated and prolonged overexposure to solvents with permanent brain and nervous system damage.

TOXICOLOGY DATA

Continued on page 5

CAS No.	Ingredient Name				
100-41-4	Ethylbenzene				
		LC50	RAT	4HR	Not Available
		LD50	RAT		3500 mg/kg
1330-20-7	Xylene				
		LC50	RAT	4HR	5000 ppm
		LD50	RAT		4300 mg/kg
68410-23-1	Polyamide				
		LC50	RAT	4HR	Not Available
		LD50	RAT		8000. mg/kg
14807-96-6	Talc				
		LC50	RAT	4HR	Not Available
		LD50	RAT		Not Available
13463-67-7	Titanium Dioxide				
		LC50	RAT	4HR	Not Available
		LD50	RAT		Not Available

Section 12 -- ECOLOGICAL INFORMATION

ECOTOXICOLOGICAL INFORMATION

No data available.

Section 13 -- DISPOSAL CONSIDERATIONS

WASTE DISPOSAL METHOD

Waste from this product may be hazardous as defined under the Resource Conservation and Recovery Act (RCRA) 40 CFR 261.

Waste must be tested for ignitability to determine the applicable EPA hazardous waste numbers.

Incinerate in approved facility. Do not incinerate closed container. Dispose of in accordance with Federal, State/Provincial, and Local regulations regarding pollution.

Continued on page 6

Section 14 -- TRANSPORT INFORMATION

US Ground (DOT)
1 Gallon and Less may be Classed as CONSUMER COMMODITY, ORM-D
Larger Containers are Regulated as:
UN1263, PAINT, 3, PG III, (ERG#128)

DOT (Dept of Transportation) Hazardous Substances & Reportable Quantities
Ethyl benzene 1000 lb RQ
Xylenes (isomers and mixture) 100 lb RQ

Bulk Containers may be Shipped as (check reportable quantities):
RQ, UN1263, PAINT, 3, PG III, (XYLENES (ISOMERS AND MIXTURE)), (ERG#128)

Canada (TDG)
UN1263, PAINT, CLASS 3, PG III, LIMITED QUANTITY, (ERG#128)

IMO
UN1263, PAINT, CLASS 3, PG III, (29 C c.c.), EmS F-E, S-E

Section 15 -- REGULATORY INFORMATION

SARA 313 (40 CFR 372.65C) SUPPLIER NOTIFICATION

CAS No.	CHEMICAL/COMPOUND	% by WT	% Element
100-41-4	Ethylbenzene	3	
1330-20-7	Xylene	15	

CALIFORNIA PROPOSITION 65
WARNING: This product contains chemicals known to the State of California to cause cancer and birth defects or other reproductive harm.
TSCA CERTIFICATION
All chemicals in this product are listed, or are exempt from listing, on the TSCA Inventory.

Section 16 -- OTHER INFORMATION

This product has been classified in accordance with the hazard criteria of the Canadian Controlled Products Regulations (CPR) and the MSDS contains all of the information required by the CPR.

The above information pertains to this product as currently formulated, and is based on the information available at this time. Addition of reducers or other additives to this product may substantially alter the composition and hazards of the product. Since conditions of use are outside our control, we make no warranties, express or implied, and assume no liability in connection with any use of this information.

THE SHERWIN-WILLIAMS COMPANY

Industrial and Marine Coatings

INDUSTRIAL & MARINE COATINGS

ACROLON™ 218 HS

ACRYLIC POLYURETHANE

PART A	B65-600	GLOSS SERIES
PART A	B65-650	SEMI-GLOSS SERIES
PART B	B65V600	HARDENER

PRODUCT INFORMATION

Revised 2/04

PRODUCT DESCRIPTION

ACROLON 218 HS acrylic polyurethane is a VOC compliant, polyester modified, aliphatic, acrylic polyurethane formulated specifically for in-shop applications. Also suitable for industrial applications. A fast drying, high gloss urethane that provides color and gloss retention for exterior exposure.

- Can be used directly over organic zinc rich primers (epoxy zinc primer and moisture cure urethane zinc primer)
- Suitable for use in USDA inspected facilities
- Color and gloss retention for exterior exposure
- Fast dry

RECOMMENDED USES

Specifically formulated for in-shop applications.

For use over prepared metal and masonry surfaces in industrial environments such as:

- Structural steel
- Rail cars and locomotives
- Conveyors
- Bridges
- Offshore platforms - exploration and production
- Tank exteriors
- Pipelines
- Ships

PRODUCT CHARACTERISTICS

Finish: High Gloss or Semi-Gloss

Color: Wide range of colors available

Volume Solids: 65% ± 2%, mixed, may vary by color
Ultra White

Weight Solids: 78% ± 2%, mixed, may vary by color
Ultra White

VOC (EPA Method 24): Pure White, mixed

Unreduced:	287 g/L; 2.4 lb/gal
Reduced 10%:	336 g/L; 2.8 lb/gal
Reduced 15%:	360 g/L; 3.0 lb/gal

Mix Ratio: 6:1 by volume, 1 gallon or 5 gallon mixes premeasured components

Recommended Spreading Rate per coat:

Wet mils:	4.5 - 9.0
Dry mils:	3.0 - 6.0
Coverage:	175 - 346 sq ft/gal approximate

NOTE: Brush or roll application may require multiple coats to achieve maximum film thickness and uniformity of appearance.

Drying Schedule @ 6.0 mils wet @ 50% RH:

	@ 50°F	@ 77°F	@ 120°F
To touch:	2 hours	30 minutes	20 minutes
To handle:	10 hours	6 hours	4 hours
To recoat:			
minimum:	12 hours	8 hours	6 hours
maximum:	3 months	3 months	3 months
To cure:	14 days	7 days	5 days

Drying time is temperature, humidity, and film thickness dependent.

Pot Life: 4 hours | 2 hours | 45 minutes
(reduced 5% with Reducer R7K15)

Sweat in Time: none | none | none
If maximum recoat time is exceeded, abrade surface before recoating.

Shelf Life:
Part A: 36 months, unopened
Part B: 12 months, unopened
Store indoors at 40°F to 100°F

Flash Point: 55°F, Seta, mixed

Reducer/Clean Up:

Spray	Reducer R7K15
Brush/Roll	Reducer #132, R7K132

PERFORMANCE CHARACTERISTICS

System Tested: (unless otherwise indicated)
Substrate: Steel
Surface Preparation: SSPC-SP10
1 ct. Macropoxy 646 @ 6.0 mils dft
1 ct. Acrolon 218 HS Gloss @ 4.0 mils dft

Abrasion Resistance: [1]
Method: ASTM D4060, CS17 wheel, 1000 cycles, 1 kg load
Result: 43 mg loss

Accelerated Weathering, with Diamond-Clad Clear Coat:
Method: ASTM D4587, QUV-A, 10,000 hours
Results: 100% gloss retention

Adhesion:
Method: ASTM D4541
Result: 975 psi

Corrosion Weathering: [2]
Method: ASTM D5894, 9 cycles, 3024 hours
Result: Rating 10 per ASTM D610, for rusting
Rating 10 per ASTM D714, for blistering

Direct Impact Resistance: [1]
Method: ASTM D2794
Result: 50 in. lb.

Dry Heat Resistance: [1]
Method: ASTM D2485, Method A
Result: 200°F

Flexibility: [1]
Method: ASTM D522, 180° bend, 1/8" mandrel
Result: Passes

Humidity Resistance: [2]
Method: ASTM D4585, 100°F, 1500 hours
Result: Rating 10 per ASTM D610 for rusting
Rating 10 per ASTM D714 for blistering

Pencil Hardness:
Method: ASTM D3363
Result: 3H

Salt Fog Resistance: [2]
Method: ASTM B117, 7000 hours
Result: Rating 10 per ASTM D610 for rusting
Rating 9 per ASTM D714 for blistering

[1] Finish coat only tested
[2] Primer: Zinc-Clad II HS
Intermediate: Macropoxy 646
Finish: Acrolon 218 HS

Meets the requirements of SSPC Paint No. 36, Level 3.

continued on back

THE SHERWIN-WILLIAMS COMPANY

Industrial and Marine Coatings

INDUSTRIAL & MARINE COATINGS

ACROLON™ 218 HS
ACRYLIC POLYURETHANE

PART A	B65-600	GLOSS SERIES
PART A	B65-650	SEMI-GLOSS SERIES
PART B	B65V600	HARDENER

PRODUCT INFORMATION

RECOMMENDED SYSTEMS

Steel:
1 ct. Macropoxy 646 @ 5.0 - 10.0 mils dft
1-2 cts. Acrolon 218 HS Acrylic Polyurethane @ 3.0 - 6.0 mils dft/ct

Steel:
1 ct. Zinc Clad II HS @ 3.0 - 5.0 mils dft
1 ct. Macropoxy 646 @ 5.0 - 10.0 mils dft
1-2 cts. Acrolon 218 HS Acrylic Polyurethane @ 3.0 - 6.0 mils dft/ct

Steel:
1 ct. Zinc Clad IV @ 3.0 - 5.0 mils dft
1-2 cts. Acrolon 218 HS Acrylic Polyurethane @ 3.0 - 6.0 mils dft/ct

Steel:
1 ct. Corothane I - GalvaPac Zinc Primer @ 3.0 - 4.0 mils dft
1-2 cts. Acrolon 218 HS Acrylic Polyurethane @ 3.0 - 6.0 mils dft/ct

Steel:
1 ct. Epoxy Mastic Aluminum II @ 6.0 mils dft
1-2 cts. Acrolon 218 HS Acrylic Polyurethane @ 3.0 - 6.0 mils dft/ct

Steel:
1 ct. Recoatable Epoxy Primer @ 4.0 - 6.0 mils dft
1-2 cts. Acrolon 218 HS Acrylic Polyurethane @ 3.0 - 6.0 mils dft/ct

Concrete/Masonry:
1 ct. Kem Cati-Coat HS Epoxy Filler/Sealer @ 10.0 - 20.0 mils dft
1-2 cts. Acrolon 218 HS Acrylic Polyurethane @ 3.0 - 6.0 mils dft/ct

Aluminum/Galvanizing:
1 ct. DTM Wash Primer @ 0.7 - 1.3 mils dft
1-2 cts. Acrolon 218 HS Acrylic Polyurethane @ 3.0 - 6.0 mils dft/ct

The systems listed above are representative of the product's use. Other systems may be appropriate.

SURFACE PREPARATION

Surface must be clean, dry, and in sound condition. Remove all oil, dust, grease, dirt, loose rust, and other foreign material to ensure adequate adhesion.

Refer to product Application Bulletin for detailed surface preparation information.

Minimum recommended surface preparation:
* Iron & Steel: SSPC-SP6, 1-2 mils profile
* Galvanizing: SSPC-SP1
* Concrete & Masonry: SSPC-SP13/NACE 6

* Primer required

TINTING

Tint with 844 Colorants.
- Extra white tints at 100% tint strength
- Ultradeep base tints at 150% tint strength

Five minutes minimum mixing on a mechanical shaker is required for complete mixing of color.

APPLICATION CONDITIONS

Temperature:	40°F minimum, 120°F maximum (air, surface, and material)
	At least 5°F above dew point
Relative humidity:	85% maximum

Refer to product Application Bulletin for detailed application information.

ORDERING INFORMATION

Packaging:	1 gallon mix:	5 gallon mix:
Part A:	.86 gal	4.29 gal
Part B:	.14 gal	0.71 gal
(premeasured components)		
Weight per gallon:	11.2 ± 0.2 lb mixed, may vary with color	

SAFETY PRECAUTIONS

Refer to the MSDS sheet before use.

Published technical data and instructions are subject to change without notice. Contact your Sherwin-Williams representative for additional technical data and instructions.

The statements made herein are based on our research and/or the research of others believed to be accurate.
No guarantee of their accuracy is made however, and such statements may be changed without notice.
www.sherwin-williams.com

THE SHERWIN-WILLIAMS COMPANY

INDUSTRIAL & MARINE COATINGS

Industrial and Marine Coatings

ACROLON™ 218 HS
ACRYLIC POLYURETHANE

PART A	B65-600	GLOSS SERIES
PART A	B65-650	SEMI-GLOSS SERIES
PART B	B65V600	HARDENER

APPLICATION BULLETIN

Revised 2/04

SURFACE PREPARATION

Surface must be clean, dry, and in sound condition. Remove all oil, dust, grease, dirt, loose rust, and other foreign material to ensure adequate adhesion.

Iron & Steel

Remove all oil and grease from surface by Solvent Cleaning per SSPC-SP1. Minimum surface preparation is Commercial Blast Cleaning per SSPC-SP6. For better performance, use Near White Metal Blast Cleaning per SSPC-SP10. Blast clean all surfaces using a sharp, angular abrasive for optimum surface profile (1-2 mils). Prime any bare steel the same day as it is cleaned or before flash rusting occurs.

Aluminum

Remove all oil, grease, dirt, oxide and other foreign material by Solvent Cleaning per SSPC-SP1. Primer required

Galvanized Steel

Allow to weather a minimum of six months prior to coating. Solvent Clean per SSPC-SP1. When weathering is not possible, or the surface has been treated with chromates or silicates, first Solvent Clean per SSPC-SP1 and apply a test patch. Allow paint to dry at least one week before testing adhesion. If adhesion is poor, brush blasting per SSPC-SP7 is necessary to remove these treatments. Rusty galvanizing requires a minimum of Hand Tool Cleaning per SSPC-SP2, prime the area the same day as cleaned or before flash rusting occurs.

Poured Concrete

New

For surface preparation, refer to SSPC-SP13/NACE 6. Surfaces must be clean, dry, sound and offer sufficient profile to achieve adequate adhesion. Minimum substrate cure is 28 days at 75°F. Remove all form release agents, curing compounds, salts, efflorescence, laitance, and other foreign matter by sandblasting, shotblasting, mechanical scarification, or suitable chemical means. Refer to ASTM D4260. Rinse thoroughly to achieve a final pH between 6.0 and 10.0. Allow to dry thoroughly prior to coating.

Old

Surface preparation is done in much the same manner as new concrete, however, if the concrete is contaminated with oils, grease, chemicals, etc., they must be removed by cleaning with a strong detergent. Refer to ASTM D4258. Form release agents, hardeners, etc. must be removed by sandblasting, shotblasting, mechanical scarification, or suitable chemical means. If surface deterioration presents an unacceptably rough surface, Kem Cati-Coat Epoxy HS Filler/Sealer is recommended to patch and resurface damaged concrete.

Fill all cracks, voids and bugholes with Sher-Plate Epoxy Patch.

Always follow the ASTM methods listed below:

ASTM D4258 Standard Practice for Cleaning Concrete.
ASTM D4259 Standard Practice for Abrading Concrete.
ASTM D4260 Standard Practice for Etching Concrete.
ASTM F1869 Standard Test Method for Measuring Moisture Vapor Emission Rate of Concrete.
SSPC-SP 13/Nace 6 Surface Preparation of Concrete.

APPLICATION CONDITIONS

Temperature:	40°F minimum, 120°F maximum (air, surface, and material) At least 5°F above dew point
Relative humidity:	85% maximum

APPLICATION EQUIPMENT

The following is a guide. Changes in pressures and tip sizes may be needed for proper spray characteristics. Always purge spray equipment before use with listed reducer. Any reduction must be compatible with the existing environmental and application conditions.

Reducer/Clean Up:
Spray ..... Reducer R7K15
Brush/Roll ..... Reducer #132, R7K132
If reducer is used, reduce at time of catalyzation.

Airless Spray
Pressure ..... 2500 - 2800 psi
Hose ..... 3/8" ID
Tip ..... .013" - .017"
Filter ..... 60 mesh
Reduction ..... As needed up to 15% by volume

Conventional Spray
Gun ..... Binks 95
Cap 63P
Atomization Pressure .. 50 - 70 psi
Fluid Pressure ..... 20 - 25 psi
Reduction ..... As needed up to 15% by volume

Brush
Brush ..... Natural Bristle
Reduction ..... As needed up to 15% by volume

Roller
Cover ..... 3/8" woven with phenolic core
Reduction ..... As needed up to 15% by volume

If specific application equipment is listed above, equivalent equipment may be substituted.

continued on back

THE SHERWIN-WILLIAMS COMPANY

Industrial and Marine Coatings

INDUSTRIAL & MARINE COATINGS

ACROLON™ 218 HS

ACRYLIC POLYURETHANE

PART A	**B65-600**	**GLOSS SERIES**
PART A	**B65-650**	**SEMI-GLOSS SERIES**
PART B	**B65V600**	**HARDENER**

APPLICATION BULLETIN

APPLICATION PROCEDURES

Surface preparation must be completed as indicated.

Mix contents of each component thoroughly with power agitation. Make certain no pigment remains on the bottom of the can. Then combine six parts by volume of Part A with one part by volume of Part B (premeasured components). Thoroughly agitate the mixture with power agitation. Re-stir before using.

If reducer is used, reduce at time of catalyzation.

Apply paint at the recommended film thickness and spreading rate as indicated below:

Recommended Spreading Rate per coat:

Wet mils:	4.5 - 9.0
Dry mils:	3.0 - 6.0
Coverage:	175 - 346 sq ft/gal approximate

NOTE: Brush or roll application may require multiple coats to achieve maximum film thickness and uniformity of appearance.

Drying Schedule @ 6.0 mils wet @ 50% RH:

	50°F	**@ 77°F**	**@ 120°F**
To touch:	2 hours	30 minutes	20 minutes
To handle:	10 hours	6 hours	4 hours
To recoat:			
minimum:	12 hours	8 hours	6 hours
maximum:	3 months	3 months	3 months
To cure:	14 days	7 days	5 days
Pot Life:	4 hours	2 hours	45 minutes
(reduced 5% with Reducer R7K15)			
Sweat in Time:	none	none	none

Application of coating above maximum or below minimum recommended spreading rate may adversely affect coating performance.

PERFORMANCE TIPS

Stripe coat all crevices, welds, and sharp angles to prevent early failure in these areas.

When using spray application, use a 50% overlap with each pass of the gun to avoid holidays, bare areas, and pinholes. If necessary, cross spray at a right angle.

Spreading rates are calculated on volume solids and do not include an application loss factor due to surface profile, roughness or porosity of the surface, skill and technique of the applicator, method of application, various surface irregularities, material lost during mixing, spillage, overthinning, climatic conditions, and excessive film build.

Excessive reduction of material can affect film build, appearance, and adhesion.

Do not apply the material beyond recommended pot life.

Do not mix previously catalyzed material with new.

In order to avoid blockage of spray equipment, clean equipment before use or before periods of extended downtime with Reducer #132, R7K132.

Mixed coating is sensitive to water. Use water traps in all air lines. Moisture contact can reduce pot life and affect gloss and color.

E-Z Roll Urethane Defoamer is acceptable for use. See data page 5.99 for details.

Refer to Product Information sheet for additional performance characteristics and properties.

CLEAN UP INSTRUCTIONS

Clean spills and spatters immediately with Reducer #132, R7K132. Clean tools immediately after use with Reducer #132, R7K132. Follow manufacturer's safety recommendations when using any solvent.

SAFETY PRECAUTIONS

Refer to the MSDS sheet before use.

Published technical data and instructions are subject to change without notice. Contact your Sherwin-Williams representative for additional technical data and instructions.

The statements made herein are based on our research and/or the research of others believed to be accurate.
No guarantee of their accuracy is made however, and such statements may be changed without notice.
www.sherwin-williams.com

MATERIAL SAFETY DATA SHEET

B65T604
09 00

Section 1 -- PRODUCT AND COMPANY IDENTIFICATION

PRODUCT NUMBER	DATE OF PREPARATION	HMIS CODES	
		Health	2*
B65T604	03-SEP-07	Flammability	3
		Reactivity	0

PRODUCT NAME
ACROLON™ 218 HS Polyurethane - Gloss (Part A), Ultradeep/Clear Tint Base

MANUFACTURER'S NAME
THE SHERWIN-WILLIAMS COMPANY
101 Prospect Avenue N.W.
Cleveland, OH 44115

TELEPHONE NUMBERS and WEBSITES
Product Information
www.sherwin-williams.com
Regulatory Information
(216) 566-2902 www.paintdocs.com
Medical Emergency
(216) 566-2917
Transportation Emergency for Chemical Emergency ONLY (spill, leak,
(800) 424-9300 fire, exposure, or accident)

Section 2 -- COMPOSITION/INFORMATION ON INGREDIENTS

% by WT	CAS No.	INGREDIENT			UNITS	VAPOR PRESSURE
0.4	100-41-4	Ethylbenzene				
			ACGIH TLV	100	ppm	7.1 mm
			ACGIH TLV	125	ppm STEL	
			OSHA PEL	100	ppm	
			OSHA PEL	125	ppm STEL	
2	1330-20-7	Xylene				
			ACGIH TLV	100	ppm	5.9 mm
			ACGIH TLV	150	ppm STEL	
			OSHA PEL	100	ppm	
			OSHA PEL	150	ppm STEL	
1	64742-94-5	Medium Aromatic Hydrocarbons				
			ACGIH TLV	Not Available		0.12 mm
			OSHA PEL	Not Available		
0.2	91-20-3	Naphthalene				
			ACGIH TLV	10	ppm	1 mm
			ACGIH TLV	15	ppm STEL	
			OSHA PEL	10	ppm	
			OSHA PEL	15	ppm STEL	
4	78-93-3	Methyl Ethyl Ketone				
			ACGIH TLV	200	ppm	70 mm
			ACGIH TLV	300	ppm STEL	
			OSHA PEL	200	ppm	
			OSHA PEL	300	ppm STEL	

Continued on page 2

10	123-86-4	n-Butyl Acetate				
		ACGIH TLV	150	ppm		10 mm
		ACGIH TLV	200	ppm STEL		
		OSHA PEL	150	ppm		
		OSHA PEL	200	ppm STEL		
6	108-65-6	1-Methoxy-2-Propanol Acetate				
		ACGIH TLV	Not Available			1.8 mm
		OSHA PEL	Not Available			
31	14808-60-7	Quartz				
		ACGIH TLV	0.05	mg/m3 as Resp. Dust		
		OSHA PEL	0.1	mg/m3 as Resp. Dust		

Section 3 -- HAZARDS IDENTIFICATION

ROUTES OF EXPOSURE

INHALATION of vapor or spray mist.

EYE or SKIN contact with the product, vapor or spray mist.

EFFECTS OF OVEREXPOSURE

EYES: Irritation.

SKIN: Prolonged or repeated exposure may cause irritation.

INHALATION: Irritation of the upper respiratory system.

May cause nervous system depression. Extreme overexposure may result in unconsciousness and possibly death.

SIGNS AND SYMPTOMS OF OVEREXPOSURE

Headache, dizziness, nausea, and loss of coordination are indications of excessive exposure to vapors or spray mists.

Redness and itching or burning sensation may indicate eye or excessive skin exposure.

MEDICAL CONDITIONS AGGRAVATED BY EXPOSURE

May cause allergic respiratory and/or skin reaction in susceptible persons or sensitization. This effect may be delayed several hours after exposure.

CANCER INFORMATION

For complete discussion of toxicology data refer to Section 11.

Section 4 -- FIRST AID MEASURES

EYES: Flush eyes with large amounts of water for 15 minutes. Get medical attention.

SKIN: Wash affected area thoroughly with soap and water. Remove contaminated clothing and launder before re-use.

INHALATION: If any breathing problems occur during use, LEAVE THE AREA and get fresh air. If problems remain or occur later, IMMEDIATELY get medical attention.

INGESTION: Do not induce vomiting. Get medical attention immediately.

Section 5 -- FIRE FIGHTING MEASURES

FLASH POINT	LEL	UEL
55 F PMCC	0.8	13.1

FLAMMABILITY CLASSIFICATION

RED LABEL -- Flammable, Flash below 100 F (38 C)

Continued on page 3

EXTINGUISHING MEDIA

Carbon Dioxide, Dry Chemical, Foam

UNUSUAL FIRE AND EXPLOSION HAZARDS

Closed containers may explode when exposed to extreme heat.

Application to hot surfaces requires special precautions.

During emergency conditions overexposure to decomposition products may cause a health hazard. Symptoms may not be immediately apparent. Obtain medical attention.

SPECIAL FIRE FIGHTING PROCEDURES

Full protective equipment including self-contained breathing apparatus should be used.

Water spray may be ineffective. If water is used, fog nozzles are preferable. Water may be used to cool closed containers to prevent pressure build-up and possible autoignition or explosion when exposed to extreme heat.

Section 6 -- ACCIDENTAL RELEASE MEASURES

STEPS TO BE TAKEN IN CASE MATERIAL IS RELEASED OR SPILLED

Remove all sources of ignition. Ventilate the area.

Remove with inert absorbent.

Section 7 -- HANDLING AND STORAGE

STORAGE CATEGORY

DOL Storage Class IB

PRECAUTIONS TO BE TAKEN IN HANDLING AND STORAGE

Contents are FLAMMABLE. Keep away from heat, sparks, and open flame.

During use and until all vapors are gone: Keep area ventilated - Do not smoke - Extinguish all flames, pilot lights, and heaters - Turn off stoves, electric tools and appliances, and any other sources of ignition.

Consult NFPA Code. Use approved Bonding and Grounding procedures.

Keep container closed when not in use. Transfer only to approved containers with complete and appropriate labeling. Do not take internally. Keep out of the reach of children.

Section 8 -- EXPOSURE CONTROLS/PERSONAL PROTECTION

PRECAUTIONS TO BE TAKEN IN USE

NO PERSON SHOULD USE THIS PRODUCT, OR BE IN THE AREA WHERE IT IS BEING USED, IF THEY HAVE CHRONIC (LONG-TERM) LUNG OR BREATHING PROBLEMS OR IF THEY EVER HAD A REACTION TO ISOCYANATES.

Use only with adequate ventilation.

Avoid contact with skin and eyes. Avoid breathing vapor and spray mist.

Wash hands after using.

This coating may contain materials classified as nuisance particulates (listed "as Dust" in Section 2) which may be present at hazardous levels only during sanding or abrading of the dried film. If no specific dusts are listed in Section 2, the applicable limits for nuisance dusts are ACGIH TLV 10 mg/m3 (total dust), 3 mg/m3 (respirable fraction), OSHA PEL 15 mg/m3 (total dust), 5 mg/m3 (respirable fraction).

VENTILATION

Local exhaust preferable. General exhaust acceptable if the exposure to materials in Section 2 is maintained below applicable exposure limits. Refer to OSHA Standards 1910.94, 1910.107, 1910.108.

Continued on page 4

RESPIRATORY PROTECTION

Where overspray is present, a positive pressure air supplied respirator (TC19C NIOSH/MSHA approved) should be worn. If unavailable, a properly fitted organic vapor/particulate respirator approved by NIOSH/MSHA for protection against materials in Section 2 may be effective. Follow respirator manufacturer's directions for use. Wear the respirator for the whole time of spraying and until all vapors and mists are gone. NO PERSONS SHOULD BE ALLOWED IN THE AREA WHERE THIS PRODUCT IS BEING USED UNLESS EQUIPPED WITH THE SAME RESPIRATOR PROTECTION RECOMMENDED FOR THE PAINTERS.

When sanding or abrading the dried film, wear a dust/mist respirator approved by NIOSH/MSHA for dust which may be generated from this product, underlying paint, or the abrasive.

PROTECTIVE GLOVES

To prevent skin contact, wear gloves which are recommended by glove supplier for protection against materials in Section 2.

EYE PROTECTION

Wear safety spectacles with unperforated sideshields.

OTHER PROTECTIVE EQUIPMENT

Use barrier cream on exposed skin.

OTHER PRECAUTIONS

This product must be mixed with other components before use. Before opening the packages, READ AND FOLLOW WARNING LABELS ON ALL COMPONENTS.

Intentional misuse by deliberately concentrating and inhaling the contents can be harmful or fatal.

Section 9 -- PHYSICAL AND CHEMICAL PROPERTIES

PRODUCT WEIGHT	10.64 lb/gal	1275 g/l
SPECIFIC GRAVITY	1.28	
BOILING POINT	174 - 415 F	78 - 212 C
MELTING POINT	Not Available	
VOLATILE VOLUME	36 %	
EVAPORATION RATE	Slower than ether	
VAPOR DENSITY	Heavier than air	
SOLUBILITY IN WATER	N.A.	

VOLATILE ORGANIC COMPOUNDS (VOC Theoretical - As Packaged)

2.66 lb/gal	319 g/l	Less Water and Federally Exempt Solvents
2.66 lb/gal	319 g/l	Emitted VOC

Section 10 -- STABILITY AND REACTIVITY

STABILITY -- Stable

CONDITIONS TO AVOID

None known.

INCOMPATIBILITY

None known.

HAZARDOUS DECOMPOSITION PRODUCTS

By fire: Carbon Dioxide, Carbon Monoxide

HAZARDOUS POLYMERIZATION

Will not occur

Continued on page 5

Section 11 -- TOXICOLOGICAL INFORMATION

CHRONIC HEALTH HAZARDS

Ethylbenzene is classified by IARC as possibly carcinogenic to humans (2B) based on inadequate evidence in humans and sufficient evidence in laboratory animals. Lifetime inhalation exposure of rats and mice to high ethylbenzene concentrations resulted in increases in certain types of cancer, including kidney tumors in rats and lung and liver tumors in mice. These effects were not observed in animals exposed to lower concentrations. There is no evidence that ethylbenzene causes cancer in humans.

Crystalline Silica (Quartz, Cristobalite) is listed by IARC and NTP. Long term exposure to high levels of silica dust, which can occur only when sanding or abrading the dry film, may cause lung damage (silicosis) and possibly cancer.

Methyl Ethyl Ketone may increase the nervous system effects of other solvents.

Prolonged overexposure to solvent ingredients in Section 2 may cause adverse effects to the liver, urinary, blood forming and reproductive systems.

Persons sensitive to isocyanates will experience increased allergic reaction on repeated exposure.

Reports have associated repeated and prolonged overexposure to solvents with permanent brain and nervous system damage.

TOXICOLOGY DATA

CAS No.	Ingredient Name					
100-41-4	Ethylbenzene					
		LC50	RAT	4HR	Not Available	
		LD50	RAT		3500	mg/kg
1330-20-7	Xylene					
		LC50	RAT	4HR	5000	ppm
		LD50	RAT		4300	mg/kg
64742-94-5	Medium Aromatic Hydrocarbons					
		LC50	RAT	4HR	Not Available	
		LD50	RAT		Not Available	
91-20-3	Naphthalene					
		LC50	RAT	4HR	Not Available	
		LD50	RAT		Not Available	
78-93-3	Methyl Ethyl Ketone					
		LC50	RAT	4HR	Not Available	
		LD50	RAT		2740	mg/kg
123-86-4	n-Butyl Acetate					
		LC50	RAT	4HR	2000	ppm
		LD50	RAT		13100	mg/kg
108-65-6	1-Methoxy-2-Propanol Acetate					
		LC50	RAT	4HR	Not Available	
		LD50	RAT		8500	mg/kg
14808-60-7	Quartz					
		LC50	RAT	4HR	Not Available	
		LD50	RAT		Not Available	

Continued on page 6

Section 12 -- ECOLOGICAL INFORMATION

ECOTOXICOLOGICAL INFORMATION
No data available.

Section 13 -- DISPOSAL CONSIDERATIONS

WASTE DISPOSAL METHOD
Waste from this product may be hazardous as defined under the Resource Conservation and Recovery Act (RCRA) 40 CFR 261.
Waste must be tested for ignitability to determine the applicable EPA hazardous waste numbers.
Incinerate in approved facility. Do not incinerate closed container. Dispose of in accordance with Federal, State/Provincial, and Local regulations regarding pollution.

Section 14 -- TRANSPORT INFORMATION

US Ground (DOT)
1 Gallon and Less may be Classed as CONSUMER COMMODITY, ORM-D
Larger Containers are Regulated as:
UN1263, PAINT, 3, PG II, (ERG#128)

DOT (Dept of Transportation) Hazardous Substances & Reportable Quantities
Xylenes (isomers and mixture) 100 lb RQ

Bulk Containers may be Shipped as (check reportable quantities):
UN1263, PAINT, 3, PG II, (ERG#128)

Canada (TDG)
UN1263, PAINT, CLASS 3, PG II, (ERG#128)

IMO
UN1263, PAINT, CLASS 3, PG II, (13 C c.c.), EmS F-E, S-E

Section 15 -- REGULATORY INFORMATION

SARA 313 (40 CFR 372.65C) SUPPLIER NOTIFICATION

CAS No.	CHEMICAL/COMPOUND	% by WT	% Element
100-41-4	Ethylbenzene	0.4	
1330-20-7	Xylene	2	
91-20-3	Naphthalene	0.2	

CALIFORNIA PROPOSITION 65
WARNING: This product contains chemicals known to the State of California to cause cancer and birth defects or other reproductive harm.
TSCA CERTIFICATION
All chemicals in this product are listed, or are exempt from listing, on the TSCA Inventory.

Continued on page 7

Section 16 -- OTHER INFORMATION

This product has been classified in accordance with the hazard criteria of the Canadian Controlled Products Regulations (CPR) and the MSDS contains all of the information required by the CPR.

The above information pertains to this product as currently formulated, and is based on the information available at this time. Addition of reducers or other additives to this product may substantially alter the composition and hazards of the product. Since conditions of use are outside our control, we make no warranties, express or implied, and assume no liability in connection with any use of this information.

LEFT BLANK

JOHN MEUNIER

Meadowbank mining Corp.
ACP-700R
Technical Data Sheet
Reference : NC01

HYDROCYCLONE

ST-150

VEOLIA WATER
Solutions & Technologies

LEFT BLANK

JOHN MEUNIER

NOMENCLATURE/ BILL OF MATERIALS

TITRE/ TITLE	Rev.	DESCRIPTION	PAR/ BY:	APPR:	DATE:	Affaire / Contract	Meadowbank Mining
Hydrocyclones	0	SUBMITTAL	P.Ste-Marie	P.S.M.	2009-03-26		
	1						
	2					REF. No.	NC01 | | 0
	3						
DESSIN /DWG # ST-150	4					Date:	2009-03-11

REV.	ITEM	QTE/QTY. Unit.	QTE/QTY. Total	DESCRIPTION	P&ID I.D./TAG	CAT. ACCPAC	SOURCE	FA/SA FI SITE	P / N
	NC01ST-150-1	2	4	**HYDROCYCLONES**	C2-011	B60		SA	
				Manufacturer:	C2-012				
				Krebs	C2-021				
				Model:	C2-022				
				U6-10-1758					
				Material:					
				Urethane					
				Inlet (vortex finder):					
				dia. 2,25" (57,2 mm)					
				Outlet (apex):					
				dia. 1,25" (31,8 mm)					
				must include the victaulic 4" x 3" at discharge					
				PERFORMANCES					
				Anticipated performance:					
				Recovery of solids greater than					
				50 microns in diameter					
				Operating conditions :					
				Feed at 150 usgpm (34m^3/h) at					
				19 psig (131 kPa) theoritical pressure					
				Feed characteristics:					
				Sludge mixture :Water, 135 microns microsand, settle solids and polymers.					
				Flow split:					
				20 % at Apex (underflow)					
				80 % at vortex finder (overflow)					

LEFT BLANK

FLSmidth Krebs
5505 W Gillette Rd • Tucson, AZ 85743-9501 • USA
Tel +1 520 744 8200 • Fax +1 520 744 8300
www.krebs.com

MAY 13, 2009

INSTALLATION, OPERATION AND MAINTENANCE MANUAL

4 MODEL U6-10-1758 KREBS CYCLONES
SERIAL NUMBERS: 114486U – 114489U
FOR
JOHN MEUNIER, INC.
PO NUMBER: NC01-042945

SALES ENGINEER: MIKE WILKINS **mike.wilkins@flsmidth.com**

URETHANE

KREBS ENGINEERS

GENERAL

KREBS Cyclones are the result of an intensive research and development program initiated in 1950. Each unit represents a product of advanced design, careful engineering, quality materials and the finest workmanship.

The information in the following pages is directed toward a better understanding of cyclone principles and operation, so that the potential for every KREBS Cyclone is realized.

KREBS engineers cyclone installations by studying the operating data and customer objectives. The cyclone selections are based on the large amount of operating data accumulated by our staff of engineers and our continuing research. When data is not available or is incomplete, studies in our laboratory and pilot plant are recommended. The pilot plant is equipped for complete, full-scale cyclone classification studies. Predictable performances resulting from these studies have been proven in numerous subsequent field installations. An important part of this service is the analysis of the test results by our staff of metallurgical and chemical engineers as related to the overall plant operation.

You are invited to avail yourself of these facilities and services for the study of your classification problems.

KREBS ENGINEERS

Installation

Small KREBS Cyclones are crated and shipped completely assembled. When removing the cyclone from the shipping crate, care should be taken to account for all of the parts. This can be checked against the packing slip.

Pump, Sump and Piping

Correct design of the pump and sump is probably the most important factor in establishing an efficient cyclone operation.

Conversion of flow and velocity to kinetic energy in a cyclone is derived from the energy supplied from the pump. Each adjustment of the cyclone variables will influence the pumping to some degree. This will be discussed in the section entitled "Operation". A constant volume to the cyclone is important. Momentary fluctuations are generally the result of entrained air in the slurry.

A constant level in the sump is critical, but by no means an indication that the cyclone is receiving a constant and uniform volume of feed. If the needle of the pressure gauge fluctuates rapidly, it is a definite indication that there is entrained air in the pump discharge slurry. To correct this problem, the entering stream should be prevented from carrying entrapped air to the suction of the pump. This can be done by mounting a sloping plate in the sump, well below the normal level of the slurry. An annular opening between the plate and the edges of the sump of about one inch around its entire periphery will generally be sufficient to allow the total volume of slurry to pass from the upper compartment to the lower section.

It is permissible to return part or all of the overflow product to the sump to maintain a constant level. It must be remembered that the greater the slime content of the feed slurry to a cyclone, the more difficult it becomes to make a given separation. The use of recycled overflow product should be handled with caution, as there is always a danger of recirculating an excess quantity and consequently increasing the slime content of the feed slurry.

Where water is available and the overflow product is an important consideration, fresh water should be added as a means of volume control.

The overflow product should discharge to atmosphere as close to the cyclone as possible. If the overflow pipe is carried directly to an elevation below the inlet of the cyclone, a siphoning action can be created. This will cause coarser particles to be carried to the cyclone overflow product. The overflow should be available for sampling.

The underflow discharge should be open for visual inspection, as it is important to be able to observe the characteristics of this flow. The underflow should be maintained with a 20-30 degree spray discharge. A "rope" discharge is an indication that there is excess crowding of solids at the apex orifice. This will cause coarse oversize solids to be carried into the overflow product. The underflow product should also be available for sampling.

Installation (cont'd)

Multiple Installations

A radial manifold system assures an even feed distribution to each cyclone. The take-offs should be equally spaced around the perimeter of the central distribution pot. The overflow and underflow launders must be properly sized to allow for collection and distribution of the streams. KREBS ENGINEERS will design and fabricate radial manifolds. Drawing number M1440 illustrates a typical radial manifold system for small diameter cyclones.

An inline manifold system can be used if the feed is very dilute and not subject to segregating in the system. An inline system is generally easier to design and build than a radial system and consequently is less expensive. An inline system does not assure equal feed to each cyclone. Drawing number M1536 illustrates a typical inline manifold system.

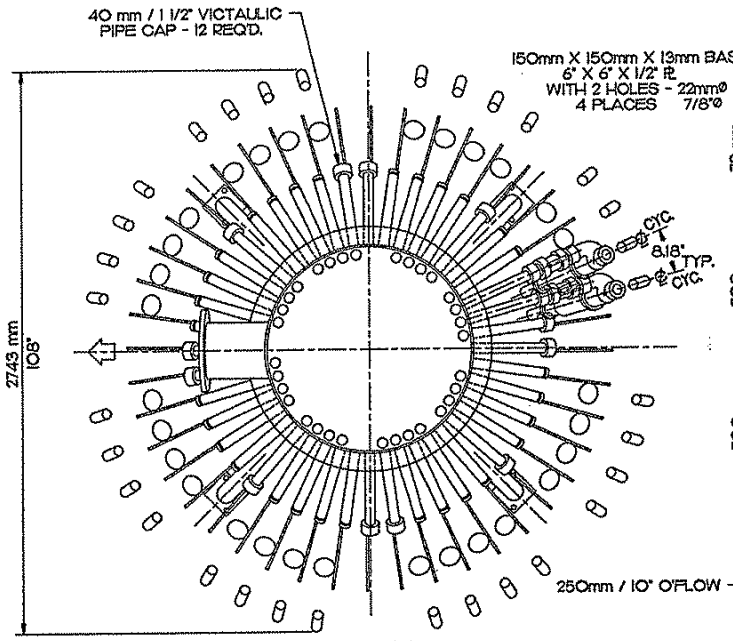

PLAN

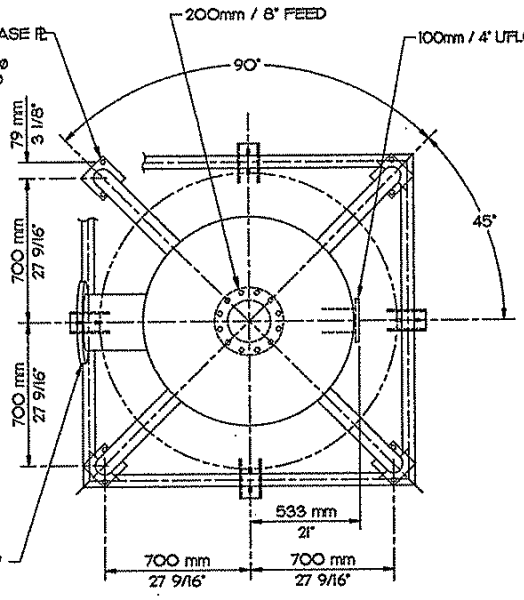

ANCHOR BOLT PLAN

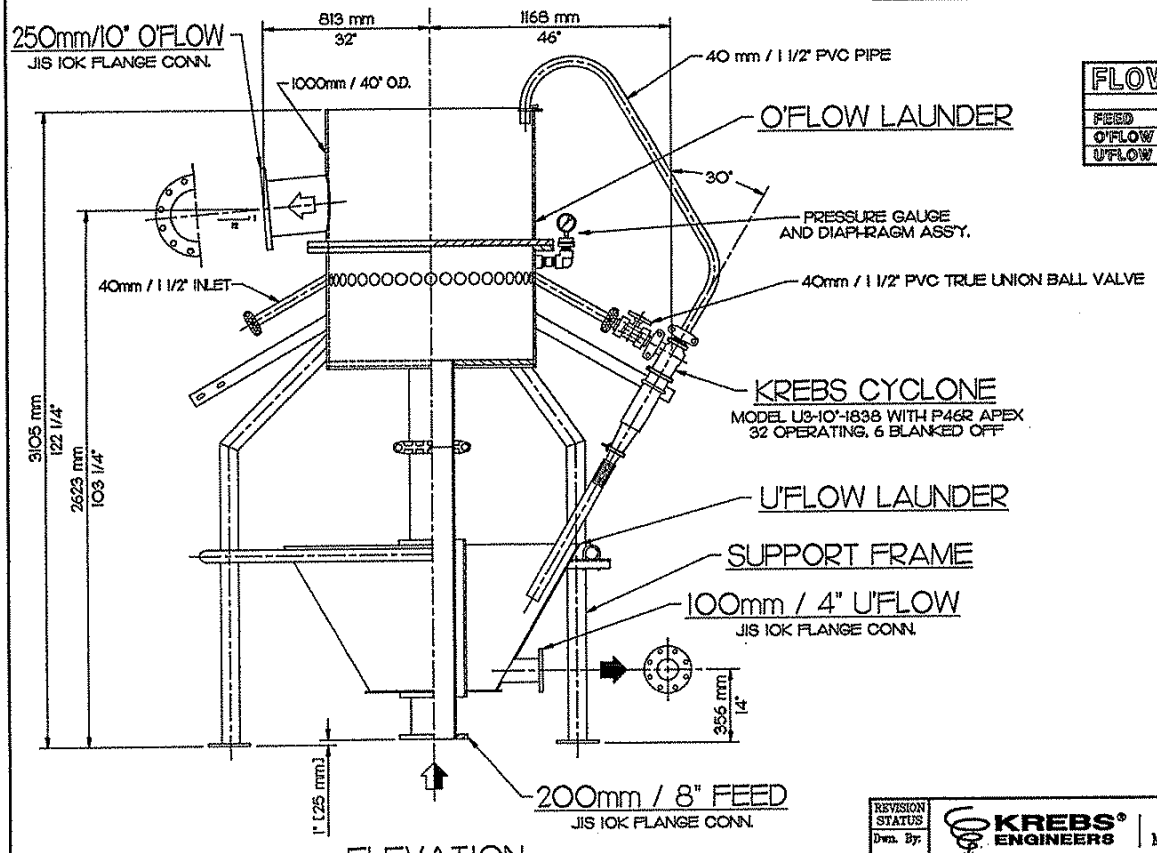

ELEVATION

(FOR TRUE PIPING ORIENTATIONS, SEE PLAN VIEW)

FLOW CHART		
	GAL/MIN	FT/SEC
FEED	1213	7.79
O'FLOW	1178	4.80
U'FLOW	35	.88

NOTES:
1. FOR CYCLONE DIMENSIONS, SEE DRAWING S1838-M1440
2. ALL CONNECTING FITTINGS ARE 150# ANSI FLANGES.
3. WEIGHTS: BARE = OPERATING = FLOODED =

TOLERANCE SCHEDULE: UNLESS OTHERWISE NOTED.		
-24"=±1/4"	+24" thru 100"=±1/2"	+100"=±1"

THIS SHEET IS THE PROPERTY OF KREBS ENGINEERS, MENLO PARK, CALIFORNIA, AND IS LOANED UNDER THE EXPRESS CONDITION THAT IT IS NOT TO BE USED IN ANY MANNER DIRECTLY OR INDIRECTLY DETRIMENTAL TO KREBS ENGINEERS.

REVISION STATUS	KREBS® ENGINEERS	1205 CHRYSLER DR. MENLO PARK, CA. 94025			
Dwn. By:					
Date:	Scale: ----	Dwn. By: MEP	Date: 8-30-93	Appvd. By: SCF	M.O. 1041I-PAT
Appvd. By:	GENERAL ARRANGEMENT 36 MODEL U3-10"-1838 KREBS CYCLONES RADIAL MANIFOLD SYSTEM				
R.N. M1440SAA	C	© KREBS ENGINEERS 1993		DWG. NO.	M1440

DWG. NO. M1440

KREBS ENGINEERS

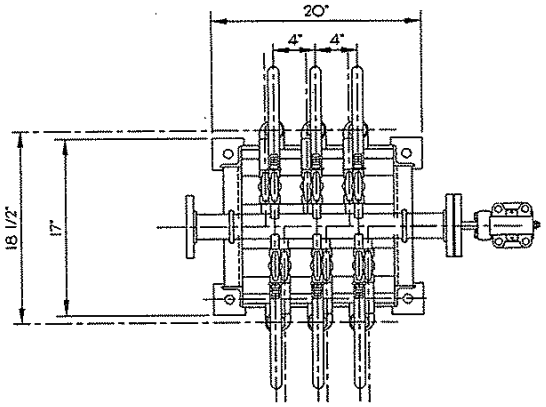

PLAN

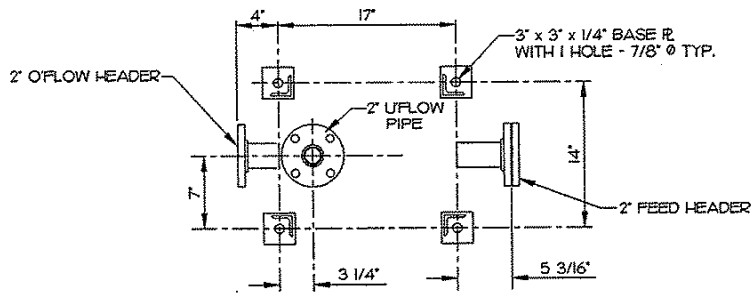

ANCHOR BOLT PLAN

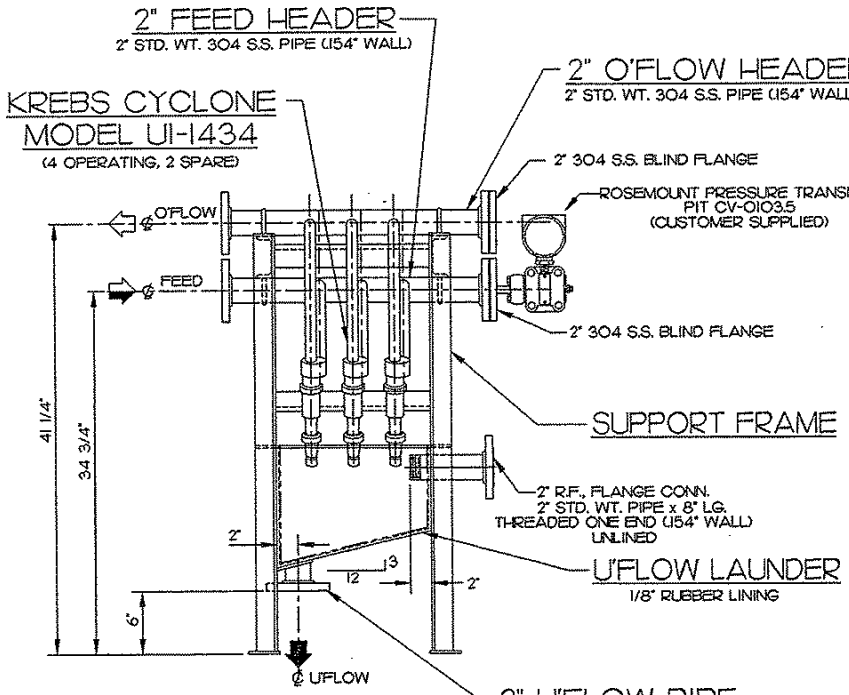

ELEVATION

FLOW CHART		
	GAL/MIN	FT/SEC
FEED	19.30	6.18
O'FLOW	14.10	4.52
U'FLOW	5.20	3.33

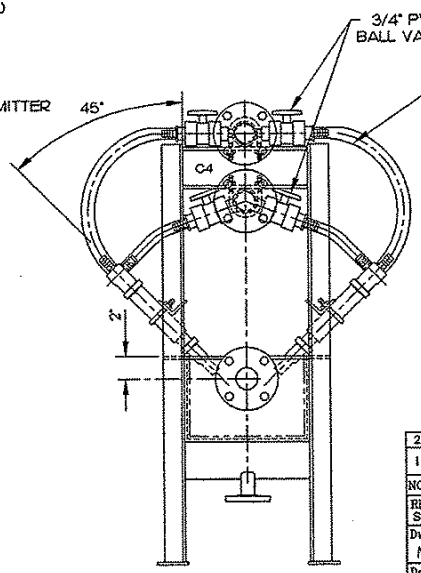

END ELEVATION

CERTIFIED FOR_____
P.O. No._____
REQ. No._____ S.O. No._____
BY_____ DATE_____

KREBS ENGINEERS
5505 WEST GILLETTE ROAD TUCSON, ARIZONA 85743
PHONE: (520) 744-8200 FAX: (520) 744-8300

EQUIP. NO. CV-0103.5

NOTES:

1. FOR CYCLONE DIMENSIONS SEE DRAWING SI434-MI536
2. CONNECTING FITTINGS ARE 150# ANSI R.F. FLANGES UNLESS OTHERWISE NOTED.
3. FURNISHED WITH THIS MANIFOLD ARE 12 - 3/4" PVC BALL VALVES.
4. WEIGHTS: BARE = OPERATING = FLOODED =

TOLERANCE SCHEDULE: UNLESS OTHERWISE NOTED.			
~24"=±1/4"	±24" thru 100"=±1/2"	±100"=±1"	

THIS SHEET IS THE PROPERTY OF KREBS ENGINEERS, TUCSON, ARIZONA, AND IS LOANED UNDER THE EXPRESS CONDITION THAT IT IS NOT TO BE USED IN ANY MANNER DIRECTLY OR INDIRECTLY DETRIMENTAL TO KREBS ENGINEERS.

NO	DATE	REVISION DESCRIPTION
2	7-23-97	ROTATED CYCLONES TO 45 DEGREES
1	5-14-97	CHANGED O'FLOW HEADER TO 2" PIPE & FLANGES AND CHANGED U'FLOW PIPE TO 2" PIPE & FLANGE. ADDED 4" TO FRAME.

REVISION STATUS

KREBS® ENGINEERS | 5505 WEST GILLETTE ROAD TUCSON, AZ 85743

Dwn. By:	Date:	Scale:	Dwn. By:	Date:	Apprd. By:	S.O.
MWH	7-23-97	—	GK	4-2-97		

Apprd. By: 2

GENERAL ARRANGEMENT
6 MODEL UI-1434 KREBS CYCLONES
IN-LINE MANIFOLD SYSTEM

R.N. M5536ANC | C | © KREBS ENGINEERS 1997 | DWG. NO. MI536

Operation

The primary consideration in selecting the proper size and design of cyclone is the classification objective, not the capacity. The proper relationship between the inlet orifice the vortex finder diameter, and the apex diameter is engineered by the staff of KREBS Engineers for each specific classification objective.

There is seldom any necessity for changing the size of these orifices unless the classification objectives or plant operating conditions are altered.

Numerous factors influence the operation of a cyclone. Following is a brief discussion of some factors influencing cyclone operation (which the operator is normally able to control while the cyclone is operating).

Feed Dilution

Feed dilution is the most effective control available. The use of additional dilution water will always result in a finer and sharper separation. The dilution water can also be adjusted to maintain a constant level in the sump, although the operator must be aware of the potential change in the separation. For very dilute feeds, the change in the separation will be minimal.

Pressure Management

Pressure drop across the cyclone is the pressure differential between the cyclone inlet and overflow. When the cyclone discharges to atmosphere, a condition we usually recommend, the inlet pressure is the pressure drop.

The pressure drop is merely an indication of the energy required to force a given volume through the cyclone and not an indication of a developed force-pattern or throughput. Excessive pressure results in high pump operating and maintenance costs and should be avoided. We generally do not recommend pressure drops above 50 psi.

The higher the pressure drop, the greater the throughput capacity of the cyclone. A higher pressure drop will also produce a finer separation.

Cyclone Orifices

The following describes the effect the various orifices have on the cyclone performance. Changing the orifice requires shutting down the system.

Inlet Orifice

The main function of the inlet orifice is to provide a smooth flow pattern at the point of entry into the cyclone. All of KREBS Cyclones are designed with an involuted entry that preorients the solids prior to reaching the tangential point of contact with the cylinder wall. This minimizes turbulence and allows KREBS Cyclones to produce finer and sharper separations.

An increase in the inlet area will increase the capacity of the cyclone. It will also coarsen the separation slightly. All of KREBS Cyclones, three inches and smaller in diameter, have fixed inlet areas.

Operation (cont'd)

Vortex Finder

The vortex finder has the greatest impact on the operating results of all the orifices. The vortex finder also has a large effect on the cyclone capacity at a given pressure drop. It also affects the cyclone separation significantly.

The larger the vortex finder diameter, the greater the cyclone capacity at a given pressure drop. A larger diameter vortex finder will also coarsen the cyclone separation.

Apex Orifice

The only function of the apex orifice is to discharge the coarse solids in such a manner that the maximum underflow density and smoothness of discharge are obtained. The apex should be large enough to produce a 20-30 degree cone discharge, but should not be used to control the cyclone separation. The apex should never be so small that a "rope" discharge exists. A "rope" discharge is an indication that the apex is not allowing all of the coarse solids out and consequently some are being forced out the cyclone overflow. Both fixed and manually adjustable apexes are available on KREBS small diameter cyclones.

Maintenance

It is important to maintain smooth surfaces on the interior of the cyclone. The cyclones should be inspected on a regular basis. When the interior surfaces become worn or uneven, the part should be replaced. After experience has been gained in operating the cyclones under given conditions, a regular maintenance schedule can be determined.

Once the apex opens more than 10% of it's original size, it should be replaced.

Common Problems and Solutions

Problem 1:

There are very coarse solids in the cyclone overflow.

Solution:

This is normally an indication that the apex is too small and coarse solids are being forced to the cyclone overflow. The apex diameter should be increased until a constant 30 degree cone angle is obtained on the discharge. The fixed apexes can be cut off to increase the diameter. An adjustable apex will have to be replaced with a larger one if it is in the full open position.

Problem 2:

The cyclone pressure drop fluctuates wildly.

Solution:

This is an indication that a constant level in the sump is not being maintained or that air is entrained in the slurry. If the pump is pumping more feed volume than is going to the slump, the sump level will go down. Eventually the pump will cavitate and the pressure drop across the cyclone will be very erratic. Slowing the pump down or increasing the dilution water to the sump will maintain a constant sump level.

Air usually enters the pump suction because the feed to the sump is pointing directly down into the pump suction. Change the feed so that it angles against a side wall of the sump or install a baffle plate as described in the installation section.

Problem 3:

The separation is not fine enough.

Solution:

Increase the dilution water to the feed. If the feed is already dilute or if diluting the feed is not possible, increase the cyclone pressure drop. This will require speeding up the pump and installing a smaller diameter vortex finder. If the separation is still not fine enough, smaller diameter cyclones will probably required.

Problem 4:

The underflow is too dilute.

Solution:

This is an indication that the apex is too large. Decrease the apex diameter until a 30 degree cone discharge is obtained. Do not decrease the apex diameter to the point of "roping" the discharge. The adjustable apexes can be decreased by tightening the worm driven clamp. The fixed apexes will have to be replaced with a smaller size.

Calculations

TONNAGE:

1) Solids: $TPH = GPM\ SLURRY \times S.G.\ SLURRY \times \%\ SOLIDS$

Slurry: $\frac{TPH\ SOLIDS}{\%\ SOLIDS}$

2) PULP SPECIFIC GRAVITY:

$$S.G.\ PULP = \frac{100 \times S.G.\ SOLIDS \times S.G.\ LIQUID}{100 \times S.G.\ SOLIDS - \%\ SOLIDS\ (S.G.\ SOLIDS - S.G.\ LIQUID)}$$

3) PERCENT SOLIDS IN PULP

$$\% = \frac{TPH\ SOLIDS}{TPH\ SLURRY} \times 100$$

4) GALLONS PER MINUTE:

$$GPM\ SLURRY = \frac{TPH\ SOLIDS \times 4}{S.G.\ SLURRY \times \%\ SOLIDS}$$

5) $$\%\ SOLIDS\ BY\ VOLUME = \frac{\%\ SOLIDS\ BY\ WEIGHT \times S.G.\ PULP}{S.G.\ SOLIDS}$$

6) $$\frac{GPM}{ONE\ TPH\ SOLIDS} = \frac{4}{\%\ SOLIDS \times S.G.\ PULP}$$

KREBS ENGINEERS

FASTENER REQUIREMENTS						
CONNECTION	DESCRIPTION	SIZE	LENGTH	QTY	SPARE	TOTAL
1 & 3 TO 5 & 6	HEX BOLT & NUT	1/2-13	2 3/4"	8	1	9

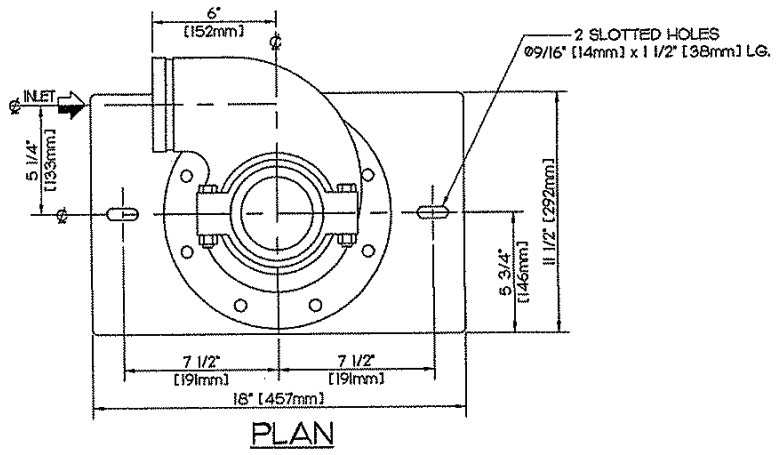

PLAN

FASTENER NOTES:

1. ALL BOLTS AND NUTS, TO BE ANSI GRADE 5 ZINC PLATED. (OTHER GRADE/PLATING CAN BE OFFERED)
2. WASHERS TO BE USED ON ALL SLOTTED HOLES.
3. PLEASE NOTIFY CUSTOMER SERVICES OF ANY DEVIATION IN THIS LIST.
4. NO PAYMENT FOR CUSTOMER MODIFICATIONS, BACK CHARGES, OR ANY OTHER CHANGES WILL BE ACCEPTED, UNLESS PREVIOUSLY AUTHORIZED BY FLSmidth KREBS.
5. QUANTITIES SHOWN ARE FOR THE ASSEMBLY OF ONE CYCLONE.

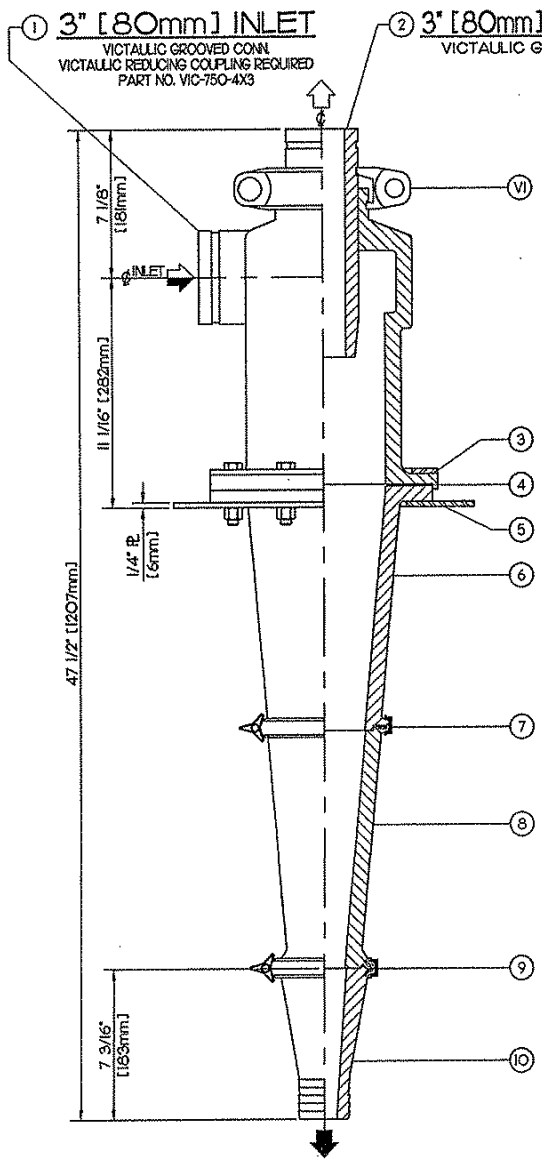

JOHN MEUNIER INC.
CUSTOMER P.O. NO: NC01-042945 / SERIAL NO: 114486U - 114489U

ITEM No.	PART NUMBER	DESCRIPTION
VI.	VIC-750-4X3	VICTAULIC REDUCER COUPLING, 4"X3" SIZE, STEEL.
1.	C6856-RU-3.3	INLET HEAD WITH 3" INLET VIC. CONN, 3.3 SQ. IN. INLET ORIFICE, URETHANE, SIZES AVAILABLE: 1.5", 2.2", & 3.3".
2.	C3802-RU-2.25	VORTEX FINDER/O'FLOW INSERT WITH 3" VIC. CONN, 2.25" SIZE, URETHANE, SIZES AVAILABLE: 1.5", 1.75", 2", 2.25", & 2.5".
3.	C1846-ST	BACKING PLATE HALF RING, STEEL, 2 - SET.
4.	C5011G-RN	GASKET, NEOPRENE.
5.	C1848-ST	MOUNTING PLATE, STEEL.
6.	C6807-RU	CONE SECTION, URETHANE.
7.	C7712-SS	CLAMP WITH HAND WHEEL, STAINLESS STEEL.
8.	C1703-RU	CONE SECTION, URETHANE.
9.	C7710-SS	CLAMP WITH HAND WHEEL, STAINLESS STEEL.
10.	C1681-RU-1.25	APEX, 1.25" SIZE, URETHANE, SIZES AVAILABLE: .25", .375", .5", .625", .75", 1", 1.063", 1.25", 1.375", & 1.5".

FINAL CERTIFICATION

CERTIFIED FOR John Meunier, Inc.
P.O. No. NC01-042945
REQ. No. _____ S.O. No. 110272
QUAN. 4 MODEL U6-10-1758
SERIAL NO. 114486U - 114489U
BY _____ DATE 05-13-09
FLSmidth KREBS
5505 WEST GILLETTE ROAD TUCSON, ARIZONA 85743
PHONE (520) 744-8200 FAX (520) 744-8300

NOTES:

1. PAINT ALL STEEL PARTS PER: EN-SPEC-4-3041
2. BARE WEIGHT: 50# [23 kg]
   SHIPPING WEIGHT: 110# [50 kg]

THIS SHEET IS THE PROPERTY OF FLSMIDTH KREBS, TUCSON, ARIZONA, AND IS LOANED UNDER THE EXPRESS CONDITION THAT IT IS NOT TO BE USED IN ANY MANNER DIRECTLY OR INDIRECTLY DETRIMENTAL TO FLSMIDTH KREBS.

TOLERANCE SCHEDULE: UNLESS OTHERWISE SPECIFIED.		
-24"=±1/4"	+24" thru 100"=±1/2"	+100"=±1"
[-600mm = ±6mm]	[+600mm thru 2500mm = ±12mm]	[+2500mm = ±25mm]

REVISION STATUS	FLSmidth KREBS	5505 WEST GILLETTE ROAD TUCSON, AZ 85743 www.krebs.com			
Dwn. By:					
Date:	Scale: —	Dwn. By: TFP	Date: 3-26-09	Appvd. By: WR DAN	S.O.
Appvd. By:	GENERAL PARTS ARRANGEMENT KREBS CYCLONE MODEL U6-10-1758 WITH FIXED APEX ASSEMBLY NO. C1681				
C	© FLSmidth KREBS 2009	DWG. NO.	SI758-114486U		

Krebs Cyclone
Model No.: U6-10°

CAPACITY CURVE
No.: U6-10°-3.3-12/02

3.30 SQ. IN. INLET ORIFICE

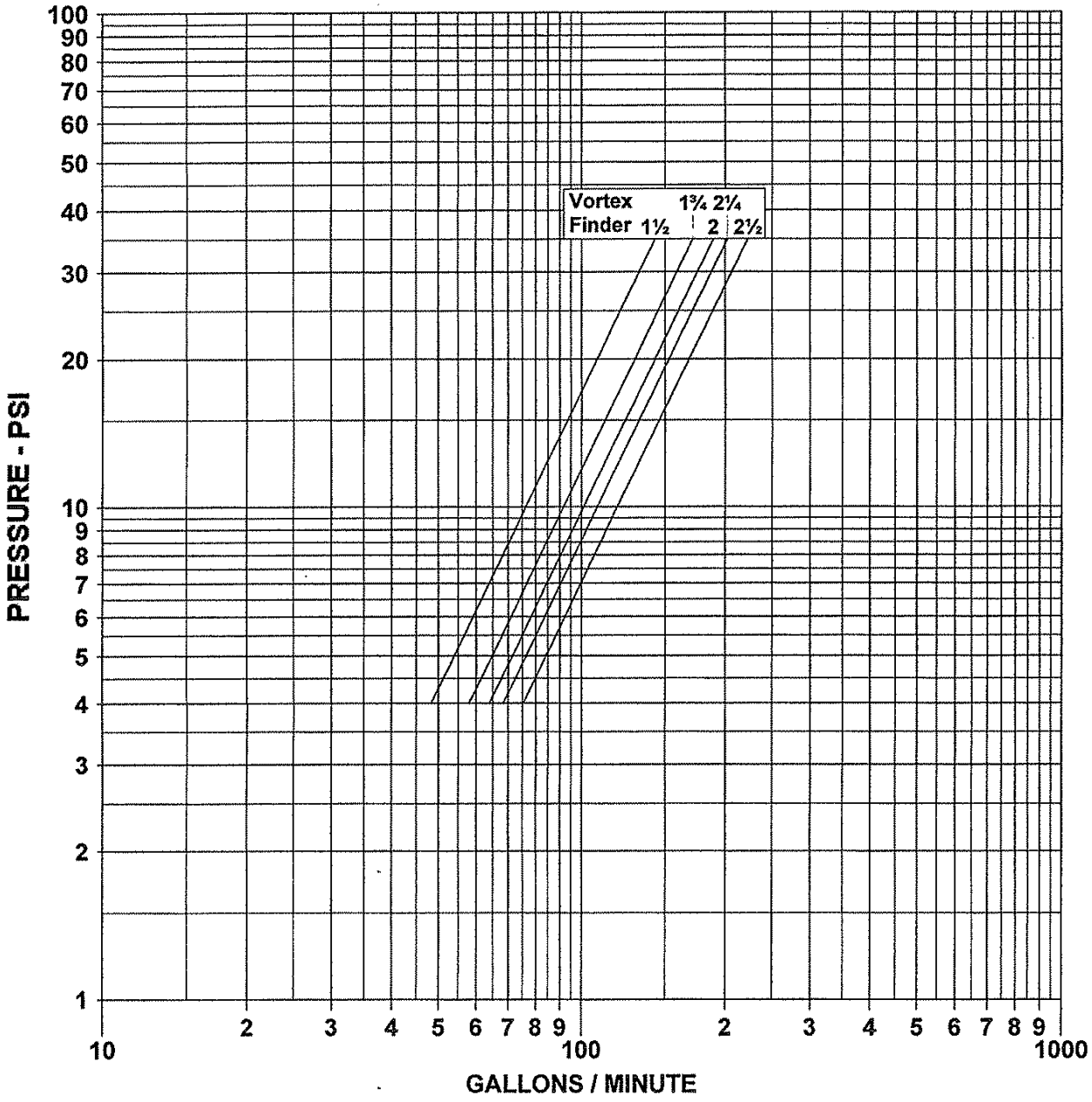

CAPACITY IS BASED ON WATER AT AMBIENT TEMPERATURE AND APEX DIAMETER EQUAL TO ONE HALF THE VORTEX FINDER DIAMETER, AND MAY VARY AT DIFFERENT RATIOS

This sheet is the property of Krebs Engineers, Tucson Arizona, and is loaned under the express condition that it is not to be used in any manner directly or indirectly detrimental to Krebs Engineers

KREBS ENGINEERS
5505 West Gillette Road
Tucson, AZ 85743
TEL: (520) 744-8200
FAX: (520) 744-8300
e-mail: www.krebs.com

KREBS ENGINEERS

SHEET: 1
DATE: 06-Mar-09
BY: BLP

Client: John Meunier

Problem: Maximum recovery of sand to the U/F with 20% of the feed volume in the U/F. Waste water sand.

Number, Model Krebs Cyclones: 1 operating Krebs Model U6-10 Hydrocyclone

Orifices:	Inlet Area	Vortex Finder	Apex	Pressure Drop
	3.3 sq. in.	2.25 in.	1.25	19 PSI

Specific Gravity: Solids: 2.7 Liquid: 1.0 Temperature: Amb. °F Viscosity: 1 Cps

	FEED	OVERFLOW	UNDERFLOW
STPH Solids	4.9	0.0	4.9
STPH Liquids	35.7	30.0	5.7
STPH Slurry	40.6	30.0	10.6
Wt Solids	12.0	0.0	46.0
S.G. Slurry	1.082	1.000	1.408
Vol% Solids	4.8	0.0	24.0
GPM Slurry	150.0	120.0	30.0
M3/Hr. Slurry	34.1	27.3	6.8

Ref: 20.2 1.0 53.0*

Mesh	Micron	FEED			OVERFLOW			UNDERFLOW			ACT. REC.	
		Cum. % +	Ind. % +	STPH	Cum. % +	Ind. % +	STPH	Cum. % +	Ind. % +	STPH		
40	425.0	1.4	1.4	0.1	0.0	0.0	0.0	1.4	1.4	0.1	100.0	
50	300.0	14.6	13.2	0.6	0.0	0.0	0.0	14.6	13.2	0.6	100.0	
70	212.0	47.2	32.6	1.6	0.7	0.7	0.0	47.3	32.7	1.6	100.0	
100	150.0	84.4	37.2	1.8	17.2	16.5	0.0	84.5	37.2	1.8	99.9	
140	106.0	99.5	15.1	0.7	76.1	58.9	0.0	99.5	15.0	0.7	99.2	
200	75.0	99.9	0.4	0.0	83.2	7.1	0.0	99.9	0.4	0.0	96.5	
200	-75.0	100.0	0.1	0.0	100.0	16.8	0.0	100.0	0.1	0.0	67.4	
TOTAL				4.9			0.0			4.9	99.8	

KREBS ENGINEERS
5505 WEST GILLETTE ROAD TUCSON, AZ 85743
TEL: (520) 744-8200 FAX: (520) 744-8300
www.krebs.com

LEFT BLANK

LAMELLA PACK

ST-151

LEFT BLANK

JOHN MEUNIER

NOMENCLATURE/ BILL OF MATERIALS

TITRE/ TITLE	Rev.	DESCRIPTION	PAR/ BY:	APPR:	DATE:	Affaire / Contract	Meadowbank Mining
Setling lamella modules	0	SUBMITTAL	P.Ste-Marie	P.S.M.	2009-03-26		
	1						
	2					REF. No.	NC01 / 0
	3						
DESSIN /DWG # ST-151	4					Date:	2009-01-07

REV.	ITEM	QTE/QTY. Unit.	QTE/QTY. Total	DESCRIPTION	P&ID I.D./TAG	CAT. ACCPAC	SOURCE	FA/SA FI SITE	P / N
	NC01ST-151-1	1	2	**SETTLING LAMELLA**		B64		SA	
				Material:					
				High impact Polystyrene					
				Type: Impact PS 6200					
				Model:					
				DH-35					
				Colorant:					
				Spartech 10189 BLACK (BK 21102)					
				(FDA approuved)					
				Opening:					
				35 mm (1,35 in)					
				DIMENSIONS					
				Width x length x height					
				tag A : 610 mm x 1554 mm x 762 mm					
				tag B: 580mm x 1554 mm x 762 mm					
				tag C: 507 mm x 799 mm x 762 mm					
				tag D: 507 mm x 1376 mm x 762 mm					

LEFT BLANK

Prospector
www.ides.com/prospector

Impact PS 6200

INEOS NOVA LLC - High Impact Polystyrene

Thursday, September 18, 2008

General Information

General			
Material Status	• Commercial: Active		
Availability	• North America		
Features	• Good Drawdown	• Good Toughness	• Ultra High Impact Resistance
Uses	• Cups • Decorative Displays	• Lids • Packaging	
Agency Ratings	• FDA 21 CFR 177.1640 [1]		
Forms	• Pellets		
Processing Method	• Injection Molding		

ASTM and ISO Properties [2]

Physical	Nominal Value (English)	Nominal Value (SI)	Test Method
Specific Gravity	1.04	1.04	ASTM D792
Melt Mass-Flow Rate (MFR) (200°C/5.0 kg)	3.0 g/10 min	3.0 g/10 min	ASTM D1238
Molding Shrinkage			ASTM D955
Flow, Injection Molded, 73°F (23°C)	0.0040 to 0.0070 in/in	0.40 to 0.70 %	
Mechanical	**Nominal Value (English)**	**Nominal Value (SI)**	**Test Method**
Tensile Modulus			ASTM D638
73°F (23°C), Injection Molded	310000 psi	2140 MPa	
Tensile Strength			ASTM D638
Yield, 73°F (23°C), Injection Molded	3630 psi	25.0 MPa	
Tensile Elongation			ASTM D638
Break, 73°F (23°C), Injection Molded	50 %	50 %	
Flexural Modulus			ASTM D790
73°F (23°C), Injection Molded	285000 psi	1960 MPa	
Flexural Strength			ASTM D790
73°F (23°C), Injection Molded	4930 psi	34.0 MPa	
Impact	**Nominal Value (English)**	**Nominal Value (SI)**	**Test Method**
Notched Izod Impact [3]			ASTM D256
73°F (23°C), 0.125 in (3.18 mm), Injection Molded	4.20 ft·lb/in	224 J/m	
Hardness	**Nominal Value (English)**	**Nominal Value (SI)**	**Test Method**
Rockwell Hardness (L-Scale)	49	49	ASTM D785
Thermal	**Nominal Value (English)**	**Nominal Value (SI)**	**Test Method**
Deflection Temperature Under Load			ASTM D648
264 psi (1.8 MPa), Annealed	185 °F	85.0 °C	
Vicat Softening Temperature	212 °F	100 °C	ASTM D1525
Electrical	**Nominal Value (English)**	**Nominal Value (SI)**	**Test Method**
Dielectric Constant (1E+6 Hz)	2.590	2.590	ASTM D150
Flammability	**Nominal Value (English)**	**Nominal Value (SI)**	**Test Method**
Flame Rating - UL	HB	HB	UL 94
Additional Properties			
Dielectric Strength, 0.125in: 500			

Copyright © 2008 - IDES - The Plastics Web ®
The information presented on this data sheet was acquired by IDES from the producer of the material. IDES makes substantial efforts to assure the accuracy of this data. However, IDES assumes no responsibility for the data values and strongly encourages that upon final material selection, data points are validated with the material supplier.

Impact PS 6200

INEOS NOVA LLC - High Impact Polystyrene

Processing Information		
Injection	**Nominal Value (English)**	**Nominal Value (SI)**
Processing (Melt) Temp	374 to 525 °F	190 to 274 °C
Mold Temperature	100 to 180 °F	38.0 to 82.0 °C

Notes

[1] When used unmodified for the manufacture of food contact articles, Impact PS 6200 will comply with Food Additive Regulations FDA 21 CFR 177.1640 under the U.S. Food, Drug and Cosmetic Act. Such uses are subject to good manufacturing practices and any other limitations which are part of the statute or regulations. These should be consulted for complete details.

[2] Typical properties: these are not to be construed as specifications.

[3] Notch Depth: 9.8 mil (0.25 mm)

Copyright © 2008 - IDES - The Plastics Web ®
The information presented on this data sheet was acquired by IDES from the producer of the material. IDES makes substantial efforts to assure the accuracy of this data. However, IDES assumes no responsibility for the data values and strongly encourages that upon final material selection, data points are validated with the material supplier.
IDES - The Plastics Web ®
800-788-4668 or 307-742-9227 | www.ides.com

INEOSNOVA

Material Safety Data Sheet

Material Name: **Impact Polystyrene, Natural Grades**

MSDS ID: INEOS-NOVA-0056

Section 1 - Product and Company Identification

Synonyms: Impact modified polystyrene, HIPS
Chemical Name: Benzene, ethenyl-, polymer with 1,3-butadiene
Chemical Family: Polymer
Material Use: Petrochemical industry: Plastics
Chemical Formula: $(C_8H_8\ C_4H_6)_x$

INEOS NOVA
25846 SW Frontage Road
Channahon, Illinois, USA 60410

EMERGENCY Telephone Numbers:

1-800-424-9300, 703-527-3887 (CHEMTREC-USA) (24 hours)

Product Information: 1-866-890-6354
MSDS Email: psinfo@ineos-nova.com

Section 2 - Hazards Identification

HMIS Ratings: Health: 0 **Fire:** 1 **Physical Hazard:** 0
*Hazard Scale: 0 = Minimal 1 = Slight 2 = Moderate 3 = Serious 4 = Severe * = Chronic hazard*
NFPA Ratings: Health: 0 **Fire:** 1 **Reactivity:** 0
Hazard Scale: 0 = Minimal 1 = Slight 2 = Moderate 3 = Serious 4 = Severe

Emergency Overview

Product is a white, inert, solid bead or pellet with slight odor. This product is not considered flammable according to OSHA, but will burn on prolonged exposure to flame or high temperature. Slipping hazard.

Potential Health Effects: Eyes

Contact with hot or molten material may cause severe thermal injury, including in extreme contact possible blindness. Contact of powder or fines with eye may cause mechanical irritation.

Potential Health Effects: Skin

Contact with hot or molten material may cause severe thermal burns. Contact of powder or fines with skin may cause mild irritation, that is increased by mechanical rubbing or if skin is dry.

Potential Health Effects: Ingestion

Ingestion of this product is unlikely. However, ingestion of product may produce mild gastrointestinal irritation and disturbances.

Potential Health Effects: Inhalation

Inhalation of fine particles may cause respiratory irritation. Fumes produced during thermal processing may cause irritation to the respiratory system.

Section 3 - Composition / Information on Ingredients

CAS #	Component	Percent by Wt.
9003-55-8	Styrene-Butadiene polymer	94-100

Additional Information

This product may be regulated, have exposure limits or other information identified as the following: Nuisance particulates.
This product is NOT considered hazardous under 29 CFR 1910.1200 (Hazard Communication).
This material is NOT a controlled product under Canadian WHMIS regulations.
This material is NOT REGULATED as a hazardous material/dangerous goods for transportation.

See Section 8 for applicable exposure limits. See Section 11 for applicable toxicity data.

Section 4 - First Aid Measures

First Aid: Eyes

Remove contact lenses, if it can be done safely. Immediately flush eyes with water for at least 15 minutes, while holding eyelids open. Seek medical attention if symptoms develop or persist.

First Aid: Skin

For skin contact, wash affected area with soap and water. Seek medical attention, if symptoms develop or persist. In case of contact with molten product, cool rapidly with water and seek immediate medical attention. Do not attempt to remove molten product, or molten product that has cooled, from skin without medical assistance.

First Aid: Inhalation

Move affected individual to non-contaminated air. Loosen tight clothing such as a collar, tie, belt or waistband to facilitate breathing. Seek immediate medical attention if the individual is not breathing, unconscious or if any other symptoms persist.

First Aid: Ingestion

Material is not expected to be absorbed from the gastrointestinal tract. DO NOT INDUCE VOMITING. Loosen tight clothing such as a collar, tie, belt or waistband. Seek immediate medical attention.

First Aid: Notes to Physician

Burns should be treated as thermal burns. Molten resin will come off as healing occurs; therefore, immediate removal from skin is not necessary. Treatment for overexposure should be directed at controlling the symptoms and clinical condition of the patient. After adequate first aid, no further treatment is necessary, unless symptoms reappear. Ingested material should pass through the digestive system without injury.

Section 5 - Fire Fighting Measures

See Section 9: Physical Properties for flammability limits, flash point and autoignition information.

General Fire Hazards

This product is not considered flammable according to OSHA, but will burn on prolonged exposure to flame or high temperature. High concentration of airborne powders or dust may form explosive mixture with air.

Explosion Hazards

Accumulated fine dusts may form an explosive mixture with air. Take precautionary measures to prevent contact with electrostatic discharges. Risk of dust/air explosion is increased if flammable vapors are present.

Hazardous Combustion Products

Styrene, butadiene, carbon dioxide, carbon monoxide.

Extinguishing Media

Dry chemical, foam, carbon dioxide, or water fog or spray. Avoid high pressure, direct water stream that may spread molten or burning resins.

Fire Fighting Equipment/Instructions

Position upwind. Keep unnecessary personnel away. Move containers from fire area if you can do so without risk. Fight fire from maximum distance or use unmanned holders or monitor nozzles. Fire fighters should wear full-face, self-contained breathing apparatus and thermal protective clothing. Avoid inhaling any smoke and combustion products. Cool containers with flooding quantities of water until well after the fire is out. Control runoff waters to prevent entry into sewers, drains, underground or confined spaces and waterways.

Section 6 - Accidental Release Measures

Evacuation Procedures

Isolate area. Keep unnecessary personnel away.

Spills

Stop leak and contain spill. Prevent entry into sewers, drains, underground or confined spaces, and waterways. Spilled product may create a dangerous slipping hazard. Use appropriate tools to put the spilled solid in an appropriate recovery or waste disposal container. Reuse or recycle where possible. Meet any applicable regulations.

Special Procedures

Contact local police and appropriate emergency telephone numbers provided in Section 1. Ensure statutory and regulatory reporting requirements in the applicable jurisdiction are met.

Wear appropriate protective equipment and clothing during clean up. Individuals without appropriate protective equipment should be excluded from area of spill until cleanup has been completed.

See Section 8 for recommended Personal Protective Equipment and see Section 13 for waste disposal considerations.

Section 7 - Handling and Storage

Handling Procedures

Handle in contained and properly designed equipment systems. Use with adequate ventilation. Avoid ingestion and inhalation. Keep away from uncontrolled heat and incompatible materials. Ground all material handling and transfer equipment to dissipate build-up of static electricity. Keep handling areas free of loose pellets and dust accumulation. Mechanical operations involving this material should be done in such a manner as to prevent or minimize dust generation. Small amounts of fines or dust contained in granular resins may accumulate in material handling systems. If permitted to accumulate, these fines or dust can, under certain conditions, pose an explosion hazard. Every effort should be made to prevent suspension, concentration or accumulation of fines or dusts in, or around, material handling systems. For additional information on control of static and minimizing potential dust and fire hazards, refer to NFPA 654, "Standard for the Prevention of Fire and Dust Explosions from the Manufacturing, Processing, and Handling of Combustible Particulate Solids, 2006 Edition." Spilled product may create a dangerous slipping hazard.

Storage Procedures

Storage area should be clearly identified, well illuminated, and clear of obstruction. Adequate security must be provided so that unauthorized personnel do not have access to product. Store in grounded, properly designed and approved vessels and away from incompatible materials. Store and use away from heat, sparks, open flame, or any other ignition source. Use non-sparking ventilation systems, approved explosion-proof equipment, and intrinsically safe electrical systems.

DO NOT enter filled bulk containers and attempt to walk over product, due to risk of slipping and possible suffocation. Use a fall arrest system when working near open bulk storage containers.

See Section 8 for recommended Personal Protective Equipment and see Section 10 for information on incompatibilities.

Section 8 - Exposure Controls / Personal Protection

Exposure Guidelines

A: General Product Information

Refer to published exposure limits - utilize effective control measures and PPE to maintain worker exposure to concentrations that are below these limits. Ensure that eyewash stations and safety showers are proximal to the workstation location.

B: Component Exposure Limits

ACGIH, OSHA, NIOSH, EPA, Alberta, and Ontario exposure limit lists have been checked for major components listed with CAS registry numbers. Other exposure limits may apply, check with proper authorities.

Styrene-Butadiene polymer (9003-55-8)

ACGIH:	10 mg/m3 TWA (inhalable particles, recommended); 3 mg/m3 TWA (respirable particles, recommended) (related to Particulates (insoluble or poorly soluble) not otherwise specified (PNOS))
OSHA:	15 mg/m3 TWA (total dust); 5 mg/m3 TWA (respirable fraction) (related to Particulates not otherwise regulated)
Alberta:	10 mg/m3 TWA (total particulate); 3 mg/m3 TWA (respirable particulate) (related to Particulates not otherwise regulated)
Ontario:	10 mg/m3 TWAEV (inhalable); 3 mg/m3 TWAEV (respirable) (related to Particulates (insoluble or poorly soluble) Not Otherwise Classified (PNOC))

ENGINEERING CONTROLS

Maintain worker exposure below recommended exposure limits by providing adequate local exhaust ventilation. Use non-sparking, grounded ventilation systems separate from other exhaust systems. Ensure that eyewash stations and safety showers are proximal to the workstation location.

PERSONAL PROTECTIVE EQUIPMENT

Personal Protective Equipment: Eyes/Face

Wear safety glasses during normal handling. Wear full-face shield during thermal processing if contact with molten material is likely.

Personal Protective Equipment: Skin/Hands/Feet

Use impervious gloves when handling product. Wear safety footwear with good traction to help prevent slipping. Work clothing that sufficiently prevents skin contact should be worn, such as coveralls and/or long sleeves and pants.

Personal Protective Equipment: Respiratory

If engineering controls and ventilation is not sufficient to prevent build up of aerosols, vapors or dusts, appropriate NIOSH/MSHA approved air-purifying respirators or self-contained breathing apparatus (SCBA) appropriate for exposure potential should be used. Air supplied breathing apparatus must be used when oxygen concentrations are low or if airborne concentrations exceed the limits of the air purifying respirators.

Personal Protective Equipment: General

Personal protective equipment (PPE) should not be considered a long-term solution to exposure control. Employer programs to properly select, fit, maintain, and train employees to use equipment must accompany PPE. Consult a competent industrial hygiene resource, the PPE manufacturer's recommendation, and/or applicable regulations to determine hazard potential and ensure adequate protection.

Section 9 - Physical & Chemical Properties

Physical State and Appearance:	Solid, beads or pellets	**Color:**	White
Odor:	Slight odor	**pH:**	Not applicable
Vapor Pressure:	Not applicable	**Vapor Density @ 0ºC (Air=1):**	Not applicable
Melting Point:	105ºC-135ºC (221ºF-275ºF)	**Boiling Point:**	Not applicable
Solubility (H2O):	Insoluble	**Specific Gravity (Water=1):**	1.04 g/cc, 104 kg/m
Dispersion Properties:	Is not dispersed in cold water	**Softening Point:**	79ºC-127ºC (174ºF-261ºF)
Flash Point:	345ºC-360ºC (653ºF-680ºF) (Combustible Flash Ignition Temperature)	**Flammability Classification:**	Not considered flammable according to OSHA.
Flash Point Method:	Not available	**Auto Ignition:**	427ºC (800ºF)
Lower Flammable Limit (LFL):	Not available	**Upper Flammable Limit (UFL):**	Not available

Section 10 - Stability & Reactivity Information

Chemical Stability

This material is stable under normal use conditions for shock, vibration, pressure, and ambient temperature.

Instability

Decomposition temperature: 300ºC (572ºF)

Chemical Stability: Conditions to Avoid

Avoid processing material over 300ºC (572ºF).

Incompatibility

Not resistant to oxidizing agents, dissolves in organic solvents.

Hazardous Polymerization

Will not occur.

Corrosivity

Not expected to be corrosive.

Hazardous Decomposition

Styrene, butadiene, carbon dioxide, carbon monoxide

Section 11 - Toxicological Information

A: Acute Toxicity - General Material Information

Material is considered essentially inert and non-toxic. Exposure to high levels of dusts may be irritating to the eyes. Skin/eye contact with molten or heated material may cause burns. Vapors/heated fumes may be irritating to the respiratory system.

B: Acute Toxicity - LD50/LC50

No LD50/LC50's are available for this product's components.

C: Chronic Toxicity - General Material Information

No additional information available.

D: Chronic Toxicity - Carcinogenic Effects

ACGIH, EPA, IARC, OSHA, and NTP carcinogen lists have been checked for selected similar materials or those components with CAS registry numbers.

Styrene-Butadiene polymer (9003-55-8)

IARC: Supplement 7, 1987; Monograph 19, 1979 (Group 3 (not classifiable))

Section 12 - Ecological Information

Ecotoxicity

The information below is based on knowledge of this product's components and the ecotoxicity of similar products. Sewer/waterway obstruction: If aquatic animals ingest pellets, digestive tract obstruction may occur. Product is not expected to be toxic, but small particles may cause adverse physical effects in aquatic and terrestrial organisms.

Environmental Fate/Mobility

Sinks in water. Pellets are persistent in aquatic and terrestrial systems. Product should be recovered from water and land following spills. This product has not been found to migrate through soils.

Persistence/Degradability

Pellets are persistent in aquatic and terrestrial systems. Do not allow product to enter sewer or waterways. Not expected to biodegrade.

Bioaccumulation/Accumulation

Pellets may accumulate in the digestive systems of birds and aquatic life, causing injury and possible death due to starvation.

Section 13 - Disposal Considerations

U.S./Canadian Waste Number & Descriptions

A: General Product Information

This product, if discarded, is not expected to be hazardous waste according to US or Canadian regulations. Check Local, State, Federal and Provincial Environmental Regulations prior to disposal.

The recommended disposal methods for polymers in order of preference are: 1) clean and reuse if possible; 2) contact resin broker; 3) contact plastic recycler; 4) incinerate with waste heat recovery and/ or 5) landfill. Reuse, recycling, storing, transportation, and disposal must be in accordance with applicable federal, state/ provincial and local regulations. DO NOT ATTEMPT TO DISPOSE OF BY UNCONTROLLED IGNITION.

See Section 7: Handling and Storage and Section 8: Exposure Controls/Personal Protection for additional information that may be applicable for safe handling and the protection of employees.

Waste generator is advised to carefully consider hazardous properties and control measures needed for other materials that may be found in the waste.

B: Component Waste Numbers

No EPA Waste Numbers are applicable for this product's components.

Section 14 - Transportation Information

Transportation Information

This material is not regulated as a hazardous material for transportation.

Section 15 - Regulatory Information

A: International Regulations

The monomers are listed by EINECS for styrene-butadiene copolymer.

Component Analysis - International Inventory Status

Component	CAS #	US - TSCA	CANADA - DSL	EU - EINECS
Styrene-Butadiene polymer	9003-55-8	Yes	Yes	Exempt

B: USA Federal & State Regulations

Ongoing occupational hygiene, medical surveillance programs, or site emission or spill reporting may be required by Federal or State regulations. Check for applicable regulations.

USA OSHA Hazard Communication Class

This product is not considered hazardous under 29 CFR 1910.1200 (Hazard communication).

USA Right-to-Know - Federal

None of this product's components are listed under SARA Section 302 (40 CFR 355 Appendix A), SARA Section 313 (40 CFR 372.65), or CERCLA (40 CFR 302.4).

USA Right-to-Know - State

None of this product's components are listed on the state lists from NJ or PA. Some components (including those present only in trace quantities, and therefore not listed in this document) may be included on the Right To Know lists of other U.S. states. The reader is therefore cautioned to contact his or her INEOS NOVA representative for further U.S. State Right-To-Know information.

C: Canadian Regulations - Federal and Provincial

Canadian Environmental Protection Act (CEPA): The components of this product are on the Domestic Substances List (DSL), or are exempt, and are acceptable for use under the provisions of CEPA.

WHMIS Ingredient Disclosure List (IDL)

No components are listed in the WHMIS Ingredient Disclosure List (IDL).

WHMIS Classification

Workplace Hazardous Materials Information Systems (WHMIS): This product has been classified in accordance with Canadian Controlled Product Regulations (CPR) hazard criteria and this MSDS contains complete CPR-required information. Not controlled under WHMIS (Canada).

Provincial Regulations

Ongoing occupational hygiene, medical surveillance programs, or site emission or spill reporting may be required by Federal or Provincial regulations. Check for applicable regulations.

Section 16 - Other Information

Label Information

PRECAUTIONS: Product is a white, inert, solid bead or pellet with slight odor. This product is not considered flammable according to OSHA, but will burn on prolonged exposure to flame or high temperature. Slipping hazard.

FIRST AID:
SKIN: For skin contact, wash affected area with soap and water. Seek medical attention, if symptoms develop or persist. In case of contact with molten product, cool rapidly with water and seek immediate medical attention. Do not attempt to remove molten product, or molten product that has cooled, from skin without medical assistance.
EYES: Remove contact lenses, if it can be done safely. Immediately flush eyes with water for at least 15 minutes, while holding eyelids open. Seek medical attention if symptoms develop or persist.
INHALATION: Move affected individual to non-contaminated air. Loosen tight clothing such as a collar, tie, belt or waistband to facilitate breathing. Seek immediate medical attention if the individual is not breathing, unconscious or if any other symptoms persist.
INGESTION: Material is not expected to be absorbed from the gastrointestinal tract. DO NOT INDUCE VOMITING. Loosen tight clothing such as a collar, tie, belt or waistband. Seek immediate medical attention.

IN CASE OF A LARGE SPILL: Stop leak and contain spill. Prevent entry into sewers, drains, underground or confined spaces, and waterways. Spilled product may create a dangerous slipping hazard. Use appropriate tools to put the spilled solid in an appropriate recovery or waste disposal container. Reuse or recycle where possible. Meet any applicable regulations.

References

Available on request.

Key/Legend

ACGIH = American Conference of Governmental Industrial Hygienists; BOD = Biochemical Oxygen Demand; CAS = Chemical Abstracts Service; CERCLA = Comprehensive Environmental Response, Compensation, and Liability Act; CPR = Controlled Products Regulations; DOT = Department of Transportation; DSL = Domestic Substances List; EINECS = European Inventory of Existing Commercial Chemical Substances; EPA = Environmental Protection Agency; EU = European Union; FDA = Food and Drug Administration; IARC = International Agency for Research on Cancer; IDL = Ingredient Disclosure List; Kow = Octanol/water partition coefficient; LEL - Lower Explosive Limit; NIOSH = National Institute for Occupational Safety and Health; NJTSR = New Jersey Trade Secret Registry; NTP = National Toxicology Program; OSHA = Occupational Safety and Health Administration; RCRA = Resource Conservation and Recovery Act; SARA Superfund Amendments and Reauthorization Act; TDG = Transportation of Dangerous Goods; TSCA = Toxic Substances Control Act.

MSDS Prepared by: INEOS NOVA

MSDS Information Phone Number: 1-866-890-6354

MSDS Information Email: psinfo@ineos-nova.com

Other Information

Notice to Reader

ALTHOUGH THE INFORMATION CONTAINED IN THIS DOCUMENT IS PRESENTED IN GOOD FAITH, BASED ON AVAILABLE INFORMATION BELIEVED TO BE RELIABLE AT THE TIME OF PREPARATION OF THIS DOCUMENT, **INEOS NOVA MAKES NO WARRANTIES OR REPRESENTATIONS WITH RESPECT TO THE INFORMATION OR THE PRODUCTS DESCRIBED HEREIN, AND EXPRESSLY DISCLAIMS ALL IMPLIED WARRANTIES AND CONDITIONS (INCLUDING ALL WARRANTIES AND CONDITIONS OF MERCHANTABILITY OR FITNESS FOR A PARTICULAR PURPOSE). NO FREEDOM FROM INFRINGEMENT OF ANY PATENT OWNED NY INEOS NOVA OR OTHERS IS TO BE INFERRED. THIS INFORMATION IS SUBJECT TO CHANGE WITHOUT NOTICE. PLEASE CONTACT INEOS NOVA FOR THE MOST CURRENT VERSION OF THIS MSDS. INEOS NOVA DOES NOT ASSUME RESPONSIBILITY FOR MSDS OBTAINED FROM THIRD PARTY SOURCES.**

RESPONSIBILITY FOR USE, STORAGE, HANDLING AND DISPOSAL OF THE PRODUCTS DESCRIBED HEREIN, WHETHER ALONE OR IN COMBINATION WITH ANY OTHER SUBSTANCE, IS THAT OF THE PURCHASER AND/OR END USER.

This is the end of MSDS # INEOS-NOVA-0056.

PRODUCT INFORMATION

Issued: October 31, 2008

DESCRIPTION:

PRODUCT NAME: Black Polystyrene Colour Concentrate

PRODUCT CODE: 10189 BLACK (BK 21102)

PHYSICAL PROPERTIES:

CARRIER RESIN

TYPE: Crystal Polystyrene

MELT INDEX 7.0 g/10 min. ASTM D-1238, Cond. 200/5

DENSITY: 1.04 g/cm^3

MASTERBATCH

PIGMENTATION: 25% (Nominal)

FOOD APPROVAL STATUS:

FDA: The ingredients in this product are regulated for use by the FDA according to the guidelines of paragraphs 177.1640, 178.3297, and 178.2010 of Title 21 of the Code of Federal Regulations.

577 Erie St., Stratford, Ont. N5A 2N7 Tel. (519) 271•1680 / 1•800•265•4338 / Fax (866) 364•5172

This document was created with Win2PDF available at http://www.daneprairie.com.
The unregistered version of Win2PDF is for evaluation or non-commercial use only.

LEFT BLANK

SLUDGE TANK

ST-999

LEFT BLANK

JOHN MEUNIER

NOMENCLATURE/ BILL OF MATERIALS

TITRE/ TITLE	Rev.	DESCRIPTION	PAR/ BY:	APPR:	DATE:	Affaire / Contract	Meadowbank Mining
Sludge tank	0	SUBMITTAL	Julie Trudel	J.T.	2009-03-26		
	1						
	2					REF. No.	NC01 | | 0
	3						
DESSIN /DWG # ST-999	4					Date:	2009-01-07

REV.	ITEM	QTE/QTY. Unit.	QTE/QTY. Total	DESCRIPTION	P&ID I.D./TAG	CAT. ACCPAC	SOURCE	FA/SA FI SITE	P / N
	NC01ST-999-1	1	1	**SLUDGE TANK**	T4-011	B80		FI	
				Material:					
				High Density Polyethylene					
				Supplier					
				Aco Container					
				Model:					
				OT-750					
				Capacity:					
				3400L					
				Top:					
				Open (no lid)					
				Dimensions:					
				70” diameter X 58” tall					
				Weight:					
				250 Lbs					
				Nozzles:					
				1x 6” HDPE gusseted flange					
				1x 8” HDPE gusseted flange					

LEFT BLANK

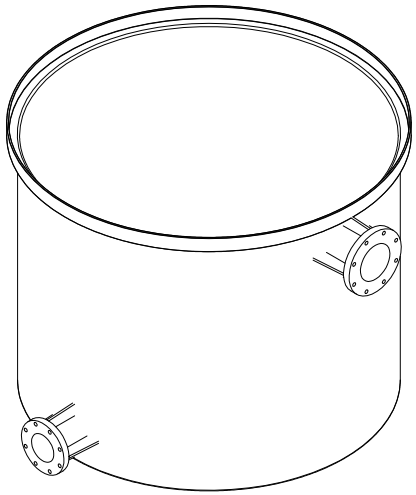

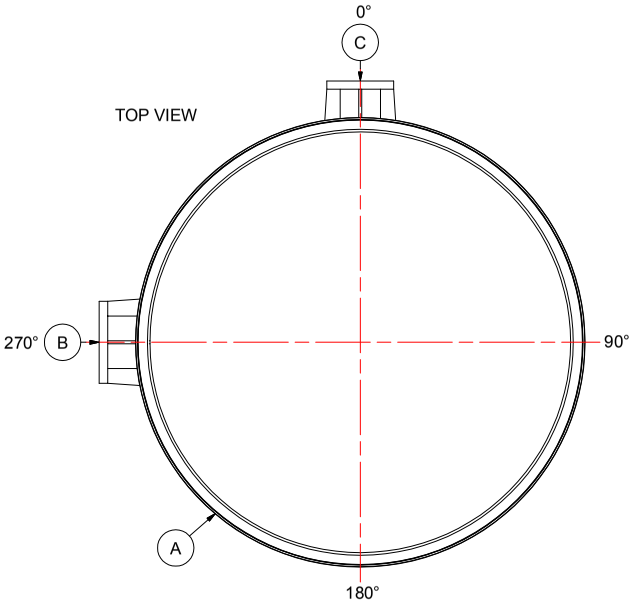

MATERIALS LIST		
ITEMS	DESCRIPTION	NOTES
A	OT-750 HDPE OPEN TOP TANK	
B	8" HDPE GUSSETED FLANGE	
C	6" HDPE GUSSETED FLANGE	

NOTES:

1. TANK IS MANUFACTURED FROM HDPE. (1.5 SG)
2. TANK IS MANUFACTURED TO ASTM-D-1998 STANDARD.
3. ACO RECOMMENDS FLANGE GASKETS TO BE MIN. 1/4" THICK.

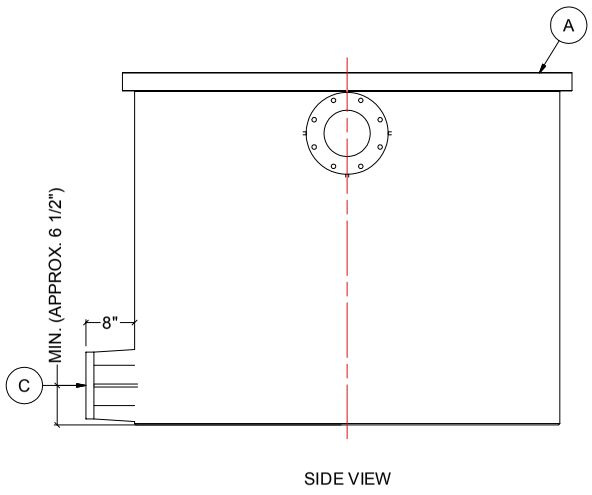

SIDE VIEW

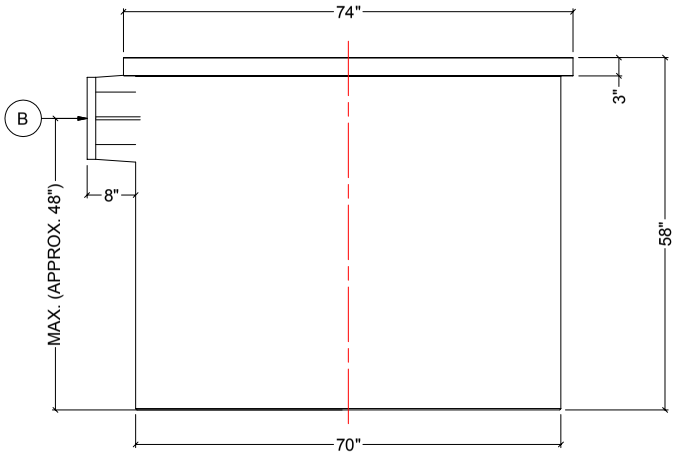

FRONT VIEW

APPROVED

REV	DATE	DESCRIPTION	BY	APPD	REVD

REVISIONS

CUSTOMER: JOHN MEUNIER / VEOLIA WATER

TITLE: OT-750 TANK WITH FITTINGS

ACO JOB NO: 55724
PURCHASE ORDER NO: 015374
PURCHASER'S EQUIP. NO:

THIS DRAWING IS THE PROPERTY OF ACO CONTAINER SYSTEMS LTD. AND SHALL NOT BE COPIED OR TRANSFERRED WITHOUT THE WRITTEN CONSENT OF ACO CONTAINER SYSTEMS LTD.

ENGINEERS SEAL

ACO CONTAINER SYSTEMS LTD.
PICKERING - ONTARIO - CANADA
ACO CONTAINER SYSTEMS LTD.
794 MCKAY RD.
PICKERING, ONTARIO, CANADA
L1W 2Y4
TEL. 905-683-8222
FAX 905-683-2959

DESIGNED	
DRAWN	WM
CHECKED	
APPROVED	
SCALE	N.T.S.
DATE	07-06-09

DWG No: OT-750-55724
REV: 0

GENERAL ARRANGEMENT DRAWINGS

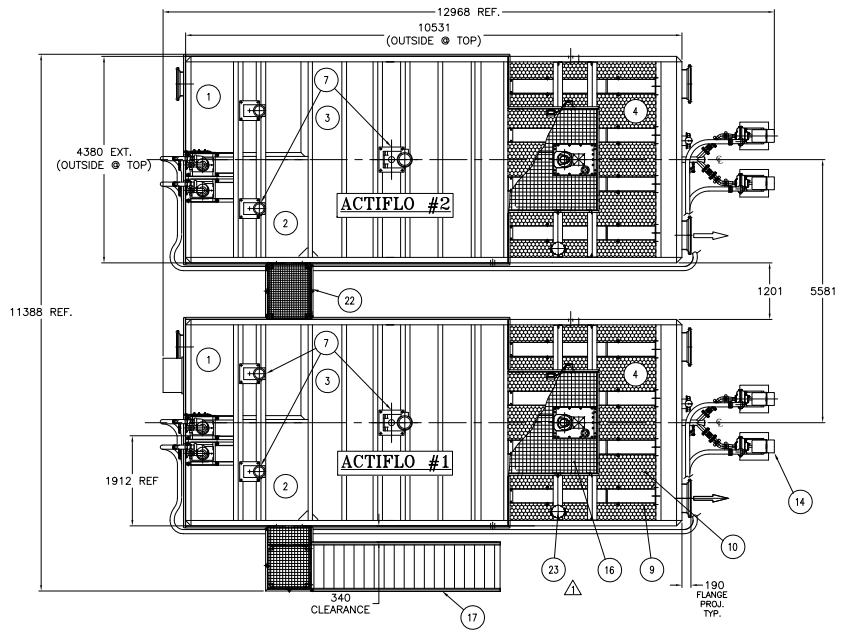

PLAN VIEW

1. COAGULATION TANK
2. INJECTION TANK
3. MATURATION TANK
4. SETTLING TANK
5. HYDROCYCLONE
6. HYDROCYCLONE SLUDGE OUTLET
7. MIXER
8. RAW WATER INLET
9. CLARIFIED WATER TROUGH
10. LAMELLA
11. DRAIN
12. CLARIFIED WATER OUTLET
13. PARTIAL DRAIN
14. MICROSAND RECIRCULATION PUMPS
15. HANDRAIL
16. GRATING
17. STAIRS
18. RAW WATER TURBIDIMETER
19. CLARIFIED WATER TURBIDIMETER
20. PH MITER
21. JUNCTION BOX
22. PLATFORM
23. SERVICE WATER PUMPS

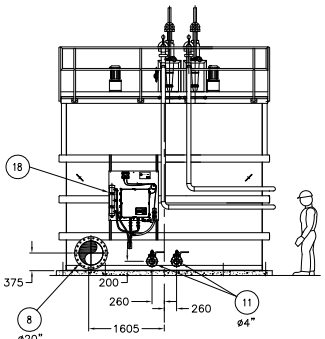

LEFT SIDE VIEW
ACTIFLO #1

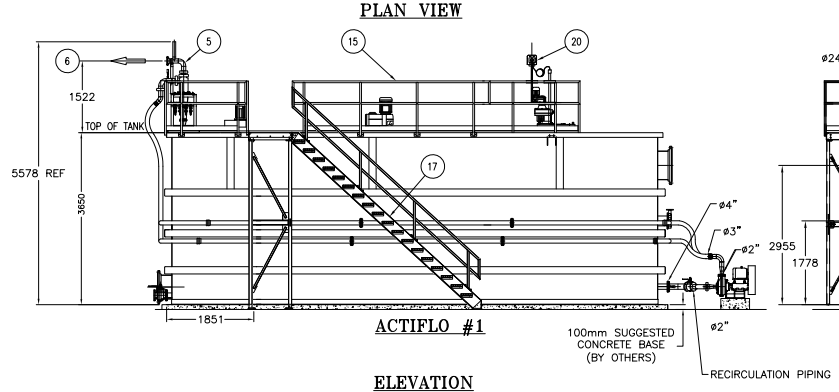

ACTIFLO #1

ELEVATION

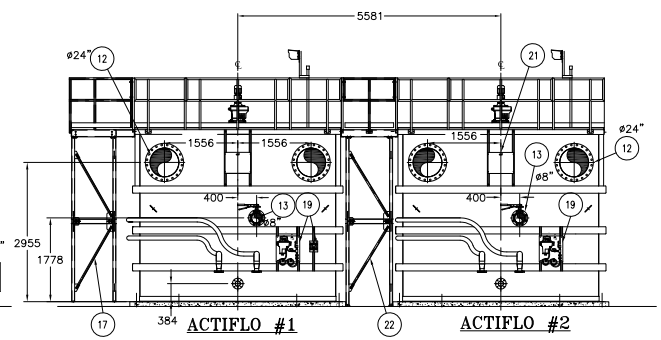

ACTIFLO #1

ACTIFLO #2

RIGHT SIDE VIEW
(PUMPS NOT SHOWN FOR CLARITY)

REV	DESCRIPTION	DATE	DWN	CHKD	APVD	ECN
1	SERVICE WATER PUMPS ADDED	2009-04-10	O.F.	N/A	P.S.M.	N/A
0	FOR INFORMATION	2009-03-10	O.F.	N/A	M.S.	N/A

STD: "D" 22x34 | REF: RA16, RC01 | BAR = 1" AT PLOT SCALE

CONFIDENTIALITY AND INTELLECTUAL PROPERTY NOTICE
ALL INFORMATION CONTAINED IN THIS DOCUMENT IS THE SOLE PROPERTY OF JOHN MEUNIER INC. AND IS PROTECTED BY ALL APPLICABLE LAWS, INCLUDING BUT NOT LIMITED TO COPYRIGHT AND OTHER INTELLECTUAL PROPERTY LAWS. THE DESIGN CONCEPTS AND INFORMATION CONTAINED HEREIN ARE PROPRIETARY TO JMI AND ARE SUBMITTED IN CONFIDENCE. THEY ARE NOT TRANSFERABLE. THEY MUST BE USED ONLY FOR THE PURPOSE FOR WHICH THE DOCUMENT IS EXPRESSLY SUBMITTED AND NO IMPLICIT LICENCE IS GRANTED OTHERWISE BY THE SUBMISSION OF THIS DOCUMENT. THEY ARE CONFIDENTIAL AND PRIVILEGED INFORMATION OF JMI AND THEY MUST NOT BE DISCLOSED, REPRODUCED, LOANED, PERMITTED OR USED IN ANY OTHER MANNER WITHOUT THE EXPRESS WRITTEN CONSENT OF JMI. JMI ASSUMES NO RESPONSIBILITY OR LIABILITY FOR THE USE OF THIS DOCUMENT OR THE DESIGN CONCEPTS AND INFORMATION CONTAINED HEREIN FOR ANOTHER PROJECT, OR IN A MANNER THAT DOES NOT RELATE TO THE FITNESS OR PURPOSE OF THIS DOCUMENT. IN NO EVENT SHALL THIS DOCUMENT OR THE DESIGN CONCEPTS AND INFORMATION CONTAINED HEREIN BE USED IN A MANNER DETRIMENTAL TO THE INTEREST OF JMI. ALL COPYRIGHT, PATENT AND OTHER INTELLECTUAL PROPERTY RIGHTS ARE RESERVED. ACCEPTANCE OF THE DELIVERY OF THIS DOCUMENT CONSTITUTES AGREEMENT TO THESE TERMS AND CONDITIONS.

DESIGNER	M. DELORME	DATE 2007-04-27
CHECKER	N/A	DATE N/A
ENGINEER	M. SABOURIN	DATE 2007-12-03
MANAGER	N/A	DATE N/A
SCALE:	1 : 50	

TITLE: ACP-700R GENERAL ARRANGEMENT

CLIENT: MEADOWBANK MINING

JOHN MEUNIER ISO 9001: 2000
4105 Sartelon Street, Saint-Laurent, Qc, Canada H4S 2B3 / Tel: (514) 334-7230 / Fax: (514) 334-5070

PROJECT	DRAWING	INTERNAL	SHEET	REV
NC01-	GA100	ACP700R	1 OF 1	1

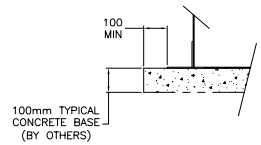

SECTION A

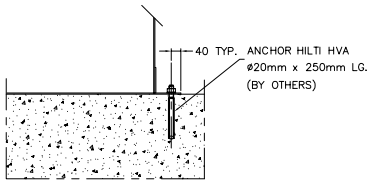

DETAIL B

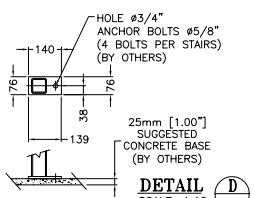

DETAIL D
SCALE: 1:10

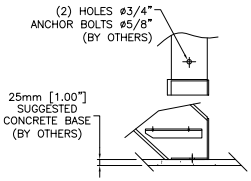

DETAIL E
SCALE: 1:10

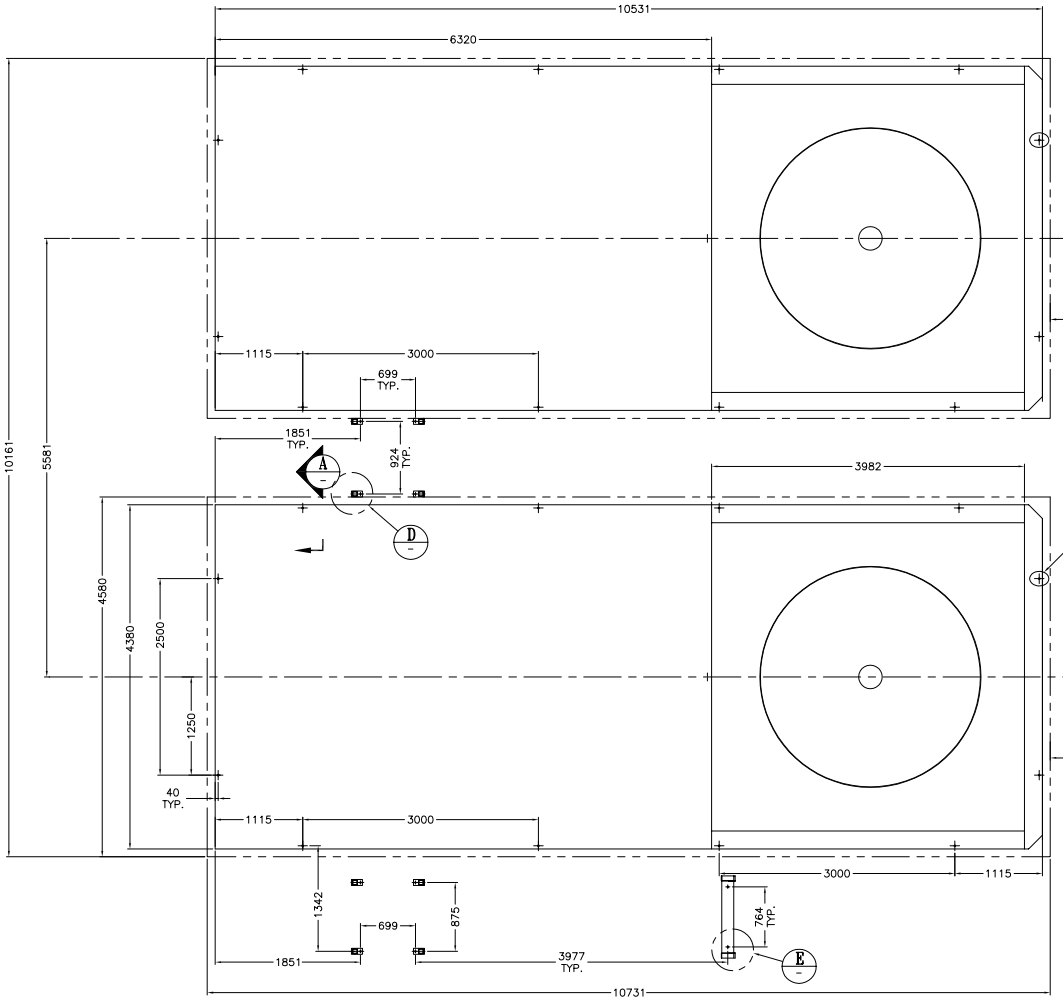

FOOTING VIEW

NOTES:

1. SEE DRAWING GA100 FOR REFERENCES
2. TOTAL UNIT WEIGHT EMPTY: 46 200 Lbs
   (21 000 Kg)
3. TOTAL UNIT WEIGHT IN SERVICE (FULL OF WATER):
   381 000 Lbs
   (173 000 Kg)

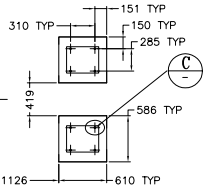

SEE DETAIL "B"
(12) HOLES ø22mm
ANCHOR BOLT ø20mm
(BY OTHERS)

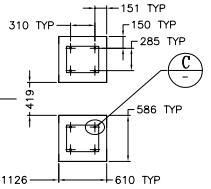

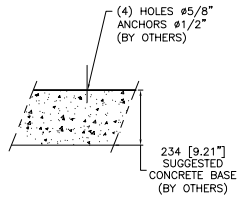

DETAIL C

CONFIDENTIALITY AND INTELLECTUAL PROPERTY NOTICE
ALL INFORMATION CONTAINED IN THIS DOCUMENT IS THE SOLE PROPERTY OF JOHN MEUNIER INC. AND IS PROTECTED BY ALL APPLICABLE COPYRIGHT, TRADE SECRET AND OTHER INTELLECTUAL PROPERTY LAWS. THE DESIGN CONCEPTS AND INFORMATION CONTAINED HEREIN ARE PROPRIETARY TO JM AND ARE SUBMITTED IN CONFIDENCE. THEY ARE NOT TRANSFERABLE, THEY MUST BE USED ONLY FOR THE PURPOSE FOR WHICH THE DOCUMENT IS SUBMITTED AND MUST NOT BE DISCLOSED WITHOUT THE PRIOR CONSENT OF THE SUBMISSION OF THIS DOCUMENT, THEY ARE CONFIDENTIAL AND PRIVILEGED INFORMATION OF JM AND THEY MUST NOT BE DISCLOSED, REPRODUCED, LOANED, MODIFIED OR USED IN ANY OTHER MANNER WITHOUT THE EXPRESS WRITTEN CONSENT OF JM. AN ASSUMED NO RESPONSIBILITY OR LIABILITY FOR THE USE OF THIS DOCUMENT, OR PORTIONS THEREOF, FOR ANY PURPOSE OTHER THAN HEREIN FOR ANOTHER PROJECT, OR IN A MANNER THAT DOES NOT RELATE TO THE INTENDED OR PURPOSE OF THIS DOCUMENT. IN NO EVENT SHALL THIS DOCUMENT OR THE DESIGN CONCEPTS AND INFORMATION CONTAINED HEREIN BE USED IN A MANNER DETRIMENTAL TO THE INTEREST OF JM. ALL COPYRIGHT, TRADE AND OTHER INTELLECTUAL PROPERTY RIGHTS ARE RESERVED. BY ACCEPTING THIS DOCUMENT, THE RECIPIENT DOCUMENT CONSTITUTES AGREEMENT TO THESE TERMS AND CONDITIONS.

REV	DESCRIPTION	DATE	DWN	CHKD	APVD	ECN
0	FOR INFORMATION	2009-03-10	O.F.	N/A	M.S.	N/A

	DATE
DESIGNER O.F.	2006-07-14
CHECKER N/A	N/A
ENGINEER M.S.	2007-12-03
MANAGER N/A	N/A
SCALE: 1:30	

TITLE: ACTIFLO ACP-700R
FOOT PRINT

CLIENT: MEADOWBANK MINING

JOHN MEUNIER ISO 9001: 2000
4105 Sartelon Street, Saint-Laurent, Qc, Canada H4S 2B3 / Tel: (514) 334-7230 / Fax: (514) 334-5070

PROJECT	DRAWING	INTERNAL	SHEET	REV
NC01-GA101	ACP700R	1	1 OF 1	0

STD: "D" 22x34 | REF: RA16, RC01 | BAR = 1" AT PLOT SCALE

Mar 11, 2009 8:36:12 - H:\2009\Execution\NC01 Meadowbank Mining\3-Operations\3.2- Ingénierie\IN-01 Dessins\GA\NC01_GA101ACP700R_0.dwg - fredorreb

IDENT.	DESCRIPTION	DIA
A	CAUSTIC SODA SUCTION FROM STORAGE TANK	ø25
B	CAUSTIC SODA PUMP DISCHARGE TO INJECTION POINT	ø15
C	CALIBRATION CYLINDER VENT/ RETURN TO SODA TANK	ø25
D	SERVICE WATER	ø15
E	STORAGE TANK VENT	ø50

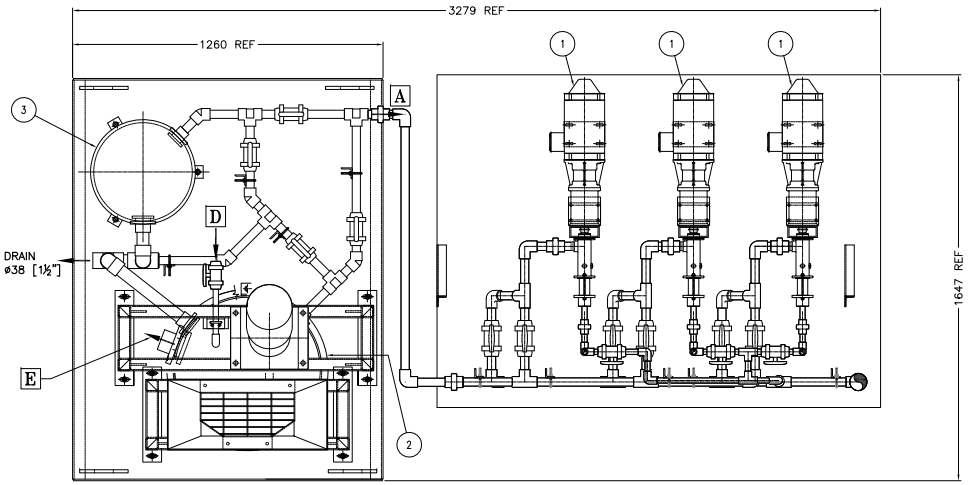

1. DOSING PUMP
2. CAUSTIC SODA PREPARATION TANK
3. CAUSTIC SODA BUFFER TANK
4. MIXER
5. JUNCTION BOX

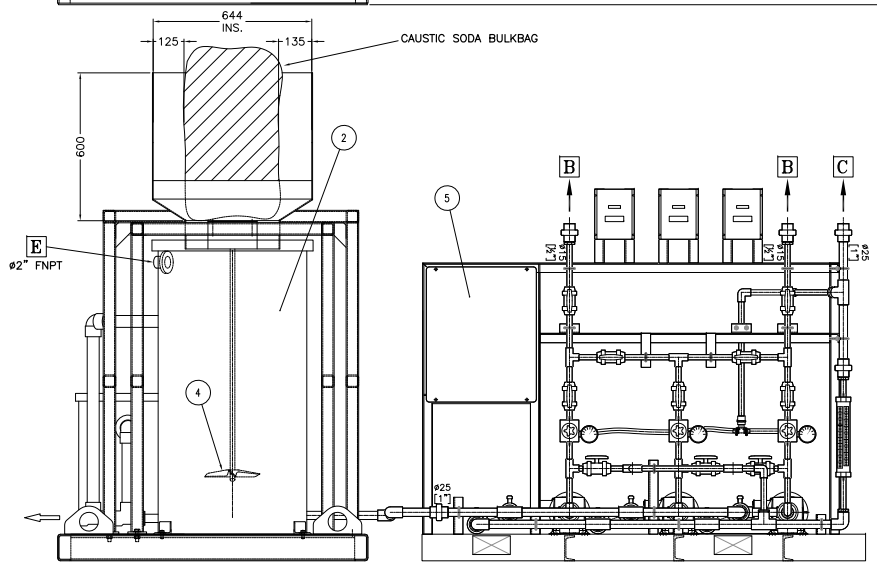

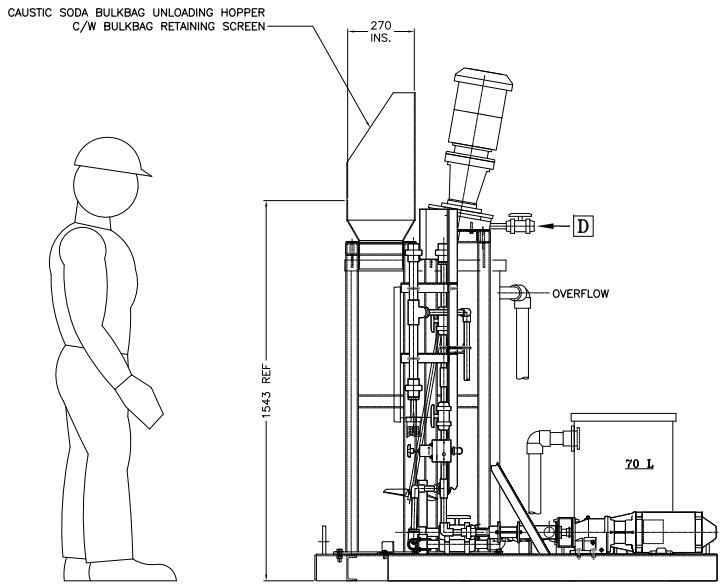

1	FOR APPROVAL	2009-05-19	M.M.	N/A	J.T.	N/A
0	FOR INFORMATION	2009-05-15	M.D.	N/A	J.T.	N/A
REV.	DESCRIPTION	DATE	DESSINÉ	VÉRIFIÉ	APPROUVÉ	ECN

AVIS DE CONFIDENTIALITÉ ET DE PROPRIÉTÉ INTELLECTUELLE
L'INFORMATION CONTENUE DANS CE DOCUMENT EST LA PROPRIÉTÉ EXCLUSIVE DE JOHN MEUNIER INC. ET EST DIVULGUÉE POUR TOUTE LA CONFIANCE REQUISE, PROPRIÉTÉ QUI LUI EST LIÉE. AUCUNE DIVULGATION, UTILISATION OU REPRODUCTION SANS LA PERMISSION ÉCRITE DE JOHN MEUNIER INC. EST PROHIBÉE. LES CONCEPTS ET L'INFORMATION CONTENUS DANS CE DOCUMENT SONT LA PROPRIÉTÉ DE JOHN MEUNIER INC. ET SONT SOUMIS À LA PROTECTION DE LA LOI SUR LE DROIT D'AUTEUR ET LA LOI SUR LES SECRETS INDUSTRIELS. CES SCHÉMA-CONCEPTS ET CETTE INFORMATION NE SONT PAS TRANSFÉRABLES. LES DESSINS D'ATELIER, ENREGISTREMENTS AUX FINS D'ESSAIS, LES DESSINS ET LES DOCUMENTS SOUMIS À L'APPROBATION EXCÈDENT NOTRE RESPONSABILITÉ QUELLE QU'ELLE SOIT EN CE QUI A TRAIT À L'INFORMATION DE NATURE CONFIDENTIELLE ET PROPRIÉTAIRE QU'ILS PEUVENT CONTENIR, À MOINS D'AVOIR CONFIRMÉ PAR ÉCRIT NOTRE ACCEPTATION DE CES DOCUMENTS. CE DOCUMENT NE SAURAIT EN AUCUN CAS ÊTRE UTILISÉ D'UNE MANIÈRE QUI PUISSE ÊTRE PRÉJUDICIABLE AUX INTÉRÊTS DE JMI. TOUT DROIT D'USAGE, DÉCOULANT DE L'INFORMATION DE NATURE CONFIDENTIELLE ET PROPRIÉTAIRE QUI NE SE TROUVE PAS DANS LE DOMAINE PUBLIC, DOIT FAIRE L'OBJET D'UNE ENTENTE ÉCRITE ENTRE LES PARTIES CONCERNÉES. REPRODUIRE, PRÊTER, REMETTRE OU UTILISER DE TOUTE AUTRE MANIÈRE SANS LE CONSENTEMENT EXPRÈS ET ÉCRIT DE LA PART DE JMI UN SECOND TORT RESPONSABILISE QUELLE QU'ELLE SOIT EN CE QUI A TRAIT À L'UTILISATION DE CE DOCUMENT. CE DOCUMENT EST DÉCLARÉ CONFIDENTIEL ET LA PARTIE RECEVANT CE DOCUMENT DOIT EN ASSURER LA CONFIDENTIALITÉ. TOUTE UTILISATION QUI N'EST PAS CONFORME À L'OBLIGATION PRÉCITÉE DU MÊME FAIT DE CE DOCUMENT CE DOCUMENT DANS SES SES SCHÉMA-CONCEPTS ET L'INFORMATION QUI Y SONT CONTENUS NE SAURAIT EN AUCUN CAS ÊTRE UTILISÉS D'UNE MANIÈRE QUI PUISSE ÊTRE PRÉJUDICIABLE AUX INTÉRÊTS DE JMI. TOUT DROIT D'USAGE, DÉCOULANT DE L'INFORMATION DE NATURE CONFIDENTIELLE ET PROPRIÉTAIRE QUI NE SE TROUVE PAS DANS LE DOMAINE PUBLIC, DOIT FAIRE L'OBJET D'UNE ENTENTE ÉCRITE ENTRE LES PARTIES CONCERNÉES. REPRODUIRE, PRÊTER, REMETTRE OU UTILISER DE TOUTE AUTRE MANIÈRE SANS LE CONSENTEMENT EXPRÈS ET ÉCRIT DE LA PART DE JMI UN SECOND TORT RESPONSABILISE QUELLE QU'ELLE SOIT EN CE QUI A TRAIT À L'UTILISATION DE CE DOCUMENT. CE DOCUMENT EST DÉCLARÉ CONFIDENTIEL ET LA PARTIE RECEVANT CE DOCUMENT DOIT EN ASSURER LA CONFIDENTIALITÉ. TOUTE UTILISATION QUI N'EST PAS CONFORME À L'OBLIGATION PRÉCITÉE DU MÊME FAIT DE CE DOCUMENT

DESSINÉ	DATE
VÉRIFIÉ	DATE
N/A	N/A
INGÉNIEUR	DATE
Julie T.	2009-05-15
DIRECTEUR	DATE
N/A	N/A
ÉCHELLE:	1:10

TITRE: ACTIFLO ACP-700R
CAUSTIC SODA DOSING SYSTEM

CLIENT: MEADOWBANK MINING

JOHN MEUNIER ISO 9001: 2000
4105 rue Sarkelon, Ville St-Laurent, Qc, Canada H4S 2B7 / Tel: (514) 334-7230 / Fax: (514) 334-5070

PROJECT	DESSIN No	INTERNE	FEUILLET	REV.
	NC01 - GA200		1 DE 1	1

STD: "D" 22x34 | REF: | BAR = 1" À L'ÉCHELLE D'IMPRESSION

FIELD INSTALLATION DRAWINGS

JOHN MEUNIER

NOMENCLATURE/ BILL OF MATERIALS

TITRE/ TITLE	Rev.	DESCRIPTION	PAR/ BY:	APPR:	DATE:	Affaire / Contract	MEADOWBANK MINING		
ACTIFLO ACP-700R ACTIFLO AND MICROSAND RECIRCULATION, INSTALLATION	0	FOR INSTALLATION	O.F.	P.S.M.	2009-04-08				
	1	ADDED ITEMS 97 & 98	O.F.	P.S.M.	2009-06-22				
	2					REF. No.	NC01	Rev.	1
	3								
DESSIN /DWG # FI100	4					Date:	2009-04-08		

REV.	ITEM	QTE/QTY. Unit.	QTE/QTY. Total	DESCRIPTION	P&ID I.D./TAG	CAT. ACCPAC	SOURCE	FA/SA FI SITE	P / N
	NC01FI100-1	2	4	HYDROCYCLONE CHAMBER ASSEMBLY			SA150		
	NC01FI100-2	1	2	SCRAPER REDUCING GEAR BOX ASSEMBLY			SA203		
	NC01FI100-3	1	2	ACTIFLO ACP-700 TANK ASSEMBLY			SA100		
	NC01FI100-4	2	4	RECIRCULATION PUMP INLET ADAPTER 3" x 2" DIA			FA122		
	NC01FI100-5	2	4	RECIRCULATION PUMP INLET ADAPTER 3" DIA			FA122		
	NC01FI100-6	2	4	RECIRCULATION PUMP OUTLET ADAPTER 3" x 2" DIA			FA121		
	NC01FI100-7	1	2	"Y" TANK ADAPTER-OUTLET TO RECIRCULATION PUMP 4" x 3" DIA			FA120		
	NC01FI100-8	2	4	45° ELBOW RECIRCULATION PUMP INLET ADAPTER 3" DIA			FA123		
	NC01FI100-9	2	4	MICRISAND RECIRCULATION PUMP (LINATEX 50mm x 50mm)	P2-011, P2-012 P2-021, P2-022	B56	ST-101-1		
	NC01FI100-10	1	2	3mm FF GASKET FOR 4" DIA FLANGE #150					678100
	NC01FI100-11	8	16	HEX. BOLTS 5/8" DIA. X 3" LG. - SS 304					621620
	NC01FI100-12	16	32	WASHER 5/8" DIA. - SS 304					624095
	NC01FI100-13	8	16	HEX. NUT 5/8" DIA - SS 304					625095
	NC01FI100-14	16	32	STAINLESS STEEL T-BOLT CLAMPS (MIKALOR) 3 9/16" X 3 13/16" W4 - ALFAGOMMA" # P-322					
	NC01FI100-15	34m	68m	80 mm (3") O.D. REINFORCED BLUE CHLOROBUTYL TUBE "ALFAGOMMA" #404LE076894V10					279020
	NC01FI100-16	1	2	SERVICE WATER PUMPS "AURORA" 2"x2" FLANGE	P7-001, P7-002		ST-090-1		
	NC01FI100-17	23	46	PIPE STRAP FOR 3" PIPE- SS 304			FA130		
	NC01FI100-18	2	4	RECIRCULATION SUPPORTS (250mm x 390mm)			FA124		
	NC01FI100-19	9	18	RECIRCULATION SUPPORTS (150mm x 390mm)			FA119		
	NC01FI100-20	2	2	HANDRAIL LENGTH: 1468 mm			FA128		
	NC01FI100-21	2	2	HANDRAIL LENGTH: 1583mm			FA128		
	NC01FI100-22	1	1	HANDRAIL LENGTH: 2575mm			FA128		
	NC01FI100-23	2	2	HANDRAIL LENGTH: 1041mm			FA128		
	NC01FI100-24	2	2	HANDRAIL LENGTH: 1879mm			FA128		
	NC01FI100-25	2	2	HANDRAIL LENGTH: 2373mm			FA128		
	NC01FI100-26	2	2	HANDRAIL LENGTH: 1879mm			FA128		
	NC01FI100-27	2	2	HANDRAIL LENGTH: 1041mm			FA128		
	NC01FI100-28	4	4	HANDRAILLENGTH: 1751mm			FA128		
	NC01FI100-29	1	1	HANDRAIL LENGTH: 1583mm			FA128		
	NC01FI100-30	12	24	GASKET 1/8" THK. RUBBER (25mm x 200mm)					179026

JOHN MEUNIER

NOMENCLATURE/ BILL OF MATERIALS

TITRE/ TITLE	Rev.	DESCRIPTION	PAR/ BY:	APPR:	DATE:	Affaire / Contract	MEADOWBANK MINING		
ACTIFLO ACP-700R ACTIFLO AND MICROSAND RECIRCULATION, INSTALLATION	0	FOR INSTALLATION	O.F.	P.S.M.	2009-04-08				
	1	ADDED ITEMS 97 & 98	O.F.	P.S.M.	2009-06-22				
	2					REF. No.	NC01	Rev.	1
	3								
DESSIN /DWG # FI100	4					Date:	2009-04-08		

REV.	ITEM	QTE/QTY. Unit.	QTE/QTY. Total	DESCRIPTION	P&ID I.D./TAG	CAT. ACCPAC	SOURCE	FA/SA FI SITE	P / N
	NC01FI100-31	46	92	WASHER 1/4" DIA. - SS 304					624065
	NC01FI100-32	46	92	HEX. HUT 1/4" DIA. - SS304					625065
	NC01FI100-33	4	8	3" DIA. RECIRCULATION PIPE (HOSE - FLANGE)			FA132		
	NC01FI100-34	2	4	3" DIA. RECIRCULATION PIPE (FLANGE - FLANGE)			FA132		
	NC01FI100-35	8	16	3mm FF GASKET FOR 3" DIA FLANGE #150					678075
	NC01FI100-36	32	64	HEX. BOLTS 5/8" DIA x 3" LG. - SS 304					621620
	NC01FI100-37	48	96	HEX. NUT 5/8" DIA - SS 304					625095
	NC01FI100-38	80	160	WASHER 5/8" DIA. - SS 304					624095
	NC01FI100-39			NOT USED					
	NC01FI100-40	4	8	HEX. BOLT 5/8" DIA. x 3" LG, - SS 304					621620
	NC01FI100-41	8	16	WASHER 5/8" - SS 304					624095
	NC01FI100-42	4	8	HEX. NUT 5/8" DIA - SS 304					625095
	NC01FI100-43	20L	40L	SCRAPERS OIL - CHEVRON FM GRADE ISO 460					
	NC01FI100-44	8	16	HEX. BOLT 5/8" DIA. x 2" LG, ASTM F593 - SS 304					
	NC01FI100-45	1	2	LOAD CELLS FOR "SEW-EURODRIVE" c/w INSTALLATION ACCESSORIES SUPPLIED BY SEW-EURODRIVEX a-ALPHA 100LB LOAD BEAM (QTY.:1) b-FA47/AD4 PLATE 011011,02,A (QTY.:1) c-FA47/AD4 BRACKET 011011,03,A (QTY.:1) d-HEXHEAD CAPSCREW M12x1,75-40 (QTY.:2) e-HEXHEAD CAPSCREW M3x0,5-5 (QTY.:1) f- LOCK WASHER M12 (QTY.:1) g-HEXHEAD CAPSCREW M5x0,8-10 (QTY.:2) h-HEXHEAD CAPSCREW M12x1,75-30 (QTY.:1)		B68	ST-010-2		
	NC01FI100-46	2	4	RECIRCULATION PUMP INLET ECCENTRIC PLUG VALVE 3" DIA. MANUFACTURER: MILLIKEN ACTUATOR: MANUAL LEVER	V2-012, V2-013 V2-022, V2-023	B56	ST-003-5		
	NC01FI100-47	1	2	NIPPEL 1" DIA x 3" LG (MNPT x MNPT), FINISH: GALVANIZED McMASTER-CARR #4549K893					
	NC01FI100-48	1	2	MANUEL VALVE FOR SLUDGE LINES/HOPPER CLEANING TYPE: MANUEL BALLE VALVE 1" DIA, FNPT SS316					311101
	NC01FI100-49	1	2	1" DIA CAM TYPE QUICK CONNECT HOSE ADAPTER "ALFAGOMMA" MODEL: PART "B" MAT'L: POLYPROPYLENE					
	NC01FI100-50	8	16	HEX. BOLTS 1/2" DIA. X 3 1/2" LG. SS 304					621545

JOHN MEUNIER

NOMENCLATURE/ BILL OF MATERIALS

TITRE/ TITLE	Rev.	DESCRIPTION	PAR/ BY:	APPR:	DATE:	Affaire / Contract	MEADOWBANK MINING		
ACTIFLO ACP-700R ACTIFLO AND MICROSAND RECIRCULATION, INSTALLATION	0	FOR INSTALLATION	O.F.	P.S.M.	2009-04-08				
	1	ADDED ITEMS 97 & 98	O.F.	P.S.M.	2009-06-22				
	2					REF. No.	NC01	Rev.	1
	3								
DESSIN /DWG # FI100	4					Date:	2009-04-08		

REV.	ITEM	QTE/QTY. Unit.	QTE/QTY. Total	DESCRIPTION	P&ID I.D./TAG	CAT. ACCPAC	SOURCE	FA/SA FI SITE	P / N
	NC01FI100-51	16	32	WASHER 1/2" DIA. SS 304					624085
	NC01FI100-52	8	16	HEX. NUT 1/2" DIA. SS 304					625085
	NC01FI100-53	56	56	HEX. BOLT 3/8" DIA. x 3 3/4" LG - SS 304					621350
	NC01FI100-54	112	112	WASHER 3/8" - SS 304					624075
	NC01FI100-55	56	56	HEX NUT 3/8" DIA. - SS 304					625075
	NC01FI100-56	104	104	HEX. BOLT 1/2" DIA. x 1 1/2" LG - SS 304					621520
	NC01FI100-57	208	208	WASHER 1/2" - SS 304					624085
	NC01FI100-58	104	104	HEX NUT 1/2" DIA. - SS 304					625085
	NC01FI100-59	4	8	GROOVED PIPE COUPLING STYLE 77 3" DIA.					
	NC01FI100-60	1	1	STAIRS ASSEMBLY			SA108		
	NC01FI100-61	44	88	WASHER 1/2" DIA. SS 304					624085
	NC01FI100-62	22	44	HEX. NUT 1/2" DIA. SS 304					625085
	NC01FI100-63	22	44	HEX. BOLTS 1/2" DIA. X 1 3/4" LG. SS 304					621525
	NC01FI100-64	8	8	SADDLE CLIP FASTENERS FOR 1 1/2" GRATING, McMASTER CARR #7010T72, SS316					668001
	NC01FI100-65	8	8	HEX. BOLT 1/4" DIA. x 1 3/4" LG - SS 304					621125
	NC01FI100-66	1	1	HANDRAIL LENGTH: 2575 mm			FA128		
	NC01FI100-67	1	1	HANDRAIL LENGTH: 2575 mm x 378 mm			FA128		
	NC01FI100-68	2	2	HANDRAIL LENGTH: 2010 mm			FA128		
	NC01FI100-69	1	1	HANDRAIL LENGTH: 2508 mm			FA128		
	NC01FI100-70	48	48	HEX. BOLT 1/2" DIA. x 1 1/2" LG - SS 304					621520
	NC01FI100-71	48	48	HEX NUT 1/2" DIA. - SS 304					625085
	NC01FI100-72	96	96	WASHER 1/2" - SS 304					624085
	NC01FI100-73	1	1	STAIRS PLATFORM GRATING			FA138		
	NC01FI100-74	1	1	STAIRS HANDRAIL			FA136		
	NC01FI100-75	1	1	STAIRS PLATFORM			FA137		
	NC01FI100-76	2	2	STAIRS LEG			FA137		
	NC01FI100-77	2	2	STAIRS PLATFORM LEG BRACE, LENGTH: 785 mm			FA137		
	NC01FI100-78	4	4	STAIRS PLATFORM LEG BRACE, LENGTH: 1514 mm			FA137		
	NC01FI100-79	1	1	PLATFORM GRATING			FA134		
	NC01FI100-80	1	1	PLATFORM			FA133		
	NC01FI100-81	2	2	PLATFORM LEG			FA133		
	NC01FI100-82	2	2	PLATFORM LEG BRACE, LENGTH: 750 mm			FA133		
	NC01FI100-83	4	4	PLATFORM LEG BRACE, LENGTH: 1497 mm			FA133		
	NC01FI100-84	1	1	HANDRAIL LENGTH: 1338 mm x 1004 mm			FA128		
	NC01FI100-85	2	2	HANDRAIL LENGTH: 1106 mm			FA128		
	NC01FI100-86	1	1	HANDRAIL LENGTH: 2575 mm			FA128		

JOHN MEUNIER

NOMENCLATURE/ BILL OF MATERIALS

TITRE/ TITLE	Rev.	DESCRIPTION	PAR/ BY:	APPR:	DATE:	Affaire / Contract	MEADOWBANK MINING		
ACTIFLO ACP-700R ACTIFLO AND MICROSAND RECIRCULATION, INSTALLATION	0	FOR INSTALLATION	O.F.	P.S.M.	2009-04-08				
	1	ADDED ITEMS 97 & 98	O.F.	P.S.M.	2009-06-22				
	2					REF. No.	NC01	Rev.	1
	3								
DESSIN /DWG # FI100	4					Date:	2009-04-08		

REV.	ITEM	QTE/QTY. Unit.	QTE/QTY. Total	DESCRIPTION	P&ID I.D./TAG	CAT. ACCPAC	SOURCE	FA/SA FI SITE	P / N
	NC01FI100-87	48	48	WASHER 1/2" - SS 304					624085
	NC01FI100-88	24	24	HEX NUT 1/2" DIA. - SS 304					625085
	NC01FI100-89	24	24	BEWEL WASHER 1/2"					664485
	NC01FI100-90	24	24	HEX. BOLTS 1/2" DIA. X 2-1/4" LG. SS 304					621533
	NC01FI100-91	6	6	HEX. BOLT 1/2" DIA. x 1 1/2" LG - SS 304					621520
	NC01FI100-92	12	12	WASHER 1/2" - SS 304					624085
	NC01FI100-93	6	6	HEX NUT 1/2" DIA. - SS 304					625085
	NC01FI100-94	16	16	HEX. BOLT 1/2" DIA. x 1 1/2" LG - SS 304					621520
	NC01FI100-95	32	32	WASHER 1/2" - SS 304					624085
	NC01FI100-96	16	16	HEX NUT 1/2" DIA. - SS 304					625085
1	NC01FI100-97	22	44	HEX. BOLT 3/8" DIA. x 1" LG - SS 304					621310
1	NC01FI100-98	22	44	WASHER 3/8" - SS 304					624075
				ITEMS NOT SHOWN					
	NC01FI100-110	5	10	MICROSAND 135 microns 1 wooden pallet (about 48 bags of 50 lbs each)		Y44	ST-011-1		
	NC01FI100-111	1	2	RAW WATER VALVE "BRAY" 92-2100 - 16" DIA.	V2-011, V2-021	B40	ST-003-1		
	NC01FI100-112	2	4	RECIRCULATION PUMPS DRIP PANS					7E6620
	NC01FI100-113	1	1	CLARIFIED WATER TURBIDIMETER - CALIBRATION KIT		B24	ST-004-13		
	NC01FI100-114	1	1	CLARIFIED WATER TURBIDIMETER - VOLUMETRIC FLASK		B24	ST-004-14		

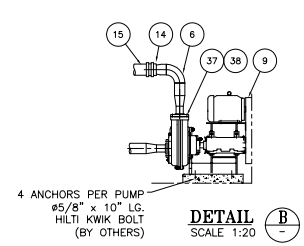

DETAIL B
SCALE 1:20

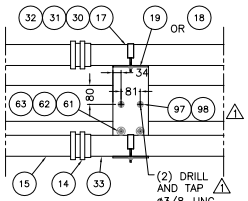

DETAIL C
SCALE 1:10

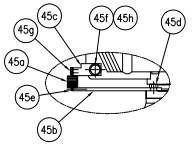

DETAIL E
SCALE 1:5

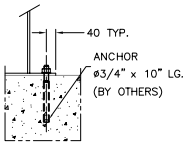

DETAIL D
SCALE 1:10

NOTES:

1. SEE BILL OF MATERIAL : NC01–FI100.xls
2. FOR MIXERS INSTALLATION SEE DRAWING FI102dwg.
3. FOR WATER CONNECTIONS POSITION SEE DRAWING GA100.dwg
4. ALL ITEMS MENTIONED WILL BE SUPPLIED BY JMI, SHIPPED LOOSE AND WILL NEED TO BE INSTALLED ON SITE
5. DO NOT REMOVE THE GREASE AND PROTECTION COATING WHEN INSTALL THE SCRAPER GEAR BOX (ITEM 2)
6. FILL SCRAPER GEAR BOX WITH OIL (ITEM 43) PRIOR TO STARTUP
7. IMPORTANT TO DROP AT THE SLUDGE OUTLET OF EACH HYDROCYCLONE TO AVOID BACKFLOW THROUGH HYDROCYCLONE.
8. WEIGHT FOR ACTIFLO ASSEMBLY:
   EMPTY: 42 000 Lbs (19 000 Kg)
   FULL OF WATER: 425 000 Lbs (193 000) Kg

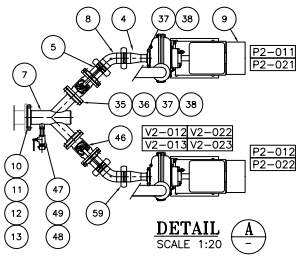

DETAIL A
SCALE 1:20

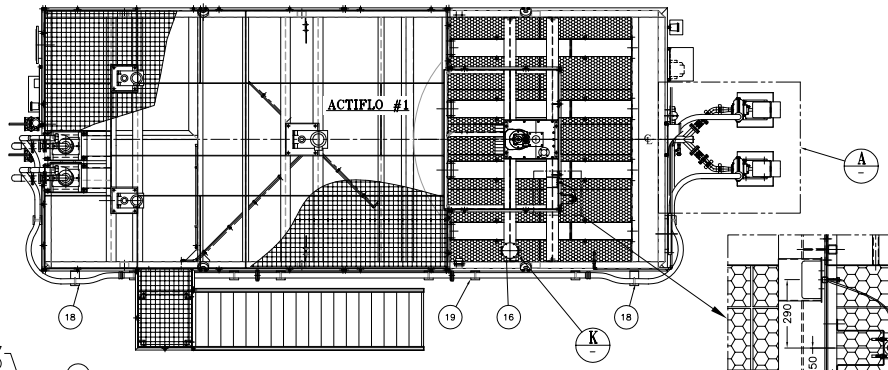

PLAN VIEW

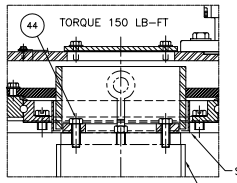

DETAIL F
SCALE 1:5

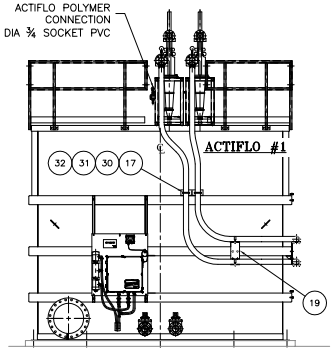

LEFT SIDE VIEW
(MIXERS, STAIRS AND SCRAPER NOT SHOWN)

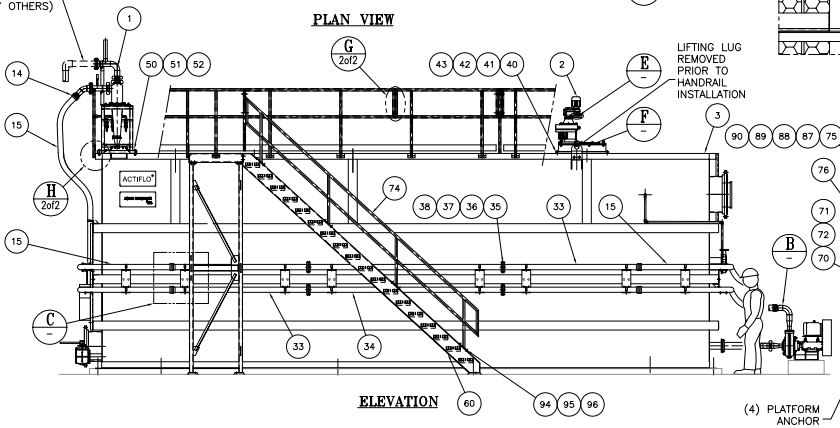

ELEVATION

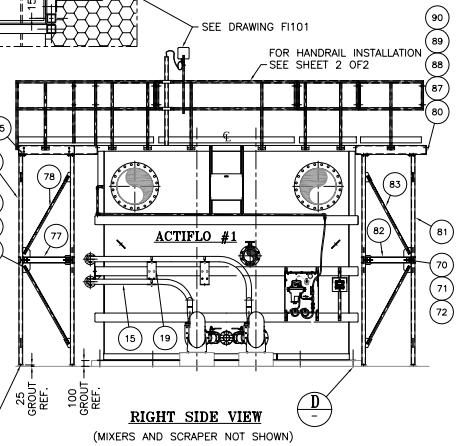

RIGHT SIDE VIEW
(MIXERS AND SCRAPER NOT SHOWN)

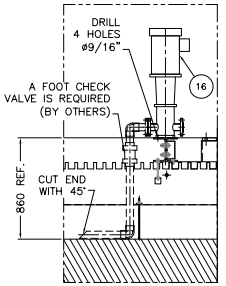

DETAIL K
SCALE 1:20
INSTALLATION BY OTHERS

REV	DESCRIPTION	DATE	DWN	CHKD	APVD	ECN
1	ADDED ITEMS 97 & 98 (SEE DETAIL "C")	2009–06–22	O.F.	N/A	P.S.M.	N/A
0	FOR INSTALLATION	2009–04–09	O.F.	N/A	P.S.M.	N/A

CONFIDENTIALITY AND INTELLECTUAL PROPERTY NOTICE
ALL INFORMATION CONTAINED IN THIS DOCUMENT IS THE SOLE PROPERTY OF JOHN MEUNIER INC. AND IS PROTECTED BY ALL APPLICABLE COPYRIGHT, TRADE SECRET AND OTHER INTELLECTUAL PROPERTY LAWS. THE DESIGN CONCEPTS AND INFORMATION CONTAINED HEREIN ARE PROPRIETARY TO JMI AND ARE SUBMITTED IN CONFIDENCE. THEY ARE NOT TRANSFERABLE. THEY MUST BE USED ONLY FOR THE PURPOSE FOR WHICH THE DOCUMENT IS SUBMITTED AND MUST NOT BE DISCLOSED TO OTHERS. ALL DRAWINGS BY THE SUBMISSION OF THIS DOCUMENT, THEY ARE CONFIDENTIAL AND PRIVILEGED INFORMATION OF JMI AND THEY MUST NOT BE DISCLOSED, REPRODUCED, LOANED, MODIFIED OR USED IN ANY OTHER MANNER WITHOUT THE EXPRESS WRITTEN CONSENT OF JMI. JMI ASSUMES NO RESPONSIBILITY OR LIABILITY FOR THE USE OF THIS DOCUMENT OR THE DESIGN CONCEPTS AND INFORMATION CONTAINED HEREIN FOR ANOTHER PROJECT, OR IN A MANNER THAT DOES NOT RELATE TO THE FITNESS OR PURPOSE OF THIS DOCUMENT. IN NO EVENT SHALL THIS DOCUMENT OR THE DESIGN CONCEPTS AND INFORMATION CONTAINED HEREIN BE USED IN A MANNER DETRIMENTAL TO THE INTERESTS OF JMI. ALL COPYRIGHT, PATENT AND OTHER INTELLECTUAL PROPERTY RIGHTS ARE RESERVED BY JMI. BY ACCEPTING THIS DOCUMENT YOU CONSTITUTE AGREEMENT TO THESE TERMS AND CONDITIONS.

DESIGNER	DATE
O.F.	2008–04–09
CHECKER	DATE
N/A	N/A
ENGINEER	DATE
P.S.M.	
MANAGER	DATE
N/A	N/A
SCALE:	1:40

TITLE: ACTIFLO ACP–700R
ACTIFLO AND MICROSAND RECIRCULATION
INSTALLATION

CLIENT: MEADOWBANK MINING

JOHN MEUNIER ISO 9001:2000
4105 Sartelon Street, Saint-Laurent, Qc, Canada H4S 2B3 / Tel: (514) 334–7230 / Fax: (514) 334–5070

PROJECT	DRAWING	INTERNAL	SHEET	REV
NC01– FI100		ACP7001	1 OF 2	1

STD: "D" 22x34 | REF: RA16 | BAR = 1" AT PLOT SCALE

Aug 13, 2009 17:42:18 – H:\2009\Exécution\NC01 Meadowbank Mining\3–Opérations\3.2– Ingénierie\IN–01 Dessins\FI\NC01_FI100ACP7001_1.dwg – stermirip

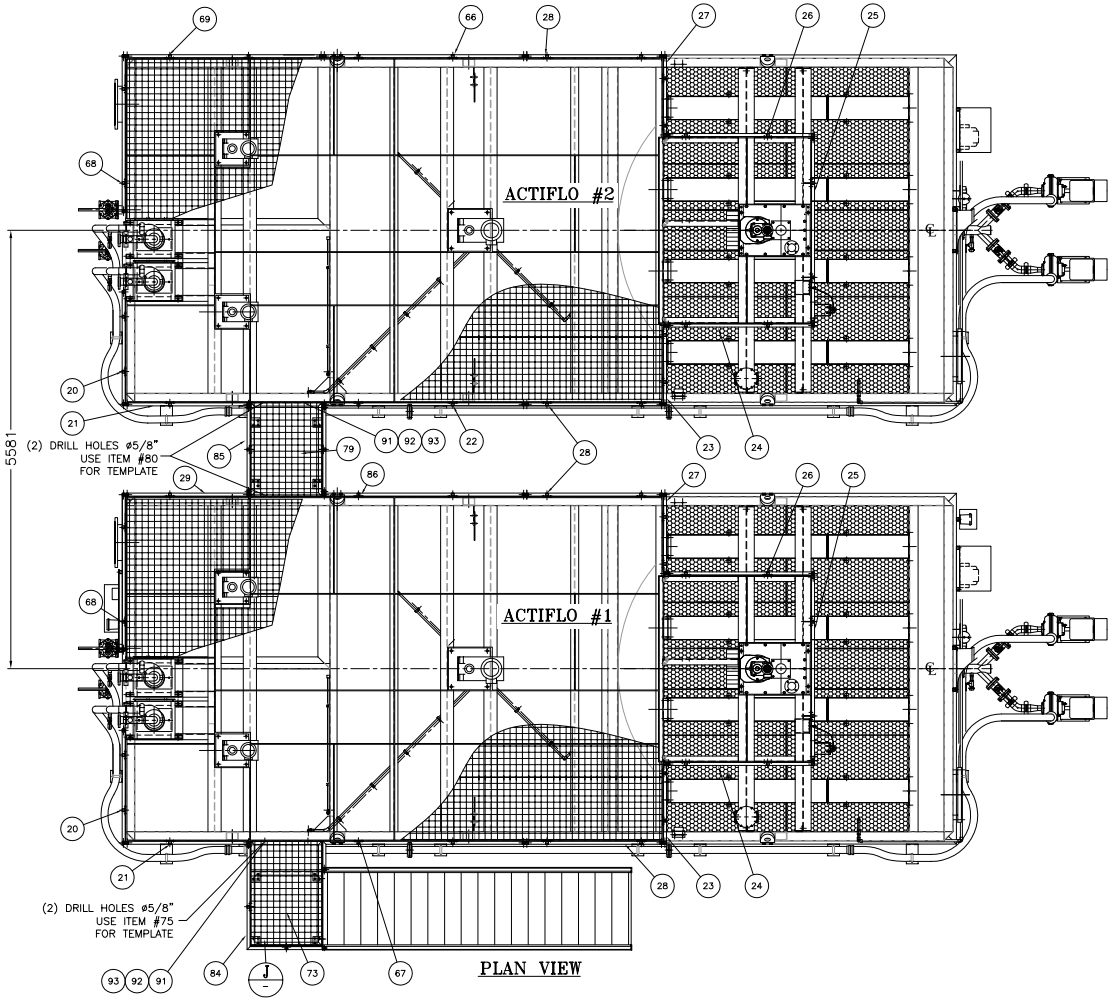

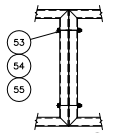

DETAIL G (1of2)
SCALE: 1:10

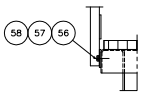

DETAIL H (1of2)
SCALE: 1:10

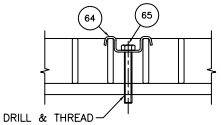

DETAIL J
SCALE: 1:2

ATTACH FOR GRATING

REV	DESCRIPTION	DATE	DWN	CHKD	APVD	ECN
1	ADDED ITEMS 97 & 98 (SEE DETAIL "C" SHEET 1 OF 2)	2009-06-22	O.F.	N/A	P.S.M.	N/A
0	FOR INSTALLATION	2009-02-23	O.F.	N/A	P.S.M.	N/A

CONFIDENTIALITY AND INTELLECTUAL PROPERTY NOTICE
ALL INFORMATION CONTAINED IN THIS DOCUMENT IS THE SOLE PROPERTY OF JOHN MEUNIER INC. AND IS PROTECTED BY ALL APPLICABLE COPYRIGHT, TRADE SECRET AND OTHER INTELLECTUAL PROPERTY LAWS. THE DESIGN CONCEPTS AND INFORMATION CONTAINED HEREIN ARE PROPRIETARY TO JM AND ARE SUBMITTED IN CONFIDENCE. THEY ARE NOT TRANSFERABLE. THEY MUST BE USED ONLY FOR THE PURPOSE FOR WHICH THE DOCUMENT IS SUBMITTED AND MUST NOT BE DISCLOSED, REPRODUCED, COPIED, MODIFIED OR USED IN ANY OTHER MANNER WITHOUT THE EXPRESS WRITTEN CONSENT OF JM. AS ASSIGNED NO RESPONSIBILITY OR LIABILITY FOR THE USE OF THIS DOCUMENT OR THE INFORMATION CONTAINED THEREIN FOR ANY PURPOSE OTHER THAN THE PURPOSE FOR WHICH IT WAS PREPARED BY JM, OR FOR ANY MODIFICATION TO THIS DOCUMENT MADE BY ANYONE OTHER THAN JM. BY ACCEPTING THIS DOCUMENT YOU AGREE TO BE BOUND BY THE FOREGOING STATEMENT. IF YOU ARE NOT AUTHORIZED TO ACCEPT THIS DOCUMENT, YOU SHALL RETURN IT IMMEDIATELY TO JM. IN THE EVENT THAT YOU USE THIS DOCUMENT OR THE DESIGN CONCEPTS AND INFORMATION CONTAINED HEREIN IN SUCH A MANNER DETERMINED, TO THE SOLE SATISFACTION OF JM, TO BE CONTRARY TO THE FOREGOING RESTRICTIONS OR JM'S INTELLECTUAL PROPERTY RIGHTS, YOU AGREE TO PAY JM THE SUM OF $10,000.00 AS LIQUIDATED DAMAGES, IT BEING AGREED THAT THIS AMOUNT IS A REASONABLE ESTIMATE OF THE DAMAGES THAT JM WOULD SUFFER AND THAT THIS DOCUMENT CONSTITUTES AGREEMENT TO THESE TERMS AND CONDITIONS.

DESIGNER	DATE
O.F.	2008-02-07
CHECKER	DATE
N/A	N/A
ENGINEER	DATE
M.S.	
MANAGER	DATE
N/A	N/A
SCALE:	1:40

TITLE: ACTIFLO ACP-700R
ACTIFLO AND MICROSAND RECIRCULATION INSTALLATION

CLIENT: THOMPSON CREEK MINE WATER, ID

JOHN MEUNIER ISO 9001:2000
4105 Sartelon Street, Saint-Laurent, Qc, Canada H4S 2B3 / Tel: (514) 334-7230 / Fax: (514) 334-5070

PROJECT	DRAWING	INTERNAL	SHEET	REV
RC01-FI100		ACP7001	2 OF 2	1

STD: "D" 22x34 | REF: RA16 | BAR = 1" AT PLOT SCALE

Aug 13, 2009 17:42:50 - H:\2009\Exécution\NC01 Meadowbank Mining\3-Opérations\3.2- Ingénierie\IN-01 Dessins\FI\NC01_FI100ACP7001_1.dwg - stemarip

JOHN MEUNIER

NOMENCLATURE/ BILL OF MATERIALS

TITRE/ TITLE	Rev.	DESCRIPTION	PAR/ BY:	APPR:	DATE:	Affaire / Contract	MEADOWBANK MINING		
PROBE SUPPORT & pH TRANSMITTER FIELD INSTALLATION	0	FOR INSTALLATION	O.F.	P.S.M.	2009-04-08				
	1								
	2					REF. No.	**NC01**	**Rev.**	**0**
	3								
DESSIN /DWG # **FI101**	4					**Date:**	2009-04-08		

REV.	ITEM	QTE/QTY. Unit.	QTE/QTY. Total	DESCRIPTION	P&ID I.D./TAG	CAT. ACCPAC	SOURCE	FA/SA FI SITE	P / N
	NC01FI101-1	1	2	pH PROBE	pHIT2-011		ST-004-8		
	NC01FI101-2	1	2	pH TRANSMITTER			ST-004-9		
	NC01FI101-3	0	0	**NON USED**					
	NC01FI101-4	1	2	NONMETALLIC THREADED STRAIN RELIEF PVC CONNECTOR, 1/2" NPT; "IPEX" TSRC10C/W "O" RING, LOCKNUT & 6 GROMMETS FOR CABLE 3/16" @ 5/8"					529065
	NC01FI101-5	1	2	PIPE SUPPORT & GUIDE FOR pH PROBE 2" DIA. PVC x 1850mm LG.			FA131		
	NC01FI101-6	2	4	MOUNTING BRACKET S.S. 304L FOR HANDRAIL INSTALLATION			FA131		
	NC01FI101-7	1	2	TRANSMITTER SUPPORT S.S. 304L			FA131		
	NC01FI101-8	1	2	NYLON STRAP TYPE "TY-RAP", "THOMAS & BETTS" N° TY25MX					534000
	NC01FI101-9	4	8	BTH. 3/8x2 1/2" (304)					621335
	NC01FI101-10	6	12	FLAT WASHER ø3/8" (304)					624075
	NC01FI101-11	6	12	HEX.NUT ø3/8"-16UNC (304)					625075
	NC01FI101-12	2	4	BTH. 3/8x3 1/2" (304)					621345
	NC01FI101-13	2	4	U-BOLT FOR PIPE ø2" S.S. 304, c/w FLAT WASHERS AND NUTS					626406

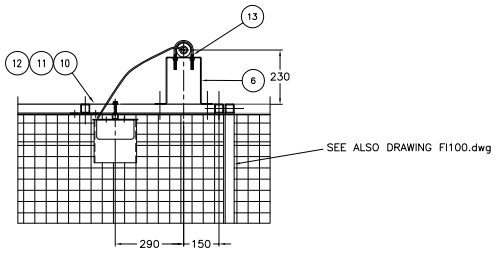

PLAN VIEW

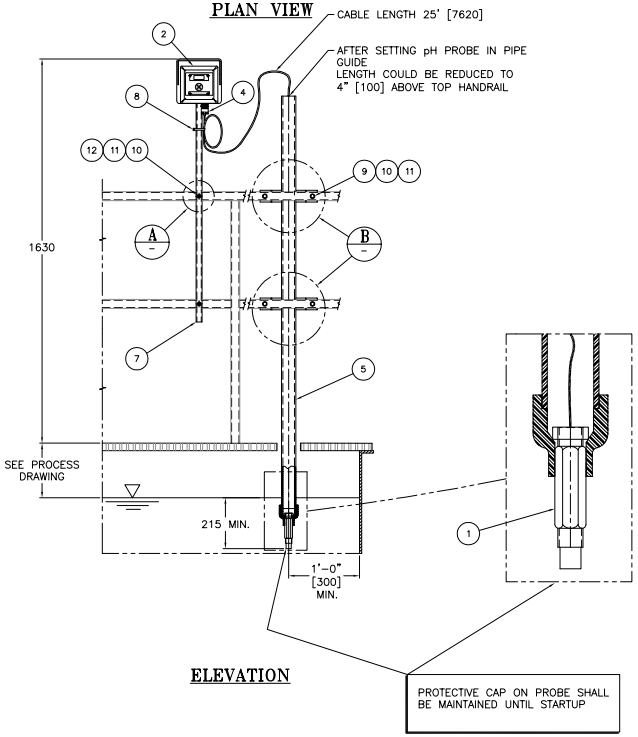

ELEVATION

TYPICAL INSTALLATION

NOTES:

1. SEE BILL OF MATERIAL FI101.xls;
2. SEE ALSO DRAWING FI100.dwg;
3. THE EQUIPMENT IS PREWIRED AND WILL NEED TO BE INSTALLED ON HANDRAIL ON SITE BY THE CONTRACTOR.

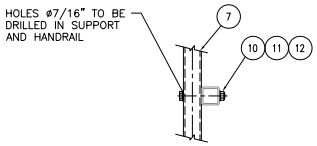

DETAIL A
SCALE: 1:5

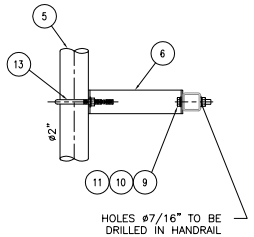

DETAIL B
SCALE: 1:5

REV	DESCRIPTION	DATE	DWN	CHKD	APVD	ECN
0	FOR INSTALLATION	2009-04-08	O.F.	N/A	P.S.M.	N/A

STD: JMI_22x34_D_ANG | REF: RA16 | BAR = 1" AT PLOT SCALE

CONFIDENTIALITY AND INTELLECTUAL PROPERTY NOTICE
ALL INFORMATION CONTAINED IN THIS DOCUMENT IS THE SOLE PROPERTY OF JOHN MEUNIER INC. AND IS PROTECTED BY ALL APPLICABLE COPYRIGHT, TRADE SECRET, TRADEMARK AND OTHER INTELLECTUAL PROPERTY LAWS. THE DESIGN CONCEPTS AND INFORMATION CONTAINED HEREIN ARE PROPRIETARY TO JMI AND ARE SUBMITTED IN CONFIDENCE. THEY ARE NOT TRANSFERABLE. THEY MUST BE USED ONLY FOR THE PURPOSE FOR WHICH THE DOCUMENT IS SUBMITTED AND MUST BE RETURNED AT ANY TIME AT THE RECIPIENT'S DISCRETION. BY THE SUBMISSION OF THIS DOCUMENT, THEY ARE CONFIDENTIAL AND PRIVILEGED INFORMATION OF JMI AND THEY MUST NOT BE DISCLOSED, REPRODUCED, LOANED, MODIFIED OR USED IN ANY OTHER MANNER WITHOUT THE EXPRESS WRITTEN CONSENT OF JMI. JMI ASSUMES NO RESPONSIBILITY OR LIABILITY FOR THE USE OF THIS DOCUMENT OTHER THAN FOR THE PURPOSE FOR WHICH IT IS SUBMITTED HEREIN FOR ANOTHER PROJECT OR IN A MANNER THAT DOES NOT RELATE TO THE FITNESS OR PURPOSE OF THIS DOCUMENT. IN NO EVENT SHALL THIS DOCUMENT OR THE DESIGN CONCEPTS AND INFORMATION CONTAINED HEREIN BE USED IN A MANNER DETRIMENTAL TO THE INTEREST OF JMI. ALL COPYRIGHT, TRADE AND OTHER INTELLECTUAL PROPERTY RIGHTS ARE RESERVED. ACCEPTANCE OR USE OF ANY SECTION OF THIS DOCUMENT CONSTITUTES AGREEMENT TO THESE TERMS AND CONDITIONS.

DESIGNER	DATE
O.F.	2008-02-12
CHECKER	DATE
N/A	N/A
ENGINEER	DATE
P.S.M.	
MANAGER	DATE
N/A	N/A
SCALE: 1:10	

TITLE: pH PROBE AND TRANSMITTER FIELD INSTALLATION ON HANDRAILS

CLIENT: MEADOWBANK MINING

JOHN MEUNIER ISO 9001:2000
4105 Sartelon Street, Saint-Laurent, Qc, Canada H4S 2B3 / Tel: (514) 334-7230 / Fax: (514) 334-5070

PROJECT	DRAWING	INTERNAL	SHEET	REV
NC01-	FI101	CTR213	1 OF 1	0

Aug 13, 2009 - 11:43:23 - N:\2008\Saskatoon\NC01 Meadowbank Mining\3-Ingénierie\3.5- Ingénierie\Nc-01 Dessins\FI\NC01_FI101CTR213.dwg - Jmorrow

JOHN MEUNIER

NOMENCLATURE/ BILL OF MATERIALS

TITRE/ TITLE	Rev.	DESCRIPTION	PAR/ BY:	APPR:	DATE:	Affaire / Contract	MEADOWBANK MINING		
ACTIFLO ACP-700R MIXERS INSTALLATION	0	FOR INSTALLATION	O.F.	P.S.M.	2009-04-08				
	1								
	2					REF. No.	NC01	Rev.	0
	3								
DESSIN /DWG # FI102	4					Date:	2009-04-08		

REV.	ITEM	QTE/QTY. Unit.	QTE/QTY. Total	DESCRIPTION	P&ID I.D./TAG	CAT. ACCPAC	SOURCE	FA/SA FI SITE	P / N
	NC01FI102-1	1	2	**MECHANICAL MIXER - COAGULATION TANK** "ENVIREQUIP" MODEL: EVGX 4-3,0 TYPE: MIX TECH VERTICAL MOUNTED c/w 304 STAINLESS STEEL SHAFT AND IMPELLER SHAFT: DIA.: 57,1 mm (2,25 in), LENGTH: 2711 mm IMPELLER: Q'TY: 1, DIAMETER "A": 1252,2 mm BOTTOM CLEARANCE "X": 939 mm ROTATION DIRECTION: CW - DOWN c/w MOTOR 3 HP, 480 Vac/3 ph/60 Hz, 1765 RPM, Isolation Class F WEIGHT: 568 lb (258 kg)	M2-011 M2-021	R110	ST-100-1		
	NC01FI102-2	1	2	**MECHANICAL MIXER - INJECTION TANK** "ENVIREQUIP" MODEL: EVGX 4-3,0 TYPE: MIX TECH VERTICAL MOUNTED c/w 304 STAINLESS STEEL SHAFT AND IMPELLER SHAFT: DIA.: 57,1 mm (2,25 in), LENGTH: 2711 mm IMPELLER: Q'TY: 1, DIAMETER "A": 1252,2 mm BOTTOM CLEARANCE "X": 939 mm ROTATION DIRECTION: CCW - UP c/w MOTOR 3 HP, 480 Vac/3 ph/60 Hz, 1765 RPM, Isolation Class F WEIGHT: 568 lb (258 kg)	M2-012 M2-022	R111	ST-100-2		

JOHN MEUNIER

NOMENCLATURE/ BILL OF MATERIALS

TITRE/ TITLE	Rev.	DESCRIPTION	PAR/ BY:	APPR:	DATE:	Affaire / Contract	MEADOWBANK MINING
ACTIFLO ACP-700R MIXERS INSTALLATION	0	FOR INSTALLATION	O.F.	P.S.M.	2009-04-08		
	1						
	2					REF. No.	NC01 Rev. 0
	3						
DESSIN /DWG # FI102	4					Date:	2009-04-08

REV.	ITEM	QTE/QTY. Unit.	QTE/QTY. Total	DESCRIPTION	P&ID I.D./TAG	CAT. ACCPAC	SOURCE	FA/SA FI SITE	P / N
	NC01FI102-3	1	2	**MECHANICAL MIXER - MATURATION TANK** "ENVIREQUIP" MODEL: EVGX 6-5,0 TYPE: MIX TECH VERTICAL MOUNTED c/w 304 STAINLESS STEEL SHAFT AND IMPELLER SHAFT: DIA.: 76,2 mm (3 in), LENGTH: 2511 mm IMPELLER: Q'TY: 1, DIAMETER "A": 2277,9 mm BOTTOM CLEARANCE "X": 1139 mm ROTATION DIRECTION: CW - DOWN c/w MOTOR 5 HP, 480 Vac/3 ph/60 Hz, 1770 RPM, Isolation Class F WEIGHT: 1393 lb (633 kg)	M2-013 M2-023	R112	ST-100-3		
	NC01FI102-4	8	16	HEX. BOLT 3/4"-UNC x 2 1/2" LG., SS 304					621715
	NC01FI102-5	8	16	LOCK NUT 3/4"-UNC, SS 304					625300
	NC01FI102-6	16	32	FLAT WASHER 3/4" NOM., SS 304					624100
	NC01FI102-7	4	8	HEX. BOLT 7/8" x 2 3/4" LG., SS 304					621808
	NC01FI102-8	4	8	LOCK NUT 7/8", SS 304					625305
	NC01FI102-9	8	16	FLAT WASHER 7/8", SS 304					624105

NOTES:

1. SEE BILL OF MATERIAL: NC01-FI102.xls
2. DEPENDING ON THE IMPELLER DIAMETER, HUB AND IMPELLER BLADES MIGHT BE SHIPPED SEPARATELY FROM THE MIXER SHAFT ASSEMBLY.
3. IMPELLERS WILL NEED TO BE ASSEMBLED ON SITE
4. MIXERS WILL NEED TO BE ASSEMBLED ON SITE (SHIPED LOOSE)
5. MIXERS AND SCRAPERS WILL NEED FOOD GRADE OIL PER SPECIFICATIONS

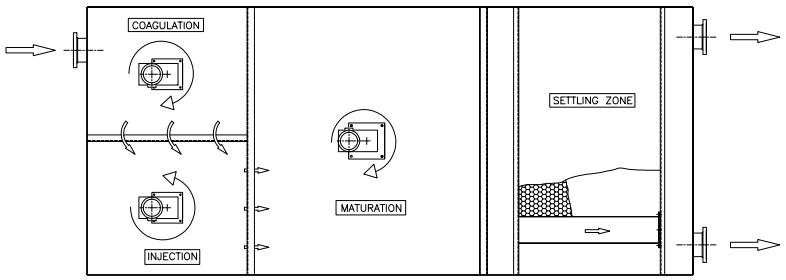

PLAN VIEW

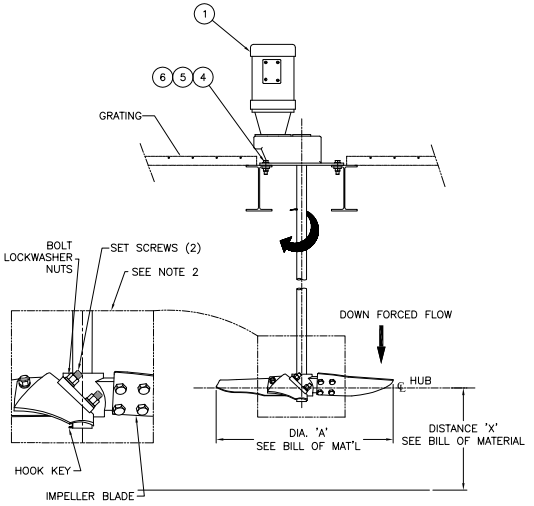

COAGULATION TANK
N.T.S

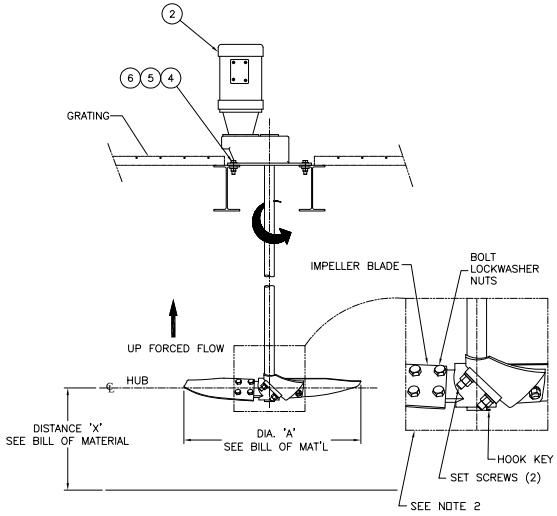

INJECTION TANK
N.T.S

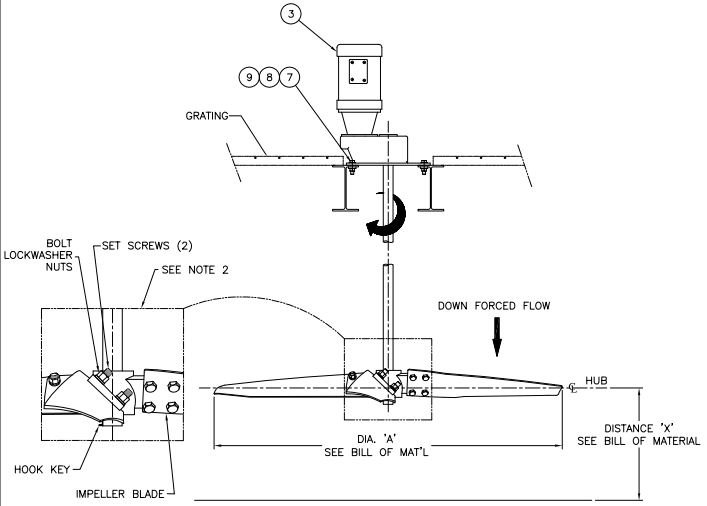

MATURATION TANK
N.T.S

REV	DESCRIPTION	DATE	DWN	CHKD	APVD	ECN
0	FOR INSTALLATION	2009-04-08	O.F.	N/A	P.S.M.	N/A

CONFIDENTIALITY AND INTELLECTUAL PROPERTY NOTICE
ALL INFORMATION CONTAINED IN THIS DOCUMENT IS THE SOLE PROPERTY OF JOHN MEUNIER INC. AND IS PROTECTED BY ALL APPLICABLE COPYRIGHT, TRADE SECRET AND OTHER INTELLECTUAL PROPERTY LAWS. THE DESIGN CONCEPTS AND INFORMATION CONTAINED HEREIN ARE PROPRIETARY TO JME AND ARE SUBMITTED IN CONFIDENCE. THEY ARE NOT TRANSFERABLE. THEY MUST BE USED ONLY FOR THE PURPOSE FOR WHICH THE DOCUMENT IS SUBMITTED AND MUST NOT BE DISCLOSED WITHOUT THE PRIOR EXPRESS WRITTEN CONSENT OF JME. UNLESS OTHERWISE AGREED TO IN WRITING BY JME, THE ACCEPTANCE OF THIS DOCUMENT BY THE RECIPIENT CONSTITUTES AGREEMENT THAT THE DESIGN CONCEPTS AND INFORMATION CONTAINED HEREIN ARE CONFIDENTIAL AND PROPRIETARY INFORMATION OF JME AND THAT THEY MUST NOT BE DISCLOSED, REPRODUCED, LOANED, MODIFIED OR USED IN ANY OTHER MANNER WITHOUT THE EXPRESS WRITTEN CONSENT OF JME. JME ASSUMES NO RESPONSIBILITY OR LIABILITY FOR THE USE OF THESE CONCEPTS AND INFORMATION FOR PURPOSES OTHER THAN THE PURPOSE FOR WHICH THEY WERE SUBMITTED, OR IN A MANNER THAT DOES NOT RELATE TO THE FITNESS OR PURPOSE OF THIS DOCUMENT. IN NO EVENT SHALL THIS DOCUMENT OR THE DESIGN CONCEPTS AND INFORMATION CONTAINED HEREIN BE USED IN A MANNER DETRIMENTAL TO THE INTEREST OF JME. ALL COPYRIGHTS, TRADE AND OTHER INTELLECTUAL PROPERTY RIGHTS IN THE DESIGN CONCEPTS AND INFORMATION CONTAINED IN THIS DOCUMENT CONSTITUTES AGREEMENT TO THESE TERMS AND CONDITIONS.

DESIGNER	M.D.
DATE	2006-09-14
CHECKER	N/A
DATE	N/A
ENGINEER	M.S.
DATE	
MANAGER	N/A
DATE	N/A
SCALE: N.T.S	

TITLE: ACTIFLO ACP-700R MIXERS INSTALLATION

CLIENT: MEADOWBANK MINING

JOHN MEUNIER ISO 9001:2000
4105 Sartelon Street, Saint-Laurent, Qc, Canada H4S 2B3 / Tel: (514) 334-7230 / Fax: (514) 334-5070

PROJECT	DRAWING	INTERNAL	SHEET	REV
NC01- FI102		ACP7001	1 OF 1	0

STD: JMI_22x34_D_ANG | REF: RA16 | BAR = 1" AT PLOT SCALE

Aug 13, 2009 - 11:44:14 - N:\2009\Estimation\NC01 Meadowbank Mining\3-Ingénierie\3.5- Ingénierie\Mr-01 Dessins\FI\NC01_FI102ACP700L.dwg - akennedy

JOHN MEUNIER

NOMENCLATURE/ BILL OF MATERIALS

TITRE/ TITLE	Rev.	DESCRIPTION	PAR/ BY:	APPR:	DATE:	Affaire / Contract	MEADOWBANK MINING		
WATER TREATMENT SYSTEM FIELD INSTALLATION	0	FOR INSTALLATION	O.F.	J.T.	2009-05-20				
	1	EQUIPMENTS IDENTIFICATION REVISED		J.T.	2009-07-20				
	2					REF. No.	**NC01**	**Rev.**	**1**
	3								
DESSIN /DWG # **FI001**	4					**Date:**	2009-05-20		

REV.	ITEM	QTE/QTY. Unit.	QTE/QTY. Total	DESCRIPTION	P&ID I.D./TAG	CAT. ACCPAC	SOURCE	FA/SA FI SITE	P / N
	NC01FI001-1	2	2	ACTIFLO ACP-700R			FI100		
	NC01FI001-2	1	1	POLYMER DOSING SYSTEM					
	NC01FI001-3	1	1	POLYMER AUTOMATIC PREPARATION SYSTEM	DF9-521	D48	ST-052-1		
	NC01FI001-4	1	1	SLUDGE TANK OT-750, CAPACITY: 3400L	T4-011	B80	ST-999-1		
	NC01FI001-5	1	1	CAUSTIC SODA DOSING SYSTEM					
	NC01FI001-6	1	1	MANUAL CAUSTIC SODA PREPARATION SYSTEM					
	NC01FI001-7	1	1	COAGULANT DOSING SYSTEM					
	NC01FI001-8	1	1	COAGULANT AUTOMATIC PREPARATION SYSTEM			ST-051-1		
1	**-a**			Hoist					
1	**-b**			Boom					
1	**-c**			Frame (top section)					
1	**-d**			Frame (middle section)					
1	**-e**			Mixer					
1	**-f**			Feeder flexible pipe					
1	**-g**			Preparation tank					
1	**-h**			Frame (lower section)					
1	**-i**			Dosing tank					
	NC01FI001-9	1	1	COAGULANT TRANSFER PUMP PROGRESSIVE CAVITY PUMP "SEEPEX" : 5000 L/H @ 2 BARS, 541 RPM PUMP MAX SPEED. WITH 2" NPT SUCTION, 2" NPT DISCHARGE, STAINLESS STEEL WETTED CASING PARTS AND ROTOR, MECHANICAL SEAL. STARTING DIRECT ON LINE, 5 HP, 1150 RPM, 575V/3PH/60HZ.	P9-515	D56	ST-051-2		
	NC01FI001-10	2	2	CORPORATION STOPS MODEL:CCS-56-PVC QUILL 6", BODY PVC, BALL CHECK CERAMIC CHECK, SPRING IN SS 316 AND GLAND SEAL IN EPDM		D56	ST-051-6		
	NC01FI001-11	2	2	CORPORATION STOPS MODEL:CCS-56-PVC QUILL 6", BODY PVC, BALL CHECK CERAMIC CHECK, SPRING IN SS 316 AND GLAND SEAL IN EPDM		D64	ST-054-11		
	NC01FI001-12	2	2	RAW WATER FLOWMETER 16" DIAMETER, 150 LBS FLANGE	FIT-2-011 FIT-2-021	A24	ST-004-6		
	NC01FI001-13	4	4	3mm FF GASKET FOR 16" DIA FLANGE #150					678260

JOHN MEUNIER

NOMENCLATURE/ BILL OF MATERIALS

TITRE/ TITLE	Rev.	DESCRIPTION	PAR/ BY:	APPR:	DATE:	Affaire / Contract	MEADOWBANK MINING		
WATER TREATMENT SYSTEM FIELD INSTALLATION	0	FOR INSTALLATION	O.F.	J.T.	2009-05-20				
	1	EQUIPMENTS IDENTIFICATION REVISED		J.T.	2009-07-20				
	2					REF. No.	**NC01**	**Rev.**	**1**
	3								
DESSIN /DWG # **FI001**	4					**Date:**	2009-05-20		

REV.	ITEM	QTE/QTY. Unit.	QTE/QTY. Total	DESCRIPTION	P&ID I.D./TAG	CAT. ACCPAC	SOURCE	FA/SA FI SITE	P / N
	NC01FI001-14	2	2	RAW WATER BUTTERFLY VALVE BRAY DIA: 400 mm (16 in), MODEL: 31-119 UC	V2-011 V2-021	B36	ST-003-1		
	NC01FI001-15	4	4	PVC 1" DIA. MANUAL BALL VALVE TRUE UNION					321085
	NC01FI001-16	4	4	1x1/2"FNPT REDUCER COUPLING 36749(PVC80)					275748
	NC01FI001-17	1	1	PVC SCH. 80 DIA. 1" PIPE - 135m LG. APPROX.					
	NC01FI001-18	49	49	PVC SCH. 80 DIA. 1" ELBOW 90° SOC x SOC IPEX #36183					275260
	NC01FI001-19	1	1	PVC SCH. 80 DIA. 1 1/2" PIPE -3,5m LG. APPROX.					
	NC01FI001-20	5	5	PVC SCH. 80 DIA. 1 1/2" ELBOW 90° SOC x SOC IPEX #36185					275338
	NC01FI001-21	1	1	COAGULANT TRANSFER PUMP SUPPORT			FA001		
	NC01FI001-22	1	1	COAGULANT TRANSFER PUMP SUPPORT			FA001		
1	**NC01FI001-23**	3	3	PVC 2" DIA. MANUAL BALL VALVE TRUE UNION					
	NC01FI001-24	2	2	PVC SCH. 80 DIA. 2" TEE 90° SOC x SOC x SOC IPEX # 36775					275379
	NC01FI001-25	8	8	PVC SCH. 80 DIA. 2" ELBOW 90° SOC x SOC IPEX #36186					275377
	NC01FI001-26	1	1	PVC SCH. 80 DIA. 2" PIPE - 5m LG. APPROX.					
	NC01FI001-27	2	2	PVC SCH. 80 REDUCER BUSHING 1 1/2" x 1" (M.SOC x F.SOC) IPEX #36612					275611
	NC01FI001-28	1	1	PVC SCH. 80 DIA. 3/4" PIPE - 0,3m LG. APPROX.					
	NC01FI001-29	2	2	PVC SCH. 80 REDUCER BUSHING 1" x 3/4" (M.SOC x F.SOC) IPEX #36606					275605

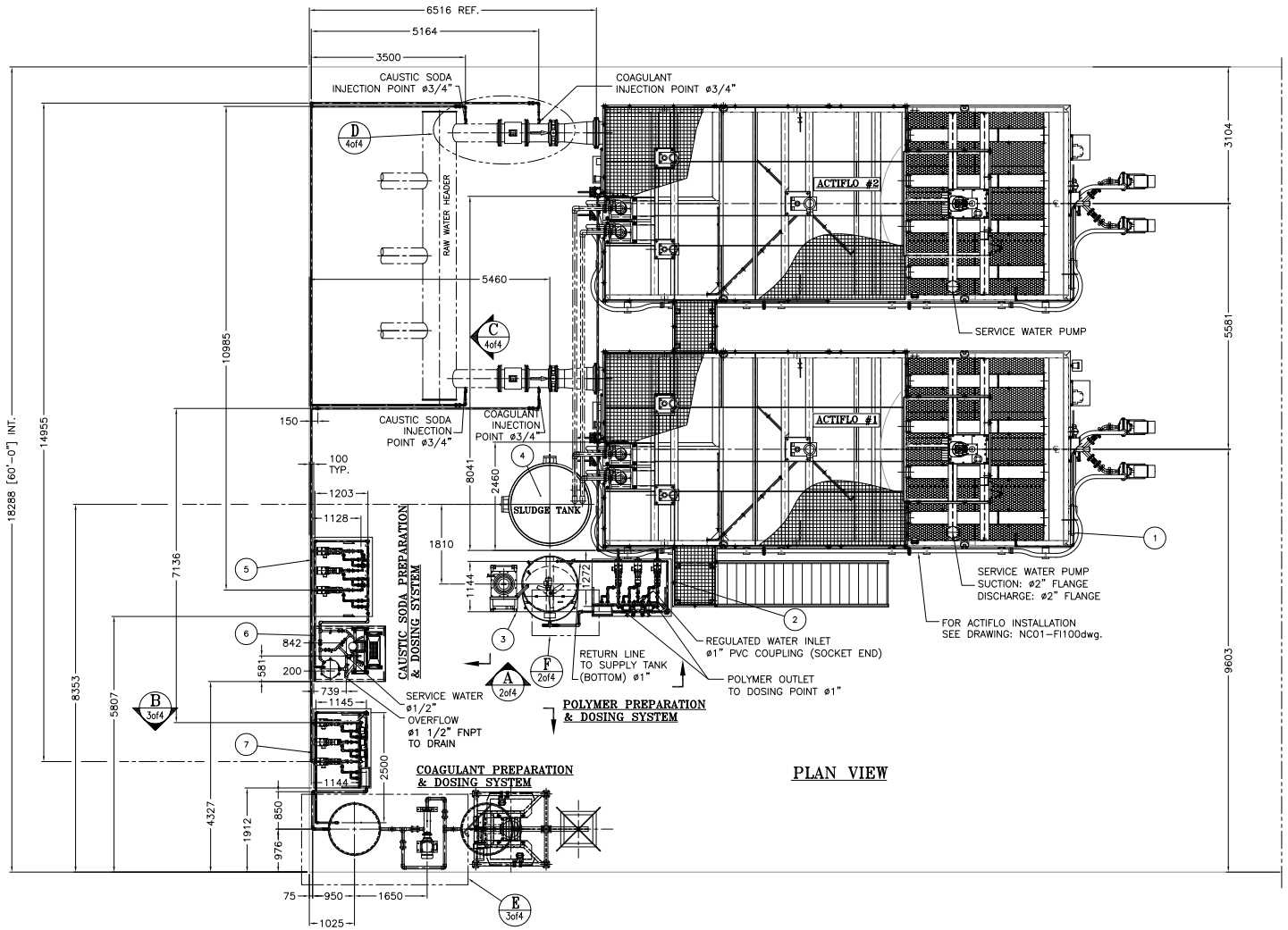

PLAN VIEW

REV	DESCRIPTION	DATE	DWN	CHKD	APVD	ECN
1	EQUIPMENTS IDENTIFICATION REVISED	2009-07-20			J.T.	
0	FOR INSTALLATION	2009-05-15	O.F.	N/A	J.T.	N/A

CONFIDENTIALITY AND INTELLECTUAL PROPERTY NOTICE
ALL INFORMATION CONTAINED IN THIS DOCUMENT IS THE SOLE PROPERTY OF JOHN MEUNIER INC. AND IS PROTECTED BY ALL APPLICABLE LAWS, INCLUDING BUT NOT LIMITED TO COPYRIGHT AND OTHER INTELLECTUAL PROPERTY LAWS. THE DESIGN CONCEPTS AND INFORMATION CONTAINED HEREIN ARE CONFIDENTIAL AND PROPRIETARY AND SUBMITTED IN CONFIDENCE. THEY ARE NOT TRANSFERRED AND THEY MUST BE USED ONLY FOR THE PURPOSE FOR WHICH THE DOCUMENT IS EXPRESSLY SUBMITTED AND NO IMPLICIT LICENCE IS GRANTED OTHERWISE BY THE SUBMISSION OF THIS DOCUMENT. THEY ARE CONFIDENTIAL AND PRIVILEGED INFORMATION OF JMI AND THEY MUST NOT BE DISCLOSED, REPRODUCED, LOANED, REWRITTEN OR USED IN WHOLE OR IN PART FOR ANY PURPOSE WHATSOEVER WITHOUT THE WRITTEN AUTHORIZATION OF JMI. JMI ASSUMES NO RESPONSIBILITY OR LIABILITY FOR THE USE OF THIS DOCUMENT OR THE DESIGN CONCEPTS AND INFORMATION CONTAINED HEREIN FOR ANOTHER PROJECT, OR IN A MANNER THAT DOES NOT RELATE TO THE FUNCTION OR PURPOSE OF THIS DOCUMENT. IN NO EVENT SHALL THIS DOCUMENT OR THE DESIGN CONCEPTS AND INFORMATION CONTAINED HEREIN BE USED BY ANY PARTY FOR ANY PURPOSE WHICH WOULD DEPRIVE JMI OF ANY RIGHT OR INTEREST IN SAME AND JMI HEREBY EXPRESSLY RESERVES ALL SUCH RIGHTS AND INTERESTS. ACCEPTANCE OF THE DELIVERY OF THIS DOCUMENT CONSTITUTES AGREEMENT TO THESE TERMS AND CONDITIONS.

DESIGNER	DATE
O. FEDORETS	2009-05-15
CHECKER	DATE
N/A	N/A
ENGINEER	DATE
J. TRUDEL	
MANAGER	DATE
N/A	N/A
SCALE:	1:50

TITLE: WATER TREATMENT SYSTEM
PROCESS EQUIPEMENT INSTALLATION
PLAN VIEW

CLIENT: MEADOWBANK MINING

JOHN MEUNIER ISO 9001: 2000
4105 Sartelon Street, Saint-Laurent, Qc, Canada H4S 2B3 / Tel: (514) 334-7230 / Fax: (514) 334-5070

PROJECT	DRAWING	INTERNAL	SHEET	REV
NC01- FI001		GEN0000	1 OF 4	1

STD: "D" 22x34 | REF: | BAR = 1" AT PLOT SCALE

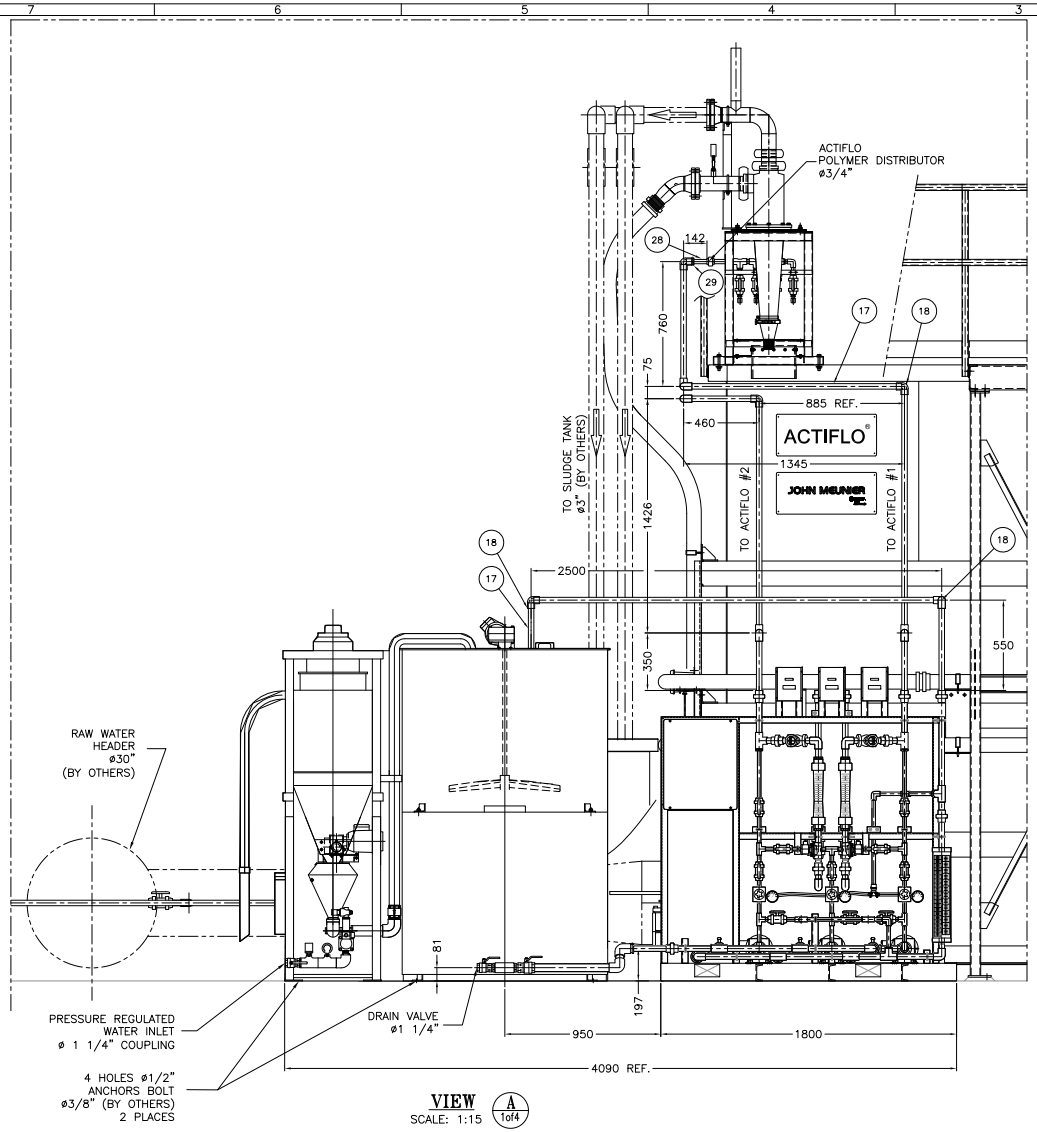

VIEW A (1of4)
SCALE: 1:15

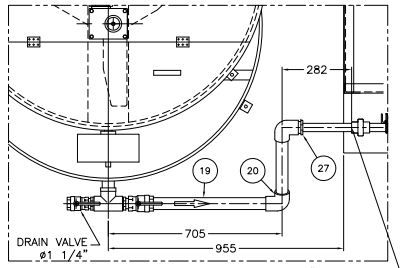

DETAIL F (1of4)
SCALE: 1:10

REV	DESCRIPTION	DATE	DWN	CHKD	APVD	ECN
1	EQUIPMENTS IDENTIFICATION REVISED	2009-07-20			J.T.	
0	FOR INSTALLATION	2009-05-15	O.F.	N/A	J.T.	N/A

CONFIDENTIALITY AND INTELLECTUAL PROPERTY NOTICE
ALL INFORMATION CONTAINED IN THIS DOCUMENT IS THE SOLE PROPERTY OF JOHN MEUNIER INC. AND IS PROTECTED BY ALL APPLICABLE LAWS, INCLUDING BUT NOT LIMITED TO COPYRIGHT AND OTHER INTELLECTUAL PROPERTY LAWS. THE DESIGN CONCEPTS AND INFORMATION CONTAINED HEREIN ARE CONFIDENTIAL AND PROPRIETARY AND SUBMITTED IN CONFIDENCE. THEY ARE NOT TRANSFERRED AND THEY MUST BE USED ONLY FOR THE PURPOSE FOR WHICH THE DOCUMENT IS EXPRESSLY SUBMITTED AND NO IMPLICIT LICENCE IS GRANTED OTHERWISE BY THE SUBMISSION OF THIS DOCUMENT. THEY ARE CONFIDENTIAL AND PRIVILEGED INFORMATION OF JMI AND THEY MUST NOT BE DISCLOSED, REPRODUCED, LOANED, RENTED OR USED IN ANY MANNER WHATSOEVER WITHOUT THE PRIOR WRITTEN CONSENT OF JMI. JMI ASSUMES NO RESPONSIBILITY OR LIABILITY FOR THE USE OF THIS DOCUMENT OR THE DESIGN CONCEPTS AND INFORMATION CONTAINED HEREIN FOR ANOTHER PROJECT, OR IN A MANNER THAT DOES NOT RELATE TO THE FITNESS OR PURPOSE OF THIS DOCUMENT. IN NO EVENT SHALL THIS DOCUMENT OR THE DESIGN CONCEPTS AND INFORMATION CONTAINED HEREIN BE USED IN ANY MANNER THAT WOULD CONFLICT WITH THE INTEREST OF JMI. © JOHN MEUNIER INC. 2009 AND OTHER INTELLECTUAL PROPERTY RIGHTS ARE RESERVED. ACCEPTANCE OF THE DELIVERY OF THIS DOCUMENT CONSTITUTES AGREEMENT TO THESE TERMS AND CONDITIONS.

DESIGNER	O. FEDORETS
DATE	2009-05-15
CHECKER	N/A
DATE	N/A
ENGINEER	J. TRUDEL
DATE	N/A
MANAGER	N/A
DATE	N/A
SCALE:	1:15

TITLE: WATER TREATMENT SYSTEM
POLYMER PREPARATION AND DOSING SYSTEM
INSTALLATION

CLIENT: MEADOWBANK MINING

JOHN MEUNIER ISO 9001: 2000
4105 Sartelon Street, Saint-Laurent, Qc, Canada H4S 2B3 / Tel: (514) 334-7230 / Fax: (514) 334-5070

PROJECT	DRAWING	INTERNAL	SHEET	REV
NC01- FI001		GEN0000	2 OF 4	1

STD: "D" 22x34 | REF: | BAR = 1" AT PLOT SCALE

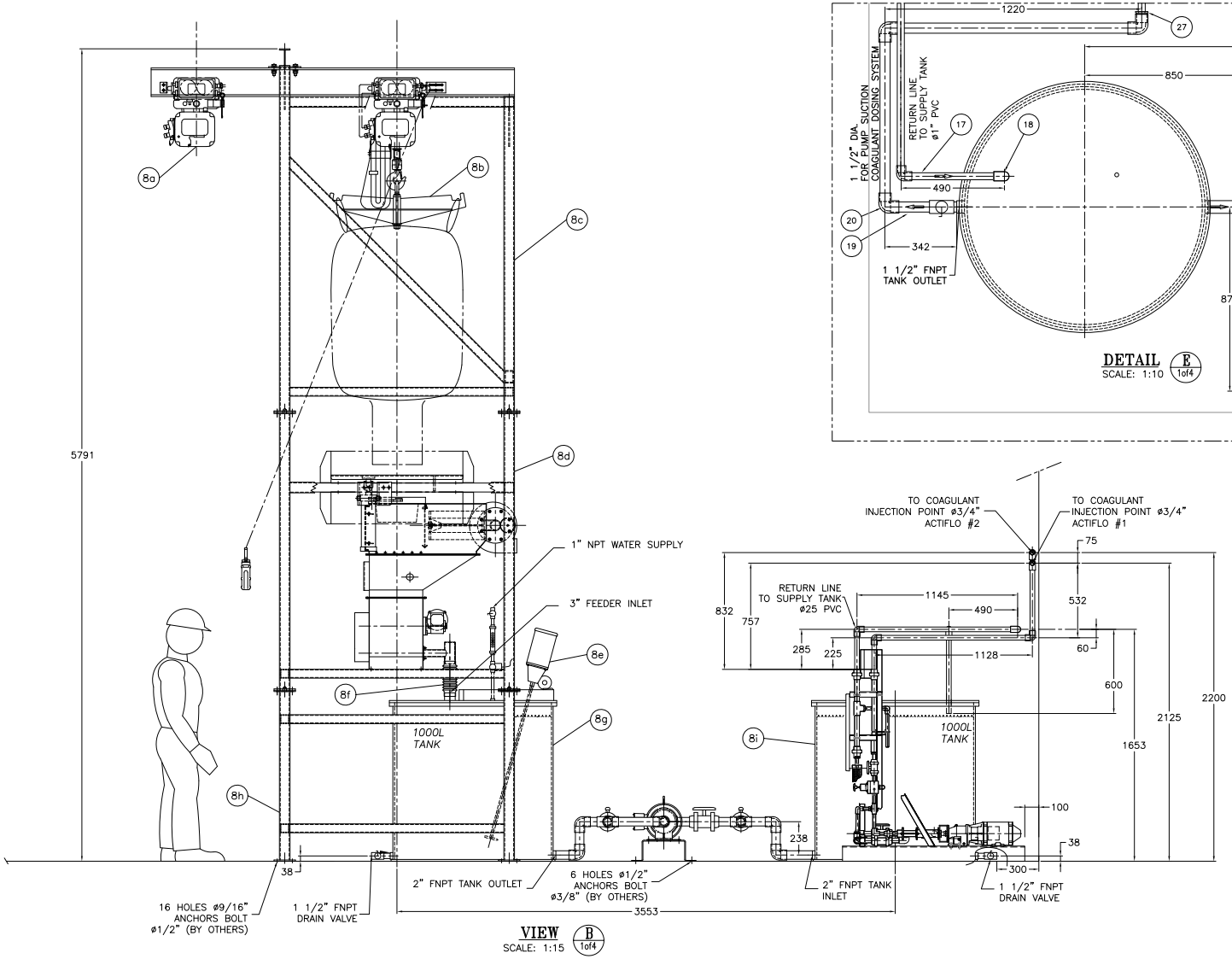

VIEW B 1of4
SCALE: 1:15

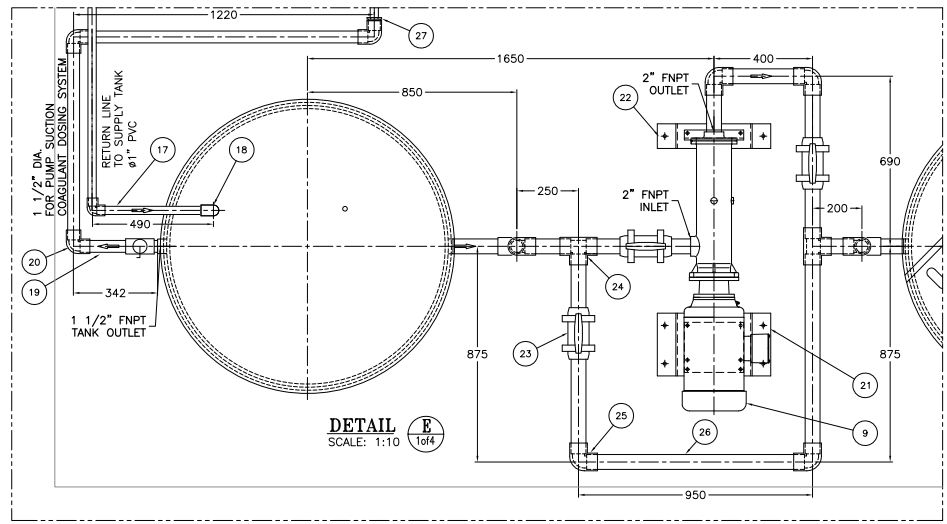

DETAIL E 1of4
SCALE: 1:10

REV	DESCRIPTION	DATE	DWN	CHKD	APVD	ECN
1	EQUIPMENTS IDENTIFICATION REVISED	2009-07-20			J.T.	
0	FOR INSTALLATION	2009-05-15	O.F.	N/A	J.T.	N/A

STD: "D" 22x34 | REF: | BAR = 1" AT PLOT SCALE

CONFIDENTIALITY AND INTELLECTUAL PROPERTY NOTICE
ALL INFORMATION CONTAINED IN THIS DOCUMENT IS THE SOLE PROPERTY OF JOHN MEUNIER INC. AND IS PROTECTED BY ALL APPLICABLE LAWS, INCLUDING BUT NOT LIMITED TO COPYRIGHT AND OTHER INTELLECTUAL PROPERTY LAWS. THE DESIGN CONCEPTS AND INFORMATION CONTAINED HEREIN ARE PROPRIETARY TO JM AND ARE SUBMITTED IN CONFIDENCE. THEY ARE NOT TRANSFERABLE. THEY MUST BE USED ONLY FOR THE PURPOSE FOR WHICH THE DOCUMENT IS EXPRESSLY SUBMITTED AND NO IMPLICIT LICENCE IS GRANTED OTHERWISE BY THE SUBMISSION OF THIS DOCUMENT. THEY ARE CONFIDENTIAL AND PRIVILEGED INFORMATION OF JM AND THEY MUST NOT BE DISCLOSED, REPRODUCED, LOANED, REMITTED OR USED IN ANY OTHER WAY WITHOUT THE EXPRESS WRITTEN CONSENT OF JM. JM ASSUMES NO RESPONSIBILITY OR LIABILITY FOR THE USE OF THIS DOCUMENT OR THE DESIGN CONCEPTS AND INFORMATION CONTAINED HEREIN FOR ANOTHER PROJECT, OR IN A MANNER THAT DOES NOT RELATE TO THE FITNESS OR PURPOSE OF THIS DOCUMENT. IN NO EVENT SHALL THIS DOCUMENT OR THE DESIGN CONCEPTS AND INFORMATION CONTAINED HEREIN BE USED IN A MANNER DETRIMENTAL TO THE INTEREST OF JM. ALL COPYRIGHT, PATENT AND OTHER INTELLECTUAL PROPERTY RIGHTS ARE RESERVED. ACCEPTANCE OF THE DELIVERY OF THIS DOCUMENT CONSTITUTES AGREEMENT TO THESE TERMS AND CONDITIONS.

DESIGNER	DATE
O. FEDORETS	2009-05-15
CHECKER	DATE
N/A	N/A
ENGINEER	DATE
J. TRUDEL	
MANAGER	DATE
N/A	N/A
SCALE: 1:15	

TITLE: WATER TREATMENT SYSTEM
COAGULANT PREPARATION AND DOSING SYSTEM
INSTALLATION

CLIENT: MEADOWBANK MINING

JOHN MEUNIER ISO 9001: 2000
4105 Sartelon Street, Saint-Laurent, Qc, Canada H4S 2B3 / Tel: (514) 334-7230 / Fax: (514) 334-5070

PROJECT	DRAWING	INTERNAL	SHEET	REV
NC01- FI001		GEN0000	3 OF 4	1

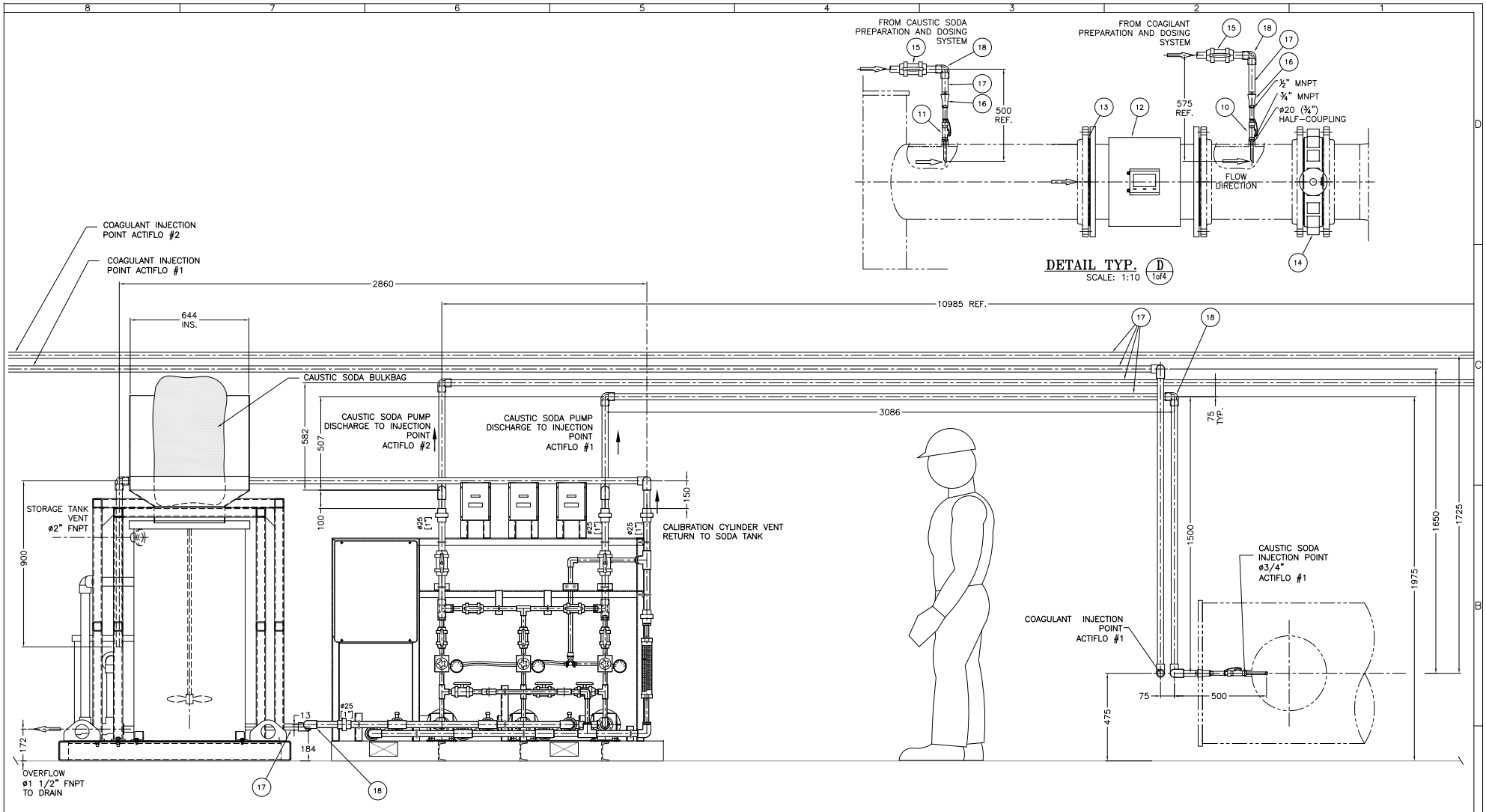

REV	DESCRIPTION	DATE	DWN	CHKD	APVD	ECN
1	EQUIPMENTS IDENTIFICATION REVISED	2009-07-20			J.T.	
0	FOR INSTALLATION	2009-05-15	O.F.	N/A	J.T.	N/A

STD: "D" 22x34 | REF: | BAR = 1" AT PLOT SCALE

CONFIDENTIALITY AND INTELLECTUAL PROPERTY NOTICE
ALL INFORMATION CONTAINED IN THIS DOCUMENT IS THE SOLE PROPERTY OF JOHN MEUNIER INC. AND IS PROTECTED BY ALL APPLICABLE LAWS, INCLUDING BUT NOT LIMITED TO COPYRIGHT AND OTHER INTELLECTUAL PROPERTY LAWS. THE DESIGN CONCEPTS AND INFORMATION CONTAINED HEREIN ARE PROPRIETARY TO JM AND ARE SUBMITTED IN CONFIDENCE. THEY ARE NOT TRANSFERABLE. THEY MUST BE USED ONLY FOR THE PURPOSE FOR WHICH THE DOCUMENT IS EXPRESSLY SUBMITTED AND NO IMPLICIT LICENCE IS GRANTED OTHERWISE BY THE SUBMISSION OF THIS DOCUMENT. THEY ARE CONFIDENTIAL AND PRIVILEGED INFORMATION OF JM AND THEY MUST NOT BE DISCLOSED, REPRODUCED, LOANED, REMITTED OR USED IN ANY OTHER MANNER WITHOUT THE EXPRESS WRITTEN CONSENT OF JM. JM ASSUMES NO RESPONSIBILITY OR LIABILITY FOR THE USE OF THIS DOCUMENT OR THE DESIGN CONCEPTS AND INFORMATION CONTAINED HEREIN FOR ANOTHER PROJECT, OR IN A MANNER THAT DOES NOT RELATE TO THE FITNESS OR PURPOSE OF THIS DOCUMENT. IN NO EVENT SHALL THIS DOCUMENT OR THE DESIGN CONCEPTS AND INFORMATION CONTAINED HEREIN BE USED IN A MANNER DETRIMENTAL TO THE INTEREST OF JM. ALL COPYRIGHT, PATENT AND OTHER INTELLECTUAL PROPERTY RIGHTS ARE RESERVED. ACCEPTANCE OF THE DELIVERY OF THIS DOCUMENT CONSTITUTES AGREEMENT TO THESE TERMS AND CONDITIONS.

DESIGNER	DATE
O. FEDORETS	2009-05-15
CHECKER	DATE
N/A	N/A
ENGINEER	DATE
J. TRUDEL	
MANAGER	DATE
N/A	N/A
SCALE: 1:10	

TITLE: WATER TREATMENT SYSTEM
CAUSTIC SODA PREPARATION AND DOSING SYSTEM
INSTALLATION

CLIENT: MEADOWBANK MINING

JOHN MEUNIER ISO 9001: 2000
4105 Sartelon Street, Saint-Laurent, Qc, Canada H4S 2B3 / Tel: (514) 334-7230 / Fax: (514) 334-5070

PROJECT	DRAWING	INTERNAL	SHEET	REV
NC01 – FI001		GEN0000	4 OF 4	1

JOHN MEUNIER

Meadowbank mining Corp.
ACP-700R
Technical Data Sheet
Reference : NC01

ELECTRICAL DRAWINGS
FIELD WIRING

VEOLIA WATER
Solutions & Technologies

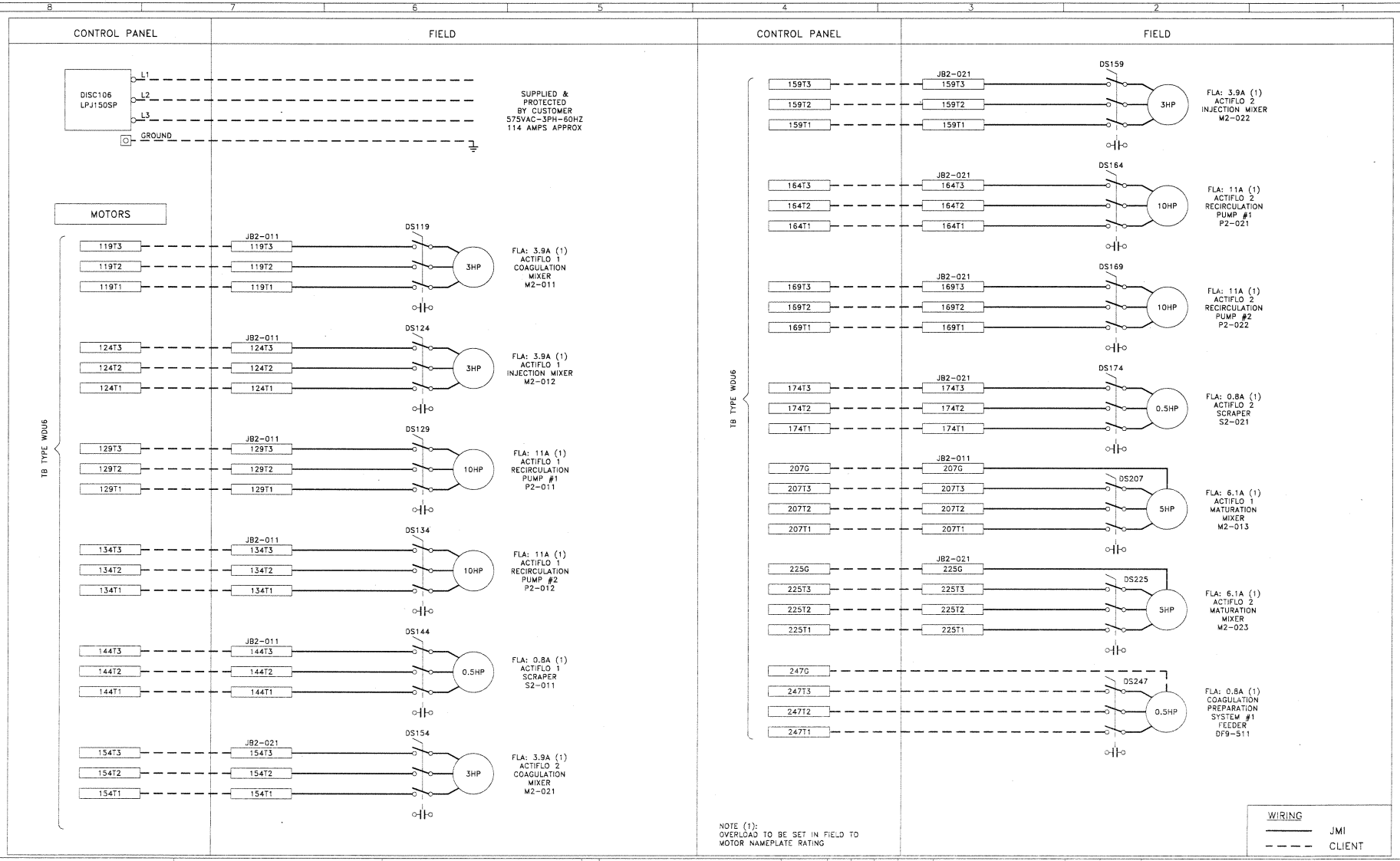

Envitech Automation Inc. CERTIFIÉ ISO9001
ENVITECH Intégrateurs de systèmes / Systems Integrators

ENVITECH DRAWING A4765A

BAR = 1" AT PLOT SCALE

REV	DESCRIPTION	DATE	DWN	CHKD	APVD	ECN
B	AS BUILT	2009/05/29	JR	JCD		
A	FOR APPROVAL	2009/04/18	JR	JCD		

STD: JMI_22x34_D_ANG REF:

CONFIDENTIALITY AND INTELLECTUAL PROPERTY NOTICE
ALL INFORMATION CONTAINED IN THIS DOCUMENT IS THE SOLE PROPERTY OF JOHN MEUNIER INC. AND IS PROTECTED BY ALL APPLICABLE LAWS, INCLUDING BUT NOT LIMITED TO COPYRIGHT AND OTHER INTELLECTUAL PROPERTY LAWS. THE DESIGN CONCEPTS AND INFORMATION CONTAINED HEREIN ARE PROPRIETARY TO JMI AND ARE SUBMITTED IN CONFIDENCE. THEY ARE NOT TRANSFERABLE. THEY MUST BE USED ONLY FOR THE PURPOSE FOR WHICH THE DOCUMENT IS EXPRESSLY SUBMITTED AND NO IMPLICIT LICENCE IS GRANTED OTHERWISE BY THE SUBMISSION OF THIS DOCUMENT. THEY ARE CONFIDENTIAL AND PRIVILEGED INFORMATION OF JMI AND THEY MUST NOT BE DISCLOSED, REPRODUCED, LOANED, TRANSFERRED OR USED IN ANY OTHER MANNER WITHOUT THE EXPRESS WRITTEN CONSENT OF JMI. JMI ASSUMES NO RESPONSIBILITY OR LIABILITY FOR THE USE OF THIS DOCUMENT OR THE DESIGN CONCEPTS AND INFORMATION CONTAINED HEREIN FOR ANOTHER PROJECT, OR IN A MANNER THAT DOES NOT RELATE TO THE STATED OR PURPOSE OF THIS DOCUMENT. IN NO EVENT SHALL THE DOCUMENT OR THE DESIGN CONCEPTS AND INFORMATION CONTAINED HEREIN BE USED IN A MANNER WITHOUT THE EXPRESS WRITTEN CONSENT OF JMI. ALL COPYRIGHT, PATENT AND OTHER INTELLECTUAL PROPERTY RIGHTS ARE RESERVED. INCORPORATE OF THE DESIGN OF THIS DOCUMENT CONSTITUTES AGREEMENT TO THESE TERMS AND CONDITIONS.

DESIGNER	DATE
CHECKER	DATE
ENGINEER	DATE
MANAGER	DATE
SCALE:	

TITLE (2) ACTIFLO ACP-700R FIELD WIRING

CLIENT MEADOWBANK MINING CORP., NWT

JOHN MEUNIER ISO 9001: 2000
4105 Garrison Street, Saint-Laurent, Qc, Canada H4S 2B3 / Tel: (514) 334-7230 / Fax: (514) 334-5070

PROJECT	DRAWING	SHEET	REV
NC01-	001-E20-001	1 OF 17	B

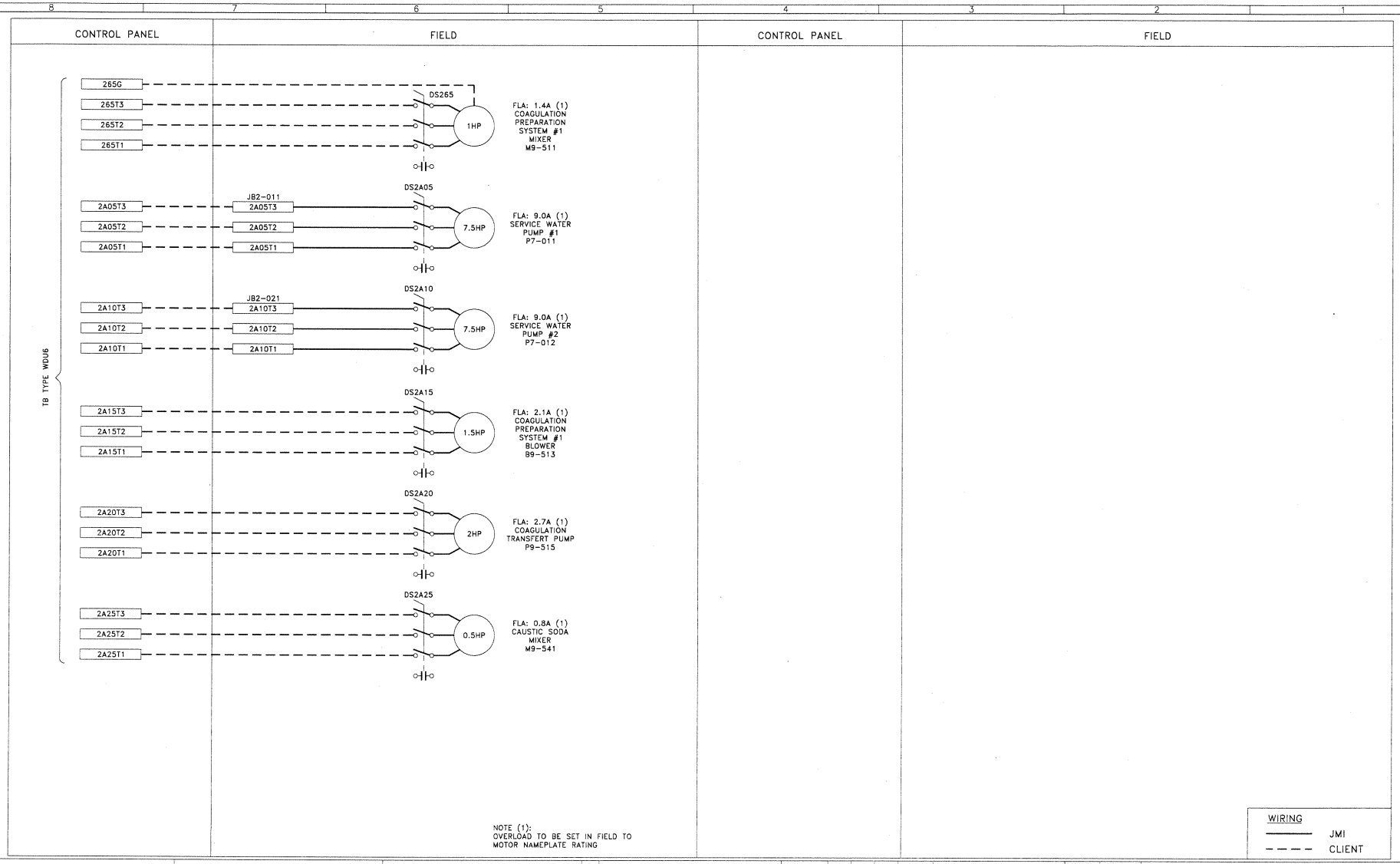

Envitech Automation Inc.
CERTIFIÉ ISO9001
ENVITECH Intégrateurs de systèmes / Systems Integrators

ENVITECH DRAWING A4765A

BAR = 1" AT PLOT SCALE

STD: JMI_22x34_D_ANG

REF:

REV	DESCRIPTION	DATE	DWN	CHKD	APVD	ECN
B	AS BUILT	2009/05/29	JR	JCD		
A	FOR APPROVAL	2009/04/16	JR	JCD		

CONFIDENTIALITY AND INTELLECTUAL PROPERTY NOTICE
ALL INFORMATION CONTAINED IN THIS DOCUMENT IS THE SOLE PROPERTY OF JOHN MEUNIER INC. AND IS PROTECTED BY ALL APPLICABLE LAWS, INCLUDING BUT NOT LIMITED TO COPYRIGHT AND OTHER INTELLECTUAL PROPERTY LAWS. THE DESIGN CONCEPTS AND INFORMATION CONTAINED HEREIN ARE PROPRIETARY TO JMI AND ARE SUBMITTED IN CONFIDENCE. THEY ARE NOT TRANSFERABLE, AND MUST BE USED ONLY FOR THE PURPOSE FOR WHICH THE DOCUMENT IS EXPRESSLY SUBMITTED AND NO IMPLICIT LICENCE IS GRANTED OTHERWISE BY THE SUBMISSION OF THIS DOCUMENT. THEY ARE CONFIDENTIAL AND PRIVILEGED INFORMATION OF JMI AND THEY MUST NOT BE DISCLOSED, REPRODUCED, LOANED, SUBMITTED OR USED IN ANY OTHER MANNER WITHOUT THE EXPRESS WRITTEN CONSENT OF JMI. JMI ASSUMES NO RESPONSIBILITY OR LIABILITY FOR THE USE OF THIS DOCUMENT OR THE DESIGN CONCEPTS AND INFORMATION CONTAINED HEREIN FOR ANOTHER PROJECT, OR IN A MANNER THAT DOES NOT RELATE TO THE FITNESS OR PURPOSE OF THIS DOCUMENT. IN NO EVENT SHALL THIS DOCUMENT OR THE DESIGN CONCEPTS AND INFORMATION CONTAINED HEREIN BE USED IN A MANNER DETRIMENTAL TO THE INTEREST OF JMI. ALL COPYRIGHT, PATENT AND OTHER INTELLECTUAL PROPERTY RIGHTS ARE RESERVED. ACCEPTANCE OF THE DELIVERY OF THIS DOCUMENT CONSTITUTES AGREEMENT TO THESE TERMS AND CONDITIONS.

DESIGNER	DATE
CHECKER	DATE
ENGINEER	DATE
MANAGER	DATE
SCALE:	

TITLE (2) ACTIFLO ACP-700R FIELD WIRING

CLIENT MEADOWBANK MINING CORP., NWT

JOHN MEUNIER ISO 9001: 2000
4105 Sartelon Street, Saint-Laurent, Qc, Canada H4S 2B3 / Tel: (514) 334-7230 / Fax: (514) 334-3070

PROJECT	DRAWING	SHEET	REV
NC01-	001-E20-002	2 OF 17	B

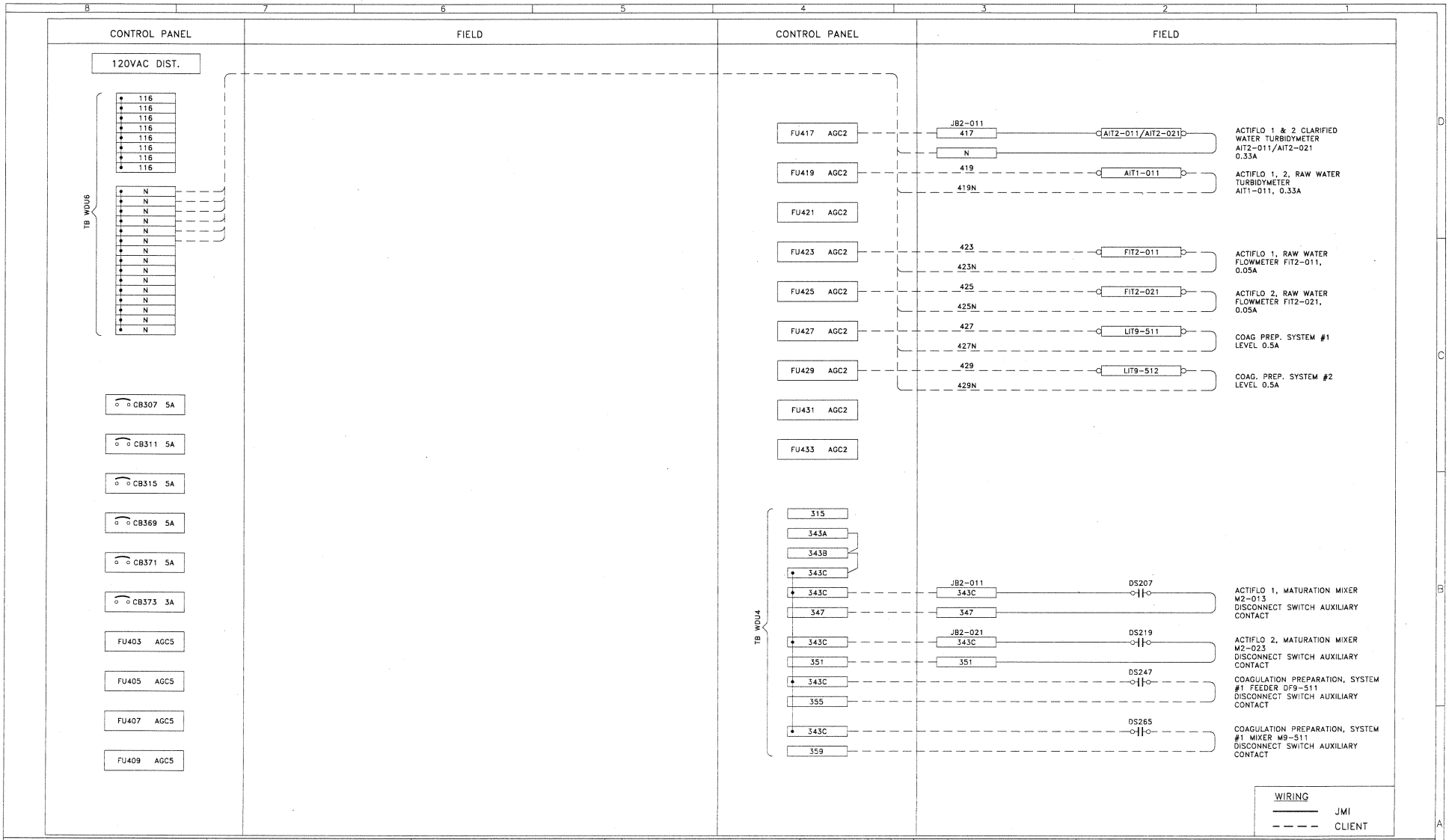

Envitech Automation Inc. CERTIFIÉ ISO9001
ENVITECH Intégrateurs de systèmes / Systems Integrators

ENVITECH DRAWING A4765A

BAR = 1" AT PLOT SCALE

REV	DESCRIPTION	DATE	DWN	CHKD	APVD	ECN
B	AS BUILT	2009/05/29	JR	JCD		
A	FOR APPROVAL	2009/04/16	JR	JCD		

STD: JMI_22x34_D_ANG REF:

CONFIDENTIALITY AND INTELLECTUAL PROPERTY NOTICE
ALL INFORMATION CONTAINED IN THIS DOCUMENT IS THE SOLE PROPERTY OF JOHN MEUNIER INC. AND IS PROTECTED BY ALL APPLICABLE LAWS, INCLUDING BUT NOT LIMITED TO COPYRIGHT AND OTHER INTELLECTUAL PROPERTY LAWS. THE DESIGN CONCEPTS AND INFORMATION CONTAINED HEREIN ARE PROPRIETARY TO JMI AND ARE SUBMITTED IN CONFIDENCE. THEY ARE NOT TRANSFERABLE. THEY MUST BE USED ONLY FOR THE PURPOSE FOR WHICH THE DOCUMENT IS EXPRESSLY SUBMITTED AND NO IMPLIED LICENCE IS GRANTED OTHERWISE BY THE SUBMISSION OF THIS DOCUMENT. THEY ARE CONFIDENTIAL AND PRIVATELY INFORMATION OF JMI AND THEY MUST NOT BE DISCLOSED, REPRODUCED, LOANED, REMITTED OR USED IN ANY OTHER MANNER WITHOUT THE EXPRESS WRITTEN CONSENT OF JMI. JMI ASSUMES NO RESPONSIBILITY OR LIABILITY FOR THE USE OF THIS DOCUMENT OF THE DESIGN CONCEPTS AND INFORMATION CONTAINED HEREIN FOR ANOTHER PROJECT, OR IN A MANNER THAT DOES NOT INFLUE TO THE OTHERS OR PURPOSE OF THIS DOCUMENT. IN NO EVENT SHALL THE DOCUMENT OR THE DESIGN CONCEPTS AND INFORMATION CONTAINED HEREIN BE USED IN A MANNER DETRIMENTAL TO THE INTEREST OF JMI. ALL COPYRIGHT, PATENT AND OTHER INTELLECTUAL PROPERTY RIGHTS ARE RESERVED. ACCEPTANCE OF THE DELIVERY OF THIS DOCUMENT CONSTITUTES AGREEMENT TO THESE TERMS AND CONDITIONS.

DESIGNER	DATE
CHECKER	DATE
ENGINEER	DATE
MANAGER	DATE
SCALE:	

TITLE (2) ACTIFLO ACP-700R FIELD WIRING

CLIENT MEADOWBANK MINING CORP., NWT

JOHN MEUNIER ISO 9001: 2000
4105 Sartelon Street, Saint-Laurent, Qc, Canada H4S 2B3 / Tel: (514) 334-7230 / Fax: (514) 334-5070

PROJECT NC01- DRAWING 001-E20-003 SHEET 3 OF 17 REV B

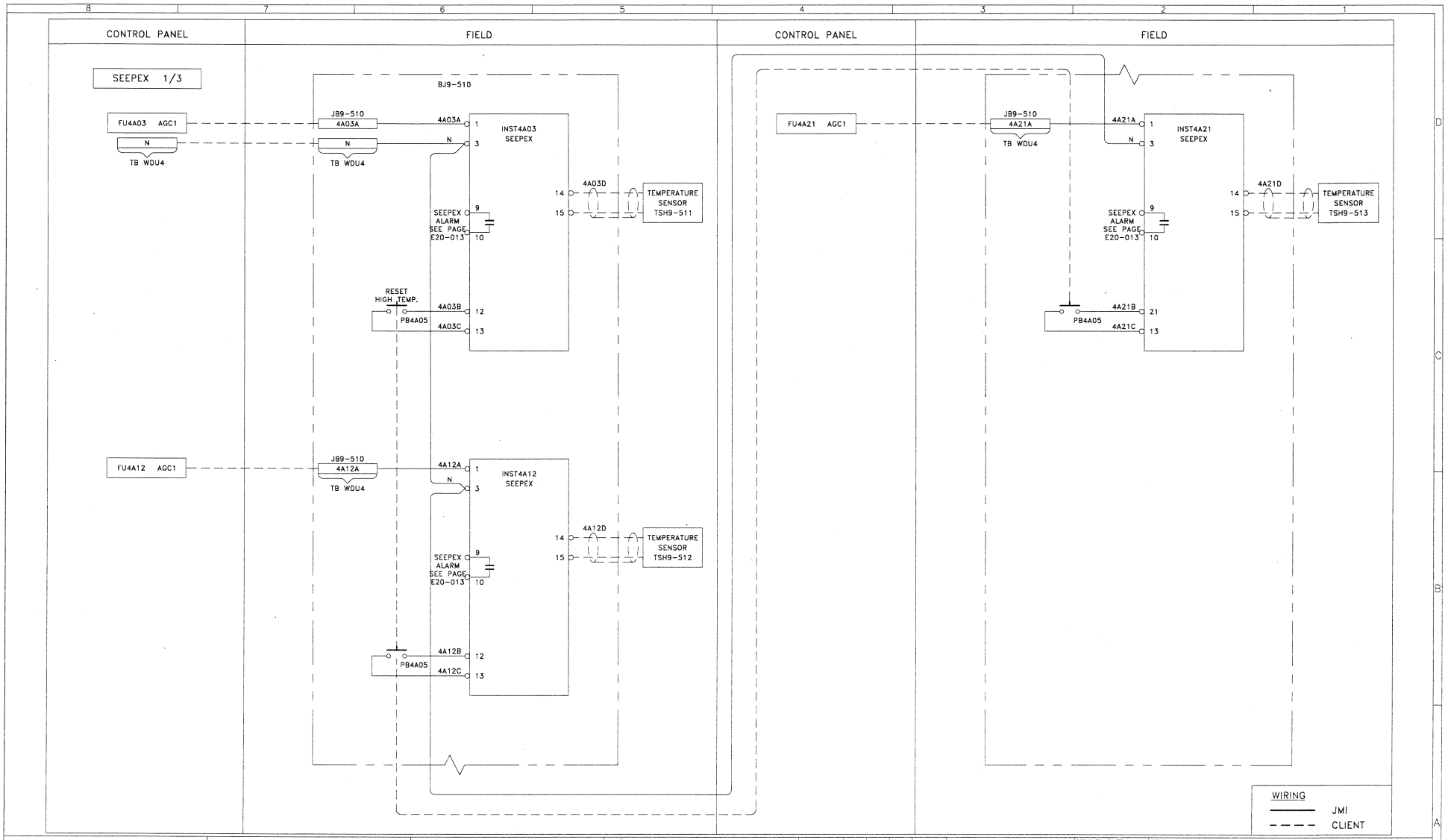

STD: JMI_22x34_D_ANG

REF:

Envitech Automation Inc. CERTIFIÉ ISO9001

ENVITECH Intégrateurs de systèmes / Systems Integrators

ENVITECH DRAWING A4765A

BAR = 1" AT PLOT SCALE

REV	DESCRIPTION	DATE	DWN	CHKD	APVD	ECN
B	AS BUILT	2009/05/29	JR	JCD		
A	FOR APPROVAL	2009/04/16	JR	JCD		

CONFIDENTIALITY AND INTELLECTUAL PROPERTY NOTICE

ALL INFORMATION CONTAINED IN THIS DOCUMENT IS THE SOLE PROPERTY OF JOHN MEUNIER INC. AND IS PROTECTED BY ALL APPLICABLE LAWS, INCLUDING BUT NOT LIMITED TO COPYRIGHT AND OTHER INTELLECTUAL PROPERTY LAWS. THE DESIGN CONCEPTS AND INFORMATION CONTAINED HEREIN ARE PROPRIETARY TO JMI AND ARE SUBMITTED IN CONFIDENCE. THEY ARE NOT TRANSFERABLE. THEY MUST BE USED ONLY FOR THE PURPOSE FOR WHICH THE DOCUMENT IS CONFIDENTIALLY SUBMITTED AND NO IMPLICIT LICENCE IS GRANTED OTHERWISE BY THE SUBMISSION OF THIS DOCUMENT. THEY ARE CONFIDENTIAL AND PROBLEMS INFORMATION OF JMI AND THEY MUST NOT BE DISCLOSED, REPRODUCED, LOANED, REMITTED OR USED IN ANY OTHER MANNER WITHOUT THE EXPRESS WRITTEN CONSENT OF JMI. JMI ASSUMES NO RESPONSIBILITY OR LIABILITY FOR THE USE OF THIS DOCUMENT OR THE DESIGN CONCEPTS AND INFORMATION CONTAINED HEREIN FOR ANOTHER PROJECT, OR IN A MANNER THAT DOES NOT RELATE TO THE PRINTED OR PURPOSE OF THIS DOCUMENT. IN NO EVENT SHALL THIS DOCUMENT OR THE DESIGN CONCEPTS AND INFORMATION CONTAINED HEREIN BE USED IN A MANNER DETRIMENTAL TO THE INTEREST OF JMI. ALL COPYRIGHT, PATENT AND OTHER INTELLECTUAL PROPERTY RIGHTS ARE RESERVED. ACCEPTANCE OF THE DELIVERY OF THIS DOCUMENT CONSTITUTES AGREEMENT TO THESE TERMS AND CONDITIONS.

DESIGNER	DATE
CHECKER	DATE
ENGINEER	DATE
MANAGER	DATE
SCALE:	

TITLE (2) ACTIFLO ACP-700R FIELD WIRING

CLIENT MEADOWBANK MINING CORP., NWT

JOHN MEUNIER ISO 9001: 2000

4105 Sartorius Street, Saint-Laurent, Qc, Canada H4S 2B3 / Tel: (514) 334-7230 / Fax: (514) 334-5070

PROJECT	DRAWING	SHEET	REV
NC01-	001-E20-004	4 OF 17	B

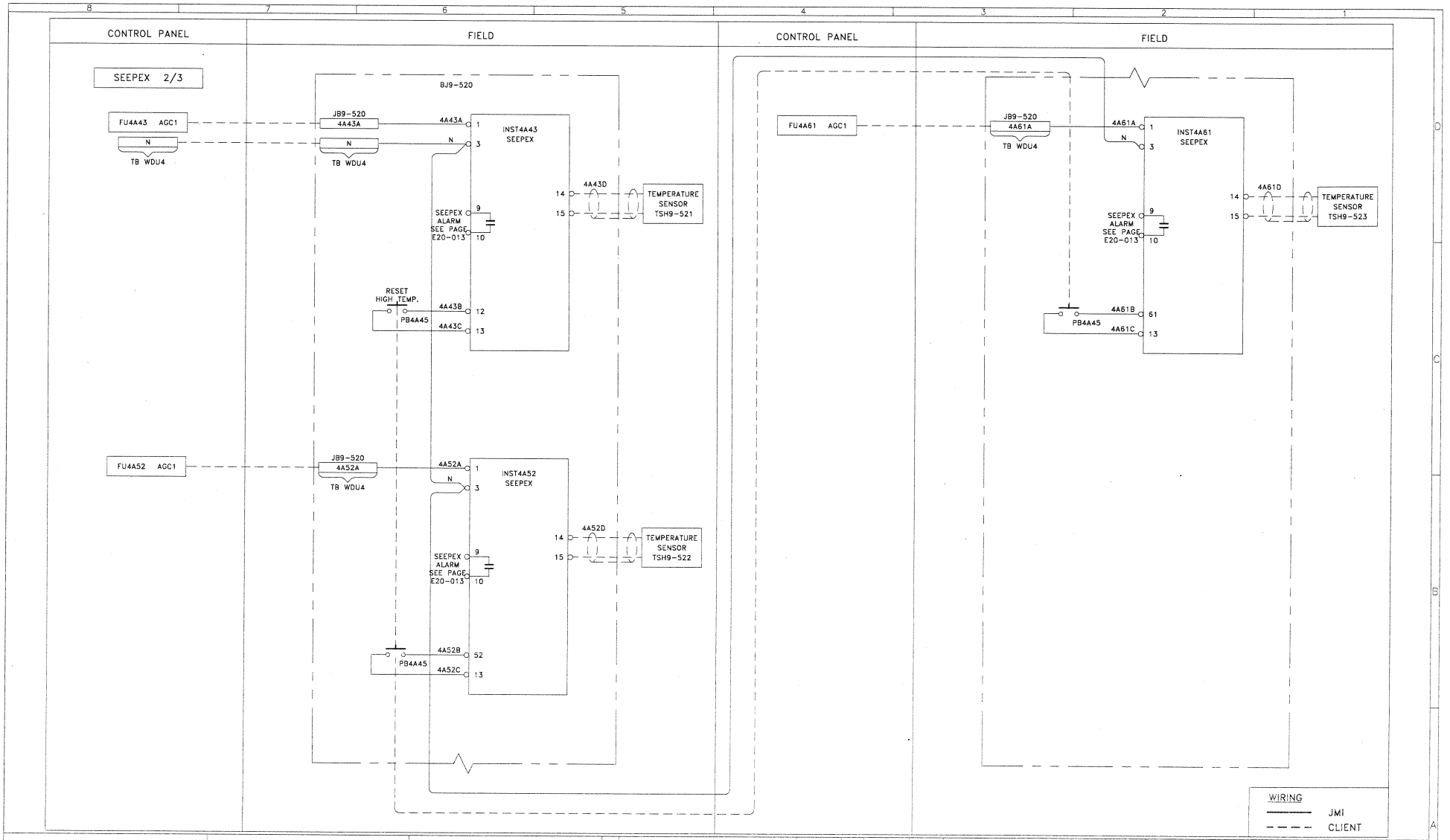

Envitech Automation Inc. CERTIFIÉ ISO9001

ENVITECH Intégrateurs de systèmes / Systems Integrators

ENVITECH DRAWING A4765A

STD: JMI_22x34_D_ANG

REF:

BAR = 1" AT PLOT SCALE

REV	DESCRIPTION	DATE	DWN	CHKD	APVD	ECN
B	AS BUILT	2009/05/29	JR	JCD		
A	FOR APPROVAL	2009/04/16	JR	JCD		

CONFIDENTIALITY AND INTELLECTUAL PROPERTY NOTICE
ALL INFORMATION CONTAINED IN THIS DOCUMENT IS THE SOLE PROPERTY OF JOHN MEUNIER INC. AND IS PROTECTED BY ALL APPLICABLE LAWS, INCLUDING BUT NOT LIMITED TO COPYRIGHT AND OTHER INTELLECTUAL PROPERTY LAWS. THE DESIGN CONCEPTS AND INFORMATION CONTAINED HEREIN ARE PROPRIETARY TO JMI AND ARE SUBMITTED IN CONFIDENCE. THEY ARE NOT TRANSFERABLE, NOT MADE BY USED ONLY FOR THE PURPOSE FOR WHICH THE DOCUMENT IS EXPRESSLY SUBMITTED AND NO IMPLICIT LICENCE IS GRANTED CONCERNING BY THE SUBMISSION OF THIS DOCUMENT. THEY ARE CONFIDENTIAL AND PROVIDED INFORMATION OF JMI AND THEY MUST NOT BE DISCLOSED, REPRODUCED, LOANED, REMITTED OR USED IN ANY OTHER MANNER WITHOUT THE EXPRESS WRITTEN CONSENT OF JMI. ADDITIONAL AND RESPONSIBILITY OF LIABILITY FOR THE USE OF THIS DOCUMENT OR THE DESIGN CONCEPTS AND INFORMATION CONTAINED HEREIN FOR ANOTHER PROJECT, OR IN A MANNER THAT DOES NOT RELATE TO THE STATED OR IMPLIED OF THIS DOCUMENT. IN NO FORM SHALL THIS DOCUMENT OR THE DESIGN CONCEPTS AND INFORMATION CONTAINED HEREIN BE USED IN A MANNER DETRIMENTAL TO THE INTEREST OF JMI. ALL COPYRIGHT, PATENT AND OTHER INTELLECTUAL PROPERTY RIGHTS ARE RESERVED. ALL DISTRIBUTION OF THIS DOCUMENT IS PROHIBITED WITHOUT THE EXPRESS WRITTEN CONSENT OF JMI.

DESIGNER	DATE
CHECKER	DATE
ENGINEER	DATE
MANAGER	DATE
SCALE:	

TITLE (2) ACTIFLO ACP-700R FIELD WIRING

CLIENT MEADOWBANK MINING CORP., NWT

JOHN MEUNIER ISO 9001: 2000

4105 Sartelon Street, Saint-Laurent, Qc. Canada H4S 2B3 / Tel: (514) 334-7330 / Fax: (514) 334-5070

PROJECT	DRAWING	SHEET	REV
NC01-	001-E20-005A	5A OF 17	B

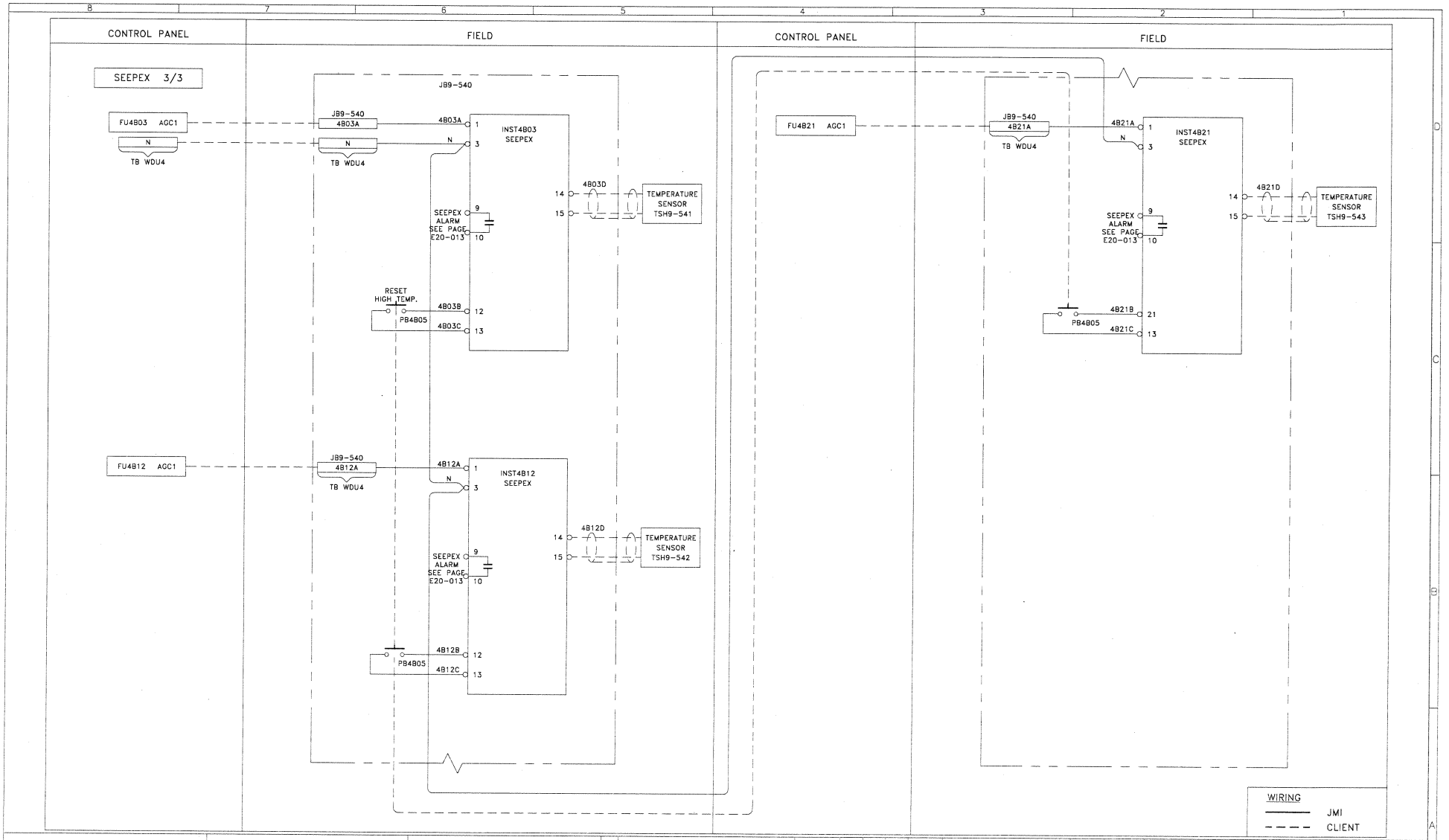

Envitech Automation Inc. CERTIFIÉ ISO9001

ENVITECH Intégrateurs de systèmes / Systems integrators

ENVITECH DRAWING A4765A

BAR = 1" AT PLOT SCALE

STD: JMI_22x34_D_ANG

REF:

REV	DESCRIPTION	DATE	DWN	CHKD	APVD	ECN
B	AS BUILT	2009/05/29	JR	JCD		
A	FOR APPROVAL	2009/04/16	JR	JCD		

CONFIDENTIALITY AND INTELLECTUAL PROPERTY NOTICE
ALL INFORMATION CONTAINED IN THIS DOCUMENT IS THE SOLE PROPERTY OF JOHN MEUNIER INC. AND IS PROTECTED BY ALL APPLICABLE LAWS, INCLUDING BUT NOT LIMITED TO COPYRIGHT AND OTHER INTELLECTUAL PROPERTY LAWS. THE DESIGN CONCEPTS AND INFORMATION CONTAINED HEREIN ARE PROPRIETARY TO JMI AND ARE SUBMITTED IN CONFIDENCE. THEY ARE NOT TRANSFERABLE. THEY MUST BE USED ONLY FOR THE PURPOSE FOR WHICH THE DOCUMENT IS EXPRESSLY SUBMITTED AND NO IMPLICIT LICENCE IS GRANTED OTHERWISE BY THE SUBMISSION OF THIS DOCUMENT. THEY ARE CONFIDENTIAL AND PRIVILEGED INFORMATION OF JMI AND THEY MUST NOT BE DISCLOSED, REPRODUCED, LOANED, PERMITTED OR USED IN ANY OTHER MANNER WITHOUT THE EXPRESS WRITTEN CONSENT OF JMI. ALL ASSUMED NO RESPONSIBILITY OR LIABILITY FOR THE USE OF THIS DOCUMENT OR THE DESIGN CONCEPTS AND INFORMATION CONTAINED HEREIN FOR ANOTHER PROJECT, OR IN A MANNER THAT DOES NOT RELATE TO THE FITNESS OR PURPOSE OF THIS DOCUMENT. IN NO EVENT SHALL THIS DOCUMENT OR THE DESIGN CONCEPTS AND INFORMATION CONTAINED HEREIN BE USED IN A MANNER DETRIMENTAL TO THE INTEREST OF JMI. ALL COPYRIGHT, PATENT AND OTHER INTELLECTUAL PROPERTY RIGHTS ARE RESERVED. ACCEPTANCE OF THE DELIVERY OF THIS DOCUMENT CONSTITUTES AGREEMENT TO THESE TERMS AND CONDITIONS.

DESIGNER	DATE
CHECKER	DATE
ENGINEER	DATE
MANAGER	DATE
SCALE:	

TITLE (2) ACTIFLO ACP-700R FIELD WIRING

CLIENT MEADOWBANK MINING CORP., NWT

JOHN MEUNIER ISO 9001: 2000

4105 Sartelon Street, Saint-Laurent, Qc, Canada H4S 2B3 / Tel: (514) 334-7230 / Fax: (514) 334-5070

PROJECT	DRAWING	SHEET	REV
NC01-	001-E20-005B	5B OF 17	B

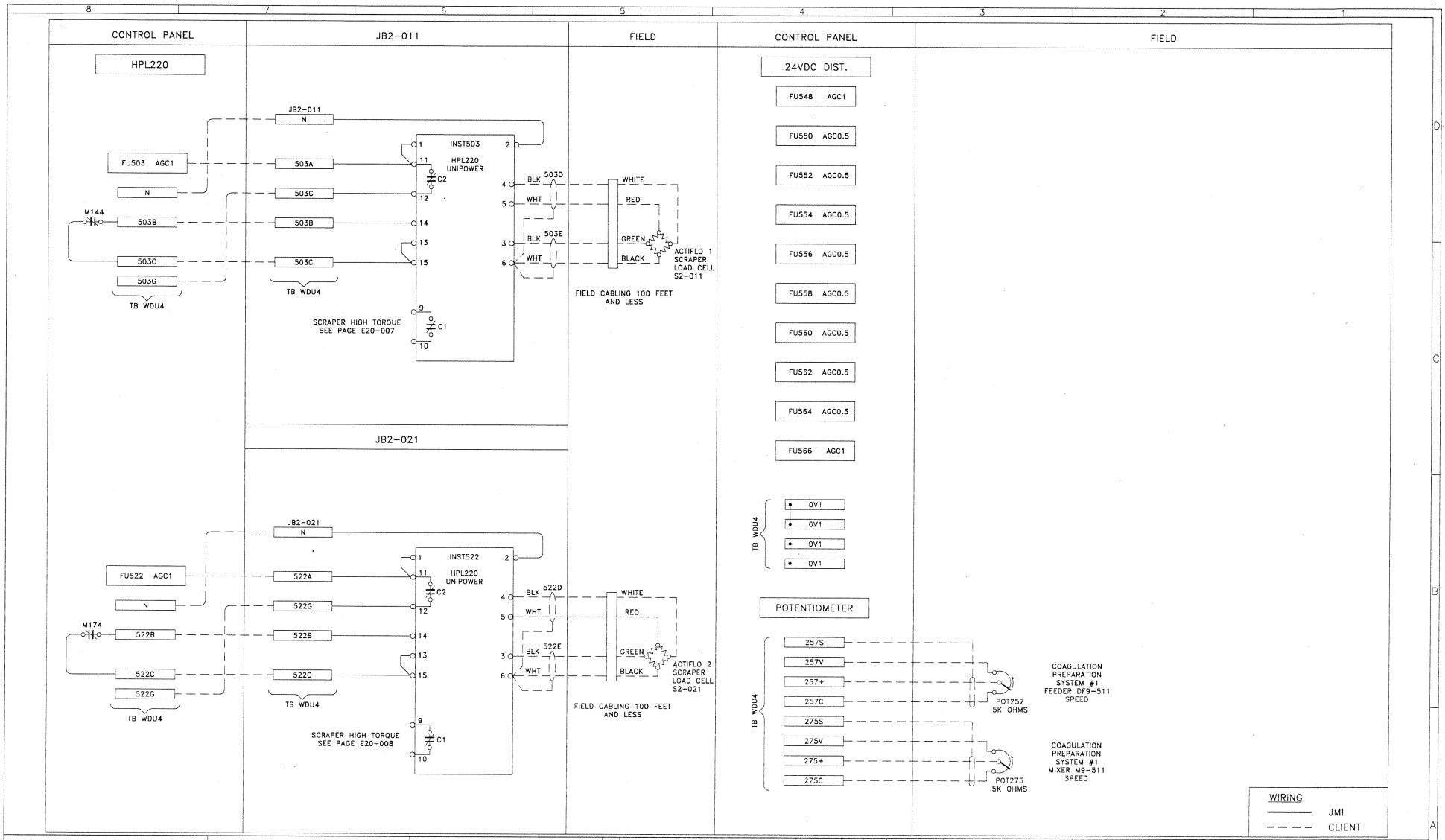

Envitech Automation Inc. CERTIFIÉ ISO9001
ENVITECH Intégrateurs de systèmes / Systems Integrators

ENVITECH DRAWING A4765A

BAR = 1" AT PLOT SCALE

REV	DESCRIPTION	DATE	DWN	CHKD	APVD	ECN
B	AS BUILT	2009/05/29	JR	JCD		
A	FOR APPROVAL	2009/04/16	JR	JCD		

CONFIDENTIALITY AND INTELLECTUAL PROPERTY NOTICE
ALL INFORMATION CONTAINED IN THIS DOCUMENT IS THE SOLE PROPERTY OF JOHN MEUNIER INC. AND IS PROTECTED BY ALL APPLICABLE LAWS, INCLUDING BUT NOT LIMITED TO COPYRIGHT AND OTHER INTELLECTUAL PROPERTY LAWS. THE DESIGN CONCEPTS AND INFORMATION CONTAINED HEREIN ARE PROPRIETARY TO JM AND ARE SUBMITTED IN CONFIDENCE. THEY ARE NOT TRANSFERABLE, MAY NOT BE DISCLOSED OR IMPARTED TO ANYONE WHO HAS NOT SIGNED A SUPPLEMENTARY NON-DISCLOSURE AGREEMENT, AND MAY NOT BE USED FOR ANY PURPOSE OTHER THAN THE EXPRESS WRITTEN CONSENT OF JM. BY ACCEPTANCE OF THE SUBMISSION OF THIS DOCUMENT, THEY AGREE THAT THIS DOCUMENT AND ALL INFORMATION OBTAINED FROM IT OR DISCLOSED AT THE MEETING ARRANGED FOR THE PURPOSE OF REVIEWING THE CONTENTS OF THIS DOCUMENT ARE CONFIDENTIAL AND PROVIDED TO THEM ON A FIDUCIARY BASIS. THEY AGREE THAT THE DISCLOSURE OF THIS DOCUMENT OR OF THE DESIGN CONCEPTS AND INFORMATION CONTAINED HEREIN FOR ANOTHER PURPOSE, OR IN A MANNER THAT DOES NOT RELATE TO THE STATED OR INTENDED PURPOSE OF THIS DISCLOSURE, IN WHOLE OR IN PART, SHALL THIS DOCUMENT OR THE DESIGN CONCEPTS AND INFORMATION CONTAINED HEREIN BE USED IN A MANNER DETRIMENTAL TO THE INTEREST OF JM. ALL COPYRIGHT, MORAL AND OTHER INTELLECTUAL PROPERTY RIGHTS ARE RESERVED BY JM. THE RECEIPT AND/OR USE BY ANY PARTY OF THIS DOCUMENT CONSTITUTES ASSENT BY THAT PARTY TO THESE TERMS AND CONDITIONS.

		DATE
DESIGNER		
CHECKER		
ENGINEER		
MANAGER		
SCALE:		

TITLE: (2) ACTIFLO ACP-700R FIELD WIRING

CLIENT: MEADOWBANK MINING CORP., NWT

JOHN MEUNIER ISO 9001: 2000
4105 Sartelon Street, Saint-Laurent, QC, Canada H4S 2B3 / Tel: (514) 334-7330 / Fax: (514) 334-0070

PROJECT	DRAWING	SHEET	REV
	NC01-001-E20-006	6 OF 17	B

STD: JMI_22x34_D_ANG

REF:

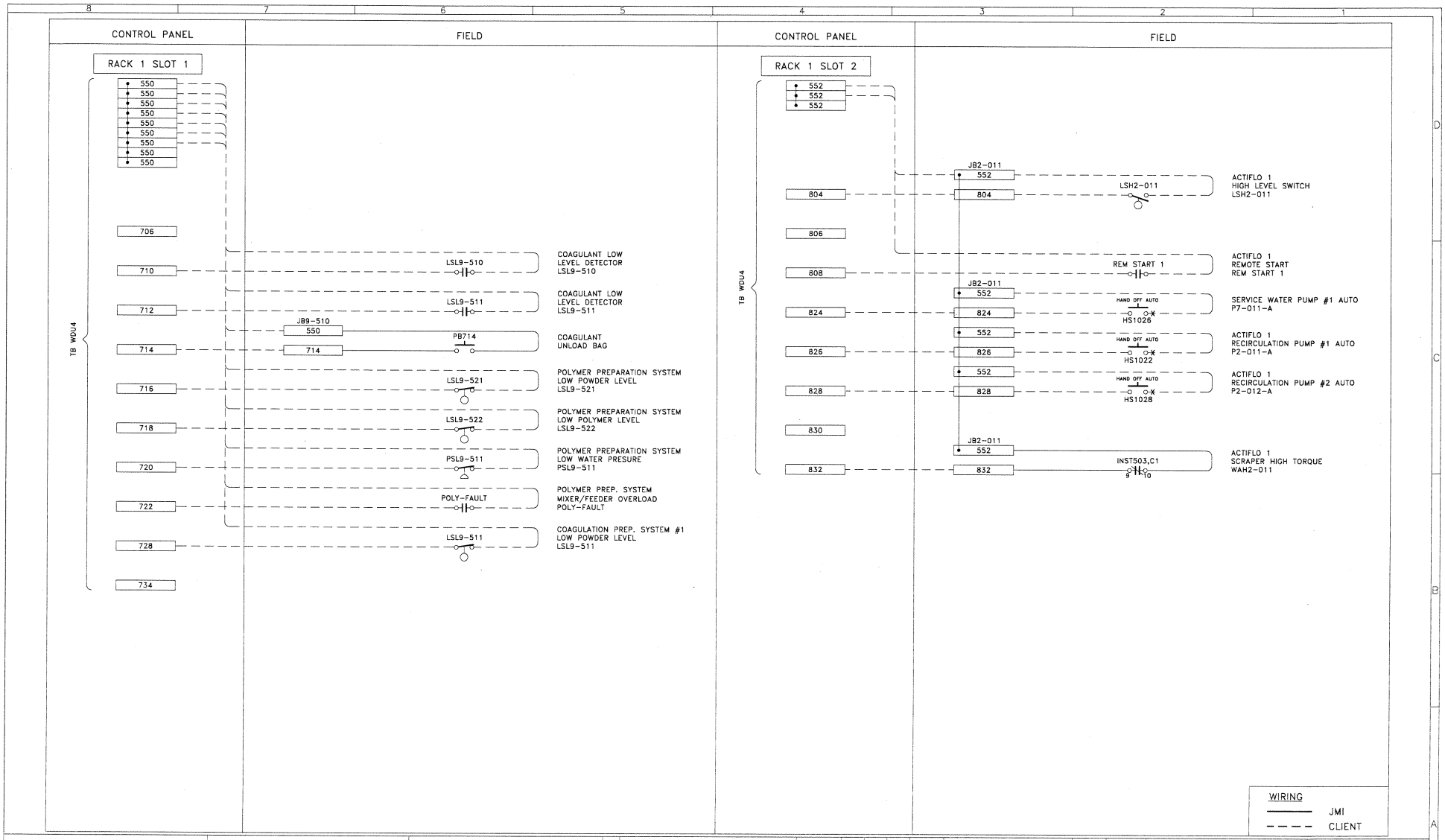

Envitech Automation Inc. CERTIFIÉ ISO9001
ENVITECH Intégrateurs de systèmes / Systems Integrators

ENVITECH DRAWING A4765A

BAR = 1" AT PLOT SCALE

STD: JMI_22x34_D_ANG

REF:

REV	DESCRIPTION	DATE	DWN	CHKD	APVD	ECN
B	AS BUILT	2009/05/29	JR	JCD		
A	FOR APPROVAL	2009/04/16	JR	JCD		

CONFIDENTIALITY AND INTELLECTUAL PROPERTY NOTICE
ALL INFORMATION CONTAINED IN THIS DOCUMENT IS THE SOLE PROPERTY OF JOHN MEUNIER INC. AND IS PROTECTED BY ALL APPLICABLE LAWS, INCLUDING BUT NOT LIMITED TO COPYRIGHT AND OTHER INTELLECTUAL PROPERTY LAWS. THE DESIGN CONCEPTS AND INFORMATION CONTAINED HEREIN ARE PROPRIETARY TO JMI AND ARE SUBMITTED IN CONFIDENCE. THEY ARE NOT TRANSFERABLE. THEY MUST BE USED ONLY FOR THE PURPOSE FOR WHICH THE DOCUMENT IS EXPRESSLY SUBMITTED AND NO IMPLICIT LICENSE IS GRANTED OTHERWISE BY THE SUBMISSION OF THIS DOCUMENT. THEY ARE CONFIDENTIAL AND PRIVILEGED INFORMATION OF JMI AND THEY MUST NOT BE DISCLOSED, REPRODUCED, COPIED, TRANSFERRED OR USED IN ANY OTHER MANNER WITHOUT THE EXPRESS WRITTEN CONSENT OF JMI. JMI ASSUMES NO RESPONSIBILITY OR LIABILITY FOR THE USE OF THIS DOCUMENT OR THE DESIGN CONCEPTS AND INFORMATION CONTAINED HEREIN FOR ANOTHER PROJECT, OR IN A MANNER THAT DOES NOT RELATE TO THE FITNESS OR PURPOSE OF THIS DOCUMENT. IN NO EVENT SHALL THIS DOCUMENT OR THE DESIGN CONCEPTS AND INFORMATION CONTAINED HEREIN BE USED IN A MANNER DETRIMENTAL TO THE INTEREST OF JMI. ALL COPYRIGHT, PATENT AND OTHER INTELLECTUAL PROPERTY RIGHTS ARE RESERVED. ACCEPTANCE OF THE DELIVERY OF THIS DOCUMENT CONSTITUTES AGREEMENT TO THESE TERMS AND CONDITIONS.

DESIGNER	DATE
CHECKER	DATE
ENGINEER	DATE
MANAGER	DATE
SCALE:	

TITLE (2) ACTIFLO ACP-700R FIELD WIRING

CLIENT MEADOWBANK MINING CORP., NWT

JOHN MEUNIER ISO 9001: 2000
4105 Sartelon Street, Saint-Laurent, Qc, Canada H4S 2B3 / Tel: (514) 334-7230 / Fax: (514) 334-5070

PROJECT	DRAWING	SHEET	REV
NC01-	001-E20-007	7 OF 17	B

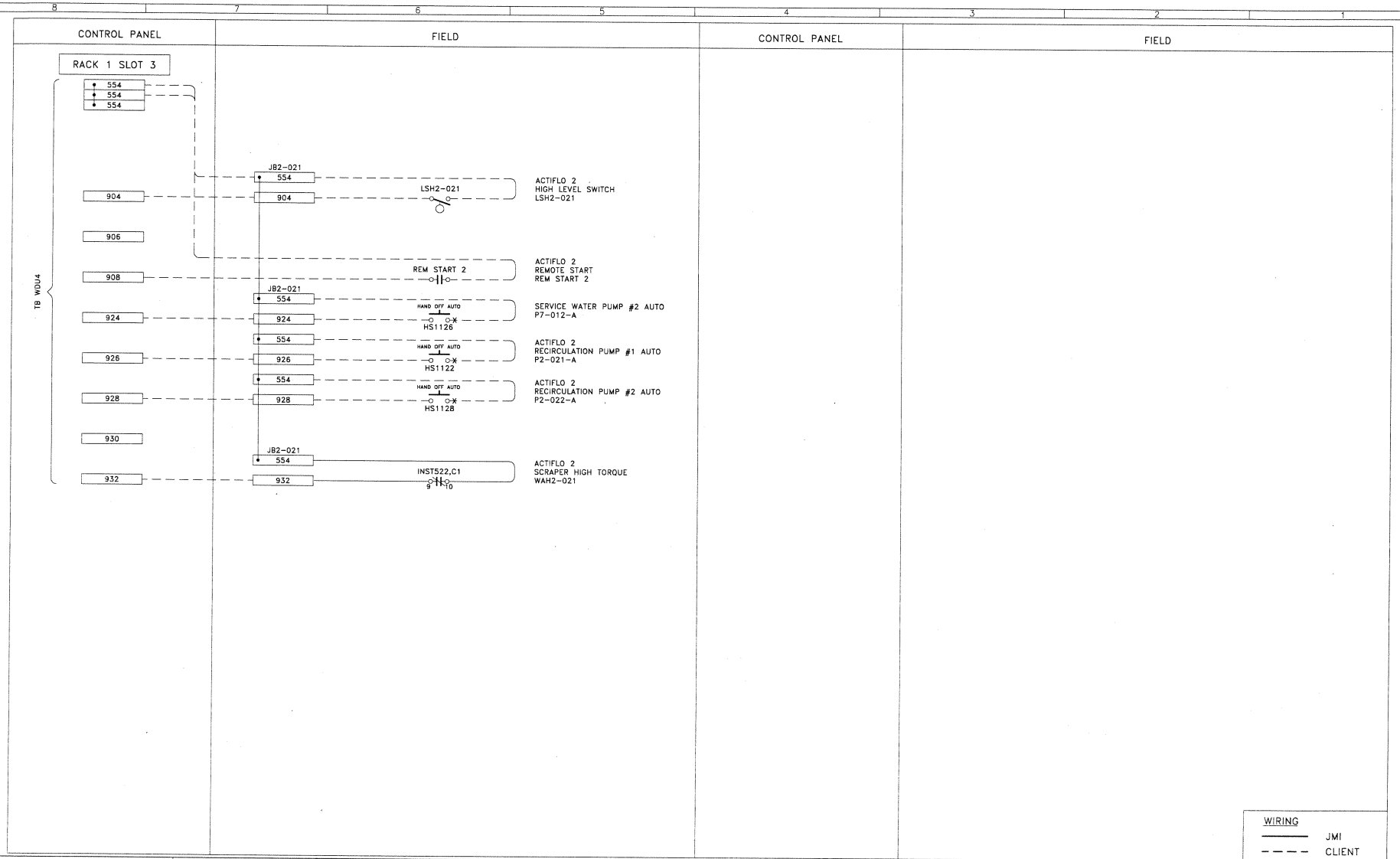

Envitech Automation Inc. CERTIFIÉ ISO9001

ENVITECH Intégrateurs de systèmes / Systems Integrators

ENVITECH DRAWING A4765A

BAR = 1" AT PLOT SCALE

STD: JMI_22x34_D_ANG

REF:

REV	DESCRIPTION	DATE	DWN	CHKD	APVD	ECN
B	AS BUILT	2009/05/29	JR	JCD		
A	FOR APPROVAL	2009/04/15	JR	JCD		

CONFIDENTIALITY AND INTELLECTUAL PROPERTY NOTICE
ALL INFORMATION CONTAINED IN THIS DOCUMENT IS THE SOLE PROPERTY OF JOHN MEUNIER INC. AND IS PROTECTED BY ALL APPLICABLE LAWS, INCLUDING BUT NOT LIMITED TO COPYRIGHT AND OTHER INTELLECTUAL PROPERTY LAWS. THE DESIGN CONCEPTS AND INFORMATION CONTAINED HEREIN ARE PROPRIETARY TO JMI AND ARE SUBMITTED IN CONFIDENCE. THEY ARE NOT TRANSFERABLE. THEY MUST BE USED ONLY FOR THE PURPOSE FOR WHICH THE DOCUMENT IS EXPRESSLY SUBMITTED AND NO IMPLIED LICENCE IS GRANTED OTHERWISE BY THE PUBLISHING OF THIS DOCUMENT. THEY ARE CONFIDENTIAL AND PRIVILEGED INFORMATION OF JMI AND THEY MUST NOT BE DISCLOSED, REPRODUCED, LOANED, VEHICLED OR USED IN ANY OTHER MANNER WITHOUT THE EXPRESS WRITTEN CONSENT OF JMI. JMI ASSUMES NO RESPONSIBILITY OR LIABILITY FOR THE USE OF THIS DOCUMENT OR THE DESIGN CONCEPTS AND INFORMATION CONTAINED HEREIN FOR WHICH IT IS PROJECT OR IN A MANNER THAT DOES NOT RELATE TO THE PURPOSE OR PURPOSE OF THIS DOCUMENT. IN NO EVENT SHALL THIS DOCUMENT OR THE DESIGN CONCEPTS AND INFORMATION CONTAINED HEREIN BE USED IN A MANNER DETRIMENTAL TO THE INTEREST OF JMI. ALL COPYRIGHT, PATENT AND OTHER INTELLECTUAL PROPERTY RIGHTS ARE RESERVED. ACCEPTANCE OF THE DELIVERY OF THIS DOCUMENT CONSTITUTES AGREEMENT TO THESE TERMS AND CONDITIONS.

DESIGNER	DATE
CHECKER	DATE
ENGINEER	DATE
MANAGER	DATE
SCALE:	

TITLE (2) ACTIFLO ACP-700R FIELD WIRING

CLIENT MEADOWBANK MINING CORP., NWT

JOHN MEUNIER ISO 9001: 2000

4105 Sartelon Street, Saint-Laurent, Qc, Canada H4S 2B3 / Tel (514) 334-7230 / Fax (514) 334-3070

PROJECT NC01- DRAWING 001-E20-008

SHEET 8 OF 17

REV B

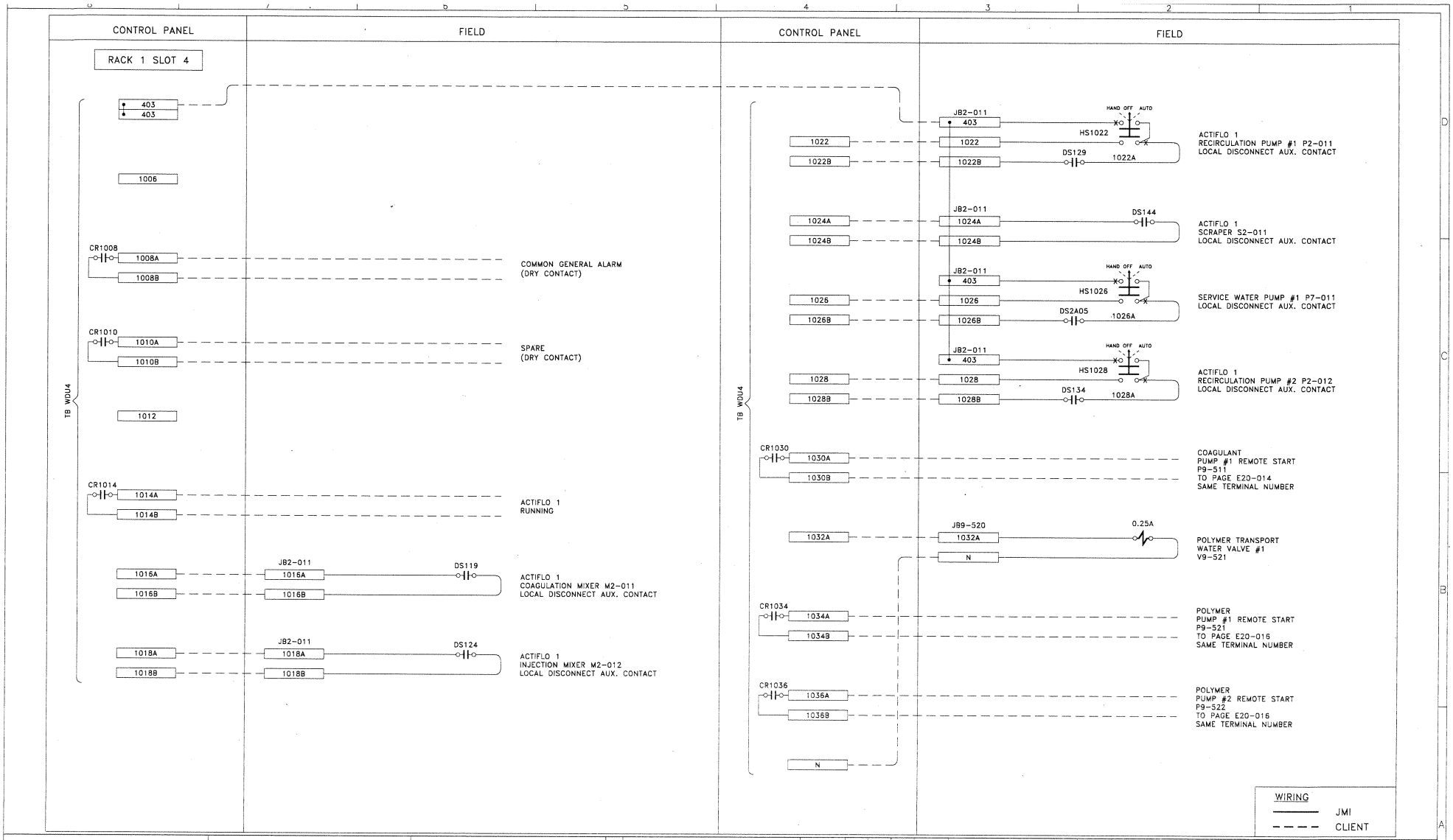

Envitech Automation Inc. CERTIFIÉ ISO9001
ENVITECH Intégrateurs de systèmes / Systems Integrators

ENVITECH DRAWING A4765A

BAR = 1" AT PLOT SCALE

STD: JMI_22x34_D_ANC REF:

REV	DESCRIPTION	DATE	DWN	CHKD	APVD	ECN
B	AS BUILT	2009/05/29	JR	JCD		
A	FOR APPROVAL	2009/04/16	JR	JCD		

CONFIDENTIALITY AND INTELLECTUAL PROPERTY NOTICE
ALL INFORMATION CONTAINED IN THIS DOCUMENT IS THE SOLE PROPERTY OF JOHN MEUNIER INC. AND IS PROTECTED BY ALL APPLICABLE LAWS, INCLUDING BUT NOT LIMITED TO COPYRIGHT AND OTHER INTELLECTUAL PROPERTY LAWS. THE DESIGN CONCEPTS AND INFORMATION CONTAINED HEREIN ARE PROPRIETARY TO JMI AND ARE SUBMITTED IN CONFIDENCE. THEY ARE NOT TRANSFERABLE. THEY MUST BE USED ONLY FOR THE PURPOSE FOR WHICH THE DOCUMENT IS EXPRESSLY SUBMITTED AND NO IMPLICIT LICENCE IS GRANTED OTHERWISE BY THE SUBMISSION OF THIS DOCUMENT. THEY ARE CONFIDENTIAL AND PRIVILEGED INFORMATION OF JMI AND THEY MUST NOT BE DISCLOSED, REPRODUCED, LOANED, REMITTED OR USED IN ANY OTHER MANNER WITHOUT THE EXPRESS WRITTEN CONSENT OF JMI. JMI ASSUMES NO RESPONSIBILITY OR LIABILITY FOR THE USE OF THIS DOCUMENT OR THE DESIGN CONCEPTS AND INFORMATION CONTAINED HEREIN FOR ANOTHER PROJECT OR IN A MANNER THAT DOES NOT RELATE TO THE FITNESS OR PURPOSE OF THIS DOCUMENT. IN NO EVENT SHALL THIS DOCUMENT OR THE DESIGN CONCEPTS AND INFORMATION CONTAINED HEREIN BE USED IN A MANNER DETRIMENTAL TO THE INTEREST OF JMI. ALL COPYRIGHT, PATENT AND OTHER INTELLECTUAL PROPERTY RIGHTS ARE RESERVED. ACCEPTANCE OF THE DELIVERY OF THIS DOCUMENT CONSTITUTES AGREEMENT TO THESE TERMS AND CONDITIONS.

DESIGNER	DATE
CHECKER	DATE
ENGINEER	DATE
MANAGER	DATE
SCALE:	

TITLE (2) ACTIFLO ACP-700R FIELD WIRING

CLIENT MEADOWBANK MINING CORP., NWT

JOHN MEUNIER ISO 9001: 2000
4105 Sorbiere Street, Saint-Laurent, QC, Canada H4S 2B3 / Tel: (514) 334-7230 / Fax: (514) 334-5070

PROJECT DRAWING NC01- 001-E20-009 SHEET 9 OF 17 REV B

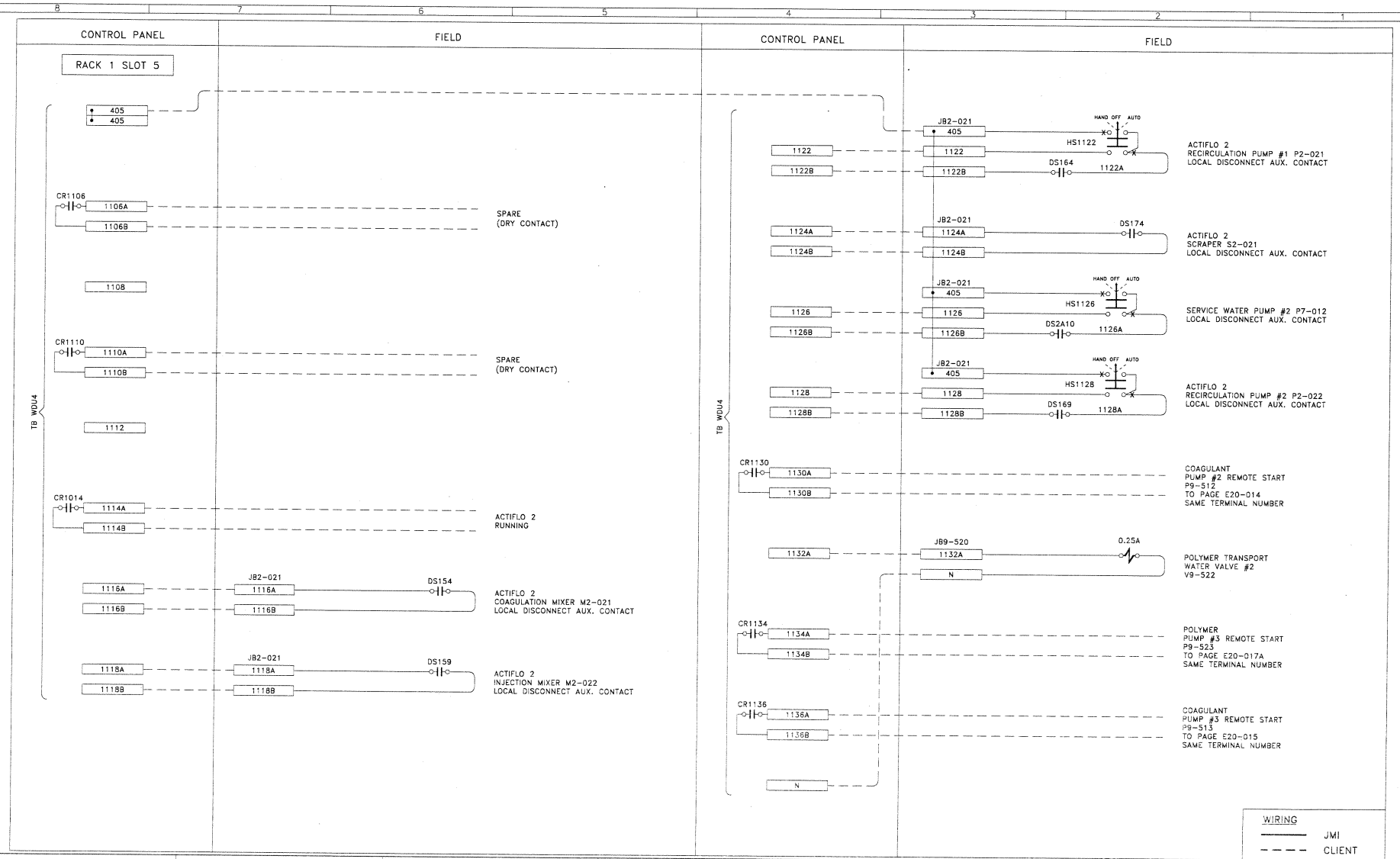

STD: JMI_22x34_D_ANG

REF:

Envitech Automation Inc. CERTIFIÉ ISO9001
ENVITECH Intégrateurs de systèmes / Systems Integrators

ENVITECH DRAWING A4765A

BAR = 1" AT PLOT SCALE

REV	DESCRIPTION	DATE	DWN	CHKD	APVD	ECN
B	AS BUILT	2009/05/29	JR	JCD		
A	FOR APPROVAL	2009/04/16	JR	JCD		

CONFIDENTIALITY AND INTELLECTUAL PROPERTY NOTICE
ALL INFORMATION CONTAINED IN THIS DOCUMENT IS THE SOLE PROPERTY OF JOHN MEUNIER INC. AND IS PROTECTED BY ALL APPLICABLE LAWS, INCLUDING BUT NOT LIMITED TO COPYRIGHT AND OTHER INTELLECTUAL PROPERTY LAWS. THE DESIGN CONCEPTS AND INFORMATION CONTAINED HEREIN ARE PROPRIETARY TO JMI AND ARE SUBMITTED IN CONFIDENCE. THEY ARE NOT TRANSFERABLE. THEY MUST BE USED ONLY FOR THE PURPOSE FOR WHICH THE DOCUMENT IS EXPRESSLY SUBMITTED AND NO IMPLICIT LICENCE IS GRANTED OTHERWISE BY THE DISTRIBUTION OF THIS DOCUMENT. THEY ARE CONFIDENTIAL AND PROPRIETARY INFORMATION OF JMI AND THEY MUST NOT BE PROCESSED, REPRODUCED, LOANED, REMITTED OR USED IN ANY OTHER MANNER WITHOUT THE EXPRESS WRITTEN CONSENT OF JMI. JMI ASSUMES NO RESPONSIBILITY OR LIABILITY FOR THE USE OF THIS DOCUMENT OR THE DESIGN CONCEPTS AND INFORMATION CONTAINED HEREIN FOR ANOTHER PURPOSE. JMI IS A MANNER THAT DOES NOT RELATE TO THE OTHERS OR PURPOSE OF THIS DOCUMENT. IN NO EVENT SHALL THIS DOCUMENT OR THE DESIGN CONCEPTS AND INFORMATION CONTAINED HEREIN BE USED IN A MANNER DETRIMENTAL TO THE INTEREST OF JMI. ALL COPYRIGHT, PATENT AND OTHER INTELLECTUAL PROPERTY RIGHTS ARE RESERVED. ACCEPTANCE OF THE DELIVERY OF THIS DOCUMENT CONSTITUTES AGREEMENT TO THESE TERMS AND CONDITIONS.

DESIGNER	DATE
CHECKER	DATE
ENGINEER	DATE
MANAGER	DATE
SCALE:	

TITLE (2) ACTIFLO ACP-700R FIELD WIRING

CLIENT MEADOWBANK MINING CORP., NWT

JOHN MEUNIER ISO 9001: 2000
4105 Sartelon Street, Saint-Laurent, Qc, Canada H4S 2B3 / Tel: (514) 334-7230 / Fax: (514) 334-5070

PROJECT DRAWING NC01- 001-E20-010

SHEET 10 OF 17

REV B

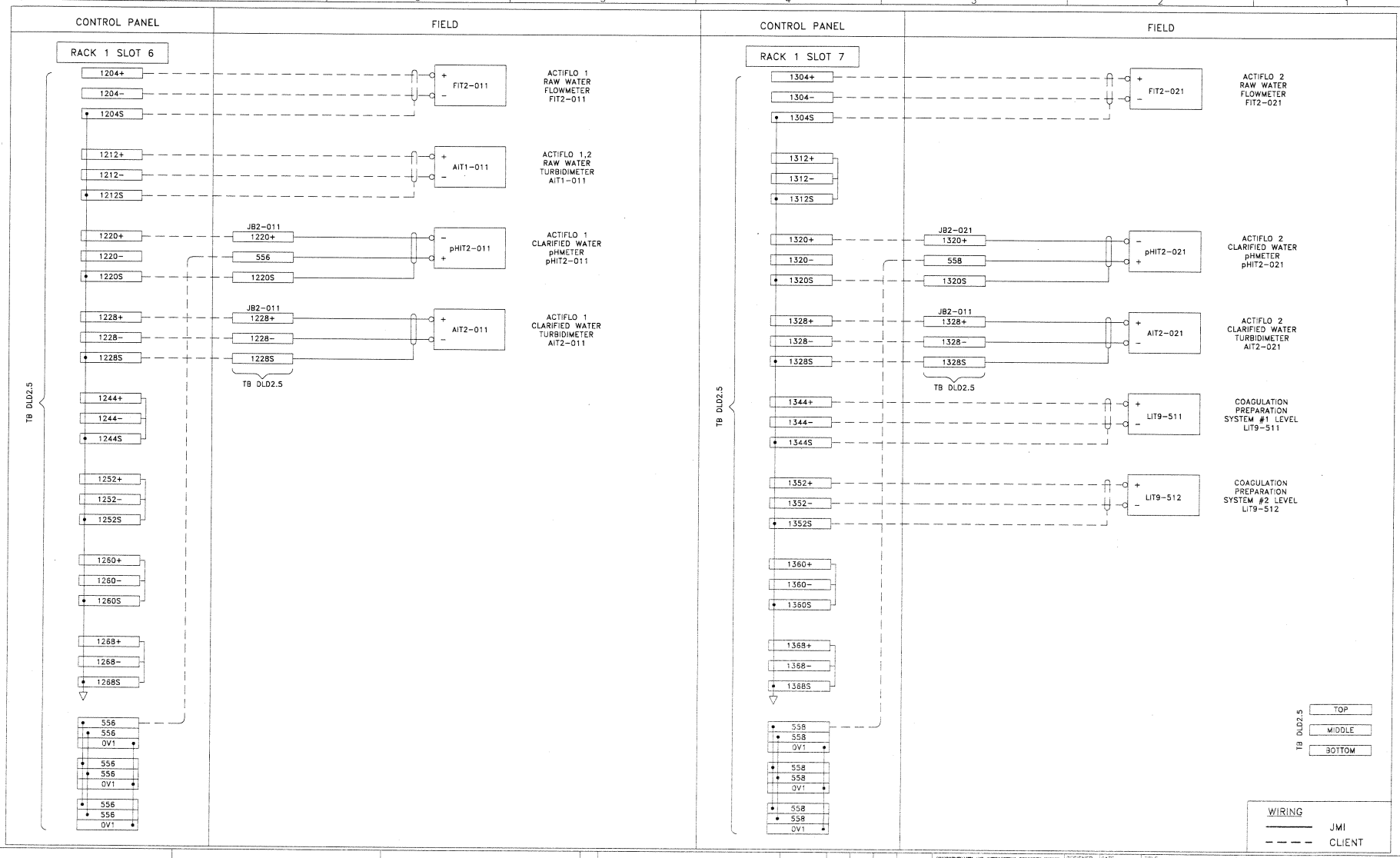

REV	DESCRIPTION	DATE	DWN	CHKD	APVD	ECN
B	AS BUILT	2009/05/29	JR	JCD		
A	FOR APPROVAL	2009/04/16	JR	JCD		

Envitech Automation Inc. CERTIFIÉ ISO9001
ENVITECH Intégrateurs de systèmes / Systems Integrators

ENVITECH DRAWING A4765A

BAR = 1" AT PLOT SCALE

STD: JMI_22x34_D_ANG

REF:

CONFIDENTIALITY AND INTELLECTUAL PROPERTY NOTICE
ALL INFORMATION CONTAINED IN THIS DOCUMENT IS THE SOLE PROPERTY OF JOHN MEUNIER INC. AND IS PROTECTED BY ALL APPLICABLE LAWS, INCLUDING BUT NOT LIMITED TO COPYRIGHT AND OTHER INTELLECTUAL PROPERTY LAWS. THE DESIGN CONCEPTS AND INFORMATION CONTAINED HEREIN ARE PROPRIETARY TO JM AND ARE SUBMITTED IN CONFIDENCE. THEY ARE NOT TRANSFERABLE, THEY MUST BE USED ONLY FOR THE PURPOSE FOR WHICH THE DOCUMENT IS SUBMITTED AND MUST BE RETURNED UPON REQUEST. BY ACCEPTANCE OF THE SUBMISSION OF THIS DOCUMENT, THEY ARE CONFIDENTIAL AND PROPRIETARY INFORMATION OF JM AND THEY MUST NOT BE DISCLOSED, REPRODUCED, LOANED, TRANSFERRED OR USED IN ANY OTHER MANNER WITHOUT THE EXPRESS WRITTEN CONSENT OF JM. JM ASSUMES NO RESPONSIBILITY OR LIABILITY FOR THE USE OF THIS DOCUMENT. THE DESIGN CONCEPTS AND INFORMATION CONTAINED HEREIN ARE NOT TO BE USED IN WHOLE OR IN PART FOR ANY PURPOSE RELATED TO THE CONCEPTION OR PURPOSE OF THIS DOCUMENT. IN NO EVENT SHALL THIS DOCUMENT OR THE DESIGN CONCEPTS AND INFORMATION CONTAINED HEREIN BE USED IN A MANNER DETRIMENTAL TO THE INTEREST OF JM. ALL COPYRIGHT, PATENT AND OTHER INTELLECTUAL PROPERTY RIGHTS ARE RESERVED. ACCEPTANCE OF THE DELIVERY OF THIS DOCUMENT CONSTITUTES AGREEMENT TO THESE TERMS AND CONDITIONS.

DESIGNER	DATE
CHECKER	DATE
ENGINEER	DATE
MANAGER	DATE
SCALE	

TITLE: (2) ACTIFLO ACP-700R FIELD WIRING

CLIENT: MEADOWBANK MINING CORP., NWT

JOHN MEUNIER ISO 9001: 2000
4105 Sartelon Street, Saint-Laurent, Qc, Canada H4S 2B3 / Tel: (514) 334-7730 / Fax: (514) 334-5078

PROJECT: NC01-001-E20-011

DRAWING: 11 OF 17

SHEET: 11 OF 17

REV: B

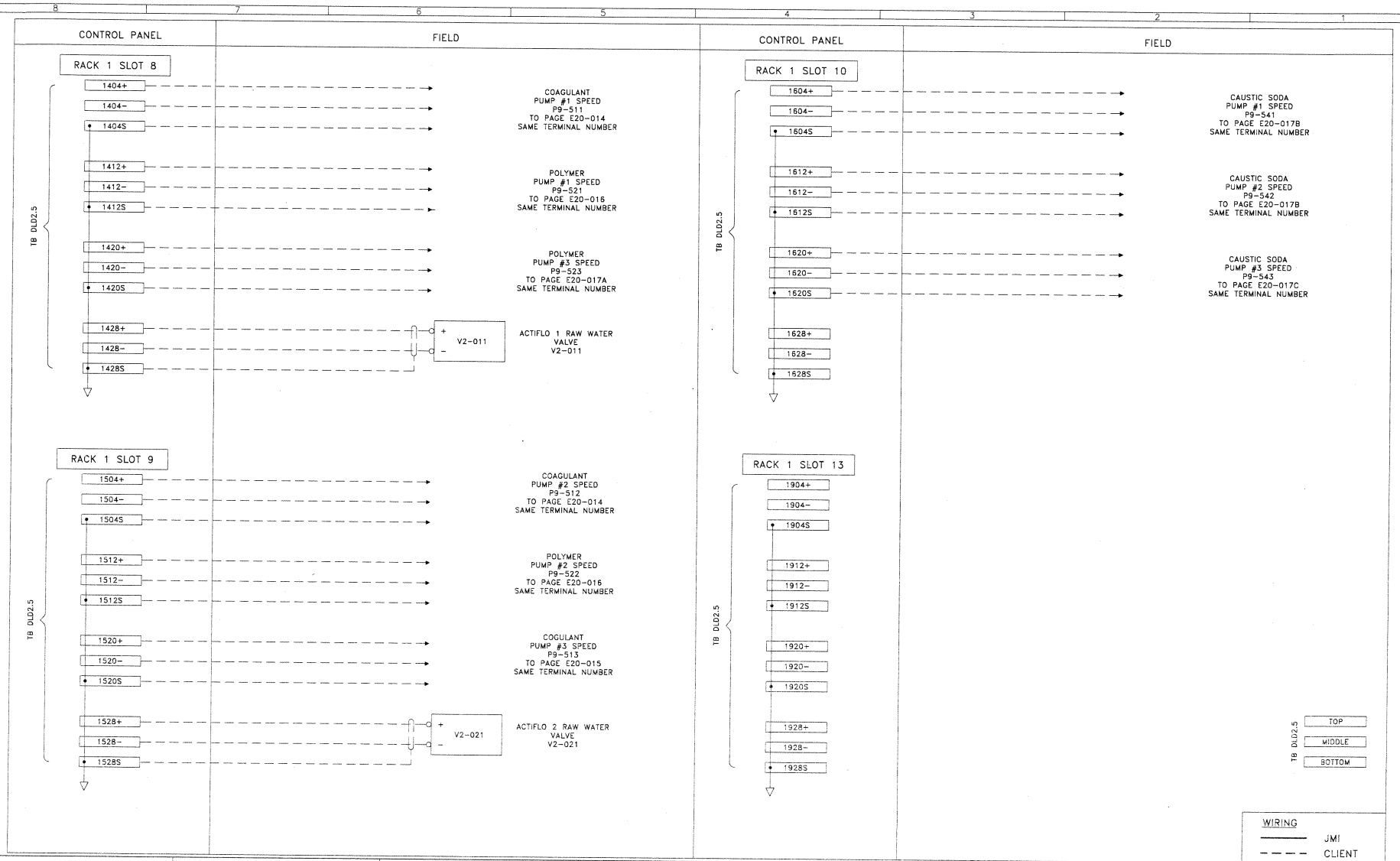

Envitech Automation Inc. CERTIFIÉ ISO9001
ENVITECH Intégrateurs de systèmes / Systems Integrators

ENVITECH DRAWING A4765A

BAR = 1" AT PLOT SCALE

STD: JMI_22x34_D_ANG

REF:

REV	DESCRIPTION	DATE	DWN	CHKD	APVD	ECN
B	AS BUILT	2009/05/29	JR	JCD		
A	FOR APPROVAL	2009/04/16	JR	JCD		

CONFIDENTIALITY AND INTELLECTUAL PROPERTY NOTICE
ALL INFORMATION CONTAINED IN THIS DOCUMENT IS THE SOLE PROPERTY OF JOHN MEUNIER INC. AND IS PROTECTED BY ALL APPLICABLE LAWS, INCLUDING BUT NOT LIMITED TO COPYRIGHT AND OTHER INTELLECTUAL PROPERTY LAWS. THE DESIGN CONCEPTS AND INFORMATION CONTAINED HEREIN ARE PROPRIETARY TO JMI AND ARE SUBMITTED IN CONFIDENCE. THEY ARE NOT TRANSFERABLE. THEY MUST BE USED ONLY FOR THE PURPOSE FOR WHICH THE DOCUMENT IS EXPRESSLY SUBMITTED AND NO IMPLICIT LICENCE IS GRANTED CONTAINED BY THE SUBMISSION OF THIS DOCUMENT. THEY ARE CONFIDENTIAL AND PROPRIETARY INFORMATION OF JMI AND THEY MUST NOT BE DISCLOSED, REPRODUCED, COPIED, TRANSFERRED OR USED IN ANY OTHER MANNER WITHOUT THE EXPRESS WRITTEN CONSENT OF JMI. ALL RESULTS NO RESPONSIBILITY OR LIABILITY FOR THE USE OF THIS DOCUMENT OR THE DESIGN CONCEPTS AND INFORMATION CONTAINED HEREIN FOR ANOTHER PROJECT, OR IN A MANNER THAT DOES NOT SERVE TO THE FUTURE OR PURPOSE OF THIS DOCUMENT. IN NO EVENT SHALL THE DOCUMENT OR THE DESIGN CONCEPTS AND INFORMATION CONTAINED HEREIN BE USED IN A MANNER DETRIMENTAL TO THE INTEREST OF JMI. ALL COPYRIGHT, PATENT AND OTHER INTELLECTUAL PROPERTY RIGHTS ARE RESERVED. ACCEPTANCE OF THE DELIVERY OF THIS DOCUMENT CONSTITUTES AGREEMENT TO THESE TERMS AND CONDITIONS.

DESIGNER	DATE
CHECKER	DATE
ENGINEER	DATE
MANAGER	DATE
SCALE:	

TITLE: (2) ACTIFLO ACP-700R FIELD WIRING

CLIENT: MEADOWBANK MINING CORP., NWT

JOHN MEUNIER ISO 9001: 2000
4165 Sartoun Street, Saint-Laurent, Qc, Canada H4S 2B3 / Tel: (514) 334-2230 / Fax: (514) 334-5070

PROJECT DRAWING: NC01- 001-E20-012

SHEET: 12 OF 17

REV: B

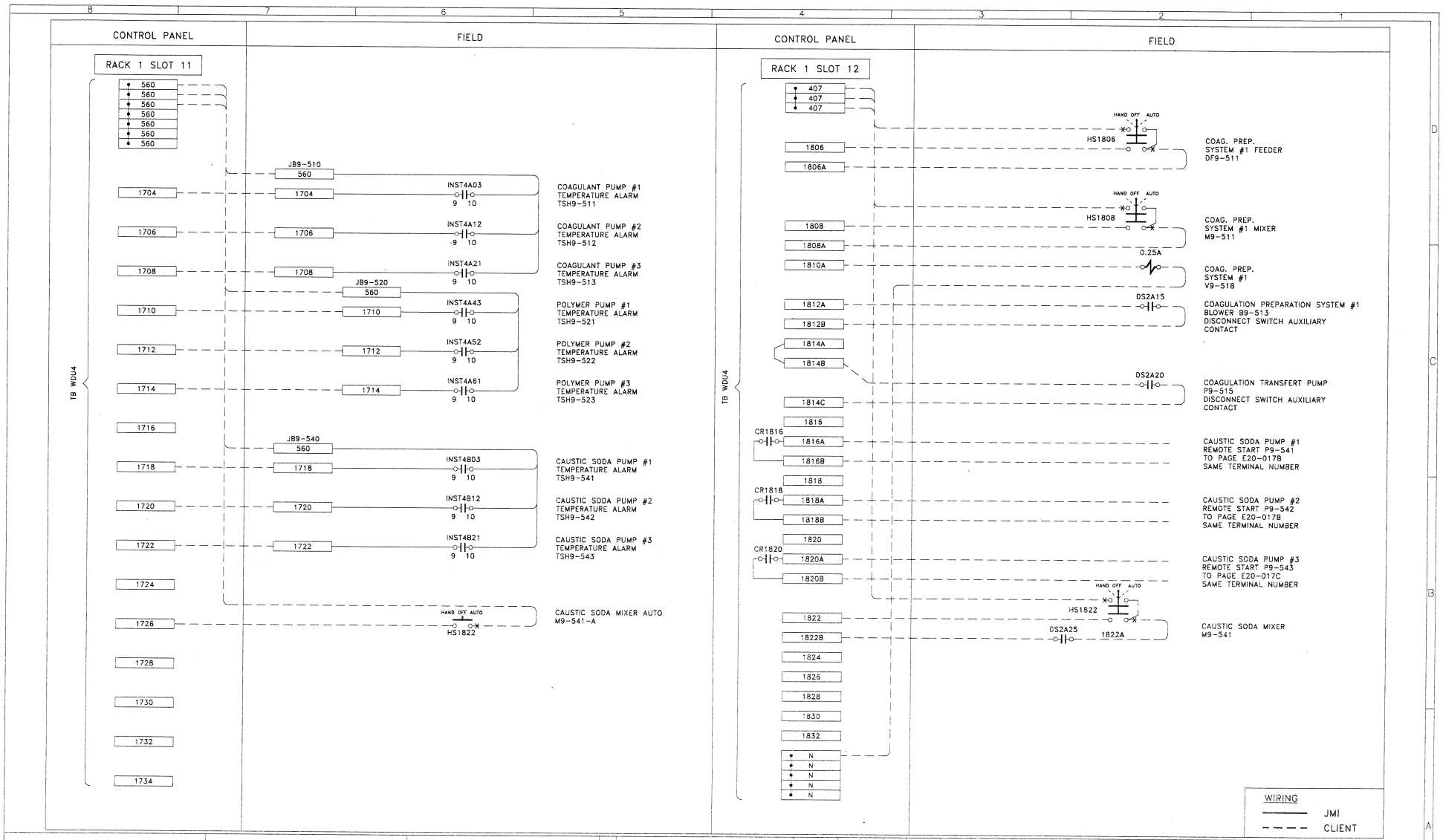

Envitech Automation Inc. CERTIFIÉ ISO9001
ENVITECH Intégrateurs de systèmes / Systems Integrators

ENVITECH DRAWING A4765A

BAR = 1" AT PLOT SCALE

STD: JMI_22x34_D_ANG

REF:

REV	DESCRIPTION	DATE	DWN	CHKD	APVD	ECN
B	AS BUILT	2009/05/29	JR	JCD		
A	FOR APPROVAL	2009/04/16	JR	JCD		

CONFIDENTIALITY AND INTELLECTUAL PROPERTY NOTICE
ALL INFORMATION CONTAINED IN THIS DOCUMENT IS THE SOLE PROPERTY OF JOHN MEUNIER INC. AND IS PROTECTED BY ALL APPLICABLE LAWS, INCLUDING BUT NOT LIMITED TO COPYRIGHT AND OTHER INTELLECTUAL PROPERTY LAWS. THE DESIGN CONCEPTS AND INFORMATION CONTAINED HEREIN ARE PROPRIETARY TO JMI AND ARE SUBMITTED IN CONFIDENCE. THEY ARE NOT TRANSFERABLE. THEY MUST BE USED ONLY FOR THE PURPOSE FOR WHICH THE DOCUMENT IS EXPRESSLY SUBMITTED AND NO IMPLIED LICENCE IS GRANTED OTHERWISE BY THE SUBMISSION OF THIS DOCUMENT. THEY ARE CONFIDENTIAL AND PRIVILEGED INFORMATION OF JMI AND THEY MUST NOT BE DISCLOSED, REPRODUCED, LOANED, REMITTED OR USED IN ANY OTHER MANNER WITHOUT THE EXPRESS WRITTEN CONSENT OF JMI. JMI ASSUMES NO RESPONSIBILITY OR LIABILITY FOR THE USE OF THIS DOCUMENT OR THE DESIGN CONCEPTS AND INFORMATION CONTAINED HEREIN FOR ANOTHER PROJECT, OR IN A MANNER THAT DOES NOT RELATE TO THE FINDER OR PURPOSE OF THIS DOCUMENT. IN NO EVENT SHALL THIS DOCUMENT OR THE DESIGN CONCEPTS AND INFORMATION CONTAINED HEREIN BE USED IN A MANNER DETRIMENTAL TO THE INTERESTS OF JMI. ALL COPYRIGHT, PATENT AND OTHER INTELLECTUAL PROPERTY RIGHTS ARE RESERVED. ACCEPTANCE OF THE DELIVERY OF THIS DOCUMENT CONSTITUTES AGREEMENT TO THESE TERMS AND CONDITIONS.

DESIGNER	DATE
CHECKER	DATE
ENGINEER	DATE
MANAGER	DATE
SCALE:	

TITLE (2) ACTIFLO ACP-700R FIELD WIRING

CLIENT MEADOWBANK MINING CORP., NWT

JOHN MEUNIER ISO 9001: 2000
4125 Sartelon Street, Saint-Laurent, Qc, Canada H4S 2B3 / Tel: (514) 334-7330 / Fax: (514) 334-5070

PROJECT DRAWING NC01-001-E20-013

SHEET 13 OF 17

REV B

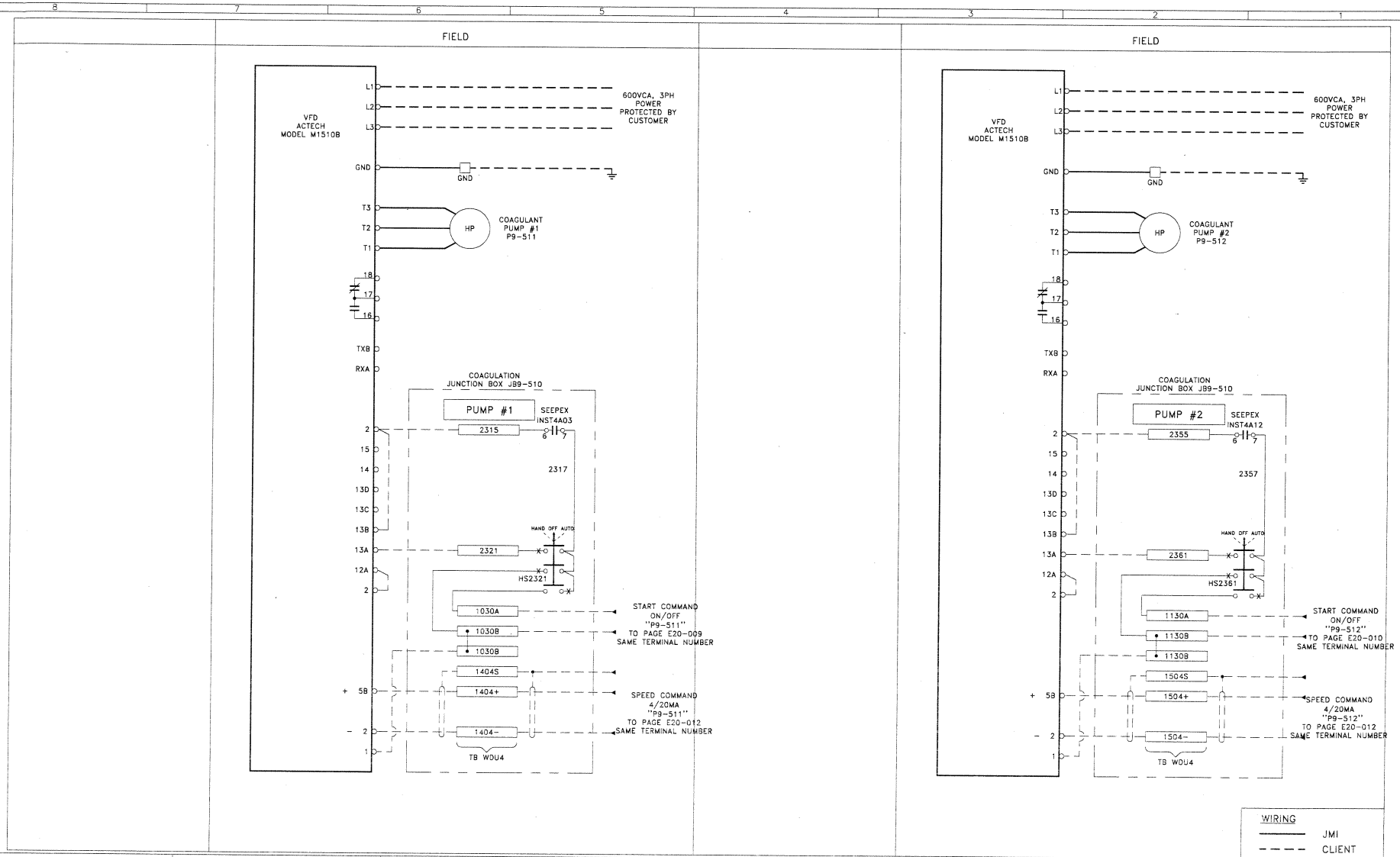

Envitech Automation Inc. CERTIFIÉ ISO9001
ENVITECH Intégrateurs de systèmes / Systems Integrators

ENVITECH DRAWING A4765A

BAR = 1" AT PLOT SCALE

STD: JMI_22x34_D_ANG

REF:

REV	DESCRIPTION	DATE	DWN	CHKD	APVD	ECN
B	AS BUILT	2009/05/29	JR	JCD		
A	FOR APPROVAL	2009/04/16	JR	JCD		

CONFIDENTIALITY AND INTELLECTUAL PROPERTY NOTICE
ALL INFORMATION CONTAINED IN THIS DOCUMENT IS THE SOLE PROPERTY OF JOHN MEUNIER INC. AND IS PROTECTED BY ALL APPLICABLE LAWS, INCLUDING BUT NOT LIMITED TO COPYRIGHT AND OTHER INTELLECTUAL PROPERTY LAWS. THE DESIGN CONCEPTS AND INFORMATION CONTAINED HEREIN ARE PROPRIETARY TO JMI AND ARE SUBMITTED IN CONFIDENCE. THEY ARE NOT TRANSFERABLE. THEY MUST BE USED ONLY FOR THE PURPOSE FOR WHICH THE DOCUMENT IS EXPRESSLY SUBMITTED AND NO IMPLICIT LICENCE IS CONVEYED CONCERNING BY THE SUBMISSION OF THIS DOCUMENT. THEY ARE CONFIDENTIAL AND PROPRIETARY INFORMATION OF JMI AND THEY MUST NOT BE DISCLOSED, REPRODUCED, COPIED, MODIFIED OR USED IN ANY OTHER MANNER WITHOUT THE EXPRESS WRITTEN CONSENT OF JMI. JMI ASSUMES NO RESPONSIBILITY OR LIABILITY FOR THE USE OF THIS DOCUMENT OR THE DESIGN CONCEPTS AND INFORMATION CONTAINED HEREIN FOR ANOTHER PURPOSE OR IN A MANNER THAT DOES NOT RELATE TO THE STATED OR INTENDED OF THIS DOCUMENT. IN ANY OTHER SHALL THIS DOCUMENT OR THE DESIGN CONCEPTS AND INFORMATION CONTAINED HEREIN BE USED IN A MANNER DETRIMENTAL TO THE INTEREST OF JMI. ALL COPYRIGHT, PATENT AND OTHER INTELLECTUAL PROPERTY RIGHTS ARE RESERVED. ACCEPTANCE OF THE DELIVERY OF THIS DOCUMENT CONSTITUTES AGREEMENT TO THESE TERMS AND CONDITIONS.

DESIGNER	DATE
CHECKER	DATE
ENGINEER	DATE
MANAGER	DATE
SCALE:	

TITLE (2) ACTIFLO ACP-700R FIELD WIRING

CLIENT MEADOWBANK MINING CORP., NWT

JOHN MEUNIER ISO 9001: 2000
4105 Sartelon Street, Saint-Laurent, Qc, Canada H4S 2B3 / Tel. (514) 334-7230 / Fax: (514) 334-5010

PROJECT	DRAWING	SHEET	REV
NC01-	001-E20-014	14 OF 17	B

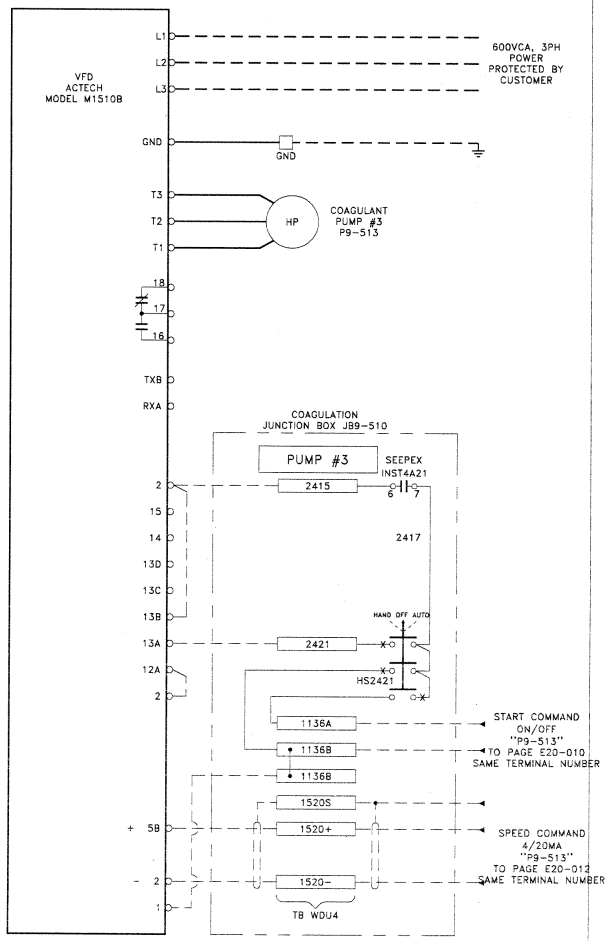

WIRING

——— JMI

– – – – CLIENT

Envitech Automation Inc. CERTIFIÉ ISO9001

ENVITECH Intégrateurs de systèmes / Systems Integrators

ENVITECH DRAWING A4765A

BAR = 1" AT PLOT SCALE

STD: JMI_22x34_D_ANG

REF:

REV	DESCRIPTION	DATE	DWN	CHKD	APVD	ECN
B	AS BUILT	2009/05/29	JR	JCD		
A	FOR APPROVAL	2009/04/16	JR	JCD		

CONFIDENTIALITY AND INTELLECTUAL PROPERTY NOTICE
ALL INFORMATION CONTAINED IN THIS DOCUMENT IS THE SOLE PROPERTY OF JOHN MEUNIER INC. AND IS PROTECTED BY ALL APPLICABLE LAWS, INCLUDING BUT NOT LIMITED TO COPYRIGHT AND OTHER INTELLECTUAL PROPERTY LAWS. THE DESIGN CONCEPTS AND INFORMATION CONTAINED HEREIN ARE PROPRIETARY TO JMI AND ARE SUBMITTED IN CONFIDENCE. THEY ARE NOT TRANSFERABLE. THEY MUST BE USED ONLY FOR THE PURPOSE FOR WHICH THE DOCUMENT IS EXPRESSLY SUBMITTED AND NO IMPLICIT LICENCE IS CONFERED OTHERWISE BY THE SUBMISSION OF THIS DOCUMENT. THEY ARE CONFIDENTIAL AND PRIVILEGED INFORMATION OF JMI AND THEY MUST NOT BE DISCLOSED, REPRODUCED, COPIED, REMITTED OR USED IN ANY OTHER MANNER WITHOUT THE EXPRESS WRITTEN CONSENT OF JMI. JMI ASSUMES NO RESPONSIBILITY OR LIABILITY FOR THE USE OF THIS DOCUMENT OR THE DESIGN CONCEPTS AND INFORMATION CONTAINED HEREIN FOR ANY PURPOSE OTHER THAN THE PURPOSE FOR WHICH IT IS SUBMITTED. THE DESIGN CONCEPTS AND INFORMATION CONTAINED HEREIN IN THIS DOCUMENT IS NEVERLESS SHALL THIS DOCUMENT OR THE DESIGN CONCEPTS AND INFORMATION CONTAINED HEREIN BE USED IN A MANNER DETRIMENTAL TO THE INTEREST OF JMI. ALL COPYRIGHT, PATENT AND OTHER INTELLECTUAL PROPERTY RIGHTS ARE RESERVED. ACCEPTANCE OF THE DELIVERY OF THIS DOCUMENT CONSTITUTES AGREEMENT TO THESE TERMS AND CONDITIONS.

DESIGNER	DATE
CHECKER	DATE
ENGINEER	DATE
MANAGER	DATE
SCALE:	

TITLE: (2) ACTIFLO ACP-700R FIELD WIRING

CLIENT: MEADOWBANK MINING CORP., NWT

JOHN MEUNIER ISO 9001: 2000

4105 Sartorius Street, Saint-Laurent, Qc. Canada H4S 2B3 / Tel. (514) 334-7230 / Fax: (514) 334-5010

PROJECT	DRAWING	SHEET	REV
NC01-	001-E20-015	15 OF 17	B

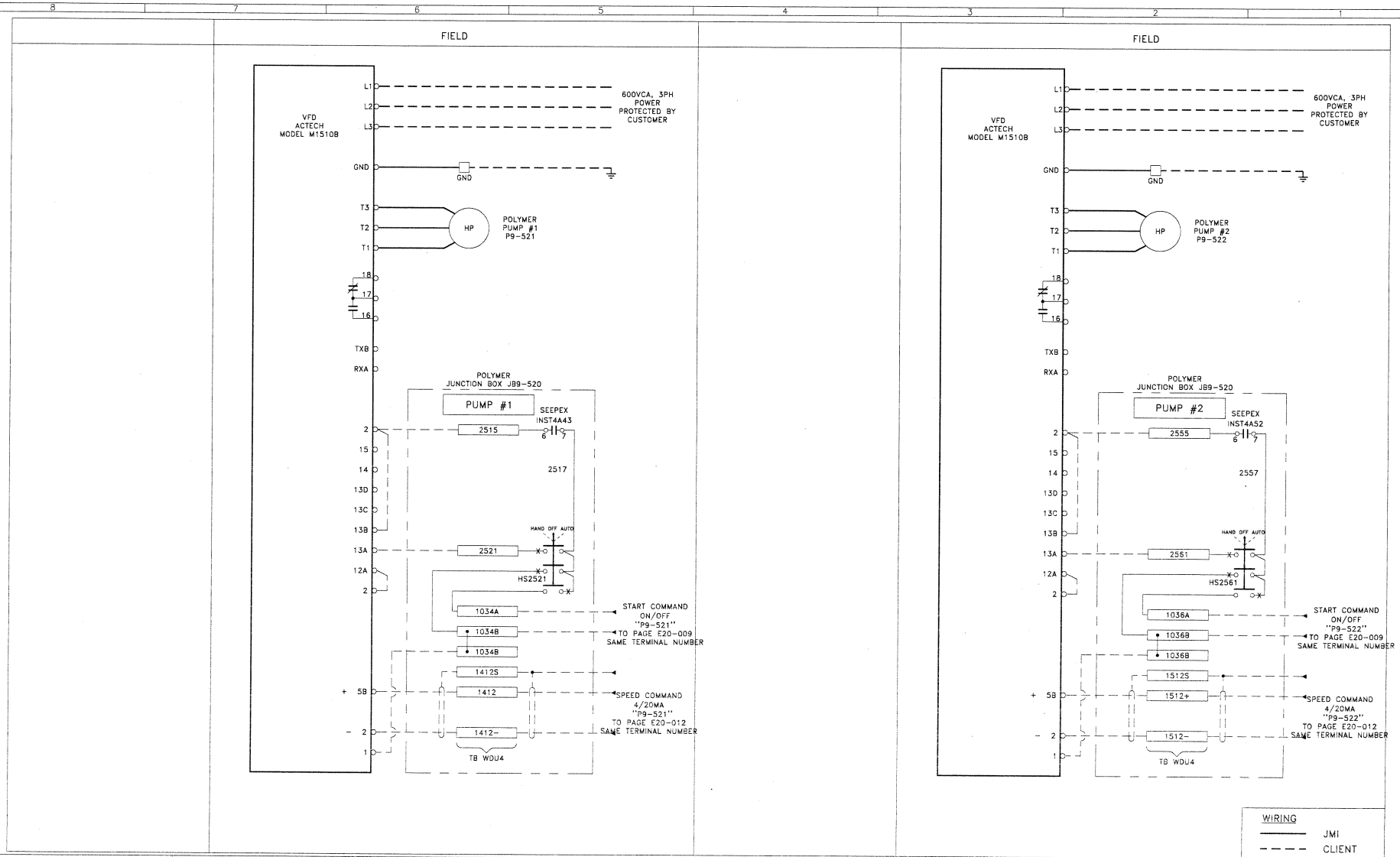

Envitech Automation Inc. CERTIFIÉ ISO9001
ENVITECH Intégrateurs de systèmes / Systems Integrators

ENVITECH DRAWING A4765A

BAR = 1" AT PLOT SCALE

REV	DESCRIPTION	DATE	DWN	CHKD	APVD	ECN
B	AS BUILT	2009/05/29	JR	JCD		
A	FOR APPROVAL	2009/04/16	JR	JCD		

CONFIDENTIALITY AND INTELLECTUAL PROPERTY NOTICE
ALL INFORMATION CONTAINED IN THIS DOCUMENT IS THE SOLE PROPERTY OF JOHN MEUNIER INC. AND IS PROTECTED BY ALL APPLICABLE LAWS, INCLUDING BUT NOT LIMITED TO COPYRIGHT AND OTHER INTELLECTUAL PROPERTY LAWS. THE DESIGN CONCEPTS AND INFORMATION CONTAINED HEREIN ARE PROPRIETARY TO JMI AND ARE SUBMITTED IN CONFIDENCE. THEY ARE NOT TRANSFERABLE. THEY MUST BE USED ONLY FOR THE PURPOSE FOR WHICH THE DOCUMENT IS EXPRESSLY SUBMITTED AND NO RIGHT OR LICENSE IS GRANTED OTHERWISE BY THE SUBMISSION OF THIS DOCUMENT. THEY ARE CONFIDENTIAL AND PROVIDED INFORMATION OF JMI AND THEY MUST NOT BE UNCLOSED, REPRODUCED, LOANED, TRANSFERRED OR USED IN ANY OTHER MANNER WITHOUT THE EXPRESS WRITTEN CONSENT OF JMI. JMI ASSUMES NO RESPONSIBILITY OR LIABILITY FOR THE USE OF THIS DOCUMENT OR THE DESIGN CONCEPTS AND INFORMATION CONTAINED HEREIN FOR WHICHEVER PROJECT, OR IN A MANNER THAT DOES NOT RELATE TO THE STRICTS OR PURPOSE OF THIS DOCUMENT. IN NO EVENT SHALL THIS DOCUMENT OR THE DESIGN CONCEPTS AND INFORMATION CONTAINED HEREIN BE USED IN A MANNER DETRIMENTAL TO THE INTEREST OF JMI. ALL COPYRIGHT, PATENT AND OTHER INTELLECTUAL PROPERTY RIGHTS ARE RESERVED. ACCEPTANCE OF THE DELIVERY OF THIS DOCUMENT CONSTITUTES AGREEMENT TO THESE TERMS AND CONDITIONS.

DESIGNER	DATE
CHECKER	DATE
ENGINEER	DATE
MANAGER	DATE
SCALE:	

TITLE: (2) ACTIFLO ACP-700R FIELD WIRING

CLIENT: MEADOWBANK MINING CORP., NWT

JOHN MEUNIER ISO 9001: 2000
4165 Sorbonne Street, Saint-Laurent, Qc. Canada H4S 2B3 / Tel: (514) 334-7230 / Fax: (514) 334-5010

PROJECT DRAWING: NC01- 001-E20-016

SHEET: 16 OF 17

REV: B

STD: JMI_22x34_D_ANG

REF:

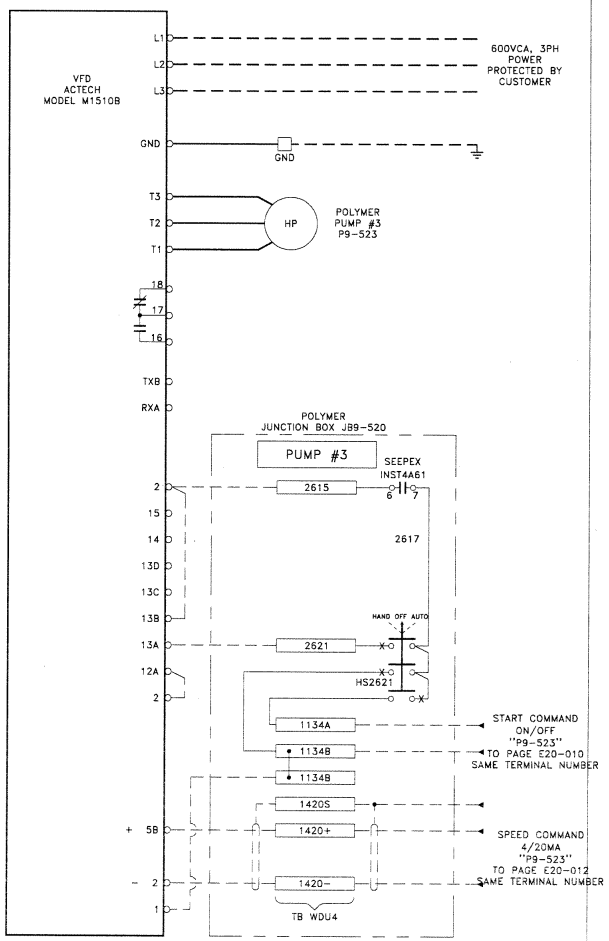

WIRING
——— JMI
– – – – CLIENT

Envitech Automation Inc.
CERTIFIÉ ISO9001
ENVITECH Intégrateurs de systèmes / Systems Integrators

ENVITECH DRAWING A4765A

STD: JMI_22x34_D_ANG

REF:

BAR = 1" AT PLOT SCALE

REV	DESCRIPTION	DATE	DWN	CHKD	APVD	ECN
B	AS BUILT	2009/05/29	JR	JCD		
A	FOR APPROVAL	2009/04/16	JR	JCD		

CONFIDENTIALITY AND INTELLECTUAL PROPERTY NOTICE
ALL INFORMATION CONTAINED IN THIS DOCUMENT IS THE SOLE PROPERTY OF JOHN MEUNIER INC. AND IS PROTECTED BY ALL APPLICABLE LAWS, INCLUDING BUT NOT LIMITED TO COPYRIGHT AND OTHER INTELLECTUAL PROPERTY LAWS. THE DESIGN CONCEPTS AND INFORMATION CONTAINED HEREIN ARE PROPRIETARY TO JMI AND ARE SUBMITTED IN CONFIDENCE. THEY ARE NOT TRANSFERABLE. THEY MUST BE USED ONLY FOR THE PURPOSE FOR WHICH THE DOCUMENT IS EXPRESSLY SUBMITTED AND NO IMPLICIT LICENCE IS GRANTED CONTAINED BY THE SUBMISSION OF THIS DOCUMENT. THEY ARE CONFIDENTIAL AND PROPRIETARY INFORMATION OF JMI AND THEY MUST NOT BE DISCLOSED, REPRODUCED, LOANED, REMITTED OR USED IN ANY OTHER MANNER WITHOUT THE EXPRESS WRITTEN CONSENT OF JMI. JMI ASSUMES NO RESPONSIBILITY OR LIABILITY FOR THE USE OF THIS DOCUMENT OR THE DESIGN CONCEPTS AND INFORMATION CONTAINED HEREIN FOR ANY PURPOSE OR IN A MANNER THAT DOES NOT RELATE TO THE STRICTLY IN PURPOSE OF THIS DOCUMENT. IN NO EVENT SHALL THIS DOCUMENT OR THE DESIGN CONCEPTS AND INFORMATION CONTAINED HEREIN BE USED IN A MANNER DETRIMENTAL TO THE INTEREST OF JMI. ALL COPYRIGHT, PATENT AND OTHER INTELLECTUAL PROPERTY RIGHTS ARE RESERVED. ACCEPTANCE OF THE DELIVERY OF THIS DOCUMENT CONSTITUTES AGREEMENT TO THESE TERMS AND CONDITIONS.

DESIGNER	DATE
CHECKER	DATE
ENGINEER	DATE
MANAGER	DATE
SCALE:	

TITLE (2) ACTIFLO ACP-700R FIELD WIRING

CLIENT MEADOWBANK MINING CORP., NWT

JOHN MEUNIER ISO 9001: 2000
4105 Sorbonne Street, Saint-Laurent, Qc, Canada H4S 2B3 / Tel: (514) 334-7230 / Fax: (514) 334-3070

PROJECT	DRAWING	SHEET	REV
NC01-	001-E20-017A	17A OF 17	B

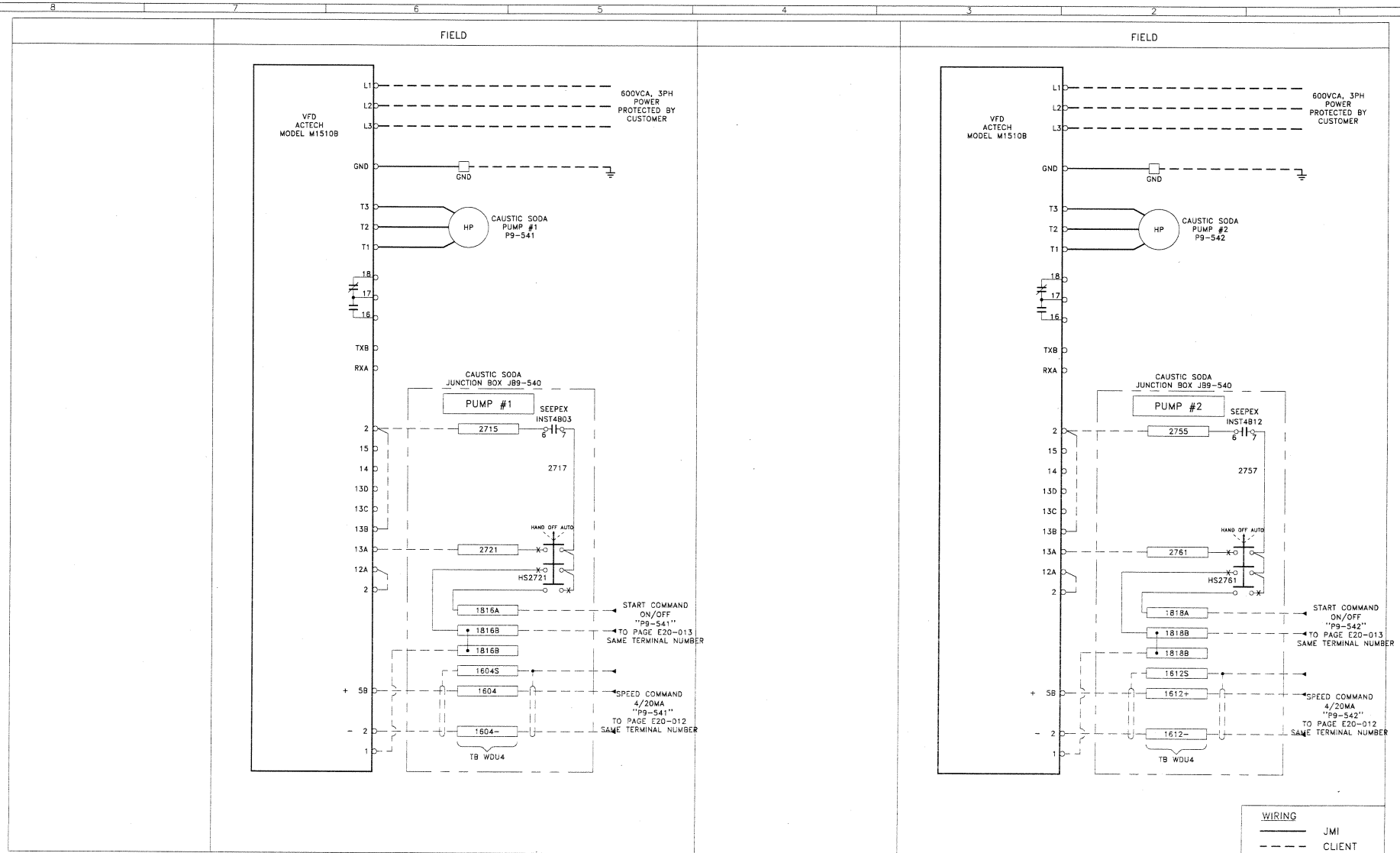

Envitech Automation Inc. CERTIFIÉ ISO9001

ENVITECH Intégrateurs de systèmes / Systems Integrators

ENVITECH DRAWING A4765A

BAR = 1" AT PLOT SCALE

STD: JMI_22x34_D_ANG

REF:

REV	DESCRIPTION	DATE	DWN	CHKD	APVD	ECN
B	AS BUILT	2009/05/29	JR	JCD		
A	FOR APPROVAL	2009/04/16	JR	JCD		

CONFIDENTIALITY AND INTELLECTUAL PROPERTY NOTICE
ALL INFORMATION CONTAINED IN THIS DOCUMENT IS THE SOLE PROPERTY OF JOHN MEUNIER INC. AND IS PROTECTED BY ALL APPLICABLE LAWS, INCLUDING BUT NOT LIMITED TO COPYRIGHT AND OTHER INTELLECTUAL PROPERTY LAWS. THE DESIGN CONCEPTS AND INFORMATION CONTAINED HEREIN ARE PROPRIETARY TO JMI AND ARE SUBMITTED IN CONFIDENCE. THEY ARE NOT TRANSFERABLE. THEY MUST BE USED ONLY FOR THE PURPOSE FOR WHICH THE DOCUMENT IS SUPPLIED, SUBMITTED AND NO IMPLICIT LICENCE IS GRANTED OTHERWISE BY THE COMMISSION OF THIS DOCUMENT. THEY ARE CONFIDENTIAL AND PROCESSED INFORMATION OF JMI AND THEY MUST NOT BE DISCLOSED, REPRODUCED, LOANED, REMITTED OR USED IN ANY OTHER MANNER WITHOUT THE EXPRESS WRITTEN CONSENT OF JMI. JMI ASSUMES NO RESPONSIBILITY OR LIABILITY FOR THE USE OF THIS DOCUMENT OR THE DESIGN CONCEPTS AND INFORMATION CONTAINED HEREIN FOR ANOTHER PROJECT, OR IN A MANNER THAT DOES NOT RELATE TO THE INTENTION OR PURPOSE OF THIS DOCUMENT. IN NO EVENT SHALL THE DOCUMENT OR THE DESIGN CONCEPTS AND INFORMATION CONTAINED HEREIN BE USED IN A MANNER DETRIMENTAL TO THE INTEREST OF JMI. ALL COPYRIGHT, PATENT AND OTHER INTELLECTUAL PROPERTY RIGHTS ARE RESERVED. ACCEPTANCE OF THE DELIVERY OF THIS DOCUMENT CONSTITUTES AGREEMENT TO THESE TERMS AND CONDITIONS.

DESIGNER	DATE
CHECKER	DATE
ENGINEER	DATE
MANAGER	DATE
SCALE:	

TITLE (2) ACTIFLO ACP-700R FIELD WIRING

CLIENT MEADOWBANK MINING CORP., NWT

JOHN MEUNIER ISO 9001: 2000
4105 Sartoon Street, Saint-Laurent, Qc, Canada H4S 2B3 / Tel: (514) 334-7230 / Fax: (514) 334-3070

PROJECT DRAWING NC01- 001-E20-017B

SHEET 17B OF 17

REV B

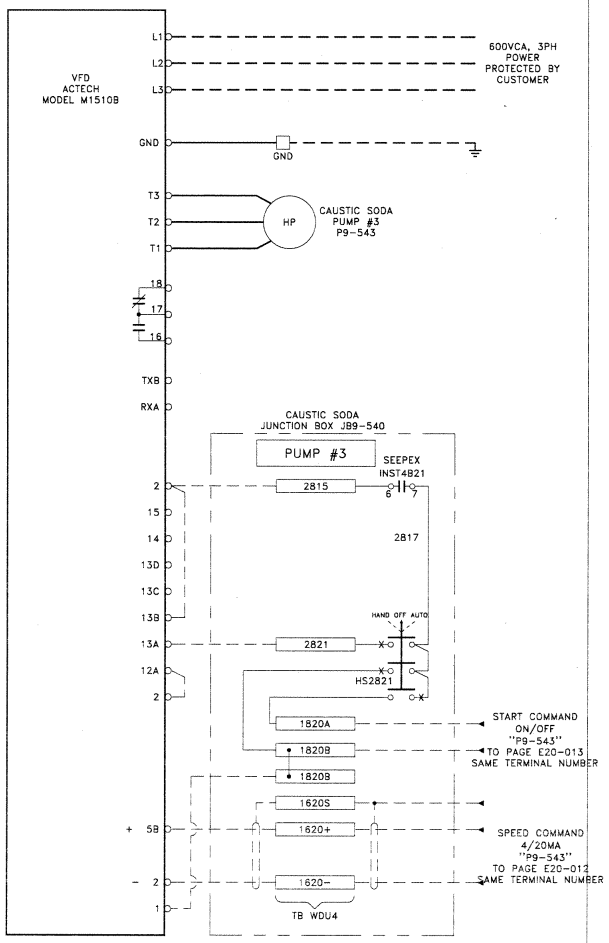

WIRING
JMI
CLIENT

Envitech Automation Inc.
CERTIFIÉ ISO9001
ENVITECH Intégrateurs de systèmes / Systems Integrators

ENVITECH DRAWING A4765A

STD: JMI_22x34_D_ANG | REF: | BAR = 1" AT PLOT SCALE

REV	DESCRIPTION	DATE	DWN	CHKD	APVD	ECN
B	AS BUILT	2009/05/29	JR	JCD		
A	FOR APPROVAL	2009/04/16	JR	JCD		

CONFIDENTIALITY AND INTELLECTUAL PROPERTY NOTICE
ALL INFORMATION CONTAINED IN THIS DOCUMENT IS THE SOLE PROPERTY OF JOHN MEUNIER INC. AND IS PROTECTED BY ALL APPLICABLE LAWS, INCLUDING BUT NOT LIMITED TO COPYRIGHT AND OTHER INTELLECTUAL PROPERTY LAWS. THE DESIGN CONCEPTS AND INFORMATION CONTAINED HEREIN ARE PROPRIETARY TO JMI AND ARE SUBMITTED IN CONFIDENCE. THEY ARE NOT TRANSFERABLE. THEY MUST BE USED ONLY FOR THE PURPOSE FOR WHICH THE DOCUMENT IS EXPRESSLY SUBMITTED AND NO IMPLICIT LICENCE IS GRANTED OTHERWISE BY THE SUBMISSION OF THIS DOCUMENT. THEY ARE CONFIDENTIAL AND PRIVILEGED INFORMATION OF JMI AND THEY MUST NOT BE REVOLVED, REPRODUCED, LOANED, REMITTED OR USED IN ANY OTHER MANNER WITHOUT THE EXPRESS WRITTEN CONSENT OF JMI. JMI RESERVES NO RESPONSIBILITY OR LIABILITY FOR THE USE OF THIS DOCUMENT OR THE DESIGN CONCEPTS AND INFORMATION CONTAINED HEREIN FOR ANOTHER PROJECT, OR IN A MANNER THAT DOES NOT RELATE TO THE FINANCE OR PURPOSE OF THIS DOCUMENT. IN NO EVENT SHALL THIS DOCUMENT OR THE DESIGN CONCEPTS AND INFORMATION CONTAINED HEREIN BE USED IN A MANNER DETRIMENTAL TO THE INTEREST OF JMI. ALL COPYRIGHT, PATENT AND OTHER INTELLECTUAL PROPERTY RIGHTS ARE RESERVED. ACCEPTANCE OF THE DOCUMENT OF THIS DOCUMENT CONSTITUTES AGREEMENT TO THESE TERMS AND CONDITIONS.

DESIGNER	DATE
CHECKER	DATE
ENGINEER	DATE
MANAGER	DATE
SCALE:	

TITLE (2) ACTIFLO ACP-700R FIELD WIRING

CLIENT MEADOWBANK MINING CORP., NWT

JOHN MEUNIER ISO 9001: 2000
4105 Sartelon Street, Saint-Laurent, Qc, Canada H4S 2B3 / Tel: (514) 334-2230 / Fax: (514) 334-5070

PROJECT	DRAWING	SHEET	REV
NC01 - 001-E20-017C		17C OF 17	B

Shipping Management Plan, Version 2

AGNICO EAGLE

MEADOWBANK DIVISION

WHALE TAIL PIT

Shipping Management Plan

APRIL 2018

VERSION 2

EXECUTIVE SUMMARY

The Shipping Management Plan for the Whale Tail Pit Project (the Project) was developed in accordance with federal legislation, notably the *Canada Shipping Act* and the *Arctic Waters Pollution Prevention Act,* and associated regulations. It also recognizes the international conventions and protocols signed by Canada. Agnico Eagle Mines Limited (Agnico Eagle) will provide the necessary human, material, and financial resources to meet or exceed the legal requirements attributable to the company that arise from shipping-related activities. Shipping contractors will be encouraged to do the same. Agnico Eagle and its shipping contractors will carry third party liability insurance.

All shipping will be carried out during the open water season and will follow recommended shipping routes for the annual sea lift to Baker Lake and other Kivalliq Region communities. There will not be any ice breaking to extend the shipping season.

Dry cargo multipurpose vessels and fuel tankers will arrive at a lightering point near Helicopter island where they will anchor approximately 1 kilometre (km) from the island. Dry cargo will be lightered onto tug-assisted barges and fuel will be lightered onto smaller shuttle tankers for transport through the Baker Lake access passage (Chesterfield narrows, south channel) to the Meadowbank Mine barge unloading facilities and laydown area in Baker Lake.

It is Agnico Eagle's intent to prioritize the road transport of hazardous materials, including explosive-related materials, to the Project site to avoid having such cargo remain in storage in Baker Lake. Other contingency measures associated with shipping-related activities include the Project's Spill Contingency Plan, Emergency Response Plan, and Oil Pollution Emergency Plan (OPEP). Risk and hazard assessments of shore-based marine response activities will be undertaken as part of training the Emergency Response Team.

Navigation through the Labrador Sea, Hudson Strait, and Hudson Bay is not challenging during the open water season. Navigation through Chesterfield Inlet also does not represent a major risk with exception of two locations; at Deer Island and Target Rock where passages are narrow and have strong currents. No major hazards are identified along the shipping and tug-barge routes under normal conditions.

All ship, tug and tanker Masters will use electronic charts and other electronic navigational aids to provide safety in transit, reduce the risk of accidents, remain within recommended shipping routes and follow their internal navigation charts and guides (e.g., Navigation Arctic Guide) based on their experience. In addition, there are some Project-specific measures concerning navigation in Chesterfield Inlet, including careful assessment of the conditions before entering the inlet, travelling during daytime when possible and good visibility, and making bound-up travel with tidal flood when possible.

Passage through locations with shipping and boating traffic will be coordinated to avoid shipping conflicts, and speed will be reduced where possible to ensure safety. To maximize the safety of the persons travelling in boats near Chesterfield Inlet, Agnico Eagle or the shipping contractor will inform the community of the shipping activities, promote actions that will allow the ship and the small boats to see one another, and, through the Community Liaison Committee, will recommend that all those in small boats wear personal floatation devices.

On board waste management (solid and hazardous wastes, sewage) will be the responsibility of shipping contractors. Agnico Eagle will require the shipping contractors to conform to the *Ballast Management Control and Management Regulations*, which should reduce the risk of invasive species being introduced as a result of shipping activities. Agnico Eagle expects to contract vessels that meet applicable environmental requirements in addition to being reliable and having a superior safety record.

Care will be taken to avoid disturbing marine mammals within the shipping lanes as much as possible and a Marine Mammal and Seabird Observer (MMSO) will be assigned to the ship crew. Ship crew will monitor the shipping lane for marine mammals during transits in Hudson Strait up to the lightering point near Helicopter Island. As in the past, monitoring will continue using Inuit Marine Wildlife Monitoring aboard the vessels between Helicopter Island and Baker Lake, in accordance with NIRB Project Certificate Condition 36 (NIRB 2006). Mitigation measures may comprise, if safe to do so, slowing the ship and maintaining a safe distance from marine mammals.

Vessels contracted by Agnico Eagle will be required to have an approved Shipboard Oil Pollution Emergency Plan (SOPEP). If an environmental emergency occurs along the shipping routes, the SOPEP will be activated. If needed, close coordination will be maintained with Agnico Eagle's shore-based supervisors who can activate Agnico Eagle's Emergency Response Plan and OPEP to provide assistance to a vessel. Accidents or malfunctions during transit will be reported to Transport Canada. Spills would also be reported to the Environmental Emergencies 24-Hour Report Line and, if necessary, advice would be requested from the Regional Environmental Emergencies Team. Assistance could be sought from nearby ships and the Canadian Coast Guard.

TABLE OF CONTENTS

Executive Summary i
Table of Contents iii
Figures and Tables iv
Document Control v
Acronyms vi
Section 1 • Introduction 1
1.1 Shipping Needs 1
1.2 Shipping Routes 1
1.3 Lightering Procedures 2
1.3.1 Dry Cargo 2
1.3.2 Diesel Fuel 4
1.3.3 Explosives and Hazardous Materials 4
Section 2 • Related Documents 6
2.1 Spill Contingency Plan 6
2.2 Emergency Response Plan 6
2.3 Oil Pollution Emergency Plan 6
2.4 Shipboard Oil Pollution Emergency Plan 7
Section 3 • Applicable Federal Acts, Regulations and Guidelines 8
Section 4 • Marine Wildlife 11
4.1 Interactions and Potential Effects 11
4.2 Mitigation Measures 11
4.3 Monitoring and Reporting 13
Section 5 • Navigational safety 14
Section 6 • On Board Waste Management 15
6.1 Sewage 15
6.2 Solid Waste 15
Section 7 • Ballast Water Management 16
7.1 Ballast Water Exchange 17
Section 8 • Safety 18

Section 9 • Hazard Identification Analysis of Marine Routes 19
Section 10 • Risk Analysis of Marine Routes 21
Section 11 • Socio-Economic Impact of Shipping 23
Section 12 • Public and Media Communications 24
References 25
Appendix A • Marine Hydrographic Charts 1
Appendix B • Marine Mammal Management and Monitoring Plan 9

FIGURES AND TABLES

Figure 1-1 Shipping Route 3
Table 3-1 Applicable Acts, Regulation, and Guidelines 9
Table 3-2 International Conventions and Protocols Signed by Canada 10

DOCUMENT CONTROL

Version	Date	Section	Page	Revision	Author
1	June 2016	All	All	First draft of plan prepared as part of the FEIS submission.	Golder Associates Ltd.
2	April 2018	All	All	Comprehensive review to ensure plan reflects most up to date information and incorporates Project Certificate 008 Conditions.	Agnico Eagle Mines Ltd.

ACRONYMS

AWPPA	*Arctic Waters Pollution Prevention Act*
BWMP	Ballast Water Management Plan
CCG	Canadian Coast Guard
ERP	Emergency Response Plan
ERT	Emergency Response Team
IMO	International Marine Organization
MARPOL	International Convention for the Prevention of Pollution from Ships
MLA	Marine Liability Act
MMSO	Marine Mammal and Seabird Observer
OPEP	Oil Pollution Emergency Plan
REET	Regional Environmental Emergencies Team
SOLAS	International Convention for the Safety of Life at Sea
SOPEP	Shipboard Oil Pollution Emergency Plan

SECTION 1 • INTRODUCTION

Agnico Eagle Mines Limited – Meadowbank Division (Agnico Eagle) has gained extensive experience in shipping fuel and dry cargo to the Meadowbank Mine since its construction began in 2008 and commercial production in 2010. The extension of the Meadowbank mine through the Whale Tail Pit Project (the Project) will utilize shipping arrangements already in use for the Meadowbank Mine and will not incur a net increase in shipping volume within Hudson Bay and Hudson Strait, or a change in shipping procedures (Figure 1-1).

This plan was prepared to comply with the Whale Tail Pit NIRB Project Certificate 008 Condition 37 (NIRB 2018).

1.1 Shipping Needs

A total of approximately 60,000 tonnes of dry cargo (equipment and supplies) and 66.8 million litres of diesel fuel will be required annually for the operations of the Project. To meet these needs, a total of three to eight vessels will annually deliver dry goods, and two to three tankers will annually deliver diesel fuel for the Project.

All shipping will be carried out during the open water season (typically from July to late October) and will follow recommended shipping routes[1] that are presently in use for the annual sea lift to Chesterfield Inlet, Baker Lake and other communities.

The priorities in shipping dry cargo and fuel will be:

- the protection of the crew and others in small boats that the ship may come across;
- the protection of the marine environment; and
- the preservation of the ship and its cargo.

All ships, tugs, and tankers will be equipped with electronic navigational aids. Ships will not be serviced in Chesterfield Inlet and will arrive with enough fuel for the return voyage south.

1.2 Shipping Routes

The marine transport of dry cargo will be comprised of five main segments, all within established shipping lanes:

- Bécancour, Québec on the St. Lawrence River, along the coast of Labrador to Hudson Strait;
- through Hudson Strait to Hudson Bay (see Appendix A for marine hydrographic charts showing the shipping lanes);

[1] Agnico Eagle's shipping routes within Nunavut are non-compulsory pilotage areas during the ice free shipping season.

- across Hudson Bay to the mouth of Chesterfield Inlet;
- through Chesterfield Inlet to an anchorage point at Helicopter Island at the head of Chesterfield Inlet; and
- through Chesterfield Narrows to the hamlet of Baker Lake (located on northwest shore of Baker Lake).

Dry cargo will be loaded on multipurpose (MPP) vessels, class: GL + 100 A5 E3 (LOA 138.98 m, draft 8 m, freight capacity ~ 19,000 m^3) in eastern ports, almost exclusively Bécancour, and delivered directly to the lightering point near Helicopter Island by Nunavut Sealink and Supply Inc. (NSSI). Currently, the contracted vessels supply cargo to both Agnico Eagle operations and the nearby communities. The first vessels of the year will normally arrive in July or early August. As these ships are too large to navigate Chesterfield Narrows (navigational passage between Chesterfield Inlet and Baker Lake), they will anchor near Helicopter Island (Figure 1-1) at the head of Chesterfield Inlet, where the dry cargo will be lightered onto barges for transport to Baker Lake. Up to eight MPP vessels will arrive throughout the open water shipping season delivering dry cargo. All ships will be equipped with complete electronic navigation aids for navigation in restricted waters.

Fuel (diesel (USLD) and Jet A) will be loaded on marine fuel tankers (LOA 130 m, draft 8 m, freight capacity ~ 10 million litres) and delivered to the lightering point near Helicopter Island by Petro-Nav inc. a subsidiary of Groupe Desgagnes. Once the fuel tankers are securely anchored, fuel is transferred to smaller shuttle tankers (LOA ~110 m, draft 4.6 m, fuel capacity ~2,900 m^3 diesel). The shuttle tankers then transport the fuel shipment through Chesterfield Narrows to the Meadowbank Mine fuel storage area in Baker Lake. Shuttle tankers will do approximately 13 trips in July or August (delivering 50 million litres total) and 5 trips in October (delivering 16.8 million litres total). On average, up to four million litres of fuel is delivered per tanker shipment.

1.3 Lightering Procedures

1.3.1 Dry Cargo

After dry cargo vessels have anchored at Helicopter Island, dry cargo will be lightered onto barges in preparation for transportation to the Meadowbank barge unloading facilities in Baker Lake. During lightering onto the barges, attention will be directed to ensuring the barges are secured alongside or anchored, with due consideration being given to the prevailing and expected wind, weather, and tide conditions.

The tug-assisted barge used to ferry dry cargo to Baker Lake will be highly manoeuvrable and capable of transiting the access passage with its changing current patterns. Navigation will proceed at a slow speed in periods of low visibility. Traffic through the access passage will be coordinated through communication between the tugs to avoid shipping conflicts and to ensure safety.

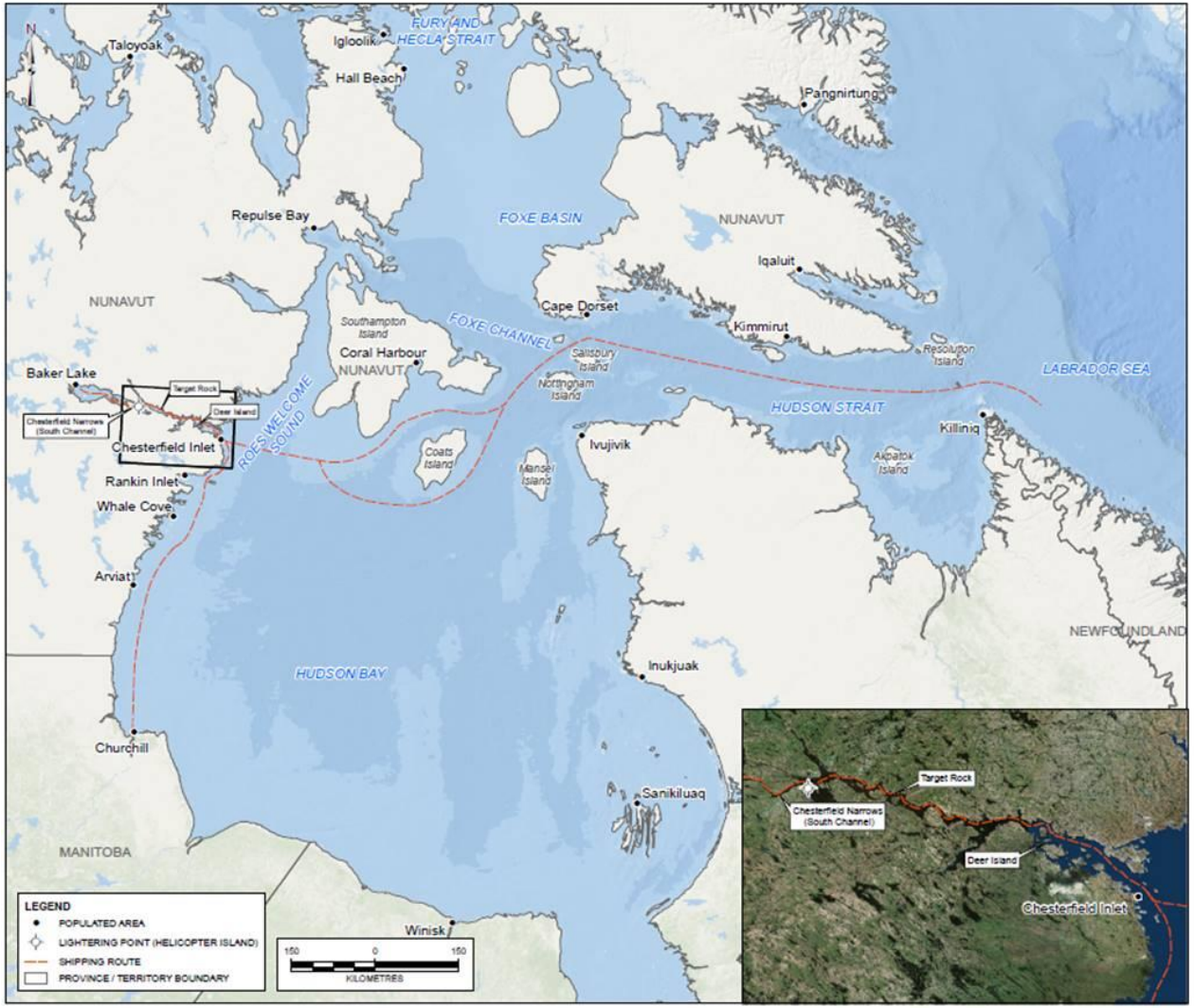

Figure 1-1 Shipping Route

The Master of each vessel (including tugs, barges, large and small tankers, and cargo ships) will be responsible for safe navigation of their vessels between the port of departure and point of destination (Helicopter Island and Baker Lake). For tugs, this also includes responsibility for navigational safety of the barge they are towing or pushing. When a barge is laid alongside a dry cargo vessel for lightering containers or equipment, a loading supervisor on the ship will take charge of the barge.

Outgoing containers, cargo and materials will be loaded on barges in Baker Lake, and then transported to Helicopter Island where it will be loaded onto the cargo ship for the return trip to southern ports. Outgoing cargo could include construction equipment being demobilized following the completion of construction and/or hazardous or other waste being sent to a certified waste management facility for treatment, recycling and/or disposal in another provincial or territorial jurisdiction.

1.3.2 Diesel Fuel

It is expected that the large tankers delivering diesel fuel will anchor in the same general location as the dry cargo vessels (i.e., near Helicopter Island; Figure 1-1). Transfer of fuel will occur from the tanker to a smaller shuttle tanker that can navigate the passage between Helicopter Island and Baker Lake. The shuttle tanker will be offloaded at the Meadowbank Mine barge unloading facilities and the fuel will be transported to the Meadowbank Mine tank farm. Contingency measures related to the transfer of fuel are described in the Oil Pollution Emergency Plan (OPEP).

1.3.3 Explosives and Hazardous Materials

A minimum amount of explosives will be stored at the Whale Tail Pit site. The existing emulsion plant at the Meadowbank Mine will be maintained with deliveries on an as need basis during operations. The Project will primarily use emulsion based explosives during construction and operations to minimize the use of ammonium nitrate/fuel oil (ANFO).

It is Agnico Eagle's intent to prioritize the road transport of hazardous materials, including explosive-related materials, to the Project site to avoid having such cargo remain in storage at Baker Lake. Sensitive products such as explosives, boosters and caps will be transported directly to the Project site. However, in the eventuality of a delay in their transit to the mine site, these products will be temporarily stored at the Meadowbank Mine laydown area in Baker Lake according to applicable regulations which include locked storage under constant surveillance. All handling, transport, storage, manufacture and use of explosives will be subject to federal approval under the *Explosives Act*, and the *Nunavut Mine Health and Safety Act*.

Sodium cyanide is used to optimize gold recovery from the ore. This product will continue to be used at the Project. Due to transportation restrictions, normally a full year's supply of sodium cyanide will be transported and stored on site. The product will be transported, stored, handled, transferred and used in compliance with appropriate legislation and applicable Best Management Practices. Agnico Eagle is a signatory to the International Cyanide Management Code.

Hazardous waste and contaminated soil will be managed on a yearly basis; consequently there will be little to no accumulation of such wastes at the Project site during operations, subject to seasonal shipping considerations. Hazardous waste will not be incinerated but returned south via a dry-cargo vessel for treatment, recycling and/or disposal in a certified waste management facility. Agnico Eagle will contract shipping companies that are certified under the IMDG code (International Maritime Dangerous Goods).

SECTION 2 • RELATED DOCUMENTS

The Shipping Management Plan (the Plan) covers the scope of shipping activities for the Project.

Management and monitoring plans for the Project that provided input to the Shipping Management Plan include the following:

- Spill Contingency Plan;
- Emergency Response Plan;
- Oil Pollution Emergency Plan; and
- Shipboard Oil Pollution Emergency Plan (shipping companies).

2.1 Spill Contingency Plan

The cornerstone of spill contingency planning for Agnico Eagle is the Spill Contingency Plan covering all spills on land, water, and ice. The Spill Contingency Plan, coupled with the Emergency Response Plan, describes the processes to be followed when responding to a spill to the environment.

2.2 Emergency Response Plan

The Emergency Response Plan (ERP) focuses on responding to all emergencies in a timely and adequate manner. It commits Agnico Eagle to being prepared for and providing adequate resources - qualified personnel and equipment - to handle a wide variety of emergency situations.

Risk and hazard assessments of shore-based marine response activities will be undertaken as part of training for the Agnico Eagle Emergency Response Team (ERT).

2.3 Oil Pollution Emergency Plan

The Oil Pollution Emergency Plan complements the Spill Contingency Plan and should not be construed as superseding it. The OPEP only provides contingency planning for storage of hydrocarbon products at the Meadowbank Mine laydown area in Baker Lake.

The OPEP complies with the requirements for procedures, equipment and resources as set out in the *Canada Shipping Act* (s.s. 660.2(4)) specific to the fuel handling facility, the bulk incoming transfer of fuel from ship-to-shore and spill scenarios directly relating to this operation. Further, the OPEP provides direction to Agnico Eagle personnel and/or contractors, and to Agnico Eagle's ERT in emergency spill response situations. It also contributes in developing oil pollution scenarios, defining the roles and responsibilities of management and responders, and outlining the measures taken to prevent spills. The OPEP seeks to minimize potential health and safety hazards, environmental damage, and cleanup costs.

Spills resulting from ship-to-ship fuel transfer will be the responsibility of the shipping companies contracted by Agnico Eagle and the vessel's Master. Agnico Eagle will provide assistance wherever possible in the event of a spill in these instances.

2.4 Shipboard Oil Pollution Emergency Plan

The Shipboard Oil Pollution Emergency Plan (SOPEP) will contain all information and operational instructions as required by the International Marine Organization's "*Guidelines for the Development of the Shipboard Marine Pollution Emergency Plan*". Vessels contracted by Agnico Eagle will be required to have an approved SOPEP. The preparation of the SOPEP is the responsibility of the shipping company and is maintained by the vessel's Master. However, close coordination will be maintained with Agnico Eagle's shore-based supervisors who can activate the ERP and OPEP in providing assistance to a vessel in the near-shore area. These two plans will have close links to the SOPEP and, as required, will include training exercises at regular intervals to ensure ship and shore can cooperate in responding to any spill of fuel or any other hazardous product. Shipboard Oil Pollution Emergency Plans will be required to include how vessel contractor(s) will maintain spill equipment, and the frequency and framework for training vessel personnel in vessel-based spill response. This may include, but not be limited to:

- spill equipment audits;
- maintaining posted list of spill equipment;
- requirements for spill response drills; and
- on-going training refreshers (e.g., annual renewals).

Accidents or malfunctions during transit will be reported to Transport Canada. If the accident involves the loss of fuel or chemicals, the SOPEP would be activated and on-board spill response materials and equipment put to use. Spills would also be reported to the Government of Nunavut Spill Line and to the Environmental Emergencies 24-Hour Report Line and, if necessary, advice would be requested from the Regional Environmental Emergencies Team. Assistance could be sought from nearby ships and the Canadian Coast Guard (CCG). Spill response resources such as those maintained by the CCG at select locations along the Kivalliq Region coast could be dispatched to the spill site.

Outside help could be requested for major accidents such as accidental grounding/stranding of a vessel. Under these circumstances, the safety of the crew and maintaining the integrity of the vessel would be the first priority.

SECTION 3 • APPLICABLE FEDERAL ACTS, REGULATIONS AND GUIDELINES

The Shipping Management Plan was prepared in accordance with federal legislation outlined in Table 3-1. Numerous regulations exist under the *Canada Shipping Act* and these can be found at www.tc.gc.ca. The regulations included here are most relevant to the environment and the Plan.

Table 3-2 lists international conventions and protocols signed by Canada. Canada is a signatory to International Maritime Organization (IMO) International Convention for the Prevention of Pollution from Ships (MARPOL) and International Convention for the Safety of Life at Sea (SOLAS). As such, Canadian marine laws, regulations and guidelines rules are a reflection of these international conventions, protocols and agreements.

At this time, Agnico Eagle has contracted NSSI and Petro-Nav to be used in Project shipping to Baker Lake. However, the shipping companies could change over the construction, operations and closure phases of the Project. It is required that the shipping contractors to be used by Agnico Eagle abide by Canadian laws and regulations, applicable MARPOL 73/70 annexes, and international conventions. This is also a requirement of NIRB Project Certificate 008 Condition 43. Inspections carried by federal inspectors will ensure that all applicable statutes are followed. This could include the review of required plans (SOPEP), an audit of the emergency response equipment carried by the vessel, and the means to prevent the discharge of any oil, oily water or other hazardous waste in Arctic waters.

All vessels transiting through and operating in Canadian Arctic waters are required to comply with the *Arctic Waters Pollution Prevention Act* (AWPPA), the *Canada Shipping Act* 2001 (CSA 2001), the *Marine Liability Act* (MLA) and their associated regulations, including requirements for vessel construction and operations (see Table 3-1). While the provisions of the CSA 2001 apply in all Canadian waters, vessels in Arctic waters north of 60°N and out to the 200 nautical mile limit of Canada's Exclusive Economic Zone are also subject to the provisions of the AWPPA. The AWPPA prohibits discharges of oil, chemicals, garbage and other wastes generated onboard vessels. It does allow for the discharge of untreated sewage[2]. The MLA sets out a regime that requires vessels operating in Canadian jurisdiction, including Arctic waters, to carry insurance to pay for damages from oil spills.

Two vessel control systems are established under the *Arctic Shipping Pollution Prevention Regulations* – the Zone/Date System and the Arctic Ice Regime Shipping System, which provide for operational safety by taking into account the vessel's capability to operate safely by virtue of ice strengthening, and the ice conditions it will encounter[3].

[2] Ships are to only discharge gray water and treated sewage when the ship is at least 50 km from Chesterfield Inlet.

[3] Agnico Eagle will only ship dry goods and fuel during the open water season.

Vessels servicing the Project will be required to comply with the AWPPA and regulations while in a Shipping Safety Control Zone.

The various shipping companies contracted by Agnico Eagle must have an approved SOPEP, and verify that equipment and operating procedures are consistent with Canadian Marine laws, regulations and guidelines, and with IMO agreements to which Canada is a signatory. It is the responsibility of the Master of the ship to ensure safe passage through Canadian waters and to maintain up-to-date charts and publications[4].

Agnico Eagle will provide the necessary human, material, and financial resources to meet or exceed the legal requirements attributable to the company that arise from shipping. Shipping contractors will be encouraged to do the same.

Table 3-1 Applicable Acts, Regulation, and Guidelines

Acts	Regulations	Guidelines
Federal Legislation		
Canada Shipping Act, 2001 (S.C. 2001, c. 26) [An Oil Pollution Emergency Plan is required under the Act (168(1)d)]	*Response Organizations and Oil Handling Facilities Regulations* (SOR/95-405) *Pollutant Discharge Reporting Regulations*, 1995 (SOR/95-351) *Environmental Response Arrangements Regulations* (SOR/2008-275) *Ballast Water Control and Management Regulations* (SOR/2006-129) *Vessel Pollution and Dangerous Chemicals Regulations*	Oil Handling Facilities Standards – TP12402 Environmental Prevention and Response National Preparedness Plan 2008 – TP13585 Guidelines for Reporting Incidents Involving Dangerous Goods, Harmful Substances and/or Marine Pollutants – TP9834E 2009 Arctic Waters Oil Transfer Guidelines, 1997 - TP10783E Response Organizations Standards – TP 12401E 1995 Guidelines for the Control of Ballast Water Discharge from Ships in Waters under Canadian Jurisdiction (TP 13617)
Canadian Transportation Accident Investigation and Safety Board Act (S.C. 1989, c. 3)	*Transportation Safety Board Regulations* (SOR/92-446)	
Marine Liability Act (S.C. 2001, c. 6)	*Marine Liability Regulations* (SOR/2002-307)	
Arctic Waters Pollution Prevention Act (R.S.C., 1985, c. A-12)	*Arctic Waters Pollution Prevention Regulations* (C.R.C., c. 354) *Arctic Shipping Pollution Prevention Regulations* (C.R.C., c. 353)	

[4] Transport Canada is not the source to provide up-to-date information on changing sea levels or on emergence of new reefs or shoals.

Acts	Regulations	Guidelines
Transportation of Dangerous Goods Act (1992, c.34)	*Transportation of Dangerous Goods Regulations* (SOR/2001-286)	
Safe Containers Convention Act (R.C.C. 1985, c. S-1)		
Oceans Act (S.C. 1996, c. 31)		
Navigable Waters Protection Act (R.S. 1985 c. N-22)		
Canada Water Act (1985 c.11)		
Fisheries Act (R.S.C. c. F-14)	*Marine Mammal Regulations* (SOR/93-56)	
	Marine Mammal Regulations (SOR/93-56)	
Species at Risk Act (2002 c.29)		Species at Risk Policies
Canadian Environmental Protection Act (1999 c.33)	*Environmental Emergency Regulations* (SOR/2003-307)	
	Interprovincial Movement of Hazardous Waste and Hazardous Recyclable Material Regulations (SOR/2002-301)	
	Release and Environmental Emergency Notification Regulations	
	Storage Tank Systems for Petroleum Products and Allied Petroleum Products Regulations (SOR/2008-197	

Table 3-2 International Conventions and Protocols Signed by Canada

Conventions	
International Convention for the Prevention of Pollution from Ships MARPOL 73/78 Annexes	
	Objective of Annex is to Prevent Pollution from:
Annex 1	Oil from ships
Annex 2	Noxious liquid substances carried in bulk
Annex 3	Harmful substances carried by ships in packaged form
Annex 4	Sewage treatment and disposal
Annex 5	Garbage handling
Annex 6	Air Pollution from Ships
International Maritime Dangerous Goods Code	
International Convention for the Safety of Life at Sea, 1974, SOLAS 74	

SECTION 4 • MARINE WILDLIFE

> Marine mammals have been the basis of the Inuit economy for over 4,000 years. They provide meat, fat, oil, leather, tools and materials for fabrication of arts and crafts. The top layers of the skin yield "muktuk", which is still highly prized as a food rich in vitamin C and high in energy content. *(Fisheries and Oceans Canada http://www.dfo-mpo.gc.ca/Science/publications/uww-msm/articles/beluga-eng.htm)*

The reaction of marine wildlife to vessel traffic is predicted to not be significant and, providing mitigation measures are employed, marine vessel traffic associated with the Project should not lead to any residual effects to marine wildlife (see Volume 3, Appendix 3-A). Agnico Eagle will include in its contracts that ships must remain mindful of marine areas having a high density of marine mammals and birds. Agnico Eagle request ships provide their ship track data for inclusion in annual reporting.

4.1 Interactions and Potential Effects

Vessel discharges (sewage, solid wastes, ballast water), the sight of the vessels and their movement, vessel noise, as well as accidental spills and releases have the potential to interact with and disturb marine wildlife and affect life cycle activities. Possible interactions between shipping and marine wildlife can have the following potential effects:

- marine mammals may retreat to the water should a vessel pass too close to an island or reef where they have pulled themselves out of the water;
- the foraging of marine birds and mammals may be interrupted when vessels approach and pass them in the shipping lanes;
- the improper treatment and release of ballast water, grey water and bilge water could alter the water quality and contaminate the food supply;
- mammal mortalities may result from collisions with the ship; and
- fuel and/or oil spills could result in mortalities and, for marine birds, could lead to the loss of foraging and brood rearing habitat.

4.2 Mitigation Measures

As part of shipping companies' standard operating procedures, ship crews will monitor for marine mammals from Hudson Strait to the lightering point near Helicopter Island. Since 2010, the Meadowbank division has implemented a vessel-based Marine Mammal and Seabird Observer (MMSO) program which will continue to be implemented during all routine project shipping activities along the shipping route (Volume 3, Appendix 3-A), in accordance with Meadowbank Mine NIRB Project Certificate Condition 36 (NIRB 2006). The ship's Master will be notified if there is a concern of the ship striking a marine mammal. Ship personnel will make a decision if actions are required to avoid

a possible collision. This may include, if safe to do so, slowing the ship until the animal has travelled clear of the ship's course. Subject to vessel and human safety considerations, ship personnel shall take every precaution to avoid disturbance, harassment, injury or mortality of marine wildlife by implementation of the following mitigation measures:

- adherence to monitoring requirements as outlined in the vessel-based MMSO program (Appendix B);
- ships will, when possible, maintain a straight course and constant speed, and avoid erratic behaviour;
- use a routing south of Coats Island as the primary shipping route (Figure 1-1)[5];
- marine mammals will be given right of way as safe navigation allows; under no circumstances, other than in the case of an emergency, will ships approach within 300 m of a walrus or polar bear observed on sea ice[6];
- ships will maintain a setback distance of at least 500 metres from colonies and aggregations of seabirds and marine mammals during Project shipping transiting through Hudson Strait, Hudson Bay, and Chesterfield Inlet[7];
- if marine mammals approach within 500 m of a ship, the vessel will reduce its speed and, if possible, cautiously move away from the animal;
- if it is not possible for the ship to move away from or detour around a stationary marine mammal or group of marine mammals, the ship will reduce its speed and wait until the animal(s) move to the side and remain at least 500 m from the ship prior to resuming speed;
- when marine mammals appear to be trapped or disturbed by ship movements, the ship will implement appropriate measures to mitigate disturbance, including stoppage of movement until the marine mammal has moved away from the immediate area;
- the ship will not be operated in such a way as to separate an individual member(s) of a group of marine mammals from other members of the group;
- when weather conditions require, such as when visibility decreases, the ship will adjust its speed accordingly to avoid the likelihood of the ship striking an animal;
- barge-tug or shipping vessels would only travel through the near shore islands and reefs when there is good visibility or adjust their speed according to the conditions;
- monitoring and reporting procedures for ship-bird collisions will be implemented, and any incidents of bird mortalities associated with ship operations will be recorded and reported to Environment and Climate Change Canada (Canadian Wildlife Services);
- ballast water will only be released in designated areas and if there is no marine wildlife in the area; and

5 In accordance with Condition 38 of NIRB Project Certificate 008

6 As all shipping will occur during the open water season, collision with young seals in liars will not happen.

7 In accordance with Condition 39 of NIRB Project Certificate 008

- bilge water, grey water and sewage will be properly treated and only released in areas where no marine wildlife is present.

Marine wildlife could be negatively affected by coming in contact with any petroleum product spilled from ships in transit. In the event of a spill, the ship personnel will discourage marine wildlife from coming in contact with the spilled material. The product most likely to be spilled from Project related shipping would be diesel fuel, which floats on the water surface and has a high rate of evaporation. However, these occurrences are expected to be rare and the activation of the SOPEP would significantly reduce their impact. Preventive and contingency measures already in place substantially reduce the risk to marine wildlife from spills.

Adaptive management will allow mitigation measures to be modified in response to new information arising from monitoring carried out by the vessel crews and from traditional knowledge.

4.3 Monitoring and Reporting

As in the past, monitoring will continue using Inuit Marine Wildlife Monitoring aboard the vessels between Helicopter Island and Baker Lake, in accordance with Meadowbank Mine NIRB Project Certificate 004 Condition 36 and Whale Tail Pit NIRB Project Certificate 008 Condition 42. In addition, as per Condition 40 of Project Certificate 008, a vessel-based MMSO program will be implemented during all Project routine shipping activities in the shipping route. This program, described in further details in Appendix B, will be executed by assigned observers stationed on-board Project vessel(s). Agnico Eagle will continue to report the observations annually to the Nunavut Impact Review Board (NIRB).

SECTION 5 • NAVIGATIONAL SAFETY

The most likely areas where interactions may occur between small boats and barges-tugs and/or ships or vessels are:

1. Chesterfield Inlet;
2. the passage between Chesterfield Inlet and Baker Lake; and
3. where the ship is transiting through the near shore islands and reefs offshore of Chesterfield Inlet.

Mitigation measures to safeguard the safety of those in small boats will include the following:

- Agnico Eagle and/or the shipping operator will consult with the community members mooring or beaching their boats in Chesterfield Inlet regarding scheduled ship transits throughout the Regional Study Area, including Hudson Bay and Chesterfield Inlet[8]; protocols will be developed to minimize the interaction between barge-tug or ship and small boats;
- vessels would only travel through the near shore islands and reefs when there is good visibility or adjust their speed according to the conditions, which would allow the ship and the small boats to be in visual contact;
- vessels will restrict themselves to the recommended shipping routes thereby not surprising any small boat travelling outside the shipping lanes; and
- vessels will sound its horn if a small boat seems unaware of its presence and hasn't responded to communication attemps.

[8] In accordance with Condition 41 of NIRB Project Certificate 008

SECTION 6 • ON BOARD WASTE MANAGEMENT

The six annexes of MARPOL promote the elimination of deliberate, negligent or accidental discharge of ship-source pollutants into the marine environment (see also Transport Canada 2009). The list of harmful ship-source discharges includes: oil, noxious liquid substances and dangerous chemicals, sewage, garbage and air pollution. Canadian laws and regulations mirror the MARPOL annexes and conventions.

Agnico Eagle will contract vessels that meet applicable environmental requirements in addition to being reliable and having a superior safety record.

6.1 Sewage

Vessels are to have an approved sewage treatment plant meeting Canadian standards[9]. Holding tanks with the capacity for all grey and treated sewage while in port are expected to be part of the ship's infrastructure. Agnico Eagle will advise ships that disposal of waste water into the environment is to be avoided within 50 km of Chesterfield Inlet.

Sewage sludge from the sewage treatment plant can be incinerated in the on-board incinerator.

6.2 Solid Waste

If deemed necessary by the carrier, solid waste materials are to be incinerated on board, disposed of in an approved landfill or shipped south for safe disposal to a certified waste management facility. No solid waste materials will be disposed of in the marine environment.

The design and operation of shipboard incinerators in Canada are specified under the International Marine Organization, Marine Environmental Pollution Committee 76 (40), Annex V. Standard specifications for shipboard incinerators allow for the incineration of solid wastes approximating in composition to household waste and liquid wastes arising from the operation of the ship, e.g., domestic waste, cargo-associated waste, maintenance waste, operational waste, cargo residues, and fishing gear. Operating temperatures are similar to those for the incinerator at the Project, and flue gases are cooled rapidly to limit the *in vivo* formation of dioxins.

Tugs will remain in Baker Lake for the duration of the shipping season. Their waste will be incinerated with the ash stored in containers, which will be shipped south at the end of the shipping season for treatment, recycling and/or disposal in a certified waste management facility.

Hazardous waste will not be incinerated but returned south for treatment, recycling and/or disposal in a certified waste management facility.

[9] If all sewage is to be incinerated, there will not be any need for sewage treatment.

SECTION 7 • BALLAST WATER MANAGEMENT

Ballast water is essential to control trim, list, draught, stability, and/or stresses on a vessel. Ballast water control and management regulations protect waters under Canadian jurisdiction from non-indigenous aquatic organisms and pathogens that can be harmful to ecosystems. The *Ballast Management Control and Management Regulations* are intended to minimize the probability of introduction of harmful aquatic organisms and pathogens from vessels' ballast water while also protecting the safety of vessels (Transport Canada 2007).

While an exemption exists in the regulations for vessels operating exclusively in waters under Canadian jurisdiction or certain adjacent waters, any Canadian vessel that has operated outside these waters may carry harmful aquatic organisms or pathogens in their residual ballast and, as such, is not eligible to exemption.

Agnico Eagle expects to use vessels largely active in the coastal trade that operate almost exclusively in waters under Canadian jurisdiction. However, these vessels do on occasion venture into waters outside Canadian jurisdiction and, as such, will require a Ballast Water Management Plan (BWMP). The regulations require the preparation and carriage of a BWMP for each vessel, and for copies to be submitted to Transport Canada. The BWMP will be specific to the vessel and will be a requirement of the carrier.

If Agnico Eagle were to contract vessels originating from waters outside the jurisdiction of Canada, a BWMP would be required. All BWMP (reviewed by the National Administration) carried on ships of foreign origin would be based on the following international guidelines and guiding principles:

- IMO Resolution A.868(20): *Guidelines for the Control and Management of Ships Ballast Water to Minimize the Transfer of Harmful Aquatic Organisms and Pathogens*, in particular Section 7.1;
- The *Model Ballast Water Management Plan* developed by the International Chamber of Shipping and the International Association of Independent Tanker Owners;
- Regulation B-1 of the IMO's *Regulations for the Control and Management of Ships' Ballast Water and Sediments*; and
- Part B of the Annex to Resolution MEPC.127 (53): *Guidelines for Ballast Water Management and Development of Ballast Water Management Plans*.

Agnico Eagle will require contracted vessels not eligible for exemption to provide Agnico Eagle with a copy of their BWMP.

7.1 Ballast Water Exchange

It is recognised by the IMO that the exchange of ballast water in deep ocean areas or open seas offers a means of limiting the probability of harmful aquatic organisms and pathogens being transferred to the marine environment via vessel ballast water. If it is necessary to take on and discharge ballast water in the same port to facilitate safe cargo operations, care will be taken to avoid unnecessary discharge of ballast water that has been taken up in another port as this could introduce harmful aquatic organisms. In particular, sediment found in the vessel's ballast tanks should be disposed of at sea in areas outside 200 nautical miles (370 km) from land and in water depths exceeding 2,000 m.

Vessels take on ballast water in segregated chambers for the main purpose of stabilizing the vessels by adding the weight of the water and maintaining a specified draught. Vessels laden with dry cargo or fuel will take on less ballast water than empty vessels. As all ships on the inward voyage to Chesterfield Inlet will be laden, they will have a minimum of ballast water. However, on the outward journey, these vessels will take on ballast water.

In the event that a ship is contracted from waters outside jurisdiction of Canada, ballast exchange is to occur at least 200 nautical miles from shore where the water is at least 2,000 m deep. If the foreign vessel undertakes this ballast exchange outside Canadian waters, it can undertake further ballast water exchanges within Canadian waters. If safety or other reasons dictates that the ballast exchange cannot occur outside waters under Canadian jurisdiction, an alternate designated area is available in Hudson Strait, east of 70°west longitude, where the water is over 300 m deep.

In the case of non-transoceanic navigation, and where ballast water is taken on-board outside waters of Canadian jurisdiction, the water is to be exchanged before entering Canadian waters at a location at least 50 nautical miles offshore, in water at least 500 m deep. If this is not possible due to safety or other reasons, the ballast water exchange can occur in the alternate designated area in Hudson Strait, east of 70°west longitude, where the water is over 300 m deep.

All coastal trade vessels will in all likelihood not venture more than 200 nautical miles from shore and will not exchange ballast water outside waters of Canadian jurisdiction. All the same, ballast water exchanges for all vessels operating in waters under Canadian jurisdiction are expected to meet the provisions of the Regulations, and to follow Part A of the IMO *Guidelines for Ballast Water Management and Development of Ballast Water Management Plans*, and the IMO *Guidelines for Ballast Water Exchange*.

SECTION 8 • SAFETY

Safety is a top priority for Agnico Eagle. It begins with all personnel (Agnico Eagle, contracted employees and contractors) wearing the appropriate personal protection equipment suitable for the task at hand and for the weather conditions at the time. Secondly, personnel must understand the hazards associated with the task, the safe procedures in carrying it out, and how not to place oneself in harm's way. Accident prevention will be supported by a proactive program to identify and correct potential hazards before an accident occurs.

Agnico Eagle or contracted supervisors will ensure that the interactions between ship and shore are carried out with the safety and the health of the employees first in mind.

SECTION 9 • HAZARD IDENTIFICATION ANALYSIS OF MARINE ROUTES

Hazard: Anything that has the potential to cause harm.

Likelihood: The probability/chance of harm occurring as a result of exposure to a hazard.

Severity: The level of harm that may occur as a result of exposure to or contact with a hazard.

Risk: The likelihood of harm occurring combined with the potential severity to produce a level of risk or risk rating.

Navigation through the Labrador Sea, Hudson Strait and Hudson Bay is not challenging during the open water season. Navigation through Chesterfield Inlet also does not represent a major risk with the exception of two locations; at Deer Island and Target Rock where passages are narrow and have strong current. No major hazards were identified along the shipping and tug-barge routes under normal conditions. Electronic charts combined with electronic navigation aids for the recommended shipping routes ensure the vessel remains on course where bathymetry and physical hazards are known.

Subject to ship and human safety considerations, the average speed of the vessels in open waters is expected to be less than 14 knots (26 km/h). Shipping can be carried out without pilotage as the shipping lanes entail minor hazards that do not significantly reduce ship safety. Any actions required by the crews of the ships and tugs are expected to be well within their capabilities.

At the anchor point, cargo will be lightered from the ships onto barges and be delivered to Meadowbank Mine barge unloading facilities in Baker Lake via the access passage (Chesterfield Narrows). The tugs-barges will be highly manoeuvrable and capable of transiting the access passage with its changing currents and will not require pilotage. Navigation will proceed with extra caution in periods of low visibility. Traffic through the access passage will be coordinated to avoid shipping conflicts and to ensure safety.

However, the following out of the ordinary events have been identified that could increase the level of hazard and necessitate associated mitigation measures:

- mechanical failure occurring on the ship or tug thereby placing it in jeopardy in the shipping lane;
- vessel running aground due to a navigational error or mechanical failure;
- loss or damage to sea cans in heavy seas;
- barge tow line breaking in heavy seas;

- collision of a vessel carrying dry cargo and fuel to Baker Lake through the access passage;
- vessel sinking upon hitting ice; and
- vessel colliding with a small boat.

The access passage between Chesterfield Inlet and Baker Lake deserves special attention as it contains a series of narrow passages and, although two-way traffic is theoretically possible, it raises the risk of collisions and groundings.

SECTION 10 • RISK ANALYSIS OF MARINE ROUTES

All ships, tugs, and tankers use electronic charts and other electronic navigational aids to provide safety in transit, reduce the risk of accidents, and remain within recommended sea routes. Also, shipping companies likely to be employed by Agnico Eagle commonly sail in Hudson Bay and to Chesterfield Inlet, are aware of its marine hazards, and have their own navigation manuals and guides (e.g., Navigation Arctic Guide).

Risk is defined as the likelihood of harm posed by a hazard combined with its potential severity. The potential severity of shipping hazards[10] cannot be changed in most circumstances; what can be reduced is their likelihood. This is possible through the application of mitigation measures. The objective is, through the use of mitigation measures, to reduce the risk as low as practically possible. Residual risk is what remains after mitigation measures have been applied; those having the highest potential residual risk would be aggressively managed. The following mitigation/safety measures will be implemented:

- where available, electronic navigation aids will be used in all instances;
- subject to ship and human safety considerations ship speeds in open water are to remain less than 14 knots in the absence of marine mammals;
- shipping will only carried out during the ice free season; should ice be encountered, the vessel will either sail around it at a reduced speed or proceed slowly through the ice;
- vessels will remain within recommended shipping routes;
- vessels will be double hulled;
- weather warnings will be consulted when updates are provided;
- traffic through the access passage will be coordinated to avoid conflicts and ensure safety;
- communication between tugs will coordinate movement through the access passage;
- Agnico Eagle will provide emergency response equipment and materials as outlined in the OPEP if necessary; tug or ship will also provide their own emergency response equipment;
- crews will follow standard operating procedures and adherence to these will be monitored;
- tug-barge or ship crews are to be trained for responses to hazards that can normally be expected in northern waters;
- before entering Chesterfield Inlet the Master of the ship is to make a careful assessment of the conditions (wind, waves, tides, currents, visibility, ship characteristics, crew experience and etc.);
- after the assessment, the ship is to proceed in the safest way according to the assessment and surrounding conditions;
- the ship's speed will be adjusted according to the current;
- the tug-barges will always proceed in good visibility conditions; and

[10] One hazard that can be reduced is shipping when ice is present. Agnico Eagle has opted to only ship during the ice-free season thereby greatly reducing this hazard.

- the vessel Master will make up-bound travel with tidal flood (starting at low water at the entrance to Chesterfield Inlet) whenever possible. This allows to take advantage of tidal current and weaker freshwater discharge current at narrow passages at Deer Island and Target Rock.

SECTION 11 • SOCIO-ECONOMIC IMPACT OF SHIPPING

Agnico Eagle does not believe that Project related shipping activities will result in an increased demand on local public service providers (i.e., fire, police, ambulance, medical, and maintenance) in Chesterfield Inlet. In most circumstances, any emergency response will be undertaken by Agnico Eagle personnel and/or the ship's crew. Agnico Eagle personnel and the Master of the ship will be responsible for security matters related to the shipping-related activities.

Shipping may impact socio-economic activities in Chesterfield Inlet and Baker Lake. The following mitigation measures will be employed to minimize negative socio-economic effects:

- communication between tugs will coordinate movement through the access passage to avoid conflicts and ensure safety;
- Agnico Eagle has a separate laydown and storage area from the community in Baker Lake; and
- Agnico Eagle and the shipping contractor will work alongside to ensure security procedures are followed. This includes restricting the transport of prohibitive substances.

Positive socio-economic effects will continue as a result of the extension of the Meadowbank Mine and the associated number of dry cargo and fuel tankers coming to the communities. The crews of these ships could come ashore when the boat is anchored and contribute to the local economy through the:

- use of restaurants, hotels and stores in the community;
- purchase of local Inuit art; and
- guided tours to the barrens for fishing and wildlife experiences.

SECTION 12 • PUBLIC AND MEDIA COMMUNICATIONS

When an environmental emergency occurs, the public will be provided with timely and accurate information as to the nature of the incident, the steps being taken to correct the problem, and, if necessary, what citizens should do to protect themselves. This information is intended to protect the overall community wellbeing, including human health; to provide timely information amongst the public,; to ensure cooperation from all interested parties; and to reduce the spread of concern or alarm through the dissemination of inaccurate information.

Each agency involved in a major spill event may provide its own media communications, and may designate spokespersons for such; however, from the Arctic REET's (Regional Environmental Emergencies Team) perspective, a coordinated response is preferable. To that end, the government lead Agency is expected to act as the official spokesperson for the response, with support provided by personnel within the Arctic REET, as required.

In the unlikely event of an environmental emergency relating to Project shipping, Transport Canada guidelines will be followed to ensure proper authorities are informed without delay so that appropriate action may be taken when:

- any incident occurs involving the loss, or likely loss, of dangerous goods into the marine environment; or
- any incident occurs giving rise to pollution or threat of pollution to the marine environment; or
- any oil pollution incident occurs involving the loading or unloading of fuel to or from tanker-to-tanker and from tanker to the Oil Handling Facility.

REFERENCES

NIRB. 2006. Project Certificate NIRB [NO.: 004] issued December 30, 2006 by the Nunavut Impact Review Board to Meadowbank Mining Corporation (assigned to Agnico Eagle Mines Limited)

NIRB. 2018. Project Certificate NIRB [NO.: 008] issued March 15, 2018 by the Nunavut Impact Review Board to Agnico Eagle Mines Limited for the development of Whale Tail Pit

Transport Canada. 2007. A Guide to Canada's Ballast Water Control and Management Regulations. Guideline TP 13617E

Transport Canada. 2009. Reporting Incidents Involving Dangerous Goods, Harmful Substances and/or Marine Pollutants. Guideline TP 9834E.

APPENDIX A • MARINE HYDROGRAPHIC CHARTS

Chart 5002 Hudson Bay and Hudson Strait

Chart 5620 Entrance to Chesterfield Inlet

Chart 5621 Rockhouse Island to Centre Island

Chart 5622 Centre Island to Farther Hope Point

Chart 5623 Farther Hope Point to Terror Point

Chart 5624 Terror Point to Schooner Harbour

Chart 5625 Schooner Harbour to Baker Lake

Chart 5626 Baker Lake

INT 406
5002

DEPTHS IN METRES

Canada metric métrique

Adjoining Chart 7010

N O R T H W E S T T E R R I T O R I E S

SOUTHAMPTON ISLAND

BAFFIN ISLAND

FOXE PENINSULA

CHESTERFIELD INLET

ROES WELCOME SOUND

FOXE CHANNEL

BELL PENINSULA

BAY OF GOOD MERCY

FISHER STRAIT

EVANS STRAIT

COATS ISLAND

MANSEL ISLAND

HUDSON STRAIT

HALL PENINSULA

META INCOGNITA PENINSULA

FROBISHER BAY

DAVIS STRAIT

RESOLUTION ISLAND

PÉNINSULE D'UNGAVA

AKPATOK BANK

LABRADOR SEA

UNGAVA BAY

SAGLEK BANK

QUÉBEC

NEWFOUNDLAND (LABRADOR)

H U D S O N B A Y

MANITOBA

ONTARIO

JAMES BAY

BELCHER ISLANDS

King George Islands

Ottawa Islands

Inssudjouac (Port Harrison)

Port-Nouveau-Québec

Fort-Chimo

Eskimo Point

Churchill

Cape Churchill

Chesterfield Inlet

Coral Harbour

Mill Island

Salisbury Island

NOTTINGHAM ISLAND

Cape Fullerton

Southampton Island

Cape Dorset

Frobisher

Lake Harbour

Cape Hooper

Cape Mercy

Cape Resolution

Cape Wolstenholme

Akpatok Island

Nottingham Island

Cape Chidley

Port Burwell

Cape Wolstenholme

Cape Smith

Cape Hope Advance

Cape Jones

Cape Dufferin

Cape Digges

Cape Comfort

Cape Henrietta Maria

Cape Tatnam

Cape Churchill

Cape Fullerton

Cape Dorset

Cape Mercy

Cape Resolution

Fisheries and Oceans Canada / Pêches et Océans Canada

Canada

5620

CANADA

NUNAVUT

HUDSON BAY/BAIE D'HUDSON

ENTRANCE TO/ENTRÉE À CHESTERFIELD INLET

FAIRWAY ISLAND TO / À ELLIS ISLAND

Scale 1: 40 000 (63°30'N) Échelle

Projection : Mercator

DEPTHS are in metres and are reduced to Chart Datum (Lowest Normal Tide), which at Chesterfield Inlet is 2.5 metres below Mean Water Level (MWL).

ELEVATIONS and spot elevations are in metres above Higher High Water, Large Tide. Underlined figures on drying areas or in brackets against drying features are in metres above Chart Datum.

HORIZONTAL DATUM: North American Datum 1983 (NAD 83), which is equivalent to WGS 84.

SOURCES: Surveyed by the Canadian Hydrographic Service, 1952-1997.

For Symbols and Abbreviations, see Chart No. 1.

LES PROFONDEURS sont en mètres et sont réduites au zéro des cartes (la marée normale la plus basse), lequel à Chesterfield Inlet est de 2.5 mètres au-dessous du niveau moyen de l'eau (NME).

LES ALTITUDES et les points cotés sont en mètres au-dessus de la pleine mer supérieure, grande marée. Les chiffres soulignés sur les zones asséchantes ou entre parenthèses contre les entités découvrantes sont en mètres au-dessus du zéro des cartes.

SYSTÈME GÉODÉSIQUE : Système de référence géodésique de l'Amérique du Nord 1983 (NAD 83), qui correspond au WGS 84.

SOURCES : Levé par le Service hydrographique du Canada, 1952-1997.

Pour les signes conventionnels et les abréviations, consulter la carte nº 1.

TIDAL INFORMATION/RENSEIGNEMENTS SUR LES MARÉES

LOCATION / LOCALITÉ	Elevations above Chart Datum/Altitudes au-dessus du zéro des cartes				
	Large Tide/Grande marée		Mean Tide/Marée moyenne		Mean Water Level / Niveau moyen de l'eau
	HHW/PMS	LLW/BMI	HHW/PMS	LLW/BMI	
	metres/mètres	metres/mètres	metres/mètres	metres/mètres	metres/mètres
Chesterfield Inlet	4.7	0.2	4.0	0.9	2.5
Sandpiper Island	4.5	-0.1	3.8	0.6	2.2
Severn Harbour	5.0	0.1	4.2	0.8	2.6

CURRENTS
The arrows indicate the approximate main flood and ebb directions. Rates given are for mean tides. The direction and rate of the tidal currents can vary substantially with the stage and range of the tide.

COURANTS
Les flèches indiquent les directions principales approximatives du flot et du jusant. Les vitesses indiquées sont pour les marées moyennes. La direction et la vitesse des courants de marées peuvent varier considérablement dépendant du marnage et du stade de la marée.

BLUE TINT
On this chart unsurveyed water areas and areas with depths of 5 metres or less are tinted full blue.

TEINTE BLEUE
Les zones non hydrographiées et les zones de profondeurs de 5 mètres ou moins sont teintées en bleu plein.

Nautical Miles/Milles marins 1 0 3 — 63°36'N / 63°13'N

Metres/Mètres 1000 0 6000 — 63°36'N / 63°13'N

MAGNETIC COMPASS ERRATIC / COMPAS MAGNÉTIQUE INSTABLE — VAR 2000 (5) 0°30'E

HANBURY ISLAND

SEVERN HARBOUR

Demon Point

Breakers/Brisants

ELLIS ISLAND

Observation Pt

CHESTERFIELD INLET

ROCKHOUSE ISLAND

Pintail Island

Akreavenek Island

Ptarmigan Island

Black Rocks Pt

FALSE INLET

WAG ISLANDS

Promise Island

Bn Priv

Jaeger Pt

NUNAVUT

AERO

Fl 6s 16m

RC RLts Ro Yr (60)

Chesterfield Inlet

Finger Pt

Chesterfield Anchorage

Thibert Pt

Cliff

Inset/Cartouche

Fish Bay

Fox Trap Island

SAKPIK BAY

SAKPIK ISLAND

Aulatsivik Point

SAKPIK CHANNEL

FAIRWAY ISLAND

HUDSON BAY / BAIE D'HUDSON

Adjoining Chart 5630 / Carte adjacente

Adjoining Chart/Carte adjacente 5621

Adjoining Chart/Carte adjacente 5533

Nautical Miles/Milles marins 1 0 3 — 63°36'N / 63°13'N

Metres/Mètres 1000 0 6000 — 63°36'N / 63°13'N

MAGNETIC COMPASS ERRATIC / COMPAS MAGNÉTIQUE INSTABLE — VAR 2009 (5) 0°10'W

CHESTERFIELD ANCHORAGE

Scale 1: 15 000 (63°30'N) Échelle

Nautical Miles (63°20'N) Milles marins 0.5 0 0.5

Metres (63°20'N) Mètres 500 0 1000

Fl 6s 16m

CHESTERFIELD INLET

Mission Sp

Tanks (22) Hudson Bay Company / Compagnie de la Baie d'Hudson

Finger Pt

CHESTERFIELD ANCHORAGE

Thibert Point

Clay Island

MAGNETIC COMPASS ERRATIC / COMPAS MAGNÉTIQUE INSTABLE — VAR 2009 (5) 0°30'E

63°48'00.00"N 90°43'12.00"W 63°19'09.00"N 90°40'48.00"W

Cruise the Net / Naviguez dans Internet
www.charts.gc.ca www.cartes.gc.ca

PREVIOUS EDITIONS/ÉDITIONS ANTÉRIEURES 1975 '91
NEW EDITION/NOUVELLE ÉDITION DEC/DÉC 29 2000
Corrected to NOTICES TO MARINERS / Corrigé jusqu'à l'AVIS AUX NAVIGATEURS : 2006-07-14
See Notices to Mariners for subsequent corrections / Voir Avis aux navigateurs pour les corrections subséquentes

METRES	1	2	3	4	5	6	7	8	9	10	11	12	13	14	15	16	17	18	19	20	21	22	23	24	25	26	27	28	29	30	31	METRES
FEET	6	12	18	24	30	36	42	48	54	60	66	72	78	84	90	96	102	PIEDS														
FATHOMS	1	2	3	4	5	6	7	8	9	10	11	12	13	14	15	16	17	BRASSES														

PUBLISHED BY THE CANADIAN HYDROGRAPHIC SERVICE
© Minister of Fisheries and Oceans Canada 2000

PUBLIÉE PAR LE SERVICE HYDROGRAPHIQUE DU CANADA
© Ministre des Pêches et des Océans Canada 2000

Nautical Charts Protect Lives, Property and the Marine Environment
Les cartes marines protègent la vie, la propriété et l'environnement marin

METRIC/MÉTRIQUE

5620

Nunavut
Hudson Bay/Baie d'Hudson
ENTRANCE TO/ENTRÉE À CHESTERFIELD INLET
FAIRWAY ISLAND TO/A ELLIS ISLAND

Fisheries and Oceans Pêches et Oceans

Canada

5621

CANADA

NORTHWEST TERRITORIES/TERRITOIRES DU NORD-OUEST

CHESTERFIELD INLET

ROCKHOUSE ISLAND TO/À CENTRE ISLAND

Scale 1:40 000 (63°30'N) Échelle

Projection : Mercator

DEPTHS are in metres and are reduced to Lowest Normal Tide, which at Akravenek Island is 2.2 metres below Mean Water Level.

ELEVATIONS are in metres above Higher High Water. Large Tide. Underlined figures on drying banks or in brackets against drying rocks are in metres above chart datum.

HORIZONTAL DATUM: North American Datum 1927 (NAD 27). Positions on NAD 83 must be moved 1.19 seconds southward and 0.28 seconds westward to agree with this chart.

SOURCES: Surveyed by the Canadian Hydrographic Service, 1974.

For Symbols and Abbreviations, see Chart No. 1.

LES PROFONDEURS sont en mètres et sont réduites à la marée normale la plus basse, laquelle à Akravenek Island est de 2.2 mètres au-dessous du niveau moyen de l'eau.

LES ALTITUDES sont en mètres au-dessus de la pleine mer supérieure, grande marée. Les chiffres soulignés sur les bancs asséchants ou entre parenthèses contre les rochers qui découvrent sont en mètres au-dessus du zéro des cartes.

SYSTÈME GÉODÉSIQUE: Système de référence géodésique de l'Amérique du Nord 1927 (NAD 27). Les positions basées sur NAD 83 doivent être corrigées de 1.19 seconde vers le sud et de 0.28 seconde vers l'ouest pour être en accord avec cette carte.

SOURCES: Levé par le Service hydrographique du Canada, 1974.

Pour les signes conventionnels et les abréviations, consulter la carte No. 1.

TIDAL INFORMATION/RENSEIGNEMENTS SUR LES MARÉES

LOCATION / LOCALITÉ	Elevation above Chart Datum/Altitude au-dessus du zéro des cartes				
	Large Tide/Grande marée		Mean Tide/Marée moyenne		Mean Water Level / Niveau moyen de l'eau
	HWW/PMS	LLW/BMI	HWW/PMS	LLW/BMI	
	metres/mètres	metres/mètres	metres/mètres	metres/mètres	metres/mètres
Akravenek Island	4.5	-0.1	3.8	0.6	2.2
Severn Harbour	5.0	0.1	4.2	0.8	2.5
Deer Island	5.4	0.2	4.6	1.0	2.9

CURRENTS

The arrows indicate the approximate main flood and ebb directions. Rates given are for mean tide. The direction and rate of the tidal currents can vary substantially with the stage and range of the tide.

COURANTS

Les flèches indiquent les directions principales approximatives du flot et du jusant. Les vitesses indiquées sont pour la marée moyenne. La direction et la vitesse des courants de marées peuvent varier considérablement dépendant du marnage et du stade de la marée.

BLUE TINT

On this chart unsurveyed water areas and areas with depths of 5 metres or less are tinted full blue.

TEINTE BLEUE

Les zones non hydrographiées et les zones de profondeurs de 5 mètres ou moins sont teintées en bleu plein.

MAGNETIC COMPASS ERRATIC

COMPAS MAGNÉTIQUE INSTABLE

Nautical Miles / Milles marins

Metres / Mètres

Adjoining Chart/Carte adjacente 5622

Adjoining Chart/Carte adjacente 5620

Cruise the Net / Naviguer dans internet
www.charts.gc.ca www.cartes.gc.ca

PREVIOUS EDITIONS/ÉDITIONS ANTÉRIEURES 1975
NEW EDITION/NOUVELLE ÉDITION APRIL/AVRIL 28 1991
NOTICE TO MARINERS/AVIS AUX NAVIGATEURS

PUBLISHED BY THE CANADIAN HYDROGRAPHIC SERVICE
© Minister of Fisheries and Oceans Canada 1991

PUBLIÉE PAR LE SERVICE HYDROGRAPHIQUE DU CANADA
© Ministre des Pêches et des Océans Canada 1991

Nautical Charts Protect Lives, Property and the Marine Environment
Les cartes marines protègent la vie, la propriété et l'environnement marin

METRIC/MÉTRIQUE

Northwest Territories/Territoires du Nord-Ouest
Chesterfield Inlet
ROCKHOUSE ISLAND TO/À CENTRE ISLAND

5621

Fisheries and Oceans Pêches et Océans

Canada

5622

Adjoining Chart/Carte adjacente 5623

CANADA

NORTHWEST TERRITORIES/TERRITOIRES DU NORD-OUEST

CHESTERFIELD INLET

CENTRE ISLAND TO/À FARTHER HOPE POINT

Scale 1:40 000 (63°30'N) Échelle

Projection : Mercator

DEPTHS are in metres and are reduced to Lowest Normal Tide, which at Deer Island is 2.9 metres below Mean Water Level.

ELEVATIONS are in metres above Higher High Water, Large Tide. Underlined figures on drying banks or in brackets against drying rocks are in metres above chart datum.

HORIZONTAL DATUM: North American Datum 1927 (NAD 27). Positions on NAD 83 must be moved 1.19 seconds southward and 0.10 seconds westward to agree with this chart.

SOURCES: Surveyed by the Canadian Hydrographic Service, 1974.

For Symbols and Abbreviations, see Chart No. 1.

LES PROFONDEURS sont en mètres et sont réduites à la marée normale la plus basse, laquelle à Deer Island est de 2.9 mètres au-dessous du niveau moyen de l'eau.

LES ALTITUDES sont en mètres au-dessus de la pleine mer supérieure, grande marée. Les chiffres soulignés sur les bancs asséchants ou entre parenthèses contre les rochers qui découvrent sont en mètres au-dessus du zéro des cartes.

SYSTÈME GÉODÉSIQUE: Système de référence géodésique de l'Amérique du Nord 1927 (NAD 1927). Les positions basées sur NAD 83 doivent être corrigées de 1.19 seconde vers le sud et de 0.10 seconde vers l'ouest pour être en accord avec cette carte.

SOURCES: Levé par le Service hydrographique du Canada, 1974.

Pour les signes conventionnels et les abréviations, consulter la carte No. 1.

TIDAL INFORMATION/RENSEIGNEMENTS SUR LES MARÉES

LOCATION / LOCALITÉ	Elevation above Chart Datum/Altitude au-dessus du zéro des cartes				
	Large Tide/Grande marée		Mean Tide/Marée moyenne		Mean Water Level / Niveau moyen de l'eau
	HWH/PMS	LLW/BMI	HWH/PMS	LLW/BMI	
	metres/mètres	metres/mètres	metres/mètres	metres/mètres	metres/mètres
Deer Island	5.4	0.2	4.6	1.0	2.9
Barbour Bay	4.0	0.4	3.2	1.0	2.1

CURRENTS

The arrows indicate the approximate main flood and ebb directions. Rates given are for mean tide. The direction and rate of the tidal currents can vary substantially with the stage and range of the tide.

Foul area dangerous for surface navigation.

COURANTS

Les flèches indiquent les directions principales approximatives du flot et du jusant. Les vitesses indiquées sont pour la marée moyenne. La direction et la vitesse des courants de marées peuvent varier considérablement dépendant du marnage et du stade de la marée.

Fond dangereux pour la navigation de surface.

BLUE TINT

On this chart unsurveyed water areas and areas with depths of 5 metres or less are tinted full blue.

TEINTE BLEUE

Les zones non hydrographiées et les zones de profondeurs de 5 mètres ou moins sont teintées en bleu plein.

MAGNETIC COMPASS ERRATIC

COMPAS MAGNÉTIQUE INSTABLE

VAR 59°W (1991) DECR 0°1 (W)

Nautical Miles/Milles marins 63°48'N 63°33'N

Metres/Mètres 63°48'N 63°33'N

PUBLISHED BY THE CANADIAN HYDROGRAPHIC SERVICE
© Minister of Fisheries and Oceans Canada 1991

PUBLIÉE PAR LE SERVICE HYDROGRAPHIQUE DU CANADA
© Ministre des Pêches et des Océans Canada 1991

Nautical Charts Protect Lives, Property and the Marine Environment
Les cartes marines protègent la vie, la propriété et l'environnement marin

PREVIOUS EDITIONS/EDITIONS ANTÉRIEURES 1975
NEW EDITION/NOUVELLE EDITION DEC./DÉC. 27/1991
NOTICE TO MARINERS/AVIS AUX NAVIGATEURS

FATHOMS PARASSES FEET PIEDS METRES METRES

METRIC/MÉTRIQUE

Northwest Territories/Territoires du Nord-Ouest
Chesterfield Inlet
CENTRE ISLAND TO/À FARTHER HOPE POINT

5622

Cruise the Net / Naviguez dans Internet
www.charts.gc.ca www.cartes.gc.ca

CANADA

NORTHWEST TERRITORIES/TERRITOIRES DU NORD-OUEST

CHESTERFIELD INLET

FARTHER HOPE POINT TO/À TERROR POINT

Scale 1:40 000 (63°30'N) Echelle

Projection : Mercator

DEPTHS are in metres and are reduced to Lowest Normal Tide, which at Promise Point is 1.8 metres below Mean Water Level.

ELEVATIONS are in metres above Higher High Water, Large Tide. Underlined figures on drying banks or in brackets against drying rocks are in metres above chart datum.

HORIZONTAL DATUM: North American Datum 1927 (NAD 27). Positions on NAD 83 must be moved 1.22 seconds southward and 0.06 seconds eastward to agree with this chart.

SOURCES: Surveyed by the Canadian Hydrographic Service, 1974.

For Symbols and Abbreviations, see Chart No. 1.

LES PROFONDEURS sont en mètres et sont réduites à la marée normale la plus basse, laquelle à Promise Point est de 1.8 mètre au-dessous du niveau moyen de l'eau.

LES ALTITUDES sont en mètres au-dessus de la pleine mer supérieure, grande marée. Les chiffres soulignés sur les bancs asséchants ou entre parenthèses contre les rochers qui découvrent sont en mètres au-dessus du zéro des cartes.

SYSTÈME GÉODÉSIQUE: Système de référence géodésique de l'Amérique du Nord 1927 (NAD 1927). Les positions basées sur NAD 83 doivent être corrigées de 1.22 seconde vers le sud et de 0.06 seconde vers l'est pour être en accord avec cette carte.

SOURCES: Levé par le Service hydrographique du Canada, 1974.

Pour les signes conventionnels et les abréviations, consulter la carte No. 1.

TIDAL INFORMATION/RENSEIGNEMENTS SUR LES MARÉES

LOCATION / LOCALITÉ	Elevation above Chart Datum/Altitude au-dessus du zéro des cartes				
	Large Tide/Grande marée		Mean Tide/Marée moyenne		Mean Water Level/Niveau moyen de l'eau
	HHWP/PMS	LLWSM/	HHWP/PMS	LLWSM/	
	metres/mètres	metres/mètres	metres/mètres	metres/mètres	metres/mètres
Promise Point	3.6	0.1	3.0	0.5	1.8
Primrose Island	2.2	0.2	2.1	0.3	1.2

CURRENTS

The arrows indicate the approximate main flood and ebb directions. Rates given are for mean tide. The direction and rate of the tidal currents can vary substantially with the stage and range of the tide.

COURANTS

Les flèches indiquent les directions principales approximatives du flot et du jusant. Les vitesses indiquées sont pour la marée moyenne. La direction et la vitesse des courants de marées peuvent varier considérablement dépendant du marnage et du stade de la marée.

BLUE TINT

On this chart unsurveyed water areas and areas with depths of 5 metres or less are tinted full blue.

TEINTE BLEUE

Les zones non hydrographiées et les zones de profondeurs de 5 mètres ou moins sont teintées en bleu plein.

Adjoining Chart/Carte adjacente 5624

Adjoining Chart/Carte adjacente 5622

Cruise the Net / Navigquez dans Internet
www.charts.gc.ca www.cartes.gc.ca

PREVIOUS EDITIONS/EDITIONS ANTÉRIEURES 1975
NEW EDITION/NOUVELLE EDITION NOV. 9 1991
NOTICE TO MARINERS/AVIS AUX NAVIGATEURS

PUBLISHED BY THE CANADIAN HYDROGRAPHIC SERVICE
© Minister of Fisheries and Oceans Canada 1991

PUBLIÉE PAR LE SERVICE HYDROGRAPHIQUE DU CANADA
© Ministre des Pêches et des Océans Canada 1991

Nautical Charts Protect Lives, Property and the Marine Environment
Les cartes marines protègent la vie, la propriété et l'environnement marin

METRIC/MÉTRIQUE

Northwest Territories/Territoires du Nord-Ouest
Chesterfield Inlet
FARTHER HOPE POINT TO/À TERROR POINT

5623

Fisheries and Oceans Pêches et Océans

Canada

5624

CANADA

NORTHWEST TERRITORIES/TERRITOIRES DU NORD-OUEST

CHESTERFIELD INLET

TERROR POINT TO/AU SCHOONER HARBOUR

Scale 1:40 000 (63°30'N) Échelle

Projection : Mercator

DEPTHS are in metres and are reduced to Lowest Normal Tide, which at Primrose Island is 1.2 metres below Mean Water Level.

ELEVATIONS are in metres above Higher High Water, Large Tide. Underlined figures on drying banks or in brackets against drying rocks are in metres above chart datum.

HORIZONTAL DATUM: North American Datum 1927 (NAD 27). Positions on NAD 83 must be moved 1.23 seconds southward and 0.18 seconds eastward to agree with this chart.

SOURCES: Surveyed by the Canadian Hydrographic Service, 1974.

For Symbols and Abbreviations, see Chart No. 1.

LES PROFONDEURS sont en mètres et sont réduites à la marée normale la plus basse, laquelle à Primrose Island est de 1.2 mètre au dessous du niveau moyen de l'eau.

LES ALTITUDES sont en mètres au dessus de la pleine mer supérieure, grande marée. Les chiffres soulignés sur les bancs asséchants ou entre parenthèses contre les rochers qui découvrent sont en mètres au- dessus du zéro des cartes.

SYSTEME GEODESIQUE: Système de référence géodésique de l'Amérique du Nord 1927 (NAD 27). Les bases sur NAD 83 doivent être corrigées de 1.22 seconde vers le sud et de 0.18 seconde vers l'est pour être en accord avec cette carte.

SOURCES: Levé par le Service hydrographique du Canada, 1974.

Pour les signes conventionnels et les abréviations, consulter la carte No. 1.

TIDAL INFORMATION/RENSEIGNEMENTS SUR LES MARÉES

LOCATION LOCALITÉ	Elevation above Chart Datum/Altitude au-dessus du zéro des cartes				
	Large Tide/Grande marée		Mean Tide/Marée moyenne		Mean Water Level Niveau moyen de l'eau
	HHW/PMS	LLW/BMI	HHW/PMS	LLW/BMI	
	metres/mètres	metres/mètres	metres/mètres	metres/mètres	metres/mètres
Primrose Island	3.2	0.0	2.1	0.3	1.2
Baleen Island	2.9	0.6	2.7	0.7	1.7

CURRENTS

The arrows indicate the approximate main flood and ebb directions. Rates given are for mean tide. The direction and rate of the tidal currents can vary substantially with the stage and range of the tide.

COURANTS

Les flèches indiquent les directions principales approximatives du flot et du jusant. Les vitesses indiquées sont pour la marée moyenne. La direction et la vitesse des courants de marées peuvent varier considérablement dépendant du marnage et du stade de la marée.

Foul area dangerous for surface navigation.

Fond dangereux pour la navigation de surface.

BLUE TINT

On this chart unsurveyed water areas and areas with depths of 5 metres or less are tinted full blue.

TEINTE BLEUE

Les zones non hydrographiées et les zones de profondeurs de 5 mètres ou moins sont teintées en bleu plein.

MAGNETIC COMPASS ERRATIC

COMPAS MAGNÉTIQUE INSTABLE

VAR 1991 (1°W) DECR 0°10' ANNUALLY

Nautical Miles/Milles marins

Metres/Mètres

BOWELL ISLANDS

QUOICH RIVER

Flat Point

Twin Peaks Island

Duncan Islands

Brant Island

BRANT CHANNEL

Helicopter Island

White Rock

CROSS BAY CHANNEL

Tarred Island

Schooner Shoal

ROUND ISLAND

LONG ISLAND

Strivewell Island

BIG POINT

CROSS BAY

HORIZON ISLANDS

Terrace Bight

BOWSER ISLAND

Terror Point

Walker Island

PRIMROSE ISLAND

Adjoining Chart/Carte adjacente 5623

Adjoining Chart/Carte adjacente 5624

Adjoining Chart/Carte adjacente 5623

Cruise the Net / Navigquez dans Internet
www.charts.gc.ca www.cartes.gc.ca

PREVIOUS EDITIONS/EDITIONS ANTERIEURES 1973
NEW EDITION/NOUVELLE EDITION APRIL/AVRIL 26 1991
NOTICE TO MARINERS/AVIS AUX NAVIGATEURS

FATHOMS / FEET / METRES

BRASSES / FEETS / METRES

PUBLISHED BY THE CANADIAN HYDROGRAPHIC SERVICE
© Minister of Fisheries and Oceans Canada 1991

PUBLIÉE PAR LE SERVICE HYDROGRAPHIQUE DU CANADA
© Ministre des Pêches et des Océans Canada 1991

Nautical Charts Protect Lives, Property and the Marine Environment
Les cartes marines protègent la vie, la propriété et l'environnement marin

METRIC/MÉTRIQUE

Northwest Territories/Territoires du Nord-Ouest
Chesterfield Inlet
TERROR POINT TO/AU SCHOONER HARBOUR

5624

Fisheries and Oceans / Pêches et Océans

Canada

5625

Adjoining Chart/Carte adjacente 5626

Adjoining Chart/Carte adjacente 5624

Cruise the Net / Navigquez dans Internet
www.charts.gc.ca www.cartes.gc.ca

SOURCE CLASSIFICATION DIAGRAM
DIAGRAMME DE CLASSIFICATION DES SOURCES

Date of Survey / Date du levé	Sources	Line Spacing / Espacement des lignes
* a- 1949-50	CHS/SHC	150 m
* b- 1949	CHS/SHC	200 m
c- 1974	CHS/SHC	100 m
d- 1974	CHS/SHC	200 m
e- 1978	CHS/SHC	100 m
f- 1978	CHS/SHC	250 m

*The shoals have not been examined in this area.
*Les hauts-fonds n'ont pas été examinés dans ces zones.

CAUTION
Depths shown in areas a and b of the SOURCE CLASSIFICATION DIAGRAM are not reduced to the presently adopted chart datum. Extreme caution should be exercised when navigating in these waters.

ATTENTION
Les profondeurs indiquées dans les zones a et b du DIAGRAMME DE CLASSIFICATION DES SOURCES ne sont pas réduites au zéro des cartes présentement adopté. Soyez très prudents en naviguant dans ces eaux.

CANADA

NORTHWEST TERRITORIES/TERRITOIRES DU NORD-OUEST

CHESTERFIELD INLET

SCHOONER HARBOUR TO/À BAKER LAKE

Scale 1:40 000 (63°30'N) Échelle

Projection : Mercator

DEPTHS are in metres and from Schooner Harbour to Baker Lake are reduced to Lowest Normal Tide which at Norton Island is 1.4 metres below Mean Water Level. In Baker Lake depths are reduced to a Low Water Datum which at the hamlet of Baker Lake is 5.3 metres below Topographical Bench Mark No. 45.

ELEVATIONS and spot elevations are in metres above Higher High Water, Large Tide. Underlined figures on drying banks or in brackets against drying rocks are in metres above chart datum.

HORIZONTAL DATUM: North American Datum 1927 (NAD 27). Positions on NAD 83 must be moved 1.24 seconds southward and 0.41 seconds eastward to agree with this chart.

SOURCES: The hydrographic data are shown in the SOURCE CLASSIFICATION DIAGRAM.

For Symbols and Abbreviations, see Chart No. 1.

LES PROFONDEURS sont en mètres et de Schooner Harbour jusqu'à Baker Lake sont réduites à la marée normale la plus basse, laquelle à Norton Island est de 1.4 mètre au-dessous du niveau moyen de l'eau. Dans le lac Baker les profondeurs sont réduites à un niveau de basses eaux, lequel au hameau de Baker Lake est de 5.3 mètres au-dessous du repère de nivellement topographique No. 45.

LES ALTITUDES et les points cotés sont en mètres au-dessus de la pleine mer supérieure, grande marée. Les chiffres soulignés sur les bancs asséchants ou entre parenthèses contre les rochers qui découvrent sont en mètres au-dessus du zéro des cartes.

SYSTÈME GÉODÉSIQUE: Système de référence géodésique de l'Amérique du Nord 1927 (NAD 27). Les positions basées sur NAD 83 doivent être corrigées de 1.24 seconde vers le sud et de 0.41 seconde vers l'est pour être en accord avec cette carte.

SOURCES: Les données hydrographiques sont indiquées dans le DIAGRAMME DE CLASSIFICATION DES SOURCES.

Pour les signes conventionnels et les abréviations, consulter la carte No. 1.

TIDAL INFORMATION/RENSEIGNEMENTS SUR LES MARÉES

LOCATION / LOCALITÉ	Elevation above Chart Datum/Altitude au-dessus du zéro des cartes				
	Large Tide/Grande marée		Mean Tide/Marée moyenne		Mean Water Level/Niveau moyen de l'eau
	HHW/PMVE	LLW/BMI	HHW/PMVE	LLW/BMI	
Norton Island	mètres/mètres 2.7	mètres/mètres 0.2	mètres/mètres 2.4	mètres/mètres 0.3	mètres/mètres 1.4

CURRENTS
The arrows indicate the approximate main flood and ebb directions. Rates given are for mean tide. The direction and rate of the tidal currents can vary substantially with the stage and range of the tide.

COURANTS
Les flèches indiquent les directions principales approximatives du flot et du jusant. Les vitesses indiquées sont pour la marée moyenne. La direction et la vitesse des courants de marées peuvent varier considérablement dépendant du marnage et du stade de la marée.

BLUE TINT
On this chart unsurveyed water areas and areas with depths of 9 metres or less are tinted full blue.

TEINTE BLEUE
Les zones non hydrographiées et les zones de profondeurs de 9 mètres ou moins sont teintées en bleu plein.

BAKER LAKE 1988-1990

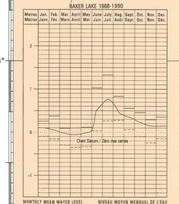

MONTHLY MEAN WATER LEVEL NIVEAU MOYEN MENSUEL DE L'EAU
Higher ——— la plus élevé
Average ——— Moyen
Lower ——— la plus bas

WATER LEVEL
The average seasonal fluctuations of the water levels at the hamlet of Baker Lake on Baker Lake are as shown in the hydrograph on this chart. When the water level is above chart datum, elevations and clearances must be reduced accordingly.

NIVEAU DE L'EAU
Les fluctuations saisonnières moyennes du niveau de l'eau au hameau de Baker Lake sur Baker Lake sont celles démontrées dans l'hydrogramme sur cette carte. Lorsque le niveau de l'eau est au-dessus du zéro des cartes, les altitudes et les hauteurs libres doivent être réduites en conséquence.

Nautical Miles / Milles marins
Metres / Mètres

MAGNETIC COMPASS ERRATIC
COMPAS MAGNÉTIQUE INSTABLE
LARGE ERRATIC / GROS ERRATIQUE

REGINA NARROWS AND/ET POLARIS NARROWS

Scale 1:20 000 (63°30'00"N) Échelle

ICE HUNTER ROCK TO/À CHESTERFIELD NARROWS

Scale 1:20 000 (63°30'00"N) Échelle

Metres (64°00'00"N) Mètres

PREVIOUS EDITIONS/ÉDITIONS ANTÉRIEURES 1976
NEW EDITION/NOUVELLE ÉDITION JULY/JUIL 10 1992
Corrected to NOTICES TO MARINERS / Corrigé jusqu'à l'AVIS AUX NAVIGATEURS : 2007-05-11
See Notices to Mariners for subsequent corrections / Voir Avis aux navigateurs pour les corrections subséquentes

METRES	1	2	3	4	5	6	7	8	9	10	11	12	13	14	15	16	17	18	19	20	21	22	23	24	25	26	27	28	29	30	31	32	33	34	35	36	37	38	39	40	41	42	43	44	45	46	47	48	49	50	51	52	METRES
FEET	3	6	9	12	15	18	21	24	27	30	33	36	39	42	45	48	51	54	57	60	63	66	69	72	75	78	81	84	87	90	93	96	99	102	105	108	111	114	117	120	123	126	129	132	135	138	141	144	147	150	153	156	FEET
FATHOMS	1	2	3	4	5	6	7	8	9	10	11	12	13	14	15	16	17	18	19	20	21	22	23	24	25	26	27	28	29	30	31	32	33	34	35	36	37	38	39	40	41	42	43	44	45	46	47	48	49	50	51	52	BRASSES

PUBLISHED BY THE CANADIAN HYDROGRAPHIC SERVICE
© Minister of Fisheries and Oceans Canada 1992

PUBLIÉE PAR LE SERVICE HYDROGRAPHIQUE DU CANADA
© Ministre des Pêches et des Océans Canada 1992

Nautical Charts Protect Lives, Property and the Marine Environment
Les cartes marines protègent la vie, la propriété et l'environnment marin

METRIC/MÉTRIQUE

Northwest Territories/Territoires du Nord-Ouest
Chesterfield Inlet
SCHOONER HARBOUR TO/À BAKER LAKE

5625

APPENDIX B • MARINE MAMMAL MANAGEMENT AND MONITORING PLAN

AGNICO EAGLE

WHALE TAIL PIT PROJECT

Marine Mammal Management and Monitoring Plan

Appendix B

APRIL 2018
VERSION 1

TABLE OF CONTENTS

Table of Contents i

Document Control ii

Acronyms iii

Section 1 • Introduction iv

Section 2 • Marine Mammal and Seabird Observer Program v

2.1 Routine Shipping Operations v

2.1.1 Program Protocol v

2.1.3 Marine Mammal Observing Protocol viii

2.1.3.1 Scan Routine ix

2.1.3.2 Scan Routine x

2.1.4 Seabird Survey Protocol xi

2.1.4.1 Survey Protocol – Moving Vessel xi

2.1.4.1 Survey Protocol – Stationary Vessel xiv

2.1.4.1 Estimating Distance xv

2.1.5 Recording Observations xv

DOCUMENT CONTROL

Version	Date	Section	Page	Revision	Author
1	April 2018	All	All	First draft of the Marine Mammal Management and Monitoring Plan	Agnico Eagles Mines Ltd.

ACRONYMS

Agnico Eagle	Agnico Eagle Mines Limited
CWS	Canadian Wildlife Service
DFO	Fisheries and Oceans Canada
ECSAS	Eastern Canada Seabird at Sea
ECCC	Environment and Climate Change Canada
MMMMP	Marine Mammal Management and Monitoring Plan
MMSO	Marine Mammal and Seabird Observer
NIRB	Nunavut Impact Review Board

SECTION 1 • INTRODUCTION

The Marine Mammal Management and Monitoring Plan (MMMMP) has been developed for the Project to meet commitments made during the Nunavut Impact Review Board (NIRB) hearings related to Marine Shipping. It should be considered a living document that can be updated throughout the Project lifecycle in order to implement adaptive management techniques.

The MMMMP has been designed to provide protocols for conducting a vessel-based Marine Mammal and Seabird Observer (MMSO) program during all routine shipping activities along the shipping route. During routine shipping operations, Project-specific mitigation measures designed to minimize Project impacts on marine mammals and seabirds will be initiated by vessel-based MMSOs and implemented by the ship's crew.

Data collected by the MMSOs will provide information annually to the Government of Nunavut and other applicable regulators (e.g., Environment and Climate Change Canada (ECCC) - Canadian Wildlife Service (CWS)) regarding the location, behaviour, abundance, and species observed as well as any interactions with Project vessels during shipping activities along the shipping route.

SECTION 2 • MARINE MAMMAL AND SEABIRD OBSERVER PROGRAM

2.1 Routine Shipping Operations

This section outlines the protocol for undertaking a vessel-based Marine Mammal and Seabird Observer (MMSO) program involving marine wildlife monitoring during all routine shipping activities in the shipping route in accordance with Project Certificate Condition 40, which states the following:

" The Proponent shall develop and implement a ship-based marine mammal monitoring program, as part of a Marine Mammal Management and Monitoring Plan, in consultation with Fisheries and Oceans Canada, communities, and other interested parties. The Proponent shall report any accidental contact by project vessels with marine mammals or seabird colonies to applicable responsible authorities including Fisheries and Oceans Canada and Environment and Climate Change Canada. "

The MMSOs will record marine mammal and seabird observations based on the protocols along the shipping routes presented in Figure 1. Datasheets outlined in Attachment A and Attachment B and daily reports outlined in Attachment C will be completed throughout the transit and provided to Agnico Eagle.

2.1.1 Program Protocol

Mitigation measures outlined in Section 4.2 of the Shipping Management Plan will be implemented during all Project shipping activities by the shipping contractor(s). MMSOs will not be directly responsible for implementing mitigation measures. The role of the MMSO is to record and report on marine mammals and seabird sightings during shipping activities, and to advise the ship's crew on the location of observed marine mammals and if any action is recommended based on mitigation measures outlined in the Shipping Management Plan.

The following protocol will be implemented during the MMSO program:

- A minimum of one assigned MMSO will be present on-board the Project shipping vessels[1] during all transits;
- The MMSO will conduct marine mammal and seabirds observations along the shipping route from the bridge during daylight hours;
- The MMSO will observe and record sightings of marine mammals and birds during vessel movements in the shipping routes (including sea birds, coastal waterfowls, and sea ducks[2]) as well as environmental conditions;

[1] Contractor is responsible to assign a crew member or contractor the task of marine mammal observations (MMSO).

[2] In accordance with Project Certificate No 008 Condition 39 and 40.

- The shipping contractor will initiate mitigation measures designed to minimize Project impacts on marine mammals and seabirds, as identified in the Shipping Management Plan.

The MMSO program will allow for the opportunity of adaptive management techniques to be implemented if monitoring identifies potential for adverse effects on marine wildlife along the shipping route. This may include modification of mitigation measures in response to new information arising from the monitoring carried out by the MMSO. Adaptive management will be conducted in consultation with the Kivalliq Inuit Association, the Hunters and Trappers Organizations of the Kivalliq communities, and the relevant regulators.

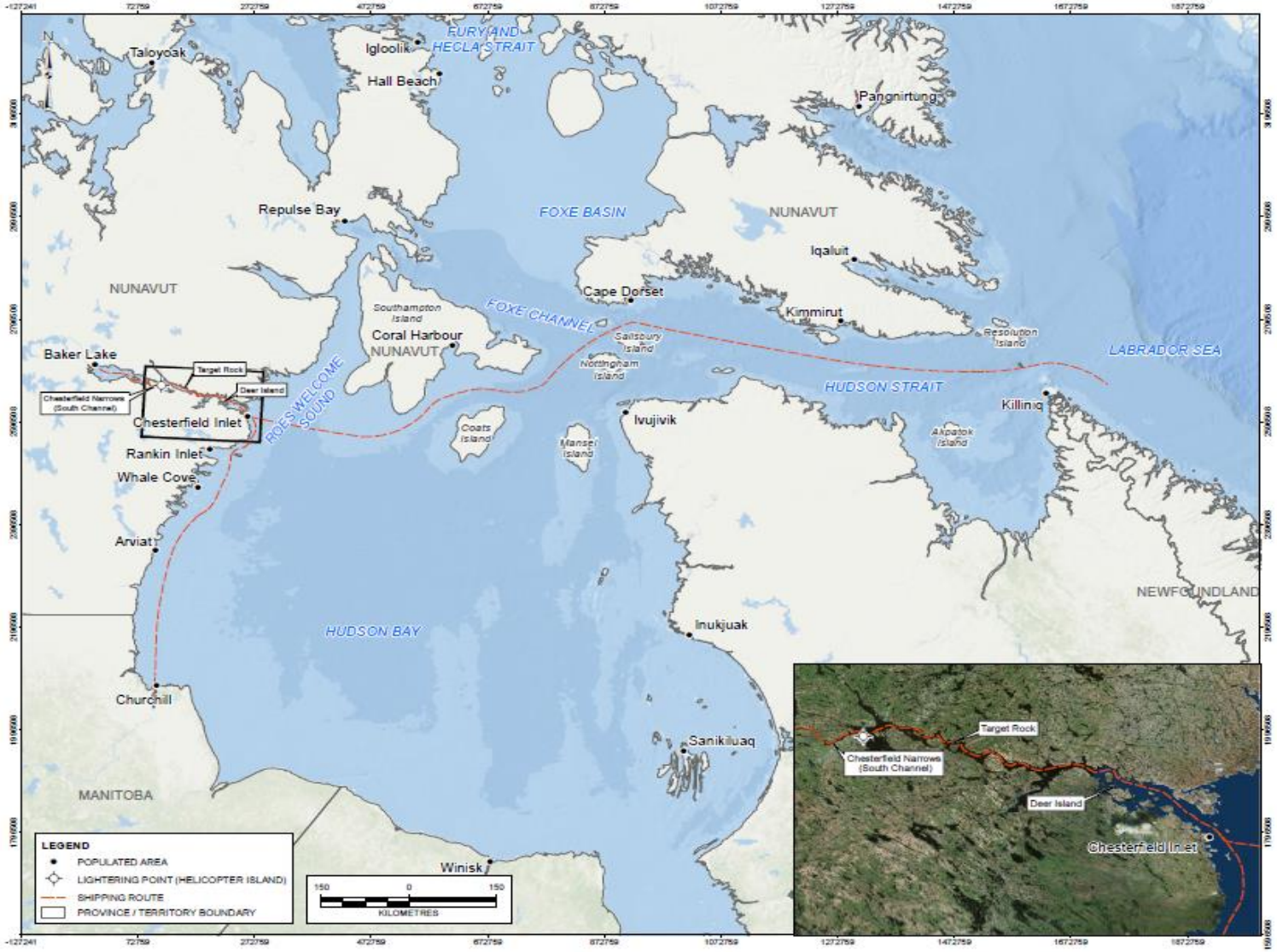

Figure 1: Meadowbank Mine and Whale Tail Pit Shipping Routes

AGNICO EAGLE

2.1.3 Marine Mammal Observing Protocol

General environmental and marine mammal sightings information is to be collected and recorded by filling out form in Attachment A.

The protocol outlined in this section are best conducted along a transect line, therefore, it is best to start a marine mammal observation period when the vessel is and will be moving in a straight line for an extended period of time.

Observer Position

Observations will be done from a high location on the vessel and ideally outdoors if possible and will be conducted at the same location each time. For marine mammal observations with a single observer, depending on the weather conditions and safety requirements for the crew the MMSO will position themselves in the middle of the ship at the front (bow) to observe marine mammal on both the starboard and the port side (Figure 2).

Observation Period

MMSO observation periods (marine mammal and seabird observations) should not last longer than 2 hours to mitigate observer fatigue and eye strain.

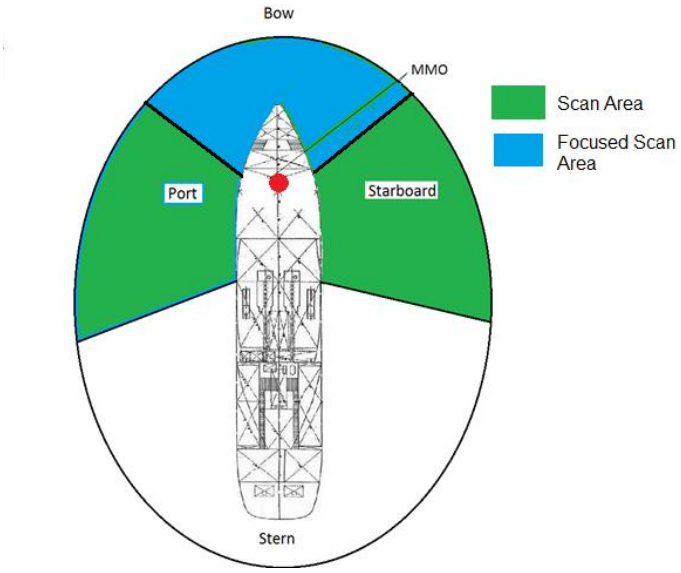

Figure 2. MMSO position and respective observation field on a hypothetical ship

2.1.3.1 Scan Routine

The following scan routine should be conducted throughout the marine mammal observation period. Scan the water with the naked eye and use binoculars only to focus on possible sightings. Perform S and U scans of the observation field about every 20 seconds (Figure 3). The most important aspect of marine mammal observing is to constantly scan the observation field to capture animals that could be located in the peripheral view for brief moments (e.g., surfacing). Scans should be made from the middle of the vessel (for one MMSO) and cover the scan area shown in Figure 2 with a focus on the water ahead and to the side to the moving vessel (e.g., focused scan area in Figure 2). If the vessel is stationary (e.g., anchored) scans should be conducted over the entire scan area (e.g., blue and green in Figure 2) in a uniform fashion. When the vessel is stationary, less priority can be attributed to marine mammal observations.

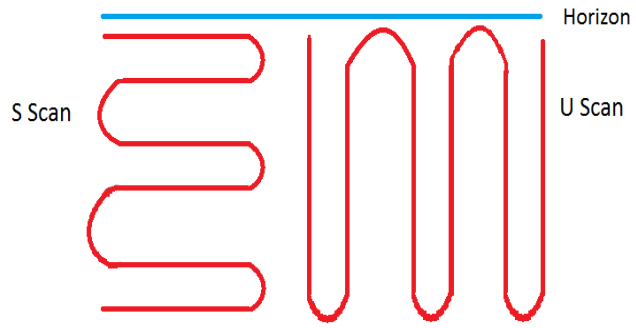

Figure 3: S & U scanning techniques

All marine mammals observed during the dedicated marine mammal observational periods as well as incidental sightings will be recorded including GPS location, distance to animal, angle to animal, number of individuals, species, behaviour etc. If a species is unknown or if a blow is the only detection of the animal observed, then mark the sighting as unknown. Marine mammals in large groups that are close together should be marked as a single sighting. When possible, photographs of marine mammal sightings will be taken and recorded alongside sightings records.

Angle to a marine mammal or group of marine mammal can be calculated using a Pelorus or by estimating the angle with an angle board. Figure 4 shows how an angle to a marine mammal from the vessel should be estimated.

On-effort sightings should be recorded by the MMSO only, with no assistance permitted by other crew members. Sightings of pinnipeds hauled-out on land will be recorded as off-effort sightings. Bow-riding dolphins or porpoises are also not recorded as on-effort sightings unless they are observed prior to their initial approach to the vessel (as it was assumed that the sighting of a bow-riding cetacean was not random but rather influenced by the presence of the vessel). Bow-riding dolphins or porpoises are recorded as incidental (off-effort) sightings.

All efforts will be made to avoid double counting individuals or groups of individuals. If a marine mammal is counted twice in the sightings record, then a note of a re-sighting should be marked.

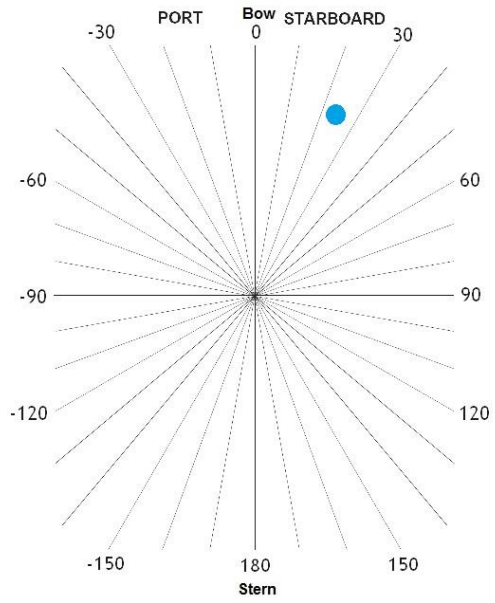

Figure 4. Angle to Marine Mammal (blue dot) is approximately 22º

2.1.3.2 Scan Routine

Record the distance to each marine mammal or group of marine mammal (to the centre of the group). For all marine mammals, estimate the angular distance between the marine mammal(s) and the observer.

Using Reticle binoculars

Reticle binoculars have a built in scale called a reticle. Estimating distances to marine mammals using reticles is based upon the distance to the horizon which is dependent on:

- the height of the observer eye above sea level in meters; and
- radians per reticle mark for the type of binoculars.

The height of the eye includes the height of the platform above the surface of the water. The number of radians (usually milliradians[3]) will depend on the type of reticles binoculars that are used. The number of radians per reticle mark can be used to produce a distance table based on an equation provided by the binocular manufacture. An example of an equation provided by Fujinon 2006 is:

Distance = (eye height + height above sea level in meters) x 1000 / # of milliradians

Reticle binoculars cannot be used to estimate distance if the horizon is obscured (by fog or land), or if they are used from a different height above sea level. Their use becomes minimal in nearshore waters.

[3] unit of angular measurement

2.1.4 Seabird Survey Protocol

Seabird survey will be conducted in the shipping route. The protocols laid out below were extracted and adapted from the CWS standardized protocol for pelagic seabird surveys from moving and stationary platforms (Gjerdrum et al. 2012).

Observer Position

Observations should be done from a high location on the vessel, when possible, at a location as close to the edge of the platform as possible to increase the detection of seabirds, especially for individuals that use the waters at the base of the vessel. All surveys should be conducted at the same location each time.

2.1.4.1 Survey Protocol – Moving Vessel

General environmental and bird sightings information is to be collected and recorded by filling out the form in Attachment B.

Transect Methods

During transect surveys, the observer is to look forward from the vessel, scanning at a 90° angle from either the port (left) or starboard (right) side depending where he or she is located. The transect width within seabirds are recorded is 300 m from the side of the vessel (see Figure 5). Scan ahead regularly (e.g., every minute) to spot birds that may dive as the vessel approaches.

All birds observed within this 300 m transect, whether flying or on the water, are recorded and are considered in-transect sightings. The methods for recording birds on the water verses birds in flight are outlined below. All five minute surveys should begin with a snapshot survey to capture flying birds. The perpendicular distance from the line to the seabirds detected on the water or in flight is estimated for each sighting. Birds observed outside the 300 m transect are also recorded if this does not affect observations within the 300 m transect. Distance categories “E” and “T” in Figure 5 are both considered not in transect. Binoculars and spotting scopes can be used to confirm species identification and other details as necessary.

Observation Period

Each seabird survey period will be conducted during six consecutive five-minute periods which is repeated three times a day to capture morning, afternoon and evening periods when possible. These five minute surveys should be dedicated to surveying for seabirds only. These surveys should be completed regardless if birds are present or not. If the vessel is not moving (stationary), use the method for stationary vessel described in Section 2.1.4.2 below.

Short breaks should be taken at the end of each five minute period to record the vessel’s position and any conditions that may have changed since the last five minute survey period. If ship speed or direction changes significantly during the survey period, record the time and location (GPS), cease the current survey and begin a new five minute survey period.

The frequency of the seabird surveys has been selected to provide time for the MMSO to:

- have dedicated seabird and marine mammal observation periods (as described above);
- conduct daily shipping-related activities if the MMSO is part of the ship's crew;
- take necessary breaks to avoid observer fatigue; and
- conduct daily reporting.

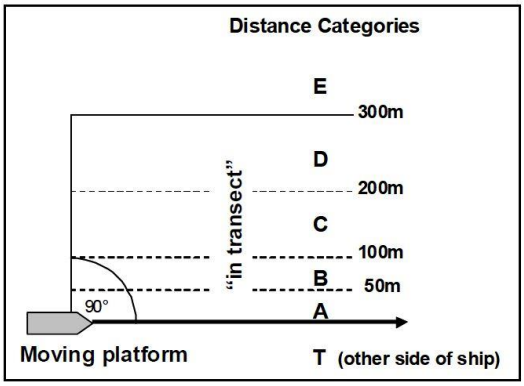

Figure 5. Illustration of a survey using a 90° scan, covering a 300 m transect from a moving platform (extracted from Gjerdrum et al. 2012)

Birds on the Water

All birds observed on the water are continuously recorded throughout the five minute survey period. If birds in the transect fly off the surface of the water as the vessel approaches, use binoculars to help count them, and record these birds as being on the water as outlined in the seabird survey sighting form (Attachment B). These birds are not subsequently counted as a flying bird during a snapshot survey (described below for flying bird).

Birds on the water may be observed up ahead of the platform, perhaps as far as 400 m or 500 m, but still within the 300 m transect (Figure 5). Because these individuals may dive or fly away as a result of the approaching ship, they should be counted as in transect and their perpendicular distance recorded when they are first observed. If the five minute survey will end before the ship reaches them they should be recorded in the next five minute survey period.

Birds in Flight – Snapshot method

All five min surveys should begin with a snapshot of flying birds. Flying birds are not recorded continuously throughout the five minute survey period as with birds on the water, as this would overestimate bird density. Create a routine of snapshot counts to record flying birds during the survey period. Only use the snapshot method when there are many birds observed flying in the area. The number of snapshots done will depend on the speed of the vessel (Table 1).

During each snapshot, record flying birds as in transect if they are flying above the 300 m transect. Record all other flying birds that are seen outside of the 300 m transect or between snapshot intervals as not in transect.

Some species may fly in long lines across the 300 m survey transect. At the time of the snapshot, the number of birds in the flock is recorded and the distance class is assigned according to the location of the centre of the flock. All the birds in the flock are recorded as in transect if the centre is within the 300 m transect. If the centre of the flock is outside the 300 m transect, all birds are recorded as not in transect.

Large Groups of Birds

When very large numbers of birds are encountered that overwhelm the observer's ability to count the number of birds and measure the distance to flocks the snapshot method can be used to count all birds in flight and on the water. If this protocol is used, note the change in protocol on the seabird survey sighting form (Attachment B). If it is not practical to estimate distance to each bird or flock of birds, the observer should at least indicate whether the birds were observed in or out of transect. If it is not practical to note which birds are on the water and which are in flight use the following guidelines:

- If the majority of the birds are in the air, they can be recorded as flying.
- If birds appear first on the water and then fly away as the vessel approached, or they continuously move between the water and air, recorded them being as on the water.

Birds that follow the Vessel

To avoid double counting birds, once a bird is recorded in-flight it is not subsequently recorded again if it follows the ship and it is not recorded on subsequent snapshots. If many birds are following the vessel and it becomes difficult to determine which individuals have already been recorded, the number of birds following the ship can be estimated and recorded at regular intervals (i.e., in between each five minute survey or as possible).

Table 1: Intervals at Which Instantaneous or "Snapshot" Counts of Flying Birds Should be conducted during a Moving Vessel Survey

Platform Speed (knots)	Interval Between Counts (minutes)
<4.5	2.5
4.5 – 5.5	2.0
5.5 – 8.5	1.5
8.5 – 12.5	1.0
12.5 - 19	0.5

Poor Visibility

When a survey period cannot be done because of poor visibility (i.e., when the entire width of the 300 m transect is not visible), the extent of visibility should be noted on the seabird survey information form.

Observation Periods with no birds

If no birds are observed during a five minute survey period, "no seabirds observed" must be noted on the seabird survey information form.

2.1.4.1 Survey Protocol – Stationary Vessel

Scan Method

Surveys while the vessel is stationary (e.g., on standby or anchored) are done using instantaneous counts, or "snapshots" of birds within a 300 m "semi-circle" area from the vessel. These surveys are conducted by scanning through a 180° arc, limiting observations to a semi-circle around the observer (Figure 6).

The area should be scanned from one side to the other, and all seabirds on water and in flight that are observed within 300 m are systematically recorded. Birds visible beyond 300 m are also, if possible. The distance to seabirds (inside and outside the 300 m area) from the observer is estimated and recorded for all birds. Birds observed outside the 300 m semi-circle are recorded as not in semi-circle on the seabird survey information form. Binoculars and spotting scopes can be used to confirm species identification and other details as necessary.

Observation Period

When the vessel is stationary, less priority can be attributed to marine mammal observations. The length of each scan will depend on the number of birds present at the time of the scan (e.g., it may only last a few seconds if there are no birds present).

Poor Visibility

When an observation period cannot be done because of poor visibility (i.e., when the entire width of the 300 m transect is not visible), the extent of visibility should be noted on the seabird survey information form.

Observation Periods with no birds

If no birds are observed during a five minute survey period, "no seabirds observed" must be noted on the seabird survey information form.

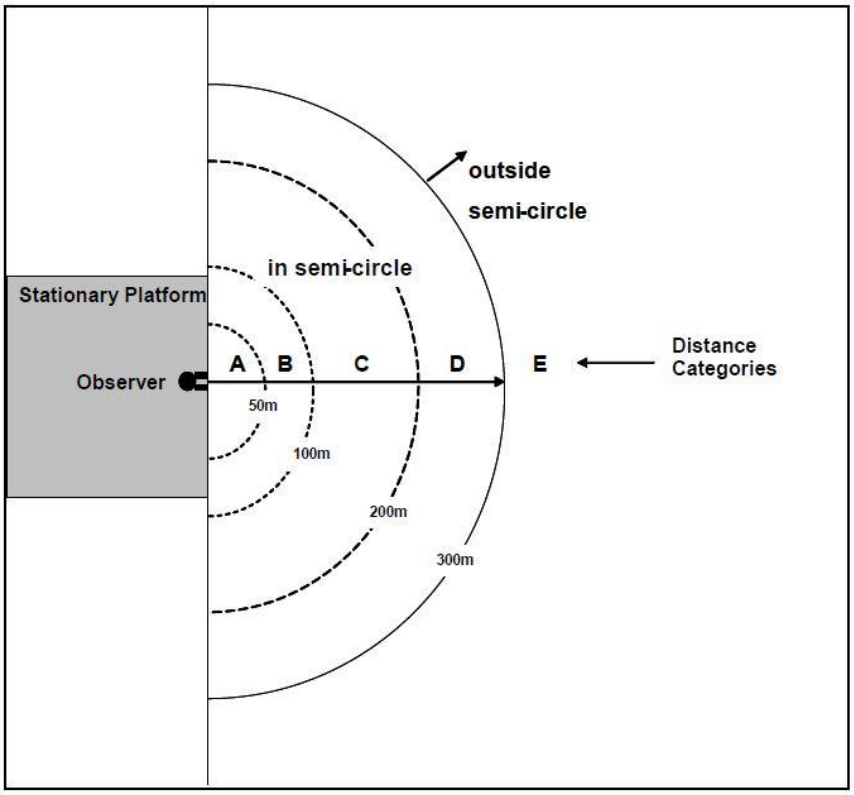

Figure 6. Survey using an 180o scan, surveying an area 300 m from a stationary observer (Extracted from Gjerdrum et al. 2012)

2.1.4.1 Estimating Distance

Record the distance to each bird or flock of birds (to the centre of the flock). For all birds, estimate the perpendicular distance between the bird(s) and the observer (Figure 6). If a group of birds is straddling the 300 m boundary with the flock centre located in D (some individuals inside and some individuals outside the transect) record the entire flock as being in D. If the flock centre is outside the transect, record the entire flock as distance class E. It is very important to record distance to birds within the 300 m strip, but if this is not possible (i.e., too busy), you may use the code 3 = within 300 m but no distance recorded. Distance T is used to indicate that the bird or flock was observed on the opposite side of the vessel.

2.1.5 Recording Observations

General environmental and marine mammal sightings information is to be collected and recorded by filling out forms in Attachments A & B.

MMSO's will record any responsive actions undertaken by the vessel crew in response to sightings. This will be recorded on a daily basis as outlined in the MMSO daily reporting template provided in Attachment C. All records of vessel strikes on marine mammals and bird collisions will be provided to Fisheries and Oceans Canada (DFO) and CWS on a weekly basis, as vessel communications allow (i.e., as internet connections allow). Immediate reporting will be required in the event that a ship strike occurs on a marine

mammal, or multiple bird collisions occur (involving more than five individuals) and the incidents appear related (i.e., similar time period, location, and weather conditions). In this instance, the regional Environment and Climate Change Canada (ECCC) Wildlife Enforcement Officer (contact information provided below) will be contacted to provide advice on the implementation of adaptive management techniques to attempt to reduce the likelihood of collisions occurring in the future.

Attachment A

Marine Mammal Sightings Record

Observation Period Information:				
Company/agency			Sea state code	
Platform name and type			Wave height (m)	
Observer (s)			True wind speed (knots) **OR** Beaufort code	
Date (DD/MMM/YYYY)			True wind direction	
Time at start (UTC)			Ice type code	
Time at end (UTC)			Ice concentration code	
Latitude at start / end			True platform speed (knots)	
Longitude at start / end			True platform direction	
Visibility (km)			Observation side	Starboard Port Middle
Weather code			Height of eye (m)	
Glare conditions code			Outdoors or Indoors	Out or In
Platform Activity			Notes	

Date and Time of Sighting	Vessel Travel Direction and Speed	Weather / Sea State	Re-Sighting? (Y or N)	Sighting Waypoint or Lat/Long(Garmin GPS)	Species, Number of Individuals	Distance to Animal (m or km)	Angle to Sighting	Behaviour/Travel Direction	Age/Sex	Mitigation Required?	Photo Number (if any)
Notes:											

AGNICO EAGLE

Species	How Animal Was Spotted	Certainty of ID	Animal Activity
Narwhal Whale	By Eye	Definite	Slow Swimming
Beluga Whale	Reticle Binoculars	Probable	Medium Swimming
Bowhead Whale	Big-eye Binoculars	Possible	Fast Swimming
Atlantic Walrus			Looking – Seals
Bearded Seal			Feeding
Ringed Seal			Flipper Slapping
Harbour Seal			Surfacing
Hooded Seal			Resting
Harp Seal			Diving
Polar Bear			Diving (Fluke Visible)
Killer Whale			Splashing
			Surfacing
			Fluking
			Lobtailing
			Bow Riding
			Wake Riding
			Porpoising
			Spyhopping
			Breaching
			Acrobatic
			Startle Response
			Milling
			Unknown

Attachment B

Record Sheet for a Moving Platform Survey[3]

Record Sheet for a Stationary Platform Survey[3]

Appendix I - Estimating Distance Categories Using Ruler Gauge[3]

Appendix II Through VI - Codes for General Weather Conditions and Glare, Sea State and Beaufort Wind Force, Ice Conditions, Species Codes for Eastern Seabirds, and Codes for [4]Associations and Behaviours[3]

[4] Eastern Canada Seabirds at Sea (ECSAS) Seabird Sightings Records and Background Material (Extracted from Gjerdrum et al. 2012)

Record sheet for a moving platform survey

Observation Period Information:

Company/agency		Sea state code	
Platform name and type		Wave height (m)	
Observer (s)		True wind speed (knots) **OR** Beaufort code	
Date (DD/MMM/YYYY)		True wind direction (deg)	
Time at start (UTC)		Ice type code	
Time at end (UTC)		Ice concentration code	
Latitude at start / end		True platform speed (knots)	
Longitude at start / end		True platform direction (deg)	
Platform activity		Observation side	Starboard Port
Visibility (km)		Height of eye (m)	
Weather code		Outdoors or Indoors	Out or In
Glare conditions code		Snapshot used?	Yes or No

Notes:

Bird Information: *this field must be completed for each record

* Species	* Count	* Fly or Water?	* In transect?	* Distance[1]	Assoc.	Behav.	Flight Direc.[2]	Age[3]	Plum.[4]	Sex	Comments

[1] ***A*** = 0-50m, ***B*** = 51-100m, ***C*** = 101-200m, ***D*** = 201-300m, ***E*** = > 300m, ***3*** = within 300m but no distance recorded.
[2]Indicate flight direction (***N***, ***NE***, ***E***, ***SE***, ***S***, ***SW***, ***W***, or ***NW***); ***ND*** = no apparent direction
[3]***J***(uvenile), ***I***(mmature), or ***A***(dult); [4]***B***(reeding), ***NB***(non-breeding), ***M***(oult)

Record sheet for a stationary platform survey

Scan Information:

Company/agency		Weather code	
Platform name and type		Glare conditions code	
Observer (s)		Sea state code	
Date (DD/MMM/YYYY)		Wave height (m)	
Time at start (UTC)		True wind speed (knots) **OR** Beaufort code	
Latitude		True wind direction (deg)	
Longitude		Ice type code	
Platform activity		Ice concentration code	
Scan type	180º or other (specify:)	Height of eye (m)	
Scan direction		Outdoors or Indoors	Out or In
Visibility (km)			

Notes:

Bird Information: *this field must be completed for each record

* Species	* Count	* Fly or Water?	* In semi-circle?	* Distance[1]	Assoc.	Behav.	Flight Direc.[2]	Age[3]	Plum.[4]	Sex	Comments

[1] ***A*** = 0-50m, ***B*** = 51-100m, ***C*** = 101-200m, ***D*** = 201-300m, ***E*** = > 300m, ***3*** = within 300m but no distance recorded.
[2]Indicate flight direction (***N***, ***NE***, ***E***, ***SE***, ***S***, ***SW***, ***W***, or ***NW***); ***ND*** = no apparent direction
[3]***J***(uvenile), ***I***(mmature), or ***A***(dult); [4]***B***(reeding), ***NB***(non-breeding), ***M***(oult)

APPENDIX I. Estimating distance categories

The various distance categories can be estimated using the following equation[1]:

$$d_h = 1000\frac{(ah3838\sqrt{h}) - ahd}{h^2 + 3838d\sqrt{h}}$$

e.g. if a = 0.730 m, h = 12.5 m, and d = 300 m

then d_h = 30.0 mm

where:

d_h = distance below horizon (mm)
a = distance between the observer's eye and the ruler when observer's arm is fully out-stretched (m)
h = height of the observer's eye above the water at the observation point (m)
d = distance to be estimated (m; a separate calculation is required for each of 50, 100, 200, 300)

Distances are easily estimated using a gauge made from a transparent plastic ruler. A different ruler will be required for each combination of observer arm length (a) and platform height (h). Calculate d_h for the boundary of each distance class (A, B, C, D) and mark them on the ruler (dashed lines in figure). To use the gauge, extend the arm fully and keep the top end of the ruler aligned with the horizon. The dashed lines now demark the distance class boundaries on the ocean surface. Keep the gauge nearby during surveys to quickly verify bird distances.

Measurements for an observer with a = 73 cm and h = 12.5 m:

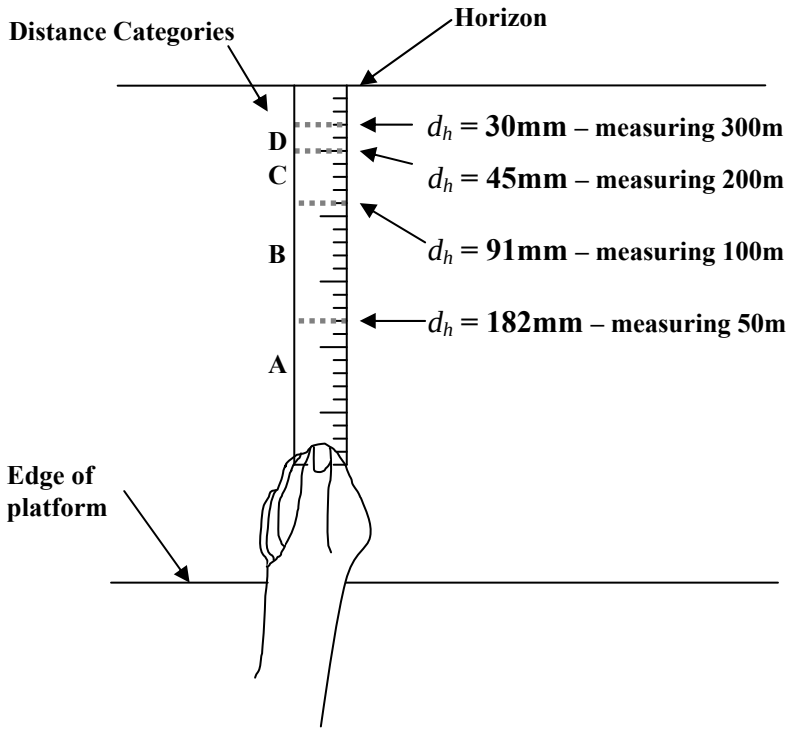

[1] Formula derived by J. Chardine, based on Heinemann 1981. A spreadsheet is available from the corresponding author to perform this calculation.

APPENDIX II. Codes for general weather conditions and glare

Code	Description	Explanation
	Weather conditions	
0		< 50% cloud cover (with no fog, rain, or snow)
1		> 50% cloud cover (with no fog, rain, or snow)
2		patchy fog
3		solid fog
4		mist/light rain
5		medium to heavy rain
6		fog and rain
7		snow
	Glare conditions	
0		none
1		slight/grey
2		bright on the observer's side of vessel
3		bright and forward of vessel

APPENDIX III. Codes for sea state and Beaufort wind force

Wind Speed (knots)	Sea state code and description	Beaufort wind force and description
0	**0** Calm, mirror-like	**0** calm
01 – 03	**0** Ripples with appearance of scales but crests do not foam	**1** light air
04 – 06	**1** Small wavelets, short but pronounced; crests do not break	**2** light breeze
07 – 10	**2** Large wavelets, crests begin to break; foam of glassy appearance; perhaps scattered white caps	**3** gentle breeze
11 – 16	**3** Small waves, becoming longer; fairly frequent white caps	**4** moderate breeze
17 – 21	**4** Moderate waves with more pronounced form; many white caps; chance of some spray	**5** fresh breeze
22 – 27	**5** Large waves formed; white foam crests more extensive; probably some spray	**6** strong breeze
28 – 33	**6** Sea heaps up; white foam from breaking waves blows in streaks in direction of wind	**7** near gale
34 – 40	**6** Moderately high long waves; edge crests break into spindrift; foam blown in well-marked streaks in direction of wind	**8** gale
41 – 47	**6** High waves; dense streaks of foam in direction of wind; crests of waves topple and roll over; spray may affect visibility	**9** strong gale
48 – 55	**7** Very high waves with long overhanging crests; dense foam streaks blown in direction of wind; surface of sea has a white appearance; tumbling of sea is heavy; visibility affected	**10** storm
56 - 63	**8** Exceptionally high waves; sea is completely covered with white patches of foam blown in direction of wind; edges blown into froth; visibility affected	**11** violent storm
64 +	**9** Air filled with foam and spray; sea completely white with driving spray; visibility seriously affected	**12** hurricane

APPENDIX IV. Codes for ice conditions

Adapted from NOAA: Observers Guide to Sea Ice

Sea Ice Forms

Code	Name	Description
0	New	small, thin, newly formed, dinner plate-sized pieces
1	Pancake	rounded floes 30 cm - 3 m across with ridged rims
2	Brash	broken pieces < 2 m across
3	Ice Cake	level piece 2 - 20 m across
4	Small Floe	level piece 20 - 100 m across
5	Medium Floe	level piece 100 -500 m across
6	Big Floe	level, continuous piece 500 m - 2 km across
7	Vast Floe	level, continuous piece 2 - 10 km across
8	Giant Floe	level, continuous piece > 10 km across
9	Strip	a linear accumulation of sea ice < 1 km wide
10	Belt	a linear accumulation of sea ice from 1 km to over 100 km wide
11	Beach Ice or Stamakhas	irregular, sediment-laden blocks that are grounded on tidelands, repeatedly submerged, and floated free by spring tides
12	Fast Ice	ice formed and remaining attached to shore

Sea Ice Concentration

Code	Concentration	Description	
0	< one tenth	"open water"	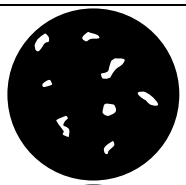
1	two-three tenths	"very open drift"	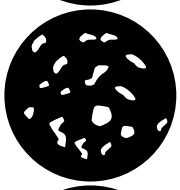
2	four tenths	"open drift"	
3	five tenths	"open drift"	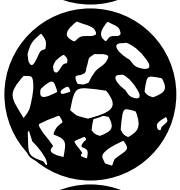
4	six tenths	"open drift"	
5	seven to eight tenths	"close pack"	
6	nine tenths	"very close pack"	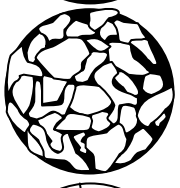
7	ten tenths	"compact"	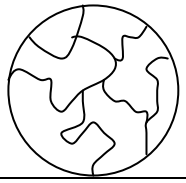

APPENDIX V. Species codes for birds seen in Eastern Canada

Common name	Species code	Latin name
COMMON, REGULAR OR FREQUENTLY SEEN SPECIES		
Northern Fulmar	NOFU	*Fulmarus glacialis*
Great Shearwater	GRSH	*Puffinus gravis*
Manx Shearwater	MASH	*Puffinus puffinus*
Sooty Shearwater	SOSH	*Puffinus griseus*
Wilson's Storm-Petrel	WISP	*Oceanites oceanicus*
Leach's Storm-Petrel	LESP	*Oceanodroma leucorhoa*
Northern Gannet	NOGA	*Morus bassanus*
Red Phalarope	REPH	*Phalaropus fulicaria*
Red-necked Phalarope	RNPH	*Phalaropus lobatus*
Long-tailed Jaeger	LTJA	*Stercorarius longicaudus*
Parasitic Jaeger	PAJA	*Stercorarius parasiticus*
Pomarine Jaeger	POJA	*Stercorarius pomarinus*
Great Skua	GRSK	*Stercorarius skua*
Herring Gull	HERG	*Larus argentatus*
Iceland Gull	ICGU	*Larus glaucoides*
Glaucous Gull	GLGU	*Larus hyperboreus*
Great Black-backed Gull	GBBG	*Larus marinus*
Black-legged Kittiwake	BLKI	*Rissa tridactyla*
Common Murre	COMU	*Uria aalge*
Thick-billed Murre	TBMU	*Uria lomvia*
Razorbill	RAZO	*Alca torda*
Dovekie	DOVE	*Alle alle*
Atlantic Puffin	ATPU	*Fratercula arctica*
SPECIES MORE COMMONLY SEEN INSHORE		
Common Loon	COLO	*Gavia immer*
Red-throated Loon	RTLO	*Gavia stellata*
Red-necked Grebe	RNGR	*Podiceps grisegena*
Horned Grebe	HOGR	*Podiceps auritus*
Great Cormorant	GRCO	*Phalacrocorax carbo*
Double-crested Cormorant	DCCO	*Phalacrocorax auritus*
Greater Scaup	GRSC	*Aytha marila*
Common Eider	COEI	*Somateria mollissima*
Harlequin Duck	HARD	*Histrionicus histrionicus*
Long-tailed Duck	LTDU	*Clangula hyemalis*
Surf Scoter	SUSC	*Melanitta perspicillata*
Black Scoter	BLSC	*Melanitta nigra*
White-winged Scoter	WWSC	*Melanitta fusca*
Red-breasted Merganser	RBME	*Mergus serrator*
Black Guillemot	BLGU	*Cepphus grylle*

Common name	Species code	Latin name
INFREQUENTLY OR RARELY SEEN SPECIES		
Cory's Shearwater	COSH	*Calonectris diomedea*
Audubon's Shearwater	AUSH	*Puffinus lherminieri*
Lesser Scaup	LESC	*Aythya affinis*
King Eider	KIEI	*Somateria spectabilis*
South Polar Skua	SPSK	*Stercorarius maccormicki*
Bonaparte's Gull	BOGU	*Larus philadelphia*
Ivory Gull	IVGU	*Pagophila eburnea*
Black-headed Gull	BHGU	*Larus ridibundus*
Laughing Gull	LAGU	*Larus articilla*
Ring-billed Gull	RBGU	*Larus delawarensis*
Lesser Black-backed Gull	LBBG	*Larus fuscus*
Sabine's Gull	SAGU	*Xema sabini*
Common Tern	COTE	*Sterna hirundo*
Arctic Tern	ARTE	*Sterna paradisaea*
Roseate Tern	ROTE	*Sterna dougallii*
CODES FOR BIRDS IDENTIFIED TO FAMILY OR GENUS		
Unknown Bird	UNKN	
Unknown Shearwater	UNSH	*Puffinus* or *Calonectris*
Unknown Storm-Petrel	UNSP	Hydrobatidae
Unknown Duck	UNDU	Anatidae
Unknown Eider	UNEI	*Somateria*
Unknown Phalarope	UNPH	*Phalaropus*
Unknown Jaeger	UNJA	*Stercorarius*
Unknown Skua	UNSK	*Stercorarius*
Unknown Gull	UNGU	Laridae
Unknown Tern	UNTE	*Sternidae*
Unknown Alcid	ALCI	Alcidae
Unknown Murre or Razorbill	MURA	*Uria* or *Alca*
Unknown Murre	UNMU	*Uria*

APPENDIX VI. Codes for associations and behaviours

From Camphuysen and Garthe (2004). Choose one or more as applicable.

Code	Description
Association	
10	Associated with fish shoal
11	Associated with cetaceans
13	Associated with front (often indicated by distinct lines separating two water masses or concentrations of flotsam)
14	Sitting on or near floating wood
15	Associated with floating litter (includes plastic bags, balloons, or any garbage from human source)
16	Associated with oil slick
17	Associated with sea weed
18	Associated with observation platform
19	Sitting on observation platform
20	Approaching observation platform
21	Associated with other vessel (excluding fishing vessel; see code 26)
22	Associated with or on a buoy
23	Associated with offshore platform
24	Sitting on offshore platform
26	Associated with fishing vessel
27	Associated with or on sea ice
28	Associated with land (e.g., colony)
50	Associated with other species feeding in same location

Code	Description	Explanation
Foraging behaviour		
30	Holding or carrying fish	carrying fish towards colony
32	Feeding young at sea	adult presenting prey to attended chicks (e.g., auks) or juveniles (e.g., terns)
33	Feeding	method unspecified (see behaviour codes 39,40,41,45)
36	Aerial pursuit	kleptoparisitizing in the air
39	Pattering	low flight over the water, tapping the surface with feet while still airborne (e.g., storm-petrels)
40	Scavenging	swimming at the surface, handling carrion
41	Scavenging at fishing vessel	foraging at fishing vessel, deploying any method to obtain discarded fish and offal; storm-petrels in the wake of trawlers picking up small morsels should be excluded
44	Surface pecking	swimming birds pecking at small prey (e.g., fulmar, phalaropes, skuas, gulls)
45	Deep plunging	aerial seabirds diving under water (e.g., gannets, terns, shearwaters)
49	Actively searching	persistently circling aerial seairds (usually peering down), or swimming birds frequently peering (and undisturbed by observation platform) underwater for prey
General behaviour		
60	Resting or apparently sleeping	reserved for sleeping seabirds at sea
64	Carrying nest material	flying with seaweed or other material; not to be confused with entangled birds
65	Guarding chick	reserved for auks attending recently fledged chicks at sea
66	Preening or bathing	birds actively preening feathers or bathing
Distress or mortality		
71	Escape from ship (by flying)	escaping from approaching observation platform
90	Under attack by kleptoparasite	bird under attack by kleptoparasite in an aerial pursuit, or when handling prey at the surface
93	Escape from ship (by diving)	escaping from approaching observation platform
95	Injured	birds with clear injuries such as broken wings or bleeding wounds
96	Entangled in fishing gear or rope	birds entangled with rope, line, netting or other material (even if still able to fly or swim)
97	Oiled	birds contaminated with oil
98	Sick/unwell	weakened individuals not behaving as normal, healthy birds, but without obvious injuries
99	Dead	bird is dead

Attachment C

MMSO Daily Reporting Template

1.0 MARINE MAMMALS AND SEABIRD OBSERVING (MMSO) DAILY REPORT

Project Information

Client:	**Date:**
Project Name:	**Location:**

Ship Contractor Information

Ship Contractor Name:	**Site Supervisor or Captain:**
Ship Name/Type:	

MMSO name:	
General weather conditions (throughout the day)	**Cloud cover:** **Precipitation:** **Wind (knots):** **Sea state:** **Swell height:** **Air temperature:** **Ice presence:** **Notes:**
Time start/Time end MMSO duties (UTC):	

2.0 MITIGATION LOG

Mitigation Implemented	Time (UTC)	GPS Location	Rational for Implementation

Under Activity note the following: Description of any vessel mitigation implemented (e.g., reduction in speeds, evasive maneuvers etc.)

3.0 RECORD OF VESSEL-ANIMAL COLLISIONS/INTERACTIONS

Species	Number of Individuals	Time (UTC)	GPS Coordinates	Visibility/Sea State	Comments

Extracted from the Meliadine Shipping Management Plan, 2017

In the comments note the following: Animals observed on the deck (seabirds) or in the water (seabirds or marine mammals), if search lights or vessel lighting sources were active at the time of collision, and any other relevant notes.

4.0 MMSO CHECKLIST

Item or Location to Check	Yes	No	Comments - Discussed (D) with relevant Ship personnel - Observed (O) - Not Applicable (NA) - Action required (as/if applicable)
General			
Copy of SMP and appendices posted on-site			
Orientation to mitigation measures outlined in Section 4.2 of the SMP			
Overview of MMSO duties and protocols (e.g., ship crews should be made aware that the MMSO is the only individual that can mark sightings during the dedicated surveys/observation periods)			
Add additional items as necessary and depending on the role of the MMSO			
General Notes:			

5.0 SUMMARY OF ISSUES AND RECOMMENDATIONS / ACTIONS

Date Noted	Issue	Recommendation/Action	Completed (Date Resolved)	Comments

Extracted from the Meliadine Shipping Management Plan, 2017

Thermal Monitoring Plan, Version 2

AGNICO EAGLE

WHALE TAIL PIT PROJECT

Thermal Monitoring Plan

In Accordance with
Project Certificate No. 008, T&C 14

Prepared by:
Agnico Eagle Mines Limited – Meadowbank Division

Version 2
March 2019

EXECUTIVE SUMMARY

Agnico Eagle Mines Limited – Meadowbank Division (Agnico Eagle) received a Project Certificate No.008 from the Nunavut Impact Review Board for the development of the Whale Tail Pit, a satellite deposit located on the Amaruq Exploration property.

The deposit will be mined as an open pit (i.e., Whale Tail Pit), and ore will be hauled by truck to the approved infrastructure at Meadowbank Mine for milling. Approximately 8.3 million tonnes (Mt) of ore will be mined from the open pit and processed over a three to four-year mine life. Ore from Whale Tail Pit will be crushed on site after which it will be transported to Meadowbank Mine for milling. The mill rate will be approximately 9,000 to 12,000 tonnes per day.

This document presents the Thermal Monitoring Plan for the Whale Tail Pit in accordance with Terms and Conditions No. 14 included in the Project Certificate.

DISTRIBUTION LIST

Agnico – Engineering Superintendent

Agnico – Geotechnical Coordinator

Agnico – Environment Superintendent

Agnico – Environment General Supervisor

Agnico – Environmental Coordinator

DOCUMENT CONTROL

Version	Date (YMD)	Section	Revision
1	2018-05-04	All	To address Project Certificate No. 008. T&C 14
2	2019-03-31	All	Comprehensive update of the plan

TABLE OF CONTENTS

1 INTRODUCTION 1
1.1 Concordance 1
1.2 Objectives 2

2 BACKGROUND 3
2.1 Climate Environment 3
2.2 Regional Permafrost 3
2.3 Site Subsurface Geology 3
2.4 Baseline Field Investigations 4
2.4.1 Existing Instrumentation on-Site 4
2.5 Baseline Thermal Modelling 7
2.6 Summary of Current Permafrost Conditions 7

3 THERMAL MONITORING PLAN 8
3.1 waste Rock Storage Facility 8
3.1.1 Facility Description 8
3.1.2 Expected Thermal Effects on Permafrost 8
3.1.3 Thermal Monitoring 9
3.2 Water Management Facilities 9
3.2.1 Facility Description 9
3.2.2 Expected Thermal Effects on Permafrost 9
3.2.3 Thermal Monitoring 10
3.3 Open Pit 11
3.3.1 Facility Description 11
3.3.2 Expected Effects on Permafrost 11
3.3.3 Thermal Monitoring 11
3.4 Whale Tail Lake Shore 11

4 CLOSURE 13

5 REFERENCES 14

List of Appendix

Appendix A: Thermal data results

1 INTRODUCTION

Agnico Eagle Mines Limited – Meadowbank Division (Agnico Eagle) is developing the Whale Tail Pit Project (Project), a satellite deposit located on the Amaruq property, to continue mine operations and milling at Meadowbank Mine.

The Amaruq property is a 408 km^2 site located on Inuit Owned Land approximately 150 km north of the hamlet of Baker Lake and approximately 50 km northwest of Meadowbank Mine in the Kivalliq Region of Nunavut. The deposit will be mined as an open pit (i.e., Whale Tail Pit), and ore will be hauled to the approved infrastructure at Meadowbank Mine for milling. The planned project involves: one year of construction, three years of mine operation, eight years of closure-related activities, and the post-closure period.

This document presents a Thermal Monitoring Plan prepared for the following mine facilities and natural locations:

- Waste rock storage facility (WRSF)
- Water management facilities including Whale Tail Dike, Mammoth Dike, North-East Dike, WRSF Dike, and Attenuation Pond
- Whale Tail Pit
- Whale Tail Lake shore

The Thermal Monitoring Plan provides general descriptions of the different facilities, describes the anticipated impact of operation of the facilities on the permafrost and presents general guidelines that are used to define instrumentation needs for each facility. This document is not intended to provide detailed specifications for the instrumentation program, which will be defined as mining progresses and infrastructures are built. The Thermal Monitoring Plan will be reviewed periodically to adjust to the dynamics of mine construction and operation and adapt the monitoring strategy defined for each facility as needed.

1.1 CONCORDANCE

Meadowbank Mine is an approved mining operation and Agnico Eagle is planning to extend the life of the mine by constructing and operating the Project. The Project was subject to an environmental review established by Article 12, Part 5 of the Nunavut Agreement. In June 2016, Agnico Eagle submitted a Final Environmental Impact Statement (FEIS) seeking a reconsideration of the Meadowbank Mine Project Certificate (No. 004/File No. 03MN107) and Type A Water Licence Amendment (No. 2AM-MEA1526) from the NIRB.

On July 2016, the NIRB determined that the proposed Project required a separate screening assessment under the Nunavut Agreement and the *Nunavut Planning and Project Assessment Act* (NuPPAA). A separate Project Certificate (NIRB Project Certificate No. 008) was issued for the Project on March 15, 2018 by the NIRB. This Thermal Monitoring Plan reflects the commitments made with respect to submissions provided during the technical review of the FEIS, to comply with Terms and Condition No. 14 included in the Project Certificate.

1.2 OBJECTIVES

The primary objective of the Thermal Monitoring Plan is to document and monitor ground thermal conditions at site and identify impacts to the permafrost, if any, that could be associated with development, operation and closure of the different mine facilities. This is done through the implementation of a monitoring program designed to assess variations in the ground thermal conditions and a data analysis program that will compare results obtained to baseline conditions prior to mine developments.

The monitoring program will allow for identification of affected permafrost zones and for the comparison between the anticipated and observed effects of the mine facilities on the permafrost. The results of the monitoring program will also be used to guide activities that might be required in future to document the development and/or evolution of permafrost at site.

In certain areas, effects of mine operations on the permafrost are anticipated to be temporary and normal conditions are expected to be restored progressively upon closure of the mine. The monitoring plan will constitute a means to assess and validate this assumption, and monitoring results will be used to determine if mitigation actions are required and define what these will be at specific locations, as needed.

2 BACKGROUND

2.1 CLIMATE ENVIRONMENT

The Project site has the following mean climate characteristics (Agnico Eagle 2016):

- Mean annual air temperature of -11.3 °C
- In summer months from June through September, the mean monthly air temperature ranges from 4.9 to 11.6 °C. In winter months from October to May, the mean monthly air temperature ranges from -6.4 to -31.3 °C
- Mean annual total rainfall of 168 mm
- Mean annual total snowfall (water equivalent) of 160 mm

2.2 REGIONAL PERMAFROST

The Project is located in the zone of continuous permafrost. Permafrost refers to subsurface soil or rock where temperatures remain at or below 0ºC for at least two consecutive years. This is synonymous to perennially cryotic ground, which may be frozen, partially frozen, or non-frozen depending on the ice/water content of the ground, and the salinity of the groundwater. The base of the permafrost is expected to be an undulating surface and the actual depth to permafrost is variable.

The Project footprint is underlain by permafrost except under portions of Whale Tail Lake where water is too deep to freeze to the bottom during winter. Taliks (areas of unfrozen ground) are expected beneath a water body where the water depth is greater than the ice thickness. Closed talik formations show a depression in the permafrost table below relatively shallow and small lakes. Open talik formations that penetrate through the permafrost and connect the lake waterbody with the sub-permafrost regime are to be expected for relatively deeper and larger lakes in the project area.

2.3 SITE SUBSURFACE GEOLOGY

The Whale Tail deposit is located in the northern portion of the Whale Tail Lake. Based on previous site investigation data, soils in the project area are typically medium to coarse grained glacial till and colluvium with high coarse fragment content overlying bedrock at shallow depths. Saturated soil layers overlying frozen layers have been observed on site. A review of the records of the six thermistor boreholes indicates soil thicknesses varying from 6.1 to 12.4 m. Underlying the soil, bedrock in the area generally consists of a stratigraphic sequence of greywacke, iron formation and komatiite, with varying thicknesses.

2.4 BASELINE FIELD INVESTIGATIONS

The Project site permafrost conditions were initially assessed by Knight Piésold (2015) between June and October of 2015 which included the installation of six thermistors in the vicinity of the proposed development of Whale Tail Lake to collect ground temperature data.

Golder Associates completed an additional thermal assessment for the Whale Tail Lake in 2017 (Golder 2017a) and installed four thermistors within the vicinity of Whale Tail Lake.

A Westbay well was installed on-site between March and April in 2016 where groundwater samples were collected from multiple intervals (Golder 2016a). A first estimation of the thickness of the permanently frozen permafrost was made based on information collected from the Westbay well.

Additional investigations and thermistor installations were carried out by SNC-Lavalin in 2016 and 2017 for the purpose of dike design.

2.4.1 Existing Instrumentation on-Site

A total of 14 thermistors have been installed at Whale Tail Site project area between 2015 and 2018. Data from these thermistors have been used to estimate the site permafrost and talik conditions (Golder 2017a, 2018a). Ten of the 14 thermistors are currently active.

The location and installation summary of the 10 active thermistors within the Project site are presented in Table 1. Figure 1 shows locations of active and inactive thermistors. Data are collected from the thermistor by data loggers or using manual readout units.

Results of each of these active and inactive thermistors are presented in Appendix A.

Figure 1. Location of Thermistors

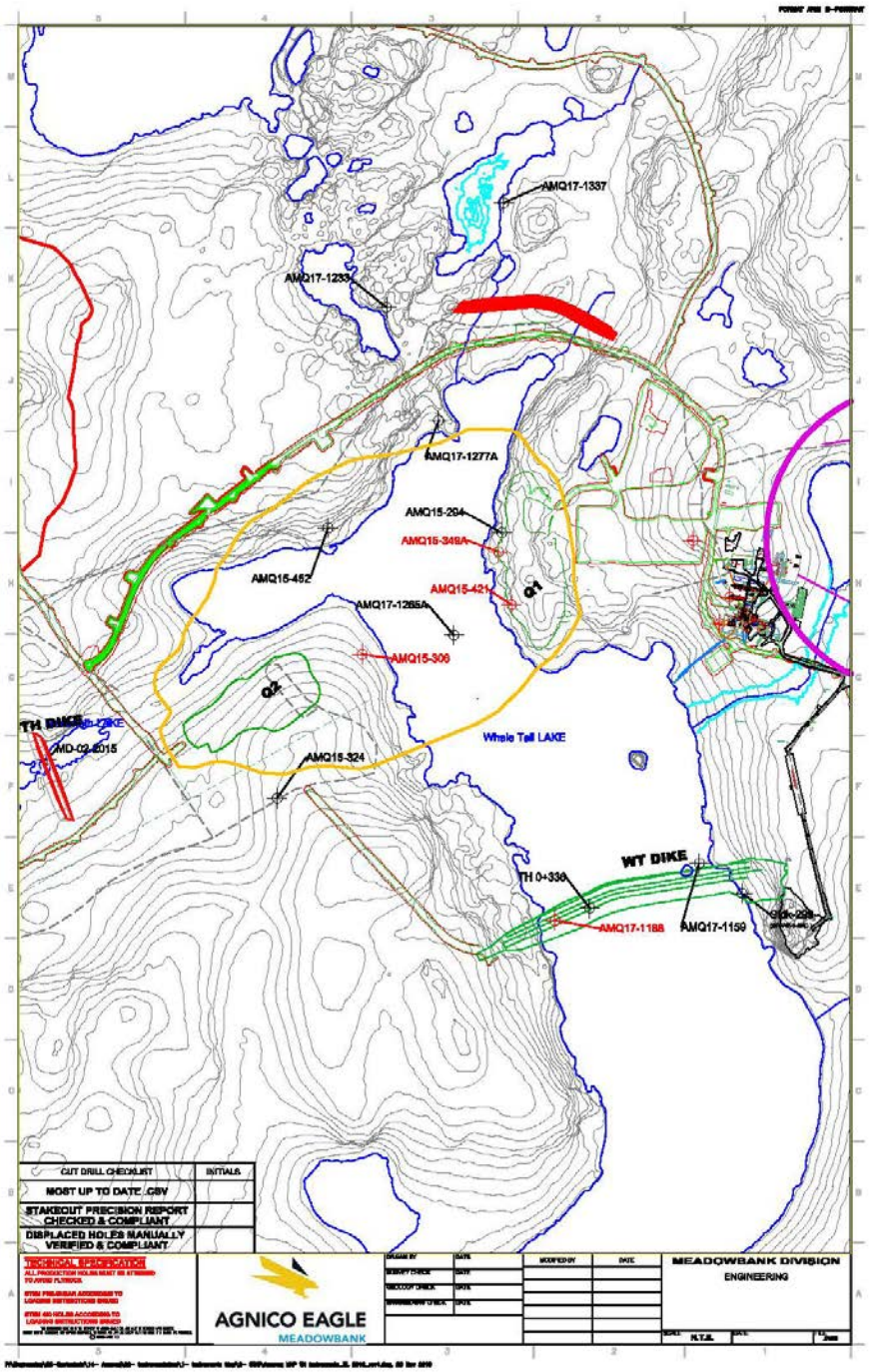

Table 1: Summary of Active Thermistors within the Project Site

Borehole	Location	Collar Coordinates					Thermistor Depth Below Ground Surface (m)	Reading Mode
		Northing	Easting	Elevation	Inclination (deg)	Azimuth (deg)		
AMQ15-294	Whale Tail Pit, at East Lake Shore	607,073.2	7,255,676.1	155.9	-45.18	322.7	144.4	Data Logger
AMQ15-324	To the southwest of Whale Tail Pit, at West Lake Shore	606,496.8	7,254,995.2	161.8	-55.46	325.5	317.4	Data Logger
AMQ15-452	Whale Tail Pit, at Northwest Lake Shore	606,627.2	7,255,687.9	156.2	-49.98	159.5	382.3	Data Logger
AMQ17-1265A	Within Whale Tail Dike and Whale Tail Pit	606,950.1	7,255,413.6	152.5	-80.0	196.0	349.6 (depth below lake level)	Manual Reading
AMQ17-1233	East Shore of Lake A49	606,777.7	7,256,253.8	161.9	-59.06	252.7	132.4	Manual Reading
AMQ17-1337	East Shore of Lake A47	607,078.4	7,256,522.0	155.2	-59.62	260.4	218.0	Data Logger
AMQ17-1277A	Whale Tail Pit, at North Lake Shore	606,911.1	7,255,963.6	153.2	-60.17	193.1	217.4	Data Logger
MD-02-2015	Mammoth Dike	605,906.1	725,5094.5	NA	NA	NA	15	Manual Reading
AMQ17-1159	Whale Tail Dike	607,580.2	725,4827.6	NA	NA	NA	20	Manual Reading
Stkd299	Whale Tail Dike	607,689.9	725,4751.0	NA	NA	NA	15	Manual Reading

NA=data not available.

2.5 BASELINE THERMAL MODELLING

Thermal modelling has been conducted to predict variations in the thermal regime of the permafrost. Modelling results are presented in the following reports:

- 2015 Site Permafrost Characterization by Knight Piésold (2015).
- 2017 Whale Tail Lake Thermal Assessment by Golder (2017a).
- 2017 and 2018 Golder Waste Rock Storage Facility thermal analysis for cover design by Golder (2017b, 2018b).
- 2018 Pit Lake Post-closure Thermal Assessment by Golder (2018a, In-progress).
- 2018 Dike Thermal Assessment by SNC-Lavalin (2018).

General results obtained from these studies are used to define the permafrost baseline conditions summarized in Section 2.6.

2.6 SUMMARY OF CURRENT PERMAFROST CONDITIONS

Current permafrost conditions on the Project site were estimated as follows based on thermistor data up to October 2017 and previous works. This information describes the baseline permafrost condition at the site.

- The depth of permafrost in the project site is estimated to be in the order of 427 to 495 m.
- The extrapolated mean annual ground surface temperature is estimated to be in the range of -3.4 to -9.9 °C.
- The estimated depths of zero amplitude from temperature profiles measured by the existing thermistors range from 18 m to 35 m.
- The temperatures at the depths of zero amplitude are in the range of -3.0 °C to -8.4 °C.
- The geothermal gradient is in the range of 0.005 °C/m to 0.025 °C/m.
- Based on the measured salinity concentration of 0.3% to 0.4% from groundwater samples collected on site, a freezing point depression of about 0.2 °C is estimated, which may reduce the frozen ground depth by approximately 20 m.

Ground thermal conditions under Whale Tail Lake were estimated by both thermal assessment and thermistor data. Results indicate the following:

- Under the northern portion of the lake including under the proposed pit location and along the proposed ramp area, there is likely a closed talik formation.
- An open talik is expected in the southern portion of the lake where it becomes wider and deeper
- Data from the thermistor AMQ17-1265A installed within the lake (near southeast side of the Pit) suggests the talik depth at this location is about 112 m from the lake water level. Permafrost is present beneath the talik at that location to a depth of about 343 m.

3 THERMAL MONITORING PLAN

This section presents a general description of each facility, the expected thermal effects on the permafrost, planned thermal monitoring and results documentation. The monitoring program will allow for evaluation of the actual impacts on the permafrost thermal regime during construction, operations, and closure of the facilities, and post-closure.

The information presented herein will be reviewed periodically during operations to reflect the actual site conditions.

3.1 WASTE ROCK STORAGE FACILITY

3.1.1 Facility Description

The WRSF is located north-west of the open pit, and consists of West WRSF and East WRSF. Waste rock and overburden will be trucked to the WRSF throughout mine operations, with distribution between the East and West portions based on the pile operation schedule. Agnico Eagle plans to deposit a total of 68.2 million dry tonnes (Mt) of waste rock and overburden material between 2018 and 2022.

The final height of the WRSF is anticipated to be 95 m. The construction process incorporates 20-m high benches composed of four 5-m thick layers. Each bench toe will start at a setback distance of 20 m from the crest of the previous bench to form an overall side slope of 2.5H:1V.

The diorite and south greywacke material, which are both non-acid generating and non-metal leaching, represent approximately 17% (10.5 Mt) of the waste rock to be mined from the open pit and can be used as cover material for the Whale Tail WRSF.Closure of the WRSF will begin when practical as part of the progressive reclamation program. As part of the Whale Tail Pit – Waste Rock Management Plan (Agnico Eagle 2017), the Whale Tail WRSF will be covered with non-potentially acid generating and non-metal leaching (NPAG/NML) waste rock to promote freezing of the pile as a control strategy to prevent acid generation and transport of contaminants.

3.1.2 Expected Thermal Effects on Permafrost

Construction of the WRSF on the permafrost is expected to result in aggradation of permafrost into the pile. The permafrost under the pile would remain, but temperatures in the upper permafrost zone are expected to increase gradually until a thermal equilibrium is established with the active zone and zero-amplitude zone moving upward and being located within the waste rock pile. Convective cooling conditions often occur in waste piles and would potentially offset some of the temperature increase in the permafrost.

The waste rock pile itself is expected to freeze back with time and have an active layer formed on the upper portion (Golder 2018b). Climate change in the long-term is expected to extend the depth of the active layer in the pile, but the thick waste rock pile will constitute a protection to the underlying permafrost. If heat generation occurs associated with the oxidation of sulphide-bearing minerals within the pile, the process of freeze-back would be delayed and, depending on the location of the heat generation source, the upper portion of the permafrost foundation could be impacted.

3.1.3 Thermal Monitoring

Currently there are no thermistors installed in the WRSF area.

Vertical thermistors will be installed through the waste rock and underlying permafrost during construction of the pile to monitor the evolution of temperature profiles with time and to evaluate if the process of permafrost aggradation and pile freeze-back is developing as anticipated. Thermistors installed during construction of the pile will be located in completed benches, and additional thermistors will be installed on top of the pile upon end of operations and installation of the cover system for closure of the facility. Thermistors installed after placement of the thermal cap on top of the facility will be used to assess whether the defined cover thickness of 4 m (Golder 2018b) is effective to maintain the top of the pile away from the active zone subject to seasonal freezing and thawing.

The thermistor strings will be connected to data loggers for automatic data collection and storage. Data will be reviewed periodically or as-needed, and results will be summarized in monitoring reports in a yearly basis during operation and for five years after closure. The frequency of reporting will be reviewed after that and might be reduced.

3.2 WATER MANAGEMENT FACILITIES

3.2.1 Facility Description

Water management infrastructure includes contact water collection ponds, freshwater collection ponds, diversion channels, retention dikes, dams, culverts, water treatment plant for effluent, potable water treatment plant, sewage treatment plant, and a discharge diffuser. All contact water on-site will be directed to an Attenuation Pond. Contact water will be treated and then released to Mammoth Lake through a discharge diffuser.

The Whale Tail Dike was constructed before operations to allow mining of the open pit. After dewatering of the lake area downstream of the dike the operational lake water level upstream of the dike is predicted to be at El. 156 masl, about 3.5 m higher than the current average lake level. The dike will be breached during closure to restore the lake, and will form a permanent pit lake as the open pit is flooded.

The Mammoth Dike is also a dewatering structure constructed at west side of the pit, and east side of Mammoth Lake to limit flow from Mammoth Lake into the pit. Similarly, the North East Dike will be constructed to limit inflow from lakes A46, A47 and AP68.

The Attenuation Pond will be located between the Whale Tail Dike and the Whale Tail Pit to collect mine water, runoff and seepage from the dike. The pond operational water level is expected to be at El. 146 masl.

The WRSF Dike is planned to be a water retaining dam to store contact water from the waste rock pile. The facility will be emptied annually and water will be pumped to the Attenuation Pond.

3.2.2 Expected Thermal Effects on Permafrost

The Whale Tail Dike will be constructed within the lake where talik is anticipated to exist, therefore there will be no direct negative impact on the permafrost zone underneath the talik. The construction of the Whale Tail Dike is expected to have a cooling effect on the lake ground

underneath the dike due to exposure to lower dike temperature than lake water. Minimal effects to the permafrost at the abutment areas are expected.

Upon lake dewatering and beginning of operations, areas downstream of the Whale Tail Dike are expected to freeze back progressively, and the upstream area of the dike is expected to remain unfrozen.

After the dike is breached in the final stages of closure, the Whale Tail lake will be restored, causing frozen zones located downstream of the dike to thaw and progressively restoring the original lake talik.

The other dewatering dike areas are expected to have similar thermal impacts on the permafrost associated with construction, operation and closure of the dikes.

The WRSF Dike may contain a pond formed from water flowing out of the waste rock facility. Depending on pond depth and operational conditions there would be impact with possible thawing of a shallow upper permafrost zone underlying the pond.

The talik zone under the Attenuation Pond would remain, but depth of the talik could be reduced as the Attenuation Pond will likely be shallower than the existing lake at that location. The surrounding areas to the pond would freeze back progressively after dewatering, but would restore to talik condition after breaching of the dewatering dikes and flooding of the area.

3.2.3 Thermal Monitoring

There are thermistors currently installed in the Whale Tail Dike and Mammoth Dike areas. No thermistors are present in North-East Dike nor WRSF Dike areas. Additional thermistors will be installed after construction of the dikes along the dike alignments, dike abutments, and adjacent lake shore areas to monitor changes in the thermal regimes, monitor performance of the dikes and confirm/validate the expected effects as described above. The exact location, quantity and specifications of new thermistor lines will be defined in future based on the final lay-out of site facilities.

Thermistors have not been installed within the footprint of the proposed Attenuation Pond. Considering that the Attenuation Pond is not anticipated to have any negative effects on permafrost due to its planned location within an existing talik area, the need for installation of thermistors will be evaluated upon completion of the detailed engineering design of the pond.

At the location of the WRSF Dike, thermistors will be installed within the dike footprint to monitor variations in the underlying permafrost condition.

All new thermistors will be connected to data loggers for automatic data collection and data storage. Existing thermistors that are not connected to a logger will be read manually in at least monthly basis, or be further connected to data loggers. Data will be reviewed periodically or as-needed. Results will be presented in annual reports during operation and closure of until dike decommissioning.

3.3 OPEN PIT

3.3.1 Facility Description

The proposed Whale Tail Pit will extend across the northern edge of Whale Tail Lake. Approximately 8.3 Mt of ore will be mined from the Whale Tail Pit and processed over a three to four-year mine life. The base of the pit is designed to be at El. 37 masl, about 115.5 m below the existing average lake water level of 152.5 masl.

Construction of the Whale Tail Pit site started in 2018. The operational phase will span from Year 1 (2019) to Year 4 (2022). Mining activities are currently expected to end in Year 3 (2021) and ore processing is expected to end during Year 4 (2022). Pit flooding is anticipated to commence in 2022 marking the beginning of the closure period, and is expected to reach the top of the pit / base of Whale Tail Lake (138 masl) in 2025 and the initial lake in 2028.

3.3.2 Expected Effects on Permafrost

The pit will be excavated through an upper closed talik zone and underlying permafrost. During operations of the pit the talik zone is expected to freeze back progressively and the lower permafrost zone surrounding the pit walls will, in general, experience reduction in temperature other than at a shallow active zone adjacent to the pit walls subjected to seasonal thawing during summer.

Upon closure and subsequent flooding of the pit, permafrost areas underneath the pit lake are expected to gradually thaw. Thermal assessments have indicated this process would take hundreds of years (Golder 2018a). The pit lake would eventually reduce the permafrost depth in the pit surrounding ground, but this process could take significantly longer time (in the order of 10,000 years) to complete.

3.3.3 Thermal Monitoring

A total of eight thermistors are currently active in the area of the future pit. Some of the existing thermistors may be destroyed during pit mining. Additional thermal investigations around the pit at shallow depth may be undertaken; the need for this will be defined during mining.

For/if any thermistors remain active or are installed in this area, they may be connected to data loggers for automatic data collection and data storage. Data will be reviewed periodically or as-needed, and results will be summarized in annual monitoring reports during operation and for five years after closure. The frequency of reporting may be modified in time as the thermal regime of the area stabilizes.

3.4 WHALE TAIL LAKE SHORE

The shore of Whale Tail Lake south basin will be affected by increased water levels upstream of the Whale Tail dike, while the shores of the Whale Tail Lake north basin will be affected by lake dewatering downstream of the dikes, mining of open pit, and re-flooding after breaching of dewatering dikes during closure of the facilities.

The design lake level of El. 156 m upstream of the Whale Tail Dike is about 3.5 m higher than the current average lake water level. This will result in flooding of part of the lake shore and shallow thawing of the upper portion of the permafrost during operations. Given the short mine operation period, the impact is anticipated to be small. Deeper portions of the permafrost in newly flooded

areas upstream of the dikes are not expected to be effected significantly. After the dewatering dikes are breached, the original lake level will be restored and permafrost conditions will recover gradually as the lake water level lowers.

There are thermistors currently installed on the lake shore of Whale Tail North Basin. These thermistors will monitor thermal conditions on the shore prior to, during and after operations into post-closure.

There are no thermistors installed on the lake shore of Whale Tail South Basin upstream of the dike. Given the short period of time (three to four years) during which the lake shore in the South Basin will be flooded, the effects on the permafrost will be temporary and limited to the shallow upper portion of the ground. It is not considered necessary to install additional thermistors in that area.

Thermistors on the shore of Whale Tail North Basin will be connected to data loggers for automatic data collection and storage. Data will be reviewed periodically or as-needed, and results will be summarized in annual monitoring reports during operations and for five years after closure.

4 CLOSURE

The Thermal Monitoring Plan presented in this document is intended to constitute a guide for instrumentation and monitoring of the Project facilities to evaluate the effects of mine developments on the thermal regime of the natural ground and relevant site infrastructures.

The instrumentation program at the different facilities will consist primarily of thermistor strings installed horizontally, vertically and at angles as needed. Data obtained from the thermistor strings will constitute the primary source of information for evaluation of changes in the thermal regime of the permafrost basin associated with construction, operations, and closure of the mine facilities.

The actual schedule of instrumentation and quantity, type of instrument, location, depth and length of the thermistor strings to be installed will be defined specifically for each facility based on the mining plan, construction schedule and accessibility to be defined during mine operation. The activities listed in this Plan will be periodically reviewed to reflect the dynamics of site development and operation. Decisions on thermistor installation will be based on the results of the monitoring program, as deemed required for a given area to assess effects on the thermal regime of the ground or facility.

Installation of different types of instrumentation such as vibrating-wire piezometers, monitoring wells and oxygen probes may be considered in the future in areas such as the WRSF if there is a need to better understand the process of water percolation, air-flow convection and heat generation within the pile.

5 REFERENCES

Agnico Eagle (Agnico Eagle Mines Limited). 2016. Final Environmental Impact Statement, Volume 8, Appendix 8-B.2 – Water Management Plan.

Agnico Eagle. 2017. Meadowbank Division, Whale Tail Volume 8, Appendix 8-A.1 Whale Tail Pit – Waste Rock Management Plan. Version 1. January 2017.

Burn, C.R. 2002. Tundra Lakes and Permafrost, Richards Island, Western Arctic coast, Canada. Canadian Journal of Earth Sciences, 39: 1281-1298.

Golder (Golder Associates Ltd.) 2003. Report on Permafrost Thermal Regime Baseline Studies, Meadowbank Project, Nunavut. Golder Project No. 03-1413-078. Prepared for Cumberland Resources Ltd. Submitted 18 December 2003.

Golder 2016a. Westby System Installation Summary – Whale Tail Pit Project, Nunavut. Golder Reference No. 1649355-033-TM-Rev0-4000. Prepared for Agnico Eagle Mines Limited. Submitted 7 July 2016.

Golder. 2017a. Whale Tail Lake Thermal Assessment. Golder Reference No. 1665859-085-TM-Rev0-5100. Prepared for Agnico Eagle Mines Limited. Submitted 22 February 2017.

Golder. 2017b. Commitment 39: Whale Tail Pit Project Waste Rock Storage Facility Cover Thermal Assessment. Golder Reference No. 1774579-124-TM-Rev0-2500. Prepared for Agnico Eagle Mines Limited. Submitted 10 July 2017.

Golder. 2018a. Whale Tail Phase 1, Post-Closure Pit Lake Thermal Assessment. Golder Reference No. 1789810-174-TM-RevA. Draft Technical Memorandum Prepared for Agnico Eagle Mines Limited. Submitted 17 April 2018.

Golder. 2018b. Whale Tail Pit Project Waste Rock Storage Facility Cover Thermal Assessment. Draft for discussion technical memorandum. Golder Reference No. 1789310-177-TM-RevA. Prepared for Agnico Eagle Mines Limited. Submitted 9 April 2018.

Knight Piésold. 2015. Agnico Eagle Mines Ltd.: Meadowbank Division – Whale Tail Pit – Permafrost and Hydrogeological Characterization. Submitted 24 November 2015.

SNC-Lavalin. 2018. Amaruq Whale Tail Dike Detailed Engineering, Report of Thermal Analysis at Whale Tail Dike. Submitted 19 February 2018.

AGNICO EAGLE

APPENDIX A

Subject: Summary of Thermal monitoring at Whale Tail Site from 2015-2018

This document present a summary of the thermal monitoring at the Amaruq project from 2015 to 2018. During that period, thermistor strings were installed around the Amaruq site to support various studies for the construction of the different infrastructures of the project.

A total of 14 boreholes for thermistors were installed between May 2015 and December 2018. 10 of the installation are still functional and continue to be monitored on a bi-weekly basis, either manually or with Dataloggers.

Table 1 present the thermistors installation, their coordinate and their status.

Figure 1 show a plan view of the location of the thermistors installed between May 2015 and December 2018.

Figure 2 to 15 present the thermistors data with a description of the instrument and the thermal results highlights for the active instruments.

Table 1: Permanent and temporary thermistors installation coordinates and status

Name	*Area*	*Easting (X)*	*Northing (Y)*	*Elevation (Z)*	*Azimuth*	*Dip*	*Installed*	*Active (Y) or (N)*
AMQ17-1159	WTD	**607580.20**	**7254827.60**	**152.56**	--	-90	2017	Y
AMQ17-1188	WTD	**607209.90**	**7254681.30**	**151.76**	--	-90	2017	N
Stkd299	WTD	**607689.94**	**7254751.01**	**153.74**	--	-90	2017	Y
MD-02-2015	MD	**605906.10**	**7255094.50**	**152.27**	--	-90	2015	Y
AMQ15-294	WTP	**607073.20**	**7255676.10**	**155.93**	322.67	-45.18	2015	Y
AMQ15-349 A	WTP	**607064.90**	**7255627.50**	**155.30**	204.41	-45.32	2015	N
AMQ15-421	WTP	**607098.30**	**7255490.80**	**155.09**	273.93	-51.31	2015	N
AMQ15-306	WTP	**606714.80**	**7255363.80**	**154.92**	96.30	-45.41	2015	N
AMQ15-324	WTP	**606496.80**	**7254995.20**	**161.79**	323.41	-55.46	2015	Y
AMQ15-452	WTP	**606627.20**	**7255687.90**	**156.16**	159.5	-49.98	2015	Y
AMQ17-1265 A (2)	WTP	**606950.00**	**7255414.00**	**140.00**	196.03	-79.99	2017	Y
AMQ17-1277 A	WTP	**606911.00**	**7255964.00**	**153.00**	193.06	-60.17	2017	Y
AMQ17-1337	IVR	**607078.00**	**7256522.00**	**155.00**	260.37	-59.62	2017	Y
AMQ17-1233	IVR	**606778.00**	**7256254.00**	**162.00**	252.71	-59.06	2017	Y

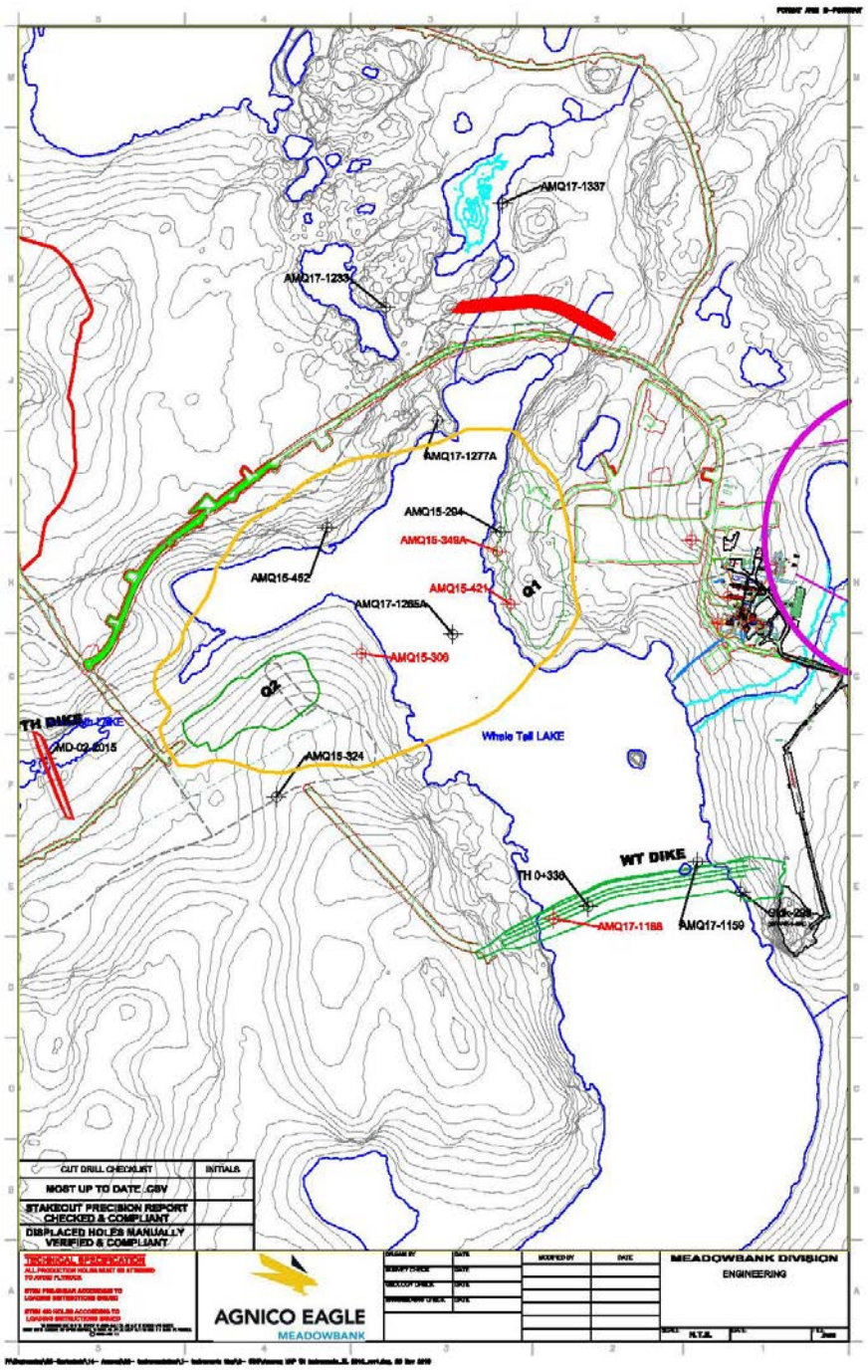

Figure 1: Amaruq Thermistor Location Plan View (active instrument in black)

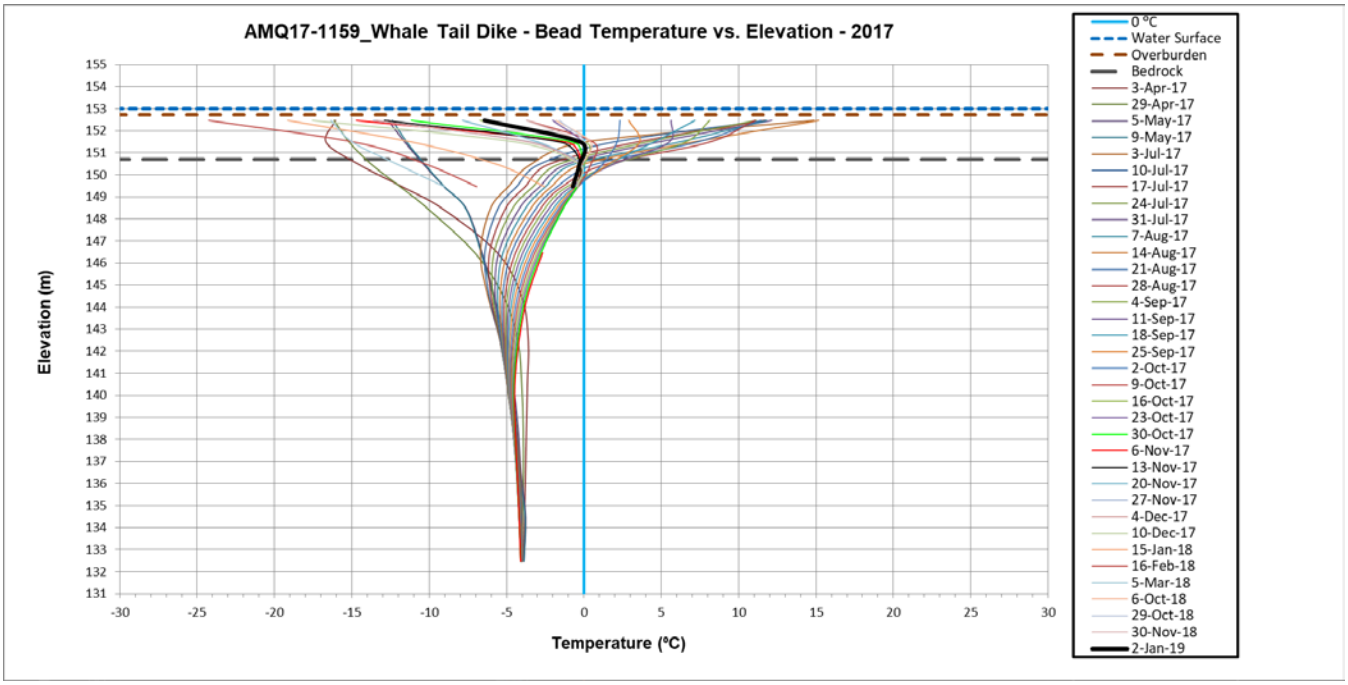

Figure 2: Temperature profile (Celsius) as a function of elevation (masl) from installation to January 2019 for thermistor AMQ17-1159

Location of the instrument:

- In proximity of the east abutment of Whale Tail dike; in shallow water (0.3m).
- Depth : 20.2m

Monitoring objective:

- Thermal condition of the surficial overburden under Whale Tail dike foundation

Thermal results highlights:

- Active layer: 3.2m (from elev. 152.7 to 149.5)
- Depth of zero annual amplitude: 13.7m (from elevation 152.7 to 139)
- Steady permafrost temperature of around -4ºC down to bottom of hole (elev 132.5)
- Geothermal gradient: Thermistor not deep enough to evaluate gradient
- Permafrost thickness: > 17m; Thermistor not deep enough to reach bottom of permafrost layer.

Annual variation in ground temperature: Similar from 2017 to 2018.\

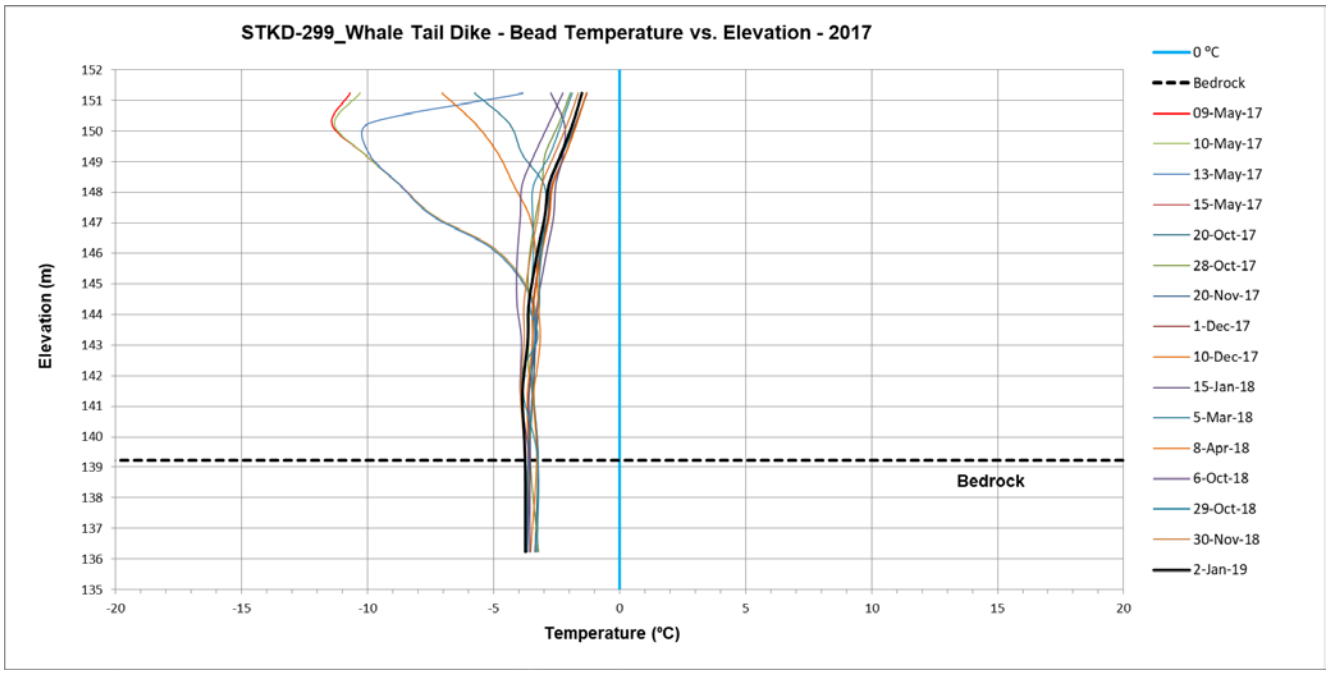

Figure 3: Temperature profile (Celsius) as a function of elevation (masl) from installation to January 2019 for thermistor STKD-299

Location of the instrument:

- In proximity of the east abutment of Whale Tail dike; on the shore.
- Depth : 16.0m

Monitoring objective:

- Thermal condition of the surficial overburden under Whale Tail dike foundation

Thermal results highlights:

- Active layer: Unknown ; Lack of surficial thermistor beads
- Depth of zero annual amplitude: 8.4m (from elevation 152.4 to 144)
- Steady permafrost temperature of around -3.7ºC down to bottom of hole (elev 136.2)
- Geothermal gradient: Thermistor not deep enough to evaluate gradient
- Permafrost thickness: > 15m; Thermistor not deep enough to reach bottom of permafrost layer.
- Annual variation in ground temperature: Similar from 2017 to 2018.

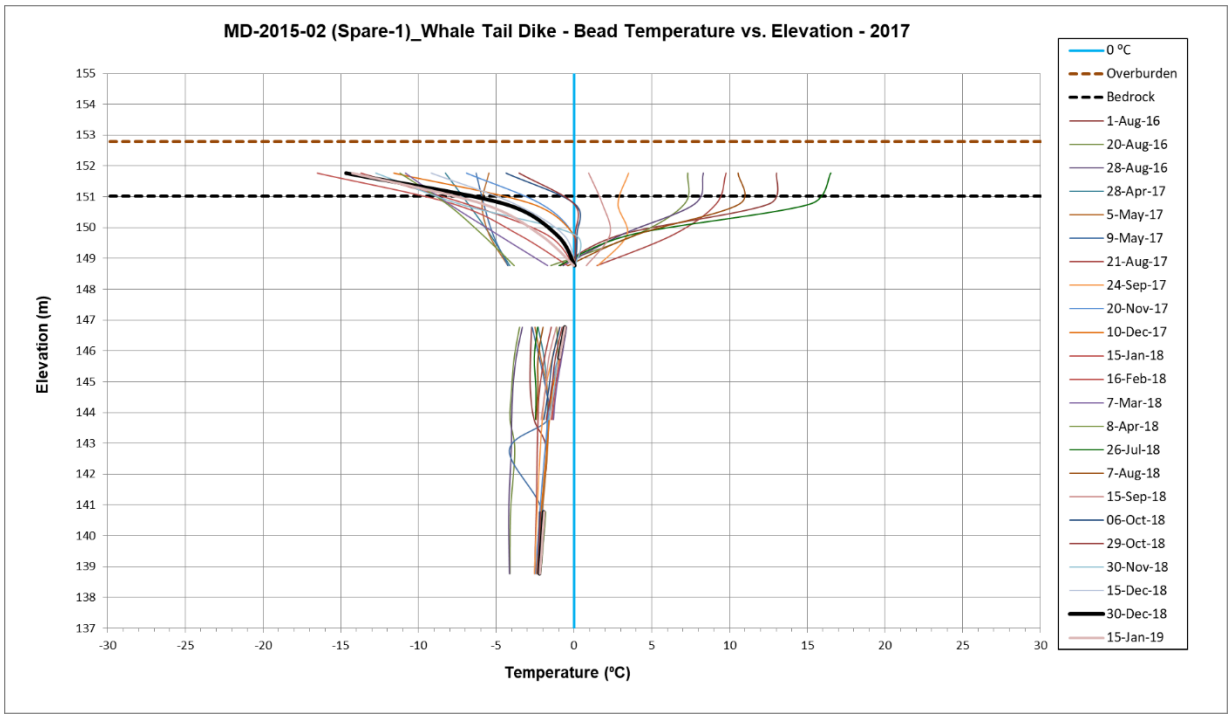

Figure 4: Temperature profile (Celsius) as a function of elevation (masl) from installation to January 2019 for thermistor MD-2015-02

Location of the instrument:

- In proximity of the deepest portion of Mammoth dike; in shallow water (<0.3m).
- Depth : 14.1m

Monitoring objective:

- Thermal condition of the surficial overburden under Mammoth dike foundation

Thermal results highlights:

- Active layer: 4.3m (from elev. 152.8 to 148.5)
- Depth of zero annual amplitude: 11.8m (from elevation 152.8 to 141)
- Steady permafrost temperature of around -2.1ºC down to bottom of hole (elev 138.7)
- Geothermal gradient: Thermistor not deep enough to evaluate gradient
- Permafrost thickness: > 9.8m; Thermistor not deep enough to reach bottom of permafrost layer.
- Annual variation in ground temperature: Similar from 2017 to 2018. 2016 data looks offset by -1 ºC

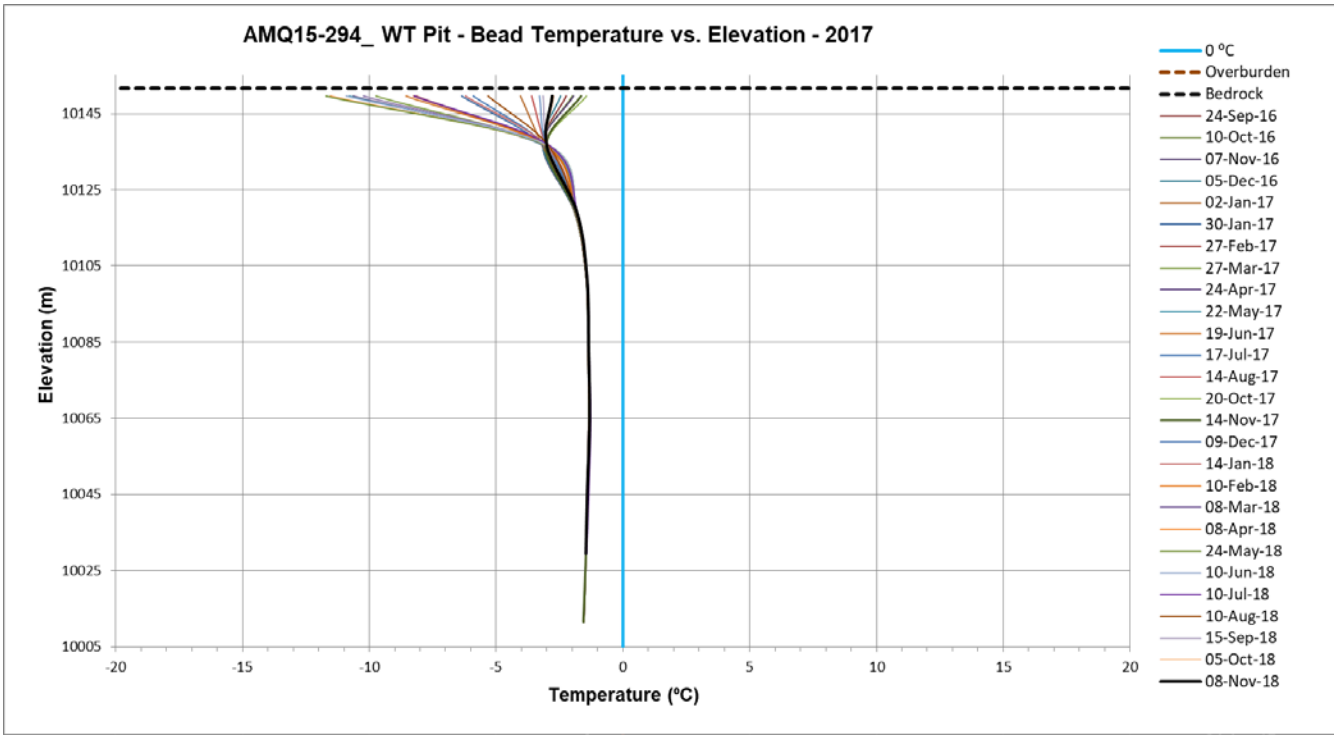

Figure 5: Temperature profile (Celsius) as a function of elevation (masl) from installation to November 2018 for thermistor AMQ15-294

Location of the instrument:

- Within the Whale Tail pit footprint (east wall). On the shore (not the lake).
- Depth : 144.4m

Monitoring objective:

- Thermal condition of the open pit walls (east). Calibration of the global thermal model.

Thermal results highlights:

- Active layer: Unknown ; Lack of surficial thermistor beads (not the objective of the instrument)
- Depth of zero annual amplitude: Unknown ; Lack of surficial thermistor beads (not the objective of the instrument)
- Steady permafrost temperature of around -1.4ºC down to bottom of hole (elev 011.5)
- Geothermal gradient: Thermistor not deep enough to evaluate gradient
- Permafrost thickness: > 140m; Thermistor not deep enough to reach bottom of permafrost layer.
- Annual variation in ground temperature: Similar from 2016 to 2018. Instrument broken as of nov 2018.

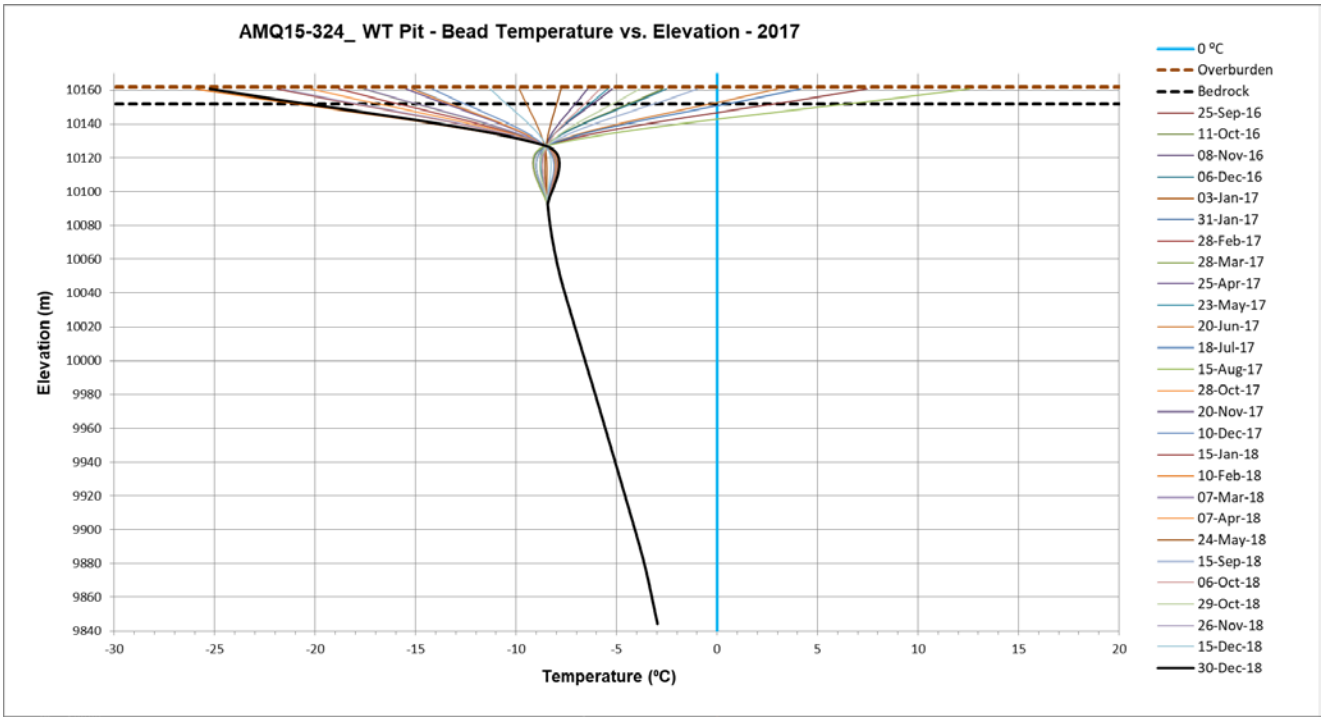

Figure 6: Temperature profile (Celsius) as a function of elevation (masl) from installation to December 2018 for thermistor AMQ15-324

Location of the instrument:

- West of Whale Tail Lake and Whale Tail pit.
- Depth : 317 m

Monitoring objective:

- Thermal condition of deep permafrost (far from talik influence). Calibration of the global thermal model.

Thermal results highlights:

- Active layer: Unknown ; Lack of surficial thermistor beads (not the objective of the instrument)
- Depth of zero annual amplitude: Unknown ; Lack of surficial thermistor beads (not the objective of the instrument)
- Variable permafrost temperature; from -8.0 ºC (ele 056) to -3 ºC (elev -155)
- Geothermal gradient: approximately +0.024ºC/m
- Permafrost thickness: > 315m; Thermistor not deep enough to reach bottom of permafrost layer.
- Annual variation in ground temperature: Similar from 2016 to 2018.

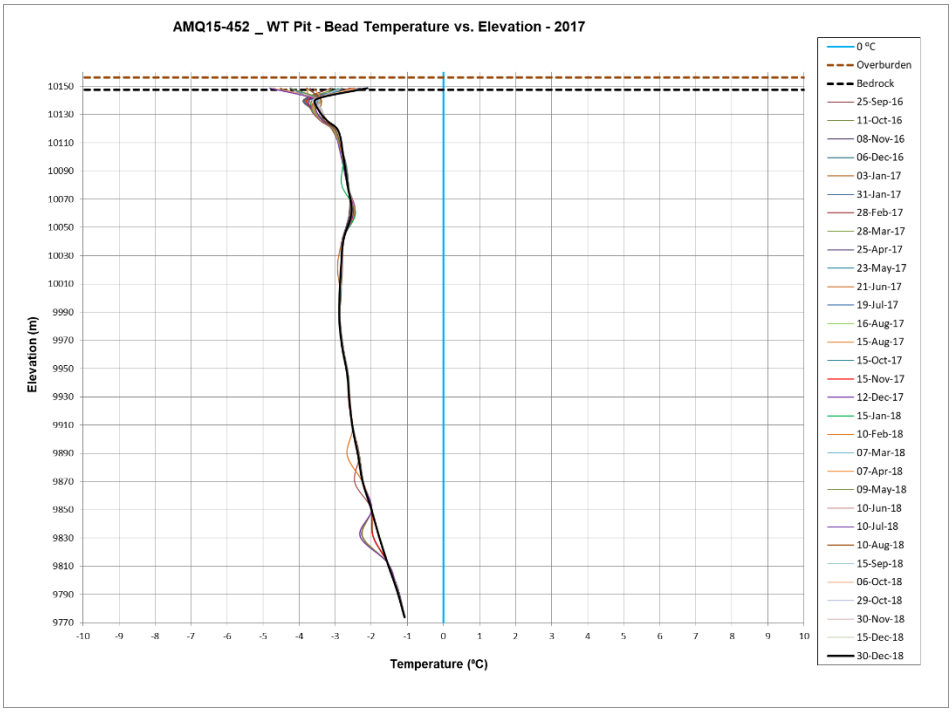

Figure 7: Temperature profile (Celsius) as a function of elevation (masl) from installation to December 2018 for thermistor AMQ15-452

Location of the instrument:

- North of Whale Tail Lake (on the shore); Within Whale Tail pit north walls.
- Depth : 382 m

Monitoring objective:

- Thermal condition of permafrost (near from talik influence). Calibration of the global thermal model.

Thermal results highlights:

- Active layer: Unknown ; Lack of surficial thermistor beads (not the objective of the instrument)
- Depth of zero annual amplitude: Unknown ; Lack of surficial thermistor beads (not the objective of the instrument)
- Variable permafrost temperature; from -2.9 ºC (ele -016) to -1.0 ºC (elev -226)
- Geothermal gradient: approximately +0.009ºC/m
- Permafrost thickness: > 380m; Thermistor not deep enough to reach bottom of permafrost layer.
- Annual variation in ground temperature: Similar from 2016 to 2018.

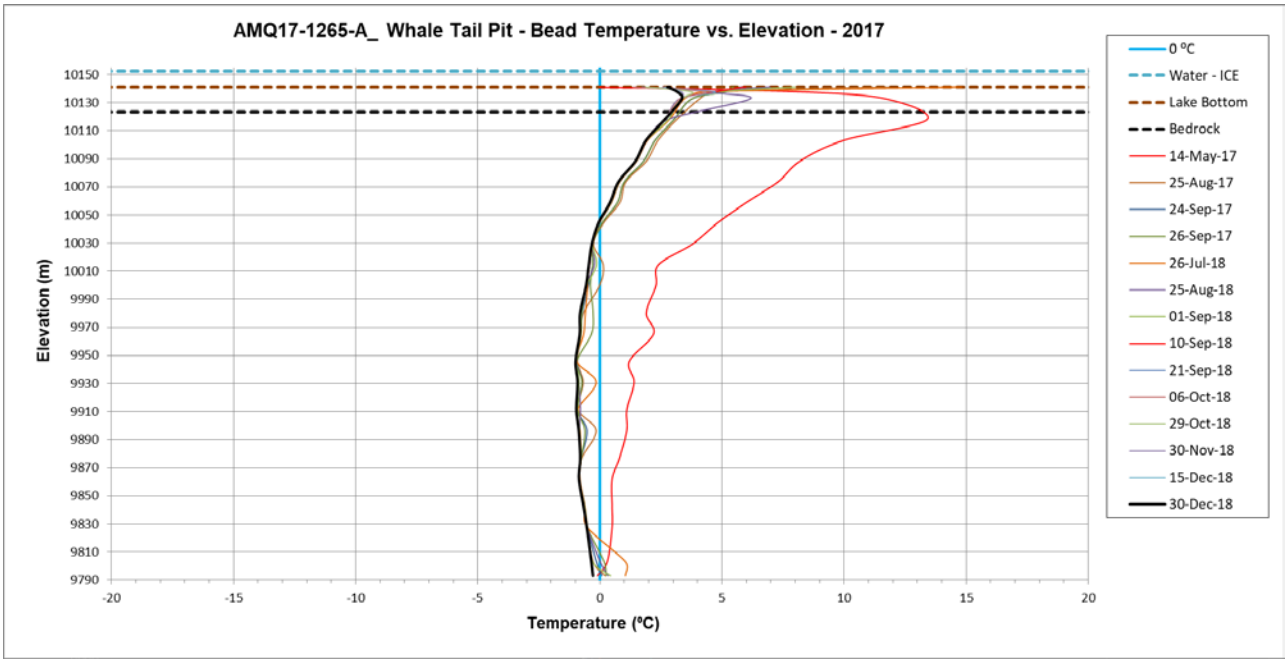

Figure 8: Temperature profile (Celsius) as a function of elevation (masl) from installation to December 2018 for thermistor AMQ17-1265A

Location of the instrument:

- In the middle of Whale Tail Lake (deep portion @ 11m of water);
- Depth : 348 m

Monitoring objective:

- Thermal condition of talik underneath the lake. Calibration of the global thermal model.

Thermal results highlights:

- Active layer: Not applicable – Talik area
- Depth of zero annual amplitude: Not applicable – Talik area
- Depth of talik: 97m (elev 141 to 044)
- Variable permafrost temperature; from -1.0 ºC (ele -055) to -0.3 ºC (elev -207)
- Geothermal gradient: approximately +0.00046ºC/m
- Permafrost thickness: approximately 250m (elev. 044 to -207)
- Annual variation in ground temperature: Similar from 2016 to 2018.

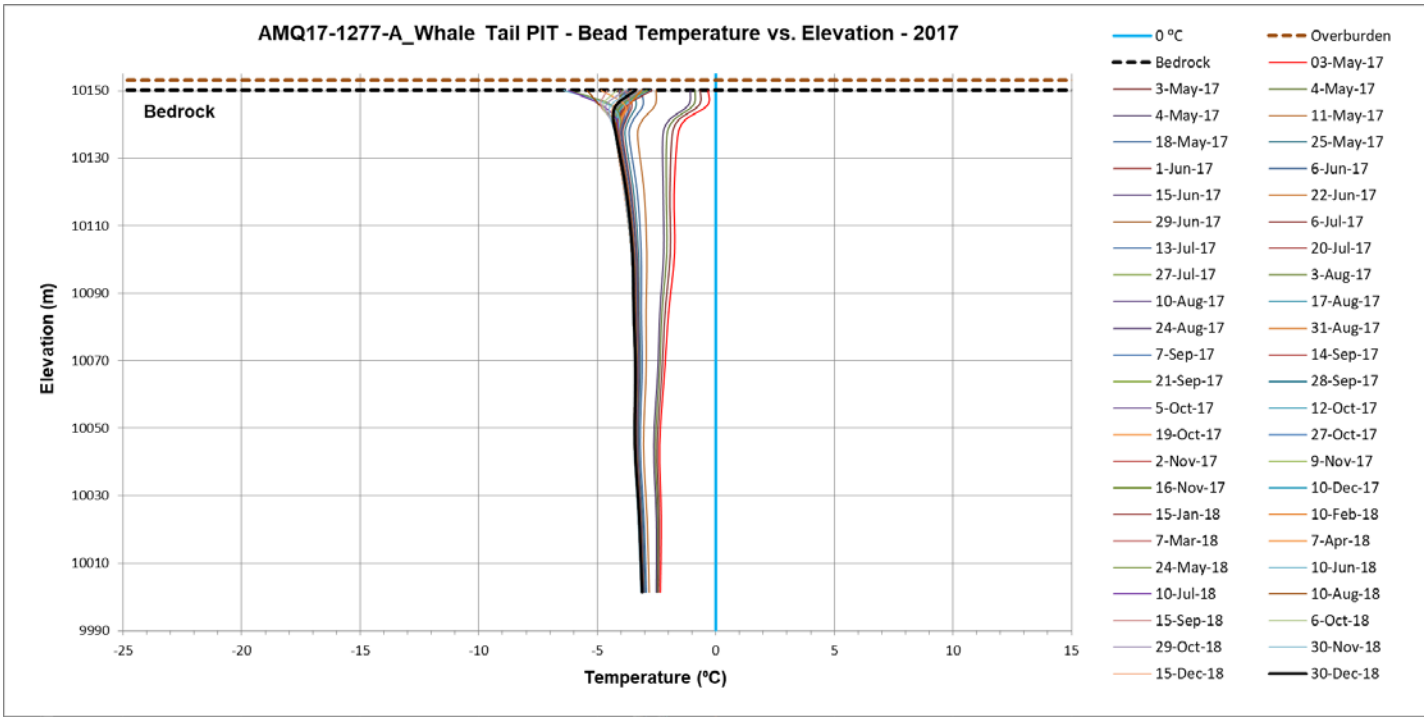

Figure 9: Temperature profile (Celsius) as a function of elevation (masl) from installation to December 2018 for thermistor AMQ17-1277A

Location of the instrument:

- North East of Whale Tail Lake (on the shore); Within the Whale Tail pit footprint
- Depth : 152 m

Monitoring objective:

- Thermal condition of talik underneath the lake. Calibration of the global thermal model.

Thermal results highlights:

- Active layer: Unknown ; Lack of surficial thermistor beads (not the objective of the instrument)
- Depth of zero annual amplitude: Approximately 12m (elev 153 to 141)
- Variable permafrost temperature; from -4.3 ºC (elev 141) to -3.1 ºC (elev 001)
- Geothermal gradient: approximately +0.0086ºC/m
- Permafrost thickness: > 150m; Thermistor not deep enough to reach bottom of permafrost layer.
- Annual variation in ground temperature: Similar from 2017 to 2018. Early 2017 data were under stabilization (post-installation)

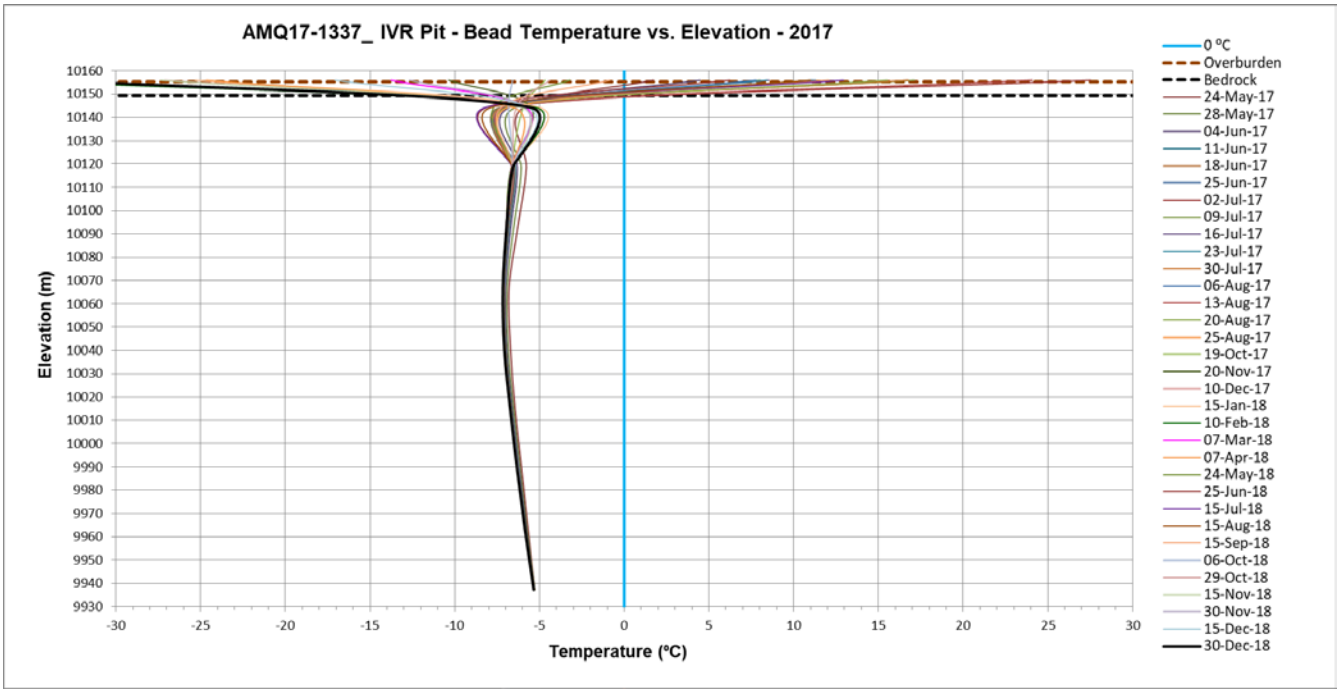

Figure 10: Temperature profile (Celsius) as a function of elevation (masl) from installation to December 2018 for thermistor AMQ17-1337

Location of the instrument:

- Within the IVR pit footprint
- Depth : 218 m

Monitoring objective:

- Thermal condition within the IVR pit area. Calibration of the global thermal model.

Thermal results highlights:

- Active layer: Unknown ; Lack of surficial thermistor beads (not the objective of the instrument)
- Depth of zero annual amplitude: Unknown ; Lack of surficial thermistor beads (not the objective of the instrument)
- Variable permafrost temperature; from -7.1 ºC (elev 040) to -5.3 ºC (elev -063)
- Geothermal gradient: approximately +0.017ºC/m
- Permafrost thickness: > 215m; Thermistor not deep enough to reach bottom of permafrost layer.
- Annual variation in ground temperature: Similar from 2017 to 2018.

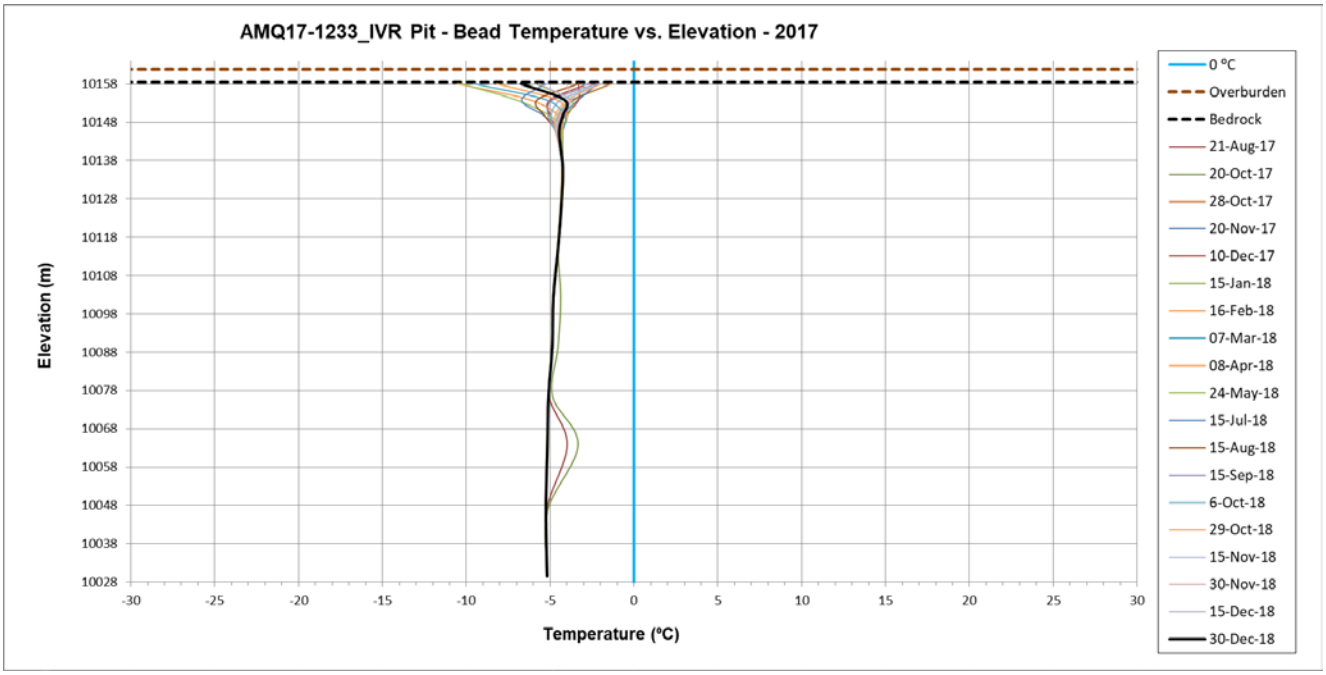

Figure 11: Temperature profile (Celsius) as a function of elevation (masl) from installation to December 2018 for thermistor AMQ17-1233

Location of the instrument:

- Within the IVR pit footprint
- Depth : 132 m

Monitoring objective:

- Thermal condition within the IVR pit area. Calibration of the global thermal model.

Thermal results highlights:

- Active layer: Unknown ; Lack of surficial thermistor beads (not the objective of the instrument)
- Depth of zero annual amplitude: Approximately 25m (from elev 161 to 136)
- Stable permafrost temperature around -5.3 ºC
- Geothermal gradient: Thermistor not deep enough to evaluate gradient
- Permafrost thickness: > 132m; Thermistor not deep enough to reach bottom of permafrost layer.
- Annual variation in ground temperature: Similar from 2017 to 2018.

Non Active thermistors:

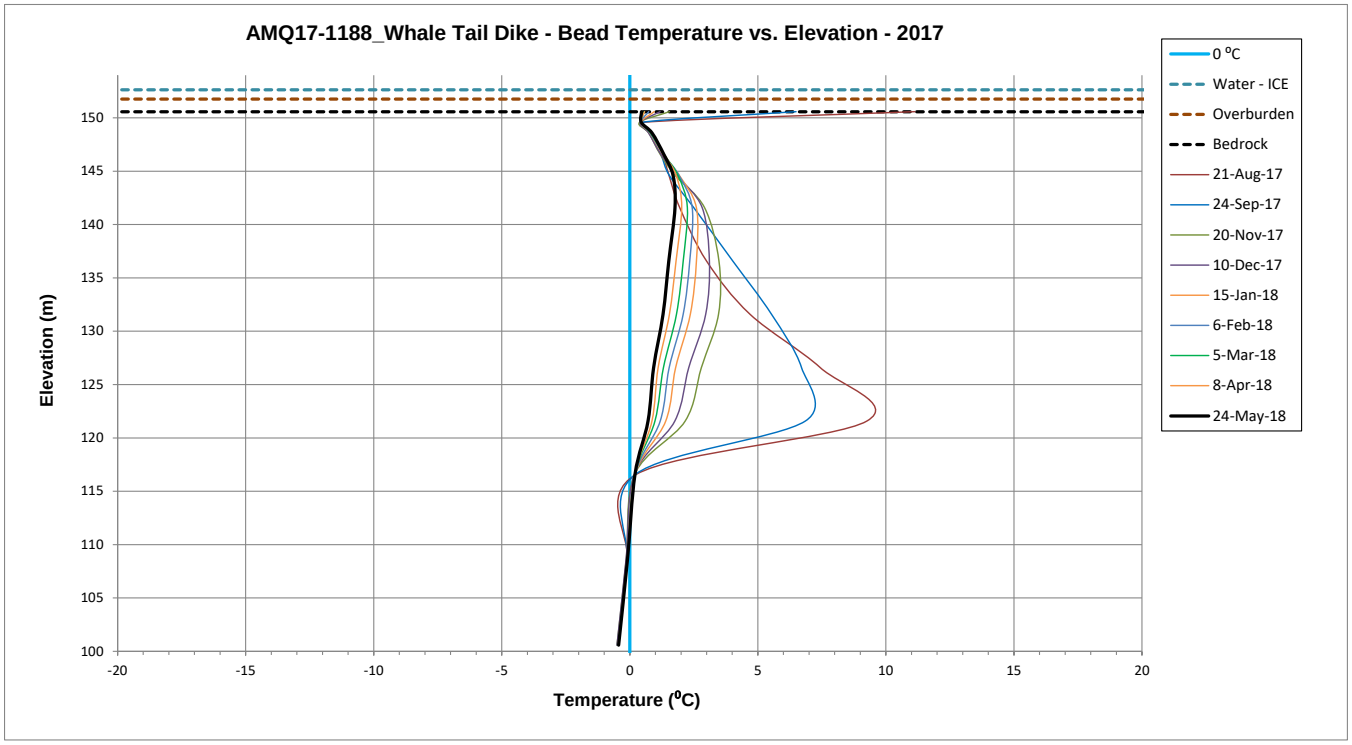

Figure 12: Temperature profile (Celsius) as a function of elevation (masl) from installation to May 2018 for thermistor AMQ17-1188

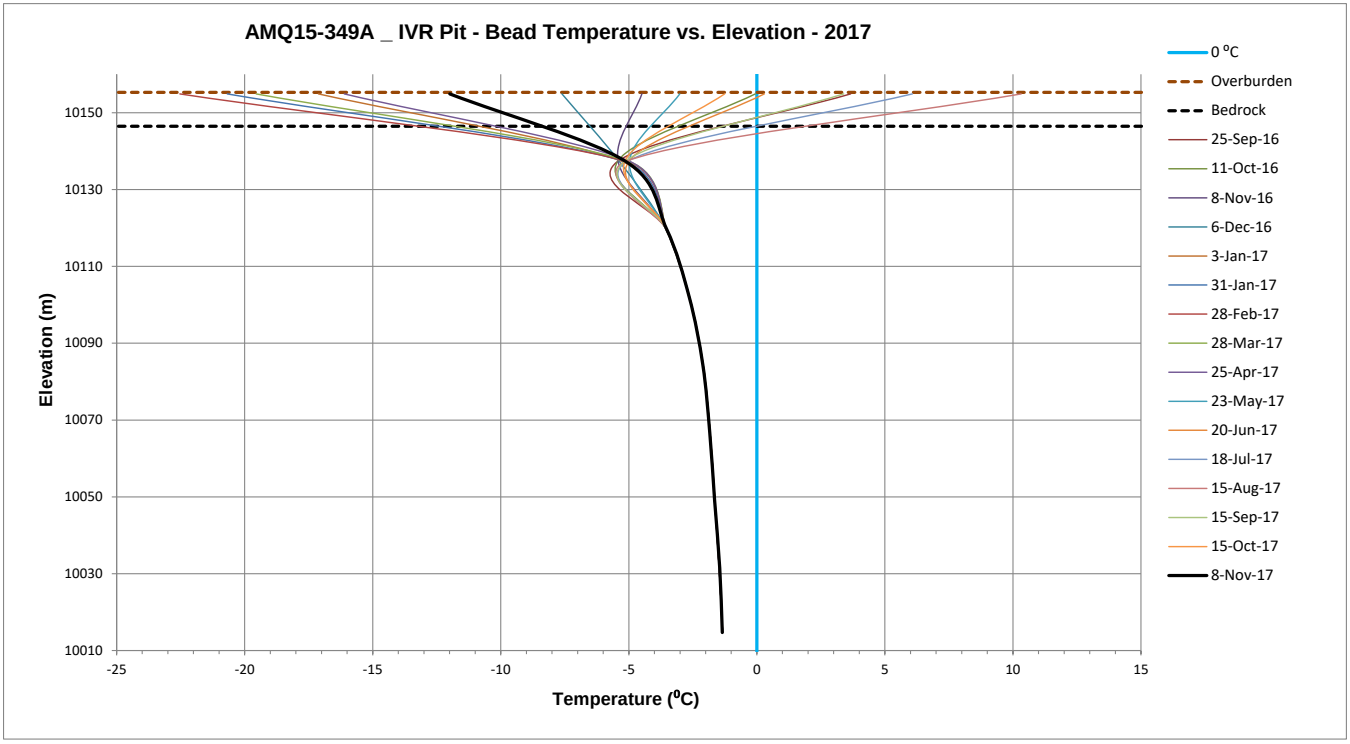

Figure 13: Temperature profile (Celsius) as a function of elevation (masl) from installation to November 2017 for thermistor AMQ15-349A

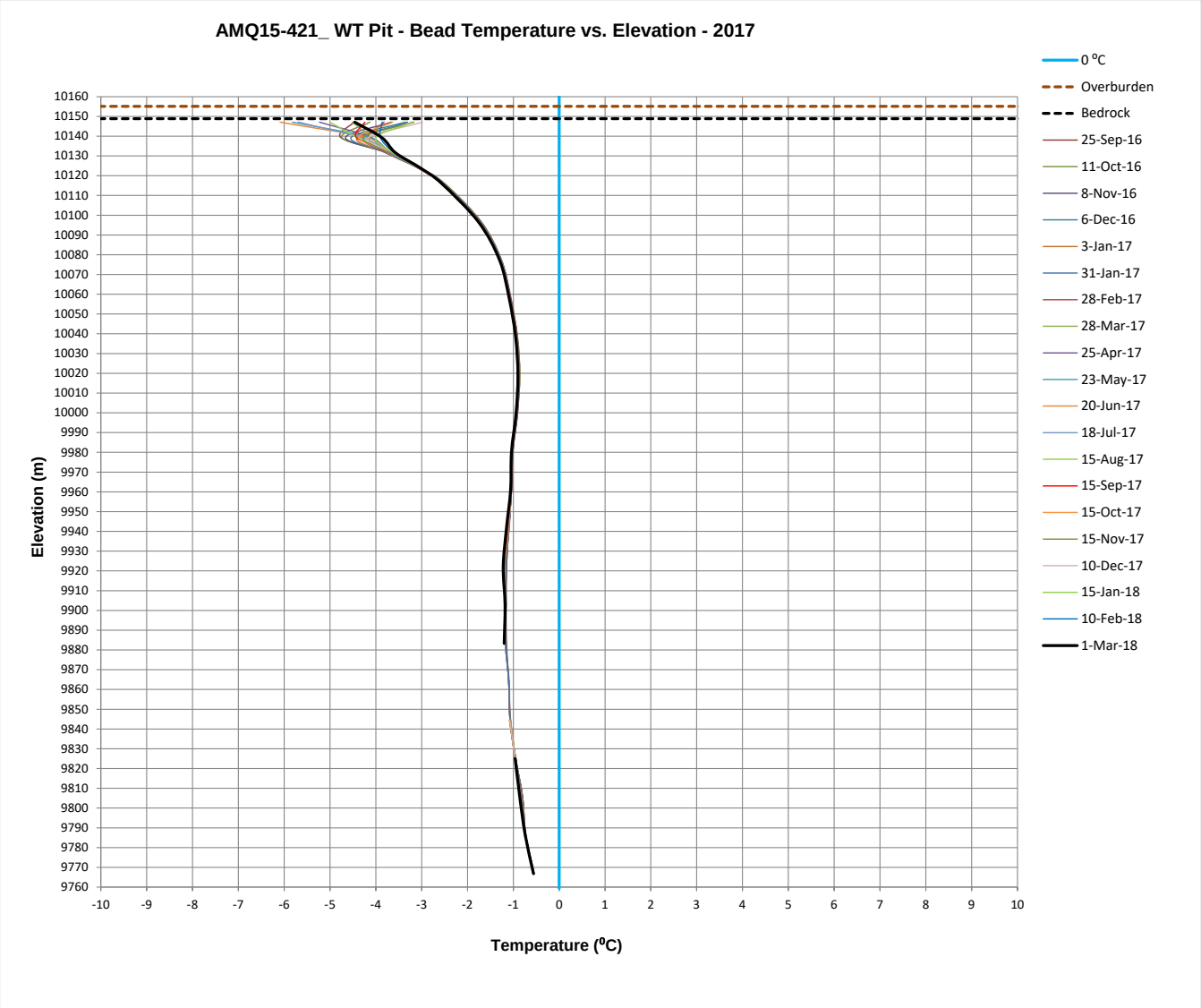

Figure 14: Temperature profile (Celsius) as a function of elevation (masl) from installation to Mars 2018 for thermistor AMQ15-421

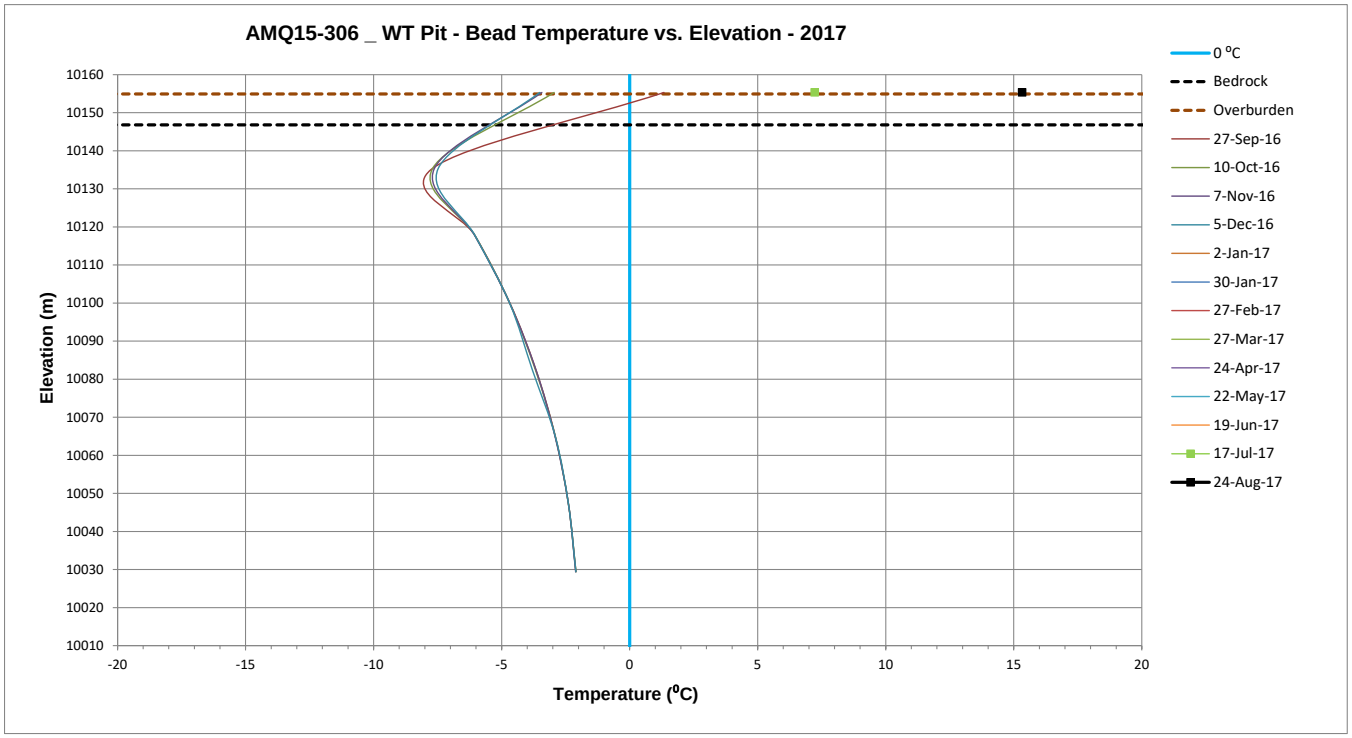

Figure 15: Temperature profile (Celsius) as a function of elevation (masl) from installation to August 2017 for thermistor AMQ15-306

Water Management Infrastructures - Operation, Maintenance and Surveillance Manual, Version 1

AGNICO EAGLE

WHALE TAIL PROJECT

WATER MANAGEMENT INFRASTRUCTURES

Operation, Maintenance and Surveillance Manual

Prepared by:
Agnico Eagle Mines Limited – Meadowbank Division

Version 1
March 2019

AMARUQ DIKES

OPERATION, MAINTENANCE AND

SURVEILLANCE MANUAL

WHALE TAIL PROJECT

AGNICO EAGLE MINES LIMITED

This Operation, Maintenance and Surveillance Manual has been prepared by Agnico Eagle Mines Limited with support from SNC-Lavallin and is to be used for the operation, maintenance and surveillance of Whale Tail water management infrastructures. All Users of this manual are responsible for ensuring that they are using the most recent revision of this document which can be found in Intelex or in paper version in the Engineering Superintendent office at Meadowbank. This Operation, Maintenance and Surveillance Manual, may not be copied in whole or in part without the written consent of Agnico Eagle Mines Limited.

IMPLEMENTATION SCHEDULE

This Plan is immediately implemented.

DISTRIBUTION LIST

AEM- General Mine Manager

AEM- Environment Superintendent

AEM- Mine Operations Superintendent

AEM- Engineering Superintendent

AEM- Energy & Infrastructure Superintendent

AEM – Maintenance Superintendent

AEM- Nunavut Division Engineer of Record

DOCUMENT CONTROL

Version	Date (YMD)	Section	Page	Revision
(Draft Version)	January 2019	All	All	Draft for Comments
1	March 2019	All	All	Final version for issuance

Approved by:

Luc Chouinard
Mine Manager

Pierre McMullen
Engineering Superintendent

TABLE OF CONTENTS

DISTRIBUTION LIST ..... **I**

DOCUMENT CONTROL ..... **II**

LIST OF TABLES ..... **IV**

LIST OF FIGURES ..... **V**

LIST OF APPENDICES ..... **V**

SECTION 1 • INTRODUCTION **1-1**

1.1 Objective of the OMS Manual 1-1
1.2 Control of DOcumented Information 1-1
1.3 management of change 1-2
1.4 Required Levels of Knowledge 1-3
1.5 LINKAGE with Emergency Response plan 1-3

SECTION 2 • ROLES AND RESPONSIBILITIES **2-1**

SECTION 3 • WATER MANAGEMENT INFRASTRUCTURES DESCRIPTION **3-5**

3.1 Whale Tail Dike 3-7
3.1.1 Whale Tail Dike - Design and Construction 3-7
3.2 Mammoth Dike 3-1
3.2.1 Mammoth Dike – Design and Construction 3-1
3.3 WRSF Dike 3-3
3.3.1 WRSF Dike – Design and Construction 3-3
3.4 North-East Dike 3-5
3.4.1 North-East Dike– Design and Construction 3-5
3.5 Attenuation Pond and Pumping Infrastructure 3-1
3.6 instrumentation 3-3

SECTION 4 • DEWATERING **4-5**

4.1 References 4-5
4.2 Summary of Performance Objective and operation control during dewatering 4-6
4.3 Operating Procedure during Whale Tail North Dewatering 4-6

SECTION 5 • OPERATIONS **5-1**

5.1 References 5-1

5.2 Summary of Performance Objective and operation control 5-1
5.2.1 Freeboard 5-3
5.2.2 Seepage Management 5-3
5.3 Water Management 5-4
5.4 Operating Procedure during operation of whale tail water management infrastructure 5-4
5.5 Communication and decision making 5-1

SECTION 6 • MAINTENANCE 6-2

6.1 Preventative, predictive and corrective Maintenance 6-2
6.2 References 6-2
6.3 component of the water management infrastructure requiring maintenance 6-3
6.3.1 Maintenance component that are outside the scope of this OMS manual 6-3
6.4 description of maintenance activities 6-3

SECTION 7 • SURVEILLANCE 7-1

7.1 Reference 7-1
7.2 Site observations and inspections 7-2
7.2.1 Site observation 7-3
7.2.2 Inspection program 7-4
7.2.2.1 Routine Visual Inspection 7-4
7.2.2.1 Special Visual Inspection 7-1
7.2.2.2 Dike Safety Inspection (annual geotechnical inspection) 7-1
7.2.2.3 Independent Dam Safety Review 7-2
7.3 Instrument monitoring program – data acquistion 7-3
7.4 Adding instrument to the monitoring program 7-1
7.5 Analysis of surveillance Results 7-1
7.5.1 Procedure in case of data exceeding expected range of observation 7-1
7.5.1.1 Blast Monitor 7-1
7.5.2 Anomalous Instrumentation Data 7-1
7.6 surveillance documentation & reporting 7-1
7.7 Data Management 7-3

LIST OF TABLES

Table 1-1: OMS Manual Distribution List 1-2
Table 1-2 Emergency Response Reference Documents 1-3
Table 2-1: Responsibilities related to Whale Tail Water Management 2-1
Table 2-2: OMS Manual Contact for each position 2-3
Table 3-1: Description of the water management infrastructure of the Whale Tail Project 3-5
Table 3-2: Reference documents for Whale Tail Dike Design and Construction 3-7
Table 3-3 Design criteria for Whale Tail Dike 3-7
Table 3-4: Reference documents for Mammoth Dike Design and Construction 3-1
Table 3-5: Design Criteria for the Mammoth Dike 3-1
Table 3-6: Reference documents for WRSF Dike Design and Construction 3-3
Table 3-7: Design Criteria for the WRSF Dike 3-3
Table 3-8: Summary of key reference documents for the dikes 3-5
Table 3-9: Design criteria for NE Dike 3-5

Table 3-10: Key reference documents for attenuation pond and pumping infrastructure 3-2
Table 3-11: Characteristic of permanent pumping setup 3-3
Table 3-12: Reference documents for instrumentation 3-4
Table 3-13: Instrumentation summary on the water management infrastructure 3-4
Table 4-1: Reference documents for Dewatering of Whale Tail North 4-5
Table 4-2: Performance objectives and operational criteria during dewatering of Whale Tail North 4-6
Table 4-3: Threshold Criteria and pre-defined action during Dewatering 4-1
Table 5-1: Key reference documents for Operation of Whale Tail water management infrastructure 5-1
Table 5-2: Performance objectives and operational criteria of Whale Tail water management infrastructure 5-2
Table 5-3: Water Elevation During Operation 5-3
Table 5-4: Threshold Criteria and pre-defined action during operation of Whale Tail Dike 5-1
Table 5-5: Threshold Criteria and pre-defined action during operation of Mammoth Dike 5-2
Table 5-6: Threshold Criteria and pre-defined action during operation of WRSF Dike 5-3
Table 5-7: Threshold Criteria and pre-defined action during operation of NE Dike 5-4
Table 5-8: Threshold Criteria and pre-defined action during operation of Attenuation Pond and Pumping Infrastructure 5-5
Table 6-1: Reference documents for Maintenance of Whale Tail water management infrastructure 6-2
Table 6-2: Component of the water management infrastructure requiring maintenance 6-3
Table 6-3 :Description of maintenance activity for component of water management infrastructure 6-1
Table 7-1: Key reference documents for Inspection of Whale Tail water management infrastructure 7-1
Table 7-2: Reference documents for Instrument monitoring of Whale Tail water management infrastructure 7-2
Table 7-3: Changes that may be observed through site observation and inspection of Whale Tail water management infrastructure 7-3
Table 7-4 : Summary of routine inspection requirements 7-1
Table 7-5: Information collected using instrument monitoring 7-3
Table 7-6: Summaries of data acquisition program related to instrument monitoring of Whale Tail water management infrastructure 7-1
Table 7-7 :Requirement for review, analyses and reporting of instrument data 7-2
Table 7-8: Example of anomalous data and some common cause 7-2
Table 7-9: How data should be presented in report for instrumentation monitoring 7-2

LIST OF FIGURES

Figure 2-1: Organizational structure 2-1
Figure 3-1: Site plan. 3-6
Figure 3-2 :Attenuation Pond and Pumping Infrastructure Layout 3-1
Figure 5-1: Flow Diagram of the Water Management Infrastructures (2019-2022) 5-4
Figure 5-2: Communication and Decision Process for Water Management Infrastructure TARP 5-1

LIST OF APPENDICES

Appendix A: Visual Inspection Forms
Appendix B: Potential mitigation for upset condition

SECTION 1 • INTRODUCTION

1.1 OBJECTIVE OF THE OMS MANUAL

The objective of this manual is to define the technical aspect related to the operation, maintenance and surveillance (OMS) of the water management infrastructure at the Whale Tail Pit Project operated by Agnico Eagle Mines Limited (AEM), Meadowbank Division.

This manual is intended as a practical document used by the personnel involved in with the Whale Tail Project water management infrastructure. It incorporates operating, maintenance and surveillance procedures recommended by the Canadian Dam Association (CDA) “Dam Safety Guidelines” (CDA 2013 & 2014) and the Mining Association of Canada (MAC) “Developing an Operation, Maintenance and Surveillance Manual for Tailings and Water Management Facilities” (MAC, 2018). This manual was written by the Meadowbank Engineering team with the support of SNC-Lavalin and the Nunavut Engineer of Record.

The objectives of this OMS manual are to define and describe:

- Roles, responsibilities, and level of authority of personnel who perform activities related to the water management infrastructure
- The water management infrastructure covered in the scope of this OMS manual
- Plans, procedures and processes for :
    - The operation, maintenance and surveillance of the Whale Tail Project water management infrastructures to ensure that it functions in accordance with their design, meets performance objectives and link to emergency response planning
    - Evaluating performance of the structures, and report performance results
    - Managing change

This manual contains protocols and information that will assist AEM to operate, maintain, and monitor the water management infrastructure in a safe manner and identify early signs of malfunction.

Element related to design, construction and closure of water management infrastructures, infrastructures related to management of underground water and to water treatment are out of scope of this manual.

1.2 CONTROL OF DOCUMENTED INFORMATION

This OMS manual is a controlled document. The latest version of this document is available in Intelex.

The person responsible for the preparation, update and distribution of this manual is the Engineering Superintendent. Any change to this OMS manual must be submitted to and approved by the Engineering Superintendent who will be responsible to update the OMS manual in Intelex.

It is each user responsibility to ensure that they are using the latest version of this document. In case of issue with retrieving the electronic version of this document, the most up to date paper version of this document will always be kept in the Engineering Superintendent Office.

The Engineering Superintendent is responsible to communicate any change to this manual by e-mail to the distribution list in Table 1-1. The Engineering Superintendent is responsible for maintaining an up-to-date distribution list of this manual.

Table 1-1: OMS Manual Distribution List

Position	Name
General Mine Manager	Luc Chouinard
General Superintendant	Eric Côté / Jacques Proulx
Environment Superintendent	Nancy Duquet-Harvey
Mine Operations Superintendent	Yan Côté, Nicolas P. Deschamps (asst.)
Engineering Superintendent	Pierre McMullen, Miles Legault (asst.)
Maintenance Superintendant	Christian Quirion
Energy & Infrastructures Superintendent	Guillaume Gemme
Engineer of Record, Meadowbank Division	Thomas Lepine

1.3 MANAGEMENT OF CHANGE

This manual will be reviewed on an annual basis at the beginning of Q3 and revised as necessary to accommodate changes in the condition and operation of the facilities. The Engineering Superintendent will be responsible to coordinate this review process.

In conducting the review and update of the OMS manual the following must be taken into account:

- Performance of the structure
- Current life cycle of the structure
- Change since the last review (site condition, critical control, risk profile, personnel, methodology and technology for OMS activities)

In addition to the annually scheduled review, a review may be triggered by a significant event or may need to be updated in response to:

- Planned changes, such as change in surveillance instrumentation or methodologies, or introduction of new instrumentation methodology
- Changes in personnel or roles referred to in the OMS manual
- Other changes that may occur that need to be addressed prior to the next scheduled review of the OMS manual

The update need to be completed in a timely manner following the document control criteria specified in Section 1.2.

As a good practice the Engineering Superintendent should organise on a yearly basis a session to present the change in the OMS manual to the person in its distribution list.

1.4 REQUIRED LEVELS OF KNOWLEDGE

To preserve the integrity of the operation of these structures, the personnel must have a good comprehension of the factor that can impact the performance of the water management infrastructures. It must also be know that any deviation can signify the emergence of a problem and the role that each person must have in the operation, maintenance and surveillance of these infrastructures.

It is the responsibility of each person in the distribution list of this manual to be familiar with it and understand its whole content. They also need to ensure that everyone under their supervision who's duty involve task related to the operation, maintenance or surveillance of any component of the water management infrastructures have the appropriate level of knowledge and the resources to comply with the protocol presented in this document.

1.5 LINKAGE WITH EMERGENCY RESPONSE PLAN

An emergency is a situation that poses an impending or immediate risk to health, life, property, or the environment and which requires urgent intervention to prevent or limit the expected outcome.

This OMS manual address conditions related to operation under normal or upset conditions, as opposed to emergency situation. An Emergency Response Plan (ERP) describes measures the Owner and, in some cases, external parties will take to prepare for an emergency, and to respond if an emergency occurs.

An OMS and ERP manual must be aligned, as a result this OMS manual contains the following information (refer to Section 4 and 5):

- Performance, occurrences, or observation that would results in an emergency being declared
- Roles and responsibilities of key personnel in transition from normal or upset conditions to an emergency
- Actions to be taken to transition from normal or upset conditions to an emergency situation

Once an emergency has been declared reference must be made to the Emergency Response Plan (Reference included in Table 1-2). The most recent version of the ERP can be found on Intelex and in the Engineering Superintendent Office

Table 1-2 Emergency Response Reference Documents

Document	Current Revision
Emergency Response Plan	Updated by AEM. Version 12, January 2018. (Intelex)

SECTION 2 • ROLES AND RESPONSIBILITIES

A functional chart for the water management infrastructure at the Whale Tail project is shown in Figure 2-1.

The roles and responsibilities of the key personnel involved in the water management infrastructure of the Whale Tail Project are shown in Table 2-1. Contact information for each position is indicated in Table 2-2.

Personnel who have task directly related to the water management infrastructure need to receive training when they start in the position to ensure they understand their roles and responsibility related to this OMS manual.

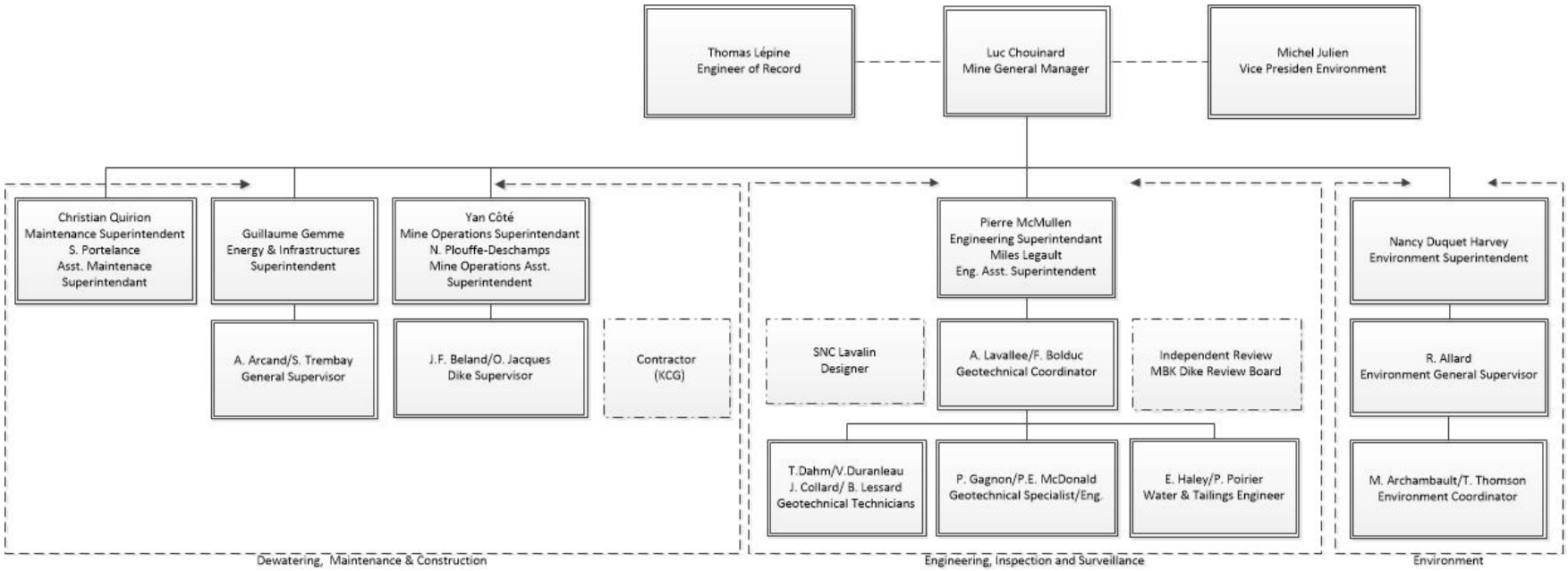

Figure 2-1: Organizational structure

Table 2-1: Responsibilities related to Whale Tail Water Management

Role	Responsibilities
Vice-President Environment	• Be aware of key outcome of water management risk assessment and how these risks are being managed • Has accountability and responsibility for putting in place appropriate management structure • Assign responsibility and appropriate budgetary authority for water management and defines the personnel duties, responsibility and reporting relationships, supported by job description and organisational charts to implements the water management system though all stages in the facility life cycles • Provide assurance to AEM and its Community of Interest that the water management infrastructure are managed responsibly
General Mine Manager	• Identifies the scope of work and budget requirement for all aspect of water management • Approve budget for OMS related activity • Establish an organisational structure with Roles and Responsibility that meets the operational needs • Delegate specific tasks and responsibilities for water management to qualified personnel • Liaise with independent reviewer (MDRB) as required
Engineer of Record (EoR)	• Input into the OMS activities in accordance with the design • Receive and review the OMS manual on a regular basis • Receive and review dewatering performance data at a frequency determined based on the risks • Either confirm operation is compliant or identify deviations from performance objectives and advise the Owner with recommendations • Advise on contemplated change on the structure operation • Maintain records relating to design construction and operation • Participate in inspection and independent review
Independent Reviewer – Meadowbank Dike Review Board (MDRB)	• Provide independent, objective, expert commentary, advice and recommendations, to assist in identifying, understanding, and managing risk associated with water management facilities
Engineering Superintendent	• Revise and update the OMS Manual to reflect as-built conditions and any other changes. • Review and update OMS manual into Intelex • Maintain up to date distribution list of the OMS Manual. • Establish a formal relationship with the EOR to ensure operation is compliant with design intent • Identify when/where contemplated operational changes are a potential deviation from the design intent and engage the EoR and Designer as part of processes to manage change

Role	Responsibilities
	• Coordinate work force as required for monitoring and maintenance.
Mine Operations Superintendent / Dike Supervisor	• Maintain access to the structure and seepage collection systems, including making road repairs, controlling dust and removing snow. • Carry out field maintenance related to earthwork as required, • Supervise Mine Contractor for aspect related to earthwork construction and maintenance
Geotechnical Coordinator	• Supervise the work of the geotechnical engineer, geotechnical technician and water and tailings engineer
Geotechnical Engineer	• Carry out inspections of the structures as required in the OMS Manual. • Carry out instrument monitoring as required in the OMS Manual. • Review and analyse surveillance data to evaluate dike performance with respect to design parameters. • Review and distribute surveillance reporting as required in the OMS Manual • Analyse geotechnical instrumentation monitoring data to evaluate dike performance with respect to design parameters
Geotechnical Technician	• Carry out inspections of the structures as required in the OMS Manual. • Monitor instrumentation as required in the OMS Manual. • Maintain instrumentation, readout units, data acquisition system and cabins • Responsible for data acquisition as required in the OMS manual • Prepare reports on instrumentation readings, dike performance, visual observations, etc. as required in the OMS Manual.
Water & Tailings Engineer	• Carry out inspections of the structures as required in the OMS Manual. • Carry out instrument monitoring as required in the OMS Manual. • Coordinate equipment, labour, materials and maintenance activities required for pumps and pipelines associated with dewatering, seepage collection systems and any runoff diversions. • Prepare reports on instrumentation readings, dike performance, visual observations, etc. as required in the OMS Manual.
Environment Department Superintendent / General Supervisor / Coordinator / Technician	• Ensure monitoring of water quality and total suspended solids as required in the water management plan • Review environmental monitoring data for compliance with Water License and regulations and to determine dike performance with respect to design parameters. • Liaise with external stakeholders including NIRB, Nunavut Water Board, NGO's, government agencies.

Role	Responsibilities
Energy & Infrastructures Superintendent / General Supervisor / Pump crew supervisor / electrical supervisor	• Installation and operation of pumps and pipeline (electrical, mechanical) • Maintain and service pumps and pipelines • Coordinate equipment, labour and materials for maintenance of electrical and mechanical equipment • Carry out field operations including pumping. • Carry out field maintenance on pumps and pipeline including electrical and mechanical repairs.
Mine Contractor	• Rent equipment and manpower for construction and maintenance of water management infrastructure
Design Engineer	• Advise on contemplated change to the structure design • Advisor on structure performance as required • Participate in inspection and independent review as required
Maintenance Superintendent/ Pump mechanics	• Ensure preventive maintenance is carried out regularly on each pumping equipment • Repair pumping equipment as required • Update and maintain a list of operational pumping equipment • Keep records of maintenance on pumping equipment

Table 2-2: OMS Manual Contact for each position

Role	Name	Work Contact Info
Vice-President Environment	Michel Julien	michel.julien@agnicoeagle.com 416-947-1212 x3738 514-244-5876
General Mine Manager	Luc Chouinard	819-759-3555 x4606896
Engineer of Record (EoR)	Thomas Lepine	thomas.lepine@agnicoeagle.com 416-947-1212 x3722 418-473-8077
Engineering Superintendent / Assistant	Pierre McMullen Miles Legault	819-759-3555 x4606721
Mine Operations Superintendent / Assistant	Yan Côté Nicolas Plouffe-Deschamps	819-759-3555 x4606832
Dike Supervisor	Jean-François Béland Olivier jacques	819-759-3555 x4606807
Geotechnical Coordinator	Frédérick L.Bolduc	819-759-3555 x4606837

Role	Name	Work Contact Info
	Alexandre Lavallée	
Geotechnical Engineer	Patrice Gagnon Pier-Eric McDonald	819-759-3555 x4606726
Geotechnical Technician	Vincent Duranleau Thomas Dahm Bruno Lessard Jerome Collard.	819-759-3555 x4606818 819-759-3555 x4606851
Water & Tailings Engineer	Eric Haley Pascal Poirier	819-759-3555 x4606752
Environment Superintendent	Nancy Duquette	819-759-3555 x4606980 x3175
Environment General Supervisor	Robin Allard	819-759-3555 x4606838
Environment Coordinator	Martin Archambault Tom Thomson	819-759-3555 x4606744
Energy & Infrastructures Superintendent	Guillaume Gemme	819-759-3555 x4606632
Maintenance Superintendent	Pierre Laberge Sylvain Portelance	819-759-3555 x4606722
Energy & Infrastructure General Supervisor	Alexandre Arcand Steven Tremblay	819-759-3555 x4606822
Pump crew supervisor	Shawn Valiquette	819-759-3555 x4606616
Electrical Supervisor	Alain Villeneuve	819-759-3555 x4606762
Mine Contractor	KCG	819-759-3555 x4606963 418-615-0559
Designer – SNC Lavalin	Yohan Jalbert	418-621-5500
Independent Reviewer – Meadowbank Dike Review Board (MDRB)	• Anthony Rattue • Don Hayley	anthony.rattue@bell.net don.hayley@icloud.com

SECTION 3 • WATER MANAGEMENT INFRASTRUCTURES DESCRIPTION

The Whale Tail Project is a deposit on the Amaruq property which is a satellite operation to the Meadowbank Mine. The Amaruq property is a 408 km² site located on Inuit Owned Land, approximately 150 km north of the Hamlet of Baker Lake and approximately 50 km northwest of the Meadowbank Mine in the Kivalliq region of Nunavut. A description of the physical conditions of the site, as well as a geological and geotechnical conditions can be found in the design document of each structure referred to in this section.

The Whale Tail Project includes the construction and operation of a series of water management infrastructure as shown in Figure 3-1. Table 3-1 indicate the water management infrastructure of the Whale Tail Project

Table 3-1: Description of the water management infrastructure of the Whale Tail Project

Infrastructure	Function
Whale Tail Dike	Non-contact water retention and dewatering structure. WTD isolates the Whale Tail pit mining activities from Whale Tail Lake
Mammoth Dike	Non-contact water retentions structure. Isolates the Whale Tail pit mining activities from Mammoth Lake
WRSF Dike	Contact water retention structure. Prevents contact water from snow melt and runoff from direct precipitation on the waste rock stockpile from reporting into Mammoth Lake by storing it in the WRSF pond
WRSF Pond and pumping infrastructure	Pond formed by the WRSF Dike. It stores contact water which is pumped to the attenuation pond
North-East Dike (NE)	Non-contact water retention structure. Prevents runoff from the watershed behind it from reporting into the Whale Tail Pit by accumulating the water in the NE pond
NE Pond and pumping infrastructure	Pond formed by the NE dike. It stores non-contact water which is discharged to the environment or to the attenuation pond based on water quality
Attenuation Pond and pumping infrastructure	Pond formed by the dewatering of the Whale Tail North basin. It stores contact water which is pump to a water treatment plant (WTP) and then discharged through an approved diffuser

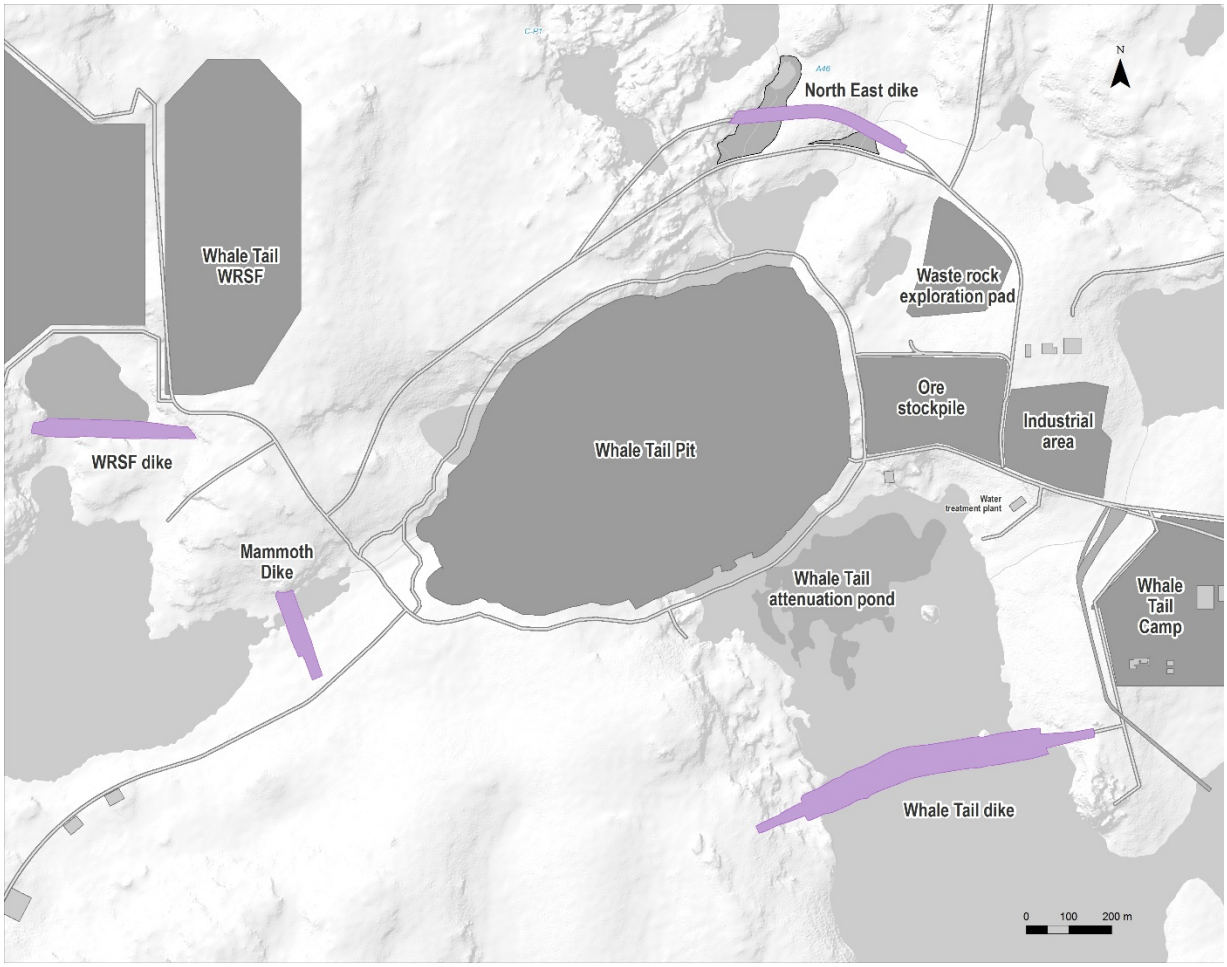

Figure 3-1: Site Plan and Water Management Infrastructure Location

3.1 WHALE TAIL DIKE

Whale Tail Dike (WTD) is a structure to isolate the Whale Tail Pit from Whale Tail Lake. WTD is located on a shallow plateau of the lake floor with an approximate 2 m depth of water. This plateau is located between deeper sections of the lake with water depths of about 12 m.

The downstream side of the dike will be dewatered and the upstream side of the dike will allow a 3.5 m raise of the water level at which time discharge will occur through the South Whale Tail Diversion Channel (SWTDC).

3.1.1 Whale Tail Dike - Design and Construction

Reference to key document for the design and construction of Whale Tail Dike are presented in Table 3-2. Table 3-3 summarise the main design criteria of WTD.

Table 3-2: Reference documents for Whale Tail Dike Design and Construction

Dike	Type of Information	Reference Document	Link to retrieve document
Whale Tail Dike	Design Report	Design Report of Whale Tail Dike (SNC, 2018) 6118-E-132-002-TCR-007_651298-2700-4GER-0001_01	..\..\1 – Whale Tale Dike\2- Detailed Engineering\3- Deliverable\1-Design Report\2- Design Report\6118-E-132-002-TCR-007_651298-2700-4GER-0001_00.pdf
	Drawings	Design Report of Whale Tail Dike (SNC, 2018) 651298-2500-4GDD-0000 to 0011	..\..\1 – Whale Tale Dike\2- Detailed Engineering\3- Deliverable\3-Drawings\Final\WTD Final Drawing_Combined.pdf
	Technical Specifications	Technical Specifications for the Construction of Whale Tail Dike (SNC, 2018) 6118-E-132-002-SPT-001_651298-2400-40EF-0001-00	..\..\1 – Whale Tale Dike\2- Detailed Engineering\3- Deliverable\2-Specification\6118-E-132-002-SPT-001_651298-2400-40EF-0001-00_WTD Technical Specs.pdf
	As-built (to come 90 days after end of construction)	NA	NA

Table 3-3 Design criteria for Whale Tail Dike

Use	Water type	Classification (CDA, 2013)	Inflow Design Flood	Water Level (m)		Crest Elevation (m)
				Normal	Design Flood	
Water Retention / Dewatering	Non-contact	High	1/3 between 1000-year and PMF[1]	156.0	157.0	159.0
Note 1: PMF means Probable Maximum Flood						

The construction of Whale Tail Dike started on July 2018 and ended on February 2019. This structure is a zoned rockfill dike with a core composed of a dynamically compacted fine filter. The low permeability element of this structure is a cement-bentonite (CB) cutoff wall consisting of secant piles drilled through the densified fine filter core.

The main highlight of the dike construction are summarised below:

- The South Whale Tail Diversion Channel will reroute the water accumulation on the upstream of the dike. This channel is designed with the same design flood as for Whale Tail Dike and will be built before freshet 2020;
- The dike is made of NPAG and NML material;
- The cutoff wall was constructed through a central zone of granular material referred to as the fine filter zone. A coarse filter zone is provided between the fine filter and the end dumped upstream and downstream rockfill zones;
- At the west abutment, the WTD alignment crosses an esker which extends well below lake level and contained a frozen core. The esker was excavated to about elevation 153 m. below that elevation, a key trench to the bedrock was progressively excavated in the thawed esker to expose its surface. At the east abutment, the strategy the active layer was removed during the summer season in order to reduce expected settlement and the impact of thaw settlement;
- The foundation preparation within the lake section of the key trench of WTD consisted of underwater excavation of the lakebed soils to the bedrock surface;
- A grout curtain was installed where the bedrock was in unfrozen condition. The grout holes were carried out from the crest at a 0.7 m upstream offset from the secant pile wall;

3.2 MAMMOTH DIKE

Mammoth Dike is a water retaining infrastructure built to isolate the Whale Tail Pit from Mammoth Lake. Mammoth Lake receives water from Whale Tail Lake through the SWTDC, treated water from the Attenuation Pond and from the North-East Sector. Mammoth dike is located across the northeast finger of the Mammoth Lake.

3.2.1 Mammoth Dike – Design and Construction

Reference to key document for the design and construction of Mammoth Dike are presented in Table 3-4. Table 3-5 summarise the main design criteria of Mammoth Dike.

Table 3-4: Reference documents for Mammoth Dike Design and Construction

Dike	Type of Information	Document Reference	Link to Retrieve Document
Mammoth Dike	Design Report	Design Report of Mammoth Dike (SNC, 2018) 6118-E-132-002-TCR-015_651298-5000-40ER-0001_01	..\..\2- Mammoth Dike\2- Detailed Engineering\3-Reporting\1-Design Report\6118-E-132-002-TCR-015_651298-5000-40ER-0001_00-Mammoth Dike Detailed Design Final_Rev 00.pdf
	Drawings	Design Report of Mammoth Dike (SNC, 2018) 651298-500-4GDD-0000 to 0005	..\..\2- Mammoth Dike\2- Detailed Engineering\3-Reporting\3-Drawings\Final
	Technical Specifications	Technical Specifications for the Construction of Mammoth Dike (SNC, 2018) 6118-E-132-002-SPT-005_651298-5000-4GEF-0001-00	..\..\2- Mammoth Dike\2- Detailed Engineering\3-Reporting\2-Specification\6118-E-132-002-SPT-005_651298-5000-4GEF-0001-00_Mammoth Specifications.pdf
	As-built (to come 90 after end of construction)	NA	NA

Table 3-5: Design Criteria for the Mammoth Dike

Use	Water Type	Classification (CDA, 2007/13)	Inflow Design Flood	Water Level (m)		Crest Elevation (m)
				Normal	Design Flood	
Water Retention	Non-Contact	High	1/3 (1,000-PMF)	Low or no water	153.5	155.0

The construction of Mammoth Dike occurred from February 2019 to March 2019 to maintain the frozen condition of the foundation. This structure is a zoned rockfill dike with a filter system. The low permeability element of the dike consist of a bituminous geomembrane (BGM) installed on the

upstream face anchored in a key trench with fine filter amended with bentonite (FFAB). The key trench is excavated in frozen glacial till or bedrock.

The main highlight of the dike construction are summarised below:

- The dike was constructed with NPAG and NL material
- Blasting activity was required for foundation excavation

3.3 WRSF DIKE

WRSF dike is a water retention infrastructure designed to prevent contact water from the Whale Tail waste rock storage facility (WRSF) accumulating in the WRSF pond from reporting to Mammoth Lake. The water collected in the WRSF pond located upstream of the dike is pumped to the Attenuation Pond and treated prior to being discharged. An area of approximately 109 ha drains towards the WRSF pond. The WRSF dike is located south of the Whale Tail WRSF.

3.3.1 WRSF Dike – Design and Construction

Reference to key document for the design and construction of WRSF Dike are presented in Table 3-6. Table 3-7 summarise the main design criteria of WRSF Dike.

Table 3-6: Reference documents for WRSF Dike Design and Construction

Dike	Type of Information	Document Reference	Link to Retrieve Document
WRSF Dike	Design Report	Design Report of WRSF Dike (SNC, 2018) 6118-E-132-002-TCR-014_651298-6000-40ER-0001_00	..\..\3- WRSF Dike\1-Detailled Engineering\3-Reporting\1-Design Report\651298-6000-40ER-0001_00 GH WRSF Dike Detailed Design.pdf
	Drawings	Design Report of WRSF Dike (SNC, 2018) 511298-6000-4GDD-0000 to 0005	..\..\3- WRSF Dike\1-Detailled Engineering\3-Reporting\3-Drawings\Final\Pages from 651298-6000-40ER-0001_00 GH WRSF Dike Detailed Design_DRAWINGS.pdf
	Technical Specifications	Technical Specifications for the Construction of WRSF Dike (SNC, 2018) 6118-E-132-002-SPT-003_651298-6000-4GEF-0001-00	..\..\3- WRSF Dike\1-Detailled Engineering\3-Reporting\2-Specification\6118-E-132-002-SPT-003_651298-6000-4GEF-0001-PB_AEM_MG.PDF
	As-built (to come 90 days after end of construction)	NA	NA

Table 3-7: Design Criteria for the WRSF Dike

Use	Water Type	Classification (CDA, 2014)	Inflow Design Flood	Water Level (m)		Crest Elevation (m)
				Normal	Design Flood	
Runoff storage	Contact	Low	100	155.0	157.8	158.4

The construction of WRSF Dike occurred from January to February 2019 to maintain the frozen condition of the foundation. This structure is a zoned rockfill dike with a filter system. The low

permeability element of the dike consist of a bituminous geomembrane (BGM) installed on the upstream face anchored in a key trench with fine filter amended with bentonite (FFAB). The key trench is excavated in frozen glacial till or bedrock.

The main highlight of the dike construction are summarised below:

- The dike is constructed with NPAG and NL material
- Foundation excavation in the key trench area was done in the fall of 2018 to avoid blasting and aggrade frost penetration

3.4 NORTH-EAST DIKE

The North-East Dike (NE) dike is designed to prevent non-contact water from the Nemo Lake watershed from reporting into Whale Tail Pit. The NE Dike is located south of the Whale Tail Pit.

Water from the pond that will be created on the upstream side of the dike will be periodically pumped out and treated for suspended solids prior to being discharged to the environment.

3.4.1 North-East Dike– Design and Construction

Reference to key document for the design and construction of NE Dike are presented in Table 3-8. Table 3-9 summarise the main design criteria of NE Dike.

Table 3-8: Summary of key reference documents for the dikes

Dike	Type of Information	Document Reference	Link to Retrieve Document
North-East Dike	Design Report	Design Report of North-East Dike (SNC, 2018) 6118-E-132-002-TCR-012_651298-7000-40ER-0001-02	..\..\4- North East dike\1-Detailled Engineering\3- Deliverable\1-Design Report\6118-E-132-002-TCR-012_651298-7000-40ER-0001-02 _ NE Dike design report.pdf
	Drawings	Design Report of North-East Dike (SNC, 2018) 651298-7000-4GDD-0000 to 0005	..\..\4- North East dike\1-Detailled Engineering\3- Deliverable\3-Drawings\Final\651298-7000-4GDD-NE Dike combined.pdf
	Technical Specifications	Technical Specifications for the Construction of North-East Dike (SNC, 2018) 6118-E-132-002-SPT-002_651298-7000-4GEF-0001-01	..\..\4- North East dike\1-Detailled Engineering\3- Deliverable\2-Specification\6118-E-132-002-SPT-002_651298-7000-4GEF-0001-01_NE Dike spec_no drawings.pdf
	As-built (to come 90 days after construction)	NA	NA

Table 3-9: Design criteria for NE Dike

Use	Water Type	Classification (CDA, 2014)	Inflow Design Flood	Water Level (m)		Crest Elevation (m)
				Normal	Design Flood	
Runoff storage	Non-contact	Significant	100 – 1000 yr	No water	156.7 (1)	157.5
Note 1: Above this elevation, water is discharged towards Nemo Lake. The integrity of the dike will not be at risk of failure.						

The construction of NE Dike occurred from January to February 2019 to maintain the frozen condition of the foundation. This structure is a zoned rockfill dike with a filter system. The low permeability

element of the dike consist of a bituminous geomembrane (BGM) installed on the upstream face anchored in a key trench with fine filter amended with bentonite (FFAB). The key trench is excavated in frozen glacial till or bedrock.

The main highlight of the dike construction are summarised below:

- The dike is constructed with NPAG and NL material
- Due to the presence of a hill in the middle of its alignment, the dike is divided into two legs ; the East and West Legs;
- Foundation excavation in the key trench area was done in the fall of 2018 to avoid blasting and aggrade frost penetration

3.5 ATTENUATION POND AND PUMPING INFRASTRUCTURE

The dewatered part of the North Whale Tail basin between the Whale Tail Dike and the Whale Tail Pit is referred as the Whale Tail attenuation pond. All surface contact water from the Whale Tail site are directed in this pond where they are stored prior to being send to the water treatment plant (WTP) and discharged in Mammoth Lake through an approved diffuser. An attenuation pond ramp will be built to allow pumping of the water from the attenuation pond to the WTP

The majority of the water movement on the Whale Tail Project will be done by pumping. Figure 3-2 indicates the position of the attenuation pond and of the pumping infrastructure of the Whale Tail Project.

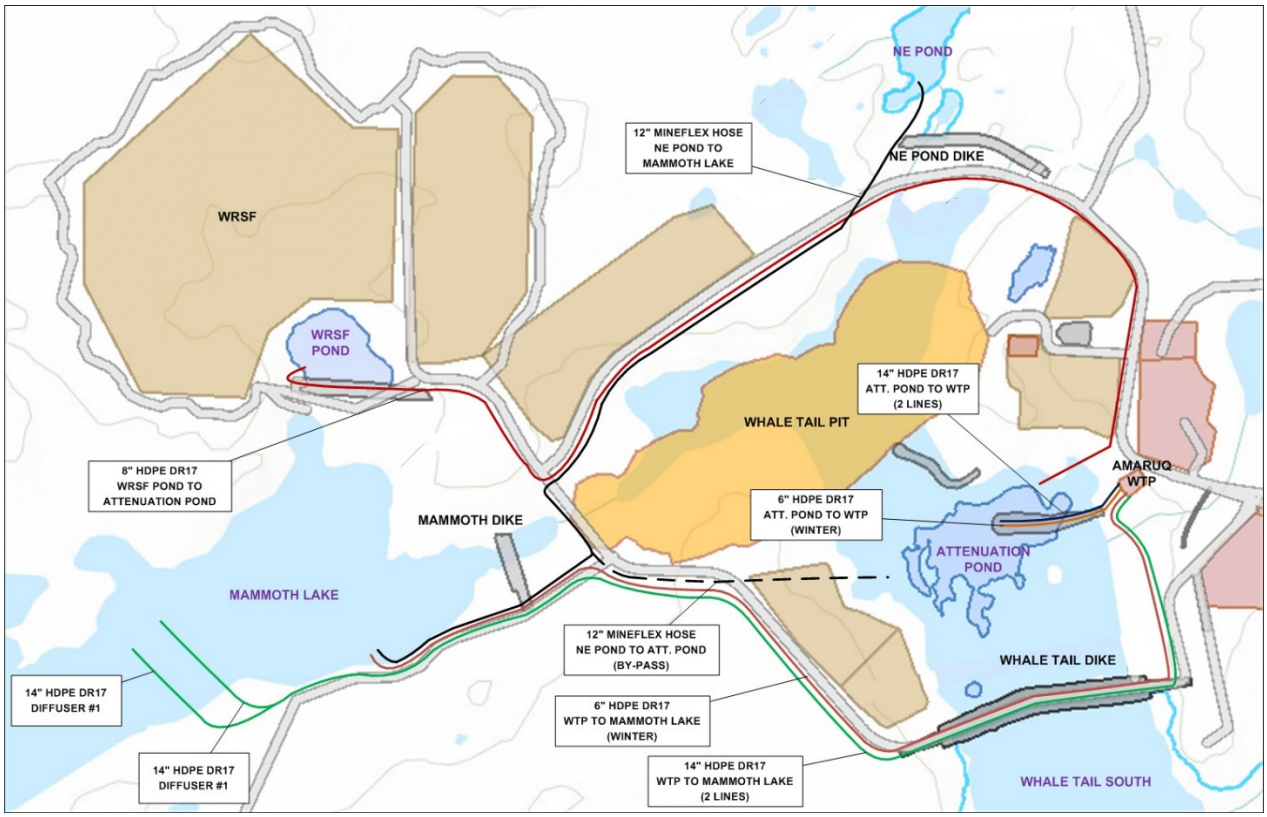

Figure 3-2 :Attenuation Pond and Pumping Infrastructure Layout

Reference to key document for the design and construction of the attenuation pond and pumping infrastructure of the Whale Tail Project are presented in Table 3-10. Reference is also given to the OMM manual of the WTP. A description of the permanent pumping setup installed is given in Table 3-11.

Table 3-10: Key reference documents for attenuation pond and pumping infrastructure

Type of information	Document Reference	Link to Retrieve Document
Detail Engineering Report	Amaruq water management pumping infrastructure (SNC 2018) 651298-8000-40ER-0001_E00	..\..\..\04- Water Management\1- Engineering Study\2- Detailed Engineering Phase 1\5- Deliverable\1- Design Report\3- Detailed Eng Water Management Infra\651298-8000-40ER-0001_E00.pdf
	Whale Tail water management and geotechnical infrastructure (SNC 2018) 6118-E-132-002-TCR-010_651298-8000-4HER-0001-00-WMinfra	..\..\..\04- Water Management\1- Engineering Study\2- Detailed Engineering Phase 1\5- Deliverable\1- Design Report\3- Detailed Eng Water Management Infra
	Mammoth Diffuser (SNC 2018) 611298-8000-40ER-E01	..\..\..\04- Water Management\1- Engineering Study\2- Detailed Engineering Phase 1\5- Deliverable\1- Design Report\4- Diffuser
	Attenuation Pond Ramp	\\Cambfs01\groups\Engineering\05- Geotechnic\14- Amaruq\04- Water Management\1- Engineering Study\2- Detailed Engineering Phase 1\5- Deliverable\1- Design Report\5- Dewatering\Attenuation Pond Ramp Detailed Eng.pdf
Specification & Drawings	Installation Specifications Amaruq Water Management Pumping Infrastructure (SNC 2018) 651298-8000-40EF-0001	..\..\..\04- Water Management\1- Engineering Study\2- Detailed Engineering Phase 1\5- Deliverable\3- Specifications\Spec water manag infra 6118-E-132-002-SPT-004_R1.pdf
OMS manual	Operation & Maintenance Manual Construction Water Treatment Plant (AEM June 2018)	..\..\..\04- Water Management\1- Engineering Study\2- Detailed Engineering Phase 1\5- Deliverable\1- Design Report\1-WTP\653281-0001-40ES-0001_0_OMS WTP.pdf
	ASWTP OMM manual (in progress)	\\Cambfs01\groups\Environment\LICENSE & REGULATORY\LICENSES & PERMITS\NWB\Licences\Whale Tail\2AM-WTP1826\Part D Item 1\AsWTP\OMM AsWTP\01-Application\2AM-WTP1826 Operation_Maintenance Manuel Asenic Water Treatment Plan-reduced.pdf
As-built pumping infrastructure (to come 90 days after end of construction)	NA	NA

Table 3-11: Characteristic of permanent pumping setup

Pumping Location	Pump and pipe	Description
WRSF Pond to Attenuation Pond	3 Godwin CD103 pumps 8'' HDPE DR11 pipe (800 m) + 8'' HDPE DR17 pipe (6575 m)	Pumping at freshet, pumping rate : 150 m^3/h
Attenuation Pond to AsWTP – Summer	Godwin HL250 pump 8'' HDPE DR17 pipe (900 m)	Total Flow Required : 950 to 1600 m^3/h
AsWTP – Summer to Mammoth Lake	2 Warman FAH pumps 8'' HDPE DR17 pipe (7620 m)	Total Flow Required : 950 to 1600 m^3/h
Attenuation Pond to AsWTP - Winter	Godwin CD103 pump 6'' HDPE DR17 insulated pipe (450 m)	Total Flow Required : 84 to 105 m^3/h
AsWTP – Winter to Mammoth Lake	Godwin CD103 pump 6'' HDPE DR17 insulated pipe (3290 m)	Total Flow Required : 84 to 105 m^3/h
NE Pond to Mammoth Lake/Whale Tail North Basin	Godwin HL250 pump Mineflew O&G, Fibers with an abrasion-resistant Polyurethane material 14'' pipe (4900 m)	Total Flow Required : 500 to 800 m^3/h

3.6 INSTRUMENTATION

The water management infrastructure will be instrumented to continuously monitor performance. In-situ instrumentation is installed within the structure and their foundation (piezometers, thermistors, and inclinometer).

Water levels in the ponds will be monitored by means of a visible staff gauge installed at a strategic location, piezometers and periodic water survey. The staff gauge will show the operational and design flood levels for ease of routine inspection.

Reference document for the instrumentation installed on the water management infrastructure is summarized in Table 3-12. The summary of the instrument installed is summarised in Table 3-13

Table 3-12: Reference documents for instrumentation

Type of Information	Reference Document	Link to retrieve document
Instrumentation campaign as-built (to come 90 days after completion of instrumentation)	AEM	NA
Instruments database (to come 30 days after completion of instrumentation)	AEM	..\..\..\09- Instrumentation\2- Master Instrument List
Instrumentation sheet calibration (to come 30 days after completion of instrumentation)	AEM	\\Cambfs01\groups\Engineering\05-Geotechnic\14- Amaruq\09-Instrumentation\6- Technical Documentation\4- Instrument Sheets (calibration)
Manufacturer data sheet	GKM	\\Cambfs01\groups\Engineering\05-Geotechnic\14- Amaruq\09-Instrumentation\6- Technical Documentation\1- Datasheets (manufacturer spec)
Instrument map and cross-section (to come 30 days after completion of instrumentation)	AEM	\\Cambfs01\groups\Engineering\05-Geotechnic\14- Amaruq\09-Instrumentation\1- Instruments Map

Table 3-13: Instrumentation summary on the water management infrastructure

Structure	Piezometer	Thermistors	Inclinometer	Survey Monument	Staff Gauge
Whale Tail Dike	27	11	4	-	-
Mammoth Dike	-	3	-	-	-
WRSF Dike	-	3	-	-	-
NE Dike	-	-	-	-	-
WRSF Pond	-	-	-	-	1
Attenuation pond	-	-	-	-	1
NE Pond	-	-	-	-	-

SECTION 4 • DEWATERING

The following section outlines the key operational procedure that need to be observed and followed during dewatering in accordance with the performance objective of the dewatering structure. The dewatering phase begins once the pumps start in the whale Tail North and ends while the Whale Tail South seep into the South Whale Tail Diversion Channel.

This section only applies to Whale Tail Dike which separates the Whale Tail Lake into the South basin and the North Basin. The North Basin will be dewatered to allow mining of the Whale Tail pit.

Dewatering of the Whale Tail Basin will occur from February 2019 to May 2019.The approximate volume to be dewatered is 3 Mm³ (SNC, 2018a).

4.1 REFERENCES

Reference to key document for the dewatering of Whale Tail North is presented in Table 4-1.

Table 4-1: Reference documents for Dewatering of Whale Tail North

Type of information	Reference	Link to Retrieve Document
WTD commissioning criteria	SNC 2018	..\..\1 - Whale Tale Dike\4- Dewatering\4- WTD commissioning criteria
Management approval to start dewatering activity of Whale Tail North (to come)	AEM	..\..\1 - Whale Tale Dike\4- Dewatering\4- WTD commissioning criteria
Details Engineering of dewatering infrastructure	Whale Tail North Dewatering 60 days' notice (AEM, 2018)	..\..\..\04- Water Management\1- Engineering Study\2- Detailed Engineering Phase 1\5- Deliverable\1- Design Report\5- Dewatering\Part D Item 1 - 60 day notice - V0.pdf
Whale Tail North dewatering water level vs pumped volume	AEM	..\..\1 - Whale Tale Dike\4- Dewatering\3- Water level vs pumped volume\Whale Tail Dike Monitoring - Dewatering - (Piezo-Survey-Flowmeter).xlsx
Whale Tail North dewatering water movement tracking	AEM	..\..\..\04- Water Management\5- Water Movement\2019
Water Quality Monitoring and Management Plan for Dike Construction and dewatering	AEM 2018	..\..\..\04- Water Management\3- Management Plan\1- 2018\Appendix 8-A.2 Water Quality Monitoring and Management Plan for Dike Con....pdf
Whale Tail North dewatering as built report (to come 90 days after end of dewatering)	NA	NA

4.2 SUMMARY OF PERFORMANCE OBJECTIVE AND OPERATION CONTROL DURING DEWATERING

The performance objective and the operational criteria and control for the Whale Tail North Basin dewatering and the performance of Whale Tail Dike during the dewatering are summarized in Table 4-2.

Table 4-2: Performance objectives and operational criteria during dewatering of Whale Tail North

Ensure that Whale Tail Dike commissioning criteria are met before starting dewatering
• All dike construction activity on WTD has been finished (except the thermal cover that may be constructed after the initiation of the dewatering) and construction deviation have been reconciled • All required instrumentation have been installed and stabilized (SNC, 2019) • Management gave the approvals to start dewatering
Water Management During dewatering
• Freeboard is respected in Whale Tail South • Discharge location is based on established water quality criteria (South Whale Tail Basin or Mammoth Lake) (refer to 60 days' notice document) • Water quality at discharge (TSS) met the approved criteria (refer to water quality management plan and 60 days' notice document) • Water discharge volume is recorded (refer to water movement tracking and 60 days' notice document) • The dewatering system (pump, pipes, dewatering ramp) is operated and maintained as per the defined operating procedure (refer to Whale Tail North Operation procedure) • The water level of Whale Tail North and South is recorded and follow prediction taking into account pumping rate
Surveillance
• Proper surveillance (inspection and data review) of Whale Tail Dike performance occur by a qualified person and is documented during dewatering (refer to section 7) • The performance of Whale Tail Dike during dewatering is reviewed against the threshold for performance criteria and trigger pre-defined actions (refer to Table 4-2)
Other
• Prohibit access to all personnel on Whale Tail North ice during dewatering • Restrict access to the dewatering ramp and Whale Tail Dike to trained personnel only during dewatering activity

4.3 OPERATING PROCEDURE DURING WHALE TAIL NORTH DEWATERING

Table 4-3 below present performance indicator and the pre-defined action (TARP) to be taken if the associated performance criteria deviate from defined range.

Table 4-3: Threshold Criteria and pre-defined action during Dewatering

		Threshold Criteria During Dewatering			
		Green **Normal Operating Range**	**Yellow** **Areas of concern**	**Orange** **High Risk Situation**	**Red** **Emergency Situation**
Criteria and specific action (SA)	Commissioning Criteria of WTD	Required commissioning criteria have been met before initiating dewatering	Dewatering ongoing while required commissioning criteria were partially met but management gave go ahead for dewatering following deviation reconciliation	Dewatering ongoing while required commissioning criteria not met or partially met and no formal go ahead from management to initiate dewatering	NA
	Whale Tail South Elevation	< 153 masl	> 153 and < 154 masl	> 154 and < 157 masl	> 157 masl Core overtopping
	Whale Tail North Elevation	Water level decrease of WT North correlate with estimate level base on pumping	Minor discrepancy between WT North level and estimate level from pumping rate before freshet (<15%)	Significant discrepancy between WT North level and estimate level from pumping rate before freshet (>30 %)	Major discrepancy between WT North level and estimate level from pumping rate before freshet (>50 %) Dike cutoff integrity is compromised
	Water Quality (turbidity)	TSS level below discharge criteria without treatment No sign of turbidity from WTD Dike	TSS level above discharge criteria without treatment Minor sign of turbidity from WTD Dike SA : Discharge to Mammoth through WTP	TSS level above discharge criteria with treatment (non-compliance with Env commitment)	NA
	Sloughing along downstream rockfill embankment face	None visible	Single event observed	More than one events observed	Continued event(s) Dike stability or cutoff integrity is compromised
	Tension crack on the crest (outside cutoff area)	None visible	< 0.1 m wide & < 5 m length < 1.0 m deep	> 0.1 m and < 0.2 m wide & > 5 m and < 10 m length along the dike > 1.0 m deep	> 0.2 m wide > 10 m length along the dike > 2.0 m deep Dike stability or cutoff integrity is compromised
	Tension crack within 3 m each side of the cutoff wall at crest	None visible	or < 0.1 m wide < 0.1 m	> 0.1 m wide and < 0.2 m wide > 0.1 m and < 0.3 m deep	or > 0.2 m wide > 0.3 m deep Dike stability or cutoff integrity is compromised
	Sinkhole on crest	None visible	Localised depression	Sinkhole identified	Development of sinkhole Dike stability or cutoff integrity is compromised
	Cut-off wall lateral cumulative deformation (based on inclinometer)	< 50 mm	Between 50 mm and 100 mm SA: Refer to 7.5.1	> 100 mm	NA
	Cumulative vertical crest movement	None visible	< 0.2 m SA: Apply step in case of instrument measurement outside normal range	> 0.2 m and < 1 m increasing rate of settlement	> 1 m increasing rate of settlement Dike stability or cutoff integrity is compromised
	Pore water pressure (based on piezometers)	Pore water pressure correlate with water level trend during dewatering	Unexplained piezometric trend observed SA: Refer to 7.5.1	Piezometric trends are explained and demonstrate an upset in the structure condition	NA
	Temperature variation along centreline (based on thermistors and piezometers)	Temperature measurement stable, seasonal trend observed	Unexplained thermal trend observed SA: Apply step in case of instrument measurement outside normal range	Thermal trends are explained and demonstrate an upset in the structure condition	NA
	Compliance to the surveillance program of the structure	Inspection done and reviewed at the frequency mentioned in Ch 7 And Instrument monitoring and analysis of data is done, documented and reviewed at the frequency mentioned in Ch 7	Dike inspection is done but not reviewed and documented at the frequency mentioned in Ch 7 Or Monitoring and analysis of data is done, but not documented and reviewed per the frequency mentioned in Ch 7	Dike inspection not done at the frequency mentioned in the OMS Or Monitoring and analysis of data is not done at the frequency mentioned in the OMS	NA
Action Required (general)		• Continue operation, maintenance, surveillance and monitoring as per standard operating procedure	• Identify potential cause • Develop mitigation plan and implement specific action. Use as reference contingency measures for different scenarios proposed (Appendix B) • Increase inspection and instrumentation monitoring frequency as Ch 7 • Implement engineering review	• Decision on stopping dewatering or not • Take appropriate corrective action based on mitigation plan and implement specific action • Increased inspection and instrumentation monitoring frequency as per Ch 7 • Reassess thresholds and conditions for red category (emergency situation)	• Stop dewatering • Implement emergency response plan • Emergency remedial work • Evacuate downstream area
		Take action and notify personnel as per decision framework of Figure 5-2			

SECTION 5 • OPERATIONS

The following section outlines the key operational procedure that need to be observed and followed during operation of the Amaruq water management infrastructure in accordance with the performance objective

5.1 REFERENCES

References to key documents for the operation of the Whale Tail water management infrastructure are presented in Table 5-1.

Table 5-1: Key reference documents for Operation of Whale Tail water management infrastructure

Type of information	Reference	Link to Retrieve Document
Whale Tail Pit – Mean Annual Water Balance	Golder (2018) 1789310_204_RPT_Phase2_waterbalance_Rev1	..\..\..\04- Water Management\2- Water Balance\1- 2018\Golder WB_Final\1789310_204_RPT_Phase2_Water Balance_Rev1.pdf
Whale Tail Pit Water Management Plan	V3 – AEM (Oct 2018)	..\..\..\04- Water Management\3- Management Plan\2- 2019\655183-2000-40ER-001-00_WhaleTailPit_WaterMgmtPlan_V3.pdf
Whale Tail Pit Water Quality Model	Golder (2018) 1789310-R-Rev0_SiteWQmodel	\\Cambfs01\groups\Engineering\05-Geotechnic\14- Amaruq\04- Water Management\2- Water Balance\1-2018\Golder WB_Final\1789310-R-Rev 0_SiteWQModel_Nov2018.pdf

5.2 SUMMARY OF PERFORMANCE OBJECTIVE AND OPERATION CONTROL

The performance objective and the operational criteria for the Whale Tail water management infrastructure during operation are summarized in Table 5-2.

Table 5-2: Performance objectives and operational criteria of Whale Tail water management infrastructure

Water Management
• Operational freeboard of each water retention structure must be respected during operation (refer to section 5.2.1) • Water movement must respect the water balance for intake and discharge location (refer to water balance) • Water movement must be tracked and recorded on a monthly basis (volume, origin, destination) • The water management system (pump, pipes, WTP) must be operated and maintained as per the defined operating procedure • Any seepage must be captured by sump and pumped back to allowed location (or naturally report to an approved location)
Water Quality
• All water discharged in the environment must be through an approved diffuser • Water quality at discharge met the approved criteria (refer to water management plan) • Water quality forecast data is used to make informed water management strategy decision • Water quality and quantity of seepage water is monitored
Surveillance
• Proper surveillance (inspection and data review) of Whale Tail Dike performance occur and is documented during dewatering (refer to section 7) • The performance of Whale Tail Dike during dewatering is reviewed against the threshold for performance criteria and trigger pre-defined actions (refer to Table 5-4 to 5-8)

5.2.1 Freeboard

The minimum freeboards for the Whale Tail water management infrastructure are contained within the design report of each infrastructure and are summarized in Tables 5-3.

Note that AP-5 is related to underground water management which is out of scope of this manual. However as long as the water quality of AP-5 met criteria for discharge it will be discharged on an annual basis to Mammoth Lake through an approved diffuser.

Table 5-3: Water Elevation During Operation

Location	Maximum Water Level		
	Normal Operating level	Design Flood Event	Related water retaining structure Dike Crest Elevation (m)
Whale Tail South	156	157	159
Mammoth Lake	152.5	153.5	155
WRSF Pond	155.4	157.8	158.4
NE Pond	155.5	156.7	157.5
Whale Tail Attenuation Pond	142	145.5	NA
AP-5	153.5	155	NA

5.2.2 Seepage Management

If seepage is observed through a water management structure, a system of collection ditch and sump will be constructed at the downstream toe of the structure to capture the seepage into a contact water retention pond. The water quality will be monitored and it will be directed to the attenuation pond or pump back on the upstream side of the structure base on its quality.

If seepage is observed through a structure but this seepage naturally report to a contact water retention pond (i.e. seepage from Whale Tail Dike reporting to the attenuation pond) then a seepage collection system would not be required.

The quantity and quality of each seepage from a water management infrastructure has to be monitored as per the requirement of section 7.

5.3 WATER MANAGEMENT

The water management strategy for the Whale Tail Project can be found in the water balance. A schematic version of the water movement strategy is summarised in Figure 5-1.

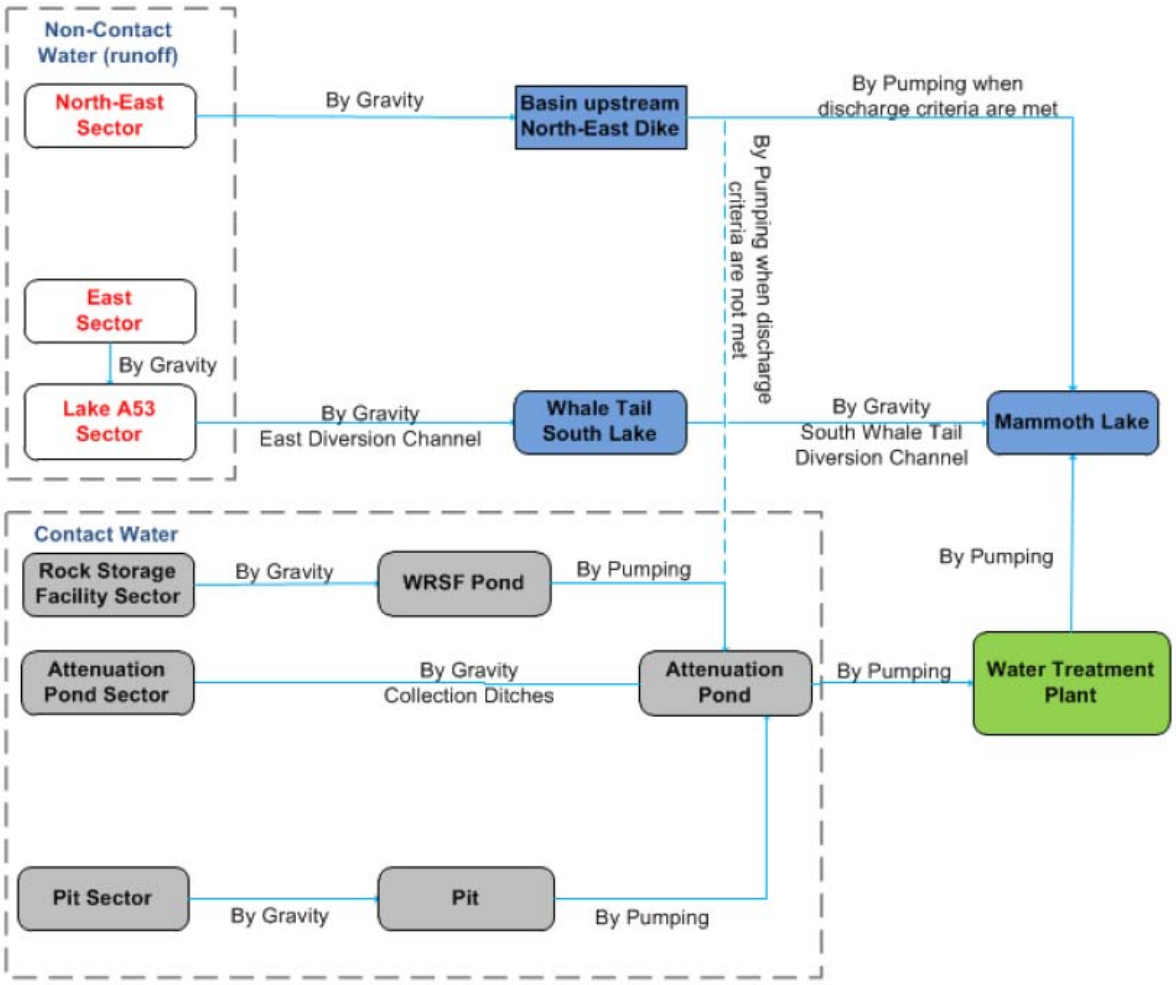

Figure 5-1: Flow Diagram of the Water Management Infrastructures (2019-2022)

5.4 OPERATING PROCEDURE DURING OPERATION OF WHALE TAIL WATER MANAGEMENT INFRASTRUCTURE

Table 5-4 to 5-8 below present performance indicator for each water management infrastructure and the Triger Action Response Plan (TARP) if the associated performance criteria deviate from defined range.

Table 5-4: Threshold Criteria and pre-defined action during operation of Whale Tail Dike

		Threshold Criteria During Operation			
		Green **Normal Operating Range**	**Yellow** **Areas of concern**	**Orange** **High Risk Situation**	**Red** **Emergency Situation**
Criteria and specific action (SA)	Whale Tail South Elevation (dike freeboard)	Normal operation range : < 156 masl	> 156 to < 156.5 m	> 156.5 to < 157 m	> 157 masl Core or crest overtopping
	Seepage to manage	Within design parameter < 2 000 m3 day and managed by pumping	Inflow higher than design parameter but manageable with a pumping capacity (FOS > 2) or Storage and discharge of this seepage is manageable without modifying water management strategy or Sudden or cumulative increase < 25 % in over 3 days	Inflow higher than design parameter and at the limit of the pumping capacity (FOS >1 and <2) or Storage and discharge of this seepage is manageable for the moment but cannot be sustained without modifying the water management strategy SA: increase pumping capacity & re-assess discharge and storage strategy	Inflow is unmanageable with pumping capacity (FOS < 1) or No more capacity on site for storage and discharge of this seepage water
	Seepage water quality (turbidity)	No observation of turbidity in seepage	Turbidity observed in seepage water (single TSS event of 30 mg/L)	Sustained high turbidity over 30 mg/l in seepage water	NA
	Sloughing along downstream rockfill embankment face and downstream toe	None visible	Single event observed	More than one events observed	Continued event(s) Dike stability or cutoff integrity is compromised
	Tension crack on the crest (outside cutoff area)	None visible	< 0.1 m wide & < 5 m length < 1.0 m deep	> 0.1 m and < 0.2 m wide & > 5 m and < 10 m length along the dike > 1.0 m deep	> 0.2 m wide > 10 m length along the dike > 2.0 m deep Dike stability is compromised
	Tension crack within 3 m each side of the cutoff wall at crest	None visible	or < 0.1 m wide < 0.1 m deep	> 0.1 m wide and < 0.2 m wide > 0.1 m and < 0.3 m deep	or > 0.2 m wide > 0.3 m deep Cutoff integrity is compromised
	Sinkhole on crest	None visible	Localised depression > 5 m outside from centreline	Sinkhole identified	Development of sinkhole Dike stability or cutoff integrity is compromised
	Cut-off wall lateral cumulative deformation (based on inclinometer)	< 50 mm	Between 50 mm and 100 mm SA: Refer to 7.5.1	> 100 mm	NA
	Cumulative vertical crest movement	None visible	< 1 m or Stable trend SA: Refer to 7.5.1	> 1 m with increasing rate of settlement	> 2 m with increasing rate of settlement Dike stability or cutoff integrity is compromised
	Pore water pressure (based on piezometers)	Pore water pressure correlate with water level trend during dewatering	Unexplained piezometric trend observed SA: Refer to 7.5.1	Piezometric trends are explained and demonstrate an upset in the structure condition	NA
	Temperature variation along centreline (based on thermistors and piezometers)	Temperature measurement stable, seasonal trend observed	Unexplained thermal trend observed SA: Apply step in case of instrument measurement outside normal range	Thermal trends are explained and demonstrate an upset in the structure condition	NA
	The surveillance program of the structure is followed	Inspection done and reviewed at the frequency mentioned in Ch 7 And Instrument monitoring and analysis of data is done, documented and reviewed at the frequency mentioned in Ch 7	Dike inspection is done but not reviewed and documented at the frequency mentioned in Ch 7 Or Monitoring and analysis of data is done, but not documented and reviewed per the frequency mentioned in Ch 7	Dike inspection not done at the frequency mentioned in the OMS Or Monitoring and analysis of data is not done at the frequency mentioned in the OMS	NA
Action Required (general)		• Continue operation, maintenance, surveillance and monitoring as per standard operating procedure	• Identify potential cause • Develop mitigation plan and implement specific action. Use as reference contingency measures for different scenarios proposed (See Appendix B) • Increase inspection and instrumentation monitoring frequency as per Ch 7 • Implement engineering review	• Restrict access to Whale Tail Dike crest • Take appropriate corrective action based on approved mitigation plan and specific action. • Increase inspection and instrumentation monitoring frequency as per Ch 7 • Reassess thresholds and conditions for red category (emergency situation) taking into account the changing conditions presently observed and interactions of various items.	• Evacuate Whale Tail Pit • Close access to Whale Tail Dike crest • Implement emergency response plan
		Take action and notify personnel as per decision framework of Figure 5-2			

Table 5-5: Threshold Criteria and pre-defined action during operation of Mammoth Dike

		Threshold Criteria During Operation			
		Green **Normal Operating Range**	**Yellow** **Areas of concern**	**Orange** **High Risk Situation**	**Red** **Emergency Situation**
Criteria and specific action (SA)	Mammoth Lake elevation (dike freeboard)	Normal operation range : < 152.5 masl	Design flood range : > 152.5 and < 153.5 masl	> 153.5 masl without crest overtopping	Crest overtopping
	Seepage through dike	Within design parameter < 300 m3 day and managed by pumping	Inflow higher than design parameter but manageable with current pumping capacity (FOS > 2) or Storage and discharge of this seepage is manageable without modifying water management strategy or Sudden or cumulative increase < 25 % in over 3 days	Inflow higher than design parameter and at the limit of the current pumping capacity (FOS >1 and <2) or Storage and discharge of this seepage is manageable for the moment but cannot be sustained without modifying the water management strategy SA: increase pumping capacity & re-assess discharge and storage strategy	Inflow is unmanageable with pumping capacity (FOS < 1) or No more capacity on site for storage and discharge of this seepage water
	Seepage water quality (turbidity)	No observation of turbidity in seepage	Turbidity observed in seepage water (single TSS event of 30 mg/L)	Sustained high turbidity over 30 mg/l in seepage water	NA
	Sloughing along downstream rockfill embankment face and downstream toe	None visible	Single event observed	More than one events observed	Continued event(s) Dike stability is compromised
	Tension crack on the crest	None visible	< 0.1 m wide & < 5 m length < 1.0 m deep	> 0.1 m and < 0.2 m wide & > 5 m and < 10 m length along the dike > 1.0 m deep	> 0.2 m wide > 10 m length along the dike > 2.0 m deep Dike stability is compromised
	Sinkhole on crest	None visible	Localised depression	Sinkhole identified	Development of sinkhole Dike stability is compromised
	Cumulative vertical crest movement	None visible	< 1 m or Stable trend SA: Refer to 7.5.1	> 1 m with increasing rate of settlement	> 2 m with increasing rate of settlement Dike stability is compromised
	Temperature variation (based on thermistors)	Temperature measurement stable, seasonal trend observed	Unexplained thermal trend observed SA: Apply step in case of instrument measurement outside normal range	Thermal trends are explained and demonstrate an upset in the structure condition	NA
	The surveillance program of the structure is followed	Inspection done and reviewed at the frequency mentioned in Ch 7 And Instrument monitoring and analysis of data is done, documented and reviewed at the frequency mentioned in Ch 7	Dike inspection is done but not reviewed and documented at the frequency mentioned in Ch 7 Or Monitoring and analysis of data is done, but not documented and reviewed per the frequency mentioned in Ch 7	Dike inspection not done at the frequency mentioned in the OMS Or Monitoring and analysis of data is not done at the frequency mentioned in the OMS	NA
Action Required (general)		• Continue operation, maintenance, surveillance and monitoring as per standard operating procedure	• Identify potential cause • Develop mitigation plan and implement specific action. Use as reference contingency measures for different scenarios proposed (See Appendix B) • Increase inspection and instrumentation monitoring frequency as Ch 7 • Implement engineering review	• Restrict access to Mammoth Dike crest • Take appropriate corrective action based on approved mitigation plan. • Increase inspection and instrumentation monitoring frequency as per Ch 7 • Reassess thresholds and conditions for red category (emergency situation) taking into account the changing conditions presently observed and interactions of various items.	• Evacuate Whale Tail Pit • Close access to Mammoth Dike crest • Implement emergency response plan
		Take action and notify personnel as per decision framework of Figure 5-2			

Table 5-6: Threshold Criteria and pre-defined action during operation of WRSF Dike

		Threshold Criteria During Operation			
		Green **Normal Operating Range**	**Yellow** **Areas of concern**	**Orange** **High Risk Situation**	**Red** **Emergency Situation**
Criteria and specific action (SA)	WRSF Pond elevation (dike freeboard)	Normal operation range : < 155.4 masl	Design flood range : > 155.4 and < 157.8 masl	> 157.8 masl without crest overtopping	Crest overtopping
	Seepage through dike	Within design parameter < 300 m3 day and managed by pumping	Inflow higher than design parameter but captured in sump and manageable with current pumping capacity (FOS > 2) or Storage and discharge of this seepage is manageable without modifying water management strategy or Sudden or cumulative increase < 25 % in over 3 days	Inflow higher than design parameter but captured in sump and managed with a limited pumping capacity (FOS >1 and <2) or Storage and discharge of this seepage is manageable for the moment but cannot be sustained without modifying the water management strategy SA: increase pumping capacity & re-assess discharge and storage strategy	Inflow is unmanageable with pumping capacity (FOS < 1) Or No more capacity on site for storage and discharge of this seepage water
	Seepage water quality (turbidity)	No observation of turbidity in seepage	Turbidity observed in seepage water (single TSS event of 30 mg/L)	Sustained high turbidity over 30 mg/l in seepage water	NA
	Sloughing along downstream rockfill embankment face and downstream toe	None visible	Single event observed	More than one events observed	Continued event(s) Dike stability is compromised
	Tension crack on the crest	None visible	< 0.1 m wide & < 5 m length < 1.0 m deep	> 0.1 m and < 0.2 m wide & > 5 m and < 10 m length along the dike > 1.0 m deep	> 0.2 m wide > 10 m length along the dike > 2.0 m deep Dike stability is compromised
	Sinkhole on crest	None visible	Localised depression	Sinkhole identified	Development of sinkhole Dike stability is compromised
	Cumulative vertical crest movement	None visible	< 1 m or Stable trend SA: Refer to 7.5.1	> 1 m with increasing rate of settlement	> 2 m with increasing rate of settlement Dike stability is compromised
	Temperature variation (based on thermistors)	Temperature measurement stable, seasonal trend observed	Unexplained thermal trend observed SA: Apply step in case of instrument measurement outside normal range	Thermal trends are explained and demonstrate an upset in the structure condition	NA
	The surveillance program of the structure is followed	Inspection done and reviewed at the frequency mentioned in Ch 7 And Instrument monitoring and analysis of data is done, documented and reviewed at the frequency mentioned in Ch 7	Dike inspection is done but not reviewed and documented at the frequency mentioned in Ch 7 Or Monitoring and analysis of data is done, but not documented and reviewed per the frequency mentioned in Ch 7	Dike inspection not done at the frequency mentioned in the OMS Or Monitoring and analysis of data is not done at the frequency mentioned in the OMS	NA
Action Required (general)		• Continue operation, maintenance, surveillance and monitoring as per standard operating procedure	• Identify potential cause • Develop mitigation plan and implement specific action. Use as reference contingency measures for different scenarios proposed (See Appendix B) • Increase inspection and instrumentation monitoring frequency as Ch 7 • Implement engineering review	• Restrict access to WRSF Dike crest • Take appropriate corrective action based on approved mitigation plan. • Increase inspection and instrumentation monitoring frequency as per Ch 7 • Reassess thresholds and conditions for red category (emergency situation) taking into account the changing conditions presently observed and interactions of various items.	• Implement emergency response plan
		Take action and notify personnel as per decision framework of Figure 5-2			

Table 5-7: Threshold Criteria and pre-defined action during operation of NE Dike

		Threshold Criteria During Operation			
		Green **Normal Operating Range**	**Yellow** **Areas of concern**	**Orange** **High Risk Situation**	**Red** **Emergency Situation**
Criteria and specific action (SA)	NE Pond elevation (dike freeboard)	Normal operation range : < 155.5	Design flood range :>155.5 and < 156.7 masl	> 156.7 masl without crest overtopping	Crest overtopping
	Seepage through dike	Within design parameter < 300 m3 day and managed by pumping	Inflow higher than design parameter but captured in sump and manageable with current pumping capacity (FOS > 2) or Storage and discharge of this seepage is manageable without modifying water management strategy or Sudden or cumulative increase < 25 % in over 3 days	Inflow higher than design parameter but captured in sump and managed with a limited pumping capacity (FOS >1 and <2) or Storage and discharge of this seepage is manageable for the moment but cannot be sustained without modifying the water management strategy SA: increase pumping capacity & re-assess discharge and storage strategy	Inflow is unmanageable with pumping capacity (FOS < 1) Or No more capacity on site for storage and discharge of this seepage water
	Seepage water quality (turbidity)	No observation of turbidity in seepage	Turbidity observed in seepage water (single TSS event of 30 mg/L)	Sustained high turbidity over 30 mg/l in seepage water	NA
	Sloughing along downstream rockfill embankment face and downstream toe	None visible	Single event observed	More than one events observed	Continued event(s) Dike stability is compromised
	Tension crack on the crest	None visible	< 0.1 m wide & < 5 m length < 1.0 m deep	> 0.1 m and < 0.2 m wide & > 5 m and < 10 m length along the dike > 1.0 m deep	> 0.2 m wide > 10 m length along the dike > 2.0 m deep Dike stability is compromised
	Sinkhole on crest	None visible	Localised depression	Sinkhole identified	Development of sinkhole Dike stability is compromised
	Cumulative vertical crest movement	None visible	< 1 m or Stable trend SA: Refer to 7.5.1	> 1 m with increasing rate of settlement	> 2 m with increasing rate of settlement Dike stability is compromised
	The surveillance program of the structure is followed	Inspection done and reviewed at the frequency mentioned in Ch 7 And Instrument monitoring and analysis of data is done, documented and reviewed at the frequency mentioned in Ch 7	Dike inspection is done but not reviewed and documented at the frequency mentioned in Ch 7 Or Monitoring and analysis of data is done, but not documented and reviewed per the frequency mentioned in Ch 7	Dike inspection not done at the frequency mentioned in the OMS Or Monitoring and analysis of data is not done at the frequency mentioned in the OMS	NA
Action Required (general)		• Continue operation, maintenance, surveillance and monitoring as per standard operating procedure	• Identify potential cause • Develop mitigation plan and implement specific action. Use as reference contingency measures for different scenarios proposed (See Appendix B) • Increase inspection and instrumentation monitoring frequency as Ch 7 • Implement engineering review	• Restrict access to NE Dike crest • Take appropriate corrective action based on approved mitigation plan. • Increase inspection and instrumentation monitoring frequency as per Ch 7 • Reassess thresholds and conditions for red category (emergency situation) taking into account the changing conditions presently observed and interactions of various items.	• Evacuate Whale Tail Pit • Implement emergency response plan
		Take action and notify personnel as per decision framework of Figure 5-2			

Table 5-8: Threshold Criteria and pre-defined action during operation of Attenuation Pond and Pumping Infrastructure

		Threshold Criteria During Operation			
		Green **Normal Operating Range**	**Yellow** **Areas of concern**	**Orange** **High Risk Situation**	**Red** **Emergency Situation**
Criteria and specific action (SA)	Attenuation Pond elevation (storage capacity)	Normal operation range : < 142	Maximum operating range :>142 and < 145 masl	> 145 masl without overflowing in pit	Pit crest overflow
	Tension cracks on the attenuation pond ramp	None visible	< 0.1 m wide & < 5 m length < 1.0 m deep	> 0.1 m and < 0.2 m wide & > 5 m and < 10 m length along the dike > 1.0 m deep	> 0.2 m wide > 10 m length along the dike > 2.0 m deep Ramp stability is compromised
	Cumulative vertical crest movement of attenuation pond ramp	None visible	< 0.2 m SA: Apply step in case of instrument measurement outside normal range	> 0.2 m and < 1 m increasing rate of settlement	> 1 m increasing rate of settlement Ramp stability is compromised
	Water movement (pumping) follow the Water Balance	Water movement (origin / destination) follow the current water balance and Elevation of each pumping point is within the predicted range of the water balance	The water management data show that the water balance strategy of the water balance is not sustainable from a storage / discharge point of view SA: Modify the water balance and re-assess water management strategy	Water movement (origin/destination) cannot follow water balance due to operational constraint (i.e. capacity, water quality, water treatment)	Water cannot be stored / discharge from the Whale Tail site. The water balance is not applicable SA : Flood underground ramp
	Water movement (pumping) are recorded for volume, origin and destination	Water movement data are read and recorded at the specified frequency of the OMS	Water movement data are read on a non-compliant frequency and there are gap in the data	Water movement data are not read or recorded at the specified frequency of the OMS	NA
	Water quality in the receiving environment and at discharge	Water quality at discharge met receiving environment criteria and Water quality of the receiving environment follow water quality forecast	Water quality at discharge met receiving environment criteria And Water quality of the receiving environment show a trend that water quality is deteriorating higher than the forecast SA : Review diffuser and WTP performance	Water quality at discharge does not met receiving environment criteria SA : stop discharge SA : Review WTP performance	Water quality of the receiving environment no longer allow discharge (no more discharge allowable) SA : Flood underground ramp
	Water quality data is used to make informed water management decision	Water quality data is integrated within the water balance to make informed water movement strategy	Water quality data is not taken into account while deciding water movement	NA	NA
Action Required (general)		• Continue operation, maintenance, surveillance and monitoring as per standard operating procedure	• Identify potential cause • Develop mitigation plan and implement specific action. Use as reference contingency measures for different scenarios proposed (See Appendix B) • Increase inspection and instrumentation monitoring frequency as Ch 7 • Implement engineering review	• Take appropriate corrective action based on approved mitigation plan. • Increase inspection and instrumentation monitoring frequency as per Ch 7 • Reassess thresholds and conditions for red category (emergency situation) taking into account the changing conditions presently observed and interactions of various items.	• Evacuate Whale Tail pit • Implement emergency response plan
		Take action and notify personnel as per decision framework of Figure 5-2			

5.5 COMMUNICATION AND DECISION MAKING

Figure 5-2 indicates the communication and decision process when the threshold criteria are met and when pre-defined action need to be implemented.

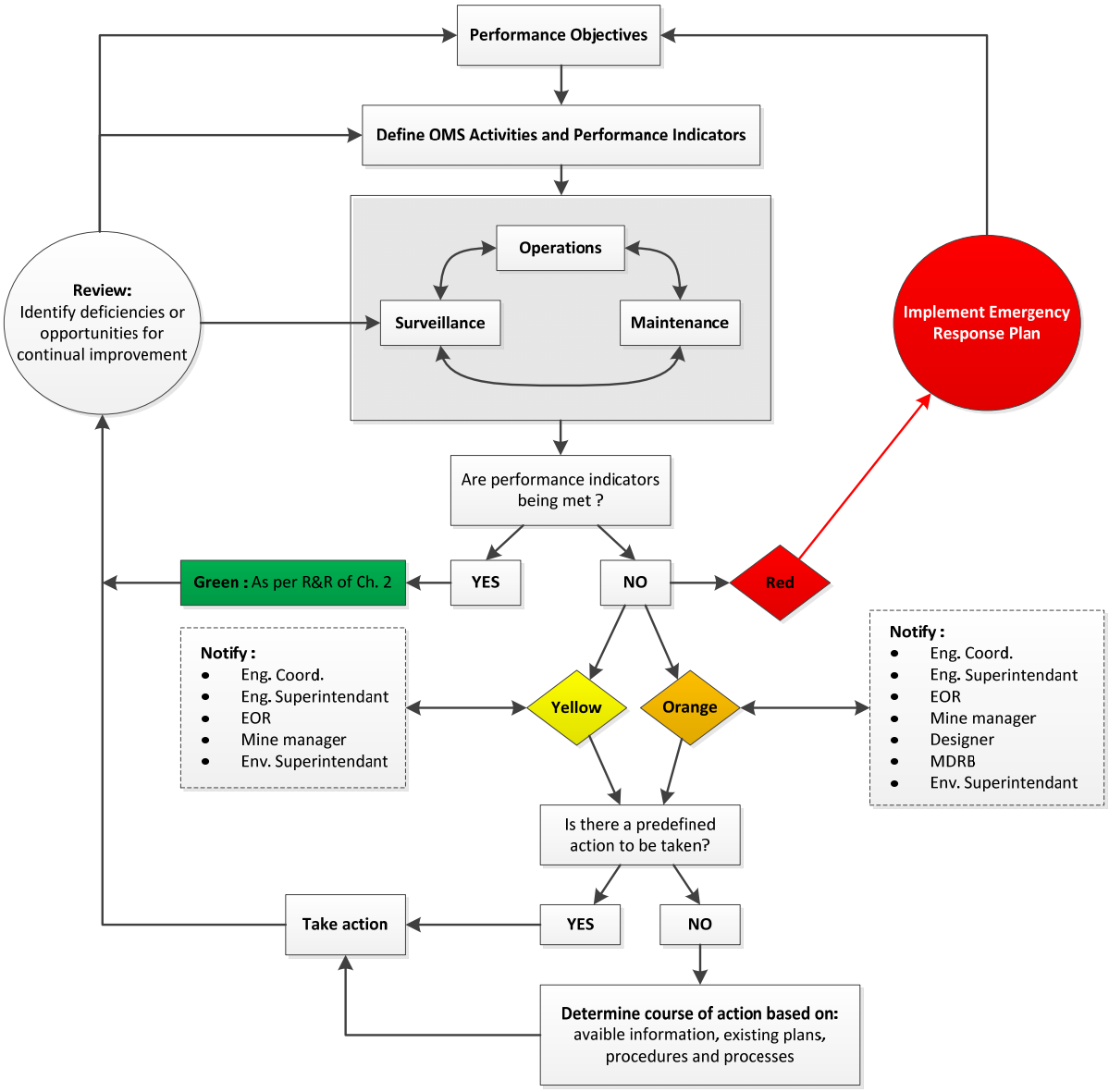

Figure 5-2: Communication and Decision Process for Water Management Infrastructure TARP

SECTION 6 • MAINTENANCE

This section identifies all infrastructures within the scope of this manual that has maintenance requirements and identifies all preventative, predictive and corrective maintenance activities.

6.1 PREVENTATIVE, PREDICTIVE AND CORRECTIVE MAINTENANCE

Maintenance is divided into preventative (planned), predictive and corrective.

Preventative maintenance is planned, recurring maintenance activities conducted at a fixed or approximate frequency and not typically arising from results of surveillance activities. Examples of such maintenance include calibration and maintenance of surveillance equipment or regularly changing oil on a pump as per manufacturer's requirement.

Predictive maintenance is pre-defined maintenance conducted in response to results of surveillance activities that measure the condition of a specific component against performance criteria.

Corrective maintenance of a component of the water management system is to prevent further deterioration and ensure their performance in conformance with performance objectives. The need for corrective maintenance is based on surveillance activities, with surveillance results identifying the need and urgency of maintenance.

6.2 REFERENCES

Reference to key document for the maintenance of the Whale Tail water management infrastructure is presented in Table 6-1.

Table 6-1: Reference documents for Maintenance of Whale Tail water management infrastructure

Type of information	Link to Retrieve Information
Maintenance log of water management infrastructure (to come)	In progress
Maintenance log of pumping equipment	\\CAMBFS01\Public\MAINTENANCE\G dore\PWA-COM-LGT hrs reading.xlsx \\Cambfs01\groups\EnergyInfra\08-PowerHouse\2 EQUIPMENT\2 GENERATORS
Maintenance log of geotechnical instrumentation (to come)	In progress
Pump allocation tool	..\..\..\04- Water Management\4- Water Management Infrastucture\3- 2019\1 - Planning\9-Procurement\Pump Allocation\AMQ Pump Allocation 2019-2020.pptx
Geotechnical instrument & Datalogger inventory	In progress

6.3 COMPONENT OF THE WATER MANAGEMENT INFRASTRUCTURE REQUIRING MAINTENANCE

Table 6-2 indicates all the component of the Whale Tail water management infrastructure that requires maintenance.

Table 6-2: Component of the water management infrastructure requiring maintenance

Water Management Infrastructure
• Dike embankment (i.e. repair erosion) • Dike crest (i.e. fill inactive tension cracks) • Seepage collection sump (i.e., reprofile slope, increase sump volume) • Ditches and diversions (i.e. snow removal, repair erosion)
Pumping infrastructure
• Pumps (mechanical and electrical maintenance) • Pipes (steaming, drain line, repair leak)
Surveillance
• Geotechnical instruments (thermistors, piezometers, inclinometers, survey monument) • Data acquisition system • Flowmeter
Other
• Dike crest access road • Access to sump

6.3.1 Maintenance component that are outside the scope of this OMS manual

The following component maintenance activities are outside of the scope of this OMS manual. For more information the superintendent of the department responsible for these maintenance can be contacted

- Electrical systems and supply – E&I
- Maintenance of heavy equipment and light vehicles – Maintenance
- Communication infrastructures - IT
- Road used to access the infrastructures – Mine
- Water treatment plant – E&I

6.4 DESCRIPTION OF MAINTENANCE ACTIVITIES

Table 6-3 summarizes the description of maintenance activities for each component of the Whale Tail water management infrastructure. Each component possesses activities as well as a trigger for that maintenance and a person responsible for this activity. It is the person responsible for the maintenance activity to ensure that the person doing the maintenance has the qualifications and competency required to conduct the maintenance and is following the proper safety procedure. The responsible person must also ensure that the proper documentation and reporting requirement are followed.

Table 6-3 :Description of maintenance activity for component of water management infrastructure

Component	Type of maintenance	Nature of the activity	Frequency of maintenance (preventative) OR Trigger of maintenance (predictive and corrective)	Responsible for the activity	Documentation Required	Reporting Requirement
Water Management Infrastructure						
Dike embankment Attenuation pond ramp repair erosion	Corrective	Gullies and depression to be filled with rockfill and re-sloped	Following a demand from engineering superintendent following a visual inspection showing erosion	Mine Superintendent (can use a contractor alternatively)	Photo of remediation work	Engineering to update the maintenance log of the structure
Dike crest / Attenuation pond ramp – fill inactive tension cracks	Corrective	Inactive tension cracks to be filled with bentonite to prevent widening due to water infiltration	Following a demand from engineering superintendent following a visual inspection showing inactive tension cracks	Geotechnical technician	Photo of remediation work	Engineering to update the maintenance log of the structure
Dike crest / Attenuation pond ramp compensate settlement	Corrective	Add rockfill to increase the height of the dike following observation of settlement	Following a demand from engineering superintendent following a visual inspection showing settlement that need to be compensated (i.e. loss of freeboard)	Mine Superintendent (can use a contractor alternatively)	Photo of remediation work Surveying of remediation work	Engineering to update the maintenance log of the structure and provide surveying
Seepage collection sump– increase volume	Predictive	Excavate an additional sump or increase the capacity of an existing sump	Following a demand from engineering superintendent following a re-assessment of the sump capacity	Mine Superintendent (can use a contractor alternatively)	Photo of remediation work Surveying of remediation work	Engineering to update the maintenance log of the structure and provide surveying
Seepage collection sump – reprofile sump	Corrective	Excavate flatter slope for the sump or add material against the slope to reprofile them	Following a demand from engineering superintendent following a visual inspection showing instable sump slope	Mine Superintendent (can use a contractor alternatively)	Photo of remediation work	Engineering to update the maintenance log of the structure and provide surveying
Ditches – snow removal	Predictive	Use an excavator to remove snow in the ditch	Every year prior to freshet to ensure that ditch is clear of snow obstruction. Demand will be formulated by the Engineering Superintendent	Energy & Infrastructure Superintendent	Photo of remediation work	Engineering to update the maintenance log of the structure
Ditches – clean debris and sediment accumulation	Corrective	Remove any debris and accumulation of sediment that can hinder flow	Following a demand from engineering superintendent following a visual inspection showing accumulation of debris and sediment	Energy & Infrastructure Superintendent	Photo of remediation work	Engineering to update the maintenance log of the structure
Ditches – repair erosion of granular layer	Corrective	Add granular material to repair erosion of the ditches	Following a demand from engineering superintendent following a visual inspection showing erosion of the ditches	Energy & Infrastructure Superintendent	Photo of remediation work	Engineering to update the maintenance log of the structure
Ditches – release of TSS from the ditches	Corrective	Corrective action to mitigate release of TSS from ditches. Can include placement of sill curtain or temporary by-passing the ditches using pump	Following a demand from the environment superintendent following sampling of a high turbidity event from the diches	Environment Superintendent	Water sample results Photo of remediation work	Engineering to update the maintenance log of the structure
Pumping infrastructure						
Pumps and Genset – maintenance as per manufacturer specification	Preventative	Do PM on the pumping unit as per manufacturer recommendation	As per manufacturer specification	Pump mechanics	Equipment log Maintenance record	Maintenance to update the pump maintenance log or Genset maintenance log
Pumps and Genset – maintenance when deficiencies are observed (cavitation, breakdown, electrical trouble)	Corrective	Troubleshoot the pump problem so that it is once again operational	When the E&I Superintendent ask that a pump be fixed following a visual inspection of deficiencies	Pump mechanics	Equipment log Maintenance record	Maintenance to update the pump maintenance log or Genset maintenance log
Pumps – winterization of unit used in winter	Preventative	Ensure that pumps used in winter have been winterized	Once new pump is received on site that will be used in winter	Maintenance superintendent	Maintenance record	Maintenance to update the pump maintenance log
Pipe – drain the line	Preventative	Ensure that the line is empty of water when it is stopped in winter	Every time pumping is interrupted in winter	Energy & Infrastructure Superintendent	-	-
Pipe – unfreezing a line	Corrective	Steaming the line to unfreeze it in winter	When the E&I Superintendent ask that a line be unfroze following visual inspection of a frozen line	Energy & Infrastructure Superintendent	-	-
Pipe – maintenance when deficiencies are observed (leak, pipe burst)	Corrective	Replacing a deficient part of a line with new pipe	When the E&I Superintendent ask that a line be repaired following visual inspection of pipe deficiency	Energy & Infrastructure Superintendent	-	-
Surveillance						

Component	Type of maintenance	Nature of the activity	Frequency of maintenance (preventative) OR Trigger of maintenance (predictive and corrective)	Responsible for the activity	Documentation Required	Reporting Requirement
Geotechnical Instrument – loss of reading	Corrective	Investigate the status of an instrument who no longer gave data	When an instrument no longer gave data for an unknown reason	Geotechnical technician	Update status in instrument database	Update of the geotechnical instrument database by the geotechnical technician
Geotechnical instrument – unusual reading	Corrective	Investigate the status of an instrument who gave unusual data	When an instrument gave an unusual data	Geotechnical technician	Update status in instrument database	Update of the geotechnical instrument database by the geotechnical technician
Geotechnical instrument – replacement	Corrective	Replace an instrument that no longer work	When the engineering superintendent as for a geotechnical instrument to be replaced	Geotechnical technician	Instrument installation as-built report Update spare inventory Calibration sheet Initial instrument reading	Update of the geotechnical instrument database by the geotechnical technician
Geotechnical instrument –calibration of total station	Preventative	Send the total station to be calibrated	yearly	Geotechnical technician	Calibration sheet	Update of the geotechnical instrument database by the geotechnical technician
Geotechnical instrument –calibration of inclinometer probe	Preventative	Send the inclinometer probe to be calibrated	yearly	Geotechnical technician	Calibration sheet	Update of the geotechnical instrument database by the geotechnical technician
Datalogger – maintenance	Preventative	Do maintenance of datalogger as per manufacturer specification	yearly	Geotechnical technician	Maintenance report	Update of the geotechnical instrument maintenance log by the geotechnical technician
Datalogger – battery change	Predictive	Change battery when the battery level alarm get triggered	When the battery alarm is triggered in VDV	Geotechnical technician	Maintenance report	Update of the geotechnical instrument maintenance log by the geotechnical technician
Datalogger – troubleshooting	Corrective	Repair of a dataloger deficiency	When a dataloger is suspected of being deficient	Geotechnical technician	Update status in instrument database	Update of the geotechnical instrument maintenance log by the geotechnical technician
Flowmeter – calibration	Preventative	Send the flowmeter to be calibrated	yearly	Energy & Infrastructure Superintendent	Calibration sheet	Update of the geotechnical instrument maintenance log by the geotechnical technician
Flowmeter – deficient reading	Corrective	Repair of a flowmeter deficiency	When the Engineering Superintendent ask that a flowmeter be troubleshoot based on irregular data	Energy & Infrastructure Superintendent	Update status in instrument database	Update of the geotechnical instrument database by the geotechnical technician
Other						
Dike crest access	Predictive	Snow clearing, maintaining roadway, grading access	As required to maintain access	Mine Superintendent	-	-
Access to sump	Predictive	Snow clearing, maintaining roadway, grading access	As required to maintain access	Mine Superintendent	-	-

SECTION 7 • SURVEILLANCE

Surveillance Involves the inspection and monitoring (i.e. collection of qualitative and quantitative observation and data) of activities related to water management infrastructures. Surveillance also includes the timely documentation, analysis and communication of surveillance results, to inform decision making and verify whether performance objective including critical controls are being met.

There are two types of surveillances activities which are further discussed in this chapter:

- Site observation and inspection
- Instrument monitoring

7.1 REFERENCE

Reference to key document for site observation & inspection of the Whale Tail water management infrastructure is presented in Table 7-1. Reference to key document for instrument monitoring is presented in Table 7-2.

Table 7-1: Key reference documents for Inspection of Whale Tail water management infrastructure

Type of information	Document #	Document Title and link
Simplified inspection form Template	-	OMS manual - Appendix A
Detailed visual inspection form template	-	OMS manual – Appendix A
Whale Tail Dike Dewatering inspection report		..\..\1 - Whale Tale Dike\4- Dewatering\1- Dewatering Inspection
Whale Tail Dike inspection report	WTD-VIR	..\..\1 - Whale Tale Dike\5 - Operation\1- Inspection
Mammoth Dike inspection report	MD-VIR	..\..\2- Mammoth Dike\4-Operation\1- Inspection\2019
WRSF Dike inspection report	WRSF-VIR	..\..\3- WRSF Dike\3-Operation\1- Inspection
NE Dike inspection report	NED-VIR	..\..\4- North East dike\3-Operation\1- Inspection
Attenuation pond and piping infrastructure inspection report	Dewatering Infrastructure -VIR	..\..\..\04- Water Management\6- Inspection
Annual dike safety inspection (annual geotechnical inspection)	-	..\..\..\10- Audit & External Inspection\2- Annual Geotech Inspection

Table 7-2: Reference documents for Instrument monitoring of Whale Tail water management infrastructure

Type of information	Link to Retrieve Information
Surveillance signoff log of Whale Tail water management infrastructure	..\..\..\..\10-Inspection\Inspection Signoff
Dewatering monitoring Report	..\..\1 - Whale Tale Dike\4- Dewatering\2- Dewatering Report
Geotechnical Instruments map (to come 30 days after instrumentation campaign)	-
Access to instrument data (restricted access)	http://cambeng1/
Instrumentation Report	..\..\7 - Instrumentation Report
Water Quality Result database (restricted access)	https://gim.golder.com/Agnico/
Blast vibration log	\\Cambfs01\groups\Engineering\05-Geotechnic\14-Amaruq\01 - Dewatering Dikes\1 - Whale Tale Dike\7 - Instruments\2- Instrument Data

7.2 SITE OBSERVATIONS AND INSPECTIONS

The purpose of site observation and inspection is to identify warning signs for the development of potentially adverse conditions that could lead to a failure or some other form of loss of control. Site observation and inspection include the direct observations by personnel on or adjacent to the water management infrastructure and may also include observation from helicopter or photo taken from unmanned airborne vehicle (UAV, satellites).

Site observation and inspections are used to identify and track visible change in the condition of the water management infrastructure. Changes that may be observed throughout site observations and inspections are included in Table 7-3

Table 7-3: Changes that may be observed through site observation and inspection of Whale Tail water management infrastructure

Changes related to physical risk of dike, road, ramp
• Change in freeboard • Deformation or change in condition at the crest, slopes and toes (i.e. bulge, cracks, sinkhole, sloughing, settlement) • Newly form or expanding areas of erosion • Evidence of piping or unexpected water movement through water containment structures • Changes in the seepage quantity (pumping rate) and quality (turbidity)
Changes related to physical risk of ditch
• Newly form or expanding areas of erosion • Newly form of obstruction to flow (i.e. boulder, sediments, snow) • Newly form of slope instability
Changes related to water storage and transport
• Change in sump level • Verify using the staff gauge that the pond is operated within its normal operating condition • Changes in the seepage quantity (pumping rate) and quality (turbidity) • Condition of pipe for water transport • Sign of leaks from water line • Condition of pumps
Change related to surveillance instrumentation
• Condition of surveillance instruments and associate protection around instruments (i.e. cover, barriers to prevent vehicle damage) • Condition of power supplies for instruments (i.e. solar panel) • Condition of communication infrastructure associated with instruments (i.e. antenna, datalogger)

7.2.1 Site observation

Site observation is conducted by personnel working on or adjacent to water management infrastructure as part of their daily activities, maintaining awareness of the facility in the course of carrying their duties. Trained personnel such as geotechnical technician should be on the lookout for sign of changing condition as indicated in Table7-3 as adverse condition can develop rapidly between inspections. A simplified visual observation form can be used to document such observations but they do not need to be documented unless a new condition has been observed. Any new observation should be documented by photograph and reported to the geotechnical personnel or Engineering Superintendent.

7.2.2 Inspection program

Inspections are conducted by the engineering department or other personnel with appropriate training and competency and are more rigorous than site observations.

The inspection program consists of several types of inspections such as routine and special visual inspection, dike safety inspection and dam safety review. The following sub-section describe in more details the scope, frequency and responsible for each type of inspection.

7.2.2.1 Routine Visual Inspection

Routine visual inspections are conducted on a pre-defined schedule and may target specific activities. Their objective is to identify any conditions that might indicate change in the water management infrastructure performance and therefore require follow-up. The inspection need to cover the aspect described in Table 7-2. Of particular significance are new occurrences or noted changed in seepage, erosion, sinkholes, boils, slope slumping, settlement, displacement, or cracking of structure components. These inspections are held during dewatering and operation.

There are two approved inspection form for inspection; a simplified one and a detailed one. The detailed form should be used for monthly inspection while the simplified one can be used when inspection are required at an increased frequency. All area of the form must be filled.

The person responsible for the inspection must:

- Do the inspection as per the required frequency
- Fill all information on the proper inspection form
- Take picture to supplement the inspection. As much as possible, these are to be taken from the same vantage points during each inspection so that changes in conditions can be readily identified. Photos should be annotated or captioned and should include a date stamp.
- Store electronically all photo and inspection form
- Update the surveillance log
- Ensure that the reviewer is aware that the document is ready to be reviewed

During the review process, the reviewer must:

- Ensure that all require information is present
- Ensure that the observation does not trigger a change in alert level
- Sign the inspection form as a reviewer
- Update the surveillance log
- Distribute the inspection results

The frequency for inspection of a structure will vary based on its TARP level and need to be updated in the surveillance log.

Table 7-4 summarise the Routine & Special visual inspection R&R, suggested frequency and scope in function of the alert level of the structure

Table 7-4 : Summary of routine inspection requirements

Structure	TARP Level	Inspection Responsible	Scope of inspection	Inspection Frequency	Reporting	Inspection Reviewer	Distribution List
Whale Tail Dike – Dewatering	Green	Geotechnical Engineer	All of Table 7-2	Daily	Simplified inspection form	-	Engineering Geotechnical Team, EOR
			Physical risk and surveillance	Bi weekly	Detailed inspection form	Geotechnical Coordinator	
		Water & Tailings Engineer	Water Storage and transport	At startup and bi&weekly	Detailed inspection form	Geotechnical Coordinator	
	Yellow	Geotechnical Engineer	All of Table 7-2	Daily	Simplified inspection form	Geotechnical Coordinator	Engineering Geotechnical Team, EOR
				Weekly	Detailed inspection form		
	Orange	Geotechnical Engineer	All of Table 7-2	Daily	Simplified inspection form	EOR	Engineering Geotechnical Team, EOR, designer, Management
				Weekly	Detailed inspection form + report presenting instrumentation data + report on action taken		
Whale Tail Dike, Mammoth Dike, WRSF Dike, NE Dike - Operation	Green	Geotechnical Technician	Physical risk and surveillance	Monthly	Detailed inspection form	Geotechnical Engineer	Engineering Geotechnical Team, EOR
		Geotechnical Engineer		Bi-weekly (from May to October)	Simplified inspection form	-	
	Yellow	Geotechnical Technician	All of Table 7-2	Monthly	Detailed inspection form + presentation and analysis of instrumentation data	Geotechnical Engineer	Engineering Geotechnical Team, EOR
		Geotechnical Engineer		Weekly	Simplified inspection form	-	
	Orange	Geotechnical Technician	All of Table 7-2	Weekly	Report on summary of surveillance activity + status of mitigation action	Geotechnical Engineer	Engineering Geotechnical Team, EOR, designer, Management
				Monthly	Detailed inspection form + presentation and analysis of instrumentation data	Geotechnical Engineer	Engineering Geotechnical Team, EOR
		Geotechnical Engineer		Daily	Simplified inspection form	Geotechnical Coordinator	Engineering Geotechnical Team, EOR
Attenuation Pond and Pumping Infrastructure – Operation	Green	Water & Tailings Engineer	Water storage and transport + physical stability of ramp	Monthly	Detailed Inspection	Geotechnical Coordinator	Engineering Geotechnical Team, E&I, EOR,
		Geotechnical Engineer		Bi-weekly	Simplified inspection form		
	Yellow	Water & Tailings Engineer or Geotechnical Engineer	Water storage and transport + physical stability of ramp	Weekly in area of concern	Detailed Inspection	Geotechnical Coordinator	Engineering Geotechnical Team, E&I, EOR,
	Orange	Water & Tailings Engineer or Geotechnical Engineer	Water storage and transport + physical stability of ramp	Daily	Simplified inspection form	Geotechnical Coordinator	Engineering Geotechnical Team, EOR, designer, Management
				Weekly in area of concern	Detailed Inspection		

7.2.2.1 Special Visual Inspection

Special inspections are conducted during and after unusual or extreme events that may impact the facility. Special inspections are conducted by the geotechnical engineer or Engineer of Record using the detailed inspection form and using the same procedure for review and documentation. Special visual inspection must be done on each structure after each of these events:

- At the end of dewatering once downstream toe is exposed
- Following a blast that exceed the vibration limits of the structure
- After an earthquake
- After a high intensity rainfall event (higher than a 1:2 years recurrence)
- Immediately after a site observation notice a change in condition
- Prior or immediately after increasing or decreasing the TARP level of a structure

7.2.2.2 Dike Safety Inspection (annual geotechnical inspection)

A dike safety review is a more comprehensive technical inspection, integrating inspections and results of monitoring instrument. This type of inspection is conducted by an external geotechnical engineer and supported by the Engineer of Record to have a more complete understanding of the facility performance and identify deficiencies in performance or opportunity for improvement. This will provide information to be used to revise the OMS manual.

For Whale Tail water management infrastructure such inspection need to occur on an annual basis between the month of July and September. The following components need to be inspected during this review:

- Whale Tail Dike, Mammoth Dike, WRSF Dike, NE Dike
- Attenuation pond and pumping infrastructure
- Ditches and channel

In addition to field inspection done as part of the safety review the following point should be addressed during the review:

- Review of all inspections report performed since the last review
- Review of monitoring instruments data;
- Identify deficiencies in performance or opportunity for improvement
- Review OMS performance and operational criteria and confirm that these meet the performance objective of the design
- Review and provide recommendations regarding OMS for the following year.

After each safety inspection a report must be submitted to the Engineering Superintendent which includes the results of the inspection done and addressing all point above. These reports will be stored electronically

7.2.2.3 Independent Dam Safety Review

Independent dam safety review are carried out by an independent third party to review all aspects of the design, construction, operation, maintenance, processes and other systems affecting the dam's safety, including the dam safety management system. The review defines and encompasses all components of the "dam system" under evaluation including the dam, foundations, abutments, instrumentation and seepage collection works. The independent third party for the Whale Tail water management infrastructure is the Meadowbank Dike Review Board (MDRB).

Modification to the MDRB composition can only be made by the Engineer of Record.

The Meadowbank Dike Review Board (MDRB) is comprised of the following member.

- Anthony Rattue
- Don Haley

An annual MDRB meeting will be held every year at the Meadowbank site. Other events that could trigger a MDRB meeting are:

- Major modifications to the design or design criteria;
- Discovery of unusual conditions that can compromise the integrity the water management infrastructure;
- After extreme hydrological or seismic events; and
- Decommissioning.

During the annual MDRB meeting, a dam safety review will be carried out according to the recommendations laid out in the Dam Safety Guidelines (CDA, 2013).

This review will include, but is not limited to:

- Review of the dikes classification;
- Site inspection;
- Review of design and construction records;
- Review of monitoring practices and the instrumentation records
- Assessment of the operation of the facilities;
- Provide recommendation on operation, maintenance and surveillance based on the results of the instrumentation readings, construction records and site observations;

7.3 INSTRUMENT MONITORING PROGRAM – DATA ACQUISTION

Instrument monitoring provides information on parameters or characteristics that cannot be detected through site observation or inspections cannot be observed with sufficient precision and accuracy or need to be monitored at high frequency or continuously.

The objective of instrument monitoring is to collect data to be used to assess the performance of the infrastructure against the performance objectives and indicators and the critical controls (refer to table 4-2 and 5-2). Instrument monitoring and inspections work together as a comprehensive data set to enable assessment of the water management infrastructure performance and provide a basis for informed decision. All are essential, and none of these forms of surveillance can be neglected if performance objectives are to be met and risks are to be managed.

More information on the type of in-situ instruments installed on each structure, how they were installed and their location can be found in Section 3-6 of this OMS manual.

Table 7-5 indicate the type of information collected through instruments monitoring and how it is collected. Table 7-6 summarise the data acquisition program related to instrument monitoring

Table 7-5: Information collected using instrument monitoring

Direct collection of information
• In-situ thermistors to measure temperature profile within the structure and its foundation • In-situ piezometer to measure pore-water pressure providing information about flow of water through the structure and foundation stability • In-situ shape array inclinometer (SAA) to provide information on deformation within the cut-off wall • Survey monument to provide information on settlement and deformation • Staff gauge to inform about water level of a pond versus its operating level • Blast monitor to inform on potential impact of blasting vibration on the structure • Flow meters and seepage monitoring station to inform on volume of water movement • Surveys conducted to measure ice cover, water level, update height and slope of containment structure
Collection of information from remote sensing
• Data acquired from airborne survey to generate detailed topographic map
Collection of information based on laboratory analyses
• Water quality analysis of seepage and surface runoff • Water quality analysis of water discharged through diffuser to inform on Environmental compliance • Water quality analysis of water stored in the various pond on site to inform on water movement decision
Collection of information related to the conduct of OMS activities
• Automatic data collection and transmission system for in-situ instruments (datalogger, solar panel, antenna, battery)

Table 7-6: Summaries of data acquisition program related to instrument monitoring of Whale Tail water management infrastructure

Instrument monitoring	Location of monitoring (3)	Parameter measured	Acquisition Methodology	Standard Acquisition frequency	Acquisition Responsible	Documentation methodology	Documentation Responsible
Thermistors	Whale Tail Dike, WRSF Dike, Mammoth Dike	Temperature (C^0) point for each bead on the chain	In-situ instrument connected to automatic data acquisition and transmission system	New data are acquired and transmitted to VDV every 3 hrs	Geotechnical Technician	Data are exported from VDV into instrumentation report emitted at a predetermined frequency (1)(2)	Geotechnical Engineer
Piezometer	Whale Tail Dike, Whale Tail South, Attenuation Pond	Pressure (kpa) point for each instrument	In-situ instrument connected to automatic data acquisition and transmission system	New data are acquired and transmitted to VDV every 3 hrs	Geotechnical Technician	Data are exported from VDV into instrumentation report emitted at a predetermined frequency (1)(2)	Geotechnical Engineer
Shape array accelerometer (SAA)	Whale Tail Dike	Displacement in mm	In-situ instrument connected to automatic data acquisition and transmission system	New data are acquired and transmitted to VDV every 3 hrs	Geotechnical Technician	Data are exported from VDV into instrumentation report emitted at a predetermined frequency (1)(2)	Geotechnical Engineer
Survey monument (4)	-	Elevation of monument which is then converted into mm of displacement (minimum precision of 3 mm required)	Data are acquired using a total station	Monthly in winter and bi-weekly from May to September	Geotechnical Technician	Data are exported into geoexplorer. Instrumentation report are emitted at predetermined frequency (1)(2)	Geotechnical Technician
Staff Gauge	Attenuation pond, WRSF pond, NE pond	Water level in pond	Take picture of the gauge	During each inspection	Inspection officer	Within inspection report	Inspection officer
Blast Monitor	Whale Tail Dike, WRSF Dike, Mammoth Dike, NE Dike	Peak particle velocity (PPV) measured by the blast monitor (mm/s)	Placement of blast monitor at a predetermined area on the dike	Before each blast in the vicinity of the dike	Geotechnical Technician	Update the blast vibration log. Discussion on recorded vibration in instrumentation report	Geotechnical Technician
Flow meter	NE pond, WRSF pond,	Volume of water pump (m^3)	Pumpman operator will inscribe flowmeter value on a pumping sheet	Daily when pump is operating	E&I Pump crew supervisor	Data will be integrated in the water balance	Water & Tailings engineer
Seepage monitoring station (manual reading with a V notch)	Where umpumped seepage is observed	Seepage flow (m^3/s)	Using a bucket and a stopwatch	Weekly during period of flow	Geotechnical Technician	Documented within instrumentation	Geotechnical Engineer
Survey shot	Whale Tail South, Whale Tail North, WRSF Pond, NE Pond	Elevation of the water level (minimum precision of 3 mm required)	Surveyor will take a water/ice level at a predetermined area	Once per week	Surveyor Leader	Integrated in the water movement log	Water & Tailings engineer
Airborne survey	All water management infrastructure	Topographic aerial survey made using drone	Surveyor will take a drone survey	Once per year after freshet	Surveyor Leader	Within survey database	Surveyor Leader
Water quality	Mammoth Lake, WTP discharge, WRSF pond, NE pond, attenuation pond, sumps (5)	Parameter indicated within water management plan	Water quality sample taken and sent for laboratory analyses	Acquisition frequency within water management plan	Environment General Supervisor	Within Env water quality database	Environment General Supervisor

(1)Refer to section 7-5 for more information on reporting methodology and the frequency of reporting
(2) Refer to section 7-6 on how to present instrumentation data from VDV in a report
(3) Exact location of each instrument can be found in the instrumentation database
(4) Survey monument are planned to be installed in 2020
(5) Location of water quality sampling point can be found in water management plan

7.4 ADDING INSTRUMENT TO THE MONITORING PROGRAM

Any addition to the monitoring program must be validated by the Engineering Superintendent or by the Environment Superintendent for aspect relating to water quality. In-situ instrument installation must be recorded in an as-built report and added to the instrumentation database and map. After each installation of instrumentation the following must be done:

- Document the calibration sheet and initial data reading
- Document instrument specification (manufacturer sheet)
- Document Information to which datalogger the instrument is connected
- Survey instrument coordinate (x,y,z)
- If the instrument is drilled, a schematic view of the depth of the instrument versus the stratigraphy must be produced
- Photo of installation must be documented

7.5 ANALYSIS OF SURVEILLANCE RESULTS

For the effective use of surveillance results and decision making, results must be collated, examined, analysed and reported in a timely and effective manner.

For visual inspection the process of analysing the data and communicating the results is describe in section 7-4 and happen at the same time the inspection is done and the report is sent. The information gained from the analysis of these results is then compared during the inspection and review to the TARP criteria which will then inform the action to take if performance indicator is not met.

For the instrumentation monitoring to be effective the data must be reviewed, analysed and reported at the proper frequency. Table 7-7 summarise the requirement for review, analyses and reporting of instrumentation data.

The person responsible for instrumentation data review need to update the surveillance log each time an instruments results has been reviewed and analysed. The person responsible for review of reporting and distribution need to update the surveillance log once the report has been reviewed and distributed.

Instrumentation	TARP Level	Expected range of observation	Responsible for review & analyse	Frequency of review	Responsible for reporting	Reporting frequency	Responsible for review and distribution	Distribution List
Piezometer, thermistor, SAA, (**Dewatering**)	Green	Define in TARP for dewatering	Geotechnical Engineer	Daily	Geotechnical Engineer	Bi-weekly instrumentation report	Geotechnical Coordinator	Engineering geotechnical team, designer, EOR
	Yellow	Define in TARP for dewatering	Geotechnical Engineer	Twice a Day	Geotechnical Engineer	Weekly instrumentation report	Geotechnical Coordinator	Engineering geotechnical team, designer, EOR
	Orange	Define in TARP for dewatering	Geotechnical Engineer	Twice a Day	Geotechnical Engineer	Weekly instrumentation report	Geotechnical Coordinator	Engineering Geotechnical Team, EOR, designer, Management
Piezometer, thermistor, SAA, survey monument (**Operation**)	Green	Define in TARP of each structure	Geotechnical Engineer	Bi-Weekly	Geotechnical Technician	Quarterly instrumentation report	Geotechnical Engineer	Engineering geotechnical team, designer, EOR
			Geotechnical technician	Weekly				
	Yellow	Define in TARP of each structure	Geotechnical Engineer	Weekly	Geotechnical Technician	Instrumentation reporting included within monthly inspection report	Geotechnical Engineer	Engineering geotechnical team, designer, EOR
			Geotechnical technician	Every 3 days				
	Orange	Define in TARP of each structure	Geotechnical Engineer	Daily	Geotechnical Engineer	Instrumentation reporting included within weekly update report	Geotechnical Coordinator	Engineering Geotechnical Team, EOR, designer, Management
			Geotechnical technician	Daily				
Staff Gauge / Survey shot (freeboard)	Green	Define in TARP of each structure	Water & Tailings Engineer	Weekly	Water & Tailings Engineer	Within the monthly attenuation pond and pumping infrastructure inspection report	Geotechnical Coordinator	Engineering geotechnical team, designer, EOR
	Yellow	Define in TARP of each structure	Water & Tailings Engineer	Daily	Water & Tailings Engineer	Within the monthly attenuation pond and pumping infrastructure inspection report	Geotechnical Coordinator	Engineering geotechnical team, designer, EOR
	Orange	Define in TARP of each structure	Water & Tailings Engineer	Twice a day	Water & Tailings Engineer	Included within weekly update report	Geotechnical Coordinator	Engineering Geotechnical Team, EOR, designer, Management
Blast Monitor	-	PPV> 50 mm/s	Geotechnical Technician	After retrieving a blast monitor on a water management structure	Geotechnical Technician	In Quarterly instrumentation report	Geotechnical Engineer	Engineering geotechnical team, designer, EOR
Flow meter / Seepage monitoring	Green	Define in TARP of each structure	Water & Tailings Engineer	Weekly	Water & Tailings Engineer	During the monthly update of the water balance	Geotechnical Coordinator	Engineering geotechnical team, designer, EOR
	Yellow	Define in TARP of each structure	Water & Tailings Engineer	Daily	Water & Tailings Engineer	During the monthly update of the water balance	Geotechnical Coordinator	Engineering geotechnical team, designer, EOR
	Orange	Define in TARP of each structure	Water & Tailings Engineer	Twice a day	Water & Tailings Engineer	Included within weekly update report	Geotechnical Coordinator	Engineering Geotechnical Team, EOR, designer, Management
Water quality	Green	Define in TARP of each structure	Environment General Supervisor	As per water management plan	Environment General Supervisor	As per water management plan	Environment Superintendent	Engineering geotechnical team

	Yellow	Define in TARP of each structure	Environment General Supervisor	As per water management plan	Environment General Supervisor	As per water management plan	Environment Superintendent	Engineering geotechnical team
	Orange	Define in TARP of each structure	Environment General Supervisor	As per water management plan	Environment General Supervisor	As per water management plan	Environment Superintendent	Engineering geotechnical team

Table 7-7 :Requirement for review, analyses and reporting of instrument data

7.5.1 Procedure in case of data exceeding expected range of observation

If data exceeding the expected range of observation or anomalous data readings are observed, the following actions need to be taken:

- Re-read to check the reading (if the reading is from VDV, take a manual reading in the field);
- Check readout equipment to verify that it is functioning correctly;
- Verify calibration;
- If instrument has stopped functioning, notify the Engineering Superintendent immediately. If considered critical, a replacement instrument should be installed;
- If an anomalous reading is confirmed, a detailed review of the effects of the reading should be carried out and design or remedial actions should be implemented if determined necessary by the Engineering Superintendent. Any malfunctioning instrument or frozen piezometer must be documented.
- In the case of valid data that would exceed the TARP level do a special inspection if possible.

Before modifying the TARP level due to in-situ instrumentation reading that cannot be confirmed by other visual observation the EOR must be consulted for further guidance.

7.5.1.1 Blast Monitor

If a reading exceeding the PPV limit for a water management structure (50 mm/s) is observed this event must be communicated to the drill and blast engineer who will need to ensure that the blasting pattern is modified to avoid re-occurrence of this event. Afterward a special inspection will need to be done on the structure to look for changing condition.

If more than one occurrence of blast vibration exceeding the limit are observed within a 2 weeks period the Engineering Superintendent needs to be notified of the situation.

7.5.2 Anomalous Instrumentation Data

Anomalous instrumentation data includes the following as presented in Table 7-7. These anomalies could happen without triggering a TARP level change and need to be investigated and recorded:

Table 7-8: Example of anomalous data and some common cause

Thermistors
• Increase or decrease in measurements (over two or more readings) that cannot be explained by seasonal temperature variations; • Progressive loss of data (starting from the bottom and progressing). This is usually a sign of water infiltration • Observation of a spike in temperature in one bead. This is usually due to a capacitive effect • Loss of data (could be a transmission error, faulty hardware or a sheared cable)
Piezometer
• Increase or decrease in pore water pressure measurements that cannot be explained by seasonal lake level variations (verify that the instrument has not been installed in a casing); • Sharp increase in reading (verify that the instrument is not frozen) • Loss of data (could be a transmission error, faulty hardware or a sheared cable)
SAA
• Cumulative increases in displacement (greater than 3 cm); • Erratic movement. This is usually a sign of water infiltration
Survey Monument
• Accelerating displacement rate of the survey monuments (x, y, z directions) (over two or more readings) (could be due to a prism shooting error or problem with the total station)
Blast Monitor
• Vibrations during a blast are not observed (the blast was cancelled, the blast monitor was not properly installed or vibrations were too weak to be recorded)
Flowmeter, survey shot and staff gauge
• Sudden change in staff gauge reading. Or reading that seem to not reflect the probable water elevation. This could be due to a settlement or displacement of the staff gauge. • Increase or decrease in flowmeter reading that are inconsistent with pumping rate or rainfall or observed water level. • Survey elevation that has a sharp fluctuation from last reading. This can be caused by the reading not taken at the good location, wave actions or daily variances in GPS signal

7.6 SURVEILLANCE DOCUMENTATION & REPORTING

One visual inspection report per structure needs to be completed, reviewed and distributed per the frequency in Table 7-4.

An instrumentation report need to prepare at predetermined frequency to present all instrumentation monitoring data as described in Table 7-8.
Table 7-9 describe how instrumentation data should be reported.

Instrumentation reports need to include the following information:

- Table presenting all the instruments installed on each structure, their status and pertinent installation information
- Graph of all instruments for all structure covered by the report. The graph need to present data for a minimum period of 1 year. Higher recurrence should be presented if clarity of the presented information allows it. The graph need to be presented in a way that allow for data interpretation without referring to other document
- Analyses of all instruments data presented highlighting specific trend
- Discussion on anomalous trend

For the structure having a yellow Tarp level the instrumentation data relevant to the cause of the alert need to be included with each visual inspection report.

For the structure having an orange Tarp level the instrumentation data relevant to the alert level need to be included with each inspection report. In addition the weekly update reports need to be written with the following information:

- Context on why the structure is at the orange level
- Change in condition since the last weekly report
- What is the mitigation plan and what action have been taken since the last update report
- Discussion on the result of the instrumentation data

Table 7-9: How data should be presented in report for instrumentation monitoring

Thermistance
• Temperature vs. depth plots over time. • The plot should indicate the thermistor string reference number and date of each measurements presented • The plot need to indicate relevant stratigraphy and their depth • Plot need to be presented with a cross-section of the installation (if on a structure) as well as a plan view showing the instrument location
Piezometer
• Plots of total head as elevation versus time; and • Plot need to be presented with a cross-section of the installation showing lithology with depth as well as a plan view showing the instrument location • The plot need to indicate the instrument number, the dates of each measurement and a mention if the temperature read by the instrument is less than 0 degree
SAA
• Cumulative displacement plots (to view total displacement); • Incremental displacement plots (to present increasing or accelerating movements between readings); • Cumulative displacement at crest versus time; and • Time plots at zones of identified displacement. • The plot need to indicate the SAA number, what is considered positive and negative displacement and the dates of each measurement • Both elevations and depths should be presented together with the lithology. • A plan view need to be included showing the instrument location
Survey Monument
• Total net movement plots (to present total displacement); • Vertical displacement plots; and • Lateral displacement plots parallel and perpendicular to the dike axis • The plot need to indicate the survey monument number, what is considered positive and negative displacement and the dates of each measurement • A plan view need to be included showing the instrument location

7.7 DATA MANAGEMENT

An electronic library or database, which is easily accessible, shall be set up to catalogue and store inspection documents, maintenance reports and instrumentation measurements. The following will be stored in the hard copy and/or electronic format. Section 7.1 indicates where each of these items can be found electronically:

- Instrumentation report
- Visual inspection report
- Weekly report for structure in orange Tarp level
- Dike safety inspection (annual geotechnical inspection)
- Dam Safety Review report;
- Surveillance log
- Instruments database and map
- Maintenance log of geotechnical instrument
- Maintenance log of water management infrastructure
- Pump maintenance record

Appendix A

Simplified Inspection Form

Detailed Inspection Forms Template

Simplified Surveillance Form

Structure :	Date :
Surveillance done by :	

	Item	Changing condition ? Yes	No	NA	Comments
1	Freeboard and pond level				
2	Tension Cracks				
3	Sinkhole				
4	Settlement				
5	Sloughing				
6	Erosion				
7	Debris & Obstruction (ditches, sump)				
8	Seepage				
9	Turbidity				
10	Instrumentation Condition				
11	Piezometric reading				
12	Thermistor reading				
13	SAA reading				
14	Flowmeter				
15	Condition of pipe and pump				

Recomendation

This simplified form is to be used as per the OMS manual instruction. The surveillance log must be updated after this surveillance report is filed. All condition deviating from normal operating threshold must be described in the comments section. Picture of changing condition should be attached to this document. Any changing condition must be reported to the geotechnical engineer. Any chaning condition trigering a change in threshold level must be communicated to the Engineering Coordinator or Superintendant

DIKE VISUAL INSPECTION REPORT

AGNICO EAGLE
MEADOWBANK

The instrumentation data is treated separately in the instrumentation quarterly report.

Inspecting Officer	Choose an item.
Report No.	Dike-VIR-
Inspection Date	

Dike name	

Last Inspection Date						
Weather during the current inspection		Sunny ☐	Overcast ☐	Rain ☐	Snow ☐	Wind ☐
	Comments:					
Main changes since the last inspection						

Tarp level (Based on OMS manual revision from March 2018)	

General Condition Summary

➢

Inspecting Officer: _____ Review Officer: _____ Date Reviewed: _____
(YY/MM/DD)

DIKE VISUAL INSPECTION REPORT

AGNICO EAGLE
MEADOWBANK

Field observations

Location	Observations	Recommendations
Downstream slope and berm	▪	▪
Upstream slope and berm	▪	▪
Crest	▪	▪

Seepage Report

Location	Observations	Recommendations
	▪	▪

Methodology: For the visual inspection, any anomaly or change since the last inspection must be reported. These anomalies include cracks, erosion, settlements, sink holes, bulging, sloughing, seepage signs, snow/ice, rutting, mud, ponds/puddles, signs of saturated soil and any damage on the liner or objects/water over the liner.

Aerial view of the Dike

Map of the Dike

Downstream slope and berm

DS1: Downstream slope and berm.	Location and orientation of DS1.

DS2: Downstream slope and berm.	Location and orientation of DS2.

Upstream slope and berm

US1: Upstream slope. Lake is frozen.	Location and orientation of US1.

US2: Upstream slope.	Location and orientation of US2.

Crest surface

CR1: Rolling surface.	Location and orientation of **CR1**

Appendix B

Potential Mitigation for Upset Condition

Potential Mitigation Plan for Upset Condition on Water Management Infrastructures

Upset Condition	Area / Cause		Comments/Monitoring	Contingency or Corrective Action
Overtopping and Subsidence	1a	Water level rise / storm event	Lake levels and crest elevations is monitored as part the water management infrastructure surveillance program Outflow channels are inspected during thaw, open water season and during ice break-up.	Add additional pumping unit If rise is caused by a channel obstruction, remove the obstruction
	1b	Dam crest settlement	This scenario requires extensive loss of support in the foundation since the rockfill of the dikes is essentially not settlement prone itself after construction and dewatering. For foundation settlement of this magnitude to occur, a piping event must develop or there is unexpected layer of compressible soil in the foundation. The situation would develop slowly with crest settlement evident at least several weeks before a run-away event develops. Easily observed cracks should be evident. Monitoring of the crest settlement is conducted routinely.	The crest is wide and comprises of coarse rockfill. Significant damage to the dike is not credible, based on performance of other rockfill structures subjected to overtopping or flow through events Rockfill from the mining operations can be placed to raise the dike crest and compensate settlement. Mining operations may need to be suspended, but there will be considerable warning time given the slow development of the scenario.
	1c	Wave action	Large freeboard and wide crest zone makes this a low concern	Rip-rap can be added and/or dam crest can be raised.
Internal Erosion	2a	Dike section: Cut-off wall/geomembrane is defective, allowing high water flow. This defect occurs at a location where the core allows high flows and where the fills/geomembrane is defective; the combination allows erosion of the cut-off and/or the Core Backfill.	The cut-off wall/geomembrane and/or core backfill will develop a progressively increasing void ratio, thereby increasing the rate of water flow through the dike. This is not a catastrophic failure mode but could lead to an inability to manage water on site	Monitor seepage from downstream face for rate of seepage and for presence of sediment in seepage. Identify zone of seepage and establish a seepage capture and monitoring station with sufficient pumping capacity Re-evaluate the impact of this water inflow on the site wide water balance
	2b	Dike section: geomembrane is defective.	Results in increasing the rate of water flow through the dike. This is not a catastrophic failure mode as the rockfill will be stable and at its worst would lead to temporary suspension of mining.	Monitor seepage from downstream face for rate of seepage and for presence of sediment in seepage. Identify zone of seepage and establish a seepage capture and monitoring station with sufficient pumping capacity Re-evaluate the impact of this water inflow on the site wide water balance
	2c	Foundation till is possibly non-uniform with more transmissive zones and not self-filtering. It is possible that one of these zones may align with defective construction of the cut-off wall allowing high flows. Seepage would lead to erosion of the cut-off into the downstream rockfill. Seepage could also erode the foundation tills at the downstream toe or into the downstream rockfill because of the lack of filtering.	Limited seepage at the toe or into the rockfill would accelerate in to a large inflow, and could lead to the undermining of the dike if no action was taken. This is a credible catastrophic mode if increased seepage is not detected in time. No particular instrumentation is needed as this failure mode will show itself as localized and increasing seepage. It could be detected by walk-over inspection by an experienced engineer or technician.	Remedial action could comprise a reverse filter and rockfill buttress depending on location of the flow and configuration of the foundation, freezing or grouting, if identified in time. In the worst case, the pit may be deliberately flooded in a controlled manner, the cut-off repaired and the pit dewatered. Build additional dike downstream increasing pumping.

Upset Condition	Area / Cause		Comments/Monitoring	Contingency or Corrective Action
Seepage	3a	Within the Embankment	Seepage on its own is not a credible failure scenario. The downstream rockfill shell has extremely high flow through capacity. The rockfill zone is both large and pervious, so that seepage will not daylight and lead to instability.	Monitor seepage from downstream face for rate of seepage and for presence of sediment in seepage. Identify zone of seepage and establish a seepage capture and monitoring station with sufficient pumping capacity Re-evaluate the impact of this water inflow on the site wide water balance
	3b	Within the Foundation	Defective construction of cut-off leading to transfer of unexpectedly high fraction of the reservoir head into the downstream part of the dike foundation, or leading to a piping event as described in internal erosion (2c). If this mechanism arises it should show itself during initial dewatering or very shortly thereafter.	Monitor seepage from downstream face for rate of seepage and for presence of sediment in seepage. Identify zone of seepage and establish a seepage capture and monitoring station with sufficient pumping capacity Re-evaluate the impact of this water inflow on the site wide water balance Re-assess stability (numerical modelling) and construct a stabilising berm
Structural - Slope Instability	4a	Normal Operation: Slope Failure	The rockfill shoulders of the dike are wide and have high shear strength Slope failure requires failure in the foundation and which would extend into the overlying dike. Sliding failure is considered unlikely given the low horizontal forces generated by the water and ice relative to the normal frictional force due to the weight of the dikes and the frictional angles of foundational materials. This mechanism should develop during construction or dewatering, due to the increase in load and associated pore water pressure development. Initial stages of failure should be observable as tension cracks in the dike crest. Walk-over inspection of the dike by trained inspector is an appropriate monitoring strategy in addition the instrumentation. Survey of crest face and toe is conducted.	Re-assess stability (numerical modelling) and construct a stabilising berm if required Fill inactive tension cracks with bentonite
	4b	Earthquake Induced: Slope Failure	Site is located in a low seismic zone. Dam consisting of massive rock zone has a low sensitivity to seismic motion.	Do an inspection and repair damage
	4c	Erosion; washout, ice scour	Crest – minimum 50 m section, Downstream – large quarry rock face.	Repair erosion by placing additional rockfill and material
Structural – Lateral Movement	5a	Failure of Cut-off Wall	Differential horizontal movement of the dike due to dewatering, water or ice loading or pit wall failure may create a breach in the cut-off wall. Ice and water forces are not credible due to the ratio of frictional forces generated by the self-weight of the dike versus ice loads and water pressure. Large inflows through the breach may occur as a consequence if the cut-off wall breached. Pit would flood requiring suspension of mining activities. Potential for loss of life of workers inside dikes. Inclinometer, settlement prism and monument monitoring is done routinely.	Repair the cutoff wall
Subsidence	6	Foundation Soils	Unexpected foundation soils consolidated during dike construction or dewatering. A significant quantity of clay would be required to generate settlement resulting in a water release event. Prism and monument monitoring is done routinely.	A 1 m core settlement would be required to allow water to flow through the rockfill and over the settled cut-off. This flow would not cause failure of the rockfill shells. It would also be readily repaired by excavating rockfill above the cut-off wall and placing more till. Soil conditions will be observed during dewatering to accommodate actual conditions.
Premature Closure	7	Corporate Bankruptcy or Early Resource Depletion	Bond is provided for this eventuality. Design of rehabilitation is the same as rehabilitation at closure of project.	This would trigger the closure plan

Upset Condition	Area / Cause		Comments/Monitoring	Contingency or Corrective Action
Pump and Pipeline Failure	8	Pumping infrastructures	Freezing protection is provided by heat tracing and insulation. Pipelines monitored pump pressures at plant and frequent site inspection.	Replace defect in pipeline Repair the pump and use another pump in the meantime

Water Quality and Flow Monitoring Plan, Version 6

AGNICO EAGLE

MEADOWBANK DIVISION

WHALE TAIL PIT

Water Quality and Flow Monitoring Plan

MARCH 2019

VERSION 6

EXECUTIVE SUMMARY

The purpose of this Water Quality and Flow Monitoring Plan is to establish the program to be implemented and followed by Agnico Eagle's environmental management team to monitor the performance of the waste and water management systems at the Whale Tail Pit Project.

The Plan is one component of the *Aquatic Effects Management Program* (AEMP) and is closely associated with the *Water Management Plan* and the *Core Receiving Environment Management Plan* (CREMP). The Water Quality and Flow Monitoring Plan summarizes the monitoring locations, sampling frequency, monitoring parameters, compliance discharge criteria and an adaptive management plan for water quality at the Whale Tail Pit.

Section 2 in this Plan includes an overview of the monitoring programs and mine development schedule. Section 3 provides specific details (including sampling locations and parameters to be measured) for the compliance monitoring program, along with general guidance for the event monitoring program. An adaptive management program is described for both regulated discharges and non-regulated discharges in Section 3 as well. Requirements of the flow monitoring program are described in Section 4, and an overview of the reporting requirements is described in Section 5.

This Plan has been updated to meet terms and conditions 17 and 18 in Project Certificate No. 008 and Type A Water License 2AM-WTP1826.

IMPLEMENTATION SCHEDULE

This Plan will be implemented immediately, subject to any modifications proposed by the NWB as a result of the review and approval process.

DISTRIBUTION LIST

Environmental Superintendent
Environmental General Supervisor
Environmental Coordinators
Environmental Technicians
Engineering Superintendent
Geotechnical Coordinator
Water Engineer

DOCUMENT CONTROL

Version	Date (YMD)	Section	Page	Revision
1	January 2017			Comprehensive plan for Whale Tail Pit project.
2	May 2017	1.0	1	Updated to include sampling station during post-closure (based on Commitment #2 from the Technical Meeting April 28-May 2, 2017; Agnico Eagle 2017)
	May 2017	Figure 2.4	-	Updated to include sampling station during post-closure (based on Commitment #2 from the Technical Meeting April 28-May 2, 2017; Agnico Eagle 2017)
	May 2017	Table 3-1	-	Updated to include sampling station during post-closure (based on Commitment #2 from the Technical Meeting April 28-May 2, 2017; Agnico Eagle 2017)
3	May 2018	All	multiple	Updated to meet Nunavut Impact Review Board Project Certificate Number 008, Term and Conditions 17 and 18.
4	August 2018	All	multiple	Updated to align with NWB Water Licence 2AM-WTP1826
5	October 2018	2.3, 3.1	multiple	Updated to align with recommendations issued by CIRNAC and ECCC in October 2018 Updated to align with recommendations issued by CIRNAC and ECCC in October 2018
6	March 2019	All	multiple	Updated to add the NWB Schedule 1 modification

Prepared by:

Agnico Eagle Mines Limited - Meadowbank Division

Plan approved by:



Robin Allard

Meadowbank Environment General Supervisor

Table of Contents

SECTION 1. INTRODUCTION 1
SECTION 2. Background 3
2.1 OVERVIEW OF SITE WATER MANAGEMENT PLAN 3
2.2 MONITORING PROGRAMS 3
2.2.1 Compliance Monitoring Program (CM) 3
2.2.2 Event Monitoring Program (EM) 4
2.3 OVERVIEW OF MINE DEVELOPMENT SCHEDULE 4
2.3.1 Pre-development and Construction Phase 9
2.3.2 Operations Phase 9
2.3.3 Closure Phase 9
2.3.4 Post-closure Phase 9
SECTION 3. MONITORING PROGRAM 10
3.1 COMPLIANCE MONITORING PROGRAM 10
3.1.1 General Sampling and Analysis Program 13
3.1.2 Compliance Monitoring Stations and Discharge Criteria 15
3.2 EVENT MONITORING 20
3.3 ADAPTIVE MANAGEMENT PROGRAM 21
3.3.1 Adaptive Management Program for Regulated Discharge 21
3.3.2 Adaptive Management Program for Non-Regulated Discharge 24
SECTION 4. FLOW VOLUMES 27
SECTION 5. REPORTING 28
5.1 Monthly Reporting 28
5.2 ANNUAL REPORTING 28
5.3 EXCEEDANCE REPORTING 28
SECTION 6. References 29

LIST OF TABLES

Table 3-1: Monitoring Program 11
Table 3-2: Monitoring Parameters 13
Table 3-3: Summary of Sampling Requirements for each Analyte 14
Table 3-4: Effluent Criteria – Discharge from Mammoth Lake Diffuser 16
Table 3-5: TSS Criteria at CM Stations ST-WT-7 and ST-WT-13 17
Table 3-6: Effluent Criteria – Whale Tail Bulk Fuel Storage Facility at Monitoring Station ST-WT-12 18
Table 3-7: Action Plan for Regulated Discharge 22

LIST OF FIGURES

Figure 2-1: Site Layout and Monitoring Plan (Construction Phase) 5
Figure 2-2: Site Layout and Monitoring Plan (Operation) 6
Figure 3-1: Logic Diagram for Regulated Discharge 23
Figure 3-2: Logic Diagram for Non-Regulated Discharge 26

SECTION 1. INTRODUCTION

The Water Quality and Flow Monitoring Plan (the Plan) has been prepared to meet Type A water Licence requirements (Water Licence 2AM-WTP1826, including modified Schedule I as approved by the Nunavut Water Board (NWB) through Board Motion NO. 2018-A1-023, dated December 6, 2018, as required by Part G, Item 2 of the Licence), and Project Certificate No.008. This Plan is one component of the Aquatic Effects Management Program (AEMP) and is closely associated with the Water Management Plan and the Core Receiving Environment Management Plan (CREMP). The Plan summarizes the monitoring locations, sampling frequency, monitoring parameters, compliance discharge criteria and an adaptive management plan for water quality at the Whale Tail Pit.

The purpose of this Water Quality and Flow Monitoring Plan is to establish the program to be implemented and followed by Agnico Eagle's environmental management team to monitor the performance of the waste and water management systems for the Project. The program includes:

- A Plan to verify and validate the results of predictive water quality modelling with empirical measurements of the mine site water quality and flows;
- An assessment of the effects of project activities and infrastructure on surface water quality conditions;
- A comparison of measured water quality data to compliance requirements;
- A monitoring plan with documentation to track the quantity of water that contacts mine ore and wastes, management of contact water to protect aquatic resources, and water conservation and recycling; and
- A framework for adaptive management that allows the identification and rectification, where necessary, of unexpected trends or non-compliance in water quality and flows.

The Plan provides information on the locations of the monitoring stations at the various stages of mining. These monitoring locations are used to evaluate the performance of the mine waste and water management system.

The objectives of the monitoring program are:

1) to track the chemistry of the contact and non-contact water prior to and during discharge;
2) to assist in identifying if water treatment is required prior to discharge;
3) to minimize the potential impacts of mining activities on the surrounding environment;
4) to confirm that non-contact water is clean; and
5) to demonstrate contact water is being captured and managed accordingly.

Additional locations outside the footprint of the Amaruq property (and outside the scope of this Plan) are monitored under the Aquatic Effects Management Program and the Core Receiving Environmental Monitoring Plan (Azimuth 2015, 2016, 2018a, 2018b).

There are three main surface water quality monitoring programs designed for the monitoring and protection of the receiving environment:

- Water Quality Monitoring and Management Plan for Dike Construction Dewatering
- Water Quality and Flow Monitoring Plan

- Core Receiving Environment Monitoring Program

Through these combined programs, water quality will be monitored at various locations (including two reference lakes), at least annually, and during all phases of the project.

SECTION 2. BACKGROUND

2.1 OVERVIEW OF SITE WATER MANAGEMENT PLAN

Details of overall water management are discussed in the Whale Tail Pit Water Management Plan which is updated as needed to reflect changes in operation and/or technology or as otherwise required by a Water Licence. All contact water from the mine facilities including the waste rock storage facilities (WRSF), Whale Tail open pit, and other disturbed areas will be directed by pumping or berms and other surface diversions to either of the following:

- Sumps from which the water will be pumped to the Whale Tail Attenuation Pond; or
- The open pits during re-flooding and after mining activity has ceased.

As specified in the Water Management Plan: All contact water will be intercepted, contained, analyzed, treated, if required, and discharged to the receiving environment only when water quality meets the discharge criteria. The Water Management Plan is intended to ensure appropriate destination and treatment of contact water as well as water conservation and recycling to minimize the use of natural water.

2.2 MONITORING PROGRAMS

The Water Quality and Flow Monitoring Plan has been divided into two levels of monitoring to characterize the range of potential effects between the sources of contact water in the individual mine facilities and the point of discharge or release to the receiving environment. The two levels of monitoring include:

1) compliance monitoring; and
2) event monitoring.

2.2.1 Compliance Monitoring Program (CM)

The compliance monitoring (CM) sites are those stipulated in a water Licence; these sites vary from contact water collection ditches and attenuation ponds to sampling in areas prior to discharge to the receiving environment. The requirements of the Water Licence 2AM-WTP1826 including water quality limits will be applied at the applicable mine discharge points identified in the CM program.

The CM program provides a mechanism to assess water quality at specified sites, to confirm and to document compliance of discharge with regulatory requirements. As part of adaptive water management, these internal monitoring stations provide protection to the receiving water environment, provide data to predict pit re-flooding water quality and ensure exceedances of predicted or regulated levels are appropriately managed or mitigated to reduce impacts.

The water quality and flow monitoring program was designed as a complimentary plan to the Core Receiving Environment Monitoring Program – Whale Tail Pit Addendum (CREMP; Azimuth 2016), the Groundwater Monitoring Plan and the Water Quality Monitoring and Management Plan for Dike Construction Dewatering.

2.2.2 Event Monitoring Program (EM)

The EM sites result from unexpected events such as spills, accidents, and malfunctions. The response programs for such events are discussed in greater detail in the following documents:

- Spill Contingency Plan;
- Emergency Response Plan; and
- Whale Tail Pit Water Management Plan.

Each accidental release will require mobilization of site equipment to stabilize the release, procedures to contain, neutralize, and dispose of the discharge, and recommendations for monitoring the site following the incident.

2.3 OVERVIEW OF MINE DEVELOPMENT SCHEDULE

The Project is a satellite deposit located on the Amaruq property, to extend mine operation and milling at the Meadowbank Mine. The open pit mine, mined by truck-and-shovel operation, will produce 8.3 million tons (Mt) of ore, 68.2 Mt of waste rock and overburden material between 2018 and 2022. Figures 2-1, 2-2, 2-3 and 2-4 show the sequence of staged development of Whale Tail Pit, from the pre-development and construction, operations, closure, and post-closure phases, respectively. These figures show the water quality monitoring location by mine phase. The actual configuration of the pit may change as mining progresses. As a result, the monitoring program (Section 3.0) accommodates changes in the pit design.

The staged development of the mine facilities has been divided into four phases for monitoring purposes. The four phases include:

- Construction phase (illustrated on Figure 2-1);
- Operations phase (illustrated on Figure 2-2);
- Closure phase (illustrated on Figure 2-3); and
- Post-closure phase (illustrated on Figure 2-4).

A summary of site activities and water quality monitoring issues during these phases is provided below.

602 000 604 000 606 000 608 000

7 258 000 7 256 000 7 254 000

N

NEMO FRESHWATER INTAKE
ST-WT-5
ST-WT-6
NEMO LAKE C38
WASTE ROCK BERM
OVERBURDEN
WRSF POND
WRSF DIKE
MAMMOTH CHANNEL CULVERT
MAMMOTH DIKE
MAMMOTH LAKE DIFFUSER
CONSTRUCTION WATER TREATMENT PLANT
ST-WT-15
ST-WT-14
ST-WT-13
MAMMOTH LAKE
WHALE TAIL LAKE (NORTH BASIN)
QUARRY
QUARRY 2
ORE STOCKPILE
OVERBURDEN STORAGE
EXPLORATION STORMWATER STORAGE POND
EXPLORATION RAMP PORTAL
EXPLORATION WASTE ROCK PAD
EXPLORATION LAYDOWN AREA
COMMUNICATION TOWER
EXPLORATION CAMP
EXPLORATION RAMP
VENT RAISE
WATER TREATMENT PLANT
WHALE TAIL BULK FUEL STORAGE FACILITY
HAZARDOUS MATERIAL
HAUL ROAD
WHALE TAIL CAMP
WHALE TAIL DIKE
WHALE TAIL EAST CHANNEL
TURBIDITY CURTAIN
ST-WT-DC4
ST-WT-DC3
ST-WT-DC2
ST-WT-DC1
WHALE TAIL LAKE (SOUTH BASIN)
ARCHAEOLOGICAL SITE 2015 - 14

MONITORING PLAN

- Turbidity monitoring station
- Water quality monitoring station

PROJECT COMPONENTS

- Road
- Temporary road
- Collection channel
- Culvert
- Contact water pipe
- Freshwater pipe
- Turbidity curtain
- Dike
- Overburden
- Quarry
- Storm water storage pond
- Pond/sump

HYDROGRAPHY

- Watercourse
- Lake
- Natural watershed

AGNICO EAGLE

SNC·LAVALIN

AMARUQ GOLD MINING PROJECT
Water Quality and Flow Monitoring Plan

Site Layout and Monitoring Plan Year -1: 2018

Sources:
Topography, PhotoSat, 2015
CanVec, NRCan, 2016
Project components : May 2018

Project: 655183
File: snc655183_f2-1_MonitPlan_Year-1_180730.mxd

0 250 500 m
1:25 000
UTM projection, Zone 14, NAD83 (CSRS)

July 30, 2018

Figure 2-1

S:\INTC\MineAmaruq\655183 Management Plans Update\Produit\01-Monitoring Plan\snc655183_f2-1_MonitPlan_Year-1_180730.mxd

602 000 604 000 606 000 608 000

7 258 000 7 256 000 7 254 000

N

ST-WT-12 ST-WT-11 ST-WT-5 ST-WT-6 ST-WT-3 ST-WT-4 ST-WT-1 ST-WT-15 ST-WT-2 ST-WT-14 ST-WT-13 ST-WT-12 ST-WT-11 ST-WT-7

HAZARDOUS MATERIAL STORAGE AREA
GAS BOY
TSD PARKING
WHALE TAIL BULK FUEL STORAGE FACILITY 3X50,000L TANK
POWERPLANT 2x1.8MW
KITCHEN / DINING ROOM / OFFICE
WHALE TAIL CAMP
EXPLORATION CAMP AREA
LUBE STORAGE TOTE
SMOKE SHACK
PUMP MAN SHOP
BIT SHOP
COLD STORAGE
ERT
MINE DRY
WAREHOUSE HEATED COVERALL
SEWAGE TREATMENT SYSTEM
POTABLE WATER TREATMENT PLANT
0 80 160 m
1:8 000

NEMO FRESHWATER INTAKE
NEMO LAKE
C38
ROAD AROUND WRSF
NORTHEAST POND
NORTHEAST DIKE
STORM WATER STORAGE POND
SADDLE / COFFER DAM #1
WHALE TAIL WASTE ROCK STORAGE FACILITY
WHALE TAIL LANDFILL
WRSF POND
WRSF DIKE
BERM
WASTE ROCK EXPLORATION PAD
EXPLORATION RAMP PORTAL
EXPLORATION LAYDOWN AREA
COMMUNICATION TOWER
CRUSHING AREA (2X CRUSHER)
ORE STOCKPILE 1
ORE STOCKPILE 2
WHALE TAIL BULK FUEL STORAGE FACILITY
HAUL ROAD
EXPLORATION RAMP VENT RAISE
WATER TREATMENT PLANT
NORTH CHANNEL
MAMMOTH CHANNEL CULVERT
MAMMOTH DIKE
MAMMOTH LAKE DIFFUSER
MAMMOTH CHANNEL CULVERT
ORE STOCKPILE 3
WHALE TAIL ATTENUATION POND
SADDLE / COFFER DAM
WHALE TAIL CAMP
OVERBURDEN STORAGE
WHALE TAIL DIKE
WHALE TAIL EAST CHANNEL
MAMMOTH LAKE
WHALE TAIL LAKE (SOUTH BASIN)
ELEVATION ZONE EL. 156m
ARCHAEOLOGICAL SITE 2015-14
WHALE TAIL CHANNEL
EXPLOSIVE MAGAZINE 35 000kg
CAP MAGAZINE

MONITORING PLAN

- Water quality monitoring station

PROJECT COMPONENTS

- Road
- Temporary road
- Diversion channel
- Collection channel
- Culvert
- Intake water pipe
- Contact water pipe
- Freshwater pipe
- Dike
- Open pit
- Final Whale Tail Waste Rock Storage Facility
- Whale Tail Lake (South basin) flooded limit (water level 156.0 m)
- Pond/sump

HYDROGRAPHY

- Watercourse
- Lake
- Natural watershed

AGNICO EAGLE

SNC·LAVALIN

AMARUQ GOLD MINING PROJECT
Water Quality and Flow Monitoring Plan

Site Layout and Monitoring Plan Year 1: 2019

Sources:
Topography, PhotoSat, 2015
CanVec, NRCan, 2016
Project components : May 2018

Project: 655183
File: snc655183_f2-2_MonitPlan_Year1_180730.mxd

0 250 500 m
1:25 000
UTM projection, Zone 14, NAD83 (CSRS)

July 30, 2018 | **Figure 2-2**

S:\INTC\MineAmaruq\655183 Management Plans Update\Produit\01-Monitoring Plan\snc655183_f2-2_MonitPlan_Year1_180730.mxd

602 000 604 000 606 000 608 000

7 258 000 7 256 000 7 254 000

N

ST-WT-6 ST-WT-3 ST-WT-10 ST-WT-9 ST-WT-11 ST-WT-12 ST-WT-8 ST-WT-15 ST-WT-14 ST-WT-13

CLOSED WHALE TAIL WASTE ROCK STORAGE FACILITY

SADDLE / COFFER DAM #1

ROAD AROUND WRSF

WHALE TAIL LANDFILL

WRSF POND

WRSF DIKE

SUMP

EXPLORATION STORMWATER STORAGE POND

EXPLORATION RAMP PORTAL

EXPLORATION LAYDOWN AREA

COMMUNICATION TOWER

ORE STOCKPILE 1

ORE STOCKPILE 2

WHALE TAIL BULK FUEL STORAGE FACILITY

HAUL ROAD

WATER TREATMENT PLANT

WHALE TAIL CAMP

WHALE TAIL DIKE

WHALE TAIL EAST CHANNEL

WHALE TAIL FRESHWATER INTAKE

ORE STOCKPILE 3

OVERBURDEN STORAGE

NORTH CHANNEL

MAMMOTH DIKE

MAMMOTH CHANNEL CULVERT

MAMMOTH LAKE DIFFUSER

MAMMOTH LAKE

NEMO LAKE C38

WHALE TAIL LAKE (SOUTH BASIN)

WHALE TAIL DIVERSION CHANNEL

ARCHAEOLOGICAL SITE 2015 - 14

182 183 185 186 181

MONITORING PLAN

- Water quality monitoring station

PROJECT COMPONENTS

- Road
- Temporary road
- Scarified road and access
- Diversion channel
- Collection channel
- Culvert
- Contact water pipe
- Freshwater pipe
- Dike
- Open pit
- Closed facility
- Exploration laydown area
- Storm water storage pond
- Pond/sump

HYDROGRAPHY

- Watercourse
- Lake
- Natural watershed

AGNICO EAGLE

SNC·LAVALIN

AMARUQ GOLD MINING PROJECT
Water Quality and Flow Monitoring Plan

Site Layout and Monitoring Plan Year 4: 2022

Sources:
Topography, PhotoSat, 2015
CanVec, NRCan, 2016
Project components : May 2018

Project: 655183
File: snc655183_f2-3_MonitPlan_Year4_180730.mxd

0 250 500 m

1:25 000

UTM projection, Zone 14, NAD83 (CSRS)

July 30, 2018

Figure 2-3

S:\INTC\MineAmaruq\655183 Management Plans Update\Produit\01-Monitoring Plan\snc655183_f2-3_MonitPlan_Year4_180730.mxd

602 000
604 000
606 000
608 000
7 258 000
7 256 000
7 254 000
N

CLOSED WHALE TAIL WASTE ROCK STORAGE FACILITY
CLOSED LANDFILL
SADDLE / COFFER DAM #1
ROAD AROUND WRSF
ST-WT-3
WRSF POND
WRSF DIKE
WATER TREATMENT PLANT
ST-WT-10
CLOSED FACILITY
MAMMOTH CHANNEL CULVERT
ST-WT-9
MAMMOTH DIKE
MAMMOTH LAKE DIFFUSER
HAUL ROAD
NEMO LAKE C38
WHALE TAIL LAKE (NORTH BASIN)
MAMMOTH LAKE A16
WHALE TAIL LAKE (SOUTH BASIN) A17
ARCHAEOLOGICAL SITE 2015 - 14
181
182
183
185

MONITORING PLAN

- Water quality monitoring station

PROJECT COMPONENTS

- Road
- Temporary road
- Scarified road and access
- Culvert
- Freshwater pipe
- Dike
- Closed facility
- Pond/sump

HYDROGRAPHY

- Watercourse
- Lake
- Natural watershed

AGNICO EAGLE

SNC·LAVALIN

AMARUQ GOLD MINING PROJECT
Water Quality and Flow Monitoring Plan

Site Layout and Monitoring Plan Year 11: 2029

Sources:
Topography, PhotoSat, 2015
CanVec, NRCan, 2016
Project components : May 2018

Project: 655183
File: snc655183_f2-4_MonitPlan_Year11_180730.mxd

0 250 500 m
1:25 000
UTM projection, Zone 14, NAD83 (CSRS)

July 30, 2018

Figure 2-4

S:\INTC\MineAmaruq\655183 Management Plans Update\Produit\01-Monitoring Plan\snc655183_f2-4_MonitPlan_Year11_180730.mxd

2.3.1 Pre-development and Construction Phase

The principal impacts resulting from construction activities may be the increase in turbidity and TSS from the release of particulates during dike construction, surface runoff, the disturbance of lake sediments and the dewatering of future mining zones. Management and monitoring of these impacts are discussed in the AEMP and the Water Quality Monitoring and Management Plan for Dike Construction and Dewatering. Construction of the Whale Tail Pit site has commenced.

2.3.2 Operations Phase

During the operations phase, mining will occur in the Whale Tail Pit. Most of the waste rock generated from the pit will be deposited in the waste rock storage facility (WRSF), however some NPAG waste rock may be used for construction of mine infrastructure (roads, dikes), and potentially some for fish habitat structures. Milling and tailings will be regulated under the 2AM-WTP1826 Type A Water Licence. During the early operations phase, mine water from the individual pit sumps including dike seepage will be pumped to the Attenuation Pond. Water from the Attenuation Pond will be discharged to Mammoth Lake during the open water period on an annual basis through a diffusor. This water will be treated as required (e.g., TSS arsenic, and phosphorus) prior to being discharged.

The operations phase will span three to four years, from Year 1 (2019) to Year 4 (2022).

2.3.3 Closure Phase

Mining activities are currently expected to end during Year 4 (2022). Closure will occur from Year 4 (2022) to Year 11 (2029) after the completion of mining and will include removal of the nonessential site infrastructure and flooding of the mined-out open pit, as well as reestablishment of the natural Whale Tail Lake water level.

The Dikes will be decommissioned once water quality within the pit lake meets discharge criteria. Activities during the late closure phase will be primarily monitoring of selected mine facilities including flooded pit lakes and the reclaimed WRSF areas.

Further details about closure is covered in the Interim Whale Tail Closure and Reclamation Plan.

2.3.4 Post-closure Phase

Activities during the post-closure phase will be primarily monitoring of selected mine facilities including flooded pit lakes and the reclaimed WRSF area. The Dikes will be breached once water quality within the pit lake meets discharge criteria – CCME guideline for the Protection of Aquatic Life and background levels for parameters not listed in the CCME guideline.

Post-closure monitoring to confirm physical and chemical stability is planned until 2046.

SECTION 3. MONITORING PROGRAM

The monitoring program is presented in three sections; requirements of the compliance monitoring (CM) program, an overview of the event monitoring program (i.e., monitoring that occurs after spills or emergencies), and details of the adaptive management program for monitoring results.

3.1 COMPLIANCE MONITORING PROGRAM

The CM program monitors the chemistry of mine contact water and diverted water at specified locations prior to the release into the receiving water environment in order to confirm and document compliance with regulatory requirements. The types of water and the timing of the CM program include:

- non-contact water discharged from diversion ditches during operations, and closure phases of the mine and eventually non-contact water from dike seepage;
- mine contact water directed to and discharged from the Attenuation Pond during the operations phase of the mine;
- monitoring points located within the pit lakes and the flooded Whale Tail Attenuation Pond before and after the dikes have been breached during the late-closure phase of the mine life; and
- runoff from Whale Tail WRSF prior to discharge to Mammoth Lake.

The CM sampling program has multiple monitoring stations across the project site, with sampling at different stages of the mine life. All of the CM stations, a description of their location, parameters to be monitored and sampling frequency are listed in Table 3-1. Specific details for the monitoring parameter groups are provided in Table 3-2 and are the same as presented in 2AM-WTP1826 Water Licence. In summary, 6 groups of parameters include:

- Group 1 – mine site monitoring parameters;
- Group 2 – receiving environment parameters consistent with the CREMP and applied to all AEMP stations (including ground water monitoring); includes dissolved metals for hydrogeological monitoring and to be protective of the aquatic environment;
- Group 3 – sampling prior to discharge; includes MDMER parameters plus sulphate, turbidity and Aluminum;
- Group 4 – sampling prior to discharge at secondary containment fuel storage areas;
- Group 5 – MDMER; and
- Group 6 – Field Measurements

Figures 2-1 and 2-4 show the approximate location of the sampling sites at the Whale Tail Pit area. The actual location of each sampling site is determined by access and safety considerations and will be marked by a stake (where appropriate) that defines the exact location of the collection point for sampling events with appropriate attached signage in English, Inuktitut, and French.

GPS coordinates for all compliance monitoring stations will be confirmed with the Water Resources Officer.

Table 3-1: Monitoring Program

Station	Description	Phase	Monitoring Parameters or Group	Frequency
ST-DC-1 to TBD	Monitoring stations during dike construction as defined in the Whale Tail Water Quality Monitoring and Management Plan for Dike Construction and Dewatering	Construction	As defined in Water Quality Monitoring and Management Plan for Dike Construction and Dewatering referred to in Part D, Item 5	As defined in Water Quality Monitoring and Management Plan for Dike Construction and Dewatering referred to in Part D, Item 5
ST-DD-1 to TBD	Monitoring Program stations during dike dewatering as defined in the Whale Tail Water Quality Monitoring and Management Plan for Dike Construction and Dewatering	Construction	As defined in Water Quality Monitoring and Management Plan for Dike Construction and Dewatering referred to in Part D, Item 5	As defined in Final Water Quality Monitoring and Management Plan for Dike Construction and Dewatering referred to in Part D, Item 5
ST-S-1 to TBD	Seeps (to be determined)	Operations	Group 1	Monthly or as found
		Closure	Group 1	Monthly or as found
ST-GW-1 to TBD	Groundwater wells (to be determined) as required under Groundwater Monitoring Plan	Operations	Group 2	Annually
		Closure	Group 2	Annually
ST-WT-1	Attenuation Pond, pre-treatment	Operations	Group 1	Four times per calendar year
ST-WT-2	Attenuation Pond, post treatment; last point of control before discharge	Operations	Volume (m^3)	Daily during periods of discharge
			Field Measurements	Weekly during periods of discharge
			Group 2	Weekly during periods of discharge
			Group1-MDMER Effluent characterization	Four times per calendar year
			Group 3-MDMER Acute Toxicity	Once prior to discharge and Monthly thereafter
			3-MDMER sub-lethal toxicity	Two times per calendar year
ST-WT-3	Waste Rock Storage Facility (WRSF) Pond prior to pumping to Attenuation Pond	Operations	Group 1	Four times per calendar year, when water is present.
		Closure	Group 1	Four times per calendar year, when water is present.
	Waste Rock Storage Facility (WRSF) Pond prior to discharge to Mammoth Lake	Post-closure	Group 1	Four times per calendar year, when water is present.
ST-WT-4	Whale Tail Pit or pit sump	Operations	Group 1	Four times per calendar year
ST-WT-5	Water intake from Nemo Lake	Construction	Volume (m^3)	Monthly
		Operations	Volume (m^3)	Monthly
ST-WT-6	Lake A47	Construction	Group 2	Monthly during open-water
		Operations	Group 2	Monthly during open-water
		Closure	Group 2	Monthly during open-water
ST-WT-7	East diversion channel	Operations	Group 3	Three times (freshet, summer, fall) per calendar year
ST-WT-8	Water intake from Whale Tail Lake	Closure	Volume (m^3)	Monthly

Station	Description	Phase	Monitoring Parameters or Group	Frequency
ST-WT-9	North Whale Tail Lake (as the basin fills and when it is connected to the south basin and prior to or when connected to the downstream environment)	Closure	Group 1	Four times per calendar year
		Post-closure	Group 2	Four times per calendar year
ST-WT-10	Pit Lake (as the pit fills)	Closure	Group 2	Four times per calendar year
		Post-closure	Group 2	Four times per calendar year
ST-WT-11	Sewage treatment plant	Operations	Group 1	Four times per calendar year
		Closure	Group 1	Four times per calendar year
ST-WT-12	Secondary containment at Whale Tail Bulk Fuel Storage Facility	Operations	Group 4	Prior to discharge or transfer of effluent
		Closure	Group 4	Prior to discharge or transfer of effluent
ST-WT-13	Lake A45	Operations	Group 3	Flow, Monthly during open-water
		Closure	Group 3	Flow, Monthly during open-water until water level have returned to baseline level
ST-WT-14	Lake A16 outlet	Construction	Group 2	Monthly during open-water
		Operations	Group 2	Monthly during open-water
		Closure	Group 2	Monthly during open-water
ST-WT-15	Lake A15	Construction	Group 2	Monthly during open-water
		Operations	Group 2	Monthly during open-water
		Closure	Group 2	Monthly during open-water

Table 3-2: Monitoring Parameters

Group	Parameters
1	pH, turbidity, hardness, alkalinity, chloride, fluoride, sulphate, total dissolved solids (TDS), total suspended solids (TSS), ammonia nitrogen, nitrite, nitrate, orthophosphate, total phosphorus, total metals (aluminum, arsenic, barium, cadmium, chromium, copper, iron, lead, manganese, mercury, molybdenum, nickel, selenium, silver, thallium and zinc).
2	**Total and Dissolved metals:** aluminum, antimony, arsenic, boron, barium, beryllium, cadmium, copper, chromium, iron, lithium, manganese, mercury, molybdenum, nickel, lead, selenium, tin, strontium, titanium, thallium, uranium, vanadium and zinc. **Nutrients:** Ammonia-nitrogen, total Kjeldahl nitrogen, nitrate nitrogen, nitrite-nitrogen, orthophosphate, total phosphorous, total organic carbon, total dissolved organic carbon and reactive silica. **Conventional Parameters:** bicarbonate alkalinity, chloride, carbonate alkalinity, conductivity, hardness, calcium, potassium, magnesium, sodium, sulphate, pH, total alkalinity, TDS, TSS and turbidity.
3	MDMER parameters (arsenic, copper, lead, nickel, zinc, TSS, pH), sulphate, turbidity and total aluminum.
4	Total Arsenic, Total Copper, Total Lead, Total Nickel, TSS, Benzene, Toluene, Ethylbenzene, Xylene, TPH, pH.
MDMER	Arsenic, copper, lead, nickel, zinc, TSS, pH, effluent volumes and flow rate of discharge, acute lethality (Rainbow Trout and *Daphnia magna*) and environmental effects monitoring (EEM).
Field Measurements	pH, specific conductivity, dissolved oxygen (DO) and temperature

3.1.1 General Sampling and Analysis Program

Samples are collected in clean laboratory-supplied containers and preserved as directed by the analytical laboratory. During all phases, samples are analyzed offsite at an accredited commercial lab (e.g., ALS in Burnaby BC, Maxxam Analytics in Montreal or H2lab in Val d'Or).

Table 3-3 summarizes the minimum sample volumes, container, preservation, and holding times for each analyze. This information is from the *USEPA Methods for Chemical Analysis of Water and Waste Water* (*EPA-600/4-79-020, 1979*). Note, these bottle types and volumes may change if the laboratories make a change in procedure.

Table 3-3: Summary of Sampling Requirements for each Analyte

Parameter	Minimum Volume (mL)	Bottle Type	Preservation	Holding Time
pH	250	250 mL, glass or plastic, filled to the top	4˚C	Analyze immediately
Conductivity	125	250 mL, glass or plastic	4˚C	28 days
Hardness	250	250 mL plastic, filled to the top	4˚C, HNO_3	6 months
Oil and Grease (total)	1000	1 L amber glass	4˚C, H_2SO_4	28 days
Turbidity	125	250 mL, glass or plastic	4˚C	48 hours
Total Dissolved Solids (TDS)	125	250 mL glass	4˚C	7 days
Total Suspended Solids (TSS)	125	250 mL glass	4˚C	7 days
Total Alkalinity	250	250 mL, glass or plastic, filled to the top	4˚C	14 days
Bicarbonate Alkalinity	250	250 mL, glass or plastic, filled to the top	4˚C	14 days
Carbonate Alkalinity	250	250 mL, glass or plastic, filled to the top	4˚C	14 days
Total Cyanide	125	250 mL, glass or plastic	4˚C, NaOH	14 days
Free Cyanide	125	250 mL, glass or plastic	4˚C, NaOH	14 days
Benzene, Toluene, Ethylbenzene & Xylene (BTEX)	40 (per vial)	3 X 40 mL, glass, filled to the top	4˚C	7 days
Total Petroleum Hydrocarbons(TPH)	1000	1L, glass	4˚C, H_2SO_4	28 days
Total Metals (ICP-MS) (Aluminum, Antimony, Arsenic, Boron, Barium, Beryllium, Cadmium, Cobalt, Copper, Chromium, Iron, Lithium, Manganese, Mercury, Molybdenum, Nickel, Lead, Selenium, Tin, Strontium, Titanium, Thallium, Uranium, Vanadium, Zinc, Potassium, Magnesium, Sodium)	125	250 mL plastic	4˚C, HNO_3	6 months
Dissolved Metals (Aluminum, Antimony, Arsenic, Boron, Barium, Beryllium, Cadmium, Cobalt, Copper, Chromium, Iron, Lithium, Manganese, Mercury, Molybdenum, Nickel, Lead, Selenium, Tin, Strontium, Titanium, Thallium, Uranium, Vanadium, Zinc)	125	250 mL plastic	4˚C, Filtered on-site, HNO_3	6 months
Ammonia-nitrogen	250	250 mL, glass or plastic, filled to the top	4˚C, H_2SO_4	28 days
Total kjeldahl nitrogen	250	250 mL, glass or plastic, filled to the top	4˚C, H_2SO_4	28 days
Nitrate nitrogen	125	250 mL, glass or plastic	4˚C	48 hours
Nitrite nitrogen	125	250 mL, glass or plastic	4˚C	48 hours
Ortho-phosphate	125	250 mL, glass or plastic	4˚C	14 days
Total phosphorous	125	250 mL, glass or plastic	4˚C, H_2SO_4	28 days
Total organic carbon	125	250 mL glass	4˚C, H_2SO_4	28 days
Dissolved organic carbon	125	250 mL glass	4˚C, H_2SO_4	28 days
Chloride	125	250 mL, glass or plastic	4˚C	28 days
Fluoride	125	250 mL plastic	4˚C	28 days
Sulphate	125	250 mL, glass or plastic	4˚C	28 days
Radium 226	500	1L plastic	4˚C, HNO_3	1 month
Reactive Silica	250	500 mL, plastic	4˚C	28 days

Note: The bottle types and preservation method may change at the discretion of the laboratory.

3.1.2 Compliance Monitoring Stations and Discharge Criteria

Consistent with similar mining operation (i.e., Meadowbank Mine) further details of the specific CM stations and discharge criteria are established for Whale Tail Pit Project according to the Nunavut Water Board Type A Water Licence 2AM-WTP1826.

3.1.2.1 *Construction and Dewatering Activities*

To mine the Whale Tail Pit, a series of dikes will be built to isolate the pit from the surrounding water bodies. The document "*Whale Tail Pit Project Water Quality Monitoring and Management Plan for Dike Construction and Dewatering"* (January 2016) will be followed for the Approved Project to specifically address the monitoring requirements for these activities (Refer to Section 3 of that plan).

3.1.2.2 *Visual Inspections and Seepage Monitoring*

The Plan includes visual inspections to be conducted regularly to monitor for potential issues such as erosion (see Section 3.1.2.3 for more details), spills and leaks (see Section 3.2 for more details), or unanticipated seepage (e.g., from the WRSF, haul road). Where seepage is observed, sampling will be conducted (Table 3-1 for details) and appropriate follow-up (e.g., collection and transport to the Attenuation Pond) will be conducted.

Regular inspections and seepage monitoring (where water is observed) is required to document that the seepage is appropriately contained, managed and will not enter the receiving environment. Inspections will be conducted on a monthly basis at the WRSF during open water season or after a major rain event occurs. Seepages identified at the Whale Tail WRSF will be pumped to the WRSF collection pond. . Results of the inspections and seepage monitoring data are also used for comparisons to the FEIS predictions (see Section 5.0 for more details).

3.1.2.3 *Water Collection System (Diversions and Effluent)*

A water collection system comprised of ditches, sumps, water management ponds, and open pits is proposed to control surface water for the Project. Water that may potentially come into contact with waste rock or contaminated material is segregated from non-contact water and collected in water management ponds and treated, if necessary, prior to discharge into the receiving environment.

Regular monitoring during freshet (the snowmelt, thawing) and during heavy or prolonged rainfall to identify any erosional or stability issues with regards to:

- The configuration or structure of channels, due to localized thawing, local ground instabilities, subsidence and transport of fine particles;
- The free flow of water, due to an accumulation of ice, sediments and other debris; and
- Potential damage to retention structures and monitoring of seepage.

Maintenance operations consist of cleaning accumulated sediments and debris from the ditches and culverts, and repairing damaged areas as soon as possible.

During pit flooding, samples will be taken in representative locations of the pit that is being re-flooded. It is likely that the sampling sites will change based on mine sequencing and as the water

level in the pits rise in response to flooding.

The following is a list of the various areas of the water collection system where samples for the internal compliance monitoring program will be collected:

- Whale Tail/ Pit area ditches, sumps, ponds, and pit lake (ST-WT-1, ST-WT-3, ST-WT-4, ST-WT-7, ST-WT-10).

Effluent discharged from the Attenuation Ponds at CM station ST-WT-2 is directed to Mammoth Lake through a diffuser. Discharge to the receiving environment shall not exceed effluent quality limits stipulated in Table 3-4 and based on criteria established in Whale Tail Pit Type A Water Licence 2AM-WTP1826.

Table 3-4: Effluent Criteria – Discharge from Mammoth Lake Diffuser

Parameter	Maximum Average Concentration	Maximum Allowable Grab Sample Concentration
Conventional Parameters		
pH	6.0 to 9.5	6.0 to 9.5
Total Suspended Solids (mg/L)	15	30
Total Dissolved Solids (mg/L)	1400	1400
Nutrients		
Total Ammonia (mg-N/L)	16	32
T-Phosphorus (mg-P/L)	0.3	0.6
Metals		
Total Aluminium (mg/L)	0.5	1.0
Total Arsenic (mg/L)	0.1	0.2
Total Cadmium (mg/L)	0.002	0.004
Total Chromium (mg/L)	0.02	0.04
Total Copper (mg/L)	0.1	0.2
Total Iron (mg/L)	1.0	2.0
Total Lead (mg/L)	0.05	0.10
Total Mercury (mg/L)	0.004	0.008
Total Nickel (mg/L)	0.25	0.5
Total Zinc (mg/L)	0.1	0.2
Other		
Total Petroleum Hydrocarbons (mg/L)	3.0	6.0

Effluent discharged from CM station ST-WT-2 shall be demonstrated to be acutely non-lethal, as stipulated in Water Licence 2AM-WTP1826 Modified Schedule 1. The following are the toxicity tests that are performed:

- Reference Method for Determining Acute lethality of Effluents to Rainbow Trout EPS 1/RM/13 Second Edition December 2000 (with May 2007 amendments); and
- Biological Test Method; Acute Lethality Test Using Daphnia spp. EPS 1/RM/11 July 1990 (with May 1996 amendments).

All water collected within the non-contact water diversion system during operations at CM stations ST-WT-7, ST-WT-13 and Whale Tail Seepage Monitoring Program Stations ST-S-1 to –TBB shall not exceed the effluent quality limits presented in Table 3-5.

Table 3-5: TSS Criteria at CM Stations ST-WT-7 and ST-WT-13

Parameter	Maximum Average Concentration (mg/L)	Maximum Allowable Grab Sample Concentration (mg/L)
TSS	15	30

3.1.2.4 *Waste Rock Storage Facility*

Waste rock from the open pits not used for site development purposes will be trucked to the Whale Tail WRSF. Samples will be collected at the WRSF Pond (ST-WT-3), and if seepage is observed, for the compliance monitoring program. Frequency of collection will be as described in Table 3-1.

In addition, there will be regular inspections of the WRSF to determine the presence of any seepage or uncontrolled runoff. Where seepage or runoff is observed, water quality samples will be collected and facilities will be constructed to divert water to a collection system. Results of these inspections are reported in the Agnico Eagle annual report.

Further details about waste rock monitoring is covered in the Acid Rock Drainage/Metal Leaching Plan.

3.1.2.5 *Support Facilities*

Whale Tail Pit Camp and Site

A sewage treatment plant will be in operation at the Whale Tail Camp. Discharge from the plant will be directed to the Whale Tail attenuation pond and then discharged through a diffuser to the receiving environment. Water quality monitoring for this facility is included in the CM water collection system.

Construction debris and domestic waste generated on-site to be disposed of to the on-site landfill located in the Whale Tail WRSF.

The Whale Tail Bulk Fuel Storage Facility will be located east of the Whale Tail Camp adjacent to the mine operations haul road. Water collected within the fuel containment facilities will be discharged to land, when necessary, in a controlled manner. It is proposed that Effluent from the fuel containment facilities being discharged to land (sampled as ST-WT-12) shall not exceed the effluent quality limits presented, as stipulated in the Whale Tail Type A Water Licence 2AM-WTP1826 (Table 3-6).

Table 3-6: Effluent Criteria – Whale Tail Bulk Fuel Storage Facility at Monitoring Station ST-WT-12

Parameter	Maximum Authorized Monthly Mean Concentration	Maximum Authorized Concentration in a Grab sample
Conventional Parameters		
pH	6.0 to 9.5	6.0 to 9.5
Total Suspended Solids (mg/L)	15*	30
Metals		
Total Arsenic (mg/L)	0.5*	1.0
Total Copper (mg/L)	0.3*	0.6
Total Nickel (mg/L)	0.5*	1.0
Total Zinc (mg/L)	0.5*	1.0
Lead (mg/L)	0.1	0.1
Other		
Oil and Grease (mg/L)	5 and no visible sheen	5 and no visible sheen
Ammonia (mg/L)	6.0	6.0
Benzene (µg/L)	370	370
Toluene(µg/L)	2	2
Ethylbenzene (µg/L)	90	90

*Metal and Diamond Mines Effluent Regulations (MDMER)

3.1.2.6 *Whale Tail Pit Haul Road and Quarries*

Whale Tail Pit Haul Road and Quarries

The 64.1 km long exploration access road from Vault to the Amaruq exploration camp site was expanded in width (from 6.5 m to 9.5 m) and upgraded to a haul road. Road surfacing was constructed using non-potentially acid generating (NPAG) Vault waste rock and aggregates from the quarry sites and esker material. Approved borrow sources was used for construction; some of these will remain open for the duration of the mine to service the road.

Monitoring procedures along the Whale Tail Pit Haul Road and quarries include visual inspections of infrastructure and water quality sampling.

As per the quarry leases requirements (Item 17 of Quarry Permit KVCA15Q02, Item 17 of Quarry Permit KVCA15Q01, Item 18 of Quarry Permit KVCA17Q01 and Item 18 of Quarry Permit KVCA18Q01), a water monitoring plan will be prepared for quarries in which explosives are in use. The water will be monthly sampled and analyzed for a full suite of water quality parameters[1]. Prior to the tenth day of each month, a report will be submitted to the KIA indicating the water quality results. Water results shall be tabulated and compared to applicable guidelines.

[1] Physical Parameters: pH (field and laboratory), temperature (field), alkalinity, bicarbonate, carbonate, electrical conductivity, hardness, hydroxide, ion balance, total dissolved solids, total suspended sediments
Nutrients: NH_4, NO_3, NO_2, PO_4
Major Ions: Ca, Cl, Mg, K, Na, SO_4
Trace Metals: Al, Sb, As, Ba, Be, B, Cd, Cr, Cu, Fe, Pb, Li, Mn, Hg, Mo, Ni, Se, Ag, Sr, Sn, Ti, U, V, Zn

Visual Inspections

The watercourse crossing visual inspection and maintenance program is designed to identify issues relating to watercourse crossings structural integrity and hydraulic function. It has two main objectives:

1) Visual inspection of its infrastructure to identify defects, cracks or any other risks to structural integrity. Particular attention will be paid to the inlet and outlet structures of culverts, and to bridge abutments and their foundations, as required. This inspection is conducted annually by a geotechnical engineer.

2) Visual inspection to identify sediment or other debris accumulation impeding the free flow of water through the crossings. Maintenance operations will consist of hand removal of accumulated debris and repairing damages as soon as possible. Visual inspection of upstream and downstream channels to identify bed erosion or scour around the watercourse crossing structure. Particular attention is to be paid to bridge abutments and abutment foundations as they are vulnerable to scour and erosion. This inspection is conducted weekly during freshet and post freshet season, by a member of the environmental team.

Results of these inspections are reported in the Agnico Eagle annual report.

Water Quality Monitoring

Geochemical characterization studies were carried out in 2015 to 2018 on esker and quarries material from potential borrow source locations between Vault and Whale Tail Pit, as well as NPAG waste rock from the Vault WRSF. The results indicate that the materials tested are suitable for construction use and are not expected to cause any adverse water quality issues.

If issues are observed or a spill occurred near a water course during the winter a full suite of water quality sampling is conducted along the Whale Tail Pit Haul Road at areas of concern. This includes:

- Any significant water seeps and/or water ponded in contact with the road. Other criteria for selecting a sampling location include: areas of evident rock staining (rust color particularly) and areas where an accidental spill has previously occurred.
- Upstream and downstream from the major road stream crossings in order to confirm there are no water quality issues resulting from these crossings or the adjacent road rock fill.

Should the results indicate a significant change in water quality from previous years or elevated risks to aquatic life, further water quality monitoring will be conducted at those specific locations to determine the cause and notification will be provided to regulatory authorities. An action plan will be developed and implemented should the results indicate issues. The results for all access road water quality monitoring are reported in the Agnico Eagle Annual Report to regulators.

3.1.2.7 *Groundwater*

The *Groundwater Monitoring Plan* describes the groundwater monitoring plan for the Project.

3.1.2.8 *Receiving Environment*

Receiving water quality monitoring is discussed in Section 1A of the A*quatic Effects Management Program (AEMP) (November 2015*). Within the AEMP are numerous monitoring programs: of greatest emphasis for the protection of the aquatic environment are the core receiving environment monitoring program (CREMP), Environmental Effects Monitoring studies and targeted monitoring programs (Azimuth 2015, 2016, 2018a, 2018b).

The core monitoring program includes three areas of sampling stations that surround each of the mine developments (near field, mid field and far field) for early detection of mine-related impacts, as well as two reference lake areas. The monitoring program is summarized in Table 2-2 of the CREMP and includes: water quality, sediment chemistry, benthos, periphyton, phytoplankton, and fish monitoring (as part of EEM and fish habitat compensation monitoring), the parameters to be measured, sampling locations, sampling frequency, sampling methods, and criteria for data evaluation. Targeted studies are limited in scope and intended to address "specific questions related to particular components of mine development during construction and operation."

Monitoring locations for the effluent diffuser in the receiving environment will be located at the edge of the diffuser mixing zone either within the CREMP core near-field sampling zones or as separate monitoring locations, depending upon the final location of the diffuser.

Lakes not sampled under the CREMP (ST-WT-13 and ST-WT-15) are included in this monitoring plan and are listed in Table 3-1. Data collected from these sampling stations during the operations phase will be compared to the water quality model predictions.

3.2 EVENT MONITORING

The Event Monitoring (EM) program addresses the site-specific monitoring that is required following any accidental release. A "release" may be caused by:

- Spills, including unidentified seepage (Spill Contingency Plan); and
- Emergencies (Emergency Response Plan).

The EM program is designed to verify whether contamination of the surface soil, nearby receiving environment and active zone has occurred as a result of an accidental release of a hazardous material or contaminated water, through monitoring of surface runoff and nearby receiving environment following remediation of any release. It is anticipated that owing to the presence of permafrost beneath most of the mine footprint, there will be minimum impact to groundwater. A complete list of hazardous materials use during operations of the mine is provided in the *Hazardous Materials Management Plan.*

The EM plan is developed on a site-specific basis subsequent to a spill or other incident, and considers the type of product spilled, the potential receptors and the potential for any remaining contamination after clean-up. The plan is done in coordination with the Environmental Superintendent as described in the *Spill Contingency Plan.*

In the event of an accidental release, the water quality of the downstream receptor and possibly upstream of the receiving point, if any, is to be sampled (during the ice-free season) and analyzed. Should the spill have happened over snow cover, water and possibly soil sampling is to take place at the earliest feasible time after thaw to verify if there has been any impact to the receiving water

or soil quality. The specific parameters monitored as part of the EM program will depend on the nature of the spill, and will be determined for the specific hazardous material released.

EM monitoring will occur following the clean-up of a release and the frequency of sampling will depend on the type of material spilled (wet or dry spill), the environment into which the chemical was released (surface water body or soil; frozen or thawed), the quantity of spill material and the status of remediation/clean up measures that were initiated. The EM program for a particular spill will cease upon obtaining satisfactory analytical results (within 20% of background level, to accommodate for analytical accuracy) from the potentially affected areas or as required by regulators.

3.3 ADAPTIVE MANAGEMENT PROGRAM

Results of the water quality monitoring are to be reviewed by the Environmental Department of the mine and chemical trends of constituents of interest are tracked for mine site monitoring and in the AEMP data (including the CREMP) to allow early detection of significant changes in water quality within the mine site prior to discharge, or if thresholds and triggers are exceeded in the receiving environment. Action plans are then to be implemented to ensure that environmental protection objectives are met.

Results of the annual monitoring are compared to the FEIS water quality predictions to determine if conditions are similar to predicted. If site data shows a negative trend that differs from predicted concentrations by a significant amount, the adaptive management program designed for the Project provides a framework for action, if necessary. This program is consistent with the program in use at the Meadowbank Mine. The program has two levels - a trigger level to compare the monitoring data, and an action plan of mitigative measures for identified exceedances to these triggers.

The adaptive management program is divided into two sections, one for parameters with regulated discharge criteria at specific monitoring locations, as specified in the Water Licence 2AM-WTP1826 and by the MDMER. The second section is for measured parameters for which no discharge limits have been identified in the water Licence (i.e. CREMP monitoring).

3.3.1 Adaptive Management Program for Regulated Discharge

3.3.1.1 *Action Plan*

In the case of an exceedance of a NWB Licence limit or MDMER discharge limit an action plan will be implemented. The adaptive management program requires that if one or more of the key monitored parameters exceed the respective limits, a staged sequence of responses will follow. Table 3-7 summarizes the staged adaptive action plan for the CM program for regulated discharge. Figure 3-1 is a logic diagram showing the decision path for evaluating analytical results for regulated discharge.

Should the TSS value (measured value or calculated from turbidity measurements) of non-contact water at any time during the construction, operation, or closure phases exceed regulatory guidelines, the water will be discharged to the Attenuation Pond until the cause of the exceedance can be identified and the situation rectified.

In addition to the mitigative measures listed above, a number of other possible alternatives are

available to reduce or treat contaminants. These mitigation measures include:

- Best management practices for sediment and erosion control would be employed to reduce TSS concentrations, i.e. flow control, sedimentation basin construction, etc.;
- Addition of a coagulant for the reduction of TSS in pond water;
- Use of geotextile or re-armoring of banks to filter and reduce TSS in pond/ditch water;
- Deployment of absorbent booms and/or barriers within ponds to isolate surface petroleum hydrocarbon films for removal and/or treatment;
- Adjustments to on-site sewage treatment for the reduction of BOD and E. coli concentrations;
- Injection of oxygen or aeration for the reduction of ammonia;
- Addition of lime to increase a low pH value or reduce metal concentrations; and/or
- Removal of the offending source rock or the prevention of surface waters coming into contact with the offending source rock.
- Development and Implementation of a Whale Tail Pit-specific *Freshet Action Plan* to proactively identify any additional seeps around areas of concern; conduct additional monitoring, and control and contain seepage on site.

Table 3-7: Action Plan for Regulated Discharge

Example	Action Plan
Exceeds water Licence discharge criteria or MDMER	- Suspension of discharge activities; - QA/QC review and analysis, and re-sample water at the particular location if necessary; - Notification of mine management (General Mine Manager and Environment Superintendent) and the Nunavut Water Board, the CIRNAC Water Resources water Licence inspector and the Kivalliq Inuit Association; - Investigation to identify possible source(s) and cause(s) of the exceedance; - Initiation of corrective actions or water treatment, and follow up monitoring; and - Resumption of discharge when concentrations are below the discharge criteria

Figure 3-1: Logic Diagram for Regulated Discharge

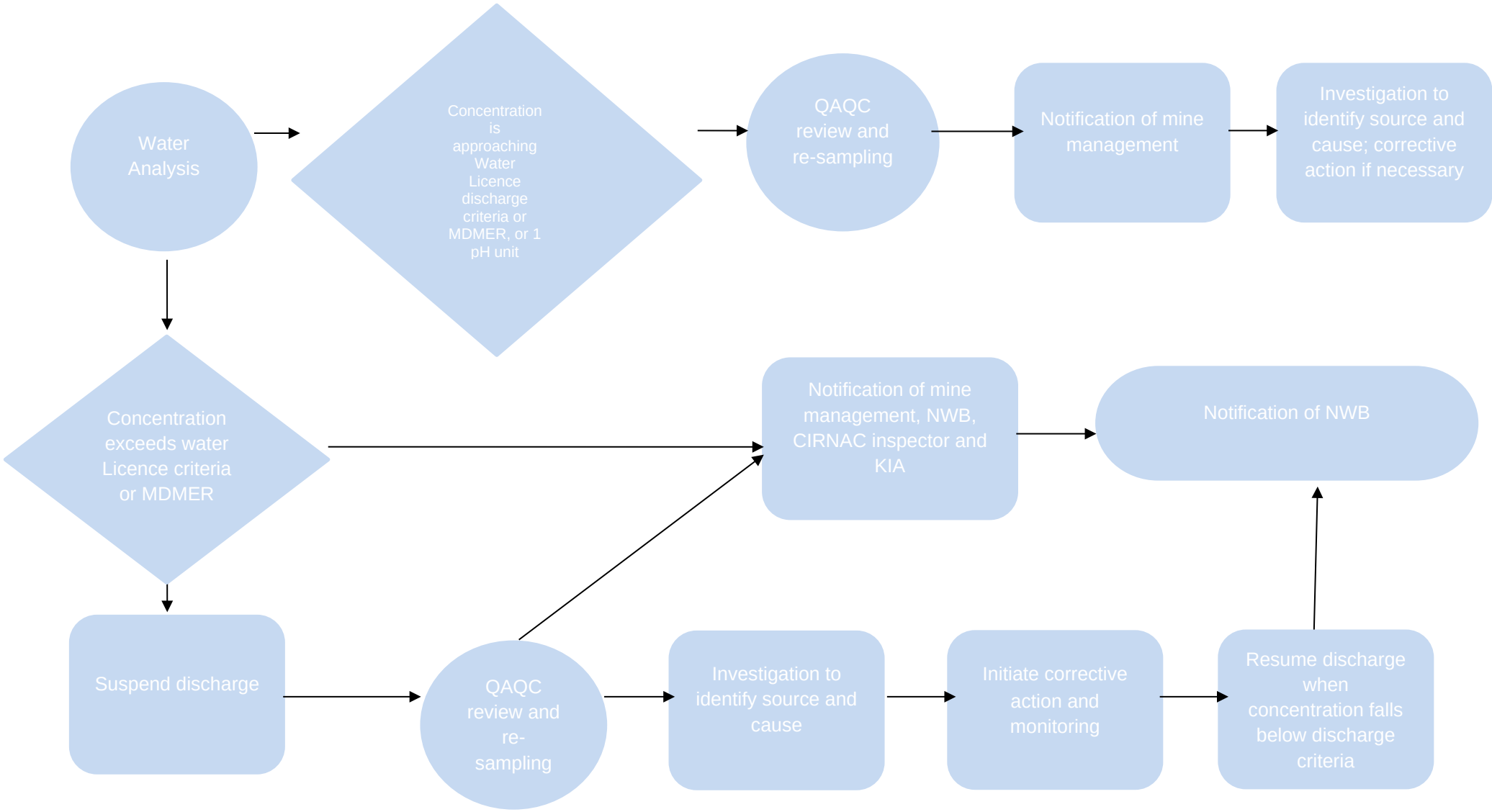

3.3.2 Adaptive Management Program for Non-Regulated Discharge

Aside from targeted monitoring studies (i.e. “Effects Assessment Studies”) such as those commissioned following dike construction, the CREMP is the main program aimed at measuring and assessing potential impacts of contaminants in the receiving aquatic environment that are not regulated under MDMER or NWB.

This program was designed to take an integrated, ecosystem-based approach that links mitigation and monitoring of physical/chemical effects on key ecological receptors in the receiving environment. It addresses key issues identified in the Environment Assessment (i.e., mining-related activities with the potential to affect water quality, fish habitat and fish populations). Monitoring results are intended to inform the “adaptive management” process, supporting the early identification of potential problems and development of mitigation options to address them by comparing results to established threshold and trigger levels.

3.3.2.1 *CREMP Threshold and Trigger Levels*

As described in the CREMP Design Document (Azimuth 2015, 2016) trigger levels were developed to facilitate adaptive management of potential water quality issues in the receiving environment. These criteria were developed with the assumption that action will be considered before certain monitored parameters reach levels that cause or have the potential to cause adverse effects to aquatic biota. The criteria for action provide an early warning framework under which management responses may be considered, taking into account findings from other AEMP component programs. Two types of criteria were developed:

- Thresholds are legal requirements, regulatory guidelines (e.g., CCME), or other discrete benchmarks, below which unacceptable adverse effects are not expected and above which adverse effects may occur. If effects-based thresholds do not exist or are not warranted for a particular variable, then early warning triggers (based on statistical criteria) will be developed without thresholds.
- Triggers are early warning criteria that may lead to action. Exceedance of a trigger value does not necessarily imply that an adverse effect may be expected. For variables with a threshold, the trigger was set as the maximum of either the value halfway between: the baseline median and the threshold, or the 95th centile of the baseline data. For variables without thresholds, triggers were set equal to the 95th centile of the baseline data except in cases where less than 5% of the data exceeded the current detection limit (DL), in which case the trigger was set to two times the DL.

Water chemistry data is collected up to six months per year (March, May, July, August, September and November/December) for the annual period of paired sampling to support Before/After Control/Impact statistical analyses, recognizing that in any given year the actual number of samples collected may range from four to six depending on logistical constraints (e.g. snow and ice). Two randomly located subsamples are collected at each station each month and all samples are 3 m from the surface. In addition, basic water quality data is collected at key near-field areas at least once mid-winter to reduce uncertainty regarding the potential occurrence of change over winter.

Annual average concentrations (6-month mean) are compared to trigger values to determine need for action (rather than results from individual sampling events).

Further information on the development of thresholds and triggers is provided in the CREMP Design Document (Azimuth, 2016).

3.3.2.2 *Action Plan*

A management response plan (MRP) has been developed for the AEMP (Azimuth 2015, 2016), of which the CREMP is one component. The general MRP for the AEMP is shown in Figure 3.2. Following the integration of the results from each independent program, the response actions are based on the cumulative results of all programs. Therefore, while we expect management actions to be taken in cases where criteria for action are exceeded, the specific actions are not linked to outcomes of the CREMP alone because the CREMP is only one of the monitoring programs under the AEMP. In other words, it is not possible or appropriate to describe the specific management actions that will be taken when CREMP triggers or thresholds are exceeded.

Nevertheless, there are two general classes of management actions – those aimed at further assessment and those aimed at mitigation. In general, exceedance of early warning triggers will trigger further assessment, which may then lead to mitigation, whereas exceedances of thresholds could possibly lead directly to mitigation. It is expected that CREMP triggers will be exceeded occasionally due to chance (given the large number of variables that are monitored, particularly for water chemistry), therefore further assessment will almost always be important.

The specific management action that would be appropriate in a given case depends on the underlying cause. For example, if a metal becomes elevated in receiving water, the identification of options for further assessment and/or mitigation options would be different if the source of the metal is groundwater versus effluent versus dust. The timing of management actions is also case-specific. In cases where further assessment is warranted, that assessment should begin as soon as practically possible. In cases where mitigation is considered, mitigation should begin as soon as the weight of evidence indicates that mitigation is warranted, and the benefits of commencing mitigation immediately outweigh the disadvantages of waiting for further information. Consultation with regulators and stakeholders is important for determining management actions (see Azimuth, 2015).

Further details on the integrated aquatic effects action plan are provided in Azimuth, 2015.

The general staged sequence of responses for triggered parameters is summarized in Figure 3.2 below.

Figure 3-2: Logic Diagram for Non-Regulated Discharge

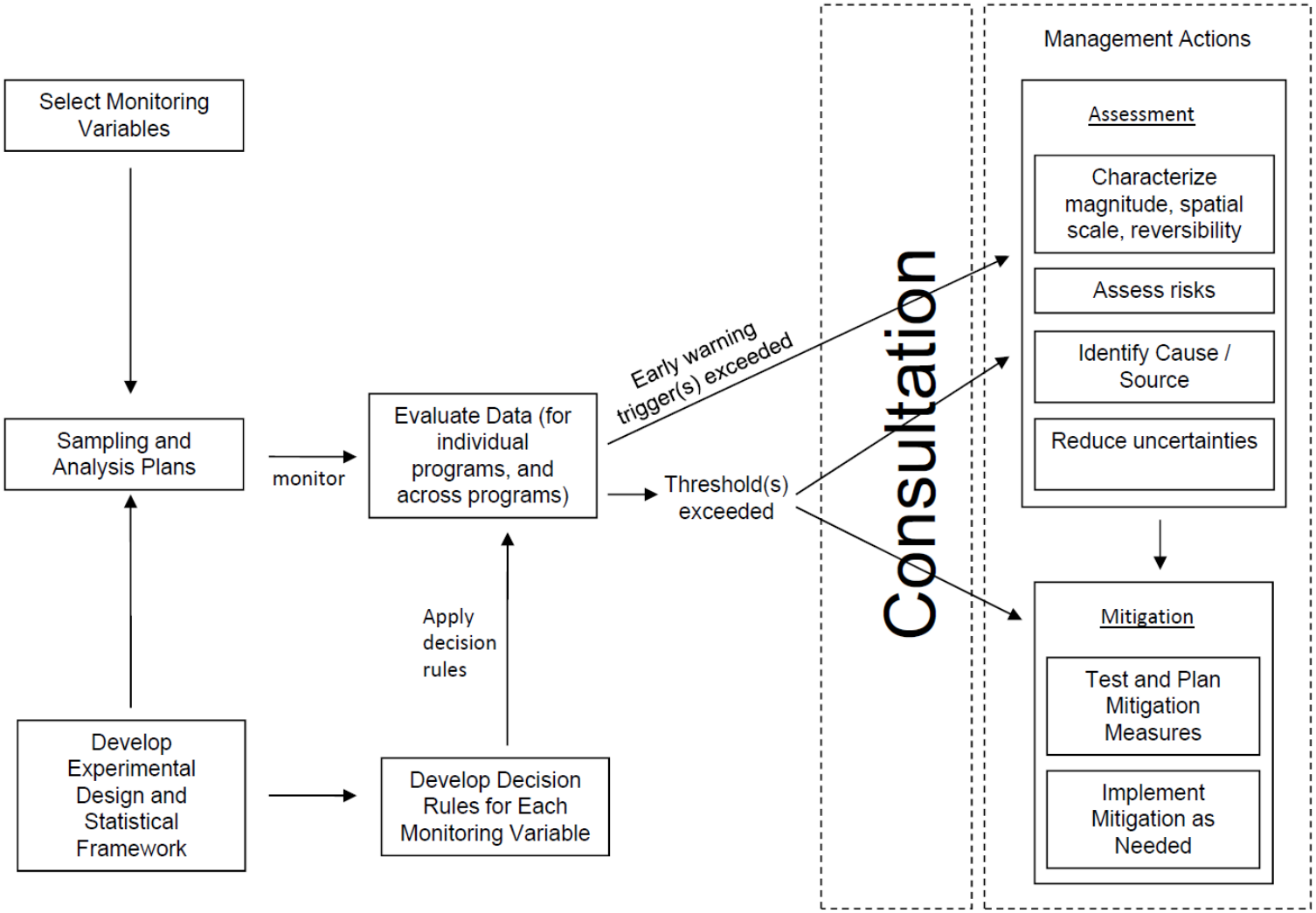

SECTION 4. FLOW VOLUMES

Flow volumes within the mine footprint will be measured daily during periods of discharge. Flow volume measurements will be conducted using volumetric flow meters attached to applicable pumps. For permanent pumping arrangements, these flows will be measured using permanent in-line flow meters, such as fresh and reclaim water pumping systems. For periodic batch discharges, such as secondary containment sumps, portable flow meters or calculated pump time and capacity methods will be used. If needed, seepage collection ditch flows may be measured using either flow measuring weirs or using stream gauging methods.

Detailed pump records are maintained including date, pond/sump number, receiving location of pumped water, pump ID, duration of pumping, and total volume pumped. The average flow rates, total discharge per event and total cumulative discharge will be reported annually. The flow volumes monitoring is intended to help in the water management by ensuring the appropriate destination for contact water and discharges, and to track water conservation and recycling.

In accordance with Water Licence 2AM-WTP1826, monitoring locations of the Whale Tail Pit area for water flow volumes include:

- The volume of fresh water obtained from any source for domestic, industrial, or re-flooding (ST-WT-5);
- The volume of effluent (ST-WT-11) and fresh water (Whale Tail Lake South Basin, ST-WT-8) transferred to the pit lake; and
- The volume of water discharged from the Attenuation Ponds to a diffuser (ST-WT-2).

Details on the intervals of pumping for contact water are provided in the Water Management Plan.

SECTION 5. REPORTING

5.1 Monthly Reporting

All water quality monitoring results and flow measures will be compiled into a brief monthly report, and sent to the NWB, Crown-Indigenous and Northern Affairs Canada (CIRNAC), Water Resource Inspector and to the Kivalliq Inuit Association (KIA). These reports are due within 30 days of the end of the month being reported on.

5.2 ANNUAL REPORTING

An annual report is to be submitted to the NWB, KIA, Department of Fisheries and Oceans, CIRNAC, NIRB, Government of Nunavut, and other interested parties by March 31st of the following year. The report is to summarize the following:

- Monitoring results for each sampling station during the year and for the life of mine (construction to end of closure); activities during the year at each station; and any exceedances at stations, the action plan applied to the exceedance, and the results of the action plan;
- Annual seep water chemistry results; including location of the samples, sources of the water collected, and results of chemical analyses of the samples;
- Annual groundwater monitoring results; activities during the year at each well site and record of well operations, well replacement, and proposed drilling for the next year; and installation details of new wells and identification of any abandoned or destroyed wells.
- Receiving water monitoring results;
- Spills and any accidental releases; event monitoring activities conducted following containment, remediation, and reclamation; and the results of EM program, any exceedance in EM results, and the action plan following the exceedance;
- Compare monitoring results to predictions in the Environmental Assessment (EA) and identify significant discrepancies;
- Measured flow volumes;
- Effluent flow rates, volumes and calculated chemical loadings following the requirements of MDMER; and
- Results of QA/QC analytical data.

5.3 EXCEEDANCE REPORTING

Any measured concentration at a CM station exceeding a regulated discharge criterion stipulated in the Water Licence 2AM-WTP1826 or MDMER will be reported to the NWB and Environment and Climate Change Canada upon receipt of the analysis. In addition, results of the action plan will be reported and, where necessary, mitigation options identified within 90 days after receipt of the analyses.

Exceedances in the concentration of a parameter in receiving water will be reported as specified in the AEMP and EEM – MDMER accordingly.

SECTION 6. REFERENCES

Agnico Eagle. 2017. Whale Tail Pit Final Technical Comment Responses. April 2017. http://www.nirb.ca/app/dms/script/dms_download.php?fileid=309317&applicationid=124683&sessionid=7ge0bjmft6458r8co9v5b639g4

Agnico Eagle 2018b. Whale Tail Pit – Waste Rock Management Plan. Version 3. September 2018.

Azimuth (Azimuth Consulting Group). 2015. Aquatic Effects Management Program (AEMP), Meadowbank Mine. Report prepared by Azimuth Consulting Group, Vancouver, BC for Agnico Eagle Mines Ltd., Baker Lake, NU. November 2015.

Azimuth. 2016. Core Receiving Environment Monitoring Program (CREMP): 2015 Plan Update – Whale Tail Pit Addendum. Report prepared by Azimuth Consulting Group, Vancouver, BC for Agnico Eagle Mines Ltd., Baker Lake, NU. May, 2016.

Azimuth. 2018a. Whale Tail Pit Core Receiving Environment Monitoring Program (CREMP): 2014-2017 Baseline Studies. Prepared for Agnico Eagle Mines Ltd. February 2018.

Azimuth. 2018b. Whale Tail Pit Project: Mercury Data Compendium and Memorandum. Report prepared by Azimuth Consulting Group, Vancouver, BC for Agnico-Eagle Mines Ltd., Baker Lake, NU. June 2018.

Nunavut Impact Review Board. Project Certificate No. 008. March 2018

Nunavut Water Board. 2018. Water Licence 2AM-WTP1826. May 2018.

Waste Rock Management Plan, Version 4

AGNICO EAGLE

Meadowbank Division

Whale Tail Pit – Waste Rock Management Plan

OCTOBER 2018

VERSION 4

EXECUTIVE SUMMARY

Agnico Eagle Mines Limited – Meadowbank Division (Agnico Eagle) will develop the Whale Tail Pit and Haul Road Project (Project), a satellite deposit located on the Amaruq property, to continue mine operations and milling at Meadowbank Mine.

The proposed open pit mine, mined by truck-and-shovel operation, will produce 8.3 million tonnes (Mt) of ore, 61.3Mt of waste rock, and 6.0 Mt of overburden waste. There are four phases to the development: 1 year of construction, 3 years of mine operations, 8 years of closure, and the post-closure period. According to the Whale Tail Pit Life of Mine (LOM) calculation, the addition of the Whale Tail Pit to the actual Meadowbank LOM (LOM 2015) will generate an addition of approximately 8.3 Mt (dry) of tailings to the Meadowbank Tailings Storage Facility (TSF) for a total of 35.4 Mt.

Project mining facilities include accommodation buildings; two ore stockpiles; one overburden stockpile; one waste rock storage facility (WRSF) area planned to receive waste rock and waste overburden; a water management system that includes collection ponds, water diversion channels, and retention dikes/berms; and a Water Treatment Plant.

One area, located north-west of the open pit, has been identified as the Whale Tail WRSF for waste rock placement. Waste rock and overburden will be trucked to the Whale Tail WRSF until the end of mine operations, with distribution according to the operations schedule. Waste rock and overburden will be co-disposed together in one of the two piles constituting the Whale Tail WRSF area. All waste rock material will be sampled and tested during operations to confirm their ARD and ML potential in support of waste segregation. Waste rock and overburden produced during mining will be used in the construction of the mine site infrastructure, while some of the non-potentially acid generator (NPAG) and non-metal leaching (NML) waste rock will be put aside for capping at closure. Because of the large material requirement for construction and NPAG/NML rock cover, as well as the importance for adequate disposal to meet closure objectives, waste rock management will be a key component of the mining planning for the Whale Tail Project.

Tailings from the Project will be stored in the Meadowbank TSF. The management operation and monitoring of the TSF is regulated under Agnico Eagles existing Type A Water Licence 2AM-MEA1526. Updates to the Meadowbank Mine Waste Rock and Tailings Management Plan have been provided in support of the application and amendment needed to the Type A Water Licence to reflect changes in the Meadowbank operations. In summary, the TSF consists of a North Cell and South Cell located within the basin of the former north-west arm of Second Portage Lake previously dewatered to allow mining in the Portage Pit. To store the full volume of tailings from processing of the Whale Tail Pit ore, Agnico Eagle will maximize storage in South cell through the deposition of approximately 5.3 Mt of tailings, and is proposing to construct internal dike structures to store the remaining 3 Mt within the current footprint of the North Cell.

The generation of metal leachate in acidic drainage is a concern for mining projects. Climate control strategies rely on cold temperatures to reduce the rate at which oxidation occurs. The low net precipitation in permafrost regions limits infiltration of water into waste rock and tailings disposal areas. Consequently, the climate of the Whale Tail Pit will act as a natural control to reduce the production of acid mine drainage and metal leachate. Climate control strategies are best applied to materials placed at a low moisture content to reduce the need for additional controls on seepage and infiltration. This strategy is considered to be effective for waste rock in arid climate such as the one of Whale Tail Pit.

The Whale Tail WRSF and the ore stockpiles were designed to minimize the impact on the environment and to consider geotechnical and geochemical stability. The surface runoff and seepage water from these facilities will be collected in water collection ponds as part of the water management strategy. If water quality does not meet the discharge criteria as per the Whale Tail Water Licence requirement, the collected water will be treated prior to being discharged to the outside environment during operation and closure.

Closure of the Whale Tail WRSF will begin when practical as part of the progressive reclamation program. The Whale Tail WRSF will be covered with non-potentially acid generating and non-metal leaching waste rock to promote freezing as a control strategy against acid generation and migration of contaminants. Thermistors will be installed within the Whale Tail WRSF to monitor permafrost development. Thermal and water quality monitoring will be carried out during all stages of the mine life to demonstrate geotechnical stability and the safe environmental performance of the facilities. If any non-compliant conditions are identified, then maintenance and planning for corrective measures will be completed in a timely manner to ensure successful completion of the Whale Tail Interim Closure and Reclamation Plan.

DOCUMENT CONTROL

Version	Date (YM)	Section	Page	Revision
1	January 2017	ALL	-	Comprehensive plan for Whale Tail Pit project
2	May 2018	ALL	-	Comprehensive review of the plan for Whale Tail Pit project
3	September 2018	ALL	-	Comprehensive review of the plan for Whale Tail Pit project
4	October 2018	2.5, 3.2, 9.3	7, 11, 29	Updated to align with recommendations issued by CIRNAC and ECCC in October 2018

TABLE OF CONTENTS

Executive Summary ..... **i**

Table of Contents ..... **iv**

Acronyms ..... **vii**

Units ..... **vii**

Section 1 • INTRODUCTION **1**

Section 2 • BACKGROUND INFORMATION **5**

2.1 Whale Tail Pit Mine Operations 5
2.2 Meadowbank Mine Operations 5
2.3 Whale Tail Pit Site Layout 5
2.4 Climate 6
2.5 Climate Change 7
2.6 Permafrost 7
2.7 Seismic Zone 8

Section 3 • WHALE TAIL PIT DEVELOPMENT PLAN **9**

3.1 Whale Tail Pit Life of Mine 9
3.2 Mine Waste Production Sequence 9

Section 4 • WHALE TAIL PIT OVERBURDEN MATERIALS **12**

Section 5 • WHALE TAIL PIT WASTE ROCK **14**

5.1 Waste Rock Properties 14
5.2 Waste Rock and Waste Rock Storage Facility Management 16
5.2.1 Waste Rock Storage Facility Water Management 16
5.2.2 Waste Rock Management Planning 17
5.2.3 Waste Rock Management Execution 18
5.2.4 Waste Rock Facility Monitoring 19
5.3 Whale Tail Waste Rock Storage Facility Dimensions 20

Section 6 • WHALE TAIL PIT ORE STOCKPILES **22**

6.1 Ore Properties 22

6.2 Ore Stockpile Management 22
6.3 Ore Stockpile Facility Dimensions 22
Section 7 • MEADOWBANK TAILINGS STORAGE FACILITY - TAILINGS MANAGEMENT FOR WHALE TAIL PIT 24
Section 8 • CONTROL STRATEGIES FOR ACID ROCK DRAINAGE AND METAL LEACHATE IN COLD REGIONS 25
Section 9 • MONITORING AND CLOSURE 27
9.1 Whale Tail Waste Rock Storage Facility 27
9.2 Ore Stockpiles 28
9.3 Water Quality Forecast for Whale Tail Pit Operation and Closure 28
9.4 Water Quality Forecast for Meadowbank Operation and Closure 29
9.5 Monitoring of Freezeback 29
9.5.1 Whale Tail Waste Rock Storage Facility 29
Section 10 • REFERENCES 31
Appendix A • Drawings - Site Layouts 29

List of Tables in Text

Table 2.1 Overview of Timeline and General Activities 5
Table 2.2 Estimated Mine Site Monthly Mean Climate Characteristics 6
Table 2.3 Estimated Mine Site Extreme 24-Hour Rainfall Events 7
Table 3.1 Projected Whale Tail Pit Mined Tonnages 9
Table 3.2 Projected Mined Tonnages and Ore Stockpile Balance (2018 – 2022) 10
Table 3.3 Summary of Mine Waste Tonnage and Destination 11
Table 3.4 Projected Waste Rock Tonnages Used for Construction (2018 – 2022) 11
Table 5.1 Anticipated ARD/ML Potential of Waste Rock Types at Whale Tail (Golder, 2018b) 15
Table 8.1 Acid Mine Drainage Control Strategies of the Arctic 25

List of Figures in Text

Figure 1.1 Location of Whale Tail Pit 2

Figure 1.2 Meadowbank Tailings Storage Facility 4

Figure 5.1 Typical Cross Section of the Whale Tail Waste Rock Storage Facility 21

ACRONYMS

Agnico Eagle	Agnico Eagle Mines Limited – Meadowbank Division
ARD	Acid Rock Drainage
CCME	Canadian Council of Ministers of the Environment
FEIS	Final Environmental Impact Statement
IPCC	Intergovernmental Panel on Climate Change
LOM	Life of Mine
ML	Metal Leaching
NML	Non-Metal Leaching
NPAG	Non-Potentially Acid Generating
NWB	Nunavut Water Board
PAG	Potentially Acid Generating
PGA	peak ground acceleration
Project	Whale Tail Pit and Haul Road Project
SWD	Stormwater Dike
TSF	Tailings Storage Facility
WRSF	Waste Rock Storage Facility
WTP	Water Treatment Plant

UNITS

%	percent
°C	degrees Celsius
°C/m	degrees Celsius per metre
g	gram
ha	hectare
km	kilometre(s)
km^2	square kilometre(s)
m	metre
masl	metre above sea level
mm	millimetre
m^3	cubic metre(s)
m^3/hr	cubic metre(s) per hour
Mm^3	million cubic metre(s)
Mt	million tonne(s)
t	tonne
t/day	tonne(s) per day
t/m^3	tonne(s) per cubic metre

SECTION 1 • INTRODUCTION

Agnico Eagle Mines Limited – Meadowbank Division (Agnico Eagle) will develop the Whale Tail Pit and Haul Road Project (Project), a satellite deposit located on the Amaruq property, to continue mine operations and milling at Meadowbank Mine.

The Amaruq property is a 408 square kilometre (km^2) site located on Inuit Owned Land approximately 150 kilometres (km) north of the hamlet of Baker Lake and approximately 50 km northwest of Meadowbank Mine in the Kivalliq Region of Nunavut. The deposit will be mined as an open pit (i.e., Whale Tail Pit), and ore will be hauled to the approved infrastructure at Meadowbank Mine for milling.

The proposed open pit mine, mined by truck-and-shovel operation, will produce 8.3 million tonnes (Mt) of ore, 61.3Mt of waste rock, and 6.0Mt of overburden waste. There are four phases to the development: 1 year of construction, 3 years of mine operations, 8 years of closure, and the post-closure period.

The general mine site location for the Project is shown in Figure 1.1. The mine development will include the following major infrastructure:

- industrial area (camp and garage);
- crusher;
- ore stockpiles;
- rock and overburden storage facilities;
- landfill;
- haul and access roads;
- open pit mine; and
- water dewatering dikes.

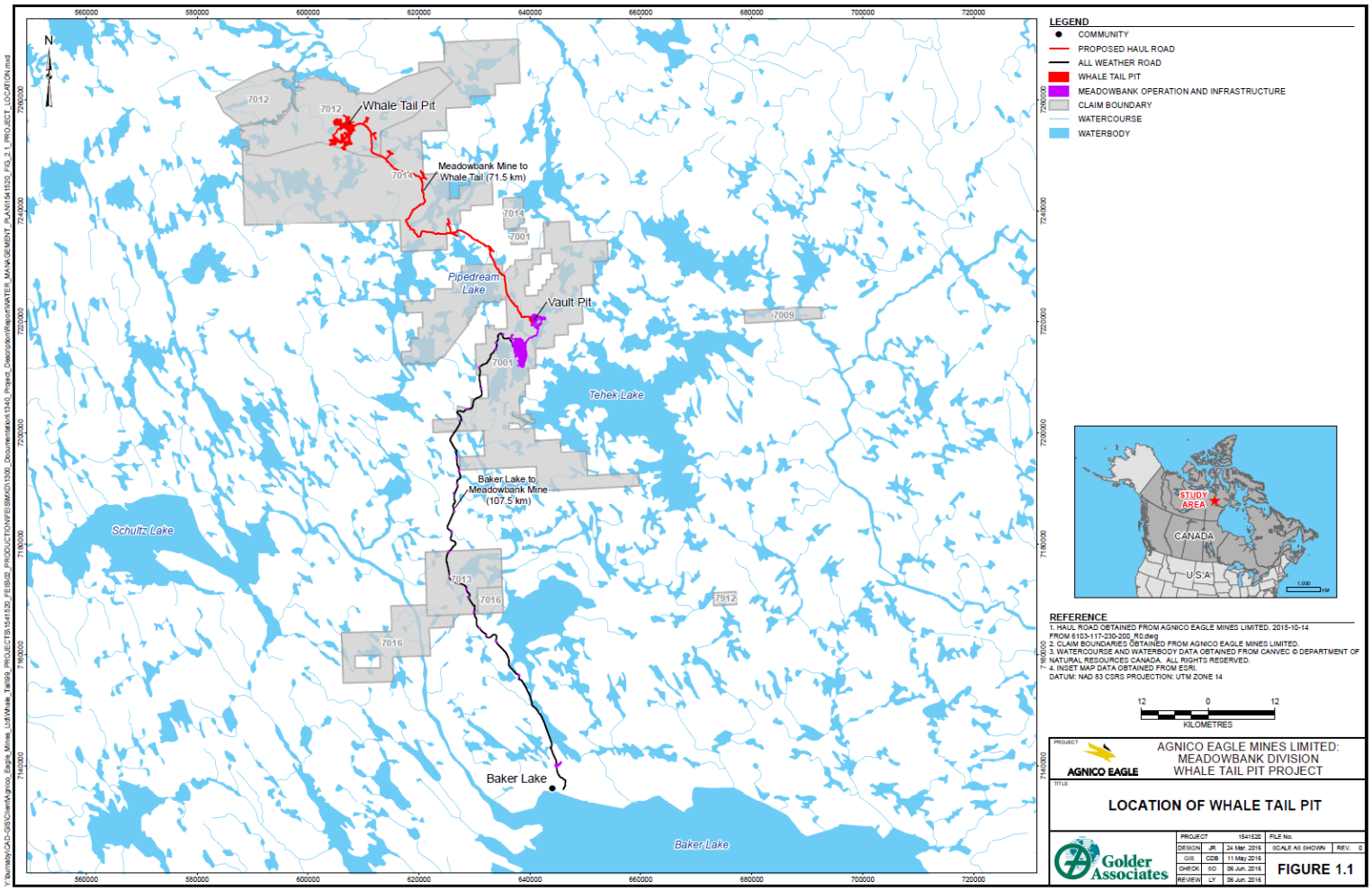

Figure 1.1 Location of Whale Tail Pit

This document presents the Waste Rock Management Plan (the Plan) and is submitted as per Part B, conditions 14 and 15 of the NWB Whale Tail Type A Water License 2AM-WTP1826. The purpose of the Plan is to provide consolidated information on the management ore stockpiled on site, waste rock and overburden, including strategies for runoff and dust control and monitoring programs for the storage facilities. The management operation and monitoring of the tailings storage facilities (TSF) (refer to Figure 1.2) is regulated under Agnico Eagles existing Type A Water Licence 2AM-MEA1526. Updates to the Meadowbank Mine Waste Rock and Tailings Management Plan have been provided in support of the application and amendment needed to the Type A Water Licence to reflect changes in the Meadowbank operations.

As per the Nunavut Impact Review Board (NIRB) Whale Tail Project Certificate No.008, term and condition 7, the Whale Tail Waste Rock Management Plan is submitted to the NIRB at least 60 days prior to the start of construction of the Waste Rock Storage Facility, with subsequent updates or revisions to the Plan submitted annually thereafter or as may otherwise be required by the NIRB for the life of the Project.

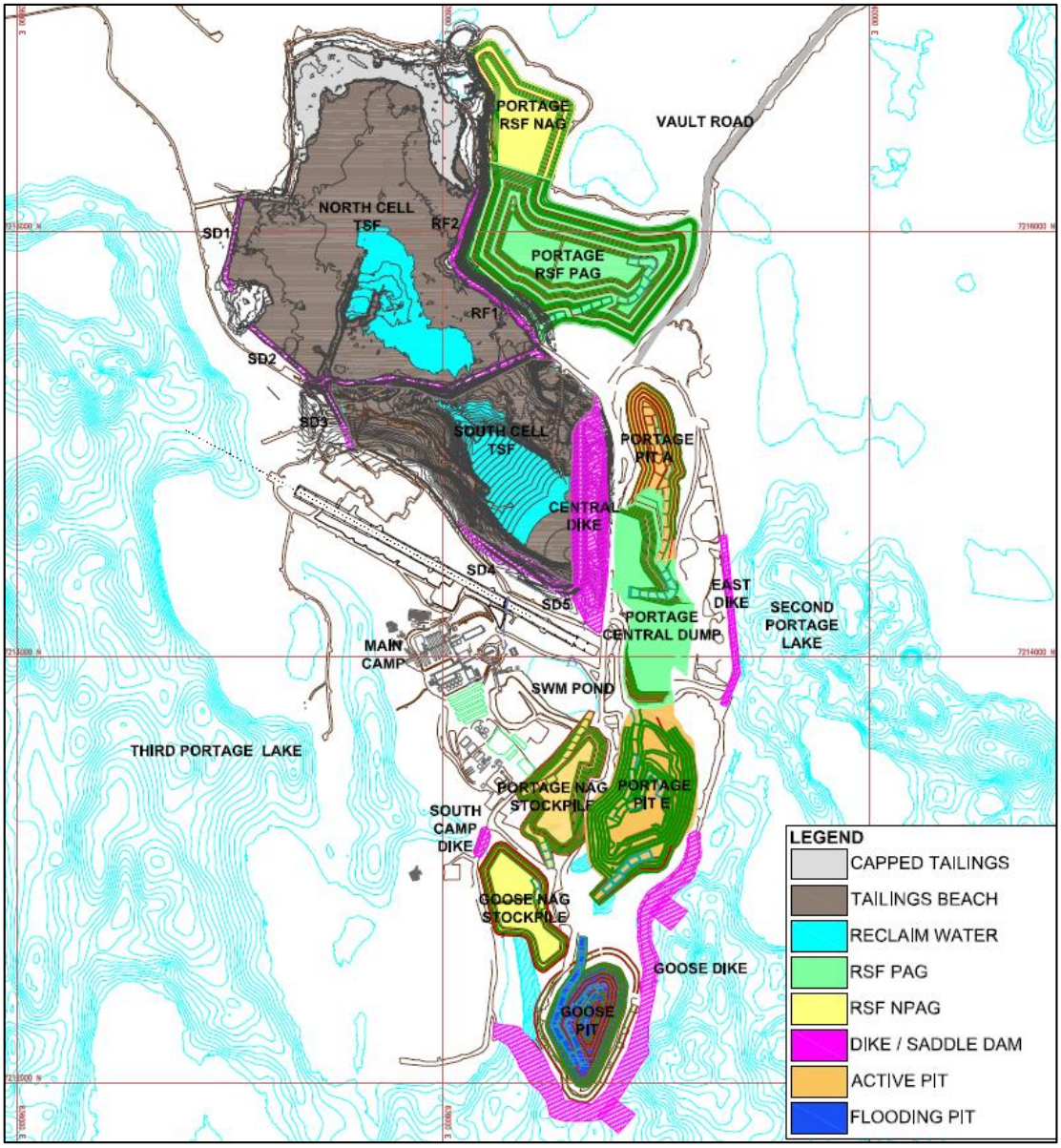

Figure 1.2 Meadowbank Tailings Storage Facility

SECTION 2 • BACKGROUND INFORMATION

2.1 Whale Tail Pit Mine Operations

The construction phase is anticipated to start in at the beginning of the third quarter of Year -1 (2018) and focus on site preparation and the construction of infrastructure, with the start of the open pit development to produce construction material. The operations (mining and ore processing) will continue approximately 3 years, from Year 1 (2019) to Year 4 (2022), with a rate of extraction targeted between 9,000 and 12,000 tonnes per day (t/day) of ore at an average stripping ratio of 8.1. Mining activities are expected to end in Year 3 (2021) and ore processing with stockpiled material is expected to end during the first quarter of Year 4 (2022). Closure will occur from Year 4 (2022) to Year 11 (2029) after the completion of mining and will include removal of the non-essential site infrastructure and flooding of the mined-out open pit, as well as reestablishment of the natural Whale Tail Lake level. Post-closure and monitoring phases will commence as closure is completed in Year 11 (2029) and will continue until approximately Year 28 (2047) or until it is shown that the site and water quality meets regulatory closure objectives. Table 2.1 summarizes the Project timeline and general activities.

Table 2.1 Overview of Timeline and General Activities

Phase	Year	General Activities
Construction	Year -1	• Construct site infrastructure • Develop open pit mine • Stockpile ore
Operations	Year 1 to 3	• Open pit operations • Transport ore to Meadowbank Mine • Stockpile ore • Discharge Tailings in Meadowbank TSF
	Year 4	• Complete transportation of ore to Meadowbank Mine • Complete discharge tailings in Meadowbank TSF
Closure	Year 4 to 11	• Remove non-essential site infrastructure • Flood mined-out open pit • Re-establish natural Whale Tail Lake level
Post-Closure	Year 11 forwards	• Site and surrounding environment monitoring

TSF = Tailings Storage Facility

2.2 Meadowbank Mine Operations

As a requirement of the Type A Water Licence, any modifications to the dewatering process, life of mine (LOM), tailings storage facilities (TSF), and any other aspect associated to the water management at Meadowbank are adhered to and updated in the annual submission of the Meadowbank Water Management Plan and associated water balance.

2.3 Whale Tail Pit Site Layout

Site layouts are presented in Appendix A.

2.4 Climate

Climate characteristics presented herein were extracted from the permitting level engineering report (SNC, 2015).

The Project is located in an arid arctic environment that experiences extreme winter conditions, with an annual mean temperature of -11.3 degrees Celsius (°C). The monthly mean temperature ranges from -31.3°C in January to 11.6°C in June, with above-freezing mean temperatures from June to September. The annual mean total precipitation at the Project is 249 millimetres (mm), with 59 percent (%) of precipitation falling as rain, and 41% falling as snow. Mean annual losses were estimated to be 248 mm for lake evaporation, 80 mm for evapotranspiration, and 72 mm for sublimation. Mean annual temperature, precipitation, and losses characteristics are presented in Table 2.2.

Short-duration rainfall events representative of the Project are presented in Table 2.3, based on intensity-duration-frequency curves available from the Baker Lake A meteorological station (Station ID 2300500) operated by the Government of Canada (2015).

Table 2.2 Estimated Mine Site Monthly Mean Climate Characteristics

Month[a]	Mean Air Temperature (°C) [a]	Monthly Precipitation (mm) [a]			Losses [a]		
		Rainfall (mm)	Snowfall Water Equivalent (mm)	Total Precipitation (mm)	Lake Evaporation (mm)	Evapo-transpiration (mm)	Snow Sublimation (mm)
January	-31.3	0	7	7	0	0	9
February	-31.1	0	6	6	0	0	9
March	-26.3	0	9	9	0	0	9
April	-17.0	0	13	13	0	0	9
May	-6.4	5	8	13	0	0	9
June	4.9	18	3	21	9	3	0
July	11.6	39	0	39	99	32	0
August	9.8	42	1	43	100	32	0
September	3.1	35	7	42	40	13	0
October	-6.5	6	22	28	0	0	9
November	-19.3	0	17	17	0	0	9
December	-26.8	0	10	10	0	0	9
Annual	**-11.3**	**146**	**103**	**249**	**248**	**80**	**72**

[a] SNC (2015). mm = millimetre; °C = degrees Celsius.

Table 2.3 Estimated Mine Site Extreme 24-Hour Rainfall Events

Return Period (Years) [a]	24-hour Precipitation (mm) [a]
2	27
5	40
10	48
25	57
50	67
100	75
1000	101

[a] SNC (2015). mm = millimetre.

2.5 Climate Change

Climate change information presented herein was extracted from the Final Environmental Impact Statement (FEIS) Amendment, Volume 4, Section 4.2 (Agnico Eagle, 2016).

The climate in the Arctic is changing faster than at mid-latitudes (IPCC, 2014). The most recent set of climate model projections (CMIP5) predict an Arctic-wide year 2100 multi-model mean temperature increase of +13°C in late fall and +5°C in late spring under the Intergovernmental Panel on Climate Change (IPCC)'s "business as usual scenario" (RCP8.5). IPCC climate change mitigation scenario RCP4.5 results in a year 2100 multi-model Arctic wide prediction of +7°C in late fall and +3°C in late spring (Overland et al., 2013). The effects of changes of this magnitude to terrestrial, aquatic and marine ecosystems, and social and economic systems of the Arctic are an active area of research. However, due to the short duration of the proposed Project, climate change related effects to the Project are likely negligible. The WRSF, which will be a permanent infrastructure, was design using the appropriate climate change model scenario to mitigate potential climate change related effects (Golder, 2018).

2.6 Permafrost

The mine site is located in an area of continuous permafrost, as shown on Figure 2.1. Based on measurements of ground temperatures (Knight Piésold, 2015), the depth of permafrost at the mine site is estimated to be in the order of 425 metres (m) outside of the influence of waterbodies. The depth of the permafrost and active layer will vary based on proximity to the lakes, overburden thickness, vegetation, climate conditions, and slope direction. The typical depth of the active layer is 2 m in this region of Canada. The typical permafrost ground temperatures at the depths of zero annual amplitude (typically at the depth of below 15 m) is approximately -8.0 °C in areas away from lakes and streams. The geothermal gradient measured is 0.02 degrees Celsius per metre (°C/m) (Knight Piésold, 2015). Late-winter ice thickness on freshwater lakes is approximately 2.0 m. Ice covers usually appear by the end of October and are completely formed in early November. The spring ice melt typically begins in mid-June and is complete by early July.

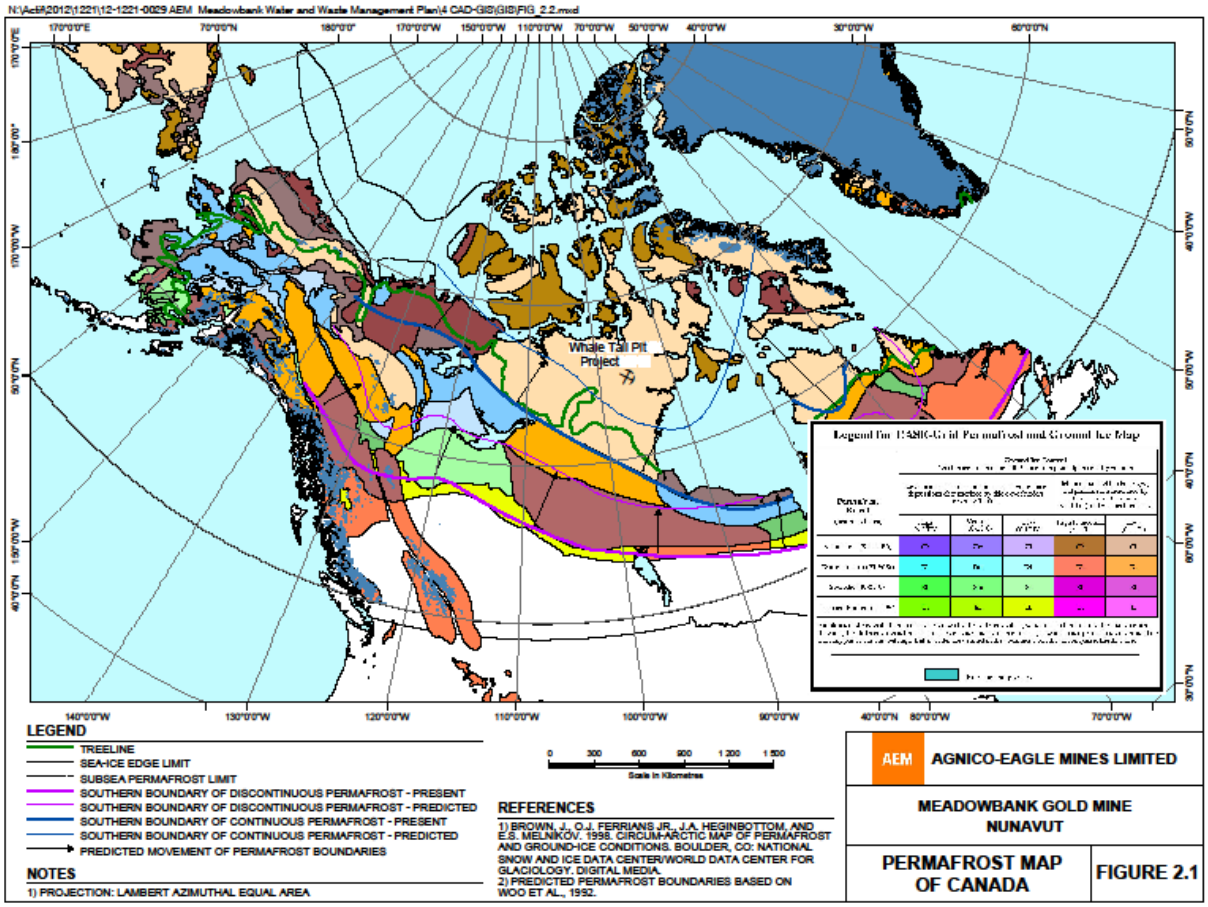

Figure 2.1 Permafrost Map of canada

2.7 Seismic Zone

The mine site is situated in an area of low seismic risk. The peak ground acceleration (PGA) for the area was estimated using the seismic hazard calculator from the 2010 National Building Code of Canada website (http://www.earthquakescanada.nrcan.gc.ca/hazard-alea/interpolat/index_2010-eng.php). The estimated PGA is 0.019 grams (g) for a 5% in 50-year probability of exceedance (0.001 per annum or 1 in 1,000 year return) and 0.036 g for a 2% in 50-year probability of exceedance (0.000404 per annum or 1 in 2,475 year return) for the area.

SECTION 3 • WHALE TAIL PIT DEVELOPMENT PLAN

3.1 Whale Tail Pit Life of Mine

Several LOM scenarios were analysed by Agnico Eagle, which ultimately retained the best one based on economic viability of the Project. The chosen scenario is not expected to change significantly from that existing at Meadowbank, and will remain on average 9,000 t/day and up to a peak mill throughput of 12,000 t/day (which is the current rate capacity at Meadowbank Mill). Milling will end as the maximum capacity of the current TSF at Meadowbank is reached (8.3 Mt). Table 3.1 summarizes the Whale Tail Pit LOM.

Table 3.1 Projected Whale Tail Pit Mined Tonnages

Year	Period	Ore Mined (t)	Ore Processed in Mill (t)	Production Days
2018		160,020	-	-
2019	Q1	366,229	-	184
	Q2	610,012	-	
	Q3	418,663	821,250	
	Q4	895,072	821,250	
2020	Q1	800,463	821,250	366
	Q2	931,458	821,250	
	Q3	763,882	821,250	
	Q4	856,512	821,250	
2021		2,476,834	3,285,000	365
2022		0	66,644	8
Total		**8,279,144**	**8,279,144**	**923**

t = tonne.

The Whale Tail Pit deposition plan is proposed to be a continuation of the current Meadowbank deposition plan according to the Whale Tail Pit production rates and mill feed presented in Table 3.1. Completion of the Meadowbank LOM milling activities will occur in Q3 2018.

For additional information, refer to the Mine Waste Rock and Tailings Management Plan submitted under Water Licence 2AM-MEA1526.

3.2 Mine Waste Production Sequence

Two mine waste streams will be produced at Whale Tail Pit, waste rock and overburden. A third mine waste stream, tailings, will be produced at Meadowbank Mine (Refer to the Mine Waste Rock and Tailings Management Plan, submitted under Water Licence 2AM-MEA1526). Approximately 61.3Mt of waste rock and 6.0Mt of overburden will be generated by the Project as presented in Tables 3.2 and 3.3. The operation management and monitoring of the TSF is regulated under Agnico Eagle Type A Water Licence 2AM-MEA1526.

The term "waste rock" designates all fragmented rock mass that has no economic value and needs to be stored separately. Waste rock is also commonly referred to as "mine rock" in the mining industry. Typically, waste rock is produced during the initial stripping phase and during the subsequent development of open pits and underground workings.

The term "overburden" designates all soils above the bedrock that needs to be stripped at surface prior to developing the open pits. Generally, the overburden at the site consists of a thin layer of organic material overlying a layer of non-cohesive soil with variable amounts of silt, sand, and gravel.

Table 3.2 Projected Mined Tonnages and Ore Stockpile Balance (2018 – 2022)

Year	Period	Ore Mined (t)	Waste Rock Excavated (t)	Overburden Excavated (t)	Total Material Excavated (t)	Total Material Excavated (t/day)	Strip ratio	Ore Stockpile Balance (t)
2018	June to Sept.	0	1 356 408	0	1 356 408	11 303		0
	Q4	160 020	851 428	0	1 011 448	10 994	5.3	126 417
	Sub-total	**160 020**	**2 207 836**	**0**	**2 367 856**	**11 169**	**13.8**	**160 020**
2019	Q1	366 229	517 007	2 750 378	3 633 613	40 373	8.9	140 664
	Q2	610 012	2 153 610	931 456	3 695 079	40 605	5.1	222 710
	Q3	418 663	6 170 599	1 710 536	8 299 798	90 215	18.8	0
	Q4	895 072	7 141 907	649 578	8 686 557	94 419	8.7	0
	Sub-total	**2 289 976**	**15 983 122**	**6 041 948**	**24 315 047**	**66 617**	**9.6**	**0**
2020	Q1	800 463	8 044 059	0	8 844 522	97 193	10.0	0
	Q2	931 458	7 676 901	0	8 608 359	94 597	8.2	0
	Q3	763 882	7 837 460	0	8 601 342	93 493	10.3	0
	Q4	856 512	6 609 431	0	7 465 943	81 152	7.7	0
	Sub-total	**3 352 314**	**30 167 851**	**0**	**33 520 165**	**91 585**	**9.0**	**0**
2021		**2 476 834**	**12 974 910**	**0**	**15 451 744**	**42 334**	**5.2**	**0**
2022		**0**	**0**	**0**	**0**	**0**	-	**0**
Total		**8 279 144**	**61 333 719**	**6 041 948**	**75 654 811**		**8.1**	**0**

t = tonne; t/day = tonnes per day.

The proposed usage or destination of the two mine waste materials is presented in Table 3.3. Further details on the management of the mine waste materials are presented in Section 5 of this Plan.

The site layouts presented in Appendix A show the evolution of the site in 2018, 2019, 2022, and 2029. Most of the waste rock excavated in 2018 at the start of the open pit development will be used for the construction of the water management structures, the infrastructures pads, and the access roads (Table 3.4). During the Year 1 (2019) and the Year 2 (2020), the remaining required facilities for the operations will be completed.

Table 3.3 Summary of Mine Waste Tonnage and Destination

Mine Waste Stream	Estimated Quantities	Waste Destination
Overburden	6.0Mt	• Temporary storage West of Whale Tail Lake (~ 0.1 Mt for operations) • Co-disposed with waste rock in Whale Tail WRSF
Waste Rock	61.3Mt	• Construction material • Whale Tail WRSF • Closure and site reclamation

Mt = million tonnes; WRSF = Waste Rock Storage Facility.

Table 3.4 Projected Waste Rock Tonnages Used for Construction (2018 – 2022)

Year	Period	Waste Rock and Overburden Excavated (t)	Waste Rock Used for Pad and Road Construction (t)	Waste Rock Used for Water Management Structures (t)	Waste Rock and Overburden Stored in Whale Tail WRSF (t)
2018	June to Sept.	1 356 408	654 044	514 655	187 709
	Q4	851 428	0	75 970	775 458
	Sub-total	**2 207 836**	**654 044**	**590 625**	**963 167**
2019	Q1	3 267 384	185 970	153 600	2 927 814
	Q2	3 085 067	470 772	0	2 614 295
	Q3	7 881 135	0	96 120	7 785 015
	Q4	7 791 485	0	0	7 791 485
	Sub-total	**22 025 071**	**656 742**	**203 306**	**21 165 023**
2020	Q1	8 044 059	0	0	8 044 059
	Q2	7 676 901	0	0	7 676 901
	Q3	7 837 460	0	0	7 837 460
	Q4	6 609 431	0	0	6 609 431
	Sub-total	**30 167 851**	**0**	**3 624**	**30 164 227**
2021		**12 974 910**	**0**	**0**	**12 974 910**
2022		**0**	**0**	**0**	**0**
Total		**67 375 667**	**1 310 786**	**797 555**	**65 267 327**

t = tonne; WRSF = Waste Rock Storage Facility.

Over the LOM, non-potentially acid generating (NPAG)/non-metal leaching (NML) and potentially acid generating (PAG)/metal leaching (ML) waste rock will be segregated according to the requirement for construction (refer to the Operational Acid Rock Drainage (ARD)/Metal Leaching (ML) Testing and Sampling Plan) and capping of the Whale Tail WRSF (refer to Sections 5 and 9). The NPAG waste rock tonnage required for the construction of the Whale Tail WRSF for the 4.7 m thermal cover is 8,883,000 tonnes.

SECTION 4 • WHALE TAIL PIT OVERBURDEN MATERIALS

A detailed description of soils in the Project footprint is presented in FEIS Volume 5, Section 5.3 - Terrain, Permafrost, and Soils (Agnico Eagle, 2016). Soils in the Project footprint are predominantly coarse to moderately coarse-textured glacial till and colluvium with high coarse fragment content commonly overlying bedrock at shallow depths (less than 1 m). Soils are dominated by Cryosols which develop on till dominated landscapes. Saturated soil layers overlying frozen layers have been observed on site. Other soils identified include Brunisols which are most prevalent on glaciofluvial material (e.g., eskers), Gleysols which develop on till in transition areas between upland and depressional landscape positions, and Regosols which are poorly developed soils. Organic Cryosolic soils have been found in wetlands.

Field results suggest that the mineral soils are predominantly acidic to neutral, ranging from pH 5.14 to 6.96, with pH tending to increase with soil depth (FEIS Amendment Volume 5, Appendix 5-A, Appendix E). Due to their mineralogy, the mineral soils in the Project area are increasingly sensitive to adverse effects due to acid deposition with decreasing baseline pH. Soils in the Project footprint are generally not susceptible to compaction. Soils prone to compaction are limited to low-lying, imperfectly and poorly drained areas where the clay content of soils is slightly higher.

Most soils in the Project area are rated as having moderate erosion potential, with the exception of areas with morainal blankets or colluvial deposits on slopes greater than 60%, and areas containing glaciofluvial soils. In areas of gullied or dissected terrain, the erosion potential would increase.

There is a level of uncertainty associated with the location of ice-rich permafrost within the Project footprint as no detailed permafrost studies regarding the thickness of the active layer or the ice content of the soils were completed for this area. It is assumed that ground ice content is between 0 and 10% as suggested by Heginbottom et al. (1995). Conditions are considered to be similar to Meadowbank, with ice lenses and ice wedges present locally on land, as indicated by permafrost features such as frost mounds. These areas of local ground ice are generally associated with low-lying areas of poor drainage.

A chemical characterization program investigated the geo-environmental properties of surficial overburden and Whale Tail Lake sediments. Static geochemistry tests, mineralogy and kinetic leaching tests were carried out to investigate the reactivity of these materials with respect to their potential to generate ARD and to release metals (metal leaching or ML) to the receiving environment. The surficial overburden, as described in FEIS Amendment Volume 5, Appendix 5-E, is NPAG and has low leachability but the fines portion of the material could be amenable to erosion and transport as suspended solids in contact water.

The overburden expected to be excavated over the LOM is presented in the Table 3.2. According to Meadowbank Mine experience, lakebeds will consist of water saturated and soft soils. The remainder

of the overburden materials will consist of till excavated on land. Some of the till or till-like material (approximately 100,000 t) is expected to be used during operations and will be temporarily stockpiled on the Overburden Storage pad (having approximate footprint of 3.2 hectares (ha)) near Whale Tail Dike and where the contact runoff will naturally flow into the Whale Tail Attenuation Pond. The remaining 5.9 Mt of overburden will be piled at the base of the Whale Tail WRSF and surrounded with waste rock to stabilize the material (see Figure A.1 in Appendix A). All the overburden stockpiled in the Whale Tail WRSF will be eventually covered with NPAG/NML waste rock if deemed required. Further details on mine site closure and reclamation can be found in the Whale Tail Interim Closure and Reclamation Plan.

SECTION 5 • WHALE TAIL PIT WASTE ROCK

The location of the Whale Tail WRSF took into consideration the following environmental, social, economic, and technical aspects of waste rock management:

- minimize the overall footprint of the Whale Tail WRSF to the extent practicable while maintaining the short-term and long-term stability of the facilities;
- avoid or minimize impact to adjacent fish bearing lakes;
- minimize the haul distance from the open pit to the Whale Tail WRSF;
- minimize the number of the water catchment areas potentially affected by drainage from the Whale Tail WRSF;
- when feasible, divert upstream clean natural non-contact run-on water away from the Whale Tail WRSF; and
- facilitate the collection and management of the contact water from the Whale Tail WRSF during mine operations to avoid potentially negative impacts on the surrounding environment.

The area selected for the storage of waste rock and overburden materials is shown in Figures A.1 to A.4 of Appendix A. This area has an approximate footprint of 110 ha. Waste rock and overburden from the Whale Tail Pit not used for site development purposes will be trucked to the Whale Tail WRSF until the end of mine operations.

Waste rock will be managed in accordance with the Plan, as per Part F, condition 19 of the Water License 2AM-WTP1826.

5.1 Waste Rock Properties

A chemical characterization program investigated the geo-environmental properties of waste rock and ore at the Project (Golder, 2018b). Static geochemistry tests, mineralogy and kinetic leaching tests were carried out to investigate the reactivity of these materials with respect to their potential to generate ARD (potentially acid generating, or PAG) and to release metals (ML) to the receiving environment.

The Whale Tail deposit mineralization is low sulphur but the sulphur carries arsenic which is enriched in many waste rock types, while other rock types are PAG. Arsenic, sulphur, and carbonate-buffering capacity are the parameters of environmental interest present in mining wastes. Mine waste will be segregated during operations, such that all PAG and/or ML material will be managed within the Whale Tail WRSF, and all material that is NPAG and NML will be used for site construction and WRSF closure. Table 5.1 below summarizes the various waste rock types and their ARD/ML potential.

Table 5.1 Anticipated ARD/ML Potential of Waste Rock Types at Whale Tail (Golder, 2018b)

Waste Type	Rock Unit Code	ARD Potential	ML Potential[1]
Komatiite North	V4a – 0a	No	High
Komatiite South	V4a – 0b	No	Moderate
Greywacke Central	S3C – 3b	Yes	Variable
Greywacke South	S3S – 3b	No	Low
Greywacke North	S3N-3b	Variable	Variable
Chert	S10 – 3b	Yes	Variable
Iron Formation	S9E – 3b	No	High
Basalt	V3 – 1b	No	Moderate
Diorite	I2 – 8b	No	Low
Overburden	n.a.	No	Low[2]
Lake sediment	n.a.	Yes	High[2]

n.a. not applicable

[1] based on large column kinetic test results

[2] based on Shake Flask Extraction results

Most of the waste rock lithologies to be disturbed by mining are NPAG including komatiite, iron formation, basalt, southern greywacke and diorite units. Together, these lithologies comprise approximately 68% of the waste rock (41.8 Mt). These units will not require means to control ARD. Of these, however, the basalt, komatiite and iron formation units, which account for 51% of waste rock (31.3 Mt), as well as some of the lake sediments, leach arsenic in static and kinetic leaching tests at concentrations that exceed the Effluent Quality Criterion (EQC) developed for the site. The south greywacke and the diorite within the open pit have low leachability in addition to being NPAG and represent approximately 17% of the waste rock (10.5 Mt). The north greywacke has variable ARD and arsenic leaching potential and represents 11% of waste rock (6.8 Mt).

The ore and waste rock from the central greywacke and chert units are PAG. Chert and central greywacke represent 21% of waste rock to be generated by mining (19.1 Mt). They are silicified and, compared with the other greywacke waste rock, have a lower buffering capacity and/or a slightly higher sulphur content which results in a PAG classification of this material. The PAG waste rock also leaches arsenic but at concentrations that are well below the EQC. Kinetic leaching tests, mineral

depletion calculations and consideration of the scale and site differences between laboratory tests and field conditions suggest a time lag to possible ARD development at site of more than a decade. Upper tier ARD materials (high sulphur/low buffering capacity greywacke or chert waste rock) generated acidic drainage earlier under laboratory conditions but without the benefit of added buffering capacity from mixing with other NPAG rock piles. The delay to onset of ARD from the bulk of PAG waste rock and ore is expected to be substantially longer than the four years of mine construction and operations. Further, ARD control mechanisms for PAG materials will be implemented during operations as PAG/ML material will be in placed in the center of the WRSF and progressively covered with NPAG material.

All waste material will be sampled and tested during operations to confirm their ARD and ML potential in support of waste segregation. Based on results to date, a sulphur content of 0.1 wt% appears to be a suitable threshold to identify PAG material. Arsenic leaching material will be evaluated based on a strong correlation between total and leachable arsenic in the current results, which indicates that material below 75 mg/kg is not expected to result in waste rock contact water quality above the EQC. The diorite and south greywacke material, which are both NPAG/NML, as well as other material below these threshold values, can be used as construction materials on site, as cover material for the Whale Tail WRSF and as reclamation material. All material above these thresholds, as well as the lake sediments, will require long-term management and will be stored in the Whale Tail WRSF.

5.2 Waste Rock and Waste Rock Storage Facility Management

5.2.1 Waste Rock Storage Facility Water Management

Seepage and runoff water from the Whale Tail WRSF will be managed by a combination of water retention dikes and water collection ponds (Whale Tail WRSF Pond and Whale Tail Attenuation Pond). Water quality will be monitored as per the Whale Tail Water License requirements. If water quality does not meet discharge criteria, contact water in the water collection ponds will be treated at the Whale Tail water treatment plant (WTP) prior to discharge to the outside environment.

The Whale Tail WRSF was located considering advantageous topography in the form of a gentle valley presenting one low topographic point near Mammoth Lake where a contact water pond will be built. Only one low topographic point is observed north of the Whale Tail WRSF where potential runoff could escape from the Whale Tail WRSF footprint. As part of the surrounding road, a saddle dam will be constructed at this location to avoid contamination of the sub-watershed located northward of the Whale Tail WRSF.

As mentioned in the document Amaruq Stage 1 WRSF, Ore Stockpile 1 and Starter Pit Design Report and Drawings (Agnico Eagle, 2018), while awaiting the construction of the Whale Tail WRSF dike expected in winter 2019, a Stage 1 WRSF will be initiated. The Stage 1 WRSF, located within the footprint of the final location of the WRSF, will be positioned as to be able to control the watershed using the topography in combination with temporary water management structures in order to prevent potentially contaminated contact water from seeping into the environment. The duration of

this Stage 1 WRSF will be during the second half of 2018 until the aforementioned WRSF dike is constructed or when weather conditions are sufficiently cold that no thawing or water runoff can occur.

To avoid any potential contact water from entering the environment, a low-permability access road built of overburden will be established first to reach the Stage 1 WRSF location and will act as a barrier to any water not naturally diverted towards a containment sump that will be established once the access road is completed and prior to any placement of PAG / ML material. The location of the Stage 1 WRSF was chosen as to use the topography to control water runoff, in combination with the access road and collection sump designed to sustain a 1:100 year rain event. All water collected in the sump will be directed towards Quarry 1 in a closed circuit. Refer to Figure A.5 of Appendix A.

The construction of Whale Tail WRSF Pond (Whale Tail WRSF Dike) and Whale Tail Attenuation Pond (Whale Tail Dike) are among the most important water management infrastructure for the Project Construction of Whale Tail Dike will be initiated in the third quarter of 2018 and the construction of the Whale Tail WRSF Dike will start in 2019. The source of construction material for these facilities will be the first development of the open pit where NPAG/NML rocks are located. The overburden will be removed and stockpiled in the Whale Tail WRSF. During the construction, berms and sumps will be built inside the footprint of the Whale Tail WRSF area if required to limit seepage and runoff from overburden and waste rock. As soon as waste rock material will be available from the open pit, the overburden will be surrounded with waste rock material (see Figure A.1 in Appendix A) to control the stability of the pile. If deemed necessary, turbidity barriers in Mammoth Lake will also be installed.

During the operations of the mine, seepage and runoff from the Whale Tail WRSF will be captured by the Whale Tail WRSF Pond and pumped to the Whale Tail Attenuation Pond where the contact water will be treated in the Whale Tail WTP prior to discharge to the outside environment.

The Whale Tail WRSF water management infrastructure will remain in place until mine closure activities are completed and monitoring results demonstrate that the contact water quality from the Whale Tail WRSF meets discharge criteria (refer to Section 9.1).

Refer to the Whale Tail Pit Water Management Report for additional details on water management of the Whale Tail WRSF.

5.2.2 Waste Rock Management Planning

Waste rock and overburden produced during mining will be used in the construction of the mine site infrastructure, while some of the NPAG/NML waste rock will be put aside for capping at closure and for underwater structures for fish habitat compensation if required. The balance of the PAG or NPAG waste rock that will not be used will be placed in the Whale Tail WRSF and will remain in the dedicated rock storage facility areas for PAG or NPAG material.

As a first step in waste rock management planning, options are developed to define the main use and destination for each rock type based on the results of geochemical testing. The second step required accounting of the quantity and timing of extraction of each waste rock type on an annual basis. This included further refinement of the quantity, type and timing of construction material requirements for each infrastructure of the project. The lithology of waste rock is added to the geological block model for each deposit and a detailed account of construction requirements is made, based on the most advanced infrastructure designs available at the moment of planning. The Waste Rock Management Plan is updated annually with current production quantities and actual LOM, dictating the production and mining schedule. Planning of the placement of waste rock material is reviewed for each LOM exercise, considering the different waste rock facility locations and capacity, as well as the closure NPAG/NML cover requirements.

Waste rock management is also part of the day to day planning of the mine operation. Part of the mining planning includes the management of waste rock, to ensure the plan established with the LOM is followed, to ensure material required for construction or closure purposes are properly stored, and also to plan for adequate and permitted storage areas. Because of the material requirement for construction and NPAG/NML rock cover, as well as the importance for adequate disposal to meet closure objectives, waste rock management will be a key component of the mining planning for the Whale Tail Project.

5.2.3 Waste Rock Management Execution

Segregation of ore, waste rock as potentially acid generating (PAG) or non-potentially acid generating material (NPAG), as well as metal leaching (ML) and non-metal leaching material (NML), is based on operational testing during mining activity to differentiate waste rock type. Sampling and testing of waste materials for acid rock drainage (ARD) and metal leaching will be conducted during mine operation in order to segregate PAG/ML waste rock from NPAG/NML waste rock material, so that waste material can be assigned to specific locations or use. This practice has been ongoing since the beginning of the mining operations at Meadowbank, and will continue during the operation period at Whale Tail Pit.

Operational sampling and analysis will be completed at the laboratory on site, at specified frequency during mining activities, in order to identified and delineate the material type in the pits during mining. The results from these analyses will be used to differentiate the PAG/ML and NPAG/NML materials. Once characterized, the waste rock material will be segregated and placed in appropriate locations.

The geochemical properties of all Whale Tail mining wastes will also be confirmed by certified laboratory, through both static and kinetic testing on numerous representative samples, by various test methods and through multiple Project development stages. These data will be used to update the Waste Rock Management Plan and implement adaptive management strategies to adequately ensure the protection of the environment and meet regulatory requirements.

The dispatch system is a computer system used to manage and control surface mining equipment. This system has been implemented at Meadowbank and will be used also at the Whale Tail Pit. The system offers real time fleet management and machine guidance technology that records data related to mining equipment activity, location, time, production, and maintenance. This information is also displayed to machine operators and other mining personnel. The system connects with mobile computers on field equipment such as excavators and haul trucks. For example, operators of loading equipment in the pit have information on screens about the type of material they are excavating. The haul truck drivers also have access to information in their equipment, about what type of material they are hauling and where is the appropriate disposal destination for the material. Information regarding the waste rock characterization is also managed and recorded by the mine dispatch system, tracking in real time loads of material, including waste rock, and their respective destination. The system and the dispatcher in charge guide the operators and ensure the ore and waste rock material are transported to the appropriate destination.

As part of the planning and execution of the waste rock management strategy, waste rock presenting geological characteristics leading to metal leaching such as arsenic will be managed in the Whale Tail WRSF in order to ensure their encapsulation and geochemical stability. Certain type of waste rock material or lithology will be placed in specific locations within the WRSF in order to provide sufficient cover of NPAG/NML waste rock material to prevent metal leaching and ensure geochemical stability.

5.2.4 Waste Rock Facility Monitoring

Monitoring will be carried out during all stages of the operation to demonstrate geotechnical stability, safe environmental performance of the facility and efficiency of the waste management procedures. If any non-compliant conditions are identified, adaptive management including modification of waste management practices and planning for corrective measures will be completed in a timely manner to ensure the environmental performance of the Whale Tail WRSF, the protection of the environment and that regulatory requirements are met.

In order to assess and monitor the performance of the waste rock management procedure, a number of methods can be put in place during the operation, such as:

- QA/QC laboratory analysis program with an accredited commercial laboratory to validate the procedure and results of the onsite laboratory for determination of PAG/NPAG and ML/NML waste rock;
- Mine dispatch data base, ensuring tracking and location of all waste rock material at any locations on site. With the information in the system, recovery of waste rock material disposed in an inappropriate location will be possible in a timely manner;
- Clear indication and marking of the PAG/ML zones, NPAG/NML zones and NPAG/NML cover within the waste rock storage facility, to provide visual guidance for the operators and during environmental inspection;

- Survey of the WRSF to provide a record plan of the waste rock material placement within the facility;
- Thermal monitoring of the WRSF to observe freezeback with thermistors installed at strategic locations. The purpose of the thermistors is to monitor the temperature within the facility as freezing progresses. The thermistors will be monitored regularly throughout the operational period, as presented in the Thermal Monitoring Plan, to verify and validate the WRSF thermal model with operational data from site.
- Water quality monitoring will be completed as per the Water Quality Flow and Monitoring Plan and the Water License requirements.

A specific set of procedures for segregation and monitoring of the waste rock material at the Whale Tail Project is presented in the Operational Acid Rock Drainage (ARD)/ Metal Leaching (ML) Testing and Sampling Plan.

5.3 Whale Tail Waste Rock Storage Facility Dimensions

The evolution of the Whale Tail WRSF is shown in Figures A.1 to A.4 of Appendix A. At completion, the crest elevation of the Whale Tail WRSF will be approximately at 250 m (maximum height of approximately 95 m) in an environment where the adjacent topography elevation varies between 154 and 170 m.

The Whale Tail WRSF is designed to minimize the impact on the environment and consider both the physical and geochemical stability of the stored waste rock and overburden. The design criteria are presented in FEIS Amendment Volume 2, Appendix 2-J (Agnico Eagle, 2016). Final design details for the Whale Tail WRSF will be provided to the regulators for approval at least 60 days prior to construction. The Whale Tail WRSF is designed considering the placement of the waste rock and overburden in layers spread using a dozer to minimize the footprint and the dust. Each bench of 20 m maximum height is going to be composed of 4 layers of 5 m thickness, and where the bench toe will start at a setback distance of 20 m from the crest of the previous bench. The current design and overall sideslope angle of the Whale Tail WRSF will be 2.5V:1V, an angle generally considered stable for such a facility (see Figure 5.1 for a typical cross section). However, slope stability analyses will be performed during the next engineering phases to determine the final design so that it is consistent with approved Portage and Vault Waste Rock facilities at Meadowbank Mine. If needed, the Whale Tail WRSF could be expended for additional capacity, within the approved limits of the Project and upon regulatory approval.

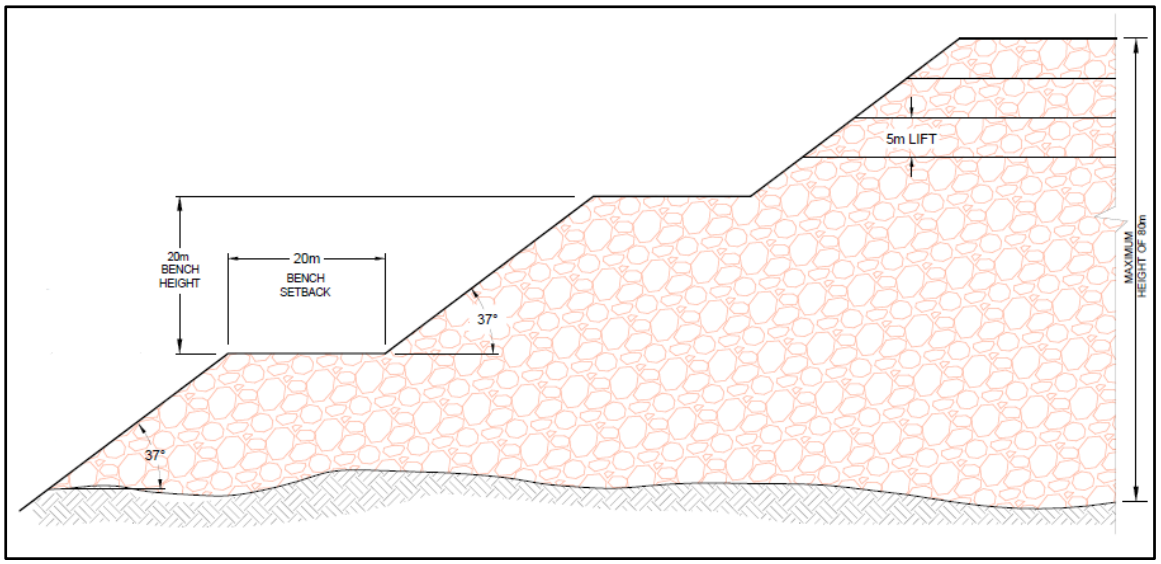

Figure 5.1 Typical Cross Section of the Whale Tail Waste Rock Storage Facility

Source: SNC (2015).

SECTION 6 • WHALE TAIL PIT ORE STOCKPILES

The three areas selected for stockpiling of ore are identified as Ore Stockpile 1, Ore Stockpile 2, and Ore Stockpile 3 on Figure A.2 of Appendix A. These ore stockpile pads have an approximate footprint of 5.7, 5.5, and 6.5 ha, respectively. As presented in Table 3.1, the maximum amount of ore stockpiled on the ore pads is 1,136,261 tonnes (t) in Q2 2019, from there the quantity of ore stockpiled stabilizes and then decreases until the end of operations in Q1 2022. No ore will remain on stockpile pads at the end of operations.

6.1 Ore Properties

A chemical characterization program investigated the geo-environmental properties of waste rock and ore report (FEIS Amendment Volume 5, Appendix 5-E). Static geochemistry tests, mineralogy and kinetic leaching tests were carried out to investigate the reactivity of these materials with respect to their potential to generate ARD and to release metals (ML) to the receiving environment.

The ore is PAG, and is enriched in arsenic, antimony, bismuth, chromium, selenium, silver and to a lesser extent, nickel. Some of the ore samples leached arsenic at concentrations that exceed the Portage effluent criterion in static (shake flask extraction) tests but exceedances were short-lived in the first cycles of kinetic leaching tests. The delay to onset of ARD from ore is expected to be substantially longer than the seven years of mine construction, operations, and closure.

6.2 Ore Stockpile Management

Seepage and runoff water from Ore Stockpiles 1, 2, and 3 will naturally flow to the Whale Tail Attenuation Pond; channels will be constructed if deemed required to direct the seepage and runoff to the pond. If the water quality does not meet discharge criteria, the contact water will be treated at the Whale Tail WTP prior to discharge to the outside environment.

The Ore Stockpile Pad 1, which constitute the first stage of the ore stockpile, was designed based on the following considerations. A minimum 1.0 m of overburden and/or waste rock will be placed over original ground to reduce any thaw-induced differential settlements. Waste rock will then be placed to follow the natural topography, thereby reducing the likelihood of water ponding on the surface of the pad requiring additional maintenance. A final grade of about 0.5% sloping towards the Whale Tail Attenuation Pond will be achieved. Any surface run off from the ore stockpile or the pad will therefore be directed to the Attenuation Pond containment area (Agnico Eagle, 2018).

6.3 Ore Stockpile Facility Dimensions

The three ore stockpiles will occupy an area of approximately 17.8 ha. A typical cross section of these facilities is presented in Appendix A (Drawing no. 6108-687-210-001). Currently, Ore Stockpiles 1, 2, and 3 are designed to stack three layers of 5 m maximum thickness for a total height of 15 m. The sideslope angle of these ore stockpiles will be 3V:1V, an angle generally considered stable for such

facility. Slope stability analyses will be performed during the next engineering phases and a final design will be presented prior to construction.

SECTION 7 • MEADOWBANK TAILINGS STORAGE FACILITY - TAILINGS MANAGEMENT FOR WHALE TAIL PIT

According to the Whale Tail Pit LOM calculation, the addition of the Whale Tail Pit to the Meadowbank LOM (LOM 2015 – completion Q3 2018) will generate an addition of approximately 8.3 Mt (dry) of tailings to the Meadowbank TSF for a total of 35.4 Mt.

Currently, Meadowbank tailings are stored within the TSF North and South Cells. The TSF includes dikes/dams, and is located within the basin of the former north-west arm of Second Portage Lake which has been dewatered to allow mining in the Portage Pit (refer to Figure 1.2). The TSF North and South cells are separated by the Stormwater Dike. Tailings were deposited into the North Cell from 2010 until November 2014, and again from June to September 2015. The South Cell (former Portage Attenuation Pond) is currently operating and receiving tailings.

Tailings from Whale Tail Pit will be stored within the approved Meadowbank TSF footprint. According to the approved Meadowbank TSF design and Meadowbank LOM 2015, there remains a capacity of 5.3 Mt in the South Cell after the completion of mining Goose Pit, Portage Pit, Vault Pit, BB Phaser, and Phaser Pit. To provide the additional 3 Mt of capacity required to store Whale Tail Pit tailings, Agnico Eagle is proposing to construct an internal structure raise over the outside perimeter of the existing and frozen North Cell. This concept will increase the tailings beach elevation to a maximum of 153.5 masl in the North Cell.

The management operation and monitoring of the TSF is regulated under Agnico Eagles existing Type A Water Licence 2AM-MEA1526. Updates to the Meadowbank Mine Waste Rock and Tailings Management Plan has been provided in support of the Whale Tail Pit application and amendment needed to the existing Type A Water Licence to reflect changes in the Meadowbank operations.

SECTION 8 • CONTROL STRATEGIES FOR ACID ROCK DRAINAGE AND METAL LEACHATE IN COLD REGIONS

The generation of metal leachate in acidic drainage is a concern for mining projects. In evaluating the potential control strategies for the disposal of the mine waste for the Whale Tail Pit, consideration was given to strategies that are effective in cold regions. A discussion of the alternative control strategies considered is summarized below.

Common control strategies for the prevention or reduction of acid mine drainage in cold regions are:

1. Control of acid generating reactions;
2. Control of migration of contaminants; and
3. Collection and treatment.

In assessing the overall control strategies for the Project, emphasis has been placed on methods that satisfy (1) and (2) in the above list, which then has an impact on (3) by potentially reducing the requirements for these activities. Table 8.1 presents various acid mine drainage control strategies.

Table 8.1 Acid Mine Drainage Control Strategies of the Arctic

Strategy	Description
Freeze Controlled	Requires considerable volumes of non-acid waste rock for insulation protection. Better understanding of air and water transport through waste rock required for reliable design.
Climate Controlled	Requires control of convective air flow through waste rock, infiltration control with modest measures and temperature controls. Better understanding of waste rock air, water, and heat transport for reliable design.
Engineered Cover	Special consideration for freeze-thaw effects. Availability and cost of cover materials are major impediments.
Subaqueous Disposal	Very difficult to dispose of waste rock beneath winter ice.
Collection and Treatment	Costly to maintain at remote locations Long-term maintenance cost.

Source: Dawson and Morin (1996).

The Whale Tail Pit site is located within the zone of continuous permafrost, and has a mean annual air temperature of about -11.3°C. Based on thermal data collected during baseline studies, the mine area is underlain by permafrost to the depth of 425 m below the ground surface. In developing this Plan, freeze control and climate control strategies have been adopted.

Freeze control strategies rely on the immobilization of pore fluids to control acid mine drainage reactions, and the potential migration of contaminated pore water outside of the storage facility. The climate conditions in the project area are amenable to freeze control strategies, and hence should be taken advantage of. In addition to immobilization of pore fluids, permafrost can reduce the hydraulic conductivity of materials by several orders of magnitude. Consequently, freeze control strategies are effective methods for reducing the migration of contaminants through materials. According to

Dawson and Morin (1996), freeze control strategies can only be effective if sufficient quantities of NPAG waste rock are available for use as a cover and insulation protection.

Climate control strategies rely on cold temperatures to reduce the rate at which oxidation occurs. The low net precipitation in permafrost regions limits infiltration of water into waste rock and tailings disposal areas. Consequently, the climate of the Whale Tail Pit will act as a natural control to reduce the production of acid mine drainage and metal leachate. Climate control strategies are best applied to materials placed at a low moisture content to reduce the need for additional controls on seepage and infiltration. This strategy is considered to be effective for waste rock in arid climate such as the one of Whale Tail Pit.

Meadowbank Mine uses the climate control strategy for the reclamation of the WRSF and TSF. Research activities are ongoing about the behaviour and the performance of the proposed cover systems for Meadowbank Mine with the participation of the Université du Québec en Abitibi-Témiscamingue and Polytechnique: Research Institute Mines and Environment since 2014. Experience and knowledge acquired at Meadowbank Mine regarding the design, the closure cover conception and the monitoring of the facility and the cover system will be applied to the Whale Tail Pit waste rock storage facility.

SECTION 9 • MONITORING AND CLOSURE

9.1 Whale Tail Waste Rock Storage Facility

Progressive reclamation includes closure activities that take place prior to permanent closure in areas or at facilities that are no longer actively required for current or future mining operations. Reclamation activities can be done during operations with the available equipment and resources to reduce future reclamation costs, minimize the duration of environmental exposure, and enhance environmental protection. Progressive reclamation may shorten the time for achieving reclamation objectives and may provide valuable experience on the effectiveness of certain measures that might be implemented during permanent closure. The Whale Tail WRSF will be operated to facilitate progressive reclamation; detailed mine closure and reclamation activities are provided in the Whale Tail Interim Closure and Reclamation Plan.

A closure cover system will be added on the slopes and top surface of the Whale Tail WRSF, to encapsulate the PAG/ML waste rock. As for the Meadowbank WRSF, the NPAG/NML cover to be placed over the PAG/ML waste rock will be constructed during operations with the available equipment and resources in areas safe to access for work. The cover design proposed is the similar as the Meadowbank Portage WRSF. Based on results calibrated to the Meadowbank WRSF thermal data to date and climate change predictions, the maximum predicted thickness of the WRSF active layer is 4.2 m and a contingency of 0.5 m will be added. Thus, the cover will consist of a 4.7 m thick NPAG/NML waste rock placement as a final surface cover. The intent of the cover is to contain the yearly active layer inside the thickness of the cover and maintain a temperature below 0°C for the underlying PAG/ML waste rock. The objective of the cover is the control of acid generating reactions and migration of contaminants.

The segregation of the PAG/NPAG and ML/NML waste rock will occur during operations (see the Operational ARD-ML Sampling and Testing Plan and Section 5.2), as will the progressive placement of the final cover on the WRSF slopes. The covering of the top of the Whale Tail WRSF will be completed during the closure period using the stockpiled NPAG and NML waste rock. There is sufficient NPAG/NML material for the 4.7 m cover, if needed (Golder, 2018b). It is anticipated that the native lichen community will naturally re-vegetate the surface of the Whale Tail WRSF over time.

During operation, thermal monitoring will be conducted in the cover and the facility. These results, along with thermal modelling, will assess the performance of the WRSF closure cover and identify if adjustments in the cover placement or thickness will be required.

Thermal and water quality monitoring will be carried out during all stages of the mine life to demonstrate geotechnical stability and the safe environmental performance of the facilities. If any non-compliant conditions are identified, then maintenance and planning for corrective measures will be completed in a timely manner to ensure successful completion of the Whale Tail Interim Closure and Reclamation Plan.

Mine closure and the reclamation of the Whale Tail WRSF will use currently accepted management practices and appropriate mine closure techniques that will comply with accepted protocols and standards.

Geochemical testing indicates that some waste rock material is NPAG/NML, but some waste rock is characterized as PAG and/or ML (refer to Section 5.1) and therefore, means to limit oxidation and water infiltration need to be put in place. By containing the yearly active layer inside the thickness of NPAG/NML waste rock cover and maintain a temperature below 0°C for the underlying PAG/ML waste rock, the cover will provide control of acid generating reactions and migration of contaminants. Increased active thaw depth/rock cover from 4.0 to 4.7 m is expected to have no effect on WRSF contact water quality during operations, and long-term post closure effects to water quality of a thicker active layer are expected to be within model accuracy where a clean (low leaching) waste rock cover present.

The contact water management system for the Whale Tail WRSF (WRSF Dike and WRSF Pond) will remain in place until mine closure activities are completed and monitoring results demonstrate that water quality conditions from the Whale Tail WRSF are acceptable for discharge with no further treatment required. Water quality will be monitored as per the Whale Tail Pit Water License requirements. Once water quality meets the discharge criteria established through the water licensing process, the contact water management system will be decommissioned to allow the surface runoff and seepage water from the Whale Tail WRSF to naturally flow to the outside environment. Water quality predictions for Whale Tail Pit are provided in Volume 6, Appendix 6-H of the FEIS (Agnico Eagle, 2016).

9.2 Ore Stockpiles

Ore Stockpiles 1, 2, and 3 will used over the operations to stockpile ore and will be freed during Q1 2022. During the following summer, if metal contamination of ore pads is measured, the pad section targeted by the contamination will be excavated and placed in the Whale Tail WRSF before its final covering with NPAG waste rock. If deemed required, the Ore Stockpiles 1, 2, and 3 will be covered with NPAG/NML waste rock or soils. In the event of a short-term temporary closure, the water and dust management strategies for the ore stockpiles will be kept the same as used during active mine operations. In the event of a long-term temporary closure, surface water control structures will be maintained as required. Further details on mine site closure and reclamation, including the ore stockpiles, can be found in the Whale Tail Interim Closure and Reclamation Plan.

9.3 Water Quality Forecast for Whale Tail Pit Operation and Closure

An updated water quality forecast report including Whale Tail Pit was completed in 2017 (Golder, 2017). The purpose of the updated modelling was to identify through a mass balance approach the contaminants of concern during the pit flooding process and determine if water treatment will be required on site for closure activities when comparing the final contaminant levels to the CCME

guidelines and/or site specific criteria for parameters that are not included in the CCME guidelines. In 2018, a hydrodynamic modelling of Whale Tail Pit Lake was conducted as additional analyses to determine the approximate fill time for the Whale Tail Pit at closure and to evaluate the potential for chemical stratification and the Pit Lake water quality profile post-closure. This hydrodynamic modelling study is addressing terms and conditions of NIRB project certificate, Condition 16 a), c). Results show that diffusion of arsenic from all pit walls has no significant effect on water quality in short and long-term. Arsenic transfer to the open pit by diffusion from the submerged pit walls is not significantly affected by the hydrogeological regime around the flooded open pit (Golder, 2018a).

By 2018, the pit lake is expected to be fully flooded by transfer from South Basin and natural inflows. Lake water is predicted to completely mix bi-annually in spring and fall and exhibit weak chemical stratification in summer and winter. Pit lake water quality meets SSWQO for arsenic, oligotrophic level of 0.01 mg/L phosphorous and receiving water quality guideline for and nitrate in 2028 and post-closure, allowing reconnection of North and South Basins and restore lake circulation (Golder, 2018a).

The hydrodynamic modelling indicated that the effluent discharge into Mammoth Lake will be well mixed (fully mixed conditions), which is representative of the closure conditions. The water quality forecast will be updated on an annual basis as new monitoring data is added at the site, as per the Whale Tail Water License requirements. Forecasted model values from prior years will be compared with the actual sample results from the following years for model calibration purposes.

9.4 Water Quality Forecast for Meadowbank Operation and Closure

Using Whale Tail Pit tailings geochemistry data, identified three contaminants of concern that could impact end Goose and Portage pits water quality at Meadowbank and therefore require treatment: copper, selenium and total nitrogen. These contaminants originate from the TSF reclaim water transferred to the pits in 2022 as outlined in Section 8.7 of the forecast (SNC, 2016). As the afore mentioned parameters may be of concern prior to dike breaching, treatment options for their removal during or after the pit flooding process will need to be examined and will be assessed in greater detail during the preparation of the Meadowbank Final Closure and Reclamation Plan to be submitted one year prior to the end of operations. The management operation and monitoring of the TSF and of the Portage and Goose pits water quality is regulated under Agnico Eagle existing Type A Water Licence 2AM-MEA1526.

9.5 Monitoring of Freezeback

9.5.1 Whale Tail Waste Rock Storage Facility

To observe the freezeback of Whale Tail WRSF, a series of subsurface thermistors will be installed at strategic locations. The purpose of the thermistors is to monitor the temperature within the facility as freezing progresses. The thermistors will be monitored regularly throughout the operational period as well as during closure and post-closure according to the Whale Tail Water Licence and as described

in the Thermal Monitoring Plan. The results will be used to evaluate the predicted thermal response of the facility, and will allow for revision of the thickness of the final cover if required.

SECTION 10 • REFERENCES

Agnico Eagle (Agnico Eagle Mines Limited). 2018. Amaruq Stage 1 WRSF, Ore Stockpile 1 and Starter Pit Design Report and Drawings. Meadowbank Divison, June 2018.

Agnico Eagle, 2016. Final Environment Impact Statement (FEIS) Volumes 1 to 8, Whale Tail Pit Project, Meadowbank Division.

Dawson and Morin. 1996. Mine Effluent Neutral Drainage (MEND), 1.61.2: Acid Mine Drainage in Permafrost Regions: Issues, Control Strategies and Research Requirements, 1996.

Golder (Golder Associates Ltd.). 2018a. Hydrodynamic modelling of Whale Tail Pit Lake, Agnico Eagle Mines, Meadowbank Division.

Golder (Golder Associates Ltd.). 2018b. Evaluation of the Geochemical Properties of Waste Rock, Ore, Tailing, Overburden and Sediment from the Whale Tail Pit and Road Aggregate Materials, Agnico Eagle Mines, Meadowbank Division. Document No. 1789310_182. May 2018.

Golder Associates Ltd (Golder) 2018c, Whale Tail Pit Project Waste Rock Storage Facility Cover Thermal Assessment, Technical Memorandum Prepared for Agnico Eagle Mines Limited. Golder reference No. 1789310_177_TMRev0, 16 p. and Appendix. June 2018.

Golder Associates Ltd. 2017. Addendum to Agnico Eagle Mines Whale Tail FEIS Appendix 6-H. Sensitivity Analyses on Water Quality Modelling In Support of Responses to Technical Commitments 30, 36, 37 and 42 and Intervenor Comment ECCC#15 and INAC-TRC #3 and #5, on the Water Licence Application to the Nunavut Water Board. Prepared for Agnico Eagle Mines Ltd. Golder Doc. 015 1658927/6100/6120 Revision 3; August 2017.

Golder (Golder Associates Ltd.). 2016. Addendum for Closure and Reclamation Plan, Agnico Eagle Whale Tail FEIS, Appendix 8-F. Interim Whale Tail Closure Plan and Reclamation plan. Golder Associated Limited. June 2016.

Government of Canada. 2015. Historical Climate Data. Available online from: http://climate.weather.gc.ca/index_e.html

Heginbottom, J.A., M.A. Dubreuil and P.A. Harker. 1995. Canada – Permafrost. In, National Atlas of Canada, 5th Edition, National Atlas Information Service, Natural Resources Canada, MCR 4177.

IPCC (Intergovernmental Panel on Climate Change). 2014. *Summary for Policymakers*. In: Climate Change 2014: Impacts, Adaptation, and Vulnerability. Part A: Global and Sectoral Aspects. Contribution of Working Group II to the Fifth Assessment Report of the Intergovernmental Panel on Climate Change [Field, C.B., V.R. Barros, D.J. Dokken, K.J. Mach, M.D. Mastrandrea,

T.E. Bilir, M. Chatterjee, K.L. Ebi, Y.O. Estrada, R.C. Genova, B. Girma, E.S. Kissel, A.N. Levy, S. MacCracken, P.R. Mastrandrea, and L.L. White (eds.)]. Cambridge University Press, Cambridge, United Kingdom and New York, NY, USA, pp. 1-32

Knight Piesold. 2015. Agnico Eagle Mines Ltd.: Meadowbank Division – Whale Tail Pit – Permafrost and Hydrogeological Characterization, File No.:NB101-00622/04-A.01

MDRB (Meadowbank Review Board). 2015. Report No 17 Meadowbank Mine Dike Review Board Meeting July 27-30, 2015. Meadowbank Mine Dike Review Board. August 6th, 2015.

Overland, J.E., M. Wang, J.E. Walsh, and J.C. Stroeve. 2013. Future Arctic climate changes: Adaptation and mitigation time scales, Earth's Future, 2, doi:10.1002/2013EF000162.

SNC (SNC Lavalin). 2015. Whale Tail Pit Project Permitting Level Engineering, Geotechnical and Water Management Infrastructure, Rev. 00 Ref. 627215-1000-40ER-0004, Agnico Eagle Ref. 6108-REP-004_RA.

SNC. 2016. Tailings Storage Facility Expansion Project Phase 1 - Water Quality Assessment Technical Report. March 11th, 2016

APPENDIX A • DRAWINGS - SITE LAYOUTS

Figure A.1 **Yearly Site Layout Plan (Year -1: 2018)**

Figure A.2 **Yearly Site Layout Plan (Year 1: 2019)**

Figure A.3 **Yearly Site Layout Plan (Year 4: 2022)**

Figure A.4 **Yearly Site Layout Plan (Year 11: 2029)**

Figure A.5 **WRSF, Starter Pit and Ore Stockpile Plan View, Roads and Pads Construction Drawing 6108-687-210-001**

NO. DESSIN
DRAWING NO.

FORMAT ANSI C

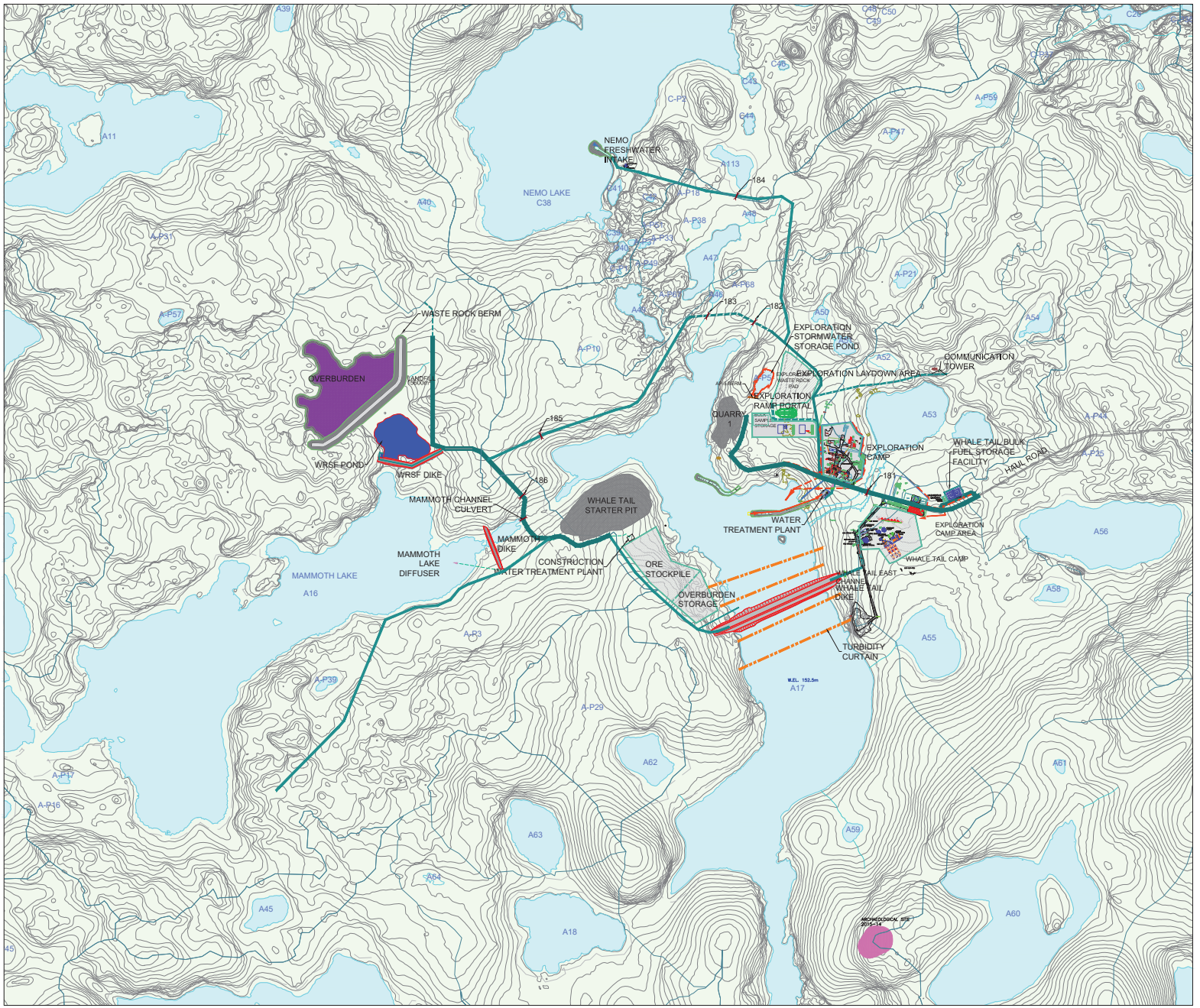

PLAN CLÉ
KEY PLAN

NOTES GÉNÉRALES / GENERAL NOTES

LEGEND

- ROAD
- TEMPORARY ROAD
- NATURAL WATERSHED
- COLLECTION CHANNEL
- CULVERT
- INTAKE WATER PIPE
- CONTACT WATER PIPE
- FRESHWATER PIPE
- TURBIDITY BARRIER
- DIKE
- ARCHAEOLOGICAL SITE
- POND / SUMP

L'INFORMATION CI-CONTENUE EST LA PROPRIÉTÉ DE AGNICO-EAGLE LTÉE ET DOIT ÊTRE RETOURNÉE SUR DEMANDE, SANS AUTORISATION ÉCRITE PRÉALABLE, TOUTE TRANSMISSION DE COPIE(S) À AUTRUI ET TOUTE UTILISATION AUTRE QUE CELLE POUR LAQUELLE L'INFORMATION EST PRÊTE SONT INTERDITES. © AGNICO-EAGLE LTÉE

THE INFORMATION HERE ON IS THE PROPERTY OF AGNICO-EAGLE LTD. AND MUST BE RETURNED UPON REQUEST. WITHOUT WRITTEN PERMISSION, ANY COPYING TRANSMITTAL TO OTHERS AND ANY USE EXCEPT THAT FOR WHICH IT IS LOANED ARE PROHIBITED. © AGNICO-EAGLE LTD.

DESSINS EN RÉFÉRENCE / REFERENCE DRAWINGS

TITRE / TITLE	# DWG
–	–
–	–
–	–
–	–

AGNICO EAGLE

REV.	DATE	DESCRIPTION	PAR/BY	APP.	CLIENT

REVISIONS

TITRE / TITLE

AGNICO–EAGLE – MEADOWBANK DIVISION
WHALE TAIL PROJET
WM

YEARLY SITE LAYOUT PLAN
(YEAR –1:2018)

DESSINÉ PAR / DRAWN BY: J.CRETE	DATE: 2018–05–04
VÉRIFIÉ PAR / CHECKED BY:	
APPROUVÉ PAR / APPROVED BY:	
ÉCHELLE / SCALE:	DATE:
NO. DESSIN / DRAWING NO.: 2018	
NO. PROJET / PROJECT NO.:	REVISION: / FEUILLE / SHT: 1 / 1

AE–CART–ANSI C

FILE NO. .DWG

N:\Projet\Vmonroy\050 Studies\6108 Permitting Concepts\010 Info by area\600 General\00 Drawings\6108-II WHL_001_00R\6108-600-210-001_R3(2018) - Standard\6108-600-210-001_R3(2018).dwg, 04 Mai 2018

NO. DESSIN
DRAWING NO.

FORMAT ANSI C

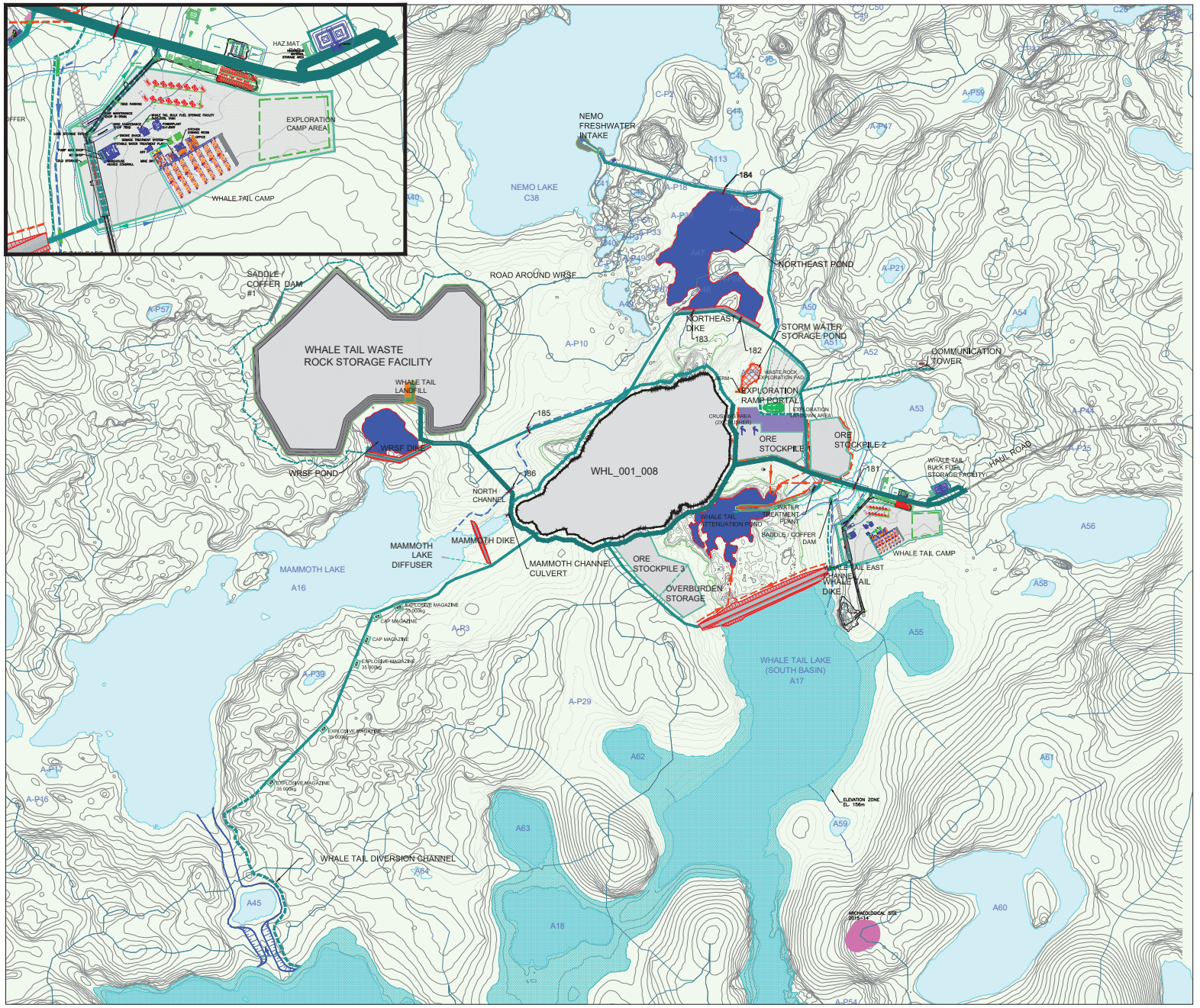

PLAN CLÉ
KEY PLAN

NOTES GÉNÉRALES / GENERAL NOTES

LEGEND

- WHALE TAIL LAKE(SOUTH BASIN) FLOODED LIMIT (WATER LEVEL 156.0m)
- ROAD
- TEMPORARY ROAD
- NATURAL WATERSHED
- DIVERSION CHANNEL
- COLLECTION CHANNEL
- CULVERT
- INTAKE WATER PIPE
- CONTACT WATER PIPE
- FRESHWATER PIPE
- DIKE
- POND / SUMP
- ARCHAEOLOGICAL SITE

L'INFORMATION CI-CONTENUE EST LA PROPRIÉTÉ DE AGNICO-EAGLE LTÉE ET DOIT ÊTRE RETOURNÉE SUR DEMANDE. SANS AUTORISATION ÉCRITE PRÉALABLE, TOUTE TRANSMISSION DE COPIE(S) À AUTRUI ET TOUTE UTILISATION AUTRE QUE CELLE POUR LAQUELLE L'INFORMATION EST PRÊTE SONT INTERDITES. © AGNICO-EAGLE LTÉE

THE INFORMATION HERE ON IS THE PROPERTY OF AGNICO-EAGLE LTD. AND MUST BE RETURNED UPON REQUEST. WITHOUT WRITTEN PERMISSION, ANY COPYING TRANSMITTAL TO OTHERS AND ANY USE EXCEPT THAT FOR WHICH IT IS LOANED ARE PROHIBITED.
© AGNICO-EAGLE LTD.

DESSINS EN RÉFÉRENCE / REFERENCE DRAWINGS

TITRE / TITLE	# DWG
_	_
_	_
_	_
_	_

AGNICO EAGLE

REV.	DATE	DESCRIPTION	PAR/BY	APP.	CLIENT

REVISIONS

TITRE / TITLE

AGNICO–EAGLE – MEADOWBANK DIVISION
WHALE TAIL PROJET
WM

YEARLY SITE LAYOUT PLAN
(YEAR 1:2019)

DESSINÉ PAR DRAWN BY: J.CRETE	DATE 2018–05–04
VÉRIFIÉ PAR CHECKED BY	
APPROUVÉ PAR APPROVED BY	
ÉCHELLE SCALE	DATE
NO. DESSIN DRAWING NO.	2019
NO. PROJET PROJECT NO.	REVISION / FEUILLE / SHT 1 / 1

AE–CART–ANSI C

FILE NO. .DWG

N:\Projet\Vmonroy\050 Studies\0108 Permitting Concepts\010 Info by area\600 General\00 Drawings\0108-II WHL_001_008\0108-600-210-002_R3(2019) - Standard\0108-600-210-002_R3(2019).dwg, 04 Mai 2018

NO. DESSIN
DRAWING NO.

FORMAT ANSI C

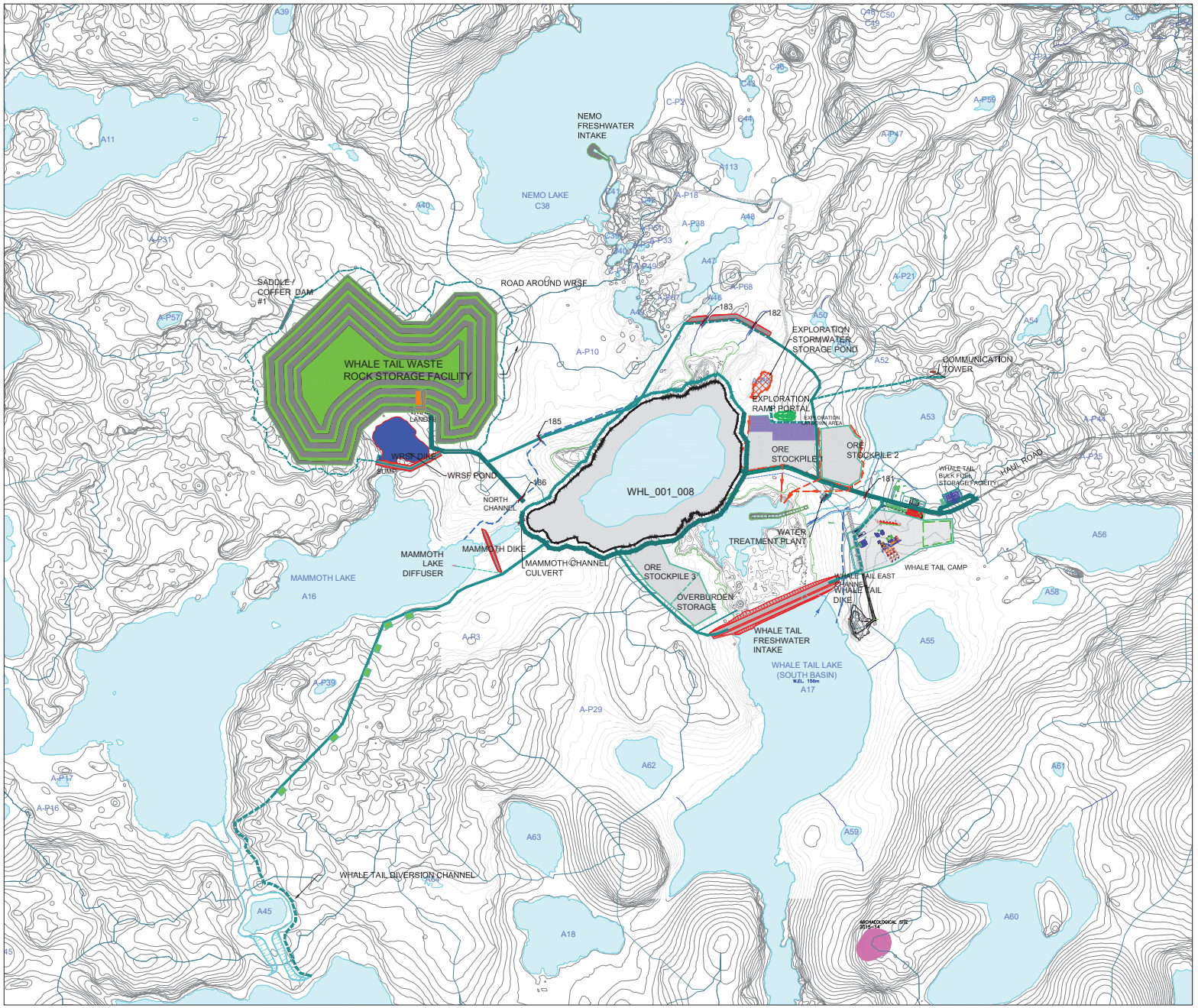

PLAN CLÉ
KEY PLAN

NOTES GÉNÉRALES / GENERAL NOTES

LEGEND

- CLOSED FACILITY
- ROAD
- TEMPORARY ROAD
- SCARIFIED ROAD & ACCESS
- NATURAL WATERSHED
- DIVERSION CHANNEL
- COLLECTION CHANNEL
- CULVERT
- INTAKE WATER PIPE
- CONTACT WATER PIPE
- FRESHWATER PIPE
- DIKE
- POND / SUMP
- ARCHAEOLOGICAL SITE

L'INFORMATION CI-CONTENUE EST LA PROPRIÉTÉ DE AGNICO-EAGLE LTÉE ET DOIT ÊTRE RETOURNÉE SUR DEMANDE. SANS AUTORISATION ÉCRITE PRÉALABLE, TOUTE TRANSMISSION DE COPIE(S) À AUTRUI ET TOUTE UTILISATION AUTRE QUE CELLE POUR LAQUELLE L'INFORMATION EST PRÊTÉE SONT INTERDITES. © AGNICO-EAGLE LTÉE

THE INFORMATION HERE ON IS THE PROPERTY OF AGNICO-EAGLE LTD. AND MUST BE RETURNED UPON REQUEST. WITHOUT WRITTEN PERMISSION, ANY COPYING TRANSMITTAL TO OTHERS AND ANY USE EXCEPT THAT FOR WHICH IT IS LOANED ARE PROHIBITED. © AGNICO-EAGLE LTD.

DESSINS EN RÉFÉRENCE / REFERENCE DRAWINGS

TITRE / TITLE	# DWG
–	–
–	–
–	–
–	–

AGNICO EAGLE

REV.	DATE	DESCRIPTION	PAR/BY	APP.	CLIENT

REVISIONS

TITRE / TITLE
AGNICO–EAGLE – MEADOWBANK DIVISION
WHALE TAIL PROJET
WM

YEARLY SITE LAYOUT PLAN
(YEAR 4:2022)

DESSINÉ PAR / DRAWN BY	J.CRETE	DATE 2018–05–04
VERIFIÉ PAR / CHECKED BY		
APPROUVÉ PAR / APPROVED BY		
ÉCHELLE / SCALE	DATE	
NO. DESSIN / DRAWING NO.	2022	
NO. PROJET / PROJECT NO.	REVISION	FEUILLE / SHT 1 / 1

AE–CART–ANSI C

FILE NO. .DWG

N:\Projet\Amaruq\050 Studies\6108 Permitting Concepts\010 Info by area\600 General\00 Drawings\6108-II WHL_001_008\6108-600-210-003_R3(2022) – Standard\6108-600-210-003_R3(2022).dwg, 04 Mai 2018

NO. DESSIN
DRAWING NO.

FORMAT ANSI C

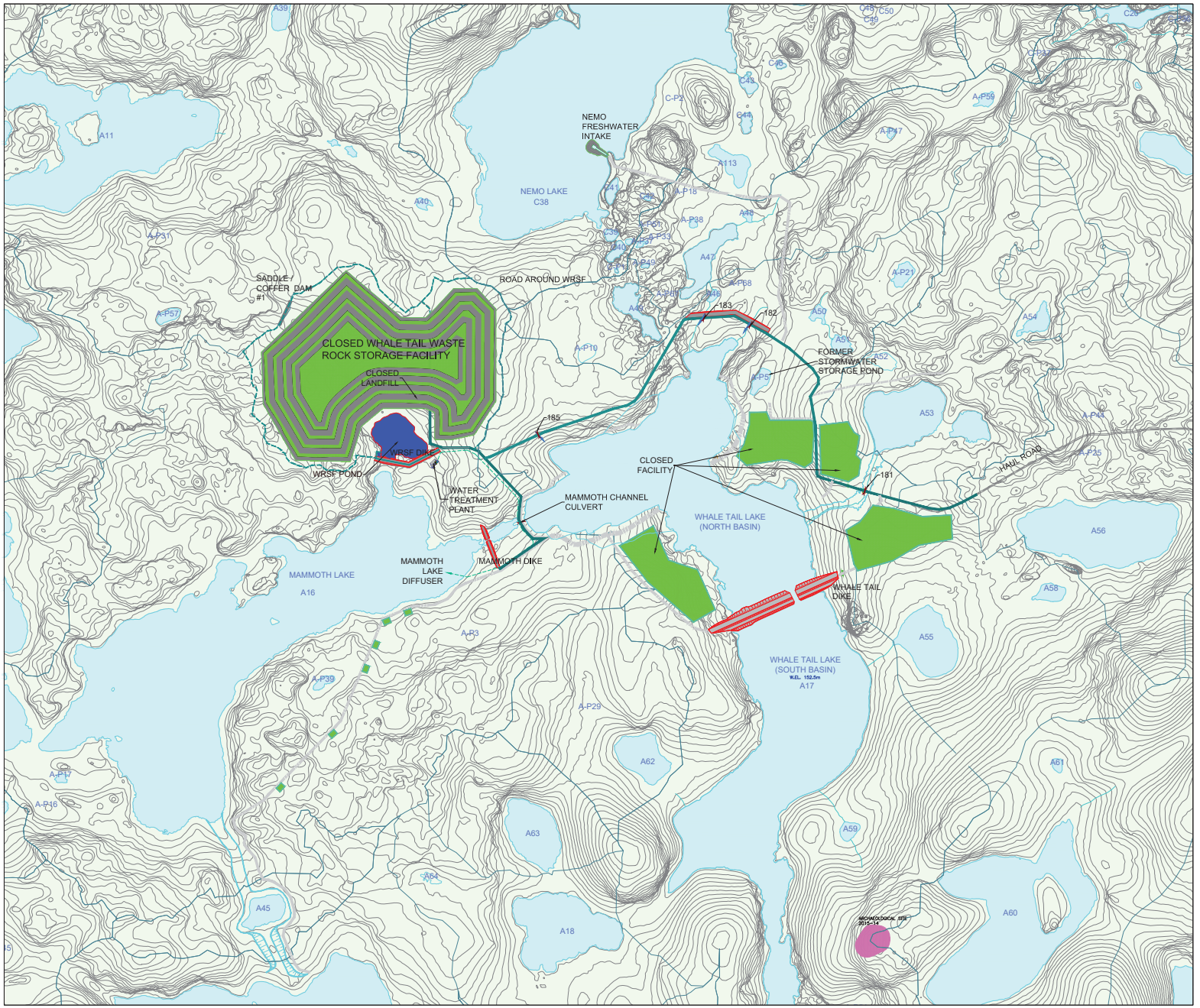

PLAN CLÉ
KEY PLAN

NOTES GÉNÉRALES / GENERAL NOTES

LEGEND

- CLOSED FACILITY
- ROAD
- TEMPORARY ROAD
- SCARIFIED ROAD & ACCESS
- NATURAL WATERSHED
- CULVERT
- FRESHWATER PIPE
- DIKE
- POND / SUMP
- ARCHAEOLOGICAL SITE

L'INFORMATION CI-CONTENUE EST LA PROPRIÉTÉ DE AGNICO-EAGLE LTÉE ET DOIT ÊTRE RETOURNÉE SUR DEMANDE. SANS AUTORISATION ÉCRITE PRÉALABLE, TOUTE TRANSMISSION DE COPIE(S) À AUTRUI ET TOUTE UTILISATION AUTRE QUE CELLE POUR LAQUELLE L'INFORMATION EST PRÊTE SONT INTERDITES. © AGNICO-EAGLE LTÉE

THE INFORMATION HERE ON IS THE PROPERTY OF AGNICO-EAGLE LTD. AND MUST BE RETURNED UPON REQUEST. WITHOUT WRITTEN PERMISSION, ANY COPYING THEREOF TO OTHERS AND ANY USE EXCEPT THAT FOR WHICH IT IS LOANED ARE PROHIBITED. © AGNICO-EAGLE LTD.

DESSINS EN RÉFÉRENCE / REFERENCE DRAWINGS

TITRE / TITLE	# DWG

AGNICO EAGLE

REV.	DATE	DESCRIPTION	PAR/BY	APP.	CLIENT

REVISIONS

TITRE / TITLE

AGNICO–EAGLE – MEADOWBANK DIVISION
WHALE TAIL PROJET
WM

YEARLY SITE LAYOUT PLAN
(YEAR 11:2029)

DESSINÉ PAR / DRAWN BY: J.CRETE	DATE: 2018–05–04
VERIFIÉ PAR / CHECKED BY	
APPROUVÉ PAR / APPROVED BY	
ÉCHELLE / SCALE	DATE
NO. DESSIN / DRAWING NO.	2029
NO. PROJET / PROJECT NO.	REVISION / FEUILLE / SHT: 1 / 1

AE–CART–ANSI C

FILE NO. .DWG

N:\Projet\Vmorva\050 Studies\0108 Permitting Concepts\010 Info by area\000 General\00 Drawings\0108-II WHL_001_OGR\0108-600-210-004_R3(2029) - Standard\0108-600-210-004_R3(2029).dwg, 04 Mai 2018

NO. DESSIN
DRAWING NO.

FORMAT ANSI B–11x17

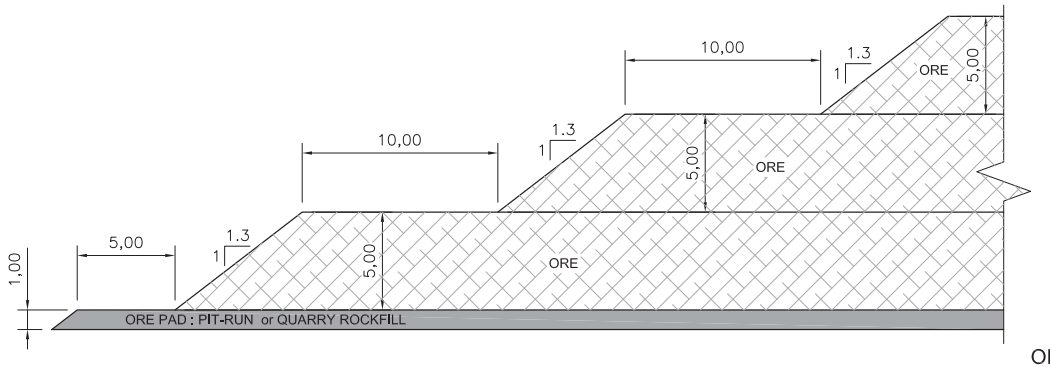

TYPICAL SECTION
SCL 1:250 (1H:1V)

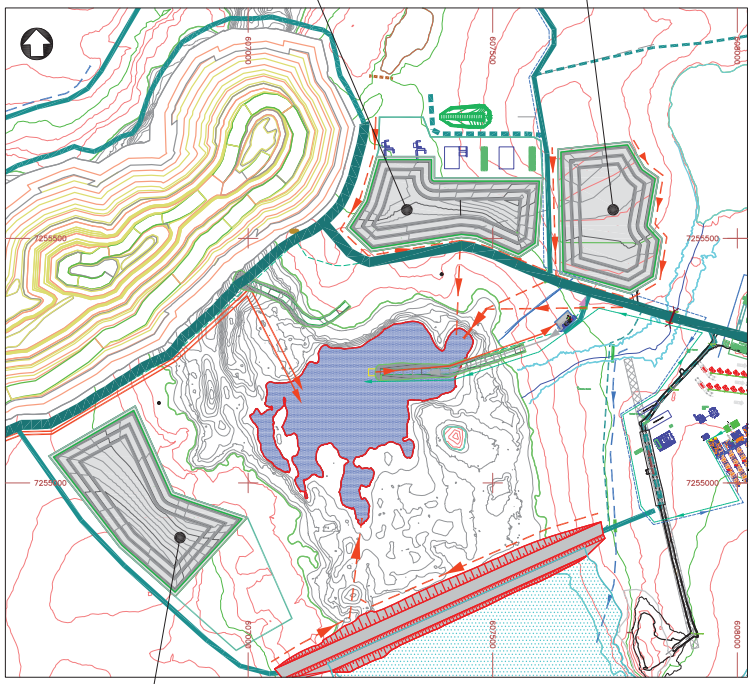

PLAN VIEW
SCL 1:10000

ISSUED FOR PERMITTING
DATE : 2016-05-03

_	_				
_	_				
_	_				
_	_				
_	_	0	ISSUED FOR PERMITTING	2016-05-03	J.C.
TITRE / TITLE	# DWG	REV	DESCRIPTION	DATE	PAR BY
DESSINS EN RÉFÉRENCE / REFERENCE DRAWINGS		REVISIONS			

AGNICO EAGLE

Golder Associates

DESSINÉ PAR DRAWN BY	J.CRETE	DATE 2016-05-02
VÉRIFIÉ PAR CHECKED BY	F.PETRUCCI	2016-05-03
APPROUVÉ PAR APPROVED BY	S. OUELLET	2016-05-03
No. PROJET PROJECT NO.	6108	
DATE	2016-05-02	

L'INFORMATION CI-CONTENUE EST LA PROPRIÉTÉ DE AGNICO-EAGLE LTÉE ET NE DOIT ÊTRE REPRODUITE SOUS QUELQUE FORME QUE CE SOIT, SANS AUTORISATION ÉCRITE PRÉALABLE. TOUTE REPRODUCTION DE COPIE(S) À AUTRUI ET TOUTE UTILISATION AUTRE QUE CELLE POUR LAQUELLE L'INFORMATION EST MISE SONT INTERDITES.
© AGNICO-EAGLE LTÉE
THE INFORMATION HERE ON IS THE PROPERTY OF AGNICO-EAGLE LTD. AND MUST BE RETURNED UPON REQUEST. WITHOUT WRITTEN PERMISSION, ANY COPYING, TRANSMITTAL TO OTHERS AND ANY USE EXCEPT THAT FOR WHICH IT IS LOANED ARE PROHIBITED.
© AGNICO-EAGLE LTD.

TITRE / TITLE
AGNICO–EAGLE – MEADOWBANK DIVISION
WHALE TAIL PIT PROJECT
ORE STOCK PILE #1, #2, #3
ORE PAD MAXIMUM CAPACITY
PLAN VIEW & TYPICAL SECTION

ÉCHELLE/ SCALE	A/S	FICHIER FILE	.DWG	
No. DESSIN/ DRAWING NO.	6108–687–210–001	REVISION	0	FEUILLE/SHT 1 / 1

AE–CART–ANSI B

N:\Projet\Amaruq\050 Studies\6108 Permitting Concepts\010 Info by area\687 Ore Stockpile\00 Drawings\6108–687–210–001_R0(OreStockPiles).dwg, 03 Mai 2016

Water Management Plan, Version 3

AGNICO EAGLE

Meadowbank Division

WHALE TAIL PIT

Water Management Plan

OCTOBER 2018
VERSION 3

EXECUTIVE SUMMARY

Agnico Eagle Mines Limited – Meadowbank Division (Agnico Eagle) is proposing to develop Whale Tail Pit and Haul Road Project (Project), a satellite deposit located on the Amaruq property, to extend mine operations and milling at Meadowbank Mine.

The open pit mine, mined by truck-and-shovel operation, will produce 8.3 million tonnes (Mt) of ore, 61.3 Mt of waste rock, and 6.0 Mt of overburden waste. There are four phases to the development: 1 year of construction, 3 years of mine operations, 8 years of closure, and the postclosure period. According to the Whale Tail Pit Life of Mine (LOM) calculation, the addition of the Whale Tail Pit to the actual Meadowbank LOM (LOM 2015) will generate an addition of approximately 8.3 Mt (dry) of tailings to the Meadowbank Tailings Storage Facility (TSF) for a total of 35.4 Mt.

The water management objectives are to minimize potential impacts to the quantity and quality of surface water at the mine site. Water management structures (water retention dikes/berms and diversion channels) will be constructed, dependent on the potential presence and volume of water, to contain and manage the contact water from the areas affected by the mine or mining activities. The major water management infrastructure includes: two contact water ponds, three water diversion channels, four water retention dikes, and two Water Treatment Plants (WTP).

This Water Management Plan for the Project describes the main objectives pertaining to water management, which are to limit and/or stop the flow of surface water runoff in the pit and to limit the impact on the local environment. In developing the water management plan, the following principles were followed:

- keep the different water types separated as much as possible;
- control and minimize contact water through diversion and containment;
- minimize freshwater consumption by recycling and reusing the contact and process water wherever feasible; and
- meet discharge criteria before any site contact water is released to the downstream environment.

During mine construction and operations, contact water originating from affected areas on surface will be intercepted, diverted and collected within the various collection ponds. The collected water on the mine site will be eventually pumped and stored in the Whale Tail Attenuation Pond, where the contact water will be treated by the WTP prior to discharge to the receiving environment or reused in the operations.

During operations, site contact water quality is predicted to exceed established effluent criteria (i.e. under the Meadowbank Water Licence for Portage Pit) for arsenic and total dissolved solids in Whale Tail Waste Rock Storage Facility (WRSF) Pond and in Whale Tail Pit sump. Therefore, this water will be

controlled by constructing the Whale Tail WRSF Dike and the Whale Tail Attenuation Pond. The Whale Tail WRSF Pond water will report with all other contact water and will be mixed in the Whale Tail Attenuation Pond and treated during operations. Through best management practices and mitigation, the predicted water quality of Whale Tail Lake (North Basin) meets aquatic life guidelines post-closure.

During operations when the mine is at its maximum footprint, the conservative predictions of future water quality indicate that most parameter concentrations in the downstream environment are below CEQG-AL except for arsenic. A site wide water balance will be updated on a regular basis and end pit water quality modelling will be conducted as needed to update predictions.

Dikes will not be breached until the water quality in the flooded area meets Canadian Council of Ministers of the Environment Water Quality Guidelines, baseline concentrations or appropriate site specific water quality objectives. During mine closure, no mine discharges will occur to the downstream receiving environment since all contact waters are diverted to the open pit and Whale Tail Lake (North Basin) for re-flooding. The water quality in open pit and Whale Tail Lake (North Basin) averaged over the closure period is predicted to be similar to that of the last year of operations, with similar maximum and average concentrations.

DOCUMENT CONTROL

Version	Date	Section	Page	Revision	Author
1	January 2017			Water Management Plan for the Whale Tail Pit	Agnico Eagle Meadowbank Division and Golder Associates Ltd.
2	September 2018	All	All	Water Management Plan for the Whale Tail Pit	Agnico Eagle Meadowbank Division and SNC-Lavalin inc.
3	October 2018	3.1.4.11 3.3.1	23 32	Updated to align with recommendations issued by CIRNAC, ECCC and KIA in October 2018	Agnico Eagle Meadowbank Division

TABLE OF CONTENT

EXECUTIVE SUMMARY ..... **i**

DOCUMENT CONTROL ..... **iii**

TABLE OF CONTENT ..... **iv**

Acronyms ..... **viii**

Units ..... **ix**

Section 1 • INTRODUCTION **1**

Section 2 • BACKGROUND INFORMATION **3**

2.1 Site Conditions 3

2.1.1 Climate 3

2.1.2 Permafrost 6

2.1.3 Hydrology 8

2.1.4 Surface Water Quality 8

2.1.5 Climate Change 9

2.1.6 Seismic Zone 9

2.2 Mine Operations Description 9

2.2.1 Mine Development Plan 9

2.2.2 Summary of Mine Waste Management 10

Section 3 • WATER MANAGEMENT PLAN AND WATER BALANCE **11**

3.1 General Water Management Strategy 11

3.1.1 Water Management Objectives and Strategies 11

3.1.2 Water Management System 12

3.1.3 Waterbody Inventory 12

3.1.4 Water Management Plan during Construction and Operations 13

3.1.5 Freshwater and Sewage Water Management 24

3.2 Operation, Maintenance, and Surveillance of Project Dikes 26

3.2.1 Consequence of Failure 26

3.2.2 Operation, Maintenance, and Surveillance Manual 27

3.2.3 Role and Manual Holders 27
3.2.4 Dewatering 27
3.2.5 Operations 28
3.2.6 Surveillance 29
3.2.7 Monitoring and Instrumentation 29
3.2.8 Reporting Procedures and Data Management 29
3.2.9 Decommissioning 29
3.2.10 Emergency Preparedness Plan 30
3.3 Water Management during Closure 30
3.3.1 Open Pit and Refilling of Whale Tail Lake (North Basin) 31
3.3.2 Contact Water Collection System 32
3.4 Water Balance 33
Section 4 • REFERENCES 36
Appendix A • YEARLY SITE LAYOUT PLANS 38
Appendix B • WATER MANAGEMENT SCHEMATIC FLOW SHEETS 39
Appendix C • SELECTED YEARLY WATER BALANCE DATA 44

List of Tables

Table 1.1 Overview of Timeline and General Activities 2
Table 2.1 Estimated Mine Site Monthly Mean Climate Characteristics 5
Table 2.2 Estimated Mine Site Extreme 24-Hour Rainfall Events 5
Table 2.3 Summary of Mine Waste Tonnage and Destination 10
Table 3.1 Inventory of Waterbodies Directly Impacted by Mining Activities 13
Table 3.2 Water Management Facilities and Construction Schedule 14
Table 3.3 Water Management Activities during Construction and Operations 19
Table 3.6 Design Minimum Freeboard 28
Table 3.7 Key Water Management Activities during Mine Closure 31

Table 3.8 Estimated Mean Annual Volumes from Mine Site Water Balance 35

Table C.1 Whale Tail Waste Rock Storage Facility Pond Water Balance 45

Table C.2 Whale Tail Camp Pond Water Balance 46

Table C.3 Whale Tail Pit Water Balance (Groundwater not considered) 47

Table C.4 Whale Tail Attenuation Pond Water Balance 48

Table C.5 Northeast Pond Water Balance 49

Table C.6 Whale Tail Lake (South Basin) Water Balance 50

Table C.7 Lake A16 (Mammoth Lake) Water Balance 51

LIST OF FIGURES

Figure 2.1 Location of the Project 4

Figure 2.2 Permafrost Map of Canada 7

Figure 3.1 Typical Sections of Whale Tail Dike and Whale Tail Dike Abutment 16

Figure 3.2 Typical Section of Mammoth Dike 17

Figure 3.3 Typical Section of Whale Tail Waste Rock Storage Facility Dike 17

Figure 3.4 Typical Section of Northeast Dike 18

Figure A.1 Yearly Site Layout Plan (Year -1: 2018) 38

Figure A.2 Yearly Site Layout Plan (Year 1: 2019) 38

Figure A.3 Yearly Site Layout Plan (Year 4: 2022) 38

Figure A.4 Yearly Site Layout Plan (Year 11: 2029) 38

Figure A.5 WRSF, Starter Pit and Ore Stockpile Plan View, Roads and Pads Construction 38

Figure B.1 Water Management Flowsheet during Construction and Operations 40

Figure B.2 Water Management Flowsheet during Closure (Year 4 [2022] to Year 7 [2025]) 41

Figure B.3 Water Management Flowsheet during Closure (Year 8 [2026] to Year 11 [2029]) 42

Figure B.4 Water Management Flowsheet during the Post-Closure..... 43

LIST OF APPENDICES

Appendix A Yearly Site Layout Plans

Appendix B Water Management Schematic Flow Sheets

Appendix C Selected Yearly Water Balance Data

ACRONYMS

Agnico Eagle	Agnico Eagle Mines Limited – Meadowbank Division
CCME	Canadian Council of Ministers of the Environment
DFO	Department of Fisheries and Oceans Canada
FEIS	Final Environmental Impact Statement
NWB	Nunavut Water Board
OMS	Operation, Maintenance, and Surveillance
PGA	Peak Ground Acceleration
Plan	Water Management Plan
Project	Whale Tail Pit
STP	Sewage Treatment Plant
TSS	total suspended solids
WRSF	Waste Rock Storage Facility
WSER	Wastewater System Effluent Regulations
WTP	Water Treatment Plant

UNITS

±	plus or minus
<	less than
%	percent
°C	degrees Celsius
°C/m	degrees Celsius per metre
masl	metre(s) above sea level
mg/L	milligrams per litre
km	kilometre(s)
km^2	kilo square metre(s)
L/day/person	litres per person per day
m	metre
mm	millimetre
m^3	cubic metre(s)
m^3/day	cubic metres per day
m^3/hour	cubic metres per hour
m^3/year	cubic metres per year
Mm^3/year	million cubic metre(s) per year
Mm^3	million cubic metre(s)
t	tonne
Mt	million tonne(s)

SECTION 1 • INTRODUCTION

Agnico Eagle Mines Limited – Meadowbank Division (Agnico Eagle) is proposing to develop Whale Tail Pit and Haul Road Project (Project), a satellite deposit located on the Amaruq property, to continue mine operations and milling at Meadowbank Mine.

The Amaruq property is a 408 square kilometre (km^2) site located on Inuit Owned Land approximately 150 kilometres (km) north of the hamlet of Baker Lake and approximately 50 km northwest of Meadowbank Mine in the Kivalliq Region of Nunavut. The deposit will be mined as an open pit (i.e., Whale Tail Pit), and ore will be hauled to the approved infrastructure at Meadowbank Mine for milling.

The open pit mine, mined by truck-and-shovel operation, will produce 8.3 million tonnes (Mt) of ore, 61.3 Mt of waste rock, and 6.0 Mt of overburden waste. There are four phases to the development: 1 year of construction, 3 years of mine operations, 8 years of closure, and the postclosure period. According to the Whale Tail Pit Life of Mine (LOM) calculation, the addition of the Whale Tail Pit to the actual Meadowbank LOM (LOM 2015) will generate an addition of approximately 8.3 Mt (dry) of tailings to the Meadowbank Tailings Storage Facility (TSF) for a total of 35.4 Mt.

The construction and preparation of material started in summer 2018 after all permits and authorizations were received andconstruction of the dikes has started in the third quarter of Year -1 (2018). Focus on site preparation and construction of infrastructure, with the development of the open-pit to produce construction material will continue in 2018. During this first phase, waste rock and overburden will be piled in the Whale Tail Waste Rock Storage Facility (Whale Tail WRSF) and ore stockpiled on the ore pads. The operational phase will span approximately 3 years, from Year 1 (2019) to Year 4 (2022). Mining activities are expected to end in Year 3 (2021) and ore processing is expected to end during the first quarter of Year 4 (2022). Closure will occur from Year 4 (2022) to Year 11 (2029) after the completion of mining and will include removal of the non-essential site infrastructure and flooding of the mined-out open pit as well as reestablishment of the natural Lake A17 (Whale Tail Lake) level. Only essential infrastructure related to water treatment will remain on site during the closure and post-closure phases. Accordingly, in addition to the Water Treatment Plant (WTP), a part of the camp, including all infrastructure allowing camp autonomy and security, as well as site roads, will be maintained following the operational phase (see more information in Whale Tail Pit Interim Closure and Reclamation Plan). Post-closure is expected from Year 11 (2029) forwards. Site and surrounding environment monitoring will start from the beginning of the construction and be completed during the post-closure phase when it is shown that the site and water quality meets the regulatory closure objectives. Table 1.1 summarizes the overview of the timeline and general activities.

Table 1.1 Overview of Timeline and General Activities

Phase	Year	General Activities
Construction	Year -1	• Construct site infrastructure • Develop open pit mine • Stockpile ore
Operations	Year 1 to 3	• Open pit operations • Transport ore to Meadowbank Mine • Stockpile ore • Discharge Tailings in Meadowbank TSF
	Year 4	• Complete transportation of ore to Meadowbank Mine • Complete discharge tailings in Meadowbank TSF
Closure	Year 4 to 11	• Remove non-essential site infrastructure • Flood mined-out open pit • Re-establish natural Whale Tail Lake level
Post-Closure	Year 11 forwards	• Site and surrounding environment monitoring

TSF = Tailings Storage Facility

This document presents the Water Management Plan (Plan) for the Project in accordance with Part B, conditions 14 and 15, and Part E, condition 7, of the Nunavut Water Board (NWB) Water License 2AM – WTP1826. It is also addressing Term and Condition n. 6 of the Nunavut Impact Review Board (NIRB) project certificate. Agnico Eagle has applied the same water management and water balance approach in this document as used for the annual Meadowbank Mine Water management report (Agnico Eagle, 2015a and 2018). The purpose of this Plan is to provide consolidated information on water management, required water management infrastructure and water balance for the operations of Whale Tail Pit as a satellite pit for the Meadowbank Mine.

This Plan will be updated as required to reflect any changes in operations or economic feasibility occurs, and to incorporate new information and the latest technology, where appropriate.

SECTION 2 • BACKGROUND INFORMATION

2.1 Site Conditions

The general mine site location for the Project is presented in Figure 2-1.

2.1.1 Climate

Climate characteristics presented herein were extracted from the permitting level engineering report (SNC 2015).

The Project is located in an arid arctic environment that experiences extreme winter conditions, with an annual mean temperature of -11.3 degrees Celsius (°C). The monthly mean temperature ranges from -31.3°C in January to 11.6°C in June, with above-freezing mean temperatures from June to September. The annual mean total precipitation at the Project is 249 millimetres (mm), with 59 percent (%) of precipitation falling as rain, and 41% falling as snow. Mean annual losses were estimated to be 248 mm for lake evaporation, 80 mm for evapotranspiration, and 72 mm for sublimation. Mean annual temperature, precipitation, and losses characteristics are presented in Table 2.1.

Short-duration rainfall, representative of the Project are presented in

Table 2.2, based on intensity-duration-frequency curves available from the Baker Lake A meteorological station (Station ID 2300500) operated by the Government of Canada (2015).

Figure 2.1 Location of the Project

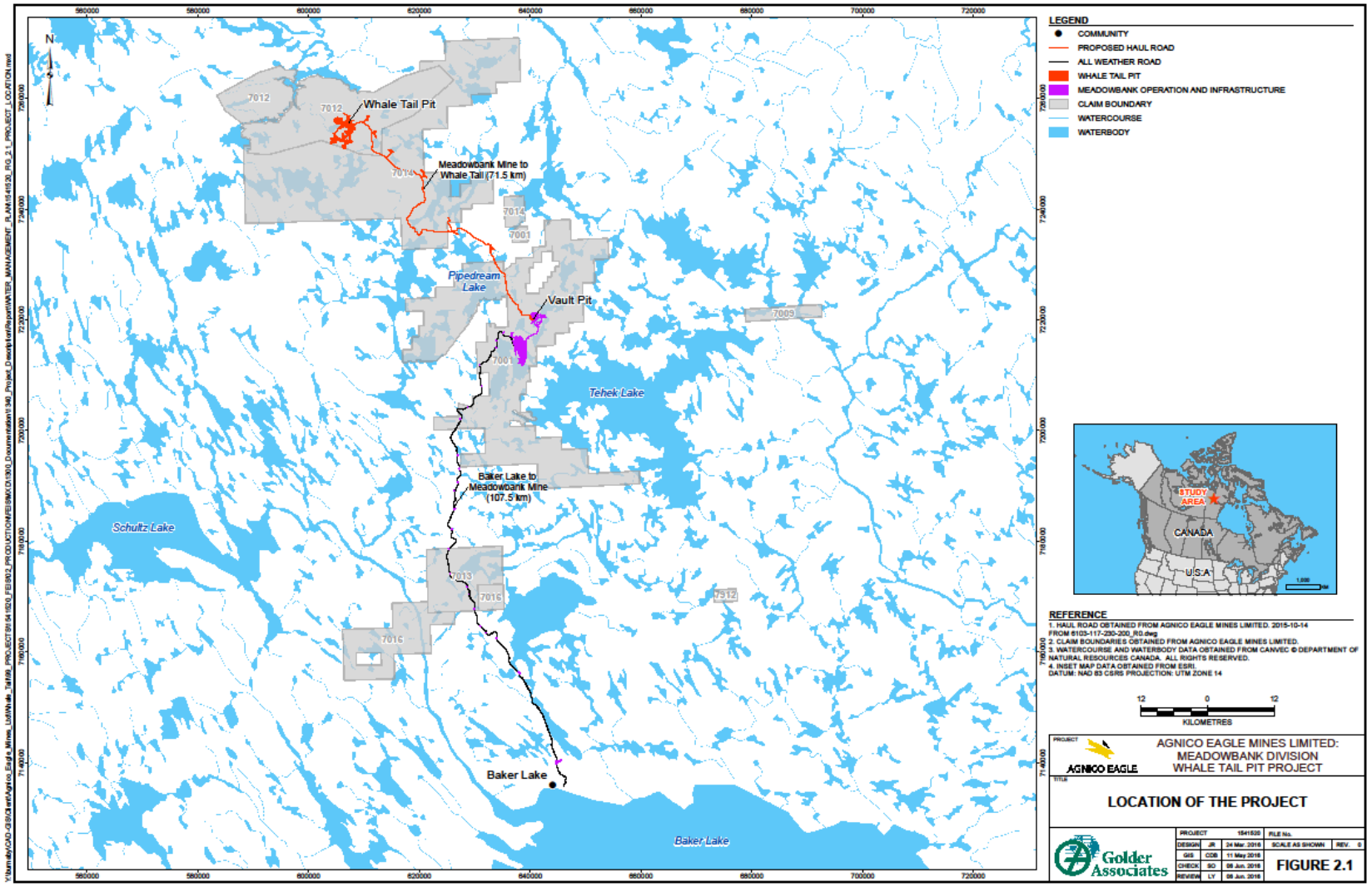

Table 2.1 Estimated Mine Site Monthly Mean Climate Characteristics

Month[a]	Mean Air Temp. (°C) [a]	Monthly Precipitation (mm) [a]			Losses [a]		
		Rainfall (mm)	Snowfall Water Equivalent (mm)	Total Precip. (mm)	Lake Evap. (mm)	Evapo-transpiration (mm)	Snow Sublimation (mm)
January	-31.3	0	7	7	0	0	9
February	-31.1	0	6	6	0	0	9
March	-26.3	0	9	9	0	0	9
April	-17.0	0	13	13	0	0	9
May	-6.4	5	8	13	0	0	9
June	4.9	18	3	21	9	3	0
July	11.6	39	0	39	99	32	0
August	9.8	42	1	43	100	32	0
September	3.1	35	7	42	40	13	0
October	-6.5	6	22	28	0	0	9
November	-19.3	0	17	17	0	0	9
December	-26.8	0	10	10	0	0	9
Annual	-11.3	146	103	249	248	80	72

[a] SNC (2015).

°C = degrees Celsius; mm = millimetre.

Table 2.2 Estimated Mine Site Extreme 24-Hour Rainfall Events

Return Period (Years) [a]	24-hour Precipitation (mm) [a]
2	27
5	40
10	48
25	57
50	67
100	75
1000	101

[a] SNC (2015).

mm = millimetre.

2.1.2 Permafrost

The mine site is located in an area of continuous permafrost, as shown on Figure 2.2. Based on measurements of ground temperatures (Knight Piésold 2015), the depth of permafrost at the mine site is estimated to be in the order of 425 metres (m) outside of the influence of waterbodies. The depth of the permafrost and active layer will vary based on proximity to the lakes, overburden thickness, vegetation, climate conditions, and slope direction. The typical depth of the active layer is 2 m in this region of Canada.The typical permafrost ground temperatures at the depths of zero annual amplitude (typically at the depth of below 15 m) is approximately -8.0 °C in the areas away from lakes and streams. The geothermal gradient measured is 0.02 degrees Celsius per meter (°C/m) (Knight Piésold 2015). Late-winter ice thickness on freshwater lakes is approximately 2.0 m. Ice covers usually appear by the end of October and are completely formed in early November. The spring ice melt typically begins in mid-June and is complete by early July.

Groundwater characteristics at the mine site are detailed in the Final Environmental Impact Statement (FEIS), Volume 6, Section 6.2 (Agnico Eagle, 2016) and are briefly summarized herein.

Two groundwater flow regimes in areas of continuous permafrost are generally present:

- a deep groundwater flow regime beneath the base of the permafrost; and
- a shallow flow regime located in an active (seasonally thawed) layer near the ground surface.

From late spring to early autumn, when temperatures are above 0˚C, the active layer thaws out. Within the active layer, the water table is expected to be a subdued replica of topography, and is expected to parallel the topographic surface. Project area groundwater in the active layer flows to local depressions and ponds that drain to larger lakes at velocities estimated to range from about 0.004 m/day to 0.08 m/day.

Figure 2.2 Permafrost Map of Canada

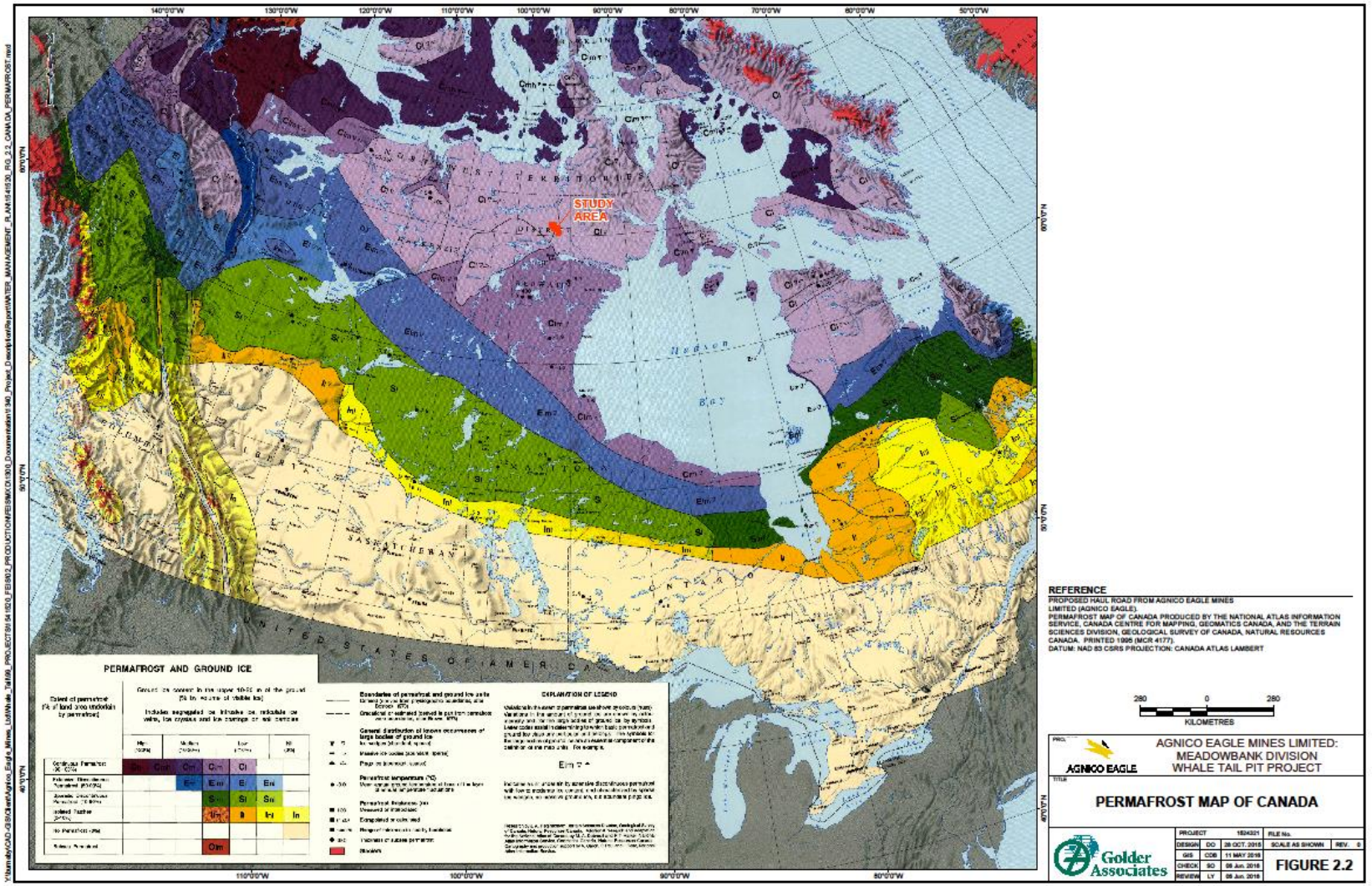

2.1.3 Hydrology

Hydrology characteristics were extracted from surface water quantity impact assessment section (FEIS, Volume 6, Section 6.3; Volume 6, Appendix 6-C, Agnico Eagle, 2016).

The proposed mine site is located in the A watershed (i.e., where Lake A17 [Whale Tail Lake] and Lake A16 [Mammoth Lake] are located), and water management activities are planned in the A watershed, and the C watershed (i.e., where Lake C38 [Nemo Lake] is located); these two watersheds drain into Lake DS1, which drains north to the Meadowbank River. These watersheds comprise an extensive network of lakes, ponds, and interconnecting streams, and have lake water surface fractions (i.e., the ratio of lake area to watershed area) of 16% (A watershed) and 23% (C watershed).

Shorelines in the mine site area exhibit a consistent terrain type related to shorelines that have developed in morainal material. These morainal shorelines were observed at all lakes visited during the 2015 field survey. Limited areas of bedrock and shallowly sloped sandy shorelines were also observed. As a general characteristic for the surveyed shorelines, the predominant materials are boulder gardens mixed with cobble with very limited soils or organic materials on top. The outlet channels are relatively short with a low sinuosity (i.e., close to 1.0) and exhibit the same characteristics for streambed materials, which results in interstitial flow through large boulders or below the surface likely close to the bedrock, making flow difficult to observe and measure.

Discharges of watercourses in the mine site area typically peak in late-May to mid-June from snowmelt, rapidly decline in July, and low discharges prevail until frozen conditions in October to November, with a secondary peak in September from rainfall events. Watercourses in the Project area are frozen over the winter.

Derived long-term mean annual water yield for selected lakes in the mine site area vary between 86 mm at Lake C38 (Nemo Lake) to 230 mm at Lake A69. These water yields are similar to regional water yields reported at the Meadowbank Mine.

2.1.4 Surface Water Quality

Water quality characteristics were extracted from the water quality baseline report (FEIS, Volume 6, Appendix 6-G, Agnico Eagle, 2016) and the water quality impact assessment section (FEIS, Volume 6, Section 6.4, Agnico Eagle, 2016). Baseline water quality sampling was conducted at lakes and tributaries in various watersheds in the study area during open-water conditions in 2014 and 2015.

Surface water collected from lakes during the open water season was characteristic of low productivity headwater lakes in the Arctic; soft water, with low alkalinity, low turbidity (and corresponding high Secchi depth) and low total suspended solids (TSS). There was minor thermal stratification evident at some deeper lake stations. The water columns of lakes are well oxygenated and pH was neutral to slightly acidic. The majority of water chemistry parameter concentrations were below the analytical detection limit and below the Canadian Council of Ministers of the Environment

water quality guidelines for the protection of aquatic life (CCME, 1999) and the Canadian drinking water guidelines (Health Canada, 2014).

Samples collected from the tributaries showed them to be well oxygenated, with low conductivity, and neutral to slightly alkaline pH. As with the lakes, the majority of the water chemistry parameter concentrations were below the aquatic life and drinking water quality guidelines.

2.1.5 Climate Change

Climate change information presented herein was extracted from the air quality impact assessment section (FEIS, Volume 4, Section 4.2, Agnico Eagle, 2016).

The climate in the Arctic is changing faster than at mid-latitudes (IPCC, 2014). The most recent set of climate model projections (CMIP5) predict an Arctic-wide year 2100 multi-model mean temperature increase of +13°C in late fall and +5°C in late spring under the IPCC's "business as usual scenario" (RCP8.5). IPCC climate change mitigation scenario RCP4.5 results in a year 2100 multi-model Arctic wide prediction of +7°C in late fall and +3°C in late spring (Overland et al., 2013). The effects of changes of this magnitude to terrestrial, aquatic and marine ecosystems, social and economic systems of the Arctic are an active area of research. However, the short duration of the proposed Project means that climate change related effects to the Project are likely negligible.

2.1.6 Seismic Zone

The mine site is located in an area of relatively low seismic risk. The peak ground acceleration (PGA) for the area was estimated using seismic hazard calculator from the 2010 National Building Code of Canada website (http://www.earthquakescanada.nrcan.gc.ca/hazard-alea/interpolat/index_2010-eng.php). The estimated PGA is 0.019 g for a 5% in 50-year probability of exceedance (0.001 per annum or 1 in 1,000 year return) and 0.036 g for a 2% in 50-year probability of exceedance (0.000404 per annum or 1 in 2,475 year return) for the area.

2.2 Mine Operations Description

2.2.1 Mine Development Plan

Whale Tail Pit will be mined using traditional open pit method, and the mining is planned from Q2 of Year -1 (2018) to the end of Year 3 (2021).

Two mine waste streams will be produced at Whale Tail Pit, waste rock and overburden. Approximately 61.3 Mt of waste rock and 6.0 Mt of overburden will be generated by the Project. As ore is transported to the Meadowbank Mine for processing, a third mine waste stream, tailings, will be produced at Meadowbank Mine (Refer to the Meadowbank Mine Waste Rock and Tailings Management Plan). The operation management and monitoring of the TSF is regulated under Agnico Eagle Type A water Licence 2AM-MEA1526.

The mine development will include the following major infrastructure:

- industrial area (camp and garage);
- crusher;
- ore stockpiles;
- rock and Overburden Storage facilities;
- landfill;
- haul and access roads; and
- open pit mine.

In addition, the mine development will include construction of water management facilities, listed in Section 3.1.2.

2.2.2 Summary of Mine Waste Management

This section describes a summary of the mine waste management plan. More detailed information on mine waste management is presented in the Whale Tail Pit Waste Rock Management Plan. Water management associated with mine waste management is described in Section 3.1.4 of this document. One area was identified as the Whale Tail WRSF to store waste rock and overburden material, as shown in Figure A.1 to Figure A.4 in Appendix A. Table 2.3 presents a summary of the total tonnage of mine waste materials and their proposed usage or destination.

Table 2.3 Summary of Mine Waste Tonnage and Destination

Mine Waste Stream	Estimated Quantities	Waste Destination
Overburden	6.0Mt	• Temporary storage West of Whale Tail Lake (~ 0.1 Mt for operations) • Co-disposed with waste rock in Whale Tail WRSF
Waste Rock	61.3Mt	• Construction material • Whale Tail WRSF • Closure and site reclamation
Tailings	8.3 Mt	• As slurry tailings placed in the approved Meadowbank Mine tailings storage facility

WRSF = Waste Rock Storage Facility; Mt = million tonne

SECTION 3 • WATER MANAGEMENT PLAN AND WATER BALANCE

3.1 General Water Management Strategy

3.1.1 Water Management Objectives and Strategies

The goal of water management is to minimize the impact of the mine activities on the aquatic ecosystem surrounding the mining area. The key objectives for water management are:

- keep the different water types (i.e., contact, non-contact, and freshwater) separated to the extent practical;
- control and minimize contact water through diversion and containment;
- minimize freshwater usage by recycling and reusing the contact water to the extent practical; and
- meet discharge criteria before any site contact water is released to the downstream environment.

To achieve the above water management objectives, the following key strategies were implemented to develop the Plan:

- Two levels of catchment disturbance have been defined for the area, namely undisturbed and disturbed. Areas that have been disturbed as part of the mine development are considered disturbed catchments, while the areas left unaffected are considered undisturbed catchments.
- For the purpose of mine water management, runoff from undisturbed areas is considered non-contact water, while runoff from disturbed catchment areas is considered contact water. Surface water that is diverted around the mine facilities, or groundwater that does not emerge into a mine facility, is considered non-contact water. Any non-contact water that mixes with contact water becomes contact water.
- Conveyance and storage of contact water will be controlled by channels and containment structures (i.e., sumps and ponds). Sumps will be installed in the open pit and in low points surrounding the open pit. Contact water will be diverted and collected in various sumps and water collection ponds and conveyed to the Whale Tail Attenuation Pond.
- The collected water will be treated if the water quality does not meet the discharge criteria established in the Water Licence 2AM-WTP1826.
- The treated water will be reused as much as possible to minimize the freshwater requirements. The excess treated water will be discharged into Lake A16 (Mammoth Lake) through a submerged diffuser.
- Non-contact water will be intercepted and directed away from disturbed areas by means of natural catchment boundaries and/or man-made diversion structures and will be allowed to flow to the neighbouring waterbodies.

3.1.2 Water Management System

The water management system includes the following components (identified on Figure A.1 to Figure A.5 in Appendix A):

- Turbidity Curtains;
- low-permeability access road to reach the Stage 1 WRSF and a collection sump;
- two contact water collection ponds (Whale Tail Attenuation and Whale Tail WRSF);
- two freshwater collection ponds (Whale Tail Lake (South Basin) and Northeast Sector);
- three proposed water diversion channels (Whale Tail, East, and North, if deemed necessary);
- four water retention dikes (Whale Tail, Mammoth, Whale Tail WRSF, and Northeast);
- two coffer/saddle dams;
- seven proposed culverts (Culverts 181, 182, 183, 184, 185, 186, and Mammoth Channel Culvert, if deemed necessary);
- a freshwater intake causeway and pump system;
- a WTP and associated intake causeway;
- a WTP for construction;
- a Sewage Treatment Plant (STP);
- pipeline and associated pump system;
- a Potable WTP; and
- a discharge diffuser located in Lake A16 (Mammoth Lake).

3.1.3 Waterbody Inventory

The A and C watersheds will potentially be impacted by mining activities, primarily by dewatering of Whale Tail Lake (North Basin) to Lake A16 (Mammoth Lake), the Northeast Diversion to the C watershed, and the Whale Tail Lake (South Basin) Diversion to Lake A16 (Mammoth Lake). Waterbodies directly impacted by mining activities are presented in Table 3.1 and shown in Figure A.2 in Appendix A.

Table 3.1 Inventory of Waterbodies Directly Impacted by Mining Activities

Watershed	Primary Disturbance	Waterbody	Note
A	Dewatering	Lake A16 (Mammoth Lake)	Receiving lake during dewatering activities
	Northeast Diversion	Lake A47	Flooded
		Lake A48	Flooded
		Lake A55	Flooded
		Lake A62	Flooded
		Lake A63	Flooded
		Lake A65	Flooded
		Lake A113	Flooded
		Pond A-P38	Flooded
		Pond A-P68	Flooded
	Whale Tail Lake (South Basin) Diversion	Lake A18	Flooded
		Lake A19	Flooded
		Lake A20	Flooded
		Lake A21	Flooded
		Lake A22	Flooded
		Lake A45	Part of diversion channel
		Lake A55	Flooded
		Lake A62	Flooded
		Lake A63	Flooded
		Lake A65	Flooded
		Pond A-P1	Flooded
		Pond A-P53	Flooded
	Various Water Management Activities	Lake A17 (Whale Tail Lake)	Water management activities include diversion of upper watershed and dewatering of Whale Tail Lake (North Basin)
C	Water Intake	Lake C38 (Nemo Lake)	

3.1.4 Water Management Plan during Construction and Operations

3.1.4.1 Infrastructure Required for Mine Site Water Management

During the mine construction, operational and closure phases, a network of collection and interceptor channels and sumps will be constructed and maintained to facilitate mine site water management. A list of the water management control structures and facilities is presented in Table 3.2 together with the proposed construction schedule. These structures were designed according to design criteria presented in the FEIS, Volume 2, Appendix 2-J (Agnico Eagle, 2016). Final design details of these structures will be provided to the regulators for approval at least 60 days prior to construction.

Appendix A, Figure A.1 to Figure A.5 shows the location of the respective structures at the different development stages of the mine life. Information on operation, maintenance, and surveillance (OMS) of Project dikes is provided in the following sub-sections.

Table 3.2 Water Management Facilities and Construction Schedule

Mine Year	Figure	Water Management Facilities Constructed or Installed
Year -1 (2018) Construction	A.1 and A.5	• Turbidity Curtains • Start Whale Tail Dike • Start Mammoth Dike • Start the contact water intake causeway in the Whale Tail Attenuation Pond • Construction of the low-permeability access road built of overburden and collection sump for Stage 1 WRSF • Freshwater intake causeway in Nemo Lake • Water Treatment Plant and Construction Water Treatment Plant • Pipelines and associated pump systems for water management and dewatering • Sewage Treatment Plant • Potable Water Treatment Plant • Discharge diffuser in Mammoth Lake • Culverts 184, 186, and Mammoth Channel
Year 1 (2019) Operations	A.2	• Complete Whale Tail Dike • Complete Mammoth Dike • Complete the contact water intake causeway in the Whale Tail Attenuation Pond • Whale Tail WRSF Dike • Northeast dike • Whale Tail Lake (South Basin) Diversion Channel • Whale Tail East Channel and Saddle/Coffer Dam • If deemed necessary, North Diversion Channel • Saddle/Coffer Dam #1 in Whale Tail WRSF

WRSF = Waste Rock Storage Facility.

3.1.4.2 Dike Construction

The Whale Tail Dike is intended to raise Whale Tail Lake (South Basin), Lake A18, Lake A19, Lake A20, Lake A21, Lake A22, Lake A55, Lake A62, Lake A63, Lake A65, Pond A-P1, and Pond A-P53, to an elevation of 156.0 metres above sea level (masl), and divert runoff downstream to the Lake A16 (Mammoth Lake) watershed through the Whale Tail Lake (South Basin) diversion channel. Whale Tail Dike will be constructed as a zoned rockfill dike on the lakebed foundation with a core composed of a fine filter dynamically compacted. A coarse filter will be placed between the rockfill and the fine filter.

A cement-bentonite cutoff wall consisting mainly of secant piles will be constructed through this dense core and will act as a seepage barrier. The construction technique will differ for the sections extending into the existing lake from those at the abutments. For the lake sections of the dike, construction will be initiated by advancing two single-line platforms built at elevation 154.0 masl. After cleaning out the central key trench by reaching the bedrock, backfill consisting of fine and coarse filters will be gently deposited up to elevation 154.0 masl. The WTD will then be constructed up to elevation 157.0 masl. From this level, the fine filter will be dynamically compacted by heavy tamping. The secant piles will then be installed from elevation 157.0 masl to 1.0 m below the bedrock surface. The type of material used for the cutoff wall will be a cement-bentonite mix. The maximum height of the secant pile cutoff wall is expected to be of 10.5 m.

At the west abutment, the footprint of WTD will cross an esker which extends well below lake level. The esker will be blasted to about elevation 153.0 masl at the west abutment. The bottom of the excavation would be 0.5 m above lake level and then the rockfill zones and fine filter would be placed. Above elevation 153.0 masl, a key trench to the bedrock will then be progressively excavated in the thawed esker to expose its surface. In addition, and to minimize the number of secant piles, it is proposed to place a cement-bentonite slurry cutoff wall where bedrock surface is above elevation 155.5 masl. The secant piles will overlap the cured CB slurry cutoff over 1.5 m in horizontal length.

The strategy for the east abutment will be different than for the west abutment. It would be beneficial to remove (in the core trench area) the layer that contains ice rich till prior to the placement of any material. Due to schedule and access constraints, the east abutment will be blasted in order to remove about 4 m of frozen soil (in the core trench area) that contains ice rich material.

The performance of Whale Tail Dike will be evaluated based on the quantity of seepage collected (compared to the design estimate). This structure will be highly instrumented with sections of piezometers and thermistor strings to understand the hydraulic and thermal behaviour during reservoir filling. The thermal regime will be monitored all along the dike to note the thermal impact of raising the lake water level. Monuments and inclinometers will be installed along the dike as well. Typical sections of Whale Tail Dike and of Whale Tail Dike abutment are shown in Figure 3.1. All design drawings and figures can be found in the Whale Tail Dike Detailed Design Report (SNC, 2018).

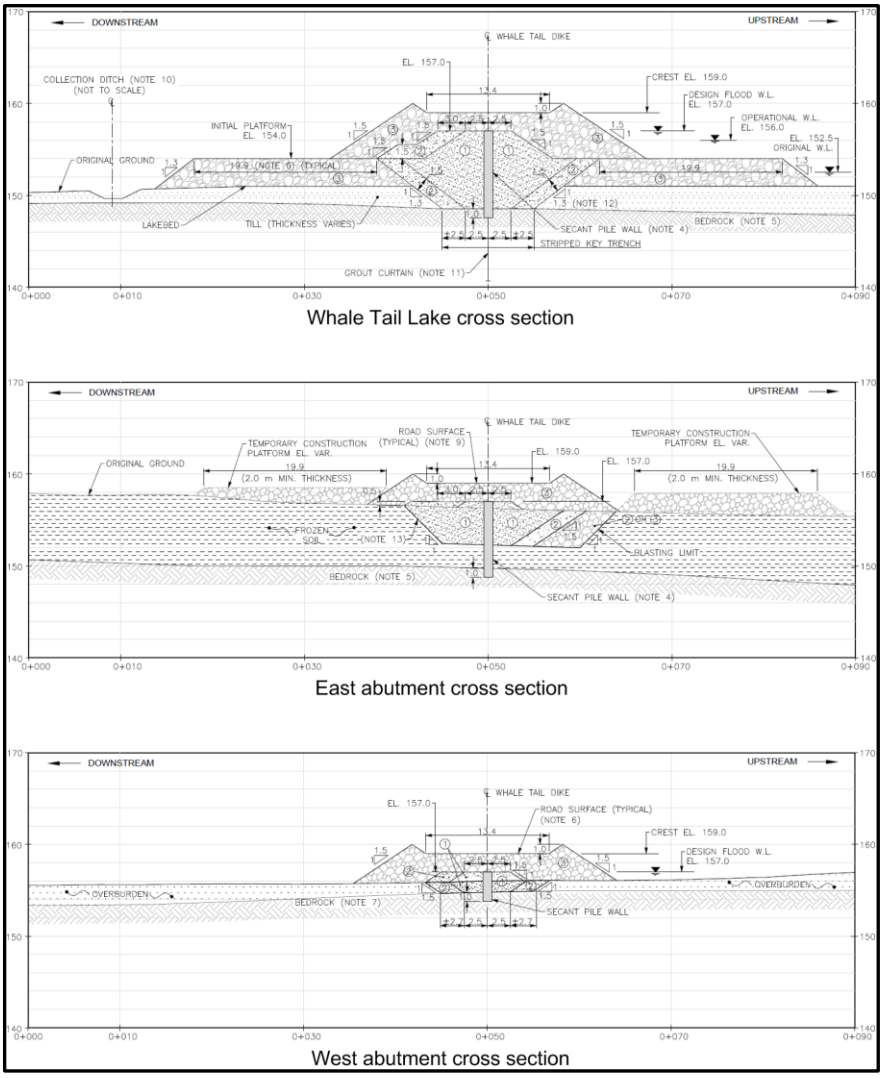

Figure 3.1 Typical Sections of Whale Tail Dike and Whale Tail Dike Abutment

The Mammoth Dike is intended to protect the mine site area from potential backwatering from Lake A16 (Mammoth Lake) during the operational and closure phases. The concept of this structure is similar to the other dikes in shallow water operated by Agnico Eagle (as Vault Dike). Mammoth dike has a length of about 300 m and a height of 2 m. It will be a rockfill dike lined with bituminous geomembrane on its upstream face encapsulated at the toe in a layer of fine filter amended with bentonite (FFAB) liner in turn constructed in a key trench. The key trench will extend down to the bedrock and all boulders along the alignment will be removed. A thermal cap of rockfill will be placed on top during the winter season to prevent the FFAB from thawing. The winter construction technique aims to reinforce the permafrost strength of the foundation. A typical section of the Mammoth Dike is shown in Figure 3.2.

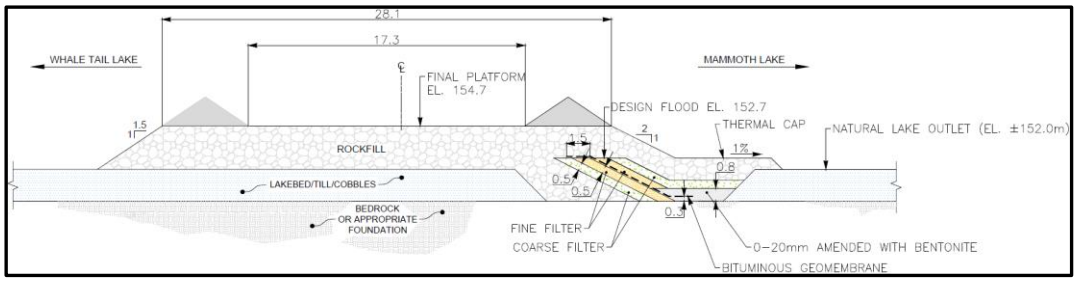

Figure 3.2 Typical Section of Mammoth Dike

Note: Adapted from SNC-Lavalin (2017).

The Whale Tail WRSF Dike confines contact water in the Whale Tail WRSF Pond before it is pumped to the Whale Tail Attenuation Pond. The WRSF dike is about 300 m and 5 m height and has been classified as a high based on CDA Guidelines. As the Mammoth Dike, the Whale Tail WRSF Dike will be a rockfill dike with a bituminous liner on its upstream face encapsulated at the toe in a layer of FFAB liner in turn constructed in a key trench anchored to the bedrock during the summer season. The liner will take advantage of frozen soil conditions to integrate the permafrost into its foundation (and key trench). The key trench will be stripped during the summer season. All ice-rich material sensitive to thawing will be removed below the liner. Once the bedrock is exposed, the bituminous liner will be sealed with FFAB. While the geomembrane in the key trench is buried, a thermal cap will be put in place to protect the foundation against sources of heat. If during the operation the degradation of the permafrost occurs, a grout curtain will be installed to enhance the performance of the dike. A typical section of the Whale Tail WRSF Dike is shown in Figure 3.3.

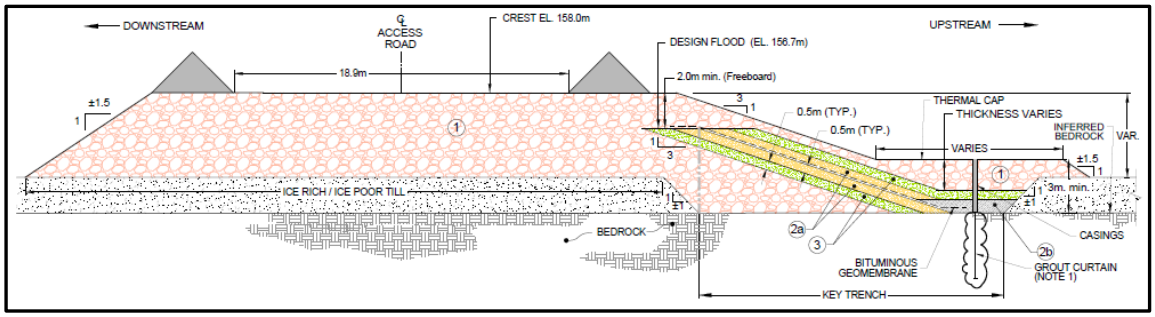

Figure 3.3 Typical Section of Whale Tail Waste Rock Storage Facility Dike

Note: Adapted from SNC (2015).

The Northeast (NE) Dike is a temporary structure with an estimated service life of about two (2) years and is designed to prevent runoff from the Northeast watershed reporting to the Whale Tail Pit As both Mammoth and WRSF Dikes, the upstream slope of the NE Dike will be lined with bituminous geomembrane encapsulated at the toe in a layer of FFAB liner in turn constructed in a key trench to the bedrock or to an appropriate foundation (ice-poor till). The construction will promote the extraction of heat to reinforce the permafrost of the key trench thus making it impervious. Dewatering should be completed prior to beginning of winter to promote development of permafrost in the

foundation. A thermal cap will be put in place to limit the penetration of heat into the foundation. A typical section of the Whale Tail WRSF Dike is shown in Figure 3.4.

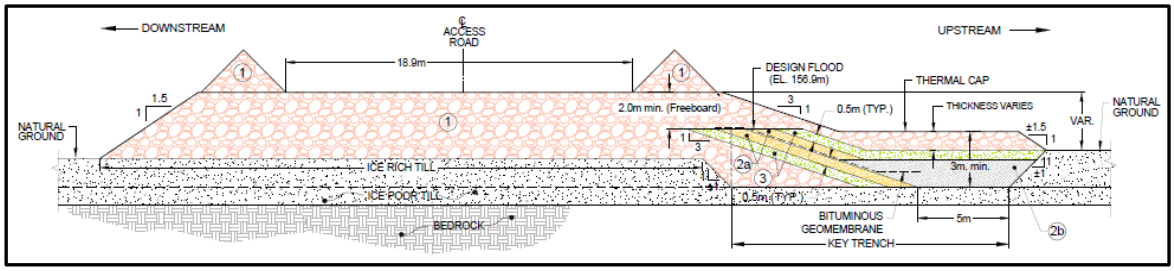

Figure 3.4 Typical Section of Northeast Dike

Note: Adapted from SNC (2015).

During dike construction, both the dike material itself as well as the disturbed material on the lake floor (particularly in the deep areas of the lakes) will contribute to increases in concentrations of suspended sediments in the water column. In the absence of sediment control measures, suspended sediment plumes would be expected to migrate with wind-driven currents. The key means for minimizing suspended sediment discharges from the dike construction zones during dike construction include the deployment of Turbidity Curtains and water treatment (if deemed necessary).

For the construction of Whale Tail Dike, a total of four (4) layers of turbidity curtains will be installed across Whale Tail Lake (two (2) on each side of the dike). These curtains will be deployed concurrently with the start of the dike construction to contain turbid water caused by the construction while the fishout is taking place. In addition, requirement for pumps installed in the water in front of the construction platform to neutralise the current created by the displacement of water from the deposition of rock in the lake will be evaluated at the beginning of the construction. If such mitigation measure is required, water will be pumped to the dewatering WTP and discharged into Lake A16 (Mammoth Lake) through the existing discharge diffuser system. The proposed location for the Turbidity Curtains is shown in Figure A.1.; however final location of the curtains will depend of the final dike design and site conditions.

For Northeast Dike, no specific TSS management plan is expected as the construction of this facility is planned when the open pit will be in operation and contact water will be managed as part of the current operations.

3.1.4.3 Dewatering

To allow the mining of the Whale Tail Pit, Lake A17 (Whale Tail Lake) will be partly dewatered once the Whale Tail Dike is constructed. The estimated total volume of Whale Tail Lake (Lake A17) is 8.5 million m^3 (Mm^3); the upper portion of Lake A17 (3.4 Mm^3) will be pumped to either Whale Tail Lake (South Basin) or to Lake A16 (Mammoth Lake) through the discharge diffuser. It is assumed that approximately 66% of the volume of water will be pumped directly to Whale Tail Lake (South Basin) if

it meets discharge criteria, and the remaining 34% of water will be pumped to the WTP first and then discharged to Lake A16 (Mammoth Lake) after treatment. The dewatering activity is planned from March to May 2019 to Whale Tail Lake (South Basin) and from June to September 2019 to Lake A16 (Mammoth Lake).

3.1.4.4 Key Water Management Activities during Construction and Operations

An inventory of waterbodies impacted by mining activities is provided in Table 3.1 (Section 3.1.3) and the water management facilities required for the Plan is provided in Table 3.2 (Section 3.1.4.1). These tables should be read in conjunction with Table 3.3, which presents the yearly major water management activities during the construction and operational phases. Water management activities during the closure phase are described in Section 3.2.

Table 3.3 Water Management Activities during Construction and Operations

Mine Year	Water Management Activities and Sequence
Year -1 (2018)	• Temporary pump contact water from the Stage 1 WRSF sump to quarry 1 • Temporary pump contact water from the starter pit to quarry 1 • Temporary pump contact water from open pit to the Whale Tail WRSF Pond • Treat turbid water from construction using the construction WTP and discharge in Lake A16 (Mammoth Lake) • Treat contact water from quarries using the construction WTP and discharge in Lake A16 (Mammoth Lake)
Year 1 (2019)	• Dewater Whale Tail Lake (North Basin) • Pump contact water from the open pit to the Whale Tail Attenuation Pond • Pump contact water from the Whale Tail WRSF Pond to the Whale Tail Attenuation Pond • Treat through the WTP the Whale Tail Attenuation Pond contact water and discharge in Lake A16 (Mammoth Lake) • Whale Tail East channel diverts non-contact water from Lake A53 to Whale Tail Lake (South Basin) • If deemed necessary, North channel diverts non-contact water from the north shore of the open pit to Lake A16 (Mammoth Lake)
Year 2 (2020)	• Continue to pump contact water from the open pit to the Whale Tail Attenuation Pond • Continue to pump contact water from the Whale Tail WRSF Pond to the Whale Tail Attenuation Pond • Treat through the WTP the Whale Tail Attenuation Pond contact water and discharge in Lake A16 (Mammoth Lake) • Northeast Pond flows towards the C watershed • Whale Tail Lake (South Basin) flows to Lake A16 (Mammoth Lake) through the Whale Tail Lake (South Basin) Diversion Channel

WRSF = Waste Rock Storage Facility; WTP = Water Treatment Plant.

A brief summary of the Plan during the construction and operational phases is presented as follows:

- Turbidity Curtains will be used during the construction of the Whale Tail Dike and, if deemed necessary for the construction of Mammoth Dike and Whale Tail WRSF Dike.
- During the construction, to the extent practical, turbid water originating from Lake A17 (Whale Tail Lake) and from the quarry 1 will be treated and discharged in Lake A16 (Mammoth Lake).
- The main contact water pond of the Project (i.e., Whale Tail Attenuation Pond) is located in a deep part of Whale Tail Lake (North Basin).
- Contact water from the major mine infrastructure will be diverted and/or collected in the Whale Tail Attenuation Pond.
- Contact water from the Whale Tail WRSF Pond will be pumped to the Whale Tail Attenuation Pond.
- Runoff water in the open pit will be collected by the sumps and then pumped to the Whale Tail Attenuation Pond.
- Water collected in the Whale Tail Attenuation Pond will be reused to the extent practical in the open pit and dust control operations, and the excess water will be treated by the WTP prior to discharge to the receiving environment via the diffuser into Lake A16 (Mammoth Lake). Water quality objectives for arsenic and phosphorous will be meet via the proposed diffusor design: 10 ports at 12.6 m spacing and 75mm, diameter diffusor ports, effluent mixing (mixing zone). Within Mammoth Lake, the required dilution of WRSF seepage is predicted to be met at 60 m from the discharge location in all scenarios. A rock fill weir at outlet will channelize seepage outflow into Mammoth Lake and facilitate dilution.
- Non-contact water is diverted away from the mine site infrastructure by reversing natural flows and/or using diversion channels.
- Freshwater usage on site will be supplied from Lake C38 (Nemo Lake) during operations, and from Whale Tail Lake (South Basin) during closure.

Table 3-4 summarizes the overall contact water management plan for the major mine infrastructure with the initial water collection location and final water destination. Detailed water management information for major mine infrastructure areas is described in the following sub-sections. Water management flowsheets for the construction and operations phase are provided in Appendix B.

Table 3.4 Overall Site Surface Contact Water Management Plan

Contact Water Source	Initial Contact Water Collection Location	Final Contact Water Collection Location
Industrial Sector	Whale Tail Attenuation Pond	Whale Tail Attenuation Pond
Whale Tail WRSF Sector	Whale Tail WRSF Pond (Quarry 1 for the temporary Stage 1 WRSF sump)	
Ore Stockpiles	Whale Tail Attenuation Pond	
Landfill	Whale Tail WRSF Pond	
Open Pit	Open pit sumps	

WRSF = Waste Rock Storage Facility.

3.1.4.5 Erosion and Sediment Control Plan

As described in the previous sections, Whale Tail Pit site infrastructure, channels, sumps and associated water management activities are designed with consideration of site wide erosion and sediment control. In addition to design controls, best management practices (BMPs) will furthermore ensure that activities, practices, devices or a combination thereof will prevent or reduce the release of sediments and will control erosion. The selection of permanent or temporary BMPs will be specific to the site and timing and may require regulatory approval prior to installation or construction.

Temporary BMPs Whale Tail Pit may include:

- Silt fences and fabric installation;
- Turbidity curtains;
- Sediment control basins to detain sediment-laden water; and
- Diversion of flows away from the construction area.

Permanent BMPs at the Whale Tail Pit may include:

- Infiltration basins and trenches;
- Sedimentation basins or ponds; and
- Construction of swales in ditches.

Monitoring of erosion and sedimentation associated with construction and operations are discussed in Section 3.2 of this plan and are detailed in the Whale Tail Pit Water Quality and Flow Monitoring Plan (FEIS Appendix 8 B.3, Agnico Eagle, 2016) and dike construction sediment control and monitoring is presented in Whale Tail Pit Dike Construction and Dewatering Management Plan (FEIS Appendix 8 – A.2, Agnico Eagle, 2016).

For specific details on sediment control guidelines and license requirements, on erosion monitoring and mitigation during freshet and the rise of water level in the South Basin of Whale Tail Lake, refer to the Whale Tail Project - Erosion Management Plan (Agnico Eagle, 2018b).

3.1.4.6 Water Management in Whale Tail Waste Rock Storage Facility

As mentioned in the document Amaruq Stage 1 WRSF, Ore Stockpile 1 and Starter Pit Design Report and Drawings (Agnico Eagle, 2018c), while awaiting the construction of the Whale Tail WRSF dike expected in winter 2019, a Stage 1 WRSF will be initiated. The Stage 1 WRSF, located within the footprint of the final location of the WRSF, will be positioned as to be able to control the watershed using the topography in combination with temporary water management structures in order to prevent potentially contaminated contact water from seeping into the environment. The duration of this Stage 1 WRSF will be during the second half of 2018 until the aforementioned WRSF dike is constructed or when weather conditions are sufficiently cold that no thawing or water runoff can occur.

To avoid any potential contact water from entering the environment, a low-permeability access road built of overburden will be established first to reach the Stage 1 WRSF location and will act as a barrier to any water not naturally diverted towards a containment sump that will be established once the access road is completed and prior to any placement of PAG / ML material. The location of the Stage 1 WRSF was chosen as to use the topography to control water runoff, in combination with the access road and collection sump designed to sustain a 1:100 year rain event. All water collected in the sump will be directed towards Quarry 1 in a closed circuit. Refer to Figure A.5 of Appendix A.

The Whale Tail WRSF will be used to permanently store all waste rock and overburden from mining activities. Seepage and runoff from the Whale Tail WRSF during the construction and operational phases will be managed via the Whale Tail WRSF Pond, isolated by the Whale Tail WRSF dike, where the contact water will be pumped to the Whale Tail Attenuation Pond for further treatment. During the construction phase or until the Whale Tail WRSF Dike is operational, runoff and especially water originating from thawed ice-rich soils will be managed with ditches and local sumps. All overburden soils will be stabilized with waste rock berms in order to limit spreading and soil water separation. More details about management of the Whale Tail WRSF are presented in the Mine Waste Rock and Tailings Management Plan.

3.1.4.7 Water Management for Ore Stockpile Areas

The ore stockpiles are located within the catchment of the Whale Tail Attenuation Pond as shown in Figure A.2, Figure A.3 and Figure A.5 (Appendix A). Based on the topographic information, contact water will naturally flow to the Whale Tail Attenuation Pond for further treatment. Channels will be constructed if deemed required to direct the seepage and runoff to the pond.

The Ore Stockpile Pad 1, which constitute the first stage of the ore stockpile, was designed based on the following considerations. A minimum 1.0 m of overburden and/or waste rock will be placed over original ground to reduce any thaw-induced differential settlements. Waste rock will then be placed to follow the natural topography, thereby reducing the likelihood of water ponding on the surface of the pad requiring additional maintenance. A final grade of about 0.5% sloping towards the Whale Tail

Attenuation Pond will be achieved. Any surface run off from the ore stockpile or the pad will therefore be directed to the Attenuation Pond containment area.

3.1.4.8 Water Management for the Pit Sector

The Whale Tail open pit is planned to extend to approximately 115 m below the ground surface. The open pit will be mined mostly within permafrost except for the north-central portion of the pit which will be within the closed talik at the northern end of Lake A17 (Whale Tail Lake). The pit does not extend through the bottom of the closed talik; however, the open pit acts as a sink for groundwater flow during operations, with water induced to flow up through the open talik beneath the central portion of Lake A17 (Whale Tail Lake) and into the open pit. Accordingly, groundwater inflows into open pit are expected, this water will be mixed with the open pit contact water and pumped the Whale Tail Attenuation Pond for further treatment.

3.1.4.9 Water Management for Haul Road

A network of access and haul roads will connect the ore body to the Whale Tail WRSF Sector and the Industrial Sector. The majority of the roadways servicing the mining area will drain directed towards the proposed contact water management infrastructure. Detailed information on roads is described in the Whale Tail Pit Haul Road Management Plan.

The approach to water management for these roads will involve the implementation of local best management practices during the construction, operational, and closure phases. The roads are constructed of non-potential for acid generating and non-leaching waste rock from mining operations. Other best management practices will strive to minimize the amount of runoff originating from the roadways and to prevent the migration of surfacing material from the roadways and crossings. Any areas identified as point sources of runoff originating from the roadways or crossings can be managed locally with silt fences, straw booms, turbidity curtains, interceptor channels, rock check dams, and/or small sedimentation ponds.

3.1.4.10 Water Management for Landfill

The landfill is located southeast of the Whale Tail WRSF, within the catchment of Whale Tail WRSF Pond, as shown in Figure A.2 to Figure A.4 (Appendix A). Based on the topographical information (PhotoSat 2015), runoff and any seepage from the landfill will naturally flow to the Whale Tail WRSF Pond and then pumped to the Whale Tail Attenuation Pond for further treatment before discharge.

Further information on the management of this facility is described in the Whale Tail Pit Landfill and Waste Management Plan.

3.1.4.11 Sludge Management from Water Treatment Plant

Sludge water from the Operation Water Treatment Plant (OWTP) will be dewatered with a centrifuge to produce a cake having a density with 20% of solid content. This cake will be stored in the Whale Tail WRSF. The maximum predicted annual volume of cake from the OWTP is approximately 5,760

cubic metres (m3). The OWTP, is designed to treat total suspended solids and arsenic during the Operations Phase.

3.1.5 Freshwater and Sewage Water Management

3.1.5.1 Freshwater Management

Freshwater for the Whale Tail Camp will be sourced from Lake A17 (Whale Tail Lake) and from Lake C38 (Nemo Lake), as per Part E, conditions 1, 2 and 3 of the Water License 2AM-WTP1826. Freshwater usage includes potable use, fire suppression, dust suppression, drilling water, if contact water is not available, and water for the truck shop. The freshwater source is Lake C38 (Nemo Lake) during construction and operations, and Lake A17 (Whale Tail Lake) during closure. For explosives mixing and associated use, the water will be pumped from the unnamed lake, as per Part E, condition 4 of the Water License 2AM-WTP1826. Freshwater will also be required to refill Whale Tail Lake (North Basin) at closure and will be sourced from the Whale Tail Lake (South Basin) and inflows to Whale Tail Lake (North Basin). Agnico Eagle will endeavour to minimize the amount of freshwater required for the Project, where possible.

Freshwater will be sourced through a freshwater intake and pump system. The intake will consist of vertical filtration wells fitted with vertical turbine pumps that supply water on demand. The intake will be connected to the pump house with piping buried under a rockfill causeway. The intake pipe will exit at the bottom of the causeway and will be fitted with a stainless steel screen, as per Part E, condition 6 of the Water License 2AM-WTP1826. The rockfill causeway will act as a secondary screen to prevent fish from becoming entrained. The stainless steel screens design for the water intake will be consistent the Fisheries and Oceans Canada (DFO) “Freshwater Intake End-Of-Pipe Fish Screen Guideline” (DFO 1995). As per the DFO policy intake screens will be cleaned every 2 years. The freshwater intake will be moved to Whale Tail Lake (North Basin) at closure.

Freshwater will be pumped to an insulated main storage tank located at the Whale Tail Camp. The freshwater pipeline will be a high density polyethylene pipe and insulated and heat traced. The Whale Tail Camp will have a WTP for potable (domestic) water. The design flow rate for the potable water for the Whale Tail Camp and accommodations (i.e., kitchen, laundry) is 84 cubic metres per day (m^3/day), based on a 350 people camp capacity, using both the existing Exploration Camp and additional 210 units and a nominal consumption of 240 litres per day per person (L/day/person). In the Potable WTP, the freshwater will first go through sand filters and then be pumped through ultraviolet units, and finally be treated with chlorine. The treated water will be stored within a potable water tank. Potable water will be monitored according to the Nunavut health regulations for total and residual chlorine and microbiological parameters. Treated potable water will be piped to other facilities requiring potable water.

Approximately 8,760 cubic metres per year (m^3/year) of freshwater will be required during the construction phase, 118,625 m^3/year during the operational phase, and 17,520 m^3/year during the

closure phase. The use of freshwater will respect the limits as per Part E, conditions 1 and 2 of the Water License 2AM-WTP1826 During closure, the Whale Tail Pit and Whale Tail Lake (North Basin) will be allowed to flood naturally with non-contact, treated, and freshwater from direct precipitation, runoff from adjacent land, and Whale Tail Lake (South Basin). It is anticipated that approximately 24,000,000 m^3 over 8 years is required to fill the mined-out Whale Tail Pit (i.e., approximately 17,000,000 m^3) and Whale Tail Lake (North Basin) (i.e., approximately 7,000,000 m^3) to its original level, including approximately 2,300,000 m^3/year from Whale Tail Lake (South Basin), 120,000 m^3/year from tributaries to Whale Tail Lake (North Basin), and 580,000 m^3/year from direct precipitation to Whale Tail Lake (North Basin). As per part E, condition 5 of the Water License 2AM-WTP1826, the use of water from Whale Tail Lake shall not exceed a total of 10,655,000 m^3/year commencing when notification of closure is received by the NWB through to the expiry of the Licence.

3.1.5.2 Sewage Water Management

Sewage will be collected from the camp and change-room facilities and pumped to a STP. The objective of the STP is to treat sewage to an acceptable level for discharge to the Whale Tail Attenuation Pond via a sewage water discharge pipeline. The STP will be housed in a prefabricated (modular) structure located in the Whale Tail Camp. The sewage treatment system will be designed based on a flow rate of 200 L per day per room for a peak load of 210 rooms, for an average daily flow rate of 42 m^3 (1.75 cubic metres per hour [m^3/hour]). As already installed on site for the Exploration Camp, additional Bionest Kodiak biological reactor units are envisioned to be installed to treat camp waste water and accommodate for a total of 350 rooms.

The STP for the camp facilities will be designed to meet appropriate guidelines for wastewater discharge (for example, NWT Water Board 1992). Wastewater System Effluent Regulations (WSER) criteria are not currently applicable to systems located in Nunavut, and is unlikely to apply to the Project effluent quality.
Table 3.5 provides the anticipated performance of the system compared to the WSER criteria.
Further information on the management of this facility is described in the Whale Tail Sewage Treatment Plant Operation and Maintenance Manual.

Table 3.5 Effluent Quality and Wastewater Characteristics

Parameter	Units	Regulatory Limit	Design Value
Wastewater			
• Biochemical Oxygen Demand	mg/L	-	952
• Total Suspended Solids	mg/L	-	300
• Total Kjeldahl Nitrogen	mg/L	-	130
• Ammonia nitrogen	mg/L	-	130
• Fat, Oil and Grease	mg/L	-	30
• pH	-	-	6 to 9.5
• Water Temperature	°C	-	10 to 25
• Alkalinity	mg/L as $CaCO_3$	-	471.1
• Prohibited Chemicals/Compounds	Not present		
• Grinder Pumps	Not present Upstream of MBR		
Effluent			
• pH	-	6-9.5	6.5 to 8.5
• Carbonaceous Biochemical Oxygen Demand	mg/L	<25	<5
• Total Suspended Solids	mg/L	<25	<1
• Un-ionized ammonia	mg/L	<1.25	<0.08
• $N0_3$-N	mg/L	<5	4
• TP	mg/L	<0.5	0.5
• Fat, Oil and Grease	mg/L	<5	<1
• Fecal Coliform	CFU/100mL	<200	Non-Detect
• Total Residual Chlorine	mg/L	<0.02	0

1. Noted values are assumed blend between kitchen and dormitory wastewater after the grease trap.
2. A complete list of prohibited chemicals is included in the membrane maintenance manual.

3.2 Operation, Maintenance, and Surveillance of Project Dikes

3.2.1 Consequence of Failure

The consequence of failure classification is presented in SNC (2018b) based on the guidelines provided in the Canadian Dam Association Dam Safety Guidelines (CDA, 2014). The Whale Tail Dike and the Mammoth Dike are rated as “High” consequence of failure structures, Northeast Dike is rated as “Significant” consequence of failure structure, and Whale Tail WRSF Dike is classified as “Low” consequence of failure structure.

No flooding or inundation mapping has been completed.

It is assumed that failure of Whale Tail Dike and Mammoth Dike could flood the Whale Tail Pit, resulting in associated threat to the safety of mine personnel, equipment, and other workings within

the dewatered area. Flooding would likely cause cessation of mining operations within the pit, either temporarily or permanently.

Finally, as the Whale Tail WRSF Pond will have a small volume and will continue to be pumped to the Whale Tail Attenuation Pond over the summer season, a low probability of failure is attributed to the Whale Tail WRSF Dike and then to the consequence of failure.

3.2.2 Operation, Maintenance, and Surveillance Manual

The Meadowbank Mine OMS manual (Whale Tail Addendum) will be updated by Agnico Eagle before the operations of the dikes, reviewed on an annual basis and revised as necessary to accommodate changes in the condition and operations of the facilities or in management structure as per Part B, condition 13 of the Water License 2AM-WTP1826 . The OMS Manual will be an extension of the existing Meadowbank OMS Manual (Agnico Eagle, 2017).

3.2.3 Role and Manual Holders

The Meadowbank Mine Engineering Superintendent will be responsible for delivering the first release of the OMS Manual as well as issue all revisions and addenda to the registered holders: General Mine Manager, Environment Superintendent, Mine Operations Superintendent, Engineering Superintendent, General Services Manager, Site Services Superintendent, Corporate Environment Director, Health and Safety Superintendent, and Dike Design Engineer. The role and responsibilities of holders will be revised when issuing the OMS Manual.

3.2.4 Dewatering

Based on SNC (2018c), the design criteria for minimum freeboard for the dikes are presented in Table 3.6. The freeboard may change due to fluctuations in Whale Tail Lake and Ponds, or due to settlement in the dikes. Maintenance may be required to restore loss of freeboard due to settlement. The freeboard may also change during further advanced engineering phases.

Table 3.6 Design Minimum Freeboard

Structure	Minimum Freeboard		
	Normal operation (m)	Design flood conditions (m)	Actual minimum freeboard (m)
Whale Tail Dike	2.0	1.8	2.0
Mammoth Dike	No water	1.3	1.5
Whale Tail WRSF Dike	No water	0.6	0.7
Northeast Dike	No water	0.7	0.8

m = metre; WRSF = Waste Rock Storage Facility.

Based on past experience at dewatering operations (i.e. Vault Lake for Meadowbank operations), a WTP was not required because the regulatory criteria limit was reached without treatment or a WTP was used only during the latter stages when TSS from bottom sediments were present. It is expected for the Project that approximately 2/3 of the dewatered water from the Whale Tail Lake (North Basin) will be pumped and directly discharged to Whale Tail Lake (South Basin) while the remaining 1/3 of the water will be processed through the WTP to reduce TSS and discharged to Lake A16 (Mammoth Lake) thru a diffuser. During new dike construction, Agnico Eagle will abide by limits established by the NWB in the Water License 2AM-WTP1826. .

Pore water pressures in the foundation of the dewatering dikes will be monitored during dewatering as a predictor of possible slope instability. Both pore water pressures and temperature measurements will be monitored during dewatering as one method of detecting potential zones of seepage. The quantity of water pumped out during dewatering will be monitored with flow meters in addition to monitoring the water level downstream of the Lake A17 (Whale Tail Lake) watershed.

3.2.5 Operations

Water from the seepage collection systems of the dikes is to flow naturally to the Whale Tail Attenuation Pond or to the Open-Pit and the Collection Ponds and be pumped to the Whale Tail Attenuation Pond. The quantity of seepage through the dikes will be estimated on further advanced engineering phases. Seepage rates, volumes and the condition of the seepage water (i.e. turbidity, temperature, etc.) will be monitored as per Part I, conditions 15 and 16 of the Water License 2AM-WTP1826, and incorporated in the Water Balance.

Water quality of the seepage and runoff collected in the sumps and ditches at the toe of the dikes is to be monitored during operations according to the Water License 2AM-WTP1826requirements. Weekly inspections will be performed as an indicator of dike performance to note whether seepage water is clear, cloudy or if fine material is present.

3.2.6 Surveillance

A program of regular surveillance is required to ensure that the dikes, instrumentation and seepage collection systems are performing adequately and that problems are detected so that the necessary corrective actions can be implemented in a timely manner. A surveillance program will be implemented based on the International Commission on Large Dams (ICOLD 1998) for detection of potential failure mechanisms applicable to the dikes, primarily Whale Tail Dike, Northeast Dike and Whale Tail WRSF Dike. The surveillance program for the Project will be implemented in the OMS Manual by Agnico Eagle before the operations of the dikes.

3.2.7 Monitoring and Instrumentation

Monitoring of the dikes will be carried out for the purpose of environmental monitoring, assessment of physical stability of the structures, assessment of overall performance of the dikes, and aiding in future design. Monitoring complements the surveillance and is divided into the following aspects: drawdown rate and water quality during dewatering, geotechnical instrumentation including piezometers, thermistors, inclinometers, survey prisms, etc., and seepage rates and water quality during operations. The monitoring program for the Project will be implemented by the OMS Manual issued by Agnico Eagle before the operations of the dikes.

3.2.8 Reporting Procedures and Data Management

Emergency, inspection, and instrumentation measurements will be reported according to the role and responsibility of individuals and as per the OMS Manual requirements. An electronic library or database will be set up to catalogue and store inspection documents, maintenance reports and instrumentation measurements. Hard copies will also be catalogued and stored on site.

3.2.9 Decommissioning

The decommissioning of the dikes will take place progressively as the dikes are decommissioned and opened to reconnect lakes.

The Whale Tail Dike and the Mammoth Dike will remain intact during the controlled flooding of the Whale Tail Pit and Whale Tail Lake (North Basin). These are flooded gradually over the course of several years. Once the water levels have stabilized within Whale Tail Lake (South Basin) and Whale Tail Lake (North Basin) and water quality is considered acceptable for mixing with neighbouring lakes, these two dikes will be decommissioned to allow circulation of lake water.

The Northeast Pond will be draw-down into the open-pit before the dike be decommissioned.

The Whale Tail WRSF Dike will remain in place during closure and post-closure period or until the water quality monitoring results meet discharge criteria to allow water to naturally flow to the receiving environment. Following confirmation the water quality monitoring results meet discharge criteria the Whale Tail WRSF Dike will be decommissioned.

Long-term inspection will be carried out to ensure the adequate performance of maintained closure and post-closure facilities.

3.2.10 Emergency Preparedness Plan

The purpose of an Emergency Preparedness Plan is to present a basic procedure for responding to potential failure mechanisms for dikes. The procedure identifies various measurable or observable effects or causes of the failure mechanisms, identifies the appropriate people to notify, presents the procedure to put in place according to the level of emergency and lists the response reference. The Emergency Preparedness Plan for the Project will be implemented in the OMS Manual by Agnico Eagle before the operations of the dikes.

3.3 Water Management during Closure

Mine closure is integral to the mine design and will be modified during operations. Planning for permanent closure is an active and iterative process. The intent of the process is to develop a final closure plan including specific water management components using adaptive management. This begins during the mine design phase and continues through to closure implementation. Adaptive management enables the plan to evolve as new information becomes available through analysis, testing, monitoring, and progressive reclamation. The detailed mine closure and reclamation activities are provided in the Whale Tail Pit Interim Closure and Reclamation Plan (FEIS, Volume 8, Agnico Eagle Mine, 2016).

Water management during closure and reclamation will involve maintaining contact water management systems on site until monitoring results demonstrate that water quality is acceptable for discharge of all contact water to the environment without further treatment. Once water quality meets the discharge criteria, the water management systems will be decommissioned to allow the water to naturally flow to the receiving environment. In 2018, a WRSF seepage analysis and Hydrodynamic modelling of Mammoth Lake were conducted to address NIRB project certificate Term and Condition no. 6 a). The objectives were to assess Mammoth Lake near-field water quality at WRSF seepage outlet post-closure and to evaluate seasonal water circulation patterns in Mammoth Lake resulting from effluent discharge. This analysis also aimed to predict and evaluate the water quality within Mammoth lake during operations and post-closure (Golder, 2018a). Results show that no modification to the water management strategy are needed concerning closure activities and sequence.

The key water management activities during mine closure are summarized in Table 3.7. Figure B.2 to Figure B.4 in Appendix B show the water management flowsheets during mine closure phases.

Table 3.7 Key Water Management Activities during Mine Closure

Mine Year	Figure	Key Water Management Activities and Sequence
Year 4 (2022) to Year 7 (2025)	A.3	• Fill the mined-out open pit with active pumping of water from Whale Tail Lake (South Basin) and treated Whale Tail WRSF pond water • Draw-down of the raised Northeast Sector and breaching of the Northeast Dike. The Northeast Pond water flows in the open pit and Lake A47, Lake A48, Lake A113, Pond A-P38, and A-P68 return to their natural water level and drainage patterns • Water from the A watershed stops to flow in the C watershed • Water from Whale Tail Lake (South Basin) stops flow through Whale Tail Lake (South Basin) Diversion Channel and to Lake A16 (Mammoth Lake) • Draw-down of the raised Whale Tail Lake (South Basin) to natural water level by pumping to Whale Tail Lake (North Basin). Lake A55, Lake A65, Lake A62, Lake A63, Lake A18, Pond A-P23, Lake A20, Lake A21, Lake A22, and Lake A45 return to their natural water level and drainage patterns. • The freshwater intake is moved in Whale Tail Lake (South Basin) • The monitoring of the site water quality starts • If necessary, the WTP is moved in the Whale Tail WRSF sector
Year 8 (2026) to Year 11 (2029)	A.4	• Fill Whale Tail Lake (North Basin) with active pumping water from Whale Tail Lake (South Basin). The pumping rate will be equivalent to the natural inflow to Whale Tail Lake (South Basin) to keep a constant and natural water level in Whale Tail Lake (South Basin) • The Whale Tail Attenuation Pond as well as the Industrial Sector and the Whale Tail Camp are no longer considered as contact water and now contribute to the re-establishment of the natural water level of the Whale Tail Lake (North Basin) • Whale Tail Dike and Mammoth Dike are breached when i) the South side and the North side of the Whale Tail Dike are at the same water level (i.e., at natural water level) and ii) the water quality monitoring results meet discharge criteria to allow water to naturally flow to the receiving environment Remove non-essential site infrastructure
Post-Closure	N/A	• Treated contact water from the Whale Tail WRSF Sector is discharged in Lake A16 (Mammoth Lake) through the existing diffuser system. This water is treated until water quality meet direct discharge criteria, following which the water management system is decommissioned • Breach the Whale Tail WRSF Dike once water quality monitoring results meet discharge criteria to allow water to naturally flow to the receiving environment • Remove non-essential site infrastructure

WRSF = Waste Rock Storage Facility; N/A = not applicable.

3.3.1 Open Pit and Refilling of Whale Tail Lake (North Basin)

Following completion of mining, the open pit will be filled with natural runoff and water pumped from Whale Tail Lake (South Basin) and treated water from the Whale Tail WRSF. During the summer of the

Year 4 (2022), the water accumulated in Whale Tail Lake (South Basin) over the years of operations will be pumped in the open pit. It will take approximately 4 years to refilling the pit with an assumed pumping rate of 45,000 m^3/day. Following this first pumping summer, the water elevation in Whale Tail Lake (South Basin) will be back to the baseline value (152.5 masl) and no outlets will be available for this basin as the Whale Tail Lake (South Basin) Diversion Channel is at the elevation 156 masl and the Whale Tail Dike is maintained in place. During the following years and until Whale Tail Lake (North Basin) reaches the same water elevation as Whale Tail Lake (South Basin) (i.e., baseline water surface elevation of 152.5 masl), the yearly accumulated water in Whale Tail Lake (South Basin) (i.e., over the baseline water surface elevation of 152.5 masl) is pumped to Whale Tail Lake (North Basin). At an assumed pumping rate of 45,000 m^3/day, the north and south parts of the Lake A17 (Whale Tail Lake) will be at the same elevation 8 years after the end of the operational phase and then the Whale Tail Dike and the Mammoth Dike will be reconnected when the water quality monitoring results meet discharge criteria to allow water to naturally flow to the receiving environment. Results from the 2018 modelling (Golder, 2018a) show that effluent discharge into Mammoth Lake will be well mixed. Steady-state untreated WRSF contact water released is predicted to meet SSWQO for arsenic at the edge of the mixing zone in the long-term, under the anticipated cover performance scenario (from the 4.7 meters cover of low arsenic leaching waste rock). The mixing zone in the Lake is predicted to range from 5 meters (under calm conditions in July when 6% of the seasonal seepage flow occurs), to 60 meters (under medium current conditions in June when 65% of the seasonal flow is predicted to occur at a more dilute arsenic concentration) from the entry point of this seepage into the Lake and along the plume centre line. Mammoth Lake is sensitive to cover material seepage quality, in turn sensitive to cover composition and WRSF pile contact water volume. Observational data at Meadowbank WRSF suggest that pile contact water volumes are substantially lower than originally predicted (Portage is 20 to 40% lower, Vault WRSF contact water is minimal compared to 178,000m^3 predicted at maximum footprint year) using similar modelling assumptions. Modelling results reflect a conservative chemical load estimate to Mammoth Lake in WRSF seepage that will be verified with monitoring.As per Type A Water Licence 2AM-WTP1826 Part E, conditions 7 and 8 , Agnico Eagle anticipates a site wide water balance and end pit water quality model update will be required for the Whale Tail Pit Site as part of the annual water management plan.

3.3.2 Contact Water Collection System

The complete contact water collection system will remain in place to collect surface runoff water and seepage from the mine site until the open pit is flooded. During this period of 4 years, the Industrial Sector and the Whale Tail Camp will be reclaimed and the non-essential site infrastructure will be removed. Thereafter, water in these sectors will no longer be collected and will contribute to the reestablishment of the natural elevation of Whale Tail Lake (North Basin). Although water might not meet the discharge criteria after 4 years, water will be controlled as the Whale Tail Dike and the Mammoth Dike will remain in place until Year 11 of the Project.

In the Whale Tail WRSF Sector, the contact water collection system will remain in place. Dikes will not be reconnected until the water quality in the flooded area meets Canadian Council of Ministers of the Environment (CCME) Water Quality Guidelines, baseline concentrations or appropriate site specific water quality objectives. Contingency for water treatment if required in closure is also accounted for in the closure plan.

Dike breaching will involve the removal of a portion of the dike to original ground levels. Consideration will be given to breach staging, with the above water portions of the dike/berm in the breach area removed during winter periods, when there will be little surface water flow, thereby minimizing the potential release of sediments to the neighbouring waterbodies. The remainder of the breach would be completed during the open water season following freshet so as to allow for the deployment of turbidity curtains to control potential releases of sediment.

Channel and sump closure involve the infrastructure will be re-contoured and/or surface treated according to site-specific conditions to minimize wind-blown dust and erosion from surface runoff, if required. This closure activity is intended to enhance site area development for re-colonization by native plants and wildlife habitat.

3.4 Water Balance

A water balance model was developed to assist in the evaluation of the proposed water management infrastructure, and estimation of the pumping requirements over the life of the mine (SNC, 2015) and under closure conditions (Whale Tail Interim Closure and Reclamation Plan).

The water balance was computed on a monthly time step based on mean annual climate conditions (Section 2.1.1) and the following conservative assumptions:

- snow sublimation is subtracted from snowfall on a monthly basis. If snow sublimation is greater than snowfall for a particular month, net snow value us zero for that month;
- snowfall between October and May, net of snow sublimation and rainfall, accumulates as snow and ice, and melts entirely in June;
- runoff is composed of precipitation and snow melt during the summer months (June to September);
- net inflow for a lake or pond is computed as runoff minus evapotranspiration (computed based on the watershed area minus lake or pond area) and lake evaporation (computed based on the lake or pond area); and
- change in storage was not accounted for, and net inflow is equal to net outflow.

The water management flow sheets are presented in Appendix B, and water balance results are presented in Appendix C for mean annual climate conditions during operations.

The estimated mean annual water input/output from each of various water management facilities under mean annual climate conditions during operations are summarized in Table 3.8.

Table 3.8 Estimated Mean Annual Volumes from Mine Site Water Balance

Item	Mean Annual Water Volume (m^3)[1]
Whale Tail Attenuation Pond	455,000
Whale Tail WRSF Contact water to Pond	112,000
Open Pit inflows	111,000
Freshwater Pumped from Lake C38 (Nemo Lake)	74,000
Treated Water from WTP to be Discharged to the Receiving environment	420,000
Freshwater Diverted from Watershed A to Watershed C	207,000
Freshwater from Whale Tail Lake (South Basin) to Lake A16 (Mammoth Lake)	1,873,000

[1] Volume rounded to the nearest thousand.

WRSF = Waste Rock Storage Facility.

SECTION 4 • REFERENCES

Agnico Eagle (Agnico Eagle Mines Limited). 2018a. Water Management Report and Plan, version 6, Meadowbank Division, March 2018.

Agnico Eagle (Agnico Eagle Mines Limited). 2018b. Whale Tail Project - Erosion Management Plan, Version 1, Meadowbank Divison, June 2018.

Agnico Eagle (Agnico Eagle Mines Limited). 2018c. Amaruq Stage 1 WRSF, Ore Stockpile 1 and Starter Pit Design Report and Drawings. Meadowbank Divison, June 2018.

Agnico Eagle (Agnico Eagle Mines Limited). 2017. Dewatering Dikes, Operation, Maintenance and Surveillance Manual, , Meadowbank Division, March 2017..

Agnico Eagle (Agnico Eagle Mines Limited). 2016. Final Environment Impact Statement (FEIS) Volumes 1 to 8, Whale Tail Pit Project, Meadowbank Division.

Agnico Eagle (Agnico Eagle Mines Limited). 2015. Water Management Report and Plan, version 3, Meadowbank Division, October 2015.

CCME (Canadian Council of Ministers of the Environment). 1999 (with updates to 2016). Canadian Environmental Quality Guidelines, 1999. Canadian Environmental Quality Guidelines Summary Table, with updates to 2016. Winnipeg, MB, Canada. Available at: http://st-ts.ccme.ca/. Accessed March 2016.

CCME. 2004. Canadian Water Quality Guidelines for the Protection of Aquatic Life: Phosphorus: Canadian Guidance Framework for the Management of Freshwater Systems. In: Canadian Environmental Quality Guidelines, 2004. Canadian Council of Ministers of the Environment, Winnipeg, MB, Canada.

CDA (Canadian Dam Association). 2014. Canadian Dam Association, Technical Bulletin: Application of Dam Safety Guidelines to Mining Dams.

DFO (Fisheries and Oceans Canada). 1995. Freshwater Intake End-of-Pipe Fish Screen Guideline, March, 1995.

Government of Canada. 2015. Historical Climate Data. Available online from: http://climate.weather.gc.ca/index_e.html

Health Canada. 2014. Guidelines for Canadian Drinking Water. Prepared by the Federal-Provincial-Territorial Committee on Drinking Water. Ottawa, ON, Canada.

ICOLD (International Commission of Large Dams) 1998. Dam Failures and Statistical Analysis. Bulletin 99.

IPCC. 2014. Summary for Policymakers. In: Climate Change 2014: Impacts, Adaptation, and Vulnerability. Part A: Global and Sectoral Aspects. Contribution of Working Group II to the Fifth Assessment Report of the Intergovernmental Panel on Climate Change [Field, C.B., V.R. Barros, D.J. Dokken, K.J. Mach, M.D. Mastrandrea, T.E. Bilir, M. Chatterjee, K.L. Ebi, Y.O. Estrada, R.C. Genova, B. Girma, E.S. Kissel, A.N. Levy, S. MacCracken, P.R. Mastrandrea, and L.L. White (eds.)]. Cambridge University Press, Cambridge, United Kingdom and New York, NY, USA, pp. 1-32

Knight Piesold. 2015. Agnico Eagle Mines Ltd.: Meadowbank Division – Whale Tail Pit – Permafrost and Hydrogeological Characterization, File No.:NB101-00622/04-A.01

NWT Water Board. 1992. Guidelines for the Discharge of Treated Municipal Wastewater in the Northwest Territories.

Overland, J.E., M. Wang, J.E. Walsh, and J.C. Stroeve. 2013. Future Arctic climate changes: Adaptation and mitigation time scales, Earth's Future, 2, doi:10.1002/2013EF000162.

PhotoSat Information Ltd. (PhotoSat). 2015. PhotoSat Stereo Satellite Elevation Mapping Project Report. Reference No. 3631.

SNC (SNC Lavalin Inc.). 2018a. Whale Tail Dike Detailed Design Report.

SNC (SNC Lavalin Inc.). 2018b. Design criteria – Basins and Pumps. Technical note no. 651298-8000-40EC-0001_00, April 2018.

SNC (SNC Lavalin Inc.). 2018c. Amaruq Freeboard Study. Technical note no. 651298-2600-4HER-0002_01, June 2018.

SNC (SNC Lavalin Inc.). 2017. Preliminary design of Mammoth Dike. Technical note no. 645003-3000-4GER-0001_01, August 2017.

SNC (SNC Lavalin Inc.). 2015. Whale Tail Pit Project Permitting Level Engineering, Geotechnical and Water Management Infrastructure, A Technical Report Submitted to Agnico Eagle Mines Ltd. by SNC Lavalin, December 2015.

APPENDIX A • YEARLY SITE LAYOUT PLANS

Figure A.1 **Yearly Site Layout Plan (Year -1: 2018)**

Figure A.2 **Yearly Site Layout Plan (Year 1: 2019)**

Figure A.3 **Yearly Site Layout Plan (Year 4: 2022)**

Figure A.4 **Yearly Site Layout Plan (Year 11: 2029)**

Figure A.5 **WRSF, Starter Pit and Ore Stockpile Plan View, Roads and Pads Construction**

NO. DESSIN
DRAWING NO.

FORMAT ANSI C

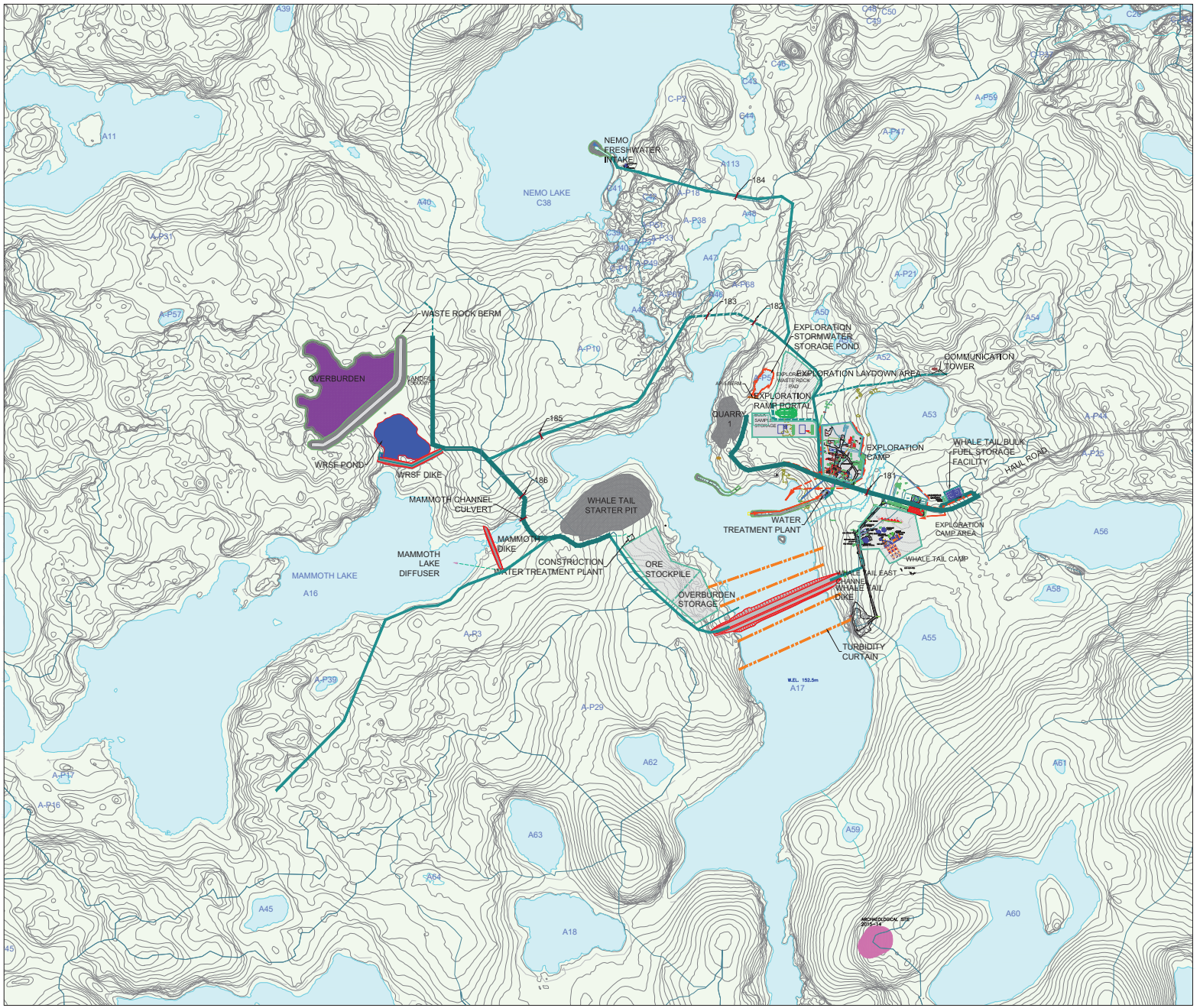

PLAN CLÉ
KEY PLAN

NOTES GÉNÉRALES / GENERAL NOTES

LEGEND

- ROAD
- TEMPORARY ROAD
- NATURAL WATERSHED
- COLLECTION CHANNEL
- CULVERT
- INTAKE WATER PIPE
- CONTACT WATER PIPE
- FRESHWATER PIPE
- TURBIDITY BARRIER
- DIKE
- ARCHAEOLOGICAL SITE
- POND / SUMP

L'INFORMATION CI-CONTENUE EST LA PROPRIÉTÉ DE AGNICO-EAGLE LTÉE ET DOIT ÊTRE RETOURNÉE SUR DEMANDE, SANS AUTORISATION ÉCRITE PRÉALABLE, TOUTE TRANSMISSION DE COPIE(S) À AUTRUI ET TOUTE UTILISATION AUTRE QUE CELLE POUR LAQUELLE L'INFORMATION EST PRÊTE SONT INTERDITES. © AGNICO-EAGLE LTÉE

THE INFORMATION HERE ON IS THE PROPERTY OF AGNICO-EAGLE LTD. AND MUST BE RETURNED UPON REQUEST. WITHOUT WRITTEN PERMISSION, ANY COPYING TRANSMITTAL TO OTHERS AND ANY USE EXCEPT THAT FOR WHICH IT IS LOANED ARE PROHIBITED. © AGNICO-EAGLE LTD.

DESSINS EN RÉFÉRENCE / REFERENCE DRAWINGS

TITRE / TITLE	# DWG
–	–
–	–
–	–
–	–

AGNICO EAGLE

REV.	DATE	DESCRIPTION	PAR/BY	APP.	CLIENT

REVISIONS

TITRE / TITLE

AGNICO–EAGLE – MEADOWBANK DIVISION
WHALE TAIL PROJET
WM

YEARLY SITE LAYOUT PLAN
(YEAR –1:2018)

DESSINÉ PAR / DRAWN BY: J.CRETE	DATE: 2018–05–04
VÉRIFIÉ PAR / CHECKED BY:	
APPROUVÉ PAR / APPROVED BY:	
ÉCHELLE / SCALE:	DATE:
NO. DESSIN / DRAWING NO.: 2018	
NO. PROJET / PROJECT NO.:	REVISION: / FEUILLE / SHT: 1 / 1

AE–CART–ANSI C

FILE NO. .DWG

N:\Projet\Vmonroy\050 Studies\6108 Permitting Concepts\010 Info by area\600 General\00 Drawings\6108-II WHL_001_00R\6108-600-210-001_R3(2018) - Standard\6108-600-210-001_R3(2018).dwg, 04 Mai 2018

NO. DESSIN
DRAWING NO.

FORMAT ANSI C

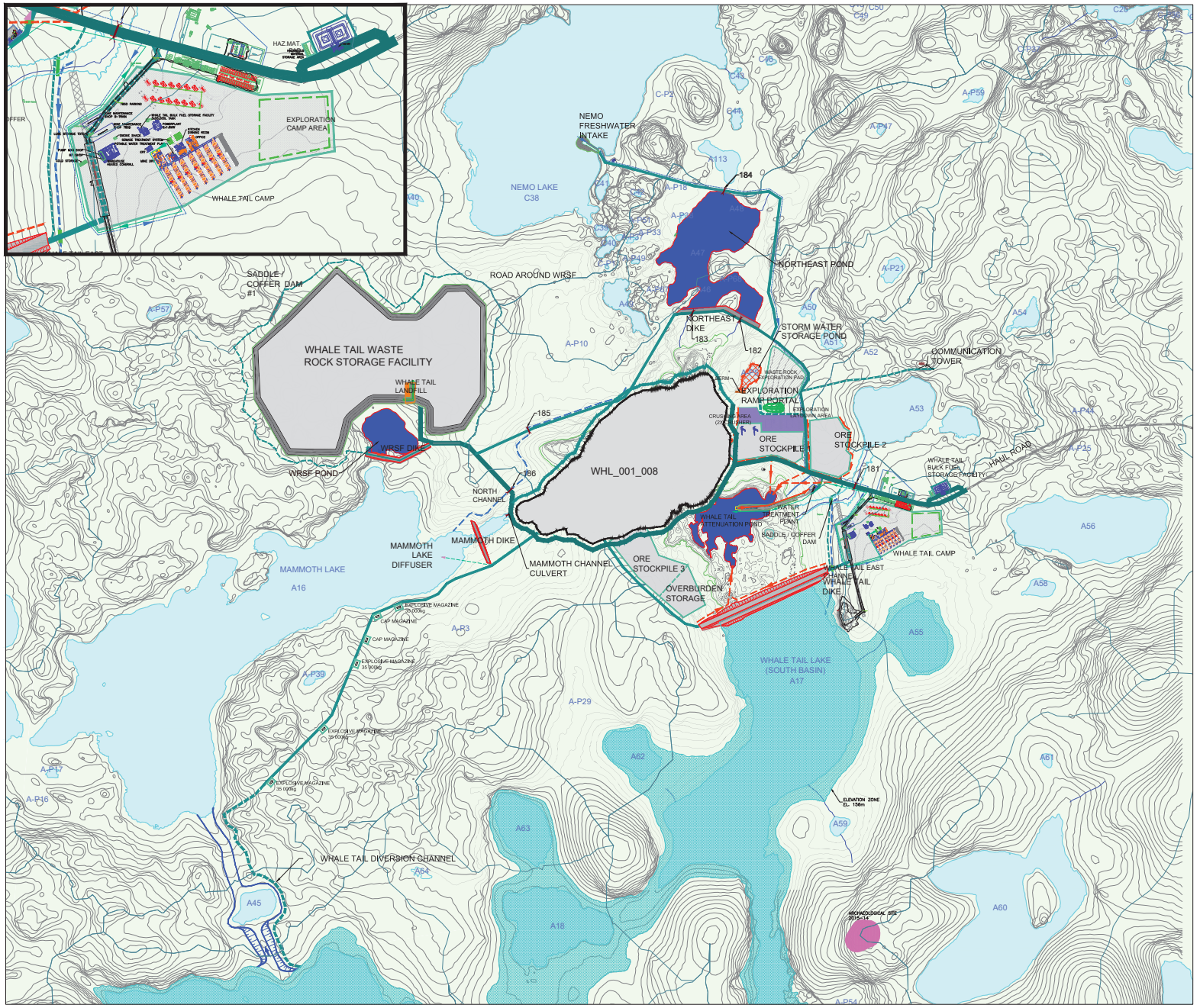

PLAN CLÉ
KEY PLAN

NOTES GÉNÉRALES / GENERAL NOTES

LEGEND

- WHALE TAIL LAKE(SOUTH BASIN) FLOODED LIMIT (WATER LEVEL 156.0m)
- ROAD
- TEMPORARY ROAD
- NATURAL WATERSHED
- DIVERSION CHANNEL
- COLLECTION CHANNEL
- CULVERT
- INTAKE WATER PIPE
- CONTACT WATER PIPE
- FRESHWATER PIPE
- DIKE
- POND / SUMP
- ARCHAEOLOGICAL SITE

L'INFORMATION CI-CONTENUE EST LA PROPRIÉTÉ DE AGNICO-EAGLE LTÉE ET DOIT ÊTRE RETOURNÉE SUR DEMANDE. SANS AUTORISATION ÉCRITE PRÉALABLE, TOUTE TRANSMISSION DE COPIE(S) À AUTRUI ET TOUTE UTILISATION AUTRE QUE CELLE POUR LAQUELLE L'INFORMATION EST PRÊTE SONT INTERDITES. © AGNICO-EAGLE LTÉE

THE INFORMATION HERE ON IS THE PROPERTY OF AGNICO-EAGLE LTD. AND MUST BE RETURNED UPON REQUEST. WITHOUT WRITTEN PERMISSION, ANY COPYING TRANSMITTAL TO OTHERS AND ANY USE EXCEPT THAT FOR WHICH IT IS LOANED ARE PROHIBITED.
© AGNICO-EAGLE LTD.

DESSINS EN RÉFÉRENCE / REFERENCE DRAWINGS

TITRE / TITLE	# DWG
_	_
_	_
_	_
_	_

AGNICO EAGLE

REV.	DATE	DESCRIPTION	PAR/BY	APP.	CLIENT

REVISIONS

TITRE / TITLE

AGNICO–EAGLE – MEADOWBANK DIVISION
WHALE TAIL PROJET
WM

YEARLY SITE LAYOUT PLAN
(YEAR 1:2019)

DESSINÉ PAR DRAWN BY: J.CRETE	DATE 2018–05–04
VÉRIFIÉ PAR CHECKED BY	
APPROUVÉ PAR APPROVED BY	
ÉCHELLE SCALE	DATE
NO. DESSIN DRAWING NO.	2019
NO. PROJET PROJECT NO.	REVISION / FEUILLE / SHT 1 / 1

AE–CART–ANSI C

FILE NO. .DWG

N:\Projet\Vmonroy\050 Studies\0108 Permitting Concepts\010 Info by area\600 General\00 Drawings\0108-II WHL_001_008\0108-600-210-002_R3(2019) - Standard\0108-600-210-002_R3(2019).dwg, 04 Mai 2018

NO. DESSIN
DRAWING NO.

FORMAT ANSI C

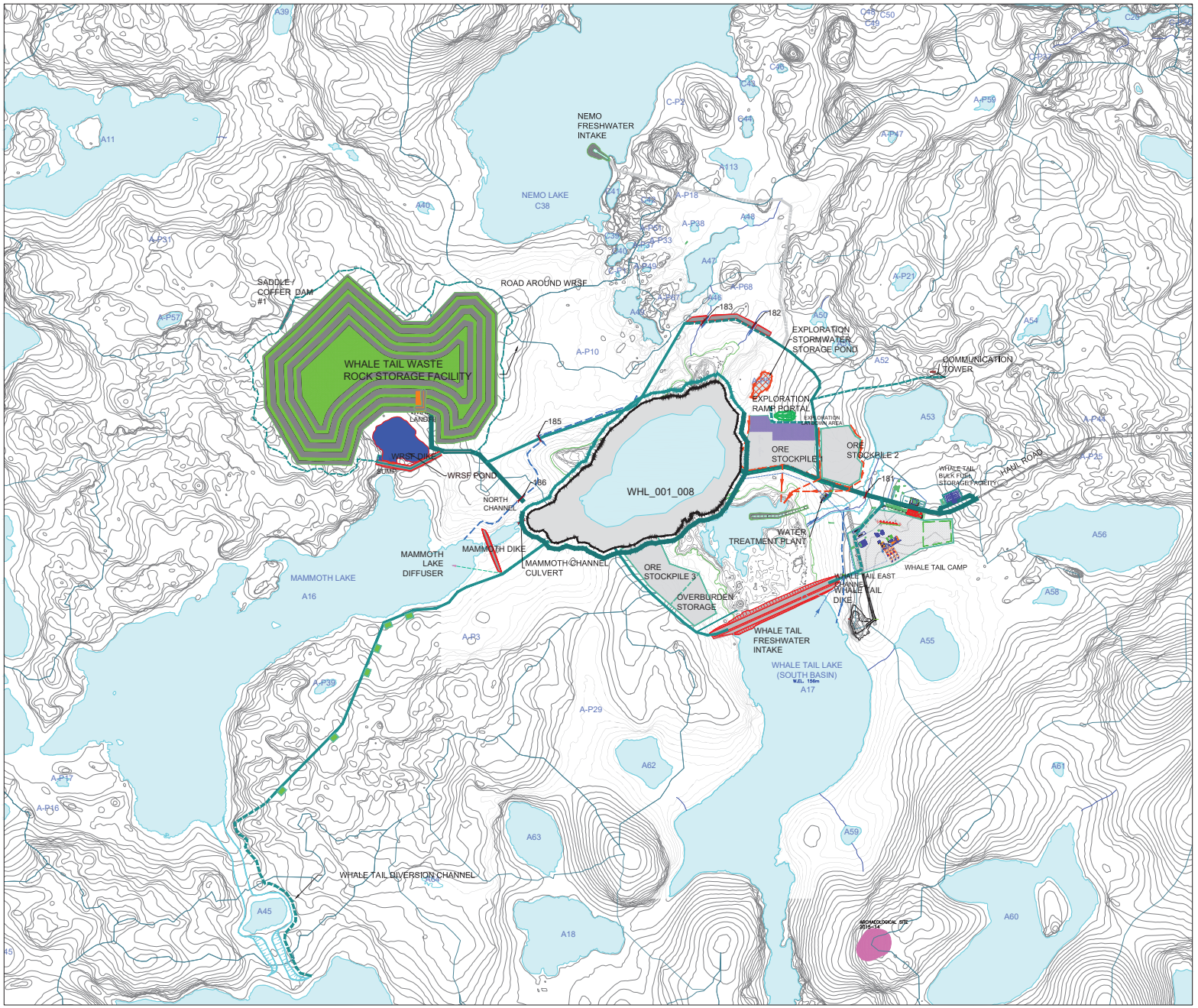

PLAN CLÉ
KEY PLAN

NOTES GÉNÉRALES / GENERAL NOTES

LEGEND

- CLOSED FACILITY
- ROAD
- TEMPORARY ROAD
- SCARIFIED ROAD & ACCESS
- NATURAL WATERSHED
- DIVERSION CHANNEL
- COLLECTION CHANNEL
- CULVERT
- INTAKE WATER PIPE
- CONTACT WATER PIPE
- FRESHWATER PIPE
- DIKE
- POND / SUMP
- ARCHAEOLOGICAL SITE

L'INFORMATION CI-CONTENUE EST LA PROPRIÉTÉ DE AGNICO-EAGLE LTÉE ET DOIT ÊTRE RETOURNÉE SUR DEMANDE. SANS AUTORISATION ÉCRITE PRÉALABLE, TOUTE TRANSMISSION DE COPIE(S) À AUTRUI ET TOUTE UTILISATION AUTRE QUE CELLE POUR LAQUELLE L'INFORMATION EST PRÊTÉE SONT INTERDITES. © AGNICO-EAGLE LTÉE

THE INFORMATION HERE ON IS THE PROPERTY OF AGNICO-EAGLE LTD. AND MUST BE RETURNED UPON REQUEST. WITHOUT WRITTEN PERMISSION, ANY COPYING TRANSMITTAL TO OTHERS AND ANY USE EXCEPT THAT FOR WHICH IT IS LOANED ARE PROHIBITED. © AGNICO-EAGLE LTD.

DESSINS EN RÉFÉRENCE / REFERENCE DRAWINGS

TITRE / TITLE	# DWG
–	–
–	–
–	–
–	–

AGNICO EAGLE

REV.	DATE	DESCRIPTION	PAR/BY	APP.	CLIENT

REVISIONS

TITRE / TITLE
AGNICO–EAGLE – MEADOWBANK DIVISION
WHALE TAIL PROJET
WM

YEARLY SITE LAYOUT PLAN
(YEAR 4:2022)

DESSINÉ PAR / DRAWN BY	J.CRETE	DATE 2018–05–04
VERIFIÉ PAR / CHECKED BY		
APPROUVÉ PAR / APPROVED BY		
ÉCHELLE / SCALE	DATE	
NO. DESSIN / DRAWING NO.	2022	
NO. PROJET / PROJECT NO.	REVISION	FEUILLE / SHT 1 / 1

AE–CART–ANSI C

FILE NO. .DWG

N:\Projet\Amaruq\050 Studies\6108 Permitting Concepts\010 Info by area\600 General\00 Drawings\6108–II WHL_001_008\6108–600–210–003_R3(2022) – Standard\6108–600–210–003_R3(2022).dwg, 04 Mai 2018

NO. DESSIN
DRAWING NO.

FORMAT ANSI C

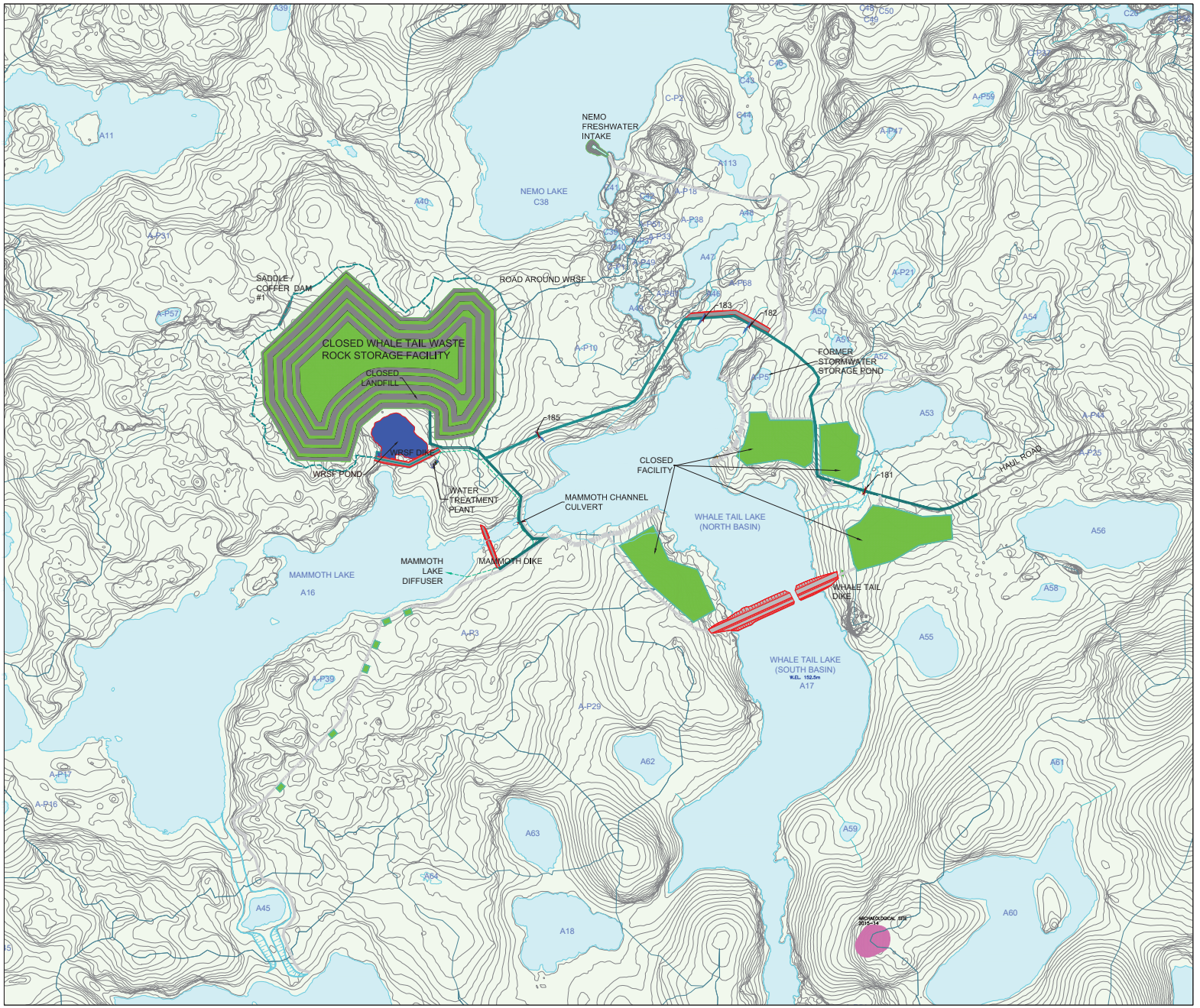

PLAN CLÉ
KEY PLAN

NOTES GÉNÉRALES / GENERAL NOTES

LEGEND

- CLOSED FACILITY
- ROAD
- TEMPORARY ROAD
- SCARIFIED ROAD & ACCESS
- NATURAL WATERSHED
- CULVERT
- FRESHWATER PIPE
- DIKE
- POND / SUMP
- ARCHAEOLOGICAL SITE

L'INFORMATION CI-CONTENUE EST LA PROPRIÉTÉ DE AGNICO-EAGLE LTÉE ET DOIT ÊTRE RETOURNÉE SUR DEMANDE. SANS AUTORISATION ÉCRITE PRÉALABLE, TOUTE TRANSMISSION DE COPIE(S) À AUTRUI ET TOUTE UTILISATION AUTRE QUE CELLE POUR LAQUELLE L'INFORMATION EST PRÊTE SONT INTERDITES. © AGNICO-EAGLE LTÉE

THE INFORMATION HERE ON IS THE PROPERTY OF AGNICO-EAGLE LTD. AND MUST BE RETURNED UPON REQUEST. WITHOUT WRITTEN PERMISSION, ANY COPYING THEREOF TO OTHERS AND ANY USE EXCEPT THAT FOR WHICH IT IS LOANED ARE PROHIBITED. © AGNICO-EAGLE LTD.

DESSINS EN RÉFÉRENCE / REFERENCE DRAWINGS

TITRE / TITLE	# DWG

AGNICO EAGLE

REV.	DATE	DESCRIPTION	PAR/BY	APP.	CLIENT

REVISIONS

TITRE / TITLE

AGNICO–EAGLE – MEADOWBANK DIVISION
WHALE TAIL PROJET
WM

YEARLY SITE LAYOUT PLAN
(YEAR 11:2029)

DESSINÉ PAR / DRAWN BY: J.CRETE	DATE: 2018–05–04
VERIFIÉ PAR / CHECKED BY	
APPROUVÉ PAR / APPROVED BY	
ÉCHELLE / SCALE	DATE
NO. DESSIN / DRAWING NO.	2029
NO. PROJET / PROJECT NO.	REVISION / FEUILLE / SHT: 1 / 1

AE–CART–ANSI C

FILE NO. .DWG

N:\Projet\Vmorva\050 Studies\0108 Permitting Concepts\010 Info by area\000 General\00 Drawings\0108-II WHL_001_OGR\0108-600-210-004_R3(2029) - Standard\0108-600-210-004_R3(2029).dwg, 04 Mai 2018

NO. DESSIN
DRAWING NO.

FORMAT ANSI B–11x17

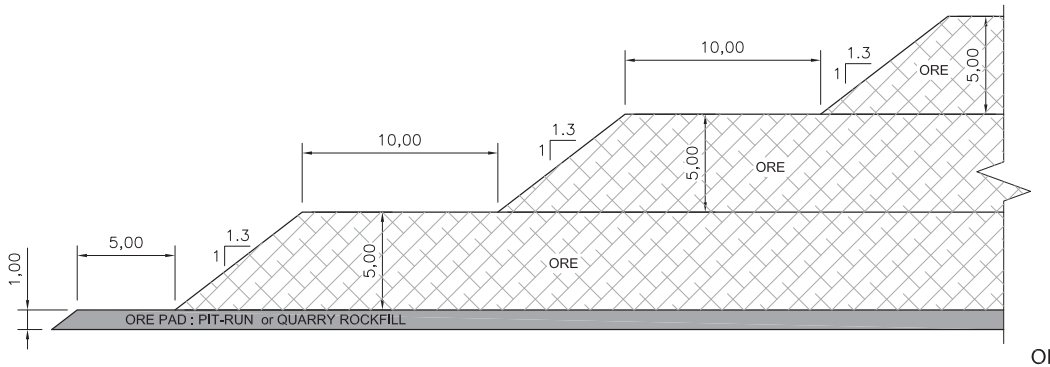

TYPICAL SECTION
SCL 1:250 (1H:1V)

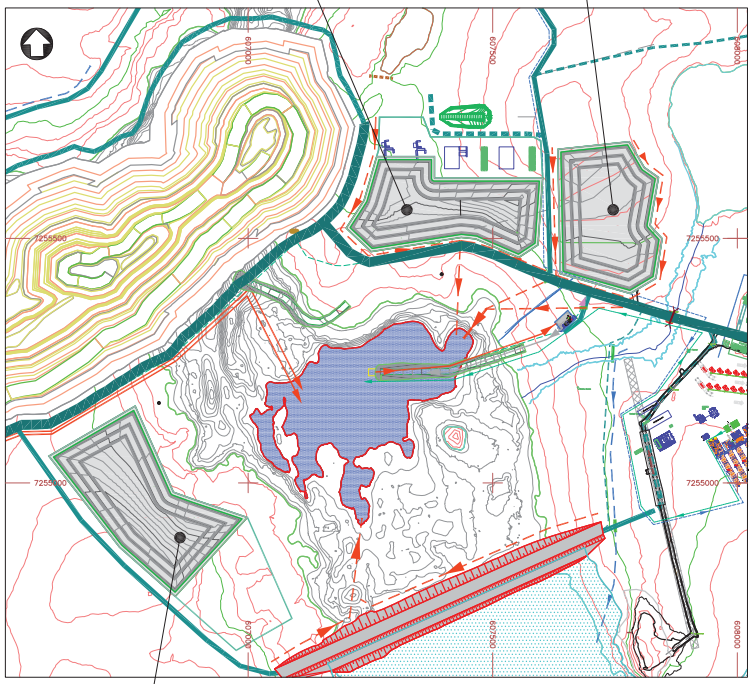

PLAN VIEW
SCL 1:10000

ISSUED FOR PERMITTING
DATE : 2016-05-03

_	_				
_	_				
_	_				
_	_				
_	_	0	ISSUED FOR PERMITTING	2016-05-03	J.C.
TITRE / TITLE	# DWG	REV	DESCRIPTION	DATE	PAR BY
DESSINS EN RÉFÉRENCE / REFERENCE DRAWINGS		REVISIONS			

AGNICO EAGLE

Golder Associates

DESSINÉ PAR DRAWN BY	J.CRETE	DATE 2016-05-02
VÉRIFIÉ PAR CHECKED BY	F.PETRUCCI	2016-05-03
APPROUVÉ PAR APPROVED BY	S. OUELLET	2016-05-03
No. PROJET PROJECT NO.	6108	
DATE	2016-05-02	

L'INFORMATION CI-CONTENUE EST LA PROPRIÉTÉ DE AGNICO-EAGLE LTÉE ET NE DOIT ÊTRE REPRODUITE SOUS QUELQUE FORME QUE CE SOIT, SANS AUTORISATION ÉCRITE PRÉALABLE. TOUTE REPRODUCTION DE COPIE(S) À AUTRUI ET TOUTE UTILISATION AUTRE QUE CELLE POUR LAQUELLE L'INFORMATION EST MISE SONT INTERDITES.
© AGNICO-EAGLE LTÉE
THE INFORMATION HERE ON IS THE PROPERTY OF AGNICO-EAGLE LTD. AND MUST BE RETURNED UPON REQUEST. WITHOUT WRITTEN PERMISSION, ANY COPYING, TRANSMITTAL TO OTHERS AND ANY USE EXCEPT THAT FOR WHICH IT IS LOANED ARE PROHIBITED.
© AGNICO-EAGLE LTD.

TITRE / TITLE
AGNICO–EAGLE – MEADOWBANK DIVISION
WHALE TAIL PIT PROJECT
ORE STOCK PILE #1, #2, #3
ORE PAD MAXIMUM CAPACITY
PLAN VIEW & TYPICAL SECTION

ÉCHELLE/ SCALE	A/S	FICHIER FILE	.DWG	
No. DESSIN/ DRAWING NO.	6108–687–210–001	REVISION	0	FEUILLE/SHT 1 / 1

AE–CART–ANSI B

N:\Projet\Amaruq\050 Studies\6108 Permitting Concepts\010 Info by area\687 Ore Stockpile\00 Drawings\6108–687–210–001_R0(OreStockPiles).dwg, 03 Mai 2016

APPENDIX B • WATER MANAGEMENT SCHEMATIC FLOW SHEETS

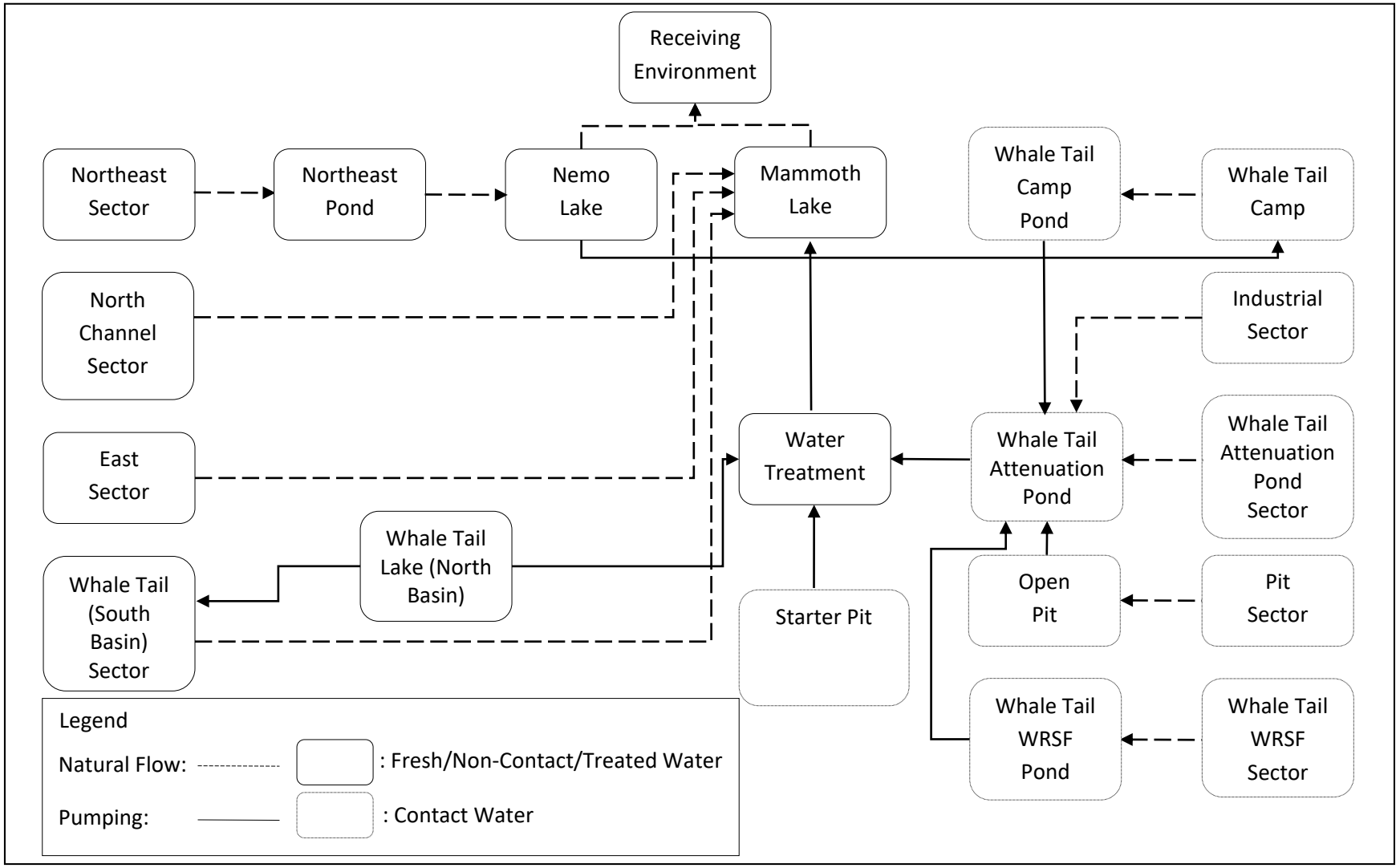

Figure B.1 Water Management Flowsheet during Construction and Operations

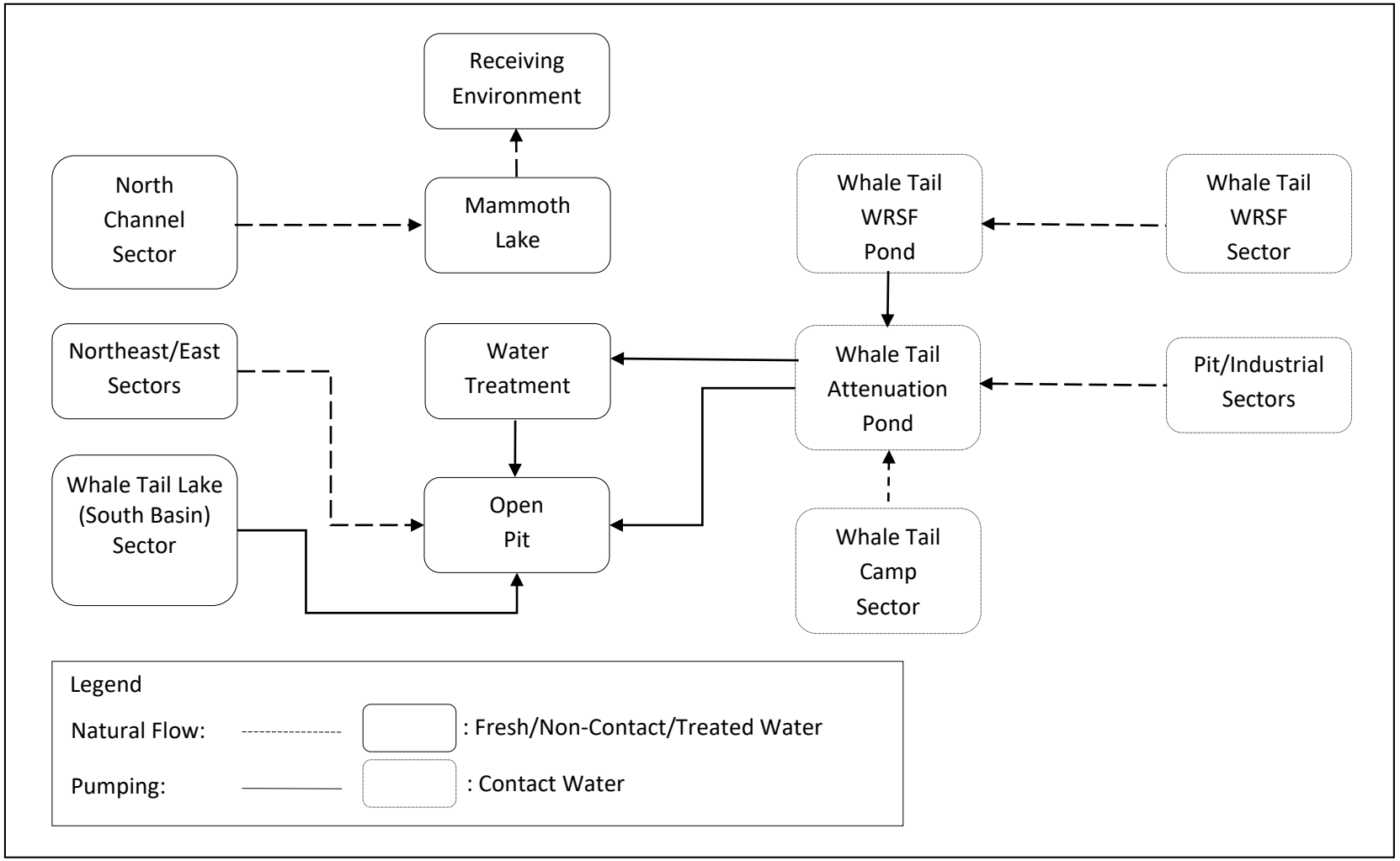

Figure B.2 Water Management Flowsheet during Closure (Year 4 [2022] to Year 7 [2025])

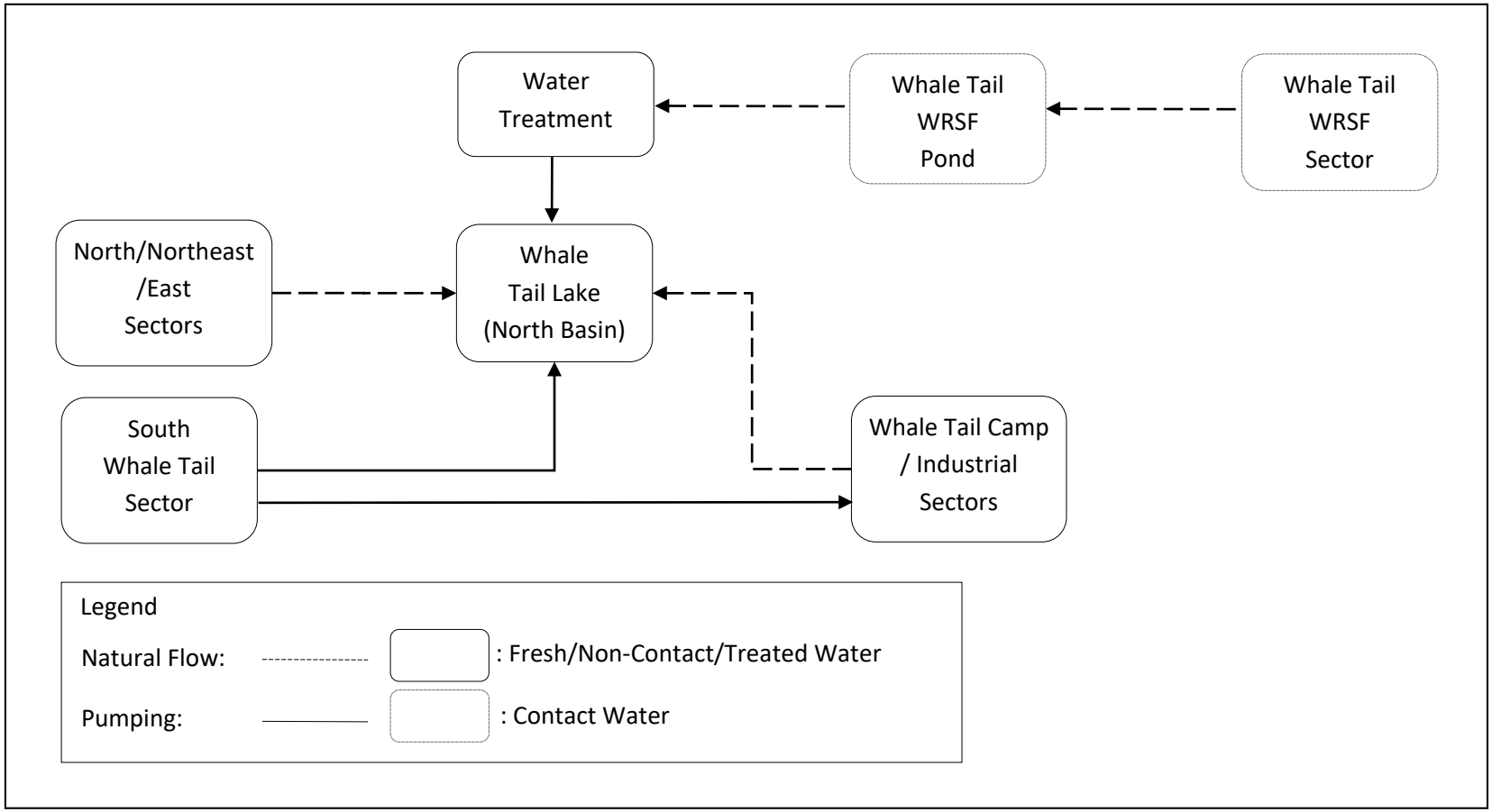

Figure B.3 Water Management Flowsheet during Closure (Year 8 [2026] to Year 11 [2029])

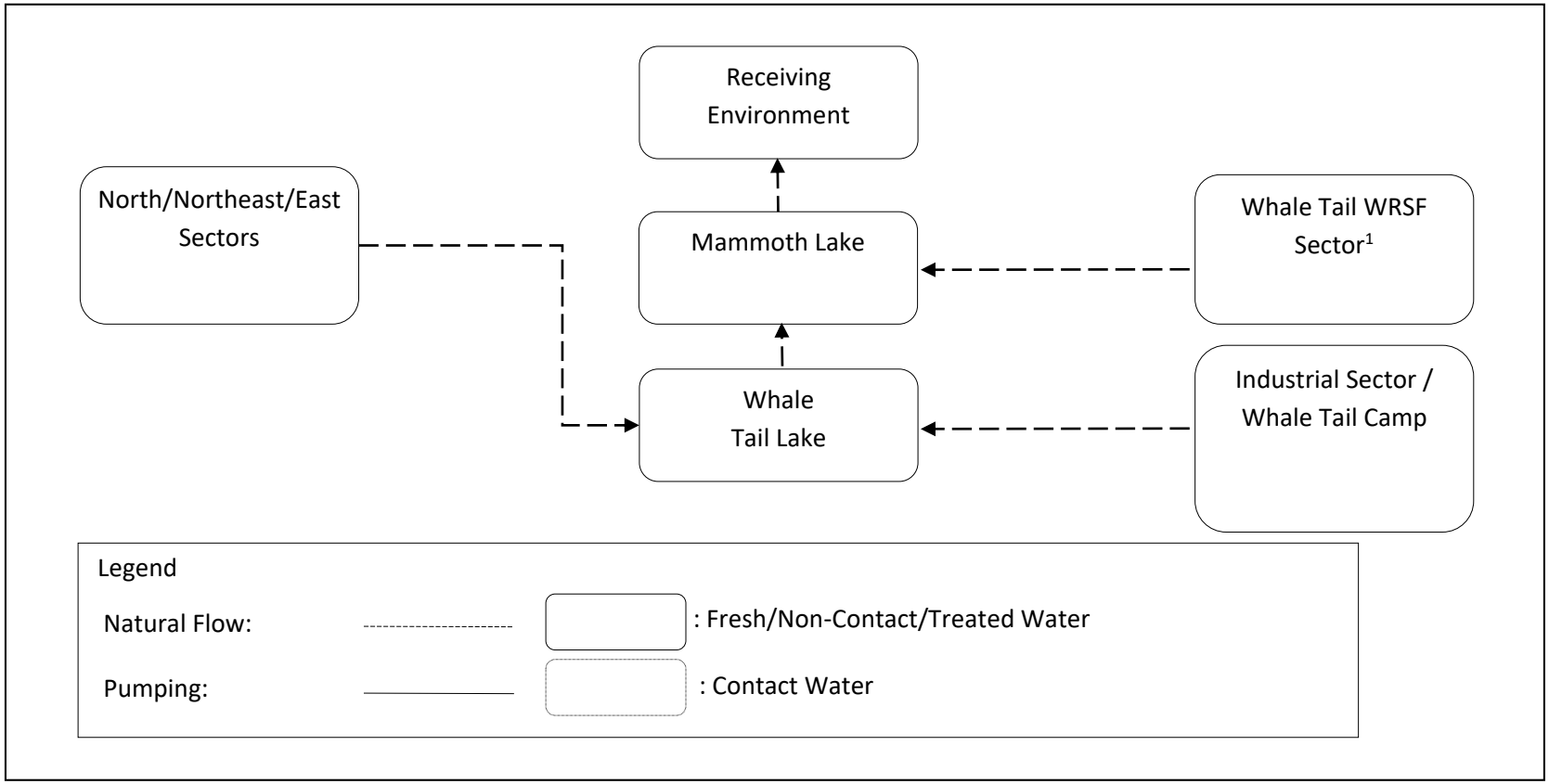

Figure B.4 Water Management Flowsheet during the Post-Closure

[1] Breaching of Whale Tail WRSF Dike may be delayed if water treatment is required

APPENDIX C • SELECTED YEARLY WATER BALANCE DATA

Water balances for each storage facilities were extracted from the permitting level engineering report (SNC 2015) under mean annual climate conditions for the operational phase. Design criteria and considerations can be found in the permitting level engineering report (SNC 2015), and in the FEIS, Volume 2, Appendix 2-J.

Table C.1 Whale Tail Waste Rock Storage Facility Pond Water Balance

Month	Temperature [°C]	Snowfall [m³]	Max Snow Sublimation [m³]	Net Inflow from Snow [m³]	Rainfall [m³]	Total Runoff [m³]	Other Qin [m³]	Total Inflow [m³]	Lake Evaporation [m³]	Maximum Evapotrans-piration [m³]	Total Inflow Net from Evaporation [m³]	Pumping out [m³]	Total Outflow [m³]
Jan	-31.3	7,536	9,864	0	19	0	0	0	0	0	0	0	0
Feb	-31.1	6,840	9,864	0	35	0	0	0	0	0	0	0	0
Mar	-26.3	9,981	9,864	117	31	0	0	0	0	0	0	0	0
Apr	-17.0	14,561	9,864	4,697	460	0	0	0	0	0	0	0	0
May	-6.4	8,871	9,864	0	5,663	0	0	0	0	0	0	0	0
Jun	4.9	3,285	0	3,285	19,847	65,478	0	65,478	3	3,110	62,365	62,365	62,365
Jul	11.6	6	0	6	42,199	42,205	0	42,205	30	35,062	7,112	7,112	7,112
Aug	9.8	671	0	671	46,176	46,847	0	46,847	31	35,486	11,330	11,330	11,330
Sep	3.1	7,465	0	7,465	37,987	45,452	0	45,452	12	13,961	31,478	31,478	31,478
Oct	-6.5	24,601	9,864	14,737	6,987	0	0	0	0	35	0	0	0
Nov	-19.3	18,180	9,864	8,316	213	0	0	0	0	0	0	0	0
Dec	-26.8	10,907	9,864	1,043	27	0	0	0	0	0	0	0	0
Year	-11.3	112,903	78,912	40,337	159,644	199,982	0	199,982	76	84,655	112,285	112,285	112,285

°C = degrees Celsius; m^3 = cubic metres.

Table C.2 Whale Tail Camp Pond Water Balance

Month	Temperature [°C]	Snowfall [m³]	Max Snow Sublimation [m³]	Net Inflow from Snow [m³]	Rainfall [m³]	Total Runoff [m³]	Other Qin [m³]	Total Inflow [m³]	Lake Evaporation [m³]	Maximum Evapotrans-piration [m³]	Total Inflow Net from Evaporation [m³]	Pumping out [m³]	Total Outflow [m³]
Jan	-31.3	1,623	2,124	0	4	0	0	0	0	0	0	0	0
Feb	-31.1	1,473	2,124	0	7	0	0	0	0	0	0	0	0
Mar	-26.3	2,149	2,124	25	7	0	0	0	0	0	0	0	0
Apr	-17.0	3,135	2,124	1,011	99	0	0	0	0	0	0	0	0
May	-6.4	1,910	2,124	0	1,219	0	0	0	0	0	0	0	0
Jun	4.9	707	0	707	4,274	14,099	0	14,099	12	666	13,421	13,421	13,421
Jul	11.6	1	0	1	9,087	9,088	0	9,088	139	7,507	1,442	1,442	1,442
Aug	9.8	145	0	145	9,943	10,088	0	10,088	141	7,598	2,349	2,349	2,349
Sep	3.1	1,607	0	1,607	8,180	9,787	0	9,787	55	2,989	6,742	6,742	6,742
Oct	-6.5	5,297	2,124	3,173	1,504	0	0	0	0	8	0	0	0
Nov	-19.3	3,915	2,124	1,791	46	0	0	0	0	0	0	0	0
Dec	-26.8	2,349	2,124	225	6	0	0	0	0	0	0	0	0
Year	-11.3	24,311	16,992	8,686	34,376	43,062	0	43,062	347	18,768	23,954	23,954	23,954

°C = degrees Celsius; m^3 = cubic metres.

Table C.3 Whale Tail Pit Water Balance (Groundwater not considered)

Month	Temperature [°C]	Snowfall [m³]	Max Snow Sublimation [m³]	Net Inflow from Snow [m³]	Rainfall [m³]	Total Runoff [m³]	Other Qin [m³]	Total Inflow [m³]	Lake Evaporation [m³]	Maximum Evapotrans-piration [m³]	Total Inflow Net from Evaporation [m³]	Pumping out [m³]	Total Outflow [m³]
Jan	-31.3	7,639	9,999	0	20	0	0	0	0	0	0	0	0
Feb	-31.1	6,933	9,999	0	35	0	0	0	0	0	0	0	0
Mar	-26.3	10,118	9,999	119	32	0	0	0	0	0	0	0	0
Apr	-17.0	14,760	9,999	4,761	466	0	0	0	0	0	0	0	0
May	-6.4	8,992	9,999	0	5,741	0	0	0	0	0	0	0	0
Jun	4.9	3,330	0	3,330	20,118	66,374	0	66,374	176	3,097	63,101	63,101	63,101
Jul	11.6	6	0	6	42,776	42,783	0	42,783	1,984	34,912	5,887	5,887	5,887
Aug	9.8	680	0	680	46,808	47,488	0	47,488	2,008	35,334	10,146	10,146	10,146
Sep	3.1	7,567	0	7,567	38,507	46,074	0	46,074	790	13,901	31,382	31,382	31,382
Oct	-6.5	24,938	9,999	14,939	7,082	0	0	0	2	35	0	0	0
Nov	-19.3	18,429	9,999	8,430	216	0	0	0	0	0	0	0	0
Dec	-26.8	11,056	9,999	1,057	27	0	0	0	0	0	0	0	0
Year	-11.3	114,449	79,992	40,889	161,829	202,719	0	202,719	4,960	87,280	110,516	110,516	110,516

°C = degrees Celsius; m^3 = cubic metres.

Table C.4 Whale Tail Attenuation Pond Water Balance

Month	Temperature [°C]	Snowfall [m³]	Max Snow Sublimation [m³]	Net Inflow from Snow [m³]	Rainfall [m³]	Total Runoff [m³]	Pumping In from Dump, Pit and Exploration Camp [m³]	Total Inflow [m³]	Lake Evaporation [m³]	Maximum Evapotrans-piration [m³]	Total Inflow Net from Evaporation [m³]	Pumping out [m³]	Total Outflow [m³]
Jan	-31.3	6,319	8,271	0	16	0	0	0	0	0	0	0	0
Feb	-31.1	5,735	8,271	0	29	0	0	0	0	0	0	0	0
Mar	-26.3	8,369	8,271	98	26	0	0	0	0	0	0	0	0
Apr	-17.0	12,209	8,271	3,938	385	0	0	0	0	0	0	0	0
May	-6.4	7,438	8,271	0	4,749	0	0	0	0	0	0	0	0
Jun	4.9	2,754	0	2,754	16,641	54,903	138,886	193,789	251	2,528	191,011	191,011	191,011
Jul	11.6	5	0	5	35,384	35,389	14,441	49,830	2,826	28,496	18,508	18,508	18,508
Aug	9.8	563	0	563	38,719	39,282	23,825	63,107	2,860	28,841	31,406	31,406	31,406
Sep	3.1	6,259	0	6,259	31,852	38,111	69,603	107,714	1,125	11,347	95,242	95,242	95,242
Oct	-6.5	20,628	8,271	12,357	5,858	0	0	0	3	29	0	0	0
Nov	-19.3	15,244	8,271	6,973	179	0	0	0	0	0	0	0	0
Dec	-26.8	9,146	8,271	875	23	0	0	0	0	0	0	0	0
Year	-11.3	94,670	66,168	33,823	133,862	167,685	246,755	414,441	7,065	71,241	336,166	336,166	336,166

°C = degrees Celsius; m^3 = cubic metres.

Table C.5 Northeast Pond Water Balance

Month	Temperature [°C]	Snowfall [m³]	Max Snow Sublimation [m³]	Net Inflow from Snow [m³]	Rainfall [m³]	Total Runoff [m³]	Other Qin [m³]	Total Inflow [m³]	Lake Evaporation [m³]	Maximum Evapotrans-piration [m³]	Total Inflow Net from Evaporation [m³]	Pumping out [m³]	Total Outflow [m³]
Jan	-31.3	13,917	18,216	0	36	0	0	0	0	0	0	0	0
Feb	-31.1	12,631	18,216	0	64	0	0	0	0	0	0	0	0
Mar	-26.3	18,432	18,216	216	58	0	0	0	0	0	0	0	0
Apr	-17.0	26,889	18,216	8,673	849	0	0	0	0	0	0	0	0
May	-6.4	16,382	18,216	0	10,459	0	0	0	0	0	0	0	0
Jun	4.9	6,066	0	6,066	36,651	120,918	0	120,918	0	5,746	115,173	0	115,173
Jul	11.6	12	0	12	77,929	77,941	0	77,941	0	64,768	13,173	0	13,173
Aug	9.8	1,239	0	1,239	85,274	86,514	0	86,514	0	65,551	20,962	0	20,962
Sep	3.1	13,785	0	13,785	70,151	83,936	0	83,936	0	25,790	58,147	0	58,147
Oct	-6.5	45,432	18,216	27,216	12,902	0	0	0	0	65	0	0	0
Nov	-19.3	33,574	18,216	15,358	394	0	0	0	0	0	0	0	0
Dec	-26.8	20,142	18,216	1,926	50	0	0	0	0	0	0	0	0
Year	-11.3	208,500	145,728	74,492	294,817	369,309	0	369,309	0	161,920	207,454	0	207,454

°C = degrees Celsius; m^3 = cubic metres.

Table C.6 Whale Tail Lake (South Basin) Water Balance

Month	Temperature [°C]	Snowfall [m³]	Max Snow Sublimation [m³]	Net Inflow from Snow [m³]	Rainfall [m³]	Total Runoff [m³]	Other Qin [m³]	Total Inflow [m³]	Lake Evaporation [m³]	Maximum Evapotrans-piration [m³]	Total Inflow Net from Evaporation [m³]	Pumping out [m³]	Total Outflow [m³]
Jan	-31.3	166,428	217,845	0	429	0	0	0	0	0	0	0	0
Feb	-31.1	151,050	217,845	0	768	0	0	0	0	0	0	0	0
Mar	-26.3	220,430	217,845	2,585	692	0	0	0	0	0	0	0	0
Apr	-17.0	321,568	217,845	103,723	10,150	0	0	0	0	0	0	0	0
May	-6.4	195,907	217,845	0	125,075	0	0	0	0	0	0	0	0
Jun	4.9	72,542	0	72,542	438,310	1,446,063	0	1,446,063	33,893	57,778	1,354,392	0	1,354,392
Jul	11.6	139	0	139	931,955	932,094	0	932,094	382,064	651,314	0	0	0
Aug	9.8	14,822	0	14,822	1,019,793	1,034,614	0	1,034,614	386,686	659,192	0	0	0
Sep	3.1	164,858	0	164,858	838,935	1,003,792	0	1,003,792	152,132	259,344	592,317	0	592,317
Oct	-6.5	543,320	217,845	325,475	154,300	0	0	0	385	657	0	0	0
Nov	-19.3	401,510	217,845	183,665	4,714	0	0	0	0	0	0	0	0
Dec	-26.8	240,882	217,845	23,037	598	0	0	0	0	0	0	0	0
Year	-11.3	2,493,455	1,742,760	890,846	3,525,717	4,416,563	0	4,416,563	955,160	1,628,284	1,946,709	0	1,946,709

°C = degrees Celsius; m^3 = cubic metres.

Table C.7 Lake A16 (Mammoth Lake) Water Balance

Month	Temperature [°C]	Snowfall [m³]	Max Snow Sublimation [m³]	Net Inflow from Snow [m³]	Rainfall [m³]	Total Runoff [m³]	Qin from Whale Tail South and Whale Tail Attenuation Pond [m³]	Total Inflow [m³]	Lake Evaporation [m³]	Maximum Evapotrans-piration [m³]	Total Inflow Net from Evaporation [m³]	Pumping out [m³]	Total Outflow [m³]
Jan	-31.3	65,196	85,338	0	168	0	0	0	0	0	0	0	0
Feb	-31.1	59,172	85,338	0	301	0	0	0	0	0	0	0	0
Mar	-26.3	86,351	85,338	1,013	271	0	0	0	0	0	0	0	0
Apr	-17.0	125,970	85,338	40,632	3,976	0	0	0	0	0	0	0	0
May	-6.4	76,744	85,338	0	48,997	0	0	0	0	0	0	0	0
Jun	4.9	28,417	0	28,417	171,702	566,477	1,545,145	2,111,622	12,246	22,966	2,076,410	0	2,076,410
Jul	11.6	54	0	54	365,081	365,136	15,602	380,738	138,042	258,894	0	0	0
Aug	9.8	5,806	0	5,806	399,491	405,297	28,465	433,762	139,711	262,026	32,024	0	32,024
Sep	3.1	64,581	0	64,581	328,642	393,223	686,402	1,079,625	54,966	103,088	921,570	0	921,570
Oct	-6.5	212,839	85,338	127,501	60,445	0	0	0	139	261	0	0	0
Nov	-19.3	157,286	85,338	71,948	1,847	0	0	0	0	0	0	0	0
Dec	-26.8	94,362	85,338	9,024	234	0	0	0	0	0	0	0	0
Year	-11.3	976,779	682,704	348,977	1,381,155	1,730,132	2,275,614	4,005,746	345,104	647,236	3,030,004	0	3,030,004

°C = degrees Celsius; m^3 = cubic metres.

Blasting Activities – Whale Tail Dike construction, Version 1

AGNICO EAGLE

TECHNICAL MEMORANDUM

To: Department of Fisheries and Ocean (DFO)

Cc: Amaruq Permitting team

From: Pier-Eric McDonald, Patrice Gagnon

Date: Friday, June 15, 2018

Subject: Blasting Activities – Whale Tail Dike construction

---

1. Introduction

After the reception of Licence A, Agnico Eagle (AEM) plans to build the Whale Tail Dike that will allow for the mining of the Whale Tail pit. One of the construction activities consists of drill & blasting (D&B) the East and West abutments of the Whale Tail dike. Those abutments are located on the shoreline of Whale Tail Lake and this activity is critical for assuring the performance of the dike. Since this activity is close to a water body, AEM aims to comply with the DFO's Guidelines for Use of Explosives in or Near Canadian Fisheries Waters. This memo presents the proposed monitoring and mitigation measures in order to respect the above guidelines that are summarized in section 3.

2. Description of Blasting Activities

Drill and Blast of the Whale Tail Dike abutment is required as per the Design to minimize the risk of deformation of cut-off wall of the structure due to thaw settlement. Following the dike construction, thawing of the abutment is expected due the rise of the Whale Tail lake level which will change the thermal regime of the foundation. Removing the ice-rich till material and unsuitable foundation material under the cut-off wall on the abutments will remove this risk by ensuring that the cut-off of the dike is on a foundation not prone to thaw settlement. Due to the expected thickness of frozen material to remove, blasting is required for this activity. Drill and blast will be undertaken on each abutment and near the lake shore while respecting the distance allowed per the DFO's guideline. The blasting activities are planned to occur in the months of July to August 2018. The extent of the blasting area for both abutments are presented in Appendix A. These extents might change due to field observations and design adjustments.

3. Review of existing DFO guidelines

AEM intends to comply with the nine (9) guidelines of the document "Guidelines for Use of Explosives in or Near Canadian Fisheries Waters" summarize below:

> *1. Proponents considering the use of explosives are encouraged to consult the appropriate DFO Regional/Area authorities (Appendix I) as early as possible in their planning process to identify possible alternatives to the use of explosives, the biological resources and their habitats at risk, and/or effective mitigation measures.*
>
> *2. Where provincial or territorial resource management agencies, or aboriginal resource management boards undertake the administration of fisheries, the proponent is encouraged to consult with the relevant authorities.*

3. The use of confined or, in particular, unconfined explosives in or near Canadian fisheries waters is discouraged, and proponents are encouraged to utilize other potentially less destructive methods wherever possible.

4. No use of ammonium nitrate-fuel oil mixtures occurs in or near water due to the production of toxic by-products (ammonia).

5. After loading a charge in a hole, the hole is to be back-filled (stemmed) with angular gravel to the level of the substrate/water interface or the hole collapsed to confine the force of the explosion to the formation being fractured. The angular gravel is to have a particle size of approximately 1/12th the diameter of the borehole.

6. All "shock-tubes" and detonation wires are to be recovered and removed after each blast.

7. No explosive is to be knowingly detonated within 500 m of any marine mammal (or no visual contact from an observer using 7x35-power binocular).

8. No explosive is to be detonated in or near fish habitat that produces, or is likely to produce, an instantaneous pressure change (i.e., overpressure) greater than 100 kPa (14.5 psi) in the swimbladder of a fish.

9. No explosive is to be detonated that produces, or is likely to produce, a peak particle velocity greater than 13 mm•s-1 in a spawning bed during the period of egg incubation.

4. Proposed Monitoring Plan

AEM is committed to monitor blast vibrations with Instantel seismograph monitoring devices to be installed as indicated by the manufacturer at the same location every blast. Note that 2 stations per abutment are suggested depending on which side of the centerline the blast are occurring. Those locations are to be in a representative area on the shoreline and outside the footprint of dike construction . Refer to appendix A for proposed locations of STA-W1, STA-W2, STA-E1 and STA-E2. Such practices are consistent with the current application of the license at Meadowbank.

After each blast, the recorded values shall be analyzed and documented by competent personal and adjustments on the next blasting sequences shall be brought forward should the vibration limits exceed the guidelines presented in section 3.

5. Potential mitigation measures

AEM has identified a handful of potential mitigation measures that could be applied in Drill & Blast practices in order to comply with the above mentioned DFO guidelines. Those are developped from a combination of literature and past experiences at Meadowbank that have proven to be successful, namely:

- This document will be reviewed by all parties involved in the D&B activities ;
- Drill on small diameters hole as low as 3" to limit vibrations ;
- The explosive charge in each hole (powder factor) shall be reduced to the minimum judged practical in the design phase of the blast ;

- Number of holes blasting per delay shall be reduced to a minimum as much as practical in the tying plan produced by the D&B engineer to limit vibrations ;
- The blasting area will be broken down to small blast patterns to be blasted in a sequential manner.
- The blaster will perform a visual inspection of the area around the blast after each blast and remove any shock tubes or detonators close to the shoreline. If visual inspection reseals blasting accessories in the water, the blaster will advice the Geotechnical engineer so that the material is removed by boat via appropriate procedures ;
- Every hole will be backfilled with angular gravel as per current AEM practices ;
- The explosive used will be emulsion which is not water soluble.
- In the event where projections are judged problematic, blasting mats or geotextile could be applied over the whole blasting sequence with an appropriate amount of aggregates over it in such a way that the energy is kept in the rock mass as opposed to sending projections and deleterious blasting material in the air.

Additionally, AEM's D&B engineers have performed calculations as presented in Appendix II & III of the DFO's guidelines document to find the maximum setback distance from the shoreline to avoid a pressure on fish bladders exceeding 100kpa as per criteria number 8 and to have vibrations limit not exceeding 13 $mm*s^{-1}$ in spawning beds for criteria number 9. Furthermore, appendix B below presents the fish habitats type and it can be seen that the Whale Tail Dike's alignment and proposed blasting areas on the East and West abutments are in a low risk zone and more than 100m away from the critical areas. Nevertheless, AEM is committed to respect the criteria directed by DFO's Guidelines for Use of Explosives in or Near Canadian Fisheries Waters.

APPENDIX A – Proposed Blast Monitoring Stations

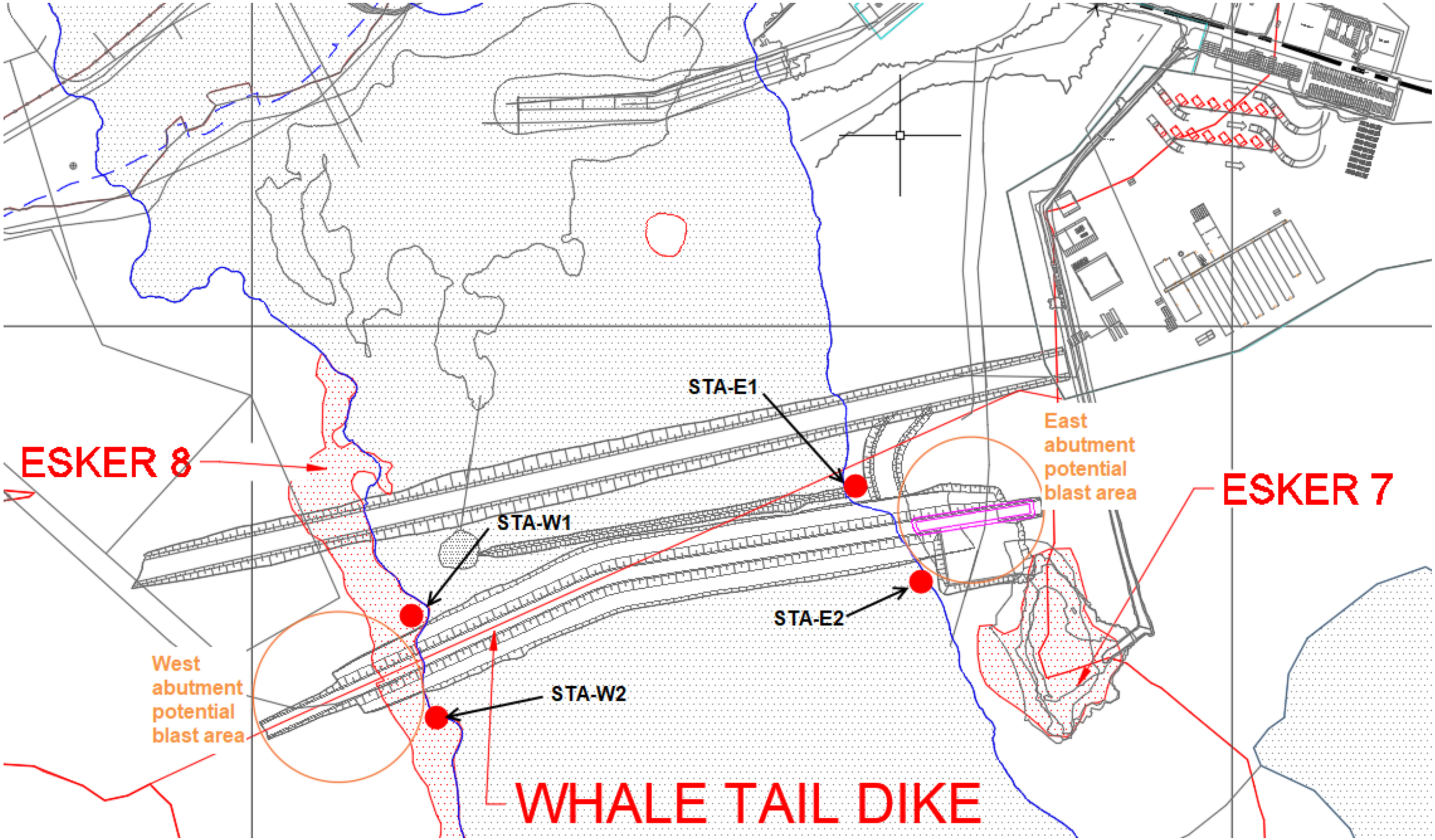
ESKER 8
STA-E1
East
abutment
potential
blast area
ESKER 7
STA-W1
STA-E2
West
abutment
potential
blast area
STA-W2
WHALE TAIL DIKE

APPENDIX B – Fish Habitats Types

Whale Tail Study Area
Habitat Types

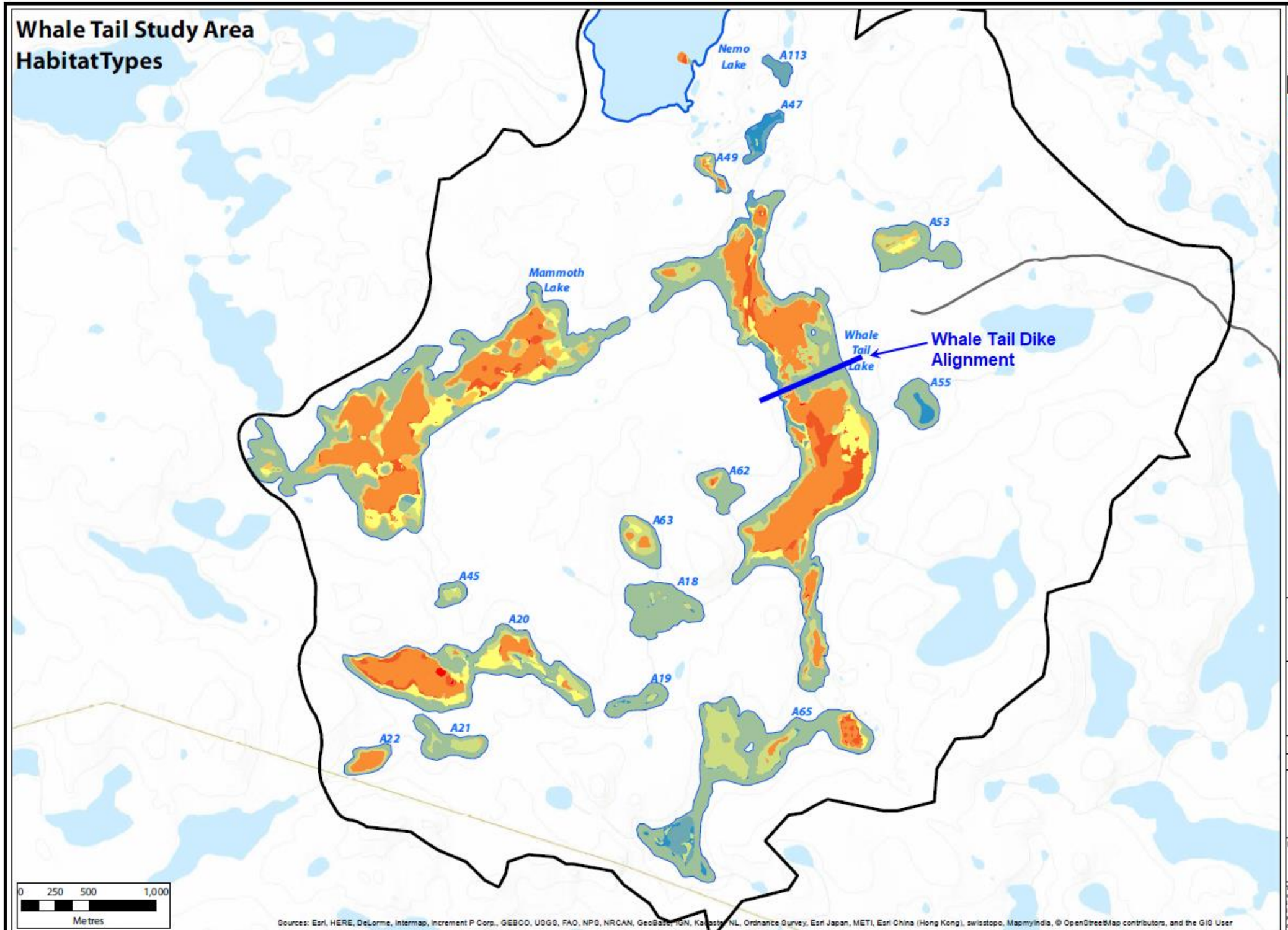

Legend

- Proposed Haul Road (AEM, Nov. 2015)
- Whale Tail Study Area
- Study Lake
- Freshwater Jetty

Habitat Type

- 1
- 2
- 3
- 4
- 5
- 6
- 7
- 8
- 9

Habitat Type	Criteria	
	Depth Zone	Substrate
1	<2 m	Fines
2	<2 m	Mixed
3	<2 m	Coarse
4	2-4 m	Fines
5	2-4 m	Mixed
6	2-4 m	Coarse
7	> 4 m	Fines
8	> 4 m	Mixed
9	> 4 m	Coarse

Whale Tail Habitat Types
Pre-Construction

DOUGAN & ASSOCIATES
ECOLOGICAL CONSULTING & DESIGN

PROJECT: DA14-053-07

CLIENT: Agnico-Eagle Mines Ltd., Meadowbank Div.

N W E S

DATE: APRIL 2016

SCALE: 1:26,000

DRAWN BY: LC

CHECKED BY: C. Portt

FIGURE:

3.7

The information displayed on this map has been compiled from various sources. While every effort has been made to accurately depict the information, this map should not be relied on as being a precise indicator of location, features, or roads, nor as a guide to navigation. MNR data provided by Queen's Printer for Ontario. Use of the data in any derivative product does not constitute an endorsement by the MNR or the Ontario Government of such products.

Freshet Action Plan, Version 1



AGNICO EAGLE

MEADOWBANK GOLD MINE

FRESHET ACTION AND INCIDENT RESPONSE PLAN

WHALE TAIL PROJECT

MARCH 2019

VERSION 1

EXECUTIVE SUMMARY

The purpose of this Action and Response Plan is to identify areas of concern around the Whale Tail Pit mine site and the associated Hauling road that need to be managed in an organized and timely manner during the annual freshet period to prevent adverse environmental and operational impacts. The Incident Response section of the Plan outlines any future incidents that have the potential to affect off site water or land will be added and would include any specific mitigation and monitoring actions.

The freshet period typically occurs during the annual snow and ice melt sometime around mid-May and extends until the end of July. During this period excess water is created and must be managed through additional pumping and management practices at vulnerable areas around the site. Mitigation techniques, timeframes and specified roles and responsibilities are outlined in this document for each area of concern.

The main areas of concern are the mining pit and pit wall.

It is important that all dewatering and associated infrastructure be in good working order and adequate to manage the expected water flows associated with the freshet period; this includes but is not limited to pumps, ditch, culvert and sump maintenance, critical piping system installation and inspection, adequate resource allocation for preparative work and establishing a viable monitoring program for the areas of concern and incident response locations. A summary of the 2019 preparation works and roles and responsibilities is presented in the attached Appendix 1 (2019 Freshet Action Plan Procedures). Appendix 1 will be updated yearly to reflect changes in conditions at the Whale Tail site. .

DOCUMENT CONTROL

Revision				Pages Revised	Remarks
#	Prep.	Rev.	Date		
01	Agnico	Internal	March 2019	All	Initial Version

Prepared By: Meadowbank Environment

Approved by: 

Robin Allard, General Supervisor Environment

TABLE OF CONTENTS

1 INTRODUCTION 6

2 AREAS OF CONCERN 7

2.1 Site maps 7
2.2 Mining Pits and Pit walls 7
2.3 Whale Tail Rock Storage Facility 8
2.4 A53 Lake 8
2.5 East channel 8
2.6 North-East Dike 8
2.7 Attenuation pond 8
2.8 Whale tail FUEL TANK FARMS 9
2.9 Haul road Culverts and bridges 9

3 INCIDENT RESPONSE 10

4 SNOW MANAGEMENT 10

LIST OF FIGURES

Figure 2-1: View of Whale Tail area with the associated pumps and trenches 7

List of Appendix

Appendix 1 - 2019 Freshet Action Plan Procedure

1 INTRODUCTION

The purpose of this Whale Tail (WT) Freshet Action and Incident Response Plan is to ensure that Agnico can address and manage excess water associated with the freshet season at the Whale Tail site and to ensure Agnico has implemented specific management and mitigation measures in response to environmental incidents with potential for off site impacts to water or land.

The freshet season is loosely defined as being a period of time from approximately May 15 – July 30; in some cases this period of time can extend up to early fall when freezing re-occurs (October 15). There are many areas around the site that are vulnerable to this excess water; the goal is to identify these areas and develop a clear plan with defined roles and responsibilities (among Agnico Departments), and to manage the freshet flows.

In addition, several guiding principles are applicable to the formation of this plan. The highest priority principles are:

1) to ensure that mine contact water from runoff or seepage is managed to prevent adverse environmental impacts;
2) to ensure that the health and safety of Agnico employees is protected, especially with respect to mining operations when excess water is present; and
3) to make sure the site is in compliance with the Nunavut Water Board (NWB) License, Part D, Item 21 and Part E, Item 11.

The plan will identify the areas of concern and discuss the potential risks as well as mitigation measures necessary to address the identified issues. An adaptive strategy had been designed at the Whale Tail site to ensure sufficient mitigation measured are in place to prevent potential issues. The overall site footprint has increased and experience needs to be gained in indenfying key location; lessons learned from the Meadowbank site will provide the necessary guidance. Appendix 1 contains the defined 2019 procedures, the roles and responsibilities and associated timelines. Agnico's intent is to update the Procedural Appendix on a yearly basis. For example, there may be additional mitigation measures for a defined problem area or in some cases a previously defined issue may be permanently rectified.

The main areas of concern are:

- Mining pits and pit walls;
- WRF pond;
- A53 pond;
- East channel;;
- North-East dike;
- Attenuation pond;
- WT Tank farm;
- Haul road culverts and bridges.

Each area identified above will be discussed in detail below. All areas of concern are considered priorities based on the guiding principles.

2 AREAS OF CONCERN

2.1 SITE MAPS

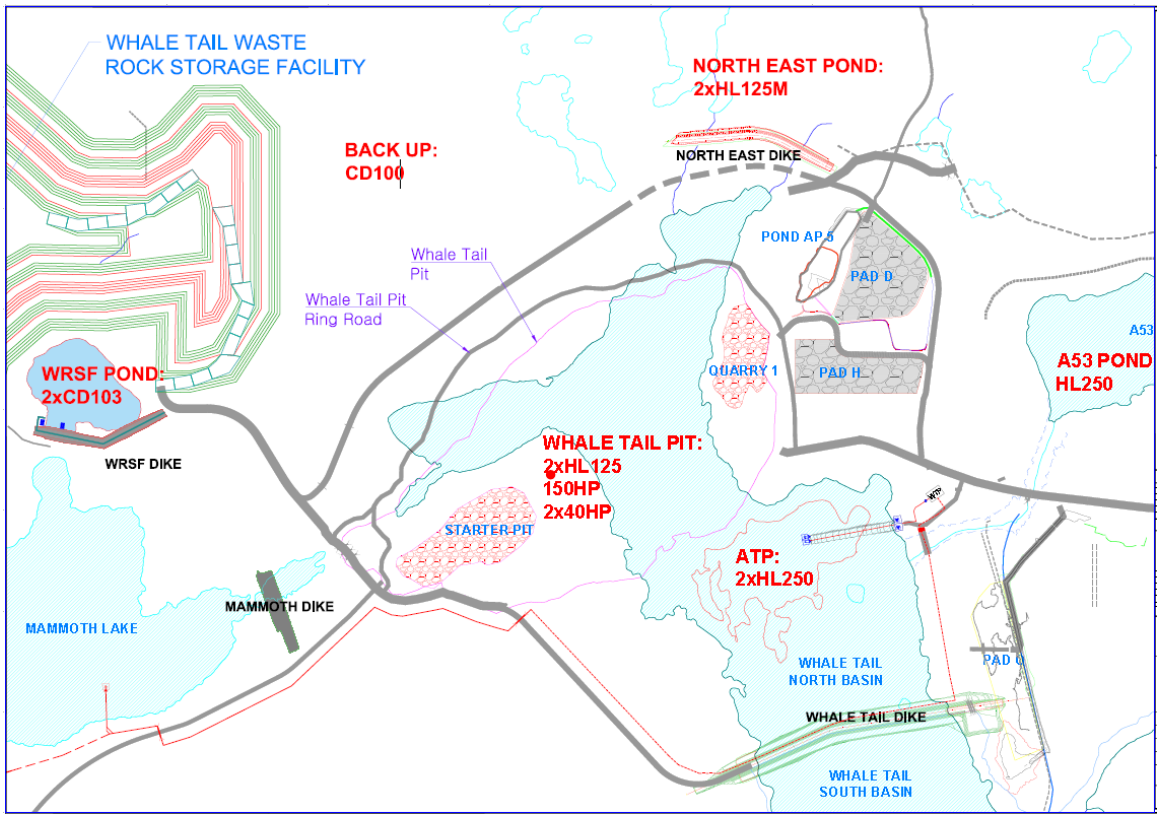

Figure 2-1: View of Whale Tail area with the associated pumps and trenches

2.2 MINING PITS AND PIT WALLS

All permanent ramps, jump ramps, ditches and sumps must be cleaned of all ice and snow before May in order to contain any water resulting from the snow melt. All pumps must be checked and serviced before the month of May. In addition, a check must be completed confirming that all piping systems starting from the different pits leading to the Whale Tail attenuation pond are free of ice by validating pumping values (if pumping systems are active) and/or performing an air test in the pipe with a compressor.

Water management in the Whale Tail pit has been simplified since the mining is it's early sequences of operation.

- A pond and ditch system is planned in the pit. Runoff water accumulated in this pond will be pumped into the attenuation pond. Infrastructures might be modified or added within the actual trench and sumps footprint in such a way to prevent water from ponding against the pit crest;

2.3 WHALE TAIL ROCK STORAGE FACILITY

The Whale Tail Rock Storage Facility (RSF) will require weekly inspections around the perimeter beginning as soon as the freshet starts (May) until freeze up to identify any seepage. In the event that seepage is observed from the RSF, it must be reported to the Engineering and Environment Departments and samples must be taken to determine the water quality and source. A mitigation plan will be prepared and implemented if necessary. A sump is located at the toe of the RSF and water will be pumped to the WT Attenuation pond when required.

2.4 A53 LAKE

Water management around A53 will required regular inspection to ensure impacts are limited, to maintain integrity of structure and to prevent any adverse environmental impacts. Inlfows of water will be monitored for the lake immediate watershed to ensure, erosion and sediments are not impacting the waterbody.

2.5 EAST CHANNEL

The east channel structure is planned to be built subsequently to the 2019 freshet season and therefore water will be management by maintaining a pumping strategy from it's planned source (lake A53), ensuring that water from upstream won't impact surrounding water bodies by erosion and TSS.

2.6 NORTH-EAST DIKE

Water collecting at North-East Dike will be managed according by letting water raise behind the dike thus redirecting the non-contact water naturally towards Nemo lake. A pumping strategy could also be used to ensure no impacts are directed towards Nemo Lake if erosion and dike stability are affected depending on water quality and quantities observed around the area.

2.7 ATTENUATION POND

Water from the WT Attenuation pond will be management as contact water and treated, if necessary, through the AsWTP and the water discharged towards Mammoth Lake. Representing the main water collection structure in 2019, the attenuation water levels will be managed closely and be inspected regularly at freshet.

Discharge from the WT attenuation pond to Mammoth Lake may require treatment at the AsWTP if the water quality did not meet discharge criteria, Water License and MDMER criteria, for the Attenuation Pond discharge. The Actiflo treatment plant was designed to remove TSS and arsenic. All piping and the discharge diffuser must be inspected in April in order to have all installations in place to proceed with pumping and/or treatment activities during freshet.

2.8 WHALE TAIL FUEL TANK FARMS

The main fuel fuel farm constainment is in the process of being built and will be monitored at freshet. Snow and ice accumulation within the fuel tank farm must be adequately managed to prevent overflow to the environment and/or damage to the fuel handling systems. The Energy and Infrastructure Department will advise the Environmental Department of their intent to pump the containment area once ice/snow begins to melt. Water samples will be taken in accordance with the Water License to ensure compliance prior to its release. A notice must be provided to the Inspector 10 days prior to this pumping activity. Once sample results have been obtained, the Environmental Department will advise the Energy and Infrastructure Department if pumping can begin. If sample results permit, the pumping may begin; to direct water to the tundra/ground in a way to prevent erosion. In the event that the water sample results do not meet discharge criteria the water could be trucked in a tanker and transported to the Meadowbank site to be disposed of in the TSF or placed in containers for shipment south as hazmat.

2.9 HAUL ROAD CULVERTS AND BRIDGES

Daily and Weekly inspections will be undertaken starting in May at all culverts along the Haul road to ensure that water during freshet is flowing freely and no erosion is occurring. If elevated TSS/Turbidity levels are observed sampling will occur and the results assessed. Turbidity barrier will be installed if required. The Energy and Infrastructure department will also be advised if severe erosion/scouring is observed. In addition snow and ice removal may be required to allow the water to flow as per design specifications. Daily inspections will be performed during the freshet period by the Environment department.

3 INCIDENT RESPONSE

No incidents require a specific response plan to be impleted for the Whale Tail site at this moment.

4 SNOW MANAGEMENT

Similarly to the Meadowbank site, a snow management procedure has been developed internally in 2018 and will be updated annually. Temporary snow storage dumps and snow accumulation areas of concern were identified on a map. Removal will be managed accordingly.

APPENDIX 1

2019 Freshet Action Plan Procedure

Section	Area of Concern	Role/Action	Responsbilities	Dates
2.1	**Mining Pits and Pit Walls**			
2.1	Mining Pit and Pit walls - General	1) Clean all ice, mud and snow on all permanent ramps, jump ramps, etc.	Mine Operations	Before May
		2) Check and service all pumps.	E&I (Energy and Infrastructure) and Maintenance	Before May
		3) Check that all piping systems starting from the pit leading to the Attenuation pond are free of ice by validating pumping values (if pumping systems is active) and/or performing an air test in the pipe with a compressor.	E&I	Before May
2.2	**WASTE ROCK STORAGE FACILITY**			
2.2.	WT RSF Inspection	1) Weekly inspection around the RSF perimeter to identify any seepage.	Env. Department	May - as soon as freshet starts until freeze up
		2) If seepage observed notify Eng and Env Department AND sample for Water License Parameters.	Env. Department	May - as soon as freshet starts until freeze up

2.3	**A53**			
2.3	A53	1) Daily inspection - keep record	Env. Department	May - until Freshet complete and after rain events
		2) Install turbidity barriers, if needed (elevated TSS observed), and maintain	Env. Department	May - until freshet complete and after rain events
		3) Sample monitoring for TSS, if excess turbidity observed - use external lab.	Env. Department	May - until freshet complete and after rain events
		4) Report any discharge of TSS to ECCC/NWB (if grab > 30 mg/L).	Env. Department	May - until freshet complete and after rain events
2.4	**East Channel**			
2.4	A53 to East channel	1) Daily inspection - keep record	Env. Department	May - until Freshet complete and after rain events
		2) Install turbidity barriers, if needed (elevated TSS observed), and maintain	Env. Department	May - until freshet complete and after rain events

		3) Sample monitoring for TSS, if excess turbidity observed - use external lab.	Env. Department	May - until freshet complete and after rain events
		4) Report any discharge of TSS to A56 to ECCC/NWB (if grab > 30 mg/L).	Env. Department	May - until freshet complete and after rain events
2.5	**North-East dike**			
2.5	North-East dike flow to Nemo	1) Daily inspection - keep record	Env. Department	May - until Freshet complete and after rain events
		2) Install turbidity barriers, if needed (elevated TSS observed), and maintain	Env. Department	May - until freshet complete and after rain events
		3) Sample monitoring for TSS, if excess turbidity observed - use external lab.	Env. Department	May - until freshet complete and after rain events
		4) Report any discharge of TSS to Nemo Tail to ECCC/NWB (if grab > 30 mg/L).	Env. Department	May - until freshet complete and after rain events

2.6	**WT Attenuation pond**		
2.6 WT Attenuation Pond	1) During the freshet period water management consists of making sure all sumps are pumped to the Attenuation Pond.	Mine Operations	May to Sept
	2) Set-up pumping Attenuation Pond to prevent water from flowing into the pit area.	Mine Operations	May
	3) Notify Environmental Department before discharging any water to Mammoth Lake. **NOTE: Any discharge of contact water must be through the Diffuser.**	Engineering	Freshet/Summer 2019
	4) Inspect all piping and discharge diffuser	E&I	May
2.7	**FUEL TANK FARMS**		
2.7 WT Tank Farm	1) E&I Dept to advise Env Dept in advance of intent to pump once ice melts in containment area.	E&I and Env. Department	Probably mid-June and September
	2) Sample water in accordance with Water License to ensure compliance with limits prior to release.	Env. Department	Probably mid-June and September
	3) Provide notice to Inspector 10 days prior to pumping.	Env. Department	Probably mid-June and September

		4) Advise Energy and Infrastructure Dept if pumping can begin based on sample results.	Env. Department	Probably mid-June and September
		5) Pump to tundra/ground or Meadowbank TSF. **NOTE: The water cannot be pumped out to the tundra if it does not meet the Water License criteria.**	E&I	Probably mid-June and September
2.8	**HAUL ROAD CULVERTS AND BRIDGES**			
2.8	Culverts and bridges	1) Weekly inspection of culverts along the haul road.	Env. Department	May
		2) Sample for TSS and Turbidity if elevated TSS observed.	Env. Department	May - until freeze up
		3) Notify E&I Dept if severe erosion/scouring observed - for repair action.	Env. Department	May - until freeze up
		4) Install turbidity barriers if required.	Env. Department	May - until freeze up
2.9	**INCIDENT RESPONSE**			
	To be determined			

MEADOWBANK GOLD PROJECT & WHALE TAIL PROJECT (COMBINED)

Air Quality and Dustfall Monitoring Plan, Version 4

MEADOWBANK OPERATIONS
(Meadowbank Gold Project & Whale Tail Pit Project)

Air Quality and Dustfall Monitoring Plan

In Accordance with:
NIRB Project Certificate Terms and Conditions No.004 and No. 008

Prepared by:
Agnico Eagle Mines Limited – Meadowbank Division

Version 4
March 2019

EXECUTIVE SUMMARY

General Information

The Air Quality and Dustfall Monitoring Plan (AQDMP) describes the design features and operational procedures for the monitoring of air quality and dustfall at the Meadowbank Gold Project and Whale Tail Pit Project sites.

Annual Review

The AQDMP will be reviewed and updated regularly if necessary. Completion of the review of the AQDMP will be documented through signatures of the personnel responsible for reviewing, updating and approving the AQDMP.

Record of Changes

A record will document all significant changes that have been incorporated in the AQDMP subsequent to the latest review. The record will include the names of the persons who made and approved the change, as well as the date of the approval.

Distribution List

Agnico Eagle Mines Limited (Agnico Eagle) will maintain a distribution list for the AQDMP providing information about all parties that receive the plan.

IMPLEMENTATION SCHEDULE

The proposed implementation schedule for this Plan is effective immediately (March 2019) subject to any modifications proposed by the NIRB as a result of the review and approval process.

DISTRIBUTION LIST

Agnico Eagle - Environmental Superintendent

Agnico Eagle – Environmental General Supervisor

Agnico Eagle – Environmental Coordinator (s)

DOCUMENT CONTROL

Version	Date (YMD)	Section	Page	Revision
1	10/2005			
Tech. Memo Addendum	16/05/2008	3.4		Update to air quality monitoring section of Version 1
2	10/2013	All		Revision
WT	06/2016	1.2		Update to include Whale Tail Pit
3	05/2018	All		Updated to include Terms and Conditions of NIRB Project Certificate #008 – Whale Tail Pit Project
4	03/2019	All		Included recommendation from ECCC

Prepared by:
Agnico Eagle Mines Limited - Meadowbank Division - Environmental Department

1 TABLE OF CONTENTS

EXECUTIVE SUMMARY ..... **i**
IMPLEMENTATION SCHEDULE ..... **ii**
DISTRIBUTION LIST ..... **ii**
DOCUMENT CONTROL ..... **iii**
2 LIST OF TABLES ..... **v**
3 LIST OF FIGURES ..... **v**
1 INTRODUCTION **1**
1.1 OBJECTIVES 1
1.2 MONITORING LOCATIONS 1
1.2.1 DF-1 1
1.2.2 DF-2 1
1.2.3 DF-3 1
1.2.4 DF-4 1
1.2.5 AWAR: KM-18 and KM-78 2
1.2.6 DF-5 2
1.2.7 WTHR: KM-18, KM-36 and KM-54 2
..... **5**
2 METHODS **5**
2.1 TSP, PM_{10}, $PM_{2.5}$ 5
2.2 DUSTFALL 6
2.3 NO_2 6
2.4 WEATHER DATA 7
2.5 GREENHOUSE GAS EMISSIONS 7
2.6 QUALITY ASSURANCE/QUALITY CONTROL PROCEDURES 7
3 DATA ANALYSIS **8**
3.1 REGULATORY STANDARDS 8
3.2 ANNUAL TRENDS 8
3.3 REPORTING 8
4 OPERATION AND MAINTENANCE **10**
4.1 MANAGEMENT RESPONSIBILITY 10
4.2 OPERATION 10
4.3 MAINTENANCE 10
5 DUST MANAGEMENT **11**

6 PLAN REVIEW.....14
7 REFERENCE.....15

LIST OF TABLES

Table 1: UTM Coordinates for the Meadowbank and Whale Tail Air Quality and Dustfall Monitoring Locations.....3
Table 2: Government of Nunavut Environmental Standards for Ambient Air Quality (October, 2011) for the parameters of concern at Meadowbank and Whale Tail.....8
Table 3: AWAR dust suppression location.....11
Table 4: Thresholds and Mitigation Measures.....13

LIST OF FIGURES

Figure 1: Meadowbank and Whale Tail Air Quality and Dustfall Monitoring Locations.....4

1 INTRODUCTION

1.1 OBJECTIVES

In accordance with Nunavut Impact Review Board Project Certificates No.004 and No.008, the objective of this program is to monitor ambient air quality and dustfall at the Meadowbank and Whale Tail Pit mine site perimeters and roads, with the goals of verifying compliance with applicable standards, and mitigating potential environmental effects. The parameters to be measured are suspended particulates (TSP, PM_{10}, $PM_{2.5}$), NO_2 and dustfall (settleable particulate matter).

1.2 MONITORING LOCATIONS

The initial monitoring locations were determined in consultation with Environment Canada in 2011. One station (DF-4) was moved in 2012 due to changes in the location of the Vault Road (see Section 1.2.4).

In 2012, dustfall transects were added at kilometer's 18 and 78 along the All-Weather Access Road (AWAR) between Baker Lake and the Meadowbank Mine.

Station DF-5 was installed in 2018 but the monitoring at this station will begin only in 2019. Dustfall transects at approximately kilometers 18, 36, and 54 along the WTHR was added in 2018.. The new monitoring locations were selected in consultation with Environment and Climate Change Canada, and in accordance with terms and conditions associated with the development of the Whale Tail Pit Project.

UTM coordinates are provided in Table 1, and locations are shown in relation to Baker Lake, the Meadowbank Mine, and the Whale Tail Pit in Figure 1.

1.2.1 DF-1

Station DF-1 is located next to the explosive storage area (emulsion plant), and approximately 500 m north of the all-weather access road. TSP, PM_{10}, $PM_{2.5}$, NO_2 and dustfall are monitored at this location.

1.2.2 DF-2

Station DF-2 is located at the northern corner of South Camp Island, near the TCG contractor area. TSP, PM_{10}, $PM_{2.5}$, NO_2 and dustfall are monitored at this location.

1.2.3 DF-3

Station DF-3 is approximately 1,800 m east of the East Dike. Second Portage Lake is to the west and east. Dustfall only is monitored at this location.

1.2.4 DF-4

Station DF-4 was approximately 1,500 m southwest of the future location of Vault Pit. This monitoring station was installed before the construction of the Vault Road. Realignment of the road during

construction placed the station within 10 feet of the road. Therefore, Agnico Eagle re-positioned Station DF-4 approximately 480 m to the north-west on February 29, 2012 to be representative of the originally intended location relative to the road. Dustfall only is monitored at this location.

1.2.5 AWAR: KM-18 and KM-78

Dustfall transects were established in 2012 at kilometers 18 and 78 along the Baker Lake to Meadowbank Mine AWAR. Dustfall samples are collected annually from mid-August to mid-September. Transects include stations at 25 m, 100 m, 300 m and 1000 m from the road on both sides (east/downwind and west/upwind). The purpose of these temporary monitoring stations were to evaluate dust mitigation measures (AEM 2017) and to validate recent model predictions of fugitive dust in support of the Whale Tail Pit and Haul Road (AEM 2016).

In 2019, Agnico will conduct a study to put in application the recommendation from ECCC saying that the installation of canisters at ground level and not on 1.5-2m poles is not a common practice. The study will first consist of the review of the following documents of reference cited by ECCC:

1. Standard test method for collection and measurement of dustfall (settleable particulate matter) - ASTM 2017

2. Ontario's manual for air quality monitoring: https://dr6j45jk9xcmk.cloudfront.net/documents/1466/3-7-32-manual-for-air-quality-monitoring-en.pdf

3. US EPA Quality Assurance Handbook for Air Pollution Measurement Systems Volume II: Ambient Air Quality Monitoring Program: https://nepis.epa.gov/Exe/ZyPDF.cgi/P100FUYK.PDF?Dockey=P100FUYK.PDF

Agnico will then determine the best method to comply with these reference documents to confirm confirm that dustfall rates measured at ground level continue to align with those measured on stands. The study will probably consist of the installation of canisters on elevated poles in one of the established transect along the AWAR. Canisters will also be installed on the ground at the same location, as in previous years, and a comparison on both methods will be assessed. Result of the study will be provided in subsequent annual report along with sampling method and mitigation measure that will be adopted.

1.2.6 DF-5

Station DF-5 (Figure 1) will be sited with the communications tower on the eastern boundary of the Whale Tail Pit in an area predicted to receive elevated concentrations of particulate matter (TSP, PM_{10} and $PM_{2.5}$) and NO_2 relative to concentrations predicted further from the project footprint. Monitoring at DF-5 will include TSP, PM_{10}, $PM_{2.5}$, passive NO_2, and dustfall.

1.2.7 WTHR: KM-18, KM-36 and KM-54

Dustfall transects will be established between kilometers 18 & 19, 36 & 37, and 54 & 55 along the Whale Tail Haul Road (WTHR). Dustfall samples will be collected annually from mid-August to mid-September. The transects will include stations at 25 m (upwind east/north), 100 m, 300 m and 1000 m (downwind west/south) of the haul road.

Table 1: UTM Coordinates for the Meadowbank and Whale Tail Air Quality and Dustfall Monitoring Locations

Monitoring Locations	Measured Preferences	Easting	Northing
DF-1	TSP, PM_{10}, $PM_{2.5}$, NO_2, dustfall	636850	7217663
DF-2	TSP, PM_{10}, $PM_{2.5}$, NO_2, dustfall	637895	7213049
DF-3	Dustfall	639599	7213198
DF-4	Dustfall	639233	7217074
AWAR KM-18	Dustfall	640208	7152082
AWAR KM-78	Dustfall	626155	7199739
DF-5	TSP, PM_{10}, $PM_{2.5}$, passive NO_2, dustfall	608301	7255973
WTHR KM-18	Dustfall	630941	7234375
WTHR KM-36	Dustfall	618132	7238621
WTHR KM-54	Dustfall	613782	7249508

Figure 1: Meadowbank and Whale Tail Air Quality and Dustfall Monitoring Locations

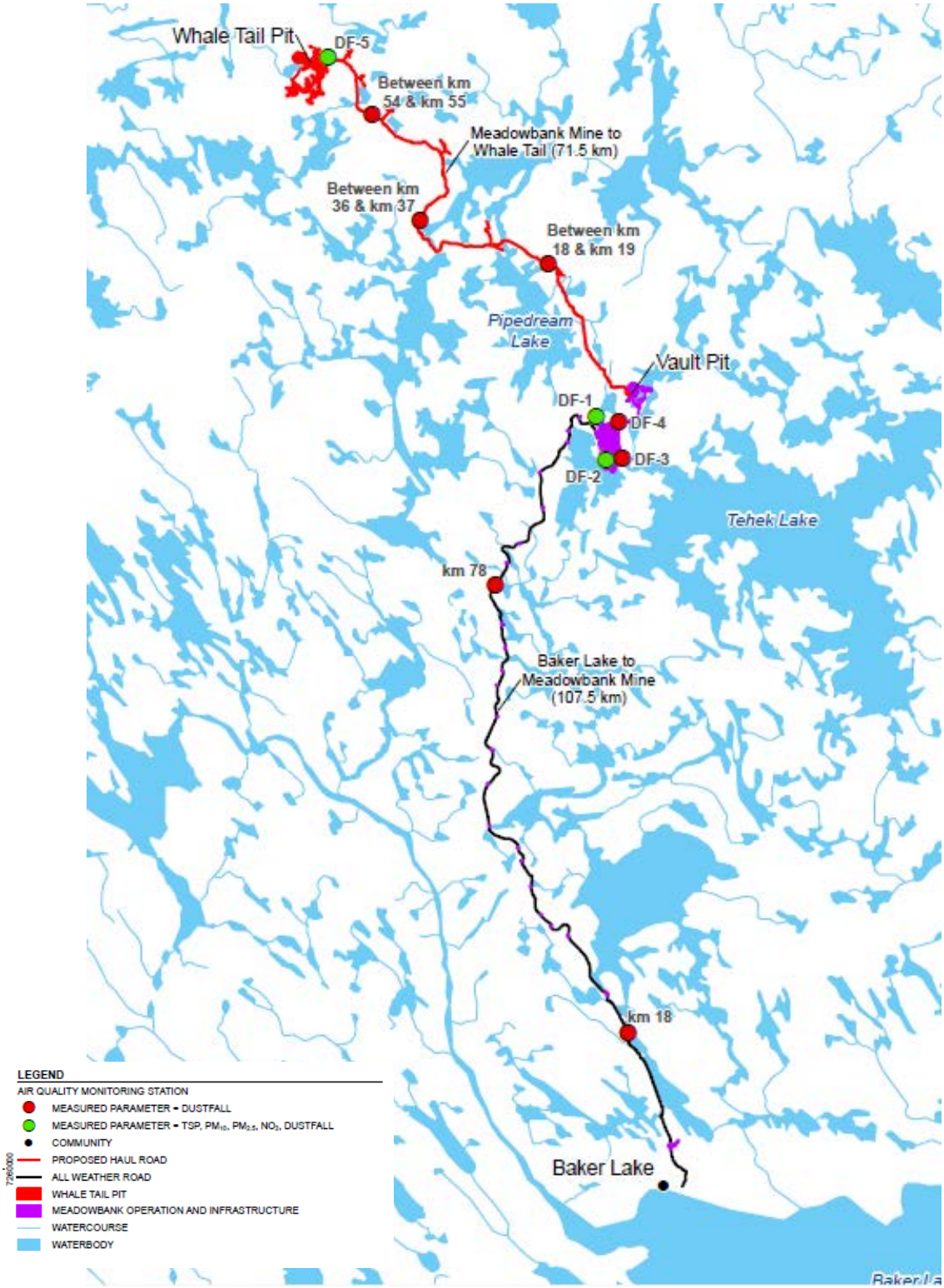

2 METHODS

2.1 TSP, PM_{10}, $PM_{2.5}$

Suspended particulate matter will be generated by wind erosion of local landscapes, movement of vehicles/equipment, airstrip activities, construction activities, the combustion of diesel fuel, and solid waste incineration.

The monitoring program for suspended particulates will utilize Partisol Model 2025 sequential air samplers (single and dichotomous units) installed at two locations to measure:

- Total suspended particulates (TSP) – particulate matter less than 100 µm;
- PM_{10} – particulate matter less than 10 µm; and
- $PM_{2.5}$ – particulate matter less than 2.5 µm.

Partisol samplers operate on the principle that a stream of ambient air at a controlled flow rate is drawn through a size-selective inlet and then through a pre-weighed filter for a pre-determined time period. The exposed filter is shipped to a laboratory where it is re-weighed. The concentrations can be determined using the measured volume of air and the weight difference between the pre-weighed and exposed filter. The U.S. EPA has described standard methods for collection of PM air samples in section 40 CFR part 53 and 58 of the U.S. Code of federal Regulations (U.S. CFR, 1997a, 1997b, 1997c,).

The monitoring of TSP, PM_{10}, and $PM_{2.5}$ concentrations will be carried out according to the National Air Pollution Surveillance (NAPS) schedule. This schedule follows a monitoring cycle where a single 24-hour sample is collected every sixth day. Sampling in accordance with the NAPS schedule will provide consistency between the Meadowbank particulate monitoring stations and stations at the other facilities across the country. In addition, by operating stations on a six-day cycle, different days are sampled each week, which allows for the monitoring of differing production intensities or other variations. Monitoring of TSP and fine particulate matter will continue throughout the operations and closure phases of the Project.

Particulate sampling will be conducted year-round using the Partisol instruments' automated sampling function. However, sampling during extreme winter conditions (-20 degrees Celsius [°C] and colder with the potential for blowing snow) which frequently occur during winter months, allows the possibility for snow to be drawn through the inlet, resulting in a void sample and possible damage to the electronic components of the sampler. A small amount of data loss is expected during the winter as ambient conditions exceed the normal operating range expected for the equipment being used. Climate-controlled shelters are used to minimize those issues.

The collection of TSP provides a measure of airborne dust or dirt, which may present environmental issues such as reduced visibility, while $PM_{2.5}$ and PM_{10} (fine and coarse particulates) are regulated based on health-related concerns. TSP and $PM_{2.5}$ are subject to GN ambient air quality standards (GN, 2011). No standard is provided for PM_{10} in Nunavut, so these results will be compared to the BC air quality objective (BC, 2013) – see Section 3.

For comparison to Government of Nunavut Ambient Air Quality Standards (GN, 2011), concentrations of particulates must be calculated as:

$$C = M/V_{STD}$$

Where:

C = mass concentration of particulates ($\mu g/m^3$)

M = final mass of filter – initial mass of filter (μg)

V_{STD} = volume of air drawn in during the sampling period, normalized to 25°C and 101.3kPA (standard temperature and pressure; STP)

The Partisol instrument will be set to calculate and store the V_{STD} value for each filter.

2.2 DUSTFALL

Dustfall collection is a passive program that provides a measure of particulate deposition in the vicinity of the Project. The main dust generation processes at Meadowbank and Whale Tail are wind erosion of site structures (e.g. the Rock Storage Facility), and fugitive sources from open pit mining, rock crushing and movement of vehicles/equipment/air traffic on site.

Dustfall is collected over monthly periods in open vessels containing a purified liquid matrix, supplied by an external accredited laboratory. Particles are deposited and retained in the liquid, which is then analyzed by the accredited laboratory for total and fixed (non-combustible) dustfall. Calculated dustfall rates are normalized to 30 days (mg/cm^2/30 days). Sampling is conducted over this period to allow for a sufficient sample size for analysis, and as a result it provides an indication of longer-term air quality trends.

The analysis of the fixed dustfall sampling results will include comparison with Alberta Environment's objectives since neither Nunavut nor the NWT have dustfall standards or guidelines (see Section 3).

2.3 NO_2

Concentrations of NO_2 by volume (ppb) are analyzed at two locations over monthly periods using a passive sampling device provided by an external accredited laboratory. No continuous monitoring is proposed for other gaseous pollutants because of low concentrations predicted by air quality dispersion modeling for Meadowbank (Cumberland, 2005) and the Whale Tail Pit (Agnico Eagle 2016).

The passive NO_2 monitoring stations are co-located with dustfall stations to allow for the efficient collection of samples and the calculation of ambient secondary particulate (nitrate) concentrations (should this information be required at a later date).

The annual average NO_2 concentration by volume is calculated from the monthly data for comparison against the relevant standard.

2.4 WEATHER DATA

Weather data for the dustfall and air quality monitoring plan is collected using the Meadowbank and Whale Tail Pit permanent climate station. Daily averages for wind speed, wind direction and temperature are available from this station (see Meteorological Monitoring Plan).

2.5 GREENHOUSE GAS EMISSIONS

Agnico Eagle is required by the Greenhouse Gas Emissions Reporting Program (GHGRP) to track greenhouse gas emissions based on annual fuel consumption, composition and the US EPA's AP-42 emission factors. Please see the Meadowbank and Whale Tail Greenhouse Gas Reduction Plan.

2.6 QUALITY ASSURANCE/QUALITY CONTROL PROCEDURES

Agnico Eagle will ensure that monitoring is conducted in accordance with the sampling reference methodology. In addition to standardized quality assurance/quality control requirements, such as instrument calibration, leak checks, review of data, and proper labeling of all sampling containers, field audits of Partisol samplers will be performed in accordance, where possible, with the Partisol Sampler Operating Manual, "Section 6 – Operations". See Section 4 for a detailed description of instrument management. Filters and dustfall samplers will be supplied and analyzed by a CALA-accredited external laboratory.

3 DATA ANALYSIS

3.1 REGULATORY STANDARDS

Data collected from the air quality and dustfall monitoring program at Meadowbank and Whale Tail are compared to the applicable Government of Nunavut Environmental Standards for Ambient Air Quality (October, 2011). Standards for the measured parameters are provided in Table 2.

Table 2: Government of Nunavut Environmental Standards for Ambient Air Quality (October, 2011) for the parameters of concern at Meadowbank and Whale Tail

Parameter	Time Frame	Standard	
		µg/m^3	ppb
Fine Particulate Matter ($PM_{2.5}$)	24-h average	30	
Total Suspended Particulate (TSP)	24-h average	120	
	Annual geometric mean	60	
Nitrogen Dioxide (NO_2)	1-h average	400	213
	24-h average	200	106
	Annual arithmetic mean	60	32

Note: All values are for data normalized to standard conditions of 25°C and 101.3 kPa.

No PM_{10} standard is yet available for coarse particulate matter (PM_{10}), so results will be compared to the BC Air Quality Objective (August, 2013) of 50 µg/m^3.

Comparison to Canadian Ambient Air Quality Standards (CAAQS) for Fine Particulate Matter (PM2.5) is also done (28 µg/m^3 for the 24-h)

Likewise, no standards for dustfall are available for Nunavut. Results of the dustfall analysis will be compared to the Alberta Environment Department recreational area guideline of 0.53mg/cm^2/30d, to provide context.

3.2 ANNUAL TRENDS

In addition, annual and year-over-year trends will be assessed, and results will be discussed in the context of mine site activity.

3.3 REPORTING

Agnico Eagle will provide an annual air quality and dustfall monitoring report that summarizes the collected data. In addition, Agnico Eagle will report annual emission estimates to the NPRI and GHG emissions to the appropriate federal program.

Annual monitoring reports will include the following:

- Description of the monitoring programs;

- Description of mitigation efforts undertaken in the previous year;
- Monitoring locations;
- Instrumentation;
- Weather conditions during sample collection;
- Time and duration of monitoring, including dates;
- Partisol sampler inspection reports;
- Relevant standards/guidelines;
- Results of monitoring (raw and averaged as appropriate for comparison to standards);Comparison of results to FEIS;
- Emission tracking data for greenhouse gases based on annual fuel consumption, composition, and AP-42 emission factors;
- Comparison of results to relevant standards, analysis of annual and year-over-year trends, and comparison to estimates in EIA dispersion modeling;
- Discussion of results, including possible reasons for non-compliance with standards; and
- Mitigation measures for reducing non-compliance incidents in the future.

4 OPERATION AND MAINTENANCE

4.1 MANAGEMENT RESPONSIBILITY

Agnico Eagle will be responsible for managing and operating the stations. Operation and monitoring of the stations will come under the responsibility of the Environment Superintendent. Designation of training requirements is the responsibility of Meadowbank Environment Department.

4.2 OPERATION

The Environment Department will be responsible to ensure that the Partisol samplers are operated in accordance with the equipment operating manual and that samples will be collected by appropriately trained personnel consistent with detailed written operating instructions from qualified personnel (i.e. air quality specialist familiar with the equipment). An SOP will be kept up to date and communicated to personnel. It will also ensure that proper QAQC practices are followed.

4.3 MAINTENANCE

As recommended by the manufacturer and to ensure results are in compliance with good practices, the following items will be part of the regular maintenance and care of the Partisol sequential air samplers. This will allow flow values and temperature compensation to be constant with time.

Maintenance Procedures	**Interval**
Exchanging particle trap filter	6 months
Testing batteries–exchange if necessary	6 months
Exchanging fuses	As needed
Cleaning Air Intake Filters	6 months
Inspect “V” Seals and O-rings	3 months
Rebuilding piston pump(s)	18 months

Audit Procedures	**Interval**
Ambient Air Temperature audit	4 weeks
Filter Temperature(s) audit	4 weeks
Ambient Pressure audit	4 weeks
External Leak Check	4 weeks
Flow controller audit	4 weeks

Calibration Procedures	**Interval**
Analog I/O calibration	Automatic
Ambient Air Temperature calibration	1 year
Filter Compartment Temperature calibration	1 year
Filter Temperature(s) calibration	1 year
Ambient Pressure calibration	1 year
Ambient Relative humidity calibration	1 year
External Leak Check	1 year
Flow controller calibration	1 year

5 DUST MANAGEMENT

Daily road watering and, if necessary, the application of chemical dust suppressants will be employed at the Meadowbank Project and the Whale Tail Pit Project to mitigate emissions of fugitive road dust during the frost-free summer season. Dust suppression along the Meadowbank AWAR will consist of the application of Tetraflake ($CaCl_2$) twice a year during summer time on five sections of the AWAR, as well as two locations in the hamlet of Baker Lake, and one area onsite. Locations are described in Table 3. Effectiveness of dust suppression will continue to be reported annually to NIRB. Dust suppression on mine site will consist of water and Tetraflake.

As well, Agnico will also continue to investigate alternatives dust mitigation measures in its Nunavut sites.

Table 3: AWAR dust suppression location

Location Type	Dust Suppression Location	Rationale
Hamlet	Agnico Eagle spud barge area	High traffic area near hamlet
Hamlet	Agnico Eagle tank farm to Arctic Fuel site	High traffic area near hamlet
AWAR	km 10 - 12	High traffic area near hamlet & area of concern to HTO – proximity to lake
AWAR	km 24 - 26	Area of concern to HTO – proximity to lake
AWAR	km 48 - 50	Area of concern to HTO – water crossing
AWAR	km 68 - 70	Location identified by Agnico Eagle – water crossing
AWAR	km 80 - 84	Location identified by Agnico Eagle – proximity to water & crossing
Onsite	Emulsion plant turn off to Meadowbank site (km 103 – 110)	High traffic area onsite

Based on the modelling of the dust emissions on the road, and the experience and monitoring data of the Meadowbank AWAR from Baker Lake to the mine site, use of chemical dust suppressants is not expected for the Whale Tail Pit Haul Road. Chemical dust suppressants may be only used as a last resort and only in accordance with the Environmental Guidance for Dust Suppression published by the Government of Nunavut Department of Environment (GN 2014).

The Whale Tail Haul Road (WTHR) Management Plan discusses mitigation measures that will be employed by Agnico Eagle to suppress the production of fugitive dust along the Whale Tail Pit Haul Road (see Section 8.3; WTHR Management Plan; Agnico Eagle 2019). These strategies include:

- enforcing speed limits;
- grading of road surfaces;
- placement of new coarser material onto the road surface; and
- if necessary, road watering or application of dust suppressants.

The Agnico Eagle road supervisor may employ dust mitigation measures where road visibility is impaired, or in areas where dust deposition is potentially impacting traditional land use, fish habitat and/or water quality (WTHR Management Plant; Agnico Eagle; 2019).

Thresholds (Table 3) will be used to determine when mitigation measures need to be initiated. Dustfall measurements will be regularly collected (along the roads and other parts of the Meadowbank and Whale Tail Mine site) using passive sampling methods to record the quantity of dust collected over time and to quantify the success of mitigation measures. The monitoring data will be used to adjust mitigation measures and improve dust management strategies.

In Q2 2019, Agnico Eagle will hold a discussion with ECCC during the technical meeting of the Whale Tail Expansion Project and will determine in collaboration, the threshold that will trigger adaptive management responses and actions. The Air Quality and Dustfall Monitoring Plan will then be updated.

Table 4: Thresholds and Mitigation Measures

Location	Frequency	Indicator	Threshold	Mitigation Measure
Haul road and site access roads	Regular weekly or more frequency inspection by road supervisor during the late spring and summer periods	• Measured dustfall • Deterioration of visibility along road	• Deterioration of visibility • Safety concern • High dust levels evident near significant waterbodies	• Use of water and/or dust suppressant in areas requiring attention • Grade the road surface • Add new granular material to the road surface • Temporarily lower the speed limit on the road
Mine site, including travel areas	Regular weekly or more frequent inspection by the site supervisor during the late spring and summer periods.	• Measured dustfall	• Deterioration of visibility • Safety concern • Dust reaching Whale Tail Lake or Mammoth Lake	• Use of water and/or dust suppressant on exposed surfaces such as parking areas, pads, haul, access and service roads • Review mitigation measures in place • Add new granular material to surface • If applicable, grade the surface • Temporarily lower the speed limit on site
Ramps in the open pits	Regular inspection by pit supervisor during summer period	• Deterioration of visibility	• Deterioration of visibility • Safety concern	• Use water as a dust suppressant

6 PLAN REVIEW

The Air Quality and Dustfall Monitoring Plan will be reviewed regularly by the Meadowbank Environmental Superintendent and be updated if any changes to the equipment or the program occur.

7 REFERENCE

Agnico Eagle (Agnico-Eagle Mines Limited). 2008. Technical Memo- Air Traffic Management- Meadowbank Gold Project (June 10, 2008)

Agnico Eagle. 2016. Environmental Assessment for the Whale Tail Pit and Haul Road.

Agnico Eagle. 2017. 2016 All-Weather Access Road Dust Monitoring Report.

BC 2013. British Columbia Ambient Air Quality Objectives. Provincial Air Quality Objective Information Sheet. August 12, 2013.

Cumberland Resources Ltd. 2005. Meadowbank Gold Project Air Quality Impact Assessment Report.

GN (Government of Nunavut) 2011. Environmental Guideline for Ambient Air Quality. Department of Environment, Government of Nunavut. October, 2011.

GN, Department of Environment. 2014. Guideline: Dust Suppression on Unpaved Roads.

Golder (Golder Associates Ltd.) 2005 Air Quality and Noise Management. Meadowbank Gold Project.

Golder 2008. Technical Memorandum. Addendum Report: Air Quality Monitoring Meadowbank Gold Project. Prepared for Agnico-Eagle Mines Ltd. May 16, 2008.

Blast Monitoring Plan, Version 3

AGNICO EAGLE

Meadowbank & Whale Tail Project

Blast Monitoring Program

Prepared by:
Agnico-Eagle Mines Limited – Meadowbank Division

Version 3

March 2019

1. EXECUTIVE SUMMARY

The Guidelines for the Use of Explosives In or Near Canadian Waters (Wright and Hopky, 1998) as modified by the DFO for use in the North mention the following requirements that are applicable to the Meadowbank Mine:

- No explosive is to be detonated in or near fish habitat that produces, or is likely to produce, an instantaneous pressure change (i.e. overpressure) greater than 100 kPa in the swim bladder of a fish.
- No explosive is to be detonated that produces, or is likely to produce, a peak particle velocity greater than 13 mm/sec in a spawning bed during the period of egg incubation.

As a result of testing and monitoring in the NWT that indicates the limit of 100 kPa was not protective to fish, DFO has recommended to Agnico to use 50 kPa as the threshold for instantaneous pressure change.

Every blast is monitored with an Instantel Minimate Blaster to ensure that vibrations generated by blasting are less than 13 mm/sec and the overpressure is under 50 KPa. The blasts are monitored from three locations at the Meadowbank site; one station is located near the northern end of Portage Pit, the second near the south end of Portage Pit and the other one at the north of Vault Pit. For Whale Tail, the blasts are monitored from two locations; one on Whale Tail Lake before the fish out is completed and another one on Mammoth Lake for the open pit operations. Independent blast monitoring plans will be established for blasts that are outside of the Whale Tail Pit area; for example: the Whale Tail Dike and the Mammoth Dike Construction MEMO that was submitted to the DFO. The results of blast monitoring are systematically analyzed by the Engineering department within the 24 hours following the blasting operation. The blast monitoring results are interpreted and a blast mitigation plan is implemented immediately if the vibrations or the overpressure exceed the guidelines. A retro analysis is conducted to determine what caused the higher than expected results.

The following factors are considered in controlling vibration intensity:

- The confinement of the charges
- The coupling of the explosives charges to the rock affects how much energy is transferred to the rock

- The spatial (geometric) distribution of the explosives affects the character and intensity of the ground vibrations
- The charge weight per delay (8ms intervals)
- The blast direction

The following factors are considered in controlling overpressure:

- Depth of burial
- Insufficient burden on the first row of holes, this can cause air blast and generate fly rocks
- Charges placed in open seams, clay filled seams, and highly fractured zones where gases could be vented
- The charge weight per delay (8ms intervals), especially for pre-shear blasting

The blast monitoring reports are systematically archived and relevant information entered into a database. The blast monitoring data will be submitted for regulatory review annually in the Meadowbank Annual Report.

IMPLEMENTATION SCHEDULE

This Plan is implemented immediately (March 2019)

DISTRIBUTION LIST

Agnico Eagle – Environment Superintendents
Agnico Eagle – Environmental Coordinators
Agnico Eagle – Engineering Superintendents
Agnico Eagle – Engineering Coordinators

Version	Date (YMD)	Section	Page	Revision
1	May 2010	All Section		Comprehensive plan for Meadowbank Project
2	March 2017	All Section		Update of the original plan
3	March 2019	All Section		Implementation of Whale Tail project monitoring

Produced by Engineering Department

Approved by: 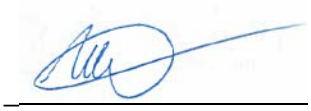

Miles Legault
Assistant Engineering Superintendent

TABLE OF CONTENTS

1. EXECUTIVE SUMMARY 2
IMPLEMENTATION SCHEDULE 4
DISTRIBUTION LIST 4
TABLE OF CONTENTS 6
LIST OF TABLES 7
LIST OF FIGURES 7
1. Introduction 8
2. Blasting standard and criteria 9
3. Blast monitoring plan 10
3.1. Blast monitoring equipment 10
3.2. Equipment installation 12
3.3. Blast monitoring stations at Meadowbank 15
3.4 Whale Tail monitoring stations 17
3.5 Blast monitoring report 19
4. Blast mitigation plan 20
5. Conclusion 22
6. References 23

LIST OF TABLES

Table 1 : Set back distance (m) from center of detonation of a confined explosive to spawning habitat to achieve 13mm/sec guideline criteria for all types of substrate (Wright and Hopkins, 1998) 10
Table 2 : Set back distance (m) from center of detonation of a confined explosive to fish habitat to achieve 100 KPa guideline criteria for various substrate. 10
Table 3: Main Factors Influencing Blast Vibration Intensity (ISEE, 1998) 20
Table 4: Main Factors Influencing Overpressure (ISEE, 1998) 20

LIST OF FIGURES

Figure 1: Instantel Minimate Blaster Unit 11
Figure 2: Sensor Orientation (Instantel, 2016) 11
Figure 3: 3/8 inch bolt anchored in the rock 12
Figure 4: Transducer tightened with a nut 13
Figure 5: Final Set-up with the Microphone in the direction of the blast 13
Figure 6: General view of the Portage South monitoring station 14
Figure 7: Localizations of the two blast monitoring stations at Portage Pit 15
Figure 8: Localization of the blast monitoring station at Vault pit 16
Figure 9: Localization of the blast monitoring stations at Amaruq 17
Figure 10: Fish Habitat Types for Mammoth Lake 18

1. Introduction

Agnico-Eagle Mines Limited – Meadowbank Division has developed this Blasting Monitoring Program for the control of blasting vibrations at the Portage, Goose and Vault Pit in accordance with Condition 85 of Project Certificate No.004 issued by the Nunavut Impact Review Board (NIRB). This monitoring program was also updated to include blasting activities at Whale Tail Project in accordance with Condition 22 of NIRB Project Certificate No.008.

Agnico had developed a detailed blasting program to minimize the effects of blasting on fish and fish habitat, water quality, and wildlife and terrestrial VECs. The Blasting Program has been developed in consultation with the Department Of Fisheries and Oceans (DFO) and the Government of Nunavut (GN), and shall:

a) Comply with the Guidelines for the Use of Explosives In or Near Canadian Fisheries Waters (Wright and Hopky, 1998) as modified by the DFO for use in the north;
b) adhere to the guidance provided in the Monitoring Explosive-Based Winter Seismic Exploration in Waterbodies, NWT 2000-2002 (Cott and Hanna, 2005);
c) Include a monitoring and mitigation plan to be developed in consultation with the DFO, and obtain DFO approval of the blasting program prior to the commencement of blasting;
d) Restrict blasting when migrating caribou, or sensitive local carnivores or birds may be negatively affected; and
e) Minimize the use of ammonium nitrate to reduce the effects of blasting on receiving water quality

The Blasting Monitoring Program will continue to be implemented during the operation phases of the Meadowbank and Whale Tail Projects.

2. Blasting standard and criteria

The effects of blasting are typically assessed in terms of Peak Particle Velocity (PPV). The US Bureau of Mines has established that the peak particle velocity is related to the scaled distance by the following relationship:

$$PPV = k * (R/W^{0.5})^{-b}$$

Where:

PPV = Peak Particle Velocity, mm/s

R = Distance from blast to point of concern, m

W = Charge weight per delay, kg

k = confinement factor – specific to site

b = site factor

This formula can be used to estimate PPV and determine if the PPV will surpass the given limits before the blast occurs.

The Guidelines for the Use of Explosives In or Near Canadian Waters (Wright and Hopky, 1998) as modified by the DFO for use in the North mention the following requirements that are applicable to the Meadowbank Project:

> "8. No explosive is to be detonated in or near fish habitat that produces, or is likely to produce, an instantaneous pressure change (i.e. overpressure) greater than 100 kPa (14.5 psi) in the swim bladder of a fish.
>
> 9. No explosive is to be detonated that produces, or is likely to produce, a peak particle velocity greater than 13 mm/sec in a spawning bed during the period of egg incubation."

As a result of testing and monitoring in the NWT that indicates the limit of 100kpa was not protective to fish, DFO has recommended to Agnico to use 50 kPA as the threshold for instantaneous pressure change.

To keep PPV under the 13 mm/sec guideline Wright and Hopky (1998) suggests the setback distances shown in table 1.

Table 1 : Set back distance (m) from center of detonation of a confined explosive to spawning habitat to achieve 13mm/sec guideline criteria for all types of substrate (Wright and Hopkins, 1998)

	Weight of Explosive Charges (kg)						
	0.5	1	5	10	25	50	100
Setback distance (m)	10.7	15.1	33.7	47.8	75.5	106.7	150.9

Concerning the instantaneous pressure change (i.e. overpressure), Wright and Hopky (1998) suggest the following setback distances to keep it under the 100 kPa guideline.

Table 2 : Set back distance (m) from center of detonation of a confined explosive to fish habitat to achieve 100 KPa guideline criteria for various substrate.

	Weight of Explosive Charges (kg)							
Substrate Type	0.5	1	2	5	10	25	50	100
Rock	3.6	5.0	7.1	11.0	15.9	25.0	35.6	50.3
Sfrozen Soil	3.3	4.7	6.5	10.4	14.7	23.2	32.9	46.5
Ice	3.0	4.2	5.9	9.3	13.2	20.9	29.5	41.8
Saturated Soil	3.0	4.2	5.9	9.3	13.2	20.9	29.5	41.8
Rock	2.0	2.9	4.1	6.5	9.2	14.5	20.5	29.0

The Meadowbank Engineering team is also referring to the vibration and overpressure historical data to assess certain blast pattern closer to lakes. Nine (9) years of historical data are archived in the Meadowbank database and they are often used as case study for delicate blasting operations.

3. Blast monitoring plan

3.1. Blast monitoring equipment

Every blast is monitored to ensure that vibrations generated by blasting are less than 13 mm/sec and the overpressure is under 50 KPa. The instrument used for blast monitoring is an Instantel Minimate Blaster which is fully compliant with the international Society of Explosives and Engineers performance specification for blasting seismographs (Instantel, 2005).

The Minimate Blaster has three main parts: a monitor, a standard transducer (geophone) and a microphone (figure 1). The monitor contains the battery and electronic components of the instrument. It also checks the two sensors to be sure that they work properly. The transducer measures ground vibration with a mechanism called a geophone.



Figure 1: Instantel Minimate Blaster Unit

The transducer has three geophones that measure the ground vibrations in terms of particle velocity. They measure transverse, vertical and longitudinal ground vibrations (figure 2). Transverse ground vibrations agitate particles in a side to side motion. Vertical ground vibrations agitate particles in an up and down motion. Longitudinal ground vibrations agitate particles in a back and forth motion progressing outward from the event site (Instantel, 2016).

The microphone measures the PSP (Peak Sound Pressure) also referred as to the PAO (Peak Air Overpressure). The instrument checks the entire event waveform and displays the largest sound pressure in Pa unit.

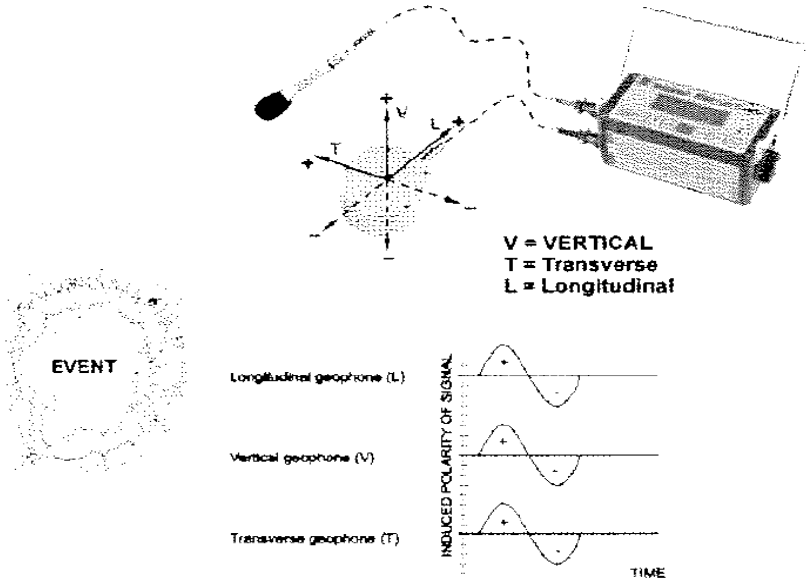

Figure 2: Sensor Orientation (Instantel, 2016)

The Minimate Blaster (Instantel) calculates the PPV for each geophone and calculates the vector sum of the three axes.

The final result is the PVS (Peak Vector Sum) and it is the resultant particle velocity magnitude of the event:

$$PVS = \sqrt{(T^2 + V^2 + L^2)}$$

Where:

T = particle velocity along the transverse plane

V = particle velocity along the vertical plane

L = particle velocity along the longitudinal plane

3.2. Equipment installation

The transducer is installed on a hard surface, which in this case is rock. A 3/8 inch bolt is anchored in the rock (figure 3) and the transducer is tightened with a nut (figure 4). The arrow on the top of the standard transducer must be pointed in the direction of the event to ensure the geophone sensors, located inside the standard transducer, remains in their natural axis (Instantel, 2016). The trigger level of the instrument is set to 1 mm/s and the transducer will start recording an event automatically when the ground vibrations are greater than or equal to 1 mm/s. The recording time is 4 seconds, which is sufficient considering that the blast timing is rarely more than 2 seconds at Meadowbank. The instrument is protected with a box and the microphone is oriented in the direction of the blast.

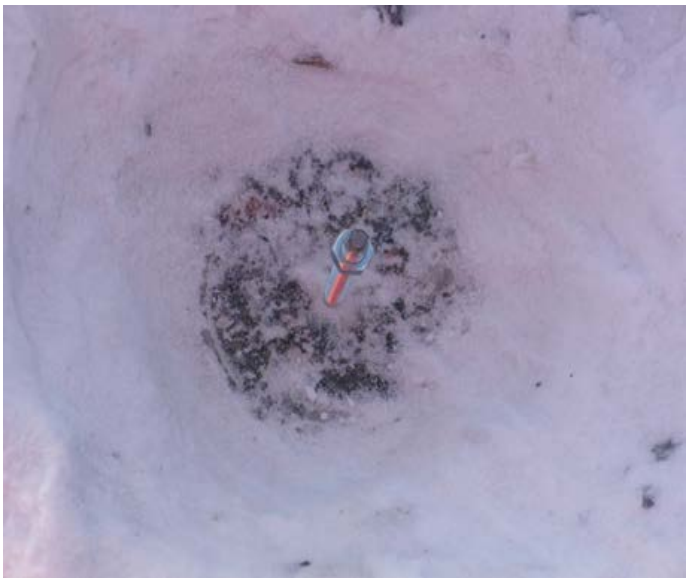

Figure 3: 3/8 inch bolt anchored in the rock



Figure 4: Transducer tightened with a nut



Figure 5: Final Set-up with the Microphone in the direction of the blast



Figure 6: General view of the Portage South monitoring station

3.3. Blast monitoring stations at Meadowbank

The blasts are monitored from three different locations. The locations were chosen to have the optimal distance between the blasts and the water (fish habitat). One station is located near the northern end of Portage pit and the other near the south end of Portage pit (figure 7). The third station is located at the complete northern of the Vault Pit (Figure 8).

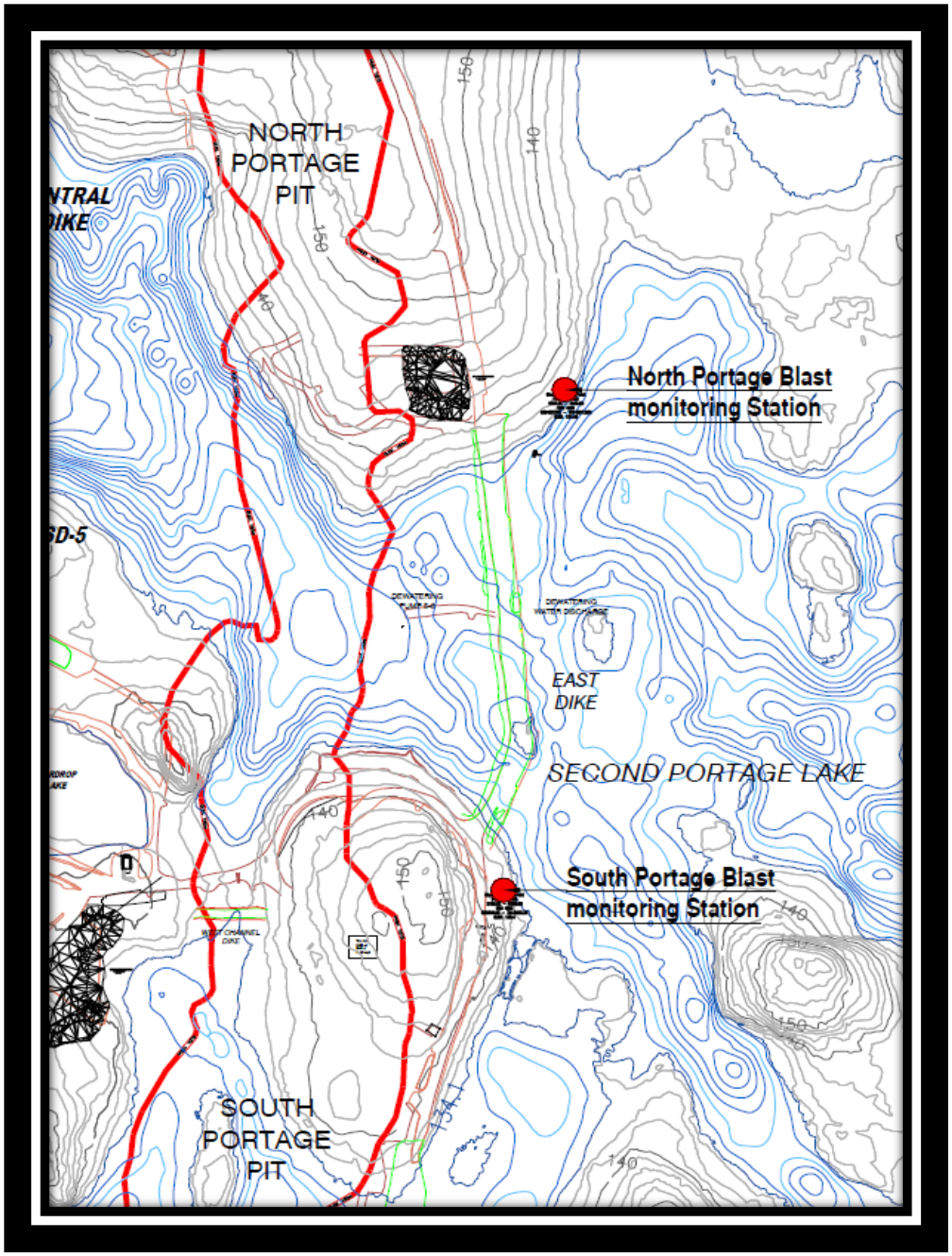

Figure 7: Localizations of the two blast monitoring stations at Portage Pit

.

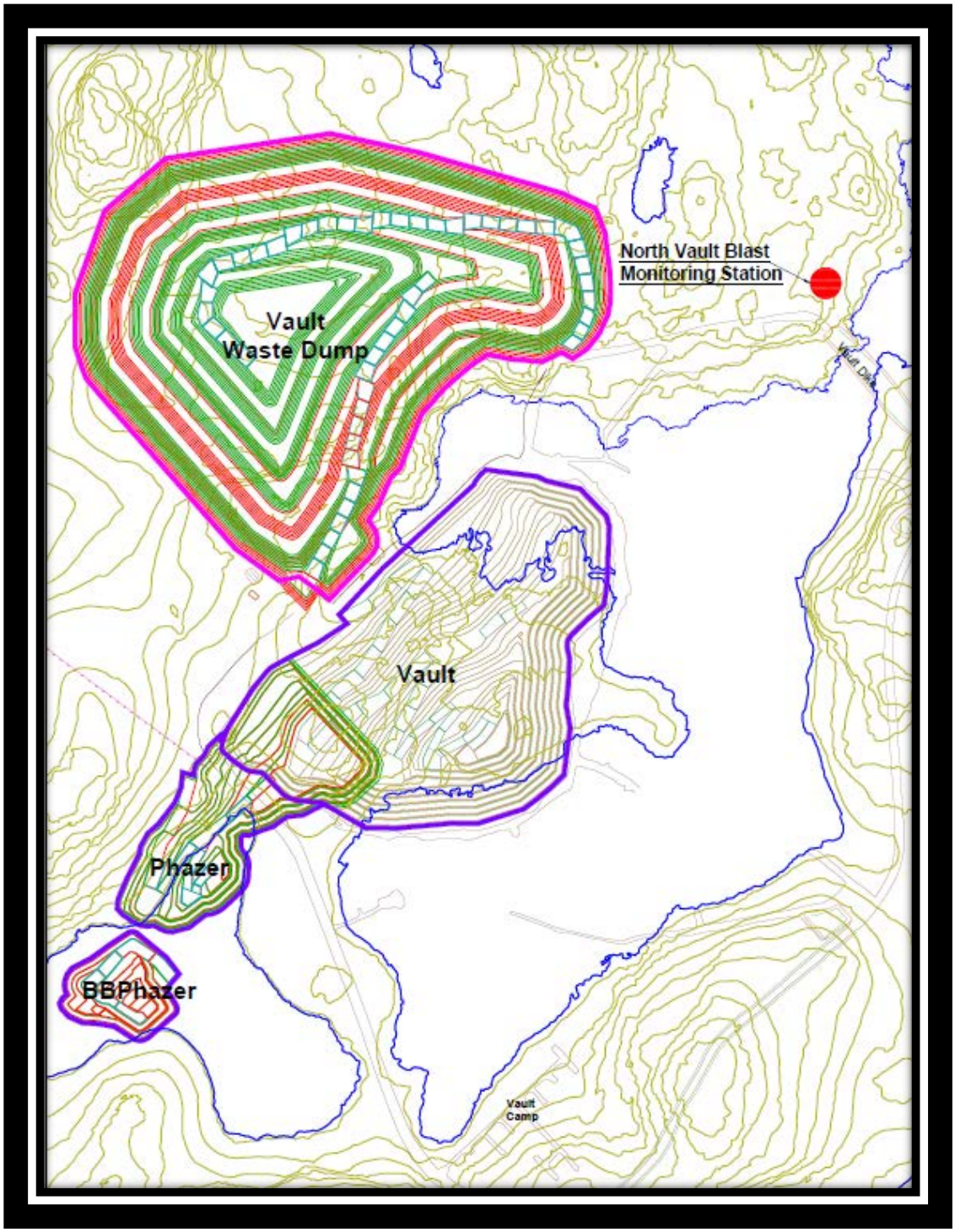

Figure 8: Localization of the blast monitoring station at Vault pit

3.4 Whale Tail monitoring stations

The blasts were monitored from Whale Tail Station 1 when mining in Quarry 1 and Ap-5. For Quarry 2 and Phase 1 of Whale Tail Pit; monitoring is done from Mammoth Station 1 only since the fish out of Whale Tail Lake has been completed. Depending on the location of the blast inside Whale Tail Pit, Whale Tail Station 2 will be used as well. Additionally, monitoring will be done on both Mammoth Dike and Whale Tail Dike which will provide redundancy and mitigation if ever the Instatel monitoring devices were to not record.

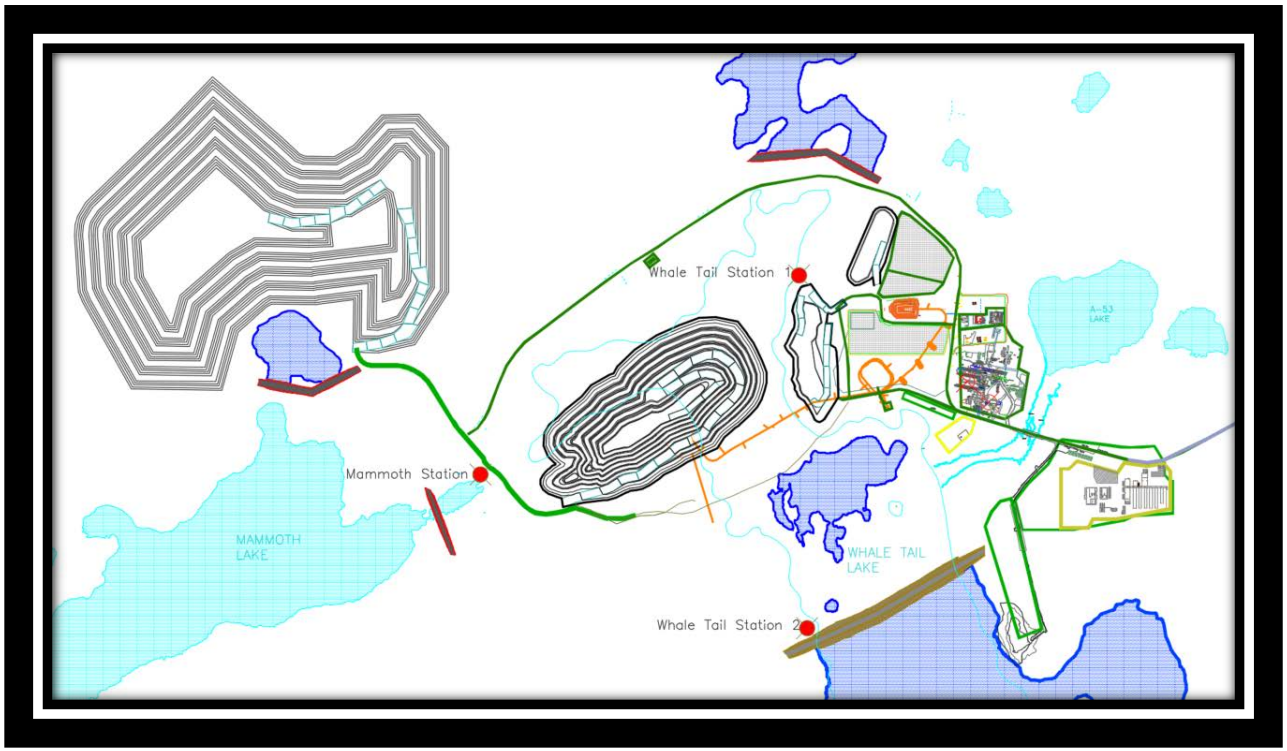

Figure 9: Localization of the blast monitoring stations at Amaruq

As demonstrated on Figure 10, the possible fish spawning areas are located West of Mammoth Dike while Mammoth Station is located East of the Dike. Therefore, it is safe to say, according to the formula for calculating PPV in Section 2, that if we record PPVs under the 13mm/s threshold, that the PPVs will be lower at the fish spawning areas.

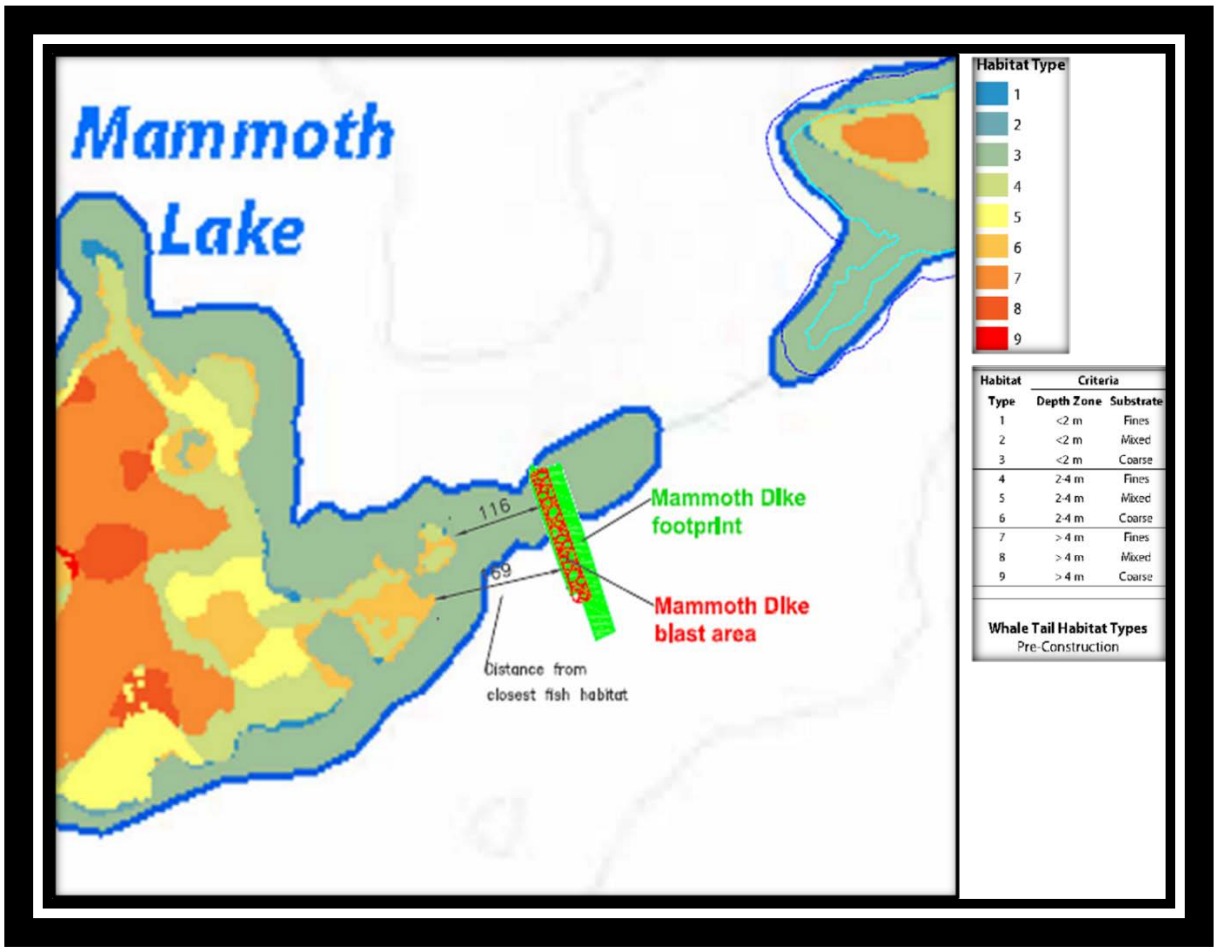

Figure 10: Fish Habitat Types for Mammoth Lake

3.5 Blast monitoring report

After each blast, the results are stored in a database and the report saved in the library for future reference. The blast monitoring results are interpreted and a blast mitigation plan is implemented immediately if the vibrations or the overpressure exceed the permitted limit (see section 4). The data will be submitted to DFO, GN, NIRB, Environment and Climate Change Canada, and the Nunavut Water Board annually in the Meadowbank Annual Report.

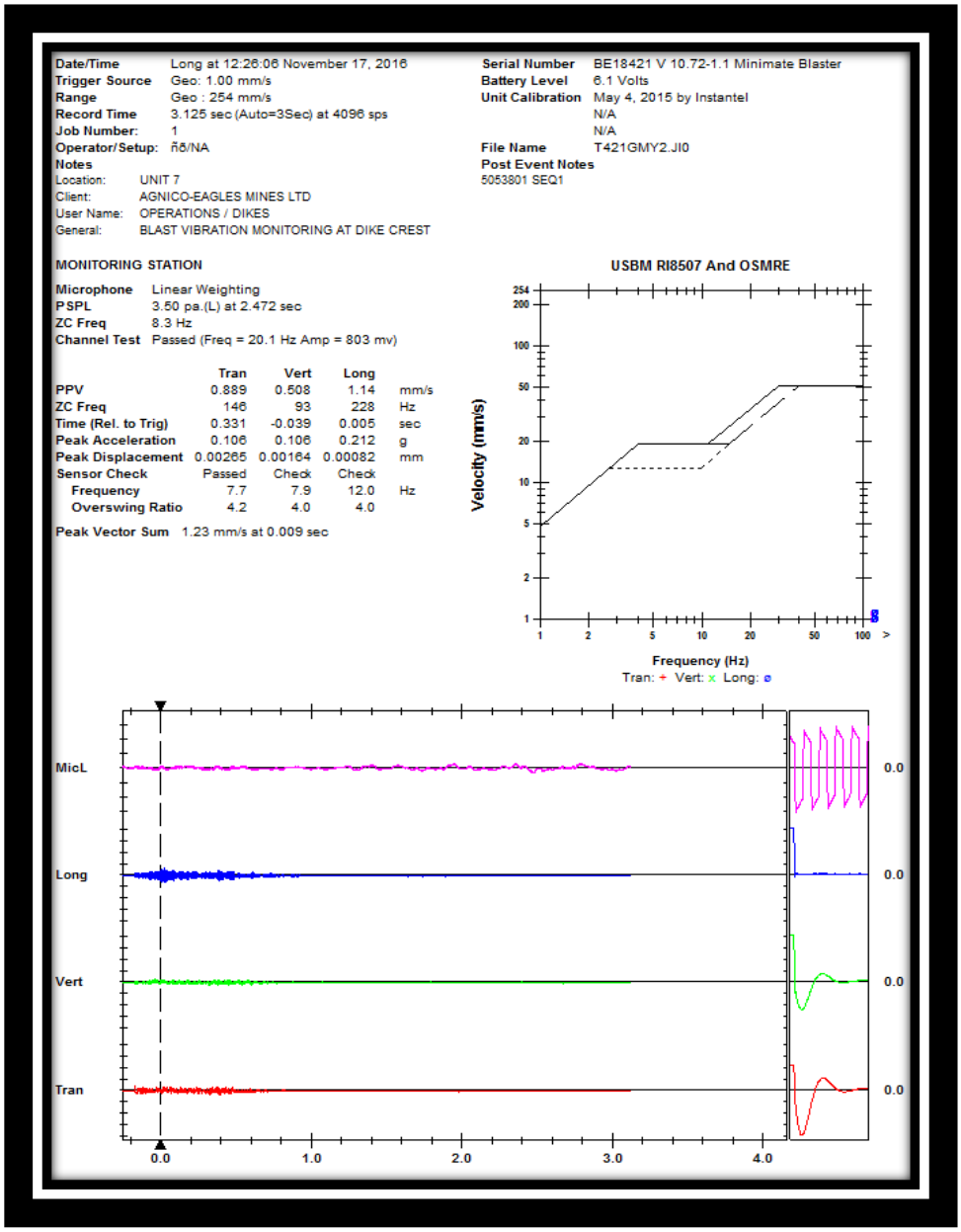

4. Blast mitigation plan

This mitigation plan is specific to blasts in the open pits (Portage Pit, Vault Pit, BB Phaser Pit, Phaser Pit and Whale Tail Pit. A Memo has been sent to the Fisheries and Oceans with its own specific mitigation plan relative to blasts for Whale Tail Dike and Mammoth Dike excavation.

If the vibrations or the overpressure approach or exceed the permitted limit, it is possible to conduct a retro analysis and find the factors that may have caused higher than desired results. It is important to consider the main factors influencing blast vibration intensity (table 3) or overpressure (table 4) in order to prevent such results (ISEE, 1998).

Table 3: Main Factors Influencing Blast Vibration Intensity (ISEE, 1998)

Main Factors Influencing Blast Vibration Intensity
Maximum charge weight detonating at one time
True distance (distance the waves must travel)
Geological conditions
Confinement
Physical properties of the rock
Coupling
Spatial distribution
Detonator timing scatter
Time of energy release
Type of Explosive

Table 4: Main Factors Influencing Overpressure (ISEE, 1998)

Main Factors Influencing Overpressure
Maximum charge weight per delay
Depth of burial of charges
Exposed surface detonation material
Atmospheric conditions
Wind
Temperature gradients
Topography

Volume of displaced rock
Delay interval and orientation
Type of Explosive

Geological conditions and rock properties are site specific and cannot be changed but there are several controllable factors that may reduce blast vibration intensity. Agnico takes the following factors into consideration at Meadowbank to reduce vibration intensity:

I. The confinement of the charges affects the vibration intensity. If a charge is deeply buried with no free face nearby, the rock is not displaced and more of the energy goes into seismic waves (ISEE, 1998). The engineering department carefully plans pre-shear blasting that may have excessive burden in the first row of holes.

II. The coupling of the explosives charges to the rock affects how much energy is transferred to the rock and hence the intensity of the vibrations. If smaller-diameter charges are placed in large-diameter holes, the charges are decoupled and less energy is transferred (ISEE, 1998). Using bulk products increases the coupling. In specific cases, like pre-splitting blast, it is a better idea to use packaged products that have a small diameter.

III. The spatial (geometric) distribution of the explosives affects the character and intensity of the ground vibrations. A reduction in vibration is often found when there are many small charges per delay, widely distributed. There is a practical limit to the number of small charges that can reinforce each other, and the more there are, the less effective their reinforcement. A charge per delay composed of 100 charges of 1lb each will not generate the same intensity of vibration as a single charge of 100 lbs. (ISEE, 1998).

IV. The main factor that is used to prevent high intensity vibration is the charge weight per delay. The 8-ms criterion is applied to prevent short delay times from overlapping or causing constructive reinforcement (addition) of two or more pulses (ISEE, 1998), which could cause higher vibrations. In every blast connection plan designed by the engineering department, this fact is taken into consideration. Timing is designed to minimize the number of holes that overlap in an 8 ms delay.

V. The blasting direction of a blast pattern is another key element to minimize vibration once blasting besides areas close to lakes.

Mitigation techniques used to reduce overpressures are as follows:

I. Depth of burial affects the overpressure. Improperly stemmed or insufficient collar will allow blast holes energy to be vented upwards. The quality of the stemming is also important: angular, coarse stemming material (3/4'') is necessary to be efficient.

II. Avoid having insufficient burden on the first row of holes. This can cause air blast and generate fly rocks. Leaving muck piles from the previous blast in front of the free face (choke blasting) can reduce the amount of air blast generated and minimize the chance fly rocks.

III. Avoid placing charges in open seams, clay filled seams, and highly fractured zones where gases could be vented.

IV. Controlling the charge weight per delay especially for the pre-shear drilling. A limited number of kg per delay is in effect at Portage pit to avoid overpressure.

5. Conclusion

Blast monitoring process will continue to ensure that blast vibrations do not cause harm to aquatic life at Meadowbank and Whale Tail. The results are used to find a more accurate confinement factor of the site. The data collected helps to correlate different factors that could influenced vibration intensity and will be taken into consideration in the future to guarantee a constant improvement in controlling blast vibrations.

We have overall successfully managed to keep our vibrations below the limit authorized. Agnico is committed to monitoring all blasts in order to fully comply with the regulation.

6. References

INSTANTEL INC. 2005, MINIMATE BLASTER OPERATOR MANUAL

INTERNATIONAL SOCIETY OF EXPLOSIVE ENGINEERS (ISEE) (1998). BLASTERS' HANDBOOK (17TH ED.). CLEVELAND: INTERNATIONAL SOCIETY OF EXPLOSIVE ENGINEERS..

WRIGHT, D.G., AND G.E. HOPKY. (1998) GUIDELINES FOR THE USE OF EXPLOSIVES IN OR NEAR CANADIAN

FISHERIES WATERS. CAN. TECH. REP. FISH. AQUAT. SCI. 2107: IV + 34P.

GAGNON, P. AND MACDONALD, P-E, MEADOWBANK AND AMARUQ GEOTECHNICAL ENGINEERS,

Memo: Blasting Activities – Mammoth Dike construction, Agnico Eagle

Bulk Fuel Storage Facility: Environmental Performance Monitoring Plan, Version 4

AGNICO EAGLE

MEADOWBANK DIVISION

Meadowbank and Whale Tail Bulk Fuel Storage Facility:

Environmental Performance Monitoring Plan

MARCH 2019

VERSION 4

EXECUTIVE SUMMARY

Agnico Eagle Mines Limited – Meadowbank Division (Agnico Eagle) is currently operating the Meadowbank Gold Project approximately 70 km north of the Hamlet of Baker Lake. As part of the project, one - 5.6 million litres bulk fuel storage tank was constructed to store diesel fuel for routine operations at the mine site, and one - 1.5 million liters bulk fuel storage tank will be built at the Whale Tail Pit site. The former bulk fuel tank facility was commissioned in January 2009 while the one at Whale Tail is to be commissioned in 2019. This document provides the details for the Meadowbank and Whale Tail Pit Bulk Fuel Storage Facility Environmental Performance Monitoring Plan required by Water License 2AM-MEA1526 Part B, Item 13(l) and 2AM-WTP1826 Part B, Item 14 (b).

To adequately assess the environmental performance of the bulk fuel storage tank at Meadowbank and Whale Tail Pit, this report provides: a summary of the design, installation, operation and maintenance that follows the CCME (2003) Environmental Code of Practice for Aboveground Storage Tank Systems Containing Petroleum and Allied Petroleum Products; a summary of the location and environmental setting; a summary of the NWB Type A water license requirements; and an environmental assessment to support the recommended environmental monitoring for the ongoing evaluation of the secondary containment.

IMPLEMENTATION SCHEDULE

As required by Water Licence 2AM-MEA1526 and 2AM-WTP1826, , the proposed implementation schedule for this Plan is effective upon approval and subject to any modifications proposed by the NIRB and NWB as a result of the review and approval process.

DISTRIBUTION LIST

Agnico Eagle – General Mine Manager

Agnico Eagle – Environment Superintendent

Agnico Eagle – General Supervisor

Agnico Eagle – Environmental Coordinator

Agnico Eagle – Environmental Technician

Agnico Eagle – Energy and Infrastructures Superintendent

Agnico Eagle – Field Services Supervisor

Agnico Eagle – Warehouse Supervisor

Agnico Eagle – Whale Tail Open Pit Manager

DOCUMENT CONTROL

Version	Date (YMD)	Section	Page	Revision
1	09/12/22			Comprehensive plan for Meadowbank Bulk Fuel Storage Facility
2	14/06/30			Comprehensive review of the plan
3	16/06/02			Addition of the Whale Tail Pit site and Whale Tail Pit haul road to the Plan
4	19/03/31	All	All	Update to reflect current Whale Tail Operations and storage capacity

TABLE OF CONTENTS

Section 1 INTRODUCTION 1
Section 2 SITE LOCATION, CONSTRUCTION AND OPERATION 2
2.1 SITE LOCATION 2
2.2 DESIGN AND INSTALLATION SUMMARY 4
2.3 OPERATION AND MAINTENANCE SUMMARY 4
Section 3 ENVIRONMENTAL SETTING 5
3.1 TOPOGRAPHY 5
3.2 GEOLOGY 5
3.3 FLORA AND FAUNA 5
3.4 SUBSURFACE CONDITIONS 5
3.5 WATER QUALITY 5
Section 4 NWB TYPE A WATER LICENSE CONDITIONS 6
Section 5 ENVIRONMENTAL PERFORMANCE ASSESSMENT 7
5.1 DESK-TOP REPORT REVIEW OF THE MEADOWBANK BULK FUEL STORAGE FACILITY 7
5.2 SECONDARY CONTAINMENT VISUAL INSPECTIONS 8
5.3 ENVIRONMENTAL ASSESSMENT 8
5.3.1 Terrestrial Environment 8
5.3.2 Surface Water 8
5.3.3 Groundwater 9
Section 6 PERFORMANCE MONITORING PLAN 10
6.1 VISUAL AND OPERATIONAL INSPECTIONS 10
6.2 ROUTINE CONTACT WATER MONITORING 10
6.3 EVENT MONITORING 11
6.3.1 Soil Sampling 11
6.3.2 Water Sampling 11
6.3.3 Assessment of the Need for Groundwater Well Installation 11
Section 7 REFERENCES 12

LIST OF FIGURES

Figure 2-1..... 2
Figure 2-2. Location of Whale Tail Fuel Storage..... 3

LIST OF APPENDICES

Appendix A: Meadowbank Fuel Storage Installations – Final Report

Appendix B: Whale Tail Storage Installations – Final Report (to be added once completed)

Section 1 INTRODUCTION

Agnico Eagle Mines Limited – Meadowbank Division (Agnico Eagle) is operating the Meadowbank Gold Project and Whale Tail Pit (a Meadowbank satellite deposit located on the Amaruq property). The Meadowbank Project includes the Baker Lake Marshalling Area, the All-weather Access Road (AWAR), the Meadowbank Mine site, the Whale Tail pit, and the Whale Tail Haul Road.

One 5.6 million liter bulk fuel storage tank was constructed to provide diesel fuel for routine operations at the Meadowbank mine site, and one 1.5 ML tank will be built at the Whale Tail Pit Project.

To adequately assess the environmental performance of the bulk fuel storage tanks at Meadowbank and Whale Tail this report provides:

- a summary of the design, installation, operation and maintenance that follows the CCME (2003) Environmental Code of Practice for Aboveground Storage Tank Systems Containing Petroleum and Allied Petroleum Products;
- a summary of the location and environmental setting;
- a summary of the NWB Type A water license 2AM-MEA1526 and 2AM-WTP1826 requirements; and
- an environmental assessment to support the recommended environmental monitoring for the ongoing evaluation of the secondary containment.

Section 2 SITE LOCATION, CONSTRUCTION AND OPERATION

2.1 SITE LOCATION

The Meadowbank Bulk Fuel Storage Facility is located at Meadowbank, east of the main camp facilities adjacent to the mine operations haul road. There is one (1) above ground storage tank with approximately 5.6 million liters capacity. The GPS coordinates of the facility is NAD83 14W E 0638083 N 7214288. The general location of the tank farm is provided in Figure 2-1 below.

Figure 2-1. Location Meadowbank Tank Farm

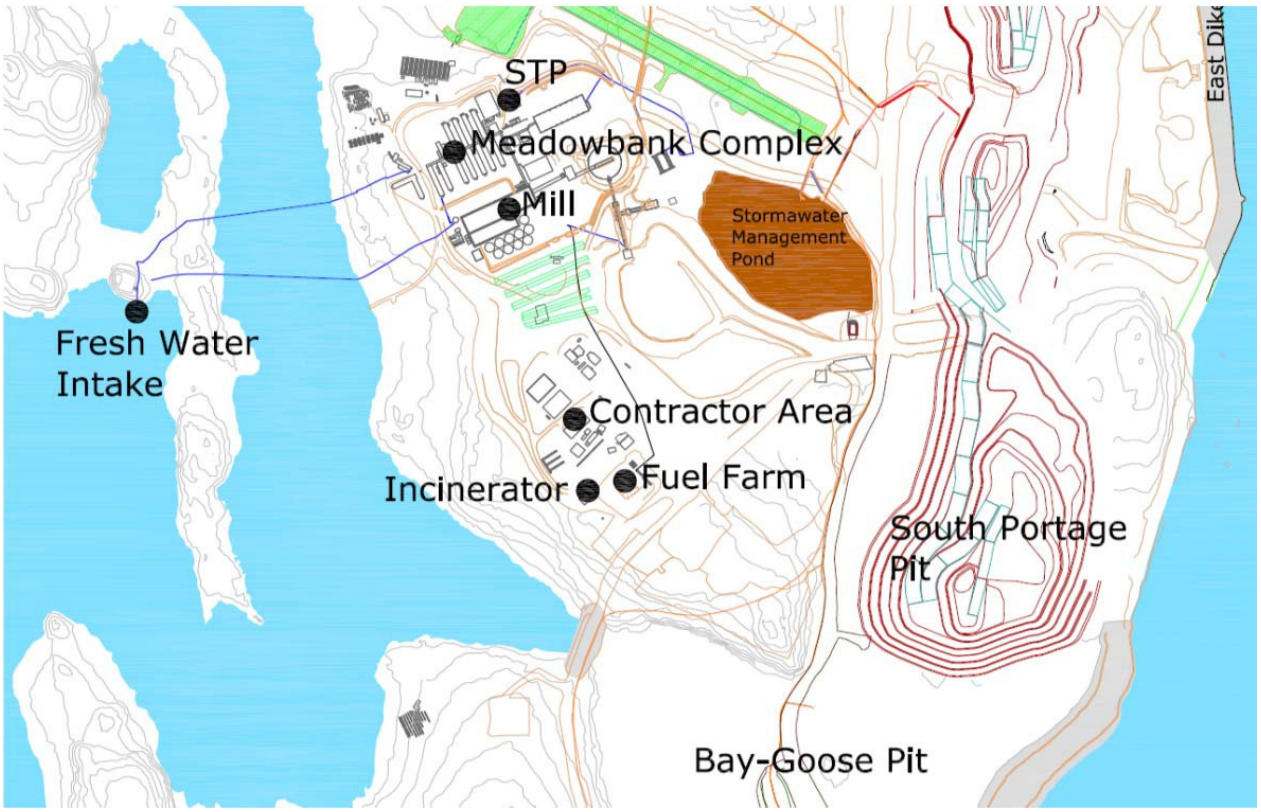

The Whale Tail Fuel Storage Facility is located at the Whale Tail satellite open pit, approximately 50 km west of the Meadowbank site. One 1.5 ML tank will be built. The tank will be in a berm and lined area and its location is shown in Figure 2-2.

Figure 2-2. Location of Whale Tail Fuel Storage

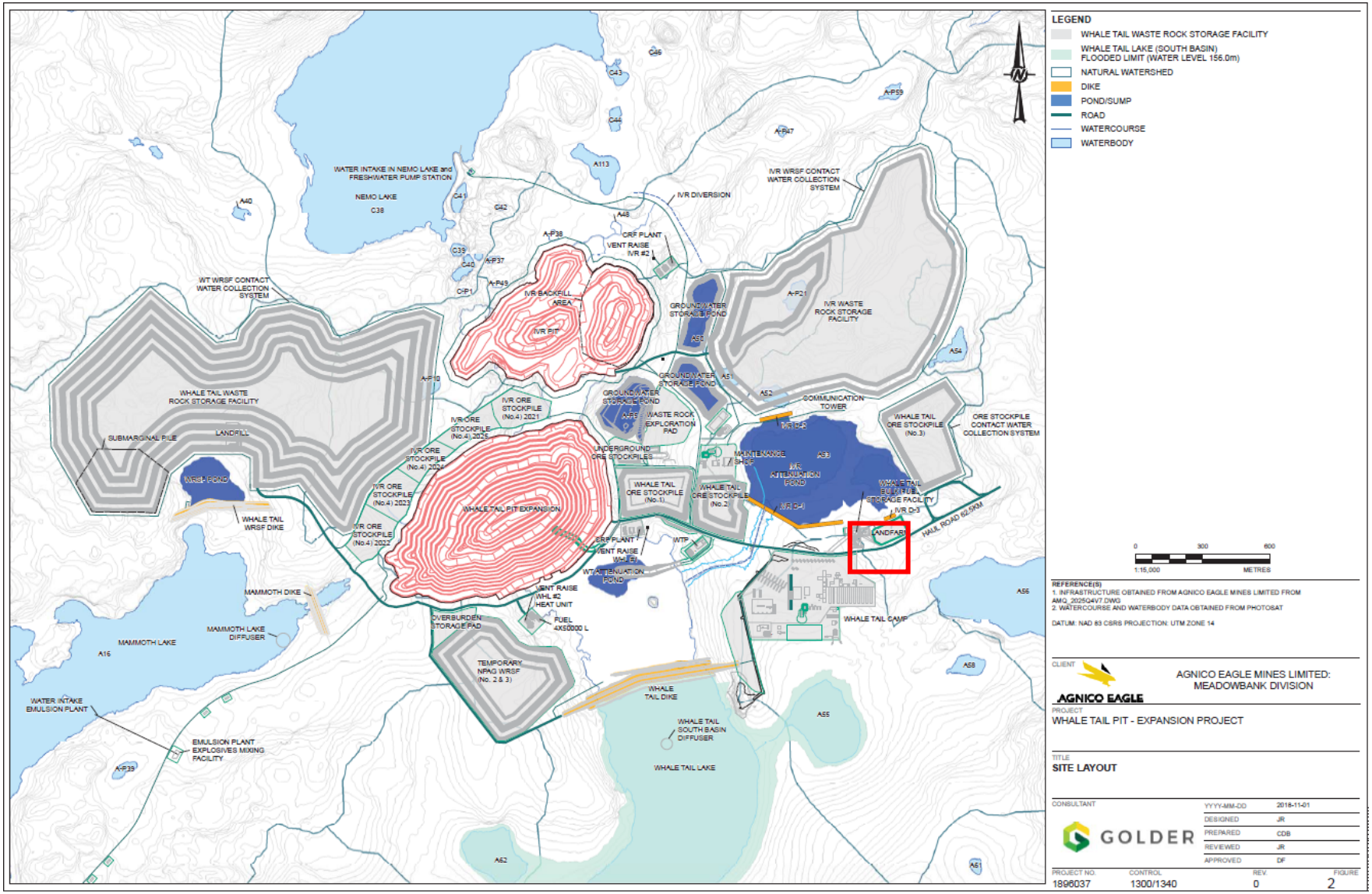

2.2 DESIGN AND INSTALLATION SUMMARY

Following regulatory approval, during the summer of 2008 Agnico Eagle built the bulk fuel tank and respective secondary containment with a capacity of 5.6 million liters (AEM, 2009). The secondary containment enclosure and HDPE liner was installed in accordance with CCME (2003) specifications. The aboveground storage tanks were field erected. Construction activity was supervised by Hatch Engineering and Stavibel Engineering and included qualified steel fabricators and membrane installers. The diesel fuel tank is single-walled and constructed of welded steel. In addition, aviation fuel is stored in two 50,000 L double-walled steel tanks adjacent to the airstrip. Additionally, in the summer of 2015, an aboveground pipe was installed in accordance with CEPA (2008) specifications to supply fuel from the bulk fuel tank to the main Meadowbank power plant.

Similarly, for the Whale Tail Pit site, diesel fuel originating from the Baker Lake Tank Farm is stored in one 1,500,000 L tank with secondary containment. The Whale Tail Bulk Fuel Storage Facility is shown in Figure 2-2.

2.3 OPERATION AND MAINTENANCE SUMMARY

Inventory control of transfer and monthly volume inspections using manual or electronic dip reconciliation are conducted at Meadowbank and at the Whale Tail Pit by operations staff at the respective sites. Weekly inspections are logged and reported by Agnico Eagle. Weekly visual inspections and inventory reconciliation are used to evaluate and determine bulk fuel tank leakage at Meadowbank and Whale Tail.

The bulk fuel storage facilities are maintained in accordance with best management practices. The bulk fuel tanks at Meadowbank and Whale Tail Pit are re-filled by a fuel truck on a regular basis throughout the year. During the period of re-filling, there is the greatest risk of over-filling. Through regular visual inspections, inventory control and monitoring fuel transfer, the risk of over-filling is significantly reduced. In the case of a spill, the Spill Contingency Plan will be implemented.

Section 3 ENVIRONMENTAL SETTING

3.1 TOPOGRAPHY

The surrounding area of the Meadowbank site and Whale Tail site consists of low, rolling hills with many small lakes; Third Portage Lake is located to the south and Second Portage Lake to the north. The bulk fuel storage tank at Meadowbank is bound to the north by the mine site, a haul road to the east, and the incinerator and waste management area to the south. The surface water drainage at the bulk fuel storage facility is towards the storm water management pond to the north.

The topography of the Whale Tail area differs a little from that of Meadowbank. The tank farm is located northeast of the camp as shown in Figure 2-2. The water drainage at the Whale Tail Pit bulk fuel storage facility is towards pond A53, which during operations drains through the east channel and into Whale Tail Lake (South Basin).

3.2 GEOLOGY

The two fuel storage sites have a thin, discontinuous cover of top soil with minimal organic material. Soil thickness is typically between 1 and 5 m below which bedrock is encountered. In the area near the Meadowbank and Whale Tail Pit bulk fuel farm, bedrock is encountered within 2m of existing ground surface or is exposed with weathered fractures extending 1 to 2 m into the rock.

3.3 FLORA AND FAUNA

There are no trees and few shrubs in the area surrounding the Meadowbank and Whale Tail sites. The sites are covered by low-lying vegetation; predominated by grassy hummocks, dwarf willow, sedge, green moss, and lichen.

Arctic ground squirrels, ptarmigan and songbirds are inhabitants in the area surrounding the fuel storage areas. Lake trout, arctic char, lake whitefish, round whitefish, slimy sculpin and stickleback are predominant fish species found in local lakes.

3.4 SUBSURFACE CONDITIONS

At the two sites, soil is characterized by lateral deposits of glacial till. Bedrock is exposed at shallow depths throughout the sites. There is high site drainage due to limited soil depth, high presence of fractured bedrock and glacial till.

3.5 WATER QUALITY

Water quality closely resembles distilled water as many conventional water chemistry parameters are at or below detection limits. The water column is generally well mixed and the water chemistry homogenous. During the open water season there is limited vertical stratification in temperature and dissolved oxygen.

Section 4 NWB TYPE A WATER LICENSE CONDITIONS

Agnico Eagle will continue to adhere and will apply the conditions of the Nunavut Water Board (NWB) Type A water license 2AM-MEA1526 and 2AM-WTP1826 requirements, related to the Meadowbank mine site bulk fuel storage facility and the Whale Tail Pit Bulk Fuel Storage Facility. Agnico Eagle is committed to achieving all of these requirements at Meadowbank, and at Whale Tail.

Section 5 ENVIRONMENTAL PERFORMANCE ASSESSMENT

To adequately assess the environmental performance of the Meadowbank bulk fuel storage tanks and facilities, a desktop review of the Meadowbank Fuel Storage Installations: Final Report (Agnico Eagle, 2009) was completed. In addition, on October 26, 2009 Agnico Eagle environmental personnel completed a site inspection to visually evaluate the site drainage, tank construction, and secondary containment and performed an environmental assessment of the bulk fuel storage facility. A geotechnical inspection is also conducted annually by an external qualified engineer. The report included observations, photos and recommendations.

A similar level of assessment was carried out at Whale Tail Pit once the fuel storage facilities are in place.

5.1 DESK-TOP REPORT REVIEW OF THE MEADOWBANK BULK FUEL STORAGE FACILITY

The Meadowbank bulk fuel storage facility was commissioned in January 2009. The installation report (Agnico Eagle, 2009; attached in Appendix A) indicated the use of best management practices during the installation of the aboveground fuel storage tank. Following the tank construction, X- Ray testing of horizontal and vertical welds was completed. All of the welds met the specifications outlined in the API Standard 650 (Agnico Eagle, 2009). A similar approach was used at the Whale Tail tank farm.

Under the supervision of Hatch Engineering and Stavibel Engineering, the construction of the secondary containment berm was completed for the tank. Enviroline Services Inc. was hired in October 2008 to install the HDPE membrane liner in accordance with CCME (2003) specifications; this liner was subsequently covered with a surface layer of crushed stone.

A secondary containment volume calculation using AutoCAD Civil 3D was completed to provide verification on the liquid storage capacity of the storage tank system. The CCME Environmental Code of Practice for Aboveground Storage Tanks (2003) states:

> *a storage tank system that consists of more than one storage tank which should have a volumetric capacity of not less than the sum of the capacity of the largest storage tank located in the contained space and 10% of the capacity of the largest tank or the aggregate capacity of all other storage tanks located in the contained space.*

In accordance with the CCME (2003) code of practice, the Meadowbank bulk fuel storage tank meets the volumetric requirements for a storage tank system (Agnico Eagle, 2009). The Whale Tail bulk fuel storage tanks will also be constructed to meet CCME (2003) code of practice.

In the summer of 2009, a 4-inch below-ground pipe was installed to supply fuel from the Bulk Fuel storage tank to the Meadowbank main power plant. The pipe was installed according to the CEPA (2008) regulations.

5.2 SECONDARY CONTAINMENT VISUAL INSPECTIONS

A consultant performs a geotechnical inspection annually and inspects the bulk fuel secondary containment structures at the Meadowbank Bulk Fuel Storage Facility, the report is sent to NWB annually. The same inspections and reporting are carried out at Whale Tail Pit.

5.3 ENVIRONMENTAL ASSESSMENT

The management at the site drainage, surface water collection, and water/fuel removal within the secondary containment area is an important measure in the protection of the terrestrial environment, surface water, and ground water from potential sources of contamination. The environmental protection objectives, strategy, and an evaluation of the potential of leaks or seepage that could contaminate the terrestrial environment, surface water and ground water are provided in the following sections. Much of the environmental protection strategies focus on the control of contact water. In this report contact water is defined as any water that may be physically or chemically affected by the nearby operational activities.

At Meadowbank and Whale Tail Pit, the bermed and lined tank farm provides secondary containment. If fuel escapes from the tanks holding the fuel, the bermed and lined area will not allow the fuel to escape to the receiving terrestrial and aquatic environment. As there is expected to be a high volume of fuel transfer and activity around the modular fuel dispenser and refueling station, inadvertent fuel spills during refueling are expected but will be retained on the impermeable, lined pad. The liner is sloped such that any fuel spilled on the pad would flow to a sump where it collects and can be recovered.

5.3.1 Terrestrial Environment

The primary objective of the terrestrial management plan is to minimize any adverse impacts to the terrestrial (soil, flora and fauna) environment. To meet this objective, the Meadowbank and Whale Tail Pit bulk fuel storage facility structures have been constructed, to minimize the operational footprint and control contact run-off water within the secondary containment area. Due to the site grading, all water that comes into contact with the bulk fuel storage facility (including the modular fuel dispenser) is intercepted and directed into the impermeable HDPE lined secondary containment area.

The ground beneath the secondary containment area has been graded to ensure berm stability.

5.3.2 Surface Water

The objective of water management around the Meadowbank and Whale Tail bulk fuel storage facilities is to minimize impacts on the quantity and quality of surface water and groundwater. To meet this objective, the bulk fuel storage facility structures have been constructed to intercept and direct contact run-off water to the impermeable HDPE lined secondary containment area. As there is a high volume of fuel transfer and activity around the modular fuel dispenser, the pad below the modular fuel dispenser and refueling station is lined and sloped toward the secondary containment berm.

Due to the high compaction of the surrounding mine site pad, natural topography of the site, shallow top soil and predominate bedrock, should contact water reach the natural environment at Meadowbank, the ultimate fate of the contaminants is to the stormwater management pond.

5.3.3 Groundwater

It is not expected that groundwater would be impacted as there is no direct pathway for contaminated water to seep from the Meadowbank and Whale Tail bulk fuel storage facilities. Due to the site grading, all contact water from the bulk fuel storage facility is directed inside the HDPE lined secondary containment area. Should the integrity of the liner become compromised, there could be leakage into the below grade soil, which is within a zone of continuous permafrost.

Section 6 PERFORMANCE MONITORING PLAN

The environmental performance monitoring plan is a tiered approach with an emphasis on visual and operational inspections; routine surface water sampling to control and monitor the quality of the contact water; and event monitoring (in the case of a spill emergency or occurrence). Management of the Meadowbank and Whale Tail fuel storage facilities will be guided by the monitoring results.

6.1 VISUAL AND OPERATIONAL INSPECTIONS

Visual and operational inspections are a central component of the environmental performance monitoring plan. Visual inspections of the Meadowbank and Whale Tail secondary containment structures are important because if the integrity of the berm walls or liner is compromised, this presents the greatest potential for leaks or seepage.

Visual inspections are conducted by the environmental department once per week and monthly manual or electronic dip tests are conducted for inventory reconciliation by Procurement Department. Staff will inspect the bulk fuel storage facilities pad for: tank and piping condition, secondary containment berm structure and integrity, indicators of liner damage, precipitation/ run-off accumulation, evidence of tampering or misuse, any structural abnormalities and visible sheens on contact water pools and crush material inside the secondary containment.

The Environment staff will follow-up with the Energy and Infrastructures (E&I) Department if any non-compliances are observed. A weekly written inspection sheet will continue to be completed and signed by the E&I supervisor and available upon request.

6.2 ROUTINE CONTACT WATER MONITORING

Due to snow accumulation, melting and precipitation, contact water is unavoidably collected inside the secondary containment area. Contact water from inside the secondary containment area is sampled as described below before being discharged. The water accumulated in the Meadowbank and Whale Tail secondary containment will be released in accordance with the Type A Water License 2AM-MEA1526 and 2AM-WTP1826, Part F Item 7 to 11 conditions.

During visual inspections the quantity of contact water collected inside the secondary containment area and sump will be evaluated. If there is a visible sheen on the contact water or if water withdrawal to the environment is deemed necessary, water samples will be collected and analyzed as per Water License 2AM-MEA1526 Part F Item 8 and 2AM-WTP1826 Part F Item 7. If the contact water exceeds the licensed limits, a portable oil-water separator can be used to treat the water. Prior to withdrawal, samples will be analyzed at a certified laboratory and the 10-day notice will be sent to the inspector (as per 2AM-MEA1526 Part F Item 12 and 2AM-WTP1826 Part F, Item 13).

In addition, water samples from lakes near the Meadowbank and Whale Tail Pit site are collected as part of the Core Receiving Environmental Monitoring Plan (CREMP) and Aquatic Environmental Management Plan. The results of these analyzes will continue to be included in the annual report.

These samples are used to evaluate the performance of the overall water management plan for the Meadowbank and Whale Tail sites.

6.3 EVENT MONITORING

In the event of a spill occurrence at fuel storage facilities, the Spill Contingency Plan will be followed. As a follow-up to the spill response, the environmental staff will conduct an environmental assessment to determine the extent of impacts of the spill occurrence on the nearby environment. This will include the identification of the potential environmental pathways of concern that may result in impacts to surface water (i.e. Third Portage Lake near-shore surface water or east channel that drains into Whale Tail Lake (South Basin)), soil or groundwater.

6.3.1 Soil Sampling

Following the unlikely event where a spill is not contained within the secondary containment area or on the lined pad, soil sampling may be required to locate and prevent further impact to the terrestrial and aquatic receiving environment. Depending on the quantity of the spill, the organic surface soils and shallow till are a likely sink for hydrocarbons, thus soil samples will be taken at selected locations to horizontally and vertically delineate the impacted areas. Furthermore, the soil samples will provide valuable information used to determine the necessity of installing groundwater wells (see Section 6.3.3 below).

6.3.2 Water Sampling

Following a spill event escaping secondary containment, an environmental assessment will be conducted. Similar to routine contact water sampling (inside the secondary containment area or on the lined pad), water samples will be collected and analyzed as per Water License 2AM-MEA1526 Part F Item 8 and 2AM-WTP1826 Part F Item 7. If the contact water exceeds the licensed limits, a portable oil-water separator can be used to treat the water before it was disposed to the stormwater management ponds. Prior to withdrawal, samples will be analyzed at a certified laboratory. As part of the CREMP, receiving environment surface and at-depth water samples will be taken from Third Portage Lake or Whale Tail Lake, and analyzed for the same parameters as listed above.

6.3.3 Assessment of the Need for Groundwater Well Installation

Following a spill event escaping secondary containment, if soil sample results identify elevated concentrations of contaminants (i.e. exceeding the CCME Canada-Wide Standard (CWS) for Petroleum Hydrocarbons (PHC) in Soil) and/or if water samples identify elevated receiving environment water samples (i.e. exceeding licensed limits caused as a result of the spill event), an assessment of the need for groundwater wells will be conducted. The assessment, and if required, design for installation, monitoring and maintenance of vertical ground water monitoring wells will be in accordance with CCME (2003) procedures.

Section 7 REFERENCES

Agnico Eagle (2009). Meadowbank Fuel Storage Installations: Final Report Following Construction. April 2009.

Agnico Eagle (2016). Meadowbank Gold Project: Spill Contingency Plan. June 2016

Azimuth (2016). Core Receiving Environmental Monitoring Program: Whale Tail Pit Addendum. May 2016

BAER (2005). Meadowbank Gold Project Baseline Aquatic Ecosystem Report. October 2005. CCME (2008). Canadian Council of Ministers of the Environment: Canada Wide Standards for Petroleum Hydrocarbons in Soil. PN 1398. January 2008.

CCME (2003). Canadian Council of Ministers of the Environment: Environmental Code of Practice for Aboveground and Underground Storage Tank Systems Containing Petroleum and Allied Petroleum Products. ISBN 1-896997-33-3.

CEPA (2008). Canadian Environmental Protection Act. Storage Tank Systems for Petroleum Products and Allied Petroleum Products Regulations. June 12, 2008.

Golder Associates Ltd. (2004). Geotechnical Input to Infrastructure Design. Meadowbank Gold Project. Nunavut. Report submitted to Cumberland Resources Ltd, March 2004.

Golder Associates Ltd (2014). 2014 Annual Geotechnical Inspection Meadowbank Gold Mine, Nunavut.

Appendix A

Meadowbank Fuel Storage Installations – Final Report



AGNICO-EAGLE MINES LTD
MEADOWBANK DIVISION

MEADOWBANK FUEL STORAGE INSTALLATIONS

FINAL REPORT
FOLLOWING THE CONSTRUCTION

AGNICO-EAGLE MINES LTD
MEADOWBANK DIVISION

MEADOWBANK FUEL STORAGE INSTALLATIONS

FINAL REPORT
FOLLOWING THE CONSTRUCTION

PREPARED BY :



Patrick Giard, P.Eng., CCE
Supervisor, Construction Department
AGNICO-EAGLE MINES LTD, *Meadowbank Division*

AGNICO-EAGLE MINES LTD
MEADOWBANK DIVISION

MEADOWBANK FUEL STORAGE INSTALLATIONS

FINAL REPORT
FOLLOWING THE CONSTRUCTION

TABLE OF CONTENTS

DESCRIPTION OF THE MANDATE

A **DOCUMENTATION READILY AVAILABLE**

B **ADDITIONAL COLLECTION OF INFORMATION**

C **REVISION OF CONSTRUCTION DRAWINGS**

D **VERIFICATIONS TO STORAGE CAPACITY WITHIN BERMS**

APPENDIX 1 : DRAWINGS

AS-BUILT : VD2259-MBD-001, VD2259-MBD-002, VD2259-MBD-003

REVISION 1 OF 17202-2000-46D6-2001 IFC DRAWING from SNC-LAVALIN

VENDOR DRAWING FROM CHAMCO INDUSTRIES LTD : CUP1014938-21

APPENDIX 2

SAFE FILL LEVEL FOR FUEL TANK 680-TK-042

DESCRIPTION OF THE MANDATE

Agnico-Eagle Mines has given a mandate to the undersigned in order to verify the compliance with applicable regulations of its fuel storage installations at the Meadowbank gold mining site, in Nunavut.

According to the terms of reference, the mandate consists summarily in the following activities.

A. Review and compilation of the available documentation ;

B. Collection of any information that may be missing ;

C. Preparation of an *AS BUILT* version of the construction drawings ;

D. Verifications to the storage capacity within the containment berms in regards to the applicable regulations.

A. DOCUMENTATION READILY AVAILABLE

HATCH - Vancouver Office

Only one (1) layout drawing showing the berm enclosure was issued from Hatch. No detailed design or cross-sections of containment berms was available prior to the construction phase. The original design of the fuel containment area is shown on revision 0B of drawing 325174-600-C-0135, which was issued **for information**.

NISHI-KHON / SNC-LAVALIN LTD - Vancouver Office

This firm was responsible for issuing the piping layout drawings and P&ID's for the Baker Lake fuel storage installations, which is a similar project located 100 km further South. During the construction and installation of piping for the Meadowbank bulk fuel storage tank, the *Process and Instrumentation Diagram* issued for construction was not readily available to the pipefitters.

GEM STEEL EDMONTON LTD

This vendor has submitted a set of drawings issued **for review**, consisting in three (3) structural drawings showing the details of a fuel tank of 5.6 million liters nominal capacity. The original design of this fuel tank is shown on revision A0 of drawings BL-2008-80-1, BL-2008-80-2, and BL-2008-80-3.

CHAMCO INDUSTRIES LTD

This vendor has submitted a set of preliminary drawings issued **for approval**, consisting in twenty-five (25) documents showing details of a fuel dispensing module. These documents have been reviewed by HATCH, and bear the following identification, which has been assigned by HATCH Document Control.

DRAWING NUMBER	H325174-M268-VD-0040	H325174-M268-VD-0041	H325174-M268-VD-0010
H325174-M268-VD-0011	H325174-M268-VD-0012	H325174-M268-VD-0013	H325174-M268-VD-0014
H325174-M268-VD-0015	H325174-M268-VD-0016	H325174-M268-VD-0017	H325174-M268-VD-0019
H325174-M268-VD-0020	H325174-M268-VD-0021	H325174-M268-VD-0029	H325174-M268-VD-0030
H325174-M268-VD-0031	H325174-M268-VD-0032	H325174-M268-VD-0033	H325174-M268-VD-0034
H325174-M268-VD-0035	H325174-M268-VD-0036	H325174-M268-VD-0037	H325174-M268-VD-0039

B. ADDITIONAL COLLECTION OF INFORMATION

HATCH - Vancouver Office

Role during construction phase : Design & Field Supervision during construction of berms.

Mr. Marlon Coakley and Jim Bonia, both of which were HATCH employees at the time, have supervised the construction of the fuel containment area. They have also hired a specialized crew from Saskatoon (Enviroline Service inc.) in October 2008 to install the HDPE membrane covering the berms. This HDPE membrane has since been covered with a layer of about 100 mm thickness of crushed stone.

NISHI-KHON / SNC-LAVALIN LTD - Vancouver Office

Role during construction phase : So far, I have never communicated with these people.

A research of all files provided by HATCH Document Control has permitted to find **Revision 0** of drawing 017202-2000-46D6-2001 from SNC-LAVALIN.

This document was not readily available to the construction team at the time when the crew from Mosher Engineering Ltd were installing the piping and commissioning the fuel dispensing module.

AGNICO-EAGLE MINES LTD, Meadowbank Surveying Team

Role during construction phase : Surveying of quantities & grades for berms, HDPE liner.

A surveying crew from AEM has monitored the quantities of granular materials and required berm elevations, as well as the installation of the HDPE membrane and grounding wire around the fuel tank. All of this work was done with the same specifications which were observed during the construction of the berms around the AEM bulk fuel storage tanks, which are located in Baker Lake.

GEM STEEL EDMONTON LTD

Role during construction phase : Fabrication and field assembly of the 5.6 M liters tank

A crew of ten (10) workers has started the construction of fuel tank 680-TK-042 on August 25, 2008 and the field erection was completed over a period of 16 days. Following this field work, a crew from ACUREN has proceeded to X-RAY testing of horizontal and vertical welds according to specifications described in the latest edition of API Standard 650. According to the report made by ACUREN, no repairs of defective welds were required, either on the tank shell or nozzles.

MOSHER ENGINEERING LTD

Role during construction phase : Welding of pipelines and support brackets between the 5.6 M liters tank and the fuel dispensing module.

In early November 2008, a crew of two (2) workers has welded the pipelines and installed the flanged connections and gate valves between fuel tank 680-TK-042 and the fuel dispensing module manufactured by CHAMCO INDUSTRIES LTD.

They have also installed check valves on the 100 mm diameter inlet and outlet nozzles on this tank, as well as a pressure relief valve set at 75 psi to bypass the check valve on the pipeline between the tank outlet and the fuel dispensing module. The grade of material that was used for this pipeline was A333 cold temperature rated steel.

CHAMCO INDUSTRIES LTD

Role during construction phase : Manufacturing of the fuel dispensing module.

This fuel dispensing module was manufactured in the summer of 2007 and sent to the Meadowbank site. No representatives of CHAMCO were present during the commissioning. Possibly due to vibrations during transport, there were many flanged connections that needed tightening, and it was found that this was not a turn-key installation. The air eliminator unit on the fuel tanker unloading area leaked fuel extensively during operation, as it was often locked in open position.

C. REVISION OF CONSTRUCTION DRAWINGS

AEM has hired STAVIBEL Engineering Services, a firm based in Val-d'Or, in order to complete the drawings that were used in producing this report.

Those four (4) drawings are enclosed in **Appendix 1** of this report.

Drawing VD2259-MDB-001 shows the general layout of the fuel tank 680-TK-042 and containment area. It has been compiled using surveying data collected by a crew from AEM. It also shows the location of pipelines, fuel dispensing module, and some three (3) additional fuel tanks.

Drawing VD2259-MDB-002 shows the cross-sections on both sides of the containment area. These cross-sections are derived from surfaces that were generated using the *Autocad Civil 3D* software, and are also based on information collected from AEM Construction Supervisors. This drawing file was also used to verify containment volumes, as it is described further in section D.

Drawing VD2259-MDB-003 is an as-built version of Vendor drawing BL-2008-80-1 which has been updated to reflect nozzle orientations that were noted during a site visit. No changes were noted except those made to the nozzle schedule.

The enclosed **Revision 1** of drawing 017202-2000-46D6-2001 from SNC-LAVALIN is also an as-built drawing. It shows a few items from the proposed piping layout for the Meadowbank bulk fuel storage that have not yet been put in place. These missing items consists in three (3) pressure relief loops around gate valves, and a 300 US gallon floor sump, which was to be located inside the fuel dispensing module. This floor sump has not been supplied by CHAMCO INDUSTRIES LTD.

Also enclosed is a vendor drawing from CHAMCO INDUSTRIES LTD, which shows the piping details inside the fuel dispensing module.

D. VERIFICATIONS TO STORAGE CAPACITY WITHIN BERMS

STAVIBEL Engineering Services has completed verifications on the liquid storage capacity inside the containment berms, which create an impermeable enclosure around tank 680-TK-042.

The method used was a volume calculation using *Autocad CIVIL 3D* software.

The maximum storage capacity of fuel tank 680-TK-042 is 5 675 700 litres of diesel fuel at a standard temperature of fifteen degrees Celcius (15 °C).

It has been verified using the above software that the impermeable enclosure around this fuel tank will effectively hold one hundred and ten percent (110 %) of its maximum storage capacity. This theoretical calculation does not include the volume inside the tank itself, as if the fuel was pumped outside the tank.

Thus, the lowest point of the HDPE membrane that sits atop the containment area is sufficiently high (at elevation 150.94 m) to meet the above criteria.

On the following pages are the results of a software simulation, which are showing a 3D view of the containment area in normal storage conditions, as well as another view showing the worst case scenario.

This worst case scenario would consist in either a rupture of the first course of side plates in the tank shell, or a failure in the outlet piping, when the tank is 100% full.

This simulation shows that, in such a worst case scenario, the hydraulic balancing level inside the containment area would not exceed the point with the lowest elevation on the surrounding berms. There is a safety margin of about 200 mm.

MEADOWBANK FUEL STORAGE INSTALLATIONS

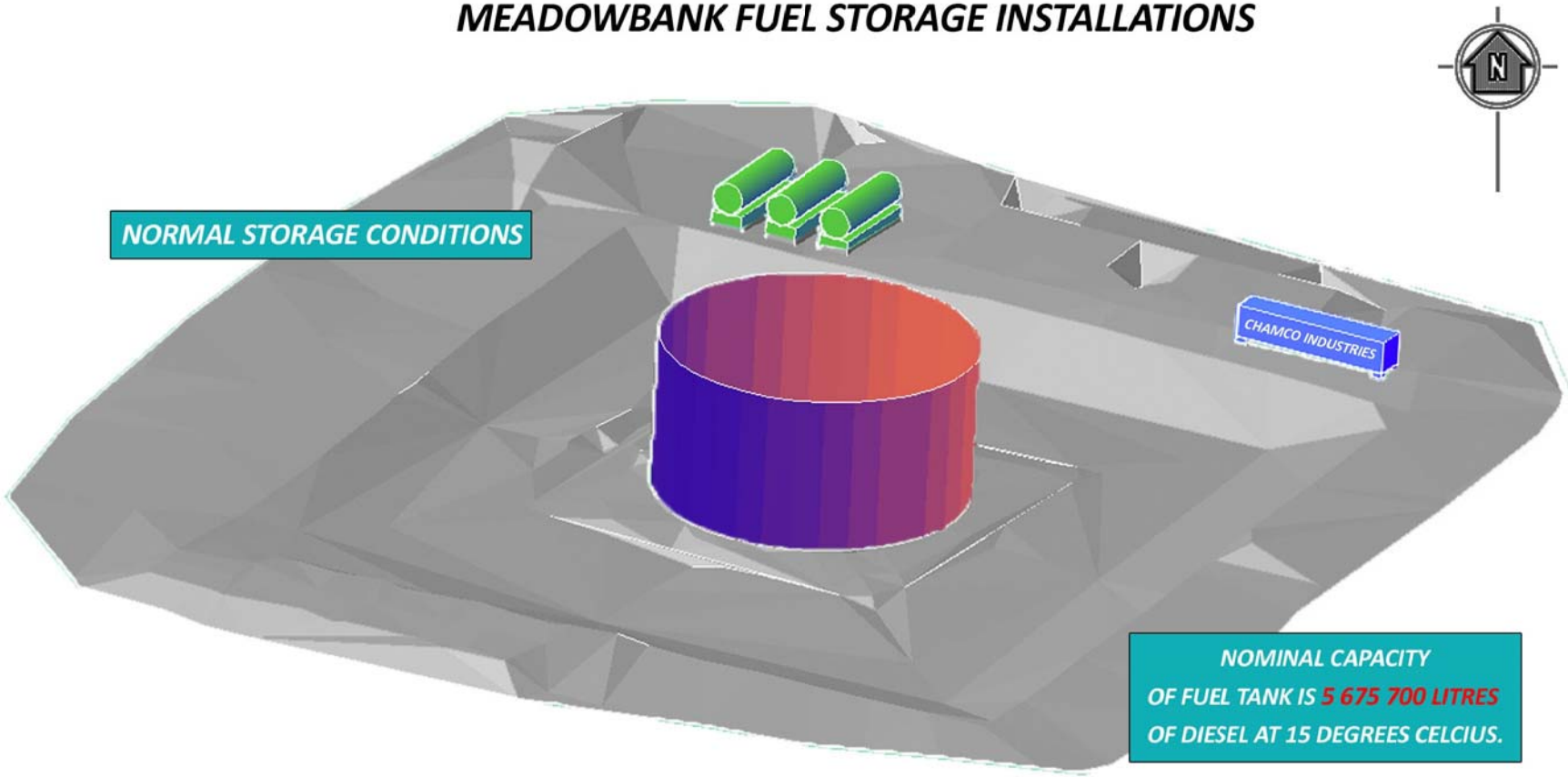

MEADOWBANK FUEL STORAGE INSTALLATIONS

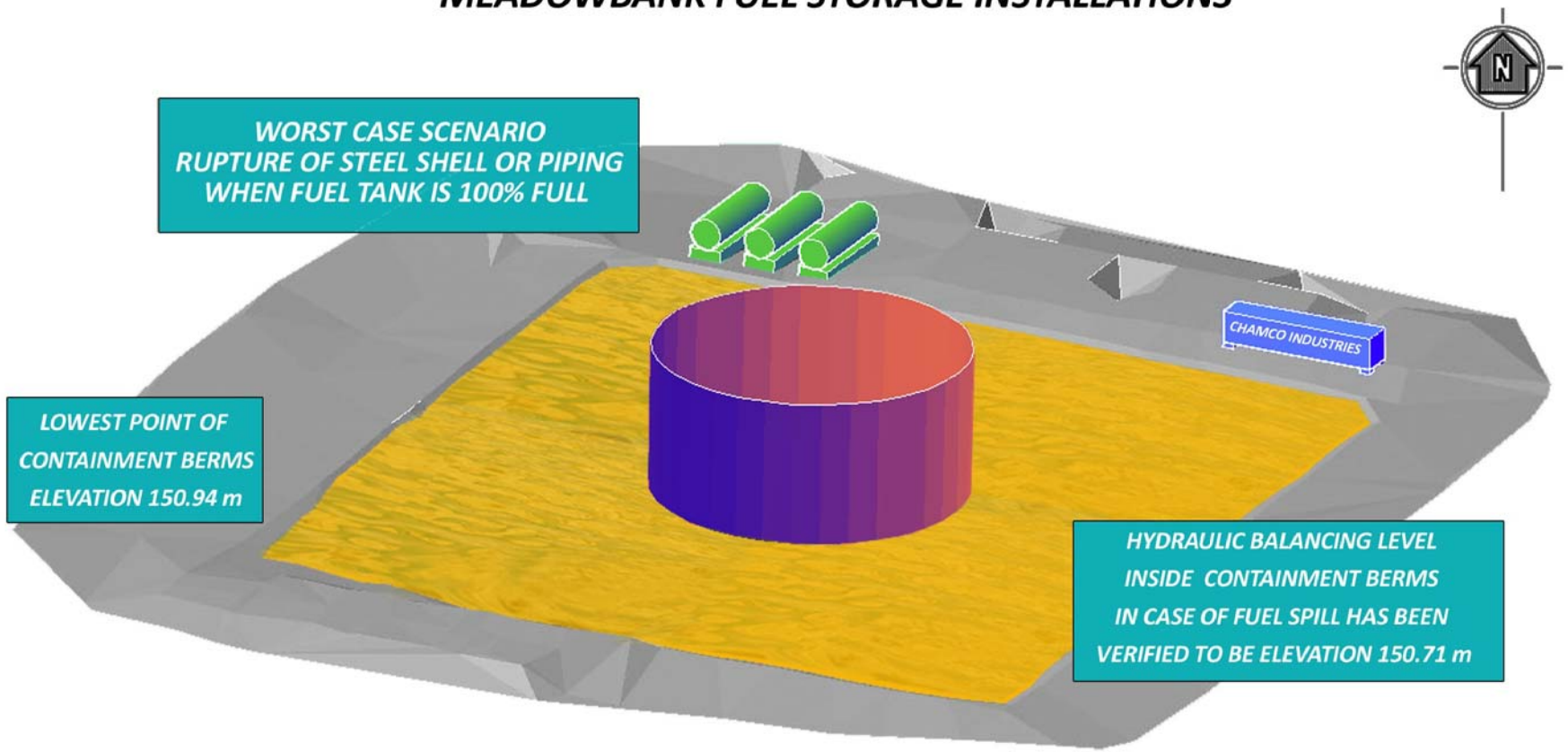

APPENDIX 1

AS BUILT DRAWINGS

VD2259-MDB-001
VD2259-MDB-002
VD2259-MDB-003

017202-2000-46D6-2001 IFC DRAWING from SNC-LAVALIN

Plus one (1) drawing from CHAMCO INDUSTRIES LTD

Vendor ref. # CUP1014938-21

DRAWING NO.

FORMAT ARCH-D-LANDSCAPE

KEY PLAN

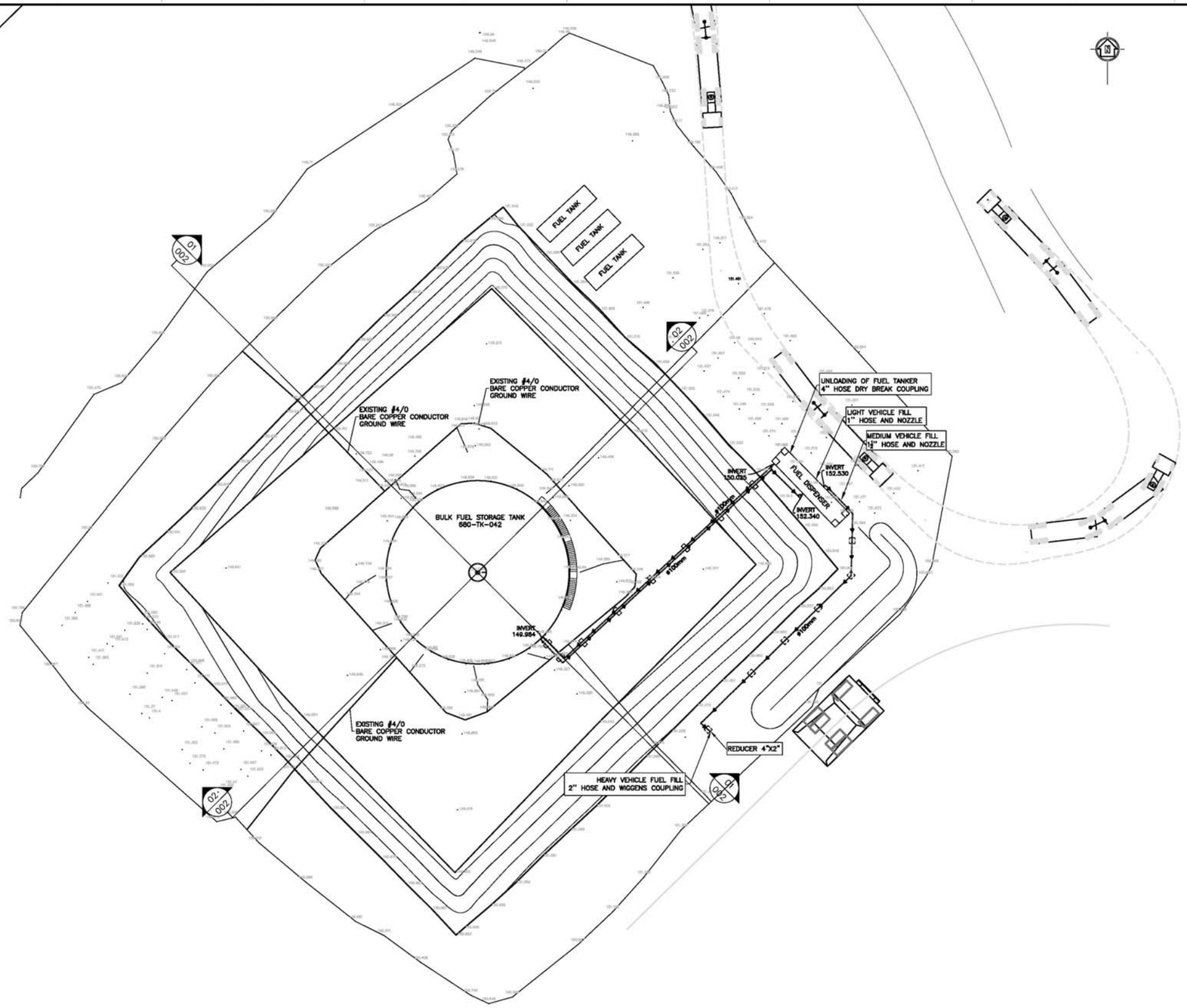

GENERAL NOTES

Groupe STAVIBEL
Consultants en Ingénierie
1271, 7e Rue
Val-d'Or (Québec) J9P 3S1
Tél: (819) 825-2333 Télécopieur: (819) 825-1322
Courriel : stavibel@stavibel.qc.ca
Site internet : www.stavibel.qc.ca

THE INFORMATION CONTAINED IN THIS DRAWING IS THE PROPERTY OF AGNICO-EAGLE MINES LTD. AND IS LOANED ON THE CONDITION THAT IT IS NOT REPRODUCED, DISCLOSED OR USED WITHOUT THE WRITTEN AUTHORIZATION OF AGNICO-EAGLE MINES LTD. COPYRIGHT 2009

TITLE	# DWG

REFERENCE DRAWINGS

REV.	DATE	DESCRIPTION	BY	APP.	CLIENT
1	09-03-31	AS-BUILT (ADD GROUNDWIRE)	F.R.	P.G.	
0	09-03-12	AS-BUILT	F.R.	P.G.	

REVISIONS

AGNICO-EAGLE
MEADOWBANK DIVISION

TITLE
AGNICO-EAGLE – MEADOWBANK DIVISION

GENERAL LAYOUT

DRAWN BY	CHRISTIAN DÉRY	DATE 2009-02-23
CHECKED BY	FRANCIS ROSE	2009-03-31
APPROVED BY	PATRICK GIARD, P.ENG	2009-03-31
SCALE 1:250	DATE	2009-03-31

DRAWING NO.
VD2259-MDB-001

PROJECT NO.	REVISION	SHEET
VD2259-1	1	1/4

P:\VD2259 – AGNICO-MEADOWBANK\VD2259-TVFUEL EMPIEMENT\Drawings\As built\DRAWINGS\DEV (VD2259-1 AS BUILT FUEL TANK MEADOWBANK 2009-03-12 (MAY 13,2009, 21 Mar 2009

FILE NO. .DWG

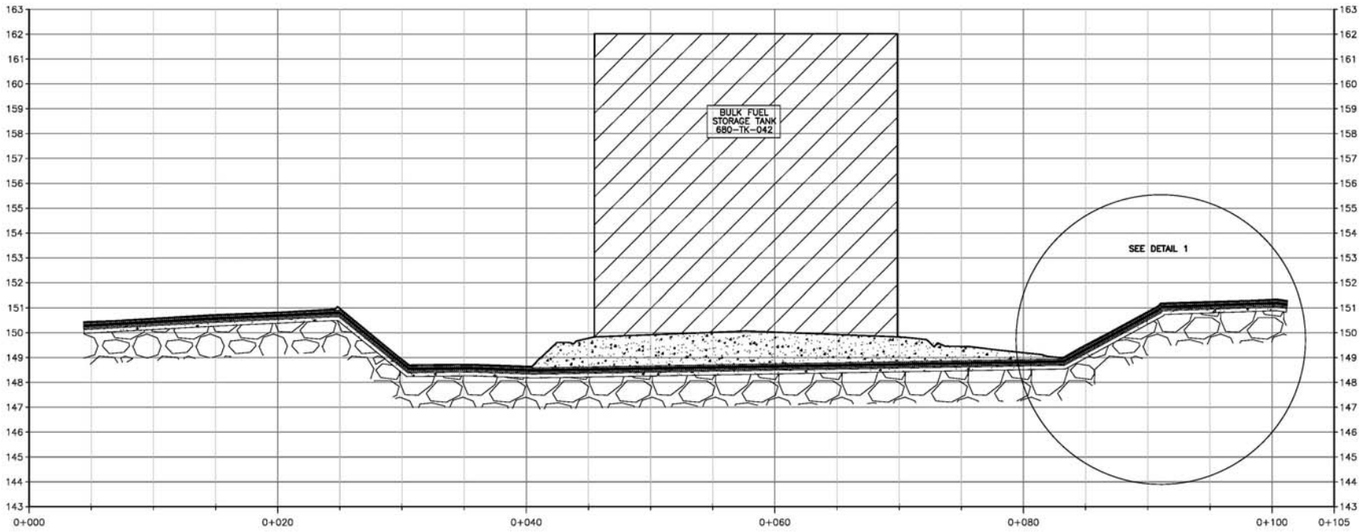

CROSS-SECTION 01/001

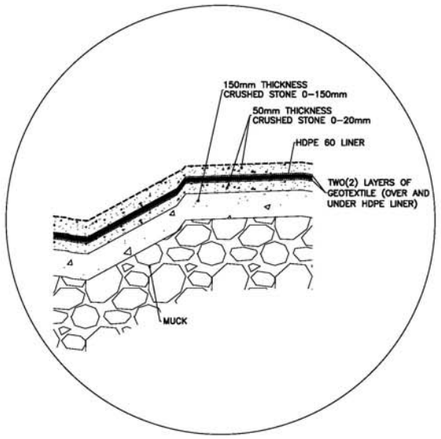

DETAIL 1
NOT TO SCALE

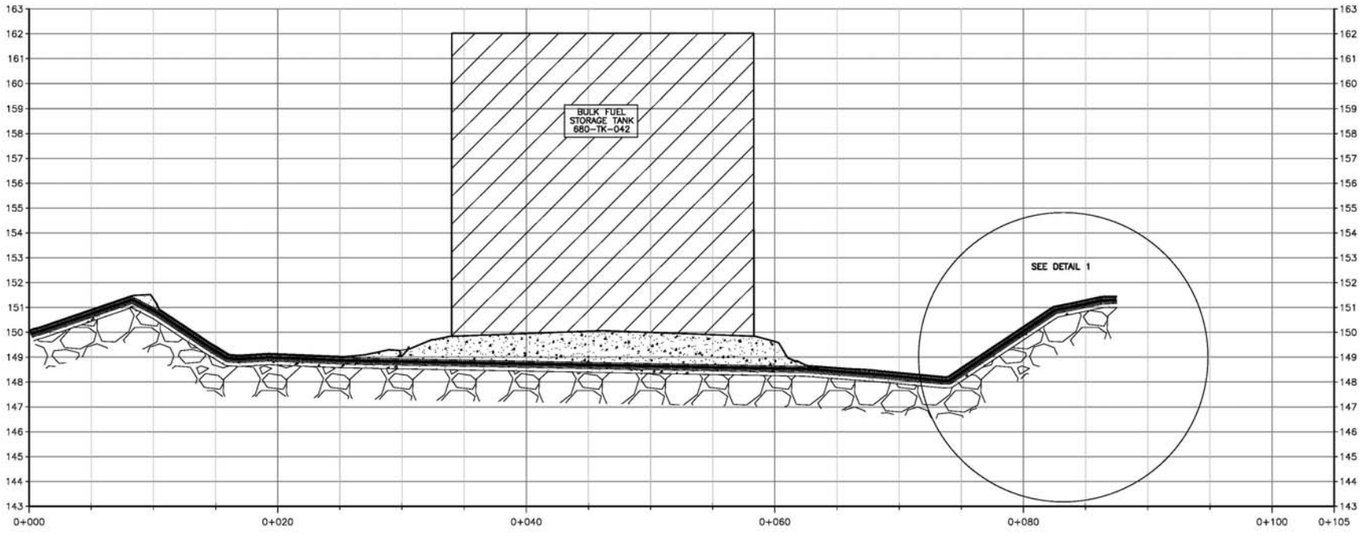

CROSS-SECTION 02/001

Property Specifications for High Density Polyethylene (HDPE 60):

Style	ASTM	Qualifier	Unit	Specified Value	Minimum Test Frequency
Average Thickness	D5994	minimum	mm	1.5	1 per 50,000 kg
Density (Untextured)	D792	minimum		0.94	1 per 50,000 kg
Tensile Strength	D638	minimum	kN/m	23.1	1 per 4,000 m^2
Tear Resistance	D1004	minimum	N	200	1 per 4,000 m^2
Low Temperature	D746	minimum	°C	-60	1 per 4,000 m^2
Dimension Stability	D1204	maximum	%	+/- 1.5	1 per 4,000 m^2
Notched Constant Load	D5397	minimum	hours	200	1 per 4,000 m^2
Puncture Resistance	2065	minimum	N	347	1 per 4,000 m^2
Carbon Black Content	D1603	minimum	%	2.0	1 per 4,000 m^2

Property Specifications for Geotextile:

Material Property	Qualifier	Unit	Specified Value	Test Method	Minimum Test Frequency
Mass / Unit Area	minimum	g/m	270	ASTM D5261	1 per 10,000 m^2
Grab Tensile Strength	minimum	N	975	ASTM D4632	1 per 10,000 m^2
Grab Elongation	minimum	%	50	ASTM D4632	1 per 10,000 m^2
Puncture Strength	minimum	N	525	ASTM D4833	1 per 10,000 m^2
Apparent Opening Size	maximum	mm	0.180	ASTM D4751	1 per 60,000 m^2
Permeability	minimum	cm/sec	0.30	ASTM D4491	1 per 60,000 m^2
Water Flow Rate	minimum	L/min/m^2	4,480	ASTM D4491	1 per 60,000 m^2
UV Resistance	minimum	%	70	ASTM D355	1 per 60,000 m^2

SPECIFICATIONS FOR GEOTEXTILE AND HDPE LINER

KEY PLAN

GENERAL NOTES

Groupe STAVIBEL
Consultants en ingénierie
1271, 7e Rue
Val-d'Or (Québec) J9P 3S1
Tél: (819) 825-2233 Téléc: (819) 825-1322
Courriel : stavibel-vd@stavibel.qc.ca
Site Internet : www.stavibel.qc.ca

TITLE	# DWG

REFERENCE DRAWINGS

REV.	DATE	DESCRIPTION	BY	APP.	CLIENT
1	09-03-31	AS-BUILT	F.R.	P.G.	
0	09-03-12	AS-BUILT	F.R.	P.G.	

REVISIONS

AGNICO-EAGLE MEADOWBANK DIVISION

TITLE
AGNICO-EAGLE – MEADOWBANK DIVISION

CROSS-SECTION AND DETAILS

DRAWN BY	FRANCIS ROSE	DATE 2009-03-31
CHECKED BY	PATRICK GIARD, P.ENG	2009-03-31
APPROVED BY		
SCALE HOR:1:200 VER:1:100	DATE 2009-03-31	
DRAWING NO.	VD2259-MDB-002	
PROJECT NO. VD2259-1	REVISION 1	SHEET 2/4

FILE NO. .DWG

DRAWING NO.

FORMAT ARCH-D-LANDSCAPE

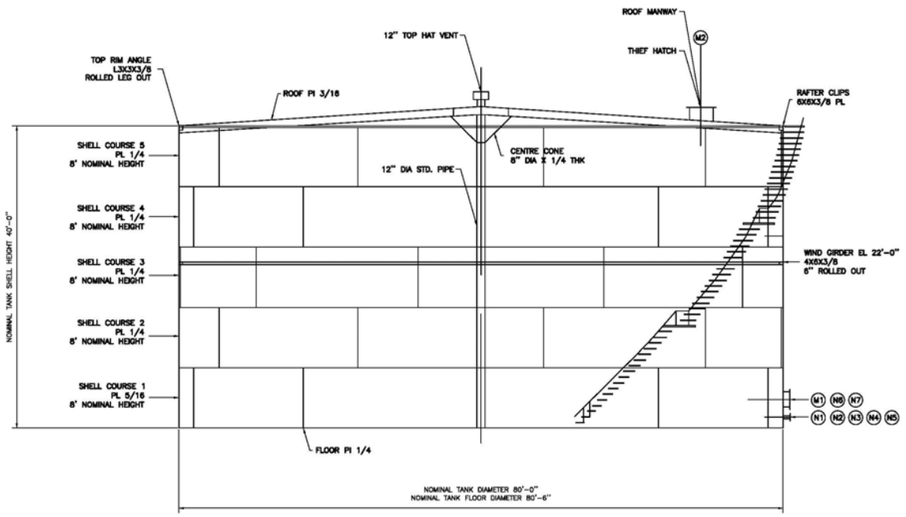

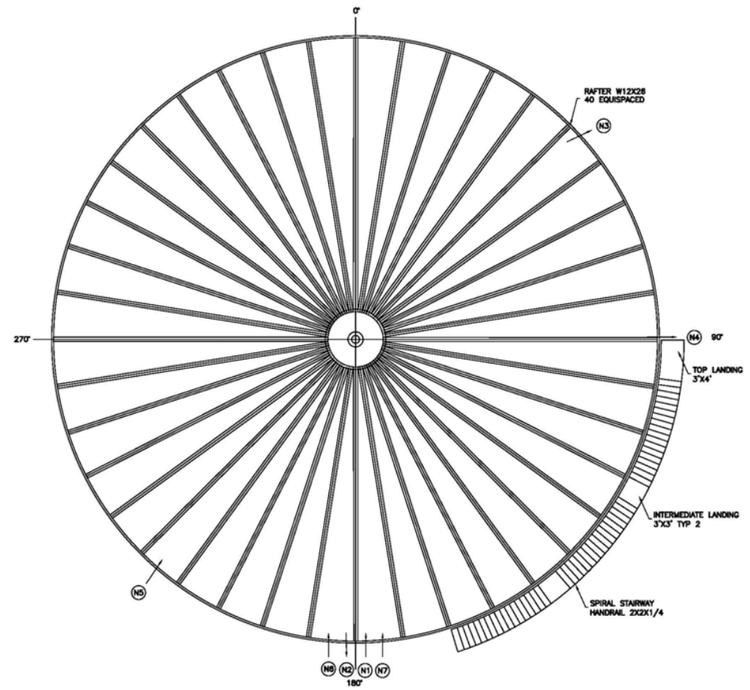

* ALL NOZZLE ORIENTATIONS ARE APPROXIMATE

GENERAL NOTES

DESIGN

1. CODE OF CONSTRUCTION: API-650, LATEST EDITION
2. ALL DIMENSIONS ARE IN IMPERIAL UNLESS NOTED OTHERWISE
3. PRODUCT STORED: DIESEL
4. DIAMETER 80'-0"
5. HEIGHT: 40'-0"
6. NOMINAL CAPACITY: 5.6 MILLION LITRES.
7. OPERATING TEMPERATURE RANGE: -45/+100°C
8. PRODUCT SPECIFIC GRAVITY: 0.9
9. VENTING: PRESSURE: ATMOSPHERIC

INSPECTION

1. VACUUM TESTING: FLOOR
2. LIQUID PENETRANT INSPECTION: SHELL TO FLOOR WELD
3. RADIOGRAPHY: VERTICAL SHELL WELDS-SPOT AS PER API 650
4. RADIOGRAPHY: HORIZONTAL SHELL WELDS-SPOT AS PER API 650

MATERIALS

1. STRUCTURAL BOLTS: A-325
2. REGULAR BOLTS: A-193 GR.B7
3. NUTS: A-194 GR.2H
4. PIPE NOZZLES: A106 GR.B SCH.80
5. FORGED FLAMINGS AND COUPLINGS:LF2
6. PIPE FITTINGS: A234 GR.WPB
7. STRUCTURAL STEEL: G40.21 44W
8. STEEL PLATE: G40.21M-260WT
9. GASKETS: NA60
10. ROOF SUPPORT COLUMN: 12" STD PIPE STRUCTURAL GRADE OR BETTER

NOZZLE SCHEDULE (ALL NOZZLE ORIENTATIONS ARE APPROXIMATE)

MARK	DESCRIPTION	SIZE	INT.PROJ.	PROJ.	TYPE	RATING	NOTES
M1	SHELL MANWAY	24"					180°
M2	ROOF MANWAY	24"					
N1	RE-SUPPLY	4"			RFSO	150#	175°
N2	SUCTION FOR FUEL DISPENSING	4"			RFSO	150#	185°
N3	DRAW-OFF	3"	152		RFSO	150#	40°
N4	SUCTION FOR FUEL TRANSFER	4"	152		RFSO	150#	90°
N5	SPARE	4"			RFSO	150#	220°
N6	PRESSURE RELIEF FOR N2	2"			RFSO	150#	
N7	SPARE	2"					190°
TH	THIEF HATCH (ON M2)	8"					170°

KEY PLAN

GENERAL NOTES

GEM STEEL
9060-24 STREET
EDMONTON, ALBERTA
CANADA T6P 1X8
PH. (780) 449-0000
FAX. (780) 449-0001

THE INFORMATION HERE ON IS THE PROPERTY OF GEM STEEL AND MAY NOT BE REPRODUCED WITHOUT PERMISSION FROM GEM STEEL. ANY REPRODUCTION, IN WHOLE OR IN PART, MUST BEAR THIS NOTICE IN ITS ENTIRETY. © GEM STEEL 2009

TITLE	# DWG
GENERAL TANK ELEVATION	SL3008-80-01
ROOF AND NOZZLE PLAN	SL3008-80-01
GENERAL TANK DETAILS	SL3008-80-01

REFERENCE DRAWINGS

NO.	DATE	DESCRIPTION	BY	APP.	CLIENT
1	12/03/09	AS-BUILT DRAWING	PR		P.G.
A	10/09/09	ISSUED FOR REVIEW	JGC	BNB	

REVISIONS

AGNICO-EAGLE
MEADOWBANK DIVISION

TITLE
AGNICO-EAGLE - MEADOWBANK DIVISION
GENERAL TANK LAYOUT
80' DIAX40' HIGH
DIESEL FUEL STORAGE TANKS

DRAWN BY	GEM STEEL EDMONTON LTD	DATE 2008-08-08
CHECKED BY	PATRICK GIARD, P.ENG	2009-03-31
APPROVED BY		
SCALE	N.T.S.	DATE

DRAWING NO.
VD2259-MDB-003

PROJECT NO.	REVISION	SHEET
VD2259-1	1	3/4

P:\VD2259 - AGNICO-MEADOWBANK\VD2259-7\FUEL DISPENSER\Meadowbank fuel models\DRAWINGS\REV 1\VD2259-1 AS BUILT FUEL TANK MEDOWBANK 2009-03-12 (REV 1).DWG, 31 Mar 2009

FILE NO. .DWG

DRAWING NO.

FORMAT ARCH-D-LANDSCAPE

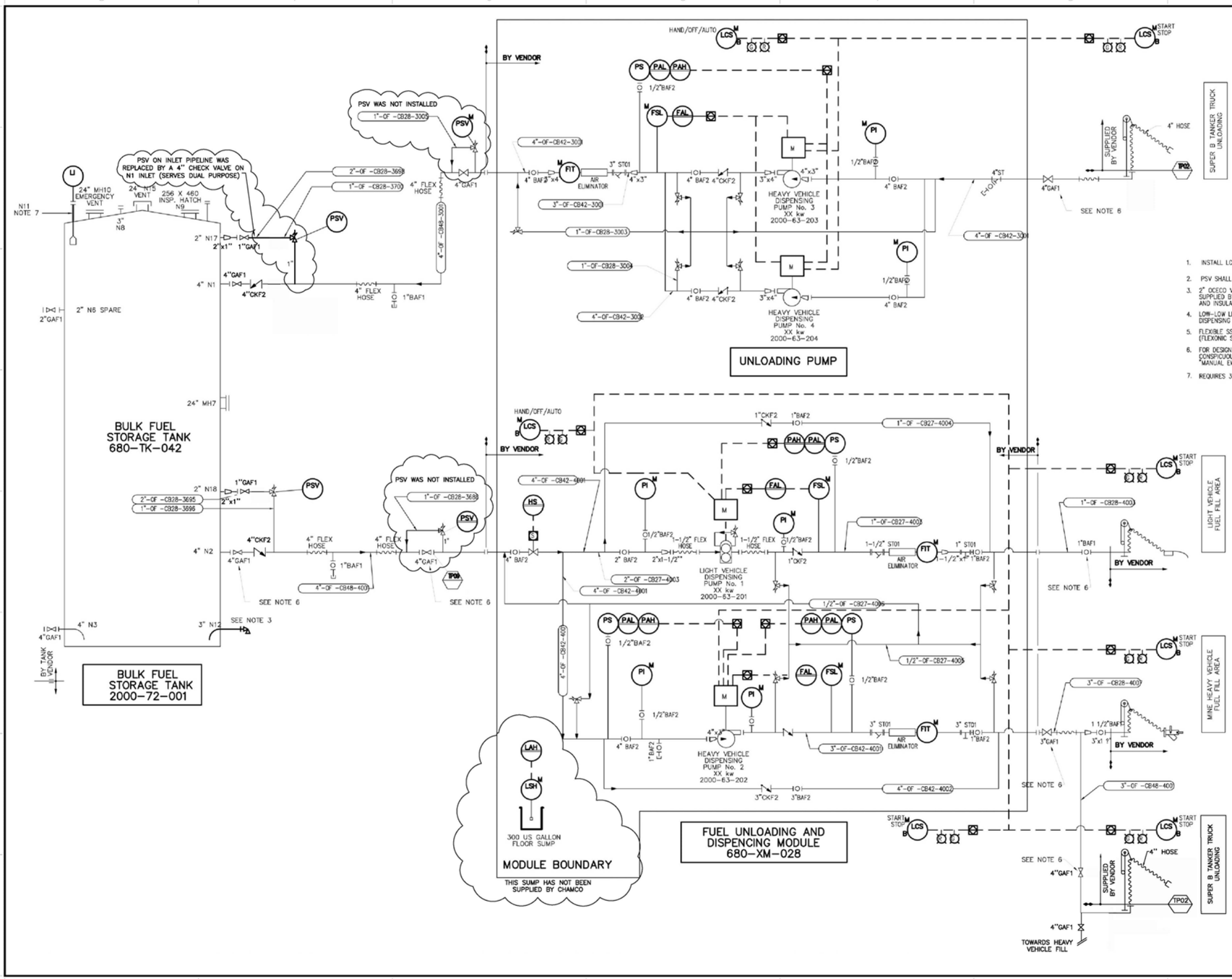

KEY PLAN

GENERAL NOTES

1. INSTALL LOW POINT DRAINS
2. PSV SHALL BE SUITABLE FOR FLUID AT -54 ℃.
3. 2" OCECO V-144 WATER DRAWOFF VALVE (3" ANSI 150# FLG. SUPPLIED BY TANK VENDOR. VALVE TO BE HEAT TRACED AND INSULATED.
4. LOW-LOW LEVEL IN TANK STOPS DISTRIBUTION AND DISPENSING PUMPS.
5. FLEXIBLE SS BRAIDED HOSE, 750mm LG. (FLEXONIC SENIOR, OR EQUAL).
6. FOR DESIGNATED VALVES, POST SIGNS NEARBY IN CONSPICUOUS LOCATIONS READING "MANUAL EMERGENCY SHUTOFF VALVE".
7. REQUIRES 3-NOZZLES, 2 x 1-1/4" & 1 x 1-1/2".

THE INFORMATION SHOWN ON THIS DRAWING IS THE PROPERTY OF AGNICO-EAGLE AND MAY NOT BE REPRODUCED, EITHER WHOLLY OR PARTIALLY, FOR ANY PURPOSE WHATSOEVER, WITHOUT THE WRITTEN PERMISSION OF AGNICO-EAGLE. © AGNICO-EAGLE 2007

TITLE	# DWG

REFERENCE DRAWINGS

REVISIONS

REV.	DATE	DESCRIPTION	BY	APP.	CLIENT
1	31/03/09	AS-BUILT DRAWING	FR		P.G.
0	03/08/07	ISSUED FOR CONSTRUCTION	RU	ARW	

AGNICO-EAGLE
MEADOWBANK DIVISION

TITLE
AGNICO-EAGLE – MEADOWBANK DIVISION

PROCESS AND INSTRUMENTATION DIAGRAM

DRAWN BY F.REYES/CHL	DATE MARCH 2006
CHECKED BY PATRICK GIARD, P.ENG	2009-03-31
APPROVED BY A.R. WACHMANN, P.ENG	2007-08-03
SCALE N.T.S.	DATE 2009-03-31

DRAWING NO.
2000-46D6-2001

PROJECT NO.	REVISION	SHEET
017202	1	4/4

FILE NO. .DWG

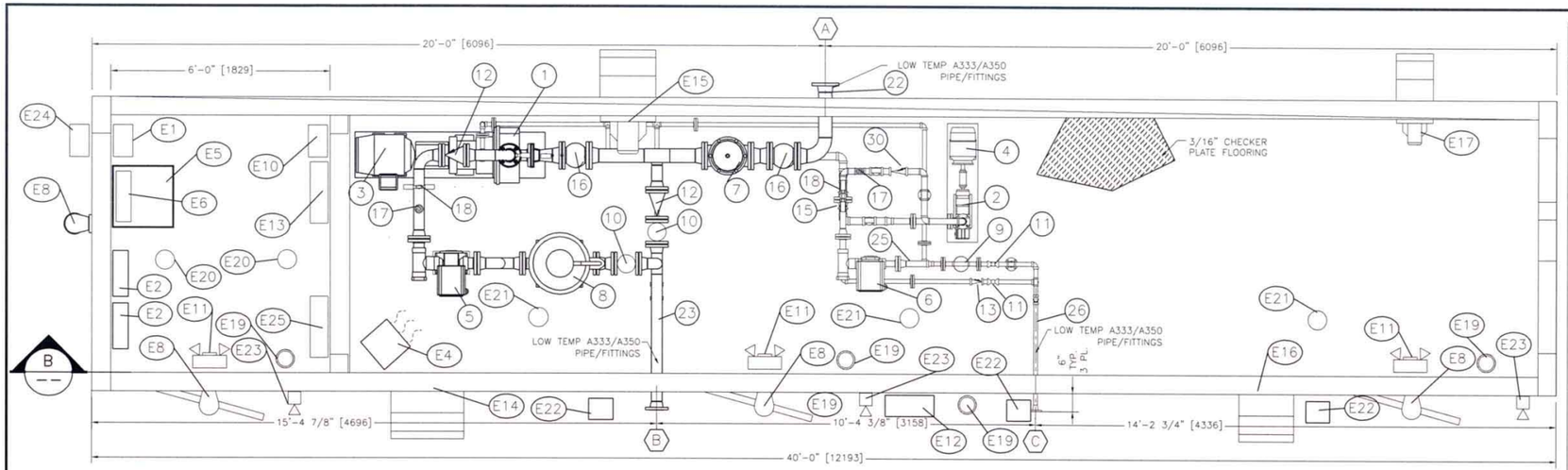

PLAN VIEW A

LEGEND

1. PEERLESS – 3"X3" 13 MTP 8796 PUMP
2. GORMAN RUPP GHS 1.5 GC 32–B PUMP
3. ELECTRIC MOTOR 15HP
4. ELECTRIC MOTOR 1.5HP
5. TCS 700–30 3" AIR FLOW METER
6. TCS 700–15 1–1/2" FLOW METER
7. 4" 120VAC SOLENOID FIRE SAFE VALVE
8. 3" BASKET FILTER
9. 1" BASKET FILTER
10. 3" BALL VALVE
11. 1" BALL VALVE
12. 3" CHECK VALVE
13. 1" CHECK VALVE
14. 1–1/2" FLEX HOSE
15. 2" BALL VALVE
16. 4" BALL VALVE
17. FLOW SWITCH
18. PRESSURE SWITCH
19. 1" PSV SET AT 75PSI
20. 3" API DRY BREAK (HEAVY FILL)
21. 1" NOZZLE (LIGHT FILL)
22. 4" LOW TEMP PIPE AND FITTINGS
23. 3" LOW TEMP PIPE AND FITTINGS
24. 2" LOW TEMP PIPE AND FITTINGS
25. 1–1/2" LOW TEMP PIPE AND FITTINGS
26. 1" LOW TEMP PIPE AND FITTINGS
27. HIGH HOSE RETRIEVER AND BUN
28. 1/2" BALL VALVE
29. PRESSURE GAUGE
30. 1–1/2" CHECK VALVE

E1. DISTRIBUTION PANEL
E2. FUEL PUMP CONTROLLER
E3. AIR MAKE UP UNIT
E4. 10 kW HEATER
E5. 15 KVA TRANSFORMER
E6. LIGHTING PANEL
E7. INTERIOR LIGHT (NOT SHOWN)
E8. EXTERIOR LIGHT
E9. DUPLEX RECEPTACLE (NOT SHOWN)
E10. VENT CONTROL J.B.
E11. EXIT LIGHT/EMRGENCY LIGHT
E12. SCULLY SYSTEM
E13. FIRE ALARM PANEL
E14. 24" ARCTIC LOUVRE
E15. 18" EXHAUST FAN
E16. 18" ARCTIC LOUVRE
E17. 12" EXHAUST FAN
E18. LIGHT SWITCH (NOT SHOWN)
E19. FIRE EXTINGUISHER
E20. SMOKE/HEAT DETECTOR (ELEC. ROOM)
E21. SMOKE/HEAT DETECTOR (MECH. ROOM)
E22. EXTERIOR PULL STATION
E23. RED STROBE
E24. EXTERIOR JUNCTION BOX
E25. ALARM JUNCTION BOX

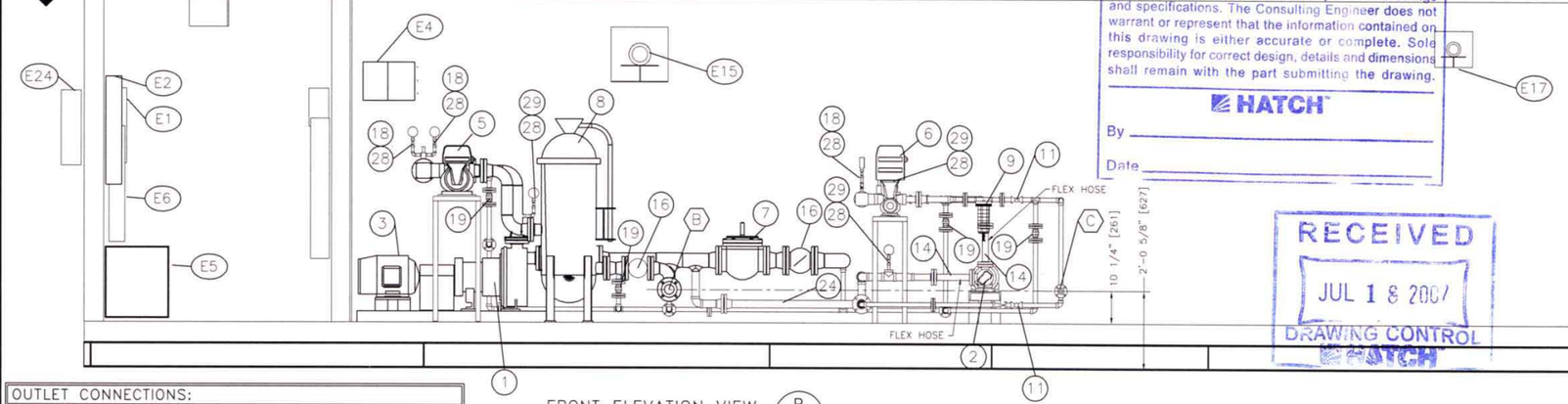

FRONT ELEVATION VIEW B

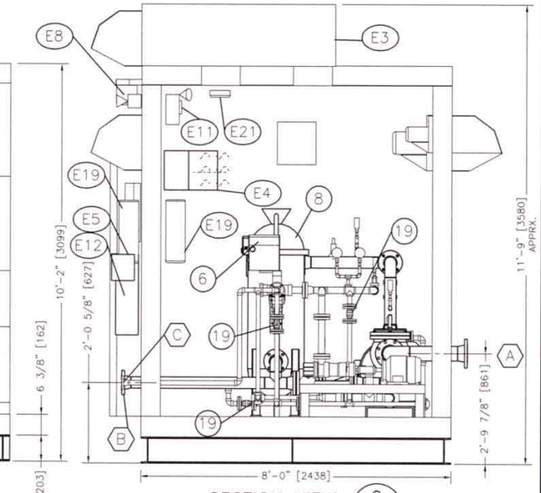

SECTION VIEW C

OUTLET CONNECTIONS:

- (A) 4"–150 LB. RF SUCTION
- (B) 3"–API DRY BREAK DISCHARGE CONNECTION (HEAVY FILL)
- (C) 1"–DRY FILL DISCHARGE CONNECTION (LIGHT FILL)

CONDITIONS:

PEERLESS 8796 CENTRIFUGAL PUMP AT DISCHARGE HEAD IS RATED FOR 220 USGPM [50M3/HR] AT 100' [30M] TDH.

GORMAN RUPP GHS 1.5 GC 32–B GEAR PUMP AT DISCHARGE HEAD IS RATED FOR 10 USGPM [2.27M3/HR] AT 110' [33.53M] TDH.

GENERAL NOTES:

– ALL DIMENSIONS ARE + OR – 1/2" [13 mm].

HATCH
- ☐ Code 1" Proceed, No Exception Taken"
- ☐ Code 2 "Proceed, with Exceptions as Noted and **Re-submit**"
- ☐ Code 3 "Do not Proceed, Revise as Noted and **Re-submit**"
- ☐ Code 4 "Information Only"

Reviewed only for general conformity with the drawings and specifications. The Consulting Engineer does not warrant or represent that the information contained on this drawing is either accurate or complete. Sole responsibility for correct design, details and dimensions shall remain with the part submitting the drawing.

HATCH

By _____

Date _____

RECEIVED
JUL 18 2007
DRAWING CONTROL
HATCH

PRELIMINARY
FOR APPROVAL
CHAMCO INDUSTRIES LTD.

REV.	DATE	BY	DESCRIPTION

THIS PRINT IS THE PROPERTY OF CHAMCO INDUSTRIES LTD., IS CONFIDENTIAL, IS LENT ONLY FOR REFERENCE IN EQUIPMENT MAINTENANCE OR IN DEALING WITH CHAMCO INDUSTRIES LTD. AND IS NOT TO BE COPIED OR REPRODUCED WITHOUT OUR EXPRESS WRITTEN PERMISSION

CHAMCO
CHAMCO INDUSTRIES LTD.
VANCOUVER – CALGARY – EDMONTON – PRINCE GEORGE

H325179-M268-VD-0011

CUMBERLAND RESOURCES
BAKER LAKE, NUNAVUT
.
P.O. No. M268

BAKER LAKE DISPENSING FUEL TRANSFER MODULE
PEERLESS 8796, 3x3x13MTP CENTRIFUGAL PUMP (1)
GORMAN RUPP GHS 1.5 GC 32–B GEAR PUMP (1)
PLAN VIEW & SECTIONS GENERAL ARRANGEMENT

DESIGNED BY	D.J.C.
DRAWN BY	G.R.M.
CHECKED BY	.
JOB No.	1014938ABS

DATE	SCALE	DWG No.	REV.
25–APRIL–07	N.T.S.	CUP1014938–21	0

APPENDIX 2

SAFE FILL LEVEL FOR FUEL TANK 680-TK-042

The safe fill level of fuel tank 680-TK-042 depends on the temperature of the fuel inside the tanker, as well as outside temperature. In order to allow room for thermal expansion of diesel fuel, some care must be taken not to exceed the safe fill levels stated hereunder. The VAREC float gives imperial readings.

safe fill for fuel tank 680-TK-042			
TEMPERATURE of fuel unloaded	MAXIMUM FUEL LEVEL		
	feet	**inches**	**fraction**
- 40°C	38	1	9/16
- 35°C	38	3	3/8
- 30°C	38	5	3/16
- 25°C	38	7	1/16
- 20°C	38	8	7/8
- 15°C	38	10	3/4
- 10°C	39	0	5/8
- 5°C	39	2	9/16
0°C	39	4	9/16
+ 5°C	39	6	1/2
+10°C	39	8	1/2
+15°C	39	10	1/2

Hazardous Materials Management Plan, Version 4

AGNICO EAGLE

MEADOWBANK Division

Hazardous Materials Management Plan

Meadowbank Mine Site

Whale Tail Pit Site

Baker Lake Facilities

In Accordance with Water License 2AM-MEA1526 & 2AM-WTP1826

Prepared by:

Agnico Eagle Mines Limited – Meadowbank Division

Version 4
March 2019

EXECUTIVE SUMMARY

General Information

The Hazardous Materials Management Plan (HMMP) will be executed within the scope of normal operations. The Meadowbank Mine and Whale Tail Project requires that the transportation, storage, handling and use of hydrocarbon products, ammonium nitrate and associated explosive materials, and all other chemicals be conducted in a safe and efficient manner. Ore and material (including various hazmat products and waste) will be shipped along the Whale Tail Pit Haul Road (WTHR) an All-Weather access road (AWAR).

Annual Review

The HMMP will be reviewed annually and updated as required. Completion of the annual review of the HMMP will be documented through signatures of the personnel responsible for reviewing, updating and approving the HMMP.

IMPLEMENTATION SCHEDULE

As required by Water License 2AM-MEA1526 and 2AM-WTP1826, the proposed implementation schedule for this plan is effective immediately and subject to any modification proposed by the Nunavut Water Board as a result of the review and approval process.

DISTRIBUTION LIST

Agnico Eagle - Environmental Superintendent

Agnico Eagle – Environmental General Supervisor

Agnico Eagle – Environmental Coordinator

Agnico Eagle – General Mine Manager

Agnico Eagle – Health and Safety Superintendent

Agnico Eagle – Mill Superintendent

Agnico Eagle – Maintenance Superintendent

Agnico Eagle – Mine Superintendent

Agnico Eagle – Energy and Infrastructures Superintendent

Agnico Eagle – General Services Superintendent

Agnico Eagle – Procurement and Logistics Coordinator

DOCUMENT CONTROL

Version	Date (YMD)	Section	Page	Revision
1	2007/08			Comprehensive plan for Meadowbank Mine Site and Baker Lake Facilities
2	2012/3/12			Comprehensive review and update.
3	2013/10			Add Baker Lake Jet-A Information and comprehensive review and update
WT	2016/06/15	All	All	Added the Whale Tail pit development to the Plan. Numerous changes were made throughout the document.
4	2019/03/31	All	All	Updated plan to reflect active operating licenses

Table of Contents

1 INTRODUCTION 8
1.1 PURPOSE & SCOPE OF THE PLAN 8
1.2 APPLICABLE LEGISLATION 9
2 OVERVIEW OF HAZARDOUS MATERIALS 10
2.1 HAZARDOUS MATERIALS AND FUEL STORAGE LOCATIONS 10
2.2 TYPES OF HAZARDOUS MATERIALS 10
2.3 GENERAL HAZARDOUS MATERIAL STORAGE GUIDELINES 11
2.3.1 General Guidelines for Storage Drums/Containers 11
2.3.2 General Guidelines for Storage Areas 12
3 HAZARDOUS MATERIALS LIFE CYCLE MANAGEMENT 13
3.1 LIFE CYCLE MANAGEMENT 13
3.1.1 Delivery 13
3.1.2 On-Site Handling 13
3.1.3 Wastes 14
3.1.4 Empty Product Containers 15
4 SODIUM CYANIDE 16
4.1 INTRODUCTION 16
4.1.1 Physical Properties 16
4.1.2 Cyanide Production 16
4.1.3 Cyanide Transport 16
4.1.4 On-Site Storage & Handling 17
4.1.5 Spills 17
4.1.6 International Cyanide Management Code 17
5 PETROLEUM PRODUCTS 19
5.1 PRODUCT DESCRIPTION 19
5.2 DELIVERY TO SITE 19
5.3 FUEL TRUCK TRANSFER PROCEDURES 20
5.4 CONTAMINATED SOILS AND SPILLS 21
5.5 USED PETROLEUM PRODUCTS 21
6 EXPLOSIVES 26
6.1 PRODUCT DESCRIPTION 26
6.2 EXPLOSIVES STORAGE 26
6.3 USE OF EXPLOSIVES 27

6.4 DISPOSAL 27
7 PROCESS PLANT & WATER TREATMENT REAGENTS & CONSUMABLES 29
7.1 PRODUCT DESCRIPTION 29
8 MISCELLANEOUS HAZARDOUS/TOXIC MATERIALS 41
8.1 PRODUCT DESCRIPTION 41
8.2 STORAGE FACILITIES OF HAZARDOUS/TOXIC CHEMICALS 41
9 INVENTORY, INSPECTION & RECORDS 42
9.1 PETROLEUM PRODUCTS 42
9.1.1 Inventory Management 42
9.1.2 Inspection 42
9.1.3 Records 43
9.2 EXPLOSIVES 44
9.2.1 Inventory Management 44
9.2.2 Inspection 44
9.2.3 Records 44
9.3 MISCELLANEOUS HAZARDOUS/TOXIC MATERIALS 45
9.3.1 Inventory Management 45
9.3.2 Inspection 45
9.3.3 Records 45
10 TRAINING 46
10.1 GENERAL 46
10.2 PETROLEUM PRODUCTS HANDLERS 46
10.3 EXPLOSIVES HANDLERS 46
10.4 PLANT EMPLOYEES 47
10.5 THIRD PARTY CONTRACTORS 47
11 PLAN EVALUATION, AUDIT & IMPROVEMENT 48
12 FIGURES 49
13 LIST OF ACRONYMS 56

LIST OF TABLES

Table 1 - Fuel Products – Hazardous Classes & Potential Impacts 22
Table 2 - Fuel Products – Meadowbank and Whale Tail Site Storage Locations 22
Table 3 - Fuel Products – Safe Handling Procedures 24
Table 4 - Fuel Products – Personal Protective Equipment 25
Table 5 - Process Plant & Water Treatment Reagents – Use, Consumption & Storage 29
Table 6 - Process Plant & Water Treatment Reagents – Hazard Classes & Potential Environmental Impacts 31
Table 7 - Process Plant & Water Treatment Reagents – Safe Handling Procedures 32
Table 8 - Process Plant & Water Treatment Reagents – Personal Protective Equipment 36
Table 9 - Inspection of Petroleum Storage Sites 43

LIST OF FIGURES

Figure 1 Meadowbank Site Layout 50
Figure 2 - Vault General Layout 51
Figure 3 - Meadowbank Mine Site: Hazardous Material Storage Locations 52
Figure 4 - Baker Lake Marshalling Area Layout: Diesel Fuel Storage Facility 53
Figure 5 – Baker Lake Marshalling Area Layout: Jet-A Fuel Storage Facility 54
Figure 6 Whale Tail Camp 55

LIST OF APPENDICES

APPENDIX A: List of Applicable legislation

APPENDIX B: Hazardous Materials stored at the Meadowbank site

APPENDIX C: Cyanide

C.1 Cyanide – Properties, Uses, Storage & Handling (Dupont)

C.2 Material Safety Data Sheets – Sodium Cyanide

APPENDIX D: Hazardous Material Storage Area Inspection Report

APPENDIX E: Procedure Poster Hazardous Material Storage

1 INTRODUCTION

1.1 PURPOSE & SCOPE OF THE PLAN

The purpose of this plan is to provide a consolidated source of information on the safe and environmentally sound transportation, storage, and handling of the major hazardous products that are used at the Meadowbank Mine and Whale Tail Pit. A hazardous material is one that, as a result of its physical, chemical, or other properties, poses a hazard to human health or the environment when it is improperly handled, used, stored, disposed of, or otherwise managed. In combination with Agnico Eagle's Emergency Response Plan (ERP) and Spill Contingency Plan (SCP), this Hazardous Materials Management Plan (HMMP) provides instruction on the prevention, detection, containment, response, and mitigation of accidents that could result from handling hazardous materials.

The plan is based on the following principles of best practice management for hazardous materials:

- Identify and prepare materials and waste inventories;
- Characterize potential environmental hazards posed by those materials;
- Allocate clear responsibility for managing hazardous materials;
- Describe methods for transport, storage, handling, and use;
- Identify means of long-term storage and disposal;
- Prepare contingency and emergency response plans;
- Ensure training for management, workers, and contractors whose responsibilities include handling hazardous materials; and
- Maintain and review records of hazardous material consumption and incidents in order to anticipate and avoid impacts on personal health and the environment.

All hazardous materials to be used at the Meadowbank and Whale Tail Projects operations will be manufactured, delivered, stored, and handled in compliance with all applicable federal and territorial laws and regulations. Agnico Eagle is committed to preventing, to the greatest extent possible, both inadvertent release of these substances to the environment and accidents resulting from mishandling or mishap. Agnico Eagle has instituted programs for employee training, facility inspection, periodic drills to test systems, and procedural review to address deficiencies, accountability, and continuous improvement objectives.

Agnico Eagle actively works towards minimizing the generation of hazardous wastes by investigating alternatives to the use of hazardous materials, by recycling products and containers wherever feasible, and by treating wastes using state-of-the-art technologies before any release to the environment.

As with all other aspects of health and safety policy at the Meadowbank mine, all employees will be expected to comply with all applicable precautions and handling procedures with regard to hazardous materials. Employees are also expected to report any concerns to their supervisors, the Occupational Health & Safety Committee (OH&SC), or senior site management. All staff are encouraged to bring forward suggestions for improvements that can be incorporated into procedure revisions as appropriate.

1.2 APPLICABLE LEGISLATION

Both federal and territorial legislation regulate the management of hazardous materials in Nunavut. Copies of relevant legal documents are kept on file at the mine site. Agnico Eagle will regularly update the HMMP with respect to applicable legislation, and ensure that current legislation documents are available at the mine site.

Management and safety personnel provide an overview of the applicable regulations to all employees as part of their initiation and ongoing training. The acts, regulations, and guidelines pertinent to the hazardous products that are used at the Meadowbank Gold Project[1] are listed in Appendix A.

The *Transportation of Dangerous Goods Act* classifies hazardous materials into nine (9) main classes according to an internationally recognized system, as follows:

- Class 1 – Explosives;
- Class 2 – Gases;
- Class 3 – Flammable liquids;
- Class 4 – Flammable solids;
- Class 5 – Oxidizing substances and organic products;
- Class 6 – Poisonous (toxic) and infectious substances;
- Class 7 – Nuclear substances, within the meaning of the Nuclear Safety and Control Act, which are radioactive;
- Class 8 – Corrosives; and
- Class 9 – Miscellaneous products or substances.

Fuel products hazard classes and potential impacts are presented in Table 1.

[1] The Meadowbank Gold Project includes the Meadowbank mine site, the Baker Lake facilities All-weather Private Access Road, the Whale Tail open pit and the haul road between Meadowbank and Whale Tail Pit.

2 OVERVIEW OF HAZARDOUS MATERIALS

2.1 HAZARDOUS MATERIALS AND FUEL STORAGE LOCATIONS

The primary storage locations for hazardous materials, hazardous wastes and fuel are shown on Figures 1 to 6. Figure 1 and 2 are respectively a general layout of the Meadowbank mine site and Vault open pit. Figure 3 identifies hazardous material storage areas at Meadowbank mine site. Figure 4 shows the Diesel Fuel Tank Farm and Figure 5 show the Jet-A Fuel Tank Farm at the Baker Lake Marshalling Area. Figure 6 provides a general layout of camp infrastructure at the Whale Tail Project, including a Hazardous Material Storage Area. Hazardous materials are to be located in all work areas such as the warehouse, mine maintenance shop and bulk fuel storage facility. Comprehensive lists of all hazardous materials and the estimated quantities that are and will be stored at the mine site and the satellite open pit are provided in Appendix B. Hazardous materials used in the process plant will only be located at the Meadowbank site.

Petroleum products, explosives, sodium cyanide and miscellaneous hazardous materials are stored in facilities that contain no open drains, utilize concrete berms, and incorporate lined areas or secure sea-cans. Storage tanks on site are regularly inspected and maintained.

Meadowbank's permanent storage facilities are clearly identified as storage facilities for hazardous materials with proper labelling. These are ventilated in order to prevent the build-up of toxic fumes or dust, which could harm both the personnel present and the environment. The facilities are secured and only authorized personnel have access to the area. The same will hold true for the Whale Tail storage facilities. Additionally, the Whale Tail site includes a hazardous material storage area next to the tank farm where products and wastes will be held until they are either consumed or transported to Meadowbank for treatment or sent south to a certified waste management company for disposal or recycling.

2.2 TYPES OF HAZARDOUS MATERIALS

The Meadowbank Gold Project requires the use of the following types of classified hazardous materials:

- Petroleum products and lubricants – diesel fuel, Jet-A, oils, greases, anti-freeze, and solvents used for equipment operation and maintenance;
- Meadowbank Process plant consumables – sodium cyanide, caustic soda (sodium hydroxide), sulphur prills, carbon sodium metabisulphite, nitric acid , calcine lime, flocculants, calcium chloride, borax, silica, lead nitrate, and anti-scalants used in mineral extraction;
- Water treatment chemicals - silica sand and flocculants polymers;

Explosives – emulsion, caps, and high explosives used for blasting in the mine; and

- Meadowbank Laboratory chemicals and wastes – various by-products classified as hazardous waste and chemicals such as nitric acid used in the assay laboratory.

Sections 5 and 7 contain general information and safe handling procedures for the first four categories above. Laboratory wastes are generally very limited in quantity and will be handled only by specialist laboratory technicians. These wastes will be pumped to the grinding circuit in the process plant for recycling and eventually become part of the tailings disposal stream. As such, they are not addressed separately in this document.

2.3 GENERAL HAZARDOUS MATERIAL STORAGE GUIDELINES

Agnico Eagle is committed to the safe and appropriate storage of fuels, hazardous materials and hazardous wastes. The following sections outline Agnico Eagle's general guidelines for storing fuels, hazardous materials and hazardous wastes.

2.3.1 General Guidelines for Storage Drums/Containers

Hazardous materials/waste shall be stored in super sacs/drums/sea containers according to the following guidelines:

- In the original containers, where possible, or in containers compatible with the material being stored to prevent corrosion or chemical interaction that could lead to leaks or fires;
- Storage containers shall be in good condition, sealable and not damaged or leaking;
- Drums containing hazardous materials/wastes expected to be in storage for more than six months shall be placed on pallets or on a well-drained storage area to prevent rusting;
- Each container shall be clearly labelled to identify the substance being stored according to the requirements of the *Workplace Hazardous Materials Information System* (WHMIS) and as specified in the MSDS;
- Containers shall be kept closed except when adding or removing product;
- Containers with product shall be kept in the upright position, empty drums can be placed horizontally;
- Containers shall be arranged to prevent damage from falling or dislodging; and
- Containers shall be arranged to allow for easy access and inspections.

2.3.2 General Guidelines for Storage Areas

To assist in the safe and secure storage of fuels, hazardous materials and hazardous wastes, the following general guidelines for storage areas/facilities are followed:

- Design of storage areas are in compliance with the *National Fire Code*, where appropriate;
- Compliance with the Canadian Council of Ministers of the Environment (CCME) publication, *"Environmental Code of Good Practice for Above Ground Storage Tank Systems Containing Petroleum Products"*. This CCME code deals with inventory control, inspections, corrosion protection, records and monitoring. Environment Canada's *Storage Tank Systems for Petroleum Products and Allied Petroleum Products Regulations* outline registration and documentation requirements for storage tanks;
- Storage areas are adequately signed indicating that hazardous materials/wastes are stored therein;
- Storage locations are clearly defined and marked to prevent damage of storage drums and containers in the event they are covered by snow;
- Incompatible materials are segregated by chemical compatibility within the storage area to prevent contact between materials in the event of a release;
- Storage areas are located at least 30 metres from surface water and on a low-permeability area;
- Storage areas are readily accessible for firefighting and other emergency procedures;
- Storage areas are adequately ventilated to prevent the build-up of noxious or toxic vapours;
- Where necessary secondary containment is installed to allow for the containment of at least 110% of the largest container or tank volume within the contained area;
- Storage areas are constructed, or provided with barriers, to protect containers from physical damage;
- Adequate spill and emergency response equipment has been installed at large volume storage areas – i.e.; bulk fuel tank facilities (i.e. spill control, fire protection, etc.). A list of spill control equipment is provided in the Spill Contingency Plan.

3 HAZARDOUS MATERIALS LIFE CYCLE MANAGEMENT

3.1 LIFE CYCLE MANAGEMENT

"Life cycle management" implies the assessment of a particular product over its entire life — from the time where a material need is identified to the time the product is fully consumed or disposed of as waste. It covers product supply, transportation, storage, handling, recycling, and waste disposal. Agnico Eagle is committed to ensuring proper life cycle management of all products used at the Meadowbank and Whale Tail sites, including hazardous materials. Agnico Eagle and its contractors will deal only with reputable, certified suppliers, transporters, and expediters.

3.1.1 Delivery

All hazardous materials are delivered to site by commercial carriers in accordance with the requirements of the *Canadian Transportation of Dangerous Goods Act* (TDGA). Carriers are licensed and inspected as required by the Department of Transportation. All required permits, licences, and certificates of compliance are the responsibility of the carrier. All shipments are properly identified and labelled. Shipping papers must be accessible and include information describing the substance, immediate health hazards, fire and explosion risks, immediate precautions, firefighting information, procedures for handling leaks or spills, first aid measures, and emergency response telephone numbers.

Each transportation company is required to develop a spill prevention, control, and countermeasures plan to address the materials they are importing. In the event of a release during transport, the commercial transportation company is responsible for first response and cleanup. Agnico Eagle intends to periodically verify the qualifications of transport companies, their personnel and the existence of their spill prevention, control and countermeasures plan.

3.1.2 On-Site Handling

Once dangerous goods are received at the workplace, additional regulations apply. The federal *Workplace Hazardous Materials Information System* (WHMIS) calls for the proper labelling of products, the availability of product information in the form of MSDS, and employee education on how to identify and handle hazardous products. Agnico Eagle has established procedures for obtaining MSDS with new product deliveries; maintaining MSDS current (i.e. no older than three years), and maintaining a system of hardcopy or electronic MSDS that are readily accessible by all employees. A chemical tracking system is also established and all news hazardous material used on site are reviewed by Health and Safety and Environmental Department before the first use.

All hazardous materials are stored in secured areas to prevent access by unauthorized personnel or any tampering. All tanks used for the storage of diesel and aviation fuel have been installed in secondary containment areas sized to hold at least 110% of the volume of the largest tank or in double walled storage tanks. Tanks and vessels in the process plant are installed on concrete surfaces sloping

to interior sumps that will route spilled solutions to lined collection areas. Additional guidelines for the storage of hazardous materials are provided in Section 2.3.2.

In support of pollution prevention, Agnico Eagle has established procedures for the regular inspection of storage containers and facilities. If deficient conditions are identified, appropriate corrective actions are taken and documented. Additional details for inspection of storage areas are provided in Section 9.

Emergency response procedures for spilled chemical substances are provided in the Spill Contingency Plan (SCP) (see also the Emergency Response Plan (ERP). These procedures outline the response to accidental spills or releases of hazardous materials to minimize health risks and environmental effects. Included are procedures for evacuating personnel, maintaining safety, cleanup and neutralization activities, emergency contacts, internal and external notifications to regulatory authorities, and incident documentation.

3.1.3 Wastes

On becoming wastes, materials are stored and/or disposed of in accordance with specific government regulations and guidelines. Agnico Eagle stores most waste materials on the Meadowbank site in secure facilities until they can be transported to a provincial jurisdiction for recycling or disposal. Wastes materials originating from the Whale Tail site are to be sorted at Whale Tail sites, packaged at the source and delivered to Meadowbank for management, shipment to Baker Lake and ultimately sent on the barge. The waste will be stored in a seacan on a lined pad. The length of time the wastes will be stored at Whale Tail Pit will depend on the product and the time it takes to fill a seacan for safe shipment along the Haul Road.

Process plant tailings pass through a treatment plant for cyanide destruction using the standard Inco SO_2/air process or through chemical destruction with Sodium Metabisulphite before being disposed of in the tailings pond. The cyanide content of the tailings material is reduced to 15 ppm (parts per million). Cyanide further degrades naturally with exposure to air and sunlight (UV) in the Tailings Storage Facility. The current regulatory requirement for cyanide content in liquids released to the environment is 1 mg/L for a single grab sample or no greater than 0.5 mg/L average for the month (Nunavut Water Board Water License).

The Nunavut Department of Environment and Environment Protection Service (EPS) monitor the movement of hazardous waste from the generator to final disposal, through use of a tracking document known as a Waste Manifest. Accordingly, a Waste Manifest accompanies movements of hazardous wastes for the Meadowbank Project. Agnico Eagle is registered with the EPS as a waste generator, and employs only registered waste carriers to transport waste to registered/approved waste receivers. A copy of the completed manifest will be maintained for a period of two years after the hazardous waste is received by the authorized waste disposal facility.

3.1.4 Empty Product Containers

Many empty chemical containers are not safe to dispose of directly and require handling precautions identical to those for full containers. Chemical users must be familiar with safe waste handling and storage procedures supplied by manufacturers in MSDS. The containers are backhauled to the Baker Lake Marshalling Area for disposal at an approved facility. These containers are stored and hauled south via sealift.

4 SODIUM CYANIDE

4.1 INTRODUCTION

Large quantities of sodium cyanide are used at the Meadowbank Gold Project to optimize gold recovery from the ore. Due to transportation restrictions, normally a full year's supply of sodium cyanide will be transported and stored on site. This product will be transported, stored, handled, transferred and used in compliance with appropriate legislation and applicable Best Management Practices. Agnico Eagle became a signatory to the International Cyanide Management Code in 2011.

4.1.1 Physical Properties

Cyanide is one of only a few chemical reagents that will dissolve in water. Gold mining operations use very dilute solutions of sodium cyanide, typically in the range of 0.01% to 0.05% cyanide (100 to 500 ppm). Unlike many synthetic chemicals, cyanide oxidizes and decomposes when exposed to air or other oxidants (UV sunlight rays), and does not persist in the environment. As such, it does not give rise to chronic health or environmental problems when present in low concentrations.

4.1.2 Cyanide Production

Cyanide production and handling are highly regulated. Both the manufacturer and Agnico Eagle employ stringent risk management systems to prevent injury or damage from the use of cyanide.

Sodium cyanide for the Meadowbank project is in briquette form, and packaged in water-resistant super sac and 4mm bags inside an intermediate bulk container (IBC). The IBC holds 1,000 kg of cyanide, and have the following approximate dimensions: 44" x 44" x 44". For shipment, there are normally 20 IBCs in a sea can container.

4.1.3 Cyanide Transport

Cyanide producers audit purchasers and transportation systems. They design special packaging for the transport of cyanide and inventory all shipments against delivery records to ensure proper surveillance at all times. All shipments are accompanied by MSDS that provide the chemistry and toxicity of sodium cyanide, instructions in case of accidents, and emergency telephone numbers for assistance.

Truck, rail, and barge transporters screen their employees, carefully inventory shipments and, establish and maintain systems for loading and unloading cyanide products. Product handling and transportation are in accordance with protocols set by the industries and in compliance with national and international regulations.

For the Meadowbank Project, the IBCs are properly stacked in sea containers and transported by ship from Becancour, QC to Baker Lake, NU. At Baker Lake, the containers are transferred from barge to truck for transport to the Meadowbank mine site. At no point during transport the sea container or IBCs will be opened. From the point of cyanide packaging and onwards, the bags will only be opened on site, when and at the location (mill) where the use of cyanide is required.

This method of cyanide transport provides three levels of containment. The cyanide is contained within plastic bags. In the event one of the bags ruptures, the cyanide is contained within the IBC. In the event the IBC container breaks, the cyanide is contained within the sea container, which provides a tertiary precautionary measure for minimizing the impact of the spilled material.

4.1.4 On-Site Storage & Handling

The cyanide is stored on site in a dark, cool, dry, location. Cyanide is stored in sealed sea cans until the time it is needed for processing. Only as much as needed is removed from storage at any one time. The cyanide storage area is located close to the processing plant. Only authorized personnel have access to the cyanide storage.

When cyanide is required, only the quantity required for immediate use will be removed from storage. The cyanide bag will be lifted by its straps (the straps are provided by the manufacturer as part of packaging; see Appendix C for an illustration) using a forklift, and then using an overhead crane to lower onto a specially designed knife slitter that cuts the bag. The contents of the bag will drop into a mixing tank. At no time does the cyanide need to be physically handled by Meadowbank personnel.

The IBC materials are properly decontaminated and disposed of according to all applicable regulations to prevent environmental impact. Before disposal, the bags are visually inspected to ensure they are empty, and triple rinsed and drained to dissolve any residual cyanide left in the bag. Rinse water from the flushing process is recovered and reused in the cyanide mix tank and used in the gold recovery plant.

All personnel potentially exposed to cyanide, including contractors and visitors, receive appropriate training (see Section 10).

4.1.5 Spills

In the event a spill occurs, the cyanide will be promptly cleaned up to minimize its exposure to humans and the environment. A dry spill will be swept up and disposed of in a drum or other suitable container. In the event of a wet spill, the spill procedures will be carried out to prevent environmental contamination and the appropriate authorities will be contacted. For more information on spills handling and containment, see the SCP and ERP.

After cleaning up as much cyanide as possible, the area will be decontaminated using a small amount of caustic solution (i.e., 1 oz. /5 gal hypochlorite solution). This will help keep the pH in the 10 to 11 range and suppress the formation of lethal HCN gas.

4.1.6 International Cyanide Management Code

Agnico Eagle is a signatory to the International Cyanide Management Code (the Code) for the manufacture, transport and use of cyanide in the production of gold. The Code is administered by a non-profit institute consisting of participants from the gold mining industry, governments, nongovernmental organizations, labour, cyanide producers, and other interested parties.

The Code represents a voluntary commitment on the part of all signatories to identify and follow basic principles and guidelines for safe cyanide use at gold mining operations. This is the first such generic international code in the history of the mining industry. Under the Code, gold mines are required to manage their cyanide from source to site, thus assuming "cradle to grave" responsibility for all cyanide used at their operation.

5 PETROLEUM PRODUCTS

5.1 PRODUCT DESCRIPTION

The Meadowbank and Whale Tail Project operations use large amounts of fuel and lubricants (petroleum products). These products are transported, stored, handled, transferred and used in compliance with the appropriate legislation and Best Management Practices.

5.2 DELIVERY TO SITE

With the exception of diesel and aviation fuel, most petroleum fuel and lubricant products are delivered to the two sites and stored in the original packing container from the manufacturer. These types of containers include a variety of sealed drums, pails, 1 tonne super sac, bulk cubes, cans, and tubes.

Due to transportation restrictions, i.e. climate, a full year's supply of fuel and lubricants is transported and stored on-site, in order to meet the demand of the upcoming year. During the summer months, diesel and aviation fuel are shipped from Becancour, QC to Baker Lake, NU where it is transferred into storage tanks. From the Baker Lake storage tanks, fuel is transported daily on the AWAR to Meadowbank and in the near future on the Whale Tail haul road to Whale Tail Pit bulk fuel storage sites via contracted tanker trucks.

Diesel fuel coming from the Baker Lake Tank Farm is stored onsite at the Meadowbank site in a single 5.6 million litre tank within secondary containment, and the aviation fuel into two (2) – 50,000L double walled tanks at the airstrip. Similarly for the Whale Tail site, diesel fuel originating from the Baker Lake Tank Farm will be stored in one 1,500,000 L tank within secondary containment. From there, the diesel at both sites is delivered directly to the power plants by above ground pipes or redistributed into different storage tanks by an on-site tanker. Table 2 provides the varieties and volumes of petroleum products stored on site and their storage locations at Meadowbank.

Exploration will have up to 37 envirotanks of diesel for use in their underground and regional exploration programs.

The Baker Lake fuel farm consists of six (6), ten (10) million litre (L) tanks for diesel fuel and eighteen (18), 100,000L double walled tanks, within secondary containment, for aviation fuel. Agnico Eagle is currently working to permit the addition of two (2) ten (10) million L tanks for diesel fuel to the Baker Lake fuel farm. The diesel fuel tanks are single-walled and constructed of welded steel. The aviation fuel tanks are double-walled and constructed of steel. Both Baker Lake Fuel Farm and storage locations have been designed and constructed to meet the CCME guidelines for *Aboveground Storage Tank Systems Containing Petroleum and Allied Petroleum Products*. The fuel unloading facility in each area includes a sloped lined pad to prevent contamination of the receiving environment. A continuous 60 mm high-density, polyethylene liner sheet is installed under the tanks and the internal sides of the berm. The containment area is sized to hold 110% of the volume of the largest tank.

All fuel transfer and storage facilities have been designed in accordance with the Canadian Council of Ministers for the Environment (CCME, 1994) *Environmental Code of Practice for Above Ground Storage Tank Systems Containing Petroleum Products*, and the *National Fire Code*.

Appropriate measures are in place to minimize impacts to surface water, groundwater and soils from potential vehicle accidents when transporting petroleum products to the site. Details of petroleum product safe handling procedures and proper PPE can be found in Tables 3 and 4. Details of spill response measures are presented in the SCP. The following general precautions will be taken:

- A maximum speed on the All-Weather Private Access Road and the Whale Tail haul road for loaded and empty vehicles has been established based on the road design which considers safety and the protection of wildlife. This speed limit is 50 km/hr;
- All trucks will carry a spill kit;
- Trucks are equipped with a reliable radio and/or satellite phone; and
- Agnico Eagle commits to being prepared to respond to spills resulting from vehicle accidents on both roads in a timely and efficient manner. Refer to the Spill Contingency Plan.

5.3 FUEL TRUCK TRANSFER PROCEDURES

A contract supplier fills the storage tanks in the main tank farms at both sites. General procedures to be followed are listed below. Similar procedures would be followed for fuelling remote station tanks.

Before fuel transfer, verify that:

- All fuel transfer hoses are connected properly and couplings are tight;
- Transfer hoses are not obviously damaged;
- Fuel transfer personnel are familiar with procedures;
- Personnel are located at both the fuel delivery truck and fuel transfer tank(s) and can manually shut off the flow of fuel;
- If a high liquid level shutoff device is installed at the delivery tank, verify that the shutoff is operating correctly each time it is used; and
- Fuel transfer will then proceed per the established procedures of the contract supplier.

Any accidents or spills must be reported immediately to the Environmental Department representatives at the Meadowbank or Whale Tail sites. Notification and response procedures are detailed in the Spill Contingency Plan.

5.4 CONTAMINATED SOILS AND SPILLS

All contaminated spill pads, and booms resulting from the storage and handling of fuels and lubricants will be salvaged at the time such impacts are identified, and put into Quatrex bags, labelled and shipped off-site to an approved disposal facility or incinerated (small quantities) on site. All the petroleum hydrocarbon contaminated soil from the Meadowbank and Whale Tail sites is placed into the Meadowbank landfarm for treatment. At this time, a landfarm will not be established at the Whale Tail Pit site. Refer to the *Landfarm Design and Management Plan* for more details regarding the Meadowbank landfarm.

5.5 USED PETROLEUM PRODUCTS

Used oil that is no longer suitable for its intended use is classified as a liquid waste. The discharge of used oil into the environment, including but not limited to landfills, sewers and water bodies, is prohibited.

Used oil is used as auxiliary fuel at the secondary chamber at the Meadowbank incinerator or in designated on site waste oil heaters. This used oil burner at the incinerator has the capacity to handle approximately 200,000 litres of used oil per year. Refer to the *Incinerator Waste Management Plan* for more information. Similarly, at the Whale Tail site, waste oil will be used in the incinerator or waste oil heaters. Failing this, the waste oil will be sent to Meadowbank where it will be consumed or shipped to an accredited recycling facility.

All used oil products that are not burned in the incinerators or waste oil heaters are collected in tanks or drums marked “Waste Oil” and disposed of at an approved facility in the south. Empty petroleum containers are stored on site in a designated area and returned to the supplier on backhauls or disposed at approved facilities in the south. Oil filters are punctured and/or crushed and drained of their contents for 24 hours prior to disposal.

A random sample of used oil incinerated at both sites will continue to be analysed twice a year to ensure that it does not contain unacceptable levels of impurities, including cadmium, chromium, lead, total organic halogens (such as chlorine compounds), polychlorinated biphenyls (PCB) and ash content. Samples will be sent to an accredited laboratory (H2Lab) for analysis. Concentrations of parameters listed above will be compared to the criteria set out in Schedule A of the *Used Oil and Waste Fuel Management Regulations*. Alternate arrangements will be made for the off-site disposal, treatment or recycling of used oil that does not meet this criteria.

The following information is recorded in association with the incineration of used oil:

- Volume of used oil generated at each site;
- Volume of used oil incinerated at each site;
- Name and address of the person in charge, management or control of the used oil, and the place where the used oil was produced;

- Analysis of any representative sample of used oil;
- Summary of maintenance performed on the incinerators or processing equipment;
- Volume and nature of the products produced from the used oil; and
- Destination of the used oil products shipped from the Meadowbank Mine (including Whale Tail Pit facilities).

Table 1 - Fuel Products – Hazardous Classes & Potential Impacts

Material	TDGA Class[a]	Potential Environmental Impact
Diesel	3	Water & soil contamination
Motor oil	Not regulated	Water & soil contamination
Aviation fuel	3	Water & soil contamination
Hydraulic fluid	Not regulated	Low risk to water & soil with proper handling
Varsol	3	Water & Soil contamination
Automotive grease	Not regulated	Low risk to water & soil with proper handling
Ethylene glycol	Not regulated	Toxic by ingestion, could potentially be consumed by wildlife.

Table 2 - Fuel Products – Meadowbank and Whale Tail Site Storage Locations

Product	Total Quantity On-Site	Storage Location	Container	Presently used
Diesel	6.1 ML (potentially 66.1 ML including Baker Lake) and 1.5 ML at Whale Tail Site	Meadowbank Fuel farm	1 x 5.6 ML tank in berm area	Yes
		Whale Tail Fuel Farm	1 x 1.5 ML tank in berm area	Yes
		Meadowbank Powerhouse	2 x 25,000 L tank	Yes
		Exploration camp	1 x 10,000 L tank	Not in use but contains diesel
			1 x 75,000 L tank	Not in use but contains diesel
		Meadowbank Emulsion Plan	1 x 25,000 L tank	Yes

		Meadowbank Camp Emergency Genset	2 x 55,000 L tank	Yes
		Meadowbank Incinerator	1 x 2,200 L tank	Yes
		Meadowbank Fueling station	1 x 50,000 L tank	No
		Vault	4 x 50,000 L tank	Yes
			1 x 25,000 L tank	Yes
			1 x 10,000 L tank	Yes
		Baker Lake	6 x 10 ML tank in bermed area	Yes
Gasoline	60,000 L	Fueling Station	1 x 50,000 L tank	Yes
			1 x 10,000 L tank	Yes
Waste oil	50,000 L	Incinerator	1 x 50,000 L tank	Yes
Motor oils	*refer to Appendix B	Mechanical shop	Cubes or Barrels	Yes
		Powerhouse	Cubes or Barrels	Yes
		Exploration camp	Cubes or Barrels	No
Aviation fuel	100,000 L (potentially 2.1ML including Baker Lake)	Airstrip	2 x 50,000 L tank	Yes
		Exploration Camp	1 x 75,000 L tank	Not in use but contain aviation fuel
		Baker Lake	20 x 100,000 L tank in berm area	Yes
Hydraulic fluid	*refer to Appendix B	Mechanical shop	Cubes or Barrels	Yes
		Powerhouse	Cubes or Barrels	Yes
		Plant	Cubes or Barrels	Yes

Ethylene glycol	*refer to Appendix B	Mechanical shop	Cubes	Yes

Note: L = litre; ML = Mega-litre (1X10^6 litres).

Table 3 - Fuel Products – Safe Handling Procedures

Product	Handling Procedures
Diesel	Do not get in eyes, on skin, or on clothing. Avoid breathing vapours, mist, fume, or dust. Do not swallow. May be aspirated into lungs. Wear PPE and/or garments if exposure conditions warrant. Wash thoroughly after handling. Launder contaminated clothing before reuse. Use with adequate ventilation. Keep away from heat, sparks, and flames. Store in a well-ventilated area. Store in a closed container. Bond and ground during transfer.
Motor oil	Wear protective clothing and impervious gloves when working with used motor oils. To be handled generally consistent with other petroleum hydrocarbons.
Aviation fuel	See diesel procedures above.
Hydraulic fluid	Keep container closed until ready for use.
Ethylene glycol	Ensure adequate ventilation. Wear protective gloves and chemical safety goggles. Keep in tightly closed container, stored in a cool, dry, ventilated area. Separate from acids and oxidizing materials. Empty containers of this product retain product residues and may be hazardous.

Table 4 - Fuel Products – Personal Protective Equipment

Product	Personal Protective Equipment		
	Eyes	**Skin**	**Respiration**
Diesel	Chemical goggles	Neoprene or nitrile gloves; protective garments	None usually required
Motor oil	Chemical goggles	Neoprene or nitrile gloves; protective garments	None usually required
Aviation fuel	Chemical goggles	Neoprene or nitrile gloves; protective garments	None usually required; ensure adequate ventilation
Hydraulic fluid	Chemical goggles	None usually required	None usually required
Ethylene glycol	Chemical goggles	Neoprene or nitrile gloves; protective garments	None usually required; ensure adequate ventilation

6 EXPLOSIVES

6.1 PRODUCT DESCRIPTION

Explosives are required for blasting waste rock and ore in the mine. Transportation, storage, use, and handling of blasting materials are strictly regulated by the Federal *Explosives Act* and *Transportation of Dangerous Goods Act* (Class 1 – Explosives), as well as the following territorial Acts:

- Explosives Use Act and Regulations; and
- Mine Health and Safety Act and Regulations.

6.2 EXPLOSIVES STORAGE

Manufacturing, handling, and storage of explosives are carried out by QAAQTUQ – Dyno Nobel Canada Inc. However, a small amount of explosive materials are shipped to Meadowbank in the form of blasting caps and Agnico handles them. The bulk of the explosives used at site are Emulsion (XL-1000), which is a mixture of nitrites and emulsifier. Emulsion is mixed by Dyno Nobel in an on-site plant (Emulsion Plant shown on Figure 1), located near the Meadowbank Mine site.

The estimated annual explosives requirement for the Whale Tail satellite open pit is expected to vary from 6,000 to 11,000 tonnes per year, this being the same as presently used at Meadowbank. The use of explosives at Portage Pit, Goose Pit, Vault Pit, Phaser Pit and BB Phaser Pit, located on or near the Meadowbank Mine site, will cease upon completion of mining.

The existing emulsion plant at Meadowbank Mine will continue to operate with deliveries on an as needed basis to Whale Tail. The haul road will be used to truck explosives between Meadowbank and the Whale Tail sites, with a minimum amount of explosives to be stored at the Whale Tail Pit site in the remote emulsion storage located adjacent to the Whale Tail Pit operations. Explosives truck(s) will be based at the Emulsion Plant at the Meadowbank Mine.

The Whale Tail site will primarily use emulsion based explosives during construction and operations. Presplit explosives will also be used to control the final pit walls, where required.

Sea cans of emulsion and nitrite prills are stored on the Meadowbank Emulsion Plant site. They are stored within sea cans in quantities of approximately 20,000 kg's per sea can. These items are stored in separate locations so as to prevent the mixing of the two products. These products are also stored away from any other products, >40m away from the emulsion plant, and >25m from the fuel tanks.

The high explosive detonators and blasting caps are stored in an enclosed magazines located near the Meadowbank emulsion plant and will be stored at a safe location and distance from the Whale Tail Pit operations. It is estimated that approximately twelve magazines will be required on site, each being approximately 4 m x 14 m (i.e., not much bigger than a sea can).

The explosive mixing plant, product storage, and magazines are safely located away from vulnerable facilities, as stipulated by the federal and territorial *Explosives Use Act* and Regulations. The mixing plant is also used for the washing and minor repair of trucks and equipment used to handle the explosives.

6.3 USE OF EXPLOSIVES

The primary blasthole drills are diesel-powered rigs capable of drilling 152.4 mm diameter holes. Drilling requirements were calculated for ore and waste. A pre-shear and buffer blasting followed by mechanical wall cleanup is used for the final wall. Blasting operations are affected by several factors, including wall control and weather. A number of modified operating procedures will be implemented during the winter season. These may include minimizing the sleep time for loaded holes; ensuring that cuttings are mounded around the hole collars after loading to prevent snow drifting into the holes, and utilizing blasthole covers.

The responsibility for blasting is split between appropriately trained mine personnel and the explosives supplier, Dyno Nobel. Dyno Nobel is responsible for supplying and delivering blasting agents to the site, manufacturing the blasting product on site, delivering blasting agents to the blastholes and filling the holes. Agnico Eagle Blasters are responsible for charging the holes, placing the detonators and boosters, and tying-in the patterns. The AN and emulsion components are loaded on barges and transported to the Baker Lake Marshalling Area for temporary storage, if necessary, prior to transport to site. Dyno Nobel provide mixing and delivery trucks. Agnico Eagle provides diesel fuel and accommodations.

Blasting will be approximately daily and will average, in size, the daily production requirement of 50-90,000 tonnes per blast. Blasting will likely be by electric initiation and will feature current technology with down-the-hole delays to minimize the energy per delay to single hole loads. This will minimize backbreak, fly rock, vibration levels and will optimize fragmentation and minimize digging problems.

Blasting is carried out by certified blasters following blasting regulations and safe practices. All pit activities are under the supervision of certified mine supervisors, knowledgeable in mine operating regulations and best practices.

The manufacture and distribution of explosives is carried out by suppliers under Federal license to conduct such work. They provide and operate the explosives manufacturing plant under such license and authority.

Details on explosives inventory and inspections are provided in Section 9.2. Information on Explosives Handlers is available in Section 10.3.

6.4 DISPOSAL

Disposal of regular waste will follow the *Agnico Eagle Meadowbank Mine Waste Management Plan*.

Wash water that is created at the Emulsion plant is sucked out via vacuum truck and taken to the tailings storage facility for disposal.

Any unusable Emulsion waste is taken to the mines blast pattern for disposal down the bore holes.

7 PROCESS PLANT & WATER TREATMENT REAGENTS & CONSUMABLES

7.1 PRODUCT DESCRIPTION

The Process Plant (mill) uses a number of chemicals and reagents to treat the ore, recover entrained gold and to destroy cyanide. The Water Treatment Plant also uses a number of chemicals and reagents to treat water for TSS removal. Water Treatment chemicals would be used over a 3 to 4 month period during frost-free months only for dewatering and the discharge of the attenuation pond water to Mammoth Lake. The range in annual quantities used would reflect the different dosages that may be used during different mining stages (early operations, late operations, closure treatment of tailings water and polishing of pit lake water quality on a contingency basis). Material categories, site handling and storage requirements, and PPE recommended by manufacturers are summarized in Tables 5 to 8.

Table 5 - Process Plant & Water Treatment Reagents – Use, Consumption & Storage

Reagent	Use	Approximate Consumption		Phase	Normal Delivery Format	On-Site Storage
		Daily	Annual			
Acetylene	Welding	1-2	600	gas	gas cylinders	secured upright
Activated carbon (granular)	Gold recovery	340 kg	140 t	solid	500 kg bags	Pallet
Anti-scalant	Water treatment	25 kg	10 t	liquid	650 kg tote tank	Pallet drums
Borax	Refinery	60 kg	22 t	solid	40 kg bags	Pallet
Silica	Refinery	30 kg	11 t	solid	22.7 kg bags	Pallet
Calcium oxide (Quicklime) (CaO)	pH control	7,814 kg	3150 t	solid	1 t supersacs	Pallet
Calcium peroxide (alternative to hydrogen peroxide)	Potential use: Water treatment	minimal*	minimal*	solid	45 kg drum	Pallet drums
Copper sulphate ($CuSO_4$)	Cyanide destruction	1450 kg	585 t	solid	1 t supersacs	Pallet

Flocculant (Magnafloc 338 or Magnafloc 10)	Settling aid	300 kg	120 t	solid	25 kg bags	Pallet
Hydrochloric acid (HCl)	Refining/stripping	200 kg	75 t	liquid	20 gal drums	Pallet drums
Hydrofluoric acid	Laboratory	5 gallons	1 825 gallons	liquid	20 gal drums	Pallet drums
Hydrogen peroxide (alternative to calcium hydroxide)	Potential use: Water treatment	minimal*	minimal*	liquid	1 m^3 HDPE tote	Pallet
Lead acid batteries	Vehicles	-	24	liquid	-	Pallet
Nitric acid	Stripping	50 kg	18 t	liquid	34 kg bottle	Pallet
Paints	Maintenance	-	100 gallons	liquid	gallon	Pallet
Sodium cyanide (NaCN)	Leaching	3825 kg	1 540 t	solid	1 t box bags	Pallet
Sodium hydroxide (caustic soda) (NaOH)	Refining/stripping	20 kg	8 t	solid	25 kg bags	Pallet
	Refining/stripping	786 kg	320 t	solid	1000 kg	Pallet
Sodium metabisulphite ($Na_2S_2O_5$)	Cyanide destruction	7710 kg	3100 t	solid	1 t supersacs	Pallet
Sodium nitrate	Refinery	40 kg	15 t	solid	50 kg bags	Pallet
Sulphur	Cyanide destruction	745 kg	300 t	solid	1 t bags	Pallet

Note: kg = kilogram; t = ton; gal = gallon; m^3 = cubic metre.

Table 6 - Process Plant & Water Treatment Reagents – Hazard Classes & Potential Environmental Impacts

Material	Class	Potential Impact
Acetylene	2.1	Generally not hazardous for water.
Activated carbon	4.2	No information available.
Anti-scalant	Not regulated	Negligible with proper handling
Borax	Not regulated	Presents no health hazards.
Calcium oxide	Not regulated	No information available.
Calcium peroxide	5.1	Releases oxygen into environment when dissolved in water.
Copper sulphate	9	Harmful to aquatic life.
Flocculant	Not regulated	Acute fish, invertebrate, algae and bacteria toxicity.
Hydrochloric acid	8	Extremely toxic to aquatic life by lowering the pH below 5.5. When released into the soil, this material may leach into groundwater.
Hydrofluoric acid	8.6.1	No information available.
Hydrogen peroxide	5.1	Aquatic Toxicity 96-hour LC50.
Lead acid batteries	8	No information available.
Nitric acid	8	No information available.
Paints	Not regulated	No information available.
Silica	Not regulated	Generally not hazardous for water.
Sodium cyanide	6.1	Expected to be very toxic to aquatic life and to terrestrial life.

Sodium hydroxide	8	No information available.
Sodium metabisulphite	Not regulated	No information available.
Sodium nitrate	5.1	Possibly hazardous short-term degradation products are not likely. However, long term degradation products may arise. The products of degradation are less toxic than the product itself.
Sulphur	9	No info available (insoluble in water).

Table 7 - Process Plant & Water Treatment Reagents – Safe Handling Procedures

Product	Handling Procedure
Acetylene	Do not mix with air or oxygen above atmospheric pressure. Store away from oxidizing agents. Open and handle cylinder with care. Keep ignition sources away - Do not smoke. Protect from heat. Protect against electrostatic charges. Pressurized container: protect from sunlight, store in a cool location and do not expose to temperatures exceeding 50°C. Do not pierce or burn, even after use. Prevent impact and friction. Store in accordance with local fire code and/or building code or any pertaining regulations.
Activated carbon	Wash thoroughly after handling. Use with adequate ventilation. Minimize dust generation and accumulation. Avoid contact with eyes, skin, and clothing. Avoid ingestion and inhalation. Activated Carbon, especially when wet, can deplete oxygen from air in enclosed spaces, and dangerously low levels of oxygen may result. Store in a tightly closed container. Keep from contact with oxidizing materials. Store in a cool, dry, well-ventilated area away from incompatible substances.
Anti-scalant	Used in extremely small quantities. Can cause mild to moderate irritation of eyes, skin, and upper respiratory tract. Wash thoroughly after handling. Use sensible industrial hygiene and housekeeping products. Not flammable. Keep containers tightly closed
Borax	No special steps required.

Calcium oxide	Store in closed containers in a controlled drainage area under cover. Use in a well ventilated area. Empty containers retain product residues and may be hazardous.
Calcium peroxide	Wash thoroughly after handling. Avoid all situations that could lead to harmful exposure. Store in a cool, dry, well-ventilated place. Keep container tightly closed and away from incompatible materials and sources of heat.
Copper sulphate	Avoid contact with skin and eyes. DO NOT breathe dust. Always wash hands thoroughly after contact. Store and use only in dry, well-ventilated areas. Keep container tightly closed.
Flocculant	Dust generated in handling of this product can be explosive if sufficient quantities are mixed in air, in which case ignition sources should be avoided. Employ grounding, venting and explosion relief provisions in accord with accepted engineering practices in process operations capable of generating dust/or static electricity. Handle in accordance with good industrial practice, handle with care and avoid unnecessary personal contact. Avoid contact with eyes and prolonged or repeated skin contact. Avoid continuous or repetitive breathing of dust. Use only with adequate ventilation. Remove contaminated clothing; launder or dry-clean before reuse. Wash thoroughly with soap and water after using. For industrial use only. Slip hazard when wet. Material is slippery when wet. Store in the original container, securely closed, in a cool and dry location. Avoid extremes of temperature and ignition sources.
Hydrochloric acid	Do not get in eyes, on skin, or on clothing. Wear protective clothing. Avoid breathing vapours or fumes. Store in cool, dry, ventilated area with acid-resistant floors. Keep container closed, out of direct sunlight, and away from heat, water, and incompatible materials. When diluting, add acid slowly to water and in small amounts. Never use hot water and never add water to acid. When opening metal drum, use non-sparking tools because hydrogen gas may be present. Do not wash out container and use for other purposes. Empty containers retain product residues and may be hazardous.

Hydrofluoric acid	Wash thoroughly after handling. Remove contaminated clothing and wash before reuse. Use with adequate ventilation. Do not get on skin, in eyes or on clothing. Do not ingest or inhale. Store in a cool, dry, well-ventilated area away from incompatible substances. Do not store in metal or glass containers. Do not store in direct sunlight. Keep tightly closed. Empty container may contain hazardous residue. Do not add any other material to the container. Do not wash down the drain. Do not allow smoking or food consumption while handling. Store in approved containers only. Do not add water to acids.
Hydrogen peroxide	Use extreme care when attempting any reactions because of fire and explosion potential (immediate or delayed). Conduct all initial experiments on a small scale and protect personnel with adequate shielding as the reactions are unpredictable, and may be delayed, and may be affected by impurities, contaminants, temperature, etc. Do not get in eyes. Avoid contact with skin and clothing. Wash thoroughly after handling. Avoid contact with flammable or combustible materials. Avoid contamination from any source including metals, dust, and organic materials. In the event of an accident where large volumes of hydrogen peroxide might come into contact with external fires or with incompatible chemicals, a one-half mile area from the incident should be evacuated. Store in a properly vented container or in approved bulk storage facilities. Do not block vent. Do not store on wooden pallets. Do not store where contact with incompatible materials could occur, even with a spill (see "Hazardous Reactivity" on MSDS). Have water source available for diluting. Do not add any other product to container. Never return used or unused peroxide to container, instead dilute with plenty of water and discard. Rinse empty containers thoroughly with clean water before discarding. (See "Waste Disposal" on MSDS).
Lead Acid Batteries	Store batteries in a well-ventilated cool area. Handle carefully to avoid damaging or turning batteries over.
Nitric acid	Class 8 products are not to be loaded with class 1, 4.3, 5, 6, 7 or foodstuffs or foodstuff empties. Store in a well-ventilated area and out of direct sunlight. Keep containers closed at all times. Store away from oxidisable, caustic and combustible materials. Vapours heavier than air; prevent concentration in sumps and hollows. DO NOT enter confined spaces where vapour may have collected. Strong oxidising agent; can lead to fire or explosion with organic and/or combustible materials.
Paints	No special steps required.

Silica	Prevent formation of dust. This product is not flammable. When pouring into a container of flammable liquid, ground both containers electrically to prevent static electric spark. Keep containers tightly sealed.
Sodium cyanide	Highly toxic, corrosive to eyes, skin, and respiratory tract. Can be fatal if swallowed, inhaled, or absorbed through skin. Keep cyanide antidote kit available in any cyanide work area. Wear personal protective clothing at all times. Keep in tightly closed container in cool, dry, ventilated area. Protect against physical damage to containers. Do not store under sprinkler systems. Do not wash out container and use for other purposes. Empty containers retain product residues and may be hazardous.
Sodium hydroxide (caustic soda)	Can cause severe injury to eyes, skin, and respiratory tract. Use PPE at all times and DO NOT contact product directly. Wash thoroughly after handling. Store in dry, well ventilated area. Keep in original container, tightly closed. Empty containers retain product residues and may be hazardous.
Sodium	May cause irritation to eyes, skin, and respiratory tract with prolonged exposure.
metabisulphite	Sulphite-sensitive individuals may experience severe allergic reaction to dust. Releases sulphur dioxide gas when mixed with water. Wear PPE and wash thoroughly after handling. Store in dry, well-ventilated area away from heat, acids, and oxidizers. Keep container tightly closed. Use vacuum to clean up dust.
Sodium nitrate	Keep away from heat. Keep away from sources of ignition. Keep away from combustible materials. Empty containers pose a fire risk; evaporate the residue under a fume hood. Ground all equipment containing material. Do not ingest. Do not breathe dust. In case of insufficient ventilation, wear suitable respiratory equipment. If ingested, seek medical advice immediately and show the container or the label. Avoid contact with skin and eyes. Keep away from incompatibles such as reducing agents, combustible materials, acids. Keep container dry. Keep in a cool place. Keep container tightly closed. Keep in a cool and well-ventilated area. Highly toxic or infectious materials should be stored in a separate locked safety storage cabinet or room.

Sulphur	Wash thoroughly after handling. Remove contaminated clothing and wash before reuse. Minimize dust generation and accumulation. May form flammable dust-air mixtures. Avoid contact with skin, eyes and clothing. Empty containers contain product residue, (liquid and/or vapour), and can be dangerous. Keep containers tightly closed. Avoid contact with heat, sparks, and flame. Use with adequate ventilation. Do not pressurize, cut, weld, braze, solder, drill, grind, or expose empty containers to heat spark, or open flames. Store away from heat, sparks, and flame. Keep away from sources of ignition. Store in a tightly closed container. Store in a cool, dry, well-ventilated area away from incompatible substances (oxidizing agents).

Table 8 - Process Plant & Water Treatment Reagents – Personal Protective Equipment

Product	Personal Eyes	Protective Skin	Equipment Respiration
Acetylene	Tightly sealed goggles	Protective gloves	Use atmosphere supplying respirators (e.g. supplied-air: demand, pressure demand, or continuous flow or self-contained breathing apparatus: demand or pressure demand or combination supplied-air with auxiliary self-contained air supply atmosphere supplying respirator in case of insufficient ventilation).
Activated carbon	None required	None required	None required
Anti-scalant	For splash protection use chemical goggles or full face shield	Rubber or neoprene gloves; impervious apron or coveralls and boots	Not normally needed

Borax	Avoid eye contact	None required	None required
Calcium oxide	For splash protection use chemical goggles or full face shield.	Rubber, neoprene, or nitrile gloves; impervious apron or coveralls and boots.	NIOSH/MSHA approved respirator, if required.
Calcium peroxide	Chemical goggles, full-face shield, or a full-face respirator is to be worn at all times when product is handled. Contact lenses should not be worn; they may contribute to severe eye injury.	Impervious gloves of chemically resistant material (rubber or neoprene) should be worn at all times. Wash contaminated gloves and dry thoroughly before reuse. Body suits, aprons, and/or coveralls of chemical resistant material should be worn at all times. Wash contaminated clothing and dry thoroughly before reuse. Impervious boots of chemically resistant material should be worn.	NIOSH-approved respirator for dust should be worn if needed.
Copper sulphate	Chemical goggles or full face shield.	Rubber or neoprene gloves; impervious apron or coveralls and boots.	Dust mask; NIOSH/MSHA approved respirator, if required.
Flocculant	For splash protection use chemical goggles or full face shield	Rubber or neoprene gloves; impervious apron or coveralls and boots	Dust mask
Hydrochloric acid	For splash protection use chemical goggles or full face shield	Rubber or neoprene gloves; impervious apron or coveralls and boots	NIOSH/MSHA approved respirator

Hydrofluoric acid	Wear appropriate protective eyeglasses or chemical safety goggles as described by OSHA's eye and face protection regulations in 29 CFR 1910.133. Wear face shield.	Wear appropriate protective neoprene gloves to prevent skin exposure. Wear acid resistant jacket, trousers and boots sufficient to protect skin.	Wear appropriate OSHA/MSHA approved chemical cartridge respirator regulations found in 29CFR 1910.134. If more than TLV, do not breathe vapour. Wear self contained breathing apparatus. Always use an NIOSH-approved respirator when necessary.
Hydrogen peroxide	Wear coverall chemical splash goggles. In addition, where the possibility exists for eye or faces contact due to splashing or spraying of material, wear chemical splash goggles/full-length face shield combination.	Where there is potential for skin contact, have available and wear as appropriate: impervious gloves, apron, pants, jacket, hood, and boots; or totally encapsulating chemical suit with breathing air supply. Permeation data supplied by vendors indicate that impervious materials such as natural rubber, natural rubber plus neoprene, nitrile, or polyvinylchloride afford adequate protection. Do not wear leather gloves or leather shoes (uppers or soles) because they can ignite following contact with peroxide. Cotton clothing can also ignite. This effect may be within minutes, or delayed. Clothing fires and skin damage occur less quickly with 50% or lower hydrogen peroxide than with 70% material, but adequate personal protection is essential for all industrial concentrations. Protective skin creams offer no	Where there is potential for airborne exposure in excess of applicable limits, wear NIOSH approved respiratory protection.

		protection from hydrogen peroxide and should not be used.	
Lead Acid Batteries	Safety glasses must be worn when moving, connecting, disconnecting, or maintaining batteries, or cleaning up acid spills; as well as, when brushing battery posts or handling solids from inside a battery.	When moving, connecting, disconnecting or maintaining batteries, or cleaning up acid spills acid resistant gloves and full coverage acid resistant clothing must be worn. When brushing battery posts or handling solids from inside a battery gloves and apron must be worn.	When brushing battery posts or handling solids from inside a battery, dust masks must be worn.
Nitric acid	Chemical safety goggles. A face shield may also be necessary.	Impervious gloves, coveralls, boots, and/or other resistant protective clothing. An impervious full-body encapsulating suit and respiratory protection may be required in some operations.	NIOSH/MSHA approved respirator, if required
Paints	None required.	None required.	None required.

Silica	Safety goggles	Wear impervious gloves, shoes and protective clothing to prevent skin contact.	NIOSH/MSHA approved respirator, if required
Sodium cyanide	For dust and splash protection use chemical goggles or full face shield	Rubber or neoprene gloves; impervious lab coat, apron, or coveralls and boots	NIOSH/MSHA approved respirator, if required
Sodium hydroxide (caustic soda)	Tight-fitting goggles if dust is generated. For splash protection use chemical goggles or full face shield	Gauntlet type rubber or neoprene gloves; impervious apron or coveralls and boots	NIOSH/MSHA approved respirator
Sodium metabisulphite	Chemical safety goggles	Cotton gloves adequate for handling dry product. For solutions, use rubber or neoprene gloves; impervious apron or overalls and boots	NIOSH/MSHA approved respirator
Sodium nitrate	Contact lenses should not be worn; they may contribute to severe eye injury.	Impervious gloves of chemically resistant material (rubber or PVC), body suits, aprons, and/or coveralls of chemical resistant material and impervious boots of chemically resistant material should be worn at all times	For dusty or misty conditions, wear NIOSH-approved dust or mist respirator. In case of spill or leak resulting in unknown concentration, use NIOSH approved supplied air respirator.
Sulphur	Chemical safety goggles	Wear impervious gloves, shoes and protective clothing to prevent skin contact.	NIOSH/MSHA approved respirator, if required

8 MISCELLANEOUS HAZARDOUS/TOXIC MATERIALS

8.1 PRODUCT DESCRIPTION

Acids such as nitric acid, as well as emulsifiers and ammonium nitrate are used at the mine site. Gases such as propane, oxygen, acetylene; solvents; water/effluent treatment chemicals and various additives are also utilized.

The release or spillage of any of these substances would possibly result in environmental impacts and pose a potentially hazardous situation for those personnel exposed to some of these materials. It is essential that materials deemed to be potentially hazardous be dealt with in a cautious manner, in strict adherence to laws and regulations outlined in the legislation, whether the substance is provided in large or smaller quantities as this will prevent serious repercussions should an accidental release of material happen.

8.2 STORAGE FACILITIES OF HAZARDOUS/TOXIC CHEMICALS

All explosive related chemicals will be stored as discussed in Section 6 of this Plan.

All other chemicals and gases will be stored in appropriate locations.

These storage facilities ensure that chemicals that could interact and cause a serious incident will be kept segregated.

9 INVENTORY, INSPECTION & RECORDS

A contract expediting company, Arctic Fuels, arranges all deliveries from the Baker Lake Marshalling Area to the Meadowbank and Whale Tail sites. This includes the hazardous materials discussed in this plan. The General Mine Manager has ultimate responsibility for supervising the receipt, inspection, and recording of all material inventories at site. The division managers reconcile total amounts received against amounts ordered.

9.1 PETROLEUM PRODUCTS

9.1.1 Inventory Management

Diesel fuel use is metered automatically when it is pumped from the Meadowbank and Whale Tail bulk tanks. The metered volumes are summarized weekly and reconciled against tank levels determined manually with a dipstick from the top of the tanks. Diesel fuel consumption for the power generators is recorded weekly at Meadowbank and will be recorded weekly at Whale Tail.

Aviation fuel is dispensed as required under the supervision of aircraft personnel and site services. Helicopters may be stationed at the Whale Tail site for Amaruq exploration activities with periodic use of a fixed wing aircraft at the Amaruq Exploration site. Fixed wing aircrafts and helicopters will continue to use the Meadowbank airstrip. Consumption and on-site volumes are reconciled monthly at both locations. Lubricants and other petroleum products are inventoried monthly.

9.1.2 Inspection

The Environmental Department performs regularly scheduled inspections of all fuel and lubricant storage areas at both sites. The inspection schedule and procedures to be followed are summarized in Table 9. All inspections are logged with the date and time of inspection, facility inspected, and name of the person making the inspection. See Appendix D for the inspection report of any hazardous material storage area.

The condition of hazardous materials storage areas, containers, tanks, connectors and associated plumbing will be checked on a regular basis. Observations on their condition will be logged, dated and kept near the corresponding storage area. Drums/containers will be inspected for the presence and legibility of symbols, words or other marks identifying the contents, signs of deterioration or damage such as corrosion, rust, leaks at seams or signs that the drum/container is under pressure such as bulging and swelling, spillage or discoloration on the top or sides of the drum/container. If leaks or deterioration is encountered it will be noted and addressed in a timely manner.

The hazardous materials area's secondary containment will be inspected and the condition of the secondary containment will be noted. Arrangements will be made for repairs if necessary.

Table 9 - Inspection of Petroleum Storage Sites

Fuel Tanks	*Schedule* – Daily by Site Services Supervisor, Weekly by Environmental Technician, Quarterly by Environmental Coordinator. *Procedure* – Repair leaks and report promptly. Inspections will be reported annually and filed with the General Mine Manager or Site Services Superintendent and Environmental Superintendent.
Electrical Generating Plant (diesel)	*Schedule* – Daily by powerhouse operator, weekly by Environmental Technician as part of internal environmental inspections. *Procedure* – Inspections will be reported annually and filed as above.
Other Fuelling Stations	*Schedule* – Daily by Site Services Supervisor, Weekly by Environmental Technician as part of regular inspections. *Procedure* – Inspections will be reported annually and filed as above.
Spill Kits	*Schedule* – Monthly by Environmental Technician, Quarterly by Environmental Coordinator. *Procedure* – Inspections will be reported annually and filed as above.
Other Hazardous Material Storage	*Schedule* – Daily by Site Services Supervisor, Mill Supervisor, Weekly by Environmental Technician when materials are on site. *Procedure* – Inspections will be reported annually and filed as above.

Any accidental damage to containment structures will be inspected immediately and appropriate repairs undertaken. The extent of damage will be reported in writing to the General Mine Manager and Environmental Superintendent. The report will note any remedial repairs that may be made, the date of any repairs, and the need for any follow-up inspection.

9.1.3 Records

Records pertaining to storage, use, and loss of fuels and lubricants are required by CCME and the Fire Marshal (under the *National Fire Code).* The following records are prepared by the Procurement and Logistics and Site Services departments:

- Reconciliation of bulk inventory from resupply logs;
- Weekly use summaries;
- Weekly reconciliation for each storage tank;

- Overfill alarm tests;
- Pressure tests (if applicable);
- Inspections and maintenance checks of the storage tank, piping, and delivery systems;
- Any alteration to the systems;
- Reports of leaks or losses;
- Reports of spill responses; and
- Records of training.

9.2 EXPLOSIVES

9.2.1 Inventory Management

See Figure 1 for location of the Meadowbank Explosives Mixing Plant or Emulsion Plant. Once mining ends at Meadowbank, the emulsion manufactured on-site will continue to be stored in a tank located at the Emulsion Plant and delivered via the haul road to the Whale Tail site on an as needed basis. Refer to the Ammonia Management Plan for more details on emulsion storage. Agnico Eagle's explosive contractor, Dyno Nobel Inc., performs daily and weekly inspections on the Emulsion Plant to ensure that inventory used is documented. Agnico Eagle conducts daily inspections of the sea can's storing the boosters, delays and detonator cords and provides an inventory to the Mine Manager.

9.2.2 Inspection

Access to and use of explosives will be under the exclusive control of Agnico Eagle. Agnico Eagle will be responsible for inspection of all explosives equipment and facilities, including the ammonium nitrate storage areas and the magazines for high explosive detonators and blasting caps. The explosives manufacturing plant is inspected by Dyno Nobel Inc. and reports this to Agnico Eagle Management.

9.2.3 Records

The *Federal Explosives Act* requires that the following records be kept with regard to explosives products:

- Quantity and strength of each explosive manufactured; and
- Quantity of each explosive issued to the mine site from the factory, including the dates of shipments and quantity of each explosive on site.

Agnico Eagle staff will provide weekly reports to the General Mine Manager that will include:

- Staffing;
- Safety concerns or incidents;

- Total explosives consumption;
- Amount of ammonium nitrate remaining on site; and
- Inventory of other explosives and accessories to be audited for fiscal month-end balances.

9.3 MISCELLANEOUS HAZARDOUS/TOXIC MATERIALS

9.3.1 Inventory Management

Adequate quantities of all hazardous chemicals are reconciled against orders on receipt. The appropriate department responsible for the miscellaneous chemicals at each site is responsible for reconciling the resupply inventory.

9.3.2 Inspection

During operations, the appropriate department responsible for storage and handling of the miscellaneous chemicals are to regularly inspect all areas where such hazardous materials are used and stored. Any problems will be noted and reported to the Department Manager. The Department Manager is responsible for weekly or monthly inspections of miscellaneous hazardous materials and storage areas.

9.3.3 Records

The quantity of hazardous materials received, used, and in possession of personnel are recorded by appropriate Departments. The departments are to comply with the environmental regulations.

10 TRAINING

10.1 GENERAL

All staff and contractors at the Meadowbank and Whale Tail sites will receive the following training:

- WHMIS;
- Emergency and spill response (see also the SCP and ERP);
- Operations overview; and
- Mine Standard Operating Procedures.

Mine employees will receive additional training in mine safety as specified by the *Mine Health and Safety Act* and regulations. Agnico Eagle will ensure compliance with the training requirements specified in the Act and regulations.

Process plant employees will receive additional training specific to their area of work and duties, including safe operating practices, safe handling and storage of chemicals, and use of PPE. Other training includes cyanide and chemical awareness, specific chemical training for specific tasks, and a mill induction training. This training will be the responsibility of Agnico Eagle.

A record of training received will be maintained for each employee and also from contractors.

In Appendix E you will find a procedure poster that is placed at the applicable hazardous material storage location. This poster will also be used during toolbox meetings with all departments to ensure that hazardous material is being segregated and placed in the appropriate containers for storage.

10.2 PETROLEUM PRODUCTS HANDLERS

Personnel who handle petroleum products will be expected to be conversant with relevant MSDS information. As well, these personnel will be given training in the following:

- Transportation of dangerous goods (TDG);
- Agnico Eagle's fuel handling procedures (outlined in Section 5);
- Spill response and cleanup procedures for petroleum (see the SCP); and
- Emergency response, especially firefighting procedures (see the ERP).

10.3 EXPLOSIVES HANDLERS

Only trained and certified persons will work with explosives. The explosives personnel will undertake formal training and on-the-job training to ensure compliance with legislation. The Mine Inspector will check the adequacy of training. Training requirements will include (but not necessarily be limited to):

- Specific fire procedures as per the *Federal Explosives Act*;

- First aid;
- Transportation of dangerous goods (TDG); and
- WCB Blasting Certificate.

10.4 PLANT EMPLOYEES

Process plant operators may receive TDG training, if appropriate. All plant employees will be trained in spill and emergency response procedures. Emergency response procedures for spilled chemical substances are provided in the SCP.

10.5 THIRD PARTY CONTRACTORS

It is expected that third party contractors receive adequate and comprehensive training to conduct their work tasks from their employer. Agnico Eagle intends to review the general qualifications of third party contractors prior to having them work at the site. In addition, the contractor companies may also be requested to confirm the qualifications of specific individuals that they may have working at the site.

Third party contractors working on the site are required to participate in, and complete a site specific health and safety training session. The training session is envisioned to be valid for a period of 3 years, after which time the contractor may be required to complete the training again, or attend a refresher. The training session will outline site specific hazardous and response procedures that they should be aware of in the course of conducting their work on site. The training session will cover hazardous materials management.

11 PLAN EVALUATION, AUDIT & IMPROVEMENT

As part of Agnico Eagle's commitment under the International Cyanide Management Code, it will sponsor regular (every three years) audits by Institute-approved, third-party professionals to verify its compliance with the Code's principles and standards of practice with regard to cyanide handling

12 FIGURES

Figure 1: Meadowbank Mine Site General Layout

Figure 2: Vault General Layout

Figure 3: Meadowbank Mine Site: Hazardous Material Storage Locations

Figure 4: Baker Lake Marshalling Area Layout: Diesel Fuel Storage Facility

Figure 5: Baker Lake Marshalling Area Layout: Jet-A Fuel Storage Facility

Figure 6: Whale Tail Camp Layout



Figure 1 Meadowbank Site Layout

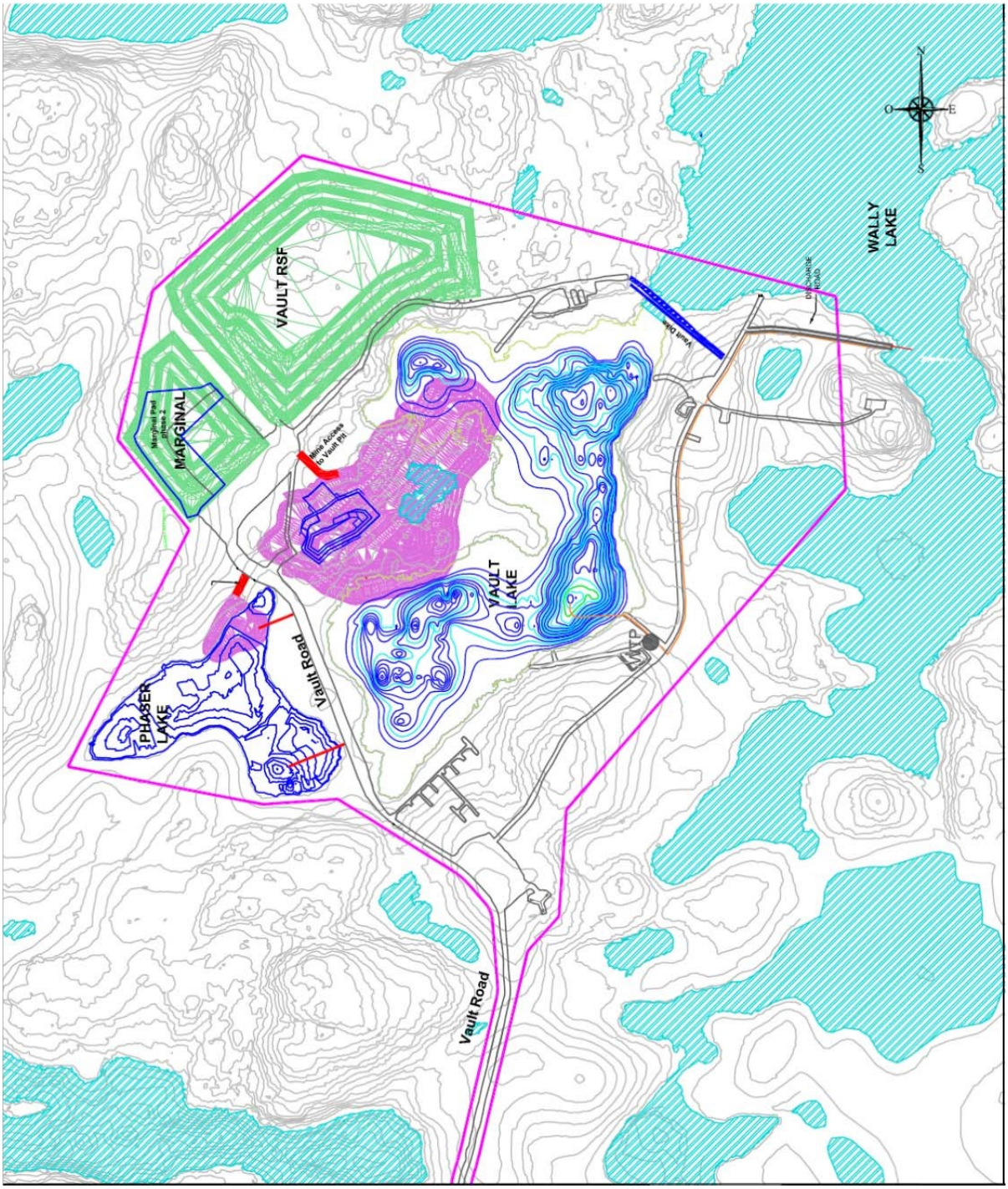

Figure 2 - Vault General Layout

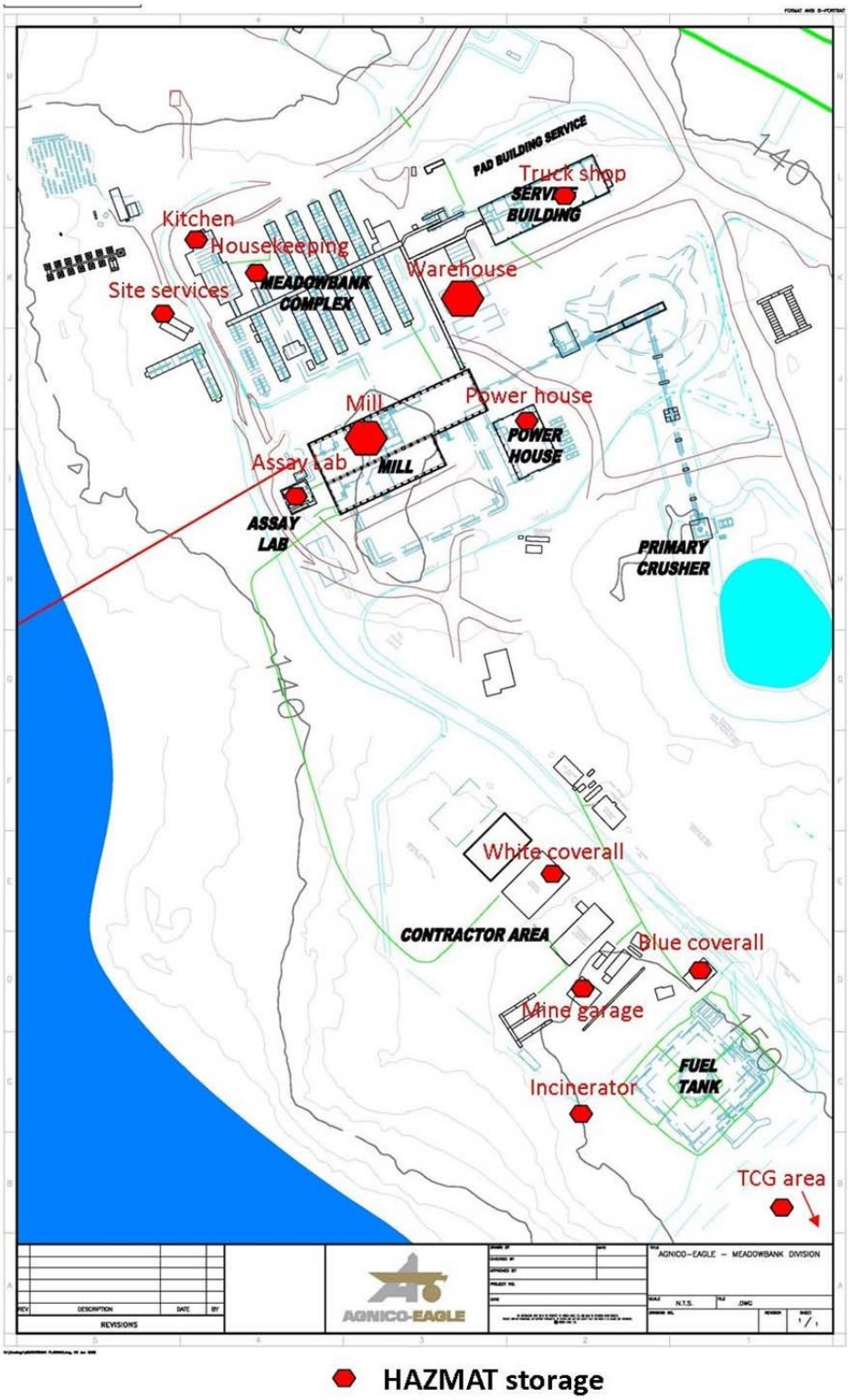

Figure 3 - Meadowbank Mine Site: Hazardous Material Storage Locations



Figure 4 - Baker Lake Marshalling Area Layout: Diesel Fuel Storage Facility

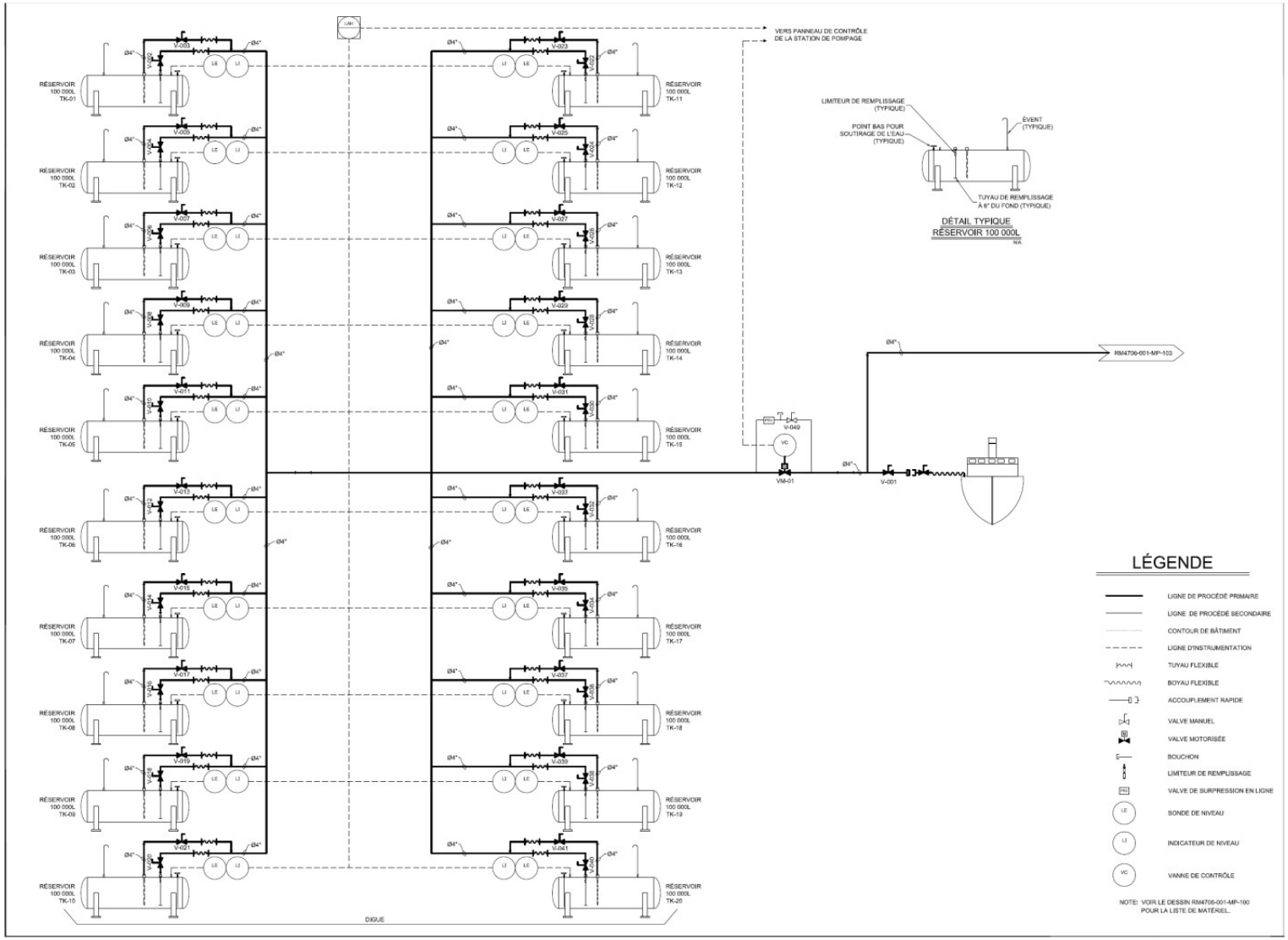

Figure 5 – Baker Lake Marshalling Area Layout: Jet-A Fuel Storage Facility

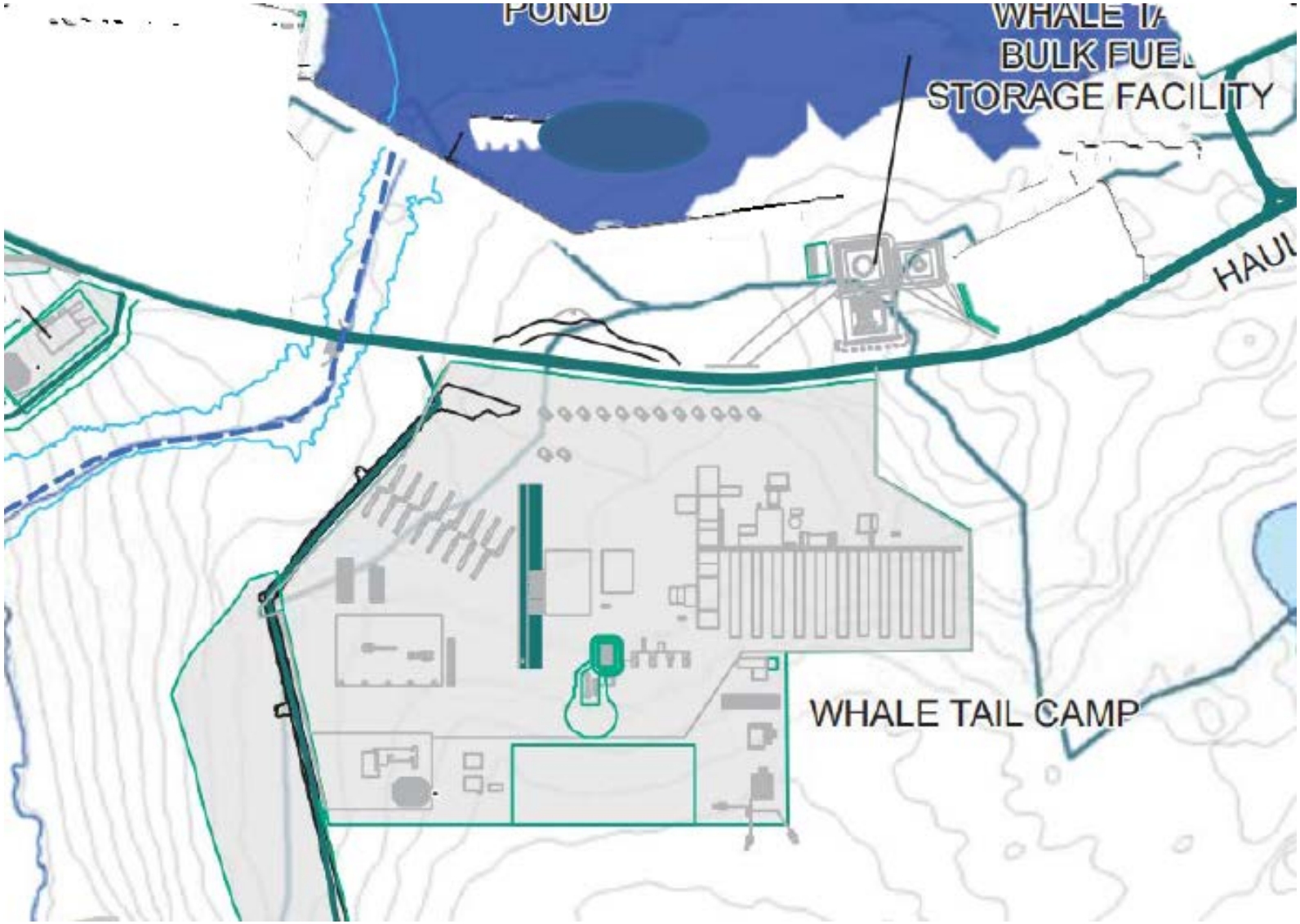

Figure 6 Whale Tail Camp

13 LIST OF ACRONYMS

Agnico Eagle	Agnico Eagle Mines Ltd.
AN	Ammonium Nitrate
ANSI	American National Standards Institute
ANFO	Ammonium Nitrate Fuel Oil
CCME	Canadian Council of Ministers of the Environment
EPS	Environmental Protection Service
ERD	Explosives Regulatory Division, Natural Resources Canada
ERP	Emergency Response Plan
ERT	Emergency Response Team
FS	Fuel Storage Area
HAZCOM	Hazard Communication
HCN	Hydrogen Cyanide
HM	Hazardous Materials Storage Area
HMMP	Hazardous Materials Management Plan
HR	Human Resources
HSC	Occupational Health & Safety Committee
HW	Hazardous Waste Storage Area
IBC	Intermediate Bulk Container
ISO	International Organization for Standardization
MSDS	Materials Safety Data Sheets
MSHA	Mine Safety and Health Administration

NIOSH	National Institute for Occupational Safety and Health
OHSA	Occupational Health and Safety Administration
OHSP	Occupational Health & Safety Plan
PCB	Polychlorinated Biphenyls
PPE	Personal Protective Equipment
SCP	Spill Contingency Plan
TDG	Transportation of Dangerous Goods
TDGA	Transportation of Dangerous Goods Act
WCB	Workers' Compensation Board
WHMIS	Workplace Hazardous Materials Information System

Appendix A

List of Applicable Legislation

The following is a list of federal and territorial legislation and guidelines that regulate the management of hazardous materials in Nunavut, and which are considered potentially applicable to the Meadowbank Gold Mine. As part of Meadowbank Mining Corp's overall environmental management system for the mine site, this list is updated at least annually to ensure it represents current and relevant information.

Federal Legislation

- **CANADIAN ENVIRONMENTAL PROTECTION ACT, 1999 S.C. 1999, c. 33**

  Code of Practice for the Reduction of Chlorofluorocarbon Emissions from Refrigeration and Air Conditioning Systems.

  Environmental Code of Practice for Elimination of Fluorocarbon Emissions from Refrigeration and Air Conditioning Systems.

  Environmental Code of Practice on Halons Code of Practice EPS 1/RA/3E.

  Environmental Emergency Regulations SOR/2003-307.

  Environmental Guidelines for Controlling Emissions of Volatile Organic Compounds from Aboveground Storage Tanks, CCME-EPC-87-E, as amended.

  Export and Import of Hazardous Waste and Hazardous Recyclable Material Regulations SOR/2005-149.

  Federal Halocarbon Regulations, 2003 SOR/2003-289.

  Interprovincial Movement of Hazardous Waste Regulations SOR/2002-301.

  Ozone-Depleting Substances Regulations, 1998 SOR/99-7.

- **EXPLOSIVES ACT R.S.C 1985, c. E-17**

  Ammonium Nitrate and Fuel Oil Order C.R.C. 1978, c. 598.

  Explosives Regulations C.R.C. 1978, c. 599.

 TRANSPORTATION OF DANGEROUS GOODS ACT, 1992 S.C. 1992, c. 34
Transportation of Dangerous Goods Regulations SOR/2001-286.

Transportation of Dangerous Goods Regulations - Schedules SOR/2001-286.

Federal Codes and Other Guidance Documents

- National Fire Code.
- Indian and Northern Affairs Canada. 2005. DEW Line Cleanup Barrel Protocol.
- Canadian Council of Ministers for the Environment (CCME) - Environmental Code of Practice for Above-Ground and Underground Storage Tanks Systems containing Petroleum Products and Allied Petroleum Products (2003).
- CCME - Canadian Wide Standards for Petroleum Hydrocarbons in Soil.
- CCME - Canadian Environmental Quality Guidelines.
- Environment Canada (Tilden & Westerman). 1990. Guidelines for the Preparation of Hazardous Material Spill Contingency Plans.
- Department of Fisheries and Oceans. 1998. Guidelines for the Use of Explosives in or Near Canadian Fisheries Water.

Territorial Legislation

- **ENVIRONMENTAL PROTECTION ACT R.S.N.W.T. 1988, c. E-7**

  A Guide to the Spill Contingency Planning and Reporting Regulations January 2002.

  Environmental Guideline for Contaminated Site Remediation November 2003.

  Environmental Guideline for Waste Lead and Lead Paint.

  Guideline for Ozone Depleting Substances.

  Guideline for the General Management of Hazardous Waste in the NWT.

  Guideline for the Management of Waste Antifreeze.

  Guideline for the Management of Waste Batteries.

  Guideline for the Management of Waste Paint.

  Guideline for the Management of Waste Solvents.

  Guideline for Dust Suppression, February 1998.

  Spill Contingency Planning and Reporting Regulations R-068-93.

  Used Oil and Waste Fuel Management Regulations R-064-2003.

  Plain Language Guide to the Used Oil and Waste Fuel Management Regulations.

- **TRANSPORTATION OF DANGEROUS GOODS ACT, 1990 S.N.W.T. 1990, c. 36**
  Transportation of Dangerous Goods Regulations R-049-2002.

- **EXPLOSIVES USE ACT R.S.N.W.T. 1988, c. E-10**
- *Explosives Regulations R.R.N.W.T. 1990, c. E-27.*

Appendix B

Hazardous Materials Stored on the Meadowbank Site

Name	Description	Quantity
2,6 DIMETHYL 4 HEPTANONE 80 %	4LT	60
ABS GLUE CAN WITH BRUSH	500ML	3
ABS TO PVC TRANSITION GLUE	W/ BRUSH 500ML	11
ACETONE	4LT	4
ACETONE CLEANER		22
ACETYLENE	SIZE A390 CYLINDERS	506
ACETYLENE CGA510	SIZE MC CYLINDERS	20
ACETYLENE LABORATORY GRADE	SIZE K	42
ACTISAND 7E-3003	SILICE SAND 22.68KG	144
ACTIVATED CARBON	8 X 16 - 60% ACTIVE IN 500KG	504
ACTIVATED CARBON (GAC) FILTER	2 1/2" X 10" PHOSPHATE	12
ADDITIVE		16
ADHESIVE SILICONE	WITH RTV SUPERFLEX	40
ADHESIVE SILICONE	HIGH-TEMP RTV RED	93
ADHESIVE/SEALANT 277	BOT/250ML F/ LARGE BOLTS	41
ALIQUAT 336 AVERAGE MW 442	1LT	4
ALIQUOT 336	250ML	4
ALL SEASON SELECT OIL.	1L	16
ALL STEEL WELDING ELECTRODE	M4 5/32" 2.5KG/BX	2
ANHYDRE BORAX 12 MESH	25KG DEHYBOR	167
ANHYDRONE		7
ANIONIC FLOCCULANT 920 MC	750KG/BAG	181
ANIONIC FLOCCULANT 934 SH	750KG/BAG	151
ANTI SEIZE LOCTITE SILVER GR	CONTENANT 1LB	26
ANTI-STATIC/FOG BOTTLE CLEANER	MAGIC 225ML	36
ARC AIR TORCH	EXTREME K4000	4
ARC AIR TORCH 1000A	W/10' CABLE CSK4000W	9
ARCAIR SLICE ROD	1/4" X 22" LONG 100/PACK	2
ARCAIR SLICE ROD	3/8" X 18" LONG 50/PACK	2
ARCTIC GREEN LOW TEMP WET CHEM	FOR HVY EQUIP FIRE SUPPRESSION	15
ARDEE 100 ROCK DRILL OIL	20LT	201
ARDEE 32 ROCK DRILL OIL	20LT	1301
ARDEE 32 ROCK DRILL OIL	205LT DRUM	7
ARENA SILICA	MALLA 2030 INDUSTRIAL 25KG/BAG	0
ARGON	SIZE T CYLINDERS	118
ARSENIC EDL		2
ARSENIC STANDARD	1000PPM 500ML	4
ASSIST 1AL1 LIQUID ALKALI	18.9LT	107
ATF D3M	1040LT	1
AU LUMINA HCL		1
BACKING COMPOUND	MAGANESE	50
BATTERY	12V CM785	4
BATTERY	12 VOLTS	0
BATTERY	KAWASAKI MULE	12
BATTERY	12V 8DW ELECTROL F/ DM45 DRILL	2
BATTERY	CR2	6
BATTERY 12V	FOR HVY EQUIP FIRE SUPPRES	6
BATTERY ACID NEUTRALIZER		22
BATTERY ENERGIZER	6V	3
BATTERY ENERGIZER INDUSTRIAL	ALKALINE AAA 4/PK	2185
BATTERY ENERGIZER INDUSTRIAL	AA 4/PK	2554
BATTERY ENERGIZER INDUSTRIAL	C	39
BATTERY ENERGIZER INDUSTRIAL	ALKALINE D	572
BATTERY ENERGIZER INDUSTRIAL	9V	453

BATTERY INTERNATIONAL	LUBE AND SERVICE TRK	12
BATTERY LI-ION CP200	2250MA CAPACITY	13
BATTERY MOTORCRAFT	12V 850A	31
BLUESHIELD WIRE LA-S6.35	20KG ROLL	10
BODY PRIMER	F/ URATHANE WINDOW&WINDSHIELD	1
BONE ASH	20 MESH	27
BRAKE CLEANER	KLEEN-FLO 20LT	82
BRAKE CLEANER	12/CS	766
BRAKE FLUID DOT-3	1LT	32
BRP MINERAL OIL	946ML 2 STROKE	265
BUFFER SOLUTION PH 10	4L	3
BUFFER SOLUTION PH 4	4L	3
BUFFER SOLUTION PH12	R1300 (4 LITRES)	0
BUFFER SOLUTION PH7	4/CASE	2
BUG SPRAY DEEP WOOD OFF	100ML PUMP BTL	278
BURNING RODS LENCO	10' 6" 5/8ID 11/16OD	100
BUTANE FUEL	70ML	14
C25 ARGOSHIELD	SIZE T CYLINDERS	99
CALCIUM CHLORIDE LIQUID	29.6% 1000L/DM	1587
CALCIUM CHLORIDE LIQUID	29.6% 1200L/DM	303
CARBON DIOXIDE	SIZE T CYLINDERS	0
CAT DEO MONOGRADE 40 OIL	1200 LITERS/TOTE	93
CAT DEO MONOGRADE 40 OIL	205 LITERS DRUM	6
CATIONIC POLYMER	25KG HYDREX 3613	25
CAUSTIC SODA ANHYDRE	1000KG MICROPEARL	321
CAUSTIC SODA MICROPEARL	25KG/BG	1137
CAUSTIC ULTRATAK GREASE	CARTRIDGES	4
CELLULOSE		30
CHASSIS LUBRIFIANT	2KG CASTROL	2
CHIP CMS HYDROCYANIC ACID	2 - 50 PPM	10
CHOKE AND CARB CLEANER	KLEEN-FLO	37
CLEANER BATTERY MAINTENANCE	AERO 312GM	78
CLEANER CARBURATOR/CHOKE		9
COAGULANT ALUMINIUM HYDROXYDE	1000KG HYDREX 352 PASS-10S	123
COLORED FLEECE RAGS	20LB	314
COMPRESSOR OIL SYNTHETIC	COMPRO XL-S 32 205LT	23
COMPRO SYNTHETIC	205LT/DM	14
COOLANT CVC-7-A	1040LT TOTE YELLOW	1
COOLANT SAMPLE KIT		114
COOLANT TREATMENT		2
COPPER OXIDE		16
COPPER SULPHATE	PENTAHYDRATE MINE GRADE	447
COUPLER QUICK		34
CPVC GLUE	W/ BRUSH 500ML	7
CULTURE TUBE DISPOSABLE	BOROSILICATE16MMX150MM 1000/BX	196
CVC-7-A YELLOW COOLANT	3.78LT	50
DEB DEBBA PROTECTIVE CREAM	# 233 8 X 800ML	31
DEB NATURELL HAIR/BODY	# 266 4 X 4LT	166
DEB NATURELL SUNFLOWER	# 256	145
DEFLECT PRO SUN SCREEN	140ML	1174
DE-ICER LOCK POCKET SIZE	35ML	47
DIELECTRIC GREASE		7
DIESEL ADDITIVE	9.8L	145
DIESEL MELT	ANTI-GELLING TREATMENT	34
DIFERENCIEL LOCK ADDITIVE SEAL		6

DISSOLVED OXYGEN SERVICE KIT	HACH PORTABLE OXYGEN METER	6
DIXON LUBRICATOR	3/4"	3
DOW CORNING GREASE # 111 TUBE	HVY EQUIP FIRE SUPPRES	7
DPD FREE CHLORINE HACH	10ML SAMPLE REAGENT 100/PK	7
DRILL CARE MOTOR OIL	QT FOR DM45 DRILL	7
DRILL STEEL GREASE	KOPPER KOTE 10LT	76
DURADRIVE MV SYNTHETIC ATF	20LT PAIL	10
DURATRAN SYNTHETIC	205 LITERS DRUM	5
DURON E 15W40	1040LT IBC	80
DURON E SYN 0W40	1040LT IBC	27
DURON E SYNTHETIC 5W-40	4L	32
DURON SYNTHETIC 15W40	205LT	1
DURON XL 0W30	1040LT IBC	88
DUST BAN	20KG	95
DUST CONTROL NALCO	8882.61 1183KG TOTE	92
DYNALENE EG 60 A-RED	ETHYLENE GLYCOL (1078KG/TOTE)	15
ECOTRACTION	1 TON BULK TOTE IBC	15
EDGE DETERGENT	18.9LT	108
ELECTRODE	600-800-900	60
ELECTRODE CLEANING SOLUTION	HANNA INSTR.TESTER 230ML BTL	12
ENDURATEX EP150	205L/DM	86
ENDURATEX EP220	205LT/DRUM	30
ENDURATEX EP220	1040LB IBC	10
ENDURATEX EP320	205LT/DM	4
ENDURATEX EP460	205LT/DM	7
ENDURATEX EP68	205LT/DM	29
ENDURATEX SYN EP150	205LT/DM	3
ENDURATEX SYN EP220	205LT/DM	34
ENDURATEX SYN EP320	205L/DM	10
ENDURATEX XL SYN BLEND 68/220	205LT	7
ESAB WELDING WIRE	0.045 (15 Kg/ROLL)	50
ESAB WELDING WIRE	0.062 (15 Kg/ROLL)	82
ESSO XDO 60	1100L/TOTE	0
EXTENDED LIFE COOLANT -52	1040LT	123
EXTERIOR SEALANT MULCO	300ML BLUE SCOTIA	47
EXTERIOR SEALANT MULCO	300ML CLEAR	48
FLOCULANT	25KG/BG 85016	1
FUNNEL	DYNALINE	9
GASKET ELIMINATOR 515	50ML SMALL TUBE	16
GASKET MAKER HI-TEMP	80ML RED	5
GASKET SEALANT IN TUBE		94
GEAR CHAIN & CABLE LUBRICANT	LOCTITE 12 OZ. AEROSOL	26
GEARGUARD	180KG/DRUM	4
GENERAL PURPOSE THINNER	GALLON	59
GLUE STICK	20G	23
GLUE STICK ENIUM	40G	7
GLYCEROL (VERLUBE)	4LT/CONTAINER	1
GOLD SOLUTION STD	1000PPM	5
GREASE EP.	NLGI CHEVRON 6134 300GR	12
GREASE EP-1	IN TUBE ULTRA DUTY	58
GREASE FOR COUPLING	PEERLESS XCG FLEX GREASE	90
GREASE TUBE	TRAMAC	0
GREASE TUBE KIT	GRACO FIREBALL 425 50:1	8
HAND CLEANER GRIME EATER	3.5LT	7
HARD FACING ELECTRODE	3/16" 20KG/CS	0

HELISTAR CS GAS		30
HELIUM	SIZE T CYLINDERS	28
HIGH PRESSURE NITROGEN	SIZE T CYLINDERS	25
HIGH TEMPERATURE CONTROLLER		1
HIGH VACUUM GREASE		4
HYD ARCTIC OIL	FOR DM45	2
HYDRAULIC COOLER	THERMAL TRANSFER	1
HYDREX AW 46	HYDRAULIC OIL 20LT/PAIL	6
HYDREX EXTREME HYDRAULIC OIL	205LT	10
HYDREX MV ARCTIC 15	205LT	24
HYDREX MV22	20LT/PAIL	40
HYDREX MV36	20LT/PAIL	40
HYDREX MV60	20LT/PAIL	32
HYDREX XV ALL SEASON	1040LT IBC	0
HYDROCHLORIC ACID	240KG 20BE 32%	396
HYDROCHLORIC ACID REAGENT GRAD	2.5LT 4/CS	52
ICE FREE AIR TOOL OIL	1LT WHEEL & ACCESSORIES	0
INO FOAM SOAP	6 X 1LT	160
INT/EXT BLUE PAINT	AGNICO DEVOE	17
IRON ACCELERATOR		89
J-512 FINAL STEP/SANITIZER	4 X 1.89LB BY CS	15
JAVELISANT DIBAC	20LT	12
JERRYCAN GAS	20LT	30
KEEN-FLO	BRAKE & PARTS CLEANER 4LT	20
KIDDY APC WET CHEMICAL AGENT	MODEL # WHDR-125	2
KIDDY APC WET CHEMICAL AGENT	MODEL # : WHDR-600	2
KVS	20G/PKG	2
LAUNCH 6GL2 LIQUID SOUR	18.9LT	28
LEAD BULLION MOLD	1000 OZ	20
LEAD NITRATE	25KG 99% MIN	2730
LEAD NITRATE	1000 KG	138
LEPAGE BLUE CONTACT CEMENT	3.8L	0
LITHARGE GOLD FREE	25KG	2
LOCTITE 290	50ML GREEN	4
LOCTITE 510 GASKET ELIMINATOR	50ML	12
LOCTITE SUPER GLUE	SUPER GLUE 495	69
LOCTITE THREADLOCKER 242 BLUE	REMOVABLE BOT 250ML	7
LOW COOLANT SEN		2
LUBRICANT	5 GALLON	2
LUBRICANT OIL WD 40	AEROSOL	2
LUBRICANT OIL WD40	4LT	24
LUBRICANT SUPER PENETRATING	PL-100 350G 12/CS	20
LYSOL TOILET CLEANER	710ML	1
MAGIC BOND EPOXY STICK		6
MAGLITE RECHARGEABLE BATTERY		10
MERCON SP TRANSMISSION OIL	1 LITER CONTENANT	2070
METABISULFITE	97% W	1046
METABISULFITE	97% W 907.19KG	389
METABISULFITE	97% W 1200KG/BAG	51
METABISULFITE	97% W 1360KG/BAG	80
MILL PERSE 813	SCALE CONTROL 200LT	0
MILL PERSE 813	SCALE CONTROL 1000LT TOTE	34
MOBILE SHC 10/24	20LT COMPRESSOR OIL	4
MOBILITH	GREASE SHC100	10
MOBILTAC 325NC	205L/DM	1

MOBILTAC 375 NC	17.2KG PAILS	24
NEW FLUX	491KG BATCH (26 PAILS/18.8846)	34074.85
NICKEL ANTI-SEIZE	1LB. CAN	13
NITRIC ACID 67%	193LT/DM	467
NITRIC ACID REAGENT GRADE	2.5LT 4/CS	23
NITRO CARTRIDGE	FOR HVY EQUIP FIRE SUPPRESSION	14
NITROGEN PILOT CYLINDER KIT	FOR HVY EQUIP FIRE SUPPRESSION	4
NITROGEN PP4.8	SIZE T CYLINDERS	25
NU-ACTION-3	4LT	76
NU-BIO SCRUB	4LT	55
NU-KLEENSMELL	4LT	20
NU-TRAP	20LT	14
OIL ADDITIVE	301-A	20
OIL COOLER	COOLER	4
OIL COOLER		0
OIL COOLER		2
OIL F/ CHAIN LIGHT	WINTER -40°C RESISTANT	20
OIL MOTOR DRILL CARE	20 LITER	2
OIL RALUBE 40	1040 LITER TOTE IBC	40
OXYGEN	SIZE K CYLINDERS	286
OXYGEN CGA540	SIZE D CYLINDERS	10
OXYGEN LABORATORY GRADE	HYDROCARBON FREE SIZE K	67
PAINT	1GAL BRIGHT YELLOW	25
PAINT AERVOE INVERTED	ORANGE GLO 12CN/BX	158
PAINT AERVOE INVERTED	GREEN GLO 12 CAN/BX	78
PAINT BRUSH	2 1/2"	196
PAINT BRUSH ANGLE	2 1/2"	100
PAINT DEVOE	1GAL SAFETY BLUE H19	54
PAINT DEVOE	1GAL SAFETY YELLOW EPOXY	13
PAINT DEVOE RUST-OLEUM	1GAL SILVER GRAY	47
PAINT EXTERIOR LATEX	1GAL SAFETY BLUE	22
PAINT GREY	ATLAS-COPCO	15
PAINT PIZZAZZ ENAMEL ALKYD	1GAL SATURN YELLOW	2
PAINT RUST-OLEUM	14OZ FLUO GREEN	64
PAINT RUST-OLEUM	14OZ FLUO ORANGE	241
PAINT YELLOW	ATLAS-COPCO	12
PC ATF D3M	205LT/DM	5
PEERLESS LLG GREASE	TUBE	140
PEKOE THE VRAC	(1000/BX)	99
PERMATEX ORING&RUBBER ADHESIVE		11
PETROSOL 3139	205LT	1
PH 4.01 SOLUTION	HANNA INSTRUMENT PH TESTER	5
PH 7.01 SOLUTION	HANNA INSTRUMENT PH TESTER	6
PINE-SOL	443ML	0
POTASSIUM NITRATE	FA209A	0
PRECISION SYNTHETIC EMB	TUBE	90
PRECISION SYNTHETIC GREASE	TUBE	270
PRECISION XL EMB GREASE	TUBE	179
PRECISION XL EP2 GREASE	TUBE	782
PRECISION XL EP2 GREASE DRUM		15
PREMIX FLUX 66PB026SODA4.5	ORANGE 19KG/PAIL	0
PRIMARY OIL BURNER		1
PRODURO OIL FD-1 60	1100/TOTES	8
PRODURO TO -4+ SYNTH	ALL SEASON 205L	25
PRODURO TO-4 30 S	205LT/DRUM	9

PRODURO TO-4 SYN ALL SEASON	1040LT IBC	43
PRODURO TO-4 XL SYN LO-TEMP	1040LT	20
PROLEACH KG		10
PROLITE MOP STICK 54	#AG-1674	17
PROPANE FUEL TANK	16.9OZ	133
PVC GLUE W/ BRUSH	711 WELD*ON 946ML	16
PVC PRIMER WITH BRUSH	P70 500ML	2
QUICK LIME	1700KG 0-2 5MM 1152	2768
REAGENT TUBE	280 X 32MM F/ CHS500	2
REAGENT TUBE		1
REAGENT TUBE		1
RUBBER CLEANER RUB-O-MATIC	1 LITER	119
SAND FOR SANDBLAST JETMAG	GRIT 30-60 25KG OLIVINE	316
SILICA SAND	SILICA SAND 22.7KG	177
SILICON FOOD GRADE GREASE	4 OZ FOR AMP SERIES PUMPS	0
SILICONE LUBRICANT		11
SILVER ELECTRODE	M2.4 3/32" .5KG/TUBE	1
SILVER FOIL	1 ONCE 99.999% PURE	52
SILVER NITRATE	500GRAM	3
SODA ASH NA2CO3	25KG MR118	11
SODIUM CYANIDE	PELLETS 1000KG	1677
SODIUM HYDROXIDE	SCRUBBER FILL	8
SODIUM HYPOCHLORITE	20/LITERS	52
SODIUM NITRATE	22.27KG 98% INDUSTRIAL GRADE	226
SOLVENT VARSOL	PLASTIC BOTTLE 3.78LT	68
SPRAY SPATTER BLOCK	W/TRIGGER 500ML	10
STOKOLAN HAND CREAM		35
SULPHUR PRILLS	99.5% 1000KG	4497
SUPER 3000 MORTAR		4
SUPER 77 SPRAY ADHESIVE		0
SUPER 90 ABC DRY CHEMICAL	PAIL FOR HVY EQUIP FIRE SUPPRE	30
SUPER DUTY MOTOR OIL	4LT	18
SUPER FLUID KLAR PILOT		199
SWIVEL CASTERS WHEEL	8"	8
SYNDURO SHB150	205LT/DM	59
SYNDURO SHB32	20LT/BUCKET	262
SYNDURO SHB32 SYNT.	COMPRESSOR OIL 205L/DRUM	14
SYNDURO SHB460		2
SYNTETHIC SHB 68	205LT-45GAL	7
SYNTEX FAN MOP HEAD	20OZ 550G	70
SYNTHETIC 75W140	1040LT/TOTE	2
THREAD SEALANT	W/ PTFE	17
THREAD SEALANT W/TEFLON	PERMATEX 118ML	56
THREADLOCKER	36ML GREEN	4
THREADLOCKER 272 HIGH-TEMP	LOCTITE 250ML	2
TRANSFORMER OIL	VOLTESSO 205LT	1
TRAXON E SYN 80W140	1040LT/DRUM	3
TRAXON E SYN CD50	205LT/DRUM	8
TRAXON ENGRENAGE	20LT 85W140	1
TRAXON XL 75W90	205LT/DRUM	2
TRAXON XL SYNTH BLEND 75W90	60L	5
TUNGSTEN ACCELERATOR		15
TURBOFLO R&068	20LT PAIL	1
TURBOFLO R&O 100 OIL	20L PAIL	8
TWO CYCLE ENGINE OIL		12

ULTIMA EP150	205LT	2
ULTRA CLEAR PREMIUM OIL LAMP		3
URATHANE BRUSH	F/ URETHANE WINDOW&WINDSHIELD	33
URETHANE DUR-X-LINE MATERIEL	780001277 WRM-80T 1KG KIT	15
URETHANE DUR-X-LINE MATERIEL	780001276 WRM-80T 4KG KIT	5
URETHANE SEALANT IN TUBE		275
VALVE LUBRICANT AND SEALANT	400GR	40
VARSOL	PARTS CLEANER 45GAL/DM	8
VICTAULIC LUBRICANT	ONE QUART	0
VULTREX G-124 GREASE	TUBE	59
VULTREX GEARSHIELD NC	205 LITERS	120
VULTREX OGL SYNTHETIC	ALL SEASONS 54KG KEG	1
VULTREX OGL SYNTHETIC GREASE	ALL SEASON 680, 54KG	70
WELDING ELECTRODE BRONZE	3.2MM 1/8 SODEL 661 5KG/BX	5
WELDING ELECTRODE MG	1/8" 5KG/BX	2
WELDING ELECTRODE MG	3/32" 2.5KG/BX	2
WELDING ELECTRODE TRACTALOY	M2.4 3/32" 5KG/BX	2
WELDING FACE SHIELD		15
WELDING ROD	STUD-XTRACT SOUDOTEC 5KG/BX	2
WELDING ROD	0.156" NON FERROUS	12
WELDING ROD	3/32" 10.20KG/BOX 624P-3	5
WELDING ROD	1/8" 12.90KG/BX 624P-309	14
WELDING ROD	5/32" 12.90KG/BX 624P-309	7
WELDING ROD	3/32" 10KG/BX LA-11018	6
WELDING ROD	1/8" 20KG/BX LA-11018-M	5
WELDING ROD	5/32" 20KG/BOX LA-11018-M	5
WELDING ROD	3/32" 10KG/BX LA6010	14
WELDING ROD	1/8" 20KG/BX LA6010	14
WELDING ROD	3/32" 10KG/BX LA7018	8
WELDING ROD	1/8" 20KG/BX LA7018	25
WELDING ROD	5/32" 20KG/BX LA7018	24
WELDING ROD 1/4	6 X 450MM 19.5KG/CS	1
WELDING ROD 5/32	4 X 450MM 18.6KG/CS	1
WELDING ROD ALU LITE	3/32 2.5KG/BX	10
WELDING ROD ALU LITE	1/8 2.5 KG/BX	10
WELDING ROD CARBON ARC DCCC	1/8" X 12" 100/BX	15
WELDING ROD CARBON ARC DCCC	3/16" X 12" 50/BX	41
WELDING ROD CARBON ARC DCCC	1/4" X 12" 50/BX	22
WELDING ROD CARBON ARC DCCC	5/16" X 12" 50/BX	71
WELDING ROD CARBON ARC DCCC	3/8" X 12" 50/BX	98
WELDING ROD CARBON ARC DCCC	1/2" X 14" 50/BX	28
WELDING ROD FLAT DCCC	3/8" X 5/32" X 12" 50/BX	20
WELDING ROD FLAT DCCC	5/8" X 3/16" X 12" 50/BX	18
WELDING ROD HARD 58	1/8" 5KG/BX	6
WELDING ROD HARD 58	5/32" 5KG/BX	14
WELDING ROD STEEL ALLOY	1/8" (3.2mm) 5 KG/BOX	5
WELDING ROD TRI-CAST	3/32 5KG/BX	9
WELDING ROD TRI-CAST	1/8 5KG/BX	10
WELDING ROD XTREME	1/16 0.5KG/BX	11
WELDING ROD XTREME	3/32" 5KG/BX	7
WELDING ROD XTREME	1/8" 5KG/BX	7
WELDING WIRE LA 111 T1-K3M	1/16 FLUX CORE 15KG SPOOL	68
WELDING WIRE LA T-91	.045 CARBON STEEL 15KG SPOOL	155
WELDING WIRE LA T-91	1/16 CARBON STEEL 15KG SPOOL	215
WELDING WIRE OUTERSHIELD	0.045 33LBS	52

WELDING WIRE OUTERSHIELD	0.062 33LBS-	0
WET WASHING SIEVE 200 MESH		2
WHITE GREASE	KLEEN FLOW 225G/TUBE	51
WINDEX	765ML	437
WINDOW PRIMER	F/ URETHANE WINDOW&WINDSHIELD	6
WINDSHIELD GLUE TREMSHIELD		44
WINDSHIELD WASHER CONCENTRATE	SOLUTION 1000LT TOTE	54
WINDSOCK (ORANGE/WHITE)	AVIOATION STANDARD 36" x 12'	6
WIRE OPEN ARC	110-O 1/16 33LB WB	15
XL3 MOLY ARCTIC GREASE	54KG/KEG	636
ZEP LIQUID BOTTLE WASHER	X-2887 20LT/PAIL	4

Appendix C

Cyanide

C.1: Cyanide – Properties, Uses, Storage & Handling (Dupont)

C.2: Material Safety Data Sheets – Sodium Cyanide

C.1 Cyanide – Properties, Uses, Storage & Handling (Dupont)

Sodium Cyanide

PROPERTIES, USES, STORAGE, AND HANDLING

DUPONT CHEMICAL SOLUTIONS ENTERPRISE



DUPONT

The miracles of science™

Notice:

Sodium cyanide may be fatal if swallowed, inhaled, or with prolonged skin contact. Contact with acids, water, or weak alkalies liberates poisonous gas. Causes eye burns and may irritate skin. See "Personal Safety and First Aid." See DuPont's Sodium Cyanide Material Safety Data Sheet (MSDS) for more detailed safety and health information.

For Emergency Assistance, Call DuPont at

(901) 357-1546

(This is a transportation emergency Cyanide Hotline to our Memphis, TN plant.
Do not use for routine technical or commercial information.)

For Transportation Emergencies,

Call DuPont at (901) 357-1546, Then Call

CHEMTREC at (800) 424-9300

(See "Transportation Emergencies")

For commercial or technical information, call your DuPont marketing representative or a sales office listed on the back cover.

Sodium Cyanide: UN 1689

DO NOT USE AS A PESTICIDE.

See DuPont's MSDS for detailed instructions for treatment of cyanide poisoning.

Table of Contents

Product Information 1
- Introduction 1
- Uses and Applications 2

Chemical Reactions 3
- Sodium Cyanide Reactions in Water 3
- Other Reactions 5

Personal Safety and First Aid 6
- Health and Safety Hazards 6
- Safety Precautions 7
- Sodium Cyanide Exposure Limits 7
- HCN Exposure Limits 7
- Symptoms of Cyanide Poisoning 8
- Effects of Exposure to HCN Vapor 8
- First Aid and Medical Treatment 8

Shipping 8
- Containers 8
- Transportation 10

Storage and Handling 10
- Storage Security 10
- Drums 10
- FLO-BIN® 11
- Intermediate Bulk Container (IBC) 12
- Excel Trucks 12

Equipment 14
- Materials of Construction 14
- Solution Storage Tank 14
- Water Meter and Supply 14
- Pipe and Hoses 14
- Drainage Control 14
- Filter 15
- Level Indicator and Alarm 15
- Temperature Indicators, Insulation, Heating, and Cooling 15
- Caustic Addition 15

Transportation Emergencies 16
- How to Get Help 16
- Action at the Scene 16

Cyanide Destruction 17
- Chlorination 17
- Hydrogen Peroxide Oxidation 17
- Hydrolysis 18
- Metal Complexes 18
- Handling Spills 18

References and Notes 18

Product Information

Introduction

DuPont sodium cyanide (NaCN) is a white crystalline solid, available in a briquette or granular form. The briquettes are uniform in size, average 18 g (about ⅔ oz) in weight, and have overall dimensions of approximately 3.5 × 3.5 × 1.3 cm (1⅜ × 1⅜ × ½ in). They are resistant to breakage and dusting, easy to scoop up, and readily soluble in water. The granules are irregularly shaped particles, typically sized to generate a minimum of dust, and pass 90–100% through a ⅜-in screen and 3% maximum through a USS Sieve No. 50. Cyanobrik® and Cyanogran® are DuPont trade names (see **Figures 1** and **2**).

The Chemical Abstract Service Registry Number for NaCN is 143-33-9.

Table 1. Physical Properties of Sodium Cyanide

Formula Weight	49.007
Melting Point, °C (°F)	564 (1047)
Boiling Point, °C (°F)	1496 (2725)
Specific Gravity, Solid, 25°C (77°F)	1.60
Apparent Bulk Density, Solid, kg/m³ (lb/ft³)	880–960 (55–60)
Specific Gravity, Liquid, 850°C (1560°F)	1.19
Heat of Formation, ΔH° *f*	
25°C, cal/g	–438
25°C, kJ/kg	–1833
77°F, Btu/lb	–788
Specific Heat, 26–73°C (78–163°F)	
Btu/lb·°F or cal/g·°C	0.335
kJ/kg·K	1.402
Heat of Fusion, mp, Btu/lb	77
cal/g	43
kJ/kg	179
Heat of Vaporization, bp, Btu/lb	1309
cal/g	727
kJ/kg	3041
Vapor Pressure, mmHg	
800°C (1470°F)	0.76
1200°C (2190°F)	89.8
1360°C (2480°F)	314.0
Solubility in Water, g NaCN/100 g water	
(see **Figure 3**), –20°C (–4°F)	35.4
20°C (68°F)	58.3

Table 2. Specifications and Typical Analysis

	Cyanobrik®/Cyanogran® and Bulk Solution Specifications	Typical Analysis*
Product Code 1220 (Cyanobrik®)		
Product Code 1222 (Cyanogran®)		
Sodium Cyanide, %	98.0 minimum	99
Sodium Hydroxide, %	0.5 maximum 0.06 minimum	0.3**
Product Code 1254 (Mining Grade)		
Sodium Cyanide, %	96.0 minimum	98
Sodium Hydroxide, %	0.5 maximum 0.06 minimum	0.3**
Product Code 1249 (30% Solution)		
Sodium Cyanide, %	28 minimum	30
Sodium Hydroxide, %	0.5 minimum	1

* Typical analyses based on historical production performance. DuPont does not make any express or implied warranty that future production will demonstrate or continue to possess these analyses.

** **CAUTION:** Sodium hydroxide (NaOH) content can be below 0.1% versus 0.3%, typical. NaOH should be added as outlined on page 3 to suppress hydrogen cyanide formation when making a water solution.

Figure 1. Cyanobrik®



Figure 2. Cyanogran®



Uses and Applications

The mining, metal, and chemical industries are the principal consumers of sodium cyanide. Typical uses include:

Ore Extraction and Ore Flotation

The cyanide process for extracting gold and silver from low-grade ores uses aqueous solutions of sodium cyanide with oxygen (air) to convert the noble metal (M) to soluble $NaM(CN)_2$, from which M can be recovered either by precipitation with zinc dust or aluminum powder, carbon absorption, or electrowinning.

In the flotation of galena (lead sulfide) to separate it from mixed ores containing sphalerite (zinc sulfide) and pyrite (iron sulfide), sodium cyanide acts as a depressor; that is, it reduces the tendency of gangue materials to travel along on the froth and so impair the separation. Sodium cyanide finds similar use in the separation of pentlandite from pyrrhotite and molybdenite from copper concentrates by flotation. It is also used to purify the molybdenite by extraction of copper impurities.

Electroplating

Cyanide brass, cadmium, copper, gold, silver, and zinc baths deposit decorative and/or functional metal coatings on a variety of substrates. The good throwing power of the electrolyte causes relatively uniform deposition of the metal on intricately shaped parts. Small amounts of special additives in the baths give bright metal deposits, even on recessed surfaces of the work. Cyanide electroplating baths are versatile and capable of high production rates, whether plating large or small parts.

Case Hardening Steel

Molten salt baths containing 10–30% sodium cyanide find extensive use for case hardening steels at temperatures below 870°C (1600°F). The molten bath process is fast, easy to operate, and yields mixed carbon-nitrogen cases that have excellent wear resistance and uniformity. The addition of activators or accelerators to the bath results in deeper cases than those obtained with plain cyanide baths, but nitrogen pickup is usually less.

The life of keen-edged tools improves when the high-speed steel is cyanide-nitrided in molten cyanide baths at about 565°C (1050°F).

Metal Cleaning

Aqueous solutions of sodium cyanide are effective metal cleaners, especially for smut removal after acid pickling.

Chemical Manufacture

Sodium cyanide is used to make other chemicals that lead to such diverse products as pharmaceuticals, vitamins, animal food supplements, dyes and pigments, insecticides, sequestrants, polymers, and catalysts (see "Chemical Reactions" section).

In any synthesis or formulation involving sodium cyanide, no cyanide compound should survive in the final product as an impurity. This is especially important with regard to consumer products.

Chemical Reactions

The most hazardous reaction of sodium cyanide is with acids to form lethal hydrogen cyanide (HCN) gas, which is invisible and has a very weak odor. Smaller amounts of HCN gas can develop from contact with water and weak alkalies. When working with sodium cyanide, special provisions are needed to address HCN and cyanide toxicity.

Sodium cyanide deliquesces in moist air. Crystals of the dihydrate, $NaCN{\cdot}2H_2O$, form when saturated solutions of sodium cyanide cool at temperatures below 35°C (95°F) (see **Figure 3**). Sodium cyanide dissolves in methanol (6.05 g/100 mL saturated solution at 15°C [59°F]). It also dissolves in liquid ammonia (3.7 g/100 mL NH_3 at –33°C [–27°F]).

Sodium Cyanide Reactions in Water

Sodium cyanide dissolved in water forms an equilibrium between ionized sodium cyanide and highly volatile HCN. In sodium cyanide solutions, HCN concentrations must be kept low and/or contained to avoid toxic fumes. HCN formation varies with pH, cyanide concentration, and temperature. HCN in the air around a sodium cyanide solution will also be influenced by the amount of solution surface area and ventilation. At pH 8 or less, essentially all of the cyanide will be in the HCN form in dilute solutions (see **Figure 5**). To suppress HCN formation in typical concentrated sodium cyanide make-up solutions, a pH of 12 minimum (preferably 12.5–13) should normally be used. In operating tanks, HCN in the vapor space above a 23% solution at room temperature typically will be about 250 ppm (without pH adjustment). With the pH raised to 12–12.5, HCN levels drop to around 125 ppm and below 50 ppm, around pH 13. Higher temperatures and solution concentrations increase HCN fumes. The following recommendation is made to minimize HCN formation with a modest pH increase.

When making a concentrated (e.g., 10–30%) cyanide solution, the proper procedure is to add about 0.5% sodium hydroxide (caustic) (about 50 lb [22.7 kg] sodium hydroxide/1000 gal [3785 L] water) before adding the cyanide. More sodium hydroxide will not be chemically harmful to the cyanide and will further reduce HCN levels; however, increased alkalinity increases eye hazards from splashes. For most operations, pH 12.5–13.0 is a good compromise to reduce HCN without excessively high alkalinity. If process chemistry prevents adding caustic, adequate precautions in design and operation must be taken to protect against HCN fumes, HCN polymerization, and cyanide hydrolysis.

pH is a log scale measurement, which means it takes about ten times as much sodium hydroxide to raise the pH each subsequent unit than the previous. For example, if it took 1 lb (0.45 kg) of sodium hydroxide to go from pH 9 to 10, it would take 10 lb (4.5 kg) to raise the pH from 10 to 11 and 100 lb (45.4 kg) from 11 to 12, etc. Therefore, even pH 11 water will need

Figure 3. Solubility of Sodium Cyanide in Water

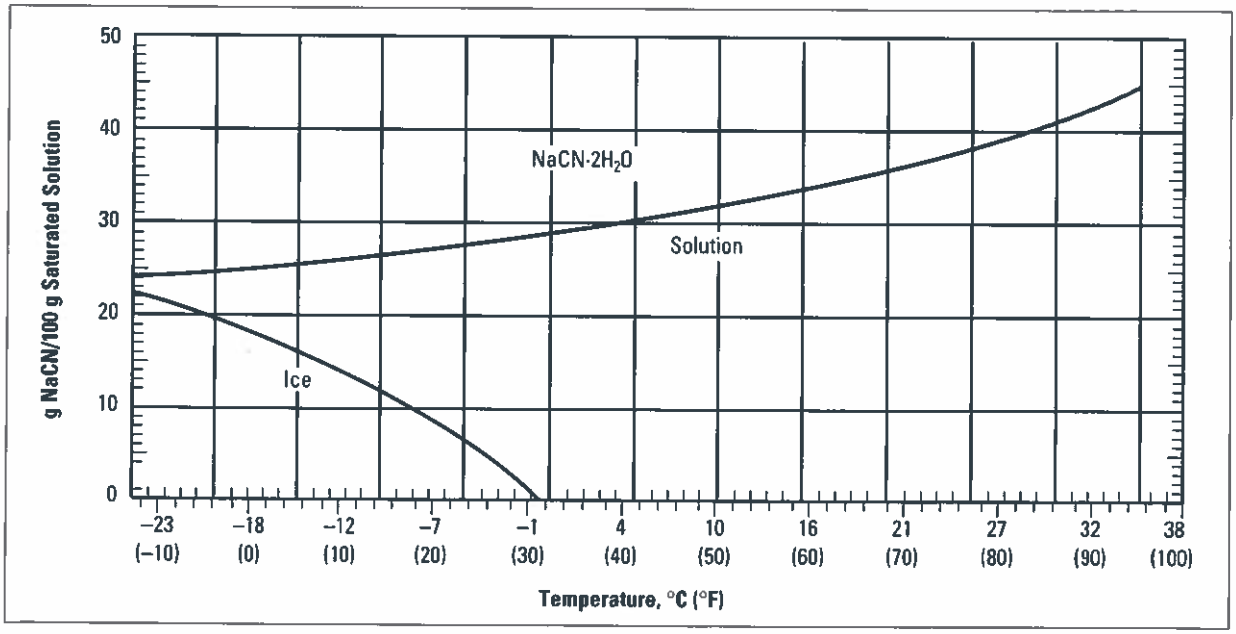

Figure 4. Densities of NaCN Solutions

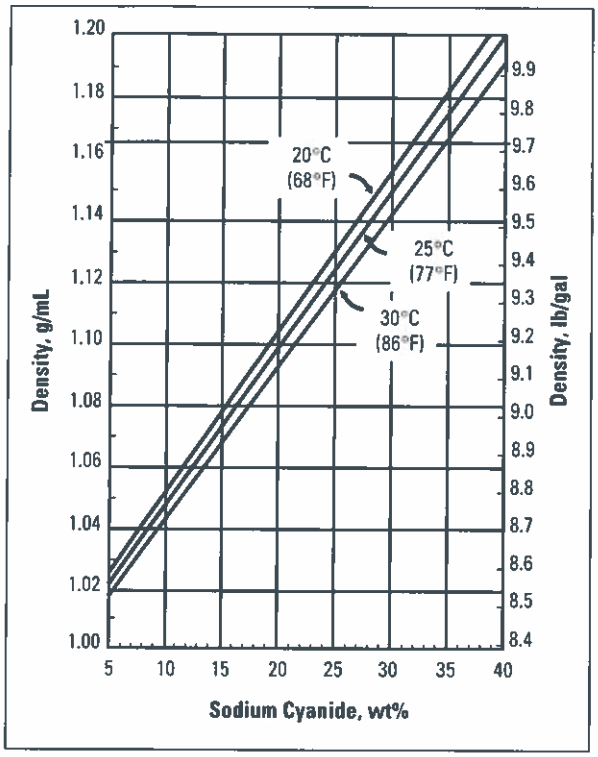

Figure 5. Effect of pH on Cyanide Ionization

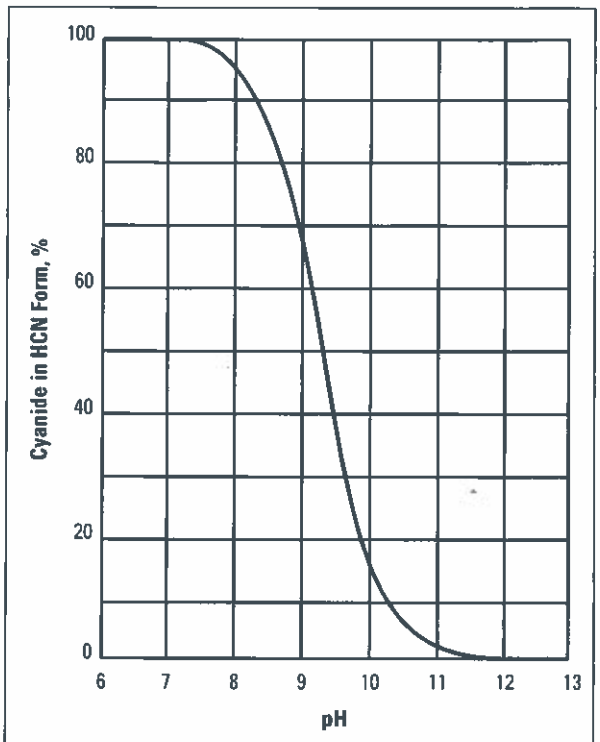

Data based on work by D. Milne, 1950, for dilute sodium cyanide solutions at ambient temperature. Toxic HCN fumes increase as temperature and solution concentrations increase, requiring higher pH for safe operation.

nearly as much sodium hydroxide added to it as would the same amount of water with pH 6 to 11. Water at pH 10 or 11 does not eliminate the need to add sodium hydroxide to reduce HCN.

NOTE: Lime (calcium hydroxide) is not as effective as sodium hydroxide because of limited solubility, but it can be substituted to raise the pH to around 12.

Hydrogen cyanide molecules will polymerize to form the extremely inert HCN polymer. It is not unusual for HCN polymerization to occur in sodium cyanide solutions made without additional alkali, particularly if stored at elevated temperatures. In dilute solutions, HCN polymer will generate colors ranging from pale yellow to dark reddish brown. In stronger solutions, a dark brown precipitate resembling iron rust can form, which will interfere with heat transfer, plug pumps, orifices, etc., and may cause significant cyanide loss. HCN polymer will discolor chemical products. Again, high pH values give low HCN concentrations, which reduces the tendency for polymer formation.

Cyanide also reacts with water to form ammonia and formate ions. In the acid pH range, hydrolysis products are formic acid and ammonium salts. Alkaline solutions produce formate salts and volatile ammonia. With strong solutions, the volume of ammonia evolved can cause dangerous pressure buildup. One gallon of 30% sodium cyanide solution can produce more than 25 ft^3. For this reason, extra vent capacity is recommended for large, heated storage tanks.

Ordinarily, the reaction between cyanide and water proceeds slowly. However, the reaction rate increases exponentially with an increase in temperature. The critical range is around 60–70°C (140–158°F). At temperatures below this range, the reaction can be controlled by cooling and, where practical, by dilution. At higher temperatures, however, the reaction can be uncontrollable in large tanks for highly concentrated solutions and may proceed until substantially all the cyanide has been consumed, unless temperature control and adequate cooling and venting capacity exist (see **Figure 6**).

Figure 6. Decomposition Rate of NaCN Solutions

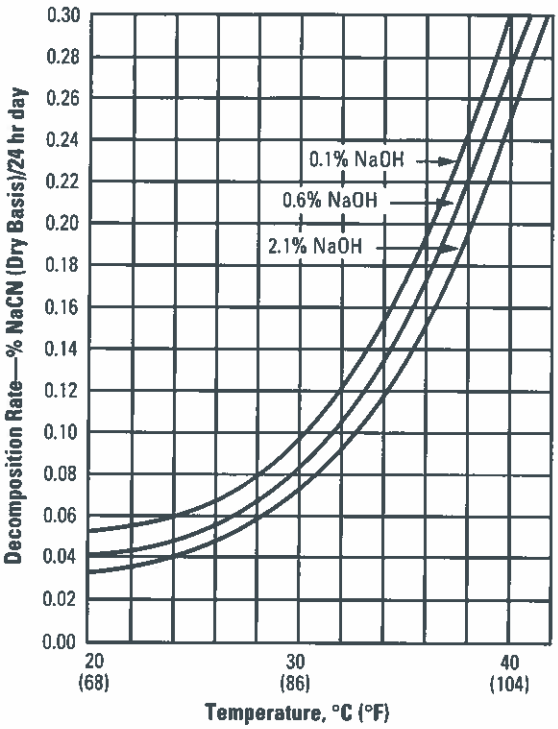

NOTE: The % NaOH shown above is the concentration in the final solution. The NaCN (as shipped–containing 0.1% NaOH), when diluted to a 30% solution, will have only 0.03% NaOH in the final solution, unless additional NaOH is added. (Decomposition rates based on DuPont experimental data using 35% NaCN solution.)

Heated sodium cyanide solution storage tanks should be equipped with facilities to measure and control solution temperature (see "Equipment" section). Heating may be needed to assist in dissolving the NaCN and to prevent freezing (see **Figures 3** and **7**). Cooling could be critically important, if the hydrolysis reaction begins to generate heat faster than it can be dissipated to the surroundings.

All the reactions discussed above consume a portion of the stored cyanide, and all are inhibited by maintaining low solution temperature and high pH.

If special precautions are taken, acidification of sodium cyanide to produce HCN gas for a chemical reaction is an acceptable procedure, but only when handled in special equipment by technically qualified people after detailed planning. HCN operations require much more stringent plans, procedures, and standards for safe operation.

CAUTION

Even in laboratory quantities, the accumulation and storage of liquid or gaseous HCN should not be considered until its properties and the required safety precautions for handling it have been studied carefully. In addition to toxicity considerations, violent exothermic polymerization reactions can occur with liquid HCN, even in the absence of air or oxygen.

Other Reactions

Oxidants, such as alkaline hypochlorite solutions, hydrogen peroxide solutions, and permanganate solutions can oxidize cyanide to sodium cyanate. These oxidation reactions find wide use in the control of cyanides in effluents. They must be done in dilute solutions at proper pH to avoid formation of highly toxic gases (see "Cyanide Destruction" section).

Strong oxidants, such as nitrites and chlorates, react violently when added to molten sodium cyanide (or vice versa).

With the exception of lead and platinum, most metals (when finely divided) dissolve in aqueous sodium cyanide in the presence of oxygen.

Alkaline solutions of sodium cyanide dissolve water-insoluble cuprous and zinc cyanide with formation of sodium tricyanocuprate and tetracyanozincate, respectively.

Reacting an alkyl halide, sulfate, or toluene-sulfonate (p-$CH_3C_6H_4SO_2OR$) with sodium cyanide in aqueous alcohol, dimethylformamide (DMF), or similar aprotic solvent, leads to an alkyl cyanide (nitrile). Fusing a sodium aryl sulfonate with sodium cyanide yields the aryl nitrile; for example, sodium benzene-sulfonate (sodium phenyl sulfonate) gives benzonitrile (phenyl cyanide).

Hydrogen cyanide, generated by reacting an acid with sodium cyanide, is capable of adding to isolated double bonds and to the carbonyl group of an aldehyde or ketone. In the case of acetophenone, for example, the corresponding cyanohydrin forms, which hydrolyzes to atrolactic acid (a-phenylacetic acid, $C_6H_5[CH_3]C[OH]COOH$). Similarly, when preparing an alpha-amino acid from an aldehyde or ketone by Strecker synthesis, the hydrogen cyanide and ammonia needed can come from ammonium cyanide formed in the reaction of sodium cyanide with ammonium chloride.

Figure 7. Freezing Points of Sodium Cyanide Solutions

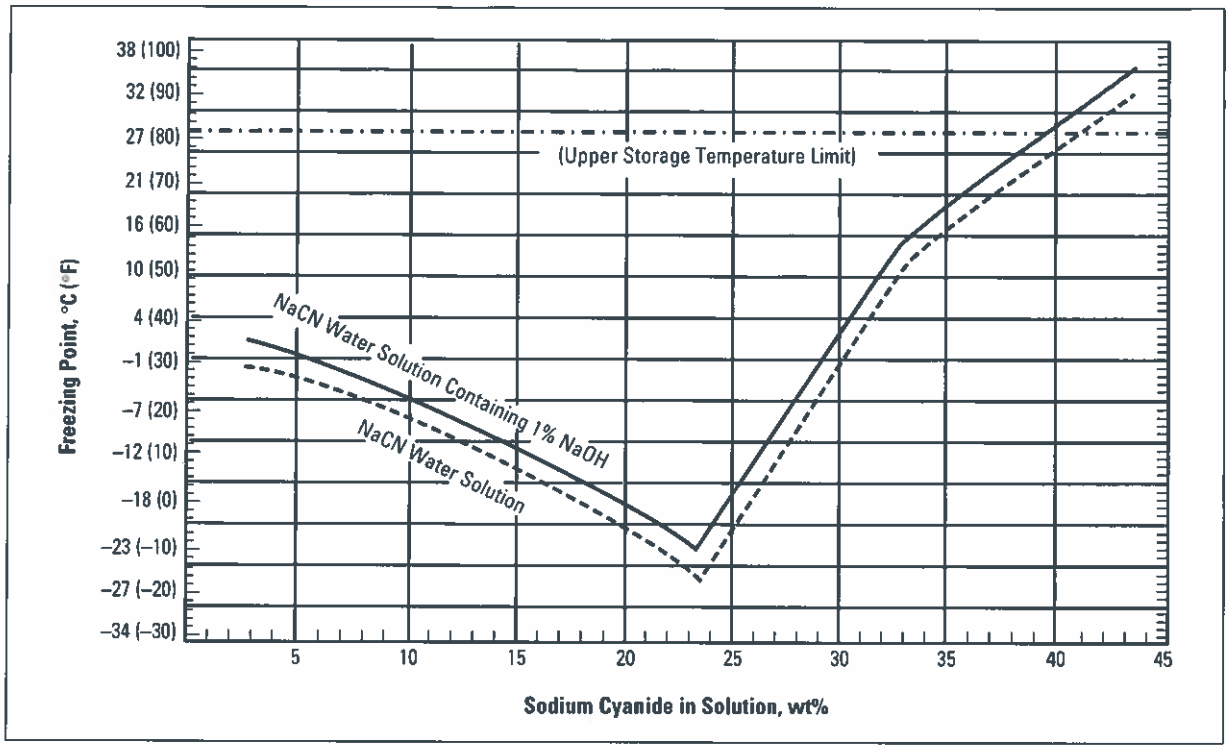

One method of synthesizing the sodium salt of ethylen ediaminetetraacetic acid (tetrasodium EDTA, a chelating agent) combines ethylenediamine with formaldehyde and sodium cyanide in hot (80°C [175°F]) alkaline solution.

Personal Safety and First Aid

Health and Safety Hazards

See DuPont's MSDS for detailed instructions for treatment of cyanide poisoning.

Because of the toxicity of sodium cyanide, all persons working with it should be completely familiar with and observe the established safety practices.

Sodium cyanide is a fast-acting poison that can cause death quickly at low levels of exposure. Its toxic effect results from the inhibition of specific processes in body cells by restricting oxygen use in cellular respiration, particularly cells in the brain and heart. Poisoning can result from breathing cyanide gas, dust, or solution; absorption through the skin, particularly the eyes and other membranes and feet; and from ingestion. Contact with the skin may cause irritation and poisoning, particularly with prolonged contact, or if open wounds, skin abrasions, or mucous membranes are involved. Sodium cyanide is alkaline and causes eye burns. Because of the possibility of skin absorption of hydrogen cyanide fumes, air monitoring for HCN is required, even for someone wearing an air mask.

Cyanide is not a cumulative poison, and it is not a carcinogen. It is believed that there are no chronic effects of cyanide poisoning, unless repeated, prolonged exposures, well above the established limits, were to occur. With prompt treatment, recovery from overexposure is normally quick and complete.

CAUTION

Sodium cyanide in contact with acids liberates highly toxic and flammable hydrocyanic acid gas. Also, toxic amounts of HCN can be liberated from water solutions of sodium cyanide or from contact with weak alkalies, if ventilation is inadequate (see "Sodium Cyanide Reactions in Water").

Safety Precautions

The basic safety precautions are:

- Do not breathe sodium cyanide dust, solution mist, or HCN gas. Wear an approved toxic dust and mist respirator when there is danger of inhaling cyanide dust or mist. Additional protection is required for HCN gas. The respirator should be one approved by the Mine Safety and Health Administration (MSHA) or by the National Institute for Occupational Safety and Health (NIOSH).
- Avoid skin contact with cyanides, particularly contact with open wounds or skin abrasions. Wash skin promptly and thoroughly if contact occurs. Wear protective gloves when handling solid cyanides. Wear rubber gloves when handling cyanide solutions (butyl rubber has very low permeability; neoprene is more rugged with low HCN permeability and is best for many jobs involving sodium cyanide).
- Do not get in eyes. Wear approved chemical splash goggles when handling cyanide solutions and when there is danger of splashing.
- Have available and wear other protective clothing as needed for job safety. Develop clothing change procedures to ensure cyanide is not scattered around the site or inadvertently carried home.
- Immediately sweep up any spilled cyanide and place in a suitable container. Wash area and/or treat contaminated area with dilute hypochlorite solution to destroy the cyanide. Comply with federal, state, or local regulations. If approved, drain to neutral chemical waste sewer.
- Take every precaution to keep acids from contacting sodium cyanide. Do not store with acids or weak alkalies.
- Do not eat, drink, or smoke in areas where cyanide is present. Do not handle or store food or beverages in cyanide areas.
- Store sodium cyanide in a ventilated, locked area. Containers should be kept closed and their contents dry. Do not store under sprinklers; sodium cyanide will not burn, but sprinkler activation could cause an environmental problem. Local fire regulations may require sprinklers. Always check and follow local regulations. If sprinkling is required, the area must be diked to contain the runoff.
- Have antidote, emergency plans, and training in place before using cyanide. See DuPont's Sodium Cyanide MSDS for detailed instructions.

Sodium Cyanide Exposure Limits

The U.S. Department of Labor (OSHA) has ruled that an employee's exposure to sodium cyanide in any 8-hr work shift of a 40-hr week shall not exceed a time-weighted average (TWA) of 5 mg of cyanide per cubic meter of air.[2,3] It also cautions that because cyanide may penetrate the skin, control of vapor or dust inhalation alone may not be sufficient to prevent absorption of an excessive dose.

HCN Exposure Limits

The current OSHA workplace exposure limit for HCN is 11 mg/m^3 (10 ppm), ***8-hr average***. A 1989 revision of the HCN limit (along with several hundred other chemicals) to 5 mg/m^3 (4.7 ppm), ***15-min average***, was vacated by court order, and the pre-1989 limit has been reinstated. OSHA (and others) also cautions that because hydrogen cyanide may penetrate the skin, control of vapor inhalation alone may not be sufficient to prevent absorption of an excessive dose.[2,3] During all of this, the U.S. Mine Safety and Health Administration (MSHA) limit stayed at 10 ppm for HCN. The American Conference of Governmental Industrial Hygienists (ACGIH) recommends a 4.7 ppm limit instantaneous ceiling value with a similar skin notation.[4] DuPont's experience supports the current OSHA and MSHA regulatory levels. However, as a matter of practice, DuPont does not have people working for prolonged periods under conditions approaching our upper limits, because we can design/operate to avoid prolonged exposure.

In summary, HCN air quality requirements will vary from jurisdiction to jurisdiction, and it is incumbent on each user to be aware of and comply with the rules regulating exposure to HCN in their regulatory jurisdiction. The specific OSHA and MSHA exposure limit for HCN is currently 11 mg/m^3 (10 ppm) for an 8-hr TWA. The ACGIH Threshold Limit Value (TLV) is 5 mg/m^3 (4.7 ppm), 15-min TWA. This is also a ceiling value. The DuPont Acceptable Exposure Limit (AEL) is 4.7 ppm, 15-min TWA with current regulatory ceiling limitations. All of these exposure limits carry a "skin" notation indicating that HCN may penetrate the skin; therefore, control of vapor inhalation alone may not be sufficient to prevent cyanide poisoning. Also, exposure limits are subject to change, and users should stay current with regulatory changes.

Symptoms of Cyanide Poisoning

Personnel should be constantly alert for symptoms of cyanide poisoning in themselves and others. The following poison symptoms can result from other causes, but should be investigated promptly when they occur around cyanide:

Reddening of the eyes*	Nausea*
Irritation of the throat	Headache*
Palpitation	Weakness of arms and legs
Difficulty in breathing	Giddiness
Salivation	Collapse
Numbness	Convulsions

Effects of Exposure to HCN Vapor

The following toxicity data show the "Reported Human Response to Various Concentrations of HCN Vapor"[5]:

2–5 ppm	Odor threshold
10 ppm	OSHA and MSHA exposure limit, 8-hr TWA[2]
20–40 ppm	Slight symptoms after several hours
45–54 ppm	Tolerated for ½ to 1 hr without significant immediate or delayed effects
100–200 ppm	Fatal within ½ to 1 hr
300 ppm	Rapidly fatal (if no treatment)

These numbers should be considered reasonable estimates only, because data are not exact and effects vary for different people. Also, *heavy breathing from physical work will increase cyanide intake and reduce the time for symptoms to show.* The "rapidly fatal" exposure level of 300 ppm assumes no first aid or medical treatment; either is very effective if used quickly.

* Reddening of the eyes (and skin) is one of the earliest symptoms, with nausea and/or headache common in low level exposure. These three are the most readily identifiable symptoms of low level cyanide overexposure.

Prompt administration of the recovery techniques has proven very effective, but emphasis must be placed on quick action. Seconds count, and treatment should be provided within about 200 sec (3–4 min). In case of overexposure to cyanide, quick action is required to sound the alarm, remove the patient from the contaminated area, and provide treatment. With prompt treatment as prescribed, recovery is normally quick and complete with no serious aftereffects. Treatment after 3–4 min can still be effective, but chances of recovery are reduced without prompt treatment. Unlike many poisons, cyanide is not cumulative. While cyanide poisoning can be rapidly fatal, no case should be considered hopeless. Treatment should be continued until a physician certifies death.

First Aid and Medical Treatment

See DuPont's MSDS for detailed instructions for treatment of cyanide poisoning.

Ordering Cyanide Poisoning Antidote Kits and Amyl Nitrite

To obtain cyanide poisoning antidote kits and/or amyl nitrite ampules:

1. Obtain a prescription from your local physician (required because amyl nitrite is a prescription product).
2. Purchase the cyanide antidote kit from your pharmacy. The pharmacy can obtain the kit from Akorn Pharmaceuticals at (800) 932-5676.
3. Amyl nitrite can also be purchased from your local pharmacy or from Save-A-Life Systems in Ft. Wayne, IN at (800) 933-5885.

Shipping

Containers

DuPont produces sodium cyanide in briquette and granular forms.

A variety of containers are used as follows:

Nonreturnable Drums

Net weight 50-kg (110.2-lb) steel drums stacked 9–27 to a pallet.

Net weight 100-kg (220.4-lb) steel drums stacked eight to a pallet (see **Figure 8**).

Note: Drums can be stored three pallets high in a warehouse.

Figure 8. Palletized 100-kg (220-lb) Drums Being Loaded into a Truck

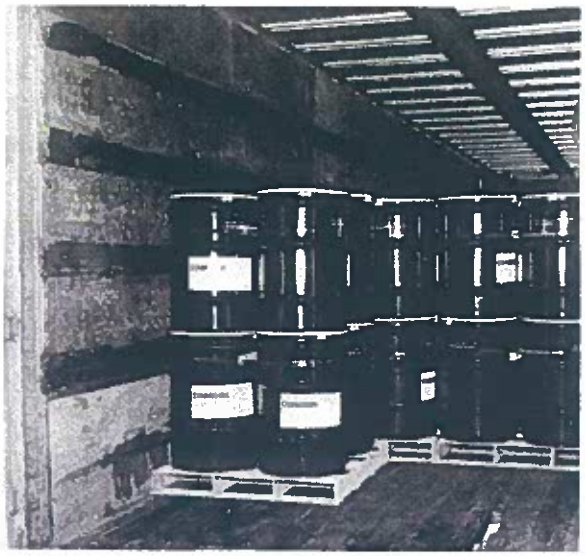

Figure 9. A Tuff-Pak Box Full of Bags



Tuff-Pak

- 48 20-kg (44-lb) pinch-bottom, multiwall composite bags that are hermetically sealed and water-resistant. The bags are packaged in a wooden box on a self-contained pallet. Net weight 960 kg (2116 lb). Individual bags are not to be sold separately (see **Figure 9**).

Figure 10. Partially Loaded Container of IBCs



Nonreturnable Intermediate Bulk Container (IBC)

- Water-resistant package holding 1000 kg (2205 lb). Box dimensions are 44¾ × 44¾ × 44⅜ in high (see **Figure 10**). For shipment, there are normally 20 IBCs in a container.

Returnable FLO-BIN® Containers (Briquettes Only)

- 1361- and 1497-kg (3000- and 3300-lb) net returnable FLO-BIN® containers, 12–14 bins per truck (see **Figures 11** and **14**).

Bulk Trucks

- 30% solution tank trailers (18,000 lb, 100% basis—8180 kg) are available from the Carlin, NV terminal. They can be unloaded using the customer's pump or by plant or truck air (see **Figure 13**).
- Excel I tank trucks (6804–9526 kg [15,000–21,000 lb]). These trucks are equipped with circulation pumps that will permit water addition, dissolving by circulation, and then pumping off into the customer's tank (see **Figure 15**).
- Excel II tank trucks (15,876–18,144 kg [35,000–40,000 lb]) are unloaded by circulating premeasured water from a storage tank by a driver/technician (see **Figures 12** and **16**).

Figure 11. Bins corded two abreast on a flatbed trailer. The bins are strapped to the trailer to prevent movement during transportation.



Transportation

Sodium cyanide must not be shipped by U.S. mail. The U.S. Department of Transportation (DOT)[3,6] hazard classification is Class 6.1 (Toxic) with an ID number of UN1689. A DOT toxic label is required. Transportation equipment must also be placarded with toxic placards in accordance with DOT requirements.

Sodium cyanide drums, Tuff-Paks, and IBCs should be shipped in vehicles that have secondary containment, such as vans. Pickup trucks, etc., should not be used. In case of an accident, secondary containment will minimize the impact of spilled material. Also, the driver must be in a separate compartment isolated from the cyanide.

Sodium cyanide must not be shipped with any acids (dry or liquid), food (human or animal), or ingredients for products used for human or animal consumption, including food, pharmaceuticals, food supplements, etc. Shipment with flammables and strong oxidizers should be avoided, as these mixed shipments can cause fire fighting complications, including cyanide runoff, in case of an accident and subsequent fire.

Storage and Handling

Storage and use areas should be designed so that accidental spillage can be contained and disposed of safely.

Storage Security

When sodium cyanide is stored, security should be maintained so only authorized people have access to it. Locked rooms or locked fenced areas can be used. Only the quantity required for immediate use should be removed from storage.

Figure 12. Excel II Truck



Drums

Drums of sodium cyanide should be stored inside and segregated from acids, weak alkalies, and strong oxidizing materials such as nitrates. It is also recommended that sodium cyanide be stored away from flammables and combustibles to minimize the chance of cyanide-water runoff as a result of fire fighting. Where local regulations permit, sodium cyanide drums should not be stored under sprinklers, because sodium cyanide will not burn in ordinary fires and cyanide runoff must be avoided. Storage with food or intermediates for human or animal products must be avoided. Observe all the precautions given under "Safety Precautions."

Figure 13. NaCN Solution Truck



If possible, open cyanide containers in the areas in which the cyanide is to be used. Remove the cover from the container, and remove the cyanide with a metal scoop or dump the cyanide from the container as required. Replace the cover on the container if the drum still contains cyanide. Store appropriately. Immediately pick up any spillage.

Drum Disposal

Sodium cyanide drums are nonreturnable, and it is against U.S. DOT regulations to reship or recoup the drum, except when approved for disposal of waste materials. Empty drums should be visually inspected for cyanide removal, flushed with large volumes of water, and then drained. This flush and drain cycle should be repeated three times to comply with federal regulations. Rinse water should be collected, treated, and disposed of according to local regulations (see "Cyanide Destruction" section). After cleaning, drum labels should be removed or obliterated to confirm cleaning, and the drum destroyed to prevent reuse. After the above, recycling as scrap metal is appropriate.

FLO-BIN®

A typical FLO-BIN® unloading and storage system is shown in **Figure 14**. A special design manual is available from DuPont. Contact DuPont's sales representative to discuss package and delivery options to meet specific needs.

Sodium cyanide is shipped in returnable FLO-BIN® containers (600 lb tare weight) to customers by truck or rail. In trailers, bins are shipped two abreast. Road weight limitations restrict the truck load to 12–14 bins. The advantages of FLO-BIN® deliveries are:

Economics—Customers using about 100,000 kg (200,000 lb) or more per year of sodium cya-nide can effect direct cost savings versus other smaller packages.

FLO-BIN® Customer Shipping Responsibility

When returning bins, the customer becomes the shipper and bears the responsibility for seeing that all safety precautions are carried out. DOT regulation 49 CFR 173.29 requires that a returnable container offered for transportation must meet the same standards as when the container previously held a greater quantity of a hazardous material. Returning bins do not have to be cleaned internally. Internal water washing is discouraged, because cyanide solution rundown is likely to create spillage, unless the bins are dried. External cleaning and inspection of each bin is required to ensure no cyanide is left on the outside and that the camlocks are locked closed with locking pins or wires.

When returning bins, secure bins with equipment provided. DO NOT reverse the poison placards (four) on car or truck. DO NOT remove or deface product label on bin.

Figure 14. Typical FLO-BIN® Unloading System

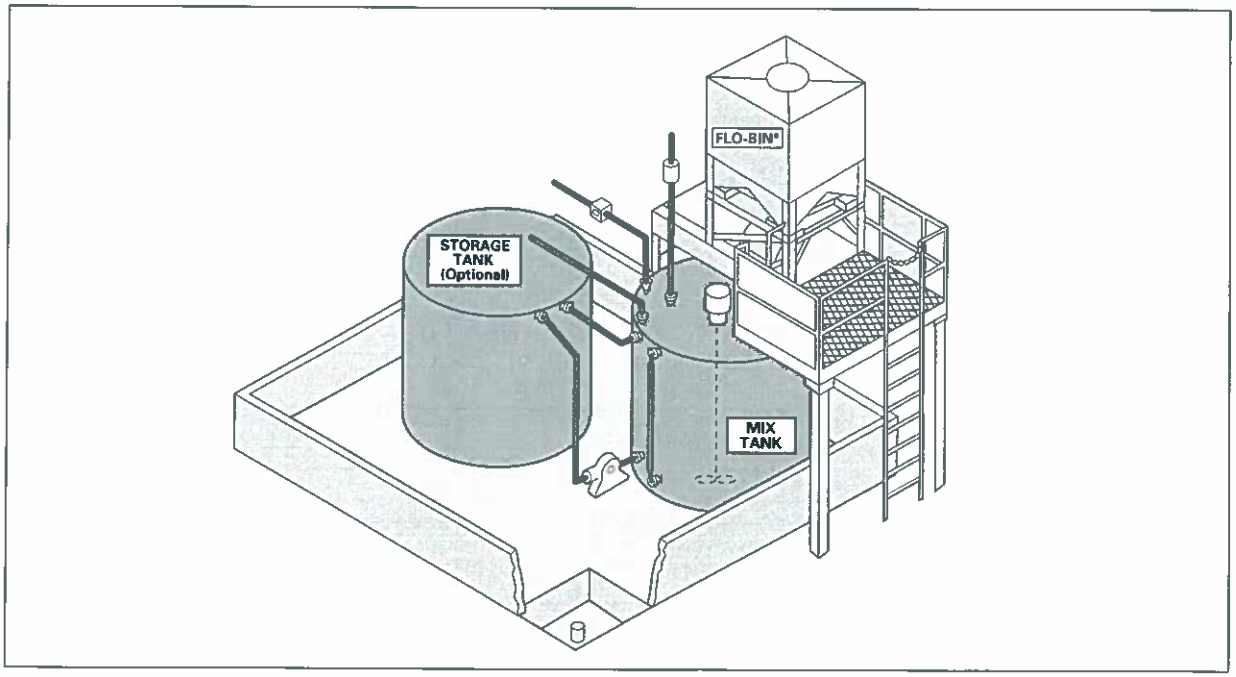

Intermediate Bulk Container (IBC)

IBCs are the ideal package for most large consumers of NaCN who are not near a manufacturing facility. IBCs are readily handled with forklift trucks. DuPont recommends stacking IBCs two high for storage. The DuPont IBC holds 1000 kg (2205 lb) of NaCN. When diluted to 23% (the minimum freezing point of a NaCN/water solution) with pH at 12 or above, the IBC will make about 3900 L (1030 gal).

The IBC is emptied by lifting the bag by the straps using a forklift or hoist and then positioning and lowering the bag onto the specially designed knife slitter that cuts the bag, allowing the contents to drop into the dissolving tank.

IBC Decontamination and Disposal

Decontamination and disposal of used IBC materials must be properly handled to prevent environmental contamination and meet regulations. The bags should be empty—this should be confirmed visually or by weight before they are sent to a disposal facility. Then, a flush and drain cycle, repeated three times, will dissolve any residual cyanide left in the bag. Care must be taken to ensure the bag material does not overlap and prevent water contact—interfering with the dissolving process. Rinse water should be collected and recycled or treated and disposed of according to local regulations. As part of the cleaning process, labels should be removed or obliterated. If burning is the method of disposal, keep in mind that all of the NaCN will probably not be destroyed during the burning process, and the ashes must be properly contained.

30% NaCN Solution

The DuPont terminal in Carlin, NV ships 30% NaCN solution as far away as 300 miles. The specially designed trailers hold 6300 gal—equivalent to 18,000 lb of dry NaCN. DuPont 30% NaCN solution is often the most convenient way to receive NaCN. The drivers are specially trained to make these deliveries and have a safety record envied in the trucking industry. DuPont offers technical assistance and support to assist with the design or modification of an existing system.

Excel Trucks

Excel trucks combine transportation and unloading safety by permitting shipment of solid sodium cyanide and unloading by dissolving the cyanide in place and then pumping the solution into appropriate storage. Excel I (see **Figure 15**) is ideal for customers with annual usage of ½ to 1 million lb, where 30% solution may not be desirable, but Excel I is only available in limited geographical areas. Excel II delivery systems (see **Figure 16**) are ideal for many large sodium cyanide users and usually require an annual NaCN usage of about 1 million lb per year to justify the larger investment compared to handling FLO-BIN® containers. Cost factors such as location (transportation), expected operating life, available space, inventory requirements, etc., should be evaluated with DuPont to determine the best system for each specific situation. Design manuals are available for Excel systems.

When dissolving the sodium cyanide in Excel systems, position the tank truck so that the hose connection can be made between the truck pipe headers and the storage tank and pump piping.

For Excel II, meter into the storage tank the amount of water and sodium hydroxide (NaOH) needed to make the desired concentration of sodium cyanide solution (about 363 kg [800 lb] NaOH for 18,144 kg [40,000 lb] NaCN). The water temperature needed for dissolving the NaCN depends on the solution concentration needed, the circulation rate, and weather conditions. The water can be preheated up to about 38°C (100°F) to speed the dissolving, but heated water is frequently not needed, unless cold weather and cold water are involved (see "Chemical Reactions" section).

Cyanide decomposition rates increase with higher temperatures, with sodium formate and ammonia being formed. Because the decomposition reaction is exothermic, provision must be made for temperature monitoring and emergency cooling, if heating is used (see "Temperature Indicators, Insulation, Heating, and Cooling").

Excel II Unloading Procedures

Position valves. Start the pump. Check the system for leaks. Circulate the water continuously from the storage tank through the tank truck from the bottom to top to flood the truck and overflow back to the storage tank. Listen to the rattling briquettes by placing your ear near the bottom of the tank trailer. Dissolving should be complete about 30 min after the rattling stops, but system experience will provide the best guide. Then, pump the sodium cyanide solution from the tank truck into the storage tank. The dissolving time varies with circulation rate, water temperature, and final concentration, but dissolving can be complete in about 1½ hr under best conditions. Typically, 3–4 hr are needed in winter, without heat, for a 20–25% concentration.

Figure 15. Typical Excel I Unloading System

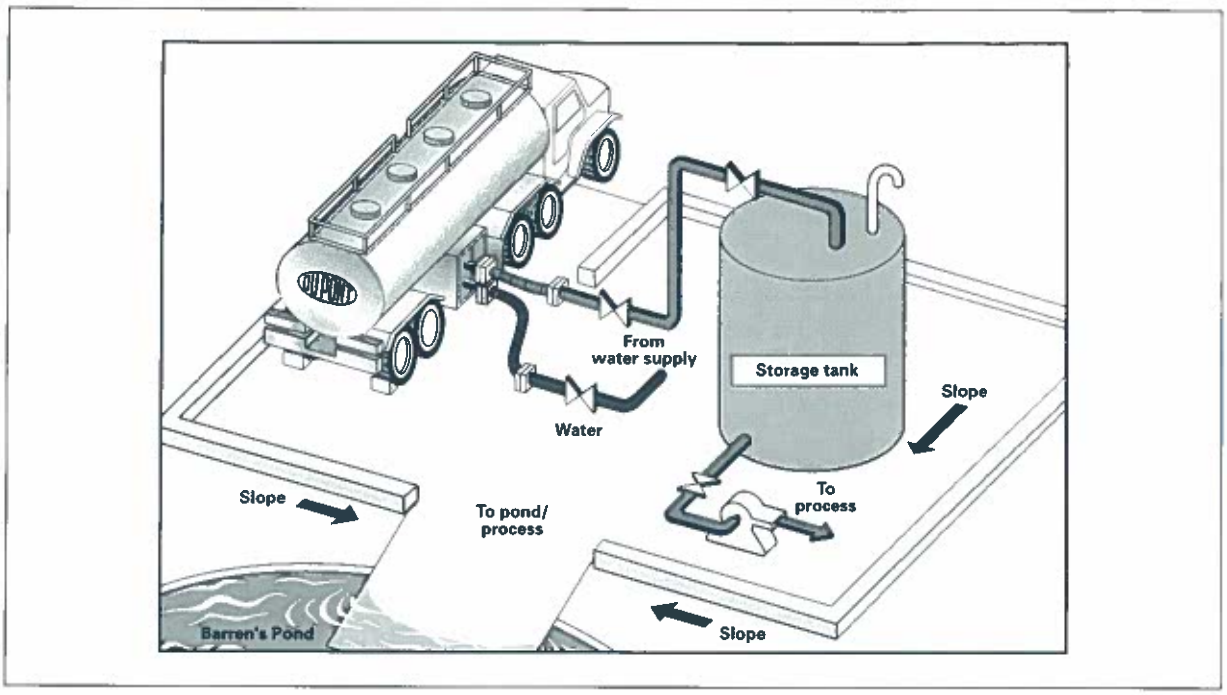

Figure 16. Typical Excel II Unloading/Storage System

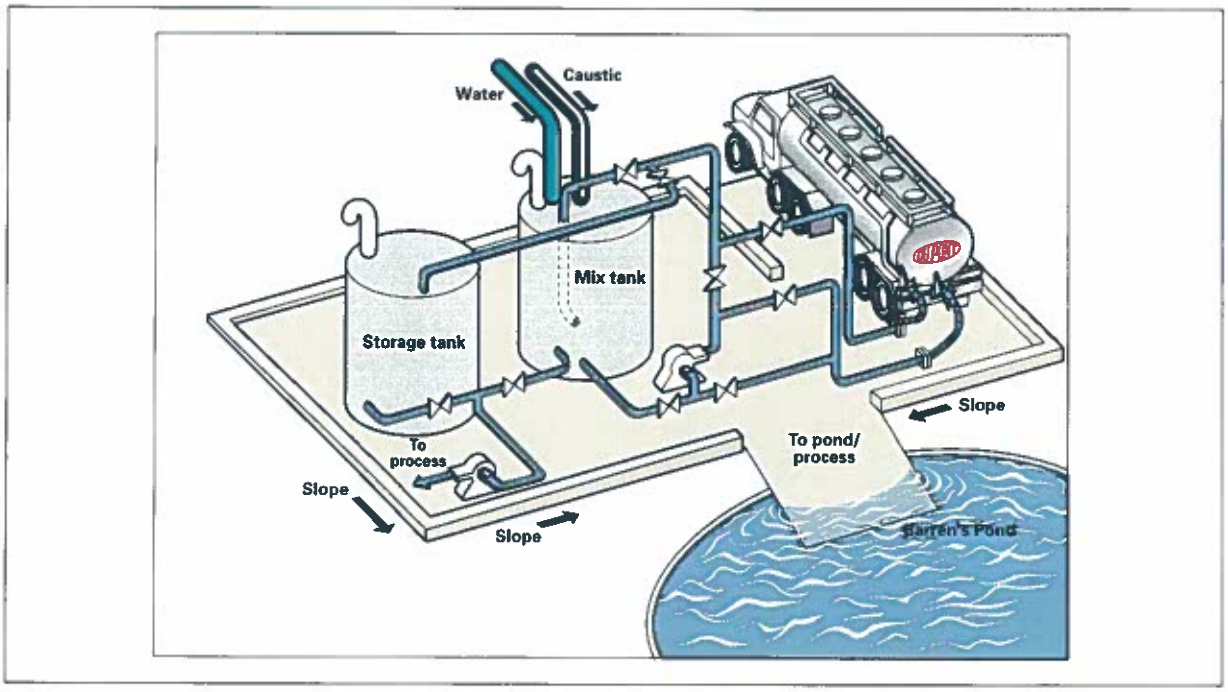

Equipment

Materials of Construction

Carbon steel equipment is usually satisfactory for sodium cyanide solutions where velocities are not over 1.2–1.5 m/sec (4–5 ft/sec). At higher velocity, 304 or 316 stainless steel is sometimes recommended, because an erosion-corrosion effect occurs on steel. Carbon steel with a corrosion allowance may be acceptable instead of stainless to reduce cost, particularly if flow is frequently shut off so no erosion-corrosion is occurring. Even at very low velocities, welded, not threaded, piping should be used for all pipe materials to avoid leaks. To avoid leaks, no threaded connections should be used for piping instruments, drains, or any other connection. For pumps and instruments, 316 stainless is recommended. Valve operating conditions will determine whether carbon steel versus stainless can be used. Gaskets of Teflon® or nitrile-butadiene rubber (NBR), with Kevlar® filler, are recommended for sodium cyanide solutions.

Solution Storage Tank

Sodium cyanide solution is stored in a tank typically fabricated from ¼-in carbon steel plate. For bulk installations, top nozzles are recommended for a 15.2- to 20.3-cm (6- to 8-in) pipe vent, a 10-cm (4-in) fill and circulating line, level indicator, high-level alarm, provision for water, and caustic additions and manway. A top 4-in nozzle with a physical break in the water line will prevent backflow. Bottom openings must also be provided for a 15-cm (6-in) pump suction line, temperature control-alarm, and (optional) heating/cooling coils. The size of the storage tank depends upon the sodium cyanide shipment size and concentration of solution required. For example, 18,150 kg (40,000 lb) of sodium cyanide makes 71,000 L (18,750 gal) of 23% solution. A vertical tank 4.9 m (16 ft) in diameter by 5.0 m (16½ ft) high has a nominal 95,000-L (25,000-gal) capacity, which is sufficient to allow some outage and/or solution inventory (see **Figure 17**). The tank may be lined with neoprene to prevent buildup of iron content, if this is critical to the process. All pipe nozzles should be schedule 40 pipe minimum.

To provide mixing, a properly aligned dip tube/mixer with a siphon vent must be installed.

If the storage tank is located inside a building, all tank openings must be sealed and the tank vent routed outside the building to a safe location. This will prevent the discharge of hydrogen cyanide inside the building when the tank is being filled (see "Caustic Addition" on page 15).

Pump

For Excel II, a 316 stainless steel pump with a 10.2-cm (4-in) suction and a 7.6-cm (3-in) discharge is needed. It should be capable of delivering 2271–2650 L (600–700 gal) per minute at 18.3–21.3 m (60–70 ft) head. Small pumps will not provide sufficient agitation for tank car cyanide dissolving. Totally enclosed, fan-cooled, 25-HP motors are recommended.

Water Meter and Supply

A 7.6-cm (3-in) water meter with a preset totalizer and an automatic cutoff is recommended in the storage tank water addition line. There should be a physical disconnection in the water supply line to prevent cyanide from backing up into the water system.

Pipe and Hoses

Welded, not threaded, carbon steel (or 304 or 316 stainless steel) pipe with minimum flanges can be used (see "Materials of Construction" for piping and gaskets). Excel II circulation piping of 10.2-cm (4-in) is recommended (except for the line from the tank to the pump inlet, which should be 6 in, to minimize NPSH losses) with all valves, pumps, etc., located inside the dike and minimum flanges outside the dike. Tank car and truck hoses should be overdesigned to ensure against failure. Hose pressure rating should be 225 psi minimum with burst pressure (including end connections) at least twice the rated pressure. Contact DuPont for hose design and vendor recommendations. Circulation piping system, including hoses, should be inspected before each use to protect against failure and a major spill. Hoses should be long enough to permit hookup, regardless of the direction the vehicle comes into the facility. Sodium cyanide solution trailer connections are located at the rear (bumper level) and middle (on top) of the trailer; Excel II trailer connections are located at the rear (bumper level); and Excel I connections are in the box located in the middle of the trailer (ground level). All connections are quick connects, except for the top solution connection, which may be either bolted or quick connect.

Drainage Control

The storage tank should be diked and have a sealed concrete bottom. No dike drain should be installed, because it might leak or be left open. The unloading area should be curbed and drainage control provided that will prevent spilled cyanide solution from draining into public water courses (see "Pipe and Hoses"). Specific spill control requirements depend on surroundings and local regulations. Impounded sodium cyanide can be reclaimed or chemically destroyed.

Figure 17. Solution Volume Curves—Gallons of Solution from Dry Weight at 35°C (95°F)

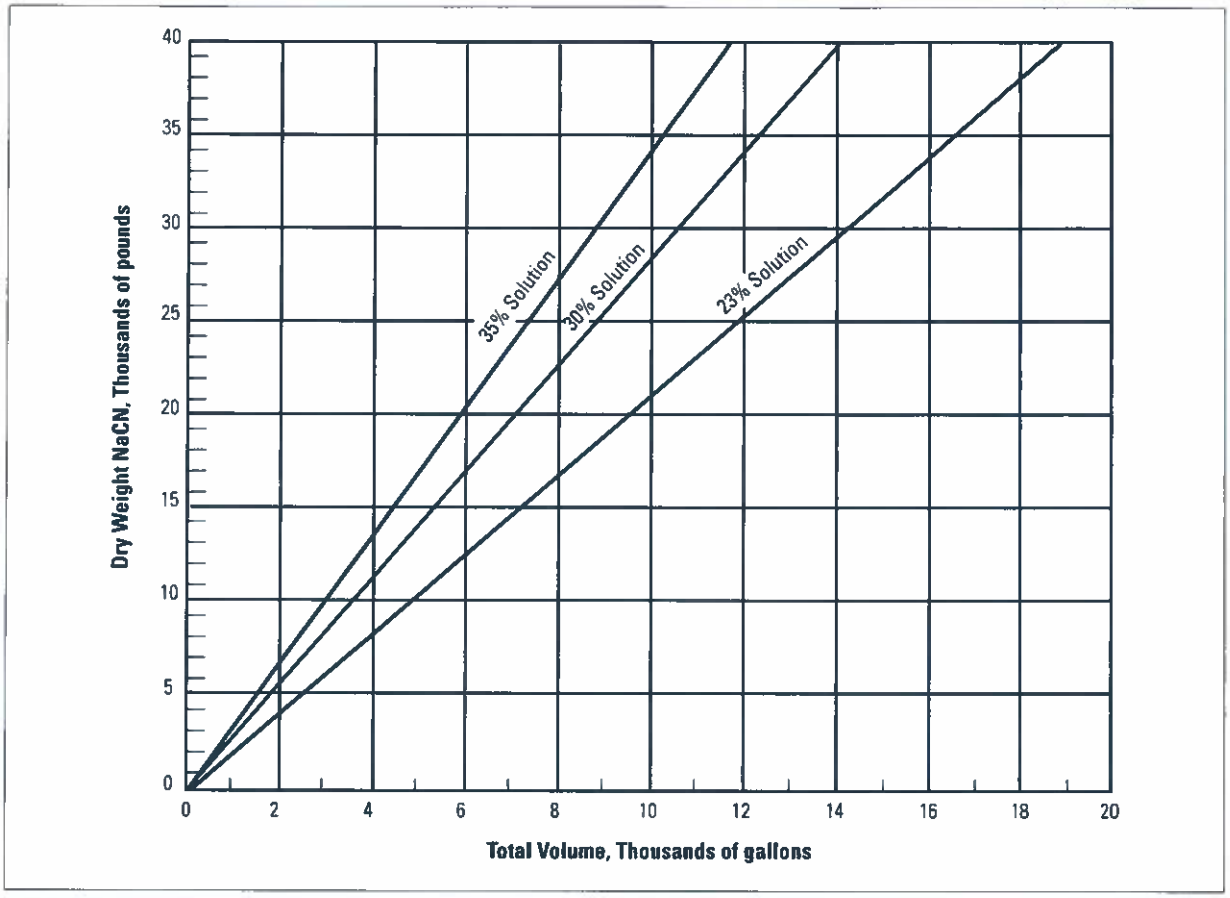

Filter

To obtain a clear solution, a filter can be used. It should be located so that it filters the solution between the tank car and the storage tank and, also, between the storage tank and process. Filters are not needed if a clear solution is not required.

Level Indicator and Alarm

A sonic liquid level indicator is preferred over a float-type instrument, as it is more reliable, easier to read, and can be installed at a convenient location. It is recommended that a high-level alarm system, equipped to shut off the pump, be installed to prevent overflowing the storage tank.

Temperature Indicators, Insulation, Heating, and Cooling

Sodium cyanide solution should be stored above the crystallization point (see **Figure 3**), but normally below 38°C (100°F), when possible, to reduce decomposition (see **Figure 6**). A temperature control system may be needed for high concentrations. Tank insulation can be fiberglass with a sheet aluminum cover, if climate and solution concentration warrant. Low pressure steam can be used to reduce localized overheating. The same coils can be used for circulating cold water when necessary. Alternately, live steam can be injected, if small concentration changes from condensation are acceptable.

CAUTION

Read the "Chemical Reactions" section carefully and note the dangers at high temperatures.

Caustic Addition

To minimize highly toxic HCN formation and prevent color formation from HCN polymerization in the stored sodium cyanide solution, sufficient caustic (sodium hydroxide) is added to give a pH 12, preferably 12.5–13. Caustic addition to provide a 0.3–0.5% solution (about 50 lb NaOH per 1000 gal water) is usually sufficient. A 50% caustic solution can be used during the summer, but 25% solution is recommended for winter to avoid freezing. Use of 22.7-kg (50-lb) bags of bead caustic may be convenient. Additions can be made directly to the tank. Caustic should be added before sodium cyanide is added. Where process chemistry prevents caustic addition, HCN formation will increase, which must be controlled by ventilation and/or other means.

Transportation Emergencies

How to Get Help

DuPont wants to be called about any transportation incident involving DuPont cyanide, regardless of whether a spill occurred. In the event of a transportation incident or other problem involving DuPont cyanide that requires immediate help, call the DuPont Cyanide Hotline at our Memphis, Tennessee plant:

Call Collect, Day or Night

(901) 357-1546

NOTE: Do not use this number for non-emergencies. Contact the sales office listed on the back cover for routine commercial or technical information.

Calling the DuPont Cyanide Hotline is the fastest way DuPont can provide guidance to assist in handling an emergency. DuPont will evaluate whether a team of specialists should be sent to the scene.

In the United States and Canada, CHEMTREC can also be called at:

(800) 424-9300

In the rest of the world, call CHEMTREC at:

001-703-527-3887

CHEMTREC uses Language Services for non-English speakers.

The DuPont or CHEMTREC information specialist on duty will ask the name and location of the caller, the name of the shipper, the product, the shipping point and destination as well as what happened, nature of any injuries, weather conditions, proximity to populated areas, etc. If you call CHEMTREC, the information specialist will then contact the manufacturer (DuPont) for further assistance.

In Canada, CANUTEC can also be called in Ottawa, Ontario, at:

(613) 996-6666

Action at the Scene

The following is intended to provide guidance to first responders to a DuPont sodium cyanide transportation emergency incident.

1. For any transportation incident involving DuPont sodium cyanide, call DuPont for assistance as soon as possible, regardless of whether there is a spill.
2. Avoid overreaction that can occur because "cyanide" is involved. Remember, in most cases, you are dealing with a dry, solid, nonvolatile material that is normally easy to clean up, unless the cyanide has contacted acid or some other incompatible chemical or is spilled into a water system. If sodium cyanide solution is spilled, the amount of HCN gas evolved will probably be greater than if dry sodium cyanide was spilled, but because of the amount of caustic contained in sodium cyanide solution, the amount of HCN will probably still be well below lethal limits (see "Effects of Exposure to HCN Vapor" on page 8)—unless the HCN vapors are somehow contained or the solution is in contact with an acid. Gasoline, diesel, or other motor oils do not generally cause large amounts of cyanide gas.
   a. The need for evacuation is highly unlikely. Unless acid and cyanide are mixed, hydrogen cyanide gas formation is limited.
   b. While rain or any water contact with sodium cyanide can produce hydrogen cyanide gas, the amount of gas is small and would not require evacuation. While dangerous levels of gas can develop in enclosed spaces, wet sodium cyanide in the open can be shoveled up by standing upwind during cleanup.
3. Shovel the cyanide into drums, plastic bags, or any suitable container.
4. If sodium cyanide solution is spilled, contain the spill as soon and as much as possible. Keep sodium cyanide out of lakes, streams, or any other water. Block off sewer system, drainage, or any other water access. Even small concentrations of cyanide can be fatal to aquatic life. As soon as is practical, place the spilled material into a container suitable for movement to a proper disposal area.
5. As with all chemical spills, approach the scene from upwind to determine what chemicals are involved. With sodium cyanide spillage, check for battery acid spillage.
6. Keep people (nonresponders) away.
7. Halt or divert traffic to prevent spreading the cyanide.
8. If raining, cover any spilled sodium cyanide with a tarp, plastic, or anything available to minimize water contact and subsequent cyanide-water runoff. Divert any water streams around the cyanide.
9. To repeat, call the DuPont Cyanide Hotline at:

(901) 357-1546

Cyanide Destruction

The entire process in which by-products are generated should be reviewed for possible recycle of sodium cyanide, instead of disposal. If recycle is not feasible, ion exchange and reverse osmosis may be useful for concentrating cyanides, but destruction is usually easier and more economical.

The most effective and widely used chemical methods to destroy cyanide are oxidizing it to cyanate (CNO^-) with hypochlorite or hydrogen peroxide. Both methods are effective for oxidizing free and weak acid-dissociable cyanide.

For concentrated cyanide solutions, long-term high-temperature heating will destroy much of the cyanide with associated ammonia release.

Chlorination

CAUTION

Concentrated hypochlorite should not be mixed with concentrated cyanide solutions or solid cyanide, because highly toxic cyanogen chloride gas will be released. Very dilute solutions, in the correct pH range, should be used.

Chlorination of dilute sodium cyanide solutions can be accomplished by treatment with diluted solutions of sodium hypochlorite, calcium hypochlorite, or by generating hypochlorite from NaOH and Cl_2 gas. The choice of hypochlorite is an economic and safety decision. Solution concentrations of 1% sodium cyanide and 1% hypochlorite can be reacted if mixed slowly (over, say, 10 min) and with proper pH control.

Hypochlorite reacts with cyanide ions (CN^-) to produce highly toxic cyanogen chloride, which, at pH 10–11, hydrolyzes promptly to form cyanate ions (CNO^-). Because cyanogen chloride is a poisonous gas with little water solubility, the treatment process must be designed and operated to prevent cyanogen chloride fumes. Fumes are best controlled by limiting the cyanide concentration to a few thousand parts per million and controlling pH. Below pH 10, cyanogen chloride release increases; above pH 11, cyanide destruction slows, particularly above pH 11.5.

Further chlorination to destroy cyanate, sometimes referred to as "complete" chlorination, can be accomplished with additional chlorine. After reaction at pH 10.5 for 10 min or more, the pH must be reduced to 7.5–9, preferably 8–8.5, and maintained at that pH until the reaction is complete. Completion of both reactions typically requires at least 2 hr and can use eight or more parts of Cl_2 per part of CN^- (versus about three parts of Cl_2 for oxidation to CNO^-), while producing CO_2 and N_2 as reaction products. Chlorination is effective for cyanide destruction and can be automated for continuous systems. However, other waste stream components are often chlorinated, which increases chlorine consumption and may produce undesirable by-products in the effluent.

pH 10–11

Normally fastest reaction rate. Reduced HCN release and pH drop during treatment favor starting around pH 11. Higher pH will slow reaction, particularly above 11.5.

CAUTION

Adequate ventilation and HCN monitoring are important and more so as cyanide concentrations increase and pH decreases, particularly below pH 11.

pH Below 10

Causes slower reaction and release of HCN and/or cyanogen chloride gas (highly toxic, like HCN, and a powerful lachrymator, causing tearing of the eyes). Also, there is greatly increased concern about HCN release.

Acid pH

CAUTION

In addition to toxic gas release, acidic conditions can result in nitrogen trichloride formation that can separate as an insoluble oil-like material and explode violently, even in small amounts.

Hydrogen Peroxide Oxidation

CAUTION

Concentrated hydrogen peroxide should not be mixed with concentrated cyanide solutions or solid sodium cyanide, because highly toxic HCN or ammonia gas could be released. Also, high heat and oxygen gas release may cause foaming or eruption and splash workers. Dilution minimizes these problems.

Depending on the composition of the waste, additions of copper or formaldehyde may be required to destroy cyanide. The waste liquor is adjusted to pH 11 (10.5–11.5), formaldehyde or copper ions (typically with copper sulfate) added if needed, and hydrogen peroxide mixed with the solution. The solution must be agitated mechanically or with air. The reaction rate is dependent on temperature. Dilute wastes can be warmed to 38–54°C (100–130°F), but temperature elevation is usually less economical than adding 10–20% excess peroxide to shorten reaction time (which is normally about ½–1 hr at ambient temperature). Dilution and/or controlled addition rate may be needed when treating more concentrated wastes.

Chlorination is faster than peroxide oxidation and is frequently more adaptable to continuous destruction systems. Where speed is not critical, such as in batch tanks, hydrogen peroxide has several advantages including:

- Cyanogen chloride and chlorinated by-products are not produced.
- More concentrated cyanide wastes can be treated safely.
- The hazards of handling chlorine are avoided.
- Chlorine/chloride in water discharges are prohibited in some locations and can be avoided with peroxide.
- Sulfur compounds will react with hypochlorite, but not peroxide, and can increase hypochlorite costs substantially.
- Peroxide may destroy other objectionable organics.

By-products from peroxide treatment are cyanate, ammonia, and glycolic acid amide. Cyanate does not revert to cyanide in surface waters or sewage treatment systems, according to a U.S. Public Health Service study. Both the cyanate and glycolic acid amide are biodegradable. The cyanate can be readily hydrolyzed in acid solutions to ammonia.

Hydrolysis

Hydrolysis is sometimes a practical treatment for strong sodium cyanide solutions. Simply heating a 10% sodium cyanide solution for about 36 hr to 95–100°C (about 210°F) should reduce the cyanide content well below 1%, where chemical oxidation can be used more effectively. Provisions should be made to accommodate the ammonia that will be generated (see "Sodium Cyanide Reactions in Water").

Metal Complexes

Strongly bonded metal cyanides, especially iron cyanides (ferrocyanide and ferricyanide), are apt to be found in cyanide waste streams. These will not be detected by simple analytical procedures, such as titration with silver nitrate, which are normally used for measuring "free" or "weak acid-dissociable" cyanides. However, they will be included in the "total cyanide" analyses using acid distillation procedures. These complexes are not effectively destroyed by the commonly used waste treatment processes. If regulations require removal of these generally stable complexes of low toxicity, other treatment methods such as precipitation to produce a solid waste may be required.

Handling Spills

Sodium cyanide spills should be cleaned up promptly to minimize exposure of people and the environment. Shovel and sweep dry spilled material into a drum or suitable container. Keep dry spilled material dry. If solutions are spilled, immediately contain them to prevent contaminating nearby water. Contact DuPont for additional actions at a spill scene. If raining, covering the spill will reduce sodium cyanide dissolving and runoff. Decontamination of an area, after cleaning up as much cyanide as possible, can be accomplished with hypochlorite solution. A small amount of caustic (1 oz/5 gal hypochlorite solution) will help keep the pH in the 10–11 range.

References and Notes

1. Elial, E. L., and Freeman, J. P., "Organic Syntheses," Wiley, New York, Coll. Vol. 4, 58–62.
2. OSHA, 29 CFR 1910.1000, Air Contaminants.
3. Due to changing governmental regulations, such as those of the Department of Transportation, Department of Labor, U.S. Environmental Protection Agency, and the Food and Drug Administration, references to governmental requirements may be superseded. Consult and follow the current governmental regulations, such as Hazard Classification, Labeling, Worker Exposure Limitations, and Waste Disposal procedures, for up-to-date requirements for sodium cyanide.
4. "HYDROGEN CYANIDE and CYANIDE SALTS" published in 2001 by American Conference of Governmental Industrial Hygienists (ACGIH) 1330 Kemper Meadow Drive, Cincinnati, OH 45240; telephone (513) 742-2020. The ACGIH recommends a 4.7 ppm ceiling for HCN. Both OSHA and ACGIH advise avoiding skin contact.
5. "Occupational Exposure to Hydrogen Cyanide and Cyanide Salts," NIOSH Criteria Document, U.S. Department of Health, Education, and Welfare, 1976.
6. DOT, 49 CFR 712.101, Hazardous Material Table.

DuPont Chemical Solutions Enterprise

DuPont Chemical Solutions Enterprise
Barley Mill Plaza 23-1229A
P.O. Box 80023
Wilmington, DE 19880-0023
U.S.A.
Telephone: 001 (302) 892-7520
Fax: 001 (302) 892-1456

International Sales Offices

Asia Pacific
DuPont Kabushiki Kaisha
Sanno Park Tower
2-11-1, Nagato-cho
Chiyoda-ku
Tokyo 100-6111, Japan
81 3 5521 8670

DuPont Company (Singapore) Pte Ltd.
1 Maritime Square #07-01
HarbourFront Centre
Singapore 099253
Tel: (65) 6586 3688
Fax: (65) 6586 3043

DuPont China Holding Limited
Beijing Office
Unit 1101, 11th Floor
China World Tower 2
No. 1 Jian Guo Men Wai Avenue
Beijing 100004
PR China
0086 1065 058 000
525 722 1200

South America
DuPont Chile
El Bosque 500
Of. 1102 (Las Condes)
Santiago, Chile
562 362 2200

Canada
DuPont Canada Inc.
DuPont Specialty Chemicals
P.O. Box 2200, Streetsville
Mississauga, Ontario
Canada L5M 2H3
(905) 821-3300

Europe
DuPont de Nemours International S.A.
2 chemin du Pavillon
P.O. Box 50
CH-1218 Le Grand Saconnex
Geneva, Switzerland
41 22 717 51 11

Mexico, Central America and Caribbean
DuPont Chemical Solutions Enterprise
Homero 206 Piso 10
Col. Chapultepec Morales
CP 11570
Mexico D.F.
525 55 722 1200

The information set forth herein is furnished free of charge and is based on technical data that DuPont believes to be reliable. It is intended for use by persons having technical skill and at their own discretion and risk. Because conditions of use are outside our control, we make no warranties, express or implied, and assume no liability in connection with any use of this information. Nothing herein is to be taken as a license to operate under or a recommendation to infringe any patents.

Copyright © 2005 DuPont or its affiliates. All rights reserved. The DuPont Oval Logo, DuPont™, The miracles of science™, Cyanobrik®, Cyanogran®, Kevlar® and Teflon® are registered trademarks or trademarks of DuPont or its affiliates.

FLO-BIN® is a registered trademark of Fabricated Metals, Inc.

H-37163-6 (5/05) Printed in the U.S.A.

DUPONT

The miracles of science™

C.2 Material Safety Data Sheets – Sodium Cyanide

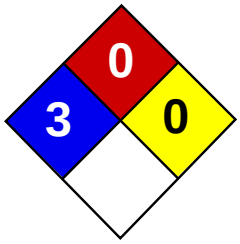



Material Safety Data Sheet
Sodium Cyanide MSDS

Section 1: Chemical Product and Company Identification

Product Name: Sodium Cyanide

Catalog Codes: SLS2314, SLS3736

CAS#: 143-33-9

RTECS: VZ7525000

TSCA: TSCA 8(b) inventory: Sodium Cyanide

CI#: Not available.

Synonym:

Chemical Name: Sodium Cyanide

Chemical Formula: NaCN

Contact Information:

Sciencelab.com, Inc.
14025 Smith Rd.
Houston, Texas 77396

US Sales: **1-800-901-7247**
International Sales: **1-281-441-4400**

Order Online: ScienceLab.com

CHEMTREC (24HR Emergency Telephone), call:
1-800-424-9300

International CHEMTREC, call: 1-703-527-3887

For non-emergency assistance, call: 1-281-441-4400

Section 2: Composition and Information on Ingredients

Composition:

Name	CAS #	% by Weight
Sodium Cyanide	143-33-9	100

Toxicological Data on Ingredients: Sodium Cyanide: ORAL (LD50): Acute: 6.44 mg/kg [Rat]. DERMAL (LD50): Acute: 10.4 mg/kg [Rabbit].

Section 3: Hazards Identification

Potential Acute Health Effects:
Very hazardous in case of skin contact (irritant), of eye contact (irritant), of ingestion, of inhalation. Hazardous in case of skin contact (permeator). Corrosive to eyes and skin. The amount of tissue damage depends on length of contact. Eye contact can result in corneal damage or blindness. Skin contact can produce inflammation and blistering. Inhalation of dust will produce irritation to gastro-intestinal or respiratory tract, characterized by burning, sneezing and coughing. Severe over-exposure can produce lung damage, choking, unconsciousness or death. Inflammation of the eye is characterized by redness, watering, and itching. Skin inflammation is characterized by itching, scaling, reddening, or, occasionally, blistering.

Potential Chronic Health Effects:
CARCINOGENIC EFFECTS: Not available. MUTAGENIC EFFECTS: Not available. TERATOGENIC EFFECTS: Not available. DEVELOPMENTAL TOXICITY: Not available. The substance may be toxic to skin, eyes, central nervous system (CNS). Repeated or prolonged exposure to the substance can produce target organs damage. Repeated exposure of the eyes to a low level of dust can produce eye irritation. Repeated skin exposure can produce local skin destruction, or dermatitis. Repeated inhalation of dust can produce varying degree of respiratory irritation or lung damage. Repeated exposure to a highly toxic material may produce general deterioration of health by an accumulation in one or many human organs.

Section 4: First Aid Measures

Eye Contact:
Check for and remove any contact lenses. In case of contact, immediately flush eyes with plenty of water for at least 15 minutes. Cold water may be used. Get medical attention immediately.

Skin Contact:
In case of contact, immediately flush skin with plenty of water for at least 15 minutes while removing contaminated clothing and shoes. Cover the irritated skin with an emollient. Cold water may be used.Wash clothing before reuse. Thoroughly clean shoes before reuse. Get medical attention immediately.

Serious Skin Contact:
Wash with a disinfectant soap and cover the contaminated skin with an anti-bacterial cream. Seek immediate medical attention.

Inhalation:
If inhaled, remove to fresh air. If not breathing, give artificial respiration. If breathing is difficult, give oxygen. Get medical attention.

Serious Inhalation:
Evacuate the victim to a safe area as soon as possible. Loosen tight clothing such as a collar, tie, belt or waistband. If breathing is difficult, administer oxygen. If the victim is not breathing, perform mouth-to-mouth resuscitation. WARNING: It may be hazardous to the person providing aid to give mouth-to-mouth resuscitation when the inhaled material is toxic, infectious or corrosive. Seek immediate medical attention.

Ingestion:
If swallowed, do not induce vomiting unless directed to do so by medical personnel. Never give anything by mouth to an unconscious person. Loosen tight clothing such as a collar, tie, belt or waistband. Get medical attention immediately.

Serious Ingestion: Not available.

Section 5: Fire and Explosion Data

Flammability of the Product: May be combustible at high temperature.

Auto-Ignition Temperature: Not available.

Flash Points: Not available.

Flammable Limits: Not available.

Products of Combustion: Some metallic oxides.

Fire Hazards in Presence of Various Substances: Slightly flammable to flammable in presence of acids, of moisture.

Explosion Hazards in Presence of Various Substances:
Risks of explosion of the product in presence of mechanical impact: Not available. Risks of explosion of the product in presence of static discharge: Not available.

Fire Fighting Media and Instructions:
SMALL FIRE: Use DRY chemical powder. LARGE FIRE: Use water spray, fog or foam. Do not use water jet.

Special Remarks on Fire Hazards:
Dangerous on contact with acids, acid fumes, water or stream. It will produce toxic and flammable vapors of CN-H and sodium oxide. Contact with acids and acid salts causes immediate formation of toxic and flammable hydrogen cyanide gas. When heated to decomposition it emits toxic fumes hydgrogen cyanide and oxides of nitrogen

Special Remarks on Explosion Hazards: Fusion mixtures of metal cyanides with metal chlorates, perchlorated or nitrates causes a violent explosion

Section 6: Accidental Release Measures

Small Spill: Use appropriate tools to put the spilled solid in a convenient waste disposal container.

Large Spill:
Corrosive solid. Poisonous solid. Stop leak if without risk. Do not get water inside container. Do not touch spilled material. Use water spray to reduce vapors. Prevent entry into sewers, basements or confined areas; dike if needed. Eliminate all ignition sources. Call for assistance on disposal. Be careful that the product is not present at a concentration level above TLV. Check TLV on the MSDS and with local authorities.

Section 7: Handling and Storage

Precautions:
Keep locked up.. Keep container dry. Keep away from heat. Keep away from sources of ignition. Empty containers pose a fire risk, evaporate the residue under a fume hood. Ground all equipment containing material. Do not ingest. Do not breathe dust. Never add water to this product. In case of insufficient ventilation, wear suitable respiratory equipment. If ingested, seek medical advice immediately and show the container or the label. Avoid contact with skin and eyes. Keep away from incompatibles such as oxidizing agents, acids, moisture.

Storage: Keep container tightly closed. Keep container in a cool, well-ventilated area. Do not store above 24°C (75.2°F).

Section 8: Exposure Controls/Personal Protection

Engineering Controls:
Use process enclosures, local exhaust ventilation, or other engineering controls to keep airborne levels below recommended exposure limits. If user operations generate dust, fume or mist, use ventilation to keep exposure to airborne contaminants below the exposure limit.

Personal Protection:
Splash goggles. Synthetic apron. Vapor and dust respirator. Be sure to use an approved/certified respirator or equivalent. Gloves.

Personal Protection in Case of a Large Spill:
Splash goggles. Full suit. Vapor and dust respirator. Boots. Gloves. A self contained breathing apparatus should be used to avoid inhalation of the product. Suggested protective clothing might not be sufficient; consult a specialist BEFORE handling this product.

Exposure Limits:
STEL: 5 (mg/m3) from ACGIH (TLV) [United States] SKIN CEIL: 4.7 from NIOSH CEIL: 5 (mg/m3) from NIOSHConsult local authorities for acceptable exposure limits.

Section 9: Physical and Chemical Properties

Physical state and appearance: Solid. (Granular solid. Flakes solid.)

Odor:
Faint almond-like odor. Odorless when perfectly dry. Emits odor of hydrogen cyanide when damp.

Taste: Not available.

Molecular Weight: 49.01 g/mole

Color: White.

pH (1% soln/water): Not available.

Boiling Point: 1496°C (2724.8°F)

Melting Point: 563°C (1045.4°F)

Critical Temperature: Not available.

Specific Gravity: 1.595 (Water = 1)

Vapor Pressure: Not applicable.

Vapor Density: Vapor Density of Hydrogen Cyanide gas: 0.941

Volatility: Not available.

Odor Threshold: Not available.

Water/Oil Dist. Coeff.: Not available.

Ionicity (in Water): Not available.

Dispersion Properties: See solubility in water.

Solubility:
Soluble in cold water. Slightly soluble in Ethanol

Section 10: Stability and Reactivity Data

Stability: The product is stable.

Instability Temperature: Not available.

Conditions of Instability: Excess heat, moisture, incompatibles.

Incompatibility with various substances: Reactive with oxidizing agents, acids, moisture.

Corrosivity:
Corrosive in presence of aluminum. Non-corrosive in presence of glass.

Special Remarks on Reactivity:
Violent reaction with fluorine gas, magnesium, nitrates, nitric acid. Dangerous on contact with acids, acid fumes, water or stream. It wil produce toxic and flammable vapors of CN-H and sodium oxide. Cyanide may react with CO2 in ordinary air to form toxic hydrogen cyanide gas. Strong oxidizers such as acids, acid salts, chlorates, and nitrates. Contact with acids and acid salts causes immediate formation of toxic and flammable hydrogen cyanide gas.

Special Remarks on Corrosivity: Corrosive to aluminum

Polymerization: Will not occur.

Section 11: Toxicological Information

Routes of Entry: Absorbed through skin. Dermal contact. Eye contact. Inhalation. Ingestion.

Toxicity to Animals:
Acute oral toxicity (LD50): 6.44 mg/kg [Rat]. Acute dermal toxicity (LD50): 10.4 mg/kg [Rabbit].

Chronic Effects on Humans: May cause damage to the following organs: skin, eyes, central nervous system (CNS).

Other Toxic Effects on Humans:
Very hazardous in case of skin contact (irritant), of ingestion, of inhalation. Hazardous in case of skin contact (permeator).

Special Remarks on Toxicity to Animals: Not available.

Special Remarks on Chronic Effects on Humans: May cause adverse reproductive effects (maternal and paternal fertility) based on animal data.

Special Remarks on other Toxic Effects on Humans:
Acute Potential Health effects: Skin: May cause itching and irritation. May be fatal if absorbed through injured skin with symtpoms similar to those noted for inhalation and ingestion. Eyes: May cause eye irritation and eye damage. Inhalation: May cause respiratory tract irritation. May be fatal if inhaled. The substance inhibits cellular respiration causing metabolic asphyxiation. May cause headache, weakness, dizziness, labored breathing, nausea, vomiting. May be followed by cardiovascular effects, unconciousness, convulsions, coma, and death Ingestion: May be fatal if swallowed. May cause

gastrointestinal tract irritation with nausea, vomiting. May affect behavior and nervous systems(seizures, convulsions, change in motor activity, headache, dizziness, confusion, weakness stupor, aniexity, agitation, tremors), cardiovascular system, respiration (hyperventilation, pulmonary edema, breathing difficulty, respiratory failure), cardiovascular system (palpitations, rapid heart beat, hypertension, hypotension). Massive doses by produce sudden loss of conciousness and prompt death from respiratory arrest. Smaller but still lethal doses on the breath or vomitus. Chronic Potential Health Effects: Central Nervous system effects (headaches, vertigo, insomnia, memory loss, tremors, fatigue), fatigue, metabolic effects (poor appetite), cardiovascular effects (chest discomfort, palpitations), nerve damage to the eyes, or dermatitis, respiratory tract irritation, eye irritation, or death can occur. may prolong the illness for 1 or more hours. A bitter almond odor may be noted

Section 12: Ecological Information

Ecotoxicity: Not available.

BOD5 and COD: Not available.

Products of Biodegradation:
Possibly hazardous short term degradation products are not likely. However, long term degradation products may arise.

Toxicity of the Products of Biodegradation: The products of degradation are less toxic than the product itself.

Special Remarks on the Products of Biodegradation: Not available.

Section 13: Disposal Considerations

Waste Disposal:
Waste must be disposed of in accordance with federal, state and local environmental control regulations.

Section 14: Transport Information

DOT Classification: CLASS 6.1: Poisonous material.

Identification: : Sodium cyanide UNNA: 1689 PG: I

Special Provisions for Transport: Marine Pollutant

Section 15: Other Regulatory Information

Federal and State Regulations:
Connecticut carcinogen reporting list.: Sodium Cyanide Illinois chemical safety act: Sodium Cyanide New York release reporting list: Sodium Cyanide Rhode Island RTK hazardous substances: Sodium Cyanide Pennsylvania RTK: Sodium Cyanide Minnesota: Sodium Cyanide Massachusetts RTK: Sodium Cyanide Massachusetts spill list: Sodium Cyanide New Jersey: Sodium Cyanide New Jersey spill list: Sodium Cyanide Louisiana RTK reporting list: Sodium Cyanide Louisiana spill reporting: Sodium Cyanide California Director's List of Hazardous Substances: Sodium Cyanide TSCA 8(b) inventory: Sodium Cyanide TSCA 4(a) final test rules: Sodium Cyanide TSCA 8(a) PAIR: Sodium Cyanide TSCA 8(d) H and S data reporting: Sodium Cyanide TSCA 12(b) one time export: Sodium Cyanide SARA 302/304/311/312 extremely hazardous substances: Sodium Cyanide CERCLA: Hazardous substances.: Sodium Cyanide: 10 lbs. (4.536 kg)

Other Regulations:
OSHA: Hazardous by definition of Hazard Communication Standard (29 CFR 1910.1200). EINECS: This product is on the European Inventory of Existing Commercial Chemical Substances.

Other Classifications:

WHMIS (Canada):
CLASS B-6: Reactive and very flammable material. CLASS D-1A: Material causing immediate and serious toxic effects (VERY TOXIC). CLASS E: Corrosive solid.

DSCL (EEC):
R27/28- Very toxic in contact with skin and if swallowed. R41- Risk of serious damage to eyes. S1/2- Keep locked up and out of the reach of children. S26- In case of contact with eyes, rinse immediately with plenty of water and seek medical advice. S28- After contact with skin, wash immediately with plenty of water S36/37- Wear suitable protective clothing and gloves. S39- Wear eye/face protection. S45- In case of accident or if you feel unwell, seek medical advice immediately (show the label where possible). S46- If swallowed, seek medical advice immediately and show this container or label.

HMIS (U.S.A.):

Health Hazard: 3

Fire Hazard: 1

Reactivity: 0

Personal Protection: j

National Fire Protection Association (U.S.A.):

Health: 3

Flammability: 0

Reactivity: 0

Specific hazard:

Protective Equipment:
Gloves. Synthetic apron. Vapor and dust respirator. Be sure to use an approved/certified respirator or equivalent. Wear appropriate respirator when ventilation is inadequate. Splash goggles.

Section 16: Other Information

References: Not available.

Other Special Considerations: Not available.

Created: 10/11/2005 01:58 PM

Last Updated: 11/01/2010 12:00 PM

The information above is believed to be accurate and represents the best information currently available to us. However, we make no warranty of merchantability or any other warranty, express or implied, with respect to such information, and we assume no liability resulting from its use. Users should make their own investigations to determine the suitability of the information for their particular purposes. In no event shall ScienceLab.com be liable for any claims, losses, or damages of any third party or for lost profits or any special, indirect, incidental, consequential or exemplary damages, howsoever arising, even if ScienceLab.com has been advised of the possibility of such damages.

Appendix D

Hazardous Material Storage Area Inspection Report

HAZMAT Storage Area: Environmental Inspection report

Date: _____ **Inspected By: _____**

Location: _____ **Responsible department: _____**

Subject	Conform	Non-conform	N/A	Picture(s) #
Are storage containers clearly labelled to identify Hazmat substance?				
Are storage containers in good condition? Is there any visible damage or leaks? Can the doors be sealed shut?				
Is HAZMAT in containers properly segregated?				
Is HAZMAT arrangement to prevent from falling or dislodging?				
Where necessary – Is HAZMAT placed on pallets i.e. Drums?				
Where necessary – Are containers with product stored in an upright position?				
Where necessary – Are Quatrex bags closed properly?				
Do you see any potential environmental hazards posed by these HAZMAT containers/materials?				

Comments:_____
_____
_____
_____
_____

Recommendations:_____
_____
_____
_____
_____

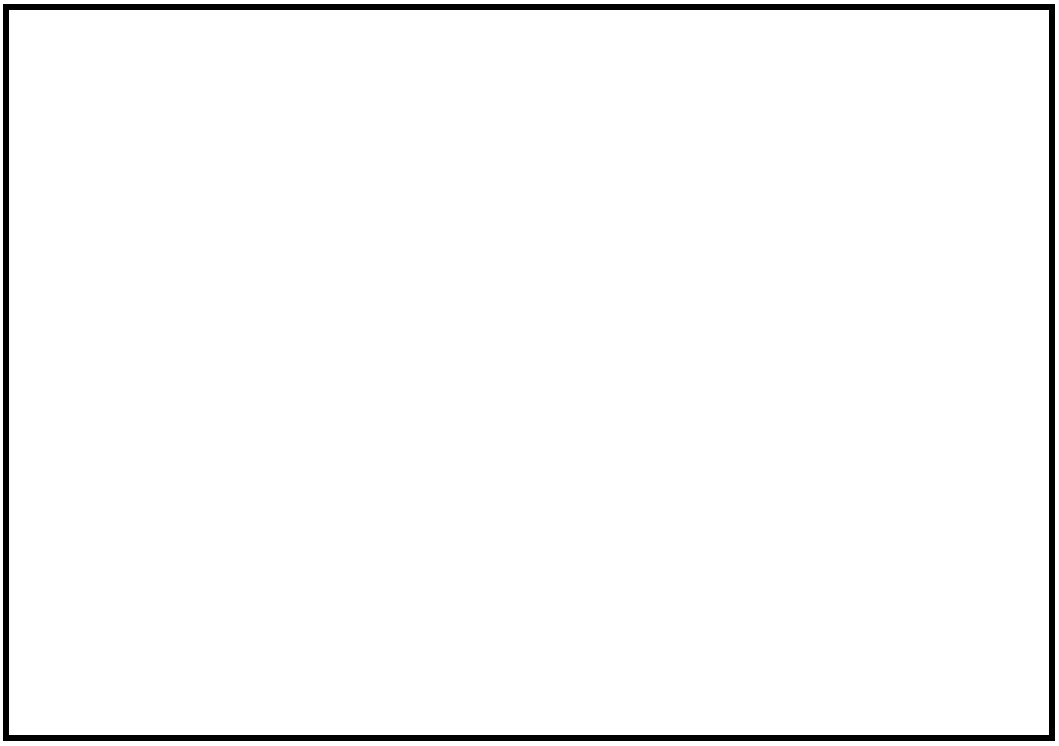

Picture 1: Description

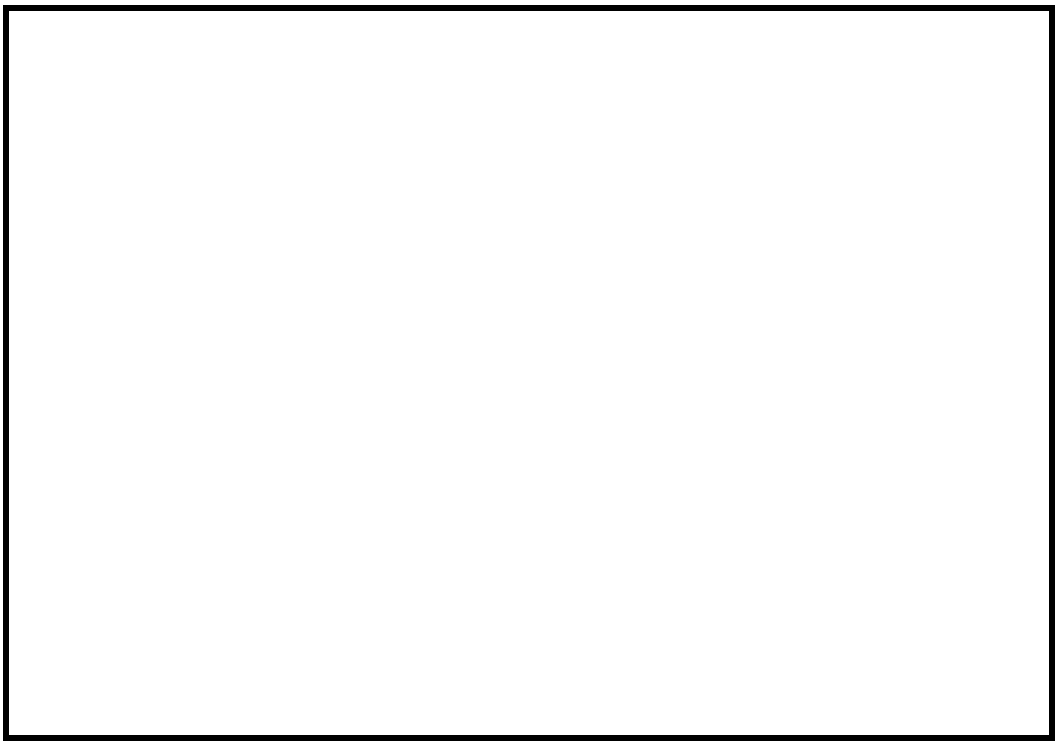

Picture 2: Description

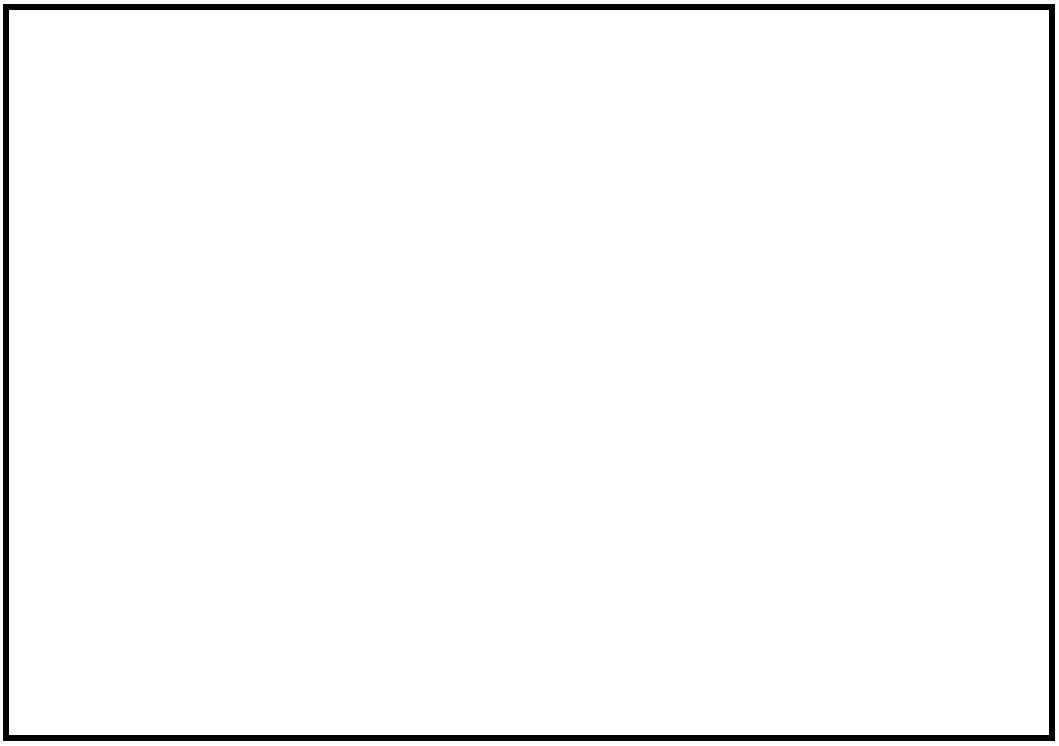

Picture 3: Description

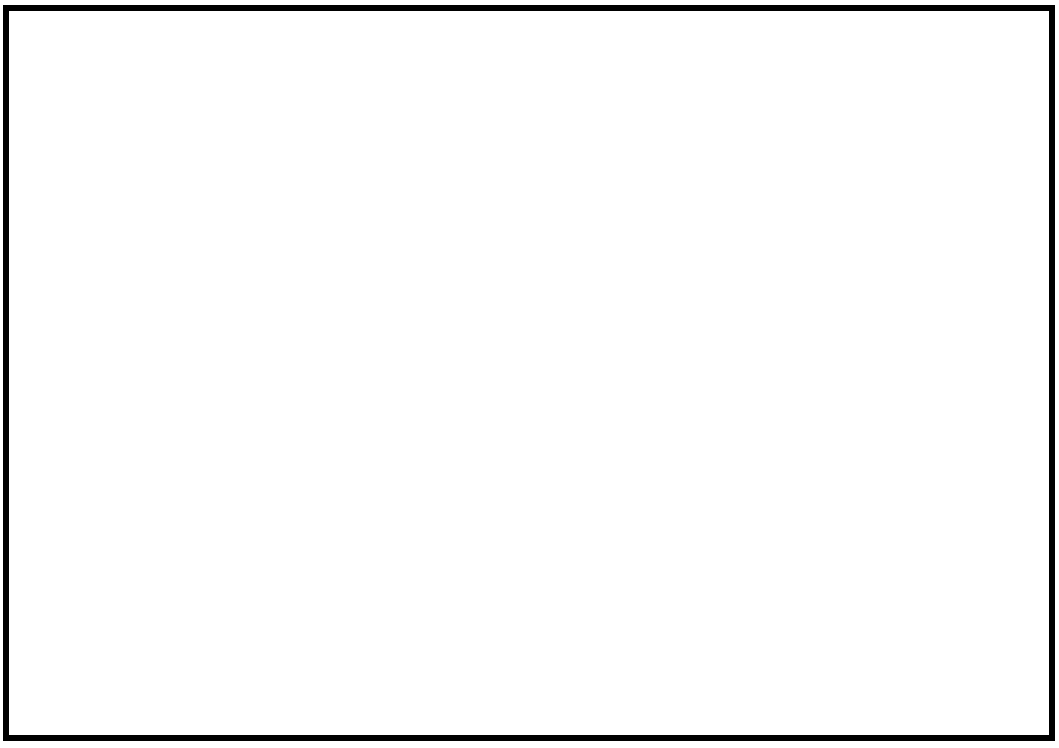

Picture 4: Description

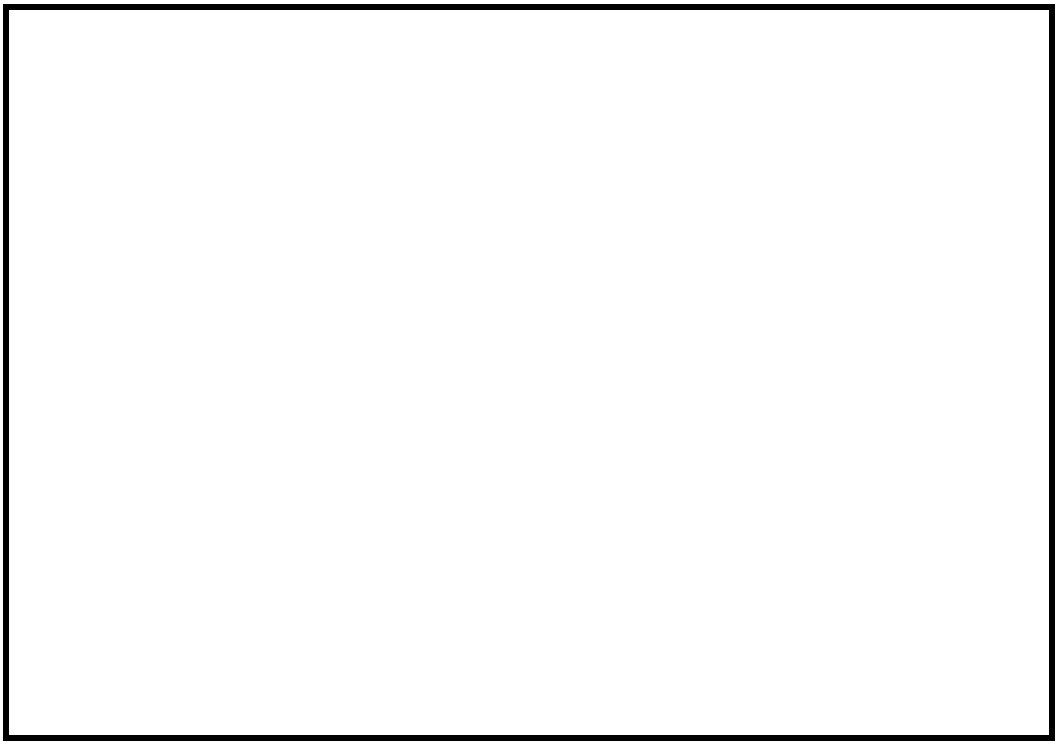

Picture 5: Description

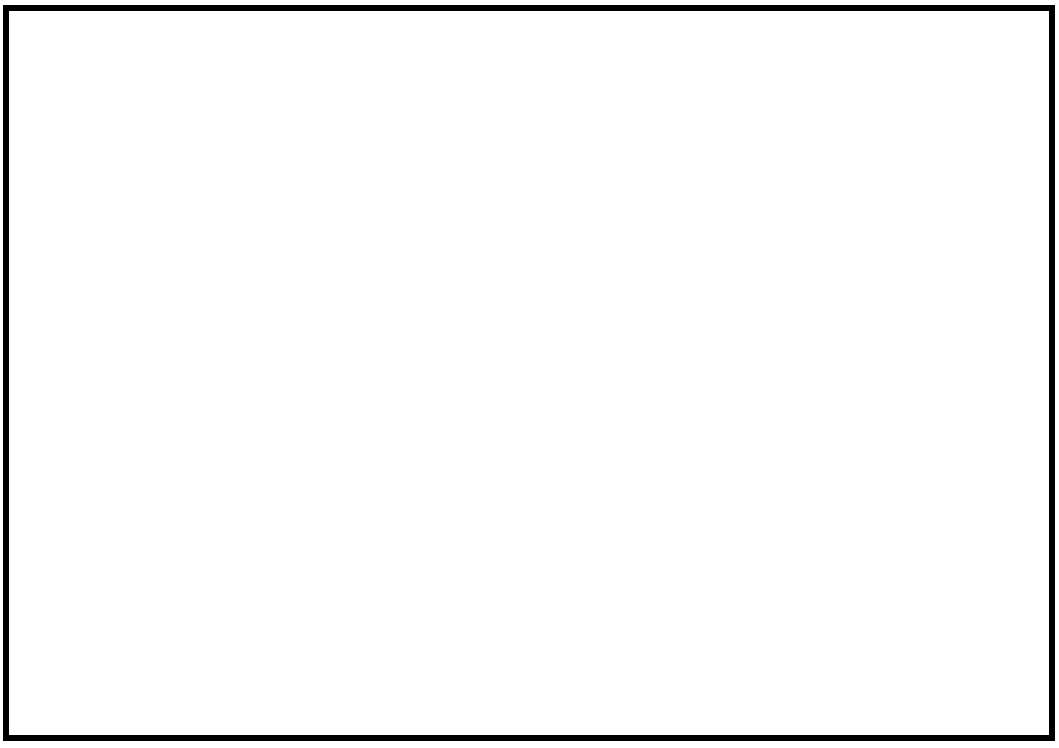

Picture 6: Description

Appendix E

Procedure Poster Hazardous Material Storage

Agnico-Eagle Mines: Meadowbank Division Environment Department

AGNICO EAGLE
MEADOWBANK

HAZARDOUS Materials/Waste Management and Storage Procedures

- AEM is committed to the safe and appropriate storage of fuels, hazardous materials, and hazardous wastes.
- AEM Environmental Department will be conducting routine inspections on each departments HAZMAT area to ensure proper procedures and storage are being met. This not only meets the requirements of our license, but is also a cost-savings initiative.
- When Hazardous Materials are not properly segregated, additional handling costs are added to the total cost of shipping our Hazardous Material down south.
- AEM's general guidelines for storing fuels, hazardous materials and hazardous wastes are listed below.

Hazardous Materials/Waste includes:

Waste Oil, Grease, Filters & Hoses, Spray Cans, Rags with Oil, Grease or Chemical Product, Paints, Batteries, Fluorescent Lights








HAZARDOUS MATERIALS/WASTE MUST BE SEPARATED (See Example Below)




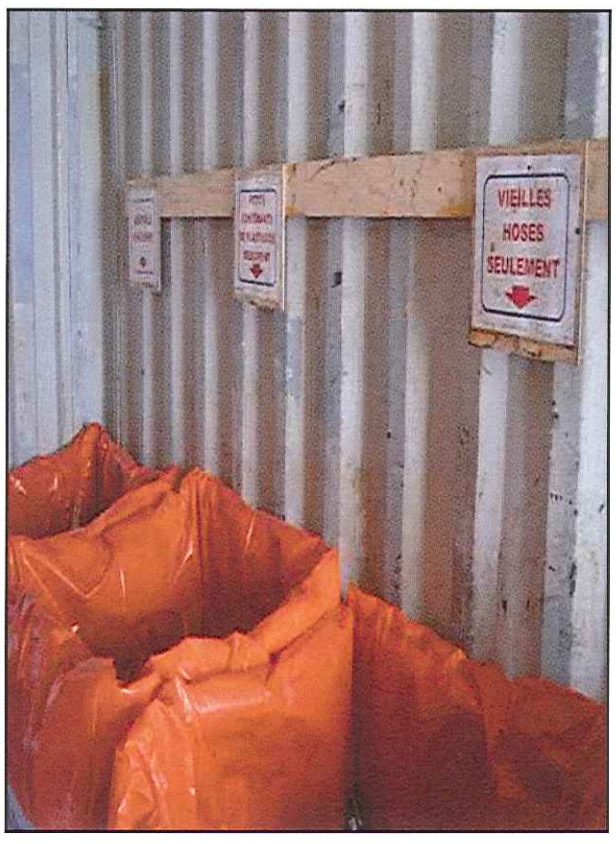

The Hazardous Materials/Waste Storage Area is located near the Fuel Farm and Incinerator



When your HAZMAT is ready to transport to the Hazardous Materials/Waste Storage area, we ask that you follow these steps:

- HAZARDOUS MATERIALS MUST BE SEGREGATED AND STORED IN PROPER DRUMS, QUATREX, OR CONTAINER TO ALLOW ACCESS FOR INSPECTION AND EMERGENCY RESPONSE IN THE EVENT OF A SPILL OR RELEASE
- ALL OF THE CONTAINERS IN THE HAZMAT STORAGE AREA ARE CLEARLY LABELED. IDENTIFY THE STORAGE CONTAINER THAT MATCHES THE HAZMAT THAT YOUR TRANSPORTING (FOR EXAMPLE—SEE BELOW)

AEROSOL CANS **INTO** **AEROSOL CONTAINER**





- WHEN PLACING HAZMAT PRODUCT INTO THE STORAGE AREA CONTAINERS, GENERAL HOUSE KEEPING RULES APPLY. CONTAINERS WITH PRODUCT SHALL BE KEPT IN AN UPRIGHT POSITION AND MATERIAL SHALL BE ARRANGED TO PREVENT DAMAGE FROM FALLING OR DISLODGING

Hazardous Materials/Waste Management requires the commitment and participation of all site personal. If you have questions or are unsure of where to dispose of your Hazardous Material/Waste please call:

Site Services at extension 6902, Environment Department at extension 6747

THANK YOU FOR YOUR CO-OPERATION

Noise Monitoring and Abatement Plan, Version 3

MEADOWBANK GOLD PROJECT

WHALE TAIL PIT PROJECT

Noise Monitoring and Abatement Plan

In Accordance with

NIRB Project Certificates No. 004 and No.008

Prepared by: Agnico Eagle Mines Limited

Version 3

June 2018

EXECUTIVE SUMMARY

GENERAL INFORMATION

This Noise Monitoring and Abatement Plan (NMAP) describe the operational procedures for noise abatement and monitoring at the Meadowbank Gold Project site and Whale Tail Pit Project, with respect to wildlife disturbance and potential offsite human receptors. This plan is an updated version of the Noise Management and Abatement Plan (Version 2) –January 2014.

ANNUAL REVIEW

The NMAP will be reviewed regularly and updated as necessary. Completion of the review of the NMAP will be documented through signatures of the personnel responsible for reviewing, updating and approving the NMAP.

RECORD OF CHANGES

A record will document all significant changes that have been incorporated in the NMAP subsequent to the latest review.

DISTRIBUTION LIST

Agnico Eagle Mines Limited (AEM) will maintain a distribution list for the NMAP, providing information about all parties that receive the plan.

IMPLEMENTATION SCHEDULE

The proposed implementation schedule for this Plan is effective immediately (June 2018) subject to any modifications proposed by the NIRB as a result of the review and approval process.

DISTRIBUTION LIST

Agnico Eagle Mines - Environmental Superintendent
Agnico Eagle Mines– Environmental Coordinator

DOCUMENT CONTROL

Version	Date	Section	Page	Revision
1	09/2009			
2	01/2014	All		See Record of Changes
3	06/2018	All		Plan including Meadowbank and Whale Tail Pit

Version 3

Prepared By: Environment Department



Approved By: _____

Nancy Duquet Harvey

Environmental Superintendent

TABLE OF CONTENTS

EXECUTIVE SUMMARY ..... **i**
IMPLEMENTATION SCHEDULE ..... **ii**
DISTRIBUTION LIST ..... **ii**
DOCUMENT CONTROL ..... **iii**
SECTION 1 • INTRODUCTION **1**
SECTION 2 • TARGET SOUND LEVELS **2**
2.1 Wildlife 2
2.2 Offsite Human Receptors 2
SECTION 3 • NOISE MONITORING **3**
3.1 Objective 3
3.2 Monitoring Locations 3
3.2.1 R1 4
3.2.2 R2 4
3.2.3 R3 4
3.2.4 R4 4
3.2.5 R5 4
3.2.6 R6 4
3.2.7 R7 5
3.2.8 R8 5
3.2.9 R9 5
3.2.10 R10 5
3.2.11 R11 5
3.3 Monitoring Frequency 8
3.4 Sound Level Meter 8
3.5 Weather Data 8
3.6 Field Notes 8
3.7 Quality Control 8
3.8 Data Analysis 8
3.9 Report 9
SECTION 4 • NOISE ABATEMENT **10**

4.1 General Practices 10
4.2 Daily Noise Occurrences 10
4.3 Intense Noise Occurrences 12
4.3.1 Strategy 12
4.3.2 Identification 12
4.3.3 Abatement 12
SECTION 5 •MANAGEMENT AND OPERATION 13
5.1 Management Responsibility 13
5.2 Equipment Operation 13
5.3 Equipment Maintenance 13
SECTION 6 •PLAN REVIEW 14
SECTION 7 •REFERENCES 15

LIST OF TABLES

Table 1 – Meadowbank Site Base Noise Monitoring Locations 3
Table 2 –Whale Tail Site Base Noise Monitoring Locations 4
Table 3 - Standard mitigation measures for daily noise occurrences. 10

LIST OF FIGURES

Figure 1 - Meadowbank noise monitoring stations 6
Figure 2 – Whale Tail noise monitoring stations 7

LIST OF APPENDICES

Appendix A: Example of noise monitoring field sheet

Appendix B: Environmental Noise Monitoring Guide - Bruel and Kjaer 2250 Sound Level Meter

SECTION 1 • INTRODUCTION

The following document presents Meadowbank and Whale Tail Pit Noise Monitoring and Abatement Plan (the Plan) in support of Meadowbank Nunavut Impact Review Board (NIRB) Project Certificate No.004 Condition 62 and Whale Tail NIRB Project Certificate No.008 Conditions 4 and 5. This plan outlines Agnico Eagle's strategy for reducing noise disturbance on and near the Meadowbank and Whale Tail mine sites, with particular regard to wildlife and potential offsite human receptors.

Section 2 of this Plan describes the site's target sound levels based on Environment and Climate Change Canada (2009) guidelines.

Section 3 describes the onsite noise monitoring program that will be conducted to track typical noise levels in the local study area and to assist in the continual improvement of noise mitigation whenever possible.

Finally, Section 4 describes the onsite noise abatement plan for anticipated common noise sources and intense noise occurrences.

SECTION 2 •TARGET SOUND LEVELS

2.1 WILDLIFE

As no specific noise guidelines were found for the Meadowbank and Whale Tail project area, recommendations made by Environment and Climate Change Canada's "Environmental Code of Practice for Metal Mines" (2009) were adopted. This document states that:

> *"In residential areas adjacent to mine sites, the equilibrium sound pressure level (L_{eq}) from mining activities should not exceed 55 dBA during the day and 45 dBA at night. Ambient noise can also affect wildlife, so sites in remote locations should also work to meet these objectives for off-site ambient noise levels."*

Therefore, target sound levels at the perimeter of the Meadowbank and Whale Tail sites are:

Daytime (0700 – 2300 h) L_{eq} (1hr) = 55 dBA

Nighttime (2300 – 0700 h) L_{eq} (1hr) = 45 dBA

Results from noise monitoring stations located at the perimeter of the Meadowbank and Whale Tail sites (including the noise monitoring stations located near the Amaruq Exploration/Haul Road) are compared to these guidelines to assist in ongoing noise management (see Section 3).

To further ensure that mine site activities are not impacting wildlife more than predicted, Agnico Eagle maintains a Terrestrial Ecosystem Management Plan (Agnico Eagle, 2018), as per Condition 54 of the Meadowbank NIRB Project Certificate and Condition 28 of the Whale Tail NIRB Project Certificate.

2.2 OFFSITE HUMAN RECEPTORS

Although no offsite impacts to human receptors were identified in the FEIS due to the remote location of the mine site, a Permissible Sound Level (PSL) may be developed in the event of construction of a dwelling in an impacted location. Based on the Alberta Energy and Utilities Board (EUB)'s "Noise Control Directive User Guide" (1999, 2007) this value will be the existing noise level at the new dwelling, when constructed.

SECTION 3 • NOISE MONITORING

3.1 OBJECTIVE

The objective of noise monitoring at the Meadowbank and Whale Tail sites is to measure representative noise levels at the perimeter of the mines and roads, and to assist in the implementation of noise mitigation measures, wherever feasible (see Section 4).

3.2 MONITORING LOCATIONS

Agnico Eagle will continue to monitor noise levels around the Meadowbank mine site at five locations previously determined in consultation with Golder Associates Ltd. UTM coordinates for the base noise monitoring stations are provided in Table 1, and are shown in relation to the mine site features in Figure 1. All sites are located at a distance from noise sources to be representative of sound levels in locations where wildlife may be expected to occur, and where noise-related PPE is not required. These locations may be adjusted as mine site operations change, to target specific activities or receptors.

Table 1 – Meadowbank Site Base Noise Monitoring Locations

Location Name	Easting	Northing
R1	636018	7217101
R2	636795	7214435
R3	641121	7214417
R4	639441	7218750
R5	633779	7214494

Agnico Eagle will also monitor noise levels around the Whale Tail mine site and Whale Tail Pit Haul road at six locations. As per the Condition 5 of NIRB Project Certificate No.008, for noise monitoring, four (4) monitoring stations are located in the vicinity of the Whale Tail Pit and two (2) are along the Haul road. Four (4) of the chosen locations (R6, R7, R8 and R9) are the same receptor locations used for baseline monitoring (refer to Volume 4, Whale Tail FEIS, Agnico Eagle, 2016). Two (2) additional locations (R10 and R11) were selected close to Whale Tail Pit. UTM coordinates for the base noise monitoring stations are provided in Table 2, and are shown in relation to the mine site features in Figure 2.

Table 2 –Whale Tail Site Base Noise Monitoring Locations

Location Name	Easting	Northing
R6	640708	7221964
R7	620194	7239038
R8	610725	7256677
R9	602488	7255946
R10	609516	7254055
R11	608 786	7257008

3.2.1 R1

Location R1 is approximately 700 m south of the explosive storage area, 400 m north of the all-weather access road, and 3,500 m north of the Meadowbank camp. Third Portage Lake is nearby to the south, and surrounding terrain is rocky tundra with some vegetation.

3.2.2 R2

Location R2 is approximately 600 m southwest of the airstrip, and 1,600 m northwest of the Meadowbank camp. Third Portage Lake is to the west and southwest and surrounding terrain is vegetated tundra with rocky outcrops.

3.2.3 R3

Location R3 is approximately 1,800 m east of the East Dike, and 3000 m east of the Meadowbank camp. Second Portage Lake is to the west and east, and surrounding terrain is vegetated tundra with rocky outcrops.

3.2.4 R4

Location R4 is approximately 1,100 m southwest of Phaser Pit, and 5,350 m north of the Meadowbank camp. Turn Lake is to the west, and surrounding terrain is vegetated tundra with rocky outcrops.

3.2.5 R5

Location R5 is in the exploration camp area, near the all-weather access road, approximately 3,500 m west of the airstrip and 4,500 m west of the Meadowbank camp. Third Portage Lake is immediately to the east, and surrounding terrain away from the shoreline is vegetated tundra with rocky outcrops. This location is situated on a known caribou migration route.

3.2.6 R6

Location R6 is located approximately 1,500 m east from the proposed Whale Tail Pit Haul road and approximately 1,500 m north from the centre of the Vault Pit. The terrain is relatively flat and covered by vegetation typical of tundra (i.e., low vegetation). In addition, the ground surface near

the receptor is covered by scattered rocks. The waste rock storage area of the Vault Pit is located approximately 750 m south from the monitoring site.

3.2.7 R7

Location R7 is located approximately 1,500 m east from the proposed Whale Tail Pit Haul Road. The ground surface around the monitoring site is generally covered by vegetation typical of tundra (i.e., low vegetation). In addition, the ground surface is covered with scattered rocks.

3.2.8 R8

Location R8 is located on an elevated plateau approximately 1,500 m northeast from the Whale Tail Pit site. The ground surface is covered by vegetation typical of tundra (i.e., low vegetation) and covered by scattered rocks.

3.2.9 R9

Location R9 is located approximately 1,500 m northwest from the proposed Whale Tail Pit. The ground surface is covered by vegetation typical of tundra (i.e., low vegetation) and covered by scattered rocks.

3.2.10 R10

Location R10 is located approximately 1,000 m southeast from the Whale Tail Pit site, on the east side of Whale Tail Lake.

3.2.11 R11

Location R11 is located approximately 1,000 m north from the Whale Tail Pit site, on the east side of Nemo Lake.

634000 636000 638000 640000 642000 644000

7218000 7216000 7214000 7212000

N

R1 R2 R3 R4 R5

NP 2

Dodleg North

Dodleg Pond

North Basin

Second Portage Lake

Third Portage Lake

Lake

Legend

NOISE MONITORING POINT

ROADS

0 0.125 0.25 0.5 0.75 1 Kilometers

SNC·LAVALIN

AGNICO EAGLE MINE LIMITED
MEADOWBANK DIVISION

WORK DOCUMENT

Project : 655183

Meadowbank Noise Monitoring Stations

Coordinate system UTM, zone 14, NAD83

June 11, 2018 | **Fig.1**

590 000 600 000 610 000 620 000 630 000 640 000 650 000 660 000

7 260 000 7 250 000 7 240 000 7 230 000 7 220 000 7 210 000

N

Whale Tail Pit

Nemo Lake

R11

R8

R9

R10

Mammoth Lake

Whale Tail Lake

R7

Innugugayualik Lake

Pipedream Lake

R6

Vault Pit

Legend

- NOISE MONITORING POINT
- WHALE TAIL HAUL ROAD
- VAULT PIT
- WHALE TAIL PIT

0 1 2 4 6 8 Kilometers

SNC·LAVALIN

AGNICO EAGLE MINE LIMITED
MEADOWBANK DIVISION

WORK DOCUMENT

Project : 655183

Whale Tail Noise Monitoring Stations

Coordinate system UTM, zone 14, NAD83

June 11, 2018 | **Fig.2**

3.3 MONITORING FREQUENCY

Agnico Eagle field staff will aim to conduct a minimum of two noise surveys per year at each of the locations described in Section 3.2. Each survey will be for a 2-4 days period to ensure significant data is collected. These surveys provide data on average noise levels during a typical day, as well as variability of noise levels within the day.

3.4 SOUND LEVEL METER

A Bruel and Kjaer Model 2250 integrating sound level meter will be used to conduct the noise surveys at the locations described in Section 3.2. The noise level logging rate will be set at one-minute intervals, and sound will be recorded in 10 minute intervals.

The parameters logged each minute will be:

- Integrated average sound level, in dBA – L_{eq}
- Absolute maximum sound level, in dBA – L_{max}
- Absolute minimum sound level, in dBA – L_{min}

3.5 WEATHER DATA

Weather data for the noise monitoring periods is collected using onsite weather stations. Hourly data for wind, temperature and relative humidity is available from this station. This data is used to screen out sound levels collected under inappropriate conditions (see Section 3.7).

3.6 FIELD NOTES

A pocket weather meter (Kestrel 3000) will be used by field staff to record wind speed, direction and temperature at the beginning and end of each monitoring period. Other records include precipitation, cloud cover and observed noises during instrument set-up and take-down. See Appendix A for an example field monitoring sheet.

3.7 QUALITY CONTROL

Calibration of the sound level instrument will be performed before and after each monitoring period using a Bruel and Kjaer Type 4231 Calibrator, to ensure variance is within 0.5 dB. Calibration results are recorded in field notes. Estimated uncertainty of the calibrator is ± 0.12 dB at a 99% confidence level. Professional calibration of the instrument will be performed as described in Section 5.

3.8 DATA ANALYSIS

Since noise levels vary over time, the monitoring instrument used measures near-continuously and reports a single-number value for each minute, representing the “equivalent sound level” (L_{eq}). This value is the average sound level occurring over the specified time period (i.e.one minute). Alternatively, it is the sound level that would produce the same total amount of acoustical energy in the specified time period as the measured sound levels did.

Data downloaded from the instrument will be filtered to remove measurements collected outside of acceptable weather conditions (wind speed > 4.17 m/s; relative humidity > 90%). All data points associated with the first and last 30 min of measurement will be filtered out to remove noise from technicians, and more than 30 min of data will contribute to hourly averages.

One-minute L_{eq} values produced by the instrument will be used to calculate hourly, day-time (7am-11pm), night-time (11pm-7am) and 24 hr L_{eq} values. These time periods are based on Health Canada recommendations, as described in Golder (2012). L_{eq} values for each time period are calculated as the geometric mean of filtered one-minute L_{eq} values.

3.9 REPORT

Results of the noise monitoring program will be compiled annually and reported to NIRB and Environment and Climate Change Canada. Reports will include, for each station:

- Visual display of one-minute L_{eq}, one-minute maximum and one-minute minimum values;
- Hourly, daytime, nighttime and 24 hr L_{eq} values, including number of hours of valid data contributing to each;
- Weather data for each monitoring period (temperature, wind speed and direction);
- Audible noises noted on field logs and in sound files, especially those corresponding with intense noise occurrences (see Section 4.3);
- Comparison of daytime and nighttime L_{eq} values to target sound levels, for applicable stations (those located at the site perimeter);
- A historical comparison of daytime, nighttime and 24-hr L_{eq} values, and comparison to predicted noise levels for the Projects;
- Recommendations for additional monitoring or for implementation of additional abatement measures, if possible, when sources of intense noise occurrence are confirmed.

SECTION 4 • NOISE ABATEMENT

4.1 GENERAL PRACTICES

The Meadowbank and Whale Tail Pit mine sites infrastructure are laid out to concentrate all activities within a small footprint (see Figures 1 and 2). As a result, the common noise sources at site are in close proximity to one another and for the most part are contained within separate buildings (i.e. facilities such as the crusher, SAG mill are indoors to reduce noise intensity). Personnel office spaces and accommodations are separate from these operational buildings. The Meadowbank and Whale Tail site infrastructure are oriented to reduce intense noise occurrences that may impact wildlife or personnel. These attenuation measures taken during the design and construction of the infrastructure are an important component of noise abatement on the mine sites.

In general, all departments will strive to ensure that equipment manufacturers have incorporated noise attenuation into their design as much as possible, will maintain equipment in good working condition, and will position stationary equipment away from potential receptors of concern or in enclosed areas.

4.2 DAILY NOISE OCCURRENCES

Common noise sources that are daily occurrences may include road traffic, air traffic, impact equipment, stationary equipment (such as generators, compressors or pumps), construction activities, blasting, material handling (i.e. crushers, cranes), earth movers (i.e. truck loaders and dozers) and the Meadowbank primary plant facilities (i.e. SAG mill, ball mill and power plant).

Table 3 describes the project-related noise sources that have been identified as well as proposed mitigation/management measures to be implemented whenever possible during operation of the facility.

Table 3 - Standard mitigation measures for daily noise occurrences.

Noise Source	Noise Mitigation Measures
Whale Tail Haul Road Construction	• Operate construction equipment within specification and capacity (i.e., don't overload machines) • Adequate equipment maintenance • Avoid operating numerous pneumatic tools at the same time, and spread operation throughout working periods • Avoid prolonged idling • If blasting is required, preference for daytime blasting
Road traffic (mine site, AWAR) and Haul Roads operation	• During maintenance, check that noise abatement devices are in good order (e.g., brakes, exhaust mufflers, engine hoods) • Enforce speed limits • Use shallow slopes for haul road

Noise Source	Noise Mitigation Measures
	• Educate truck drivers about the characteristics of diesel engines (i.e., that the flat torque characteristic allows ascending an incline in a higher gear, which is a less noisy operation) • Keep road surfaces in good repair to reduce tire noise • Avoid prolonged idling • Avoid trucking operation during night time on access road, when possible
Air traffic (Meadowbank)	• Avoid low altitude flights (not lower than 610 m in sensitive bird/wildlife areas), except on take-off and landing • Restrict air traffic to daytime hours except for emergencies
Impact equipment (pile drivers, jack hammers, drills, pneumatic tools)	• Avoid operating numerous pneumatic tools at the same time, and spread operation throughout working periods
Stationary equipment (compressors, generators, pumps)	• Keep equipment in good condition
Blasting	• Use delays, both surface and down hole • Preference for daytime blasting • Blasting in depressed pits (normal production practice)
Outdoor material handling equipment (crushers, concrete mixers, cranes)	• Place crushers in sheltered/enclosed locations if possible • Maintain equipment in good working condition • Turn equipment off when not in use if practicable
Earth moving equipment (trucks, loaders, dozers, scrapers)	• Aim to restrict equipment age so only newer, more efficient machinery will operate onsite • Operate equipment within specification and capacity (i.e., don't overload machines) • Use noise abatement accessories such as sound hood and mufflers
Primary plant facilities (gyratory primary crusher, SAG mill, ball mill, power plant)	• Provide building with walls absorbing noise • Maintain equipment on a regular basis, replace worn parts, lubricate as required • Provide diesel plant units with efficient intakes and exhaust silencers • Use conveyor system with low noise output, paying particular attention to rollers • Enclose conveyors where necessary
Utilities and services	• Ensure that a rotating biological contactor treatment system operates quietly • Dump solid waste behind barriers

4.3 INTENSE NOISE OCCURRENCES

4.3.1 Strategy

It has been found that people (and therefore, potentially, wildlife) are more tolerant of louder continuous background noise than a quieter baseline punctuated by high-level peaks. Therefore, the intense noise abatement strategy acknowledges the common continuous noise sources, and aims to reduce the occurrence of intense noise peaks. For the purposes of this Plan, intense noise occurrences are considered to be those that exceed the target sound levels described in Section 2. Examples of these may be low flying air traffic, exceedingly loud blasting or nearby impact equipment. Since noise monitoring stations may be located away from the site perimeter, the target sound levels are only used as a conservative benchmark to filter audio files for closer analysis and adaptive noise management.

4.3.2 Identification

Through the annual monitoring program, 24-h sound profiles for each monitoring station will be developed, and the daytime equivalent sound level (L_{eq}) identified (see Section 3.7). Recorded sound files will then be reviewed in conjunction with field notes to attempt to determine the sources of intense noises (> target sound levels).

4.3.3 Abatement

When sources of intense noises are confirmed, the Environment Department staff will work with the responsible party to determine whether further abatement of the noise is possible. At a minimum, this will include ensuring the previously identified mitigation measures (Table 3) are being applied. If all abatement practices are in use and the source continues to contribute to intense noise occurrences in subsequent monitoring events, the implementation of additional appropriate measures will be investigated. This method of intense noise identification means that there will be a continual effort to reduce the sounds contributing to the loudest, most disruptive noise peaks onsite, even as site operations evolve and average noise levels change.

SECTION 5 • MANAGEMENT AND OPERATION

The following presents the plan's management responsibility, and operational procedures for the Bruel and Kjaer Model 2250 integrating sound level meter.

5.1 MANAGEMENT RESPONSIBILITY

Operation and monitoring of the noise stations will come under the responsibility of the Environment Superintendent. Designation of training requirements is the responsibility of the Environment Department.

5.2 EQUIPMENT OPERATION

The Environment Department will be responsible for the operation of equipment and collection of samples by appropriately trained personnel consistent with detailed written operating instructions (SOP – Appendix B) from qualified personnel. The SOP will be kept up-to-date and any changes will be communicated to relevant personnel.

5.3 EQUIPMENT MAINTENANCE

As recommended by the manufacturer and to make sure results are in compliance with good practices, the meter will be factory calibrated and certified per the schedule outlined below.

Calibration	Interval
Microphone	2 years
Meter	2 years
Calibrator	1 year

SECTION 6 • PLAN REVIEW

The Noise Monitoring and Abatement Plan will be reviewed regularly by the Environmental Superintendent and be updated if any changes to the equipment or the program occur.

SECTION 7 • REFERENCES

Agnico Eagle (2018). Terrestrial Ecosystem Management Plan, Meadowbank Division. June 2018.

Agnico Eagle (2016). Final Environment Impact Statement (FEIS) Volumes 1 to 8, Whale Tail Pit Project, Meadowbank Division. Volume 4 – Atmospheric Environment

AEM (2009). Noise Management and Abatement Plan. Meadowbank Gold Project. Version 1. September, 2009

Alberta Energy and Utilities Board (1999, 2007). Directive 038 - Noise Control.

Environment Canada (2009). Environmental Code of Practice for Metal Mines. 1/MM/17 Mining Section, Mining and Processing Division, Public and Resources Sectors Directorate, Environmental Stewardship Branch.

Health Canada (2005) Noise Impact Assessment Orientation Document for Projects Triggering CEAA. Prepared by the Healthy Environments and Consumer Safety Branch. Health Canada, May 2005.

Golder Associates (Golder), 2012. 2011 Noise Monitoring, Meadowbank Division, Nunavut. Prepared for Agnico-Eagle Mines Ltd. February, 2012.

Appendix A

Example of noise monitoring field sheet

MONITORING STARTS			
Operator:			
Location:			
Noise Meter Start Time:			
Date:			
Calibration complete ?:			
Sensitivity			
Derviation			
Time of Calibration:			
Battery Power Check:	Good		Poor
Photographs of Setup (Y/N)			
Photographs of Surrounding (Y/N)			
Check available disk memory (Y/N)			
Cloud cover:	cloudy	partly cloudy	sunny
Height of cloud (feet):	0-10,000	10,000-25,000	25,000 +
Air Temperature (C):			
Wind Speed (km/hr):			
Wind Direction: North wind (wind blows from North)	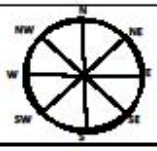		
Barometric Pressure (kPa):			
Relative Humidity (%)			
Precipitation:	none	drizzle	rain
GENERAL SITE DESCRIPTION			
GPS Location	Latitude	Longitude	Altitude
Type of Ground Surface:			
Acoustic Environment:			
Traffic			
Human activities			
Animal			
Other noise sources			
MONITORING ENDS			
Operator:			
Record Data File Name:			
Total Monitoring Period			
Noise Meter End Time:			
Date:			
Calibration complete ?:			
Sensitivity			
Derviation			
Time of Calibration:			
Check file size (GB)			
Battery Power Check:	Good		Poor
Cloud cover:	cloudy	partly cloudy	sunny
Height of cloud (feet):	0-10,000	10,000-25,000	25,000 +
Air Temperature (C):			
Wind Speed (km/hr):			
Wind Direction: North wind (wind blows from North)	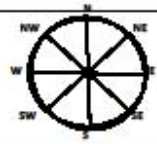		
Barometric Pressure (kPa):			
Relative Humidity (%)			
Precipitation:	none	drizzle	rain
Departure Time:			

Appendix B

Environmental Noise Monitoring Guide - Bruel and Kjaer 2250 Sound Level Meter

GOLDER ASSOCIATES

ENVIRONMENTAL NOISE MONITORING GUIDE



Doc. No. 747 Ver.0

September 2008

08-1428-0007/4000/4100

TABLE OF CONTENTS

SECTION PAGE
1.0 LONG-TERM MONITORING CONFIGURATION 1
1.1 Storage Case Setup 2
1.2 Outdoor Microphone Assembly 3
1.3 Hardware Setup Procedure 4
1.3.1 Tripod 4
1.3.2 Outdoor Microphone Kit 4
1.3.3 Extension Cable Connection 5
1.3.4 Long Term Power Supply (12V DC) 6
1.3.5 Extension Cable Arrangement 7
1.4 SLM Setup Procedure 8
1.4.1 Data Storage Card - 4.0 GB Memory (CF/SD) Card 8
1.4.2 Monitoring Template 11
2.0 SHORT TERM MONITORING CONFIGURATION 14
2.1 B&K 2250 Hand-held Configuration 14
2.2 Frequency Analyzer Template 16
3.0 POWER SUPPLY 17
3.1 Panasonic 12 Volt External Battery Charging 17
3.2 2250 SLM Internal Battery Charging 19
4.0 FIELD MEASUREMENT RECORDS 20
5.0 CALIBRATION 21
5.1 Calibrator 21
5.2 Calibration Procedure 21
5.3 High Deviation Level 24
6.0 START NOISE MONITORING 25
7.0 POST MEASUREMENT PROCEDURES 28
7.1 Data Check 28
7.2 Save 29
7.3 Calibration 29
8.0 DATA DOWNLOAD 30
8.1 CF/SD Card Reader and USB Dongle Key 31
8.2 Data Archive 31
9.0 EQUIPMENT TROUBLESHOOTING CASE STUDY 32
9.1 Failed Power Connection 32
9.2 Invalid Data Collection 32
9.2.1 Poor Weather: Wind Speed and Precipitation 32
9.2.2 B&K 2250 Analyzer Calibration Fault 34

10.0 EQUIPMENT MAINTENANCE 35
10.1 Microphone Maintenance 35
10.2 B&K 2250 Analyzer Maintenance 36
10.3 B&K 4231 Calibrator Maintenance 37
10.4 Outdoor Microphone Assembly Maintenance 37

1.0 LONG-TERM MONITORING CONFIGURATION

The Bruel and Kjaer 2250 sound level meter (2250 SLM) can be configured for short or long term noise monitoring. The photo below shows the long-term monitoring setup including the weather protective case. In long-term monitoring, the following components are required:

- 2250 SLM;
- Microphone and Preamp Assembly;
- Outdoor Microphone Kit;
- Microphone Extension Cable;
- Tripod;
- External 12 Volt DC Power Supply;
- Power Supply Cable Connector;
- External Memory Card (CF-Card or SD-Card);
- Support Pegs; and
- Electrical Tape.



1.1 Storage Case Setup

The monitoring components and setup for the equipment storage case are shown below.



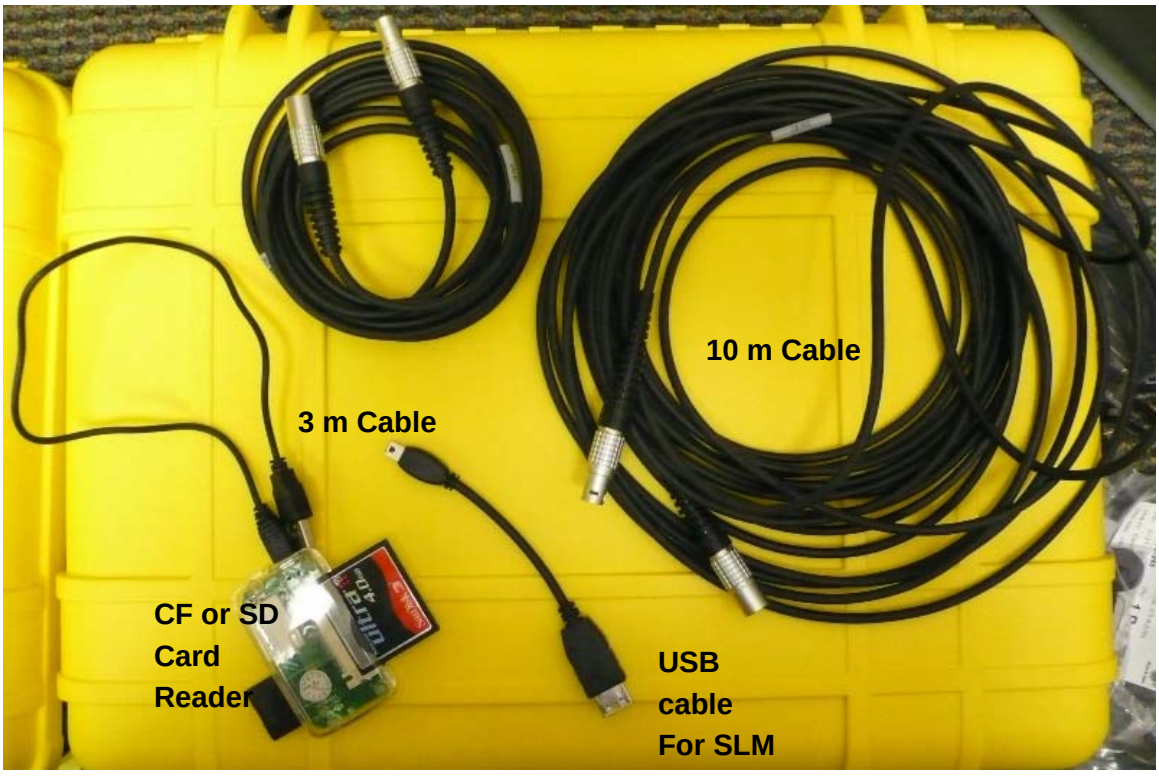

1.2 Outdoor Microphone Assembly

The procedure for assembling the outdoor microphone is summarized below:



1.3 Hardware Setup Procedure

1.3.1 Tripod

Extend the tripod to its maximum extension. Secure a support peg to end of each tripod leg, making sure that the pegs are parallel to the leg. Using electrical tape (note electrical tape is ideal as it is durable and can be easily removed) to secure the tripod legs to the support pegs such that little to no swaying or tipping is possible. Insert the support pegs into the ground far enough to provide ample support of the legs of the tripod.

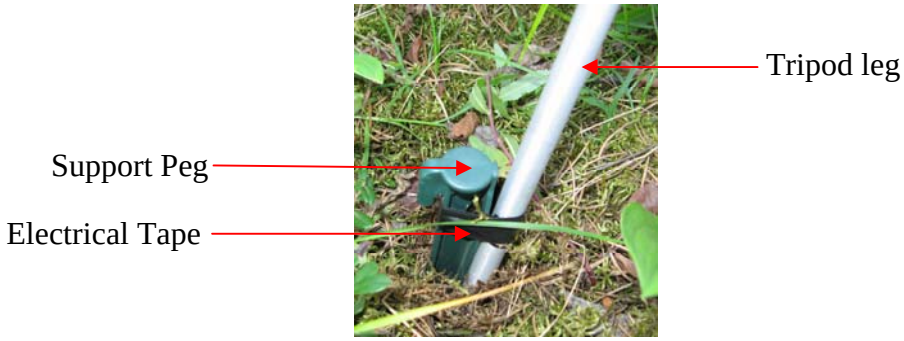

1.3.2 Outdoor Microphone Kit

Remove the outdoor microphone kit windscreen and extension cable and attach it to the top of the extension pole. Run the microphone extension cable down one of the tripod legs securing it with electrical tape approximately every 2 feet along the leg as shown below.



1.3.3 Extension Cable Connection

Connect the microphone extension cable to the input of the B&K 2250 Analyzer making sure that the dot on the extension cable is lined up with the dot on the input of the Analyzer (see left figure below).



Note, when dismantling the meter it may be difficult to remove the microphone extension cable from the B&K 2250 Analyzer. If difficulties do arise, place a cloth over the sleeve and use pliers to gently grip and pull back the sleeve to release the connection as shown below.



Sleeve

Place cloth over sleeve.

Use pliers to gently pull back sleeve.

1.3.4 Long Term Power Supply (12V DC)

Connect the power supply cable from the 12V Panasonic battery to the external power supply located at the base of 2250 SLM. There are two indicators to confirm that 12V DC power supply is connected successfully to the 2250 SLM:

- The green LED which is located at the bottom of the B&K 2250 Analyzer should be on; and



Check 2250 Analyzer LED for power.

- The battery symbol on the B&K 2250 Analyzer screen display changes from a battery to a power plug symbol - as shown in the figure below.



External power symbol indicating that external power is connected.

A flashing green LED light indicates the internal battery of the Sound Level Meter is fully charged (100%).

1.3.5 Extension Cable Arrangement

There are two data cable available (3 m and 10 m). Use the 3 m when connect to the handheld microphone pre-amp and use the 10 m extension cable when using the outdoor microphone kit. The microphone extension cable must extend across the notched portion of the sound level meter case as shown below.

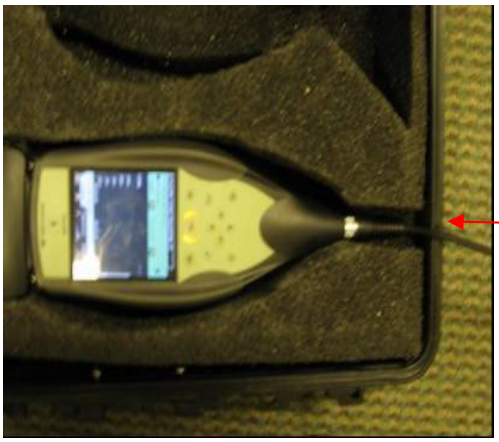

Extend microphone extension cord over notched portion of protective case.

After securing the cables of the sound level meter, the case should be placed underneath the three legs of the tripod as shown below. Coil the excess cable length and store it inside the case. Tape the microphone extension cord along the tripod to avoid tripping and noise contamination (wind).



Tape microphone extension cord along tripod.

1.4 SLM Setup Procedure

1.4.1 Data Storage Card - 4.0 GB Memory (CF/SD) Card

1. Insert an empty 4 Gigabyte memory card into the B&K 2250 Analyzer. Upon inserting the CF/SD card, the B&K 2250 Analyzer should acknowledge the card and display the prompt to accept the card. Click "Yes" to this.



2. Select the "Main Menu" which is shown by three bars to the lower right on the B&K 2250 Analyzer screen as shown above left. Then select the "Explorer" (see below) option so that a folder can be created on the CF/SD card.



3. The next step involves creating a folder on the CF/SD card in which to store the noise data. Creating a new folder is done by selecting the folder icon with a star as shown in the figure below left. A prompt will display that a new job folder will be created. Select "Ok".





4. Renaming the folder is the next step. Select the folder, right click mouse button, and then select the "Rename" option. Choose the name of the folder appropriately to help with identification of noise monitoring location during data analysis and processing later (*e.g.*, MEADOWBANK030308).





5. Once the folder has been renamed, the folder must be identified as the default for data storage. This is done by selecting the folder itself and selecting the "Open" option (1 below). Now select the folder icon with the check mark (2 below) on it to set the current job folder (NR1 in photo below) as the default job folder, *i.e.*, all measurements will be stored within this folder.

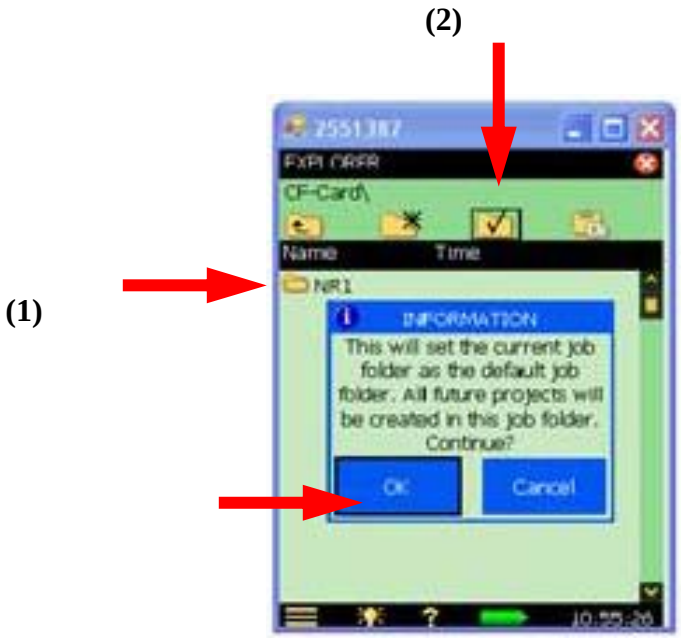

6. Observe the file path that is shown at the top of the display screen, it should display that the CF/SD card is at the top level and that the folder (NR1 in photo below) is one level below, *i.e.*, "CR-Card\NR1" as is shown in the below left screen.



7. Exit the “Explorer” screen by selecting the red “x” at the top left of the display screen.

1.4.2 Monitoring Template

The 2250 SLM is loaded with 10 standard monitoring templates. Each of the 10 standard templates performs a different type of measurement. The standard templates can be modified and saved as a Project Template to retain specific display settings and measurement setups. The template itself does not store any measurements. A Project Template named “MEADOWBANK 24hr LOGGING” has been designed to conduct the 24 hr noise monitoring. Use the following procedures to load the template.

1. Select the “Main Menu” and select the “Template Explorer” option as shown below. All the available templates will be shown on the screen.

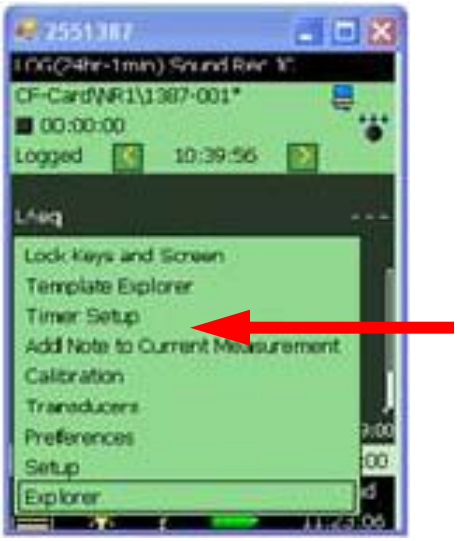

2. Choose the “MEADOWBANK 24hr LOGGING” and then select “Open”.

3. The common measurement settings selected in this template are shown in the following table:

MEADOWBANK 24hr LOGGING SETTING

Input		
Input	Top Socket	
Trans. Used	4152_0 (########) Check serial # on mic	Outdoor kit
Sound Field Correction	Free-field	
Extended Low Frequency	Off	
Frequency Weightings		
Broadband (excl.Peak)	AZ	Z is linear
Broadband Peak	A	
Spectrum	Z	
Bandwidth (1/3-octave)		
Statistics		
Broadband Statistics based on	LAF	
Spectral Statistics based on	LXF	
Percentile 1	1 %	
Percentile 2	5 %	
Percentile 3	10 %	
Percentile 4	50 %	
Percentile 5	90 %	
Percentile 6	95 %	
Percentile 7	99 %	
Measurement Control		
Preset Logging Time	1.00:30:00	1 day and 30 minutes
Logging Period	00:01:00	1 minutes
Synchronize with Clock	Yes	Save at 1:00, 1:01, 1:02
Logged Broadband		
Full Statistics	Yes	
Broadband Parameters	Selected	
Parameter 1	LAeq	
Parameter 2	LApeak	
Parameter 3	LAFmax	
Parameter 4	LAFmin	
Parameter 5	LZeq	
Parameter 6	LAIeq	
Parameter 7	LCeq-LAeq	
Parameter 8	Overload	
Logged Spectrum		
Full Spectral Statistics	Yes	
Spectrum Parameters	Selected	
Spectrum	LZeq	

MEADOWBANK 24hr LOGGING SETTING continued

Level Trigger (OFF)		
Trigger	Off	
Start Slope	Rising	
Start Level	50 dB	
Start Duration	2 s	
Stop Level	40 dB	
Stop Duration	2 s	
Parameter	LAF (SPL)	
Sound Recording		
Recording Control	Automatic	
Recording Quality	Fair (6.6 kHz)	
Recorded Signal	Input Z-weighted	
Automatic Gain Control	On	
Duration Limits	Off	

2.0 SHORT TERM MONITORING CONFIGURATION

The following components are for short term monitoring:

- 2250 SLM;
- Microphone and Preamp assembly;
- Windscreen;
- External Compact Flash Memory Card (CF/SD-Card);
- Tripod; and
- Tripod mounting bracket.

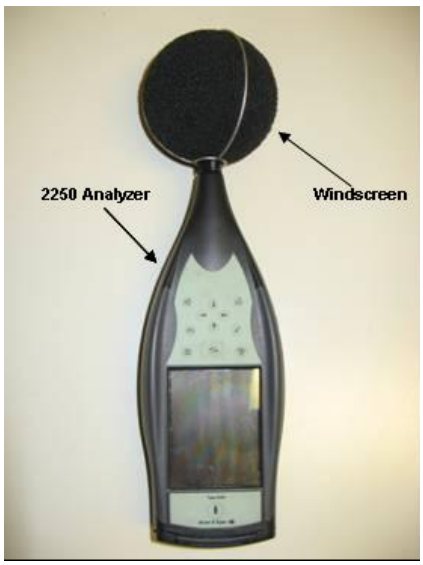

Since short term measurements rarely require an external power source. The B&K 2250 internal battery is typically used as the power source which can supply the meter for approximately 7 hours of operating time. The battery icon will display the estimate battery life remain in the internal battery. The photo on the left shows the hand-held configuration assembly.

2.1 B&K 2250 Hand-held Configuration

1. Connect the microphone to the pre-amplifier.





Option:
3 m extension cable can be inserted here for extension purposes.
(*e.g.*, ventilation fans on building wall)

2. Insert the microphone and pre-amplifier component into the B&K Analyzer making sure to line up the dot on the preamplifier with the dot on the B&K Analyzer.

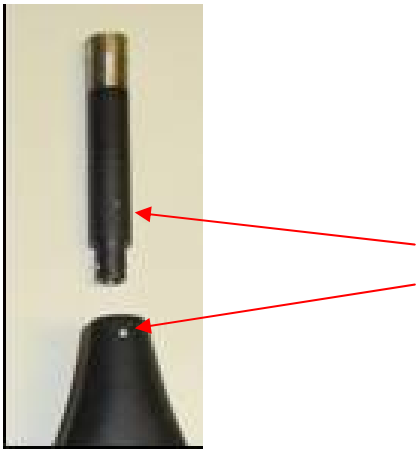

3. Connect the windscreen to the microphone-preamplifier.



4. Mount the SLM on the tripod with the tripod adaptor.



2.2 Frequency Analyzer Template

Select the "Main Menu" and select the "Template Explorer" option as shown in Section 1.4.2 above. All the templates available will be shown on the screen. Choose the Project template named "MEADOWBANK SHORT-TERM FREQ ANALYZER", and then select "Open". This template is setup so that the B&K 2250 Analyzer records the frequency content in 1/3-octave measurements and broadband sound level measurements simultaneously. The measurement settings selected in this template are shown in the following table:

MEADOWBANK SHORT-TERM FREQUENCY ANALYZER SETTING

Input		
Input	Top Socket	
Trans. Used	4189 (#######) Check serial # on mic	mic with preamp
Sound Field Correction	Free field	
Windscreen Auto Detect	On	
Extended Low Frequency	Off	
Trigger Input	None	
Frequency Weightings		
Broadband (excl.Peak)	AZ	Z is linear
Broadband Peak	Z	
Spectrum	Z	
Bandwidth (1/3 Octave)		
Statistics		
Broadband Statistics based on	LAF	
Spectral Statistics based on	LXF	
Percentile 1	1 %	
Percentile 2	5 %	
Percentile 3	10 %	
Percentile 4	50 %	
Percentile 5	90 %	
Percentile 6	95 %	
Percentile 7	99 %	
Measurement Control		
Measurement Mode	Manual	
Sound Recording (Off)		

3.0 POWER SUPPLY

3.1 Panasonic 12 Volt External Battery Charging

A long term measurement duration can be anywhere between 7 to 36 hours. When an external batter supply is used, the 2250 m draws first from it until it is depleted. When the fully charged external battery is depleted (roughly 3 days) then the meter begins to draw from the internal power supply (roughly 7 hours). To recharge the 12 Volt Panasonic batteries used for long term measurements do the following:

- Connect the battery power supply cord to the battery charge cord;

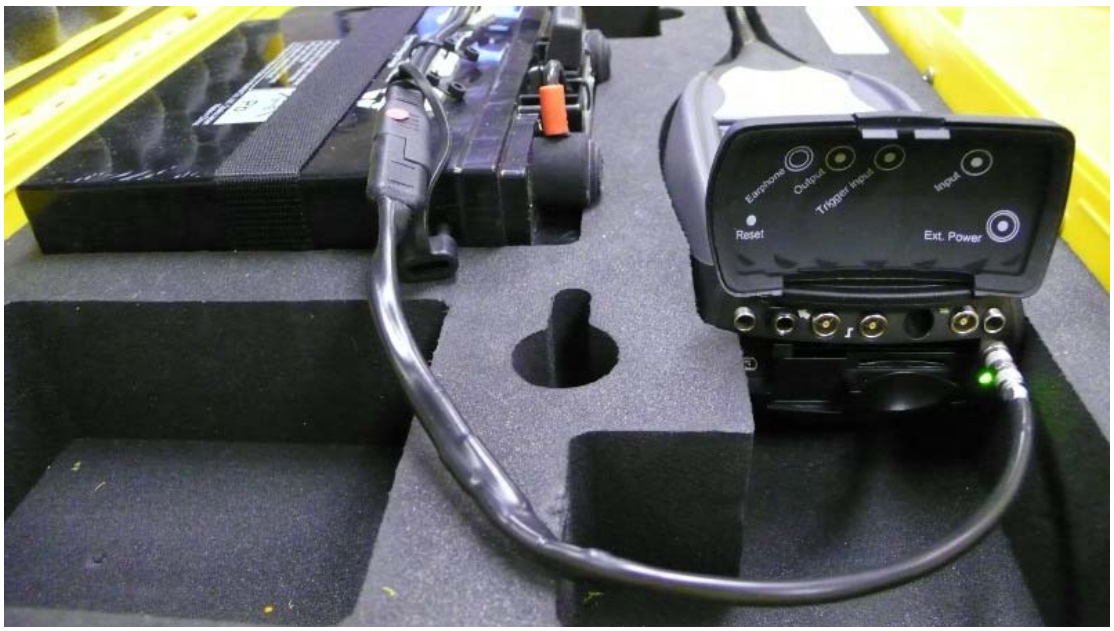

- NOTE: The battery charger input rating is 120V, connecting it directly to a 220-230V AC supply will DESTROY IT!





- Connect the battery charger to the power outlet and observe the colour of the battery chargers LED.

    - GREEN - battery is being charged, NOT READY
    - YELLOW - battery is being charged, READY FOR USE
    - RED - battery malfunction or bad connection

3.2 2250 SLM Internal Battery Charging

Connect AC/DC power supply adaptor to 2250 SLM power inlet as shown in the photo below. The 2250 internal battery will take up to 10 hours to charge. The battery will typically last 7 to 8 hours in warm temperature.



4.0 FIELD MEASUREMENT RECORDS

Important information such as field observation, measurement location, weather, acoustic environment must be recorded prior to any measurement period. The following field record sheets shows example for the record entries in Long Term and Short Term Measurements:

MONITORING STARTS		
Operator:		
Location:		
Noise Meter Start Time:		
Date:		
Calibration complete ?:		
Sensitivity		
Derviation		
Time of Calibration:		
Battery Power Check:	Good 	Poor 
Photographs of Setup (Y/N)		
Photographs of Surrounding (Y/N)		
Check available disk memory (Y/N)		
Cloud cover:	cloudy	partly cloudy
Height of cloud (feet):	0-10,000	10,000-25,000
Air Temperature (C):		
Wind Speed (km/hr):		
Wind Direction: North wind (wind blows from North)	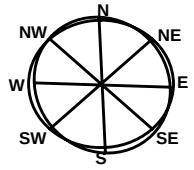	
Barometric Pressure (kPa):		
Relative Humidity (%)		
Precipitation:	none	drizzle
GENERAL SITE DESCRIPTION		
GPS Location	Latitude	Longitude
Type of Ground Surface:		
Acoustic Environment:		
Traffic		
Human activities		
Animal		
Other noise sources		
MONITORING ENDS		
Operator:		
Record Data File Name:		
Total Monitoring Period		
Noise Meter End Time:		
Date:		
Calibration complete ?:		
Sensitivity		
Derviation		
Time of Calibration:		

5.0 CALIBRATION

5.1 Calibrator

The 2250 SLM requires regular calibration to confirm the meter meets the precision requirement. It is mandatory to perform a calibration before and after each measurement program. Calibration is carried out via the B&K 4231 Calibrator shown in following photos.



Without case



With case

5.2 Calibration Procedure

The following steps are to be taken for proper calibration:

1. Choose the Main Menu to access the “Calibration” option as shown below.



2. Insert the B&K 4231 Calibrator on to the microphone; pushing it until it becomes flush (bottoms out). Press the start button. The way in which the calibrator is installed for the hand-held and outdoor kit configuration is shown below. There are two ways of checking that the calibrator is working. The first is by simply turning it on prior to inserting it onto the microphone and listening. Alternatively, confirming that the LED light on the calibrator is lit.



Outdoor Calibration Configuration



Hand-held Calibration Configuration

3. On the display screen the "Start Calibration" should appear. Select this and let the calibration begin.

4. It is important to conduct the calibration in a quiet environment (*e.g.*, no car engine idling or conversation). High ambient noise will disrupt calibration.

5. Observe the dB level in the 2250 SLM display measuring the calibration signal. This level should be at or very close to 94 dB.



6. Just before the end of the calibration, the meter will display "New Sensitivity" information. This information should be documented on the "Noise Field Sheet" for later use (see Noise Field Sheet form in Section 4 above). Note that the value "Deviation from last" should be no more than ±0.1 dB. Repeat the calibration if the deviation exceeds the ±0.1 dB limit.

7. Select yes to "Accept calibration?" and then "Exit Calibration".



5.3 High Deviation Level

The following may be reasons for the deviation value being consistently outside the acceptable limit of ±0.1 dB during calibration:

- High humidity levels;
- High ambient noise level surrounding the calibration environment; and/or
- Poor connection between the preamplifier and the B&K outdoor kit body. The preamplifier should be firmly screwed into B&K outdoor kit body; however, not so tight as to damage the fine threads of the preamplifier, or not to be able to unscrew the amplifier after use.

6.0 START NOISE MONITORING

After completing the setup and calibration, the following steps are to be carried out to begin noise measurements during long-term monitoring:

1. Press the “Reset Measurement” button.

2. Press the “Start” button.

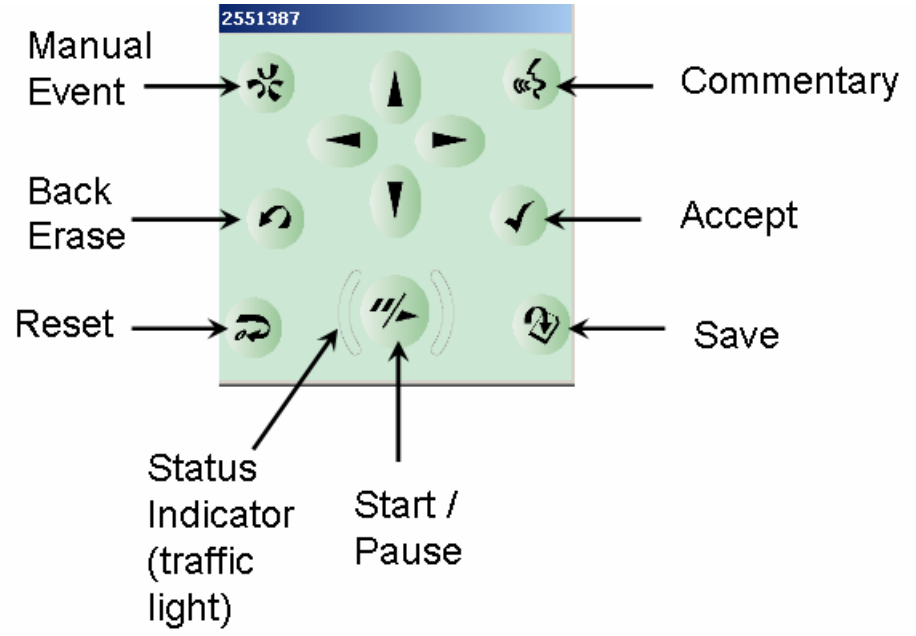

Because the measurement control setup is manual during short-term monitoring, you will have to repeat the following steps for each measurement:

- Reset
- Start
- Stop/Pause
- Save

The following information should be recorded on the Noise Field Sheet shown in Section 4:

- Save file number
- Location of measurement
- Overall level

Upon starting a measurement, one will see a time history forming which fluctuates with time as shown in the below figure.

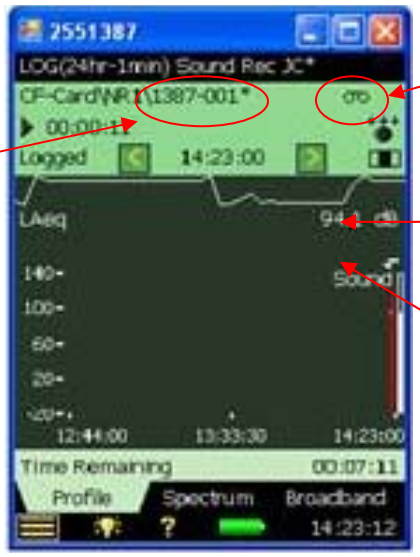

Sound recording

File name for data storage, asterisk * indicates file has not been saved

"Real Time" Time History Plot

Instantaneous Noise Level

It is recommended to remain silent for a minute after starting a measurement so as to let the meter "settle-down" and to determine whether the noise levels being recorded are representative for the study area. The following figure lists some typical noise level ranges for different environments. It should be used as a rough guide when on site taking noise measurements.

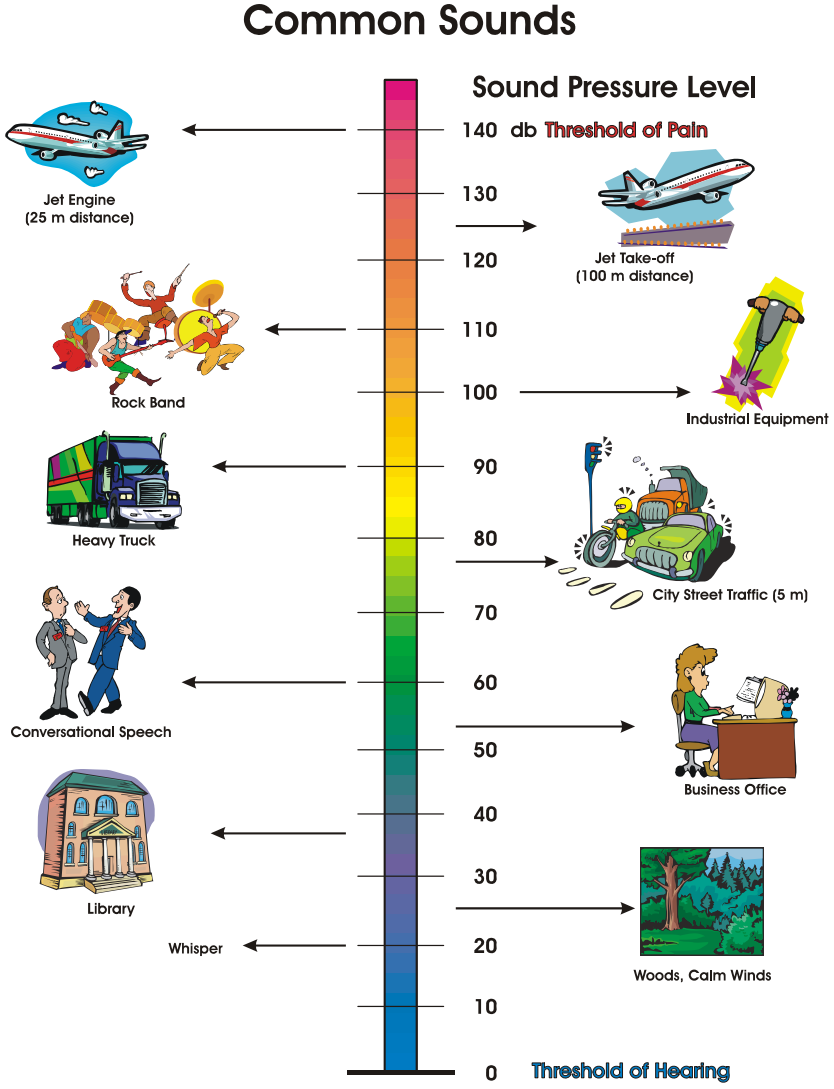
Common Sounds
Sound Pressure Level
140 db Threshold of Pain
130
120
110
100
90
80
70
60
50
40
30
20
10
0 Threshold of Hearing
Jet Engine
(25 m distance)
Jet Take-off
(100 m distance)
Rock Band
Industrial Equipment
Heavy Truck
City Street Traffic (5 m)
Conversational Speech
Business Office
Library
Whisper
Woods, Calm Winds

7.0 POST MEASUREMENT PROCEDURES

After completing a long-term noise measurement (*i.e.*, after 24 hours has passed), it is time to retrieve the equipment from the field to set it up at some other desired location.

7.1 Data Check

Prior to completely dismantling the equipment, the quantity of the data that has been recorded should be verified.

A series of checks can be performed to confirm that the noise data has been collected. Prior to removing the CF/SD card from the B&K 2250 Analyzer, the amount of data recorded on the CF/SD card should be checked on the 2250 Explorer display. As a general rule of thumb, a 24 hour noise measurement should represent approximately 2.4-2.7 Gigabytes of data (or thereabouts). This leaves about 1.6 Gigabytes of storage space remaining on the card.

Select the Main Menu to access Explorer. Select the up one folder icon (folder with up arrow on it) to view both the "Internal Disk" and the "CF/SD card" as shown below.

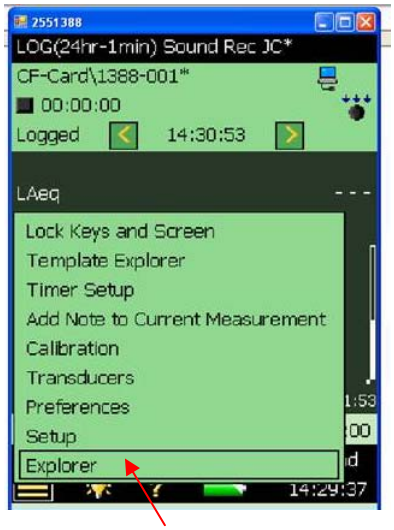

Choose Explorer

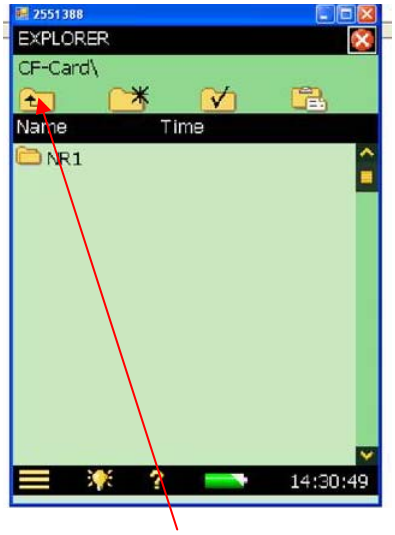

Choose Up one level

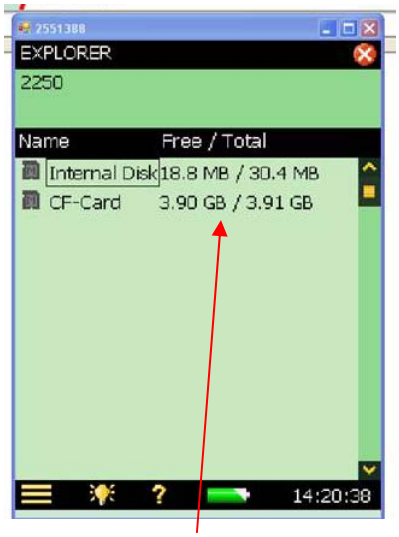

View "Free/Total" of each storage device

In the example above, it can be seen that there is 3.90 Gigabytes of free data storage space available on the CF/SD card. Note Explorer displays "Free" space on the storage medium and not used space. This means that 0.01 Gigabytes has been used; not enough for a 24 hour monitoring period. Again, approximately 1.6 Gigabytes of free data storage space should be available following a 24-hour monitoring period.

7.2 Save

The recorded data will be saved automatically into the specified file upon completion of the specified measurement period (24 hours). However, if the measurement period is terminated before the specified period, the data must be saved manually.

Only save the file if the specified measurement period has not been exceeded.

In such case, the SLM is still recording upon arrival. The data record file display on the top will show an asterisk '*' at the end of the filename (*e.g.*, CF-card\Project001*****). Press the Pause button and then the Save button.

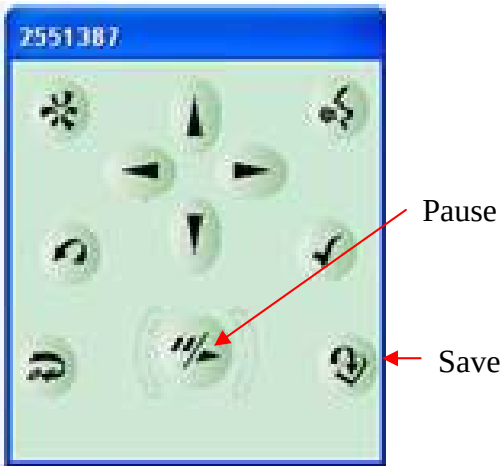

7.3 Calibration

Before powering down the B&K 2250 Analyzer, the sound level meter needs to be recalibrated. Following procedure outlined in Section 5 for post measurement calibration.

8.0 DATA DOWNLOAD

The data download requires the following steps:

1. Connect CF/SD card to the card reader;

2. Activate the B&K BZ5503 software to copy data files from CF/SD card into archive files on a computer;

3. Export the archive file to a format for the Evaluator 7820-7821 Software; and

4. View recorded data in Evaluator 7820-7821 Software.

The following equipment is required to complete the data download:

- Computer with USB port;
- CF/SD card reader; and
- B&K USB dongle key for the use of the B&K Evaluator software.

Refer to the document “BZ – 5503 Data Download Procedure” provided with the noise monitoring equipment for further details.

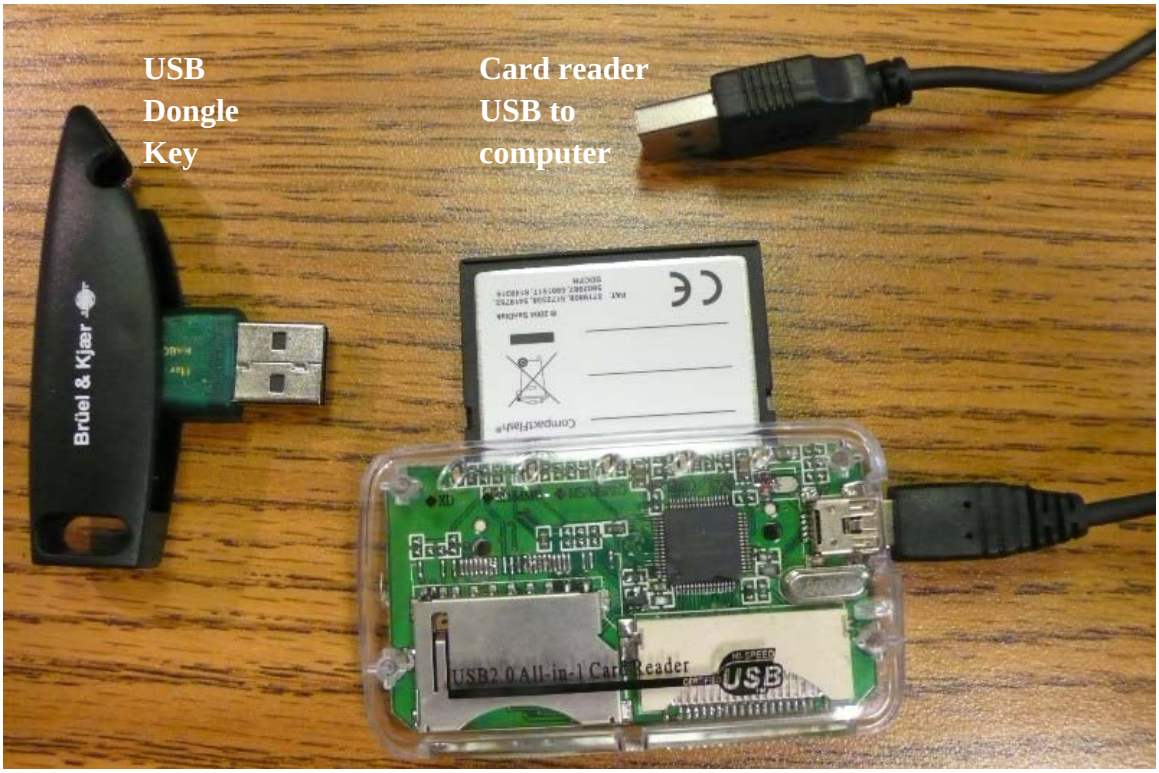

8.1 CF/SD Card Reader and USB Dongle Key

After connecting the dongle key to the computer, start/run the B&K BZ 5503 software and connect the card reader using the computer USB connection as shown in the figures below:



Insert B&K Dongle



Remove CF/SD card from 2250 Analyzer and insert into card reader



Connect USB connection to USB port

8.2 Data Archive

The data from each 24-monitoring location should be archived and the entire archive directory should be burnt to a DVD. A typical 24 hour monitoring program will occupy one 4GB DVD.

9.0 EQUIPMENT TROUBLESHOOTING CASE STUDY

The following are examples of potential equipment malfunctions and possible reasons for those malfunctions.

9.1 Failed Power Connection

The following reasons can result in external power supply failure:

- Loose power supply connecting cable;
- Uncharged battery; and
- Bad fuse.

9.2 Invalid Data Collection

Invalid data collection is typically found when analyzing the time history of the sound file. The data ends up having either higher or lower sound levels (dBA) than would be representative of the area. Regular field visits during the monitoring period to check on the measurement levels will reduce the potential for invalid data being recorded. The following are common causes of invalid data:

- Power failure;
- Poor weather – heavy rainfall, high wind gust;
- Tampering with sound level meters;
- No calibration check; and
- Incorrect setup.

9.2.1 Poor Weather: Wind Speed and Precipitation

Poor weather conditions are probably the biggest reason for invalid data. Poor weather conditions include rain and high winds. Long-term noise measurements are rarely if ever done during winter months. Ideal noise monitoring conditions require that wind be no more than 20 km/hr (5.6 m/s) and that there be no precipitation during the measurement period. High wind has the effect of masking the true noise at a distance from different sources. Flutter noise is a type of noise due to velocity gusts impacting the microphone. In both cases the data collected during these non ideal conditions must be removed in order to have valid noise data set. The Energy Resources Conservation Board (ERCB) has established guidelines, namely, Directive 0038, for “Favourable summertime weather conditions” as shown in the below table:

Parameter	Preferred Condition
Ground Cover	No snow, water, or ice (frozen) ground cover.
Precipitation	No steady precipitation, monitoring invalid.

Wind Speed	Wind speed limits (noise data may be invalid if limits are exceeded):
	• Less than 500 m from noise source
	  • Upwind: 10 km/hr limit
	  • Crosswind: 15 km/hr limit
	  • Downwind: 15 km/hr limit
	• 500–1000 m from noise source
	  • Upwind: 5 km/hr limit
	  • Crosswind: 10 km/hr limit
	  • Downwind: 10 km/hr limit
	• Greater than 1000 m from noise source
	  • Upwind: less than 5 km/hr limit
	  • Crosswind: 10 km/hr limit
	  • Downwind: 10 km/hr limit
	24-hour noise sampling period: there should be at least 3 hours of wind blowing directly to the noise receptor in the nighttime sampling period (22:00 to 7:00) and 3 hours in the daytime sampling period (7:00 to 22:00).

When doing a long-term noise measurement, it is not always possible to determine whether rain has occurred over the entire 24 hours of the study. The possibility of rain should be investigated prior to the noise field trip. The following website is useful for determining weather conditions across Canada: www.theweathernetwork.com or http://www.weatheroffice.gc.ca/canada_e.html.

In addition, a couple of indicators may help determine whether rain has occurred including:

- Visible signs of water on the protective sound level meter case and the surrounding ground.

- Cross referencing the B&K Evaluator sound file with the weather data obtained from the site weather station. If rain can be heard upon listening to the sound file, and the humidity is close to 100 %, then there is good reason to believe that rain occurred during that time period.

9.2.2 B&K 2250 Analyzer Calibration Fault

Calibrating the sound level meter before and after each measurement is a necessary part of the noise monitoring process. Not carrying out this necessary step can result in invalid data. Calibrating the noise level meter essentially tests the B&K 2250 Analyzer's ability to sense correct noise levels. The B&K 4231 calibrator itself must have new or fully charged batteries so that it too outputs the correct test signal (94 dBA at 1000 Hz). As an example during one noise field study, the microphone on the B&K 2250 Analyzer was found to become wet from the rain. Upon performing a post measurement calibration, the B&K 2250 Analyzer was found to be observing larger than normal values. Typically, the B&K 2250 Analyzer outputs a reading in the range between 49-52 mV/Pa (millivolts per Pascal). With the moisture in the microphone, the values were found to be much higher than this. After the water evaporated, the calibration was again found to be in normal range.

10.0 EQUIPMENT MAINTENANCE

10.1 Microphone Maintenance

The following maintenance procedures are recommended keeping order to maintain the microphone in good working order:

- When not in use, keep the microphone in an environmentally controlled area with moderate to low humidity levels, as humidity will alter the sensitivity of the microphone. Condensation of water vapour within the microphone can cause significant negative effects, the worse of which is electrical continuity between the diaphragm and the back plate. Thus, it is necessary to prevent the microphone from coming into contact with any liquid whatsoever. Keep the microphone and preamplifier assembly in the designated case when not in use for long periods of time as shown in the figure below:



- When connecting the microphone to the preamplifier or the outdoor kit body, thread the microphone VERY CAREFULLY to avoid damaging the threads. Do not remove the microphone shield as the microphone drum can fall out and become damaged or lost (see photos below).

- The Microphone and SLM should be calibrated every two years.



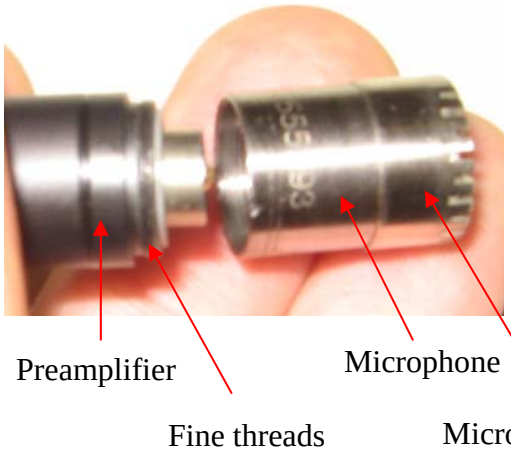

10.2 B&K 2250 Analyzer Maintenance

The following maintenance procedures are recommended to keep the B&K 2250 Analyzer in good working order:

- Keep the Analyzer in the protective case when not in use.
- Be careful not to drop the meter as the touch display screen can be damaged.
- Avoid using solvents when cleaning the touch display screen. Instead use a damp cloth as recommended by B&K.
- To remove the microphone extension cable, make sure to pull back the spring loaded sleeve gently before pulling the connection from the meter. If difficultly arises in removing the connection, put a cloth over the sleeve and use pliers to gently grip the cloth while pulling back to release the connection.
- The B&K 2250 Analyzer should be sent to the B&K North America service department every two years for maintenance. This facility is located at:

  Bruel & Kjaer North America
  2815-A colonnades Court
  Norcross, GA 30071-1588
  Phone: 800-332-2040
  Fax: 770-447-4033
  www.bkhome.com

10.3 B&K 4231 Calibrator Maintenance

The following maintenance procedures are recommended to keep the B&K 4231 Calibrator in good working order:

- Keep the calibrator in its case at all times. There is no need for the leather case to be removed except for when the batteries need to be changed.

- The B&K 4231 Calibrator should be sent to the B&K North America service department every year for maintenance. This facility is located at the same address as that given above.

10.4 Outdoor Microphone Assembly Maintenance

- Keep the windscreen on the outdoor microphone body, as this protects the microphone.

- Clean the windscreen from any debris that may accumulate on it after field work, as any build up of debris will serve to impede sound from being transmitted to the microphone.

HSL/JC/TD/DRW/rs
O:\Final\2008\1428\08-1428-0007\Word\Doc 747 Manual-0903_08 Golder-Environmental Noise Monitoring Guide.doc

Occupational Health and Safety Plan, Version 2

Occupational Health & Safety Plan

	PROGRAM NUMBER:MBK-HSS-PLN – Occupational Health and Safety Plan		
People concerned	• All employees, contractors and visitors	**Prepared by**	Health and safety
		Authorized by	Markus Uchtenhagen Health and Safety Superintendent
Effective **Revised**	April 24, 2013 December 6, 2018	***"Safety First, Safety Last … Safety Always!"*** ***"No Repeats" – Our Stepping Stone to ZERO HARM***	
This program corresponds to the required minimum standard. Each and every one also has to comply with the rules and regulations of the Nunavut Government in terms of health and safety at work.			

Objective:

- To establish the framework, rules and procedures for ensuring the health and safety of all employees, contractors and visitors at Meadowbank and Amaruq sites.

Concerned departments:



All departments

Required equipment:

- Knowledge

Risks /Impacts legend

Health & Safety	Process/Quality	Costs	Environment

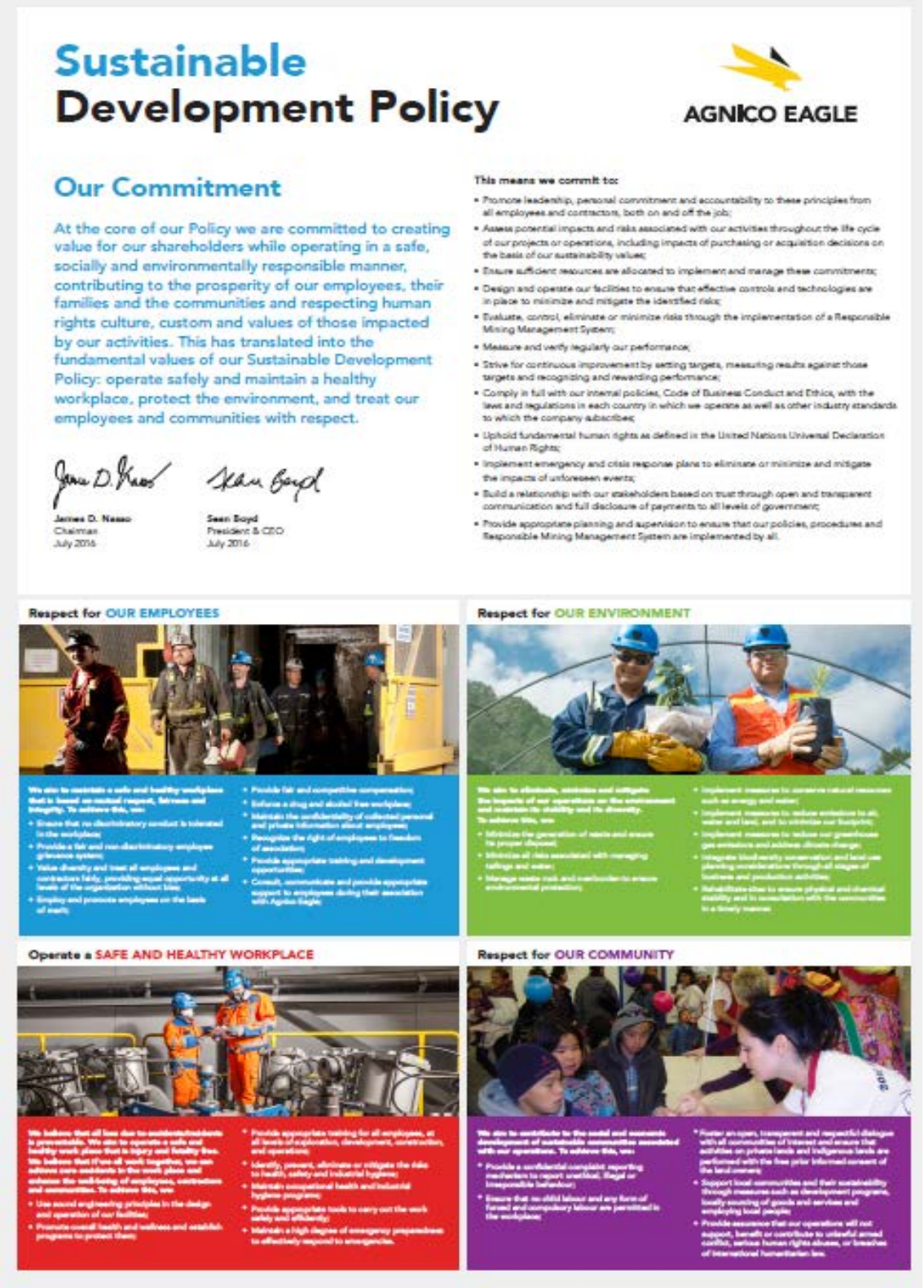

Sustainable Development Policy

AGNICO EAGLE

Our Commitment

At the core of our Policy we are committed to creating value for our shareholders while operating in a safe, socially and environmentally responsible manner, contributing to the prosperity of our employees, their families and the communities and respecting human rights culture, custom and values of those impacted by our activities. This has translated into the fundamental values of our Sustainable Development Policy: operate safely and maintain a healthy workplace, protect the environment, and treat our employees and communities with respect.

James D. Nasso
Chairman
July 2016

Sean Boyd
President & CEO
July 2016

This means we commit to:

- Promote leadership, personal commitment and accountability to these principles from all employees and contractors, both on and off the job;
- Assess potential impacts and risks associated with our activities throughout the life cycle of our projects or operations, including impacts of purchasing or acquisition decisions on the basis of our sustainability values;
- Ensure sufficient resources are allocated to implement and manage these commitments;
- Design and operate our facilities to ensure that effective controls and technologies are in place to minimize and mitigate the identified risks;
- Evaluate, control, eliminate or minimize risks through the implementation of a Responsible Mining Management System;
- Measure and verify regularly our performance;
- Strive for continuous improvement by setting targets, measuring results against those targets and recognizing and rewarding performance;
- Comply in full with our internal policies, Code of Business Conduct and Ethics, with the laws and regulations in each country in which we operate as well as other industry standards to which the company subscribes;
- Uphold fundamental human rights as defined in the United Nations Universal Declaration of Human Rights;
- Implement emergency and crisis response plans to eliminate or minimize and mitigate the impacts of unforeseen events;
- Build a relationship with our stakeholders based on trust through open and transparent communication and full disclosure of payments to all levels of government;
- Provide appropriate planning and supervision to ensure that our policies, procedures and Responsible Mining Management System are implemented by all.

Respect for OUR EMPLOYEES

Respect for OUR ENVIRONMENT

Operate a SAFE AND HEALTHY WORKPLACE

Respect for OUR COMMUNITY

Table of contents

1. Goals for the Occupational Health and Safety Plan 5
2. Policy 5
3. Application 5
4. Responsibilities of the parties 6
4.1 Management team 6
4.2 Health and Safety/Training Officers/Emergency Response Coordinators/Security 6
4.3 Supervisors 7
4.4 Worker 8
4.5 Nurse (Health Care Provider) 8
4.6 Industrial Hygiene Technician 9
4.7 Contractors 9
4.8 Suppliers 11
4.9 Joint Occupational Health and Safety Committee 11
5. Elements of the program 12
5.1 Risk identification 12
5.2 Prioritization of risks 12
5.3 Revision 12
5.4 Activities and Specific Management Programs 13
5.4.1 Supervision Formula and work card 13
5.4.1.1 Summary of Supervision Formula 13
5.4.1.2 Using the work card 14
5.4.1.3 Follow-up Committee of the Supervision Formula 14
5.4.2 The Health Program 14
5.4.2.1 The Medical Staff (Health Care Providers) 14
5.4.2.2 First Aid Emergency 15
5.4.2.3 Trained First aid personnel 15
5.4.2.4 Emergency First Aid Kits 15
5.4.2.5 Registers and accident reports 15
5.4.2.6 Clinic 15
5.4.2.7 Medical Examinations 16
5.4.2.8 Monitoring during an illness or accident 16
5.4.2.9 Medical exam when leaving the company 17
5.4.2.11 Review of Health Program 17
5.4.3 Investigation and analysis program 17
5.4.3.1 Procedure for investigation and accident analysis 18
5.4.3.2 Accident report 20
5.4.3.3 Training in investigation and analysis 23
5.4.3.4 Review the program of investigation and analysis of accidents, incidents 23
5.4.4 Inspection of workplace 23
5.4.4.1 Description of the different types of inspections 24
5.4.4.2 Frequencies of the inspections 24
5.4.4.3 Methodology of Inspection 25
5.4.5 Objectives of management of cutting and welding activities 27
5.4.5.1 Information on contaminants potentially released with the activities of cutting and welding 27
5.4.5.2 Reduction at the source 29
5.4.5.3 Means of technical control 29
5.4.5.4 Respiratory Protective Equipment 31
5.4.5.5 Other risks related to activities of cutting and welding 31
5.4.5.6 Hot Work Permit 32
5.4.6 Lock out and tag out 33
5.4.6.1 Tools 33

5.4.6.2 Zero-energy Procedure 33
5.4.6.3 Removing locks from a lock out situation 34
5.4.6.4 Cut padlock security 35
5.4.6.5 Training on the lockout and ensuring zero-energy It is important to note that the implementation of such a procedure must be accompanied by specific training. Training on lockout and ensuring zero energy aims particularly the employees working on equipment that may be started by others during the repairs. 35
The training includes the following: 35
5.4.6.6 Review 35
5.4.7 Respiratory Protection Program 35
5.4.7.1 Risk Assessment 35
5.4.7.2 Means of Risk Control 35
5.4.7.3 Criteria for selecting respirators 36
5.4.7.4 Training on respiratory protection 38
5.4.7.5 Revision of the respiratory protection program 38
5.4.8 Hearing Conservation Program 38
5.4.8.1 Exposure assessment of workers 38
5.4.8.2 Identification of noise zones 39
5.4.8.3 Potential Risks to health associated with exposure to noise 39
5.4.8.4 Methods used to reduce noise exposure 39
5.4.8.5 Training Information 41
5.4.8.6 Hearing Conservation Program 42
5.4.9 Confined Space Management Program 42
5.4.9.2 Assessment of potential hazards in confined spaces 42
5.4.9.3 Preventive measures 42
5.4.9.4 Entry Permit Confined Space 43
5.4.9.5 Opening an confined space at high risk 43
5.4.9.6 Confined Space Training 43
5.4.9.7 Review of Confined Space Management Program 44
5.4.10 Fall Protection 44
5.4.10.1 The safety measures against falls from height 44
5.4.10.2 Personal Protective Equipment 45
5.4.10.3 Training on Fall Protection 47
5.4.10.5 Site Management 48
5.4.11 Management of Sulphur Dioxide (SO2) 48
5.4.11.1 Means of Control 48
5.4.11.2 Training Information 49
5.4.12 Cyanide Management 49
5.4.12.1 Means of Control **Preventive maintenance** 49
5.4.12.2 Training 50
6. Review of Health & Safety Plan 55

AGNICO EAGLE

The following document presents Meadowbank and Whale Tail Pit Occupational Health and Safety Plan (the Plan) in support of Meadowbank Nunavut Impact Review Board (NIRB) Project Certificate No.004 and Whale Tail NIRB Project Certificate No.008, condition 57. This plan outlines Agnico Eagle's strategy for Health and Safety.

1. Goals for the Occupational Health and Safety Plan

The prevention program focuses on eliminating dangers to health, safety and protects the physical integrity of all workers (this includes all Agnico-Eagle Mines employees, Contractors and visitors).

Specific objectives:

- Identify and assess the risks in the process and the work environment;
- Propose effective and sustainable technical controls to ensure the health and safety of employees/contractors;
- Adequately protect workers exposed to specific risks by setting health and safety standards;
- Adequately protect all personnel and contractors working on sites against specific risks, by setting health and safety standards, for every risk encountered;
- Ensure the preventive maintenance of personal and collective protective equipment;
- Train the employees and contractors on the risks related to their work and their environment.

2. Policy

Agnico Eagle Mines – Meadowbank Division recognizes the importance of eliminating as much as possible the risks of an accident and/or occupational disease. To achieve this goal, Agnico Eagle Mines - Meadowbank Division established a policy for these objectives, and, always maintains harmonious relations with their employees.

3. Application

The prevention program is for all employees of the Meadowbank Mine, Agnico and contractors. All contractors, suppliers and visitors working at the Meadowbank Division site must comply with the content of this program.

Accident prevention necessitates the involvement of everyone. Every employee and contractor has a specific role to play and is responsible for their health and safety. In other words, we can say that, at Agnico Eagle Mines, Meadowbank Division, we have as many safety specialists as we have employees, contractors at the site.

4. Responsibilities of the parties

4.1 Management team

- Provide material, financial and human resources to implement, maintain, update and improve the prevention program;
- Maintain the prevention programs to provide workers and contractors a safe and healthy work environment;
- Participate actively in the assessment, review and monitoring of the program activities;
- Ensure the implementation, improvement and monitoring of the Supervisors' Formula and the work card;
- Ensure that the employees and contractors have the training and the necessary information to avoid endangering their health or safety and / or their colleagues;
- Correct with immediacy, a known situation that might endanger the health or safety of someone; and
- Collaborate with the occupational health and safety committee and with any public health and safety institution or regulator.

4.2 Health and Safety/Training Officers/Emergency Response Coordinators/Security

- Coordinate the implementation, application and improvement of the prevention program;
- Coordinate all activities by managing health and safety and security;
- Support and coach employees, Supervisors and Management in performing their duties;
- Collaborate in the identification, evaluation and controlling risks in their respective workplaces;
- Ensure compliance with Act and Regulations, Standards and Site policies/procedures;
- Inform members of the management team of any suspicious circumstances that may affect the health or safety or security;
- Ensure the implementation, improvement and the follow-up of the Supervision Formula and the work card;

- Ensure that workers have the necessary training and information to minimize the possibility of endangering their health, safety or security and / or their colleague;
- Correct with immediacy, a known situation that might endanger the health or safety or security of someone;
- Collaborate with the safety representatives in the various mandates entrusted to them;
- Collaborate with the (Workers Safety and Compensation Commission) WSCC inspectors or other regulators during their visits;
- Collaborate with health team on site or mandated by the WSCC; and
- Ensure an effective and properly trained Emergency Response Team. Ensure an adequate number of trained personnel for both Surface and Underground settings.

4.3 Supervisors

- Correct immediately any potential hazard in the workplace;
- Collaborate in the identification, evaluation and control of any hazardous situation in the workplaces;
- Inform the Health and Safety Department of any situation that could affect the health or safety of the workers;
- Provide individual and/or collective protective equipment for workers;
- Ensure that workers have the training and the necessary information to avoid endangering their health and safety and / or their colleague;
- Follow the Act/Regulations, rules, standards, procedures and site Policies/Protocols;
- Ensure the implementation, improvement and follow-up of the Supervision Formula and the work card with an emphasis on "immediacy" for the corrective actions to be taken;
- Ensure that all incidents are properly reported in a timely manner to the Health and Safety Department, and Department, using the appropriate forms;
- Investigate all incidents/accidents and document findings and recommend corrective measures on appropriate forms; and
- Work with the Occupational Health and Safety Committee and the safety representative in the various mandates that were given to them.

4.4 Worker

- Protect their health, safety and physical integrity or that of others in the workplace;
- Respect the preventive measures established in the Health and Safety plan;
- Respect the information given during the induction program, postings, and safety meetings;
- Participate in the identification, evaluation and control of hazards in the workplace;
- Wear personal protective equipment and/or collective protective equipment required for specific jobs to protect their health and safety;
- Participate in identifying and quantifying of the contaminants in the workplace;
- Respect the Act/Regulations, safety rules, standards, procedures and policies/protocols at all times;
- Inform the supervisor of any doubtful situations that may affect the health or safety;
- Report all accidents, incidents or close calls (near misses) to the supervisor immediately (within the working shift);
- Participate in training or/and health and safety information sessions; and
- Work with the Joint Occupational Health and Safety Committee on different health and safety issues that were mandated to the committee.

4.5 Nurse (Health Care Provider)

- Coordinate the health program for the site;
- Inform managers, supervisors and workers on contaminants potentially present in their workplace;
- Propose to the management team methods to control risks that could affect the health or safety of workers;
- Initiate screening biological tests on contaminants potentially present in the workplace;
- Provide immediate care to injured personnel and follow-up;
- Training as required;
- Participate in the identification of Health hazards in the workplace;

- Provide information on sexual health and well-being; and
- Work with the Occupational Health and Safety Committee on the various mandates given to the committee.

4.6 Industrial Hygiene Technician

- Identify all the contaminants in the workplace that could pose a health and safety hazard to workers;
- Determine the potential exposure of workers to the identified contaminants with good sampling and analysis strategy;
- Inform supervisors and workers on the results of exposure present in their workplace and how to protect themselves;
- Provide managers with methods to control risks that could affect the health and/or safety;
- Perform maintenance and monitor the calibration of measuring instruments used in industrial hygiene;
- Develop and maintain an Industrial Hygiene Program;
- Develop and maintain an Asbestos Management Plan;
- Provide training in Industrial Hygiene subjects with all concerned; and
- Work with the Occupational Health and Safety Committee on the various mandates given to the committee.

4.7 Contractors

- Transmit to Agnico Eagle Mines– Meadowbank Division a Health and Safety program specific to their activities on the site. Agnico Eagle Mines- Meadowbank Division reserves the right to request changes that they consider important;

  Note: Any contractor on site for a period of less than fifteen (15) days does not have to submit a Health and Safety program. However, they must comply with the Health and Safety program of the site and made available to workers.

- Transmit (before the job starts) all plans certified, signed and sealed by an engineer recognized in the Nunavut Territory for construction on surface;
- Provide Agnico Eagle Mines – Meadowbank Division with a current letter indicating that they are in good standing with WSCC in Nunavut;

- Transmit the Health and Safety program specific to their activities on the site, which must contain a list of risks in regards to construction work and, indicate the controls put in place in regards to those risks;

- Submit in writing to Agnico Eagle Mines– Meadowbank Division all changes that were made to the work procedures and have them available for the workers and their supervisors;

- Take measures to ensure that all workers under their supervision are informed of the risks they are exposed to;

- Inform, immediately, Agnico Eagle Mines– Meadowbank Division of any accident/incident in the execution of various contracts;

- Inform in writing Agnico Eagle Mines– Meadowbank Division of any writing or report issued by the WSCC to the contractor;

- Update a bulletin board dedicated exclusively to health and safety at work inside the trailer or any other location easily accessible to workers;

- Hold a weekly safety meeting for each crew. Send a copy of the minutes of the meeting with the names of participants to Agnico Eagle Mines – Meadowbank Division Health and Safety Department;

- Provide a written document stating that your enterprise as a contractor on the site will abide to Agnico Eagle Mines– Meadowbank health and safety programs;

- Provide monthly hours worked by their employees and sub-contractors (if applicable) as well as its accident/incidents statistics;

- Provide workers with personal protective equipment determined by legislation or by the Occupational Health and Safety Committee according to the tasks they must accomplish;

- Ensure that the employees wear their personal protective equipment at all times while at work and that they use the proper tools to accomplish their tasks;

- Ensure that the corrective measures requested by Agnico Eagle Mines– Meadowbank Division be completed in the time frame prescribed;

- Submit a list of workers who have a valid or current first aid certificate;

- Ensure that all equipment complies with Agnico Eagle Mines – Meadowbank Division and Nunavut Regulations;

- Provide a list of all current MSDS sheets for products that you as a contractor are bringing on site;

- Ensure that all temporary structures and / or permanent are safe and that they comply with legislation or site specifics ex. (railings, guarded openings, etc.).

If the contractor or any person within its jurisdiction fails to comply with the terms of the program, Agnico Eagle Mines– Meadowbank Division can then take any necessary action to correct the situation, and that at the expense of Contractor.

4.8 Suppliers

- Comply with the Health and Safety program of Agnico Eagle Mines– Meadowbank Division, standards and procedures applicable to them (especially when they perform delivery or assemble their products or equipment on site).

4.9 Joint Occupational Health and Safety Committee

- Approve the Health and Safety Plan;
- Make periodic follow-up of the Health and Safety plan by actively participating in various activities to identify, assess and control;
- Cooperate with the WSCC representatives;
- Encourage the participation of managers, supervisors and workers in various elements of the program; work within the “Terms of Reference” guidelines;
- Receive suggestions and complaints from employees, employee representatives on health and safety issues at work;
- Receive and review the planned inspection reports, accident investigations, safety meetings and the WSCC mine inspector reports;
- Receive and analyze the accidents and incidents statistics;
- Receive and analyze the accidents / incidents investigations reports;
- Participate in accidents/incidents investigations and analysis and risk assessments for all job tasks on site;
- Hold a meeting with the Joint Occupational Health and Safety Committee members at least once a month;
- Provide recommendations to Management to resolve Health and Safety issues; and
- Actively and positively promote Health and Safety for all workers, contractors on site.

5. Elements of the program

5.1 Risk identification

Identify all potential hazards from different health and safety activities in place within the Meadowbank and Amaruq site. Among these activities, we find the planned inspections, investigations and analysis of accidents/incidents, close calls, task observations, monthly safety meetings, job hazard analysis (JHA), and the workers comments on their work card.

In addition, periodic meetings are held with all the personnel to complete the list of possible hazards. This process requires the participation of every department and requires an effort from everyone. A listing of possible risks is presented at these meetings to guide workers in selecting potential hazards in their work place. The potential risks are then stored in a tabloid format. Once the list of potential risks is developed, a selection process is started to prioritize the hazards. This prioritization step consists of a consultation process with officials from each department and each committee member of risk management program.

5.2 Prioritization of risks

Prioritizing risks is mathematically based on a prioritization grid containing different risk parameters and control:

Legal requirement

- Site specific
- Extent of risk
- Probability of risk
- Severity of risk
- Risk of fire
- Effect on health as a function of exposure
- Administrative control
- Operational Control
- HR Dimension

Once the list is completed, every department will develop an action plan to address the most significant risks determined in the prioritizing process. In addition, the departments will also have created a list of training needs, a list of critical tasks to be observed and a list of hazards. Job Hazard Analysis will be completed when and where required.

5.3 Revision

The process of identification, assessment and risk control will be revised every three (3) years.

5.4 Activities and Specific Management Programs

5.4.1 Supervision Formula and work card

The Supervision Formula is a philosophy and is the basis for our entire Health and Safety Program, here at Meadowbank.

To meet due diligence, the supervisor must take immediate action on all situations that could endanger the health or safety of the employees. In other words, he must use the "immediacy" to correct outstanding situations and involve the employees.

5.4.1.1 Summary of Supervision Formula

The Supervision Formula is divided into six (6) phases which are:

- Greeting
- Inspection
- Planning
- Decision
- Execution
- Worker's comments

The **Greeting** phase allows the supervisor to discuss with workers on the tasks to be done during the day, list the equipment and tools they may need, check the understanding and above all, arousing all workers to have "a safety minded attitude all the time", followed by a talk about known abnormal conditions reported by the previous shift and the hazards they may encounter during the day.

The **Inspection** phase enables workers and supervisors to inspect the access to the work place, workplaces, tools, equipment to detect any anomalies that could lead to an incident or accident in the short, medium and long term. It also eliminates these deficiencies "immediately" when discovered. The inspection is the most important phase of the Supervision Formula, because at this stage, if we take the time to inspect and correct the deficiencies found, the risks will be minimized or even eliminated.

The **Planning** phase is the logical extension of the inspection, because when anomalies are found, we must define how to correct them. Then the planning of the day's tasks to be accomplished is revised with the employee on how it will be done, what tool and/or equipment to use and the most important part is to identify the specific risks that could be generated and how to control the risks identified.

The **Decision** phase is when the supervisor gives his/her agreement to do the task as planned. Before giving the agreement he/she must make certain that the employee understood him and agrees with the planning, the workplace is up to standard, the tools and equipment are good, the hazards have been identified and controlled, the employee has the training to accomplish the task, and then the supervisor will give the authorization to continue the work.

The **Execution** phase is to accomplish the work as agreed in the planning phase. However, we must remember at this stage to be vigilant at all times, because during the execution of work, we may have to repeat all the phases of the **Supervision Formula** that is: inspection, planning, decision and

execution.

Reviewing the **Worker's Comments** on the work card (at end of shift) is an extremely important part of communication for the incoming shift. This part allows workers to report any anomalies/deficiencies observed during their shift which could affect the health and safety of other workers. Workers also reports broken equipment, missing material etc.

The ideal tool for conveying the supervision formula is:

"The work card"

5.4.1.2 Using the work card

Every day, the employees/contractors receive a work card that they must complete at the workplace before the work begins. Workers notes on the work card the state of the access to the workplace, the work place, material to be used and equipment with special attention to sub-standard conditions. During his/her tour while applying the Supervision Formula, the supervisor approves the continuation of work by comparing the information written on the card to his own observations. Exchanges are done between the employees/contractors at the workplace and the supervisor.

At the end of the shift, the cards are handed by the employees to the supervisor so that he can read the comments and the situation of the work place. The supervisors will leave instruction to the incoming shift.

The work cards are kept in files for a period of one (1) year.

An evaluation on the quality of the work cards used by the employees and supervisors is done on a quarterly basis by the 2nd level supervisors. The evaluation results are then presented to the follow-up Committee of the Supervision Formula.

5.4.1.3 Follow-up Committee of the Supervision Formula

A follow-up committee meets periodically to evaluate the application of the supervision formula and the results of the work card. The follow-up team is composed of members of management and two (2) representatives of the Health and safety department.

5.4.2 The Health Program

The health program is part of the health and safety plan. It identifies some hazards associated with physical or mental health of workers and recommends a series of actions to protect all employees against the hazards in their work tasks or their environment.

5.4.2.1 The Medical Staff (Health Care Providers)

Two (2) registered nurses are present at the Meadowbank mine site, and (1) one nurse is present at Amaruq 24 hours a day, 365 days a year. They are registered in Nunavut territories and have accredited training in trauma (ACLS/TNCC).

To complement the health and safety team, a medical director conducts periodic visits to the mine site. During these visits, the medical director will do the medical examinations required by the legislation.

5.4.2.2 First Aid Emergency

First aid is provided by anyone who is qualified to give first aid. In addition our Health Care Providers provide higher level of treatment when necessary. They can direct the patient to specialized care if necessary. However, several people have been trained and can give first aid. The injured employee if/when transported must be accompanied by a nurse or paramedic in the ambulance or airplane.

5.4.2.3 Trained First aid personnel

First aid training is provided to a sufficient number of workers who are able to respond at all times. To ensure the continuous presence of rescuers/first aiders on all shifts, all supervisors are trained from all areas of the mine site. Furthermore, all Emergency Response team members received first aid training. A minimum of twenty (20) emergency response team members are on site all the time and trained to face every type of emergency.

In addition, some Emergency Response team members are trained to the advanced first aid level.

5.4.2.4 Emergency First Aid Kits

Emergency first aid kits are available in all AEM vehicles and workplaces at different locations on the site. The contents respect legislation requirements. We have MASS Casualty First Aid Supply is in place by entrance to Gymnasium. Our ERT teams are equipped to handle most Emergencies that can occur on site.

5.4.2.5 Registers and accident reports

In case of accident, an initial report is completed by the supervisor with the employee. The original report is then forwarded to the Health and Safety department. When the accident causes bodily harm that requires medical assistance, the Health Care Providers will open a file on the accident and if needed, they will fill out the necessary WSCC claim reports. All medical files are kept at the clinic under lock.

A weekly report is communicated to the management and the accident statistics are tabulated and communicated on a monthly basis to site and WSCC.

5.4.2.6 Clinic

(At Meadowbank site) The clinic is located on the ground floor of the service building adjacent to the Maintenance team offices and shop. (At Amaruq site), the clinic is located in the Exploration camp at far end – West adjacent to the fire hall.

The following equipment is available at the clinic:

- Oxygen and defibrillators
- Examination table

- Eye wash station
- Scale, Bandages
- Medications
- Burn Kits
- I.V. solution
- Material Safety Data Sheets (MSDS)
- First Aid Equipment
- Heart monitoring equipment
- Trauma Supplies
- Multiple Casualty equipment

5.4.2.7 Medical Examinations

Medical pre-employment

Prior to employment with Agnico-Eagle Mines, Meadowbank Division, each candidate must have a full medical examination and a hearing test. The pre-employment medical ensures that the candidate is fit for the job for which he/she is hired.

When hired, the new employee/contractor completes an induction session (e-learning) with different modules. A Health Care Provider explains their programs such as what to do in case of an accident or sickness. Each worker will have a confidential medical record kept under lock in the clinic. Only nurses and physicians will have access to the medical files. In addition, the physician will meet with workers upon their request.

5.4.2.8 Monitoring during an illness or accident

During a prolonged absence from work, the Health Care Provider is responsible for systematically monitoring the health of the worker. If the absence lasts more than three (3) days, the procedures for insurance is undertaken jointly with the worker and Human Resources Department. For absences due to an accident at work, the case is managed with the WSCC.

During a medical visit following an accident, the worker must contact the nurse or his supervisor to transmit the doctor's decision if he has allowed the injured worker to be assigned to light duty work as soon as possible.

To facilitate rehabilitation, the worker is assigned to light duty work until his/her injury is healed. The supervisor is notified of employees' work limitations/restrictions as well as the probable date of return

to regular work. At the clinic, each employee has a separate file for personal sickness and for work related accidents.

5.4.2.9 Medical exam when leaving the company

Every employee leaving the company shall, before his/her departure, pass a hearing test if his last test exceeds six (6) months and be referred to a specialist if required.

5.4.2.10 Health and Well-Being

Our Health Care Providers have included health and well-being information in our employee orientation program and our “Site Readiness” program. When any new employee arrives on site, they will be informed of topics such as sexual health, well-being, mental health, fatigue management, addictions, being “fit for duty” etc.

They will communicate and share with all workers the range of health services available onsite and update it as necessary as new services are available.

Periodic crew meetings with the different departments to inform our employees of our health and well-being services on site.

Brochures are developed and made available to all employees on subject matter.

We have also made available condoms on our site to promote sexual health.

We endeavor to ensure that all brochures are available in English and Inuktitut.

5.4.2.11 Review of Health Program

To audit the health program, an annual evaluation of the program is made by the Health Care Providers.

Any request for modification, addition and revision should be made to the Health Care Providers.

5.4.3 Investigation and analysis program

The investigation program and accident analysis aim to ensure and maintain a process of investigation and clear analysis so that it will:

- Clarify the responsibilities of all concerned parties;
- Ensure the quality of investigation reports and analysis based on criteria established and recognized;
- Identify the immediate and root cause of accidents or incidents;
- Recommend preventive and corrective measures following related events;

- Follow-up preventive and corrective measures;
- Eliminate the hazards and threat to health and safety of workers.

Important Information:

Under the NU – Mines Safety Health Act and Regulations, the employer must inform a WSCC Mines Inspector, as soon as possible (without delay) (ex. by telephone), and, within (72) hours, make a written report with the information required by regulations, regarding the events that have caused:

- Fatal injury to an employee;
- Serious injury to a worker; (as defined by Section 16.01 and 16.02 of NU Mines Safety Health Act and Regulations (Reportable Incident).

Furthermore, the NU Mine Safety Health Act and Regulations states that the inspector must be advised as soon as possible for any Dangerous Occurrence incident as defined by Section 16.01 (within 24 hours). The Dangerous Occurrence final investigation report must be submitted to the Mines Inspector within (72) hours.

At Agnico Eagle Mines – Meadowbank Division, the WSCC mine inspector will be informed by the General Manager, or by the Health and Safety Superintendent or Designate.

5.4.3.1 Procedure for investigation and accident analysis

At Agnico Eagle Mines - Meadowbank Division, accidents are divided into the following categories: fatality, lost time accidents, accidents resulting in modified/light duty assignment, medical aid, first aid, reported incidents, fire incidents, incidents (but no injury) and near miss or close calls.

Depending on the frequency and severity of the situation, some accidents/incidents must be investigated, in order to collect all the information and evidence or facts that cause the accident/incident. This information is used to determine the root causes of the accident/incident and finally, to recommend corrective and preventive measures to prevent its recurrence. The following chart summarizes the accidents that should be investigated.

Fact PARTICIPANTS



Guidelines for assembling persons for the investigation process: always keep in mind the "potential" severity and not the result.

Worker;
Supervisor;
JOHSC Representative
General Foreman;
Dept. Superintendent/Designate
Health and Safety Dept. Rep.
General Manager /Designate (if required)

Worker;
Supervisor;
JOHSC Representative
General Foreman;
Dept. Superintendent/Designate (if required)
Health and Safety Dept. Rep.

Worker;
Supervisor;
JOHSC Representative to review;
General Foreman to review
Health and Safety Department Rep.;

Worker;
Supervisor;
JOHSC Representative to review;
General Foreman (if required);
Health and Safety Department Rep (if required);

** If an investigation is requested*
Worker;
Supervisor;
JOHSC Representative to review
Health & Safety Dept. (if required);
General Foreman to review

Note: All accident/incident reports are to be forwarded to Meadowbank Health and Safety Department!!!

5.4.3.2 Accident report

Steps:

1. Any employee/contractor involved or that witnesses an accident must immediately notify their immediate supervisor or designate of the situation and keep the scene intact or undisturbed to allow time for the investigation, except to prevent further accidents.

2. Any worker involved or witnesses an accident must complete with the supervisor the initial incident report form, as soon as possible after the event but at the very least before the end of the shift.

   Note: The official accident with bodily harm log book is located in the clinic.

3. The immediate supervisor or his designate must immediately notify the general foreman who will notify the health and safety department of the accident. Depending on the severity and/or potential of the accident/incident, the OHSC representative will also be notified by the Health and Safety department or by the Department Management in which the event occurred.

Note: Reportable incidents – (Any incident listed in the "Serious Injury" portion and as described in Section 16.01 of the Regulations must be reported without delay to a Nunavut Mines Inspector and OHSC Co-chairs, by the Manager and/or his designate.
Dangerous Occurrences – (Any incident listed in the "Dangerous Occurrence" portion and as described in Section 16.01 of the Regulations must be reported within 24 hours to a Nunavut Mines Inspector by the Manager and/or his designate and OHSC Co-chairs.
Within 72 hours after a "Dangerous Occurrence" or "Reportable Incident", the Manager and/or designate shall send a report to the Mines Inspector and OHS Committee Co-chairs.

The investigation:

1. When an accident happens, the supervisor shall, if possible, go immediately to the scene of the accident to control the scene and collect the facts of the accident. The scene shall be secured pending investigation and only released after all facts have been gathered. In the case of a "Dangerous Occurrence" and/or "Reportable Incident", the scene shall not be released until the Mine Manager and/or his designate release it and only after consultation with Mines Inspector and OHSC Co-Chairs.

2. The supervisor will evaluate the loss and he will contact the appropriate officials.

A Supervisor or Health and Safety Department representative may demand an investigation for an accident without injury or even a first aid accident in the case if the consequences could have been worst (potential severity).

3. The immediate supervisor or designate will immediately initiate, if necessary, the process of the investigation, if possible, with the injured worker or workers who witnessed the accident. The investigation will be done whenever possible at the scene of the accident.

4. The supervisor fills out the investigation report with, if possible, the injured worker or/and the worker/s that witnessed the accident.

5. The investigation report must be signed and a copy must be sent to the Health and Safety Department as soon as possible. The Health and Safety Department is responsible for forwarding a copy of the investigation to the Manager (as needed) and to the Occupational Health and Safety Committee without delay. A copy of the investigation report must also be reviewed by the OHSC safety representative.

Accident analysis:

An analysis must accompany every accident investigation. This analysis is essential to determine the root causes of the accident and to recommend corrective and preventive measures necessary to prevent the accident from recurring. The analysis includes three (3) major steps:

- Initial analysis of all the information gathered in the investigation to keep only the contributing factors;
- Identification of all the causes and factors that contributed to the accident;
- Separation of contributing factors into two (2) categories:
  - Immediate causes
  - Root causes

The method of analysis:

This method involves taking the consequences as a starting point and looking for causes by asking "Why?" At each step, ask the following question: "Why did it happen this way?"

Each answer must be complete and sufficient to explain the reason the accident happened. If they do not explain it completely, there is/are another cause/s to be determined.

Please find enclosed the steps in completing an accident/incident investigation:

The accident/Incident

Need a complete description of the event, location and who was involved.

↓

Immediate causes

Immediate Causes categories:
- Work practices, behaviors
- Environmental conditions, equipment/material
- Use of protective equipment
- Conditions of protective equipment

↓

Fundamental Root Causes

Fundamental (Root) Causes categories:
- Personal factors
- Organizational factors

↓

Consequences

Results in Injury, Damage to Equipment, Fires, Damage or Spills to Environment, Loss to Process

↓

Corrective Measures

Ensuring good corrective measures will prevent Re-occurrence of accident/incident
Communication of incident/accident is very important as well

↓

Follow-Up

Ensuring that corrective measures are in place, in force and doing what they were designed to do
Sharing corrective measures within the Department and site wide to prevent similar accidents/incidents from occurring again

To do this, the immediate supervisor or his designate must initiate the review process once the investigation is completed. The analysis may be conducted away from the scene of the accident by completing the investigation and analysis formula of the accidents.

Furthermore, it is essential that recommendations and remedial measures following the investigation and analysis of the accident are followed-up for the immediacy of corrective actions.

5.4.3.3 Training in investigation and analysis

Training in investigation and analysis of accident is a must for all supervisors, general supervisors and occupational health and safety committee members. This training aims to provide supervisors and members of the occupational health and safety committee good knowledge, techniques and skills to effectively fulfill their responsibilities outlined by the management team. A refresher course will be given when needed.

5.4.3.4 Review the program of investigation and analysis of accidents, incidents

The accident investigation and analysis program is revised as needed.

Any request for modification, addition and/or revision must be made to the Health and Safety Department.

5.4.3.5 Entry into Intelex – tracking system

All incidents / accidents will be logged into Intelex in a timely manner and incidents will be closed out on a monthly basis.

5.4.4 Inspection of workplace

Objectives of the inspection of the workplaces:

- Eliminate accidents, improve the quality of life, increase productivity and efficiency;
- Protect the health, safety and integrity of workers;
- Identify and correct the situations and conditions that may cause loss;
- Identify non-compliances with the standards in the work areas;
- Develop appropriate remedial action following non-compliances and ensure follow-up.

5.4.4.1 Description of the different types of inspections

General planned inspection:

Systematically inspect one or more areas to check compliance of area, equipment and work environment. Pay attention to the working methods to detect dangerous actions or methods. Good housekeeping is a must.

Specific inspection:

Check one specific aspect following an investigation and analysis of accident/incident, a specific request of the JOHSC, an evaluation of the accident log book or any other situation with a potential of loss.

Daily inspection (work card):

Daily inspection of access, work places, tools, equipment listed on the work card to detect and correct with immediacy sub-standard conditions. This inspection is to be done by worker/Supervisor.

Daily pre-use inspection of equipment:

All users of mobile equipment must check compliance of their mobile equipment and complete inspection card associated with the equipment at the beginning of each shift to ensure that equipment is compliant and it creates no risk to the safety and health for operator and others. Once completed, the cards are stored and kept for a period of one (1) year.

5.4.4.2 Frequencies of the inspections

- **Site General Manager** will plan and participate in general inspections to cover the surface operations as needed (2) times per year.
- **Department Superintendent/Assistant:** must attend a minimum of four (4) planned, general inspections with the supervisors, or general foremen of his department, or area of responsibility.
- **General Foreman** must attend a minimum of four (4) inspections with the supervisors via Supervision Formula and (1) planned inspection per month in area of responsibility.
- **Supervisor** will conduct daily inspections planned in his sector with his workers (as per work card) and occasionally with a member of the Health and Safety Department. Monthly, he and an OHSC rep. will conduct (1) planned inspection in his/her working area.

- **Health and Safety Department personnel: (Health and Safety Superintendent/Assistant and H & S Advisors)** will conduct minimum of (2) inspections per rotation in different areas of the site.

- **JOHSC Representatives** will be invited to participate in monthly inspections with each level of the management team named above in their area of responsibility. Note: JOHSC must conduct one inspection per month as legislated in the Mine Regulations Section 3.19 – 3.22.

- **Worker** will conduct a daily inspection of access, work places, tools, equipment listed on the work card to detect and correct with immediacy sub-standard conditions.

5.4.4.3 Methodology of Inspection

To be effective, the people responsible for the inspection must be prepared, organized and have the right tools. Four (4) steps are necessary to ensure an inspection of quality:

- Planning
- Inspection
- Report
- Corrective actions and follow-ups

Objectives of the inspection report:

- Identify all items inspected (compliant or non-compliant); **(Note: non-compliance must be based and in reference to Mine Regulations, Company Policies/Procedures etc.)**
- Identify the sector and / or equipment inspected;
- Classify risks for each observed deviation;
- Determine corrective action;
- Identify a person responsible for each corrective action;
- Determine a timeframe;
- Indicate the number of the work order and/or completed formulas to apply corrective measures.

Note: the report must be written legibly or typed, saved electronically

Distribution of the inspection reports:

Once the report is completed, participants in the inspection must send the original to the health and safety department. A copy of the report must be sent to the department heads concerned by the inspection and to the manager.

The participants keep a copy of the inspection report and when the sub-standard anomalies have been corrected, they will send a copy of the report with the corrective actions completed to the department heads concerned by the inspection and the safety and health department.

Follow-up of the corrective action:

The responsibility to follow-up the corrective action should be incumbent to those who conducted the inspection. The department head will make certain that the follow-up is completed.

The Health and Safety Department will produce an update on the frequency of inspections and the amount of corrective actions that were completed every month. The report will be sent to the JOHS Committee for review.

Classification and time frame for the corrective measures

Severity	Time frame for temporary corrective actions	Time frame for permanent corrective actions
A) Action or condition that could have resulted in permanent disability, fatality, loss of a limb; damages that created a loss of production and/or material exceeding $50,000	Immediately	Started Immediately and corrections completed within (24) hours following the report Note: if corrections cannot be completed within (24) hours – a plan must be put in place to ensure the health and safety of all concerned.
B) Action or condition that could cause a temporary disability with a duration of more than the day of the accident; damages that created a loss of production and/or material exceeding $10,000 but less than $50,000	Immediately	Started Immediately and repairs completed within (3) days (72 hours) following the report
C) Action or condition that could cause a minor accident necessitating first aid treatment and or a medical assistance without a loss of time; damages that created a loss of production and/or material less than $10,000	Within (24) hours	Started Immediately and repairs completed within (7) days following the report
H) Action or condition that is considered a housekeeping item and if left unattended or not taken care of could result in trip and fall or other injury or damage to equipment or environment.	Within (24) hours	Started immediately and maintained continuously. No time limit to fix, repair or clean up. An on-going effort is required to maintain good housekeeping.

5.4.5 Objectives of management of cutting and welding activities

- **I**dentify the contaminants in the welders' workplace;
- Assess the physical and chemical contaminants in the cutting and welding activities;
- Provide effective lasting controls to ensure health and safety of employees;
- Train and inform employees about the contaminants in their asks and their environment;
- Prevent fire hazards;
- Follow up on these activities;

The risk assessment will be done through field inspection, task analysis and sampling of contaminants on/with the personnel. The sampling methods used are consistent with those proposed by the Institute of research for Health and Safety (IRSST), OSHA and A.C.G.I.H.

5.4.5.1 Information on contaminants potentially released with the activities of cutting and welding

Health effects of certain metals may be present in fumes from welding and cutting

Contaminants	Source or process	Possible effects on the health
Aluminum oxide	Composition of welding rods or aluminum alloy.	Aluminosis: particle deposition forming of fibroids in the lungs.
Cadmium oxide	Silver electrode surface in some alloys and rustproof of the steel.	Highly toxic substance that can cause lung and kidney lesions. Carcinogen.
Chrome	Alloy in stainless steel, rust-proof paint or covering chromed parts	May cause lung damage and asthma. Carcinogen.
Copper	Copper concentrate and copper welding electrodes (brass or bronze).	May cause metal fume fever (fever welders) similar to that of zinc.
Tin	Welding electric wires and copper pipe.	Lungs irritation
Iron Oxide	Ferrous metals and steel, welding electrode, may represent 50 to 60% of welding fumes.	Respiratory irritation, low toxicity dusts of iron oxide, may be due to siderosis.
Manganese	Alloy steel rods and composition of capital.	Irritation of upper respiratory tract attacks the nervous tissue and causes weakness and poor coordination.

Molybdenum	Composition of some steel alloys.	Irritation of eyes and lungs.
Nickel	Metals nickel, stainless steel.	Carcinogen.
Lead	Metals coated with paint containing lead present in certain alloys and metals, coatings and tank armor, welding tin.	Toxic substances that affect blood, nervous tissue, gastrointestinal tract and brain.
Silica	Embedding electrode can be found in welding fumes.	May cause lung damage.
Titanium	Coating of electrodes and in some alloys (ferrovanadium).	Respiratory irritant that can cause fibrosis.

Health effects of certain gases may be present in fumes from welding and cutting

Gas	Source or process	Possible effects on the health
Ozone	Gas with a characteristic odor formed during arc welding resulting from the action of UV on oxygen.	Low concentration: irritation of nose, throat and respiratory tract. Elevated: headache, dizziness, nausea, vomiting, fainting
Carbon Monoxide	Produced by the incomplete combustion of organic matter in the form of plaster, paint or coating electrodes, welding under protective gas (CO2).	Low concentration: headache, dizziness. Elevated: nausea, vomiting, unconsciousness, asphyxia resulting in death.
Nitrogen oxides	Suffocating gas and highly flammable formed during the process of arc welding or welding in shielding gases especially when welding stainless steel.	Low concentration: irritation of eyes, nose and lungs. Elevated: irritation of the eyes, coughing, chest pain, and pulmonary edema.
Phosgene	Irritating gas formed when a flame or heated surface at high temperatures or UV rays of the arc are in contact with chlorinated solvents.	Low concentration: sensation of dryness and burning throat, numbness, vomiting, difficulty breathing. Elevated irritation leading to pulmonary edema, chronic bronchitis, pulmonary emphysema .
Hydrogen fluoride	Formed by heat flux, decomposition coatings (applied on stainless steel), coated electrodes	Low concentration: irritation of nose, throat, nose bleeds. Elevated pain in the eyes and nose, pulmonary edema, burning the skin. Chronic Exposure: disease = bone fluorosis (increased bone density).

5.4.5.2 Reduction at the source

The reduction at the emission point is the most effective way to protect the health of workers potentially exposed to contaminants in the air. It is to prevent the emission of contaminants into the air.

Variants of the welding process must be adjusted to produce maximum performance while reducing emissions of contaminants into the air.

Parameters affecting production of contaminants

Parameters	Consequences
The power intensity	In general, the higher the amperage, the higher the emission of smoke.
The diameter of the electrode	With/when equal current is used: the small diameter electrodes produce more smoke than those with larger diameter.
The tension	The amount of smoke rises in direct proportion to the tension.
The polarity of the electrodes	The welding direct current positive at up to 30% more smoke than welding in direct current negative.
The length of the arc	The longer the arc, the more smoke is produced.
The shielding gas	The type of shielding gas used helps determine the volume of emissions. For example, the volume of emissions can be reduced by 15% to 25% by the addition of argon to carbon dioxide instead of using it in its purest form. Ozone concentrations are reduced significantly when adding nitric oxide gas protection in welding of aluminum MIG.
Substitution	Is characterized by the fact of replacing certain ingredients in the welding electrode by others with similar metallurgical characteristics, but emitting less smoke (ex. replacing an electrode lead with an electrode containing lead and tin).
The cleaning of the surfaces	The surface cleaning (grease, dust, paint, etc.) reduces the emission of contaminants into the air.

5.4.5.3 Means of technical control

Ventilation is the primary means of technical control to reduce the exposure to welders from fumes produced by welding and cutting.

General ventilation:

General ventilation can dilute contaminants dispersing in the work area. General ventilation can be mechanical (fans) or natural (open door). It can be very effective if used in order to remove the contaminants from the breathing zone of the welder.

Local ventilation:

The local exhaust ventilation will capture pollutants as close as possible to their emission sources and remove them from the workplace. Since most emissions occur near the arc, the local exhaust ventilation is more effective than general ventilation. The system of local exhaust ventilation is designed to capture fumes and gases before the welder breathes it. However, the performance of the local exhaust systems may be greatly affected by air currents and the distance between the contaminant source and the sensor arm (90% efficiency at 22 inches).

The extension arms are inspected periodically to determine the system performance. This assessment takes place every six (6) months and is made by the industrial hygienist. The data collected is stored in the log book.



Example of a “smoke eater” as used by welders



Example of an extension arm with a fume captor

5.4.5.4 Respiratory Protective Equipment

The personal protective equipment for respiratory system should be used as a last resort when other means of control are not possible. These personal protection devices must be used according to specifications of the Respiratory Protection Program of the establishment (next section).

5.4.5.5 Other risks related to activities of cutting and welding

Other risks associated with welding, apart from the fumes and gases, are radiation, noise, electricity, sparks, heat and explosions.

Protection against radiation:

The ultraviolet radiation emitted by the welding process can cause eye problems ranging from simple irritation to conjunctivitis. Therefore, eye protection devices (properly shielded safety eyewear) must be worn by the entire welder group and those assisting them in their work, unless protective screens are used and in place.

The presence of shield against radiation is necessary for places where bystanders are likely to be exposed to radiation.

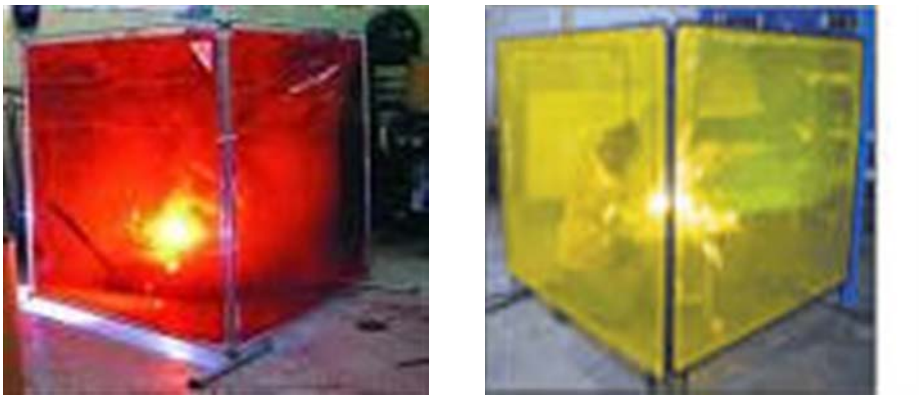

Example of shields against radiation

Tinted goggles (grade 5) may be used for small amount of cutting or brazing with torch (flame cutting) while the face shield should be used for all other types of welding and cutting. Different degrees of protection for the lenses are necessary depending on the type of welding.

The welder must change the protective lenses when they are damaged.

Protection against sparks:

Sparks projected during the cutting or welding can cause burns, fire or explosion. Welders must wear protective clothing (flame retardant) such as Indura soft (like coveralls) at all times while performing

work of cutting and welding. Long non-flammable gloves should also be used. This equipment, gloves and clothing must be changed when they are damaged.

5.4.5.6 Hot Work Permit

Welding and cutting are not permitted without obtaining a Hot Work Permit. Hot Work permits are required whenever welding, cutting or any task where open flames are required such as torch use, tiger torch, whether working inside or outside (except in designated areas such as a welding bay).

On the permit is a list of precautions to be taken. This must be completed by the welder himself/herself before commencing work. It is important that all safety precautions listed on the permit are followed as they are subject to rigorous inspection by the worker. During his inspection, the supervisor approves the continuation of work by signing the permit on the back. When the work is completed, workers must clean up their workplace and conduct a continuous check for fire for 30 minutes and monitor and check the area for a minimum of 2 hours after the welding, cutting or burning activities are finished. The employee that does the final check for fire ultimately signs the permit and gives it to the supervisor. It is kept in a register for a period of one (1) year.

To ensure the strict enforcement of permits for cutting welding, Agnico-Eagle has established an audit program with the following objectives:

- Maintain good standards of application in terms of how to safely perform hot work;
- Ensure compliance of hot work performed;
- Promote the importance of fire protection on the site.

The audits will be held every four (4) months and the results will be compiled in a register.

Fire Extinguishers:

In addition to fire extinguishers located at strategic locations and near building EXIT doors on the site and in buildings, every oxy/acetylene cutting torch set up (fixed) or (dolly) mobile is equipped with a fire extinguisher. Fire extinguishers must always be in working order. An inspection must be made before commencing work. Note: this is part of the “work card” inspection process.

All extinguishers are checked on a monthly basis. Extinguishers on equipment are checked daily as part of the pre-operational vehicle check.

Stop Work:

When welding and cutting are suspended even for a short period of time, welding machines and cutting torches must be turned off, the electrodes must be removed from their rack, valves and equipment for the cylinder compressed gas must be closed and / or stored in a safe place (as defined in the procedure for hot work).

5.4.6 Lock out and tag out

Repairs, installation and verification of equipment powered by electricity or any other energy are always a risk. Each employee must take some responsibility and ensure his/her own safety and that of fellow employees respecting the lock out tag out procedure and ensure “zero energy” state.

The lockout procedure and making a “zero energy” state is part of the prevention program at the Meadowbank Division.

5.4.6.1 Tools

The tools for the lock out tag out have several components. These various types of locks, multiple lock link, lock-boxes, keys, covers valves, chains and labels.

Personal Padlocks and departmental padlock:

Each worker exposed to a hazard that necessitates to lockout tag out must have a “brass” padlock with a single key and identification tag. This “brass” lock will have the owner’s identity on it. Locks for service department cannot be used in a personal way. It is forbidden to lend your personal lock to another person.

5.4.6.2 Zero-energy Procedure

No piece of equipment can be de-energized and locked to zero energy until the workers in the area where the work is to be performed have been told. The supervisor will then allow the employee to stop the equipment. The supervisor involved must make sure to inform all the other employees on the work to be done by the crew.

All contractors must follow the lockout procedure of Agnico-Eagle.

Note: In many areas, there are specific procedures related to certain equipment. Before you lockout inform the supervisor.

Examples: mobile equipment, radioactive devices, overhead crane, etc.

Application of the procedure:

- **Locking out equipment of 750 volts or less**

  When repairs or check-ups requiring a simple lockout, the worker shall, lockout the equipment and check to see if the equipment can start after being locked out to make sure that the equipment is not operational. Lock the master switch on equipment in the off position. It is important that other workers working on this equipment affix their padlocks by using a multiple lockout system. The last hole of the multiple lockout system must be kept to add another multiple lockout devise if ever we must add more padlocks.

- **Multiple lockout equipment of 750 volts or less**

  To accomplish a checkup or repair on equipment, it is required to use multiple lockout system (multiple padlock devices). The qualified person responsible for checking the deactivation or lockout of the equipment must take the necessary amount of locks to ensure through testing by startup of the equipment. He must lockout the master switch on the equipment in the off position and put the keys in the red lockout box by ensuring that the identification numbers of the locks are visible. The lockout box should be locked with a multiple lockout system and locked with padlocks. A lockout tag must be installed and a final start-up of the equipment must be made to make certain that the equipment will not start. All other employees who work on such equipment must affix their locks on the lockbox.

- **Lockout equipment at high voltage (over 750 volts) equipped with knives switch (inside a closed box)**

  All equipment of high voltage with knives switches are identified and require the presence of an electrician to cut the power. He ensures that there is no more energy or power on the line. Then the lockout procedure applies.

- **Lockout equipment of high voltage (over 750 volts) with motorized switches (medium voltage circuit breaker) or aerial disconnect breakers**

  All equipment with high voltage motorized switch (medium voltage circuit breaker) or aerial disconnect breakers requires the presence of an electrician to cut off the power. He must use the specific procedure to accomplish the cutoff of power. Then the lockout single or multiple lockout procedures must be applied.

- **Ensuring zero energy on piping or pressure vessels**:

  Use the single or multiple lockout procedure considering that the energy source is compressed air or steam. Beware of secondary or residual energy that may remain under pressure. Leave the drain valve in case of a leak in the isolation valve.

  Various mechanisms are available to lock the valves of different types: handles, chains, etc. We must ensure that the mechanism is reliable. If in doubt, check with your supervisor.

5.4.6.3 Removing locks from a lock out situation

When an employee must leave, he/she must remove his/her lock. After the work is completed, the equipment must be unlocked in order to verify proper operation. Notify the responsible supervisor that repairs are completed and the equipment is functional.

During a shift change or when an employee must leave before the work is completed and the person replacing him/her has not placed his personal lock, he/she must ensure that equipment is locked by a Departmental padlock with a tag-out informing his replacement to put his padlock on. He/she must also notify his/her supervisor or the job leader. When work resumes, a start test should be performed.

5.4.6.4 Cut padlock security

If an employee forgets to remove his/her lock and that employee is no longer on site or at work, the supervisor or his/her delegate has the authority to cut the lock. This must be done with great care and a good judgment. Firstly, we must try to reach the employee. If he/she can't be reached, we must make certain that the employee is no longer on the site. The **"Lock Removal Form"** must be completed and the procedure in place before cutting the lock. Return the form to the general supervisor of the lockout.

5.4.6.5 Training on the lockout and ensuring zero-energy

It is important to note that the implementation of such a procedure must be accompanied by specific training. Training on lockout and ensuring zero energy aims particularly the employees working on equipment that may be started by others during the repairs.

The training includes the following:

- Legal aspects of standards and regulations lockout;
- Effects on safety;
- Tools;
- Lockout procedure and ensuring zero energy;
- Practical exercises.

5.4.6.6 Review

The lockout procedure and ensuring zero energy is revised annually by the Health and Safety Department and Training Department.

Any request for modification, addition and revision should be made to the Health and Safety Department and Training Department.

5.4.7 Respiratory Protection Program

The objective of the Respiratory Protection Program is to effectively protect personnel working in workplaces where technology controls do not permit or are not sufficient to eliminate the source of contaminants in the air.

This program also aims to help managers to identify ways to control the selection, use, and maintenance of respiratory protection.

5.4.7.1 Risk Assessment

The risk assessment is done by sampling personnel in the workplace. These assessments help to determine the type of respiratory protection and appropriate filters to be used.

5.4.7.2 Means of Risk Control

- **Reduction at the source**

Reduction at the source is the objective of the establishment and is the most effective way to protect the health of workers potentially exposed to contaminants in the air. It is to prevent the emission of contaminants into the air.

- **Control techniques**

  Control techniques are used to vacuum, abate or dilute the contaminant emissions in air. Among these, we find the air ducks, hoods, primary and secondary fan systems to induce the fresh air, dust collectors and sprinklers.

- **Personal Protective Equipment**

  The personal protective equipment for the protection of the respiratory system must be used as a last resort when other means of control are impossible. For respiratory protection, there are several types of equipment. The apparatus of respiratory protection used in Agnico-Eagle Meadowbank Division includes: filter type respirators, cartridge type, air powered (PAPR) and self-contained breathing apparatus (SCBA). According to protective factors established by NIOSH and CSA, these appliances offer different levels of protection ranging from 10 to 10,000 depending on the equipment.

  Information on respirators:

  ✓ **Appliances Air Purification**

  This category includes all half-masks and full face using chemical cartridges or as a particulate filters contaminants. These masks are negative pressure, which is to say that the lungs of the user are the generators of the circulation of air. To meet the requirements, different types of respirators are available in three (3) sizes: small, medium and large.

  ✓ **Appliances Air purification Air powered**

  This category includes mainly helmets or masks complete type of manufacturer 3M RACAL engine which propels the air inside a helmet then filters through chemical cartridges and particulate. Currently, the agencies give this product a protective factor that varies from 25 to 1000.

  ✓ **SCBA:**

  This category includes all full-face respirators equipped with a cylinder of compressed air breathing unrelated to an external airline. In setting, only mine rescue teams, firefighters and some specially trained workers are allowed to wear such equipment. This equipment provides a minimum protection factor of 10 000.

5.4.7.3 Criteria for selecting respirators

The choice of a proper respiratory protection is essential to protect the worker. We must therefore evaluate the following parameters when choosing a type of respirator:

- **Level of oxygen in the air**

  The NIOSH states that "the percentage of oxygen by volume in air at any workstation of an establishment must not be less than 19.5% at normal atmospheric pressure". All respirators Air-purifying approved by the National Institute for Occupational Safety and Health (NIOSH) should be used in workplaces only when the oxygen concentration exceeds 19.5%. Otherwise, the worker must wear respiratory protection equipment independently.

- **Types of contaminants present or potentially present**

  The industrial hygiene department established the physical, chemical and toxicological properties of contaminants, including their concentration, toxicity, nature, condition, the detection characteristics of each and their potential for eye irritation and skin absorption.

- **Intended use of the respirator**

  To make the best choice, workers and supervisors must take into account various environmental parameters and conditions to use a respirator, for example:

  - ✓ workplace;
  - ✓ task;
  - ✓ duration of use;
  - ✓ frequency of use;
  - ✓ effort to the task;
  - ✓ industrial process used;
  - ✓ comfort of the user;
  - ✓ need for mobility;
  - ✓ need for communication;
  - ✓ extreme temperature conditions (very cold or very hot).

FIT test:

Users of respiratory protection must be tested for sealing quality with the respirator. This fit test is required prior to issuing of a respirator.

The fit testing is conducted by the Training Department, Health and safety department or industrial hygiene technician. This training shows the user how to use proper respiratory protection.

Once the initial fit test done (when issuing the respirator), additional fit testing is required only when one has suffered of a facial morphology (ex. scarring, loss of weight, acne, etc.). He/she must be fit

tested again for leakage before using respiratory protection. Those who pass the fit test are logged in a log book.



Example of a quality fit test

5.4.7.4 Training on respiratory protection

It is important to note that the implementation of such a program must be supported by training. At Agnico-Eagle Mines– Meadowbank Division, we have training on respiratory protection. The training aims particularly the users of masks to purify air using chemical cartridges and / or particulate and users of helmet air-purifying (positive pressure). This course covers the selection, use and checking of disposable masks and chemical cartridge.

The training covers the following:

- ✓ Legal aspects of regulations and standards in respiratory protection;
- ✓ Inventory of contaminants and basic rules of industrial hygiene;
- ✓ Health effects of contaminants;
- ✓ Fit Tests;
- ✓ Technical knowledge on the function of all models of respirators;
- ✓ Inspection, maintenance, cleaning and storage of respirators;
- ✓ Practical exercise.
- ✓ Refresher training is also needed each year for workers, supervisors, responsible for the fit testing and the person responsible for checking and cleaning of respirators.

5.4.7.5 Revision of the respiratory protection program

The respiratory protection program is reviewed annually by the Health and Safety Department and Training Department.

Any request for modification, addition and revision should be made to these departments.

5.4.8 Hearing Conservation Program

5.4.8.1 Exposure assessment of workers

In order to identify work areas where noise exceeds 85 decibels (83 dBA or workers, working 12 hour shifts), the exposure of workers by job or workplace, is measured in accordance with CSA Standard Z.107.2-1973 entitled "Methods for measuring sound levels".

Employees with exposure to noise exceeding 85 decibels (A) are included in this program. Wearing hearing protection is mandatory for workers unless the means of source reduction of technical and administrative controls are in place.

The assessment strategy for the noise levels are in the "Industrial Hygiene Program" as well as legal requirements. Assessments must be made when purchasing new equipment or changes in processes or equipment.

5.4.8.2 Identification of noise zones

The areas likely to exceed 83 decibels must be identified with a poster at the entrance area or where there is noisy equipment. The sign identifies the requirement to wear hearing protection.

5.4.8.3 Potential Risks to health associated with exposure to noise

The main physiological risks associated with working in noisy environments are a loss of hearing (temporary or permanent) when exposed to noise without hearing protection. Hearing loss associated with exposure in industrial work will affect the high frequencies. The loss is recognized as an occupational disease when it reaches the thresholds listed in the Regulation on the scale of industrial injuries.

5.4.8.4 Methods used to reduce noise exposure

Management and workers must take steps to protect their health, their safety and physical integrity as required by the Occupational Health and Safety. The reduction at the source and engineering controls are the best means to reduce exposure of workers to noise. If these means do not reduce noise to an acceptable level, then use the personal protective equipment. Any reduction in noise, even a few decibels, reduces hearing loss, improves communication and improves concentration. All sources of noise must be evaluated to determine the appropriate method of protection.

Reduction at the source:

The reduction at the source involves a reduction of noise from equipment:

- ✓ Replacement of equipment;
- ✓ Relocation of noisy equipment.

Technical Means of control:

The technical means of control are expected to reduce workers' exposure to noise by changing the environment in which they work:

- ✓ Modification of vector transmission noise (acoustic insulation);
- ✓ Reduction of the reverberation (absorbent materials for walls and ceilings);
- ✓ Reduced vibration equipment (carpets, preventive maintenance);
- ✓ Changing a method of work;

- ✓ Mufflers.

Means of Administrative Control:

The administrative control is to reduce the duration of worker exposure to noise:

- ✓ Modify the hours of work;
- ✓ Rotate tasks to high and low exposure;
- ✓ Start-up of noisy machines when few workers left the area.

Personal and collective protective equipment:

This is the last possible alternative when the noise reduction is less than the permissible exposure limit after implementing technical and administrative controls. The hearing protectors designed to reduce transmission of the wave to the ear.

The effectiveness of hearing protection varies from one worker to another, it depends on proper protective equipment, fitted and worn during the entire period of exposure to noise.

Types of hearing protectors:

Earplugs: plastic foam Max TaperFit 2 UltraFit, Décidamp2, Ear Caps Caboflex) (category preformed caps);

Shells: passive type deductions with a headband (PELTOR H6b, Peltor H7B) or attached on each side of the safety helmet with headphones (PELTOR HTM7P3E) or without headset (PELTOR H7P3E, PELTOR H9P3E).

Noise abatement related to the hearing protector:

The sealing and acoustical properties of the materials determine the level of protection provided by the hearing protector. The shells form a seal around the ear while the ear plugs are against the wall of the canal. The index of noise reduction from the manufacturer (IAB or NRR (English word is: "Noise Reduction Ratio") is set in ideal laboratory conditions.

It is recommended by NIOSH 1996 (Summary of Appendix B, Methods for Estimating the Adequacy of Hearing Protector Attenuation, in the Occupational Noise Standard 29 CFR 1910.95) in calculating the exposure of a worker on its protection hearing, to deduct a percentage for each specific type of hearing protector. This percentage reduction prepared by NIOSH takes into account the performance offered by each type of hearing protector.

Type of hearing protection	***Reduction percentage***
1. For the shell type	75 % of the manufacture IAB
2. Earplugs	50 % of the manufacture IAB

Taking into account the criteria set by NIOSH, the factor of noise reduction for each type of hearing protector has been calculated.

Indices noise abatement set by the manufacturer for each hearing protector available to Agnico-Eagle to the mitigating factors under criteria modified NIOSH 1996.

Type of hearing protection	IAB (dBA)	(dBA) IAB Modified
Plastic foam plug Taper Fit 2	32	16
Plastic foam plug Ultra Fit	25	13
Plastic foam plug Decidamp	29	15
Plastic foam plug Max	33	16
Plastic foam plug Ear Caps	17	9
Plastic foam plug Caboflex	20	10
Shell *PELTOR H9P3E (yellow)*	23	17
Shell *PELTOR H7P3E (green)*	24	18
Shell *PELPOR H10PE3* (*black*)	27	20
Shell *PELTOR H7B (green for helmet)*	22	17

Note: The attenuation factor (IAB) proposed by type of protector is conditional to constant wearing of the protectors during exposure.

Medical Surveillance:

An audiogram is conducted for all employees as follows:

- ✓ Every employee working where the noise levels exceed 83 dB is required to pass an audiometric test every three (3) years;
- ✓ Employees and the clerical employees are required to pass an audiometric test every five (5) years or as needed;
- ✓ All employees leaving the company shall, before departure, have an audiometric test completed;
- ✓ In the hiring process, a person must pass an audiometric test.

5.4.8.5 Training Information

Training is mandatory for all workers likely to work near a source of noise. This training consists of the following:

- Regulations;
- Responsibilities of employees;
- Effects on health over the hearing capacity and the body: short and long term;
- Source reduction;
- Control methods: technical and administrative;
- Hearing protection equipment selection, maintenance and use;
- Meaning of posters;
- Audiogram.

5.4.8.6 Hearing Conservation Program

The program for hearing protection is revised as needed by the Health and Safety Department.

5.4.9 Confined Space Management Program

The program management to work in confined space remains an important reference tool for all supervisors and workers involved in supervising and working in confined spaces area. Depending on the nature of work and the nature of the confined spaces, the risks will vary. It is the responsibility of the supervisors and workers to ensure that all preventive measures are taken when there is work to be done inside a confined space area.

5.4.9.1 Definition of a Confined Space:

“Confined Space” means a tank, process vessel, underground vault, tunnel or other enclosure that is not designed or intended for human occupancy and that a person would only enter if there were work to be done.

5.4.9.2 Assessment of potential hazards in confined spaces

Atmospheric Risk:

Confined spaces are regular atmospheric hazards that make the air unsafe to breathe for the worker. Whether a lack of oxygen, super oxygenation, the presence of flammable or toxic gases, all of these conditions pose a significant risk to the worker and should be considered before entering inside a confined space.

Physical hazards:

Physical hazards potentially present in a confined space are numerous: there is a restraint entry or exit, a dangerous work area, a risk of engulfment, mechanical parts in motion, the presence of electricity, heat or cold, noise or poor visibility.

5.4.9.3 Preventive measures

Ventilation:

For some cleaning, welding, cutting, fabrication of fiber glass, sandblasting abrasive and solvent use, ventilation must be provided before and / or during the task is being done. The duration of this ventilation vary depending on the nature of work, the size of confined space and movement of natural air flow inside the confined space.

The natural or mechanical ventilation of the confined space must be done to avoid exposing other workers to contaminants. Therefore, the breathing of the air should be prioritized in certain activities (ex: welding and cutting activities).

Lock-out and tag-out the energy:

The lockout procedures and ensuring zero energy must be followed. In addition, some confined spaces, must be completely isolated by disconnecting, purging and sealing of all supply lines.

5.4.9.4 Entry Permit Confined Space

The entry permit for confined space is a written authorization indicating the location, staff involvement, hazard identification and control for a given enclosure. This is only valid for a period of 12 hours of uninterrupted work.

The permit must be completed before the start of work by a qualified person and it applies only to a single workstation. The permit must remain in the workplace so that work is ongoing and when the job is completed, the permit must be return to the Health and Safety Department.

If environmental conditions change in the environment or the execution of work, the permit must be corrected and the testing methods must be reassessed.

5.4.9.5 Opening an confined space at high risk

The opening of the confined space must be performed with appropriate respiratory protection. The specific list of confined space for each department indicates adequate protection for the contaminant found in the enclosed space.

However, when the concentration of contaminants inside the confined space is unknown, it is considered highly dangerous to life and health. The opening of the enclosure must be done with maximum care and if necessary, with a self-contained breathing apparatus.

Evaluation of the air inside the confined space:

To evaluate the quality of air we must:

- ✓ Check the quality of air with an appropriate instrument that measures gas and of oxygen, and this even before opening the enclosed space;
- ✓ Assess the quality of air near the opening by inserting the sampling probe inside the confined space. This step is essential when you suspect the presence of toxic or flammable gases;
- ✓ Assess the entire volume of air inside the enclosure to verify the presence of heavy gas, light gas and neutral gas.

5.4.9.6 Confined Space Training

It is important to note that the implementation of such a program must be accompanied by a sustained training.

It is prepared primarily for workers, supervisors and project leaders who are likely to work in confined spaces.

The training Recognition of confined spaces:

- ✓ Responsibility of all parties;
- ✓ Risks associated with confined spaces;

- ✓ Risk assessment;
- ✓ Preventive measures put in place for every task in confined spaces;
- ✓ Entry permit;
- ✓ Emergency procedures;
- ✓ Tools;
- ✓ Assessment of air quality.

A refresher training course will last approximately two (2) hours and will be given if required to the workers, supervisors that were previously trained on confined spaces.

5.4.9.7 Review of Confined Space Management Program

The management program for confined space work is revised as needed by the Health and Safety Department.

Any request for modification, addition and revision must be made to the Health and Safety Department.

5.4.10 Fall Protection

5.4.10.1 The safety measures against falls from height

Falls from heights or in dangerous openings account for (40% of injury cases); they can and usually cause serious injuries.

The legislation states that all workers must be protected against falling when exposed to a fall of more than 3 meters from a working position;

- when he may fall into a liquid or a hazardous substance, on moving parts, on equipment or materials presenting a danger;
- if exposed to a fall of over 1.2 meters using a vehicle.

Agnico-Eagle Mines – Meadowbank Division endeavors to reduce at the source instead of using other means. But, if this is impossible, here are other preventive measures that are used to ensure the safety of workers:

Guard Rails:

Guard Rails is the means of protection most appropriate for protecting workers against the risk of falling. There is a fence along the opening that restricts the movement of workers and ensures that he/she will not be exposed to a free fall. The guardrail must be placed alongside of an elevated floor, roof, a platform of a scaffold, stairway or ramp, around an excavation or any other place where a worker may fall:

- in water;
- from a height of 1.2 meters or more if he is using a vehicle;
- from a height of 5 meters or more of a perimeter roof and 3 meters in other cases.

They are made of various materials and must meet minimum strength and built as stipulated in the safety Code for construction work. On the site, the majority of the railings are fixed permanently. They are inspected periodically.

Warning: The installation of guardrail must always be made with a full body harness

Fixed ladders:

Fixed ladders are used to replace the stairs. They must be strong enough to withstand a weight of 90 kg in middle of a rung and exceed the upper tier of at least 900 mm. Finally, fixed ladders must be equipped with guardrails surrounding the floor opening with a removable rigid barrier (not chain) giving access to it.

Ladder Safety Training:

All persons working at Meadowbank must have ladder safety training as delivered by the Training Department.

3-Point contact should be practiced and followed at all times when ascending and descending any equipment, staircases, ladders, basically any place where handrails are provided – use them.

- All ladders are to be inspected before use
- Always use the 4:1 rule when setting up a ladder – i.e.: 4' rise X 1' from the wall or structure that you are putting the ladder against
- Always secure extension ladders
- Always have a minimum of three rungs extending past the landing or exit point off of ladder at top
- Never use a conductive type ladder near electrical installations

There are many types of ladders in use at our operation. Extension ladders, folding ladders, straight ladders, and they come in assorted sizes and lengths.

5.4.10.2 Personal Protective Equipment

Safety Miners' Belts

When a safety belt is made available to a worker, it can be used in combination with a lanyard to limit the movement of the worker or to keep him/her in his/her working position and this for all workers working near an opening where a (3) meter or greater fall can occur.

Caution: The miners' belt cannot be used as personal protective equipment to stop the fall of a worker. In other words, the safety belt is used to prevent workers from reaching the point of fall (ex. Dangerous openings or shafts).

Safety Full Body Harness

Wearing a Full Body safety harness is mandatory for workers exposed to a fall of more than three (3) meters (9.8 feet) from his working position.

The full body safety harness is used with an energy absorber which is connected to a lanyard not

allowing a free fall of more than 1.2 meters (3.9 feet) or a retractable lifeline (also known as SALA BLOCK name) which includes the energy absorber.

Safety harness

Wearing a safety harness is mandatory for workers exposed to a fall of more than three (3) meters (9.8 feet) from his working position.

The safety harness is used with an energy absorber which is connected to a lanyard not allowing a free fall of more than 1.2 meters (3.9 feet) or a retractable lifeline (also known as SALA BLOCK name) which includes the energy absorber.

All persons required to use Fall Arrest Equipment – must have training in good standing.





Only harnesses classified class A (according to CSA-Z259.10) with straps for shoulders and thighs are used on the site.

Warning: *It is strictly forbidden for a worker to reuse a safety harness and energy absorber which was used in a fall. It is the responsibility of the worker involved in the fall to discard the equipment and send it to garbage.*

Energy absorber:

The shock absorber is actually a breaking device which must always be part of a safety harness, and this, in order to absorb the shock that the employee would have in cases of a free fall.

We have (2) types of dampers. The conventional damper comprising a pouch containing various types of energy absorbers and terminal loops and the lanyard shock absorber provided with an outer envelope longer than the inner part.

Lanyard:

We use two (2) types of lanyards made of synthetic fiber with or without shock absorbers built.

The lanyard without damper is always accompanied by a miner's belt and can be used as equipment used to arrest a fall. The lanyard with integrated shock is always accompanied by a safety harness and shall not permit a free fall of over 1.2 meters.

Furthermore, all lanyards shall be provided with a hook with a safety self-latching latch.

Anchor points:

The attachment point for the lanyard to a safety harness or safety belt shall be:

- Anchored to an element having a rupture capacity of a least 18 kilo Newton (4046.6 pounds);
- Attached to an approved slide line;
- Attached to a system of horizontal lifeline and anchorage, designed an certified by an engineer, certificate available on the mine site

Inspection before use of anchorage systems fall arrest is essential for the safety of the worker.

Every anchor point that was involved in a fall arrest must be re-checked and certified by an engineer.

Horizontal lifeline:

The horizontal cable is a steel cable with a diameter of 12 mm released at an angle less than 5 degrees from the horizontal and the distance between anchors points shall not be greater than 12 meters. The anchors points of a horizontal lifeline shall have a rupture capacity of a minimum 90 kilo Newton (20,000 lbs.) and cannot be used by more than two (2) workers simultaneously. The cable clamps must be tensioned using a torque wrench as specified by the manufacturer.

Any lifeline involved in a fall must be changed or re-certified by an engineer.

5.4.10.3 Training on Fall Protection

Training sessions and information are conducted periodically by training department with the collaboration of the health and safety department. The objective of this training is to train and inform about collective and personal protection in place to protect the health and safety of workers working at heights.

Workers participating to this training are documented stating the type of training, names of participants, name of contact person and the duration of the meeting. Monitoring of these meetings is to periodically respond to demands for improvement from participants. This monitoring is the responsibility of the training department.

5.4.10.4 Revision

The fall protection program is revised as required by the Health and Safety department in collaboration with all departments.

Requests for amendments, additions and revisions should be made to the Health and safety Department.

5.4.10.5 Site Management

Good housekeeping can eliminate some hazard related to the workplace and minimize the tripping hazards. In fact, if we tolerate the presence of debris and spills, it becomes easy to overlook serious risks.

In addition to basic cleanliness, good housekeeping requires that work areas are clean of debris and that the floors and hallways do not pose a risk of slipping or tripping. We must include demarcation areas, demarcation of travel ways and pedestrian crossings. The lack of storage space could be critical to maintain good housekeeping. Good housekeeping of the premises must be maintained all the time.

To achieve this, Agnico-Eagle Mines– Meadowbank division will have the resources to improve and maintain housekeeping on its site, and this, through the Supervision Formula and the work card. Furthermore, planned inspections under the theme "Hazard and Housekeeping" occur systematically in each department and this on an ongoing basis.

Waste Disposal:

The waste must be collected regularly to ensure good housekeeping of the site and to facilitate the recycling program in the waste management program. Leaving waste materials accumulate, becomes a waste of time and energy because we must go back and take the time to do the cleaning. In order to encourage and facilitate the removal of debris, containers are placed near the working areas. All waste containers are clearly identified (ex. glass, plastic, metal, etc.). To ensure compliance to this element, the environment department makes regular inspections, writes reports to the department that was inspected and makes a follow-up for the corrective actions.

5.4.11 Management of Sulphur Dioxide (SO2)

5.4.11.1 Means of Control

Preventive maintenance
In order to minimize the risk of dispersion of SO2 in the environment in the workplace, facilities are thoroughly inspected and all employees assigned to maintenance of the system receive specific training.

Several stationary SO2 gas monitors are strategically placed throughout the process plant and SO2 Plant to ensure everyone's safety.

Personal Protective Equipment
In accordance with the respiratory protection program for the selection, testing, maintenance and inspection of respirators, the following provisions apply in the presence of sulfur dioxide gas:

Sulphur dioxide in the AIR	Types of respirators	Comments
0-2 ppm	*No protection needed.*	*Concentration is lower than the prescribed threshold limit for 8 hours*
2 –20 ppm	*A cartridge half mask with sulphur dioxide filters*	

20-100 ppm	*Full-face mask with sulphur dioxide cartridge.*	*Eye irritation at 20 ppm and over*
100 ppm et plus	*A self-contained breathing apparatus*	
Emergency entrance with unknown values	*A self-contained breathing apparatus.*	

5.4.11.2 Training Information

Each year, a reminder is provided to all workers and supervisors who may perform work in the presence of sulfur dioxide.

5.4.12 Cyanide Management



In case of leakage, it evaporates rapidly producing a toxic gas lighter than air, hydrogen cyanide (HCN), a colorless gas smelling of bitter almonds.

5.4.12.1 Means of Control

Preventive maintenance

To minimize the risk of spreading the cyanide into the environment and in the workplace, facilities are thoroughly inspected and all employees assigned to maintenance of the system receive specific training.

Personal Protective Equipment

As explained in the respiratory protection program for the selection, testing, maintenance and inspection of respirators, the following provisions apply in the presence of cyanide

HCN Concentration in the air	Type of respirators	Comments
0-10 ppm	*Do not need a respirator.*	*Concentration is lower than the permissible maximum for 8 hours*
10 ppm et plus	*SCBA needs a self-contained breathing apparatus*	*Maximum value permissible for 8 hours*
Emergency entrance with unknown values	*Must enter with a self-contained breathing apparatus*	

HCN detection and alarms:

Gas sensors positioned at strategic locations to ensure plant reliability. These are calibrated periodically with standard gases of known concentration and the results of these calibrations are recorded in the register provided for that purpose and kept at the mill.

5.4.12.2 Training

All persons working with Sodium Cyanide must have received the mandatory Cyanide Awareness Training. This training will cover such topics as: what PPE is required, how to use and manipulate sodium cyanide totes, first aid procedures in the event of exposure, proper hygiene and cleaning practices that should be followed to prevent exposure etc.

Each year, a refresher course is given to all workers and supervisors that may have to work on the cyanide system. They must be able to easily recognize the warning signals and be fully aware of procedures to follow in case of alarms. They must also know the emergency plan and have conducted drills with their crew.

Under WHMIS, workers, supervisors and guardians officers are also informed about the use of cyanide (and hydrogen cyanide) and first aid measures in case of overexposure.

Finally, employers and workers concerned are trained for respiratory protection.

5.4.12.3 Dealing with Ammonia

Ammonia is a by-product gas produced by the Electro winning of Gold in the carbon stripping process in the Plant. There are stationary Ammonia gas monitors strategically located in the process plant to ensure everyone's safety.

Stationary gas monitors are in place for all gases that may be produced in the process plant. The control room operator monitors the gas readings on a 24/7 basis. If there is a release of gas in any area of the process plant, the gas monitor will alarm and the control room operator will proceed with the safe procedures for evacuating the mill and/or have the area checked out by competent trained persons.

Proper PPE such as SCBA's, portable gas monitors are provided for trained persons to do so.

5.4.13 WHMIS Review and Training

5.4.13.1 WHMIS 2015 training

All new employees and contractors will receive Workplace Hazardous Materials Information System (WHMIS 2015) training during their induction at Meadowbank site.

WHMIS 2015 training is mandatory for all employees and contractors no matter if the employee and contractor have received it in the past.

Refresher training is available on a yearly basis in the form of a safety meeting huddle and/or as requested.

5.4.13.2 SDS sheets

A "product review form" is used for all new products coming to site. This form is filled out by the Department requesting the new product.

The SDS sheet is then attached to the "product review form" and is sent to Health and Safety Department.

The "product review form" and SDS sheets are reviewed and signed off by:

- Health and Safety Department
- Environmental Department
- JOHS Committee Representative, and
- Purchasing Department

Once the "product review form" and SDS has been reviewed and signed by all concerned, the SDS sheet is then entered into the Maetrix Electronic Binder Online service by the Health and Safety Department?. From this point on, the SDS Online service is responsible in ensuring that the most up to date SDS sheets for products are kept on file.



This is the icon that is on all AEM computers which when used will access all of our SDS sheets.

Hard copies of SDS sheets are kept on file in the clinic (First Aid room) and the Warehouse.

5.4.14 Induction to Site

5.4.14.1 Emergency Measures Induction

All new employees, contractors, and visitors arriving at site for the first time receive an Emergency Measures Induction. This induction occurs on the same day as the persons arrive @ 5:00 p.m. and is delivered by a Health and Safety Department Representative.

Topics covered during the Emergency Measures Induction:

- Fire Alarm and Evacuation Route
- Muster Stations and how to access – physically shown locations
- How to initiate a "Code 1" Emergency on radio and/or telephone
- What to do if you get injured – how to access Medical help (location of clinic)
- Wearing of slippers to keep camp clean
- Kitchen/cafeteria hours
- Confectionary store – access and hours
- Mandatory Induction Training to site (Saturdays and Sundays)
- Agnico-Eagle Mines – Meadowbank Division – Emergency Response Capabilities
- How to access Security on site – (lost keys etc.)
- Working language @ Meadowbank is English
- Blasting in Open Pit mine – Noise and shaking – Blasting info etc.
- Noise and Respect for neighbors in Camp dorm room and wings
- Smoking Policy – where smoking is permitted – legislation

- Dry camp – No drugs or alcohol permitted on site
- Food and wildlife issues – no food outside and in domestic garbage
- Safety items such as using Man doors and not large garage doors to access buildings
- Danger / Caution Tape rules and respect for such
- Tagging in or signing in to access the Mill – Mill Evacuation procedures
- Respirator mandatory use in Mill, Crusher Buildings, Some areas of Assay Lab
- PPE zones and requirements for site
- Recreational walking/running on site
- Use and location of telephone booths
- Wireless Internet services
- Laundry facilities
- Use of gymnasium – physically shown location and equipment
- Review use of Fire Extinguisher
- Luggage – Tags – Check Out Time
- Health Services that are available on site such as sexual health, well-being (The clinic discusses these topics at the end of the induction, where the employees fill their medical forms.)

5.4.14.2 Mandatory Induction Training

The following topics are covered in great detail during the mandatory induction (e-learning) here @ Meadowbank. All employees, contractors (who will be at site for longer than 15 days) will receive this training prior to arriving at the site.
General Induction – (includes the following: Human Resources, Camp, Security, Environment, Health and Safety, Clinic – Health Care Providers) Each of these groups give an overview of what persons can expect from them, rules to follow, expectations etc.)

- Fire Extinguisher safety and use
- Workplace Hazardous Materials Information System – WHMIS
- SOP Surface – Driving anywhere on surface but not in the Pit or Mine
- Stairs and Ladder Safety
- Job Hazard Analysis
- Work Card (as per Supervision Formula philosophy)

5.4.14.3 Other Training provided

The following training is provided by our Training Department on an on-going basis and/or upon request. This list is not all inclusive but rather a general breakdown on some of the more common type of training that occurs at our site.

- SOP Mine – Driving in Pit and/or Mine – a person requires SOP Surface before he/she is eligible to be trained in SOP Mine.
- Aerial Work Platform
- Backhoe Operation
- Forklift Operation
- Telehandler Operation
- Over Head Crane Operation
- Lock Out / Tag Out Safety
- Fall Protection

- Confined Space
- Skid Steer
- Respiratory Protection
- Standard First aid – CPR – Oxygen Therapy
- Mill Induction

5.4.15 Emergency Response Program

5.4.15.1 Selection of Candidates

Person(s) wanting to become part of Meadowbank's Emergency Response Team may do so by filling out the application form and submitting it to the Health and Safety Department. Person(s) with previous experience in Emergency Response, Mine Rescue, Fire Fighting, Ambulance, First Aid, etc. are encouraged to apply.

5.4.15.2 Medical Evaluation

All person(s) wanting to be an active member of the Emergency Response Team must undergo and pass a Medical Evaluation. This medical is conducted by our Health Care Providers and results are sent down to our Medical Director who will review and advise accordingly.

5.4.15.3 Basic Mine Rescue Training

All person(s) who have completed and passed their medical evaluation will receive Basic Mine Rescue training. Training is of 40 hour duration and involves:

- Introduction: Principles, Requirements and Certification
- Mine Rescue Operations: Emotional Stress, Personal Safety and PPE, Team Procedures
- Mine Gases: Recognition, Effects and Treatment, TLV's, Hazards, Gases and Chart
- Gas Detection and Equipment: Introduction, Gas detection pumps and tubes, Electronic Devices
- Oxygen Therapy: When, The oxygen unit, Safe Practices, Storage and Handling
- Electrical Safety: Basic Facts and Hazards, Potential Injuries, Safe Approach and Lock Out / Tag Out
- Rescue Rigging: Introduction, Webbing and Rope, Equipment, Knots.
- Fire: Safety, Ignition Temperatures, Combustion, Fire Phases, Ventilation, Fire Habits, Fire Extinguisher. Fire-Fighting and PPE
- Respiratory Protective Equipment: Introduction, Hazards, SCBA, Donning, Doffing
- Rescue Rigging: Harnesses, Lowering, Anchoring, Packaging Systems and Shallow, Slope Rescue
- Special Hazards of Winter Conditions.
- Rescue Operations: Tools, Airbags, Winching, Vehicles, Buildings and Cave Ins
- Scene Assessment and Incident Command: ICS, Activation, Team, Classifications, Scene / Hazard Size Up / Zones
- Team Practical: Fire Drill Exercise, Equipment Donning, Searching
- Team Practical: Rescue Rigging, Repelling
- Final Evaluation and Written Exam

Upon successful completion of the Mine Rescue course – the individual will receive a Certificate from WSCC.

At the present time, we have three qualified Mine Rescue Instructors at site.

5.4.16 Critical Procedures

5.4.16.1 The Critical Procedures

- The Fundamental Critical Procedure
- Fit For Work
- Lifting and Mechanical Handling
- Working at Heights
- Permit to Work
- Energy and Machinery Isolation
- Confined Spaces
- Water Bodies and Liquid Storage
- Chemicals and Hazardous Substances
- Surface Mining
- Mobile Equipment and Light Vehicle
- Equipment Guarding

The Critical Procedures are designed to explain how we the Meadowbank Division will operate safely while conducting tasks associated with these rules.

Each Critical Procedure will have policies, procedures, standards and training associated with them, which helps our workforce to safely conduct work related to the rule.

5.4.17 Environmental Spills / Wildlife

5.4.17.1 How to Handle Spills

Any person noticing or causing a spill shall:

1. Stop the activity causing the spill
2. Contain (avoid spreading)
3. Decontaminate
4. Segregate – soil/snow – use pads, or booms
5. If larger than 100 liters – Call the Environmental Dept.: ext. 6747, 6728, or Radio channel 9.
6. Complete an Environmental Spill Report and give to Environment Department

5.4.17.2 How to Handle Wildlife

1. Make no sudden moves
2. Find a Safe shelter
3. Call Environmental or Security Department – Environmental (6747, 6728 or Radio channel 9), (Security 6748, 6817 or channel 9)
4. Do not provoke animals
5. Do not feed animals
6. Do not liter

7. Properly dispose of your food waste
8. Beware of animals while driving
9. Report all animal sightings – date, time, specific area, number of animals etc.

6. Review of Health & Safety Plan

On a yearly basis, the Health and Safety Department will produce a Health and Safety report. The purpose of this report and analysis is, among others, to reveal a tendency on the type of accidents that occur most often and to reveal the root causes behind these events, and this, in order to establish action plans for the coming months.

The results are presented to the Joint Occupational Health and Safety committee and the management team to assist them in their future goals. It must contain the following aspects:

Health Section:

- number of injuries and incidents;
- frequency of events
- severity of events;
- part of the body injured:
- type of injury;
- nature of injury;

Safety Section:

- root causes behind the events;
- main immediate causes behind the events;
- equipment involved in the events;
- time of day when events occur;
- sequence of work where events occur;
- trade affected;
- seniority workers to the task when an event occurs;
- event involving a fire hazard;
- comparison to previous years;

To be reviewed by Management and the OHSC on yearly basis.

Quality Assurance / Quality Control (QA/QC) Plan, Version 4

AGNICO EAGLE

MEADOWBANK GOLD PROJECT

Quality Assurance / Quality Control (QA/QC) Plan

In Accordance with Water License 2AM-MEA1526 and 2AM-WTP1826

Prepared by:
Agnico Eagle Mines Limited – Meadowbank Division

Version 4
March 2019

EXECUTIVE SUMMARY

This document presents the Meadowbank and Whale Tail Sites Quality Assurance / Quality Control (QA/QC) Plan, a requirement of the Meadowbank Type A Water License No. 2AM-MEA1526 Part I Item 16 and 2AM-WTP1826 Part I Item 19. This Plan also supports the following conditions of the Meadowbank Project Certificate No. 004 Condition 6 and 23, issued by the Nunavut Impact Review Board (NIRB). The plan has been developed in accordance with the current standard method and with the Crown-Indigenous Relations and Northern Affairs Canada (CIRNAC) 1996 '*Guidelines for Use by Class "A" Licensees in Meeting SNP Requirements and for Submission of a QA/QC Plan'*

The objective of quality assurance and quality control (QA/QC) program is to assure that the chemical data collected are representative of the material being sampled, are of known quality, are properly documented, and are scientifically defensible. Data quality was assured throughout the collection and analysis of samples using specified standardized procedures, by the employment of accredited laboratories, and by staffing the program with experienced technicians.

IMPLEMENTATION SCHEDULE

As required by Water License 2AM-MEA1526 and 2AM-WTP1826 Part B, Item 11, the proposed implementation schedule for this Plan is outlined below.

This Plan will be immediately implemented (March 2019) subject to any modifications proposed by the Analyst or the NWB as a result of the review and approval process**.**

DISTRIBUTION LIST

Agnico Eagle – Environment Superintendent
Agnico Eagle – Environment General Supervisor
Agnico Eagle – Environmental Coordinator
Agnico Eagle – Environmental Technician

DOCUMENT CONTROL

Version	Date (YMD)	Section	Page	Revision
1	09/01/01			Comprehensive plan for Meadowbank Project
2	14/06/20			Comprehensive update of the plan for Meadowbank Project
3	15/09	2.2.4	4	Modify Preservation section
		2.2.5	5	Add trip blank and field blank
4	2019/03	All	All	Integration of Whale Tail Site

Prepared By: Environmental Department



Approved by:_____

Robin Allard
Environment General Supervisor

TABLE OF CONTENTS

Contents

SECTION 1. INTRODUCTION 1
SECTION 2. FIELD SAMPLING 2
2.1 SAMPLING EQUIPMENT 2
2.2 SAMPLING METHODS AND HANDLING 2
2.2.1 Sample Identification 2
2.2.2 Surface Water Sampling 3
2.2.3 Groundwater Well Sampling 3
2.2.4 Preservation 4
2.2.5 Field Duplicates, Field Blanks and Trip Blanks 5
2.2.6 SAMPLE TRANSPORT 6
SECTION 3. LABORATORY ANALYSIS 7
3.1 EXTERNAL LABORATORY 7
3.2 INTERNAL LABORATORY 7
SECTION 4. DATA REQUIREMENTS 8
4.1 DATA COLLECTION 8
4.2 DATA VERIFICATION 8
4.3 EXCEEDENCE REPORTING 8

LIST OF TABLES

Table 2-1: Summary of Sampling Requirements 4
Table 2-2: Quality Control Sample Frequency 5

LIST OF APPENDICES

Appendix A: H2Lab Accreditation Certificate

SECTION 1. INTRODUCTION

The objective of quality assurance and quality control (QA/QC) program is to assure that the chemical data collected are representative of the material being sampled, are of known quality, are properly documented, and are scientifically defensible. Data quality was assured throughout the collection and analysis of samples using specified standardized procedures, by the employment of accredited laboratories, and by staffing the program with experienced technicians.

This Plan documents the QA/QC program for the Meadowbank Project required by Type A Water License 2AM-MEA1526 and 2AM-WTP1826. It has been developed in accordance with the current standard method and with the Crown-Indigenous Relations and Northern Affairs Canada (CIRNAC) 1996 '*Guidelines for Use by Class "A" Licensees in Meeting SNP Requirements and for Submission of a QA/QC Plan',* which includes the following definitions:

Quality Assurance: the system of activities designed to better ensure that quality control is done effectively; and

Quality Control: the use of established procedures to achieve standards of measurement for the three principal components of quality – precision, accuracy and reliability.

This QA/QC Plan sets out standard procedures for sample and data collection with respect to surface water and groundwater sampling in support of monitoring programs outlined in the *Water Quality and Flow Monitoring Plan*, *Groundwater Monitoring Plan* and *Core Receiving Environment Monitoring Program (CREMP)*. The QA/QC plan will be reviewed as needed and updated as required by the Environment General Supervisor.

Section 2 includes procedures for field sample collection and handling, Section 3 outlines external and internal laboratory requirements and Section 4 sets out data verification procedures and regulatory reporting requirements.

SECTION 2. FIELD SAMPLING

Sampling stations, frequency and parameters are set out in Type A Water License 2AM-MEA1526 and 2AM-WTP1826 Schedule I – Conditions Applying to General and Aquatic Effects Monitoring[1] and Metal and Diamond Mining Effluent Regulations (MDMER). All sampling stations have a GPS location and are landmarked. All stations are used repeatedly with the same qualified personnel and techniques to reduce operational error. The following sections outline the standard procedures for collection and handling of all surface water and groundwater samples.

2.1 SAMPLING EQUIPMENT

New laboratory supplied containers are used for sample collection. The bottles are either polyethylene plastic or glass, dependent on the specific parameter being analyzed.

Different handheld instruments are used to collect, as required, field parameters such as turbidity, temperature, pH, conductivity and dissolved oxygen. Instruments are calibrated before each sample event to ensure optimal performance and calibration results are recorded for future reference, if needed. Calibration and maintenance procedures are followed as set out by the supplier's operation manual. Equipment and bottles are selected so that they do not contaminate or alter the concentrations of parameters of interest according to laboratory standards.

For the groundwater sampling, CREMP sampling and to collect water samples at depth from the surrounding lake receiving and references environments, a pump with tubing is used. Low Density Poly Ethylene (LDPE) tubing (groundwater only), filter apparatus, manual pump and tubing, ash less filter paper are used to filter water for chlorophyll and inline filter for dissolved metal and/or for depth integrated sampling (i.e. chlorophyll a, phytoplankton or biological oxygen demand).

2.2 SAMPLING METHODS AND HANDLING

2.2.1 Sample Identification

All samples have a unique sample identification name based on a station identifier, date and time of collection. For duplicate, field blank and trip blank, the sample identification are still based on the station identifier, date and time but followed by DUP (duplicate), FB (field blank) or TB (trip blank).

All sample bottles are identified with the sample identification and date of collection. This information is marked on a label with a water resistant pen and affixed to the sample bottle. Additional information like time of sampling and parameters to analyses are included in the analysis request that will be sent to the accredited laboratory.

[1] Refer to Meadowbank Water Quality Flow and Monitoring Plan Section 2.3 and Whale Tail Water Quality and Flow Monitoring Plan Section 2.3 for more detailed description of station locations and both Meadowbank and Whale Tail Type A License Schedule I – Tables 1 and 2. The actual location of each sampling site will be marked with a highly visible stake with appropriate signage attached that will define the exact location of the collection point

2.2.2 Surface Water Sampling

The bottles are pre-labelled with the required sample identification before going on the field. Surface grab samples are collected by submerging the sample bottle to half depth of the stream/lake. For sumps, diversion ditches and piped discharge points, sample are collected below the surface of the water.

Samples bottles are provided by the accredited laboratory. Bottles are received pre-rinsed and pre-preserved or pre-rinsed with vials of preservative that are added in the field by qualified technicians or biologists. In the case that bottles are not pre-preserved, bottles are rinsed three times with sample water before filling. When sampling bottle contains preservative, the bottle is filled by using another clean bottle to avoid any release of preservative. Sometimes, a preservative is added after filling as directed by the laboratory; see Section 2.2.4 for more detail on preservation. The bottles are filled properly to allow mixing, preservative addition and thermal expansion.

Samples analyzed for dissolved metals are filtered through ash less filter paper at the time of collection when the delay before analysis is long. However, when the delay before analyses is fast the accredited laboratory will filter the sample before analyses. For chlorophyll A analysis, the sample is filtered through the ash less filter paper. In some case, when the analysis delay is long, the sample is frozen to prevent parameter degradation.

2.2.3 Groundwater Well Sampling

Well Preparation for Sampling

At the time of purging and sampling the heat trace cables are activated to warm the well pipe. Once the well has been thawed the well is purged.

Well Purging

Depending on the depth of the well, purging is performed by inserting a ¾'' Low Density Polyethylene (LDPE) Waterra tube to approximately 20 meters below the water surface and to use a compressor to push the water out. The wells are purged to remove standing water inside the well and to induce the flow of fresh groundwater from the rock formation. The Waterra tube is lowered to 20 meters below the remaining water and a compressor is used to completely dry the well. The quality of the purged water is monitored for pH, conductivity, temperature, water clarity and color (visual observation) during this activity. Three (3) well volumes of water between the in-well packer and bottom of screened interval) are removed prior to sampling or until the monitored parameters stabilize (values remaining within 10% for three consecutive readings).

Groundwater Sampling

Groundwater is sampled immediately after purging by lowering the intake of the DVP tubing to 3 to 5 meters above the screened interval.

A groundwater sample is collected in clean, laboratory-supplied containers as per the instructions in the previous section. Samples analyzed for dissolved metals are filtered through a 45 µm inline filter.

Samples are collected in duplicate (see Section 2.2.5) and submitted to the analytical accredited laboratory. Duplicate samples are collected.

Measurements of groundwater temperature, pH, electrical conductivity, turbidity and salinity are obtained in the field during purging and sampling. Measurements are recorded for future reference and to check against laboratory data.

The following procedures are followed to provide data quality control on the samples:

- Measurement of field parameters at selected intervals until stable readings (within 10% of each other);
- Minimization of the exposure of the sampled water to the atmosphere;
- Use of compressed, inert gas (nitrogen) to evacuate water for sample collection;
- In-situ measurement of sensitive chemical parameters (pH, conductivity, where applicable); and
- Abiding by sample preservation methods (refrigeration and use of preservatives where needed); and specified holding times.

Bottles are labelled with required information.

2.2.4 Preservation

Preservatives, if required, are added to sample bottles by the laboratory or added by the technician after filling, as directed by the analytical laboratory. Table 2.1 summarizes the minimum sample volumes, preservation and holding times for each analyte. This information was provided by the accredited laboratory H2Lab and revised with them in compliance with their protocol. It should be noted that pH, conductivity, turbidity, dissolved oxygen are parameters analyses on the field.

Table 2-1: Summary of Sampling Requirements

Parameter	Minimum Volume (mL)	Bottle Type	Preservation	Holding Time
pH	250	250 mL, glass or plastic, filled to the top	4˚C	Analyze immediately
Conductivity	125	250 mL, glass or plastic	4˚C	28 days
Hardness	250	250 mL plastic, filled to the top	4˚C, HNO_3	6 months
Oil and Grease (total)	1000	1 L amber glass	4˚C, H_2SO_4	28 days
Turbidity	125	250 mL, glass or plastic	4˚C	48 hours
Total Dissolved Solids (TDS)	125	250 mL glass	4˚C	7 days
Total Suspended Solids (TSS)	125	250 mL glass	4˚C	7 days
Total Alkalinity	250	250 mL, glass or plastic, filled to the top	4˚C	14 days
Bicarbonate Alkalinity	250	250 mL, glass or plastic, filled to the top	4˚C	14 days
Carbonate Alkalinity	250	250 mL, glass or plastic, filled to the top	4˚C	14 days
Total Cyanide	125	250 mL, glass or plastic	4˚C, NaOH	14 days
Free Cyanide	125	250 mL, glass or plastic	4˚C, NaOH	14 days
Benzene, Toluene, Ethylbenzene & Xylene	40 (per vial)	3 X 40 mL, glass, filled to the	4˚C	7 days

Parameter	Minimum Volume (mL)	Bottle Type	Preservation	Holding Time
(BTEX)		top		
Total Petroleum Hydrocarbons(TPH)	1000	1L, glass	4˚C, H_2SO_4	28 days
Total Metals (ICP-MS) (Aluminum, Antimony, Arsenic, Boron, Barium, Beryllium, Cadmium, Cobalt, Copper, Chromium, Iron, Lithium, Manganese, Mercury, Molybdenum, Nickel, Lead, Selenium, Tin, Strontium, Titanium, Thallium, Uranium, Vanadium, Zinc, Potassium, Magnesium, Sodium)	125	250 mL plastic	4˚C, HNO_3	6 months
Dissolved Metals (Aluminum, Antimony, Arsenic, Boron, Barium, Beryllium, Cadmium, Cobalt, Copper, Chromium, Iron, Lithium, Manganese, Mercury, Molybdenum, Nickel, Lead, Selenium, Tin, Strontium, Titanium, Thallium, Uranium, Vanadium, Zinc)	125	250 mL plastic	4˚C, Filtered on-site, HNO_3	6 months
Ammonia-nitrogen	250	250 mL, glass or plastic, filled to the top	4˚C, H_2SO_4	28 days
Total kjeldahl nitrogen	250	250 mL, glass or plastic, filled to the top	4˚C, H_2SO_4	28 days
Nitrate nitrogen	125	250 mL, glass or plastic	4˚C	48 hours
Nitrite nitrogen	125	250 mL, glass or plastic	4˚C	48 hours
Ortho-phosphate	125	250 mL, glass or plastic	4˚C	14 days
Total phosphorous	125	250 mL, glass or plastic	4˚C, H_2SO_4	28 days
Total organic carbon	125	250 mL glass	4˚C, H_2SO_4	28 days
Dissolved organic carbon	125	250 mL glass	4˚C, H_2SO_4	28 days
Chloride	125	250 mL, glass or plastic	4˚C	28 days
Fluoride	125	250 mL plastic	4˚C	28 days
Sulphate	125	250 mL, glass or plastic	4˚C	28 days
Radium 226	500	1L plastic	4˚C, HNO_3	1 month
Reactive Silica	250	500 mL, plastic	4˚C	28 days

2.2.5 Field Duplicates, Field Blanks and Trip Blanks

One field duplicate, one filter blank, and one field blank are collected for a) every 10 samples (i.e. randomness duplicate samples are taken for 10% of the samples), b) each sampling event or c) once per year as shown in Table 2.2. Field duplicates and filter blanks are collected and handled in the same manner as the other samples in the field. Field blanks are samples of deionized (DI) water handled concurrently and in the same manner as the other samples in the field. Trip blank, laboratory pre-filed bottles with DI water are carried to the sampling location and are left unopened, will be collected for a total of 10% annually.

Table 2-2: Quality Control Sample Frequency

Sampling Site	QA/QC Sampling Frequency
Compliance Monitoring Program	
Attenuation and reclaim ponds	1 field duplicate and 1 field blank per 10 samples
Mine facilities - operations	1 field duplicate and 1 field blank per year

Mine facilities - closure	1 field duplicate and 1 field blank per year
Mine facilities - post-closure	1 field duplicate and 1 field blank per year
Seep water chemistry	1 field duplicate and 1 field blank per 10 samples
Groundwater chemistry	1 field duplicate per groundwater sampling event. One field blank and 1 trip blank per year
Receiving water chemistry	Blind field duplicates, laboratory and field blanks, sediment cleaning swipes, laboratory matrix spike duplicates per 10 samples (CREMP)
Event Monitoring Program	
Each event	1 field duplicate and 1 field blank per 10 samples

2.2.6 SAMPLE TRANSPORT

All water samples are stored upright in coolers with ice packs and preserved as specified by the laboratory. Samples are shipped to the external laboratory as soon as possible via chartered aircraft and dedicated ground transportation to ensure arrival in a safe and timely manner. If sample can't be shipped the same day, there are conserved in a refrigerator at 4°C until shipping.

A Chain of Custody form with the following information is completed for every shipment of samples:

- Company name and sampler's name;
- Sample identification name;
- Time and date of sampling;
- Presence and type of preservative and whether the sample was filtered or not;
- Requested analytical parameters for each bottle;
- Time and date of shipping; and
- Analytical laboratory address and contact person.

One electronic or PDF copy is send by email to the laboratory and one electronically copy is kept at the mine site for reference.

SECTION 3. LABORATORY ANALYSIS

3.1 EXTERNAL LABORATORY

All analytical chemistry analyses are performed by an accredited laboratory.

In many cases these analyses are performed by H2Lab, an accredited facility (see Appendix A) that is located in Val D'Or, Quebec. This ensures that samples collected meet holding time requirements for all regulatory sampling. All data from H2Lab undergoes a rigorous internal QA/QC process, including the use of spiked samples and duplicate samples. All QA/QC data passed the laboratories acceptable limits.

All toxicity tests were performed by an accredited laboratory, generally Maxxam Analytique in Quebec City and/or Aquatox in Guelph, ON. Testing was conducted as stipulated in the corresponding Environment Canada Biological Test Methods.

Agnico also require the services of laboratory as Maxxam in Edmonton, Alberta, and SGS in Lake Field, Ontario for some parameters that H2Lab is not accredited for. Agnico also uses the services of ALS for many of the CREMP and AEMP water quality analysis.

3.2 INTERNAL LABORATORY

The assay lab at the Meadowbank site is not an accredited laboratory but is periodically used for "real-time" results for some parameters like TSS, Copper and WAD Cyanide. These results are for observational purposes and do not meet the standards of an accredited laboratory.

SECTION 4. DATA REQUIREMENTS

4.1 DATA COLLECTION

Starting in 2018, Agnico implemented the use of an environmental database named EQuiS. All historical data and future sampling result of all water sampling data is maintained at the Meadowbank and Whale Tail sites. The database has been designed based on the sample stations in the compliance monitoring program of 2AM-MEA1526 and 2AM-WTP1826 Schedule I, the various discharge limits designated in the license, the MDMER regulation and CCME guideline. The database functionality includes trend analysis and flagging out of compliance samples, all to enhance the effectiveness of the QA/QC program. All of this information is presented to regulators in the annual report.

The following data is collected for each sample in the field and will be entered into the database by the sampler for the corresponding sampling station:

a) Sample identification name;
b) Name of sampler;
c) Date and time of sampling or measurement; and
d) Physical characteristics (pH, temperature etc.), if required.

Upon receipt of sample results from the laboratory, the data will be input to the database and matched on sample identification name.

The analysis certificate for each sample from the accredited laboratory will include but not limited to:

a) Analytical methods or techniques used;
b) Date of analysis;
c) Name of the person(s) / laboratory that approved the certificate; and
d) Results of any analysis.

4.2 DATA VERIFICATION

Upon reception of analytical results, the field blank and duplicate analyses will be verified for potential contamination and accuracy, respectively. Results will be interpreted and recommended actions will be taken if results are not accurate.

4.3 EXCEEDENCE REPORTING

Any measured concentration at a sample station exceeding a regulated discharge criterion stipulated in Water License 2AM-MEA1526, 2AM-WTP1826 or the Metal and Diamond Mining Effluent Regulations (MDMER) will be reported to the NWB, ECCC and CIRNAC water inspector as soon as the analysis result is received. In addition, results of the action plan will be reported and, where necessary, mitigation options identified within 90 days after receipt of the analyses.

Appendix A
H2Lab Accreditation Certificate

H2Lab's Laboratories

Matrix legend:	Location legend :
DW: Drinking Water	RN : Rouyn-Noranda
WW: waste water, GW: Ground water, SW: Surface water	VD : Val-d'Or
S: Soil, SO: Solid, Lix: Lixiat	SAM : Sainte-Agathe-des-Monts
MD: Dangerous mannor	Jol: Joliette

Dom	Parameters	Matrix	Method	location
1	Total and fecal coliforms or *Escherichia coli*	DW, GW	Membrane filtration	RN, SAM, JOL
2	AAHB, Enterococcus	DW, GW	Culture, Membrane filtration	RN, SAM, JOL
3	Pseudomonas aeruginosa, Staphylococcus aureus	DW, GW	Culture, Membrane filtration	SAM, JOL
4	Total coliforms (presence/abscence), Escheria coli (presence/abscence)	DW, GW	Presence/Absence	RN, SAM, JOL
6	Coliphage virus (presence/absence)	DW, GW	Presence/Absence	SAM, JOL
11	Ba, B, Cd, Cr, Pb, Cu	DW, GW	ICP-MS	RN
12	Hg	DW, GW	Mercury analysor	RN
13	As, Se	DW, GW	ICP-MS	RN
14	U	DW, Lix	ICP-MS	RN
15	CN, F, NO2-NO3, Turbidity	DW, GW, SW	Colorimetry, ionic chromatography, ion analyzer, turbidimetor	RN
17	NH3-NH4, dissolved Bromine, CNd, NO2, NO3, Ptot, H2S	DW, GW, SW, Lix	Ion analyzer, ICP-MS, Colorimetry, Ion analysor, Optique-ICP, Colorimetry	RN
18	Turbidity	DW, GW, SW	Turbidimetor	SAM, JOL
20	T.O.C.	WW, SW	Infrared	VD
21	Nitrites-Nitrates	DW, GW, SW	Colorimetry	SAM
23	Ca, Fe, Mg, Mn, Na	GW	ICP-MS	RN, SAM
26	Cl, SO4	GW	Ion analyzer	SAM
28	Sb	DW, GW	ICP-MS	RN
29	Fluoride	DW, GW	Ion analyzer	SAM
30	Fecal coliforms	DW, GW, SW, Lix	Membrane filtration	RN, SAM, JOL
31	Total coliforms	WW, SW	Membrane filtration	RN, SAM, JOL
40	BOD5, COD	DW, WW	Specific electrod, Colorimetry	RN, SAM
41	TSS (total suspended solids), VSS (Volatil suspended solids)	WW	Gravimetry	SAM
42	NH3-NH4, NTK, OPO4, Ptot	WW, SW	Colorimetry, ICP	RN, SAM
43	Total solids	WW	Gravimetry	VD, RN
49	Phenol index (colorimetric)	WW, GW, SW, Lix	Colorimetry	VD
50	TSS (total suspended solids)	WW, GW, Lix	Gravimetry	RN
58	Conductivity	WW, GW	Automatic Titration	VD, RN, SAM
60	Chloride, color, pH, SO4	WW, Lix	Ion analyzer, Colorimetry, automatic titration, ion analyzer	RN
63	As, Hg, Se	WW, Lix	ICP-MS	RN
64	Cd, Cr, Cu, Fe, Ni, Pb, Zn	WW, Lix	ICP-MS	RN
66	Oils and greases	WW	Gravimetry	VD
77	Al, Sb, Ag, As, Ba, Be, Ca, Co, Mg, Mn	WW, Lix	ICP-MS	RN
86	pH	DW, WW, GW, Lix	Automatic Titration	VD, SAM
88	Al, Ag, As, Cd, Cr, Cu, Fe, Mn, Hg, Ni, Pb, Se, Na, V, Zn (mining metals)	WW, Lix	ICP-MS	RN
91	NH3-NH4, CNO, Cn, NO2+NO3, MES, H2S, SCN, S2O3	WW, SW	Colorimetry, Ionic Chromatography, Gravimetry	RN
92	TSS (Total suspended solids)	WW	Gravimetry	VD
95	Ptot, TSS (total suspended solids)	WW, SW	Colorimetry, gravimetry	SAM
97	Ba, Sn, Mo	WW	ICP-MS	RN
109	C10-C50 (Petroleum hydrocarbon)	DW, WW, SW, Lix	GC-FID	VD
120	Policyclic aromatic hydrocarbon (PAH) *Benzo (a) pyrène*	DW, WW, GW	GC-MS	VD
123	PAH	WW	GC-MS	VD
124	PAH	WW, GW, Lix	GC-MS	VD
131	Phenolic compounds (GC-MS)	GW	GC-MS	VD
140	VOC (MAH,CAH, BTEX)	DW, GW, WW, Lix	GC-MS	VD
150	Trihalomethane (THM)	GW	GC-MS	VD
209	C10-C50 petroleum hydrocarbons	S, MD, SO	GC-FID	VD
210	Leaching	SO	Leaching	RN
213	As, Hg, Se	S,MD,SO	Optic-ICP, Mercury analyzer	RN
214	Ag, Ba, Cd, Cr,Co, Cu, Sn,Mo, Ni, Pb, Zn	S, SO,MD	Optic-ICP	RN
215	Al, Ca, Mg, Mn, K	S, SO, MD	Optic-ICP	RN
217	pH, TSS (total suspended solids), VSS (Volatil suspended solids)	SO	Electrode, gravimetry	SAM
222	Sulfur	S, SO	Thermal decomposition, Infrared	RN
226	Acid generating potential	S, SO	Titration, Thermal decomposition, Infrared	RN
227	Water Leaching	SO	Leaching	RN
228	Acetic acid Leaching	SO	Leaching	RN
229	Acid rain simulation Leaching	SO	Leaching	RN
320	PAH	MD, SO	GC-MS	VD
330	Phenolic compounds (GC-MS)	S, So, MD	GC-MS	VD
342	VOC (MAH,CAH, BTEX)	S, MD, SO	GC-MS	VD
700	Sampling	DW	Sampling	RN, SAM
800	Radium	DW	Scintillation	VD
802	Tritium	DW	Scintillation	VD
850	Radium	WW	Scintillation	VD

Dom	Parameters	Matrix	Method	location
	Alcalinity		Automatic Titration	VD, RN
	Carbonate		Automatic Titration	VD, RN
	Bicarbonate		Automatic Titration	VD, RN
	Dissolved parameters		Same as for total method with filtration	RN
	Carbonated BOD5		Selective electode	RN, SAM
	DOC, TIC, DIC		Infrared	VD
	Petroleum product identification		GC-FID	VD

For other analysis please contact the lab manager

Sub-contarctant will be chosen upond the accreditation domain requested if necessary.

Adresses

H2Lab Rouyn-Noranda	H2Lab Val-d'Or
125 boul. Industriel	900 5ème avenue
Rouyn-Noranda, Qc.	Val-D'Or, Qc.
J9X 6P2	J9P 1B2
tel: 819-797-0550	Tel: 819-874-0350
H2Lab Sainte-Agathe-des-Monts	**H2Lab Joliette**
180 Boul. Norbert-Morin	963, rue Papineau
Sainte-Agathe-des-Monts, QC	Joliette, QC
J8C 2W5	J6E 2L8
tel: 819 326-8690	tel: 450 753-1118

Spill Contingency Plan, Version 7

MEADOWBANK MINE

Spill Contingency Plan

Meadowbank Mine Site
All Weather Access Road (AWAR)
Whale Tail Pit
Whale Tail Haul Road
Baker Lake Facilities

In Accordance with Water License 2AM-WTP1826 & 2AM-MEA1526

Prepared by:
Agnico Eagle Mines Limited – Meadowbank Division

Version 7
February 2019

EXECUTIVE SUMMARY

This document presents the Spill Contingency Plan for Agnico Eagle Mines Limited (Agnico Eagle) Meadowbank Mine Site, All Weather Access Road (AWAR), Whale Tail Mine Site, Whale Tail Haul Road, and Baker Lake Marshalling Facilities, which is a requirement of the Meadowbank Gold Project Type A Water License No. 2AM-MEA1526 issued on July 23, 2015 and 2AM-WTP1826 issued on July 11, 2018.

The Spill Contingency Plan (SCP) designates lines of authority, responsibility, establishes proper reporting and details plans of action in the event of a spill. This plan applies to the operational phase of the Project and is applicable to all Agnico Eagle employees and any contractors associated with the project located at latitude 65°01'52"N and longitude 96°04'22"W approximately 70 km north of Baker Lake in Nunavut including the Baker Lake Marshalling Facilities located at latitude 64°18'36"N and longitude 95°58'04"W, Whale Tail Project located at latitude 64°24’14” and 96°40’50”, the All-Weather Access Road (AWAR), and the Whale Tail Haul Road between Meadowbank and Whale Tail sites.

IMPLEMENTATION SCHEDULE

As required by Water License 2AM-WTP1826 Part B, Item 13 & 2AM-MEA1526 Part B Item 11, the implementation schedule for this Plan is effective immediately (February 2019) subject to any modification proposed by the NIRB and NWB as a result of the review and approval process.

DISTRIBUTION LIST

Agnico Eagle – Environmental Superintendent
Agnico Eagle – Environmental General Supervisor
Agnico Eagle – General Mine Manager
Agnico Eagle – Engineering Superintendent
Agnico Eagle – Health and Safety Superintendent
Agnico Eagle – Geology Superintendent
Agnico Eagle – Mill Superintendent
Agnico Eagle – Maintenance Superintendent
Agnico Eagle – Mine Superintendent
Agnico Eagle – Energy & Infrastructure Superintendent

DOCUMENT CONTROL

Version	Date (YMD)	Section	Page	Revision
1	08/08/08			Comprehensive plan for Meadowbank Mine Site, Exploration Camp and Baker Lake Facilities
2	11/12/04			Update of Contacts, Spill management materials, include AWAR map and Spill KIT Location Map
3	12/07/25			Update of the hazardous materials stored on site
4	2013/11			Comprehensive revision and update with info for Baker Lake Jet-A Tank
5	2014/11	Appendices I & J		Include the prohibition of adding neutralizing chemicals to drainages or near or within water bodies
6	2015/09	3 Table 4 5.1.3 5.6 Appendix L Appendix M		Change definition of a major spill and minor spill Contact Information Add point that procedure MBK-ENV-0016 will be followed for reporting spills Addition of section on event monitoring. Seepage monitoring included in section. Dyno Nobel Emergency Response Plan added in Appendix J MBK-ENV-0016 Spill Response Procedure Added
7	2019/02	Complete document		Added Whale Tail pit and haul road to the Spill Plan.

Prepared By: Environmental Department

Approved By: 

Robin Allard
General Supervisor Environment

Table of Content

1. INTRODUCTION....8
1.1 PURPOSE AND SCOPE OF THE SPILL CONTINGENCY PLAN....8
2 PROJECT DESCRIPTION....9
2.1 PREVENTION AND INSPECTIONS....9
3 DEFINITIONS....16
3.1 WHAT IS A SPILL?....16
3.2 MATERIALS AND REPORTABLE (TO REGULATORY AUTHORITIES) SPILLS ON SITE....16
4 RESPONSE ORGANIZATION....18
4.1 FIRST RESPONDER....21
4.2 SUPERVISOR....21
4.3 INCIDENT COMMANDER....21
4.4 EMERGENCY RESPONSE TEAM....21
4.5 EMERGENCY RESPONSE TEAM COORDINATOR....21
4.6 ENIVRONMENTAL SUPERINTENDENT OR DESIGNATE....22
4.7 GENERAL MINE MANAGER ON DUTY....22
4.8 HEALTH AND SAFETY SUPERINTENDENT OR DESIGNATE....22
4.9 ON-SITE HEALTH CARE PROVIDERS....23
4.10 SPILL RESPONSE TEAM CONTACT INFORMATION....23
5 ACTION PLAN....26
5.1 INITIAL ACTION....26
5.1.1 Respond Quickly....26
5.1.2 Ensure safety....26
5.1.3 Report Spill....27
5.2 SPILLS ON LAND....27
5.3 SPILLS ON WATER....27
5.4 SPILLS ON SNOW AND ICE....28
5.5 DISPOSAL OF SPILLED MATERIAL....29
5.6 EVENT MONITORING....29
6 HAZARDOUS MATERIALS STORED ON SITE....31
7 POTENTIAL SPILL ANALYSIS....33
8 RESPONSE EQUIPMENT....34
8.1 GENERAL EQUIPMENT....34
9 TRAINING & EMERGENCY SPILL/EXERCISE....40

LIST OF FIGURES

FIGURE 1: LAYOUT MEADOWBANK MINE SITE 11
FIGURE 2: LAYOUT VAULT SITE 12
FIGURE 3: BAKER LAKE DIESEL FUEL TANK FARM 13
FIGURE 4: BAKER LAKE JET-A FUEL TANK FARM 14
FIGURE 5: LAYOUT WHALE TAIL PROJECT CAMP 15
FIGURE 6: SPILL/INCIDENT REPORTING PROCEDURE 19
FIGURE 7: SPILL/INCIDENT ON WATER REPORTING PROCEDURE 20
FIGURE 8: SPILL RESPONSE EQUIPMENT LOCATION AT MEADOWBANK 37
FIGURE 9: MAP OF AWAR INCLUDING LOCATIONS OF ENVIRONMENTAL EMERGENCY SEA CANS 38
FIGURE 10: MAP OF WHALE TAIL HAUL ROAD INCLUDING LOCATIONS OF ENVIRONMENTAL EMERGENCY SEA CANS 39

LIST OF TABLES

TABLE 1 - SPILL QUANTITIES THAT MUST BE REPORTED TO THE NT-NU 24-HOUR SPILL REPORT LINE 16
TABLE 2 - INTERNAL CONTACTS 24
TABLE 3 - CONTRACTOR CONTACTS 25
TABLE 4 - EXTERNAL CONTACTS 25
TABLE 5 - MATERIALS STORED AT SITE DURING OPERATIONS 31

LIST OF APPENDICES

Appendix A: Environmental Department weekly inspection template

Appendix B: NWT/NU Spill Report Form

Appendix C: General Response Procedures for Spilled Chemical Substances Explosives
C.1 Ammonium Nitrate
C.2 Ammonium Nitrate Fuel Oil (ANFO)

Appendix D: General Response Procedures for Spilled Chemical Substances
D.1 Compressed Gases

Appendix E: General Response Procedures for Spilled Chemical Substances
E.1 Flammable and Combustible Liquids

Appendix F: General Response Procedures for Spilled Chemical Substances
F.1 Oxidizing Substances - Liquids
F.2 Oxidizing Substances - Solids

Appendix G: General Response Procedures for Spilled Chemical Substances
G.1 Poisonous and Toxic Substances (Sodium Cyanide)

Appendix H: General Response Procedures for Spilled Chemical Substances: Corrosive Substances
H.1 Acids, Liquids
H.2 Acids, Solids
H.3 Bases/Alkali, Liquids
H.4 Bases/Alkali, Solids

Appendix I: Agnico Eagle Spill Response Training Records

Appendix J: Dyno Nobel Emergency Response Plan

Appendix K: MBK-ENV-0016 Spill Reporting Procedure

Appendix L: 2018 Mock Spill in Baker Lake

Appendix M: Product Transfer Area Assessment – Baker Lake Oil Handling Facility

LIST OF ACRONYMS

Agnico Eagle	Agnico Eagle Mines Limited
ANFO	Ammonium Nitrate Fuel Oil
AWAR	All-Weather Access Road
CCME	Canadian Council of Ministers of the Environment
CIRNAC	Crown-Indigenous Relations and Northern Affairs Canada
DFO	Fisheries and Oceans Canada
ECCC	Environment and Climate Change Canada
EMS	Environmental Management System
ERP	Emergency Response Plan
ERT	Emergency Response Team
ERTC	Emergency Response Team Coordinator
GN	Government of Nunavut
HCN	Hydrogen Cyanide
HMMP	Hazardous Materials Management Plan
LEL	Lower Explosion Limit
MSDS	Materials Safety Data Sheets
NIOSH	National Institute for Occupational Safety and Health
OHSP	Occupational Health & Safety Plan
PCB	Polychlorinated Biphenyls
PPE	Personal Protective Equipment
PTA	Product Transfer Area
SCP	Spill Contingency Plan
TBD	To Be Determined
TDG	Transportation of Dangerous Goods
WHMIS	Workplace Hazardous Materials Information System

1. INTRODUCTION

1.1 PURPOSE AND SCOPE OF THE SPILL CONTINGENCY PLAN

The overall purpose of creating a spill contingency plan is to minimize the impacts of spills by the establishment of predetermined lines of response and plans of action. This plan has been designed to facilitate effective communication and the efficient clean-up of potentially hazardous materials spills. These materials include:

- Hydrocarbon liquids such as diesel fuel, aviation fuel (Jet-A), gasoline, hydraulic oil;
- Soluble solids such as ammonium nitrate prills;
- Soluble liquids, such as glycols, acids, paints;
- Corrosive liquids such as sulphuric acid and corrosive solids such as sodium cyanide; and
- Any deleterious substances such as suspended solids, arsenic, copper, lead, nickel, zinc etc.

More specifically the objectives of this Spill Contingency Plan (SCP) are to:

- Identify roles, responsibilities, and reporting procedures;
- Provide readily accessible emergency information to the cleanup crews, management, and government agencies;
- Comply with federal and territorial regulations and guidelines pertaining to the preparation of contingency plans and notification requirements;
- Promote the safe and effective recovery of spilled materials; and
- Minimize the environmental impacts of spills to water or land.

This plan has been prepared in accordance with the following reference documents:

- Crown-Indigenous Relations and Northern Affair Canada (CIRNAC) 2007. *Guidelines for Spill Contingency Planning*;
- Government of Canada, Department of Fisheries and Ocean (DFO) 2016, *Fisheries Act*;
- Government of Canada, Environment and Climate Change Canada (ECCC) 1999, *Canadian Environmental Protection Act (CEPA) Environmental Emergency Regulations*;
- Government of Canada, Environment and Climate Change Canada (ECCC) 2017, *Migratory Birds Convention Act 1994*;
- Government of Canada, Environment and Climate Change Canada (ECCC) 2018, *Metal and Diamond Mining Effluent Regulations*;
- Government of Nunavut (GN), *Contingency Planning and Spill Reporting in Nunavut. A Guide to the New Regulations;*
- Government of Nunavut (GN) 2002, *Guideline General Management of Hazardous Wastes in Nunavut*; and
- Northwest Territories Resources Wildlife and Economic Development, Environmental Protection Service. 1988. *Spill Contingency Planning and Reporting Regulations*.

2 PROJECT DESCRIPTION

The Meadowbank Gold Project, operated by Agnico Eagle Mines Limited, is located approximately 70 km north of the Hamlet of Baker Lake in Nunavut. The project is located on Inuit Owned surface lands (IOL BL-14) and has the following coordinates:

Latitude: 65°01'52"N
Longitude: 96°04'22"W
NTS map sheet 66H/1

Meadowbank Project components include marshalling facilities in Baker Lake, the 110 kilometer All-Weather Access Road (AWAR) from Baker Lake, the Meadowbank mine site (Figure 9), the Whale Tail Project and the Whale Tail Pit Haul Road between Meadowbank and Whale Tail sites (Figure 10). The Meadowbank mine site consists of the process plant, landfarm, sewage treatment plant, water intake, accommodation buildings, power plant, tank farm, warehouse, truck shop, emulsion plant, open pit (Figure 1) and Vault area (Figure 2). The Baker Lake Marshalling Area consists of a laydown transfer area to temporarily store materials prior to the delivery to the Meadowbank mine site. The Baker Lake fuel farm consists of six (6), ten (10) million litre tanks for diesel fuel, within secondary containment (Figure 3) and eighteen (18) 100,000L double walled tanks, within secondary containment, for aviation fuel (Figure 4). Agnico Eagle is in the permitting process to add two 10,000,000 L tanks in Bake Lake. The Whale Tail camp (Figure 5) consists of sewage treatment plant, water intake, accommodation buildings, power plant, 1,500,000 bulk fuel storage area, warehouse, maintenance shop, and open pit. The Whale Tail Haul Road has one diesel tank of 1,915L installed at Km 132.

The fuel is delivered in bulk by sealift to the Baker Lake fuel farm. From there, fuel is hauled to the Meadowbank and Whale Tail sites by contractor tanker trucks on the AWAR and on the Whale Tail Pit Haul Road, respectively. Diesel fuel coming from the Baker Lake Tank Farm is stored at the Meadowbank site into a single 5.6 million litre tank, within secondary containment, and the aviation fuel into eight (8) – 50,000L double walled tanks in proximity of the airstrip. Fuel at the Whale Tail site will be stored in one 1,500,000 L tank. From there, the diesel is redistributed around site by an onsite fuel truck to site fuel tanks. Fuel storage locations have been designed to meet the CCME guidelines for Aboveground Storage Tank Systems Containing Petroleum and Allied Petroleum Products.

Emergency spill response equipment (i.e. spill kits) is installed at each fuel storage location. Spill kits contain the appropriate type, size and quantity of equipment for the volume and type of product present at the storage location. Transport trucks, heavy equipment and light vehicles are all equipped with spill kits.

Construction at the Meadowbank mine site began with the issuance of the Type A Water License and other relevant authorizations in July 2008 with operations commencing in January 2010. Mining of ore at Meadowbank is expected to cease in Q3 2019. The Meadowbank site is expected to be extended through the operation of the Whale Tail Project which will supply ore to the Meadowbank process plant. Construction of the Whale Tail open pit has started in July 2018.

2.1 PREVENTION AND INSPECTIONS

The first step in spill contingency planning is to take actions to prevent spills from occurring.

Transport, transfer and storage of materials are performed by trained personnel using secondary containment, with well- maintained equipment and containers. Refueling stations in Baker Lake, at the mine site, and at the Whale Tail site are equipped with a lined area to contain any minor leaks or spills while refueling. Transfer of fuel from tanks to tanker trucks are performed with the aid of fuel pumps. A Product Transfer Area Assessment were conducted for the Baker Lake Oil Handling Facility and can be found in Appendix M. Good housekeeping practices are adopted especially in areas such as storage facilities, loading and unloading zones. Site orientations are conducted with all employees and spill prevention and response is discussed in detail. Regular worksite inspections are conducted to identify measures to minimize the risk of spills. All personnel are trained to be aware of the potential hazards associated with the fuel/chemicals with which they are assigned to work. In addition to work site inspections conducted by area specific employees, the Environmental Department conducts weekly inspections to audit facilities handling or storing hazardous materials (Appendix A).

Agnico Eagle supports the following general principles for spill prevention:

- Provide up-to-date and accessible Material Safety Data Sheets (MSDS) for all hazardous materials;
- Regular inspections of fuel/chemical storage areas for leaks (including flex connectors and plumbing) and platform shifting;
- Regular inspections of hazardous materials storage areas;
- Train workers in the use of safe work procedures for hazardous materials, and procedures to clean up spills;
- Encourage workers to take reasonable measures to prevent spills;
- Keep drums/containers sealed or closed when not in use;
- Place drums/containers within a suitable form of secondary or spill containment;
- Keep “overpack” or “salvage” drums nearby to contain leaking drums;
- Keep storage areas secure from unauthorized access;
- Segregate incompatible materials;
- Ensure chemical storage areas are adequately protected from weather and physical damage; and
- Provide adequate spill response materials at storage areas (details of spill response equipment are outlined in Section 8).

Figure 1: Layout Meadowbank Mine Site

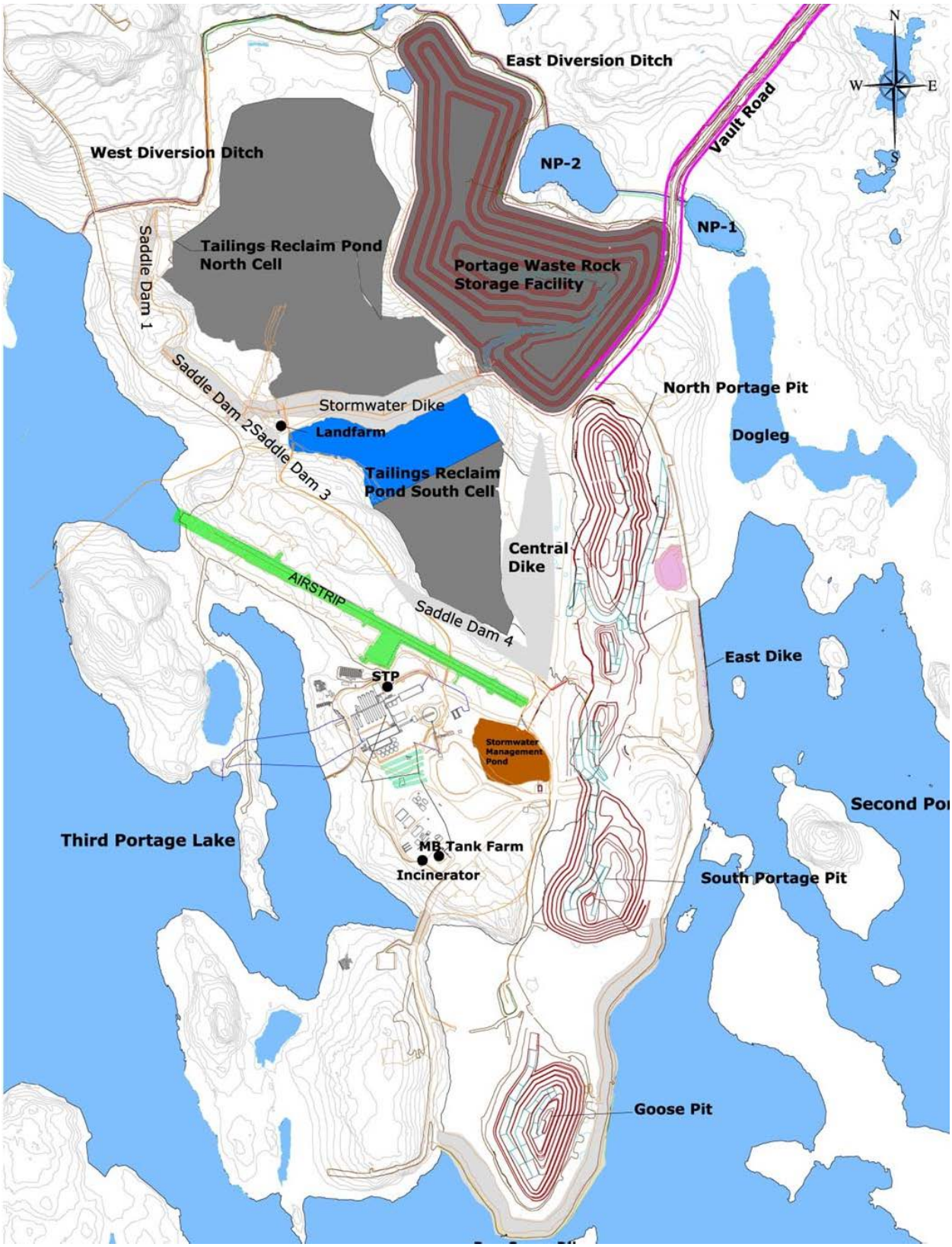

Figure 2: Layout Vault Site

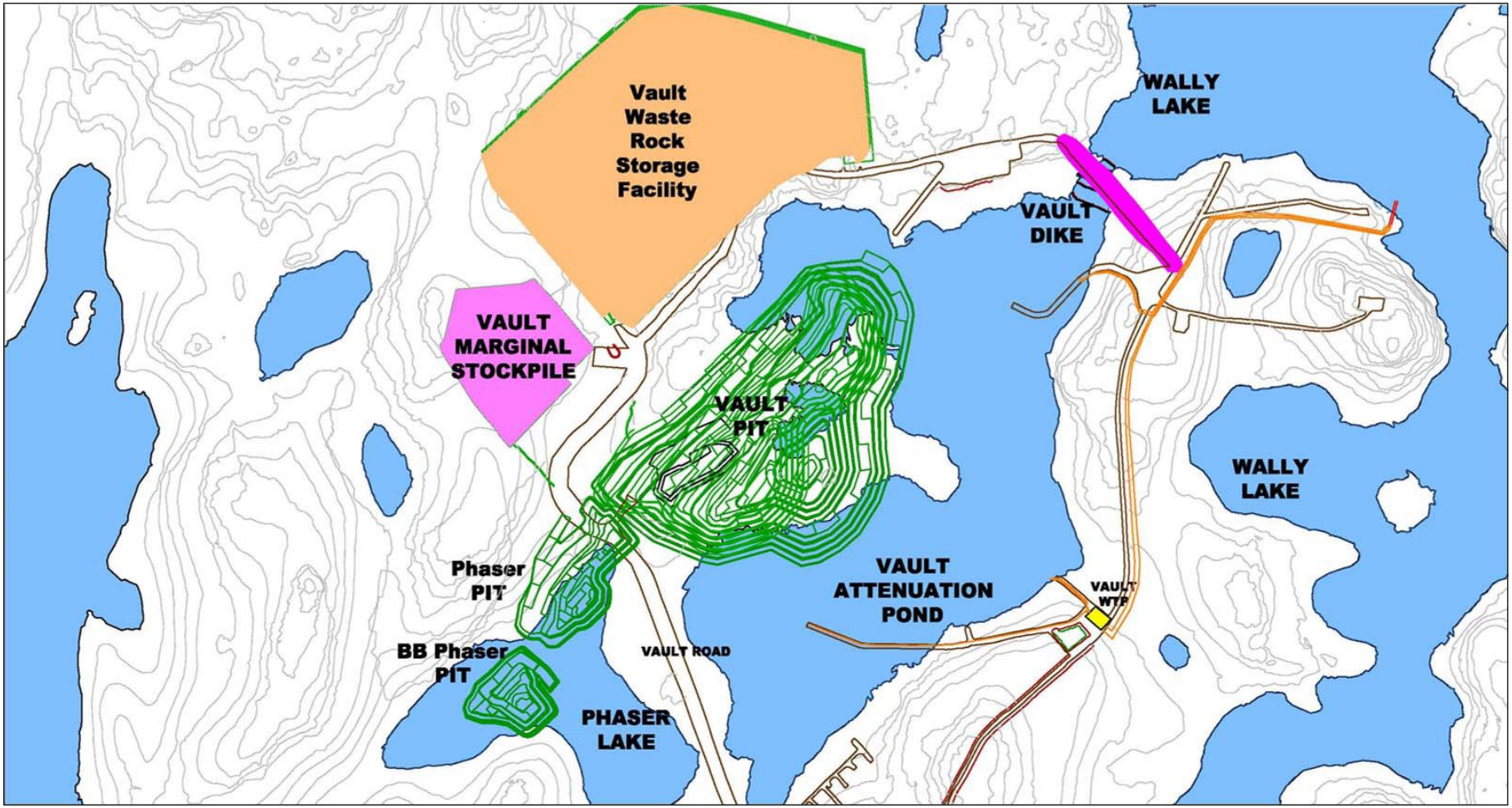

Figure 3: Baker Lake Diesel Fuel Tank Farm

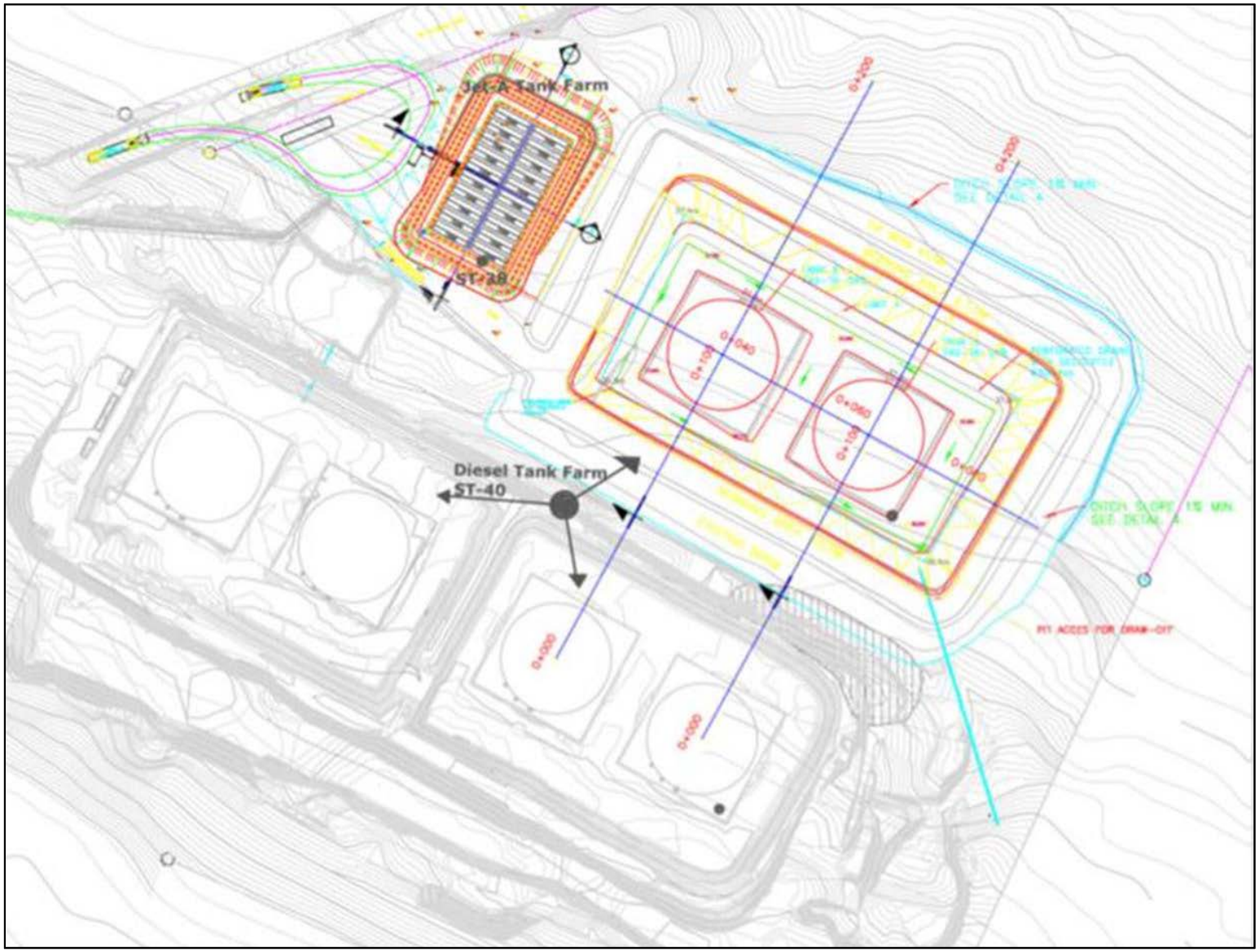

Figure 4: Baker Lake Jet-A Fuel Tank Farm

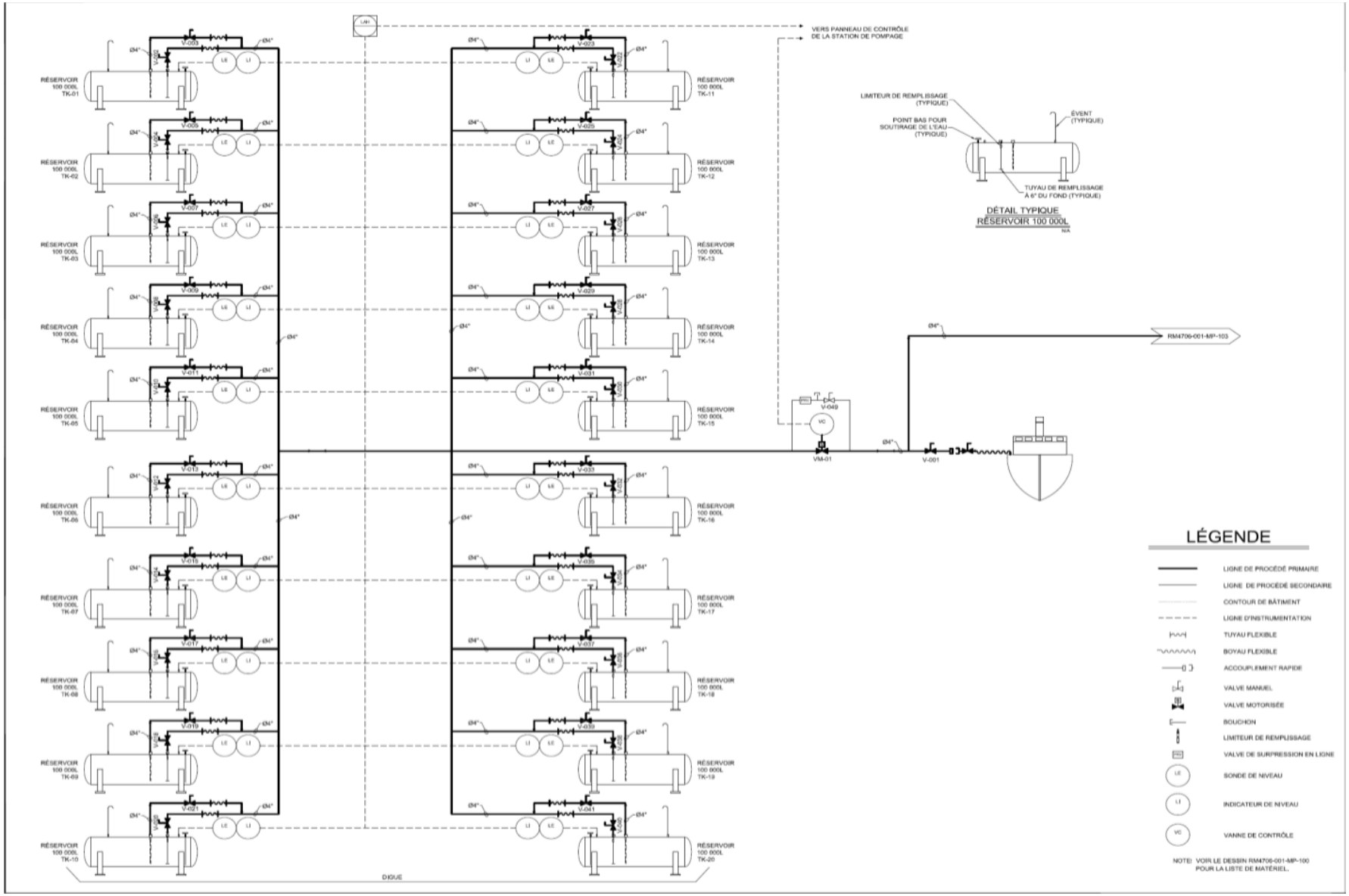

Figure 5: Layout Whale Tail Project Camp

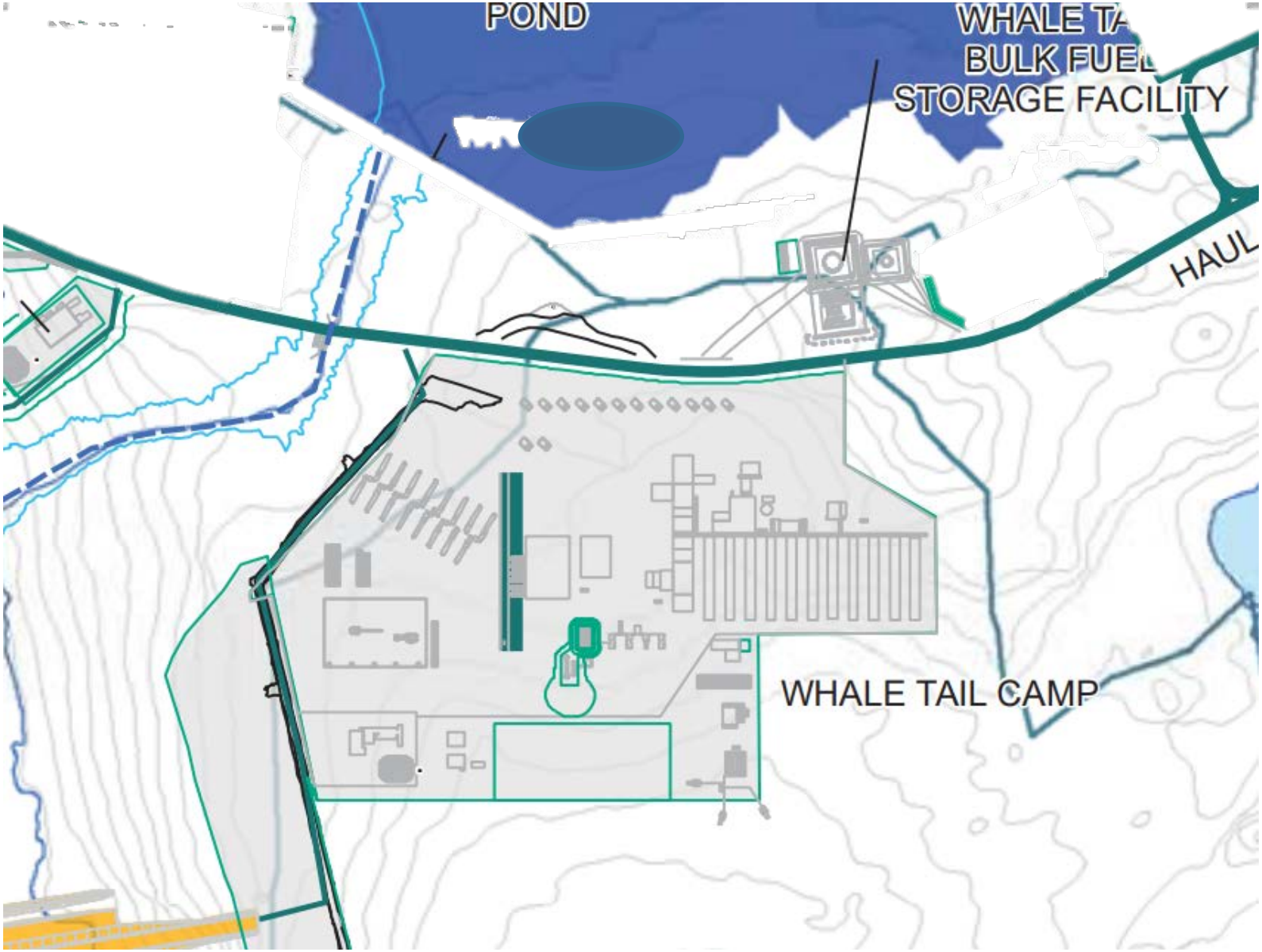

3 DEFINITIONS

3.1 WHAT IS A SPILL?

For the purposes of this plan, a major spill is defined as an accidental release of product into the environment that has the potential for adverse impacts to the receiving environment, Agnico Eagle property or human health. This can include potential impacts to water, surface and groundwater, land, equipment, buildings, local communities, human health and the atmosphere.

A minor spill is defined as any spill that does not involve a toxic, reactive, or explosive material in a situation that does not pose a significant risk to the environment, human health or Agnico Eagle property. Minor spills are generally contained within Agnico Eagle facilities.

3.2 MATERIALS AND REPORTABLE (TO REGULATORY AUTHORITIES) SPILLS ON SITE

As a precaution, if there is any doubt as to whether the quantity spilled meets the minimum thresholds for reporting to regulatory authorities listed in Table 1, the spill incident will be reported. Furthermore, Agnico Eagle maintain a detailed log of all spills reportable to authorities and those non-reportable for all materials listed in Section 1.1. As part of Agnico Eagle's overall environmental management system and in the spirit of a continuous improvement of environmental performance, procedures will be implemented to ensure **all** spills irrespective of location are reported to the Meadowbank Environment Department.

To ensure compliance with Section 36(3) and 38(5) of the Fisheries Act, Section 5(1) of the Migratory Birds Convention Act, the CEPA Environmental Emergency Regulations, Nunavut Spill Regulation and the Metal and Diamond Mining Effluent Regulations all spills of fuel or hazardous/deleterious materials, regardless of quantity, into a water body (including frozen), shall be reported immediately to the NT-NU 24-HOUR SPILL REPORT LINE (at 867.920.8130 or online at spills@gov.nt.ca). All spills on land that reach the reportable quantity listed in Table 1 need to be report to the NT-NU 24-HOUR SPILL REPORT LINE within 24 hours of the spill occurrence.

Table 1 - Spill quantities that must be reported to the NT-NU 24-HOUR SPILL REPORT LINE

Transportation Class	Type of Substance	Compulsory Reporting Amount
1	Explosives	Any amount
2.1	Compressed gas (flammable)	Any amount of gas from containers with a capacity exceeding 100 L
2.2	Compressed gas (non-corrosive, non- flammable)	Any amount from containers with a capacity exceeding 100 L
2.3	Compressed gas	Any amount
2.4	Compressed gas (corrosive)	Any amount
3.1, 3.2, 3.3	Flammable liquid	100 L
4.1	Flammable solid	25 kg
4.2	Spontaneously combustible solid	25 kg
4.3	Water reactant solids	25 kg
5.1	Oxidizing substances	50 L or 50 kg
5.2	Organic peroxides	1 L or 1 kg
6.1	Poisonous substances	5 L or 5 kg
7	Radioactive substances	Any amount
8	Corrosive substances	5 L or 5 kg
9.1 (in part)	Miscellaneous substances	50 L or 50 kg
9.2	Environmentally hazardous	1 L or 1 kg

Transportation Class	Type of Substance	Compulsory Reporting Amount
9.3	Dangerous wastes	5L or 5 kg
9.1 (in part)	PCB mixtures of 5 ppm or more	0.5 L or 0.5 kg
None	Other contaminants	100 L or 100 kg
None	Deleterious substances, Seepage	Any amount

Note: L = litre; kg = kilogram; PCB = polychlorinated biphenyls; ppm = parts per million

4 RESPONSE ORGANIZATION

This section addresses the response organization and the responsibilities of each individual during response to an incident.

Figure 6 and 7 illustrates Agnico Eagle's Spill Reporting Procedure Steps in the event of a spill and Sections 4.1 -4.9 list the major responsibilities of site staff that will be participating in the emergency response management.

The first person (first responder) to notice, or come in contact with, any spill situation either initiates a Code 1 (i.e. If a tanker truck overturns on the AWAR/Whale Tail Haul Road) or reports to his/her immediate supervisor (i.e. All other spills on land or water). The supervisor is responsible to report the incident to the designated Incident Commander for a major spill or to the environmental department for a minor spill. If a Code 1 is initiated, the Incident Commander will respond in conjunction with the Emergency Response Team (ERT). Major responsibilities such as initial coordination, spill clean-up and mobilizing the ERT are part of the Incident Commander's duties.

The Incident Commander will contact the Environmental Superintendent and/or General Mine Manager or alternate, who in turn will inform the Senior Vice President, Environment and Sustainable Development. After all information has been collected, the Environmental Superintendent or alternate will submit a spill report and follow up spill report to the NWT/NU Spill Line, Nunavut Water Board, Kivalliq Inuit Association, Environment and Climate Change Canada (ECCC) and Crown-Indigenous Relations and Northern Affairs Canada (CIRNAC). Incidents that require media communications will be the responsibility of Agnico Eagle General Mine Manager or alternate.

In the event of a major spill during a ship-to-ship transfer or due to unforeseen circumstances, the shipping company will be solely responsible for responding to the spill. The containment and clean-up of inadvertent spills resulting from the tankers in transporting the fuel is the responsibility of the shipping company. In the unlikely event where a major fuel spill becomes unmanageable, the shipping company could call on external resources such as the Canadian Coast Guard for assistance. In these situations, Agnico Eagle would provide whatever assistance it can to the shipping company[1]. Due to the lack of resources Agnico Eagle possess to counter act such a large scale marine spill, Agnico Eagle's assistance would be limited to providing support to preserve the shoreline environment. Agnico Eagle would put its resources to the best use possible during such an event, and assist as much as possible with the resources at hand. The Shipboard Oil Pollution Emergency Plan (SOPEP) is the responsibility of the shipping company; it covers the ship-to- ship transfer of fuel near Helicopter Island. Please refer to the Oil Pollution Emergency Plan for more details. Please refer to the certificate of entry and acceptance boats of shipping company, communication protocol, safety management system for entry into confined water and monthly safety meeting forms found in the Oil Pollution Emergency Plan.

[1] The Emergency Response Team will not be equipped or trained to respond to spills offshore in the Marine environment. They will however be able to respond to spills in the near shore area

Figure 6: Spill/incident reporting procedure

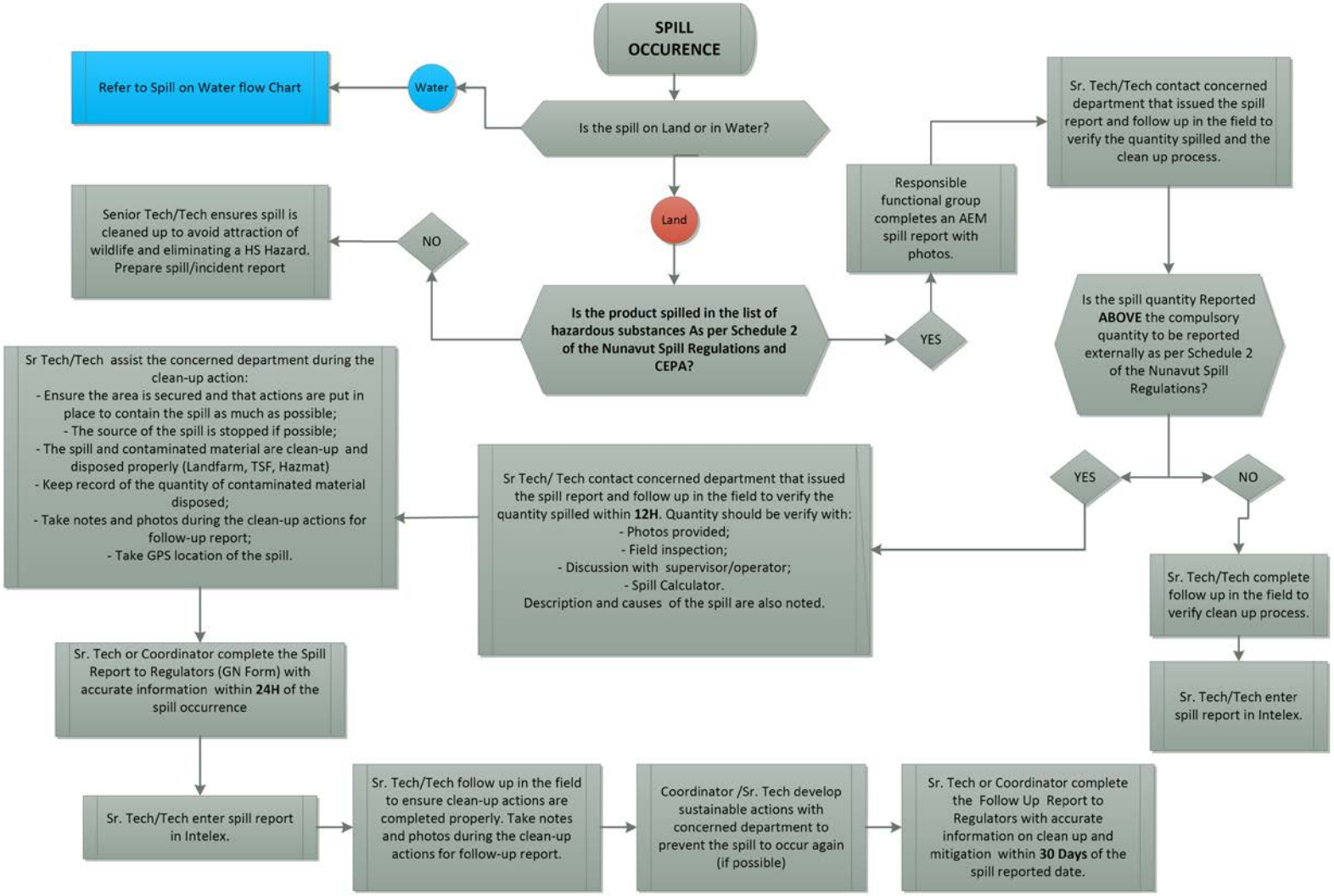

Figure 7: Spill/incident on Water Reporting Procedure

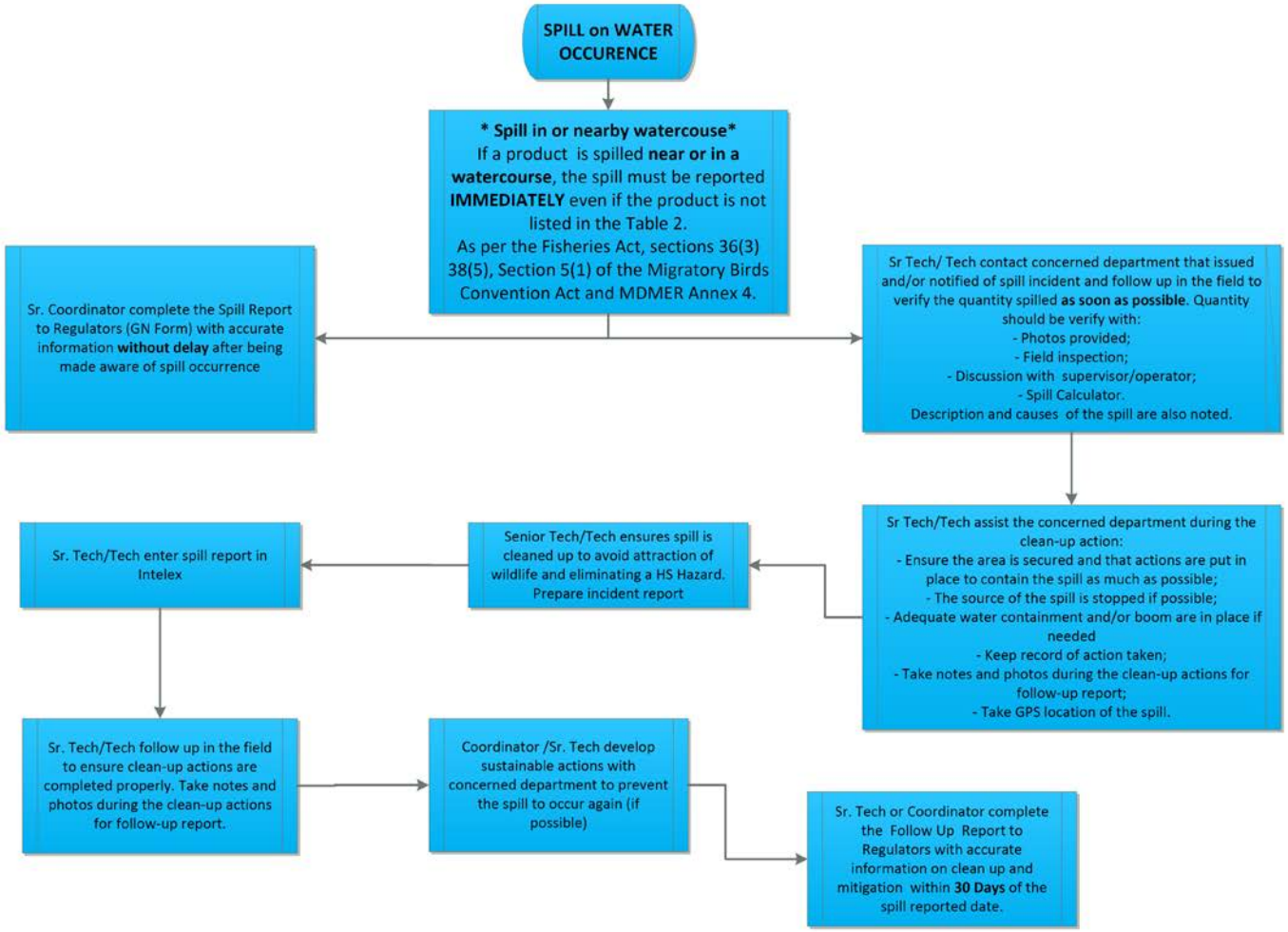

4.1 FIRST RESPONDER

The person who has caused a spill or the first to observe the spill is the first responder. The responsibilities of the first responder are as follows:

- In case of major incident (example: tanker truck overturn) and/or spill in or nearby watercourse, initiate a Code 1. Remain on radio to provide guidance to the ERT;
- In case of spill to land or water, contact the supervisor to report the incident;
- Immediately identify and contain the spill, IF SAFE TO DO SO; and
- Participate in spill response as a member of the clean-up crew.

4.2 SUPERVISOR

The responsibilities of the Supervisor are as follows:

- Initial assessment of the severity of the incident;
- Contacts the Incident Commander or Environmental Department;
- Gathers facts about the spill; and
- Participate in spill response as a member of the clean-up crew.

4.3 INCIDENT COMMANDER

Responsibilities of the Incident Commander are as follows:

- Assume complete authority over cleanup personnel and the spill scene, as well as assume responsibility for all mitigation efforts;
- Evaluate the initial situation and assess the magnitude of the problem;
- Activates the initial response plan;
- Alert and assemble key personnel in the response team, as deemed appropriate, to handle the situation;
- In consultation with the Environmental Superintendent or designate, develop the overall plan of action for containment and cleanup of the specific incident, as well as direct and implement the plan;
- Ensure assigned responsibilities are carried out and the activities of team members are coordinated;
- Assess the requirements for people, equipment, materials, and tools to contain the spill in light of what resources are immediately available; urgency will depend on the nature of the spill; and
- In consultation with the Environmental Superintendent or designate mobilize any additional resources that may be required and arrange for the transportation of necessary personnel and/or materials to the site.

4.4 EMERGENCY RESPONSE TEAM

Agnico Eagle has an Emergency Response Team (ERT) that is trained and responsible for controlling major spills, including those that could occur should a tanker truck overturn along the AWAR or on the Whale Tail Haul Road, and assisting with medical and other emergencies that may occur at the Meadowbank Mine, wherever the location. ERT team members attend regular training sessions.

4.5 EMERGENCY RESPONSE TEAM COORDINATOR

The responsibilities of the Emergency Response Team Coordinator (ERTC) are as follows:

- Mobilize all ERT personnel, equipment, personal protective equipment and supplies as

required to the site of the spill;
- Assist Incident Commander in obtaining any additional resources not available on site;
- Ensure that appropriate PPE is worn properly;
- Assist in developing and implementing emergency response training programs and exercises; and
- Ensure that all spill response personnel receive adequate training to fulfill their responsibilities as part of the ERT.

4.6 ENIVRONMENTAL SUPERINTENDENT OR DESIGNATE

The Environmental Superintendent or designate is responsible for implementing and maintaining the SCP. In addition, the Environmental Superintendent's or designates responsibilities in the case of a spill are to:

- Liaise with the Incident Commander;
- Provide technical advice on the anticipated environmental impacts of the spill;
- Advise on the effectiveness of various containment, recoveries, and disposal options, and suggest the most appropriate approach;
- Prepare and submit any formal reports (see Appendix B for NWT/NU Spill Report Form) to regulators and Agnico Eagle management detailing the occurrence of a spill;
- Contact the Senior Vice President Environment and Sustainable Development immediately for a major spill;
- Act as the spokesperson with regulatory and government agencies;
- If authorized by the General Mine Manager, act as a spokesperson with the public and media, as required;
- Implement a sampling protocol for the collection and analysis of samples to identify and monitor possible contaminant levels resulting from the spill;
- Ensure on-site resources for spill response and cleanup are available;
- Monitor the effectiveness of the cleanup operation and recommend further work, if necessary;
- Reviews incident occurrences and recommends preventative measures; and
- Assists in implementing training and simulation requirements for spill response personnel.

4.7 GENERAL MINE MANAGER ON DUTY

The General Mine Manager/designate is required to inform team members of the detailed nature of the operations to be performed in the event of a major spill during the operations phase. The responsibilities of the General Mine Manager/designate are as follows:

- Liaise with Agnico Eagle personnel resources and keep them informed of cleanup activities;
- Incidents that require media communications will be the responsibility of Agnico Eagle General Mine Manager or alternate; and
- Assist the Incident Commander and ERT as needed, particularly in obtaining any additional resources not available onsite for spill response and cleanup.

4.8 HEALTH AND SAFETY SUPERINTENDENT OR DESIGNATE

The following are the responsibilities of the Health and Safety Superintendent or designate in conjunction with the Training Department:

- Maintain emergency and health and safety records;
- Assist in conducting emergency spill response exercises;
- Track all emergency and health and safety training that on-site staff have received, and

when retraining will be required;
- Notify the Incident Commander (related to ERT) when retraining is required;
- Ensure that employees are retrained in appropriate emergency response skills, Workplace Hazardous Materials Information System (WHMIS) training, Hazard Communication (HAZCOM), Occupational Health and Safety Administration (OHSA) training, first aid, and respirator fit-testing prior to expiry of existing training certification; and
- Consult with appropriate organizations regarding retraining requirements and schedules.

4.9 ON-SITE HEALTH CARE PROVIDERS

On-site medics are responsible for the following:

- Providing on-site first aid and other medical support; and
- Providing additional training for ERT members.

In addition to the health care providers on site, the Baker Lake Hamlet health professionals will be called first on the scene, if required.

4.10 SPILL RESPONSE TEAM CONTACT INFORMATION

Internal contact information is contained in Table 2 for all Agnico Eagle personnel involved in spill recovery and subsequent reporting. Table 3 provides contact information for Agnico Eagle contractors present at the mine site and transportation contractors. Important external contacts such as regulatory agencies and health organizations are listed in Table 4. Table 5 provides contact information for external contractors should incident warrant assistance from outside sources.

Table 2 - Internal Contacts

Title	Name	Telephone No.
Sr. Vice President, Environment and Sustainable Development	Louise Grondin	416.847.8656 Cell: 819.24.2020
Vice President of Environment	Michel Julien	416-947-1212 ext. 4013738 Cell: 514.244.5876
Corporate Director, Communications & Public Affairs	Dale Coffin	416.847.8669 Cell: 647.274.4154
Manager of Nunavut Services Group	Jason Allaire	819.759.3555 ext. 4608004 M: 819.355.2608
Meadowbank General Mine Manager	Luc Chouinard	819.759.3555 ext. 4606896 Cell: 819.859.8160
H&S Superintendent or H&S Ass. Superintendent	Markus Uchtenhagen	819.759.3555 ext.4606720 Cell: 819.860.6258
Emergency Response Counselors	André Rouleau or Philip Beaudoin	819.759.3555 ext.4606809 Cell: 819.355.2191 or 819.759.3555 ext.4606809 Cell: 450.847.4214
Environmental Superintendent	Nancy Duquet Harvey	819.759.3555 ext.4606980 Cell: 819.856.4385
Environmental General Supervisor	Robin Allard	819.759.3555 ext.4606838
Environmental Coordinator	Martin Archambault or Tom Thomson	819.759.3555 ext.4606744
Environmental Department	Environmental Technicians	819.759.3555 ext.4606747/4606759
Incident Commander	Nancy Duquet Harvey or Robin Allard	819.759.3555 ext. 4606838
On-site Medics	On-site Nurses	819.759.3555 ext.4606734 or 4606751
Site Security	On-site Security	(867) 793-4610 ext. 4606748

Table 3 - Contractor Contacts

Title	Telephone No.	Contact in Emergency for:
Nolinor Aviation Services	Protocol Agent 867.759.3700 ext. 4608008	Flight services for additional crew, or additional supplies
First Air	1-800-267-1247	Flight services for additional crew, or additional supplies
Calm Air	1-800-839-2256	Flight services for additional crew, or additional supplies
Dyno Nobel Explosives Ltd.	(819) 825-5441	Heavy Equipment, Man power, Emergency Blasting
Desgagnés Transarctik Inc.	(450) 635-0833	Fuel Hauler
Baker Lake Contracting & Supplies	(867) 793-2831 Press #1	Man power, equipment, trades personnel i.e. pipefitter, plumber, electrical
Peter's Expediting	(867) 793-2703	Equipment, man power, Ground transportation services
Arctic Fuel Services	(867) 793-2311	Fuel hauling, trucking, man power.

Table 4 - External Contacts

Organization/Authority	Telephone Number	Fax Number
NT-NU 24-Hour Spill Report Line	(867) 920-8130 spills@gov.nt.ca	(867) 873-6924
Workers Safety and Compensation Commission	(867) 979-8500	(867) 979-8501
Kivalliq Inuit Association	(867) 645-5725	(867) 645-2348
Nunavut Water Board	(867) 360-6338	(867) 360-6369
CIRNAC Inspector	(867) 669-2442	(867) 669-2871
Environment and Climate Change Canada – Pacific Prairies and the North	(780)-951-8600	780-495-2615
Government of Nunavut – Department of Environment	(867) 975-7700	(867) 975-7742
Kivalliq Health Services – Baker Lake	(867) 793-2816 *Dial 0*	(867) 793-2812
Baker Lake Hamlet Office	(867)-793-2874	(867) 793-2509
Baker Lake Fire Emergency	(867) 793-2900	
RCMP Regular Hour RCMP 24 Hour Emergency Number	(867) 793-0123 (867) 793-1111	
Canadian Coast Guard (in the event of a spill to the marine environment) Superintendent Environmental Response	(800) 265-0237 (519) 383-1954 (519) 381-6186 (cell)	(519) 337-2498
Transport Canada – Marine Safety Shane Sadoway Philip Levesque	 (780)-495-7079 (204)-984-5786	 (204)-801-6951

**All above phone numbers are current as of February 1, 2019*

5 ACTION PLAN

Spills may be the result of any of the following occurrences:

- Tanks, drums or containers may develop leaks or rupture;
- Failure of equipment such as valves, piping or containment structures;
- Overfilling;
- Improper storage;
- Spills during transfer of fuel, chemicals or waste products;
- Spills resulting from accidents during transportation; and
- Seepage that may migrate off site to receiving water or land; and
- Discharge to receiving environment of a deleterious substance exceeding the MDMER and/or NWB Water License and/or any other regulation.

5.1 INITIAL ACTION

For all spill emergencies, it is required that priority actions be undertaken. These are:

- Respond Quickly;
- Ensure Safety; and
- Report the Spill;

5.1.1 Respond Quickly

- Identify the spilled material;
- Be alert – ensure safety of yourself and others by notifying them of the incident;
- Shut off ignition sources such as vehicles and unplug electrical equipment – NO SMOKING;
- Attend to the injured;
- Assess the severity of the spill; and
- Contact the Incident Commander, identify the location and request assistance as required. If required the Incident Commander will mobilize the Emergency Response Team.

The primary form of ensuring safety is by using preventative measures. All personnel who deal with chemicals must have training in first aid and safe materials handling, including the Workplace Hazardous Materials Information System (WHMIS). In addition, regular training updates and site-specific exercises/drills are integral to preventing incidents.

5.1.2 Ensure safety

- Consult the MSDS and Product Guides for further information on the substance;
- Keep people away from spill site;
- Wear appropriate PPE such as impervious clothing, goggles, and gloves when containing the spill;
- Approach spill from upwind IF IT IS SAFE TO DO SO;
- Assess whether the spill, leak, or system failure can be readily stopped or brought under control;
- Stop product flow or leak if possible and IF IT IS SAFE TO DO SO;
- Do not contain compounds (e.g. gasoline, aviation fuel) if vapors might ignite – allow them to evaporate; and
- Depending on the type of compound spilled and IF IT IS SAFE TO DO SO, contain product using booms, berms, absorbent pads, earthen dike, trenches or improvise with materials at hand.

5.1.3 Report Spill

- Spill reporting will follow Spill Reporting procedure MBK-ENV-0016. This procedure can be found in Appendix K

- Obtain all necessary information to complete the spill report form (reportable or not) and provide to Environment Staff within 12 hours. Spills that meet regulatory reporting criteria must be reported to the NWT-NU 24 Hour Spill Line/CIRNAC/ECCC/Kivalliq Inuit Association and the NWB by Agnico Environment Staff within 24 hours. Any spills near and/or in water must be reported immediately to NWT-NU 24 Hour Spill Line/CIRNAC/ECCC/Kivalliq Inuit Association and the NWB by Agnico Environment Staff even if not meeting regulatory criteria describe in Table 1; and

- For spills that meet regulatory reporting criteria, a detailed spill report will be submitted to the CIRNAC Water License Inspector, ECCC inspector and the KIA Land's Inspector by Agnico Eagle Environment Staff no later than 30 days after the initial reporting of the spill. This report will contain the amount and type of spilled product, the GPS location of the spill and the measures taken to contain, cleanup and restore the spill site.

Procedures will vary depending on the season and materials spilled. The MSDS for spilled materials and/or Transport Canada's "Emergency Response Guidebook" must be consulted to ensure that safety procedures are followed. Response procedures specific to spills on land, water, snow and ice are presented in the following sections as general guidelines.

5.2 SPILLS ON LAND

Response to spills on land will include control techniques involving the use of two types of barriers: dikes and trenches. Barriers should be placed down-gradient (down-slope) from the source of the spill, and as close as possible to the source of the spill. Barriers will slow the progression of the material spilled and will also serve as containment to allow for recovery.

Depending on the volume spilled, the site of the spill as well as available material, a dike may be built with soil, booms, lumber, snow, etc. A plastic liner, if necessary, can be placed at the toe of and over the dykes to protect the underlying soil or other material and to facilitate recovery of the material. Dikes will be constructed in such a way as to accumulate a thick layer of free product in a single area (V-shaped or U-shaped).

Trenches are useful in the presence of permeable soil and when the spilled material is migrating below the ground surface. A plastic liner should be placed on the down-gradient edge of the trench to protect the underlying soil. Liners should not be placed at the bottom of the trench to allow water to continue flowing underneath the layer floating oil.

The use of absorbent materials to recover a large volume of spilled liquids such as petroleum based material should be avoided. Large volumes of free-product should be recovered, as much as possible, by using vacuums and pumps, and containerized. Mixtures of water and fuel may be processed through an oil-water separator. However absorbent materials work well for smaller volumes of spilled hydrocarbon based materials such as fuel. Absorbent sheets should be used to soak up residual fuel on water, on the ground (soil and rock), and on vegetation. Peat moss may also be sprinkled on vegetation to absorb films of petroleum products.

5.3 SPILLS ON WATER

Response to spills on water will include procedures that include containment, diversion and recovery techniques. The following elements must be taken into consideration when conducting response operations:

- To ensure compliance with Section 36(3) and 38(5) of the *Fisheries Act* and Section 5(1) of the Migratory Birds Convention Act all spills of fuel or hazardous materials, regardless of quantity, into a water body (including frozen), shall be reported immediately to the NT-NU 24-HOUR SPILL REPORT LINE (at 867.920.8130).
- Type of water body or water course (lake, stream, river);
- Water depth and surface area;
- Wind speed and direction;
- Type of shoreline; and
- Seasonal considerations (open-water, freeze-up, break-up, frozen).

The most common type of spill that could be anticipated is a petroleum hydrocarbon (diesel) spill during fuel transfers/transport. Containment of an oil slick in water will require the deployment of mobile floating booms to intercept, control, contain and concentrate (i.e., increase thickness) the floating oil. One end of the boom will be anchored to shore while the other will be towed by a boat and used to circle the oil slick and return it close to shore for recovery using a skimmer. Reducing the surface area of the slick will increase its thickness and thereby improve recovery. Mechanical recovery equipment (i.e., skimmers and oil/water separators) will be mobilized to site if required.

Measures will be taken to protect sensitive and accessible shoreline. The oil slick will be monitored to determine the direction of migration. In the absence of strong winds the oil will likely flow towards the discharge of the lake. Measures will be taken to block and concentrate the oil slick at the lake discharge using booms where it will subsequently be recovered using a portable skimmer, vacuum, or sorbent materials.

In small slowly-flowing rivers, streams, channels, inlets or ditches, inverted weirs (i.e., siphon dams) will be used to stop and concentrate moving oil for collection while allowing water to continue to flow unimpeded. In the case of floating oil, in a stream, heading for a culvert (i.e., at a road crossing) a culvert block will be used to stop and concentrate moving oil for collection while allowing water to continue to flow unimpeded. In both cases oil will then be recovered using a portable skimmer or sorbent materials.

In the case of spills in larger rivers, with fast moving currents, diversion booming will be used to direct the oil slick ashore for recovery. Single or multiple booms (i.e., cascading) may be used for diversion. Typically, the booms are anchored across the river at an angle. The angle will depend on the current velocity. Choosing a section of a river that is both wider and shallower will make boom deployment easier. Diversion booming may also be used to direct an oil slick away from a sensitive area to be protected.

5.4 SPILLS ON SNOW AND ICE

In general, snow and ice will slow the movement of hydrocarbons. The presence of snow may also hide the oil slick and make it more difficult to follow its progression. Snow is generally a good natural sorbent, as hydrocarbons will have a tendency to be soaked up by snow through capillary action. However, the use of snow as a sorbent material will be limited as much as possible. Snow and frozen ground will also prevent hydrocarbons from migrating down into soil or at least slow the migration process. Ice will prevent seepage of fuel into the water.

Most response procedures for spills on land discussed previously may be used for spills on snow and ice. The use of dykes (i.e., compacted snow berms lined with plastic sheeting) or trenches (dug in ice) will slow the progression of the fuel and will also serve as containment to allow recovery of the fuel.

Free-product will be recovered by using a vacuum, a pump, or sorbent materials. Contaminated snow and ice will be scraped up manually or using heavy equipment depending on volumes. The contaminated snow and ice will be placed in containers or within plastic lined berms on land.

5.5 DISPOSAL OF SPILLED MATERIAL

All contaminated spill pads, and booms are placed within Quatrex bags for shipment to an approved disposal facility. All the petroleum hydrocarbon contaminated soil is placed into the Meadowbank landfarm for treatment, this includes contaminated soil from the Baker Lake and Whale Tail facilities. Spills over 100 L of non-petroleum hydrocarbon material (e.g. solvents, glycol) will be placed in drums and stored in the on-site hazardous material area for shipment south to approve facilities during barge season. Spills of non-petroleum hydrocarbon material fewer than 100 L will be placed in the Tailings Storage Facility (TSF).

Spills under 100 L of petroleum hydrocarbon contaminated snow will be placed in a designated area of the landfarm and treated as contact water after snowmelt. Spills over 100 L of petroleum hydrocarbon contaminated snow will be excavated and stored in labeled drums or at the TSF. After snow melt, the contaminated water will be pumped through the site's oil-water separator (carbon filter) to remove petroleum hydrocarbon residue. The treated water will be sampled per Part F, Item 6 of the NWB 2AM-MEA1526 Water License, and discharged to the respective Stormwater Management Pond at Meadowbank and Whale Tail if criteria are met. If criteria are not met, water will be treated as hazardous material and shipped south. Also, after snowmelt, visible product will be cleaned up with absorbent pads or booms.

For more information refer to the Meadowbank Landfarm Design and Management Plan.

5.6 EVENT MONITORING

The Event Monitoring (EM) program addresses the site specific monitoring that is required following any accidental release. A "release" may be caused by a spill or an emergency (Emergency Response Plan; January 2018).

The EM program is designed to verify whether contamination of the surface soil, nearby receiving environment and active zone has occurred as a result of an accidental release of a hazardous material or contaminated water, through monitoring of surface runoff and nearby receiving environment following remediation of any release. It is anticipated that owing to the presence of permafrost beneath most of the mine footprint, there will be minimum impact to groundwater. A complete list of hazardous materials in use during operations at all sites is provided in the Hazardous Materials Management Plan (June 2016).

The EM plan is developed on a site-specific basis subsequent to a spill or accidental release, and considers the type of product spilled, the potential receptors, and the potential for any remaining contamination after clean up. The plan is done in coordination with the Environmental Superintendent.

In the event of an accidental release, the water quality of the downstream receptor and possibly upstream of the receiving point, if any, is to be sampled (during the ice-free season) and analyzed. Should the spill have happened over snow cover, water and possibly soil sampling is to take place at the earliest feasible time after thaw to verify if there has been any impact to the receiving water or soil quality. The specific parameters monitored as part of the EM program will depend on the nature of the spill, and will be determined for the specific hazardous material released.

EM sampling is to occur following the clean-up of a release and the frequency of sampling will depend on the type of material spilled (wet or dry spill), the environment into which the chemical was released (surface water body or soil; frozen or thawed), and the quantity of spill material. The EM program for a particular spill will cease upon obtaining satisfactory analytical results (within 20% of background level, to accommodate for analytical accuracy) from the potentially affected areas or as required by regulators.

In the event of a seepage from the TSF and/or rock storage facility (RSF), water will be pumped back to the North Cell TSF (or South Cell if necessary). Visual inspections will be conducted regularly to confirm that the seepage is appropriately contained and will not enter into the receiving environment.

6 HAZARDOUS MATERIALS STORED ON SITE

A variety of petroleum products and other hazardous materials will be used as part of mining operations. Large quantities of petroleum products will be stored at various sites at the Meadowbank Mine and at Whale Tail Project. Explosives will also be stored on site. Other hazardous materials will be used but in smaller quantities. Nonetheless, all these products are considered as potential environmental and safety hazards.

Material Safety Data Sheets (MSDS) of all materials transported, stored and used on-site will be made available at strategic locations near to where hazardous materials or toxic substances are stored or utilized. Appendices C to H provide General Response Procedures for Spilled Chemical Substances.

Table 5 identifies the predominant hazardous materials transported, stored and generated at the sites. Those destined for use in the process plant will only be stored at Meadowbank. Refer to the *Hazardous Materials Management Plan* for more details.

Table 5 - Materials stored at site during operations

Material	Maximum Anticipated on - site	Maximum Amount transported per unit	Storage Location
Acetylene	500 cylinders	300 cylinders per sea can	Inventory Lay down
Acid Hydrochloric	120 L	NA	Inventory Lay down, Laboratory
Activated Carbon	350 Mt	10 Mt per sea can	Inventory Lay down and Process Plant lay down
Ammonium Nitrate	10,000 Mt	20 Mt per sea can	Emulsion plant
Ammonium Nitrate Fuel Oil (ANFO)	Manufactured on demand	20,000 kg per truck	Emulsion plant
Anionic Flocculent	99,000 Kg	750 kg/bag	Inventory Lay down
Motor Oil	Estimated at 800,000L	20,800L per sea can	Inventory Lay down, garage
Trojan Boosters (Blasting Systems)	34,000 kg	15 Mt per sea can	Emulsion plant
Borax, Anhydrous	7,500 kg	3,375 kg per sea can	Inventory Lay down and Process Plant lay down
Calcium Chloride	600,000L	10,000L per sea can	Inventory Lay down
Carbon Dioxide	10 cylinders	10 cylinders per sea can	Inventory Lay down
Caustic Soda	138,000 Kg	1,000kg/Bag	Inventory Lay down
Copper Sulphate	500 Mt	20 Mt per sea can	Inventory Lay down and Process Plant lay down
Diesel Fuel	5.6 million Litres	40,000L per tanker	Meadowbank Tank farm
Diesel Fuel	1.5 million Litres	40,000L per tanker	Whale Tail Tank farm
Diesel Fuel	60 million Litres	NA	Baker Lake Tank farm
Dyno Split (Detagel)	135,000 kg	15 Mt per sea can	Emulsion plant
Lead nitrate	350,000 kg	1,000kg/bag	Inventory Lay down
Nonel EZTL	1,400 kg	15 Mt per sea can	Emulsion plant

Material	Maximum Anticipated on - site	Maximum Amount transported per unit	Storage Location
Nonel MS	1,800 kg	15 Mt per sea can	Emulsion plant
Ethylene Glycol	60,000L	10,000L per sea can	Inventory Lay down
Jet A Fuel	400,000L	11,000L Tanker	Meadowbank Tank, tarmac
Jet A Fuel	1,800,000L	NA	Baker Lake Tank Farm
Lead Acid Batteries	500L	500L per sea can	Warehouse
Magnafloc 10 (Flocculant)	300 Mt	15 Mt per sea can	Inventory Lay down
Metabisulfite	22,000,000kg	1,000kg/bag	Inventory Lay down
Nitric Acid	120,000L	8,000L per sea can	Inventory Lay down
Portland Cement	3,500 Mt	20 Mt per sea can	Dyke and Construction lay down
Sodium Cyanide	1,550,000kg Mt	19 Mt per sea can	Inventory Lay down and Process Plant lay down
Sodium Hydroxide	10 kg	10 kg in sea can	Warehouse
Sodium Nitrate	10.2 Mt	5.1 Mt per sea can	Inventory Lay down
Sulfur	4,600 Mt	20 Mt per sea can	Inventory Lay down Process Plant lay down
Quick Lime	600,000,000kg	1,700kg/bag	Inventory Lay down
Unleaded Gasoline	50,000L	40,000L tanker	Meadowbank and Baker Lake Tank
Varsol	4,000L	2,000 L per sea can	Inventory Lay down

7 POTENTIAL SPILL ANALYSIS

To prepare for emergency spill response, potential spill analyses were conducted using various worst case scenarios. These exercises serves to identify potential risk areas, as well as to determine the fate of spilled products and their environmental effects. One such potential scenario was identified for the Meadowbank Gold Project, this being a tanker truck spilling its contents into a waterbody somewhere between Baker Lake and Meadowbank alongside the AWAR. Such a scenario could also be applied to a tanker truck going off the Whale Tail haul road and spilling its contents.

Scenario #1: Road Accident Tanker Truck Spill on AWAR

Description of incident: Spill of the contents of a fuel tanker to the ground or water during transport from Baker Lake to the Meadowbank site.

Potential causes: Vehicle accident, human error, mechanical failure

Hazardous products spilled: Diesel fuel, aviation fuel

Maximum volume spilled: 40,000 litres

Immediate receiving medium: Stream, river or lake

Distance and direction to nearest receiving body of water: N/A

Resources to protect: Streams, rivers and lakes

Estimated emergency response time: Maximum time is 90 minutes depending on location of spill (assuming truck driver is injured and cannot commence spill response procedures). Minimum time to respond to a spill on the AWAR is 15 minutes.

Spill response procedures: Contain and recover oil slick downriver as described in Section 5.3, protect shorelines using sorbent booms. Collect free-product for temporary storage. Clean-up soiled shorelines. If the response crew arrives before the complete loss of fuel from the tanker truck seal the leak if feasible, contain and recover oil spill on ground using dykes, sumps or trenches as described in Section 5.2. Also, if the truck driver is not injured, he will act as a first responder and immediately initiate the spill contingency plan as defined in Section 5 using the spill kit kept in fuel trucks.

8 RESPONSE EQUIPMENT

8.1 GENERAL EQUIPMENT

This section addresses the emergency response machinery, equipment, tools and other resources that will be made available on-site for spill counter measures.

Mobile Equipment available to Agnico Eagle that will be used for spill contingency includes:

- Graders
- Cranes
- Snowmobiles
- Vacuum Truck
- Loaders
- Backhoe
- Bulldozer
- Forklift
- Water Trucks
- Excavators
- Winch Trucks
- Pickup Trucks
- Generator Sets
- Fire Truck
- Aluminum Boats
- Fuel Trucks
- Bobcat
- Haul Trucks
- Snow Cat

If required, additional equipment on site will be made available to assist with spill recovery. Temporary containment systems are also available on site and include:

- Booms
- Drums
- Tanks
- Tailings Pond
- Spill absorbent material packages/pads
- Silt fencing
- Maritime Barrier

Emergency transportations that will be used under an emergency situation are:

- Aircraft (fixed wing or helicopter)
- 4-wheel drive vehicles
- Snowmobiles
- Boats
- Tundra Buggy

Communication equipment at Meadowbank and Whale Tail includes radios, telephones, faxes and other wireless communication systems that will be used in the event of an emergency situation.

Spill Response kits are strategically located where required around the Meadowbank (Figure 8) and Whale Tail (TBD) sites. Each department and work area is responsible for providing sufficient spill response kits in their respective work areas. The kits are kept in marked and accessible locations. The locations include all fuel storage areas, chemical storage areas and so on.

All of the mobile equipment on all sites (heavy equipment) contains an emergency spill kit.

An Environmental Emergency Trailer, which is easily accessible and mobile, is located on site at Meadowbank and contains the following items:

- Pump Elastec
- Pump accessories
- Vacuum ends
- 45 gallons top
- Tubing 2 inches diameter
- Tubing 3 or 4 inches diameter
- Diesel Fuel jerry can (place on a miniberm)
- Spill kit accessory (red box)
- Drums opener
- Wescot (to open empty drum screw)
- Empty drums
- 2 drums berm
- 4 drums berm 4x8
- Tarp 20x30
- Tarp 30x50
- Oil white spill pads
- Universal boom 5x10
- Universal boom 8x10
- ABS pipe: 10' (4")
- ABS pipe: 10' (6")
- Cell U-Sorb
- Sphagsorb
- 3 Size of Wedge wood
- Plug pattie
- Quattrex bags
- Hand shovel
- Ice braker chisel
- Sledge hammer
- Rod bar (4')

Along the AWAR there are 9 environmental emergency sea cans (Figure 9). Currently, there is two (2) environmental emergency sea cans installed along the Whale Tail Haul Road at Km 125.5 and Km 147, between Whale Tail Pit and Meadowbank. More environmental sea can are planned to be installed. Approximate location are detailed on Figure 10 below. These sea cans are, or will be placed, strategically placed along the roads at water crossings. Each environmental emergency sea can contains the following material:

- Empty drums (Sealed)
- Mini berm 36"x36" x4'
- 4 drum spill berm 4x8
- Tarp 20'x30'
- Tarp 30'x50'
- Oil white spill pads
- Universal boom 5"x10' (Chemical)
- Universal boom 8"x10' (Chemical)
- Oil only booms 5"x10' (Hydro-carbons)
- Maritime barrier (Baffle)
- ABS pipe: 10' (4")
- Cell U-Sorb
- Amerisorb peat moss
- Oil gator absorbent
- Plug pattie
- Quattrex bags

- Fork lift crate (pallets)
- Long handle round point shovel
- Chisel point crow bar 16 lbs 57"
- Ice braker chisel
- Sledge hammer 12 lbs 36"
- Rod bar (4')

If required, external resources are available in the Hamlet of Baker Lake and those contacts are found in Table 5.

Figure 8: Spill Response Equipment Location at Meadowbank

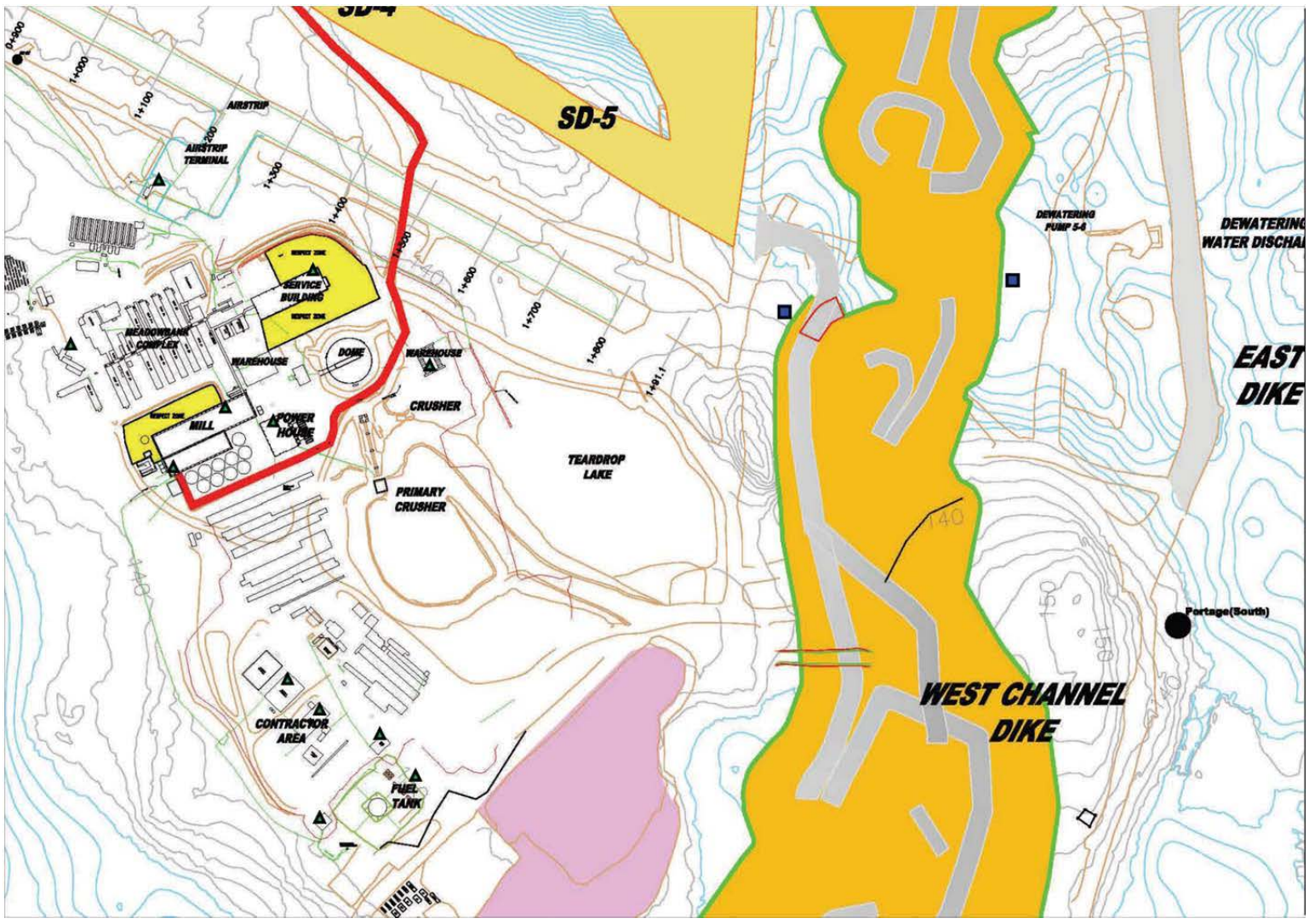

Spill Kits

Large Spill Kits for Mine Ops

Figure 9: Map of AWAR Including Locations of Environmental Emergency Sea cans

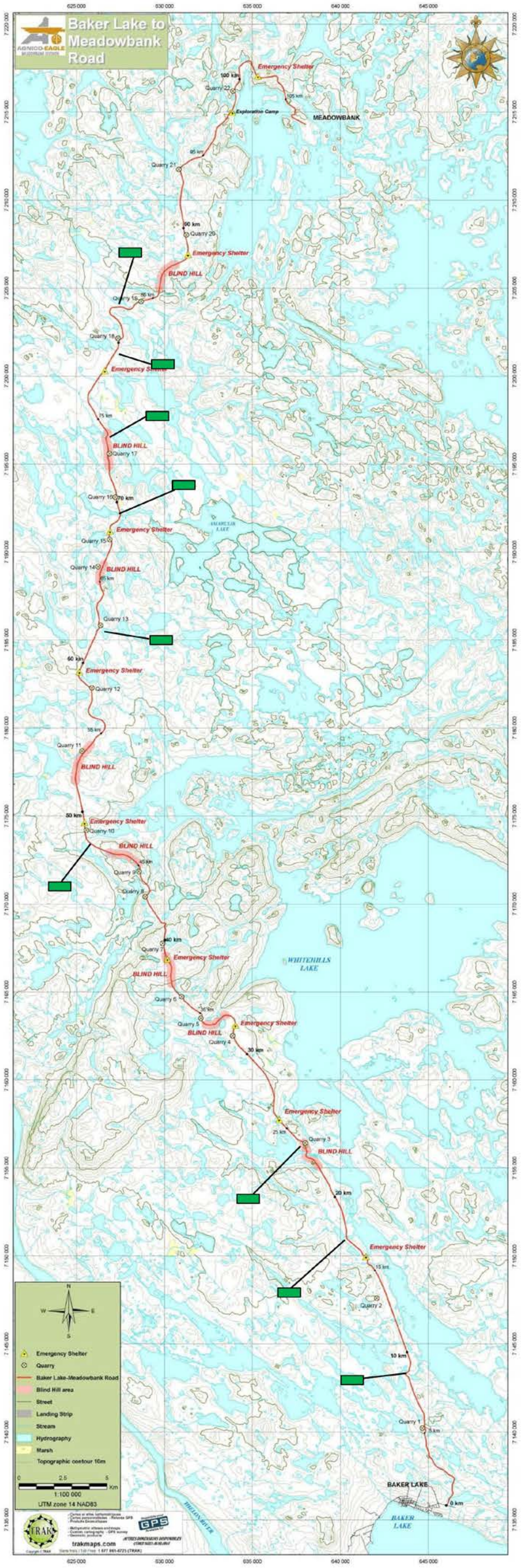

Environmental Emergency Sea cans

Figure 10: Map of Whale Tail Haul Road Including Locations of Environmental Emergency Sea cans

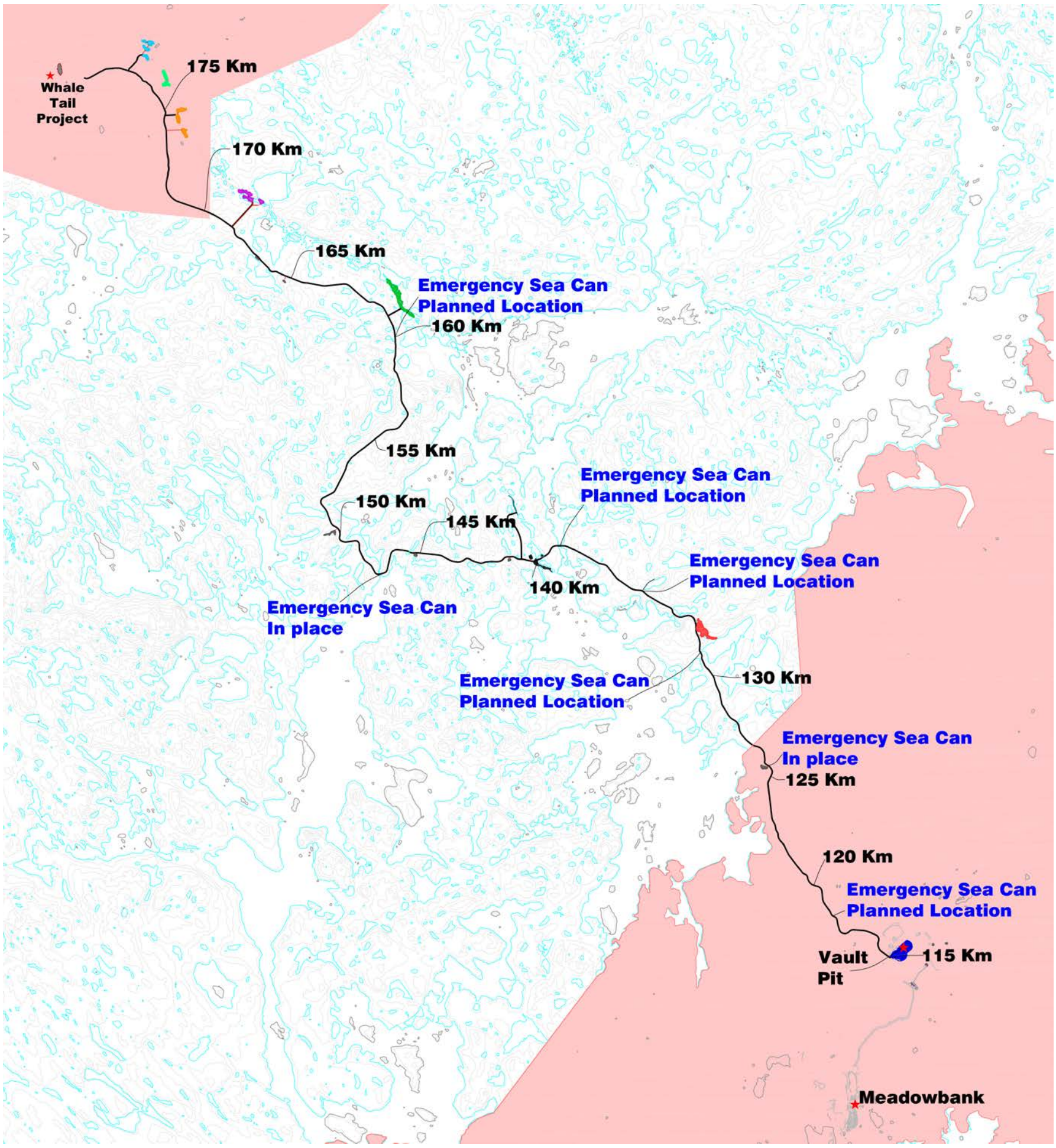

9 TRAINING & EMERGENCY SPILL/EXERCISE

A designated Emergency Response Team (ERT) consisting of on-site personnel has been established at Meadowbank and another team will be established at Whale Tail. Agnico Eagle will ensure that the ERTs are trained and present for major spill response at all times. All members of the teams are trained and familiar with emergency and spill response resources, including their location and access, the SCP, and appropriate emergency spill response methodologies. The ERT has up to 40 members, each of whom train 8 hours per month.

The following training is included:

- A review of the spill response plan and responsibilities of the ERT members;
- The nature, status, and location of fuel and chemical storage facilities;
- The on-site and off-site spill response equipment and how to use it;
- Emergency contact lists;
- Desktop exercises of “worst case” scenarios;
- The likely causes and possible effects of spills; and
- On-site personnel.

Every employee at Agnico Eagle receives spill and waste management training during their initial site orientation so they are able to respond to small spills and raise the alarm if a larger response is required. ERT members receive more extensive HAZMAT training and learn how to respond while wearing personal protective equipment (PPE).

A training program is being developed to provide more complete training to all personnel (Agnico and contractors) that will cover safe spill response and intervention as well as awareness to different guidelines pertaining to spills. This training would be mandatory for all staff and renewable yearly.

The road crews between Baker Lake and Meadowbank, and Meadowbank and Whale Tail also received or will receive training regarding the actions that they have to carry out during an emergency or major spill on the road. You can find records of different trainings that Agnico Eagle personnel have attended in Appendix I. Agnico also performed each year a Mock Spill Scenario in Baker Lake. You can find the detailed of the 2018 Mock Spill in Appendix L. A Product Transfer Area Assessment for Baker Lake Oil handling Facility was also completed and can be found in Appendix M. The Environmental Department regularly attends tool-box sessions to provide information on spill response, spill prevention and spill reporting procedures.

Appendix A

Environmental Department weekly inspection template

Environmental Inspection report for MBK Refuelling Station, Jet-A tank and fueling area, Tank farm, and Camp Gensets

---

Date: _____ **Inspected By: _____**

Time: _____ **Weekly Inspection**

Compliance with	Subject	Conform	Non-conform	N/A	Comments
NIRB Condition 26	Ensure that spills, if any, are cleaned up immediately and that the site is kept clean of debris, including wind-blown debris.				
NIRB Condition 25	Management and control waste in a manner that reduces or eliminates the attraction to carnivores and/or raptors.				
NWB Part D Item 29 MBK - SCP	Spills on the ground				
NWB Part H Item 4 NIRB Condition 27	Secondary containment for fuel, Jet-A, and chemical storage in place				
NWB Part D Item 29	Refuelling procedures followed (secondary containment at every connection and 3 persons)				
MBK Bulk Fuel Storage Monitoring Plan Section 6.1	Precipitation or runoff accumulation in secondary containment				
MBK Bulk Fuel Storage Monitoring Plan Section 6.1	Any visible sheen on water.				

NWB Part F Item 23	Water in secondary containment of MBK Bulk Fuel Storage Facility and Jet-A storage being measured and recorded in m^3.				
NWB Part F Item 9 NIRB Condition 12	Discharge of water not causing erosion				
MBK Bulk Fuel Storage Monitoring Plan Section 6.1	Any visual structural issues with containment berms				
NWB Part F Item 8	10 days' notice given to inspector prior to discharge?				
NWB Part F Item 6	Water being discharged to land meets water quality limits				
MBK Bulk Fuel Storage Monitoring Plan Section 6.1	Any indicators that would suggest damage to liner for secondary containments				
NWB Part F Item 9	Discharge of water >30m from ordinary high water mark				
NWB Part F Item 5	Discharge from MBK Fuel Storage Facility being directed to Stormwater Management Pond				
NWB Part I Item 10(e)	Is the discharge volume being tracked?				
NWB Part F Item 9	Discharge of water not directly flowing to water body				
NWB Part H Item 3 NIRB Condition 27	Prevention in place to disallow chemicals, petroleum products and waste from entering Water				
NWB Part H Item 5	Date of last Env. visual inspection (weekly)				

MBK Bulk Fuel Storage Monitoring Plan Section 6.1	Weekly manual or electronic dip tests were conducted for inventory reconciliation. Date of last test				
CCME - Above Ground Storage Tank Guidelines	Non-smoking sign, Extinguisher, and tank identification present				
MBK - SCP	Spill Kits Present				
NWB Part D Item 22 NWB Part D Item 33	Erosion present / Erosion control in Place				
NWB Part D Item 36 NIRB Condition 27	All tanks and piping are not altered from approved construction.				
NWB Part I Item 9	Are signs identifying monitoring stations in place and posted in English, Inuktitut and French				
NWB Part I Item 12 (l)	Annual Geotechnical inspection completed				
MBK Wildlife Management Plan	Any nesting taking place on tanks or stairways of tank farm				
BMP	Are there any additional environmental hazards/potential impacts that require attention?				
MINE ACT	Are there any Health and Safety issues that should be addressed to prevent injury to workers?				

Comments/Recommendations:_____

_____

_____

_____

_____

_____

_____

_____

_____

Environmental Personnel Name: _____

Signature: _____

Actions Corrected:
_____
_____
_____
_____

Site Service Supervisor Name: _____

Signature: _____

Picture 1: Description

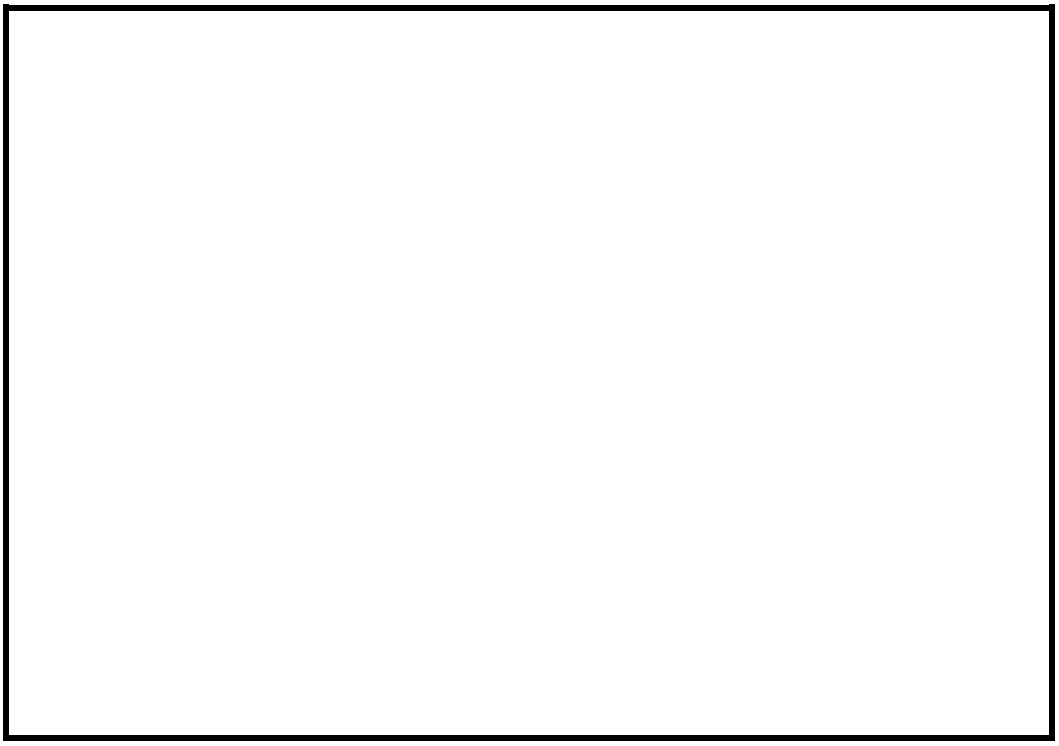

Picture 2: Description

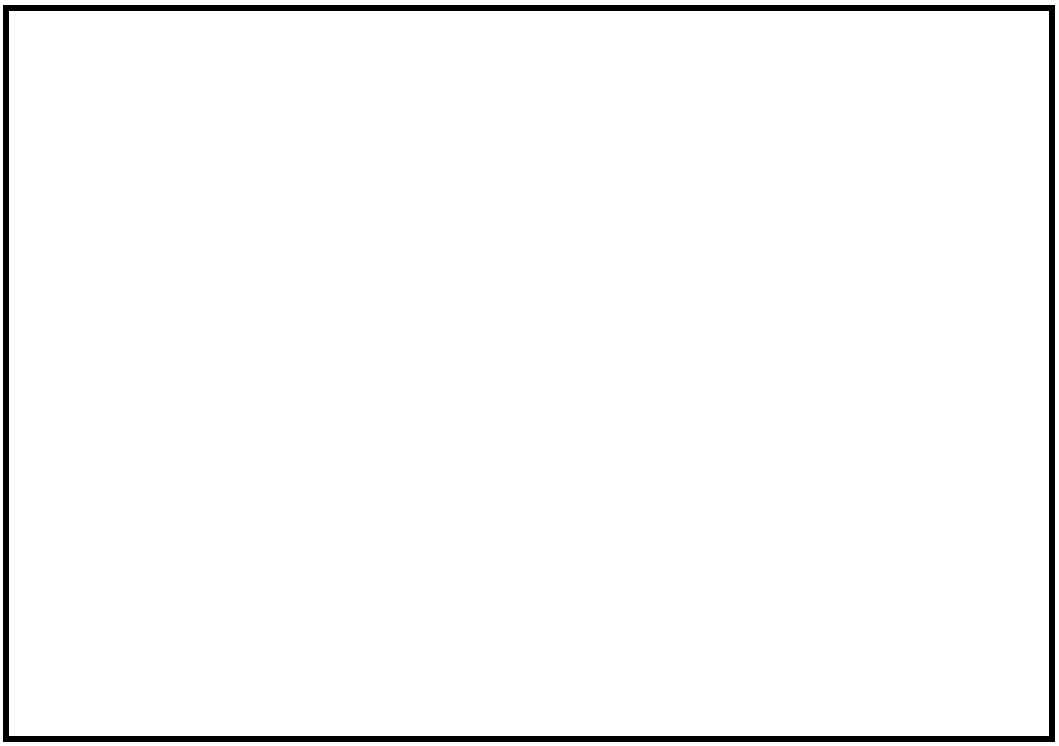

Picture 3: Description

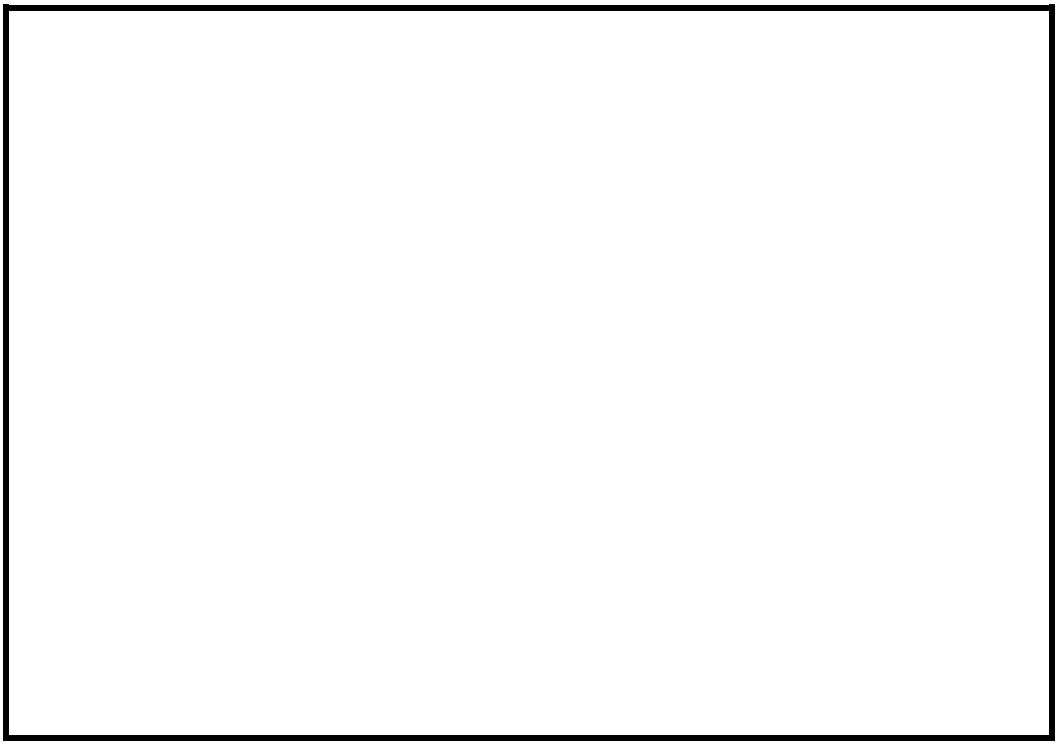

Picture 4: Description

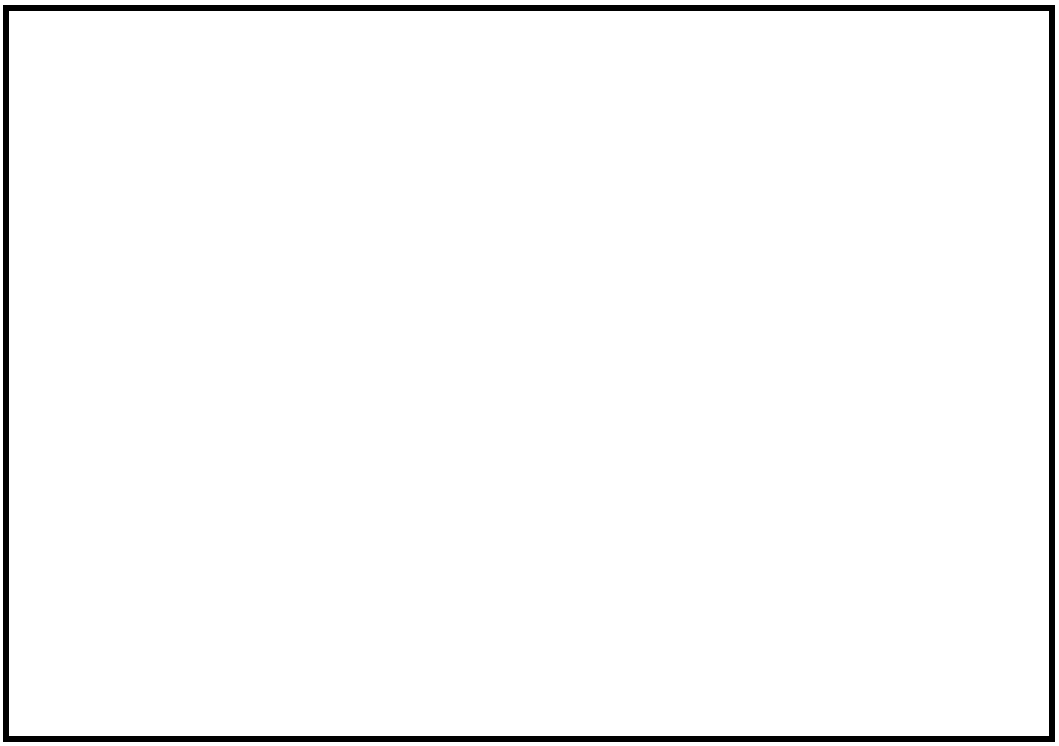

Picture 5: Description

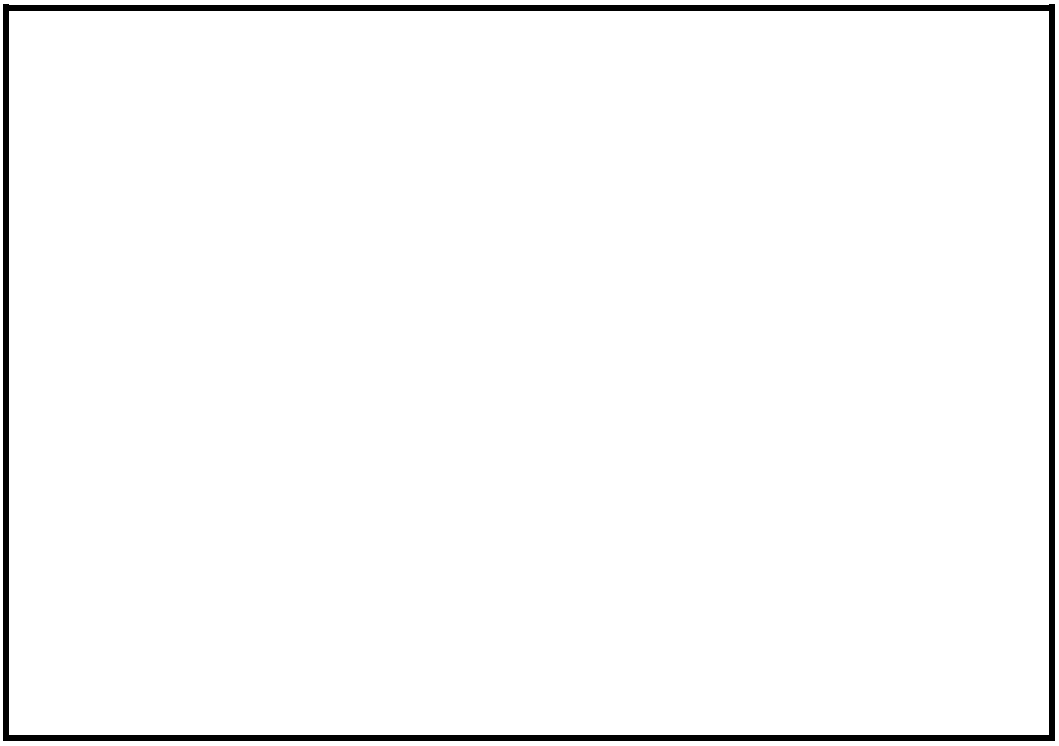

Picture 6: Description

Environmental Inspection report for Baker Lake Marshalling Area, Refuelling Station, Jet-A, and Tank farm

Date **Inspected By**:

Time: **Weekly Inspection**

NWB WL NIRB Cert	Subject	Conform	Non-conform	N/A	Comments
NIRB Condition 26	Ensure that spills, if any, are cleaned up immediately and that the site is kept clean of debris, including wind-blown debris.				
NIRB Condition 25	Management and control waste in a manner that reduces or eliminates the attraction to carnivores and/or raptors.				
NWB Part D Item 29 MBK SCP	Spills on the ground				
NWB Part H Item 4 NIRB Condition 27	Secondary containment for fuel, Jet-A, and chemical storage in place				
NWB Part D Item 29	Use of the bucket when refilling fuel truck				
NWB Part D Item 29	Refuelling procedures followed (secondary containment at every connection and 3 persons)				
MBK - BLFSF Monitoring Plan Section 6.1	Precipitation or runoff accumulation in secondary containment				

MBK - BLFSF Monitoring Plan Section 6.1	Any visible sheen on water.				
NWB Part F Item 23	Water in secondary containment of Marshalling Area Bulk Fuel Storage Facility and Jet-A storage being measured and recorded in m^3.				
NWB Part F Item 9 NIRB Condition 12	Discharge of water not causing erosion				
MBK - BLFSF Monitoring Plan Section 6.1	Any visual structural issues with containment berms				
MBK - BLFSF Monitoring Plan Section 6.1	Any indicators that would suggest damage to liner for secondary containments				
NWB Part F Item 9 NIRB Condition 12	Discharge of water >30m from ordinary high water mark				
NWB Part I Item 8(g)	Is the discharge volume being tracked?				
NWB Part F Item 9 NIRB Condition 12	Discharge of water not directly flowing to water body				
NWB Part F Item 19 NIRB Condition 12	Waste disposal area >30 m from high water mark				
NWB Part F Item 22 NIRB Condition 25	All solid waste disposed of at approved disposal facility				
NWB Part H Item 3 NIRB Condition 27	Prevention in place to disallow chemicals, petroleum products and waste from entering Water				

EC Requirement	Date of last pipe and tank visual inspection Site Services (monthly)				
NWB Part H Item 5	Date of last env. visual inspection (weekly)				
MBK - BLFSF Monitoring Plan Section 6.1	Weekly manual or electronic dip tests were conducted for inventory reconciliation. Date of last test				
CCME Above Ground Storage Tank Guidelines	Non-smoking sign, Extinguisher, and tank identification present				
MBK SCP	Spill Kits Present				
NWB Part D Item 31	No material stored on Ice of lake or streams.				
NWB Part D Item 32	No equipment stored <30m from high water mark				
NWB Part D Item 22 NWB Part D Item 33	Erosion present / Erosion control in Place				
NWB Part D Item 30	Any rutting or ground disturbance present				
NWB Part D Item 36 NIRB Condition 27	All tanks and piping are not altered from approved construction.				
NWB Part E Item 10	Measures in place to prevent the generation and deposition of dust				
NWB Part H Item 7 MBK OPEP MBK SCP	Copies of current OPEP, ERP, and SCP available at Marshalling area				
NWB Part H Item 8 NIRB Condition 27	Designated area present with measures to collect motor fluids, waste, and contain spills in the case of required emergency maintenance and Servicing.				
NWB Part H Item 8 NIRB Condition 27	Emergency maintenance and servicing is being undertaken in designated areas				

NWB Part I Item 9	Are signs identifying monitoring stations in place and posted in English, Inuktitut and French				
NWB Part I Item 12 (l)	Annual Geotechnical inspection completed				
NIRB Condition 81	Is security in place to ensure safe and secure storage of any hazardous or explosive comp				
MBK Wildlife Management Plan	Any nesting taking place on tanks or stairways of tank farm				
BMP	Are there any additional environmental hazards/potential impacts that require attention?				
MINE ACT	Are there any Health and Safety issues that should be addressed to prevent injury to workers?				

Comments :
Recommendation :

Environmental Personnel Name :

Signature: _____

Actions Corrected:
_____
_____
_____
_____

Site Service Supervisor Name: _____

Signature: _____

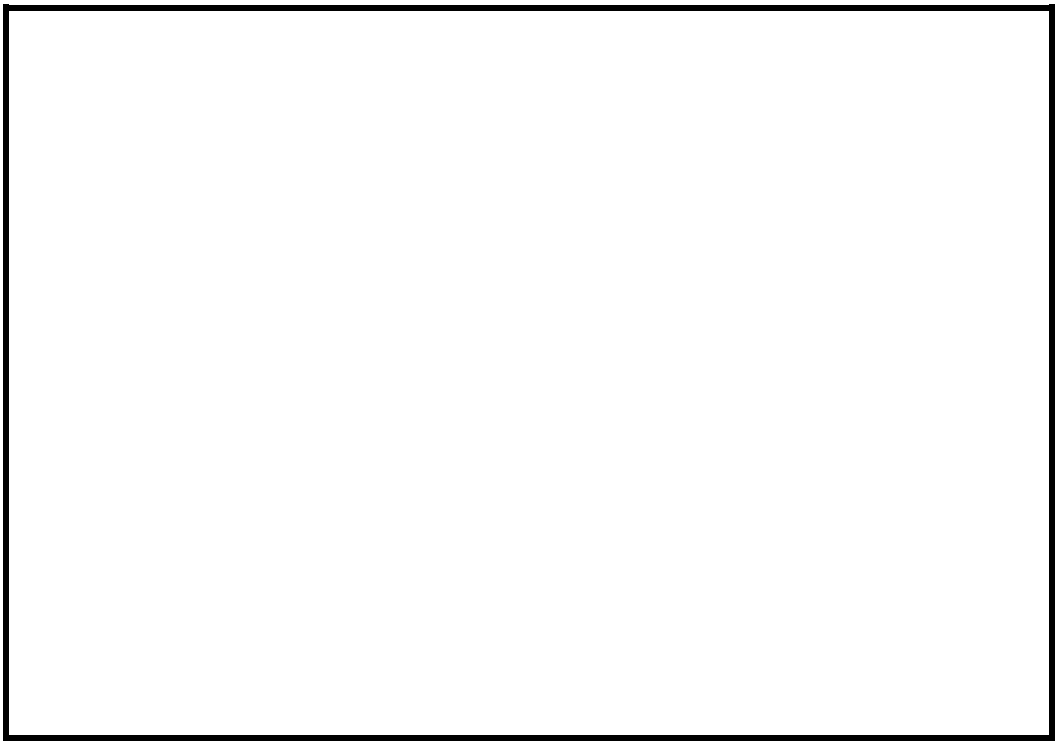

Picture 1: Description

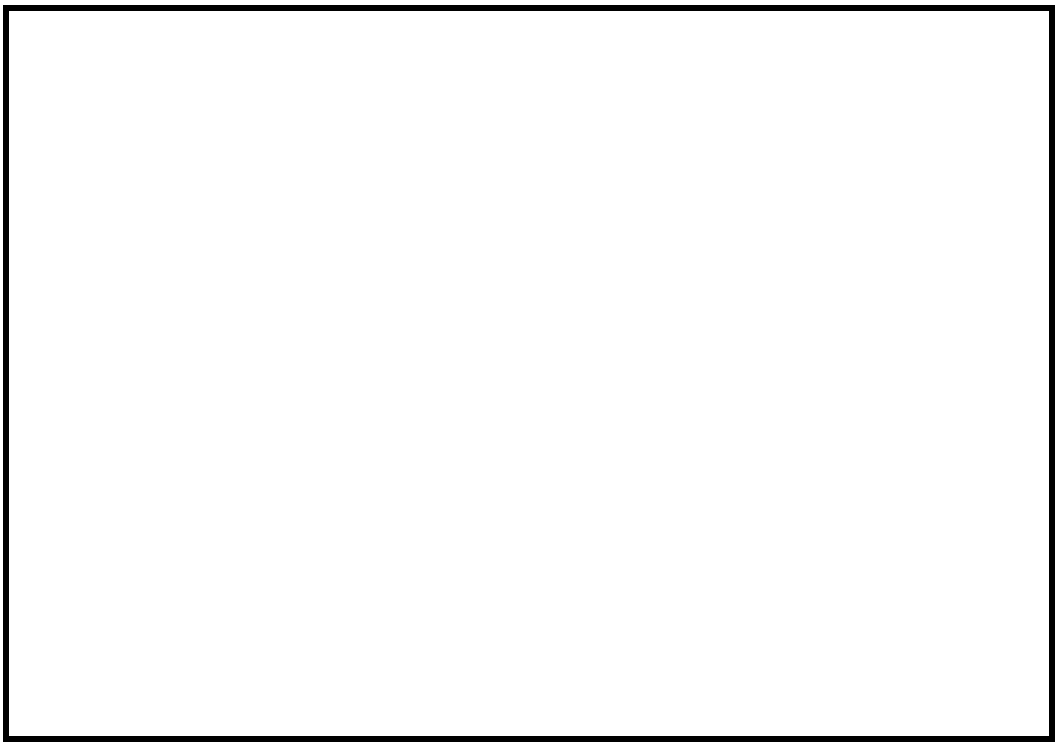

Picture 2: Description

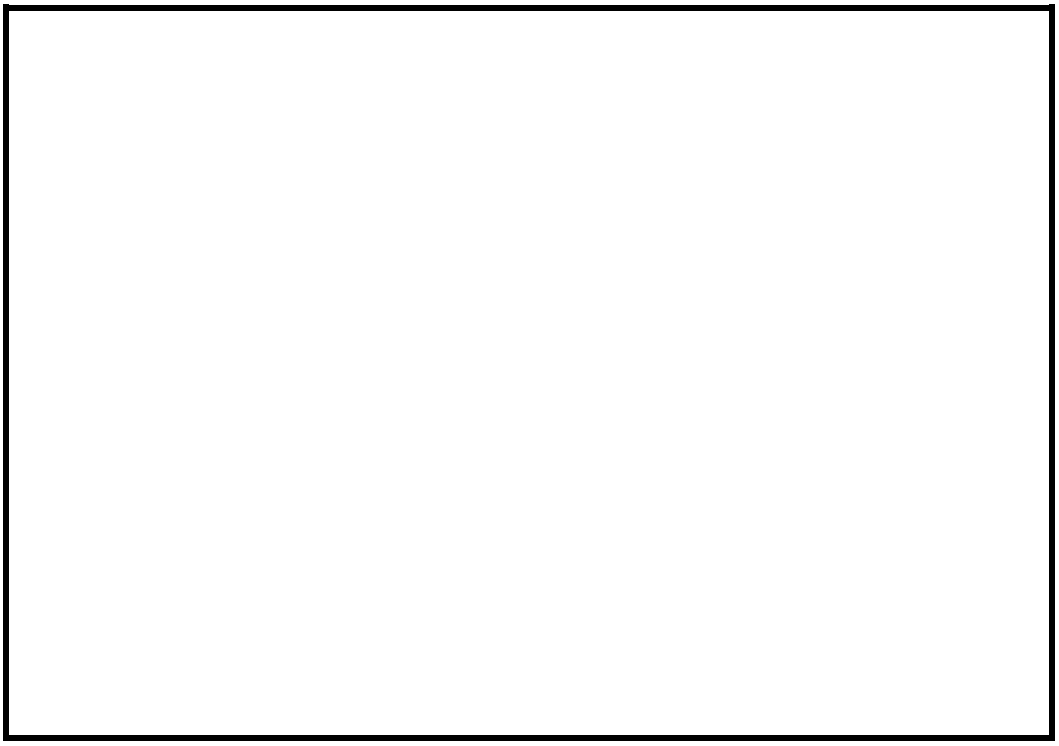

Picture 3: Description

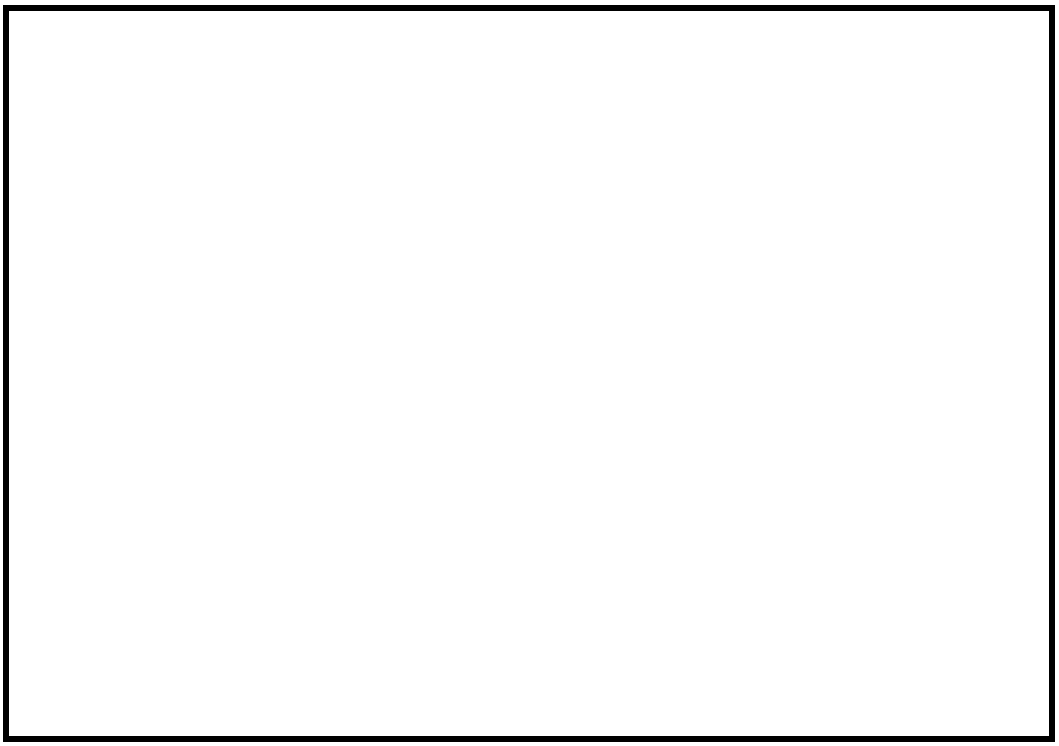

Picture 4: Description

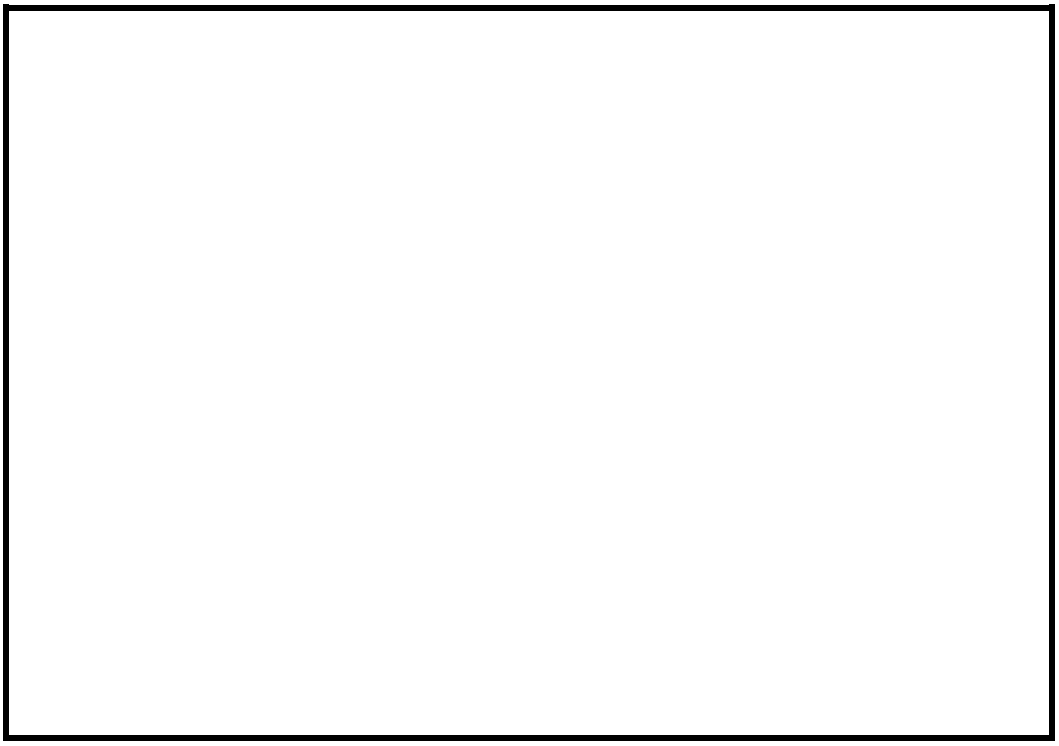

Picture 5: Description

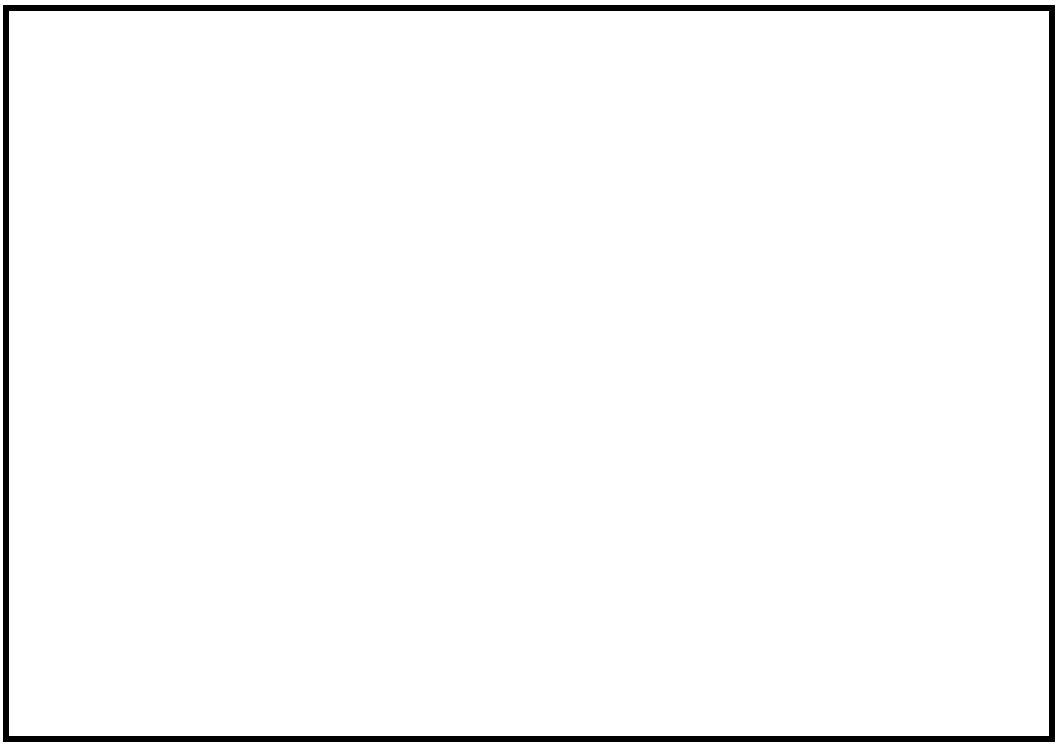

Picture 6: Description

Environmental Inspection Report for the Hazardous Material Storage Area

Date: **Inspected By:**

Location: HAZMAT area **Weekly Inspection**

In Compliance with	Subject	Conform	Non-conform	N/A	Comments
NWB Part B Item 15	Sign posted to inform of a waste disposal facility				
NWB Part D Item 29 MBK SCP NIRB Condition 26	Are there any visual spills?				
NWB Part F Item 19	All Hazardous Waste disposal is located 30m from the ordinary high water mark.				
NWB Part H Item 3	Resources in place to prevent any chemicals, petroleum products, or unauthorized Wastes from entering a water body.				
NWB Part H Item 4	Is secondary containment for chemical storage provided.				
NWB Part I Item 9	Monitoring signs are posted in English, French, and Inuktitut.				
MBK SCP	Spill Kits Present				
NWB Part F Item 14	All Hazardous waste generated is sent off site to an approved disposal facility				
NWB Part F Item 15	All Hazardous waste sent off site is manifested				
NWB Part F Item 15	Manifests are sent to Government of Nunavut				
NIRB Condition 26	Ensure that spills, if any, are cleaned up immediately and that the site is kept clean of debris, including wind-				

	blown debris.				
NIRB Condition 25	Management and control waste in a manner that reduces or eliminates the attraction to carnivores and/or raptors.				
NIRB Condition 27	Ensure the hazardous material area is contained using environmentally protective methods based on practical best management practices				
	Are storage containers clearly labelled to identify Hazmat substance?				
	Are storage containers in good condition? Is there any visible damage or leaks? Can the doors be sealed shut?				
	Is HAZMAT in containers properly segregated?				
	Is HAZMAT arrangement to prevent from falling or dislodging?				
	Where necessary – Is HAZMAT placed on pallets i.e. Drums?				
	Where necessary – Are containers with product stored in an upright position?				
	Where necessary – Are Quatrex bags closed properly?				
	Do you see any potential environmental hazards posed by these HAZMAT containers/materials?				
BMP	Are there any additional environmental hazards/potential impacts that require attention?				
MINE ACT	Are there any Health and Safety issues that should be addressed to prevent injury to workers?				

Misc.	In the punctured spray can c-can, do we have non-punctured spray can?				
	In the grease c-can, do we have open top drums without top, or screw?				
	In the empty pails c-can, do we have metal pails that should be in the metal recycling c-can?				

Comments/Recommendations :

Environmental Personnel Name: _____ **Signature:** _____

_

Actions Corrected:

_____

_____

_____

_____

Site Service Supervisor Name: _____

Signature: _____

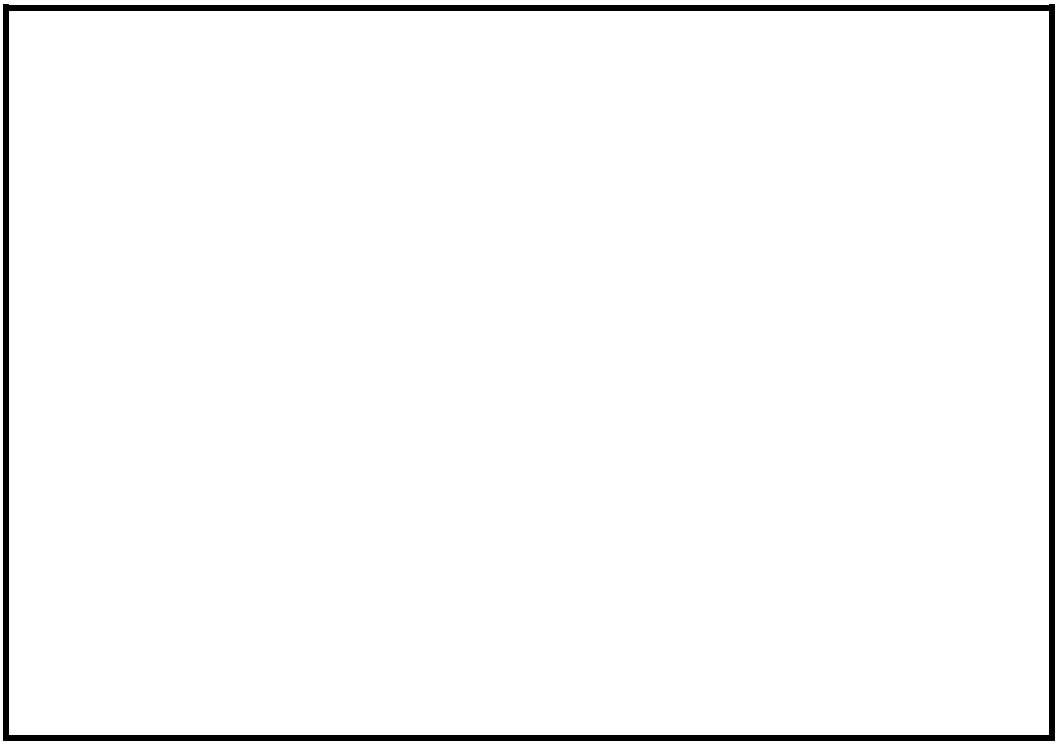

Picture 1: Open c-can doors

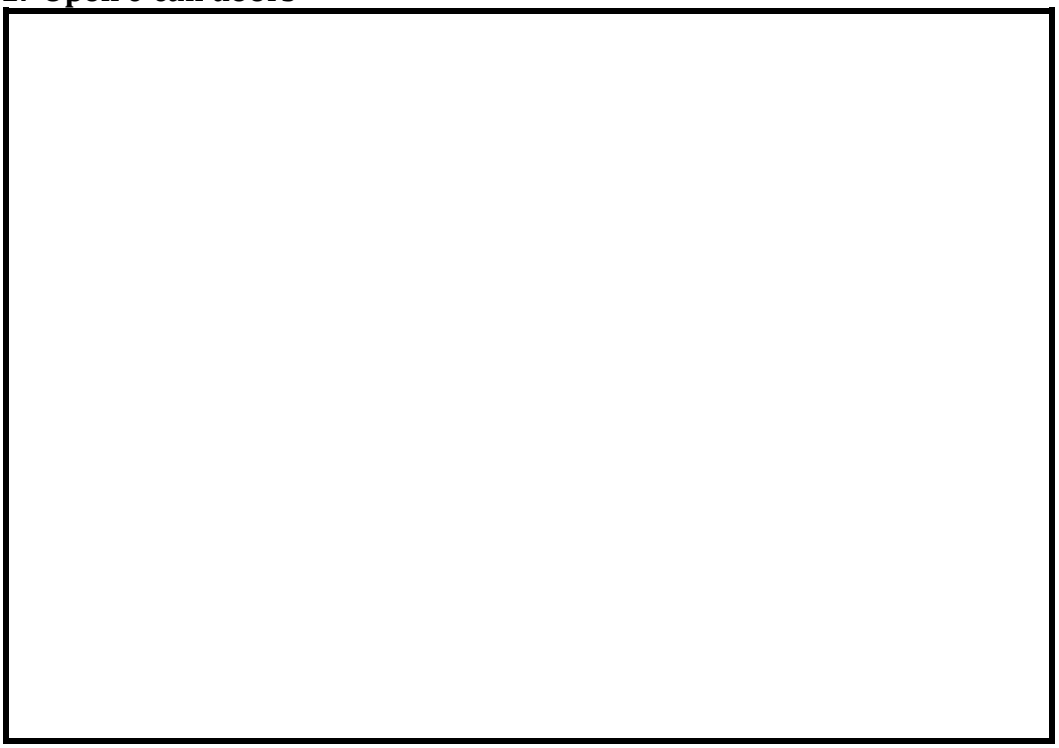

Picture 2:

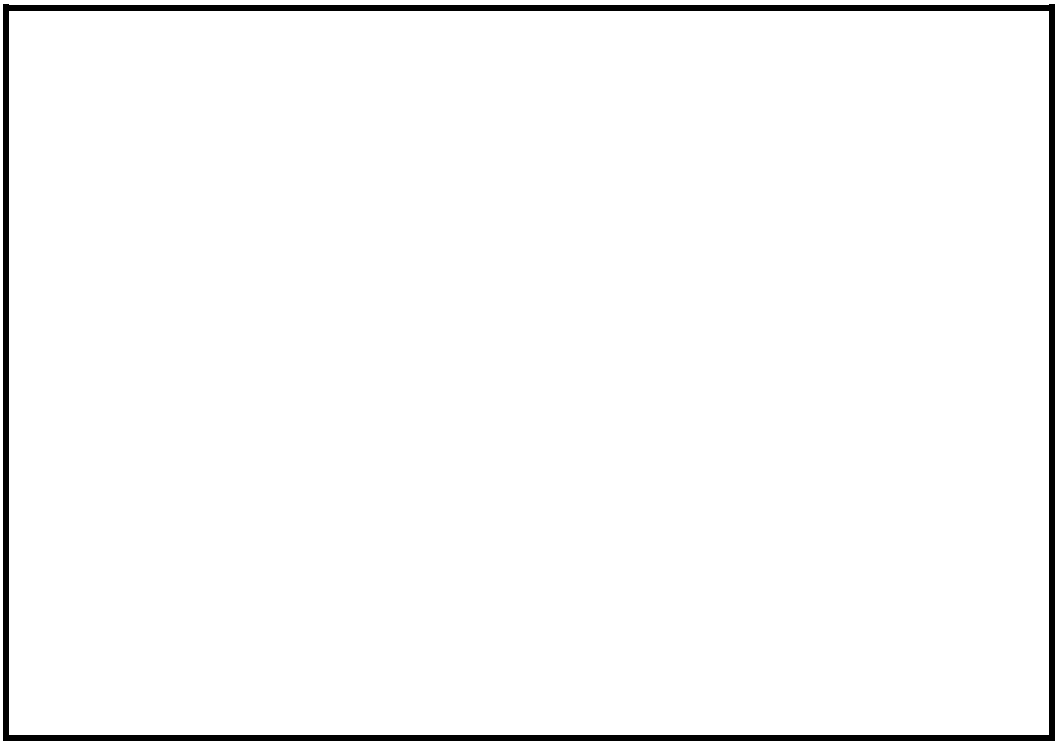

Picture 3:

Appendix B

NWT/NU Spill Report Form

NT-NU SPILL REPORT

OIL, GASOLINE, CHEMICALS AND OTHER HAZARDOUS MATERIALS

NT-NU 24-HOUR SPILL REPORT LINE
TEL: (867) 920-8130
FAX: (867) 873-6924
EMAIL: spills@gov.nt.ca

REPORT LINE USE ONLY

A	REPORT DATE: MONTH – DAY – YEAR	REPORT TIME	☐ ORIGINAL SPILL REPORT, OR ☐ UPDATE # _____ TO THE ORIGINAL SPILL REPORT	REPORT NUMBER _____-_____
B	OCCURRENCE DATE: MONTH – DAY – YEAR	OCCURRENCE TIME		

C	LAND USE PERMIT NUMBER (IF APPLICABLE)	WATER LICENCE NUMBER (IF APPLICABLE)
D	GEOGRAPHIC PLACE NAME OR DISTANCE AND DIRECTION FROM NAMED LOCATION	REGION ☐ NWT ☐ NUNAVUT ☐ ADJACENT JURISDICTION OR OCEAN
E	LATITUDE DEGREES MINUTES SECONDS	LONGITUDE DEGREES MINUTES SECONDS

F	RESPONSIBLE PARTY OR VESSEL NAME	RESPONSIBLE PARTY ADDRESS OR OFFICE LOCATION	
G	ANY CONTRACTOR INVOLVED	CONTRACTOR ADDRESS OR OFFICE LOCATION	
H	PRODUCT SPILLED	QUANTITY IN LITRES, KILOGRAMS OR CUBIC METRES	U.N. NUMBER
	SECOND PRODUCT SPILLED (IF APPLICABLE)	QUANTITY IN LITRES, KILOGRAMS OR CUBIC METRES	U.N. NUMBER
I	SPILL SOURCE	SPILL CAUSE	AREA OF CONTAMINATION IN SQUARE METRES
J	FACTORS AFFECTING SPILL OR RECOVERY	DESCRIBE ANY ASSISTANCE REQUIRED	HAZARDS TO PERSONS, PROPERTY OR EQUIPMENT
K	ADDITIONAL INFORMATION, COMMENTS, ACTIONS PROPOSED OR TAKEN TO CONTAIN, RECOVER OR DISPOSE OF SPILLED PRODUCT AND CONTAMINATED MATERIALS		

L	REPORTED TO SPILL LINE BY	POSITION	EMPLOYER	LOCATION CALLING FROM	TELEPHONE
M	ANY ALTERNATE CONTACT	POSITION	EMPLOYER	ALTERNATE CONTACT LOCATION	ALTERNATE TELEPHONE

REPORT LINE USE ONLY

N	RECEIVED AT SPILL LINE BY	POSITION STATION OPERATOR	EMPLOYER	LOCATION CALLED YELLOWKNIFE, NT	REPORT LINE NUMBER (867) 920-8130

LEAD AGENCY ☐ EC ☐ CCG ☐ GNWT ☐ GN ☐ ILA ☐ INAC ☐ NEB ☐ TC

SIGNIFICANCE ☐ MINOR ☐ MAJOR ☐ UNKNOWN

FILE STATUS ☐ OPEN ☐ CLOSED

AGENCY	CONTACT NAME	CONTACT TIME	REMARKS
LEAD AGENCY			
FIRST SUPPORT AGENCY			
SECOND SUPPORT AGENCY			
THIRD SUPPORT AGENCY			

Appendix C

General Response Procedures for Spilled Chemical Substances

Explosives

C.1 Ammonium Nitrate
C.2 Ammonium Nitrate Fuel Oil (ANFO)

C.1 Ammonium Nitrate

Agnico Eagle commits to review, modify and approve as required to establish this procedure as appropriate for use at the Meadowbank and Whale Tail sites.

The first step against prevention of potential spills and association hazards is the application of proper storage procedures for bulk Ammonium Nitrate, including the following:

- Good housekeeping of the storage facility will prevent spilling and or contamination of materials;
- Ammonium nitrate should be stored away from combustible materials and fuels, as well as other blasting accessories (i.e. boosters, delays, detonating cords and detonators);
- The storage facility should be well ventilated;
- Proper signage restricting the use/exposure of ammonium nitrate to ignition sources should be posted (e.g. no hot work, smoking or vehicle maintenance); and
- The storage facility should be locked at all times with only authorized personnel allowed access.

The following is a general spill response procedure for ammonium nitrate. Consult the MSDS for the specific spilled compound to determine whether deviations from the general guidance are required. Agnico Eagle commits to review and test, and if necessary, modify and update this spill response procedure on an annual basis.

For an ammonium nitrate spill (solid):

1. Isolate and evacuate the spill area;
2. Contact your Supervisor who will then contact the On-Scene Coordinator and coordinate appropriate spill response materials outside the spill area. **Obtain and read the MSDS** for the substance to determine the chemical-specific hazards and to identify any special precautions that must be taken;
3. Put on appropriate personal protective equipment. For an ammonium nitrate spill this includes:
    a) Gloves **as recommended by the MSDS or glove manufacturer**;
    b) Protective eyeglasses or chemical safety goggles or face shield **as recommended by the MSDS**;
    c) Lab coat, coveralls or TyvekTM coveralls **as recommended by the MSDS**; and
    d) Half mask air-purifying respirator with cartridges and/filters **as recommended by the MSDS or respirator manufacturer**;
4. Ventilate (open windows/doors to outdoors) closed spaces before entering;
5. Remove all sources of heat and ignition (no smoking, flares, sparks or flames in immediate area) and remove uncontaminated combustible materials and organic compounds (wood,

paper, oil, etc.,) from spill area;

6. For spills to land, protect the spill area from storm water runoff by constructing a ditch or dike using suitable absorbent materials, soil or other appropriate barrier;

7. Vacuum or sweep the spill residue using non-metal, non-sparking tools and place the residue in a labelled, plastic, container (plastic pail with lid or double heavy duty plastic bags) for re-use or off-site disposal at a licensed disposal facility;

   Note: Recovered solid, if generally free from impurities, may be suitable for its intended use. In this case, place solid in suitable container with lid, and ***clearly label the container per WHMIS Guidelines****.*

   Note: Minimize dust generation during the operation.

8. Remove and bag personal protective equipment for cleaning and disposal at a licensed facility. Thoroughly wash potential skin contact locations after handling.

C.2 Ammonium Nitrate Fuel Oil (ANFO)

Currently no ANFO is stored at the Meadowbank or Whale Tail sites. ANFO is fabricated on demand using ammonium nitrate and fuel oil. In the event that ANFO would be stored at the sites, Agnico Eagle commits to review, modify and approve as required to establish this procedure as appropriate for use at the Meadowbank Gold Project. Proper handling and disposal of ANFO is an important first step in mitigating against spills and associated hazards.

The proper storage procedures are as follows:

- ANFO should only be used under the supervision of authorized trained personnel;
- ANFO should be kept away from heat, sparks, and flames, as well as initiating explosives, oxidizing agents, combustibles, and other sources of heat;
- Containers should be protected from physical damage and in dry, well ventilated conditions;
- Transportation to the Mine site will be in accordance with Section 14 of the *Mines Act* and Regulations and the *Transportation of Dangerous Goods Act*. Transport vehicles will be in sound mechanical condition and equipped with proper safety equipment. Loaded vehicles will not be left unattended and only authorized personnel will be responsible for the security of the explosives under their control; and
- Explosives that have been identified as deteriorated or damaged will need to be disposed of or destroyed. The appropriate method of disposal or destruction and subsequent course of action will be determined by authorized personnel or the explosive supplier.

The following is a general spill response procedure for ammonium nitrate fuel oil – ANFO. The following procedure does not apply to emulsions or other explosives. Consult the MSDS for the specific spilled compound to determine whether deviations from the general guidance are required. Agnico Eagle commits to review and test, and if necessary, modify and update this spill response procedure on an annual basis.

For an ANFO spill (solid):

1. Isolate and evacuate the spill area;
2. Immediately extinguish any open flames and remove ignition sources (no smoking, flares, sparks in immediate area) IF SAFE TO DO SO. **Fires involving large quantities of ANFO should not be fought;**
3. Contact the On-Scene Coordinator who will assemble ERT members and the appropriate spill response materials outside the spill area. **Obtain and read the MSDS** for the substance to determine the chemical- specific hazards and to identify any special precautions that must be taken;
4. Put on appropriate personal protective equipment. For an ANFO spill this includes:
    a. Gloves **as recommended by the MSDS or glove manufacturer**;
    b) Protective eyeglasses or chemical safety goggles or face shield **as recommended by the MSDS**;
    c) Lab coat, coveralls or TyvekTM coveralls **as recommended by the MSDS**;
    d) Shoe covers or rubber boots;
    e) Half mask air-purifying respirator with cartridges and/filters **as recommended by**

the MSDS or respirator manufacturer;

5. If the spill has occurred outdoors, stay upwind and avoid low lying areas. Ventilate (open windows/doors to outdoors) closed spaces before entering. Ensure adequate explosion proof ventilation for clean-up;

6. Remove all sources of heat and ignition (no smoking, flares, sparks or flames in immediate area) and remove uncontaminated combustible materials and organic compounds (wood, paper, oil, etc.) from spill area;

7. Do not operate radio transmitters within 100 m of electric detonators;

8. For spill on land, protect the spill area from storm water runoff by constructing a ditch or dike using suitable absorbent materials, soil or other appropriate barrier. For spill to water, utilize damming, and/or water diversion to minimize the spread of contamination;

9. Collect, sweep or shovel spilled material and the other contaminated material/soil using non- metallic, spark- proof tools and place residue into a labelled, plastic, waste container (plastic pail with lid or double heavy duty plastic bags) for off-site disposal at a licensed disposal facility;

   Note: Recovered solid, if generally free from impurities, may be suitable for its intended use. In this case, place solid in suitable container with lid, and ***clearly label the container per WHMIS Guidelines.***

   Note: The drums/containers/residues are to be stored in ventilated areas away from incompatible materials for eventual off-site disposal at a licensed disposal facility.

10. Remove and bag personal protective equipment for cleaning or disposal at a licensed disposal facility. Thoroughly wash with soap potential skin contact locations after handling. Properly dispose of contaminated leather articles including shoes that cannot be decontaminated.

Appendix D

General Response Procedures for Spilled Chemical Substances

D.1 Compressed Gases

D.1 Compressed Gases

Agnico Eagle commits to review, modify and approve as required to establish this procedure as appropriate for Meadowbank Gold Project.

The following is a general spill response procedure for compressed gases. Consult the MSDS for the specific spilled compound to determine whether deviations from the general guidance are required.

Agnico Eagle commits to review and test, and if necessary, modify and update this spill response procedure on an annual basis.

For a compressed (inert and flammable) gas leak:

1. IF SAFE TO DO SO and it will stop the gas leak, turn off cylinder valve;

2. If the leak cannot be stopped by closing the cylinder valve, and it is an inert atmospheric gas (e.g. nitrogen, carbon dioxide, etc.) isolate and evacuate the affected area. If the leak is a flammable gas and the leak is outside of a ventilated building enclosure that will contain the gas, immediately activate the fire alarm system and evacuate the area/building;

3. Contact the On-Scene Coordinator who will assemble spill response team members and the appropriate spill response materials outside the spill area. Obtain and read the MSDS for the substance to determine the chemical-specific hazards and to identify any special precautions that must be taken;

4. If possible and safety permits, adjust leaking cylinder so that gas escapes rather than liquid;

5. If possible and safety permits, eliminate all ignition sources (no smoking, flares, sparks or flames in immediate area) and turn off electrical equipment;

6. If the spilled has occurred outdoors, stay upwind and avoid low lying areas. If the spill has occurred inside a building, prevent spread of vapour throughout the building by closing doors to other rooms and hallways. If the room's air exchange system distributes air throughout the building, then it may also be necessary to have it shut-down. Allow vapours to ventilate outdoors by opening windows and doors to the exterior; and

7. Isolate area until gas has dispersed. On-Scene Coordinator to verify safe conditions.

Appendix E

General Response Procedures for Spilled Chemical Substances

E.1 Flammable and Combustible Liquids

E.1 Flammable and Combustible Liquids

Agnico Eagle commits to review, modify and approve as required to establish this procedure as appropriate for use at the Meadowbank Gold Project. The following is a general spill response procedure for flammable or combustible liquids, particularly petroleum hydrocarbon products. Consult the MSDS for the specific spilled compound to determine whether deviations from the general guidance are required.

Agnico Eagle commits to review and test, and if necessary, modify and update this spill response procedure on an annual basis.

For a spill of flammable or combustible petroleum hydrocarbon product (liquid):

1. Isolate and evacuate the spill area;

2. Immediately extinguish any open flames and remove ignition sources (no smoking, flares, sparks in immediate area) IF SAFE TO DO SO;

3. Stop leak and contain spill (**see Step 9**) IF SAFE TO DO SO;

4. Contact the On-Scene Coordinator who will assemble ERT members if required and the appropriate spill response materials outside the spill area. **Obtain and read the MSDS** for the substance to determine the chemical-specific hazards and to identify any special precautions that must be taken;

5. Put on appropriate personal protective equipment. Depending on the scale of the spill and properties of the spilled substance, this can include:

    a) Gloves **as recommended by the MSDS or glove manufacturer**;

    b) Splash goggles or face shield;

    c) Shoe covers or rubber boots;

    d) Lab coat or TyvekTM coveralls; and

    e) Half mask air-purifying respirator with **organic vapour or combination** cartridges, or **as otherwise recommended by the MSDS or respirator manufacturer**.

6. If the spilled has occurred outdoors, stay upwind and avoid low lying areas. If the spill has occurred inside a building, prevent spread of vapour throughout the building by closing doors to other rooms and hallways. If the room's air exchange system distributes air throughout the building, then it may also be necessary to have it shut-down;

7. Ventilate (open windows/doors to outdoors) closed spaces before entering. Ensure adequate explosion- proof ventilation for clean-up. A vapour suppressing foam or water spray may be used to reduce vapours;

8. Remove all sources of ignition (no smoking, flares, sparks or flames in immediate area) and combustible materials (wood, paper, oil, etc.) within the spilled area;

9. Contain spill by using spill absorbent, spill pads or pillows, soil or snow to construct a dike that limits flow and prevents entry to sewer, waterways or onto ice. For spills to land,

excavation of trenches/pits to capture spill flow may also be appropriate. If possible, compact soil or snow dikes, and place plastic tarps over the dike and at its foot to allow the product to pool on the plastic for easy recovery;

Note: Do not use paper towels to absorb spill as this increases the rate of evaporation and vapour concentration in the air.

Note: Do not flush with water into drainage areas or ditches as this will spread spill.

Note: Snow works well as a natural absorbent to collect and contain spilled petroleum hydrocarbons. However, its use in containing a spill will result in a water-contaminant mixture that may be more difficult to manage. It is important to scrape up the contaminated snow and ice as soon as possible.

10. Carefully cover the spill area with spill absorbent, spill pads, soil or snow, starting at the outside and working inward. Do not touch or walk through spilled material;

11. Sweep up or shovel the residue using non-metallic, spark-proof tools and place the residue into a labelled, plastic, waste container (plastic pail with lid or double heavy duty plastic bags). For larger spills to land, excavate impacted absorbent material and soil, place in lined and bermed temporary storage area or directly into sealed drums/containers;

    Note: The drums/containers/residues are to be stored in ventilated areas away from incompatible materials for eventual treatment at on-site landfarm or off-site disposal at a licensed disposal facility. Electrically ground all containers and transporting equipment.

    Note: Larger pools of product may be pumped into empty storage tanks or drums.

12. If spill is indoors, mop the affected area using detergent and water. Dispose of this water to drums for eventual off-site disposal at a licensed disposal facility. Spills to land may require further excavation or remediation of contaminated soil until acceptable soil quality is achieved. The On- Scene Coordinator and/or Environmental Superintendent will assess this requirement;

13. For spills to water, immediately limit the area of the spill on water using absorbent pads and booms and similar materials to capture small spills on water. Deploy and slowly draw in absorbent booms to encircle and absorb the spilled product. Recover larger spills on water with floating skimmers and pumps, as required, and discharge recovered product to drums or tanks;

    Note: Petroleum hydrocarbons are generally hydrophobic, and as such, do not readily dissolves in water. They typically tend to float on the water's surface. Absorbent booms are often relied on to recover hydrocarbons that escape land containment and enter water.

    Note: Antifreeze sinks and mixes with water. If released to water, attempt to isolate/confine the spill by damming or diverting the spill. Pump contaminated water to tanks or drums.

14. Remove and bag personal protective equipment for cleaning, informing laundry personnel of contaminant hazards, or disposal at a licensed disposal facility. Thoroughly wash with soap potential skin contact locations after handling. Properly dispose of contaminated leather articles, (including shoes) that cannot be decontaminated.

Appendix F

General Response Procedures for Spilled Chemical Substances

Oxidizing Substances

F.1 Liquids
F.2 Solids

F.1 Liquids

Agnico Eagle commits to review, modify and approve as required and to establish this procedure as appropriate for use at the Meadowbank Gold Project. The following is a general spill response procedure for liquid oxidizer compounds. Consult the MSDS for the specific spilled compound to determine whether deviations from the general guidance are required.

Agnico Eagle commits to review and test, and if necessary, modify and update this spill response procedure on an annual basis.

For a liquid oxidizer spill:

1. Isolate and evacuate the spill area;

2. Stop leak and contain spill (**see Step 8**) IF SAFE TO DO SO;

3. Contact the On-Scene Coordinator who will assemble ERT members if required and the appropriate spill response materials outside the spill area. **Obtain and read the MSDS** for the substance to determine the chemical-specific hazards and to identify any special precautions that must be taken;

4. Put on the appropriate personal protective equipment. Depending on the scale of the spill and properties of the spilled substance, this can include:

   a) Gloves **as recommended by the MSDS or glove manufacturer**;
   b) Splash goggles or face shield;
   c) Shoe covers or rubber boots;
   d) Lab coat, coveralls or TyvekTM coveralls **as recommended by the MSDS**; and
   e) Half mask air-purifying respirator with cartridges and/or filters **as recommended by the MSDS or respirator manufacturer**.

5. Ventilate closed spaces before entering. Ensure adequate explosion-proof ventilation for clean-up;

6. Remove and/or moisten with water any combustible material (wood, paper, oil, etc.) affected by the spill;

7. Use water spray to reduce vapours or divert vapour cloud drift, if required;

8. Contain spill by using non-combustible spill absorbent, soil or snow to construct a dike that limits flow and prevents entry to sewer, waterways or onto ice. For spills to land, excavation of trenches/pits to capture spill flow may also be appropriate;

   *Note: Flushing area with flooding quantities of water may also be appropriate assuming this does not make clean up and waste management more difficult– **refer to the MSDS**.*

9. Carefully cover the spill area with spill absorbent, soil or snow, starting at the outside and working inward. Use non-combustible absorbent. Do not touch or walk though spilled material.

10. Sweep up or shovel the spill residue using non-metal, non-sparking tools and place the residue into a labelled, plastic, waste container (plastic pail with lid or double heavy duty plastic bags) for off- site disposal at a licensed disposal facility;

11. For indoor spills, mop the affected area using detergent and water. Flushing area with

flooding quantities of water may also be appropriate – **refer to the MSDS**. Dispose of this water to the sanitary sewer, process stream or waste drums as appropriate. Spills to land may require further excavation or remediation of contaminated soil until acceptable soil quality is achieved. The On- Scene Coordinator and/or Environmental Superintendent will assess this requirement; and

12. Remove and bag personal protective equipment for cleaning, informing laundry personnel of contaminant hazards, or disposal at a licensed disposal facility. Thoroughly wash with soap potential skin contact locations after handling. Properly dispose of contaminated clothing that cannot be decontaminated.

F.2 Solids

Agnico Eagle commits to review, modify and approve as required to establish this procedure as appropriate for use at the Meadowbank Gold Project.

The following is a general spill response procedure for solid oxidizer compounds. Consult the MSDS for the specific spilled compound to determine whether deviations from the general guidance are required.

Agnico Eagle commits to review and test, and if necessary, modify and update this spill response procedure on an annual basis.

For a solid oxidizer spill:

1. Isolate and evacuate the spill area;

2. Contact the On-Scene Coordinator who will assemble ERT members if required and the appropriate spill response materials outside the spill area. **Obtain and read the MSDS** for the substance to determine the chemical-specific hazards and to identify any special precautions that must be taken;

3. Put on the appropriate personal protective equipment. Depending on the scale of the spill and properties of the spilled substance, this can include:

   a) Gloves **as recommended by the MSDS or glove manufacturer**;
   b) Safety glasses or goggles;
   c) Lab coat; and
   d) Half mask air-purifying respirator with **N95 or greater protection** particulate filter or **as recommended by the MSDS or respirator manufacturer**.

4. Remove all sources of heat and ignition (no smoking, flares, sparks or flames in immediate area) and remove uncontaminated combustible materials and organic compounds (wood, paper, oil, etc.,) from spill area;

5. For spills to land, protect the spill area from storm water runoff by constructing a ditch or dike using suitable non-combustible absorbent materials, soil or other appropriate barrier. For spill to water, utilize damming, and/or water diversion to minimize the spread of contamination;

6. Vacuum, sweep or shovel the spill residue using non-metal, non-sparking tools and place the residue into a labelled, plastic, container (plastic pail with lid or double heavy duty plastic bags) for re- use or off-site disposal at a licensed disposal facility;

   *Note: Recovered solid, if generally free from impurities, may be suitable for its intended use. In this case, place solid in suitable container with lid, and **clearly label the container per WHMIS Guidelines**.*

   Note: Minimize dust generation.

7. If there is still oxidizer residue left in the spill area, neutralize with appropriate agent **as recommended by the MSDS**, or for spills to land continue to excavate until no visible spilled solid remains. Use non- combustible spill absorbent or soil to absorb the neutralized residue. Place in suitable drums/containers for disposal to a licensed facility;

8. For indoor spills, mop the affected area using detergent and water. Dispose of this water to the sanitary sewer, process stream or waste drums as appropriate; and

9. Remove and bag personal protective equipment for cleaning, informing laundry personnel of contaminant hazards, or disposal at a licensed disposal facility. Thoroughly wash with soap potential skin contact locations after handling. Properly dispose of contaminated clothing that cannot be decontaminated.

Appendix G

General Response Procedures for Spilled Chemical Substances

Poisonous and Toxic Substances

G.1 Sodium Cyanide

G.1 Sodium Cyanide

Agnico Eagle commits to review, modify and approve as required to establish this procedure as appropriate for use at the Meadowbank Gold Project. The following is a general spill response procedure for solid Sodium Cyanide.

Agnico Eagle commits to review and test, and if necessary, modify and update this spill response procedure on an annual basis.

For a Sodium Cyanide (solid) spill:

1. Isolate and evacuate the spill area;

2. Contact the On-Scene Coordinator who will assemble ERT members and the appropriate spill response materials outside the spill area. **Obtain and read the MSDS** for the substance to determine the chemical- specific hazards and to identify any special precautions that must be taken;

3. Put on the appropriate personal protective equipment. Depending on the scale of the spill and properties of the spilled substance, this can include:

   a) Impermeable Gloves **as recommended by the MSDS or glove manufacturer;**
   b) TyChem; and
   c) SCBA – Self Contained Breathing Apparatus
   d) Rubber Boots

   Note: For worker safety, maintain readily accessible supply of cyanide response kits on site.

4. Ventilate area of spill or leak;

5. Avoid exposure to acids, water or weak alkalis which can react to form toxic hydrogen cyanide (HCN) gas.

6. Contain spill to prevent release to sewer, waterway or onto ice. For spills to land, protect the spill area from storm water runoff by constructing a ditch or dike using absorbent materials, soil or other appropriate barrier. If raining, cover spill area with tarp or plastic to minimize contact with water and prevent subsequent runoff. For spill to water, utilize damming, and/or water diversion to minimize the spread of contamination;

7. Shovel the spilled material into labelled drums, containers or plastic bags for re-use or off-site disposal at a licensed disposal facility.

   *Note: Recovered solid, if generally free from impurities, may be suitable for its intended use. In this case, place solid in suitable container with lid, and **clearly label the container per WHMIS Guidelines**.*

   Note: Minimize dust generation.

8. If there is still spilled sodium cyanide residue left in the spill area, neutralize with appropriate agent **as recommended by the MSDS** (sodium or calcium hypochlorite solution), or for

spills to land continue to excavate until no visible spilled solid remains. Use suitable spill absorbent or soil to absorb the neutralized residue. Place in suitable drums/containers for disposal to a licensed facility. Collect material and place in a closed container for recovery or disposal.

IMPORTANT: ***It is strictly prohibited to add any chemicals or neutralizing solutions to a Sodium Cyanide Spill near a drainage system, or near or in a water body.***

9. For indoor spills, mop the affected area using detergent and water. Dispose of this water to waste drums/containers for disposal to a licensed facility; and

10. Remove and bag personal protective equipment for disposal at a licensed disposal facility. Thoroughly wash with soap potential skin contact locations after handling. Properly dispose of contaminated clothing that cannot be decontaminated.

Appendix H

General Response Procedures for Spilled Chemical Substances

Corrosive Substances

H.1 Acids, Liquids
H.2 Acids, Solids
H.3 Bases/Alkali, Liquids
H.4 Bases/Alkali, Solids

Response to Spilled Chemicals

IMPORTANT: ***It is strictly prohibited to add any chemicals or neutralizing solutions to a Spilled Chemicals near a drainage system, or near or in a water body.***

H.1 Acids, Liquids

Agnico Eagle commits to review, modify and approve as required to establish this procedure as appropriate for use at the Meadowbank Gold Project.

The following is a general spill response procedure for liquid acid compounds. Consult the MSDS for the specific spilled compound to determine whether deviations from the general guidance are required.

Agnico Eagle commits to review and test, and if necessary, modify and update this spill response procedure on an annual basis.

For a liquid acid spill:

1. Isolate & evacuate the spill area;

2. Stop leak and contain spill (**see Step 8 below**) IF SAFE TO DO SO;

3. Contact the On-Scene Coordinator who will assemble ERT members if required and the appropriate spill response materials outside the spill area. **Obtain and read the MSDS** for the substance to determine the chemical-specific hazards and to identify any special precautions that must be taken;

4. Put on appropriate personal protective equipment. Depending on the scale of the spill and properties of the spilled substance, this can include:

    a) Gloves **as recommended by the MSDS or glove manufacturer**;

    b) Splash goggles or face shield;

    c) Shoe covers or rubber boots;

    d) Lab coat or TyvekTM coveralls; and

    e) Half mask air-purifying respirator with **acid gas or combination** cartridges, or **as otherwise recommended by the MSDS or respirator manufacturer**.

5. If the spill has occurred outdoors, stay upwind and stay out of low areas. If the spill has occurred inside a building, prevent spread of vapour throughout the building by closing doors to other rooms and hallways. If the room's air exchange system distributes air throughout the building, then it may also be necessary to have it shut-down;

6. Ventilate (open windows/doors to outdoors) closed spaces before entering;

7. Remove all sources of ignition (no smoking, flares, sparks or flames in immediate area);

8. Contain spill by using spill absorbent, spill pads or pillows, or dry soil to construct a dike

that limits flow and prevents entry to sewer, waterways or onto ice. For spills to land, excavation of trenches/pits to capture spill flow may also be appropriate. Ideally, use spill absorbent that contains a mild neutralizing agent **as recommended by the MSDS;**

*Note: Many acids, particularly concentrated acids react violently in the presence of water. Do not flush spill area with water unless the **MSDS** indicates acceptable.*

Note: Nitric Acid reacts violently and explosively with organic chemicals and organic material such as wood, cotton and paper; therefore, do not use organic absorbent material on Nitric acid.

Note: Hydrofluoric acid will fume during neutralization. Provide adequate ventilation and approach from upwind. Neutralize carefully with sodium bicarbonate, soda ash or lime. Use water spray to disperse the gas/vapour if required. Remove all sources of ignition.

9. Carefully cover the spill area with spill absorbent, spill pads or dry soil, starting at the outside and working inward. If practical, neutralize spill using **MSDS-recommended** or commercially available neutralizers. Use pH indicator paper to determine if spill is neutralized (pH 7);

   Note: Use caution as neutralization reactions generate heat.

10. Sweep or shovel the neutralized spill residue using non-metal, non-sparking tools and place the residue into a labelled, plastic, waste container (plastic pail with lid or double heavy duty plastic bags) for off-site disposal at a licensed disposal facility;

11. Check the pH of the spill area. If it is less than pH 6, then further neutralize with a dilute solution of a suitable reagent **as identified on the MSDS** or for spill to land continue to excavate contaminated soil;

12. For indoor spills, mop the affected area using detergent and water. Dispose of this water to the sanitary sewer, process stream or waste drums as appropriate;

13. Remove and bag personal protective equipment for cleaning, informing laundry personnel of contaminant hazards, or disposal at a licensed disposal facility. Thoroughly wash with soap potential skin contact locations after handling. Properly dispose of contaminated clothing that cannot be decontaminated; and

14. After the spill has been cleaned up, the area should be free of vapours. However, if personnel note odours or irritation, isolate the spill area; re-clean the area as per **Steps 11 and 12** or wait at least **1 hour** before re-entering or until considered safe by the On-Scene Coordinator or Environmental Superintendent.

H.2 Acids, Solids

Agnico Eagle commits to review, modify and approve as required to establish this procedure as appropriate for use on the Meadowbank Gold Project.

The following is a general spill response procedure for solid acid compounds. Consult the MSDS for the specific spilled compound to determine whether deviations from the general guidance are required.

Agnico Eagle commits to review and test, and if necessary, modify and update this spill response procedure on an annual basis.

For a solid acid spill;

1. Isolate and evacuate the spill area;

2. Contact the On-Scene Coordinator who will assemble ERT members if required and the appropriate spill response materials outside the spill area. **Obtain and read the MSDS** for the substance to determine the chemical-specific hazards and to identify any special precautions that must be taken;

3. Put on the appropriate personal protective equipment. Depending on the scale of the spill and properties of the spilled substance, this can include:

   a) Gloves **as recommended by the MSDS or glove manufacturer**;

   b) Safety glasses or goggles;

   c) Lab coat; and

   d) Half mask air-purifying respirator with **N95 or greater protection** particulate filter, or **as otherwise recommended by the MSDS or respirator manufacturer**.

4. Contain spill to prevent release to sewer, waterway or onto ice. For spills to land, protect the spill area from storm water runoff by constructing a ditch or dike using absorbent materials, dry soil or other appropriate barrier. If raining, cover spill area with tarp or plastic to minimize contact with water and prevent reaction and/or subsequent runoff. For spill to water, utilize damming, and/or water diversion to minimize the spread of contamination;

5. If necessary to minimize dust production, slightly moisten the solid. Use water, or if the material is water reactive, another inert liquid **as recommended by the MSDS;**

6. Sweep up or shovel the residue using non-metallic, spark-proof tools and place the residue into a labelled, plastic, waste container (plastic pail with lid or double heavy duty plastic bags) for reuse or off-site disposal at a licensed disposal facility;

   *Note: Recovered solid, if generally free from impurities, may be suitable for its intended use. In this case, place solid in suitable container with lid, and **clearly label the container per WHMIS Guidelines**.*

7. Remaining solid acid residue may be neutralized using a dilute solution of appropriate agent **as recommended by the MSDS** (e.g. sodium bicarbonate - baking soda), or for spills to land continue to excavate until no visible spilled solid remains. Check the pH of the spill area; the final pH should be between pH 6 and 10. Use spill absorbent, spill pads or

dry soil to absorb the neutralized residue;

Note: Use caution as neutralization reactions generate heat.

8. For indoor spills, mop the affected area using detergent and water. Dispose of this water to the sanitary sewer, process stream or waste drums as appropriate; and

9. Remove and bag personal protective equipment for cleaning, informing laundry personnel of contaminant hazards, or disposal at a licensed disposal facility. Thoroughly wash with soap potential skin contact locations after handling. Properly dispose of contaminated clothing that cannot be decontaminated.

H.3 Bases/Alkali, Liquids

Agnico Eagle commits to review, modify and approve as required to establish this procedure as appropriate for use at the Meadowbank exploration camp.

The following is a general spill response procedure for liquid alkali or base compounds. Consult the MSDS for the specific spilled compound to determine whether deviations from the general guidance are required.

Agnico Eagle commits to review and test, and if necessary, modify and update this spill response procedure on an annual basis.

For a liquid alkali or base spill:

1. Isolate & evacuate the spill area;

2. Stop leak and contain spill (**see Step 8**) IF SAFE TO DO SO;

3. Contact the On-Scene Coordinator who will assemble ERT members and the appropriate spill response materials outside the spill area. **Obtain and read the MSDS** for the substance to determine the chemical- specific hazards and to identify any special precautions that must be taken;

4. Put on the appropriate personal protective equipment. Depending on the scale of the spill and properties of the spilled substance, this can include:

   a) Gloves **as recommended by the MSDS or glove manufacturer**;

   b) Splash goggles or face shield;

   c) Shoe covers or rubber boots;

   d) Lab coat or TyvekTM coveralls; and

   e) Half mask air-purifying respirator with cartridges/filters **as recommended by the MSDS or respirator manufacturer**.

5. If the spill has occurred outdoors, stay upwind and stay out of low areas. If the spill has occurred inside a building, prevent spread of vapour throughout the building by closing doors to other rooms and hallways. If the room's air exchange system distributes air throughout the building, then it may also be necessary to have it shut-down;

6. Ventilate (open/windows to outdoors) closed spaces before entering;

7. Remove all sources of ignition (no smoking, flares, sparks or flames in immediate area) and combustible materials (wood, paper, oil, etc.);

8. Contain spill by using spill absorbent, spill pads or pillows, or dry soil to construct a dike that limits flow and prevents entry to sewer, waterways or onto ice. For spills to land, excavation of trenches/pits to capture spill flow may also be appropriate. Ideally, use spill absorbent that contains a mild neutralizing agent **as recommended by MSDS;**

   Note: Use caution as neutralization reactions generate heat.

9. Carefully cover the spill area with spill absorbent, spill pads or dry soil, starting at the outside and working inward. If practical, neutralize spill using MSDS-recommended or commercially available neutralizers. Use pH indicator paper to determine if spill is neutralized (pH 7);

   Note: Use caution as neutralization reactions generate heat.

10. Sweep or shovel the neutralized spill residue using non-metal, non-sparking tools and place the residue into a labelled, plastic, waste container (plastic pail with lid or double heavy duty plastic bags) for off-site disposal at a licensed disposal facility;

11. Check the pH of the spill area. If it is greater than pH 10, then further neutralize with a dilute solution of a suitable reagent **as identified on the MSDS**, or for spill to land continue to excavate contaminated soil;

12. For indoor spills, mop the affected area using detergent and water. Dispose of this water to the sanitary sewer, process stream or waste drums as appropriate;

13. Remove and bag personal protective equipment for cleaning, informing laundry personnel of contaminant hazards, or disposal at a licensed disposal facility. Thoroughly wash with soap potential skin contact locations after handling. Properly dispose of contaminated clothing that cannot be decontaminated; and

14. After the spill has been cleaned up, the area should be free of vapours. However, if personnel note odours or irritation, isolate the spill area; re-clean as per **Steps 11 and 12** or wait at least **1 hour** before re- entering or until it is considered to be safe by the On-Scene Coordinator or Environmental Superintendent.

H.4 Bases/Alkali, Solids

Agnico Eagle commits to review, modify and approve as required to establish this procedure as appropriate for use at the Meadowbank Gold Project.

The following is a general spill response procedure for solid alkali or base compounds. Consult the MSDS for the specific spilled compound to determine whether deviations from the general guidance are required.

Agnico Eagle commits to review and test, and if necessary, modify and update this spill response procedure on an annual basis.

For a solid alkali or base spill;

1. Isolate and evacuate the spill area;

2. Contact the On-Scene Coordinator who will assemble ERT members if required and the appropriate spill response materials outside the spill area. **Obtain and read the MSDS** for the substance to determine the chemical-specific hazards and to identify any special precautions that must be taken;

3. Put on the appropriate personal protective equipment. Depending on the scale of the spill and properties of the spilled substance, this can include:

    a) Gloves **as recommended by the MSDS or glove manufacturer**;

    b) Safety glasses or goggles;

    c) Lab coat; and

    d) Half mask air-purifying respirator with **N95 or greater protection** particulate filter or **as recommended by the MSDS or respirator manufacturer**.

4. Contain spill to prevent release to sewer, waterway or onto ice. For spills to land, protect the spill area from storm water runoff by constructing a ditch or dike using absorbent materials, dry soil or other appropriate barrier. If raining, cover spill area with tarp or plastic to minimize contact with water and prevent reaction and/or subsequent runoff. For spill to water, utilize damming, and/or water diversion to minimize the spread of contamination;

5. If necessary to minimize dust production, slightly moisten the solid. Use water, or if the material is water reactive, another inert liquid **as recommended by the MSDS**;

    Note: Do not use water to flush bases in powdered form, such as calcium oxide (lime), as this material is not very soluble.

6. Sweep or shovel the residue using non-metallic, spark-proof tools and place the residue into a labelled, plastic, waste container (plastic pail with lid or double heavy duty plastic bags) for offsite disposal at a licensed disposal facility;

    *Note: Recovered solid, if generally free from impurities, may be suitable for its intended use. In this case, place solid in suitable container with lid, and **clearly label the container per WHMIS Guidelines**.*

7. Remaining solid alkali or base residue may be neutralized using a dilute solution of

appropriate acid. Check the pH of the spill area; the final pH should be between pH 6 and 10. Use spill absorbent, spill pads or dry soil to absorb the neutralized residue;

8. For indoor spills, mop the affected area using detergent and water. Dispose of this water to the sanitary sewer, process stream or waste drums as appropriate; and

9. Remove and bag personal protective equipment for cleaning, informing laundry personnel of contaminant hazards, or disposal at a licensed disposal facility. Thoroughly wash with soap potential skin contact locations after handling. Properly dispose of contaminated clothing that cannot be decontaminated.

Appendix I

Agnico Eagle Spill Response Training Records

Group Training Report

Course Name: Emergency Planning and Spill Response Awareness

Trainer's Name: Trever Miller

Date: Jan. 15/2013

Agnico-Eagle Mines Ltd.
Meadowbank Division

M		Name	Company	Signature	Hours TRG.	Hours ASS.	Hours Total Hours	Code
	1	Jeffrey Pratt	AEM				10	
	2	Fanny Laporte	AEM				10	
	3	Richard Jackson	AEM				10	
	4	Tom Thomson	AEM				10	
	5	Maurice Barrieau	AEM				10	
	6	David Alexander	AEM				10	
	7	Martin Theriault	AEM				10	
	8							
	9							
	10							

COMMENTS:

Trainer's signature:

Date: January 15, 2013

Codes:	Assessment Codes:
1. AEM Permit	A+: Very Good
2. Restrictive Permit	A : Good
3. Temporary Permit	B : Average
4. Training Completed	C : Below Average
5. Training Not Completed	
6. Fail	

Tom Thomson

SWAT OILSPILL ISSUES WORKSHOP

Situation Analysis – Truck Rollover

- **Incident** - 45 m^3 diesel spills/plus oil/acid – Originates on Land, flows into the River
- **Spill** - occurred 22:00 hrs on March 20, 2013
- **River** – water flow, 5 km/hr, braided channels; approx 15 km to Baker Lake
- **Lake** – winds from the North West at 20 km/hr. Tide is high.

Km 23 - Bridge 3

1. List the **issues** linked to this scenario:

Response Time + Moving Equipment / Resources to the Area
Light + Temperature
Fish Bearing Stream
Speed of Containment / Cut off Point
Vast Contaminated area - Type of Contaminate

* Safety of Personel, Communications, Environment, Equipment

2. What **resources** are required?

Baker Lake Contractor / Peters Exp.
Baker Lake Command Center, Camp, at Spill Location
Ert Personal + Relieve
Emergency Trailer - Environmental
Emergency C-Cans / Roll offs
Lighting / Generators
Transportation
Safety officer(s)
AEM Personal from Baker Lake
Mapping of Area

3. What are the **initial spill response steps and what does your ICS look like**?

3rd Control / Crisis Centre
On Site Commander
Baker Lake
Logistic, Planning, Finance

1) Review ERP + Spill Contingency Plan
Prepare J.H.A on Spill

Establish Safety Zones - Hot, Warm, Cold

SWAT Consulting Inc.

4. What is your oil spill containment and recovery **strategy**?

Shut off/Stop Spill - Identify Source
Contain Spill - Trench - Bell or (POE)
Maritime Booms & Absorbants
Estimate Direction of spill & find a cut off points
By Using 10-30-4 - Protect Shoreline and diverting flow

* Pre plan - Plan it now

5. What is your strategy for shoreline **cleanup** operations; if using SCAT what are the forecasted shoreline types, what is your treatment options for each type and what is your end point criteria

Vacuum Pump, Absorbants, Oil/water Separater
- Excavate cont Soil
- Vegatated/Rocky Shorelines
-
- Sample & Monitored until we have clearances from DFO, ENV Canada

- Do a quick wash & leave it for Bio remediation

SWAT Consulting Inc.

6. What are some **safety** issues?

[redacted], Drinking Water - Baker Lake

Temperature + H2S of Response Team
LEL's
water + ice

7. How do you manage your **waste**?

Quatrex, 45 Gallons, oil/water separator

Contaminated Soil pad

8. If it were to make it to the lake what is your containment, recovery, cleanup and general overall response?

Same as #3 - Notify Proper Personal / Authorities Additional
DFO, EC, Baker Lake Res.

SWAT Consulting Inc.

Fanny Laporte.

SWAT OILSPILL ISSUES WORKSHOP

Situation Analysis – Truck Rollover

45 000 Litres KM 23

- **Incident** - 45 m^3 diesel spills/plus oil/acid – Originates on Land, flows into the River
- **Spill** - occurred 22:00 hrs on March 20, 2013
- **River** – water flow, 5 km/hr, braided channels; approx 15 km to Baker Lake
- **Lake** – winds from the North West at 20 km/hr. Tide is high.

KM 23.

1. List the **issues** linked to this scenario:

Communication issu

Contamination

- Back to land / Water contamination / wildlife. To white lake. (Fishing major site for invit)
- Time of day and distance from camp.
- March → still snow – could be cold
- Accident → Health & Safety (Driver) and the Responder
- Acid → add another safety issue ↓ less.
- Baker Lake water intake
- Public relation case / inform the Community
  ↳ by appropriate person

SWAT Consulting Inc.

2. What **resources** are required? * 60 people ✓

- Labour → with incident Command Plan / everybody has a task in the organization / ERT Team.
- Commandement Trailer & facilities close to site ✓
  ↳ could be a container, heated
- decontamination area.
- Machinery → loader → TRUCK → ~~shovel~~ shovel. ✓
- Disposal and containing material DRUMS/45gall (berm - secondary material) Vacum - emergency trailer with supply.
- Towerlight → because it is night ✓ zodiak empty tanker.
  helicopter for next morning.

3. What are the **initial spill response steps and what does your ICS look like**?

Command ICS:

INFO. ①
- MSDS Sheets - Planning - Logistic
- JHA
- S.R.P spill response plan. / ERP. / SRP /

② Find ressources / General Briefing.

③ Logistic and reassess at all change (F.L.R.A)
  ↳ operations.
  - Isolation
  - Contain
  - Recovery - Remediate
  - wild life
  - Waste management
  - Sampling.

Level 3 ~~SPILL~~ emergency

Because it is night and impact can be desastrous

SWAT Consulting Inc.

4. What is your oil spill containment and recovery **strategy**?

(1)A → Make the environment safe for me and my Team - Gaz det tor - PPE

~~[illegible]~~ (1) Stop the leak ✓

(3) (2) dig a ~~diten~~ trenche to protect the water (Shore)

(3) evaluate where the contaminent are → wind → slope → current. ✓

(4) Instal maritime bariere to contain (or) the biggest part of the oil.

(5) Snow barrier if needed. ✓

(2) (6) cut all entries to other ponds and rivers

(7) Vaccum the contaminent and dispose the waste adequatly. ✓

(8) transpose what is still in the tanker to another container

5. What is your strategy for shoreline **cleanup** operations; if using SCAT what are the forecasted shoreline types, what is your treatment options for each type and what is your end point criteria

Tundra / Rock ✓ trenches / bell hole.

→ Inspect the shore / contain with ~~[illegible]~~ Maritime barrier.

→ Monitoring often and sample ✓

→ When melting / sample and vaccum if needed Quick wash.

→ let nature take over.

→ if ~~[illegible]~~ too much → excavate the shore ✓ and remove contaminent. and dispose

SWAT Consulting Inc.

6. What are some **safety** issues? Under the ice. → leave it.

→ LEL / Fire / toxic Gazes.

→ Water / ice / cold for response team and equipment.

→ darkness → uneven Ground / strain ankle

7. How do you manage your **waste**? 45 Gall.

Used Fuel → sent back south to appropriate place

used absorbant supply → ship down south in Quadrex

material → Land farm brought to

Clean and rinse - PPE

8. If it were to make it to the lake what is your containment, recovery, cleanup and general overall response?

see # 4 ~~Exercise~~ answer. ✓

→ cut the Hamlet Water intake. ✓

inform additional Authorities.

Skimmers Vessels

Boats. V V J

SWAT Consulting Inc.

Jeff Pratt

SWAT OILSPILL ISSUES WORKSHOP

Situation Analysis – Truck Rollover

- **Incident** - 45 m^3 diesel spills/plus oil/acid – Originates on Land, flows into the River
- **Spill** - occurred 22:00 hrs on March 20, 2013
- **River** – water flow, 5 km/hr, braided channels; approx 15 km to Baker Lake
- **Lake** – winds from the North West at 20 km/hr. Tide is high.

1. List the **issues** linked to this scenario:

- 90km From mine
- Dark out
- Very Cold
- Vacinity to lake
- low tide will suck out

2. What **resources** are required?

- Personnel
- Command center both on site & Baker Lake
- Lightening
- Amenities for personnel
- Spill Response Equipment
- Transportation

3. What are the **initial spill response steps and what does your ICS look like**?

- Alert ERT and immobilize
- Alert ICS

ICS - Review of Spill Contingency - Planning for mobilization

- ERT Captain would assess situation and report incident command

SWAT Consulting Inc.

4. What is your oil spill containment and recovery **strategy**?

~~Goal~~

- Stop the release - Plug hole or build berm.
- Contain release - Do Not Let Enter Lake
  - Place boom along ~~mouth~~ deltas From the tributaries.
  - Have to create ice road to down stream collection point.
  - ~~Use~~ Extract contaminent from down stream boom point*

5. What is your strategy for shoreline **cleanup** operations; if using SCAT what are the forecasted shoreline types, what is your treatment options for each type and what is your end point criteria

- Create Hot, Warm, Cold Zones
- Rocky Sandy Substate
- Leave to summer Valatilize

6. What are some **safety** issues?

- No light
- Cold Weather
- PPE for Chemicals

7. How do you manage your **waste**?

- Quatrex bags
- Totes for liquid Contaminants

8. If it were to make it to the lake what is your containment, recovery, cleanup and general overall response?

SWAT Consulting Inc.

M. Theriault

SWAT OILSPILL ISSUES WORKSHOP

Situation Analysis – Truck Rollover

- **Incident -** 45 m^3 diesel spills/plus oil/acid – Originates on Land, flows into the River
- **Spill** - occurred 22:00 hrs on March 20, 2013
- **River** – water flow, 5 km/hr, braided channels; approx 15 km to Baker Lake
- **Lake** – winds from the North West at 20 km/hr. Tide is high.

1. List the **issues** linked to this scenario:

- BL water intake
- impact to the land / to the water
- Going towards white hills lake (fishing lake)
- Distance from camp / time of event / Weather
- H/S for the driver and responder + possible acid reaction
- Spalding of cont.
- Wildlife (fish)
- Public relationship (Must have the appropriate person)
- Dispersion
- Communication, Road Access

2. What **resources** are required?

- Equipment : Boat, Maritime Barrier, Shovel, truck, Quadrex waste disposal, secondary containment, Spot (toward light) Vaccum (Emergency trailer)

Decontamination unit, Commandement unit

- Personnal : Labour, ERT, IC, public relationship

Helicopter

3. What are the **initial spill response steps and what does your ICS look like**?

Planning { MSDS sheet, JHA, ERP, SRP,

Logist. { General Briefing
Find ressource and equipment and make them available

Operation → Field Level Risk Assessment
↳ Isolation - contain - Recovery ~~ect~~. Wildlife - Waste Management
Sampling

Reassess between field and Management by IC.

SWAT Consulting Inc.

4. What is your oil spill containment and recovery **strategy**?

Make sure everything is safe, gaz detector, PPE ect.

Plug the hole / Stop the leak

Dig a ditch (trench) close to the shore

Evaluate the location of the contaminate in the watere

Install maritime barrier to enclose (isolate) the leaking shore

Cut all entries to other channels

Vaccum the accumulate diesel / transfert the diesel left in the tanker

Adequately dispose the waste

5. What is your strategy for shoreline **cleanup** operations; if using SCAT what are the forecasted shoreline types, what is your treatment options for each type and what is your end point criteria

inspect the shore, keep the maritime barrier containing the fuel close to shore, monitore and sample if needed, vaccuum, let nature take over

WASH IT

If too much contaminant keep coming from the underground, dig everything

SWAT Consulting Inc.

6. What are some **safety** issues?

- LEL / fire / toxic gasses
- WATER / ICE
- cold weather
- Heavy equipment
- Uneven soil, darkness (strain ankle)

7. How do you manage your **waste**?

- used fuel send back south to appropriate location
- Absorbant stuff used (quadrex) burned or ship down south
- Contaminated soil send to landfarm
- Rinse all the PPE

8. If it were to make it to the lake what is your containment, recovery, cleanup and general overall response?

See question #4

R-Jackson

SWAT OILSPILL ISSUES WORKSHOP

Situation Analysis – Truck Rollover

23 24

- **Incident** - 45 m^3 diesel spills/plus oil/acid – Originates on Land, flows into the River
- **Spill** - occurred 22:00 hrs on March 20, 2013
- **River** – water flow, 5 km/hr, braided channels; approx 15 km to Baker Lake
- **Lake** – winds from the North West at 20 km/hr. Tide is high.

1. List the **issues** linked to this scenario:

- RESPONSE TIMES
- MOVING RESOURCES + EQUIP
- LIGHT FACTOR
- FISH BEARING
- SPEED OF CONTAINMENT
- VAST CONTAMINATED AREA
-

2. What **resources** are required?

- BLCS + PETER EXPEDITING HEAVY EQUIPMENT
- ERT PERSONEL + RELIEF PERSONEL
- COMMAND CENTER ON SITE + AT CAMP
- EMERGENCY SEA CANS ROLLOFF TRUCK
- LIGHTING, GENERATORS
- INFORMATION + SAFETY OFFICER
- MAPPING OF THE AREA
-

3. What are the **initial spill response steps and what does your ICS look like**?

INCENDENT COMMANT

PREPLANNED JHA + AJUSTMENT ANNEXE

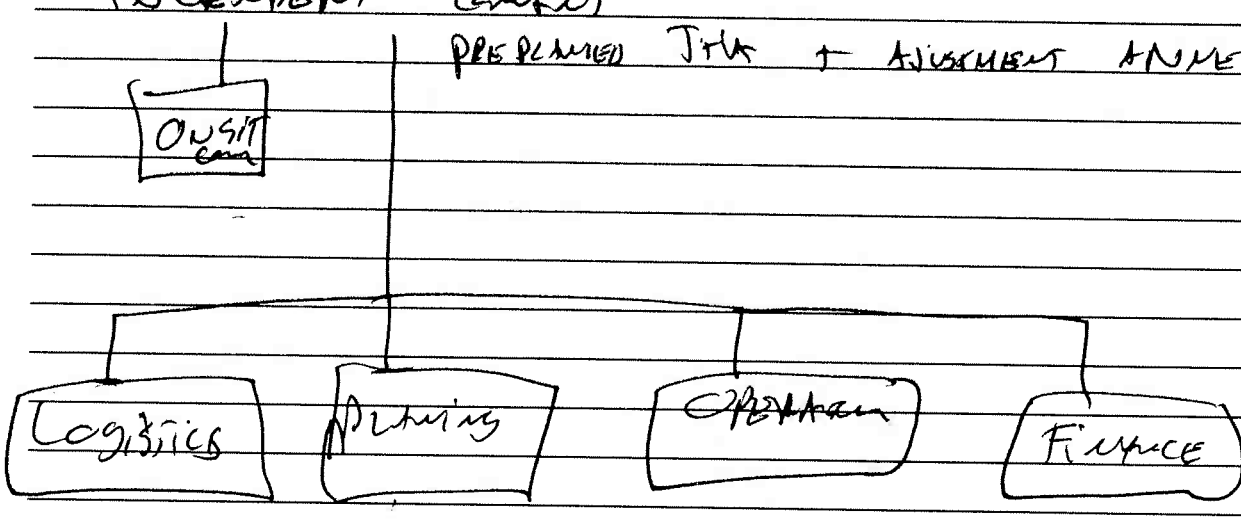

RL

SWAT Consulting Inc.

4. What is your oil spill containment and recovery **strategy**?

CONTAIN SPILL (STOP SPILL AT THE SOURCE
PREVENT FURTHER ENTRY/ TRENCH BELL HOLE
ESTIMATE DIRECTION OF SPILL MARITIME BOOMING
FIND CUT OFF POINTS
BY USING 10/30 @ 4 KNOTS DIRECT FLOW TO AND
PROTECT SHORE LINE

5. What is your strategy for shoreline **cleanup** operations; if using SCAT what are the forecasted shoreline types, what is your treatment options for each type and what is your end point criteria

- VACU PUMP
- PADS
- SORBANTS
-

6. What are some **safety** issues?

LEL
COLD T°
~~[illegible]~~ INHALATION
CONTAMINATION
FIRE
WATER OVERRUN

7. How do you manage your **waste**?

QUATREX PACKS
45 Gal DRUMS
OIL WAT SEPERATION
CONTAMINATE SOIL PAD

8. If it were to make it to the lake what is your containment, recovery, cleanup and general overall response?

SWAT Consulting Inc.

D. ALEXANDER

SWAT OILSPILL ISSUES WORKSHOP

Situation Analysis – Truck Rollover

- **Incident -** 45 m^3 diesel spills/plus oil/acid – Originates on Land, flows into the River
- **Spill** - occurred 22:00 hrs on March 20, 2013
- **River** – water flow, 5 km/hr, braided channels; approx 15 km to Baker Lake
- **Lake** – winds from the North West at 20 km/hr. Tide is high.

1. List the **issues** linked to this scenario:

WATER INFILTRATION 90KM away
Sound alarm Pitch DARK
Extreme cold
Set-up block before RIVER ~~EMPTIES~~ EMPTIES INTO BAKER LAKE
Low tide when it comes will make it worse

2. What **resources** are required?

~~ERT RESPONSE~~ - ~~ALERT~~ BAKER LAKE FIRE DEPT.
COMMAND CENTRE AT MEADOW + BAKER
LIGHTING
WARM-UP ~~FOR~~ STAFF
SPILL RESPONSE EQUIP.
TRANSPORT FROM MINE
50-60 people fly/bus off at MB

3. What are the **initial spill response steps and what does your ICS look like**?

~~ALERT ERT~~ ALERT ERT, INCL. ENVIRO, MINE SUPER, ~~H+S~~ SUPER, SITE SERVICES HR
REVIEW CONTINGENCY PLAN, PLANNING FOR MOBILIZATION
ERT CAPTAIN - WITH ENVIRO, WOULD ASSES REPORT BACK TO the ICS

SWAT Consulting Inc.

4. What is your oil spill containment and recovery **strategy**?

STOP ~~CONTAIN~~ SPILL CONTAIN FROM entry into LAKE.
PLUG THE HOLE IN TRUCK OR BUILD BERM
↳ CREW ASSIGNED.
- INSTALL BOOM ALONG THE DELTA MOUTH OF THE RIVER JUST BEFORE IN ENTERS THE LAKE
- MAKE ICE ROAD TO DOWNSTREAM COLLECTION POINT
= WITH VACUUM TRUCK
-ESTABLISH ZONES

5. What is your strategy for shoreline **cleanup** operations; if using SCAT what are the forecasted shoreline types, what is your treatment options for each type and what is your end point criteria

ROCKY, SANDY SUBSTRATE. WAIT TIL SUMMER
VALITISE.
ZONE OFF.

6. What are some **safety** issues?

PITCH DARK - NEED
Cold Weather
PROPER PPE

7. How do you manage your **waste**?

VACUUM TRUCK

8. If it were to make it to the lake what is your containment, recovery, cleanup and general overall response?

CELLULOSE BOOMS

SWAT Consulting Inc.

M. BARIBEAU

SWAT OILSPILL ISSUES WORKSHOP

Situation Analysis – Truck Rollover

- **Incident -** 45 m^3 diesel spills/plus oil/acid – Originates on Land, flows into the River
- **Spill** - occurred 22:00 hrs on March 20, 2013
- **River** – water flow, 5 km/hr, braided channels; approx 15 km to Baker Lake
- **Lake** – winds from the North West at 20 km/hr. Tide is high.

1. List the **issues** linked to this scenario:

- 90 kms From Site
- Pitch Dark Very cold.
- Sanity to Lake.
⇒ Set up on site operational Post.
⇒ Low tide will draw water away.
⇒

SWAT Consulting Inc.

2. What **resources** are required?

-> Manpower.
-> Boat, Light Tower, ammunity.
-> Baker lake Fire dept.
-> Personnel transportation.
-> Mean of communication.
-> Small loader, Vacuum Truck.

3. What are the **initial spill response steps and what does your ICS look like**?

- Set up ICS
- H&S, Environment, HR, Site Service, General Service. spill.
- Review emergency contingency Plan.
- Plan mobilization. -> ERT Captain. assess situation and Report, ->

SWAT Consulting Inc.

4. What is your oil spill containment and recovery **strategy**?

Stop the Release, prevent further entry
- shut off flow / Build Berms,
-> Block off.

make use Soal to collection Pond,

5. What is your strategy for shoreline **cleanup** operations; if using SCAT what are the forecasted shoreline types, what is your treatment options for each type and what is your end point criteria

Rocky Sand monitor leave till Summer.

SWAT Consulting Inc.

6. What are some **safety** issues?

- Measuring ice thickness,
- Wear Proper PPE,
- LIGHTING,
- cold weather,
- acid
- → assess Zoning

7. How do you manage your **waste**?

8. If it were to make it to the lake what is your containment, recovery, cleanup and general overall response?

SWAT Consulting Inc.

Group Training Report

Course Name:

Trainer's Name:

Date: 2013-01-16

Agnico-Eagle Mines Ltd.
Meadowbank Division

M		Name	Company	Signature	Hours TRG.	Hours ASS.	Hours Total Hours	Code
	1	Jamie Kataluk	AEM				10	
	2	Robin Allard	AEM				10	
	3	Dave Holmston	AEM,					
	4	Alain Genesse	A-E-M					
	5	Stéphane Larose	AEM					
	6	Luc Blanchette	FGL					
	7							
	8							
	9							
	10							

COMMENTS:

Trainer's signature: _____

Date: _____

Codes:
1. AEM Permit
2. Restrictive Permit
3. Temporary Permit
4. Training Completed
5. Training Not Completed
6. Fail

Assessment Codes:
A+: Very Good
A : Good
B : Average
C : Below Average

STÉPHANE LACOSE

SWAT OILSPILL ISSUES WORKSHOP

Situation Analysis – Truck Rollover

- **Incident** - 45 m^3 diesel spills/plus oil/acid – Originates on Land, flows into the River
- **Spill** - occurred 22:00 hrs on ~~March~~ June 20, 2013
- **River** – water flow, 5 km/hr, braided channels; approx 15 km to Baker Lake
- **Lake** – winds from the North West at 20 km/hr. Tide is high.

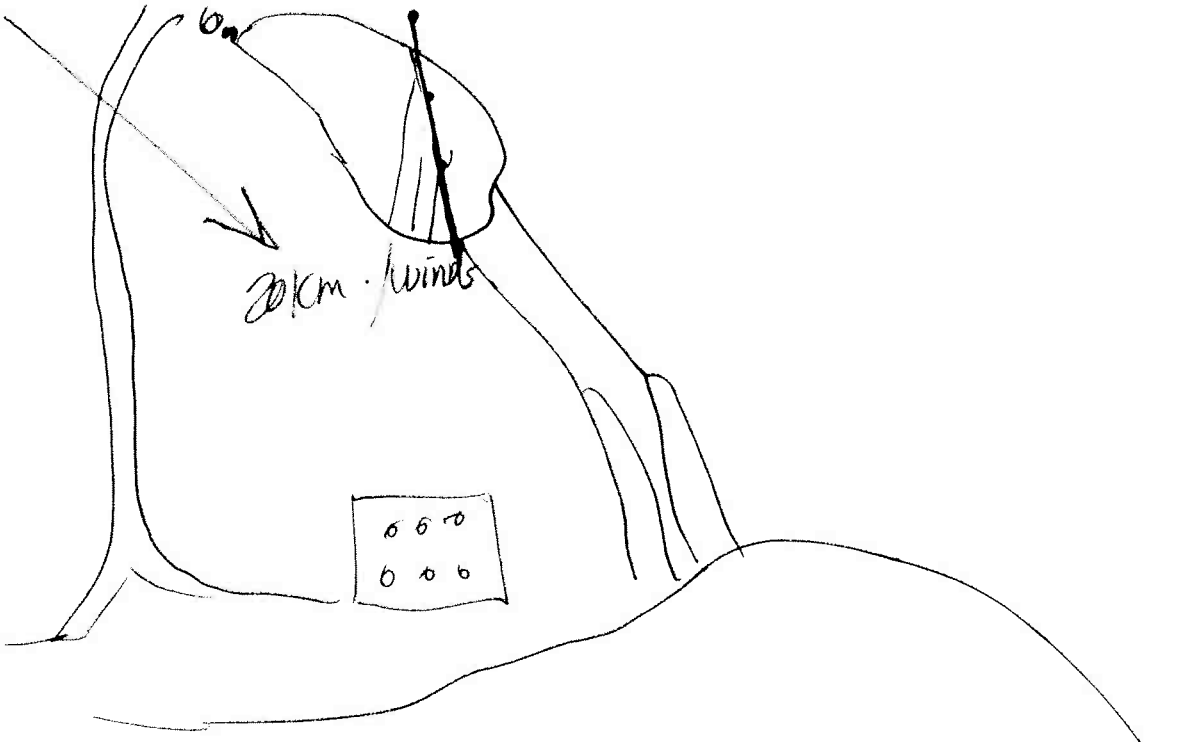

1. List the **issues** linked to this scenario:

→ 45 m^3 diesel / oil / acid flowing to the river heading to Baker lake. (15 km away)
→ Give less than 3 hours to react.
→ Contain the spill before the lake (Before to 2 rivers)
→ Secure and take care of the driver.

2. What **resources** are required?

- Helicopter to have look on the scene (Speed of the spill)
- 1 team at the scene (accident) to contained the spill at the source
- 1 team further down to stop the flow before the lake.
- Boats / maritime barrier / boom, etc... light plan
- ERT TEAM in case of fire.
- empty tanker to pump in.
- Good communication
- MSDS → Proper PPE

3. What are the **initial spill response steps and what does your ICS look like**?

- Scene survey (analyse) (inspection)
- Make the plan (planning)
- Decision (delegatee people)
- Execution
- Call proper authority

command

PLANNING OPERATION logistique cost

Safety first!!!

SWAT Consulting Inc.

4. What is your oil spill containment and recovery **strategy**?

→ Install barrier before the rivers (less contamination)
→ Recover the fuel/oil (Skimmer)

5. What is your strategy for shoreline **cleanup** operations; if using SCAT what are the forecasted shoreline types, what is your treatment options for each type and what is your end point criteria

→ Assess the shoreline situation and ask trained people to evaluate if we need to clean and what we have to do.
→ Flush
→ Is it transferable?

SWAT Consulting Inc.

6. What are some **safety** issues?

- Risk of fire
- Falling into water / ice
- Poor visibility at night.
- Hypothermia
- Cold water.
- PPE (:

7. How do you manage your **waste**?

- Bring to the proper facility disposal (ENV. DEPT.) (QUATREX BAG)

8. If it were to make it to the lake what is your containment, recovery, cleanup and general overall response?

- Protect the water intake of the town.
- Do whatever it takes at all cost.
- Inform community

SWAT Consulting Inc.

Dave Holmstrom.

SWAT OILSPILL ISSUES WORKSHOP

Situation Analysis – Truck Rollover

- **Incident -** 45 m^3 diesel spills/plus oil/acid – Originates on Land, flows into the River
- **Spill** - occurred 22:00 hrs on ~~March~~ June 20, 2013
- **River** – water flow, 5 km/hr, braided channels; approx 15 km to Baker Lake
- **Lake** – winds from the North West at 20 km/hr. Tide is high.

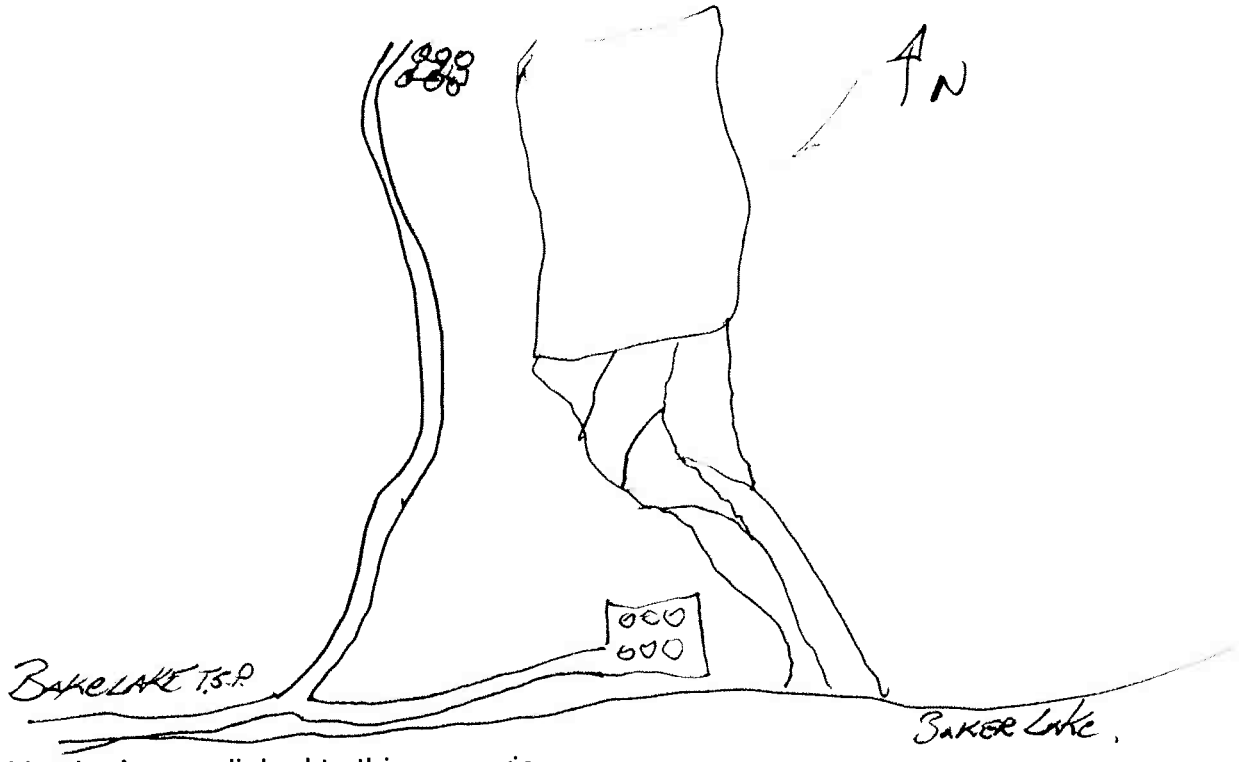

1. List the **issues** linked to this scenario:

- POTENTIAL RISK TO Baker Lake portable drinking water.
- FAST moving water (FRESHET). High travel rate / ICE,
- POTENTIAL Impact to spawning grounds.
- IS IT STOPPED? - Truck Rollover ??? Contained
- what are the sensitive areas.
- Time Frame / Braided channel extended shoreline
- LEL.
- Road traffic / Security

2. What **resources** are required?

- pump trucks - helicopter, - boat
- personal facilities - food, PPE, Bathroom - [illegible]
- personal - clean up, Communication, H&S, Environmental.
- stop & containment resources - booms, pumps, earth
- - ~~[illegible]~~, C-Cans for [illegible], earth movers, storage -
- ERP, ~~[illegible]~~ Spill contingency Plan, OPEP, JHA.
- WHMIS,
- Level C, for first 6 Hours. Level D After.
- TIER 3 response. initially

3. What are the **initial spill response steps and what does your ICS look like**?

- Call appropriate personal.
- Evaluate Spill - Immediate danger threat level.
- ~~[illegible]~~ Identify Incident Command team - With ERP
  - Operations personal.
  - Planning Team.
  - Logistics
  - Finances. -

- Spill response plan
- JHSA

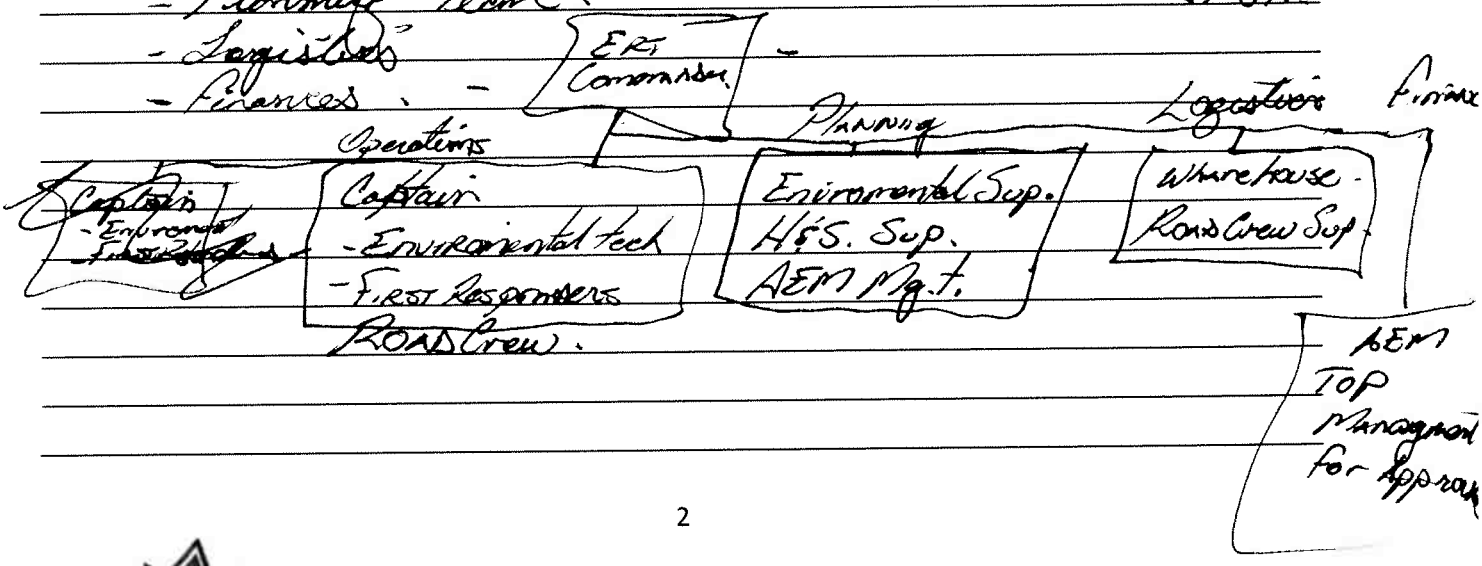

ERT Commander

Operations

Captain
- Environmental
- First Responders

Captain
- Environmental tech
- First Responders
ROAD Crew.

Planning

Environmental Sup.
H&S. Sup.
AEM Mgt.

Logistics

Wharehouse.
Road Crew Sup

Finance

AEM Top Management for Approval

SWAT Consulting Inc.

4. What is your oil spill containment and recovery **strategy**?

- STOP Source.
- Based on Evaluation = ~~contain~~ Establish Booms for River Containment
- Recover land based spills using
- haul truck, Hoe, Loaser. ~~if~~
- create ditch pump oil - from there.
- Water containment - skimmer cleanup.
- pump from bottom of V, U, J, Boom.
- Install booms at 10/30° of 4.
- Install ~~proper~~ bell hole. pump from there.

5. What is your strategy for shoreline **cleanup** operations; if using SCAT what are the forecasted shoreline types, what is your treatment options for each type and what is your end point criteria

~~Sho~~ Shoreline types.
~~- Rock~~
- Tundra Organics.
Using SCAT.
Identified shoreline types - rock - nothing
- Tundra - Absorbants
- and natural recovery
- is it transferrable?

SWAT Consulting Inc.

6. What are some **safety** issues?

- LEL, Benzine,
- Tired personel.
- recovery of truck
- water / ice operation - PPE's / Assesment.
- other road traffic.
- Possibility of Community water supplys
- Wild Animals.

7. How do you manage your **waste**?

Hazmat / Quadrex / Totes / Drums / Soil Pads.
Soil farms, Incinerate

8. If it were to make it to the lake what is your containment, recovery, cleanup and general overall response?

- U-Boom
- V-Boom.
- 5-Boom.
- Corral it.
- Tostall Booms @ POE.

Robin Allard

SWAT OILSPILL ISSUES WORKSHOP

Situation Analysis – Truck Rollover

- **Incident** - 45 m^3 diesel spills/plus oil/acid – Originates on Land, flows into the River
- **Spill** - occurred 22:00 hrs on ~~March~~ June 20, 2013
- **River** – water flow, 5 km/hr, braided channels; approx 15 km to Baker Lake
- **Lake** – winds from the North West at 20 km/hr. Tide is high.

1. List the **issues** linked to this scenario:

Flow in River.	Safety Driver
→ close Baker Lake - Potential	
→ Ice → Flow Forsket	LEL issue.
→ Potential Impact to Wildlife	
Stop possible or not +	
Sensitive area	High flow.
TIME FRAME.	
+ Surface for Braided.	
Road usus.	

SWAT Consulting Inc.

2. What **resources** are required?

→ pump truck / Machinery
Personnal facilities . Food / PPE / Tent
HR
Spill - Stop / containment ressources / Lights
Helicopter
Communication
H/S
Environment Dept / Rep.
Documentation (ERP / Spill / OPEP) - JHA / BOAT
WHMIS

TIER III / →

3. What are the **initial spill response steps and what does your ICS look like**?

Evaluate / call
→ STOP if possible / Safety ERP / Spill RP /
Immediate Danger

→ ICS

C → ~~SIT~~ - OSC

O	P	L	F
Capt.	Env.	Wash	Management
Tech.	[illegible]	P/L	
Responders	H/S		
Saber			
Coad			

SWAT Consulting Inc.

4. What is your oil spill containment and recovery **strategy**?

→ Prevent from going to WATER.
→ Boom for containment.
→ Recover Truck / Ditch / VAC TRUCK
HOE - IF POSSIBLE

→ WATER CONTAINMENTS - Bottom/End.
→ collect. Skimmer /

Protect Shoreline

5. What is your strategy for shoreline **cleanup** operations; if using SCAT what are the forecasted shoreline types, what is your treatment options for each type and what is your end point criteria

SCAT
Rocks / Organic Matter -
→ No SHEEN / Small. minimal.

Rock - Nothing
Org → Shorelines / m Nature

TRANSFERT

SWAT Consulting Inc.

6. What are some **safety** issues?

Tired

Recovery of truck.

ON WATER / ICE OPERATION / assessment.

FAST WATER

DRINKING WATER.

7. How do you manage your **waste**?

HAZMAT / QUADREX / TOTES / DRUMS

GSP

8. If it were to make it to the lake what is your containment, recovery, cleanup and general overall response?

U Boom

V Boom

J Boom.

SWAT Consulting Inc.

LUC BLANCHETTE

SWAT OILSPILL ISSUES WORKSHOP

Situation Analysis – Truck Rollover

- **Incident -** 45 m^3 diesel spills/plus oil/acid – Originates on Land, flows into the River
- **Spill** - occurred 22:00 hrs on ~~March~~ June 20, 2013
- **River** – water flow, 5 km/hr, braided channels; approx 15 km to Baker Lake
- **Lake** – winds from the North West at 20 km/hr. Tide is high.

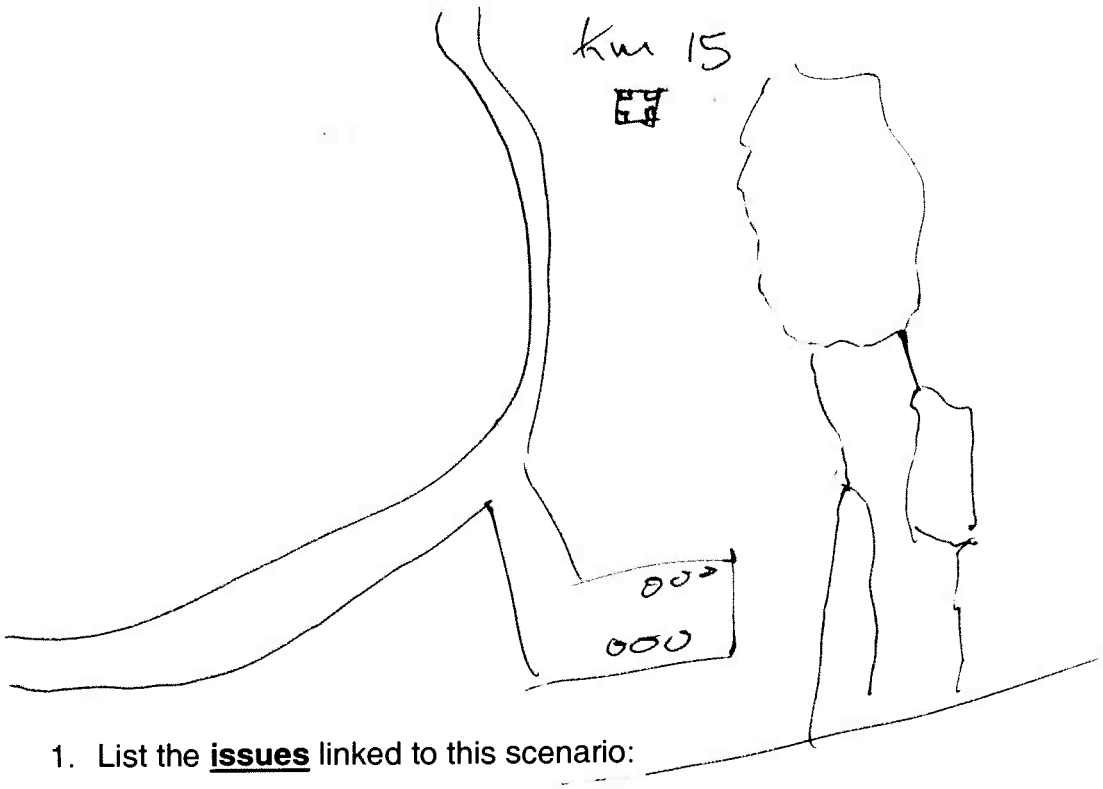

1. List the **issues** linked to this scenario:

- POSSIBLE CONTAMINATION OF COMMUNITIES WATER SUPPLY
- FRESHET WILL MAKE IT HARDER TO COLLECT CONTAMINANTS.
- BRAIDED CHANNELS INCREASE THE CHANCES OF MORE CONTAMINATED AREA
- MAY DISTURB SPAWNING AREAS → FISH
- TIDES WILL INCREASE THE CONTAMINATION OF SOIL.
- SHORT TIME FRAME
- SAFETY OF THE DRIVER
- LEL'S
- OTHER ROAD USERS.

SWAT Consulting Inc.

2. What **resources** are required?

- HEAVY EQUIPMENTS TO BUILD TRENCHES
- ENOUGH MATERIAL TO DO ENTIRE CLEANUP. (LAND & RIVER)
- PROPER PPE TO PROVIDE TO ALL PERSONEL
- ENOUGH MATERIAL TO DISPOSE CONTAMINATED MATERIAL (TOTES, SEALED DRUMS
- ADEQUATE MATERIAL TO BRING CONTAMINATED MATERIAL TO MINE SITE.
- SAFETY MONITORING DEVICE BEFORE STARTING ANY CLEANUP.
- PROPER COMMUNICATION.
- MSDS.
- MATERIAL TO MOVE THE TRUCK.
- H&S AND ENVIRONNEMENT PERSONNEL.
-

3. What are the **initial spill response steps and what does your ICS look like**?

- CODE 1 RADIO CALLED
- IC INFORMS TEAM OF SITUATION AND DOES HEADCOUNT BEFORE DEPLOYING TEAM
- COMMAND CENTRE SET UP - INCLUDE MANAGEMENT TO ASSISTS IN DECISION
- MONITOR AND DEVELOPPE A SAFETY ZONE IN THE SPILL AREA.
- IDENTIFY HAZARDS.
-

COMMAND

SWAT Consulting Inc.

4. What is your oil spill containment and recovery **strategy**?

- PREVENT FURTHER ENTRY.
- BUILD TRENCHES OF BARRIERS TO AVOID THE SPREADING OF THE SPILL.
- PLACE BOOMS INSIDE BARRIERS TO PICK UP CONTAMINANTS
- ONCE BOOMS ARE FULL - REPLACE WITH NEW ONES. PLACE CONTAMINATED BOOMS IN PROPER CONTAINERS.
- SEND QUADREX BAGS TO MINE SITE AND PLACED INSIDE SEACANS, PROPERLY LABELLED
- WATER → PLACE MARITIME BARRIER INSIDE LAKE. PLACE BOOMS OR ABSORBS ON SHORE TO PROTECT SOIL ALSO ALONG MARITIME BARRIERS.

5. What is your strategy for shoreline **cleanup** operations; if using SCAT what are the forecasted shoreline types, what is your treatment options for each type and what is your end point criteria

- ASSES THE SHORELINE.
- FLUSH THE SHORELINE
- STOP THE CLEANING WHEN CONTAMINANTS IS NOT TRANSFERABLE.

6. What are some **safety** issues?

- TIRENESS OF THE CREW
- LELS
- REMOVAL OF THE TRUCK
- WORK ON ICE AND NEAR EAST WATER.
- WILDLIFE

7. How do you manage your **waste**?

- PUT IT INTO DRUMS OR TOTES TO BURN IT OR STORE IT → MINE SITE.
- ~~IF IT HITS THE WATER, SET UP A V, J OR U BOOM.~~

8. If it were to make it to the lake what is your containment, recovery, cleanup and general overall response?

SET UP A V, J OR U BOOM.

SWAT Consulting Inc.

ALAIN GENESSE

SWAT OILSPILL ISSUES WORKSHOP

Situation Analysis – Truck Rollover

- **Incident** - 45 m^3 diesel spills/plus oil/acid – Originates on Land, flows into the River
- **Spill** - occurred 22:00 hrs on ~~March~~ June 20, 2013
- **River** – water flow, 5 km/hr, braided channels; approx 15 km to Baker Lake
- **Lake** – winds from the North West at 20 km/hr. Tide is high.

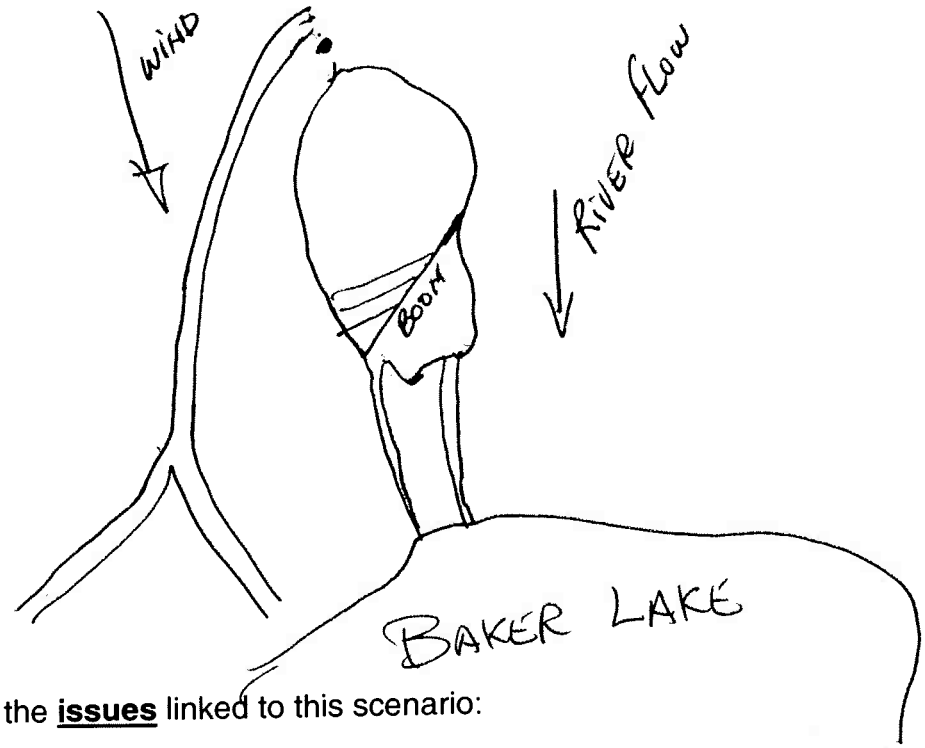

1. List the **issues** linked to this scenario:

- DIESEL FLOWING INTO THE RIVER, HEADING TO BAKERLAKE (15 KM AWAY) GIVING US LESS THAN 3 HRS TO CONTAIN THE SPILL BEFORE IT GETS TO THE LAKE.
- ISOLATE THE VEHICULE.
- MAKE SURE THE DRIVER IS OK.

2. What **resources** are required?

- HELICOPTER TO ASSESS THE SPILL ON THE RIVER AND THE ACTUAL SPEED OF THE SPILL.
- A TEAM OF RESPONDERS AT THE ACCIDENT TO CONTAIND THE SPILL AT THE SOURCE.
- ANOTHER TEAM FURTHER DOWN STREAM BEFORE THE LAKE TO PREVENT ANY SPILL INTO THE LAKE
- NEED BOATS, MARITIME BARRIERS, SKIMERS, LIGHT PLANTS
- E.R.T. TEAM IN CASE OF FIRE
- M/T TANKER TRUCK TO PUMP THE REST OF THE LOAD
- M.S.D.S. - P.P.E.

3. What are the **initial spill response steps and what does your ICS look like**?

- ANALIZE THE SCENE, DELEGATE PEOPLE
- MAKE A PLAN, MAKE A DECISION, TAKE ACTION
- CALL PROPER AUTHORITY
- SAFETY

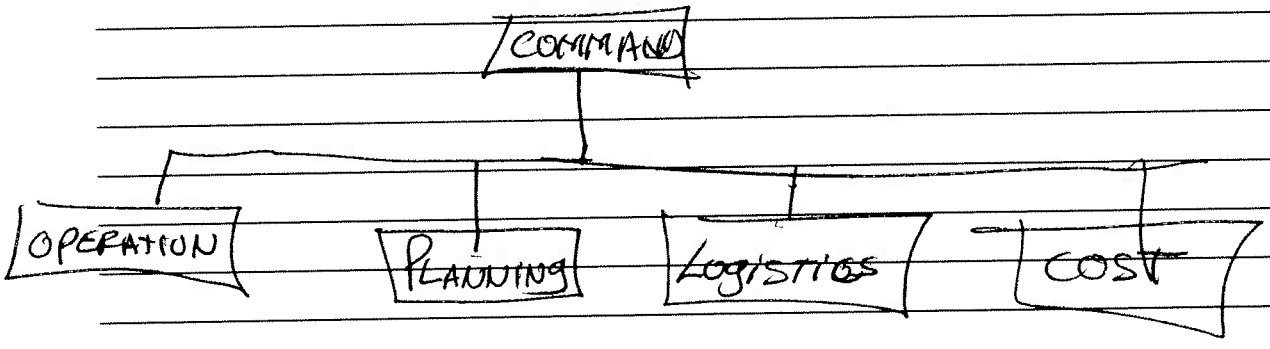

SWAT Consulting Inc.

4. What is your oil spill containment and recovery **strategy**?

- INSTALL BOOM ACROSS THE RIVER (POUND) BEFORE IT GETS INTO THE 2 RIVERS (CREEK) AND THE Big LAKE

FABRICATE A BERM

10-30-4 BARRIER

5. What is your strategy for shoreline **cleanup** operations; if using SCAT what are the forecasted shoreline types, what is your treatment options for each type and what is your end point criteria

- ASSESS THE SHORELINE SITUATION, ASK TRAINNED PEOPLE TO EVALUATE IF WE NEED TO CLEAN, IF YES WHAT IS THE BEST WAY TO DO IT. (ANY FRAGILE SYSTEM)

- IS IT TRANSFERABLE? YES OR NO

6. What are some **safety** issues?

- RISK OF FIRE
- FALLING INTO WATER
- DEALING WITH POOR VISIBILITY (DARK AT NIGHT)
- WATER & ICE
- POTABILITY

7. How do you manage your **waste**?

- BRING TO THE PROPER DISPOSAL FACILITY.

8. If it were to make it to the lake what is your containment, recovery, cleanup and general overall response?

- PROTECT THE WATER INTAKE FOR THE TOWN
- DO WHATEVER IT TAKES AT ALL COST.
- INFORM THE COMMUNITY.
- U-BOOM, V-BOOM, J-BOOM

Janie Katalnik

SWAT OILSPILL ISSUES WORKSHOP

Situation Analysis – Truck Rollover considered Tier 3 incident

- **Incident -** 45 m^3 diesel spills/plus oil/acid – Originates on Land, flows into the River
- **Spill** - occurred 22:00 hrs on ~~March~~ June 20, 2013
- **River** – water flow, 5 km/hr, braided channels; approx 15 km to Baker Lake
- **Lake** – winds from the North West at 20 km/hr. Tide is high.

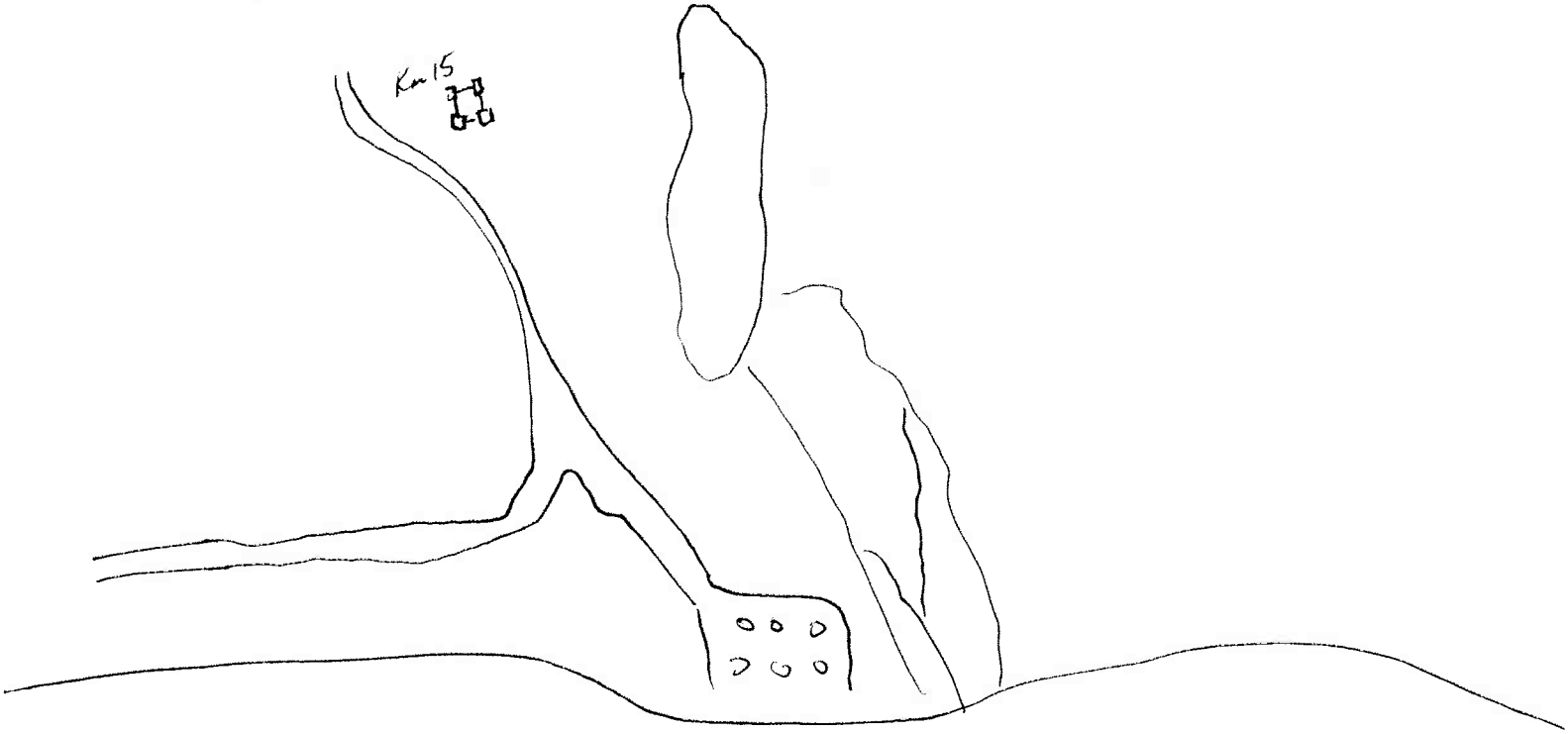

1. List the **issues** linked to this scenario:

possible contamination of communitys water supply
freshet will make it harder to collect contaminants
braided channels - increases chances of more contamination area
may disturb spawning areas - fish
tides will increase contamination of soil
response time
other road users

2. What **resources** are required?

heavy equipment to build trenches (COMMS) ERP
enough material to do entire clean up
proper PPE for all ~~personell~~ personnel
enough material to dispose contaminated material - totes, sealed drums
adequate equipment to bring contaminated material to mine site
safety monitoring devices before starting any clean up

3. What are the **initial spill response steps and what does your ICS look like**?

- Code 1 on radio called - safety
- IC informs team of situation and does a head count before deploying team
- command centre setup - include management to assist in decisions
- ~~location~~ develop a safety zone in spill area

SWAT Consulting Inc.

4. What is your oil spill containment and recovery **strategy**?

land - build bell holes or barriers to avoid spreading of contaminants
- place booms inside barriers to pick up contaminants
- once booms are full, replace with new ones - place contaminated booms into Quattrex bags
- send Quattrex bags to mine site and placed inside seacans - properly labelled

water - place maritime barrier inside lake
place booms along shore to protect soil - also along maritime barrier
collect

5. What is your strategy for shoreline **cleanup** operations; if using SCAT what are the forecasted shoreline types, what is your treatment options for each type and what is your end point criteria

SWAT Consulting Inc.

6. What are some **safety** issues?

LEL
fatigue
water and ice
removal of truck
other road users
fast water
wildlife

7. How do you manage your **waste**?

place contaminated material - rags, booms - inside Quatrex bags
send bags to mine site - placed into seacans

8. If it were to make it to the lake what is your containment, recovery, cleanup and general overall response?

Group Training Report

Course Name:

Trainer's Name: Robin Allard

Date: June 18, 2013

AGNICO-EAGLE

Agnico-Eagle Mines Ltd.
Meadowbank Division

M		Name	Company	Signature	Hours TRG.	Hours ASS.	Total Hours	Code
	1	JEAN-CLAUDE POITRAS	AEM		1.5		1.5	4
	2	Bernard Paradis	AEM		1.5		1.5	4
	3	MICHEL POITRAS	PRO-AB		1.5		1.5	4
	4	SERGE PARÉ	A.E.M		1.5		1.5	4
	5	RAY CARLSON	AEM		1.5		1.5	4
	6							
	7							
	8							
	9							
	10							
	11							
	12							
	13							
	14							
	15							
	16							
	17							

Trainer's signature:

Date: 18 June, 2013

Induction Department Signatures:	
Human Resources:	
Camp:	
Nurse:	
Security:	
Health & Safety:	
Environment:	
Training:	

Comments:

Codes:	Assessment Codes:
1. AEM Permit	A+: Very Good
2. Restrictive Permit	A : Good
3. Temporary Permit	B : Average
4. Training Completed	C : Below Average
5. Training Not Completed	
6. Fail	

AGNICO EAGLE
MEADOWBANK

Tool box Meeting attendance sheet

Topic: Spill Response (Barge BL)
Date 02/Aug/2018
Department INTERTEK - PETRONAV - AGNICO

Name (Print)	Signature
STEPHEN EASTERBY	
Ricardo Echeverria	
ALLOSSI NACEUR	
Hugo Ferreira Filho	
Fredy Rivera	
Samuel Plante	

Appendix J

Dyno Nobel Emergency Response Plan

Please refer to the approved Meadowbank Spill Contingency Plan Version 4 (November 2013)

EMERGENCY RESPONSE PLAN

Meadowbank Mine Site.

Magazine, Plant and Work Sites

This Emergency Response Plan (ERP) addresses incidents and potential incidents involving the manufacturing, handling and storage of explosives and related products in Dyno Nobel Canada Inc.' magazines, plants and worksites. This ERP has been developed for Dyno Nobel Canada Inc. and all of it's wholly-owned subsidiaries (DNX Drilling). Actions detailed within this plan are compulsory, under the approval and authorization of DNCI's Regional Operations Managers.

"This document, as presented on Dyno Nobel's database, is a controlled document and represents the version currently in effect. All printed copies are uncontrolled documents and may not be current".

Note: Information provided within this document may be privileged and is not intended for general distribution.

Publication/Amendment

Date	Changes To Prior Edition	Pg.
15 Oct 03	**New document**	All
26 Apr 04	**Amendment # 1**	
	Renumbering of Appendices 6 – 13	App. 7 – 14
	Miscellaneous Typos & Amendment Dates	All
17 March 08	Amendment #2	
	Updated Contact information	
	Addition of definitions	
	Included Calling and responding emergency procedures	
	Addition Duties of Key personnel	
	Addition of response to Natural disasters	
	Addition of visitor and contractors access control -	
	Replaced the Appendices and renumbering	
	Included a Emergency Report form	
	Addition of Nitric acid, Aluminum and Diethylene glycol and CFE	
	Addition of alternate methods of communication	
	Addition of Reportable Substance list	
	Miscellaneous Typos & Amendment Dates	All
August 18, 2010	Amendment #3	
	Updated Scope and ERP Outline	
	Added Sign-off sheet for Annual Fire Department Review	
	Added Appendix for Employee Training sign-off	
	Updated Reporting Incidents Flowchart	
	Updated procedure for Raw Material Truck Spills	
	Updated Bomb Threat Checklist	
February 14, 2011	Amendment #4	
	Updated site contacts	
	Updated site evacuation & Muster locations	
July 14, 2011	Amendment #5	
	Updated site contacts	
	Updated site evacuation & muster loaction (Map drawn)	
	Site specific emergency procedures	

Table of Contents

Section	Topic	Pg.
1.0	Scope	4
2.0	Related Documents	4
3.0	ERP Outline	4
4.0	Preparation and Planning	6
5.0	Training	7
6.0	Emergency Procedures and Lines of Authority	8
6.1	Duties Of Key Personnel	8
Table 6-1	Flow Chart	9
6.2	Fire & Explosives	13
Table 6-2	Fire Fighting Information	15
Table 6-3	Control Measures	16
Table 6-4	Evacuation Distances	18
6.3	Environmental Releases	19
Table 6-5	Environmental Release Procedures	20
6.4	Security	21
6.5	Bomb Threat	21
Table 6-6	Bomb Threat – Conversation Guidelines	21
6.6	Lines of Authority	22
7.0	Notification and Reporting	23
Table 7-1	Reportable Substances Quantity List	25
8.0	Decontamination	27
9.0	Work Site Closure / Shut Down	27
10.0	Response to Natural Disaster Preventive Measures	28
11.0	Work Site Start Up	29

Work Site Phone Numbers and Magazine / Plant Details

Appendix 1 DNCI Emergency report form
Appendix 2 DNCI Corporate Contacts
Appendix 3 ERA Contact List
Appendix 4 Management and Site Contact list
Appendix 5 Site Information
Appendix 6 Bomb Threat Checklist
Appendix 7 New/Transferred Employee or Annual Refresher Form
Appendix 8 Annual Fire Department Review Form
Appendix 9 TDG Regualtion Class Quantity Emission Limit
Appendix 10 Evacuation/Muster locations

1.0 SCOPE

This document provides a Work Site Emergency Response Plan covering fire/explosion, spills, security breach, bomb threat, evacuation and prescribed actions that employees must take to ensure employee and public safety in the event of an emergency. The general reference to DNCI's "Work Sites" throughout this document includes magazines, plants and miscellaneous work locations.

The Emergency Response Plan appearing on Dyno Nobel Canada Inc.' database is a controlled document. Uncontrolled copies of this ERP are provided to customers and associates who own the land on which DNCI's worksite is located, plus applicable municipal and regulatory authorities. As well, uncontrolled copies are issued to all Company employees and are placed in all central offices and Company delivery vehicles.

2.0 RELATED DOCUMENTS

The following documents also relate to emergency situations that can arise and should be held at each Work Site:

- Federal, Provincial and Municipal regulations, standards and guidelines
- Corporate Policies plus HSE Management System Standards & Procedures
- Standard Operating Procedures (SOP's)
- Dyno Nobel General and Specialized Work Rules
- Material Safety Data Sheets
- Prime Contractor's / Customer's ERP
- Transportation ERAP #2-1037
- Crisis Communication Plan

3.0 ERP OUTLINE

3.1 The following materials are covered by this ERP:

Fuel Oil
ATF Hydraulic Fluid
Ammonium Nitrate Prills and Solution
Sodium Nitrite
Sodium Thiocyanate
ANFO
Emulsion
Packaged Explosives
Detonators
Diethylene glycol

3.2 The following situations are addressed in this ERP:

- Fire / Explosion
- Storage Tank Failure
- Spills from Product Delivery Trucks
- Spills from Raw Material Delivery Trucks
- Process Spills
- Shut down due to weather, floods, lightning, fires, explosions and other threats to the security and operation of DNCI's facilities, equipment and material.
- Bomb Threats
- Quantities of spills and reportable to Dyno Nobel and authorities

3.3 This ERP covers:

Preparation	Reporting
Training	Waste Disposal Permits
Lines of Authority	Containment
Notification	Inspection
Decontamination	Maintenance

3.4 The following definitions apply to this plan:

DNCI Corporate contact : A DNCI corporate employee who is assigned to receive Emergency Calls at all times from the answering service.

ER Advisor: Emergency Response Advisor (ERA), who will normally be the applicable General Manager, Area Manager, or Technical Advisor who will liaise with First Responders.

OSC: (DNCI) On Scene Coordinator, the Senior DNCI employee at an incident site who manages and controls DNCI resources in support of First Responders and incident recovery.

ERT: Emergency Response Team, DNCI personnel dispatched to an incident site to assist First Responders and conduct incident recovery under the direction of the OSC.

4.0 PREPARATION AND PLANNING

4.1 In order to provide competent emergency response at Dyno Nobel Canada Inc. magazines, plants and worksites, first responders (local fire departments and mine rescue personnel) must be thoroughly briefed on an annual basis of the potential hazards involved in a Dyno Nobel Canada Inc. worksite fire. To this end, Work Site Supervisors must take fire department plus mine safety and security representatives on an annual magazine/plant tour to view:

Explosives Storage Areas	Evacuation (Meeting) Area
Bulk Emulsion Equipment	Communications Equipment
ANFO Blending Area	Facility Layout
Fire Fighting Equipment Sites	(Waste) Burn Facilities

A record of each explosives worksite tour and the names of the first responder representatives attending are to be documented and kept on file.

Annual Fire Department Review Form (Appendix 9)

4.2 All DNCI employees shall review this ERP on an annual basis and participate in ERP drills / exercises when scheduled.

4.3 All worksite accidents involving fire, explosion, reportable spills/emissions, breaches of security and bomb threats are to be reported to applicable authorities and senior management. As per incident reporting procedure

4. 4 Spill procedures for each of the materials listed in section 3.1 are outlined in Table 6-3. All procedures specify: Method of Cleanup, Method of Disposal and Protective Clothing. Based on the procedures presented in Table 6-3, worksite supervisors must ensure that adequate clean-up equipment and materials are readily available and in good condition.

4.5 Worksite information for each of DNCI's facilities is contained in the attached appendices. The ERP is revised whenever significant changes are made.

4.6 Current Material Safety Data Sheets (MSDS) are to be kept at each Work Site for all hazardous materials that are stored and handled at the Work Site. Copies of current product MSDS' are also made available to customers and landowners. Obsolete MSDS' will be replaced as new ones are issued.

4.7 Each Work Site will hold and maintain in good repair, appropriate fire fighting and spill control equipment for potential emergencies. Fire extinguishers, hoses and other fire fighting equipment are to be visually inspected on a monthly basis to ensure Magazine, Plant, Work Site and delivery vehicle readiness.

5.0 TRAINING

5.1 All employees will complete training on the contents of this Plan during their "new hire" orientation and review the plan annually.

5.2 A trained person is considered to have reviewed all related documents (Section 2.0), to have been instructed on the use of related equipment and procedures, and to have discussed with their Supervisor or trainer, questions and issues of concern.

5.3 Training records, including certificates for training completed, are to be kept onsite in the Employee's Training Record.

5.4 The Magazine, Plant or Work Site Supervisor/Manager will certify their employees as having received training by signing the training form. In signing the training form, the Supervisor / Manager will have satisfied themselves that trained employees are able to:

- Recognize fire and explosive hazards for the materials and processes to which they are exposed /involved with;
- Competently use Fire Fighting / Fire Protection Equipment (Note: employees should receive refresher training in the use of fire extinguishers at least every three years)
- Competently use applicable personal protective equipment (PPE) when handling hazardous substances;
- Recognize and be familiar with substances which become hazardous wastes when spilled; and
- Follow SOP's and use established work practices to minimize the potential for fires, explosions, environmental releases and other accidents.
- Worksite Managers / Supervisors will ensure that all contractors receive a worksite orientation before commencing work or being left unaccompanied in the worksite. Following the orientation process, the contractors will be required to sign off on the Contractor Checklist acknowledging training in the applicable areas including the site emergency response plan.

- All Plant & Magazine sites will have in place, a continuous (24 hour) access control system to control the entrance, presence and exit of visitor and contractors and their equipment and materials
- Employees must be trained on Reportable Quantities to the Government in the unlikely event of a spill.
- All employees are aware of evacuation routes, muster point location, and all-clear notice procedure.
- New/Transferred employee or Annual Refresher sign-off form located in Appendix 8

6.0 EMERGENCY PROCEDURES AND LINES OF AUTHORITY

6.1 GENERAL

Reporting Incidents Flow Chart (Following page)

Table 6-1
Emergency Response Flow Chart

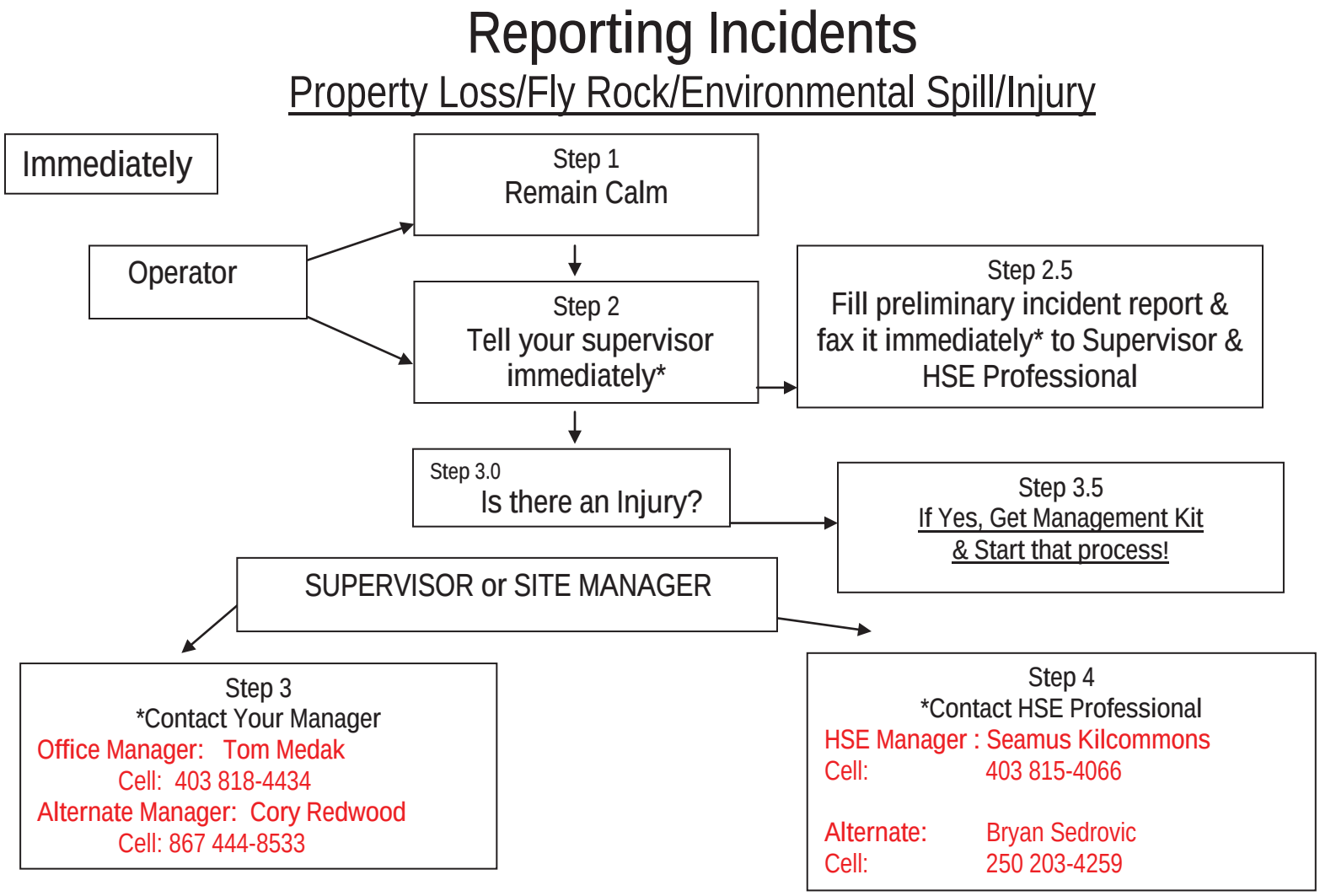

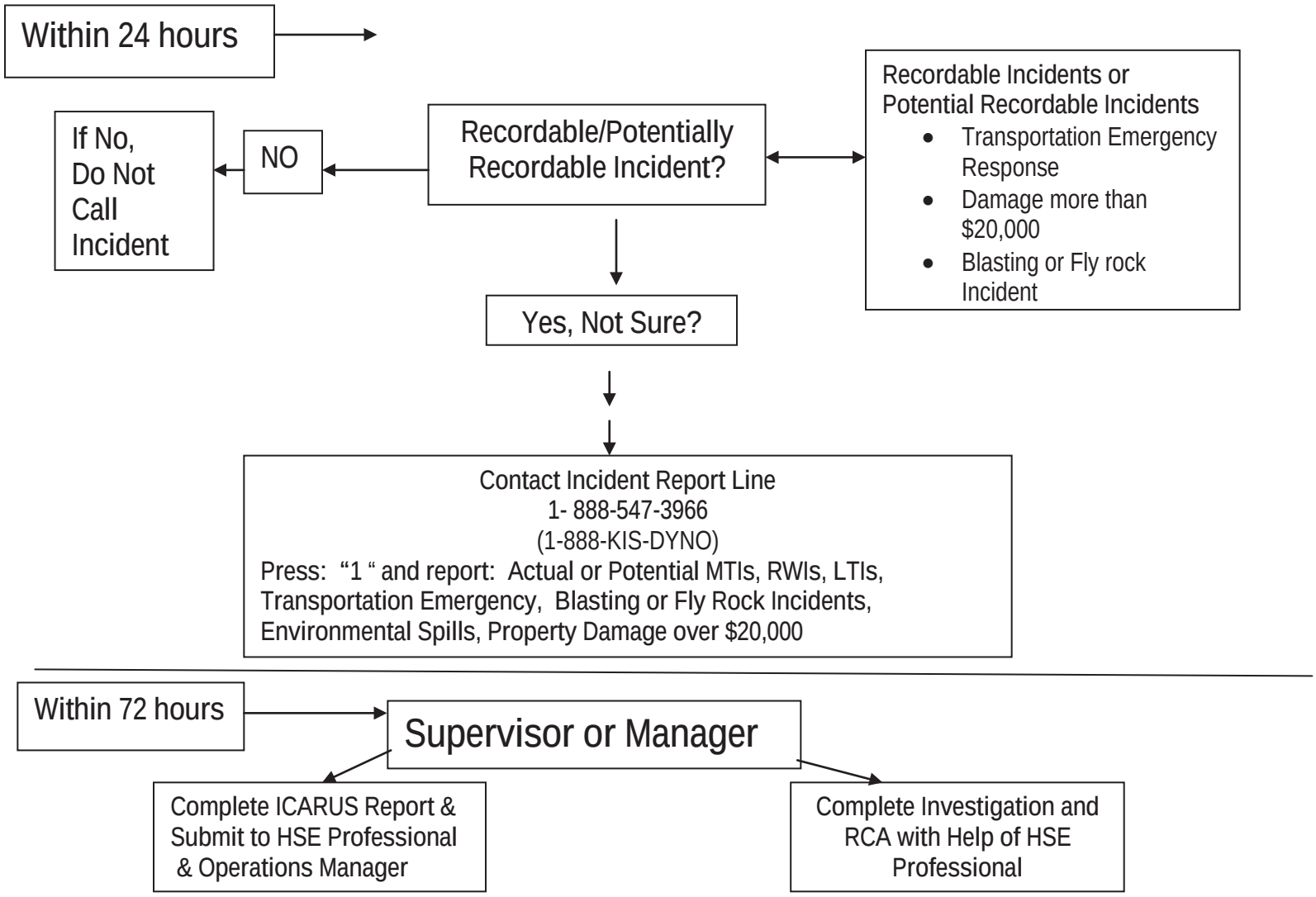
Within 24 hours
Recordable/Potentially Recordable Incident?
NO
If No, Do Not Call Incident
Recordable Incidents or Potential Recordable Incidents
Transportation Emergency Response
Damage more than $20,000
Blasting or Fly rock Incident
Yes, Not Sure?
Contact Incident Report Line
1- 888-547-3966
(1-888-KIS-DYNO)
Press: "1 " and report: Actual or Potential MTIs, RWIs, LTIs, Transportation Emergency, Blasting or Fly Rock Incidents, Environmental Spills, Property Damage over $20,000

Within 72 hours
Supervisor or Manager
Complete ICARUS Report & Submit to HSE Professional & Operations Manager
Complete Investigation and RCA with Help of HSE Professional

SITE SUPERVISOR/DELAGATE
EXPERIENCING EMERGENCY / POTENTIAL EMERGENCY

- **CALL FOR EMERGENCY ASSISTANCE**
  In the event of an emergency, accidental release or imminent accidental release involving explosives, eliminate potential sources of detonation where possible (eg. turn off the ignition of a vehicle), call **6911** (or the local emergency number) for immediate assistance, **call the site Supervisor/Area Manager** and initiate the site's Emergency Response Plan. If normal phone systems are down other methods of communication can include two way radios, satellite phones, pager, e mail and vehicle satellite tracking systems.

- **WARN PUBLIC WITHIN EVACUATION DISTANCES IF RISK OF DETONATION**
  Should there be explosive detonations, or the risk of detonations due to the presence of fire or other detonating factors, advise the First Responders (or anyone within the immediate vicinity if First Responders are not at the scene) of the risk and applicable safety distances per Table 6-4, page 17 (liaise with Emergency Response Advisor (ERA) if time permits). Help organize perimeter guards to prevent people from entering the evacuation zone.
  Note: See ERP, page 17 Table 6-4 for Evacuation Procedures.

- **ASSIST LOCAL AUTHORITIES**
  Assist First Responders and Local Authorities in eliminating the emergency situation, and liaise with DNCI's On-Call Employee / ERA until relieved by the Company's Emergency Response Team (ERT).

TO RESPOND TO AN EMERGENCY CALL

DNCI Corporate contact instructions:

Upon receiving a call for emergency response assistance, keep a log of all subsequent communications and actions, and do the following:

1. Immediately obtain the name and callback number of the caller, in case the telephone line is lost.

2. Obtain information as fully and accurately as possible following the emergency report form (see appendix 1).

3. Call an ER Advisor for the applicable Region (see appendix 2) and report the emergency situation. In turn, the ER Advisor will phone the emergency scene caller, establish ongoing contact, assess the emergency, determine what Company resources and/or contracted emergency response services are required and organize an Emergency Response Team – ERT to proceed to the emergency scene if required.

4. Assist the Emergency Response Advisor (ERA).

5. Liaise with Company Executive / Senior Managers.

Emergency Response Advisor (ERA) instructions:

1.Call the Branch/Plant Supervisor nearest the emergency scene plus territorial & federal authorities (see applicable appendix to Annex D) to advise them of the situation and the need for an emergency response.

2. Designate, assemble and dispatch an Emergency Response Team (ERT), made up of Groups 1 & 2 personnel (see ERAP pg. 16 and Annex D) under the leadership of an On Scene Coordinator (OSC), if required.

3. Authorize the dispatching of additional resources, communications, transportation and contracted services as necessary.

4. Contact and instruct the designated Emergency Response Team (ERT) to proceed to the emergency scene with the required vehicles and equipment.

5. Liaise with the Person in Charge of the Emergency) and/or Local Authorities to obtain a situation update.

6.Advise Local Authorities as appropriate, regarding the properties, hazards and handling procedures for the explosives involved in the emergency. In particular, advise the Local Authorities of appropriate evacuation distances per Table 6-4 pg. 17.

7. Continue to consult with the Local Authorities as appropriate, plus the Company's On-Scene Coordinator (OSC), to stabilize and eliminate the emergency.

8. Refer to **Regional Manager** *(Tom Medak, Willard Pierce, Dale Bodnarchuk or Francois Lambert)* for any media requests in accordance to the Crisis Communication Plan (CCP). Media contacts shall be through Regional Manager designated for the area.

9. Contact the explosives supplier and / or transporter (if other than DNCI) to advise them of the emergency and to request their assistance if/as required.

ON-SCENE CO-ORDINATOR (OSC)

- The On-Scene Coordinator (OSC) is the Company's representative and local authority in charge of all company actions and resources at the emergency scene. Once the OSC arrives at the emergency scene, the ERA will transfer communication with First Responders/Local Authorities to the OSC. In turn, the OSC will liaise with the ER Advisor as required. Throughout the Company's emergency response, the OSC will ensure that First Responders and Company personnel (employees and contractors) observe all safety and regulatory standards and procedures.
- The OSC may revise / adjust the composition of the Emergency Response Team (ERT) and supporting resources as required. The OSC may, in consultation with the ER Advisor, contract commercial services to assist in addressing and resolving the emergency situation.

- The OSC will oversee the Company's local involvement with emergency services, government (municipal & provincial) and public interests until the emergency is fully resolved. Post-emergency activities (clean-up, restoration, etc.) under the direction of the Environment Manager may be delegated to an appropriate Branch, Plant or Area Manager. **EMERGENCY RESPONSE TEAM (ERT)**

- Selected emergency response personnel will take their direction to assemble and proceed to the emergency scene from the ERA or their representative. Team members will immediately report to the On-Scene-Coordinator.

- The primary role of the ERT is to provide a competent and trained / certified workforce plus specialized equipment and material to assist First Responders / Local Authorities in the stabilizing and elimination of an 'explosives emergency', and to retrieve / recover, repackage and remove to safe and secure storage, non-detonated explosives.

- While at the emergency scene, ERT members will take their direction from the Company's OSC and remain available until released by the OSC.

NOTE:

ONLY INDIVIDUALS WHO HAVE RECEIVED TRAINING AS REQUIRED UNDER THE TRANSPORTATION OF DANGEROUS GOODS (CLEAR LANGUAGE) REGULATIONS, OR WHO ARE WORKING UNDER THE DIRECT AND CONTINUOUS SUPERVISION OF AN EMPLOYEE WHO HAS BEEN TRAINED FOR CLASS 1 DANGEROUS GOODS UNDER TDG, MAY PARTICIPATE IN SITE CLEAN-UP ACTIVITIES SUCH AS PICKING UP, REPACKAGING AND TRANSPORTING EXPLOSIVE MATERIAL.

6.1.1 In any emergency the Work Site Supervisor/Manager or their delegate must take certain actions, including the following:

- Call local fire/emergency authorities (at mine sites, also call Mine Fire, Safety and Security if different and give relevant information).
- Account for all employees and visitors. Arrange for Rescue of anyone who may be trapped, without endangering oneself or others.
- Notify Dyno Nobel Canada Inc. ERA's so that necessary arrangements can be made for technical / administrative support, including accident reporting and investigation plus continued/alternate production. The following information should be provided and refer to appendix 1:

What Occurred	Time of Occurrence
Action Taken	People Contacted
Status of Situation	Anticipated Follow-up

6.2 FIRE & EXPLOSIVES

6.2.1. There are three categories of fire that may involve explosives:

I. Fires Directly Involving Class 1 Explosives and Blasting Agents

- **DO NOT FIGHT THE FIRE.** Instruct all fire fighters on the scene not to fight fire with explosives.
- Shut off power at main breakers if possible. At mine sites, call Mine Security or Fire/Rescue. At all other DNCI locations call local Fire/Rescue personnel.
- Evacuate all personnel from the Work Site to the safe meeting place as outlined in the Work Site Appendix.
- Set up a communications base at the meeting place and guard
- against anyone entering the area.

II. Fires Involving Components For Manufacture of Blasting Agents

Bulk blasting agents may be in the form of emulsion or ANFO. ANFO is a mixture of prilled ammonium nitrate and fuel oil.

Under conditions of large mass, intense heat, confined dust / vapor buildup, and the right mixture combination of the basic ingredients, emulsion and ANFO will explode. The probability of explosion with

ammonium nitrate (AN) alone is very small, but increases when under intense heat and confinement. Table 6-1 includes recommended fire fighting procedures for each of these substances.

III. <u>Fires Involving Dyno Nobel Canada Inc. Trucks</u>

In cases where the Dyno Nobel Canada Inc. delivery trucks are in a building that is on fire, if there is no explosives and safe to do so, may be moved provided access to the truck and exit from the building is not barred by flames or smoke, with available fire extinguishers with caution only if the fire is small and not in the storage compartment.

Fires on re-pump or other bulk explosive delivery vehicles shall not be fought if the fire involves the explosives compartment. Fire fighting measures should be taken immediately to prevent any fire such as a tire, electrical or cab fire from reaching the explosives compartment.

Fires on other transport vehicles may be fought with caution. Fires that cannot be controlled sufficiently to avoid involvement of the vehicle's fuel compartment shall be left and personnel evacuated to a safe distance.

6.2.2. When a fire is small and does not involve any explosive agents, it may be fought with plant extinguishing equipment. If the fire is widespread and intense, all personnel, including visitors and contractors should be evacuated to the meeting area outside the main gate.

Table 6 - 2
FIRE FIGHTING INFORMATION

MATERIAL	RECOMMENDED FIRE-FIGHTING METHODS	SPECIAL CONSIDERATION
Ammonium Nitrate Prill – Odorless white to light tan crystaline solid	Use flooding amounts of water in early stages of fire. Keep upwind. AN is an oxidizing agent which supports combustion and is an explosive hazard if heated under confinement that allows high-pressure buildup. Ensure good ventilation and remove combustible materials if it can be safely done. Evacuate to designated area if fire cannot be controlled.	Toxic oxides of nitrogen are given off during combustion. Fire fighters require self-contained positive pressure breathing apparatus. Avoid contaminating with organic materials. Many powdered metals such as Al, Sb, Si, Cd, Cr, Co, Cu, Fe, Pb, Mg, Mn, Ni, Sn, Zn and brass react violently and explosively with fused AN below 200˚C Sensitivity to detonation increases when heated.
Ammonium Nitrate Solution- Colorless/Odourless Liquid – white paste like solid when cooled	Use flooding amounts of water in early stages of fire. Cool containing vessels with flooding quantities of water until after fire is out	Material will not burn, but thermal decomposition may result in flammable/toxic gases being formed. These products are nitrogen oxides and ammonia. (NO,NO_2 NH_3). Product may form explosive mixtures when contaminated and comes in contact with organic materials. Explosive when exposed to heat or flame under confinement. Avoid temperatures over 210°C (410°F) A self contained breathing apparatus should be used to avoid inhalation of toxic fumes
Sodium Thiocyanate – White solid - odourless	Use extinguishing media most appropriate for the surrounding fire	Wear self contained breathing apparatus – MSHA/NIOSH approved or equivalent, and full protective gear. During a fire, irritating or highly toxic gases may be generated by thermal decomposition or combustion.
Sodium Nitrite – Oxydizing agent - white to light yellow crystals- faint odour	Flammability class – not regulated. Flood with water only – Isolate materials not involved in the fire and cool containers with flooding quantities of water until well after the fire is out.	Self contained apparatus should be worn in a fire involving Sodium Nitite.Thermal decomposition will cause reddish brown nitrogen oxides to be released.
Fuel Oil (No. 2 diesel) Dyed or pale yellow liquid with petroleum odor; and/or ATF Fluid	Use water spray to cool fire-exposed surfaces and to protect personnel. Shut off fuel from fire. Use foam, dry chemical or water spray to extinguish fire. Avoid spraying water directly into storage container due to danger of boil-over.	Avoid strong oxidizing agents.

Explosive emulsions, ANFO, packaged explosives and firing devices.	**Fire involving explosive materials must never be fought. Evacuate the incident scene. Do not confine (ventilate to prevent / reduce pressure build-up if safe to do so).**	Explosion hazard.
Enviro CFE	Dry chemical, foam, water spray (fog). Use water spray to cool exposed surfaces and containers	OIL FLOATS ON WATER. Do not use direct or heavy water stream to fight fire. Use organic vapour respirator or self-contained breathing apparatus to fight fire.

Table 6 - 3
CONTROL MEASURES FOR FIRE

MATERIAL	RECOMMENDED FIRE-FIGHTING METHODS	SPECIAL CONSIDERATION
Diethylene glycol	Small fire: type ABC dry chemical or CO_2 fire extinguisher. Large fire: water fog.	Keep away from oxidizers (nitrates and perchlorate). Explosion hazard if heated under confinement.

EVACUATION PROCEDURES

Advise the first emergency responders at the scene (police or fire) of the need to evacuate using the guidance in the Emergency Response Plan. Employees at the scene should assist local emergency services to the best of their ability to accomplish this. For incidents within a worksite such as a mine, quarry or construction operation, in most cases access is radio controlled. The quickest way of alerting people, therefore, is by site radio. Clearly state your location, situation and call for assistance in evacuating the area.

DO NOT FIGHT EXPLOSIVES FIRES. EVACUATE THE AREA AND LET THE FIRE BURN ITSELF OUT.

THE MINIMUM EVACUATION DISTANCE IS AS OUTLINED IN TABLE 6-4 (Pg. 17) FOR ALL DIRECTIONS (which is based on a higher traffic / risk / population density within the area, without benefit of protective features such as berms and hills. (**Transport Canada requires 1,600 meters for situations that involve high-risk surroundings**) upon determining actual quantity of explosives refer to Table 6-4 as per ERD quantity of distances.

Table 6 - 4
EVACUATION DISTANCES
Based On Amount of Explosives Present

Explosive Quantity		Metric Distance		English Distance
250 kg		70 Meters		230 Feet
500 kg		100 Meters		320 Feet
1,000 kg		150 Meters		500 Feet
2,000 kg		240 Meters		800 Feet
5,000 kg		400 Meters		1,300 Feet
7,000 kg		450 Meters		1,450 Feet
10,000 kg		480 Meters		1,550 Feet
20,000 kg		700 Meters		2,300 Feet
40,000 kg		800 Meters		2,640 Feet
60,000 kg		870 Meters		2,860 Feet
80,000 kg		960 Meters		3,150 Feet
100,000 kg		1040 Meters		3,420 Feet
120,000 kg		1100 Meters		3,610 Feet
>120,000 kg		1600 Meters		5,250 Feet

6.3 ENVIRONMENTAL RELEASES

6.3.1 Procedure For Fuel Oil Storage Tank Failure

- Assess the magnitude of the leak.
- If the leak is slow and the source can be determined, take the appropriate action to prevent further leakage.
- Transfer fuel from storage tank into drums if necessary.
- Collect spilled material, including contaminated soil, with absorbent pads or inert solid absorbent and store in drums labeled for disposal.
- If the leak is large and further leakage cannot be prevented, allow the dyke to fill. Transfer to drums, label for reuse or disposal, and store.
- Inspect empty tank to identify failure/cause of leak and repair tank.

6.3.2 **Procedure For Raw Material Truck Spills**

- Identify the material involved, assess the magnitude of the spill or leak and assist the driver to take appropriate action to stop the leak, taking care to prevent run off and/or entry into any water course or drainage system near the spill site.
- For AN prill, shovel spilled material into drums, label for reuse or disposal, and store. Use a non-sparking shovel to transfer spilled material into lined drums.
- For spilled fuel, contain by dyking with earth. Collect spilled fuel with absorbent pads or solid inert absorbent, transfer into drums, label and store for disposal.
- Remove contaminated soil for disposal in conformance with Environment Canada standards.

6.3.3 **Procedure For Process Spills**

- Identify the material involved and assess the magnitude of the spill or leak, taking care to prevent run off and/or entry into any watercourse or drainage system near the spill site.
- For AN prill, shovel spilled material into drums, label for reuse or disposal, and store.
- For spilled fuel, contain by dyking with earth. Collect with absorbent pads or solid inert absorbent, transfer into drums, label, and store for disposal.
- In the case of leaking bags of ANFO, sweep or shovel the spilled material into a clean drum or other suitable container, label for reuse or disposal, and store.
- Remove contaminated soil for disposal in conformance with Environment Canada standards.
- Have any process equipment (pumps, process lines, parts, gauges, etc.) involved in a leak or spill inspected and repaired or replaced. Re-inspect and test if necessary after repair is affected.

6.3.4 **Procedure For Emulsion Tank Failure**

- Assess the magnitude of the leak.
- If the leak is slow and the source can be determined, take the appropriate action to prevent further leakage.
- Transfer remaining emulsion from leaking storage tank into another storage tank, a tanker trailer if available, or into drums as necessary.
- Collect spilled material using double diaphragm pump(s) and store in labeled drums for reuse or disposal at the mine.
- If the leak is large and further leakage cannot be prevented, allow the room to fill. Transfer to drums, label for reuse or disposal, and store.
- Inspect empty tank to identify failure/cause of leak and repair or replace the tank

6.3.5 **Procedure For Fire**

- In the event of a raw material or product fire, take care to protect all persons from exposure to smoke and gaseous emissions from the fire.
- Potential toxic gaseous emissions from fires involving explosive materials include:

  Oxides of Nitrogen
  Carbon Monoxide
  Cyanide Gas

- All fires must be reported to local authorities and Mine Site Security as soon as possible.
- Self contained breathing apparatus is required for fighting a fire in the plant.
- Follow procedures outlined above for any spills and leaks resulting from fire when it is safe to do so

Table 6 – 5
ENVIRONMENTAL RELEASE PROCEDURES

MATERIAL	SPILL AND LEAK PROCEDURES	WASTE DISPOSAL
Ammonium Nitrate Prill (odorless white to light tan crystalline solid)	Remove source of heat and ignition. Sweep or shovel spill into a clean, non-combustible container. Wash remaining trace residues with water. Wear rubber gloves and safety glasses to minimize contact with skin and eyes.	Re-use if possible or give it to a farmer as a fertilizer. If not possible, dispose of as-is in approved. Remove as much as possible the spilled material as a solid.
Ammonium Nitrate Solution-Colorless/Odourless Liquid – white paste like solid when cooled	Small spill - Dike and contain spilled material. Ensure spilled material does not enter sewers, wells or water courses. Allow to solidify. Use appropriate tools to place in container for disposal. Larger spill - Dike and contain spilled material. Ensure spilled material does not enter sewers, wells or water courses. Notify downstream water users. Allow to solidify. Use appropriate tools to place in container for disposal.	Call for assistance for disposal. Ensure disposal complies with regulatory requirements and regulations.
Fuel Oil (dyed or pale yellow liquid with petroleum odor)	Eliminate any source of ignition. Prevent spills from entering watercourses or drainage systems. Contain with sand or earth. Recover with pump or inert absorbent material into clean container. Wear safety glasses and rubber gloves to prevent contact with the eyes and skin.	Dispose of recovered material in approved landfill or other waste disposal facility.
ANFO (Ammonium Nitrate Fuel Oil)	This material is an explosive. Remove all sources of heat and ignition. Transfer into clean plastic container with a plastic shovel. Label drums. Wear rubber gloves.	Recycle product, if possible. If not practical, explode it inside a borehole or burn it in an authorized burning ground.
Emulsion	This product is a blasting agent. Remove all sources of heat and ignition. Prevent spills from entering watercourses or drainage systems. If large amount of emulsion is involved, contain spill with earth or sand found locally. Recover spilled material with a diaphragm pump. Use of a diaphragm pump also requires an air compressor. Limitation of the pump suction is approximately 2.5 meters, pump discharge is approximately 8 meters. Use a screening device on pump suction hose. Out of area spills will require taking two pumps and extra hose. Transfer the product into a tanker trailer or clean 200 liter drums. If small amount of emulsion is involved, transfer material into a clean plastic container with a plastic shovel. Label tanker trailer or drums. Wear rubber gloves and rubber boots.	Recycle product, if possible. If not practical, explode it inside a borehole or if large amount is involved, demulsify it with liquid detergent.

Enviro CFE	Eliminate any source of ignition. Prevent spills from entering watercourses or drainage systems. Contain with sand or earth. Recover with pump or inert absorbent material into clean container. Wear safety glasses and rubber gloves to prevent contact with the eyes and skin.	Dispose of recovered material in approved landfill or other waste disposal facility.
Sodium Thiocyanate – White solid - odourless	Ensure adequate ventilation whe handling Sodium Thiocyanate. Keep containers closed when not in use. Wear appropriate PPE – eye protection, gloves and appropriate clothing to prevent skin exposure.	Vacuum or sweep up material and place into a suitable disposal container. Avoid run off into storm sewers and ditches which lead to waterways. Not regulated as a hazardous material. Chemical waste generators must consult appropriate hazardous waste regulations to ensure complete and accurate classification.
Sodium Nitrite – Oxydizing agent - white to light yellow crystals- faint odour	In the event of a spill or leak, contact the vendor (403-263-8660) for advice. Wear respirator, protective clothing and gloves. Vacuuming is the recommended method to clean up spills. Do **not** sweep or use compressed air for clean up. Recover spilled material on non-combustible material, such as vermiculite. Use non-sparking tools and place in covered containers for disposal. Any recovered material mau be used for it's intended purpose , depending on contamination.	Dispose of the waste material at an approved hazardous waste treatment/disposal facility.
Acetic Acid – Colourless liquid with a pungent odour	Wear appropriate PPE – evacuate downind areas as required to prevent exposure and to allow fumes and vapours to dissipate. Prevent entry into sewers or streams. Dike if needed. Eliminate all sources of ignition. Neutralize the residue with sodium carbonate or crushed limestone. Absorb win an inert dry material and place in an appropriate container for disposal. Flush area with water to remove trace residue.	Waste disposal must be done in accordance with provincial and federal regulations. Empty containers must be recycled or disposed of through an approved waste management facility.

6.4 SECURITY

6.4.1. In the event of a breach of security at a Dyno Nobel Canada Inc. Work Site, a call is to be made to the RCMP / local Police Department at the discretion of the Supervisor/Manager, or their delegate. In the case of a breach of security, Dyno Nobel Canada Inc.' HSE, Regulatory Affairs and Executive / Senior Management shall also be informed immediately and provided with the same information as outlined in Section 6.1

6.4.2. Any person(s) apprehended during the course of a serious security breach shall be detained until the Police arrive (note: employees are not to put themselves at undue risk by attempting to apprehend or restrain a potentially violent person).

6.5 BOMB THREAT

6.5.1. The safety of employees and the public is of primary concern. A person receiving a bomb threat over the telephone should attempt to remain calm and keep the caller talking by asking the questions listed in Table 6-6 (ERP pg. 20). Recording (writing) as much information about the caller and their comments is also very important for future reference. If possible, alert a co-worker to the situation while talking to the caller.

6.5.2. The police / mine security should be advised of the bomb threat as soon as possible. Unless there is good reason to the contrary, all personnel should evacuate the Work Site and await the arrival of the police / first responders at the designated meeting area. Suspicious objects should be reported but not tampered with and other people should be prevented from entering the Work Site until the local authority has authorized a return to the Work Site. Employees should be prepared to assist local authorities in their search / inspection of the Work Site as necessary.

Table 6 - 6
CONVERSATION GUIDELINES IN THE EVENT OF RECEIVING A BOMB THREAT

See Appendix 7

6.6 LINES OF AUTHORITY

6.6.1 Based upon the information available at the time of the incident, the Work Site Supervisor/Manager, in consultation with others (such as DNCI Senior Management, Mine/local authorities and/or Dyno Nobel advisors), will evaluate the incident and proceed with appropriate steps to implement this ERP. A decision on when to return to the scene of a serious incident will be made in like fashion, subject to approval by public authorities overseeing the incident.

6.6.2 The Work Site Supervisor/Manager will have overall responsibility for the implementation of this ERP and the supervision of all Company activities. Public authorities and the site owner have ultimate authority regarding the resumption of normal production activities.

7.0 NOTIFICATION AND REPORTING

7.1 Any incident that activates this ERP shall be documented on the DYNO Incident (Cintellate) Report. The Corporate Emergency Response Advisor must also be notified and in turn will advise the:

HSE Manager Vice President Operations
Area Manager

It is the responsibility of the HSE Manager or his delegate to report the incident to DYNO's HSE Management Team. A major incident involving a fire with emissions and/or a hazardous material spill shall be reported to a provincial Environment Officer under the direction of the Environmental Manager. Major incidents shall also be reported to the Chief Inspector, Explosives Branch, Natural Resources Canada; a Provincial/Territorial Safety Officer; and as applicable, an Emergency Measures Official.

Any incident which involves a spill at a Mine Site shall be immediately reported to the Mine Site Environmental Representative, and followed up with a copy of the incident report when complete.

7.2 Spills and Releases – Reportable and Significant Classifications

1) Determine if the spill/release is reportable

All environmental incidents are to be input into Cintellate. Reportable spills/releases are not only input into Cintellate, but the investigation and corrective action sections of Cintellate must be completed. To assist in determining if a spill/release is reportable, a listing of common materials with assigned reportable quantities is referenced (see Appendix 5, Reportable Substance List). The reportable quantities utilize the most stringent "reportable quantity" in Canada. Even if the spill/released material is recovered, the media impacted by the spill/release may be reportable to authorities (e.g., a portion of a spill reaching a source of drinking water or wetland). In addition, a spill/release is reportable if the amount equals or exceeds the Dyno Nobel Default Threshold.

2) Determine if the spill/release is significant

- Significant spills/releases are disclosed in the company's annual report. Significant spills/releases trigger time-critical internal actions as required by the company's procedures (crisis communication, internal investigation, etc)

The following table is provided to assist in making these determinations:

Reporting of Environmental Spills

Is the spill reportable?

- Yes if above a Reportable Quantity
- Yes if oil sheen is visible or sludge/emulsion is deposited beneath water surface
- Yes if water quality standards are exceeded
- Yes if from a UST exceeding 25 gallons or result in a sheen

Is the spill significant?

- Yes if authorities implement a national contingency plan
- Yes if "sensitive" environmental features have been impacted
- Yes if neighbors are evacuated
- Yes if authorities and/or neighbors file complaints and/or demand response activities
- Yes if financial impact is >US$100K
- Yes if media coverage is adverse.

7.3 Internal investigation reports will include:

- Name, work address, and phone number of the investigating (reporting) individual
- Identification and quantity of the released substance
- Time, duration, and location of the release
- Nature and quantity of injuries, property damage, production loss, administrative penalty and/or legal liability
- Precautions taken during the incident
- Relevant environmental conditions
- Corrective actions taken at the time of the incident
- Recommended corrective actions to prevent future occurrence

7.4 Senior Management shall be immediately informed by telephone of any major incident that requires Government notification as per Dyno Nobel's reporting procedures.

7.5 Major incidents involving explosive material shall also be reported to the Chief Inspector, Explosives Branch, and Natural Resources Canada by the applicable Regulatory Affairs Coordinator.

Table 7 – 1
REPORTABLE SUBSTANCE QUANTITY LIST

Material Released	Reportable to Authorities		Dyno Nobel Default Threshold (Proposed)
	If Recovered	If Unrecoverable/ Abandoned / Disposed	
AN Solution	Not Reportable if it can be used as a product	45 Kg (100 lbs) as released oxidizer (not media specific)	225 Kg (500 lbs)
	44 Kg (100 lbs) for ammonia if released into water	45 Kg (100 lbs) for ammonia if released into water	
	Report if released to Drinking Water (DW std at 10mg/L-N)	Report if released to Drinking Water (DW std at 10mg/L-N)	
	Report if released to aquatic ecosystem (NH3 toxic to fish)	Report if released to aquatic ecosystem (NH3 toxic to fish)	
AN Prill	Not Reportable if it can be used as a product	45 Kg (100 lbs) as released oxidizer (not media specific)	225 Kg (500 lbs)
	45 Kg (100 lbs) for ammonia if released into water	45 Kg (100 lbs) for ammonia if released into water	
	Report if released to Drinking Water (DW std at 10mg/L-N)	Report if released to Drinking Water (DW std at 10mg/L-N)	
	Report if released to aquatic ecosystem (NH3 toxic to fish)	Report if released to aquatic ecosystem (NH3 toxic to fish)	
	Report if released to Drinking Water (DW std at 10mg/L-N)	Report if released to Drinking Water (DW std at 10mg/L-N)	
	Report if released to Drinking Water (DW std at 10mg/L-N)	Report if released to Drinking Water (DW std at 10mg/L-N)	
Sodium Nitrite	45 Kg (100 lbs)	45 Kg (100 lbs)	225 Kg (500 lbs)
	Report if released to Drinking Water (DW std at 1mg/L-N)	Report if released to Drinking Water (DW std at 1mg/L-N)	
Fuel Oil	Reportable if sheen on surface of pond, stream, etc. or sludge within such	Reportable if sheen on surface of pond, stream, etc. or sludge within such	225 Kg (500 lbs); 261 L (69 gallons)
	State Regulations - Varies from Any Amount to specific Trigger Amounts	State Regulations - Varies from All Spills to specific Trigger Amounts	
	95 L (25 gallons) from UST	96 L (25 gallons) from UST	
Mineral Oil	Reportable if sheen on surface of pond, stream, etc. or sludge within such	Reportable if sheen on surface of pond, stream, etc. or sludge within such	225 Kg (500 lbs); 261 L (69 gallons)
	State Regulations - Varies from Any Amount to specific Trigger Amounts	State Regulations - Varies from All Spills to specific Trigger Amounts	
	95 L (25 gallons) from UST	96 L (25 gallons) from UST	

Emulsifier Agents	Reportable if sheen on surface of pond, stream, etc. or sludge within such	Reportable if sheen on surface of pond, stream, etc. or sludge within such	225 Kg (500 lbs); 261 L (69 gallons)
	State Regulations - Varies from Any Amount to specific Trigger Amounts	State Regulations - Varies from All Spills to specific Trigger Amounts	
ANFO	Not Reportable if it can be used as a product	45 Kg (100 lbs) as released oxidizer (not media specific)	225 Kg (500 lbs)
	45 Kg (100 lbs) for ammonia if released into water	45 Kg (100 lbs) for ammonia if released into water	
	Report if released to Drinking Water (DW std at 10mg/L-N)	Report if released to Drinking Water (DW std at 10mg/L-N)	
	Report if released to aquatic ecosystem (NH3 toxic to fish)	Report if released to aquatic ecosystem (NH3 toxic to fish)	
	Reportable if sheen on surface of pond, stream, etc.	Reportable if sheen on surface of pond, stream, etc.	
Emulsion	Not Reportable if it can be used as a product	45 Kg (100 lbs) as released oxidizer (not media specific)	225 Kg (500 lbs)
	44 Kg (100 lbs) for ammonia if released into water	45 Kg (100 lbs) for ammonia if released into water	
	Report if released to Drinking Water (DW std at 10mg/L-N)	Report if released to Drinking Water (DW std at 10mg/L-N)	
	Report if released to aquatic ecosystem (NH3 toxic to fish)	Report if released to aquatic ecosystem (NH3 toxic to fish)	
	Reportable if sheen on surface of pond, stream, etc. or sludge within such	Reportable if sheen on surface of pond, stream, etc. or sludge within such	
Ethylene Glycol	2250 Kg (5000 lbs)	2250 Kg (5000 lbs)	225 Kg (500 lbs)
Sodium Thiocyanate	45 Kg (100 lbs)	45 Kg (100 lbs)	225 Kg (500 lbs)
	Report if released to Drinking Water (DW std at 1mg/L-N)	Report if released to Drinking Water (DW std at 1mg/L-N)	

8.0 DECONTAMINATION

8.1 DNCI's Standard Operating Procedures and safety rules establish work practices that minimize employees' direct and indirect contact with hazardous substances.

8.2 Equipment, rubber boots, gloves and clothes that have been contaminated can be washed with soap and water. Wash water should be collected and disposed of in an approved manner with other contaminated material.

9.0 WORKSITE CLOSURE / SHUT DOWN

9.1 **Plant Shutdown (use appropriate lock-out/tag-out procedures)**

- In the event that a plant is shut down due to weather, flood, or other adverse situation, the Plant Manager / Supervisor or his delegate will ensure that all non-essential power is shut off. The Plant Manager / Supervisor will secure all valves and flow devices so as to prevent accidental opening.
- The Plant Manager / Supervisor shall determine if any raw material or raw material storage will be contaminated or at risk of fire/explosion, and take steps to move the material or isolate it from the contamination / hazard source.
- If the power and/or gas will create a dangerous situation the Plant Manager / Supervisor will cut the outside supply of power, thereby isolating all plant equipment.
- The Plant Manager /Supervisor will advise local Mine authorities of the plant shutdown and preventative actions taken.
- All sensitive documents must be secured.

9.2 **Magazine Closure (use appropriate lock-out/tag-out procedures)**

- In the event that a magazine is closed due to weather, flood, or other adverse situation, the Supervisor/Manager or his delegate will ensure that all non-essential power is shut off. Also, the Supervisor/Manager will ensure that all magazines and compound gates are locked before leaving the site.
- The Supervisor/Manager shall determine if any products or raw materials will be contaminated and take steps to move the material or isolate it from the contamination source.
- If power and/or gas will create a dangerous situation the Supervisor/Manager will cut the outside supply of power, thereby isolating all magazine equipment.

10. RESPONSE TO NATURAL DISASTER

Hurricanes, tornadoes, floods, slides, forest fires, and earthquakes, have the ability to damage or destroy everything in their path. Yet much of the

damage or destruction associated with such phenomena is the result of some secondary event, e.g. fallen power lines, ruptured tanks valves, pipes etc. If reasonable warning of an approaching disaster is received, efforts can be made to minimize damage by taking specific preventative measures. These measures are outlined in the following procedures.

1.Consult the Site Supervisor for guidance and proceed according to his direction.
2. If so directed, notify key personnel regarding the action being taken.
3. Collect important files, records and papers for safekeeping.
4. Open main electrical breaker to cut off all power to the site. (The main breaker is marked for easy identification).
5. Secure all buildings and equipment and lock the site gate.
6. Evacuate the site taking mobile equipment to safety.
7. Post Guards on site access routes to monitor the activities of unauthorized personnel.
8. A report of the incident must be submitted to the Area Manager within 24 hours.

10.1 PREVENTIVE MEASURES

10.2 **Waste Disposal Permits**

If nitrate waste is generated, a disposal permit must be obtained and kept up to date if the product will be disposed of off-site, or in mine tailings. Permits to dispose of other collected waste in the event of spills or leaks (such as described in Section 6.3) must also be obtained in consultation with mine / provincial environmental representatives

10.3 **Liquid Containment**

All fuel / oil storage tanks must be dyked according to the provisions of Federal and/or Provincial regulations (eg. National Fire Code, Environmental Protection Act), or have a double-walled tank.

A plan must be in place and materials on hand to create a dyke in the event of a large fuel or solution leak or spill or other emergency spill situation.

10.4 **Inspection**

All site emergency storage areas and equipment must be inspected monthly by qualified personnel, monthly for physical condition and serviceability, and the results recorded according to quality and safety standard operating procedures.

All recommendations/orders made by NRC Explosives Branch inspectors, Fire Marshals and insurance inspectors must be responded to and acted upon accordingly. Copies of their reports are to be forwarded to DNCI's HSE representative for the region.

10.5 **Maintenance**

All preventive and breakdown maintenance must be carried out and recorded in accordance with standard operating procedures.

11.0 WORK SITE START UP (Restoration of Business)

11.1 Before startup, the condition prompting the shutdown / closure must be over / corrected (i.e. flood, fire, explosion or blizzard).

11.2 All decontamination procedures must be followed and the site cleared and cleaned of any environmental waste hazards.

11.3 All repairs to plant equipment involving safety shutdowns and essential operating machinery must be completed.

11.4 All electrical circuits, plumbing and piping must be tested.

11.5 The Work Site Supervisor / Manager will ensure that all lockout and tag-out procedures have been followed and signed off.

11.6 The Work Site Supervisor / Manager will start up the facility by turning on individual switches to the components that have been shutdown.

11.7 Operational checks will be done to ensure that all equipment is functioning at safe working pressures and voltage.

11.8 The Work Site Supervisor / Manager will give the verbal "all clear" before workers will be allowed to return to work.

11.9 The Work Site Supervisor / Manager or one of their delegates will cancel / remove all roadblocks, terminate evacuation activities, and notify employees to return to normal activities.

APPENDIX 1

DNCI'S EMERGENCY REPORT FORM FOR INCIDENTS INVOLVING EXPLOSIVES

WHO IS CALLING? NAME:_____

PHONE #: _____ TIME:_____DATE:_____

CALLER'S ORGANIZATION:_____

LOCATION OF INCIDENT: _____

WHAT IS THE EMERGENCY?
PROBLEM**:** (Motor Vehicle Accident, Fire, Scattered Product, Disabled Truck, etc.)

_____

PRODUCTS INVOLVED : VISIBLE PLACARDS ? YES_____ NO_____

SHIPPING NAME(S)_____

UN NUMBER(S)_____

HAZARD CLASSIFICATION (ex: 1.1 D) :_____

QUANTITY: _____

INJURIES: _____

PROPERTY DAMAGE:_____

EXPLOSIVES VEHICLE UNIT NUMBER:_____LICENSE NO._____

DRIVER:_____CARRIER:_____

WHEN DID INCIDENT OCCUR? DATE: _____TIME: _____

WHERE IS THE EMERGENCY? (City, Town, Rural Area, Lat. & Long., Specific Directions)

_____

ARE THERE RESIDENCES, BUSINESSES, OR OTHER PUBLIC GATHERING PLACES WITHIN THE EVACUATION ZONE (what, where)?

_____

WHAT ACTION HAS BEEN TAKEN TO THIS POINT IN TIME?_____
(Medical, evacuation, fire fighting, etc.)

_____

APPENDIX 2

DNCI Corporate contact

Name	Position	Cell number
Benoit Choquette	Environmental Manager - Canada	(514) 246-6285
Nicholas Ebsworth	General Manager HSE - Canada	(514) 708-5417
Hubert Fafard	HSE Manager Eastern Canada	(418) 570-9257
Willard Pierce	Regional Manager -West	(403) 836-9029
Francois Lambert	Regional Manager –East	(514) 212-3490
Dale Bodnarchuk	Regional Manager – Central	(705) 715-6672
Seamus Kilcommons	HSE Manager Western Canada	(403) 815-4066
Brad Rhude	Sales Manager - Central	(705) 494-5171
Rick Chopp	HSE Manager – Central Canada	(705) 498-2855
Pierre Poulin	Sales Manager – Quebec/Maritimes	(418) 569-5565
Greg Brown	Sales Manager Western	(403) 512-5127
Bryan Sedrovic	HSE/ Regulatory Affairs Coordinator West	(250) 203-4259

APPENDIX 3

DNCI Emergency Response Advisors (ERA) per area

Name	Position	Cell number	Area (West, Central or East)
Tom Medak	Mgr, Bulk Emulsion Operations	(403) 818-4434	West
Ralph Olson	Operations Manager, Vancouver Island	(250) 713-8720	West
Darren Woodhead	Gregg River worksite supervisor	(780) 223-4491	West
Randy Armella	Bulk Operations Manager	(780) 865-6580	West
Cory Redwood	Manager dnx Drilling/ Joint Ventures	(867) 444 - 8533	West
Kevin S Kelly	Operations Manager – Seismic	(403) 934-0753	West
Tyrone McClean	Operations manager, Manitoba and Saskatchewan	(204) 687-0046	Central
Scott Smith	Operations Manager, Red Lake Ontario	(807) 727-7300	Central
Mike Ertel	Operation Manager – Ontario	(807) 629-9660	Central
Joss Forget	Operations Manager Northern Ontario	(705) 471- 8745	East
David Roy	Manager Plant operations	(418) 570-5604	East
Francois Lambert	Operations Manager	(514) 212-3490	East
Daniel Roy	Dyno Consult , Ste-Sophie	(514) 213-5889	East
Pierre St-George	Regulatory Affairs Canada	(613) 677 - 1051	Canada

APPENDIX 4

SITE: Meadowbank Site

MANAGEMENT AND WORK SITE CONTACT LIST

NAME	TITLE	BUSINESS PHONE	HOME PHONE	CELL PHONE
Doug Robertson	Site Supervisor	(867) 793-4610 *(Option 2; option 1 ext 6804)*		(867) 222-3930
Dennis Wall	Site Supervisor	(867) 793-4610 *(Option 2; option 1 ext 6804)*		(867) 222-3930
Site employees	All employees on shift	(867) 793-4610 *(Option 2; option 1 ext 6804)*		
Tom Medak	Operations Manager	(403) 723-7530		(403) 818-4434
Seamus Kilcommons	HSE Manager	(403) 236-9160 Ext 7547		(403) 815-4066

EXTERNAL CONTACT NUMBERS

ORGANIZATION/CONTACT	LOCATION	PHONE NUMBER
Mine security	Meadowbank	Ext. 6817
Local Fire; ERT	Hinton	Ext 6911
Local Ambulance	Hinton	Ext 6911
Baker Lake RCMP	Hinton	867 793-1111

APPENDIX 5

Area Office Address:
Meadowbank site
Baker Lake, NU

Type of Facility:
Emulsion Plant
AN Tote storage

Emergency Meeting Place Upon Evacuation:
As identified on site orientation forms, employees and visitors are to meet at muster point for head count. Once all persons are accounted for, all will proceed to the Muster Point located at Security Gate #1, located at junction of All Weather Road. (see map)

Emergency Equipment On Hand:
Fire Extinguishers, First Aid Kits, Fire alarm system, video monitoring,

FY 2011 drill conducted

APPENDIX 6

BOMB THREAT CHECKLIST

Exact time of call:			
Exact words of caller:			
QUESTIONS TO ASK			
1- When is bomb going to explode?			
2- Where is the bomb?			
3- What does it look like?			
4- What kind of bomb is it?			
5-What will cause it to explode?			
6- Did you place the bomb?			
7- Why?			
8- Where are you calling from?			
9- What is your address?			
10- What is your name?			
CALLER'S VOICE (circle)			
Calm	Slow	Crying	Slurred
Stutter	Deep	Loud	Broken
Giggling	Accent	Angry	Rapid
Stressed	Nasal	Lisp	Excited
Disguised	Sincere	Squeaky	Normal
If voice is familiar, whom did it sound like?			
Were there any background noises?			
Remarks:			
Person receiving call:		Telephone number call received at:	
Date:		Report call immediately to:	

APPENDIX 7

NEW/TRANSFERED EMPLOYEE OR ANNUAL REFRESHER FORM

HSE Employee Orientation Form

To Be Completed By Supervisor (within 2 to 4 weeks of hiring)

(Employee Surname) (Given Names) (Worksite)

(Date of Hire)

(Job / Position) (RFT/ RPT/ Casual / Temp) (End date if applic)

Show & Tell

	Date Completed			Date Completed
Tour Of Facility			Introduction To Staff	
Emergency/Fire Exits & Procedures			Workplace Hazards & Controls	
Environmental Clothing Issued			First Aid & WCB Reporting	
Overview Of Organization			Telephone Contacts	
Work Schedules			Time Sheets & Pay Periods	
Security & Key Control			E-mail & Website Access	
Expense Claims Procedures			Other:	

Documentation Given To &/or Discussed With Employee

Position Description		DYNO G & S Work Rules	
Worksite ERP, TDG ERAP & CCP		MSDS's	
Handling/Transporting Explosives		SOP's	
Employee Guidelines		Policy: HSE & Quality	
Policy: Privacy & Confidentiality		Policy: Substance Abuse	
icy: Violence In The Workplace		Policy: Security	
Policy: Smoking In The Workplace		Performance Reviews	
Other:		Other:	

New Hire Training Completed

Customer Orientation		WHMIS	
TDG Clear Language		PPE (as applicable)	
Handling/Transporting Explosives		Fire Extinguisher	
ICARUS (Incident Reporting)		Take 5 (Hazard Assessment)	
Worksite ERP, TDG ERAP & CCP			

_____ _____ _____

Supervisor (Print Name) Supervisor Signature Date

APPENDIX 8

ANNUAL ERT VISIT REVIEW FORM

Information to be released to Emergency Services

From: Local Emergency Services

Subject: Emergency Response Plan for _____.

The following is a copy of the Emergency Response Plan that has been prepared by Dyno Nobel Inc. Has been received from _____ operations. The ERP has been discussed and being kept on file for future reference. If questions arise, we have been given the contact information for the _____ operations staff.

On _____ the _____ of 2011, AEM ERT responder _____ attended the Dyno Nobel Meadowbank site for an annual visit and ERP review.

Signed:_____

Position:_____

Date:_____

APPENDIX 9

Transportation of Dangerous Goods Regulation
Class Quantity Emission Limit

1	Any quantity that could pose a danger to public safety or 50 kg
2	Any quantity that could pose a danger to public safety or any sustained release of 10 minutes or more
3	200 L
4	25 kg
5.1	50 kg or 50 L
5.2	1 kg or 1 L
6.1	5 kg or 5 L
6.2	Any quantity that could pose a danger to public safety or 1 kg or 1 L
7	Any quantity that could pose a danger to public safety. An emission level greater than the level established in section 20 of the *Packaging and Transport of Nuclear Substances Regulations*
8	5 kg or 5 L
9	25 kg or 25 L

Table identified in Section 8.1(1) of Part 8 of the Transportation of Dangerous Goods Regulation Class Quantity Emission Limit

Evacuation/ Muster location

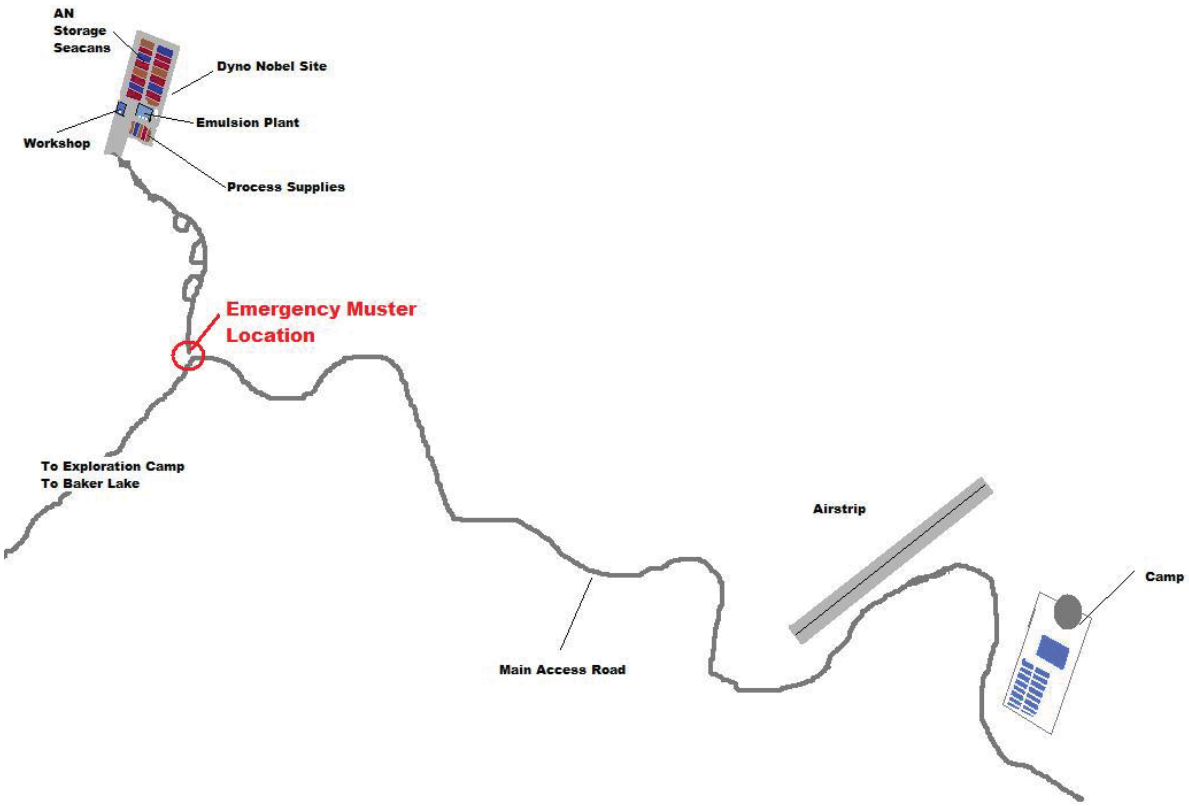

Appendix K

MBK-ENV-0016 Spill Reporting Procedure

Spill Reporting Procedure

		PROCEDURE NUMBER:	**MBK-ENV-0016**
People concerned	• **All Departments**	**Prepared by**	**Jeff Pratt** **Erika Voyer** **Environment Coordinator**
		Authorized by	**Kevin Buck** **Assistant Environmental Superintendent**
Effective :	**January 18, 2015**	***"Safety First, Safety Last … Safety Always!"*** ***"No Repeats" – Our Stepping Stone to ZERO HARM***	
This procedure corresponds to the required minimum standard. Each and everyone also have to comply with the rules and regulations of the Nunavut Government in terms of health and safety at work.			

Objective:

- As per Meadowbank's Water License we must have and employ a Spill Contingency Plan. The overall purpose of creating a spill contingency plan is to minimize the impacts of spills by the establishment of predetermined lines of response and plans of action. The plan has been designed to facilitate effective communication and the efficient clean-up of spills from potentially hazardous materials. The Plan also specifies the reporting of all spills on site to the Environment Department. The Plan details which spills will be reported to regulators.

Concerned departments:



ALL DEPARTMENTS

Risks/ Impacts Legend

Health & Safety | Process/quality | Costs | Environment

Spill Reporting Procedure

Definitions:

A) A **Major spill** is defined as an accidental release of product into the environment that has the potential for adverse impacts to the receiving environment, AEM property or human health. This can include potential impacts to water, surface and groundwater, land, equipment, buildings, human health and the atmosphere.

B) A **Minor spill** is defined as any spill that does not involve a toxic, reactive, or explosive material in a situation that does not pose a significant risk to the environment, is not human health or AEM property.

Procedure	Risks/ Impacts
1. ***All Spills*** on the Meadowbank site regardless of size, quantity, location, or time of spill are to be reported to the Environment department.	
2. Spills must be immediately reported to the Supervisor.	
3. The supervisor will determine if the spill is a major or minor spill. A) If the spill is *Major*, supervisor will call CODE 1 to dispatch (Mine, AWAR, or Control room). B) If the spill is *Minor* the supervisor will contact the Environment Department (**Channel 9** or extension 6747 or 6759 Techs / 6980 or 6728 Coordinators)	
4. Whether the spill is Major or Minor the following must be verbally reported: a) Product description (diesel, hydraulic oil, sodium cyanide) b) Estimated quantity of the product c) Location of Spill d) Area contaminated (#meters x # meters) e) Cause of spill – If this is not yet know best assumption ** if photos can be taken of the spill, please submit to the environment department with spill report	
5. For a *Major Spill* the Supervisor will ensure the area stays safe until the ERT team arrives to intervene. The environment department will assist the ERT team.	

6. For a minor spill the supervisor and the Environment department will then determine the clean-up method and the location in which the contaminated material will be taken too. **Environment department may want to investigate the spill prior to clean up.	
7. A spill report will need to be completed, ***In Full***, and submitted to the environment department within ***12 hrs.*** of the spill occurring. Thus allowing time for the environment department to determine if it needs to be reportable to the Governing bodies. ********Spill report is attached below or can be found here:* http://mymeadowbank/documentcentre/Documents/Health%20and%20Safety/2014%20-%20AEM%20Internal%20Spill%20Report%20Form_V03.pdf	
8. Spills found on site that have not been reported to the environment department will be deemed as Non-Reported spills.	

Agnico Eagle Mines Meadowbank Project:
Internal Spill Reporting Form

(Spills greater than the *Reportable Volume*, see Spill Contingency Plan, require the completion and submission of the *Nunavut Spill Report Form*)

AGNICO EAGLE	Meadowbank Project	Spill report #.
Date and time of spill :		
Location of spill :		
First responder name :		
Company Name:		
AEM Contact:		
Nature of contaminant :		
Volume/quantity of the container / tank (L)		
Quantity spilled (L) :		
Cause of the spill :		
Contaminant collected by :		
Follow-up done by :		
Actions taken :		
Report completed by:		Date :
Incident investigation recommended :	YES ☐	NO ☐
Government agency notified :	YES ☐	NO ☐
Date of notification to government agency :		
Date of report :	Signature of environmental personnel :	

Appendix L

2018 Mock Spill

Mock Spill Baker Lake

September 8th, 2018

Karen Yip, AEM Community Liaison Coordinator in Baker Lake sent a Facebook message to advise the community of the scenario, in case that we use the radios and call a code one or that information is spread on this simulation event.

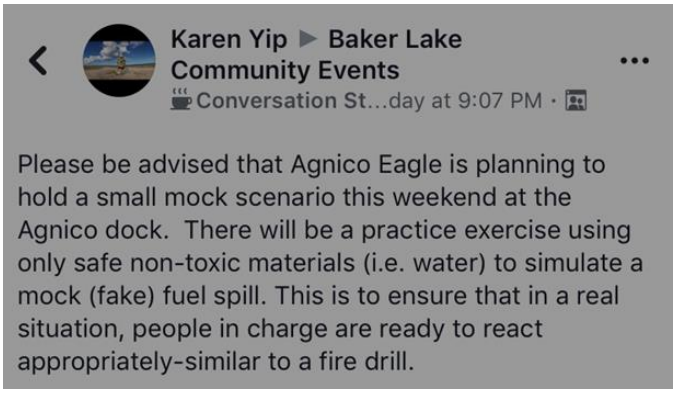

Scope/event : During the Jet A discharge, simulation of a breaking valve in the secondary containment and overflow of the secondary containment;

Environment technician on site; Fanny Laporte & Jonathan Pameolik

Event:

16:04 the Intertek crew discovered the leaking valve and advised ship captain to stop the fuel discharge

16:05 communication from Intertek to AEM staff at the spud barge, Freddy Riveron and Jean-Noel Vigneault explaining the emergency

16:05 Guillotine activated on the fuel line by the labor in charge of the inspection of the line /Employee of PetroNav Desgagnés

AEM employee left right away to the Environment spill response sea cans and grabbed the necessary supplies to contain the spill, absorbent booms, pads, PPEs, ½ cut drum, yellow secondary containment

16:07 confirmation from the vessel captain that the discharge has stopped- AEM spud barge team arrive at the location of spill Jet A.

Action taken to stop the spreading of the spill, installation of absorbent, etc.

16:12- call from the crew to AEM environment team- AEM E&I supervisors for extra resources, if not available- Arctic Fuel services will be called.

- Shovel to make a trench

- Vacuum truck
- Emergency pump and drums
- Truck for transportation, etc.

Emergency document and phone list was available at the spud barge office.

16:20 Debriefing; review of the ***General Spill Procedure, section 10*** of the OPEP, *Oil Pollution Emergency Plan*

Proper PPEs were worn- rubber gloves for the worker in contact with Jet A and safety glasses.

Good communication between the Intertek and AEM crew,

<u>Recommendation from Environment;</u>

Secure the perimeter: block access to the spill site with a pickup, a ribbon or/and message on the radio

Call dispatch for CODE 1, if the spill is significant or uncontrolled or the environment impact is major, e.i running to the lake.

Pick up at the spud barge need to have a hitch to put the boat in the water in case of emergency, it was not the case at the moment of the mock scenario.

Some documents related to OPEP and Emergency Spill response plan are outdated in the binder at the spud barge office; they need to be updated with the new documents. (as for example Woodward is now replaced by PetroNav Desgagnés, etc.)

<u>Recommendation from the **Intertek** crew for H&S and environment;</u>

To have a dock or a bridge section for pedestrian, they have to walk on the dock around the heavy equipment and they often have glass fuel jars that can break while they try to jump from the boat to the dock (they mention that the access is not easy and unsafe)

While doing the scenario, the Intertek employee recommended that they have a spill kit ready in a box in their pick up at all time during the discharge. This plastic box or cut drum can contain the minimum required to react to an eventual spill without having to drive down to the emergency sea-can, putty, absorbent, PPE- gloves, etc.

<u>Recommendation/question from the **spud barge** personnel;</u>

Why isn't there a permanent pipe & manifold with valve for the Jet A as well as the fuel tank, as of right now, there is probably 5000 feet of hoses which increase the risk of a spill while assembling/dismantling, connections, etc.

Varia;

Sulfur was removed from the Jet A fuel as per new regulation, therefore, the Jet A does not have a strong odor anymore and a spill may not be detected by the smell.

Camera, radio, electronic devices are not allowed around the discharge to prevent the risk of explosion

Low pressure alarm will go off in case of any loss of pressure, therefore, spill will or leak can easily be taken in charge early.



Employee of AEM getting supplies for spill response



Guillotine was pre-installed as per discharge protocol and it was closed right after the call of the leak



Scene where the mock spill occurred



Intertek and AEM crew installing the secondary containment and spill supplies





Drums, spills kits, quattrex and totes were available



Boat, gasoline, safety items were also available- the boat works, we went on the lake



Debriefing

Appendix M

Product Transfer Area Assessment - Baker Lake Oil Handling Facility

AGNICO EAGLE

Meadowbank Gold Project

Product Transfer Area Assessment – Baker Lake Oil Handling Facility

February 15th, 2019

Prepared for:

Environment and Climate Change Canada

Prepared by:

Agnico Eagle Mines Limited – Meadowbank Division

Document Control

Version	Date	Tank/EC number	Section	Revision	Author
1	February 2019	EC# 00025772 and 00026142		Implementation of the Product Transfer Area Assessment – Baker Lake Oil Handling Facility for the ERP	Robin Allard, General Supervisor Environment
2					

Prepared by: Environmental Department

Approved By: 

Robin Allard
Meadowbank General Supervisor Environment

1 Introduction

The purpose of this document is to satisfy the requirement of Section 15 of the Storage Tank Systems for Petroleum Products and Allied Petroleum Products Regulations (STSPPR) (SOR/2008-197) made pursuant to Canadian Environmental Protection Act, 1999 which states:

> ***15 (1)*** *The owner or operator of a storage tank system must ensure that petroleum product and allied petroleum product transfer areas are designed to contain any releases in liquid form in the environment that occur during the transfer process.*

In accordance to the STSPPR, a ‘’transfer area” means:

> *the area around the connection point between a delivery truck, railcar, aircraft or vessel and a storage tank system in which the tanks have an aggregate capacity of more than 2,500 L.*

Furthermore, Subparagraph 2.1(2) of the STSPPR states:

> *a person must not release - or permit or cause any release of - a petroleum product or allied petroleum product, in liquid form in the environment, during the transfer of the product to or from a storage tank system if, in the case of a system that has a transfer area, the release during transfer reaches outside the transfer area.*

In accordance with the above requirement, the following information intents to be the Product Transfer Area Assessment –for the Baker Lake Oil Handling Facility for both the Jet-A and the Diesel Tanks.

2 Fuel Transfer Area Description

2.1 Baker Lake Oil Handling Facility

The Baker Lake Oil Handling Facility (OHF) consists of six (6), ten (10) million liter tanks for diesel fuel, within secondary containment (Figure 1). The steel fuel tanks have been field-erected and built to API-650 standards with each bermed area holding two tanks. This area is capable of containing 110% of the volume of one ten (10) million liter tanks storage tank. Agnico Eagle is currently in the permitting process to add two (2) 10 ML diesel tanks in Baker Lake. The additional diesel tank will not change the current Product Transfer Area Assessment, as the process for fuel transfer will remain the same, i.e. no additional transfer area will be created.

The OHF also consist of eighteen (18), 100,000L double walled tanks, within secondary containment, for aviation fuel (Jet-A) (Figure 1). The steel fuel tanks have been field-erected and built to API-650 standards with the bermed area holding eighteen tanks. This area is capable of containing >110% of the volume of one 100,000L storage tank. Both Jet-A and Diesel storage area were designed by qualified engineering firm.

The Diesel and Jet-A tanks are refilled during the barge season on an annual basis, generally from July to October.

2.2 Ship to shore transfer area

The Diesel fuel transfer area from ship to tank farm consists of a permanent 6 inches steel pipe, 266m long. Two (2) shipper certified transfer hoses, 4 inches and 178m long, are connected to the shore permanent based pipeline manifold for the transfer of diesel fuel to the diesel tank farm (Photo 2). The diesel transfer rate is 200 m^3/hr. At the connection of the ship's transfer hose to the OHF manifold a portable containment pool is erected and in place during the transfer of product. This pool is capable of holding ~250L of liquid in the case that there is a leak at the flange or residual drips out of the conduit or hard wall pipe. Spill "pop-up" pools are also place under each joint for the transfer hose used to fill the Fuel tanks. These popup pools are only capable of holding 20-50 L of fuel and are in place to catch residual and be a first line of defense in the case of a leak. There is also a permanent watcher at the fuel manifold to detect any leak.

For Jet-A fuel, separate shipper certified hoses are laid out from the vessel to the Jet-A manifold located in the Jet-A Secondary Containment (Photo 3). As detailed in Section 2.1 above, this area is capable of containing >110% of the volume of one 100,000L storage tank. A total of 582m of 4'' certified hose are required to reach the Jet-A transfer area. The Jet-A transfer rate is 100 m^3/hr. Spill "pop-up" pools are place under each joint for the transfer hose used to fill the Fuel tanks. These popup pools are only capable of holding 20-50 L of fuel and are in place to catch residual and be a first line of defense in the case of a leak.

2.3 Refueling station to truck transfer area

For both the Diesel and Jet-A transfer area, there is one loading arm with dry quick connect coupling for tank truck filling operation (Photo 4). Loading arm is connected to an insulated pumping station (Photo 5) and consist of a single continuous 4m x 3 ½ inches pipe from the loading arm to the fuel truck. Both refueling system are equipped of a Scully System. These systems are capable of controlling fills and eliminating spills of tanker trucks. All fuel truck are equipped of a sensor that connected directly with the fuel dispenser. When the volume reach 90% of the truck tank capacity, the sensor stopped the refueling. The flow rate is approximately 715 L/min for both the Jet-A and Diesel. During refueling activities, a portable containment is place under the dry quick connect coupling to capture small spills that may result during disengagement of the loading arm. At the Diesel refueling station, a secondary containment area of 5,000L was constructed.

Location: 64°18’22.76” N, 95°57’33.99” W. Baker Lake, Nunavut
Diesel Tank System ID: EC# 00025772
Jet-A Tank System ID: EC# 00026142





Photo 1: Agnico Eagle Ltd.’s Baker Lake Oil Handling Facility



Figure 2: Diesel Transfer - Connection between shipper transfer hoses and Agnico permanent pipeline



Photo 3: Jet-A Transfer - Connection between shipper transfer hoses and Agnico permanent pipeline



Photo 4: Agnico Eagle Ltd.'s Refueling Station – Loading arm and Scully System



Photo 5: Agnico Eagle Ltd.'s Refueling Station – general view

3 Legislation

3.1 Ship to shore transfer area

Transfer of from ship to shore is performed in conformance with procedures outlined in:

- Canada Shipping Act;
- Response Organizations and Oil Handling Facilities Regulations;
- Vessel Pollution and Dangerous Chemical Regulation;
- Environmental Response Arrangements Regulations;
- Oil Handling Facilities Standards (TP 12402E);
- Response Organization Standards (TP 12401);
- Arctic Waters Oil Transfer Guidelines (TP 10783);
- Environmental Prevention and Response National Preparedness Plan (TP 13585);
- Release and Environmental Emergency Notification Regulations;
- Guidelines for reporting Incidents Involving Dangerous Goods, Harmful Substances and/or Marine Pollutants;
- Requirements of the Central & Arctic Regional Response Plan;
- National Fire Code of Canada (NFCC);
- Storage Tank Systems for Petroleum Products and Allied Petroleum Products Regulations – 2008; and
- Canadian Council of Ministers of the Environment, "Environmental Code of Practice of Aboveground and Underground Storage Tank Systems Containing Petroleum Products and Allied Petroleum Products – 2003 (Updated in 2013).

3.2 Refueling station to truck transfer area

Transfer of fuel into trucks is performed in conformance with procedures outlined in:

- National Fire Code of Canada (NFCC);
- American Petroleum Institute (API) Standard: 2610-94: *"Design, Construction, Operation, Maintenance and Inspection of Terminal and Tank Facilities"*;
- Canadian Petroleum Products Institute (CPPI, 1992*): "Professional Driver's Manual"*;
- Canadian Council of Ministers of Environment (CCME) – Code of Practice (COP) 2003; and
- Agnico Eagle fuel transfer procedure.

4 Analysis of Product Transfer Area Risks

The diesel and Jet-A storage tank system owned by Agnico Eagle Mines, located in Baker Lake, Nunavut, was evaluated in accordance with Environment and Climate Change Canada's (ECCC) approach to transfer area protection. A number of potential incidents, risk and related receiving environments were identified for this product transfer area.

The table below lists potential incidents, outcomes, description of PTA and receiving environments that have been identified for the storage tank system on site. The table also provides an evaluation of identified risks and an assessment on whether further action is required, and a list of mitigation measures.

Table 1: Product Transfer Risk Assessment – Ship to shore

Potential Incident	Outcome	PTA and Receiving Environment	Spill Consequence	Probability	Potential Impact	Evaluation	Mitigation Measures
Leakage if fuel remains in line after offloading and leakage at all couplings in the line (by the boat and outside the connections)	Maximum of ~7,900L of diesel and ~4,800L of Jet-A is released to Baker Lake	Secondary containment Adjacent soil/gravel area within ~10m Baker Lake	Low: the product is confined secondary containment. Moderate: the product reaches bare ground. High: the product reaches a water body.	Moderate	High	No Action Required	Trained Intertek Personal oversee product transfer at all time Line is cleared of fuel following transfer Portable containment used under each transfer hose connection
Coupling/equipment fails at onshore coupling	Maximum of ~7,900L of diesel and ~4,800L of Jet-A is released to Baker Lake			Moderate	High	No Action Required	Ships pumping system shuts off if hose pressure is lost. Trained Intertek Personal oversee product transfer at all time Transfer point is up gradient of pumping point so line does not completely drain if uncoupled Emergency Response Plan and Spill Contingency Plan Oil Pollution Emergency Plan Shipboard Oil Pollution Emergency Plan Marine spill response equipment adjacent to transfer point
Coupling/equipment fails at offshore coupling	Maximum of ~7,900L of diesel and ~4,800L of Jet-A is released to Baker Lake			Moderate	High	No Action Required	Spill contained onboard at pumping area Shipboard Oil Pollution Emergency Plan
Public interference	Transfer hose is damaged by passing boat or			Low	High	No Action Required	Community awareness conducted by Agnico

	transfer impacted by public protest						Boat traffic monitored by Desgagnes and Intertek
Operator spills small amount of fuel while uncoupling hose	~1 L of fuel is captured in secondary containment			High	Low	No Action Required	Portable containment used under each transfer hose connection
Vehicle contact with piping between transfer point and tank	Broken piping releases ~5,000L of fuel to adjacent gravel area, potentially reaching Baker Lake			Low	High	No Action Required	No road where pipes are installed for the transfer Trained Intertek Personal oversee product transfer at all time Fuel lines connected to tank farm can only release contents of the line.

Table 2: Product Transfer Risk Assessment - refueling station to fuel truck

Potential Incident	Outcome	PTA and Receiving Environment	Spill Consequence	Probability	Potential Impact	Evaluation	Mitigation Measures
Overfill during loading of fuel truck	Approximately 95L product is captured in secondary containment	Secondary containment Adjacent soil/gravel area within ~10m Bake Lake	Low: the product is confined secondary containment. Moderate: the product reaches bare ground. High: the product reaches a water body.	Moderate	Low	No Action Required	Secondary containment Scully fitted with optic overfill prevention system Permanent indoor structure with visual display for operator in cold weather Live cameras to Agnico Security Officer office
Overfill device fails	Product flows into secondary containment			Moderate	Low	No Action Required	Shut off button and tanker overfill pipe Scully System Permanent visual contact while refueling
Coupling/equipment fails at pump	Broken piping/hose			Moderate	Moderate	No Action Required	Shut off button, drainage to low point on roadside

station-hose connection.	releases ~121L of fuel to adjacent gravel area.						Emergency Response Plan and Spill Contingency Plan Trained spill response staff and equipment for large spills on site Spill kit
Absence of inspection (pre-op, checklist)	Faulty component or leak is not detected resulting in slow release of ~1L of product			Moderate	Moderate	No Action Required	Pre-op inspection (daily) Standard Operating Procedure (SOP)
Public access	Member of the public attempts to take or release fuel			Low	Low	No Action Required	Signage and surveillance cameras Fuel system security coded Community awareness conducted by Agnico
Vehicle contact with building/equipment	Broken piping releases ~1,000L of fuel to adjacent gravel area.			Low	Moderate	No Action Required	Secondary containment structure protects fuel station from collision by forming a barrier. Fuel lines connected to tank farm can only release contents of the line.
Inappropriate equipment for arctic conditions (arm/valve)	Valves and components fail in arctic conditions releasing ~121L of product			Moderate	Moderate	No Action Required	Valves and hoses suitable for arctic conditions installed. Pre-op inspection (daily)
Operator spills small amount of fuel while uncoupling hose	~1L of fuel is captured in secondary containment			High	Low	No Action Required	Portable containment used under dry quick connection

Please see Appendix A for the calculations relating to the product transfer areas. In summary, potential product spillage, volume has been calculated as follows:

Fueling station: a maximum delivery rate of 715 L/min and an emergency shut off time of 8 seconds would result in a product spillage volume of approximately 95.36L. Based on 8.9 cm hose at 4.06 m in length, a maximum potential spill at the tank / hose connection would result in an additional volume of 25.24 L, for a total 120.6 L of fuel spilled.

Ship to shore: a diesel maximum delivery rate of 3,333 L/min and an emergency shut off time of 8 seconds would result in a product spillage volume of approximately 444.4 L. Based on shipper transfer hose (10 cm diameter/178m in length * 2 hoses) and permanent pipeline (15 cm diameter/266 m in length), a maximum potential spill at the tank / hose connection would result in an additional volume of 7,492.65 L, for a total 7,937 L of diesel spilled.

Ship to shore: a Jet-A maximum delivery rate of 1,667 L/min and an emergency shut off time of 8 seconds would result in a product spillage volume of approximately 222.24 L. Based on 10 cm hose at 582 m in length, a maximum potential spill at the tank / hose connection would result in an additional volume of 4,568.70 L, for a total 4,790.94 L of Jet-A spilled.

5 Mitigation of Risks

5.1 Ship to shore transfer area

In the event of a spill, three (3) potential receiving environments have been identified for the fuel transfer system: the soil/gravel area partially surrounding the transfer area secondary containment and extending a distance of approximately 10 meters, the adjacent soil/ground surface, and the adjacent water body Baker Lake.

Any product amount of 100L or less that spills onto the gravel area can be recovered using the spill kit and shovels/equipment available on site. For spills of over 100 L, the product will likely reach the adjacent soil/ground surface and/or Baker Lake directly via overland surface flow (depending on the season). The following mitigation measures include:

- 250L secondary containment pool at onshore connection point;
- 20-50L spill 'pop-up' pools are also place under each joint for the transfer hose used;
- Pump and 1,000L portable containments on standby during transfer;
- Trained Intertek Personnel oversee product transfer at all time;
- Emergency Response Plan and Spill Contingency Plan on site;
- Oil Pollution Emergency Plan updated annually and review with all personnel involved in the ship to shore fuel transfer;
- Marine spill response equipment on site;
- As the ship to shore transfer only occurred during open water season, there is no potential spill risk during winter;
- Shipboard Oil Pollution Emergency Plan;
- The ship's pumping system is fitted with an emergency shut off system which is activated when pumping pressure is lost; and
- Annual MOCK spill and result analysis;

5.2 Refueling station to truck transfer area

In the event of a spill three (3) potential receiving environments have been identified for the refueling system: the gravel area surrounding the refueling station and extending a distance of approximately 10 meters, the adjacent soil/ground surface, and the adjacent water body Baker Lake.

Any product amount of 1,000L or less that spills onto the gravel area can be recovered using the spill kit and heavy equipment on site. For spills of over 1,000L, the product will likely reach the adjacent soil/ground surface and/or the Baker Lake directly via overland surface flow (depending on the season). During winter, the likely hood of product flowing to the shoreline increases; however, snow berms can be quickly installed. Mitigation measures include;

- Secondary containment for hose storage;
- Secondary containment for refueling of fuel trucks;
- Standard Operating Procedure (SOP);
- Inspection to determine if SOP are followed;
- Trained operators;
- Spill kit at refueling area containing absorbent pads;
- Marine spill response equipment on site;

- Personnel monitor transfer from viewing window in pump station; and
- Scully system - wire optic transfer system to prevent overfill.

6 Standard Operating Procedure (SOP)

6.1 Refueling station to truck transfer area

The Agnico procedure for diesel and Jet-A refueling fuel trucks in summarized as follows;

1. Perform an inspection of the vehicle.
2. Park the vehicle in the vicinity of the refueling tank and shut off your ignition.
3. Install wheel chocks on either side of the tanker tire.
4. Inspect the entire working area including the steps up to the HMI and the area in front of the loading arm and scully system; call your supervisor if there are problems.
5. Install the portable spill containment underneath the connection point.
6. Check the maximum capacity for the tanker being used. Ensure to only fill the tanker at 90% of the capacity to have room for fuel expansion at different temperatures, and a safe level for haulage. Fill the tanker to maximum 40,000L.
7. At the valve control panel, lift all the levers up, and make sure the valves are open.
8. Remove the cap of the scully plug and push and twist it onto the receiving end on the truck. Make sure the green light is on before continuing.
9. Connect the loading arm to the tanker.
10. Make sure the valves are open on each side.
11. Open the valve on the building.
12. Enter the control room and begin to program the fuel loading on the HMI.
13. Enter the applicable Microload identification and load sequence.
14. Enter the volume measure with the pop-up keypad.
15. Select the start button to activate the pump.
16. Once the fueling begins, the operator must monitor the situation diligently; this includes checking for leaks or monitoring any other unusual situations. The operator must be at the connection point at all times during fueling.
17. When finished pumping, close the valve on the building.
18. Disconnect the loading arm first, and then the truck level control.
19. Put the arm back and the truck level control in place. Close the valve.
20. Put the protection bag over the scully and the hose. Verify if the caps are put back on the truck.
21. Put back the portable spill containment.
22. At the valve control panel, pull down all the lever to close valve, and make sure they are closed.
23. Complete the mechanical verification in the pump station. Make sure they have no leaks on the equipment.
24. Before you leave, make sure the three doors are close at the fuel station.
25. Remove the wheel chocks and fully inspect the vehicle before beginning to bring the fuel to the Meadowbank Fuel Tank Farm.
26. If you encounter any emergency or a spill occurs, call your supervisor immediately and the Road supervisor of Agnico Eagle Mine Meadowbank.

6.2 Ship to shore transfer area

For a completed review of procedure during fuel transfer, refer to the Oil Pollution Emergency Plan. The fuel transfer is overseen by Intertek (contracted first responder). The Agnico procedure for refueling diesel and Jet-A tanks in summarized as follows:

1. The Oil Pollution Emergency Plan (OPEP) must be reviewed on an annual basis and updated prior to the first annual discharge. This will include but not limited to:
   a) Reviewing the phone numbers for emergencies
   b) Updating maps
   c) Review and if necessary update equipment lists
   d) Review roles and responsibilities
   e) Update Declaration
2. Contact Canadian Coast Guard and Transport Canada Pollution Prevention and make them aware of plans for transferring of fuel into our Oil Handling Facility (OHF) for that season
3. Complete Inventory report for Spill Response Sea Can at Agnico's Oil Handling Facility in Baker Lake
4. Ensure Shipping Company has provided Hose Testing Annual certification
5. All personnel who will be a part of the fuel transfer (including Baker Lake Supervisor and third part contractor Intertek) must review the OPEP and be familiar with preventive measures to take and with the steps to take in the case of a spill event while fueling
6. Install and monitor secondary containment underneath each connection of conduit on land
7. Ensure there is two-way functional communications between the OHF and the off-loading vessel
8. Ensure there is lighting in place at the transfer flange to provide illumination during any transfers taking place during the low to no light hours
9. Prior to any discharge, Agnico Eagle must receive a copy of the ship/shore checklist completed by the shipping company. Agnico Eagle should also verify this has been completed (as much as realistically possibly without boarding the ship)
10. The Pre-discharge Checklist for Agnico's Oil Handling Facility in Baker Lake must be completed, signed and provided to the Environment Department prior to discharge
11. During the ship-to-shore transfer, Agnico Eagle will have competent personnel on location at all times to monitor the fuel transfer and maintain contact with the tanker's crew
12. Monitor the fuel transfer at the beginning of each transfer and after that on an hourly basis checking the manifold, conduit, tank, and any connection points on land for spills and/or leaks. Communication between shore and ship should take place on an hourly basis
13. Have a fuel spill scenario annually

7 Conclusion

Agnico Eagle have the ability to respond and prevent spill to the fuel transfer area in Baker Lake according to the following management plan and refer the reader to those plan for more details:

- Oil Pollution Emergency Plan
- Spill Contingency Plan
- Shipboard Oil Pollution Emergency Plan
- Product Transfer Area Assessment – Baker Lake Oil Handling Facility

Furthermore, in the event of a spill reaching Baker Lake, a dedicated boat (open water season), containment booms, anchors, trench shovels, absorbent pads, pumps and are accessible year-round, and

regular spill response training is conducted with members of the Meadowbank Emergency Response Team and Environment Department. Meadowbank Environmental Technicians also conduct regular inspections of the Baker Lake OHF in order to ensure proper spill prevention and containment equipment is available, and that proper fuel transfer protocols are followed. All of the measures noted above are in place in order to contain, mitigate and prevent spills during the process of transferring fuel.

Appendix A - Potential Spill Quantities

1- Diesel Ship to shore

Flow rate = 200 m^3/hr (3,333 L/min) maximum rate
Transfer hose length: 17,800 cm, 10 cm diameter
Permanent pipeline: 26,600 cm, 15 cm diameter

Volume of Spill (from time it takes operator to shut off pumping)

3,333L/60s = 55.55 L/s
8s = time it takes for operator to turn off the pump should the tank start to overflow

Volume = 55.55L/s * 8s
= **444.4L**

Volume of the Shipper Transfer Hose

1. Radius = (diameter of the pipe / 2)
   Radius = (10/2)
   = 5

   Volume of a cylinder: V = πr2h
   Volume = 3.14 * 5^2 * 17,800
   = 1,397,300 cm^3

2. 1 Liter = 1,000m^3
   Volume in Liters = (volume in cm^3) * (1L/1,000cm^3)
   Volume = (1,397,300 / 1,000 L)
   = 1,397.3 L

3. Two (2) shipper transfer hose use to connect the permanent pipeline manifold
   = 1,397.3 * 2
   = **2,794.6 L**

Volume of the permanent pipeline

1. Radius = (diameter of the pipe / 2)
   Radius = (15/2)
   = 7.5

2. Volume of a cylinder: V = πr2h
   Volume = 3.14 * 7.5^2 * 26,600
   = 4,698,225 cm^3

3. 1 Liter = 1,000m^3
   Volume in Liters = (volume in cm^3) * (1L/1,000cm^3)
   Volume = (4,698,225 / 1,000 L)
   = 4,698 L

The maximum amount of a potential spill at the site would be **7,937L**.

2- Jet-A Ship to shore

Flow rate = 100 m^3/h (1,667 L/min) maximum rate
Transfer hose length: 58,200 cm, 10 cm diameter

Volume of Spill (from time it takes operator to shut off pumping)

1,667L/60s = 27.78 L/s
8s = time it takes for operator to turn off the pump should the tank start to overflow

Volume = 27.78L/s * 8s
= **222.24L**

Volume of Transfer Hose

1. Radius = (diameter of the pipe / 2)
   Radius = (10/2)
   = 5

   Volume of a cylinder: V = πr2h
   Volume = 3.14 * 5^2 * 58,200
   = 4,568,700 cm^3

2. 1 Liter = 1,000m^3
   Volume in Liters = (volume in cm^3) * (1L/1,000cm^3)
   Volume = (4,568,700 / 1,000 L)
   = **4,568.7 L**

The maximum amount of a potential spill at the site would be **4,790.94 L**.

3- Diesel and Jet-A Fuel Station to Fuel Truck

Flow rate = 715 L/min
Scully arm and hose length: 406cm, 8.9cm diameter

Volume of Spill (from time it takes operator to shut off pumping)

715L/min = 715L/60s = 11.92 L/s
8s = time it takes for operator to turn off the pump should the tank start to overflow

Volume = 11.92L/s * 8s
= **95.36 L**

Volume of Loading Arm

1. Radius = (diameter of the pipe / 2)
   Radius = (8.9/2)

= 4.45

Volume of a cylinder: V = πr2h

Volume = 3.14 * 4.45^2 * 406
= 25,245.02 cm^3

2. 1 Liter = 1,000m^3
   Volume in Liters = (volume in cm^3) * (1L/1,000cm^3)
   Volume = (25,245.02 / 1,000 L)
   = **25.24 L**

The maximum amount of a potential spill at the site would be **120.6L**.

Terrestrial Ecosystem Management Plan (TEMP), Version 6

AGNICO EAGLE

MEADOWBANK DIVISION

Terrestrial Ecosystem Management Plan

Prepared by:
Agnico Eagle Mines Limited – Meadowbank Division

Version 6
December 2018

EXECUTIVE SUMMARY

As a requirement of the Whale Tail Pit Project Certificate No.008, Condition 28, and Meadowbank Project Certificate No.004, Condition 54, this report provides an updated Terrestrial Ecosystem Management Plan (TEMP) for Agnico Eagle Mines Ltd. (Agnico Eagle) Meadowbank Gold Mine, which includes the All-Weather Access Road (AWAR) from Baker Lake to the Mine, the Vault Pit Haul Road, and the extension of the Meadowbank Mine through the Whale Tail Pit and Haul Road (inclusively the Project). In addition, the TEMP also applies to the proposed Whale Tail Expansion Project that includes a small expansion to the previous LSA to accommodate an additional pit (IVR Pit), underground mining and a vertical and minor horizontal expansion of the existing waste rock storage facility (WRSF). All other infrastructure related to processing (e.g., mill and tailings), camps, and airstrip, among others, remain unchanged. The Project is located approximately 90 to 150 km north of Baker Lake and 300 km inland from the northwest coast of Hudson Bay.

This revised TEMP has been written as a requirement of Project Certificate No.004 and No.008 in association with the Meadowbank Terrestrial Ecosystem Impact Assessment and the Whale Tail Pit Final Environmental Impact Statement, which identify potential residual effects of the Project to wildlife and wildlife habitat. For each potential effect, mitigation measures are proposed. To confirm that residual effects (i.e., after mitigation) are acceptable, a comprehensive monitoring plan is presented that evaluates the response of wildlife habitat and wildlife populations to the effects of the Project and Project-related activities, and measures effects against thresholds.

Adaptive management is used to assess the effectiveness of the mitigation. Ongoing review of the TEMP through the Whale Tail Pit regulatory process and annual Wildlife Monitoring Summary Reports by regulatory agencies, technical reviewers, Terrestrial Advisory Group, and stakeholders will further ensure that local and regional concerns have been adequately addressed.

This revised comprehensive TEMP builds on the successes of the original TEMP (October 2005) and incorporates the extension of the Meadowbank Mine through the Whale Tail Pit operations. To date, the TEMP has been effective in identifying, monitoring, and managing residual effects of the Project on wildlife and wildlife habitat. This revised TEMP has incorporated detailed decision trees outlining monitoring and adaptive management for varying scenarios of wildlife occurrence, and should enhance the ability of operations managers to respond to changes in wildlife distribution, abundance, and movement. This method provides transparency based on agreed upon approaches, thereby minimizing and mitigating potential Project/wildlife interactions.

IMPLEMENTATION SCHEDULE

This Plan will be implemented immediately subject to any modifications proposed by the Nunavut Water Board and Nunavut Impact Review Board as a result of the review and approval process.

DISTRIBUTION LIST

Agnico Eagle – General Manager

Agnico Eagle – Engineering Superintendent

Agnico Eagle – Geotechnical Engineer

Agnico Eagle – Environment Superintendent

Agnico Eagle – Environmental Coordinator

Agnico Eagle – Environmental Technician

DOCUMENT CONTROL

Version	Date (YMD)	Section	Revision
1	October 2005		Comprehensive plan for Meadowbank Project
2	May 2016	All	Update to include Whale Tail Pit and Haul Road
3	February 2017	All	Update in response to Whale Tail environmental assessment information requests
3.1	May 2017	All	Further revisions following meetings with GN, KivIA, HTO in Ottawa, February 22 and 23, 2017
3.2	June 2017	2.2, 3.4 and 4.0	Following EIS Technical Session and Community Roundtable in Baker Lake, April 28 – May 2, 2017
4	July 2017	All	Further revisions following meetings with GN, KivIA, HTO in Winnipeg, June 20 and 21, 2017
5	June 2018	All	Final revisions following final hearings, receipt of NIRB Project Certificate No.008 and comments from the TAG meeting.
6	December 2018	All	Revisions following receipt of NIRB Project Certificate No.008, TAG meeting and for review of the proposed Whale Tail Expansion Project.

Prepared By: Nunavut Environmental Consulting, Dougan & Associates, Golder Associates Ltd., and Meadowbank Environment Department

Approved by:



Ryan Vanengen
ryan.vanengen@agnicoeagle.com
819.651.2974
Nunavut Permitting Lead

TABLE OF CONTENTS

1. INTRODUCTION AND APPROACH 1

1.1 Background 1
1.2 Purpose and Objectives 5
1.3 Relevant Environmental Management Plans 5
1.4 Valued Ecosystem Components Selection 6
1.5 Species of Concern 7
1.6 Spatial Boundaries 7
1.7 Residual Effects 11

2. MITIGATION 12

2.1 General Mitigation 12
2.2 Caribou protection measures 13
2.3 VEC-Specific Mitigation 14
2.3.1 Wildlife Habitat 14
2.3.2 Ungulates 15
2.3.3 Predatory Mammals 18
2.3.4 Raptors 20
2.3.5 Waterbird 21
2.3.6 Upland Breeding Birds 22

3. MONITORING 24

3.1 Overview 24
3.2 General Monitoring 25
3.2.1 Road Surveys 25
3.2.2 Pits and Mine Site Ground Surveys 26
3.3 Wildlife Habitat 26
3.3.1 Objectives 26
3.3.2 Monitoring Approach 27
3.3.3 Thresholds 28
3.4 Invasive Plant Monitoring 29
3.4.1 Objectives and Thresholds 29
3.4.2 Monitoring Approach 29
3.4.3 Mitigation 30
3.5 Ungulates 30
3.5.1 Objectives 31
3.5.2 Monitoring Approach 37
3.5.3 Thresholds 54
3.6 Predatory Mammals 54
3.6.1 Objectives 54
3.6.2 Monitoring Approach 54
3.6.3 Thresholds 56
3.7 Raptors 57
3.7.1 Objectives 57
3.7.2 Monitoring Approach 57
3.7.3 Thresholds 59
3.8 Waterbirds 60

3.8.1 Objectives....60
3.8.2 Monitoring Approach....60
3.8.3 Thresholds....62
3.9 Upland Breeding Birds....62
3.9.1 Objectives....62
3.9.2 Monitoring Approach....62

4. REPORTING....63

4.1 Mitigation Audit....63
4.2 Terrestrial Advisory Group....64

5. LITERATURE CITED....65

LIST OF FIGURES

Figure 1: Project Location Map – Nunavut Overview....2
Figure 2: Project Location Map – Meadowbank and Whale Tail Expansion....3
Figure 3: Relationship between Effects, Mitigation, and Monitoring....4
Figure 4: Meadowbank RSA and LSA Boundaries for Monitoring Studies....9
Figure 5: Whale Tail RSA and LSA Boundaries for Monitoring Studies....10
Figure 6: Thresholds for Monitoring and Mitigation of Caribou in Proximity to the Mine Operations....32
Figure 7: Thresholds for Monitoring and Mitigation of Caribou in Proximity to the Whale Tail Haul Road....33
Figure 8: Thresholds for Monitoring and Mitigation of Caribou in Proximity to the All Weather Access Road (AWAR)....34
Figure 9: Thresholds for Monitoring and Mitigation of Ungulates in Proximity to Blasting Activities....35
Figure 10: Thresholds for Monitoring and Mitigation of Muskox in Proximity to the Project....36
Figure 11: Caribou Camera Monitoring Locations....49
Figure 12: Conceptual Hunter Harvest Study Partnership, Participants, and Relevant Objectives....53
Figure 13: Thresholds for Monitoring and Mitigation of Predatory Mammal Dens in Proximity to the Project....57
Figure 14: Thresholds for Monitoring and Mitigation of Raptor Nests in Proximity to the Project....59

LIST OF TABLES

Table 1: Valued Ecosystem Components in the Meadowbank and Whale Tail Study Areas....6
Table 2: Species of Concern Meadowbank and Whale Tail Study Areas....7
Table 3: General Mitigation for the Meadowbank Mine, and Whale Tail Pit and Haul Road....12
Table 4: Caribou Protection Measure Components to be Evaluated....13
Table 5: Mitigation to Minimize Effects to Wildlife Habitat at the Meadowbank Mine, and Whale Tail Pit and Haul Road and proposed Whale Tail Expansion....15
Table 6: Summary of AWAR Caribou Observations from 2007 to 2016 by Season and Collar Data from the Ahiak/Beverly, Lorillard, and Wager Bay Herds (2000 to 2016)....16
Table 7: Mitigation to Minimize Effects to Ungulates at the Meadowbank Mine and Whale Tail Pit and Haul Road and proposed Whale Tail Expansion....17
Table 8: Mitigation to Minimize Effects to Predatory Mammals at the Meadowbank Mine and Whale Tail Pit and Haul Road and proposed Whale Tail Expansion....19

Table 9: Mitigation to Minimize Effects to Raptors at the Meadowbank Mine and Whale Tail Pit and Haul Road and proposed Whale Tail Expansion 20
Table 10: Mitigation to Minimize Effects to Waterbirds at the Meadowbank Mine and Whale Tail Pit and Haul Road and proposed Whale Tail Expansion 21
Table 11: Mitigation to Minimize Effects to Upland Breeding Birds at the Meadowbank Mine and Whale Tail Pit and Haul Road and Proposed Whale Tail Expansion 23
Table 12: Monitoring Activities Being Undertaken for the Project Facilities, Haul Roads, and All-Weather Access Road 24
Table 13: Monitoring Approach for Wildlife Habitat for the Meadowbank, Whale Tail Project and proposed Whale Tail Expansion 27
Table 14: Monitoring Approach for Ungulates for the Project 39
Table 15: Summary of Caribou Numbers by Group Size Thresholds along the All-Weather Access Road (AWAR) from 2007 to 2016 42
Table 16: Seasonal Caribou Group Size Thresholds Representing the Protection of 75% of All Caribou Observed, with 95% Confidence Intervals 43
Table 17: Initial Seasonal Caribou Group Size's as per Project Certificate No.008, Condition 30 43
Table 18: Monitoring Approach for Predatory Mammals at the Meadowbank, Whale Tail Project and proposed Whale Tail Expansion 55
Table 19: Monitoring Approach for Raptors at the Meadowbank, Whale Tail Project and proposed Whale Tail Expansion 58
Table 20: Monitoring Approach for Waterbirds at the Meadowbank, Whale Tail Project and proposed Whale Tail Expansion 61

LIST OF APPENDICES

Appendix A: Screening Level Risk Assessment Plan
Appendix B: Meadowbank Mine Project Certificate No.004, Whale Tail Pit Project Certificate No.008 Terms and Conditions, and Government of Nunavut Commitments
Appendix C: Wildlife Protection & Response Plan
Appendix D: Field Data Forms and UTM Coordinates for Monitoring Programs
Appendix E: Peregrine Falcon Management and Protection Plan
Appendix F: Migratory Bird Mitigation Plan
Appendix G: Viewshed Analysis
Appendix H: Representative Figure from Baseline Characterization Report
Appendix I: Seasonal Group Size Thresholds
Appendix J: Predatory Mammal Den Management and Protection Plan
Appendix K: Haul Road Design Drawing

1. INTRODUCTION AND APPROACH

1.1 BACKGROUND

This report provides the Terrestrial Ecosystem Management Plan (TEMP) for Agnico Eagle Mines Ltd. (Agnico Eagle) Meadowbank Gold Mine, which includes the All-Weather Access Road (AWAR) from Baker Lake to the Mine, the Vault Pit Haul Road, and the Whale Tail Pit and Haul Road extension (inclusively the Project; see **Figures 1** and **2**). In addition, the TEMP also applies to the proposed Whale Tail Expansion Project that includes a small expansion to the previous Local Study Area (LSA) to accommodate an additional pit (IVR Pit), underground mining and a vertical and minor horizontal expansion of the existing waste rock storage facility (WRSF). All other infrastructure related to processing (e.g., mill and tailings), haul road, camps, and airstrip, among others, remain unchanged. The Project is located from approximately 90 to 150 km north of Baker Lake and 300 km inland from the northwest coast of Hudson Bay. The Project area is above the tree line near the Arctic Circle. The local physiography is characterized by numerous lakes and low, rolling hills covered mainly by lichen/rock complexes, and heath tundra.

This TEMP has been written to ensure consistency in association with the Meadowbank Terrestrial Ecosystem Impact Assessment (EIA; Cumberland 2005a), the Whale Tail Pit Final Environmental Impact Statement Addendum (EIS; Golder 2016) and proposed Whale Tail Expansion activities, which identify potential residual effects of the Project to vegetation and wildlife. The EIAs are based on an analysis of Project components and their effects on terrestrial Valued Ecosystem Components (VECs). In addition to being a revision of the original TEMP (Cumberland 2005a) and building on the monitoring experience at Meadowbank, this TEMP has also benefitted from collaborative input from the Government of Nunavut Department of Environment (GN), the Kivalliq Inuit Association (KivIA), and the Hunters and Trappers Organization (HTO) of Baker Lake through annual report reviews, technical reviews, workshops, and discussions through the Terrestrial Advisory Group (TAG).

A summary of environmental effects and a description of mitigation measures that have already been implemented during the design, construction, and operations phases of the Project, and those that will be implemented, are provided in this document. A detailed description of potential environmental effects is provided in the Project's EIA documents.

For each potential effect (described in detail in the EIAs), mitigation measures are proposed. To measure residual effects (i.e., after mitigation), a monitoring plan is presented that evaluates the response of vegetation communities and wildlife to the effects of the Project and Project-related activities, and measures effects against thresholds (see **Figure 3**).

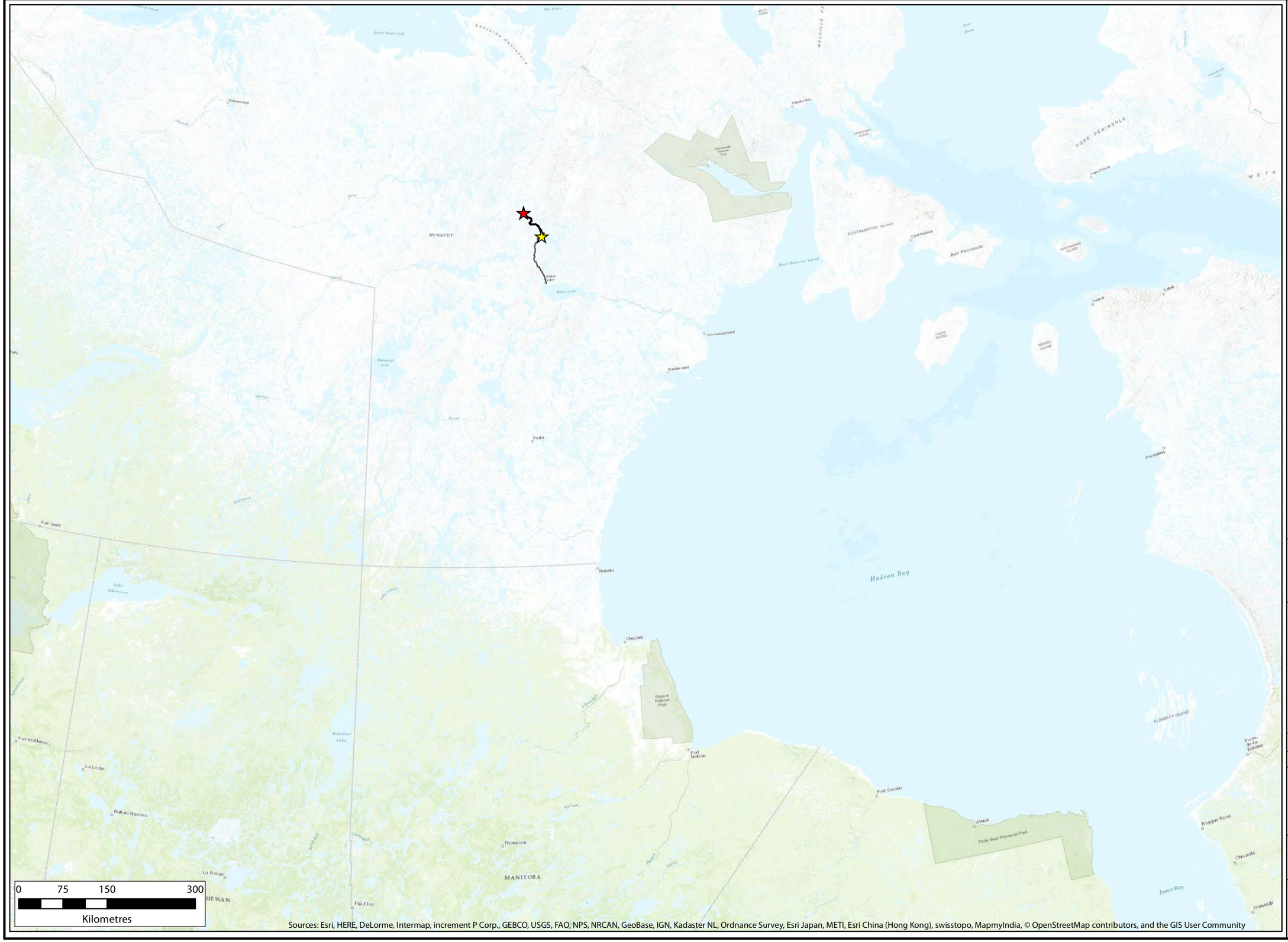

Legend

- Whale Tail Project Location
- Meadowbank Mine Site
- Haul Road (AEM, Nov. 2015)
- All Weather Access Road (AWAR)

Project Location Map - Nunavut Overview

DOUGAN & ASSOCIATES
ECOLOGICAL CONSULTING & DESIGN
77 Wyndham Street South • Guelph ON N1E 5R1
T 519.822.1609 • F 519.822.5389 • www.dougan.ca

Nunavut ENVIRONMENTAL CONSULTING LTD

PROJECT: Terrestrial Ecosystem Management Plan

CLIENT: Agnico Eagle Mines Limited

N W E S
UTM Zone 14 NAD83

DATE: FEBRUARY 2016
SCALE: 1:6,000,000
DRAWN BY: LC
CHECKED BY: MAY

Figure: 1

The information displayed on this map has been compiled from various sources. While every effort has been made to accurately depict the information, this map should not be relied on as being a precise indicator of locations, features, or roads, nor as a guide to navigation. MNR data provided by Queen's Printer of Ontario. Use of the data in any derivative product does not constitute an endorsement by the MNR or the Ontario Government of such products.

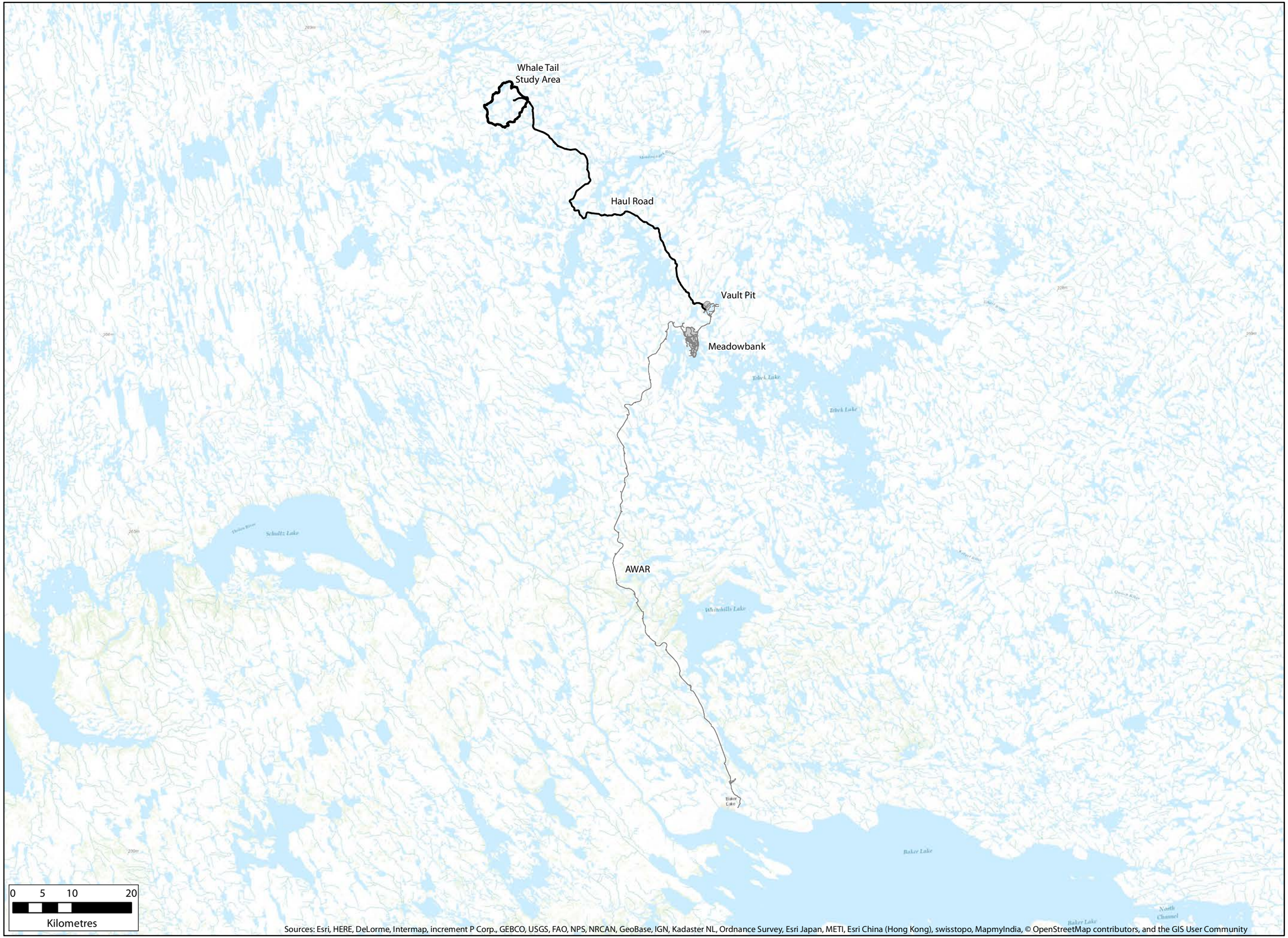

Sources: Esri, HERE, DeLorme, Intermap, increment P Corp., GEBCO, USGS, FAO, NPS, NRCAN, GeoBase, IGN, Kadaster NL, Ordnance Survey, Esri Japan, METI, Esri China (Hong Kong), swisstopo, MapmyIndia, © OpenStreetMap contributors, and the GIS User Community

Legend

- Whale Tail Study Area
- Haul Road (AEM, Nov. 2015)
- Meadowbank Mine Site
- All Weather Access Road (AWAR)

Project Location Map - Meadowbank & Whale Tail

DOUGAN & ASSOCIATES
ECOLOGICAL CONSULTING & DESIGN
77 Wyndham Street South • Guelph ON N1E 5R3
T 519.822.1609 • F 519.822.5389 • www.dougan.ca

Nunavut ENVIRONMENTAL CONSULTING LTD

PROJECT: Terrestrial Ecosystem Management Plan

CLIENT: Agnico Eagle Mines Limited

N W E S
UTM Zone 14 NAD83

DATE: FEBRUARY 2016

SCALE: 1:600,000

DRAWN BY: LC

CHECKED BY: MAY

Figure:

2

The information displayed on this map has been compiled from various sources. While every effort has been made to accurately depict the information, this map should not be relied on as being a precise indicator of locations, features, or roads, nor as a guide to navigation. MNR data provided by Queen's Printer of Ontario. Use of the data in any derivative product does not constitute an endorsement by the MNR or the Ontario Government of such products.

Figure 3: Relationship between Effects, Mitigation, and Monitoring

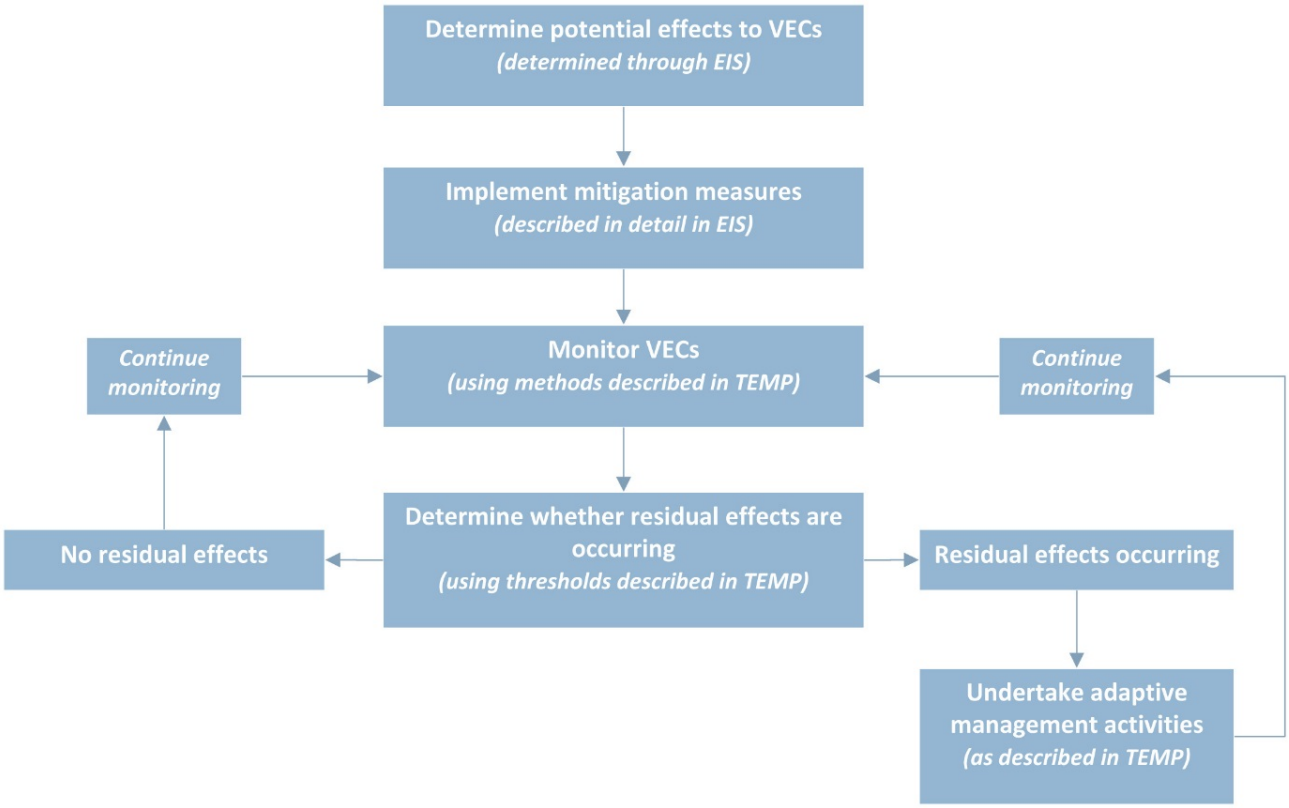

Where monitoring determines that unacceptable residual effects exist, an adaptive management approach will be taken to assess the monitoring and mitigation. Additional mitigation will be the most likely means by which this will be accomplished. Adaptive management is an ongoing process that evolves throughout the life of the Project as better and more effective ideas are introduced in a process that is designed to be continually improving. Ongoing review of the TEMP and annual Wildlife Monitoring Summary Reports (which provide results of TEMP monitoring programs) by regulatory agencies, technical reviewers, and stakeholders will further ensure that local and regional concerns have been adequately addressed. All of these approaches or plans have been previously reviewed by Nunavut Impact Review Board (NIRB). For example, due to concerns raised by local stakeholders, Agnico Eagle has updated the Air Quality and Dustfall Monitoring Plan (Agnico Eagle 2018) to continue to measure dustfall along the Baker Lake to Meadowbank AWAR and Whale Tail Haul Road, and a Screening Level Risk Assessment Plan (**Appendix A**). In addition, response procedures have been developed for when Ungulates, Predatory Mammal dens, and Raptor nests are in close proximity to Project facilities.

The mitigation and monitoring procedures identified in this TEMP will be integrated into all stages of the Project to ensure that mine operation and future mine development can proceed as scheduled while accommodating wildlife management needs. The TEMP also outlines strategies for identifying how natural changes in the environment can be distinguished from Project-related

effects. Reporting of natural versus Project-related effects will be in the annual Wildlife Monitoring Summary Report.

This TEMP builds on the success of the original TEMP (October 2005) and subsequent meetings and feedback from the Kivalliq Inuit Association (KivIA), the Baker Lake Hunter and Trapper Organization (HTO), the Kivalliq Wildlife Board (KWB), and the Government of Nunavut (GN). The revised TEMP includes monitoring of the extension of the Meadowbank Mine through the operation of Whale Tail Pit and proposed Whale Tail Expansion, and additions (e.g., decision trees for wildlife monitoring and management) will increase the transparency of the monitoring and mitigation, and enhance the ability of operation managers to protect wildlife occurring in the area.

1.2 PURPOSE AND OBJECTIVES

While specific monitoring objectives for each VEC are provided in later sections, the TEMP should meet the following global objectives:

- Provide information to test the predicted wildlife-related effects of the Project
- Estimate the effectiveness of environmental design and mitigation efforts
- Incorporate local and traditional ecological knowledge (Inuit Qaujimajatuqangit)
- Monitor for action levels or thresholds that could be used to initiate additional mitigation or studies
- Reduce uncertainties and provide information that increases confidence in environmental assessment predictions of future developments
- Consider regional and collaborative environmental monitoring programs, and contributions to regional or national monitoring initiatives
- Reduce Project related effects to wildlife

1.3 RELEVANT ENVIRONMENTAL MANAGEMENT PLANS

This document includes overlap with other environmental management plans for the Meadowbank Mine, Whale Tail Project, and proposed Whale Tail Expansion. The following other plans contain elements of mitigation and monitoring that are relevant to the terrestrial environment.

- Air Quality and Dustfall Monitoring Plan
- Hazardous Materials Management Plan
- Landfarm Design and Management Plan
- Landfill Design and Management Plan
- Noise Monitoring and Abatement Plan

- Spill Contingency Plan
- Traffic Monitoring Plan
- Transportation Management Plan All-weather Private Access Road
- Wildlife Protection and Response Plan
- Predatory Mammal Den Management and Protection Plan
- Migratory Bird Mitigation Plan

1.4 VALUED ECOSYSTEM COMPONENTS SELECTION

Valued Ecosystem Components were selected through consultation with regulatory and governmental authorities and members of the local community (e.g., Hamlet of Baker Lake, Baker Lake HTO), and a review of VECs identified in other northern mines. Selection of VECs was further refined through the consideration of one or more of the following criteria: conservation status, relative abundance within the Project study area, importance in subsistence lifestyle and economy, importance in predator-prey systems, habitat requirement size and sensitivity, and contribution to local area concerns.

Based on this selection process, the key terrestrial VECs were determined to be: Wildlife Habitat, Ungulates, Predatory Mammals, Raptors, Waterbirds, and Upland Breeding Birds. Key species associated with these VECs are shown in **Table 1.**

Table 1: Valued Ecosystem Components in the Meadowbank and Whale Tail Study Areas

VEC	Common Name	Scientific Name
Vegetation	N/A	N/A
Ungulates	barren-ground caribou muskox	*Rangifer tarandus* ssp. *groenlandicus* *Ovibos moschatus*
Predatory Mammals	grizzly bear wolverine gray (Arctic) wolf Arctic fox	*Ursus arctos* *Gulo* *Canis lupus* *Vulpes lagopus*
Raptors	peregrine falcon gyrfalcon rough-legged hawk snowy owl	*Falco peregrinus* ssp. *tundrius* *Falco rusticolus* *Buteo lagopus* *Nyctea scandiaca*
Waterbirds	Canada goose long-tailed duck loons waterfowl[(a)]	*Branta canadensis* *Clangula hyemalis* *Gavia* spp.
Upland Breeding Birds	rock ptarmigan lapland longspur horned lark semipalmated sandpiper sandhill crane	*Lagopus mutus* *Calcarius lapponicus* *Eremophila alpestris* *Calidris pusilla* *Grus canadensis*

a) Waterfowl, in general, are included based on concerns related to potential for bycatch of diving birds during fish-outs, see Section 2.3.5

1.5 SPECIES OF CONCERN

Species of concern include those species identified by the Committee on the Status of Endangered Wildlife in Canada (COSEWIC) as being At Risk or Threatened, and may be impacted by the Project. Species of concern for the Project are listed in **Table 2**.

Table 2: Species of Concern Meadowbank and Whale Tail Study Areas

Species	COSEWIC Status	SARA Status	Effects Pathways
Barren-ground caribou	Threatened	No schedule	• mortality due to vehicle collisions • habitat loss • change in harvest due to improved access • barriers to movement and changes in behaviour
Grizzly bear	Special Concern	No schedule	• habitat loss • mortality due to attraction or vehicle collisions
Polar Bear	Special Concern	Schedule 1	• None anticipated
Wolverine	Special Concern	No schedule	• habitat loss • mortality due to attraction or vehicle collisions
Short-eared Owl	Special Concern	Schedule 1	• habitat loss
Peregrine Falcon	Special Concern	Schedule 1	• physical hazards to nests on mine infrastructure or in quarries
Red-Necked Phalarope	Special Concern	No schedule	• habitat loss

As per Project Certificate No.008, Condition 35, Agnico Eagle will ensure that the mitigation and monitoring strategies developed for Species at Risk (SARA) are updated as necessary to maintain consistency with any applicable status reports, recovery strategies, action plans, and management plans that may become available through the duration of the Project. Updates to the SARA will be considered during annual review and with each new revision of the TEMP. **Appendix B** highlights the Project Certificate No.008 Term or Condition related to the TEMP.

1.6 SPATIAL BOUNDARIES

The Meadowbank Mine local study area (LSA) includes a 5 km radius area centred on the Mine site and a 5 km radius around the Vault Site creating an elliptical shape with a total area of 154 km^2. The AWAR LSA consists of a 3 km wide corridor centred on the AWAR between Baker Lake and the Meadowbank Mine (**Figure 4**). The regional study area (RSA) encompasses an area that includes a 25 km radius area around the Main and Vault sites and a 50 km wide corridor along the AWAR for a total area of 5,077 km^2 (**Figure 4**).

The Whale Tail LSA is a 3 km corridor centered on the Whale Tail Haul Road and borrow site access roads (i.e., 1.5 km on either side of the road and 1.5 km around borrow areas) and includes an approximate 1.5 km buffer around development areas at the Whale Tail Pit area, for a total area of 282 km^2. The Whale Tail RSA is a 50 km corridor centred on the Haul Road alignment (i.e., 25 km on either side of the Haul Road and borrow site access roads, and 25 km around borrow areas), with a total area of 5,017 km^2 (**Figure 5**).

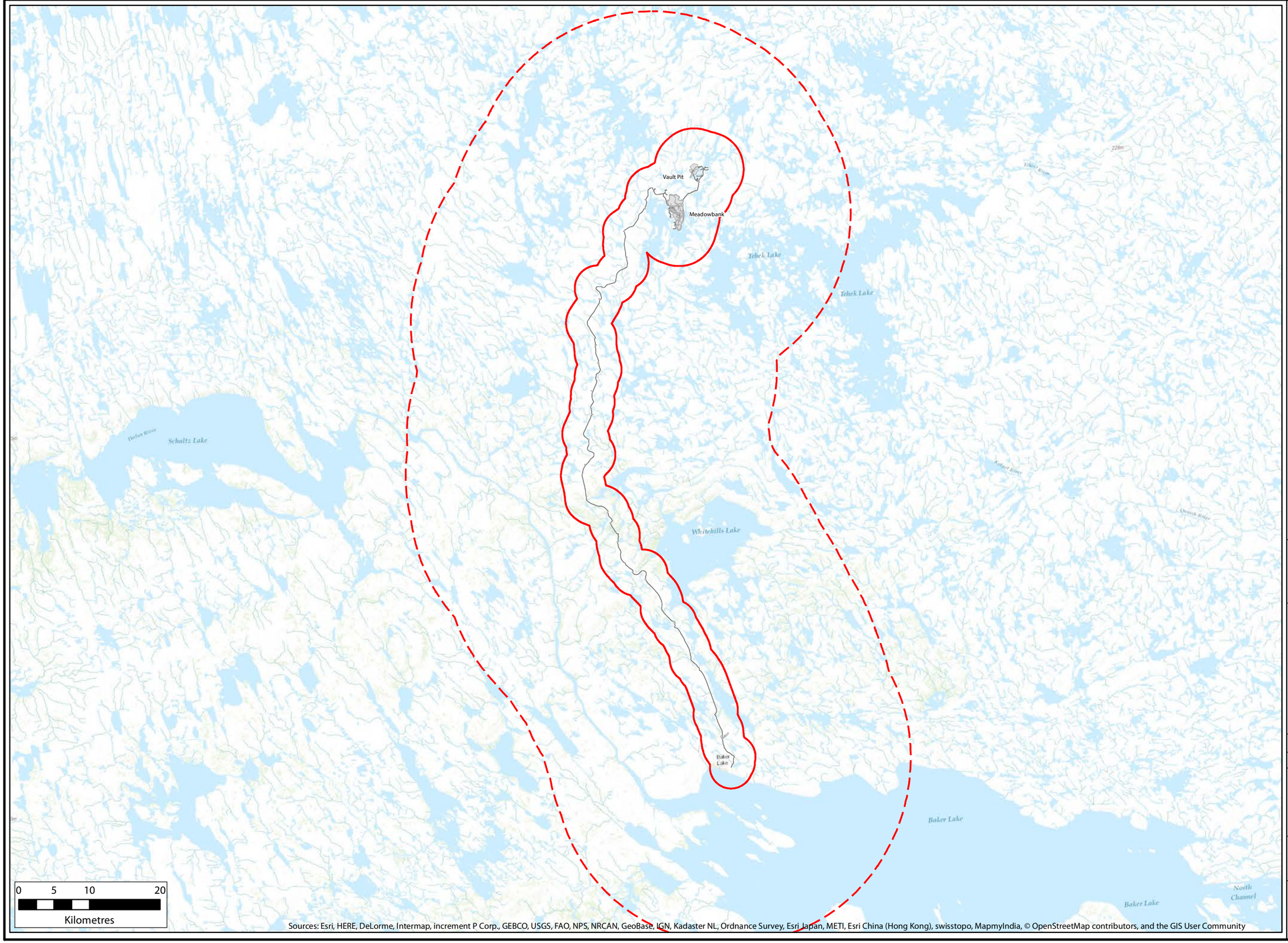

Sources: Esri, HERE, DeLorme, Intermap, increment P Corp., GEBCO, USGS, FAO, NPS, NRCAN, GeoBase, IGN, Kadaster NL, Ordnance Survey, Esri Japan, METI, Esri China (Hong Kong), swisstopo, MapmyIndia, © OpenStreetMap contributors, and the GIS User Community

Legend

- Meadowbank (5 km) & AWAR (3 km) LSA Boundary
- AWAR RSA Boundary (25 km)
- Meadowbank Mine Site
- All Weather Access Road (AWAR)

Meadowbank RSA & LSA Boundaries for Monitoring Studies

DOUGAN & ASSOCIATES
ECOLOGICAL CONSULTING & DESIGN
77 Wyndham Street South • Guelph ON N1E 5R3
T 519.822.1609 • F 519.822.5389 • www.dougan.ca

Nunavut ENVIRONMENTAL CONSULTING LTD

PROJECT: Terrestrial Ecosystem Management Plan

CLIENT: Agnico Eagle Mines Limited

N W E S
UTM Zone 14 NAD83

DATE: FEBRUARY 2016

SCALE: 1:500,000

DRAWN BY: LC

CHECKED BY: MAY

Figure: 4

The information displayed on this map has been compiled from various sources. While every effort has been made to accurately depict the information, this map should not be relied on as being a precise indicator of locations, features, or roads, nor as a guide to navigation. MNR data provided by Queen's Printer of Ontario. Use of the data in any derivative product does not constitute an endorsement by the MNR or the Ontario Government of such products.

Whale Tail Study Area

Vault Pit

Meadowbank

0 5 10 20
Kilometres

Sources: Esri, HERE, DeLorme, Intermap, increment P Corp., GEBCO, USGS, FAO, NPS, NRCAN, GeoBase, IGN, Kadaster NL, Ordnance Survey, Esri Japan, METI, Esri China (Hong Kong), swisstopo, MapmyIndia, © OpenStreetMap contributors, and the GIS User Community

Legend

- Whale Tail Study Area
- Haul Road (AEM, Nov. 2015)
- Esker Access Road
- Meadowbank Mine Site
- All Weather Access Road (AWAR)
- LSA Boundary (1.5 km)
- RSA Boundary (25 km)

Whale Tail RSA & LSA Boundaries for Monitoring Studies

DOUGAN & ASSOCIATES
ECOLOGICAL CONSULTING & DESIGN
77 Wyndham Street South • Guelph ON N1E 5R3
T 519.822.1609 • F 519.822.5389 • www.dougan.ca

Nunavut ENVIRONMENTAL CONSULTING LTD

PROJECT: Terrestrial Ecosystem Management Plan

CLIENT: Agnico Eagle Mines Limited

N W E S
UTM Zone 14 NAD83

DATE: FEBRUARY 2016

SCALE: 1:350,000

DRAWN BY: LC

CHECKED BY: MAY

Figure:

5

The information displayed on this map has been compiled from various sources. While every effort has been made to accurately depict the information, this map should not be relied on as being a precise indicator of locations, features, or roads, nor as a guide to navigation. MNR data provided by Queen's Printer of Ontario. Use of the data in any derivative product does not constitute an endorsement by the MNR or the Ontario Government of such products.

1.7 RESIDUAL EFFECTS

Residual effects are Project effects that remain after implementation of all mitigation. A comprehensive assessment of the expected residual effects on vegetation and wildlife has been provided in the Meadowbank Terrestrial Ecosystem Impact Assessment (Cumberland 2005a), the Whale Tail Pit Environmental Impact Statement (Golder 2016) and the proposed Whale Tail Pit Expansion Addendum (Golder 2018). The effectiveness of mitigation (described in **Section 2.0**) and magnitude of residual effects will be determined via monitoring programs outlined in this document, and compared against thresholds described in **Section 3.0**. Where monitoring determines that residual effects are outside established thresholds of acceptability, adaptive management will lead to more intensive monitoring or additional mitigation.

2. MITIGATION

2.1 GENERAL MITIGATION

General mitigation applicable to most wildlife are provided in **Table 3** below, while **Section 2.2** summarizes the anticipated environmental effects and mitigation specific to each VEC.

Table 3: General Mitigation for the Meadowbank Mine, and Whale Tail Pit and Haul Road

Environmental Education
Employees will participate in a wildlife awareness program during their induction, including bear safety procedures, instructions on wildlife rights-of-way, and other wildlife protection measures (see Wildlife Response and Protection Plan in **Appendix C**).
Feeding of wildlife is prohibited.
Wildlife on Site
A wildlife reporting system (e.g., wildlife log) will be maintained by environmental staff. Where human safety or wildlife well-being is an issue, employees will be notified regarding procedures (up to an including stopping work in the affected area). The Wildlife Protection and Response plan includes a staff organizational chart indicating who has responsibility for predatory mammal-human interactions, and procedures to be followed (see **Appendix C**).
Road Access and Restrictions
Public use of the AWAR is monitored by the Safety Department. For mine safety reasons, Baker Lake residents will be prohibited from travelling beyond the 85 km mark of the AWAR (see **Figure 2**). Because the Vault and Whale Tail Haul Roads begin within existing mine facilities and are beyond km 85, public access to these roads will be limited (see **Figure 2**). Voluntary hunting use data will be collected by Agnico Eagle at the gatehouse, and further action regarding acquiring this information is being considered to evaluate the presence of ATVs and hunting (i.e., shooting) as a mechanism affecting caribou interactions with the AWAR and as a component of the Hunter Harvest Survey (HHS).
The *Wildlife Act* prohibits discharging firearms along or across roads or within 1 km of dwellings (see **Figure 2** for no shooting zone). Upon notification by Agnico Eagle or this public, this is to be enforced by the Government of Nunavut (GN). Marker posts will be placed periodically to delineate the 1 km buffer along the road.
To avoid unnecessary degradation of wildlife habitats, Project vehicles will be restricted to existing roads.
Wildlife have the right-of-way on roads.
Maximum speed limits of 50 km/hr will be enforced, including periods of reduced speed limits when caribou, and/or other wildlife, are on or adjacent to the road.
All road-killed wildlife will be reported immediately to Meadowbank Mine environmental staff and removed to avoid attracting scavengers. If necessary, animals will be examined by the Environment Department to determine cause of death; ungulate and predatory mammal mortalities will be reported to the GN wildlife conservation officer. If approved by the GN officer, disposal of ungulates and predatory mammals will be through incineration at the mine or as directed by the GN. In the case of an ungulate and predatory mammal collision, drivers must fill out a vehicle/animal collision report to document the conditions and circumstances surrounding the incident. All such incidents will be reported using the Incident Report Form **(Appendix D)**.
Hunting
Hunting and harassment of any wildlife species by mine employees while on shift will be prohibited.
Access by way of All Terrain Vehicle (ATV) from Baker Lake to km 85 on the AWAR for hunting, is permissible according to NIRB Project Certificate No.004, Condition 32. See **Figure 2**

Table 3: General Mitigation for the Meadowbank Mine, and Whale Tail Pit and Haul Road

Agnico Eagle will enforce the policy of a "no-hunting zone" from km 85 to Whale Tail Pit, to reduce road-related effects on wildlife and to protect employee safety. A 1 km marker at the gatehouse will be used to ensure all hunters are aware of these restrictions. Periodic markers will be used along the AWAR to delineate the 1 km no-hunting zone between the Baker Lake gatehouse and km 85. See **Figure 2**.
Except for designated persons (e.g., wildlife monitors, environmental technicians), employees will not be permitted to carry firearms.
Spills and Contamination
All spills will be immediately cleaned up or isolated to minimize the potential for exposure to wildlife or degradation of the surrounding environment (see the Spill Contingency Plan).
Water that has the potential to come into contact with the mining activities will be intercepted, contained, and will meet license limits prior to discharge.

2.2 CARIBOU PROTECTION MEASURES

Caribou Protection measures employed by the project will be evaluated, in collaboration with, and through data sharing among Terrestrial Advisory Group (TAG) members, including the components outlined in **Table 4**.

Table 4: Caribou Protection Measure Components to be Evaluated

Caribou Protection Measures
Caribou protection measures employed the project will evaluated, including the following components
Tests of the monitoring methods that are used to detect caribou near the Project in order to quantify: (i) the probability of detecting groups; (ii) the effective range of detection; and (iii) the spatial extent of detection capacity relative to the mitigation distance buffers;
The collection of additional data on caribou group sizes to confirm the relevance of group size thresholds used in mitigation;
Collection and analyses of collar data to quantify the Zone-of-Influence (ZOI) associated with the Whale Tail Project, its haul road and the existing Meadowbank mine (and all-weather-access-road [AWAR]);
Collection and analyses of collar data to quantify the effects of the Whale Tail Project, its haul road and the existing Meadowbank mine (and AWAR) on the movements of caribou, in particular during migratory periods;
Collection of accurate records documenting the detection of caribou and the subsequent implementation of mitigation measures;
Analyses of collar Government of Nunavut (September 21, 2017) Construction and Active Phases To be completed within 5 years of commencement If active mining life span extended, the evaluation should be updated every 5 years NIRB Final Hearing Decision for the Whale Tail Pit Project NIRB File No. 16MN056 Page B-2 No. Subject Commitment Issue Raised by (Date of Commitment) Project Phase/Timing data comparing the movements of individuals that were and were not subject to the implementation of mitigation measures.
Evaluation of Caribou Protection Measures
The scope of this evaluation will include the following:
A study area or areas that encompass the Whale Tail mine site, haul road, Meadowbank mine and all-weather-access-road (including all activities utilizing this infrastructure including on-going exploration), all of which are integral components of the Project;
The use of accepted scientific methods and experimental designs to provide quantitative information;

The engagement of recognized subject matter experts in each area of the evaluation;
Collection of data with sufficient statistical power to detect potential impacts;
Guidance on study designs, analyses and interpretation from the Project's TAG;
The collection of data during both the construction and active mining phases of the Project;
Completion of the evaluation within 5 years of Project commencement (beginning with construction) to ensure that any adverse effects or deficiencies in caribou protection measures are revealed prior to potential extensions in the use of Project infrastructure;
A technical report, as noted above in (g), for the evaluation to be submitted to NIRB; and if the Project's active mining life span is extended beyond that currently proposed (i.e. 2022), including extended use of the haul road to support other projects, the evaluation should be updated every 5 years.

2.3 VEC-SPECIFIC MITIGATION

2.3.1 Wildlife Habitat

2.3.1.1 Summary of Potential Environmental Effects

Permanent habitat loss will occur due to the construction footprint of mine facilities, including mine buildings, haul roads, and access roads to quarry and borrow sites. Dewatering of Whale Tail Lake at the end of the construction phase, will result in the flooding of a number of tributary lakes upstream of the Whale Tail Dike to the Mammoth Lake Watershed, thereby altering flows to Mammoth Lake and downstream lakes. This change in water regime can strongly influence plant species composition, community structure, and biological diversity (Vale et al. 2015). These temporary changes in water levels will affect soil moisture, and may result in localized effects to vegetation quality through decreased species abundance and flooding. All terrestrial habitats provide some value to wildlife VECs. Consequently, loss or degradation of any of these habitats may result in localized negative effects on wildlife.

Another potential effect on Wildlife Habitat is degradation from dust and exhaust. Bryophytes and lichens may experience the largest effects close to roads where the greatest amount of deposition frequently occurs. Consistent with current dustfall monitoring and terrestrial monitoring along the AWAR, the EIA and EIS predicted that the primary effects of dust are generally confined to the immediate area next to roadways (Cumberland 2005a; Golder 2016; Everett 1980; Walker and Everett 1987). A recent study found that dust on plant leaves from diamond mine haul roads was significantly higher in a zone of up to 1000 m from the road (Chen et al. 2017).

2.3.1.2 Mitigation for Wildlife Habitat

Proposed mitigation for Wildlife Habitat are summarized in **Table 5**.

Table 5: Mitigation to Minimize Effects to Wildlife Habitat at the Meadowbank Mine, and Whale Tail Pit and Haul Road and proposed Whale Tail Expansion

Mitigation	Design	Construction	Operations	Closure/ Post-Closure
Minimizing Wildlife Habitat Loss				
Avoid high value habitats (e.g., eskers)	X	X		
Cluster facilities and minimize footprints	X			
Minimize haul and access road width and length	X	X		
Minimize borrow area size	X	X	X	
Construct boardwalks and helicopter pads		X	X	X
Stay on roads		X	X	X
Clearly mark road edges		X	X	X
Restore and revegetate disturbed habitats			X	X
Scarify roads, remove facilities, restore drainage patterns, and stabilize slopes			X	X
Minimizing Wildlife Habitat Degradation				
Minimize vehicle traffic and speeds to reduce dust		X	X	X
Contain (berms) fuel storage areas	X	X	X	X
Follow hazmat and spill contingency guidelines	X	X	X	X
Implement dust control measures (including dust suppressants) on mine roads and airstrip		X	X	X
Use landfill area to dispose of inorganic waste (e.g., concrete, plastic). All other materials shipped and disposed off-site		X	X	X
Maintain natural drainage patterns	X	X	X	X
During water diversion, pump discharge using natural drainage patterns when possible		X	X	X
Remove and dispose of contaminated soil (see 'Environmental Guidelines for Site Remediation', GN-DOE 2009		X	X	X

2.3.2 Ungulates

2.3.2.1 Summary of Potential Environmental Effects

Caribou and muskox are susceptible to habitat loss and sensory disturbance associated with Project facilities and activities. The potential for direct effects such as vehicle-animal collisions and increased hunting pressure are concerns, as are indirect effects related to contaminated water and vegetation. Although caribou may be present during any season, movements of collared caribou through the Meadowbank RSA are most common during the spring (April 1 to May 25) and fall (October 15 to November 7) migratory periods, (Agnico Eagle 2016; Golder 2016 Appendix 5-D). Likewise, while there are areas of the AWAR with more frequent observations of caribou, caribou may be observed along the entire length of the AWAR (Agnico Eagle 2016). Roadside observations of caribou from 2007 to 2016 show that caribou within and adjacent to the Meadowbank RSA are most common during the winter (44% of caribou observed), rut and fall

migration (34% of caribou observed) and spring (16% of caribou observed) (see **Table 6**). Data from collared caribou also closely follow the seasonal pattern of caribou observations observed from the AWAR and the Meadowbank Mine.

Table 6: Summary of AWAR Caribou Observations from 2007 to 2016 by Season and Collar Data from the Ahiak/Beverly, Lorillard, and Wager Bay Herds (2000 to 2016)

Season	Total Number of Caribou Observed from AWAR (% of Total)	Range of AWAR Count Observations (min-max)	Collar Days in Whale Tail RSA (% of Total in RSA)
Spring Migration (April 1 to May 25)	15,510 (16%)	230 to 6042	224.01 (23%)
Calving (May 26 to June 25)	4,213 (4%)	33 to 1,163	3.34 (0.3%)
Post-Calving (June 26 to July 31)	220 (0.2%)	0 to 135	18.42 (2%)
Summer Dispersal (August 1 to September 15)	1,815 (2%)	2 to 1,815	139.31 (14%)
Rut and Fall Migration (September 16 to November 7)	32,934 (34%)	44 to 9,856	155.15 (16%)
Early and Late Winter (November 8 to March 31)	43,500 (44%)	152 to 13,568	438.22 (44%)
Total	**98,192**	**0 to 13,568**	**978.45**

Monitoring at other mines suggests that caribou herds change their distribution around diamond mine developments, where probability of occurrence increases with distance from the mine (Boulanger et al. 2012; Johnson et al. 2005; Rescan 2007; Golder 2011a). This area is termed the zone of influence (ZOI), and likely results from sensory disturbance that may be related to smell, noise, taste and sight. A study using aerial survey and satellite-collar data collected around the Diavik, Ekati, and Snap Lake mines estimated that caribou relative abundance was reduced near the mine, and reached expected levels at up to 14 km (Boulanger et al. 2012). Golder (2011a) detected ZOI ranging from 12 to 40 km around the Diavik mine and Lac de Gras, although the estimates may be confounded by the presence of Lac de Gras, which affects caribou distribution. Ground-based monitoring at Ekati suggested that caribou groups with calves spend less time feeding within 5 km of the footprint (BHPB 2004). At the smaller Snap Lake Mine, a ZOI of 6.5 to 28 km was detected (Golder 2008; Boulanger et al. 2009), which increased with the level of mining activity (Golder 2008). Adding to the uncertainty, interviews with hunters in Kulguktuk familiar with mining reported that caribou are often observed at active mines; appearing undisturbed and staying for days at a time. Caribou are even attracted to mine infrastructure for mosquito relief (Golder 2011b). To date, although ZOI have been demonstrated to varying degrees around mine sites, they are poorly understood in terms of their mechanism, their extent, and the effects to individual caribou and populations. Agnico Eagle completed a preliminary ZOI study for the Lorillard and Wager Bay herds and found no ZOI effect with the exception of a weak effect during the winter months at a distance of 35 km. As part of the ZOI study, the Ahiak/Beverly herds were considered; however, there were too few collar locations within the RSA to include these data in the analysis. Through further discussions with the TAG and potentially additional workshops, additional studies are being considered in collaboration with the GN and other interested and qualified parties to better understand the presence of a ZOI, and potential barrier effects from mine infrastructure and the AWAR.

Road-related mortality may be a source of residual effects if not carefully managed. Although muskox are not considered a species at risk, their low reproductive rate, sedentary nature, and tendency to stand their ground when threatened make them vulnerable to disturbance and over-hunting.

A minor concern is the potential for caribou or muskox to drink potentially contaminated water from the tailings impoundments or possibly runoff from the waste rock piles; however this has not been documented. Approved deterrent methods have been implemented at Meadowbank Mine when necessary to remove caribou from areas of risk. On-site environmental staff will monitor the tailings facilities daily.

2.3.2.2 Mitigation for Ungulates

Proposed mitigation for Ungulates are summarized in **Table 7**. See also General Mitigation in **Table 3** and the Wildlife Protection and Response Plan.

Table 7: Mitigation to Minimize Effects to Ungulates at the Meadowbank Mine and Whale Tail Pit and Haul Road and proposed Whale Tail Expansion

Mitigation	Design	Construction	Operations	Closure/ Post-Closure
Minimizing Wildlife Habitat Loss (see Table 5 for Wildlife Habitat)				
Minimizing Wildlife Habitat Degradation (see Table 5 for Wildlife Habitat)				
Reducing Sensory Disturbance (see also General Measures, Table 3)				
Site-wide notifications of caribou presence (see **Figure 6** and **Figure 7**)		X	X	
Caribou on or crossing the road are given right-of-way		X	X	X
Construct the Whale Tail Haul Road during the winter to avoid effects to caribou during potentially sensitive periods (e.g., spring and fall migration)	X	X		
Minimize engine noises, as per the Noise Abatement and Monitoring Plan		X	X	X
Limit blasting when caribou are near (**Figure 9**); Maintain blasting windows (see Transportation Management Plan: All Weather Private Access Road and Whale Tail Haul Road Management Plan)		X	X	
Enforce speed limits on the AWAR and haul roads (Transportation Management Plan: All Weather Private Access Road and Whale Tail Haul Road Management Plan)		X	X	X
Aircraft pilots are instructed to avoid caribou, and will receive site-wide notifications of caribou movements. Recommended minimum distance is 300 m altitude and 1 km horizontal		X	X	X
Report Ungulates in the vicinity of the road to environmental staff and road dispatcher		X	X	X
Reduce speed to 30 km/h when caribou are observed from the haul road and Level 3 caribou mitigation is triggered (**Figure 7**)		X	X	

Table 7: Mitigation to Minimize Effects to Ungulates at the Meadowbank Mine and Whale Tail Pit and Haul Road and proposed Whale Tail Expansion

Mitigation	Design	Construction	Operations	Closure/ Post-Closure
Other mitigative action as determined by the Environmental Supervisor, possibly including: grouping haul trucks into convoys (e.g., 2X2 or groups of 4 or more vehicles), imposing additional speed limits, using pilot vehicles, stopping traffic near caribou attempting to cross haul roads, complete closure of haul roads, suspending blasting in accordance with **Figures 6** through **9**		X	X	X
Reducing Ungulate Project-related Mortality (see also General Measures, Section 2.2)				
Along pits, graduate slope angles to diminish likelihood of slippage	X	X	X	
Herd ungulates off airstrip only prior to arrivals and departures (see Access and Air Traffic Management Plan) if air traffic could not be delayed		X	X	X
Avoiding Exposure to Potentially Contaminated Water and Wildlife Habitat				
Deter ungulates attracted to potentially contaminated water in tailings ponds or runoff, documented using the Incident Report Form (**Appendix D**)		X	X	X
Avoiding Disruption of Movement or Migration Patterns				
Road shoulders are designed with a low profile and are sloped to ground level to accommodate haul trucks. Roads will be top dressed with esker-sourced. Consequently, roads are not perceived to be a physical barrier to caribou movement	X	X	X	
Implement special measures if Ungulates are in close proximity to Project facilities and roads (see **Section 3.5**)		X	X	
Contour snow banks to avoid creating barriers		X	X	X
Post updated maps of known migration corridors and report to GN, KivIA, and HTO personnel		X	X	
During road decommissioning, flatten and scarify road edges			X	X

2.3.3 Predatory Mammals

2.3.3.1 Summary of Potential Environmental Effects

Predatory Mammals are susceptible to animal/vehicle collisions, loss of denning habitat, and sensory disturbance associated with Project construction and operation. Grizzly bears and wolverines may be particularly vulnerable to road development. Due to their wide-ranging and scavenging natures, they are drawn to road edges where road kills may be readily available. Once they have been attracted, habituated or food-conditioned to a site, they may be difficult to avert and may eventually become a human safety concern. One wolverine and three wolves have been killed along the Meadowbank AWAR between 2007 and 2015 (Gebauer et al. 2016).

The potential for direct loss of denning habitat for some predatory mammals, especially wolves, is also a concern during road construction and borrow pit development. Wolves use unconsolidated materials (e.g., eskers), to excavate den sites, and the same den sites may be used from year to year (Cluff et al. 2002). Occasionally, adults with pups have been sighted along the AWAR area in summer denning months, and most recently, an active den and nursery site was identified within the borrow area at Esker #3 in the Whale Tail Haul Road study area (Dougan & Associates and Nunavut Environmental 2015). Wolf denning occurs between early May and late September (May et al. 2012).

Grizzly Bears are also known to use habitats such as eskers for denning (Mueller 1995), wolverines have been linked to areas of persistent snow cover and boulders because of their reliance on cached food as they litter during late winter (Inman et al. 2012). Sensory disturbance from road construction and operation could result in an indirect loss of nearby functional denning habitat (May et al. 2012).

Other potential effects to Predatory Mammals, such as changes in prey abundance, distribution, or health, are of lesser concern. Mitigation to ensure that the viability and integrity of prey populations are maintained (e.g., Ungulates) will also mitigate the potential effects to Predatory Mammals.

2.3.3.2 Mitigation for Predatory Mammals

Proposed mitigation for Predatory Mammals are summarized in **Table 8**. See also General Measures in **Table 3** and the Wildlife Protection and Response Plan.

Table 8: Mitigation to Minimize Effects to Predatory Mammals at the Meadowbank Mine and Whale Tail Pit and Haul Road and proposed Whale Tail Expansion

Mitigation	Design	Construction	Operations	Closure/ Post-Closure
Reducing Project-related Mortality (see also General Measures, Table 3)				
Apply response plan (see **Appendix C**) when individuals are near		X	X	X
Manage mine food wastes and odors (**Appendix C**)		X	X	X
Instruct mine workers to keep lunches inside vehicle cabs or buildings		X	X	X
Remove or incinerate all wildlife carcasses to avoid attracting predators to facilities		X	X	X
Continue to improve waste segregation techniques and procedures	X	X	X	X
Incinerate all kitchen waste, wood/paper products daily		X	X	X
Seal and store all aromatic products (e.g., paint) in bear-proof containers		X	X	X
Construct skirts or sheathing along all facilities with potential to attract Predatory Mammals	X	X	X	
Use deterrents if necessary for human and wildlife safety (**Appendix C**)		X	X	X
Avoiding Disturbance of Den Sites				

Table 8: Mitigation to Minimize Effects to Predatory Mammals at the Meadowbank Mine and Whale Tail Pit and Haul Road and proposed Whale Tail Expansion

Mitigation	Design	Construction	Operations	Closure/ Post-Closure
Initiate a den-specific response plan when a wolverine, grizzly bear or wolf den site is detected within 1 km of activities (see **Section 3.6**)		X	X	X
Restrict human and vehicle activity in the vicinity of den sites		X	X	X

2.3.4 Raptors

2.3.4.1 Summary of Potential Environmental Effects

Available survey data indicate that few Raptors nest in the vicinity of the Project area, and possibly also in old quarries and open pits. However, direct effects to breeding Raptors are expected to be very low (Cumberland 2005b; Dougan & Associates and Nunavut Environmental 2015). Ongoing monitoring (see **Section 3.7)** will document active nests if they are near mine facilities, or along the AWAR, Whale Tail Haul Road, and access roads to quarry/borrow sites.

Other potential effects to Raptors may result from changes in abundance, distribution, and health of prey populations due to road activities. Mitigation to minimize Wildlife Habitat removal (see **Section 2.3.1)** will reduce effects to prey populations.

2.3.4.2 Mitigation for Raptors

Proposed mitigation for Raptors are summarized in **Table 9**. See also General Measures in **Table 3**.

Table 9: Mitigation to Minimize Effects to Raptors at the Meadowbank Mine and Whale Tail Pit and Haul Road and proposed Whale Tail Expansion

Mitigation	Design	Construction	Operations	Closure/ Post-Closure
Minimizing Wildlife Habitat Loss (see Table 5 for Wildlife Habitat)				
Minimizing Wildlife Habitat Degradation (see Table 5 for Wildlife Habitat)				
Avoiding Disturbance to Nesting Raptors				
Develop a nest-specific response plan for identified raptor nests within areas of concern to ensure that nesting success is not affected by development activities (see **Section 3.7**)		X	X	X
Follow GN-DoE guidelines (GN-DOE 2005) for avoiding disturbance to raptor nests		X	X	X
Consult with GN (with respect to obligations under the *Wildlife Act*, SNU 2003, c.26) as per Project Certificate No.008, Condition 36. If deemed appropriate, discourage raptors from establishing nests on artificial structures, pit walls, or other facilities (see **Appendix E**)			X	

Mitigation	Design	Construction	Operations	Closure/ Post-Closure
Limit ferrying flight altitudes to a minimum height of 300 m above ground level where possible		X	X	X

2.3.5 Waterbird

2.3.5.1 Summary of Potential Environmental Effects

During baseline data collection and operational monitoring, only a small number of nesting Waterbirds were documented within the Meadowbank Mine and along the AWAR (see annual Wildlife Monitoring Summary Reports). Given these low densities of nests identified within the Project area since 2005 (i.e., too low to determine whether changes in nest abundance or success have occurred), and the absence of data suggesting that road-related effects were occurring, the Waterfowl nest survey program at Meadowbank was discontinued in 2012 (Gebauer et al. 2013). Initial waterfowl surveys for the Whale Tail study area have also documented low numbers of nesting waterfowl (Dougan & Associates and Nunavut Environmental 2015).

Waterbirds that use flooded portions of the tailings impoundment areas for resting or roosting purposes during the summer and migratory periods may be exposed to contaminants; however, residence times are not expected to be long due to the lack of wetland vegetation, and the absence of fish or invertebrates in the tailings impoundment and water management areas. There is a possibility that Waterbirds (e.g., geese) may forage on potentially contaminated graminoid vegetation (e.g., vegetation that may have been contaminated by fugitive dust fall from vehicles); however, results of recent risk assessments for the Meadowbank Mine have indicated no excess risk to Waterbirds as a result of Project activities (Agnico Eagle 2014).

The proposed expansion at Whale Tail will require a fish-out, which may lead to mortality of diving birds that can get caught in nets. Further, possible flooding during the nesting season may lead to loss of nests.

2.3.5.2 Mitigation for Waterbirds

Proposed mitigation for Waterbirds are summarized in **Table 10**. See also General Measures in **Table 3**.

Table 10: Mitigation to Minimize Effects to Waterbirds at the Meadowbank Mine and Whale Tail Pit and Haul Road and proposed Whale Tail Expansion

Mitigation	Design	Construction	Operations	Closure/ Post-Closure
Minimizing Wildlife Habitat Loss (see Table 5 for Wildlife Habitat)				
Stay 30 m away from shoreline areas during design except where necessary for constructing road crossings and pit development	X	X	X	
Provide foraging opportunities for Waterbirds, particularly geese, over the long term in revegetated areas and flooded mine pits			X	X

Table 10: Mitigation to Minimize Effects to Waterbirds at the Meadowbank Mine and Whale Tail Pit and Haul Road and proposed Whale Tail Expansion

Mitigation	Design	Construction	Operations	Closure/ Post-Closure
Minimizing Wildlife Habitat Degradation (see Table 5 for Wildlife Habitat)				
Where high levels of contaminants have been identified in water or vegetation, undertake reclamation activities to manage risks to Waterbirds		X	X	X
Avoiding Disturbance to Nesting Waterbird				
Clear land outside the breeding season (mid-May to mid-August) unless a nest survey by a qualified wildlife biologist has determined that no Waterbird nests are present		X	X	X
Helicopter ferrying flight altitudes should remain above 300 m, where possible		X	X	X
Where important bird areas (e.g., moulting areas, goose breeding colonies etc.) are identified, observe a 1,000 m vertical and 1,500 m horizontal distance whenever possible (Hines and Wiebe 1997). Make all pilots aware of these flight restrictions		X	X	X
Reducing Waterbird Project-related Mortality (see also General Measures, Table 3)				
Monitor tailings, reclaim ponds, and storm water retention ponds daily to ensure that Waterbird have not landed on these waterbodies. Where Waterbird have landed on ponds, use aversive tactics to scare them away		X	X	X
Implement mitigation for nests in flooding zones at the Whale Tail Project (**Appendix F**)		X		
Implement mitigation for diving bird mortality during Whale Tail Lake fish-out (see the Fishout Diving Waterbird Protection Plan)		X		

2.3.6 Upland Breeding Birds

2.3.6.1 Summary of Potential Environmental Effects

The greatest effect to Upland Breeding Birds (e.g., songbirds) is the removal, flooding, or degradation of nesting habitat. Virtually all terrestrial habitat within the study area provides foraging or nesting habitats for one or more species. Some species prefer shrubby terrain (e.g., Savannah Sparrow), others are found primarily in open tundra (e.g., lapland longspur), whereas some are restricted to wet meadows (e.g., semipalmated sandpiper).

Another potential environmental effect is the reduced habitat effectiveness due to human activity, although passerines appear to readily habituate to these activities compared to larger species such as Raptors and Waterbird. Studies have documented avoidance effects and reduced bird densities within 1 km of human infrastructure (Reijnen et al. 1997; Benitez-Lopez et al. 2010). Conversely, a study of lapland longspurs by Male and Nol (2005) showed no difference in nest success between sites with high and low levels of human noise at the Ekati Diamond Mine.

In addition, no decrease in upland bird species richness or abundance from mine activity has been observed at the Meadowbank Mine (Gebauer et al. 2012, 2013) or at the Ekati Diamond Mine (Smith et al. 2005; Rescan 2010).

Buildings, pits, and other facilities will provide new perching opportunities and possibly nesting opportunities for Raptors. The potentially higher densities of Raptors in the area, and potentially increased depredation rates on passerines, are possible negative effects of the Project on songbirds.

2.3.6.2 Mitigation for Upland Breeding Birds

Proposed mitigation for Upland Breeding Birds are summarized in **Table 11**. See also General Measures in **Table 3**.

Table 11: Mitigation to Minimize Effects to Upland Breeding Birds at the Meadowbank Mine and Whale Tail Pit and Haul Road and Proposed Whale Tail Expansion

Mitigation	Design	Construction	Operations	Closure/ Post-Closure
Minimizing Wildlife Habitat Loss (see Table 5 for Wildlife Habitat)				
Minimizing Wildlife Habitat Degradation (see Table 5 for Wildlife Habitat)				
Where high levels of contaminants have been identified in water or vegetation, undertake reclamation activities to manage risks to Upland Breeding Birds		X	X	X
Avoiding Disturbance to Nesting Upland Breeding Birds				
Clear land outside the breeding season (mid-May to mid-August) unless a nest survey by a qualified wildlife biologist or technician has determined that no Upland Breeding Bird nests are present		X	X	X
If nest found within Project facilities, set up buffer zone if possible		X	X	X
Avoid human activity around nest sites to avoid attracting predators to site		X	X	X
Reducing Upland Breeding Bird Project-related Mortality (see also General Measures, Table 3)				
Deter Raptors from nesting or roosting on mine facilities (see **Appendix E**). Locally breeding Raptors will increase predation rates on songbirds		X	X	X
Deter Upland Breeding Bird nesting attempts on equipment and facilities		X	X	X
Implement mitigation for nests in flooding zones at the Whale Tail Project (**Appendix F**)		X		

3. MONITORINGOVERVIEW

A comprehensive suite of monitoring activities are being undertaken for the Project facilities, haul roads and AWAR. **Table 12** summarizes all of the monitoring activities, their frequency, and the VEC each activity targets.

Table 12: Monitoring Activities Being Undertaken for the Project Facilities, Haul Roads, and All-Weather Access Road

Monitoring Activity	Frequency	VECs					
		Wildlife Habitat	Ungulates	Predatory Mammals	Raptors	Waterbird	Upland Breeding Birds
Traffic Monitoring for AWAR and Haul Roads	Currently completed and will be provided in the annual summary report		X	X	X	X	X
Public Use of Roads	Tracked at security gate and incidental observations, and will be provided in the annual summary report		X	X	X	X	X
Habitat monitoring	Every three years post-construction, or if greater than 25% of the overall mine footprint changes	X					
Dustfall monitoring	Monthly around Meadowbank Mine and Whale Tail Pit; detailed study conducted annually along the AWAR and the Whale Tail Haul Road	X					
Habitat reclamation monitoring	At Year 2 post-closure and every 3 years until Year 12 post-closure	X					
Caribou satellite-collaring program	Data provided to Agnico Eagle from GN at least 1x/week		X				
Zone of Influence or other Mechanistic Investigation Studies	As necessary and identified through the TAG		X				
Haul Roads, Pits and mine site ground surveys	At least 1x/week, includes inspections of waste streams for scavenger attractants		X	X	X	X	
Road surveys (AWAR and Haul Roads)	At least 1x/week		X	X	X	X	X
Height-of-Land surveys	At least 1x/week		X	X			
Vehicle encounter reports	Ongoing		X	X	X	X	X
Incident reports	Ongoing (when incidents with wildlife occur)						
Hunter Harvest Survey	Will be redeveloped and implemented in collaboration with the GN, KivIA and HTO (see **Section 3.5.2.8**)		X	X			
Active den site surveys	Initiated by the detection of an active den (grizzly bear, wolf or wolverine) within the active footprint or vicinity of Project facilities (see **Figure 12**)			X			

Table 12: Monitoring Activities Being Undertaken for the Project Facilities, Haul Roads, and All-Weather Access Road

Monitoring Activity	Frequency	VECs					
		Wildlife Habitat	Ungulates	Predatory Mammals	Raptors	Waterbird	Upland Breeding Birds
Active Raptor nest monitoring	During nesting season (May 1 to Sept 15) if active nest is within the active footprint and vicinity of Project facilities: within area of concern – 1x/day; not within area of concern – 1x/week (see **Figure 13**)				X		
Waterbird nest surveys	Active nests identified within 100 m of Project facilities and all roads monitored, if deemed necessary Additional monitoring may be required during fish-out or flooding					X	
PRISM plot surveys	Once every three years in collaboration with ECCC						X
North American Breeding Bird Survey (BBS)	Once every three years during closure and post closure complete a North American Breeding Bird Survey (NABBS) route and contribute to the NABBS						X

3.2 GENERAL MONITORING

3.2.1 Road Surveys

Meadowbank AWAR and Vault/Whale Tail Haul Road

Methods: Systematic ground surveys will be conducted along the AWAR and Whale Tail Haul Road by two observers (one can be the driver) in a vehicle. Survey vehicles will travel no more than 30 km/h to maximize observations of all wildlife along the route. All wildlife observations recorded incidentally as part of regular traffic along the haul roads and AWAR will be known at the start of ground surveys so that observers are aware of the location of wildlife observations and can focus attention in these areas. For each sighting, a UTM coordinate will be taken along the route along with distance of the animal from the haul road or AWAR, nearest road marker, and a variety of other information (see field data form in **Appendix D**). Behavior of Ungulates will also be recorded for each encounter and comments on disturbance related to a particular behavior (e.g., running) will be made (see field form in **Appendix D**). Raw data (i.e., field forms) will be included in the annual Wildlife Monitoring Summary Report. Further information on these surveys as they relate to caribou interaction are described below in Section 3.5.2.3. Timed observation scans (i.e., roadside observation locations) are also currently being considered, in addition to driving scans, where locations offer a unique vantage point for farfield detection of caribou and other wildlife (e.g., muskox).

Height of Land Surveys

Methods: While conducting the ground surveys, two observers will stop at the Height-of-Land (HOL) survey locations (see **Appendix G**) for 20 minutes to survey the area, focusing on furtherfield areas (i.e., likely up to 4 to 5 km). Raw data (i.e., field forms) will be included in the annual Wildlife Monitoring Summary Report. Further information on these surveys as they relate to caribou are described below in Section 3.5.2.3.

Frequency (haul roads and AWAR): January to April and July to August, once per week; May to June and September to December (frequency will increase when caribou are present, see **Figure 6, Figure 7,** and **Figure 9**; **Table 12**).

3.2.2 Pits and Mine Site Ground Surveys

Methods: Within the Meadowbank Mine and Vault sites (e.g., tailings pond, haul road to Vault Site) and the Whale Tail Pit site, systematic ground observations of Ungulates will be conducted by on-site environmental technicians/monitors who record details on species, numbers, sex, habitat type, and location. Behavior of Ungulates will also be recorded for each encounter and comments on disturbance related to a particular behavior (e.g., running) will be made (see field form in **Appendix D**).

Frequency: Once per week (frequency will increase if caribou are present, **Figure 6, Figure 7,** and **Figure 9; Table 12).**

3.3 WILDLIFE HABITAT

3.3.1 Objectives

The objectives of monitoring Wildlife Habitat will be to ensure that measures to minimize the amount (or area) of Wildlife Habitat lost to Project construction and operation are effective, and that concentrations of contaminants in vegetation do not exceed acceptable levels for wildlife health. Residual effects will be assessed, and opportunities for reclamation or habitat creation will be identified (e.g., recontouring, stabilization, and restoration of drainage patterns). Monitoring will also ensure that potentially contaminated vegetation is removed (or isolated from wildlife), and that the site is restored to its natural state. **Table 13** describes the framework that has been established for monitoring effects to Wildlife Habitat.

Table 13: Monitoring Approach for Wildlife Habitat for the Meadowbank, Whale Tail Project and proposed Whale Tail Expansion

Potential Effect	Impact Prediction	Quantitative Monitoring Variable	Thresholds	Monitoring Activity	Frequency
Habitat Loss **Meadowbank Mine and Vault Pit and Haul Road (Mine Site)**	Loss <EIA prediction and subsequent approvals (see Gebauer et al., 2015)	Area of altered habitat	5% above predicted EIA values of 867 ha for the Mine site	Habitat monitoring	Every three years post-construction, or if greater than 25% of the overall mine footprint changes.
Habitat Loss **Meadowbank AWAR**	Loss <EIA prediction and subsequent approvals (see Gebauer et al., 2015)	Area altered habitat	5% above predicted EIA values 281 ha for AWAR	Habitat monitoring	Every three years post-construction, or if greater than 25% of the overall mine footprint changes.
Habitat Loss **Whale Tail Pit and Haul Road**	Loss < EIS prediction (see Golder 2016)	Area of altered habitat	5% above predicted EIs values of 820 ha for the Pit and Haul Road	Habitat monitoring	Every three years post-construction, or if greater than 25% of the overall mine footprint changes.
Habitat Degradation by Contamination **Meadowbank Mine site and Haul Roads**	Dust and emissions will not result in unacceptable levels of contaminants in vegetation	Concentrations of contaminants	See Screening Level Risk Assessment Plan, **Appendix A** and Air Quality and Dustfall Monitoring Plan (Agnico Eagle 2018)	Screening Level Risk Assessment Dust fall monitoring	SLRA: Every three years Dust fall monitoring : annually
Habitat Reclamation following Project Closure	Vegetation will be naturally established on reclaimed sites	Proportion of disturbed areas revegetated	Up to 80% of the reclamation will be completed by year 12. Refer to the reclamation and closure plan for more details	Habitat reclamation monitoring	At Year 2 post-closure and every 3 years until Year 12 post-closure

3.3.2 Monitoring Approach

As per Project Certificate No.008, Condition 33, Agnico Eagle will continue to document and map sensitive wildlife features such as denning sites, caribou crossing sites, raptor nests and other nesting sites (representative figures are provided in **Appendix H**; from Dougan & Associates 2017). Initial documentation and mapping has been completed for the Whale Tail Pit and Haul Road (Dougan & Associates 2017) and information related to other development areas will be compiled into a single spatial dataset to guide monitoring activities. There are no caribou calving areas within the regional study area.

Monitoring activities for Wildlife Habitat will be carried out post-construction and post-closure. The following are the methods and frequency for the monitoring efforts for each measurable parameter.

3.3.2.1 Habitat Loss

Methods: Total area of habitat disturbance will be determined following Project construction using a combination of ground and aerial surveys, photography, ground-truthing (with the aid of GPS), as-built reports, and possibly satellite imagery. Monitoring of habitat loss will occur at three

primary locations: Meadowbank Mine (includes Vault Pit and Haul Road), AWAR (including quarry sites), and Whale Tail Pit and Haul Road (includes borrow sites and access roads). Reporting will describe the overall area of different ELC units lost due to Project development. For the Meadowbank Mine and AWAR locations, thresholds are disturbance of 5% above predicted EIA values of 867 and 281 ha (includes approved changes), respectively. For the Whale Tail and Haul Road location, the threshold is disturbance of 5% above a predicted EIS value of 820 ha.

Frequency: Every three years post-construction or if changes are greater than 25% of the overall mine site footprint from the previous year ELC was evaluated. This frequency may be reduced during the operation phase if the amount of new disturbance and reclamation areas is relatively unchanged.

3.3.2.2 Habitat Degradation by Contamination

Methods: A comprehensive environmental health monitoring program has been initiated that compares contaminant levels in soil and vegetation (i.e., lichen, berries, and sedges) before and after Project activities. Samples taken from the Project area are also compared to reference sites that are not influenced by Project activities. This Screening Level Risk Assessment program is described in **Appendix A** of this document. Additional information is provided through dustfall monitoring along the AWAR and Whale Tail Haul Road, as described in Air Quality and Dust Monitoring Plan (Agnico Eagle 2018).

3.3.2.3 Habitat Reclamation Post-Closure

Methods: Reclamation efforts will focus on providing conditions conducive to natural re-colonization of the site by surrounding native vegetation. There is a lack of available soils in the Project area that, in conjunction with the harsh climatic conditions (short cold and dry growing season), makes it difficult to establish vegetation over large areas. Reclamation activities and natural re-vegetation of disturbed areas during the closure and post-closure phases will reduce overall residual effects within the LSA.

Frequency: Vegetation plots and mapping will be conducted during the second growing season following closure and every three years thereafter up to Year 12 post-closure (considered to be a reasonable period of time within which to expect revegetation of most disturbed areas) to ensure effort is made to re-vegetate and that re-vegetation of previously disturbed areas is progressing.

3.3.3 Thresholds

Should the thresholds outlined in **Table 13** be exceeded, the following actions will be undertaken.

3.3.3.1 Habitat Loss

Where mapping indicates a loss of habitat area beyond that predicted, discussions will be held with construction contractors and Project personnel to resolve the concern. Additional mitigation may include clearer delineation of work space, road areas, and designated no-disturbance areas. Where unauthorized off-road vehicle activity is noted, more stringent off-road access control measures will be implemented. Habitat reclamation and restoration of natural drainage patterns and contours may be ordered depending on the scale of the disturbance.

3.3.3.2 Habitat Degradation by Contamination

See **Appendix A -** Screening Level Risk Assessment Program

3.3.3.3 Habitat Reclamation Post-Closure

If progress of revegetation is not occurring, further reclamation activity will be undertaken and may involve reseeding (e.g., native-grass cultivars and forbs such as nitrogen-fixing legumes).

3.4 INVASIVE PLANT MONITORING

The invasive plant monitoring component outlines the means by which Agnico Eagle plans to reduce Project-related effects to plant populations and communities, primarily through the mitigation and management of invasive species, and includes both environmental and follow-up monitoring (Project Certificate No.008, Condition 25). Proactive measures and monitoring programs are used to track conditions and implement further mitigation as required, while follow-up monitoring is used to verify the accuracy of impact predictions and adaptively manage and implement further mitigation as required.

3.4.1 Objectives and Thresholds

The objectives of the vegetation monitoring and management component are as follows:

- measure distribution and abundance of non-native invasive plant species
- using industry standards and best practices, equipment and bulk supplies must arrive to Project site free of soil or plant debris to minimize the risk of invasive plant introduction

Specific thresholds for invasive plant monitoring include the following:

- no non-native invasive species will occur as a result of mining operations (i.e., new equipment or materials arrival).

3.4.2 Monitoring Approach

Monitoring programs for non-native invasive plant species will be completed during the construction and operations phase of the Project. Surveys for non-native invasive plant species will be undertaken in disturbed areas (e.g., active mine site, borrow pits) to identify and document the extent of any non-native invasive plant species that may occur during construction and operations. Additionally, invasive plant inspection surveys will be completed on cargo in Becancour, prior to being loaded onto shipping vessel(s).

The early detection of non-native invasive plant species is important, as preventing these species from becoming established is the most effective mitigation that can be employed. If non-native invasive plant species are identified in the Project area, they will be reported to Government of Nunavut Department of Environment (GN DoE), as per DoE guidelines. As part of the reporting process, the following information will collected and sent to DoE:

- location of the species (i.e., GPS coordinates);
- species identification and population extent;
- photographs of the species in question to confirm identification; and
- species-specific management and eradication recommendations.

3.4.3 Mitigation

Terrestrial Pathways

- All Equipment and supplies brought to the project sites are clean and free of soils that could contain plant seeds or organic matter not naturally occurring in the area
- Vehicle tires and treads are inspected prior to initial use in project areas

Specific Cleaning Measures

- Equipment and bulk supplies will be cleaned using brooms, brushes, shovels, water, or compressed air. Areas of particular concern include tires, tracks, skids, buckets, scoops, and packing materials.
- Accumulated soil, plant material or crop debris from openings, tracks, skids, wheels, buckets, scoops, and packing materials using a hand scraper, shovel, broom, or other methods.
- Additional focus should be made to areas where soil or plant debris can accumulate (i.e., tires or undercarriage).

3.5 UNGULATES

As previously mentioned, decision charts (**Figures 6** through **10**) outlining monitoring and mitigation (adaptive management) measures for ungulates have been developed for each phase as follows:

- Figure 6 – caribou and mining operations;
- Figure 7 – caribou and haul roads;
- Figure 8 – caribou and the All Weather Access Road (AWAR);
- Figure 9 – caribou and blasting; and
- Figure 10 – muskox and operations.

3.5.1 Objectives

The monitoring objectives are to detect if effect thresholds have been exceeded, to test the efficacy of mitigation, and understand Project-related effects to Ungulates. For Ungulates, it is also an objective to manage sensory disturbance to caribou approaching the Project, leading to monitoring to detect caribou approaching the project and mitigation to reduce sources of sensory disturbance. Due to the collar data sharing agreement, extensive range, large numbers of caribou and muskox, and history of analysis, this evaluation is done in collaboration with the GN.

Figure 6: Thresholds for Monitoring and Mitigation of Caribou in Proximity to Mine Operations

Caribou Group Size Threshold (GST)			
Sensitive Season		Sensitive Season	
Fall	Winter	Spring	Summer
Sept 22 to Dec 15	Dec 16 to Mar 31	Apr 1 to May 25	May 26 to Sept 21
GST - 110 caribou	GST - 25 caribou	GST - 12 caribou	GST - 25 caribou

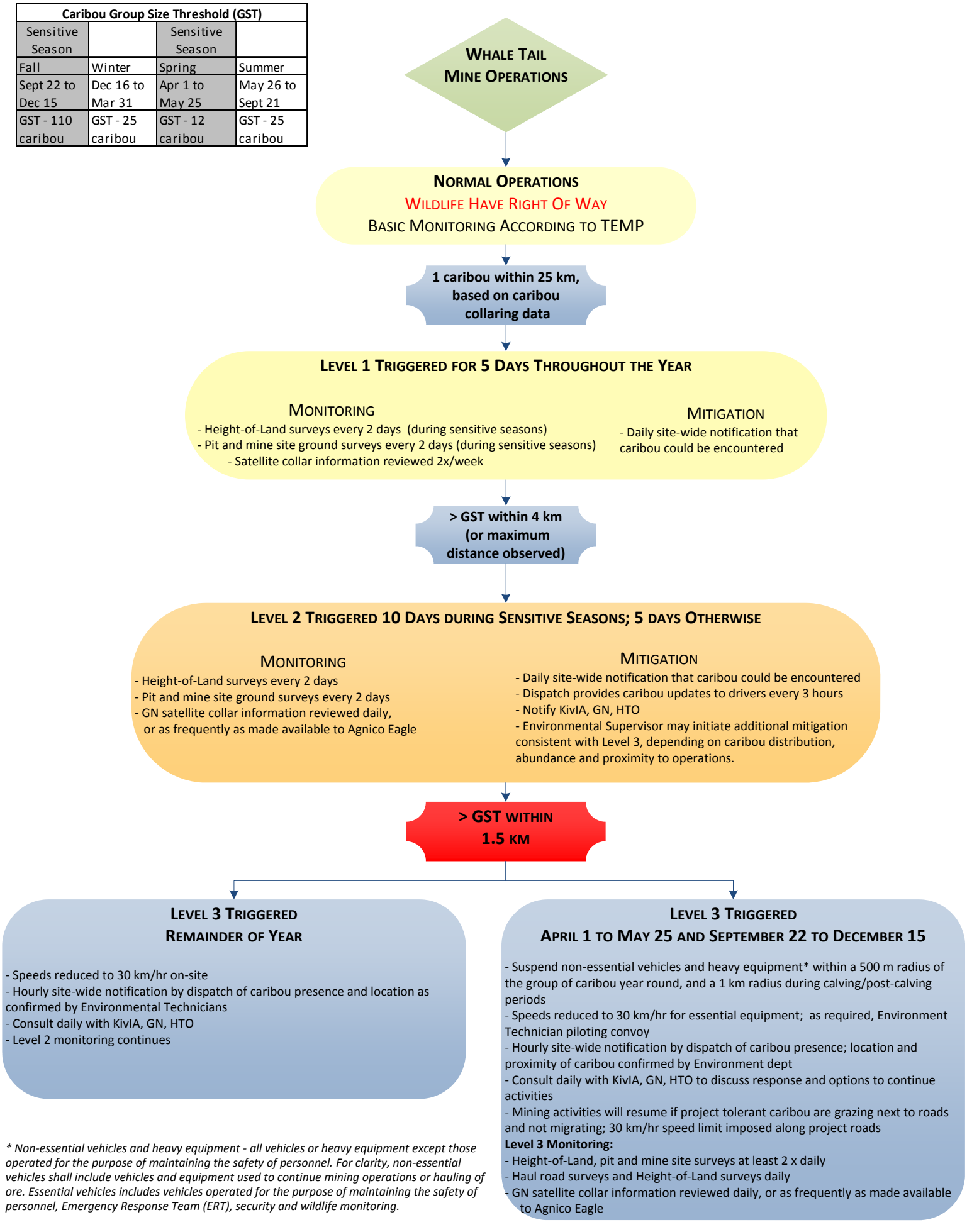

** Non-essential vehicles and heavy equipment - all vehicles or heavy equipment except those operated for the purpose of maintaining the safety of personnel. For clarity, non-essential vehicles shall include vehicles and equipment used to continue mining operations or hauling of ore. Essential vehicles includes vehicles operated for the purpose of maintaining the safety of personnel, Emergency Response Team (ERT), security and wildlife monitoring.*

Figure 7: Thresholds for Monitoring and Mitigation of Caribou in Proximity to the Whale Tail Haul Road

Caribou Group Size Threshold (GST)			
Sensitive Season		Sensitive Season	
Fall	Winter	Spring	Summer
Sept 22 to Dec 15	Dec 16 to Mar 31	Apr 1 to May 25	May 26 to Sept 21
GST - 110 caribou	GST - 25 caribou	GST - 12 caribou	GST - 25 caribou

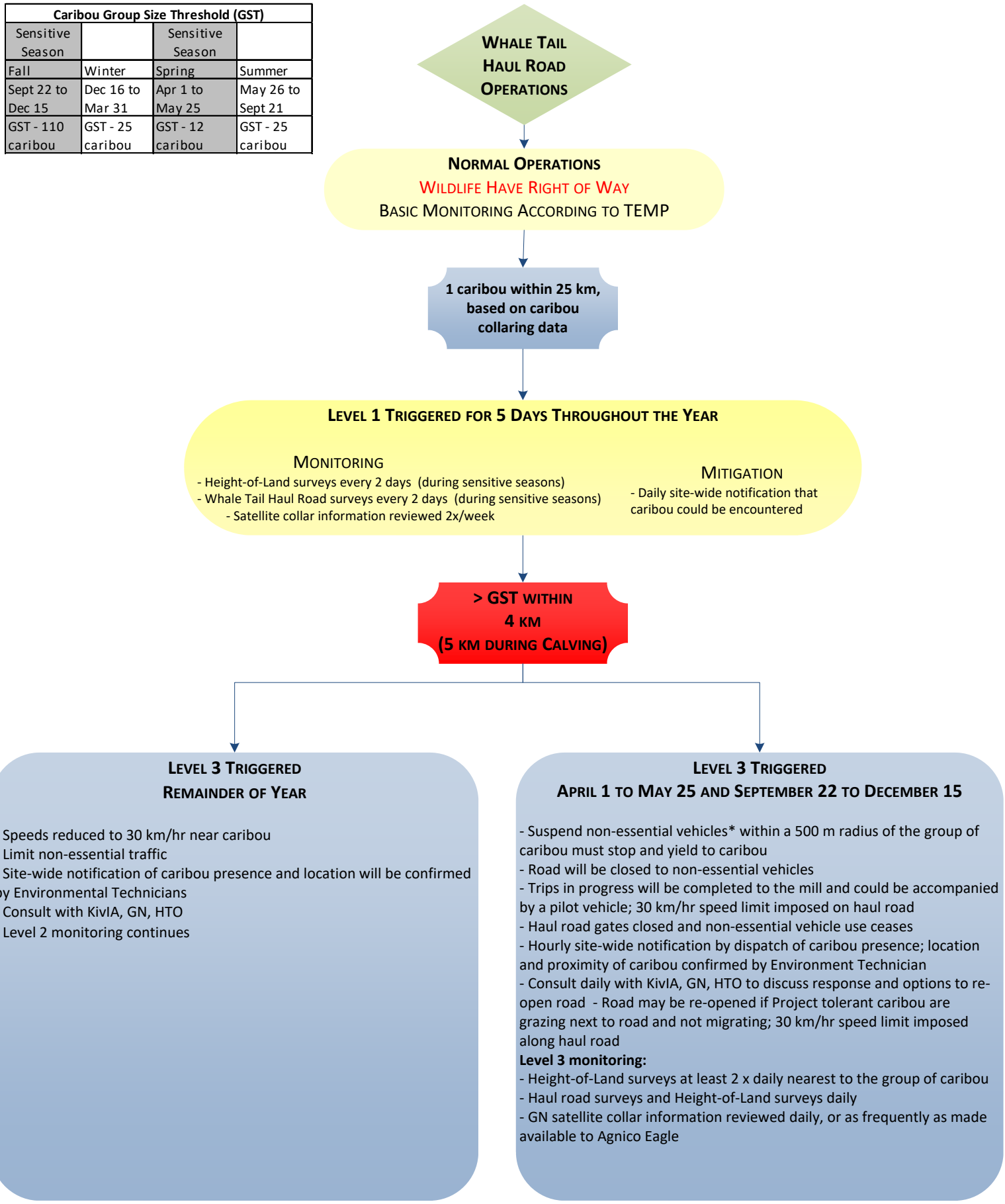

** Non-essential vehicles and heavy equipment - all vehicles or heavy equipment except those operated for the purpose of maintaining the safety of personnel. For clarity, non-essential vehicles shall include vehicles and equipment used to continue mining operations or hauling of ore. Essential vehicles includes vehicles operated for the purpose of maintaining the safety of personnel, Emergency Response Team (ERT), security and wildlife monitoring.*

Figure 08: Thresholds for Monitoring and Mitigation of Caribou in Proximity to the All Weather Access Road (AWAR)

Caribou Group Size Threshold (GST)			
Sensitive Season		Sensitive Season	
Fall	Winter	Spring	Summer
Sept 22 to Dec 15	Dec 16 to Mar 31	Apr 1 to May 25	May 26 to Sept 21
GST - 110 caribou	GST - 25 caribou	GST - 12 caribou	GST - 25 caribou

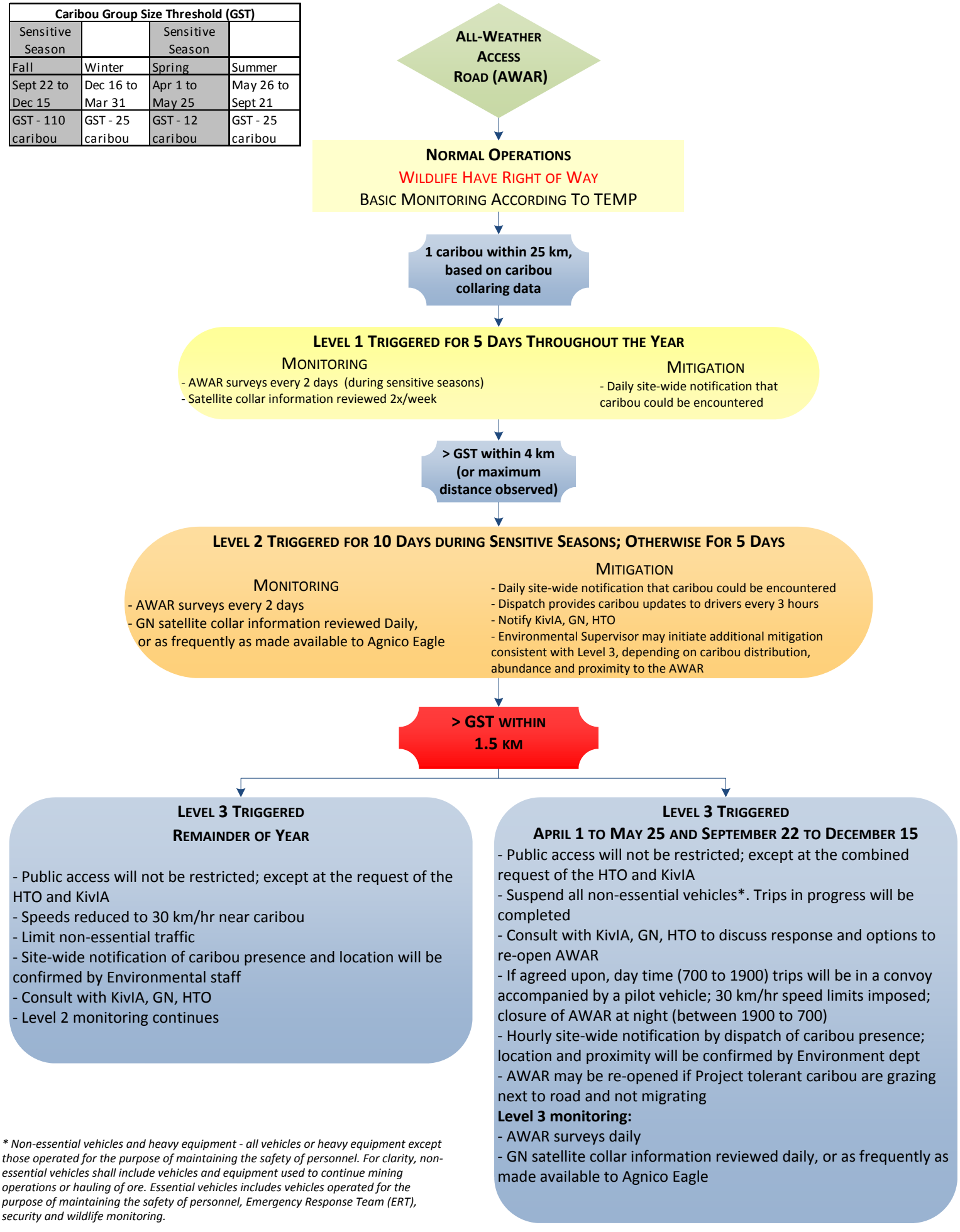

** Non-essential vehicles and heavy equipment - all vehicles or heavy equipment except those operated for the purpose of maintaining the safety of personnel. For clarity, non-essential vehicles shall include vehicles and equipment used to continue mining operations or hauling of ore. Essential vehicles includes vehicles operated for the purpose of maintaining the safety of personnel, Emergency Response Team (ERT), security and wildlife monitoring.*

Figure 09: Thresholds for Monitoring and Mitigation of Ungulates in Proximity to Blasting Activities

Caribou Group Size Threshold (GST)			
Sensitive Season		Sensitive Season	
Fall	Winter	Spring	Summer
Sept 22 to Dec 15	Dec 16 to Mar 31	Apr 1 to May 25	May 26 to Sept 21
GST - 110 caribou	GST - 25 caribou	GST - 12 caribou	GST - 25 caribou

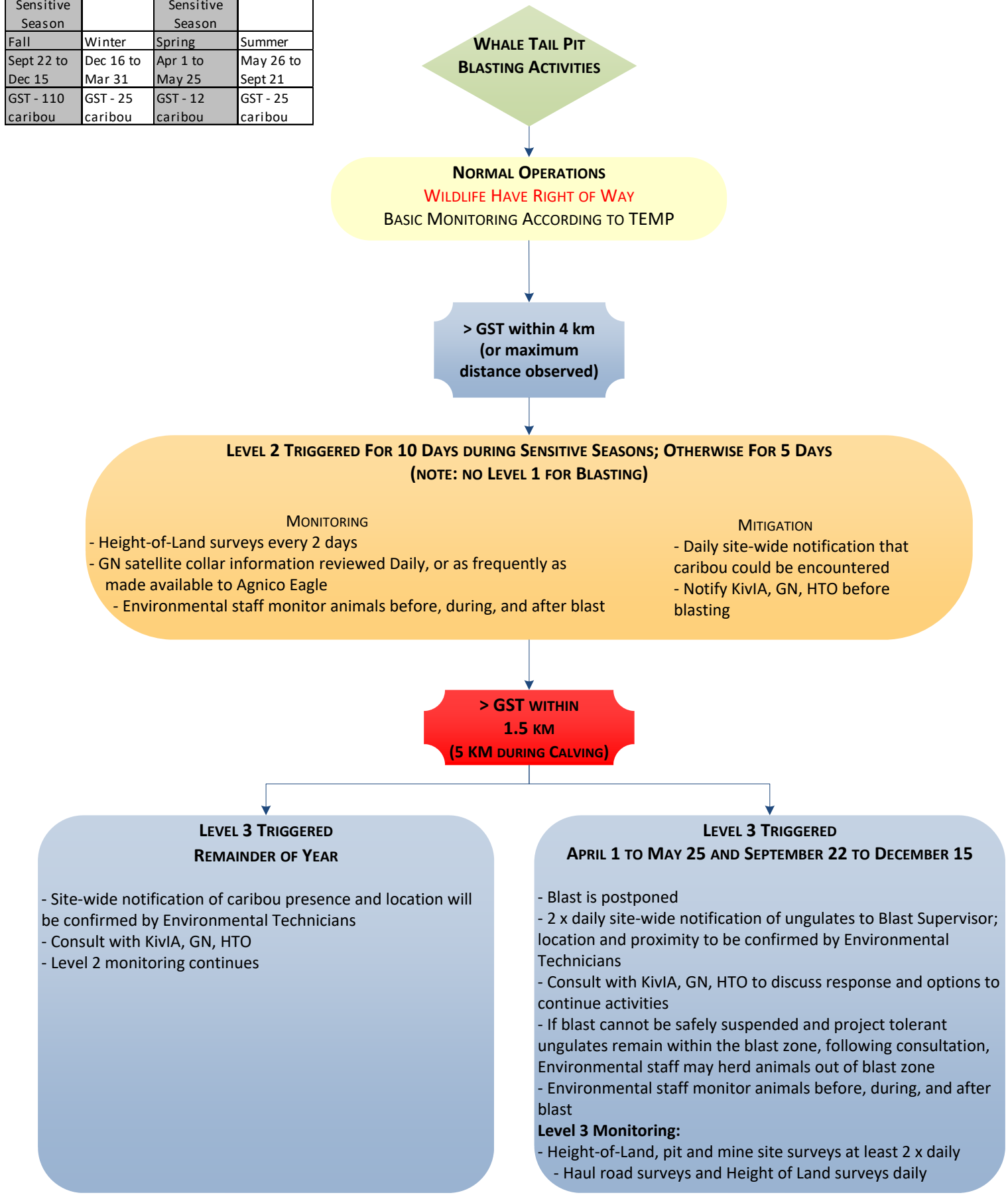

Figure 10: Thresholds for Monitoring and Mitigation of Muskox in Proximity to the Project

Muskox Group Size Threshold (GST):

- 13 muskox year round

Sensitive Seasons:

- Late winter (i.e., March 1st) through calving (i.e., mid-June) may be more sensitive and additional monitoring of muskox during this time frame will be completed, should muskox be observed near the site. If muskox are observed during this time frame, adaptive management measures may be required to reduce sensory disturbance.

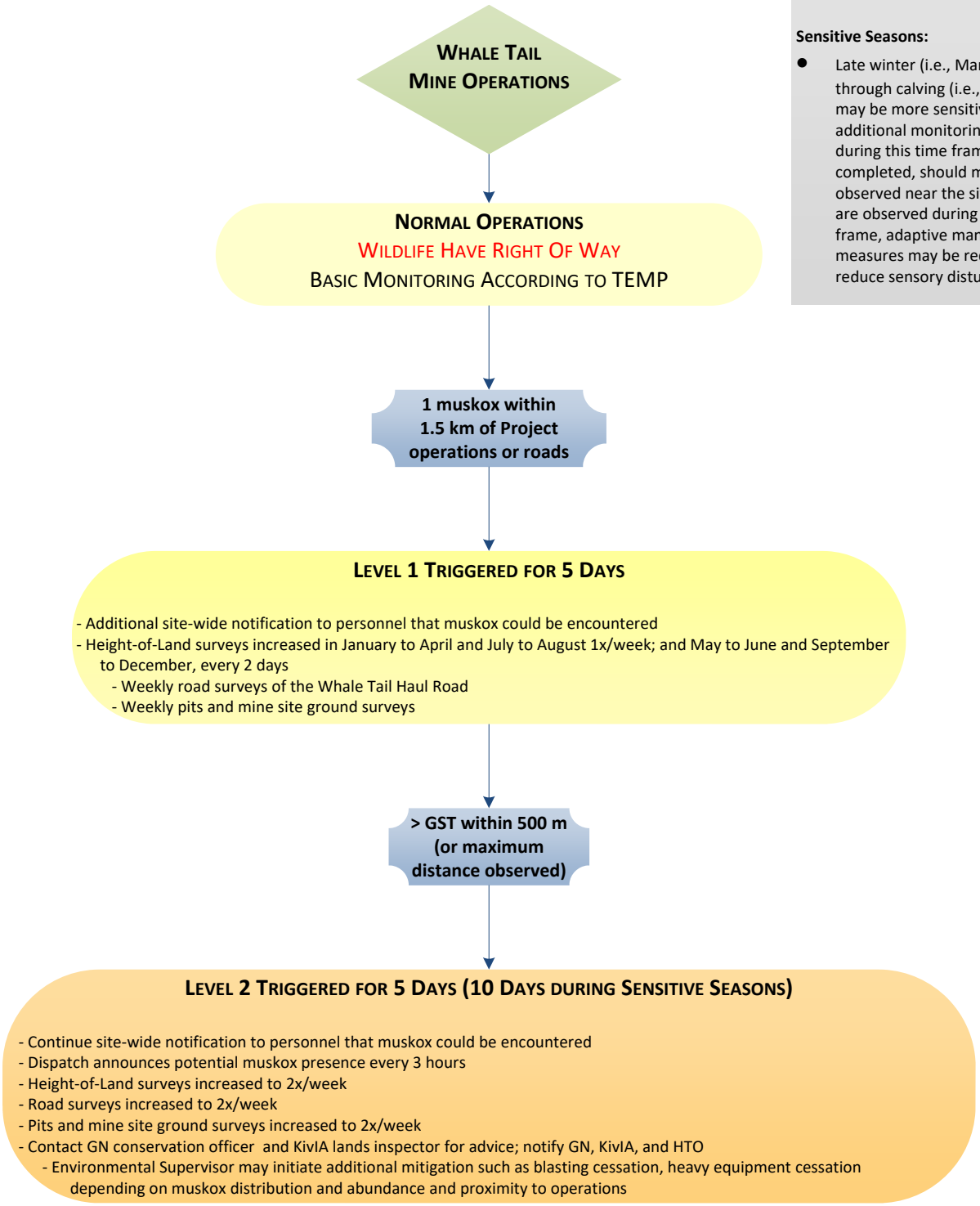

3.5.2 Monitoring Approach

Monitoring activities for Ungulates will be carried out prior to, during, and following construction. Following are the methods and frequency for the monitoring efforts for each measurable parameter.

Table 14 describes the framework which has been established for monitoring effects to Ungulates. As described above, an objective is to reduce sensory disturbance to caribou approaching the Project. This objective is not linked to an impact prediction, as the monitoring is to trigger mitigation rather than to test a threshold. **Figure 6** through **Figure 10** describe monitoring and mitigation for caribou/muskox approaching the Project site for all aspects of the operations. Documents reviewed to develop monitoring and mitigation strategies included:

- Caribou Road Mitigation Plan for the Jay Project (Golder 2017)
- Wildlife Mitigation and Monitoring Program Plan for the Back River Project (ERM 2017)
- Management of Caribou Post-Calving Areas in the Kivalliq Region, Nunavut (Poole and Gunn 2016)

Distance thresholds for caribou monitoring have the ultimate objective of detecting caribou group size triggers up to a distance of 4 km (or maximum distance observed); however, not all caribou will be able to be observed at this distance in all circumstances and areas associated with the Project. During the spring and fall migration period, alongside HTO and KivIA representatives, additional personnel will be on-site to determine the best and most logistically feasible methods of recording data to document caribou detection thresholds from roads (e.g., AWAR and Haul Road) and for HOL survey locations. On-site environmental supervisors may use discretionary mitigation measures at level 2 of caribou and initiate adaptive management in collaboration with KIA and HTOP. This could include the addition of specific automatic measures intended to prepare for an operational shutdown if caribou move closer to mine operations or roads. In addition, a retrospective analysis using presence/absence data and wildlife features to determine “hot spots” near infrastructure to focus monitoring and mitigation. Data during field surveys and through strategically placed motion sensing cameras, will provide an understanding of caribou behaviour when approaching infrastructure (e.g., within 500 m of AWAR) and when interacting with infrastructure (e.g., caribou on road with no traffic vs caribou on road with traffic vs caribou near road with ATV and hunters). These data will be analyzed, discussed with the TAG and reported annually or on a relevant frequency commensurate with data volume.

Although the monitoring and mitigation is focused on caribou, muskox are also observed along the AWAR, with approximately 2500 animals from 299 observation records, of which nearly 2/3 of observations consist of 5 animals or less. A specific monitoring and mitigation decision chart for muskox has also been developed (**Figure 10**).

To provide additional clarity and support to the decision trees, the following definitions are provided:

‘Project tolerant’ as: an animal or group of animals (i) observed within a mitigation distance buffer for greater than 72 hours during the winter or 48 hours during other seasons; and (ii) not visibly disturbed by the Project.

‘Non-Essential Vehicles’: include vehicles and equipment used to continue mining operations or hauling of ore.

‘Essential Vehicles’: include vehicles operated for the purpose of maintaining the safety of personnel, Emergency Response Team (ERT), security and wildlife monitoring.

Table 14: Monitoring Approach for Ungulates for the Project

Potential Effect	Impact Prediction	Quantitative Monitoring Variable	Thresholds	Monitoring Activity	Frequency
Habitat Loss **Meadowbank Mine, and Vault Pit and Haul Road**	Loss <EIA prediction and subsequent approvals (see Gebauer et al., 2015)	area of altered habitat	10% above total loss of high suitability habitat (for ungulates) predicted in EIA **Meadowbank Mine and Vault Site** - 240 and 191 ha for the growing and winter seasons, respectively	Habitat monitoring	Every three years post-construction or based on TAG meeting outcomes
Habitat Loss **Meadowbank AWAR**	Loss <EIA prediction and subsequent approvals (see Gebauer et al., 2015)	area of altered habitat	10% above total loss of high suitability habitat (for Ungulates) predicted in EIA **Meadowbank AWAR** - 63 and 188 ha for the growing and winter seasons, respectively	Habitat monitoring	Every three years post-construction or based on TAG meeting outcomes
Habitat Loss **Whale Tail Pit and Haul Road**	Loss <EIS prediction (see Golder 2016)	area of altered habitat	10% above total loss of high suitability habitat (for Caribou)[(a)] predicted in EIA **Whale Tail Site** – 30 and 342 ha for the growing and winter seasons, respectively	Habitat monitoring	Every three years post-construction or based on TAG meeting outcomes
Sensory Disturbance to Caribou	N/A	Caribou presence	Monitoring is continuous, but with increasing intensity as caribou approach the Project (see **Figures 6** through **9**)	Pits and mine site ground surveys	Weekly increased up to every two days as per triggers (see **Figure 6**)
				Whale Tail Haul Road surveys	Weekly increased up to every two days as per triggers (see **Figure 7**)
				Caribou satellite-monitoring program	Data provided to Agnico Eagle from GN weekly, requested daily as per triggers(see **Figure 6** through **Figure 9**)
				ZOI and Mechanistic Studies	Through discussions/workshops with TAG members, determine new analysis requirements to better understand the indirect effects of mining on caribou as new data is acquired (Project Certificate No.008, Condition 29)
				Incident reports	As occurring

Table 14: Monitoring Approach for Ungulates for the Project

Potential Effect	Impact Prediction	Quantitative Monitoring Variable	Thresholds	Monitoring Activity	Frequency
				Height-of-land surveys	Weekly increased up to every two days as per triggers (see **Figure 6** through **Figure 9)**
Sensory Disturbance to Caribou from Blasting	N/A	Intensity of blast	NPC-119 criteria Monitoring is continuous, but with increasing intensity as caribou approach the blasting site (see **Figure 9**)	Monitoring of blast frequency, noise, and vibration	Blast is postponed. 2 x daily site-wide notification of ungulates to Blast supervisor; location and proximity to be confirmed by Environmental Technicians (see **Figure 9**)
Sensory Disturbance to Muskox	N/A	Muskox presence	Monitoring is continuous, but with increasing intensity as muskox approach the Project (see **Figure 10**)	Pits and mine site ground surveys	Weekly increased up to 2x/week as per triggers (see **Figure 10**)
				Whale Tail Haul Road surveys	Weekly increased up to 2x/week as per triggers (see **Figure 10**)
				Incident reports	As occurring
				Height-of-land surveys	Weekly increased up to 2x/week as per triggers (see **Figure 10**)
Vehicle Collisions	Ungulates will not be killed by vehicles	Numbers of Ungulates killed by vehicles	2 individuals	Pits and mine site ground surveys	See above
				Whale Tail Haul Road and All Weather Access Road surveys	See above
				Incident reports	As occurring
Hunting by Baker Lake Residents	Harvest intensity in the Meadowbank RSA will increase <20%	Correlation between spatial distribution of Ungulate harvest and road development Monitor trend in harvest from Hunter Harvest Study	>20% adjustment in harvest distribution Meadowbank AWAR use. This metric will further be refined as part of the revised HHS design and implementation	Baker Lake Hunter Harvest Study	Initiated in 2007 and active until 2015. Re-initiated in September 2017 with quarterly data collection; Yearly reporting

Table 14: Monitoring Approach for Ungulates for the Project

Potential Effect	Impact Prediction	Quantitative Monitoring Variable	Thresholds	Monitoring Activity	Frequency
	No increase in harvest from Whale Tail Haul Road RSA	Monitor trend in harvest distribution or total harvest from Hunter Harvest Study	No change in harvest	Baker Lake Hunter Harvest Study Satellite-collaring program	Initiated in 2007 and active until 2015. Re-initiated in September 2017 with quarterly data collection; Yearly reporting Data provided to Agnico Eagle from GN weekly, requested up to 2x/week as per triggers (see **Figure 6** through **Figure 9**)

Note: Frequency for some activities may change, see **Figure 6** through **Figure 9**

(a) For Whale Tail extension, effects on muskox were screened out during the EA process; therefore, they are not included in habitat loss calculations for the Whale Tail Site

3.5.2.1 Caribou Group Size

The environment department representative or observer (i.e., biologist, technician, and local hunter conducting caribou surveys) responsible for determining exceedance of triggers will monitor and document a "group of caribou" defined as:

> An aggregation of caribou that are sufficiently close together that they can see and react to another animal's behaviour, and have the potential of responding should one or more animal in the aggregation become startled.

At the discretion of the observer, if an aggregate of caribou are separated by approximately 500 m, this may be considered 2 groups of caribou depending on level of interaction and behaviour of groups. Agnico Eagle observes will work with GN, KivIA, and HTO representatives to ensure consistency in the application of this definition.

3.5.2.2 Group Size Thresholds

Group size numbers of caribou collected from observation monitoring along the AWAR are shown in **Table 15**. A group size of 50, which has been used to trigger adaptive management for caribou to date at the Meadowbank Mine, has been shown to encompass almost 2/3 (i.e., 64%) of all caribou observed from roadside surveys from 2007 to 2016 (**Table 15**). In addition, the majority of caribou groups greater than or equal to 50 are observed in the rut and fall migration and winter seasons (i.e., 91%).

Table 15: Summary of Caribou Numbers by Group Size Thresholds along the All-Weather Access Road (AWAR) from 2007 to 2016

Group Size	Total Number of Observations	Total Number of Caribou Represented in Group Size	% Total Caribou Observed
≥500	30	24,204	24.6%
≥100	181	52,513	53.4%
≥50	346	62,503	63.7%
≥40	423	65,772	67.0%
≥30	572	70,666	72.0%
Total	**3,961**	**98,192[(a)]**	

(a) Represents the total number of caribou observed from AWAR surveys between 2007 and 2016, consequently it will not be the sum of the Total Number of Caribou.

Through discussions with the GN and the KivIA, a desired minimum protection level of 75% of all caribou observed will be used as the foundation for group size thresholds (GST). Consequently, GSTs have been developed for the three main periods when caribou are observed on-site: early and late winter, fall rut and migration, and spring migration (**Table 16**). These data are also presented in **Appendix I** as graphs for each season. To be further conservative of caribou protection, the lower Confidence Interval value was used for the GST to trigger adaptive management (**Table 16**).

Table 16: Seasonal Caribou Group Size Thresholds Representing the Protection of 75% of All Caribou Observed, with 95% Confidence Intervals

Season	Group Size Threshold	Average Group Size	Upper/Lower 95% Confidence Intervals (CI)
Spring Migration	14	14.6	14.9/14.3
Early and Late Winter	35	35.3	35.7/34.9
Fall Rut/Fall Migration	140	175.0	209.6/140.4

Agnico Eagle reviewed GSTs to protect 75% of the caribou interacting with the Project. Agnico Eagle is committed to caribou conservation through the implementation of adaptive management based on group size and distance thresholds, but these measures have to be done in a manner that balances mining operations, and at this point it is uncertain how operations will be affected using a GST of 75%. Although Agnico Eagle suggests using the 75% GST and revisiting this number during the TAG meeting provided that this percentage balances operations and caribou conservation, as per Project Certificate No.008, Condition 30, Agnico Eagle will continue to collect additional data on caribou group sizes in proximity to the project and will work with the TAG to refine appropriate caribou GSTs. As mentioned earlier, the indirect effects of sensory disturbance on wildlife populations is poorly understood in terms of affecting the distribution and abundance of wildlife in relation to a mining development, even less is known of how these effects can translate to population level effects. Resource management objectives are typically devised around direct effects to wildlife populations such as hunting and habitat conservation, among others. Nevertheless, as per Project Certificate No.008, Condition 30, Agnico Eagle will initially adopt GSTs presented in **Table 17**.

Table 17: Initial Seasonal Caribou Group Size's as per Project Certificate No.008, Condition 30

Sensitive Season		Sensitive Season	
Fall	Winter	Spring	Summer
Sept 22 to Dec 15	Dec 16 to Mar 31	April 1 to May 25	May 26 to Sept 21
GST - 110 Caribou	GST - 25 Caribou	GST - 12 Caribou	GST - 25 Caribou

Based on the seasonal group size that will be used in the field, to implement heightened mitigation measures, more emphasis will be placed on understanding group size and the variation of group sizes within each biological season. In addition, whenever possible, the presence of collars will also be noted so that a linkage between collar presence and overall herd numbers can begin to be developed for each season[1]. As GSTs are the main trigger for mitigation and management, it is critical to understand the efficacy of these GSTs for overall herd protection.

[1] Collars can be challenging to see and observed at distances <300 m; all effort will be made to locate collars.

3.5.2.3 Zone of Influence and Mechanistic Studies

As per Project Certificate No.008, Condition 29, Agnico Eagle will work in collaboration with the GN and other relevantly interested parties, to collect additional caribou data and conduct analysis of this data to address questions about the direct and indirect effects of mining on caribou distribution and abundance. To date, Agnico Eagle completed a preliminary ZOI study. Agnico Eagle will continue to collaborate with the GN so that additional caribou data relevant to Agnico Eagle's operations can be collected to further explore a ZOI and/or other effects on caribou. For example, there appears to be an interaction between caribou and the road during seasonal movements, whereby caribou movements may be delayed at the local scale (i.e., not necessarily a delay to the ultimate destination of the calving grounds) when they encounter the road. Ground-based studies as part of the Whale Tail Pit Haul Road (referred to as the Haul Road) monitoring are being considered to determine the mechanisms that may be responsible for this delay. The Haul Road monitoring would specifically look at collecting the following information:

- Surveys inform of caribou distribution and relative abundance, and the AWAR datasheet has been the means for collecting information using the following parameters: date, time, species, number (group size), behavior, habitat, location coordinates, direction from road, distance from road, and general comments.
- Suggested changes to the objectives, methods, and data collection parameters are as follows and will be implemented in 2018:
    - Agnico Eagle developed GSTs to guide mitigation/management; these GSTs are seasonal and based on a protection measure of 75% of the herd (i.e., 75% of the total caribou numbers are represented by group sizes of the seasonal threshold or higher);
    - When caribou are near the Roads, monitoring intensity goes up through a phased approach to daily monitoring;
    - To improve data collection, Agnico Eagle is suggesting to better understand detection distance thresholds from the roads (AWAR/Haul Road) and we can do this by testing detection and measuring using range finders, people on the landscape, and installing visual markers at 1 km perpendicular distances from the road;
    - Observers will also record the maximum observable distance even when caribou observations are 0 and can retrospectively use collar data to try and determine detectability;
    - Agnico Eagle is now employing a consistent definition of groups but it is likely still important to note the distance of one group from another and record that behavior on the data sheet (i.e., are they separate groups?) to determine if they are interacting (exchanging individuals or responding to one another). The alternative

approach is to only record data for group you know is unique (i.e., if they are close spatially assume it's the same group[2]).

- Haul Road surveys are drive and scan, with un-controlled stops to confirm caribou numbers or to let caribou pass. However, Agnico Eagle is going to implement some trials of time-limited scans in certain locations along the Haul Road (i.e., where there's trails, elevation advantages, etc.) to help with detectability. Depending on how many surveys are completed in each season and based on caribou numbers, there may be enough data to generate an occupancy map of the Haul Road by breaking it into segments with presence-absence data (observed or not). The result wold be a heat map of the Haul Road, which could then be used to focus mitigation and monitoring. We would also consider other co-variates such as elevation (i.e., a DEM), caribou trail presence, or survey-specific covariates (e.g., distance to observation, weather).

These minor modifications are intended to better facilitate the determination of detection distance thresholds (i.e., how far out can we detect caribou from these areas when we know the caribou are coming based on collar data), caribou distribution, how many caribou, group size, and ideally even caribou behaviour at various distances from the road and qualified based on road activity level.

TAG meetings specific to caribou analysis to understand the direct and indirect effects of mining on caribou distribution and abundance will be established. Agnico Eagle wishes to work collaboratively with the GN, the KivIA, and other interested relevant and qualified parties to help understand the key effects and the optimal mitigation and management. Studies and reports will be completed on an as-needed basis throughout the operations of the mine as determined through the TAG and as additional data is acquired.

3.5.2.4 Blasting Thresholds

Nunavut does not have any regulations or guidelines related to potential environmental noise and vibration effects from blasting and the NIRB does not endorse or recommend any specific regulation or guideline as being appropriate for assessing potential environmental effects from blasting. As such, the approach used here is that safety procedures for the protection of caribou due to blasting should follow the standards and procedures for humans.

The Ontario Ministry of Environment Noise Pollution Control (NPC) Publication 119 (OMOE 1978) represents best practices with respect to the assessment of potential noise and vibration effects from blasting. As such, NPC-119 assessment methods and criteria were used in the Project Noise Impact Assessment. The EIS estimates that blasting noise during haul road construction will reach the NCP-119 limit of 120 dBZ at 300 m from the blast, and at 1,000 m for Whale Tail Pit operations. Noise is also reduced when receptors are not within the line-of-sight of the blast (such as when the blast is in a deep open pit or when receptors are behind a hill). For vibration, the EIS estimates that blasting vibration from haul road construction will reach the NCP-119 limit of

[2] Based on field observations, animals can be considered a single group if they are 500 to 1,000 m apart.

10 mm/s at 165 m from the blast, and at 1,150 m for Whale Tail Pit operations. Blasting vibrations from the Whale Tail Pit operations decay quickly from the source and are 504 mm/s at 100 m from the source, 38 mm/s at 500 m from the source, and down to 4 mm/s 2 km from the source.

Caribou Response to Noise and Vibration

Research into the range of caribou frequency sensitivity has found that caribou are less sensitive to low frequency noise than humans (Flydal et al. 2001). For example, the caribou hearing threshold at 63 Hz is approximately 30 decibels (dB) higher than the human hearing threshold at 63 Hz. Put another way, a human could be expected to detect a low frequency noise approximately 30 dB quieter than could be detected by a caribou.

Because human hearing is more sensitive to low frequencies than caribou hearing, using human-centric thresholds for effects to caribou can be considered conservative – i.e., tending to overestimate the magnitude of the effect.

Blasting noise and vibration are measured by two parameters:

- Peak Particle Velocity (PPV) expressed in millimetres per second (mm/s)
- Peak Pressure Level (PPL) expressed in unweighted or linear decibels (dBZ)

Caribou hearing is less sensitive at low frequencies than human hearing (Flydal et al. 2001); therefore, it is likely that humans will be able to detect airborne PPL associated with blasting at larger distances than will caribou. In contrast, Inuit Qaujimajatuqangit (IQ) indicates that caribou feet are sensitive; therefore, it is likely that caribou will be able to detect ground-borne PPV associated with blasting at larger distances than humans. In the absence of research identifying specific vibration detection thresholds for caribou feet, it is not possible to estimate specific distances over which caribou will be able to detect ground vibration from Project blasting, although Reimers and Coleman (2001) noted that aerial bombing in military exercises did not typically elicit a visible behavioural response from reindeer at distances between 1.8 and 3.0 km. The EIS indicates that PPV from blasting at the Whale Tail Pit is predicted to drop to effectively 0 mm/s for distances of 4.0 km from the blasting site. As such, it seems reasonable to conclude that PPV associated with blasting would not be detectible by even the most sensitive caribou feet at distances beyond 4.0 km from the blasting site. Conversely, PPV is predicted to be at 13 mm/s at 1,000 m from the source and 7 mm/s at 1.5 km from the site.

Agnico Eagle will implement a field-based study to understand and document the visual and physical parameters of the blast and quantify the response of caribou to the blast.

The Study design will be implemented during the 2018/2019 winter period and followed up again during snow free conditions. The objective of the proposed program is to first characterize blasting and vibration levels on the landscape as a result of operational blasting activities. The measurement data will be used to characterize the relationship between noise/vibration levels and blasting parameters (e.g., charge mass, burden depth), and the relationship between noise/vibration levels and propagation conditions (e.g., air temperature, wind speed/direction).
The study will achieve the following:

- The measurement program will consist of long-term blast monitoring over two different time windows. The first-time window will cover nominal summertime conditions (i.e., unfrozen ground, temperatures above 0°C). The second time window will cover nominal wintertime conditions (i.e., frozen ground, temperatures below 0°C).
- The monitoring program will characterize ground vibration from blasting using the Peak Particle Velocity (PPV) parameter. The monitoring program will characterize noise from blasting (also known as airblast overpressure) using the Peak Pressure Level (PPL) parameter.
- Based on blasting schedule and knowledge of caribou distribution and group sizes, opportunistically capture caribou behavioural response to blasting.
- Existing blast monitoring program is in place to measure noise and vibration, will use this data to extrapolate vibration measurements across the landscape.
- Characterize each blast in the field based on sound (develop a relative scale similar to the Beaufort scale for wind), visibility of dust plume (Y/N), if so describe it (i.e., height, width, visual longevity, etc.).
- Characterize caribou response to blast – basic behavioural parameters including the initial startle or not. Group and focal behaviour scans will help to quantify the behavioural response and to understand how many individuals respond versus how long. In addition, behavioural monitoring has been scrutinized and requires several hours of effort to determine meaningful results. Consequently, observations from Inuit hunters will be made and incorporated and video of caribou responses will also be used to gather a weight of evidence approach to answering the question.
- The logistical challenge will be to get an accurate distance of caribou groups from the blast, right now Agnico Eagle is considering 250 to 500 m increments. Agnico Eagle is also considering the use of laser range finders that can measure the distance from observer to caribou and distance from observer to blast and the angle to triangulate.
- The objective is to demonstrate the response of caribou to blasting at varying distances.

The approach outlined in **Figure 9**, will be followed. In addition, following threshold to delay a blast will be used:

- If caribou or other wildlife are observed within the danger zone for humans surrounding the blast, where there may potentially be fly rock or debris, as determined by the Blast Supervisor – typically 600 m radius from blast centre
- If the caribou Level 3 mitigation is triggered, when the caribou seasonal GST are observed within 1.5 km of the Project facilities (**Figure 9**)

3.5.2.5 Habitat Loss & Degradation

Methods: Habitat loss and degradation will be monitored and assessed through habitat monitoring (see **Section 3.3.2** for details). An analysis of the loss of High suitability habitats will be conducted and compared to thresholds (see **Table 13**).

Frequency: See **Section 3.3.2**.

3.5.2.6 Sensory Disturbance and Disruption of Movements

The primary goal of monitoring for sensory disturbance and disruption of movements of Ungulates is to provide an early detection of animals approaching a project (Poole and Gunn 2015). Once animals are detected, operational activities will be adjusted, as described in **Figure 6** through **Figure 10**, to reduce sensory disturbance. When the caribou seasonal GST are observed within 1.5 km of the Whale Tail Haul Road, additional mitigation will be implemented of reducing speeds to 30 km/h and any caribou crossing the Whale Tail Haul Road will be given the right-of-way. The following monitoring will be used to detect caribou.

- Caribou Satellite-Collaring Program
- Height-of-Land Surveys (see **Section 3.2.1**)
- Road Surveys (see **Section 3.2.1**)
- Pit and Mine Ground Surveys (see **Section 3.2.2**)

Monitoring and mitigation triggers for caribou include one collared caribou within 25 km of the Project (i.e., Level 1), which initiates more intensive monitoring and heightened awareness for Project staff that caribou are in the area. See **Table 17** for seasonal specific GSTs.

During the June, 2018 TAG meeting, several topics were evaluated regarding sensory effects to caribou related to general monitoring to examine group size, distribution, seasonality and implement mitigation, blasting (see Section 3.5.2.4 for a study to be immediately implemented) and road interactions, particularly along the haul road in relation to traffic. To gather additional information on caribou interactions with the Whale Tail Haul Road, 20 remote cameras were placed along the haul road (**Figure 11**). This initial monitoring is to determine any trends related to distribution of caribou road crossing, effects of traffic/activity to caribou road monitoring, which can then guide more fine-scale mitigation of traffic, road activity and potentially roadside marker design.

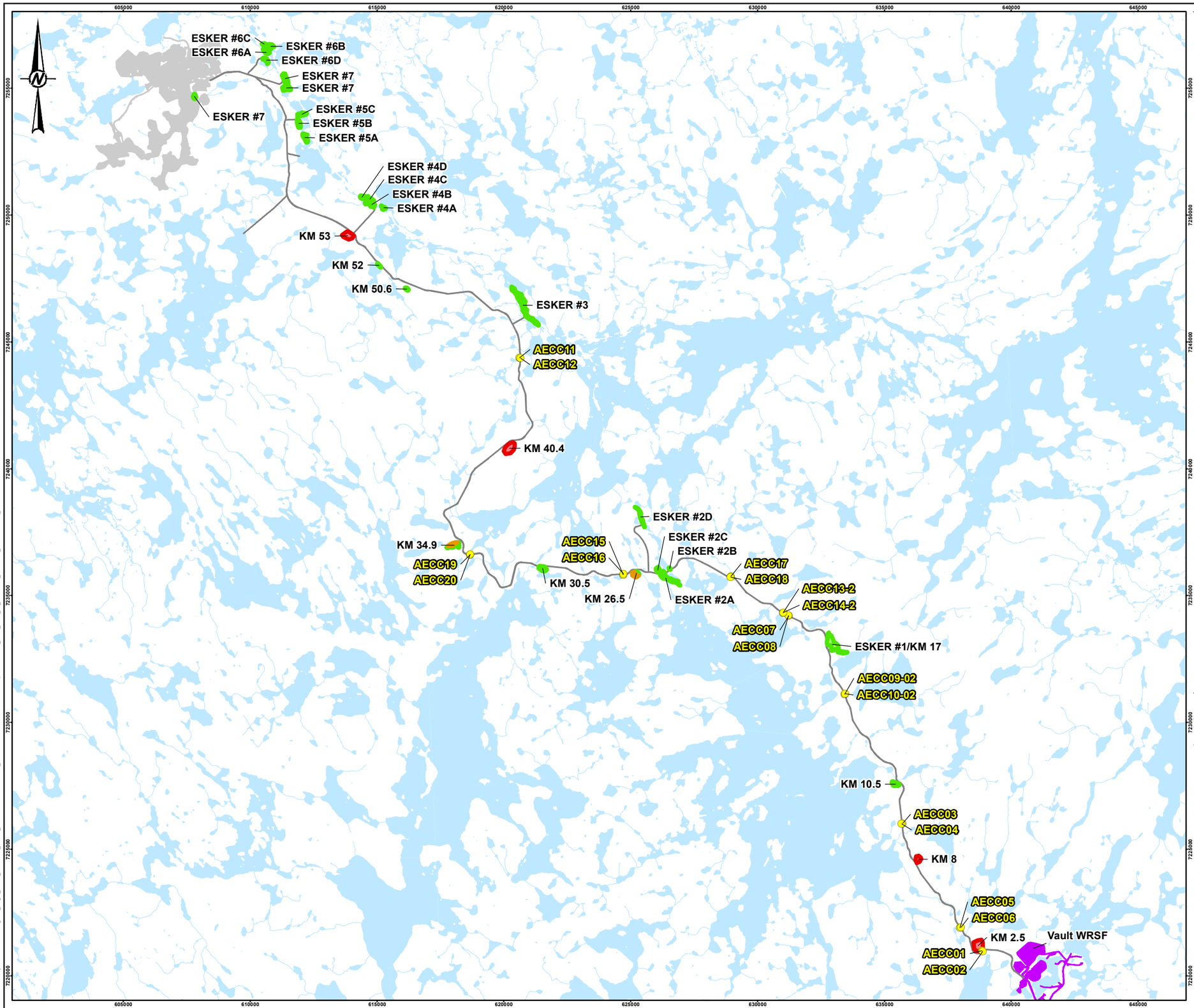

LEGEND

- CARIBOU CAMERA MONITORING LOCATION

WHALE TAIL

- ESKER/QUARRY (APPROVED)
- ESKER/QUARRY (EXPANSION)
- ESKER/QUARRY (NEW)
- INFRASTRUCTURE
- HAUL ROAD
- MEADOWBANK OPERATION AND INFRASTRUCTURE
- WATERCOURSE
- WATERBODY

0 3,000 6,000

1:150,000 METRES

REFERENCE(S)

1. INFRASTRUCTURE OBTAINED FROM AGNICO EAGLE MINES LIMITED, DRAWING AMQ 2025Q4V5.DWG.
2. WATERCOURSE AND WATERBODY DATA OBTAINED FROM NATURAL RESOURCES CANADA. DATUM: NAD 83 CSRS PROJECTION: UTM ZONE 14

CLIENT

AGNICO EAGLE

AGNICO EAGLE MINES LIMITED:
MEADOWBANK DIVISION

PROJECT

MEADOWBANK AND WHALE TAIL - TEMP

TITLE

CARIBOU CAMERA MONITORING LOCATIONS

CONSULTANT

GOLDER

YYYY-MM-DD	2018-12-13
DESIGNED	CS
PREPARED	CDB
REVIEWED	CD
APPROVED	CD

PROJECT NO.	CONTROL	REV.	FIGURE
18101195	4000/4030	0	11

IF THIS MEASUREMENT DOES NOT MATCH WHAT IS SHOWN, THE SHEET SIZE HAS BEEN MODIFIED FROM: ANSI B

25mm

0

PATH: Y:\burnaby\CAD-GIS\Client\Agnico_Eagle_Mines_Ltd\Whale_Tail\9_PROJECTS\18101195\02_PRODUCTION\4000\MXD\4030\Report\18101195_4000_4030_11_CARIBOU_CAMERA_MONITORING_LOCATIONS.mxd PRINTED ON: 2018-12-13 AT 10:10:00 AM

Caribou Satellite-Collaring Program

Methods: As part of its ongoing monitoring program for the Project, Agnico Eagle is collaborating with the GN in a caribou satellite-collaring program in the Meadowbank RSA. The joint satellite-collaring program will provide seasonal and regional information on caribou distribution within the Meadowbank and Whale Tail RSAs, and data collected during spring and fall migration periods will inform mitigation and management activities. In collaboration with the GN, data are formally analyzed for caribou migration trends and analyzed annually.

To determine whether caribou not observed from the Project are being disturbed (e.g., if their movement is deflected to avoid the Project), a one-time comprehensive analysis of satellite-collaring data since 2008 will be undertaken collaboratively by the GN and Agnico Eagle, but will be led by the GN. Results of the analysis will be included in the annual Wildlife Monitoring Summary Report. In addition, Agnico Eagle has initiated an initial analysis to explore the extent of a potential ZOI from the Project and will provide this information as it is available.

Frequency: Initiated in 2008 with four subsequent deployments. Data provided to Agnico Eagle from GN weekly, requested up to twice per week (see **Figure 6** through **Figure 9**).

Height-of-Land Surveys

Methods: Five, easily accessible, HOL survey locations are established along the Whale Tail Haul Road, one of which is near the Whale Tail Pit and another near the Vault Pit. The locations are within 500 m of the Whale Tail Pit Haul Road, and provide an unobstructed view (up to 360^0) of the surrounding terrain. **Appendix G** shows a viewshed analysis showing the amount of land available within a 4 km viewshed from each HOL survey location and a 1.5 km viewshed from the AWAR and Whale Tail Haul Road and includes available collar data. The HOL locations also show where caribou observations, signs, and trails were observed, which were used to guide these survey locations. The HOL surveys provide an 'early warning' system of the presence of caribou in proximity to the Whale Tail Pit and Haul Road after the collar data has shown that caribou may be moving towards the Project area and/or collars are within 25 km of the Project area. The surveys can be easily accessed from the Haul Road and will be conducted by environmental technicians or trained wildlife monitors. A minimum of 20 minutes will be spent surveying at each of the locations using a combination of naked eye, binoculars, and scopes. The surveyors will independently view the landscape for caribou starting at opposite cardinal directions and will scan 180° for 5 minutes at a time, but move 90° every 5 minutes. Results will then be compared to determine if GST is triggered, but consensus on numbers is not necessary as each survey will generate a separate result for each observer so that variability can be incorporated into detection rates. Further, where possible, this will also be tested with collar data. If feasible, a representative photo of the herd will be taken if GSTs (refer to decision trees) are exceeded; the environmental supervisor will be contacted immediately.

Information collected will be similar to that collected during systematic pits and mine site ground surveys (see **Table 13**, field data form in **Appendix D,** and **Appendix G**). Behavior of Ungulates will also be recorded for each encounter and comments on disturbance related to a particular behavior (e.g., running) will be made (see field form in **Appendix D**).

A summary of field confirmation details regarding the viewscape analysis at HOL locations includes the following (M. Young, Dougan Associates, 2017, pers. comm.):

HOL Survey Point	Average Maximum Observable Distance	Comments
1	9.2 km	This site was slightly relocated to improve the visibility of the road. Small blind spots (50 to 100 m wide) facing S and NW
2	7.2 km	Small blind spots facing S, SW, and W
3	9.1 km	Small blind spots facing S, SE, NW, and E
4	8.9 km	Lars Qaqqaq identified this location as a movement corridor for Barren Ground Caribou Small blind spots facing SE, W
5	5.5 km	Road at this section is not currently built. Small blind spots facing SW, NW, NE. SW, and NE blinds spots to be opened up when eskers removed for road construction.

The viewshed analysis is an important component of the overall monitoring program as it provides direction for monitoring locations that best capture caribou movements through the Project area during the spring and fall migration periods. Consequently, the survey locations chosen based on the results of the viewshed analysis will be continually reviewed and updated with the TAG. Additional tasks remaining related to the viewshed and survey locations still need to be completed prior to construction of the Whale Tail Pit and Haul Road, which include the following:

- Additional HOL survey location is to be added on the west side of the Whale Tail Pit to capture areas not currently covered by survey locations as revealed in the viewshed analysis. Suitable locations will be determined in 2018 field season and tested.
- Selected points along the road may fill in monitoring gaps in the viewshed, these sites have not yet been selected but an initial set of locations will be determined in 2018.
- Determine the amount of the landscape covered by HOL survey locations and roadside surveys within an area that buffers the HOL locations by 4 km and the road by 1.5 km to determine if there is sufficient monitoring coverage from the existing surveys.

Frequency: Surveys will be conducted weekly from January to April and July to August, twice per week from May to June and September to December. Increased up to every two days as per triggers (see **Figures 6, 7, 9,** and **10**).

3.5.2.7 Project-Related Mortality – Vehicle Collisions

Methods: Monitoring will be conducted during ground surveys at pits and the mine site, and along roads. Incident report (**Appendix D**) to be submitted following every vehicle collision with an Ungulate. The thresholds level of mortality beyond which further mitigation will be required is two mortalities per year (see **Table 14**).

Frequency: Incident reports (**Appendix D**) submitted when road-related mortalities occur. Ungulate mortality will be reviewed on an annual basis.

3.5.2.8 Project-Related Mortality – Hunting by Baker Lake Residents

Methods: As stated in the TEMP (Cumberland 2006), the Hunter Harvest Study (HHS) was established to monitor the spatial distribution, seasonal patterns, and harvest rates prior to and following construction of the AWAR. A survey of hunter harvests was conducted among Baker Lake residents from 2007 through 2015; however, declining participant rates has led to revaluation of the HHS approach.

Agnico Eagle has discussed and met with stakeholders (GN, KivIA, and HTO in November 2016 [Winnipeg], January and June 2017 [Ottawa]) to broaden the scope of the HHS and facilitate greater involvement of the local community in future years of the study.

The primary objectives of the HHS are to monitor potential Project related effects on harvesting of wildlife by residents of Baker Lake. This objective is achieved by estimating the following key metrics:

1. The distribution of caribou, muskox, and wolverine harvest by residents of Baker Lake; and

2. The total level (or an index of) caribou, muskox, and wolverine harvest by residents of Baker Lake.

Other objectives of the HHS may be established in consultation with TAG or other participants and may include:

1. Supporting creel surveys by gathering information on Arctic Char (*Salvelinus alpinus*), Lake Trout (*Salvelinus namaycush*), Lake Whitefish (*Coregonus clupeaformis*), and Arctic Grayling (*Thymallus arcticus*) catch rates and Inuit-use patterns in the Baker Lake area;

2. Understanding regional distribution of hunting and fishing activity;

3. Investigating seasonal timing of hunting and fishing activity; and

4. Determining whether increased harvest and catch rates are associated with the AWAR.

As discussed during consultation with stakeholders, HHS will further seek to:

- increase and maintain the hunter participant rate in the future of the program;

- improve resource protection,

- improve hunter awareness and education;

- increase the integration of Inuit Qaujimajatuqangit and Traditional Knowledge; and

- increase availability of data collected for a collective approach to understanding wildlife harvest, assist Agnico Eagle in mitigative actions and the GN in management decisions.

The HHS will promote involvement/partnership of the local stakeholders; including the HTO, Elders, GN officer, and KivIA in a collaborative format conceptually illustrated in **Figure 12.** Detailed survey methods, survey timing, and promotional strategies will tentatively include HHS Committee members visit hunter harvest study participants on a regular basis to document harvests and discuss general hunting trends and observations. The members will also conduct communication actions and post promotional material around the Hamlet of Baker Lake. The use of social media will also be assessed and potentially used to increase awareness within the community and especially towards a younger generation of hunters.

Figure 12: Conceptual Hunter Harvest Study Partnership, Participants, and Relevant Objectives

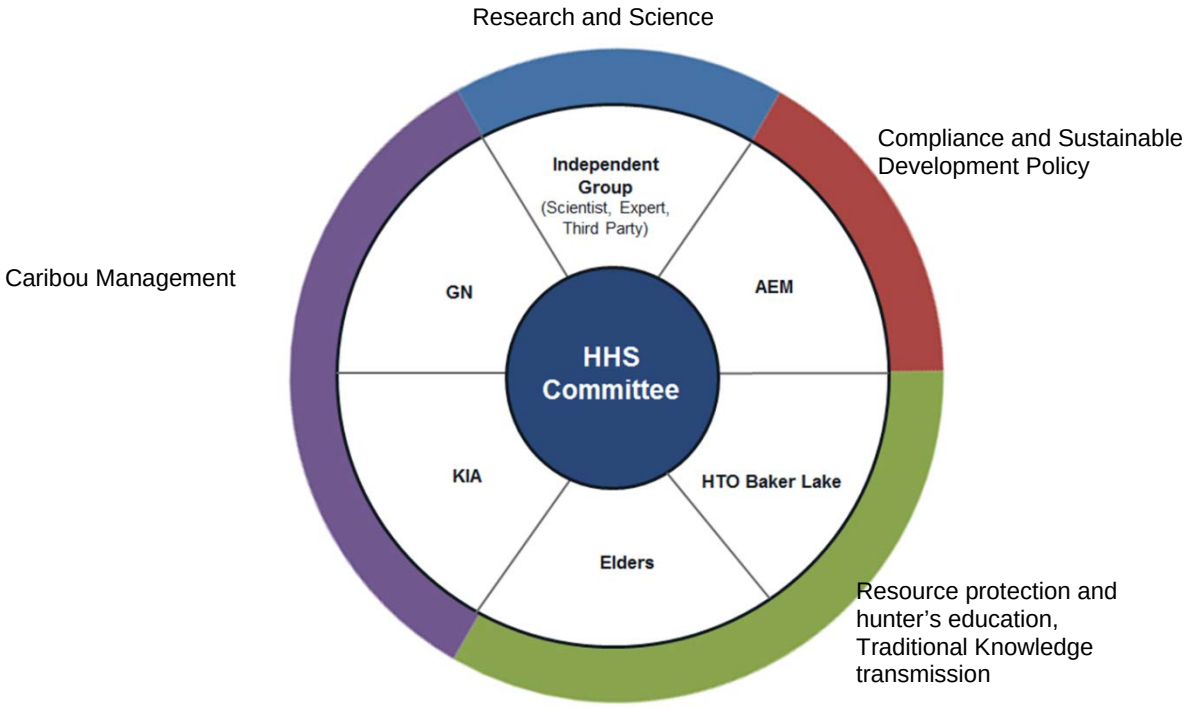

The use of a third-party group was suggested and intended to facilitate the collection, preservation, exchange, and use of local observations and knowledge of the community. The emphasis would be targeted on supporting community-based efforts to direct research and monitoring based on priorities and information needs. It would also link between stakeholders and provide expertise towards community led initiatives in the HHS.

Frequency: Data will continue to be collected at least quarterly and analyzed at the end of each calendar year and provided within the annual Wildlife Monitoring Summary Report.

3.5.3 Thresholds

Should the thresholds outlined in **Table 14** exceeded, the following actions will be undertaken.

3.5.3.1 Habitat Loss & Degradation

See **Section 3.3.3**.

3.5.3.2 Sensory Disturbance and Disruption of Movements

Agnico Eagle has developed a tiered caribou monitoring procedure to increase levels of monitoring and mitigation if caribou are found to be in the vicinity of the site. **Figure 6** through **Figure 9** describes the tiers and triggers of this procedure and the appropriate actions to be undertaken.

3.5.3.3 Project-Related Mortality – Vehicle Collisions

If an Ungulate mortality occurs (i.e., threshold of two mortalities exceeded), an investigation into the circumstances and factors leading up to the incident will be conducted by the on-site Environmental Supervisor (see also the Incident Report Form, **Appendix D**). Where an incident has resulted from operator negligence, disciplinary action may be considered.

3.5.3.4 Project-Related Mortality – Hunting by Baker Lake Residents

If harvest rates are determined to be increasing significantly (as determined by the GN) as a result of Project infrastructure, Agnico Eagle, will request the Baker Lake HTO and GN investigate additional access control measures.

3.6 Predatory Mammals

3.6.1 Objectives

The primary objective of the Predatory Mammal monitoring program in the Project area will be to evaluate the success of preventative programs designed to proactively avoid the occurrence of problem animals and detect thresholds, as opposed to reactively trying to manage them by relocation or destruction.

3.6.2 Monitoring Approach

Table 18 describes the framework that has been established for monitoring effects to Predatory Mammals.

Table 18: Monitoring Approach for Predatory Mammals at the Meadowbank, Whale Tail Project and proposed Whale Tail Expansion

Potential Effect	Impact Prediction	Quantitative Monitoring Variable	Thresholds	Monitoring Activity	Frequency
Project-related mortality	Predatory Mammals will not be killed as a result of Project activities	Number of grizzly bears, wolves and wolverines killed	Two individuals of the same species in a year	Pits and mine site ground surveys	Weekly, at least. Includes inspections of waste streams to ensure no attractants for Predatory Mammals
				Road surveys	Weekly, at least
				Incident and vehicle encounter reports	Ongoing (when incidents with wildlife occur)
				Baker Lake Hunter Harvest Study (for wolverines)	Initiated in 2007, stopped in 2015 and scheduled for re-implementation in 2017 Quarterly data collection; Yearly reporting
Disturbance of Den Sites	Active Predatory Mammal dens will not be destroyed or disturbed to the point of den abandonment	Number of active grizzly bear, wolf or wolverine dens destroyed or abandoned due to sensory disturbances	One active den	Den-specific management plan, active den site surveys	Initiated by the detection of an active Predatory Mammal den (grizzly bear, wolf or wolverine) within the active footprint or vicinity of Project facilities. See **Figure 12**. Frequency of den monitoring will be determined by season, species and location. See **Appendix J**

3.6.2.1 Project-Related Mortality

Methods: Methods are the same as those described for Ungulates (**Section 3.5.2**). The threshold level of mortality beyond which further mitigation will be required is two individuals per year (see **Table 14**). The pits and mine site ground surveys will include inspections of waste streams to ensure no attractants for Predatory Mammals. In addition, the hunter harvest study (see **Section 3.3.2**) will investigate potential increases in wolverine mortality related to the road.

Frequency: The number of grizzly bear, wolf, and wolverine mortalities will be analyzed on an annual basis with findings presented in the annual Wildlife Monitoring Summary Report (see **Table 18**).

3.6.2.2 Disturbance of Den Sites

Methods: For existing operations, data will be collected on Arctic wolf abundance and behaviour during ground surveys, vehicle surveys, and HOL surveys. Should the wildlife technician suspect or confirm that a den is present within the active footprint and vicinity of Project facilities or roads, a den management plan will be prepared (see **Appendix J** for required components of den management plans). For new development sites, suitable habitat within 1 km of new development site will be investigated on foot for active wolf dens. In the event that wolverine or grizzly bear dens are discovered, den management strategies with appropriate timing windows will be developed for these species. The thresholds beyond which further mitigation will be required is discovery of one active den (see **Figure 13** and **Table 18**).

Frequency: See **Table 14** for frequency of ground, road, and HOL surveys, see **Figure 13, Section 3.5.3** for further mitigation strategy to be undertaken upon discovery of an active Predatory Mammal den.

3.6.3 Thresholds

Should the thresholds outlined in **Table 18** be exceeded, the following actions will be undertaken.

3.6.3.1 Project-Related Mortality

The basic course of action is to contact the appropriate conservation officer with the Hamlet of Baker Lake and the GN, and to discuss additional mitigation options. At the discretion of the Agnico Eagle Environment Supervisor, GN conservation officer and the KivIA land inspector, if grizzly bears, wolverines, or wolves become problems and need to be dispatched or get killed in vehicle collisions (i.e., thus exceeding the threshold mortality of two despite efforts to avoid habituation and/or food conditioning), alternative mitigation action may be required. Regular inspections of waste streams will identify possible attractants and respond immediately with improved waste management approaches. Detailed reports for dealing with problem wildlife will be issued and are provided as an example in **Appendix C**.

3.6.3.2 Disturbance of Den Sites

If an active Predatory Mammal den is detected within the active footprint or in the vicinity of Project facilities, a den management plan will be developed (see **Figure 13** and **Appendix J** for details). The plan will include consultation with the GN with respect to obligations under *The Wildlife Act*, SNU 2003, c. 26. Ground personnel and vehicle access will be restricted in the vicinity of the den as needed to minimize disturbances at the den. The den management plan outlines a monitoring schedule (dependent on seasonal timing) and will inform further mitigation strategies as required. See **Appendix J** for Den Management and Protection Plan components.

Based on the findings from den monitoring, disturbance mitigation may be required, including increased frequency of den site monitoring, vehicle access restrictions, alterations to Project operation, or work stoppage in the vicinity of the den. Dens will be observed from a distance of at least 300 m with a spotting scope, and information on location, behaviour and number of juveniles will be determined, where possible. **Figure 13** below outlines the steps to be taken if a den is found during monitoring activities.

Example of mitigation and monitoring in action: if construction is proposed within 1 km of high-suitability denning habitat (i.e., eskers), these areas will be investigated for signs of denning (wolf pack, defensive behaviour, pups). If a den is confirmed within the active footprint or in the vicinity of Project facilities, monitoring will be undertaken from the maximum possible distance to determine if Project activities are inducing stress responses. See **Figure 13** for monitoring frequencies. If Wolves are showing signs of stress, further restrictions on vehicle access or other adaptive mitigation options may need to be considered.

See **Appendix J** for recommended Den Management and Protection Plan components.

Figure 13: Thresholds for Monitoring and Mitigation of Predatory Mammal Dens in Proximity to the Project

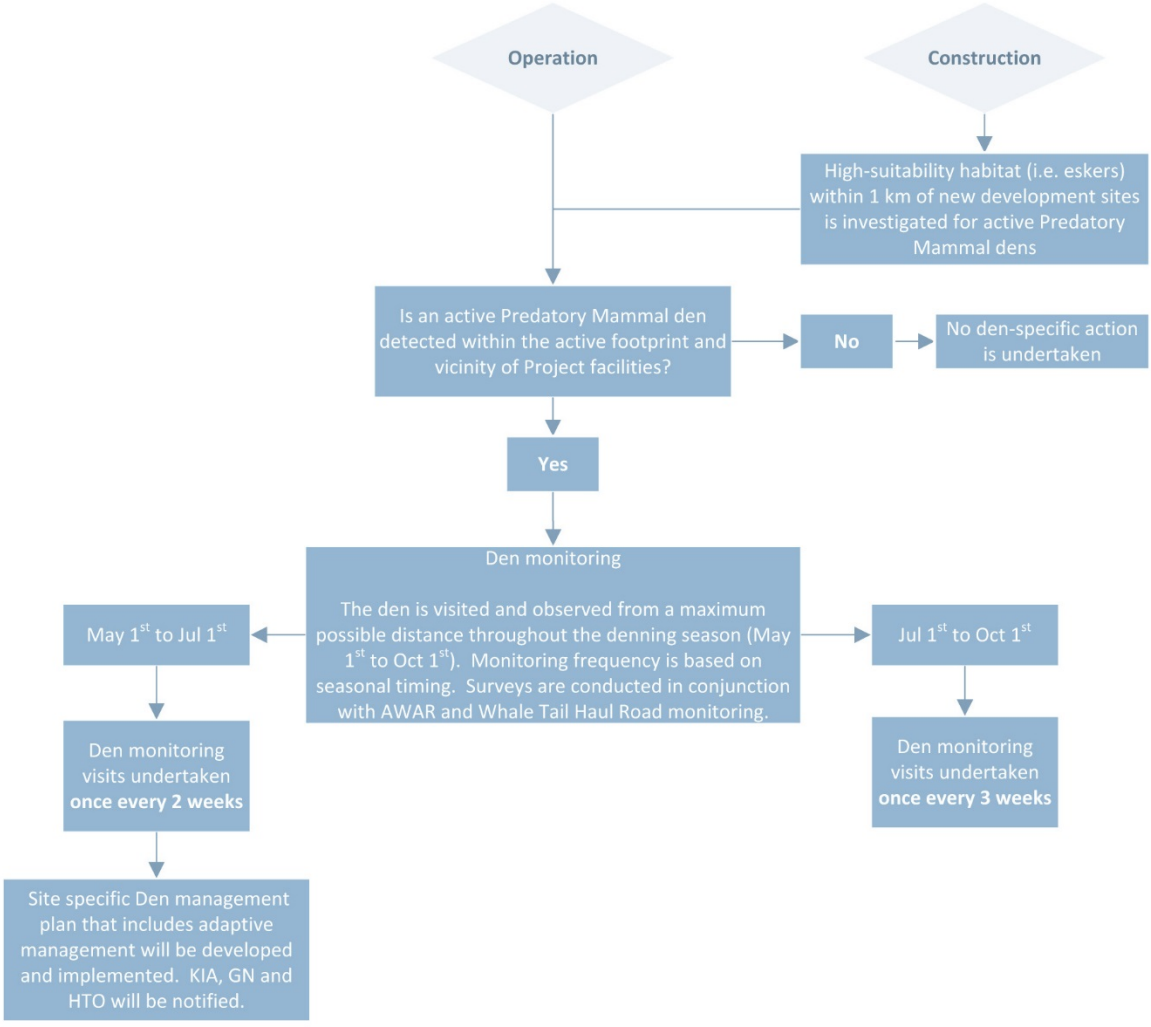

3.7 RAPTORS

3.7.1 Objectives

The primary objective of ongoing monitoring surveys for nesting Raptors evaluate the success of mitigation to prevent disturbance to raptors or raptor nests, to test for thresholds, and to determine the level of Project-related effects. Nest-specific management plans for nesting birds will reduce the potential for birds to abandon nests due to high noise or activity levels.

3.7.2 Monitoring Approach

Table 19: describes the framework that has been established for monitoring effects to Raptors.

Table 19: Monitoring Approach for Raptors at the Meadowbank, Whale Tail Project and proposed Whale Tail Expansion

Potential Effect	Impact Prediction	Quantitative Monitoring Variable	Thresholds	Monitoring Activity	Frequency
Disturbance of Nesting Raptors	Nest failures are not Project-related	Nest success	Failure of nest monitored through a Nest Protection Plan	Active Raptor nest monitoring	Daily during nesting season (May 1 to September 15) if active nest on Project facilities or within 500 m of activity Weekly if not within area of concern (see **Figure 13)**
Project-related Mortality	Raptors will not be killed at the Project site or along roads	Number of raptors killed	1 individual	Pits and mine site ground surveys	Weekly, at least
				Road surveys	Weekly, at least
				Incident and vehicle encounter reports	Ongoing (when incidents with wildlife occur)

3.7.2.1 Nest Monitoring

Methods: For existing operations, data will be collected on Raptor abundance and behaviour during ground, road, and height-of-land surveys. For active nests within the active footprint and within 1.5 km (AANDC 2011) of Project facilities, daily surveys will be conducted for nests within area of concern while weekly surveys will be conducted for nests outside the area of concern. For nests within the area of concern, a site-specific raptor response plan will be developed and implemented.

In accordance with Project Certificate No.008, Condition 36, Agnico Eagle will consult and review the raptor mitigation plan with the GN, prior to undertaking discouragement and in accordance with obligations under the *Wildlife Act* (SNU 2003, c. 26). Furthermore, the GN will be contacted prior to removal or deterrence of raptors to obtain a permit if required. To discourage raptors from nesting on pit walls and Project facilities, protocols outlined in the 'Peregrine Falcon Management and Protection Plan on the Meadowbank Gold Project Site' will be followed (see **Appendix E).** The plan also outlines management and mitigation around nests that have become established on Project facilities.

For new development sites, suitable habitat within 1.5 km of the sites will surveyed on foot for active Raptor nests. Active nests will be monitored from a distance of at least 100 m with a spotting scope, and information on location, behaviour, number of eggs, number of chicks, and number of fledged young will be determined, if possible. A raptor researcher or subject matter expert will be consulted as needed. The threshold beyond which further mitigation will be required is disturbance of one active Raptor nest (**Table 19**).

Frequency: During the nesting season (May 1 to September 15), if an active nest is within the active footprint and vicinity of Project facilities and within an area of concern, surveys will be conducted as per **Figure 14**. If disturbance to an active raptor nest is detected, mitigation and monitoring will be initiated (see **Figure 14**).

Figure 14: Thresholds for Monitoring and Mitigation of Raptor Nests in Proximity to the Project

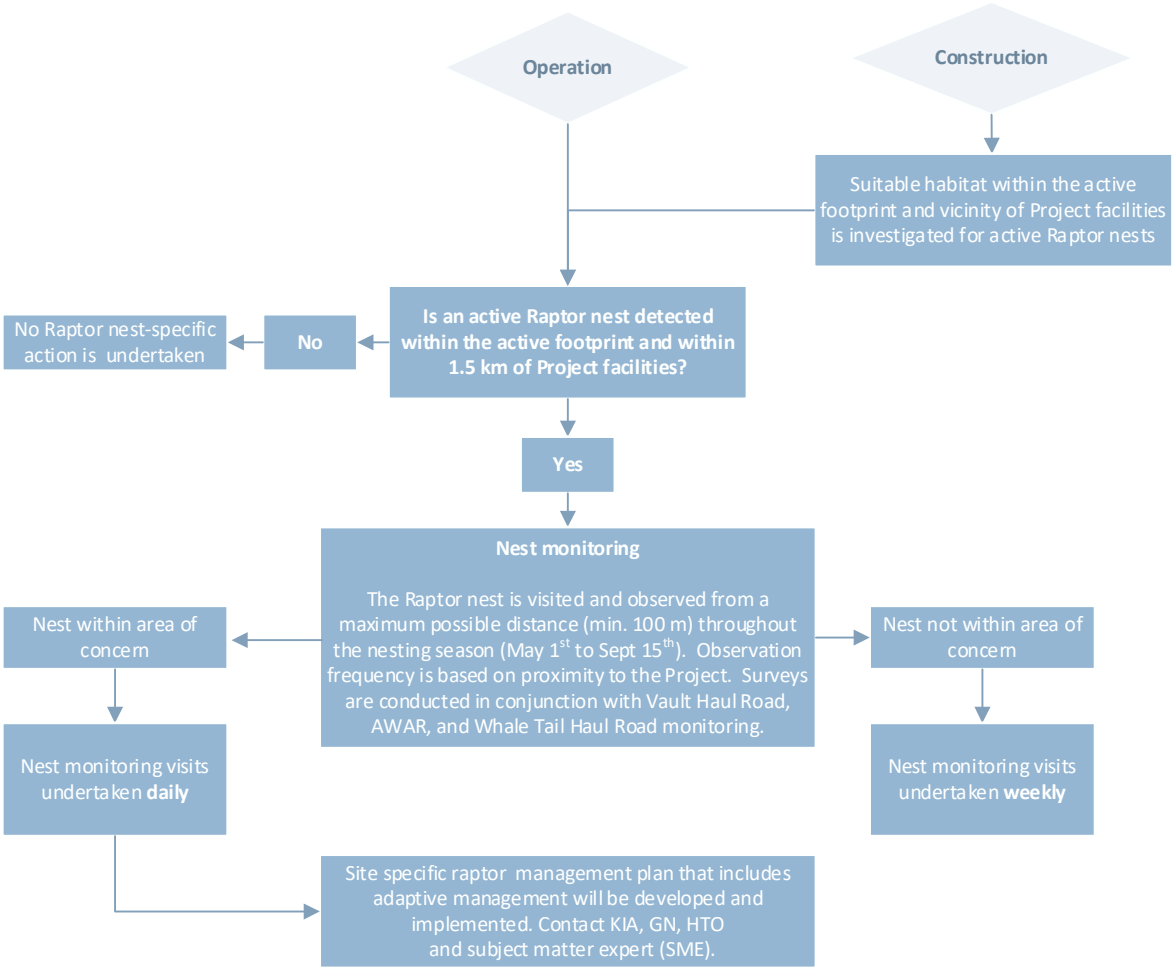

3.7.2.2 Project-Related Mortality

Methods: Methods are the same as for the ground surveys, road surveys, and Incident reports described for Ungulates (**Section 3.5.2**). The threshold level of mortality beyond which further mitigation will be required is one (1) Raptor per year (see **Table 19** and **Appendix E** for details).

Frequency: Incident reports are filed when a Raptor mortality occurs. The number of Raptor mortalities will be analyzed on an annual basis with findings presented in the annual Wildlife Monitoring Summary Report.

3.7.3 Thresholds

Should the thresholds outlined in **Table 19** be exceeded, the following actions will be undertaken.

3.7.3.1 Nesting Monitoring

In consultation with the subject matter expert, a nest management plan will be developed for active nests established within an area of concern (e.g., within active footprint or in close vicinity of Project facilities) and will include a monitoring schedule based on the proximity of the nest to the Project. The management plan will also review disturbance levels at the nest to inform active management requirements (see **Figure 14**). Where recommended mitigation are not considered adequate for reducing disturbance to nesting raptors (determined through the nest management plan monitoring), more stringent mitigation, such work stoppage for nearby operations, may be implemented.

3.7.3.2 Project-Related Mortality

If the threshold mortality level for Raptors is exceeded, further mitigation will be implemented as described for Ungulates (**Section 3.5.3**).

3.8 Waterbirds

3.8.1 Objectives

The primary objective will be to determine the effectiveness of mitigation efforts to prevent or reduce effects from the Project, to test for thresholds, and to describe Project-related effects to Waterbirds.

3.8.2 Monitoring Approach

Table 20 describes the framework that has been established for monitoring effects to Waterbirds.

Table 20: Monitoring Approach for Waterbirds at the Meadowbank, Whale Tail Project and proposed Whale Tail Expansion

Potential Effect	Impact Prediction	Quantitative Monitoring Variable	Thresholds	Monitoring Activity	Frequency
Habitat Loss and Degradation **Meadowbank Mine and Vault Site**	Loss <EIA prediction and subsequent approvals (see Gebauer et al., 2015)	Area of altered habitat	10% above predicted EIA High suitability values. **Meadowbank Mine and Vault** – 518 ha	Habitat monitoring	Every three years post-construction
Habitat Loss and Degradation **Meadowbank AWAR**	Loss <EIA prediction and subsequent approvals (see Gebauer et al., 2015)	Area of altered habitat	10% above predicted EIA High suitability values. **Meadowbank AWAR** – 22 ha	Habitat monitoring	Every three years post-construction
Habitat Loss and Degradation **Whale Tail Pit and Haul Road**	Given the minimal effects associated with the Meadowbank project, habitat loss effects on Waterbird were not considered an issue and were screened out during the EA (Golder 2016)				
Loss of nests due to flooding **Whale Tail Pit**	Nests will be lost due to flooding during nesting season	See the Migratory Bird Protection Plan (**Appendix F**)			
Project-related Mortality	Waterbird will not be killed at the Project	Number of Waterbird killed	1 individual	Pits and mine site ground surveys	Weekly, at least
				Road surveys	Weekly, at least
				Incident and vehicle encounter reports	Ongoing (when incidents with wildlife occur)

3.8.2.1 Habitat Loss & Degradation

Methods: Habitat loss and degradation will be monitored and assessed through the Wildlife Habitat monitoring program (see **Section 3.3.2** for details). An analysis of the loss of High suitability habitats will be conducted and compared to thresholds (see **Table 20 and Appendix F**).

Frequency: See **Section 3.3.2**.

3.8.2.2 Project-Related Mortality

Methods: Methods are the same as for the ground and road surveys, and Incident reports described for Ungulates (**Section 3.5**). The threshold level of mortality beyond which further mitigation will be required is one (1) Waterbird per year (see **Table 20**).

Frequency: See **Table 20**. The number of Waterbird mortalities will be analyzed on an annual basis with findings presented in the annual Wildlife Monitoring Summary Report.

3.8.3 Thresholds

Should the thresholds outlined in **Table 20** be exceeded, the following actions will be undertaken.

3.8.3.1 Habitat Loss & Degradation

See **Section 3.3.2.**

3.8.3.2 Disturbance of Nesting Waterbird

Where disturbances to nesting Waterbirds are observed beyond the acceptable threshold (see **Table 20**), further mitigation will be implemented to minimize effects. As per Project Certificate No.008, Condition 34, Agnico Eagle will maintain a Migratory Bird Protection Plan (**Appendix F**), which will be updated as needed in consultation with Environment and Climate Change Canada (ECCC). Studies will be undertaken in collaboration with Trent University beginning in 2018 and through the flooding phases of the Whale Tail Pit and proposed Expansion Project. As per condition 34, results will be presented to NIRB on an annual basis.

3.8.3.3 Project-Related Mortality

If the threshold mortality level for Waterbirds is exceeded, further mitigation will be implemented (e.g., slower vehicle speeds, driver education).

3.9 UPLAND BREEDING BIRDS

3.9.1 Objectives

The primary objective of the monitoring program for ptarmigan, shorebirds, passerines, and other upland breeding birds is to collect information that contributes to national monitoring databases by undertaking the Protocol for Regional and International Shorebird Monitoring (PRISM) and complete a North American Breeding Bird Survey Route every three years, or as agreed upon by ECCC, for contribution to this program. While these protocols will contribute data to national databases, they will be unsuited to detecting Project-related effects. Previous studies at other similar developments have found that effects to upland birds are either undetectable or not biologically significant (see **Section 2.3.6**).

3.9.2 Monitoring Approach

The PRISM and North American BBS surveys are intended to contribute to national databases administered by ECCC (2012), and are not linked to an impact prediction or threshold. PRISM plots and North American BBS surveys will be conducted every three years; stations locations and methods will be developed in consultation with ECCC.

3.9.2.1 Habitat Loss & Degradation (monitored via habitat monitoring)

Methods: Habitat loss and degradation will be monitored and assessed through the Wildlife Habitat monitoring program (see **Section 3.3.2** for details). An analysis of the loss of High suitability habitats will be conducted and compared to thresholds (see **Table 20**).

Frequency: See **Section 3.3.2**.

4. REPORTING

A Wildlife Monitoring Summary Report will be provided annually summarizing the terrestrial ecosystem monitoring activities and results of the previous calendar year. The summary report will discuss the accuracy of predictions of the effect of the Project on the various wildlife VECs, the success of mitigation (i.e., whether any thresholds are exceeded), briefly describe new measures taken through the adaptive management approach, visually present results of all monitoring activities, and recommendations for mitigation and monitoring activities in the current year. An attempt will be made to distinguish between Project-related changes and natural variations in wildlife populations.

The annual Wildlife Monitoring Summary Report will allow regulators and other stakeholders to review and contribute insight, expertise, and suggestions for improving wildlife management activities within the Project area. To ensure the reported information is accessible for all stakeholders, the summary report will be concise, visual and simple in format.

As per Project Certificate No.008, Condition 33, Agnico will provide wildlife incident reports to the appropriate authorities in a timely fashion. These reports will provide the following information: location coordinates (i.e., latitude and longitude or UTM), species, number of animals, sex, age class (if possible), and a description of the animal activity.

Further, a comprehensive data analysis report will be prepared at three-year intervals (in addition to the annual Wildlife Monitoring Summary Report). The comprehensive report will consider questions such as the ZOI, deflection of caribou by the road, the efficacy of mitigation, or other such questions depending on the availability of data. The comprehensive reports should focus on specific areas of concern and specific VCs, as the Wildlife Monitoring Summary Report provides this overview.

Agnico Eagle will have the full responsibility for all aspects of the monitoring program (implementation, monitoring, reporting) and the plan will be reviewed and updated as deemed necessary.

4.1 MITIGATION AUDIT

The mitigation described in this document stems from current practices at existing mines, or was suggested during the environmental assessment process. However, an auditing system is required to evaluate the use and effectiveness of the mitigation, following the principals of adaptive management. In other words, it should be confirmed that the mitigation proposed here is used and that it works. Further, new mitigation should be documented. As an example, per Project Certificate No.008, Condition 32, Agnico Eagle will engage with the Baker Lake Hunters and Trappers Organization and other relevant parties to ensure that safety barriers, berms, and designed crossings associated with project infrastructure, including the haul road are constructed and operated as necessary to allow for the safe passage of caribou and other terrestrial wildlife. The audit will be undertaken annually, specific to audit the mitigation listed in Section 2, which requires Agnico Eagle to evaluate:

- if all mitigation has been implemented
- which mitigation is perceived to be or shown to be successful
- if new mitigation has been implemented in response to new issues
- if some mitigation is redundant

This audit is implemented annually, as part of the annual report.

4.2 TERRESTRIAL ADVISORY GROUP

As per Project Certificate No.008, Condition 27 Agnico Eagle is committed to the establishment of a TAG consisting of representatives, at a minimum, from the following organizations:

- Agnico Eagle
- the Government of Nunavut Department of Environment (GN-DoE)
- the Kivalliq Inuit Association (KivIA)
- the Hunters and Trappers Organization (HTO) of Baker Lake

Other organizations that may participate in the TAG include ECCC, Nunavut Tunngavik Inc (NTI), and others.

The terms of reference for this TAG will be discussed and completed by Q4 2018. Items that will be identified as part of the TAG terms of reference will include the following:

- Reporting frequency for annual and comprehensive analysis (e.g., every 3 years)
- Monitoring outcomes
- Mitigation summary (i.e., operation cessation, shutdowns, etc.)
- Mitigation improvements
- Learnings from other mines
- Opportunity for all parties to contribute for continuous improvement of the TEMP

Agnico Eagle will provide a summary of the outcomes from the TAG meetings to the NIRB on an annual basis in the annual report.

5. LITERATURE CITED

AANDC (Aboriginal Affairs and Northern Development Canada). 2011. Northern Land Use Guidelines – Volume 9a Seismic Operations.

Agnico Eagle. 2016. Meadowbank Mine 20145 Wildlife Monitoring Summary Report.

Agnico Eagle. 2014. Wildlife Screening Level Risk Assessment for the Meadowbank Gold Project.

Agnico Eagle. 2018. Air Quality and Dustfall Monitoring Plan. In Accordance with NIRB Project Certificate Terms and Conditions No.004 and No.008. May 2018. Version 3.

Benitez-Lopez, A., R. Alkemade, and P. A. Verweij. 2010. The impacts of roads and other infrastructure on mammal and bird populations: a meta-analysis. Biological Conservation 143(6): 1307-1316.

BHPB (BHP Billiton Diamonds Inc.). 2004. EKATI Diamond Mine 2003 Wildlife Effects Monitoring Program. Prepared by Golder Associates Ltd. for BHP Billiton Diamonds Inc., Yellowknife, Northwest Territories. January 2004

Boulanger J, K.G. Poole, A. Gunn, and J. Wierzchowski. 2009. The zone of influence for migratory tundra Caribou around Canada's Arctic diamond mines: estimation and implications. Unpublished report.

Boulanger, J., K. G. Poole, A. Gunn, and J. Wierzchowski. 2012. Estimating the zone of influence of industrial developments on wildlife: a migratory Caribou and diamond mine case study. Wildlife Biology 18: 164-179.

Chen, W.J., S.G. Leblanc, H.P. White, C. Provost, B. Milakovic, C. Rock, G. Sharam, H. O'Keefe, L. Corey, B. Croft, A. Gunn, S. van der Wielen, A. Football, B. Tracz, J. S. Pellissey and J. Boulanger. 2017. Does dust from arctic mines affect caribou forage? Journal of Environmental Protection, 8: 258–276.

Cluff, H. D., L. R. Walton, and P. C. Paquet. 2002. Movements and habitat use of wolves denning in the central Arctic Northwest Territories and Nunavut, Canada. West Kitikmeot/Slave Study Society. Yellowknife, NT.

Cumberland (Cumberland Resources Ltd.) 2005a. Meadowbank Gold Project. Environmental Impact Assessment. October 2005.

Cumberland. 2005b. Meadowbank Gold Project. Baseline Terrestrial Ecosystem Report. October 2005.

DFO (Fisheries and Oceans Canada). 2014. Fisheries and Oceans Canada (DFO). 2014. Science review of the final environmental impact statement addendum for the early revenue phase of Baffinland's Mary River Project. Canadian Science Advisory Secretariat Science Response 2013/024, February 2014, 51pp.

DOE, Nunavut Department of Environment. 2005. KIA Land Use Application for Meadowbank Gold Project. Letter to NIRB, April 13, 2005.

DOE, Nunavut Department of Environment. 2009. Environmental Guideline for Contaminated Site Remediation. Available online at: http://www.gov.nu.ca/sites/default/files/Guideline%20Contaminated%20Site%20Remediation.pdf

Dougan & Associates (Dougan & Associates and Nunavut Environmental Consulting). 2015. Whale Tail Pit & Whale Tail Haul Road Terrestrial Baseline Characterization Report. Prepared for Agnico Eagle Mines Ltd.

Dougan & Associates. 2017. Whale Tail Pit, V-Zone & Whale Tail Haul Road Project Area, Comprehensive Terrestrial Baseline Characterization Report. Prepared for Agnico Eagle Mines: Meadowbank Division. December 2017.

Environment and Climate Change Canada (ECCC). 2012. Arctic Program for Regional and International Shorebird Monitoring (Arctic PRISM). Available online at: http://www.ec.gc.ca/reom-mbs/default.asp?lang=En&n=FC881C1B-1

ERM. 2017. Back River Project Wildlife Mitigation and Monitoring Program Plan. Prepared for Sabina Gold and Silver Corp. by ERM Ltd.

Everett. K. R. 1980. Distribution and properties of road dust along the northern portion of the haul road. In J. Brown and R. L. Berg (ed.). Environmental engineering and ecological baseline investigations along the Yukon River-Prudhoe Bay Haul road. Cold Regions Research and Engineering Laboratory. Pp 101-128.

Flydal, K., A. Hermansen, P.S. Enger and E. Riemers. 2001. Hearing in reindeer (*Rangifer tarandus*). Journal of Comparative Physiology A. 187: 265 - 269.

Gebauer, M., A. Crampton, C. Lee, J. Boulanger, J. Shaw, and I. Laing. 2012. Meadowbank Mine: 2011 Wildlife Monitoring Summary Report. Can be found in Agnico Eagle Mines Ltd. 2011 Annual Report.

Gebauer, M., A. Crampton, J. Shaw, and I. Laing. 2015. Meadowbank Mine: 2014 Wildlife Monitoring Summary Report. Can be found in Agnico Eagle Mines Ltd. 2014 Annual Report.

Gebauer, M., A. Crampton, J. Shaw, and I. Laing. 2016. Meadowbank Mine: 2015 Wildlife Monitoring Summary Report. Can be found in Agnico Eagle Mines Ltd. 2015 Annual Report.

Gebauer, M., A. Crampton, M. Huntley, J. Boulanger, J. Shaw, and I. Laing. 2013. Meadowbank Mine: 2012 Wildlife Monitoring Summary Report. Can be found in Agnico Eagle Mines Ltd. 2012 Annual Report.

Golder (Golder Associates Ltd.). 2008. Snap Lake Mine: analysis of environmental effects on wildlife 1999 to 2007. Prepared by Golder Associates Ltd. for De Beers Canada Ltd, Yellowknife, NWT, Canada.

Golder. 2011a. Analysis of environmental effects from the Diavik Diamond Mine on wildlife in the Lac de Gras Region. Prepared for Diavik Diamond Mines Inc., Yellowknife, NWT.

Golder. 2011b. Effects of development on Barren-ground Caribou: insight from IQ and an ecological model. Prepared by Golder Associates Ltd. for the Kugluktuk Hunters and Trappers Organization.

Golder. 2016. Whale Tail Pit Final Environmental Impact Statement Amendment.

Golder. 2018. Final Environmental Impact Statement (FEIS) Addendum: Whale Tail Pit – Expansion Project. Submitted to the Nunavut Impact Review Board (NIRB), November, 2018.

Golder. 2017. Caribou Road Mitigation Plan for the Jay Project. Prepared for Dominion Diamond Ekati Corporation by Golder Associates Ltd.

Hines, J. E., and M. O. Wiebe. 1997. Recommended minimum altitudes for aerial flying near birds in the Inuvialuit Settlement Region. Canadian Wildlife Service, Yellowknife, NT. Unpublished document.

Inman, R. N., A. J. Magoun, J. Persson, and J. Mattisson. 2012. The Wolverine's niche: linking reproductive chronology, caching, competition, and climate. Journal of Mammalogy 93(3): 634-644.

Johnson, C. J., M. S. Boyce, R. L. Case, H. D. Cluff, R. J. Gau, A. Gunn, and R. Mulders. 2005. Quantifying the cumulative effects of human developments: a regional environmental assessment for sensitive Arctic wildlife. Wildlife Monographs 160.

Male, S.K. and E. Nol. 2005. Impacts of roads associated with the Ekati Diamond Mine TM, Northwest Territories, Canada, on reproductive success and breeding habitat of Lapland Longspurs. Canadian Journal of Zoology 83: 1286-1296.

May, R., L. Gorini, J. V. Dijk, H. Broseth, J. D. C. Linell, and A. Landa. 2012. Habitat characteristics associated with Wolverine den sites in Norwegian multiple-use landscapes. Journal of Zoology 287(3): 195-204.

Mueller, F. P. 1995. Tundra esker systems and denning by Grizzly Bears, wolves, foxes and ground squirrels in the central Arctic, Northwest Territories. Department of Renewable Resources, Government of the Northwest Territories. Yellowknife, NT.

OMOE (Ontario Ministry of Environment). 1978. Model Municipal Noise Control By-Law – Final Report. Noise Pollution Control Publication 119.

Poole, K, and A. Gunn. 2012. Mobile Caribou Conservation Measures. Kivalliq Wildlife Board Caribou Workshop, Rankin Inlet.

Poole, K. and A. Gunn. 2016. Management of caribou post-calving areas in the Kivalliq Region, Nunavut. Prepared for the Kivalliq Inuit Association.

Reijnen, R., R. Foppen, and H. Meeuwsen. 1996. The effects of traffic on the density of breeding birds in Dutch agricultural grasslands. Biological Conservation 75: 255-60.

Reimers, E. J.E. Colman. 2001. Reindeer and caribou (*Rangifer tarandus*) response towards human activity. Rangifer 26: 55 – 71.

Rescan (Rescan Environment Services Ltd.). 2007. Ekati Diamond Mine 2006 Wildlife Effects Monitoring Program. Yellowknife, NWT, Canada.

Rescan. 2010. 13-Year Breeding Bird Monitoring Program Summary. Report prepared for BHP Billiton Canada Inc. by Rescan Environmental Services Ltd., March 2010.

Smith, A. C., J. A. Virgl, D. Panayi, and A. R. Armstrong. 2005. Effects of a diamond mine on tundra-breeding birds. Arctic 58(3): 295-304.

Stewart, D.B., Nudds, S.H., Howland, K.H., Hannah, C.G., Higdon, J.W., 2015. An ecological and oceanographical assessment of alternate ballast water exchange zones in the Canadian eastern Arctic. Canadian Science Advisory Secretariat Research Document 2015/037, December, 2015, 75 p.

Young, M.Y. 2017. Landscape Architect, Ecologist. Dougan & Associates – Ecological Consulting & Design, Guelph, ON. E-mail with R. Vanengen (Agnico Eagle). July 2017.

Vale, C. G., S. L. Pimm, and J. C. Brito. 2015. Overlooked mountain rock pools in deserts are critical local hotspots of biodiversity. *PloS one*, *10*(2), e0118367.

Walker, D. A., and K. R. Everett. 1987. Road dust and its environmental impact on Alaskan taiga and tundra. Arctic and Alpine Research Vol. 19, No. 4, Restoration and Vegetation Succession in Circumpolar Lands: Seventh Conference of the Comité Arctique International (Nov., 1987), pp. 479-489.

APPENDIX A

Screening Level Risk Assessment Plan

AGNICO EAGLE

MEADOWBANK DIVISION

Wildlife Screening Level Risk Assessment Plan

In Accordance with NIRB Project Certificate No.004

Version 2

June, 2018

IMPLEMENTATION SCHEDULE

This Plan will be implemented immediately subject to any modifications proposed by the NIRB as a result of the review and approval process.

DISTRIBUTION LIST

AEM – Environment Superintendent

AEM – Environmental Coordinator

AEM – Environmental Technician

DOCUMENT CONTROL

Version	Date (YMD)	Section	Revision
1	2016-06-01	All	Comprehensive plan for Meadowbank Mine
2	2018-06-01	2.5	ROC based on a commitment made during the Whale Tail Final Hearing through discussions with Environment and Climate Change Canada

Prepared By: Meadowbank Environment Department

Approved by: 

Ryan Vanengen

Environmental Superintendent – Permitting and Regulatory Affairs

TABLE OF CONTENTS

1 INTRODUCTION 1

1.1 Background 1

1.2 General Approach 1

2 PROBLEM FORMULATION 2

2.1 Location Description 2

2.2 Site Facilities 2

2.3 Sources of Contaminants 3

2.4 Contaminants of Potential Concern (COPCs) 3

2.5 Receptors of Concern 4

2.6 Protection Goals and Endpoints 5

2.7 Exposure Pathways 5

3 EXPOSURE ASSESSMENT 5

3.1 Intake of Water, Soil and Food 6

3.2 Dietary Concentrations of COPCs 8

3.2.1 Dietary Preferences 10

3.3 Biotransfer Factor 10

3.4 Time in Area 10

4 TOXICITY ASSESSMENT 11

5 RISK CHARACTERIZATION 12

5.1 Hazard Quotients 12

5.2 Uncertainty Assessment 12

5.2.1 Uncertainty in Exposure Assessment 12

5.2.2 Uncertainty in Toxicity Assessment 13

6 REPORTING AND ADAPTIVE MANAGEMENT 14

REFERENCES 15

APPENDICES

Appendix A: Example Calculation

Appendix B: Toxicity Reference Values

Appendix C: Standard Operating Procedure for Soil and Vegetation Sample Collection

LIST OF TABLES

Table 3-1. Body weight (BW), water intake (I_{water}), soil intake (I_{soil}), and wet and dry (I_{food}; FI) food intake for the identified ROCs. Based on Azimuth (2006)..... 7

Table 3-2. UTM coordinates for soil and vegetation sampling locations..... 3

Table 3-4. Estimated dietary preferences for the receptors of concern at the Meadowbank site. From Azimuth, 2006. 10

LIST OF FIGURES

Figure 3-1. Soil, vegetation and water sampling locations..... 9

1 INTRODUCTION

1.1 BACKGROUND

In 2006, Azimuth Consulting Group Inc. conducted a pre-construction wildlife screening level risk assessment (WSLRA) for the Meadowbank site to assess potential risks to wildlife via dietary uptake of mine-related contaminants (Azimuth, 2006). Specifically, the pre-construction SLRA focused on determining the contaminants of potential concern (COPCs) from predicted minesite activities, evaluating potential risks to wildlife from exposure to contaminants under baseline conditions, and determining the magnitude of increase in contaminant exposure required to cause concern for wildlife populations. Preliminary estimates of post-development contaminant concentrations were then obtained from models, and based on those potential future changes, expected potential risks to local wildlife were evaluated.

Under baseline conditions, negligible risks were found for all COPCs except chromium, which was determined to pose an improbable but potential risk for songbirds at baseline concentrations. COPC exposure concentrations were not expected to increase during operation, so potential risks were not expected to change from baseline conditions.

As required under the Nunavut Impact Review Board Project Certificate - Condition 67, the WSLRA is completed every 3 years during mine operation. Results to date indicate that the Meadowbank mine does not appear to be contributing significant incremental risk to wildlife from consumption of chemical contaminants.

In 2016, AEM submitted an Environmental Impact Statement (EIS) to NIRB for the Whale Tail Pit satellite deposit, located approximately 50 km north of the main Meadowbank mine site. The EIS includes an assessment of risk for wildlife in the Whale Tail Pit area under baseline conditions and the post-development scenario. Results indicated that:

> "All concentrations in soil met their respective screening values and/or baseline plus 10%; as a result, no COPCs were retained in soil and no residual impacts due to changes to soil quality were identified. Furthermore, given that no COPCs were identified for soil, no residual impacts to vegetation quality were identified. This result is consistent with the results of the conclusions of the previous risk assessments conducted at the Meadowbank Mine."
>
> "Given that no COPCs were identified in soil (Section 4.3), concentrations of chemicals in prey items (i.e., plants and animals consumed as prey) were not anticipated to change. As a result, prey items were not assessed further with respect to potential wildlife health effects and no residual health impacts due to changes to prey item quality were identified."

Nevertheless, due to stakeholder concerns with contaminant loadings due to dust, this plan presents the assessment approach and methodology that will continue to be used to assess potential risk to wildlife from chemical contaminants as a result of operations at the Meadowbank site as well as the Whale Tail Pit satellite deposit.

1.2 GENERAL APPROACH

The goal of the WSLRA is to determine whether there are potential risks to wildlife from the identified contaminants of potential concern (COPCs) under operational conditions. The general approach includes the common risk assessment components of problem formulation, exposure assessment, hazard assessment and risk characterization. In particular, assessments will aim to distinguish risk

due to operation of the mine from risk due to background conditions by taking soil and vegetation samples at on-site, near-site, AWAR, Whale Tail site, Whale Tail haul road, and reference locations.

Risk assessments will follow a hazard quotient approach, and are based on food-chain modeling developed by Azimuth Consulting Group Inc. for the baseline wildlife screening level risk assessment at the Meadowbank site (Azimuth, 2006). The risk assessment framework used by Azimuth was taken from various Canadian and American sources (Environment Canada, 1994; CCME, 1996; BCE, 1998; US EPA, 1992, 1998). The exposure assessment stage will be updated with field data collected in each assessment year. Toxicity reference values (TRVs) will be continually compared to those used in similar risk assessments in the Kiggavik region and published databases.

2 PROBLEM FORMULATION

2.1 LOCATION DESCRIPTION

The main Meadowbank site is located 70 km north of the hamlet of Baker Lake, Nunavut, near the border of the Northern and Southern Arctic ecozones. Terrain in the Meadowbank area is typical barren-ground subarctic, with low-growing vegetation in poorly developed soil with continuous permafrost. The landscape is dominated by many interconnected lakes and isolated ponds with indistinct drainage patterns. Topography consists of rolling hills, boulder fields and bedrock outcrops. The main mine site is located at the headwaters of the Quioch River system, which flows southeast through Chesterfield Inlet into Hudson Bay. Lakes in this region are ultra-oligotrophic, with low productivity levels. This region supports few terrestrial mammals (15 species) and birds (62 species) (Azimuth, 2006). Migratory species (primarily caribou and Canada geese) are present.

2.2 SITE FACILITIES

The Meadowbank project consists of several gold-bearing open-pit deposits (Portage, Goose, Vault, and Whale Tail). Much of the infrastructure is located in close proximity to the mill and mine facilities, with the exception for the Vault Pit which is approximately 10 km northeast of the site, and the Whale Tail Pit which is approximately 50 km northwest of the site.

Waste rock from the pits are stored in the Portage Waste Rock Storage Facility, Vault Waste Rock Storage Facility, and Whale Tail Waste Rock Storage Facility (RSFs). Rock Storage Facilities are constructed to minimize the disturbed area and will be capped with a layer of non-potentially acid-generating rock (NPAG). During the construction period, NPAG is also used for construction of dikes and roads. Mined ore is either processed in the mill or stockpiled for eventual processing.

Tailings are stored in the Tailings Storage Facility (TFS) adjacent to the main minesite. The TSF is defined by the series of dikes built around and across the basin of the dewatered northwest arm of Second Portage Lake. Tailings water is reclaimed for use in ore processing.

An onsite airstrip supports transportation of goods and personnel to and from the Meadowbank site by jet. A 110-km All Weather Access Road (AWAR) runs between the main minesite and the hamlet of Baker Lake, where AEM maintains a bulk fuel storage and barge facility. The Vault Pit is connected to the main minesite by a 10-km haul road, and the Whale Tail Pit satellite deposit will be connected by a 62-km haul road.

2.3 SOURCES OF CONTAMINANTS

Major mine site operations and their potential to contribute to COPCs (based on Azimuth, 2006) are summarized here.

Open pits – Along with ore, pits produce waste rock, which may contribute to COPCs through dust emissions.

Rock storage facilities – Waste rock (not containing ore) is moved to these areas. Dust may be blown from the rock piles during dumping and vehicle traffic during transport of material. Seepage from rock storage facilities is controlled in sumps and pumped back to attenuation ponds or the TSF.

Borrow pits and quarries – Borrow pits and quarries are used as necessary for the construction of mine site roads and the airstrip. The COPCs for borrow pits and quarries are similar to open pits.

Tailings Storage Facilities (TSF) – The northwest arm of Second Portage Lake was partitioned off by the East Dike and de-watered from 2009 to 2012. The northwestern portion of this area was further partitioned by the Stormwater Dike to create the North and South Cell TSF. Although permafrost is expected to freeze the tailings, the material is fine-grained and could be a source of dust emissions during dry periods.

Roads and airstrip – Frequently used gravel haul roads run throughout the mine site to connect pits, waste rock storage and processing facilities. An airstrip, receiving approximately 4 planes per week, was built at the mine site to receive deliveries and personnel. Dust from these sources could be a potential source of contaminants. A 110 km long all weather access road (AWAR) was constructed between the mine and the Hamlet of Baker Lake, using gravel from quarries along the road.

Effluent discharge – De-watering of lakes for pit development or TSF construction is considered effluent discharge and is regulated under the current NWB Water License. Lake water is treated for suspended solids removal before discharge, and since it is an existing surface water source, it is not likely to be a source of contaminants in the receiving water. Effluent is also periodically discharged from attenuation ponds into adjacent lakes, under NWB Water License and MMER requirements. As a result, metals regulated under MMER are considered as COPCs.

Diesel generating plant, mine mill plant and associated facilities – Three diesel generating plants provide power for the mine. The Air Quality Impact Assessment (2005) determined emission of PAHs was “very low” and did not require modeling. The milling of rock in the processing plant takes place under wet conditions, and is not a source of particulate emissions. All health and safety-related requirements to reduce particulate emissions during handling of the ore at the mine plant before processing are met, so these are not expected to be a significant source of contaminants.

Overall, roads, waste rock and tailings were determined to be the main sources potentially contributing to COPCs through dust emissions. Dewatering effluent discharge may potentially contribute to COPCs in water sources.

2.4 CONTAMINANTS OF POTENTIAL CONCERN (COPCS)

In the baseline WSLRA, Azimuth (2006) identified COPCs for the main minesite area based on the chemical composition of the identified dust sources, the predicted effects of effluent on water quality in Third Portage Lake (from Golder, 2005), and a review of metals regulated under MMER (see Azimuth, 2006, Section 2.5 for details). No terrestrial wildlife COPCs were identified in the Whale Tail Pit FEIS (Golder, 2016).

Projected concentrations of metals in four dust sources (roads, waste rock and tailings) that exceeded the 90th centile of baseline soil concentrations or the CCME guidelines (CCME 1999, 2001) were included as COPCs for the main minesite. Five metals regulated under MMER (arsenic, copper, lead, nickel and zinc) were also included in the assessment. Although mercury was not predicted to exceed baseline soil concentrations or CCME criteria, it was included because it was found to be of concern to the general public in the Arctic.

Methods for Whale Tail COPC determination

The COPCs for this assessment are therefore comprised of:

Antimony	Lead	Tin
Arsenic	Manganese	Uranium
Barium	Mercury	Vanadium
Beryllium	Molybdenum	Zinc
Cadmium	Nickel	
Chromium	Selenium	
Cobalt	Strontium*	
Copper	Thallium	

Certain chemicals which are controlled through best management practices and which were not addressed in the baseline SLRA include petroleum hydrocarbons, process chemicals, dioxins, nitrates, ammonia and PAHs. For each source of these chemicals, best management practices are in place and environmental exposures are not expected to occur.

2.5 RECEPTORS OF CONCERN

The WSLRA considers four Receptors of Concern (ROCs): ungulates, small mammals, waterfowl and songbirds. These choices were determined from the project's initial EIA, which included discussions with stakeholders, public meetings, traditional knowledge and experience from other mines. In addition, semi-palmated sandpiper has been added as a ROC based on a commitment made during the Whale Tail Final Hearing through discussions with Environment and Climate Change Canada (ECCC). Specifically, the WSLRA focuses on caribou, Canada goose, Lapland longspur, semi-palmated sandpiper and northern red-backed vole as representative species. An ecological description of the area and detailed descriptions of the biology of each of these receptors can be found in Azimuth (2006). Receptor-specific values such as dietary preferences that are used in this assessment are further discussed in Section 3.1 (Table 3-1).

Separate characterizations are conducted for the main minesite, near-site, AWAR, Whale Tail pit, Whale Tail haul road, and external reference locations for northern red-backed vole, Lapland longspur and Canada goose because these species have small territories when not migrating and would not be expected to move between the sampling areas. Main minesite and near-site samples are combined for the caribou risk characterization, because it is assumed that when caribou are present they can readily move between these sampling locations. See Section 3.4 for a discussion of how residence time in each area is handled as a dose-adjustment factor.

2.6 PROTECTION GOALS AND ENDPOINTS

Since the ROCs identified are not rare or endangered species, protection at the population level was determined to be appropriate (Azimuth, 2006). The assessment endpoint is no adverse effect of COPCs on populations of caribou, Canada goose, Lapland longspur and northern red-backed vole.

The measurement endpoints will be calculated as exposure to the COPCs through ingestion of soil, water and food items. Ingested concentrations will be compared to literature-based ecotoxicological benchmarks equivalent to maximum acceptable exposure levels for each ROC. Specifically, the ecotoxicological benchmarks will be lowest observable adverse effect levels (LOAELs), which are generally considered to be appropriate for determining risk at the population level (Azimuth, 2006). Sample et al. (1996) provided TRVs for most of the COPCs, but values for antimony, cobalt, and thallium were obtained from other sources (see Appendix B).

2.7 EXPOSURE PATHWAYS

The following exposure pathways will be investigated:

Small mammals – ingestion of plants, insects, water, soil

Ungulates – ingestion of plants, water, soil

Songbirds – ingestion of plants, insects, water, soil

Waterfowl - ingestion of plants, insects, water, soil

Inhalation and dermal absorption of metals are generally considered to be insignificant in comparison to exposures through ingestion (USEPA, 2005), so they are not considered here.

3 EXPOSURE ASSESSMENT

Exposure assessment is used to calculate the dose of each COPC received by each ROC. The exposure assessment uses the food chain model developed by Azimuth (2006), and provided in Excel format. The model was developed to include the influence of COPC concentrations in exposure pathways, dietary preferences, ingestion rates and dose-adjustment factors. Estimated daily intake of each COPCs is calculated for each study area (main minesite, near-site, AWAR, Whale Tail site, Whale Tail haul road, external reference) as:

$$EDI = [\sum (I_{w,s,f} \times C_{w,s,f}) \times BF \times T]_{study} + [\sum (I_{w,s,f} \times C_{w,s,f}) \times BF \times T]_{ext\ ref}$$

Where:

EDI = estimated daily intake (mg/kg body weight/day)

$I_{w,s,f}$ = intake of water, soil and food items (L/kg ww/d; kg dw/kg ww/d; kg dw/kg ww/d)

$C_{w,s,f}$ = concentration of COPC in water, soil and food items (L/kg ww/d; kg dw/kg ww/d; kg dw/kg ww/d)

BF = biotransfer factor (absorption factor)

T = proportion of time in area

Each component is described below, and an example calculation is provided in Appendix A.

3.1 INTAKE OF WATER, SOIL AND FOOD

Water, food and soil ingestion rates used in the assessments are shown in Table 3-1. All intake parameters are considered to be conservative. Water and food ingestion rates were derived from USEPA (1993). Soil ingestion rates for Canada goose and Northern red-backed vole are also from USEPA (1993). Although Beyer et al. (1994) was referenced as the source of most soil ingestion rates in the Meadowbank baseline assessment, the species chosen to represent caribou and Lapland longspur were not indicated. The soil consumption rate for caribou was increased in subsequent Meadowbank assessments and here from 2% of dry food consumption to 5%, which is the general rate for mammals in Beyer et al. (1994), as used in (Senes, 2008). The soil ingestion rate for Lapland longspur was increased from 2% to 7%, based on Hansen et al. (2011). This study identified a rate of 0.7% for Swainson's thrush, a ground-dwelling songbird that primarily feeds on flying insects and berries. A 10x safety factor was applied because Swainson's thrush is a foliage-gleaner, while Lapland longspur is considered a ground-forager (Cornell University, 2011). This factor is considered to be conservative however, because Lapland longspur does not scratch the ground to uncover food items as other ground foragers do (Harrison 1967, Greenslaw 1977).

Table 3-1. Body weight (BW), water intake (I_{water}), soil intake (I_{soil}), and wet and dry (I_{food}; FI) food intake for the identified ROCs.

Parameter	Units	Value	Reference	Notes
Northern Red-backed Vole				
BW	kg wet	0.02	Nagorsen (2005)	Smallest body weight used
I_{water}	L/kg wet/day	0.253	USEPA (1993)	Species profile data for the Prairie Vole
I_{soil}	kg dry/kg wet/day	0.0008	USEPA (1993)	Assumed 2.4% of dry food ingestion rate (similar to Meadow Vole)
I_{food}	kg wet/kg wet/day	0.135	USEPA (1993)	Species profile data for the Prairie Vole
FI	kg dry/kg wet/day	0.049	Not available	Moisture in food assumed to be 64% as per diet moisture calculation
Caribou				
BW	kg wet	75	Dauphine (1976)	Smallest body weight used
I_{water}	L/kg wet/day	0.064	USEPA (1993)	Based on allometric equation for all mammals (L/day) $(0.099*(BW)^{0.90})$
I_{soil}	kg dry/kg wet/day	0.0013	Beyer et al. (1994)	Assumed 5% of dry food ingestion rate (general rate for mammals)
I_{food}	kg wet/kg wet/day	0.047	Not available	Moisture in food assumed to be 43% as per diet moisture calculation
FI	kg dry/kg wet/day	0.027	USEPA (1993)	Based on total dry food intake for herbivorous mammals (g/day) $(0.577*(BW)^{0.727})$
Lapland Longspur				
BW	kg wet	0.023	Cornell University (2011)	Smallest body weight used
I_{water}	L/kg wet/day	0.205	USEPA (1993)	Based on allometric equation for all birds (L/day) $(0.059*(BW)^{0.67})$
I_{soil}	kg dry/kg wet/day	0.0174	Hansen et al. (2011)	Assumed 7% of dry food ingestion rate (rate of Swainson's thrush +10x safety factor)
I_{food}	kg wet/kg wet/day	0.656	USEPA (1993)	Moisture in food of insectivorous birds; assumed 62% as per diet moisture calculation
FI	kg dry/kg wet/day	0.249	USEPA (1993)	Based on total dry food intake for passerine birds (g/day) $(0.398*(BW)^{0.850})$
Canada Goose				
BW	kg wet	2.000	Mowbray et al. (2002)	Smallest body weight used
I_{water}	L/kg wet/day	0.044	USEPA (1993)	Species profile data for Canada Goose
I_{soil}	kg dry/kg wet/day	0.0006	USEPA (1993)	Assumed 8.2% of dry food ingestion rate
I_{food}	kg wet/kg wet/day	0.032	USEPA (1993)	Species profile data for Canada Goose
FI	kg dry/kg wet/day	0.011	Not available	Moisture in food assumed to be 66% as per diet moisture calculation

3.2 DIETARY CONCENTRATIONS OF COPCS

Concentrations of COPCs will be measured in and around the Meadowbank site in water, soil and plant tissue (food items: sedges, lichens, berries) in assessment years. This includes five samples of each media type from four onsite locations, three near-site locations, one AWAR location, two Whale Tail Pit locations, one Whale Tail Haul Road location, and three external reference locations. An SOP for methods of collection along with UTM coordinates is provided in Appendix C.

Water samples from the Core Receiving Environment Monitoring Program (CREMP) data collection will be used in the WSLRA analyses. Main minesite concentrations will be from samples collected in Second Portage Lake (SPL) and the east and north basins of Third Portage Lake (TPE, TPN). Near-site concentrations will be from samples collected in Tehek Lake (TE). Whale Tail concentrations will be from samples collected in Whale Tail Lake (South basin) and Mammoth Lake. External reference samples are from Inuggugayualik Lake (INUG) and Pipedream Lake (PDL). Exact coordinates are subject to slight changes each year – see CREMP Plan (Azimuth, 2015) for details.

All locations for the main Meadowbank site are shown on Figure 3-1 and coordinates for soil and vegetation samples are provided in Appendix C. Specific locations for the Whale Tail site and along the haul road will be determined following ground-truthing, but will target locations up to 5 km downwind (to the south/southeast) of site activity, and will include one location on the downwind side of the haul road. The general approach for selecting these sites will be consistent with a near-field/ far-field approach used for the main Meadowbank Mine site since 2008 and illustrated in Figure 3-1.

Concentrations in soil and plant tissue used for food chain modeling will be the upper 95% confidence limit of the mean (UCLM). If values are below the detection limit, a value of ½ the detection limit will be used. Based on published literature, methyl mercury is assumed to comprise 1% of total mercury in water and soil, and 34% of total mercury in plant tissue, and inorganic mercury = total – methyl mercury (Azimuth, 2006).

Concentrations of COPCs in insects are not planned to be measured, but will be modeled from soil concentrations using published bioaccumulation models (see Azimuth, 2006). This method is particularly conservative, because the modeled factors are for ground insects whereas the songbird population in this assessment consumes primarily flying insects.

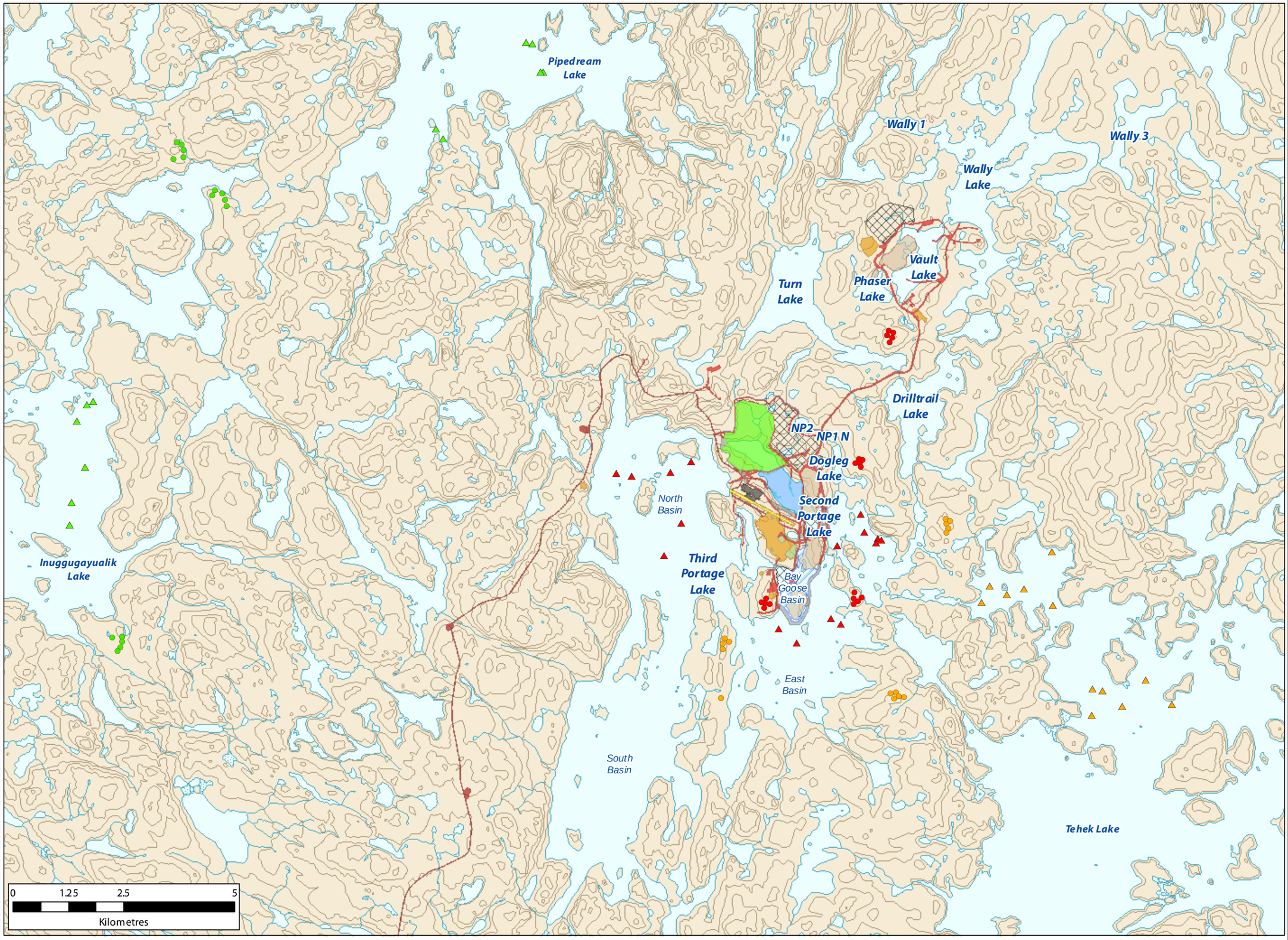

Legend

Soil/Veg Sampling Location

- Onsite
- Near Site
- External Reference

Water Sampling Locations

- Onsite
- Near Site
- External Reference

2014 Mine Plan

- Quarry
- AWPAR Quarry
- Dewatered Lake
- Portage Attenuation Facility
- Tailings Storage Facility
- Roads
- AWPAR
- Dikes
- Diversion Ditch
- Stockpiles
- Pits
- Facility
- Airstrip
- Waste Dump

Wildlife Screening Level Risk Assessment

DOUGAN & ASSOCIATES
ECOLOGICAL CONSULTING & DESIGN
77 Wyndham Street South • Guelph ON N1E 5R3
T 519.822.1609 • F 519.822.5389 • www.dougan.ca

PROJECT: DA11-062-03

CLIENT: Agnico-Eagle Mines Ltd., Meadowbank Div.

N W E S
UTM Zone 14 NAD83

DATE: MARCH 2015

SCALE: 1:80,000

DRAWN BY: LW

CHECKED BY:MAY

FIGURE:

3-1

The information displayed on this map has been compiled from various sources. While every effort has been made to accurately depict the information, this map should not be relied on as being a precise indicator of locations, features, or roads, nor as a guide to navigation. MNR data provided by Queen's Printer of Ontario. Use of the data in any derivative product does not constitute an endorsement by the MNR or the Ontario Government of such products.

3.2.1 Dietary Preferences

The proportions of food items (sedge, lichen, berries, insects) that comprise each diet were determined by Azimuth (2006) using the literature reviews referred to in Section 2.6. Similar values have been used in another recent risk assessment (Senes, 2008) and all dietary preferences presented in Azimuth (2006) will be used in subsequent assessments (Table 3-2). Consistent with Azimuth (2006), sedges, lichens and berries will be considered surrogates for all plant matter ingested by the ROCs.

Table 3-2. Estimated dietary preferences for the receptors of concern at the Meadowbank site. From Azimuth, 2006.

Dietary Item	Northern red-backed vole	Caribou	Lapland longspur	Canada goose
Sedges	55%	30%	25%	50%
Lichens	0%	65%	0%	0%
Berries	40%	5%	5%	45%
Insects	5%	0%	70%	5%
Total	100%	100%	100%	100%

3.3 BIOTRANSFER FACTOR

The uptake efficiency factor (biotransfer or absorption factor) describes the proportion of the COPC that is absorbed into the animal from any ingested sources. Uptake efficiency was conservatively assumed to be 100% for all COPC/receptor combinations. This is likely an extremely conservative assumption; for example, chromium compounds were found to have a maximum absorption efficiency of 10% in the GI tract (Outridge and Scheuhammer, 1993).

3.4 TIME IN AREA

Territory size (foraging range) affects the proportion of an animal's diet that could be affected by mine-related contaminants. In the baseline assessment for Meadowbank (Azimuth, 2006), an adjustment factor for foraging range was not applied (animals were assumed to spend 100% of time in the study area). For subsequent assessments, the only ROC assumed to spend 100% of its time in any study area will be the northern red-backed vole, because of its small territory size. Caribou, Canada geese and Lapland longspur are migratory species, and the fraction of time spent in each study area (main minesite, near-site, AWAR, Whale Tail site, Whale Tail Haul Road) is estimated at 33%, based on a recent risk assessment completed in the Kivalliq region (Senes, 2008). The remaining fraction of exposure dose (67%) will be calculated based on external reference samples. An examination of collared caribou from the Meadowbank region found that any one animal spent no more than a maximum of 12% of the year within 25 km of the minesite (Martin Gebauer and Jason Shaw, personal communication, March 2012), so the assumption of 33% is expected to be conservative. Risk will be characterized for small-territory ROCs Northern red-backed vole, Canada

geese and Lapland longspur for main minesite, near-site, AWAR, Whale Tail Pit, Whale Tail Haul Road, and external reference locations separately, in order to determine whether those animals choosing territories on the mine-site are at increased risk compared to those choosing territories at nearby locations. Exposure data for main minesite and near-site locations will be combined for caribou because caribou can readily roam between the onsite and near-site locations in the course of a day.

4 TOXICITY ASSESSMENT

The toxicity reference values (TRVs) used in the Meadowbank assessments were collated from a review of the literature; mainly from Sample et al. (1996). This represents one of the most comprehensive and commonly used sources available for wildlife toxicity reference values and has been used in other recent similar assessments (e.g. Senes, 2008). In order to ensure the selected TRVs were relevant to the Meadowbank site and the conditions of that risk assessment, several criteria were used in the baseline assessment in screening toxicity studies. These included selecting values from studies conducted on species of similar phylogeny (i.e. bird or mammal), and selecting studies that examined individual or population-level effects over chronic time periods. The following describes TRV selection, as performed by Azimuth (2006):

> The TRVs chosen for use in the risk characterization include both no observable adverse effect levels (NOAELs) and lowest observable adverse effect levels (LOAELs) when available. If effects concentrations were reported in terms of food concentrations, these were converted to dose. If a LOAEL was reported but no NOAEL could be determined, it was estimated as 1% of the LOAEL (as in Sample et al. 1996, Chapman et al. 1998). LOAELs cannot be estimated if only a NOAEL is available. Since the protection goal of this risk assessment no adverse effect of COPCs on populations of the ROCs, LOAELs are the most relevant TRV, and are used in the final risk estimate.
>
> Instead of species-to-species uncertainty factors, the baseline assessment used allometric scaling factors (Sample et al. 1996) to adjust mammalian TRVs from the test species (typically mouse or rat) to the ROC. A scaling factor of 1 was used for birds (Mineau et al. 1996).
>
> Where toxicity information was found for multiple forms of a contaminant, the one with the greatest toxic potency was chosen. TRVs for chromium-VI were available for mammals, but only chromium-III was available for birds. No NOAELs or LOAELs were available for total mercury. Mammalian LOAELs were not available for inorganic mercury or beryllium. Avian LOAELs were not available for uranium or vanadium. Avian NOAELs were not available for antimony and beryllium and were extrapolated from the mammalian values. The avian LOAEL for antimony was extrapolated from the mammalian value.

5 RISK CHARACTERIZATION

5.1 HAZARD QUOTIENTS

Risk characterization compares predicted exposure concentrations with the toxicity reference values from the literature, using the hazard quotient approach. Hazard quotients for all locations (main minesite, near-site, AWAR, Whale Tail Pit, Whale Tail Haul Road, and external reference) will be calculated as:

$$HQ = EDI / TRV$$

Where:

EDI = estimated daily intake (ug/kg body weight/day)

TRV = toxicity reference value (ug/kg body weight/day)

See Appendix A for an example calculation and Appendix B for all TRVs to be used in assessments for Meadowbank. As discussed above, the TRV to be used is represented by the LOAEL, unless only a NOAEL was available (indicated).

Because of the conservative assumptions included at this level of assessment, there is generally considered to be a high degree of certainty associated with results indicating negligible risk. A hazard quotient > 1 indicates the possible need for more in-depth assessment, including analysis of assumptions used. However, when HQ values exceed 1 for both the baseline (or external reference) and the study areas, and are of similar magnitude, it may be assumed that the receptor is adapted to the measured exposure level, or that the assumptions used in calculating the HQ have resulted in an over-estimation of risk (Dominion Diamond, 2015).

HQ values and a characterization of risk for each ROC will be provided in the assessment report.

5.2 UNCERTAINTY ASSESSMENT

The assumptions included in each section of the assessment are discussed here, along with implications for over- or under-estimating risk.

5.2.1 Uncertainty in Exposure Assessment

ROCs used in the assessment are assumed to represent categories of species (e.g. ungulates, small mammals, waterfowl, song birds) that are found around the Meadowbank site. Exposure is assumed to be similar for other species in these categories. Compared to other Arctic animals, the exposure for the species chosen is expected to be realistic to conservative, because they all are assumed to forage in or on the soil.

Exposure concentrations in environmental media are assumed to be represented by the 95$^{\%}$ UCLM of the measured concentrations. Since animals would be more likely to ingest food sources with a range of COPC concentrations, this is a conservative assumption.

Ingestion rates are applied using published values for similar but not identical species. Based on biological factors, these rates were chosen to be conservative.

Dietary preferences are from studies on the same or similar species, but are not from populations specifically inhabiting the study region.

It is assumed that flying insects accumulate the same proportion of metals from soil as ground-dwelling insects, because no flying insect BAFs were available. This assumption likely results in an over-estimation of risk for ROCs who primarily consume flying insects (Lapland longspur).

Absorption of COPCs in the gastrointestinal tract was assumed to be 100%. This assumption likely results in an over-estimation of risk for all COPCs/ROC combinations.

Methyl mercury proportions of total mercury concentrations are estimated from the available literature using the UCLM from two studies (Azimuth, 2006). While there is an unknown degree of uncertainty in the extrapolation of this data for use at the Meadowbank site, the fractions chosen were at the highest end of the published range, and are therefore designed to be conservative. Furthermore, mercury was included as a COPC because it was found to be of concern to the general public in the Arctic, and no source of elevated mercury was identified at the mine.

Ingestion of COPCs was the only route of exposure considered in this assessment. While this assumption may slightly under-estimate actual exposure, inhalation and dermal absorption of metals are generally considered to be insignificant in comparison to exposures through ingestion (USEPA, 2005).

5.2.2 Uncertainty in Toxicity Assessment

TRVs are not available for the ROCs considered in this assessment and species-to-species extrapolations are necessary. This includes allometric scaling for mammals, 1:1 scaling for birds, and the application of uncertainty factors in mammal-to-avian extrapolation. Food intake-to-body weight ratios are well studied and uncertainty factors are designed to be protective, so these extrapolations are likely to be realistic or conservative.

As is common in screening level risk assessments, the estimation of risk is for each COPC in isolation, and does not consider potential additive, synergistic or antagonistic reactions. Models for determining mixture toxicity of a large suite of metals are not yet widely available, and guideline values are for single compounds only. This factor may lead to under-estimation of actual risk from metals overall, but the otherwise conservative nature of an SLRA is assumed to compensate for this issue.

6 REPORTING AND ADAPTIVE MANAGEMENT

The SLRA for the Meadowbank Mine (including the Whale Tail Pit) will evaluate risks to wildlife from contaminant exposure in and around the mine site every three years during operation, and results will be reported to NIRB in the context of AEM's Annual Report for the Meadowbank site.

Because of the conservative assumptions included at this level of assessment, there is generally considered to be a high degree of certainty associated with results indicating negligible risk (HQ <1). In the case that hazard quotients exceed 1 and differ substantially (generally, by more than an order of magnitude) between mine-related and reference and/or baseline sites for a certain COPC, incremental risk due to mine operation will be classified as potentially unacceptable and more detailed investigations will be initiated. This may include a desk-top review and refining of the assessment parameters, and/or additional sampling in the subsequent year to confirm results. In the case that results of refined assessments continue to indicate unacceptable risk, adaptive management may include such interventions as capping of dust sources, increased road watering, delineation of contaminated areas, and deterrence methods pending reclamation.

REFERENCES

Azimuth (Azimuth Consulting Group Inc.). 2006. Wildlife Screening Level Risk Assessment for the Meadowbank Site. Prepared by Azimuth Consulting Ltd. for Cumberland Resources Ltd. 2006.

BCE. 1998. Checklist for the Tier-1 ecological risk assessment of contaminated sites in British Columbia. Environmental Protection Department, Industrial Waste and Contaminants Branch.

Beyer, W.N., Connor, E.E., Gerould, S. 1994. Estimates of soil ingestion by wildlife. The Journal of Wildlife Management. 58(2):375-382.

CCME (Canadian Council of Ministers of the Environment). 1996. A framework for ecological risk assessment: General guidance. National Contaminated Site Remediation Program. Winnipeg, Manitoba Branch.

CCME (Canadian Council of Ministers of the Environment). 1999. Canadian environmental quality guidelines (with 2004 and 2005 Soil and Water Quality Revisions). Winnipeg, Manitoba Branch.

Chapman, P.M., A. Fairbrother and D. Brown. 1998. A critical evaluation of safety (uncertainty) factors for ecological risk assessment. Environmental Toxicology and Chemistry. 17:99-108.

Dauphine, T.C. Jr. 1976. Biology of the Kaminuriak population of barren-ground caribou: Part 4. Report Series No. 38, Canadian Wildlife Service.

Dominion Diamond, 2015. Human and Wildlife Health Risk Assessment Report for the Jay Project. Prepared by Golder Associates Ltd. for Dominion Diamond Ekati Corporation. February, 2015.

Environment Canada. 1994. A framework for ecological risk assessment at contaminated sites in Canada: Review and recommendations. National Contaminated Sites Remediation Program. Scientific Series #199. Ottawa, Ontario.

Hansen, J.A., Audet, D., Spears, B.L., Healy, K.A., Brazzle, R.E., Hoffman, D.J., Dailey, A., Beyer, W.N. 2011. Lead exposure and poisoning of songbirds using the Coeur d'Alene River Basin, Idaho, USA. Integrated Environmental Assessment and Management. 7(4):587-595.

Loos, M., Ragas, M.J., Tramper, J.J., Hendriks, A.J. 2009. Modeling zinc regulation in small mammals. Environmental Toxicology and Chemistry. 28(11):2378-2385.

Mowbray, T.B., C.R. Ely, J.S. Sedinger and R.E. Trost. 2002. Canada Goose *Branta canadensis*. In: A. Poole and F. Gill (eds.). The Birds of North America. No. 682. Philadelphia: The Academy of Natural Sciences; Washington, D.C.: The American Ornithologists' Union.

Nagorsen, D.W. 2005. Rodents & Lagomorphs of British Columbia. Volume 4, The Mammals of British Columbia. Royal British Columbia Museum Handbook.

Outridge, P.M. and Scheuhammer, A.M. 1993. Bioaccumulation and toxicology of chromium: implications for wildlife. Reviews in Environmental Contamination Toxicology. 130:31-77.

Sample, B. and C.A. Arenal. 2001. Development of literature-based bioaccumulation models for terrestrial arthropods. Platform presentation at the 2001 Annual Meeting of the Society of Environmental Toxicology and Chemistry.

Senes Consultants Ltd. 2008. Final Report – Screening Level Environmental Effects Assessment Proposed Kiggavik Project. Report prepared for Areva Resources Canada Inc.

USEPA (United States Environmental Protection Agency). 1993. Wildlife exposure factors handbook, EPA/600/R-93/187. December 1993. Available: www.epa.gov/ncea/wefh.html.

USEPA (United States Environmental Protection Agency). 2005. Guidance for Developing Soil Screening Levels. OSWER Directive 9287.7-55. Washington, DC. November, 2003. Revised 2005.

Appendix A

Example Calculation

Exposure of Lapland longspur to Pb (main minesite area)

Exposure Assessment

$$EDI = T_{onsite}(DS_{onsite} + DW_{onsite} + DF_{onsite}) + T_{ref}(DS_{ref} + DW_{ref} + DF_{ref})$$

Where:

EDI = estimated daily intake of COPC

T_{onsite} = fraction of time in study area (i.e. onsite) = 33%

T_{ref} = remaining fraction of time = 67% (remainder of exposure based on external reference concentrations)

DS = dose from incidental soil ingestion

I_{soil} = intake of soil

DW = dose from drinking water

I_{water} = intake of water

DF = dose from food

I_{food} = intake of food

$Pb_{(media)}$ = measured concentration of lead in media (95% UCLM of onsite or external reference values, accordingly)

Example:

DS_{onsite} (mg/kg ww/d) = Pb_{soil}* (mg/kg dw) * I_{soil} (mg dw/kg ww/d)

= 11.23 * 0.0174

= 0.195

DW_{onsite} (mg/kg ww/d) = Pb_{water} (mg/L) * I_{water} (L/kg ww/d)

= 0.00 * 0.205

= 0.00

DF_{onsite} (mg/kg ww/d) = Pb_{sedge} (mg/kg ww)*25% + Pb_{lichen} (mg/kg ww)*0% + $Pb_{berries}$ (mg/kg ww)*5% + $Pb_{insects}$ (mg/kg ww)*70% * I_{food} (kg ww/kg ww/d)

= 0.35*25% + 1.68*0% + 0.03*5% + 0.37*70% * 0.656

= 0.228

DS_{ref} (mg/kg ww/d) = Pb_{soil} (mg/kg dw) * I_{soil} (mg dw/kg ww/d)

= 8.757 * 0.0174

= 0.152

DW_{ref} (mg/kg ww/d) = Pb_{water} (mg/L) * I_{water} (L/kg ww/d)

= 0.00 * 0.205

= 0.00

DF_{ref} (mg/kg ww/d) = Pb_{sedge} (mg/kg ww)*25% + Pb_{lichen} (mg/kg ww)*0% + $Pb_{berries}$ (mg/kg ww)*5% + $Pb_{insects}$ (mg/kg ww)*70% * I_{food} (kg ww/kg ww/d)

= 1.01*25% + 2.85*0% + 0.02*5% + 0.31*70% * 0.656

= 0.309

EDI_{Pb} (mg/kg ww/d) = 33%(0.195 + 0.00 + 0.228) + 67%(0.152 + 0.00 + 0.309)

= 0.45

Risk Characterization

HQ = EDI (mg/kg ww/d) / LOAEL-based TRV (mg/kg ww/d)**

= 0.45 / 11.30

= 0.04

**see values in Appendix B

Appendix B

Toxicity Reference Values
From Azimuth (2006)

Parameter				Antimony[2,3,4]	Arsenic[1]	Barium[1]	Beryllium[1,2]	Cadmium[1]	Chromium[1,5]	Cobalt[7]	Copper[1]	Lead[1]	Manganese[1]
TRVs for Mammals (see allometric scaling equation in footnotes)													
	NOAEL-based TRV:	Test Species		Mouse	Mouse	Rat	Rat	Rat	Rat	Rat	Mink	Rat	Rat
		BW_{NOAEL}(kg wet)		0.03	0.03	0.435	0.35	0.303	0.35	0.15	1	0.35	0.35
		NOAEL (mg/kg wet/day)		98.0	0.126	5.1	0.66	1	3.28	0.2	11.7	8	88
	LOAEL-based TRV:	Test Species		Rat	Mouse	Rat	na	Rat	Rat	Rabbit	Mink	Rat	Rat
		BW_{LOAEL}(kg wet)		0.27	0.03	0.35	na	0.303	0.35	3	1	0.35	0.35
		LOAEL (mg/kg wet/day)		112.9	1.26	19.8	na	10	13.14	2	15.14	80	284
TRVs for Birds (allometric scaling factor of 1 was assumed; see footnotes)													
	NOAEL-based TRV:	Test Species		Rat (see above)	Brown-headed cowbird	Chicken	Rat (see above)	Mallard	Black duck	Pek. Duckling	Chicken	Japanese quail	Japanese quail
		NOAEL (mg/kg wet/day)		9.8	2.5	21	0.066	1.5	1	2.37	47	1.13	977
	LOAEL-based TRV:	Test Species		Rat (see above)	Brown-headed cowbird	Chicken	na	Mallard	Black duck	Pek. Duckling	Chicken	Japanese quail	na
		LOAEL (mg/kg wet/day)		11.29	7.4	42	na	20	5	4.74	62	11.3	na
	Wildlife Species	**Body Weight (kg wet)**											
Mammals	Northern Red-backed Vole	0.02	NOAEL	108.5	0.1	11.0	1.3	2.0	6.7	0.3	31.1	16.4	180.0
	Northern Red-backed Vole	0.02	LOAEL	216.4	1.4	40.5	na	19.7	26.9	7.0	40.3	163.6	580.9
	Caribou	75	NOAEL	13.9	0.0	1.4	0.2	0.3	0.9	0.0	4.0	2.1	23.0
	Caribou	75	LOAEL	27.7	0.2	5.2	na	2.5	3.4	0.9	5.1	20.9	74.2
Birds	Lapland Longspur	0.023	NOAEL	9.8	2.5	21.0	0.1	1.5	1.0	2.4	47.0	1.1	977.0
	Lapland Longspur	0.023	LOAEL	11.3	7.4	42.0	na	20.0	5.0	4.7	61.7	11.3	na
	Canada Goose	2	NOAEL	9.8	2.5	21.0	0.1	1.5	1.0	2.4	47.0	1.1	977.0
	Canada Goose	2	LOAEL	11.3	7.4	42.0	na	20.0	5.0	4.7	61.7	11.3	na

Notes:

Based on Sample et al. (1996), the following allometric equation was used for interspecies extrapolations among mammals: $NOAEL_w = NOAEL_{ts} * (BW_{ts}/BW_w)^{0.25}$; the equation also applies to the LOAEL

Based on Sample et al. (1996), an allometric scaling factor of 1 was considered appropriate for interspecies extrapolations among birds

underline corresponds to an unbounded LOAEL (10X safety factor used to derive the NOAEL) (see text for details)

na indicates that there was no TRV (NOAEL or LOAEL) available

[1] Sample et al. (1996)
[2] Bird TRVs calculated by multiplying the mammal TRVs with a safety factor of 0.1 (see text for discussion)
[3] NOAEL from Dieter et al. (1991) as quoted in Lynch et al. (1999)
[4] LOAEL from Rossi et al. (1987)
[5] Mammals TRV based on chromium VI; bird TRV based on chromium III
[6] Ueberschar et al. (1986)
[7] Chetty et al. (1979) for mammal NOAEL TRV, Szakmary et al. (2001) for mammal LOAEL TRV, Van Vleet (1982) for bird TRVs.

Parameter				Total Hg	Inorg-Hg[1]	MeHg[1]	Molybdenum[1]	Nickel[1]	Selenium[1]	Strontium[1,2]	Thallium[1,6]	Tin[1]	Uranium[1]	Vanadium[1]	Zinc[1]
TRVs for Mammals (see allometric scaling equation in footnotes)															
	NOAEL-based TRV:	Test Species		na	Mink	Mink	Mouse	Rat	Rat	Rat	Rat	Mouse	Mouse	Rat	Rat
		BW_{NOAEL}(kg wet)		na	1	1	0.03	0.35	0.35	0.35	0.365	0.03	0.028	0.26	0.35
		NOAEL (mg/kg wet/day)		na	1	0.015	0.26	40	0.2	263	0.0074	23.4	3.07	0.21	160
	LOAEL-based TRV:	Test Species		na	Mink	Mink	Mouse	Rat	Rat	na	Rat	Mouse	Mouse	Rat	Rat
		BW_{LOAEL}(kg wet)		na	1	1	0.03	0.35	0.35	na	0.365	0.03	0.028	0.26	0.35
		LOAEL (mg/kg wet/day)		na	na	0.025	2.6	80	0.33	na	0.074	35	6.13	2.1	320
TRVs for Birds (allometric scaling factor of 1 was assumed; see footnotes)															
	NOAEL-based TRV:	Test Species		na	Japanese quail	Mallard	Chicken	Mallard	Mallard	Rat (see above)	Chicken	Japanese quail	Black duck	Mallard	White leghorn hen
		NOAEL (mg/kg wet/day)		na	0.45	0.0064	3.53	77.4	0.4	26.3	0.202	6.8	16	11.4	14.5
	LOAEL-based TRV:	Test Species		na	Japanese quail	Mallard	Chicken	Mallard	Mallard	na	Chicken	Japanese quail	Black duck	Mallard	White leghorn hen
		LOAEL (mg/kg wet/day)		na	0.9	0.064	35.3	107	0.8	na	0.757	16.9	na	na	131
	Wildlife Species	**Body Weight (kg wet)**													
Mammals	Northern Red-backed Vole	0.02	NOAEL	na	2.7	0.0	0.3	81.8	0.4	537.9	0.0	25.9	3.3	0.4	327.2
	Northern Red-backed Vole	0.02	LOAEL	na	na	0.1	2.9	163.6	0.7	na	0.2	38.7	6.7	4.0	654.5
	Caribou	75	NOAEL	na	0.3	0.0	0.0	10.5	0.1	68.7	0.0	3.3	0.4	0.1	41.8
	Caribou	75	LOAEL	na	na	0.0	0.4	20.9	0.1	na	0.0	4.9	0.9	0.5	83.6
Birds	Lapland Longspur	0.023	NOAEL	na	0.5	0.0	3.5	77.4	0.4	26.3	0.2	6.8	16.0	11.4	14.5
	Lapland Longspur	0.023	LOAEL	na	0.9	0.1	35.3	107.0	0.8	na	0.8	16.9	na	na	130.9
	Canada Goose	2	NOAEL	na	0.5	0.0	3.5	77.4	0.4	26.3	0.2	6.8	16.0	11.4	14.5
	Canada Goose	2	LOAEL	na	0.9	0.1	35.3	107.0	0.8	na	0.8	16.9	na	na	130.9

Notes:

Based on Sample et al. (1996), the following allometric equation was used for interspecies extrapolations among mammals: $NOAEL_w = NOAEL_{ts} * (BW_{ts}/BW_w)^{0.25}$; the equation also applies to the LOAEL

Based on Sample et al. (1996), an allometric scaling factor of 1 was considered appropriate for interspecies extrapolations among birds

underline corresponds to an unbounded LOAEL (10X safety factor used to derive the NOAEL) (see text for details)

na indicates that there was no TRV (NOAEL or LOAEL) available

[1] Sample et al. (1996)

[2] Bird TRVs calculated by multiplying the mammal TRVs with a safety factor of 0.1 (see text for discussion)

[3] NOAEL from Dieter et al. (1991) as quoted in Lynch et al. (1999)

[4] LOAEL from Rossi et al. (1987)

[5] Mammals TRV based on chromium VI; bird TRV based on chromium III

[6] Ueberschar et al. (1986)

[7] Chetty et al. (1979) for mammal NOAEL TRV, Szakmary et al. (2001) for mammal LOAEL TRV, Van Vleet (1982) for bird TRVs.

Appendix B – References

Chetty, K.N., D.s.v. Subba Rao, L. Drummond, D. Desaiah. 1979. Cobalt induced changes in immune response and adenosine triphosphate activities in rats. Journal of Environmental Science and Health. Part B. B14(5):525-544.

Lynch, B.S., C.C. Capen, E.R. Nestmann, G. Veenstra and J.A. Deyo. 1999. Review of subchronic/chronic toxicity of antimony potassium tartrate. Regulatory Toxicology and Pharmacology. 30: 9-17.

Rossi, F., R. Acampora, C. Vacca, S. Maione, M.G. Matera, R. Servodio, and E. Marmo. 1987. Prenatal and postnatal antimony exposure in rats: effects on vasomotor reactivity development of pups. Teratogenesis, Carcinogenesis, and Mutagenesis 7: 491-496

Sample, B., D.M. Opresko and G.W. Suter II. 1996. Toxicological benchmarks for wildlife: 1996 Revision. Prepared for the Oak Ridge National Laboratory (ORNL), Department of Energy. ES/ER/TM-86/R3

Szakmary, E., G. Ungvary, A. Hudak, E. Tatrai, M. Nary. 2001. Effects of cobalt sulfate on prenatal development of mice, rats, and rabbits, an on early postnatal development of rats. Journal of Toxicology and Environmental Health, Part A 62:367-386.

Ueberschar, K.-H., S. Matthes, and H. Vogt. 1986. Effect of thallium salts on broiler and leghorn hens (In German). A3.

Van Vleet, J.F. 1982. Amounts of twelve elements required to induce selenium vitamin E deficiency in ducklings. Amercian Journal of Veterinary Research 43(5):851-857.

Appendix C

Standard Operation Procedure for Soil and Vegetation Sampling Based on Azimuth (2006)

Meadowbank Project - Standard Operating Procedure

Collection of soil and vegetation samples for the Screening Level Risk Assessment program (from Azimuth, 2006)

March, 2016

---

1. Sample Locations

Three external reference (control) areas and eleven treatment areas are to be sampled. Control areas were selected northwest and west of the project area, upwind from mine related activities (C-1 to C-3). Treatment areas (main minesite, near-field, AWAR, Whale Tail Pit, Whale Tail Haul Road) were selected to represent wind distribution of contaminants from mining related activities (T-1 to T-11). Within each control and treatment area, five sample sites (S1 to S5) were selected within a 200 to 300 m radius, at least 150 m apart from one another. Within each sample site, composite tissue and soil samples are collected within a 10 to 30 m radius, depending on tissue (particularly berry) availability. UTM coordinates for each sample site are presented in Table 1.

Table 1. UTM coordinates for soil and vegetation sampling locations (NAD 83).

Sampling Area	Site #1	Site #2	Site #3	Site #4	Site #5
T1 – Main minesite	14W 0639238 7215692	14W 0639137 7215734	14W 0639061 7215668	14W 0639109 7215569	14W 0639010 7215459
T2 – Near-site	15W 0359410 7214020	15W 0359403 7214128	15W 0359507 7214072	15W 0359459 7213912	15W 0359391 7213816
T3 – Main minesite	14W 0640069 7212342	14W 0640146 7212421	14W 0639967 7212281	14W 0639976 7212409	14W 0639991 7212541
T4 – Near-site	14W 0640916 7210294	14W 0640994 7210201	14W 0641112 7210194	14W 0640890 7210137	14W 0640802 7210271
T5 – Near-site	14W 0637020 7211270	14W 0636978 7211160	14W 0637013 7211394	14W 0637162 7211419	14W 0637057 7211513
T6 – Main minesite	14W 0638559 7213995	14W 0638651 7213953	14W 0638780 7214028	14W 0638515 7214226	14W 0638400 7214038
T7 – Near-site	14W 0640847 7218280	14W 0640872 7218395	14W 0640755 7218444	14W 0640719 7218338	14W 0640788 7218177
T8 - AWAR	14W 0626884 7200614	14W 0626837 7200520	14W 0626806 7200427	14W 0626746 7200306	14W 0626675 7200224
T9 – Whale Tail Pit	TBD	TBD	TBD	TBD	TBD
T10 – Whale Tail Pit	TBD	TBD	TBD	TBD	TBD
T11 – Whale Tail Haul Road	TBD	TBD	TBD	TBD	TBD
C1 – External Reference	14W 0623453 7211586	14W 0623450 7211467	14W 0623416 7211345	14W 0623339 7211252	14W 0623217 7211558
C2 – External Reference	14W 06255518 7221488	14W 0625569 7221607	14W 0625743 7221542	14W 0625790 7221388	14W 0625825 7221244
C3 – External Reference	14W 0624717 7222685	14W 0624818 7222623	14W 0624850 7222504	14W 0624861 7222349	14W 0624636 7222313

2. Soil Sample Collection

Soil samples will be collected using a composite sampling method at each sample site. Representative grab samples will be collected from five separate test pits per sample site (generally no greater than a 5.0 m^2 area) using a stainless steel ladle. First, the organic layer (which ranges from 0 to 5 cm below the surface) will be removed and discarded. Second, two small scoops of soil, approximately 5-10 cm below surface, will be placed in a pre-labeled Ziploc bag and homogenized. Decontamination (i.e., cleaning to prevent cross-contamination) of soil sampling equipment (i.e. stainless steel spoons) will be conducted at the beginning of each day, between treatment and control areas and between sample site locations. The cleaning procedures will include:

- Rinsing with site water to remove any remaining sediment or organic matter
- Scrubbing with brushes using Liquinox detergent
- A final rinse with site water

3. Tissue Sample Collection

Sedges and lichen samples will be collected in close proximity to the composite soil samples. Sedges will be collected from an approximate 5.0 m^2 area, near the center of the sample site, by randomly selecting and simply grabbing/ pulling representative sedge, periodically including the roots. Samples will be placed in a pre-labeled Ziploc bag. Similarly, lichen tissue samples will be collected by hand and placed in a pre-labeled Ziploc bag. Collection of lichen and sedge should continue until the Ziploc bag is full. Berry collection sites were selected along moderately dry, rolling hills where berries are the most abundant. Approximately 2 cups of berries should be collected per site. No species of berries, sedges and lichen should be sampled preferentially, as each treatment and control area has a different variety and abundance of vegetation.

4. Sample Handling, Documentation and Analyses

4.1 Field Book

During the field-sampling program a field book will be used to maintain a record of sample collection and observations, including:

- field staff
- descriptions of photos taken
- date and time
- weather conditions
- sample identifications
- tissue and soil sample characteristics
- # of samples taken
- sample locations, including GPS coordinates
- sample time
- notes and general observations

The field logbook is intended to provide sufficient information such that personnel may reconstruct events that occurred during the sampling period, without having to rely on field personnel or memory of the individuals.

4.2 Containers and Labeling

Samples will be collected in Ziploc bags for ease of sample collection and prevention of sample destruction and mixing during shipping:

- Soil samples – one (1) 950 mL (18cm x 20cm) Ziploc® bag per soil composite
- Tissue samples – one (1) 950 mL (18cm x 20cm) Ziploc® bag, per berries, sedge, and lichen sample
- Samples will be labeled with the following:
    - Site ID
    - Sample Date and Time
    - Sample ID
    - GPS Coordinates
    - Sample Type
    - Initials of Field Staff

Sample Identification (ID) will be coordinated to accommodate ease of organization and interpretation of analytical results. As an example, the ID for a Treatment Area 1, Site No. 2, Lichen tissue sample could be: T1 S2 Li.

4.3 Tracking, Preservation, Storage and Transportation

Tissue and soil samples will be recorded in the field book following sample collection at each sample site within each area. Chain-of-custody forms will be filled out for transport. Care will be taken to ensure that the sample identification is clearly marked on each bag. A small piece of paper with the sample ID, date and sample type may be placed in the sample bag. Samples will be placed on ice in coolers and shipped, along with the chain of custody records, to an accredited laboratory (typically ALS Laboratories in Vancouver, BC).

4.4 Laboratory Analysis

All soil and tissue analyses will be conducted by a CALA-accredited laboratory (typically ALS Environmental Laboratories in Vancouver, BC). The following laboratory analyses will be requested:

Soil – soil pH and total metals; and

Plant Tissue – Moisture content and total metals.

5. Quality Assurance/Quality Control (QA/QC)

The following recommended sample collection and handling techniques will be employed during collection of vegetation tissue and soil samples:

- Sampling by qualified personnel
- Prevention of foreign material in samples or loss of sample material
- Minimization of sample handling and use of new nitrile or latex gloves during sample collection
- Use of appropriate clean containers and proper storage of samples
- Collection of sufficient sample volumes as specified by the data quality objectives
- Adequate decontamination
- Use of appropriate packaging, ice and shipping methods to ensure that holding times and storage conditions are met.

APPENDIX B

**Meadowbank Mine Project Certificate No.004,
Whale Tail Pit Project Certificate No.008 Terms and Conditions, and
Government of Nunavut Commitments**

P.C.	T&C No.	Term or Condition	Location in TEMP Document
Meadowbank Project Certificate			
No. 004	32	AEM shall operate the all-weather road as a private access road, and implement all such measures necessary to limit non-mine use of the road to authorized, safe and controlled use by all-terrain-vehicles for the purpose of carrying out traditional Inuit activities. The measures AEM shall undertake include, but are not limited to: a. Maintaining a gate and manned gatehouse at kilometre 5 of the Private Access Road; b. In consultation with the Hamlet of Baker Lake, the local HTO, and the KivIA, update the All-weather Private Access Road Management Plan to set out the criteria and processes to authorize and ensure safe and controlled non-mine use of the road by all-terrain vehicles for the purpose of carrying out traditional Inuit activities, and measure to limit all other non-mine use of the road. The updated Plan is to be submitted to the GN, INAC, and KivIA for approval no later than one (1) month after the approval of revised Condition 32. c. The posting of signs in English and Inuktitut at the gate, each major bridge crossing, and each 10 kilometres of road, stating that unauthorized public use of the road is prohibited; d. The posting of signs in English and Inuktitut along the road route to identify when entering or leaving crown land; e. Prior to opening of the road, and annually thereafter, advertise and hold at least one community meeting in the Hamlet of Baker Lake to explain to the community that the road is a private road with non-mine use of the road limited to approved, safe and controlled use by all-terrain-vehicles for the purpose of carrying out traditional Inuit activities. f. Place notices at least quarterly on the radio and television to explain to the community that the road is a private road with non-mine use of road limited to authorized, safe and controlled use by all-terrain-vehicles for the purpose of carrying out traditional Inuit activities. g. Record all authorized non-mine use of the road, and require all mine personnel using the road to monitor and report unauthorized non-mine use of the road, and collect and report this data to NIRB one (1) year after the road is opened and annually thereafter; and h. Report all accidents or other safety incidents on the road, to the GN, KivIA, and the Hamlet immediately, and to NIRB annually.	Section 2; Table 3; Annual Reporting
No. 004	51	Cumberland shall engage the HTOs in the development, implementation and reporting of creel surveys within waterbodies affected by the Project to the GN, DFO and local HTO.	Section 3.5.2.8
No. 004	54	Cumberland shall provide an updated Terrestrial Ecosystem Management Plan, to the GN, EC and INAC, within three (3) months of the issuance of the Project Certificate including: a. Updated terrestrial ecosystem baseline data; b. Details of the method and rationale for conducting monitoring surveys prior to the commencement of construction; c. Statistical validation to support the conclusions drawn from monitoring impacts of the mine and infrastructure on wildlife; d. A detailed analysis of the method of distinguishing between cow/calf groups from other caribou group observations; e. Details of a comprehensive hunter harvest survey to determine the effect on ungulate populations resulting from increased human access caused by the all-weather private access road, including establishing preconstruction baseline harvesting data, to be developed in consultation with local HTOs, the GN-DOE and the Nunavut Wildlife Management Board; f. Details of annual aerial surveys to be conducted to assess waterfowl densities in the regional study area during the construction phase and for at least the first three (3) years of operation, with the data analyzed and compared to baseline data to determine if significant effects are occurring and require mitigation. g. Details of an annual breeding bird plot surveys and transects along the all-weather road to be conducted during the construction phase and for at least the first three (3) years of operation. h. Details of a monitoring program, including recording the locations and frequency of observing caribou and carnivores and any actions taken to avoid contact with or disturbance, and a specific mitigation plan for Shortearred owls and any other species of special concern pursuant to Schedule 3 of the Species at Risk Act located in the local study area or along the all-weather private access road	Section 2.2 (methods of analysis); Section 3 (monitoring and impact prediction); Section 4 (TEMP annual report)
No. 004	55	Cumberland shall provide the following analysis in the March 2007 Wildlife Summary Monitoring Report: a. Further review and analysis of the size of the regional study area; b. A summary of the involvement of Inuit in the monitoring program; c. A detailed report of the natural variability of VECs in the region; d. A detailed analysis on distribution and abundance of cows, bulls, and calves; e. Results of the 2006 monitoring program, including field methodologies and statistical approaches used to support conclusions drawn;	TEMP Annual Report

P.C.	T&C No.	Term or Condition	Location in TEMP Document
		f. Any proposed changes to the TEMP survey methodologies, statistical approaches or proposed adaptive management stemming from the results of the monitoring program.	
No. 004	56	Cumberland shall plan, construct, and operate the mine in such a way that caribou migration paths through the Project, including in the narrows west of Helicopter Island, are protected. Maps of caribou migration corridors shall be developed in consultation with Elders and local HTOs, including Chesterfield Inlet and placed in site offices and upgraded as new information on corridors becomes available. Information on caribou migration corridors shall be reported to the GN, KivIA and NIRB's Monitoring Officer annually.	TEMP Annual Report
No. 004	57	Cumberland shall participate in a caribou collaring program as directed by the GN-DOE.	TEMP Annual Report
Whale Tail Pit Project			
No. 008	27	The Proponent shall participate in a Terrestrial Advisory Group with the Government of Nunavut, the Baker Lake Hunters and Trappers Organization, the Kivalliq Inuit Association, and other parties as appropriate to continually review and refine mitigation and monitoring details within the Terrestrial Ecosystem Management Plan. Additional caribou collar data, results from associated studies, and other monitoring data as available should be considered for incorporation as appropriate.	Section 4.2
No. 008	28	The Proponent shall maintain a Terrestrial Ecosystem Management Plan (TEMP) throughout all phases of the Project. The Plan shall include detailed monitoring, mitigation, and adaptive management measures for wildlife, with consideration for each Project activity predicted to affect wildlife, and with inclusion of specific triggers for mitigation and adaptive management intervention. The TEMP shall demonstrate consideration for all relevant commitments made by the Proponent throughout the Nunavut Impact Review Board's review of the Project. Updates to the TEMP may be required when there are significant changes in project development plans, monitoring results indicating biologically-meaningful changes, significant updates to the scientific understanding of management methods relevant to wildlife at the project site, Inuit Qaujimajatuqangit, Traditional Knowledge, changes in climatic conditions that might subject wildlife to unexpected impacts, or as otherwise necessary.	Entire Document
No. 008	29	The Proponent shall, in collaboration with the Government of Nunavut, collect additional caribou collar data and conduct analyses of this data to quantify the zone of influence and associated effects of project components on caribou movement for a study area that includes the Whale Tail mine site, the haul road, the Meadowbank Gold Mine and its All-Weather Access Road	Outside of TEMP, but related
No. 008	30	The Proponent shall collect additional data on caribou group sizes in proximity to the Project, and shall work with the Terrestrial Advisory Group to refine appropriate caribou group size thresholds that trigger additional mitigation. Initially, the group size thresholds should be set at 110 (fall), 25 (winter and summer), and 12 (spring).	Section 3.5
No. 008	31	The Proponent shall develop and implement a Road Access Management Plan and maintain traffic monitoring logs along the haul road between the Whale Tail Pit project and the Meadowbank mine. Where traffic exceeds levels predicted within the Environmental Impact Statement, the Proponent shall develop and implement appropriate modifications to its wildlife protection measures.	Outside of TEMP, but will be reported within annual TEMP reports
No. 008	32	The Proponent shall engage with the Baker Lake Hunters and Trappers Organization and other relevant parties to ensure that safety barriers, berms, and designed crossings associated with project infrastructure, including the haul road, are constructed and operated as necessary to allow for the safe passage of caribou and other terrestrial wildlife.	TEMP Annual Report
No. 008	33	The Proponent shall provide wildlife incident reports to the appropriate authorities in a timely fashion. Wildlife incident reports should include the following information: a) Locations (i.e., latitude and longitude), species, number of animals, a description of the animal activity, and a description of the gender and age of animals if possible; b) Prior to conducting project activities, the Proponent should map the location of any sensitive wildlife sites such as denning sites, calving areas, caribou crossing sites, and raptor nests in the project area, and identify the timing of critical life history events (i.e., calving, mating, denning and nesting); and c) Additionally, the Proponent should indicate potential impacts from the project, and ensure that operational activities are managed and modified to avoid impacts on wildlife and sensitive sites ***Commentary:*** *Items (b) and (c) are not typically included in the wildlife incidents reports, but rather are expected to be included in the Terrestrial Ecosystem Management Plan and will be provided in accordance with the requirements of term and condition #28.*	TEMP Annual Report

P.C.	T&C No.	Term or Condition	Location in TEMP Document
No. 008	34	The Proponent will maintain a Migratory Birds Protection Plan for the Project in consultation with Environment and Climate Change Canada and other interested parties. The plan should include and/or demonstrate that the Proponent give consideration to the following: • Information obtained from baseline characterization of migratory bird and vegetation communities within the predicted flood area; • Results of field tests and/or the thorough literature review of the effectiveness of preferred deterrence prior to actual flooding; and • Details regarding monitoring the effectiveness of mitigation measures during flooding.	Appendix I and TEMP Annual Report
No. 008	35	The Proponent shall ensure that the mitigation and monitoring strategies developed for Species at Risk are updated as necessary to maintain consistency with any applicable status reports, recovery strategies, action plans, and management plans that may become available through the duration of the Project.	TEMP Annual Report
No. 008	36	Prior to removal or deterrence of raptors, the Proponent will contact the Government of Nunavut – Department of Environment to discuss proposed mitigation options and, if required, will obtain the necessary permits.	Section 3.7 and Appendix G

No.	Subject	Commitment	Issue Raised by (Date of Commitment)	Project Phase/Timing	Location in TEMP
Terrestrial Environment Commitments					
1	Caribou Protection Measures	The Proponent shall conduct an evaluation of caribou protection measures employed by the Project. The components of this evaluation shall include the following: (a) Tests of the monitoring methods that are used to detect caribou near the Project in order to quantify: (i) the probability of detecting groups; (ii) the effective range of detection; and (iii) the spatial extent of detection capacity relative to the mitigation distance buffers; (b) The collection of additional data on caribou group sizes to confirm the relevance of group size thresholds used in mitigation; (c) Collection and analyses of collar data to quantify the Zone-of-Influence (ZOI) associated with the Whale Tail Project, its haul road and the existing Meadowbank mine (and all-weather-access-road [AWAR]); (d) Collection and analyses of collar data to quantify the effects of the Whale Tail Project, its haul road and the existing Meadowbank mine (and AWAR) on the movements of caribou, in particular during migratory periods; (e) Collection of accurate records documenting the detection of caribou and the subsequent implementation of mitigation measures; and (f) Analyses of collar data comparing the movements of individuals that were and were not subject to the implementation of mitigation measures. The scope of this evaluation shall include the following: (a) A study area or areas that encompass the Whale Tail mine site, haul road, Meadowbank mine and all-weather-access-road (including all activities utilizing this infrastructure including on-going exploration), all of which are integral components of the Project; (b) The use of accepted scientific methods and experimental designs to provide quantitative information; (c) The engagement of recognized subject matter experts in each area of the evaluation; (d) Collection of data with sufficient statistical power to detect potential impacts; (e) Guidance on study designs, analyses and interpretation from the Project's Terrestrial Advisory Group (TAG); (f) The collection of data during both the construction and active mining phases of the Project; (g) Completion of the evaluation within 5 years of Project commencement (beginning with construction) to ensure that any adverse effects or deficiencies in caribou protection measures are revealed prior to potential extensions in the use of Project infrastructure; (h) A technical report, as noted above in (g), for the evaluation to be submitted to NIRB; and If the Project's active mining life span is extended beyond that currently proposed (i.e. 2022), including extended use of the haul road to support other projects, the evaluation should be updated every 5 years.	Government of Nunavut (September 21, 2017)	■ Construction and Active Phases ■ To be completed within 5 years of commencement ■ If active mining life span extended, the evaluation should be updated every 5 years	■ Included in TEMP Section 2.2 (in mitigation section)
2	Seasonal Windows	The Proponent shall revise the Terrestrial Ecosystem Management Plan (TEMP) to define the fall caribou migration season as the period from September 22 to December 15 for the purposes of applying caribou protection measures, as detailed in the Project's TEMP. All caribou protection measures that are applied to the period from September 22 to November 7 in the current version of the TEMP (figures 6 to 9 of version 4) shall be applied to this revised period.	Government of Nunavut (September 21, 2017)	■ September 22 – December 15 for the duration of the Terrestrial Ecosystem Management Plan	■ Table 17 ■ Figures 6-9
4	Caribou Group	The Proponent shall collect additional data on caribou group-sizes in proximity to the	Government of	■ Within five years of	■ Ongoing from May

No.	Subject	Commitment	Issue Raised by (Date of Commitment)	Project Phase/Timing	Location in TEMP
	Size Thresholds – data collection	Project (including the haul road) to assess the relevance of the proposed group size thresholds. These data shall be collected using the same definition of caribou 'group' used to trigger caribou protection measures in the TEMP. The TAG shall be directly involved in this assessment. This shall occur within five years of the Project's start.	Nunavut (September 21, 2017)	the project's start	2018 and Section 3.5.2.2
5	Monitoring for CPM - Frequencies	Within 1 year of Project certification, the Proponent shall revise the TEMP to increase the frequencies of height-of-land, road and ground surveys for caribou compared to the current levels in the TEMP (v.4.0). Thereafter, further revisions may be made annually within the TEMP, taking into account ongoing project monitoring. The revisions shall adhere to advice provided by the TAG, as per the terms of reference.	Government of Nunavut (September 21, 2017)	■ Within 1 year of project certification ■ Annually thereafter	■ In development /ongoing assessment and adaptation of monitoring methods
6	Monitoring for CPM – Height of Land and Road Surveys coverage	Within 1 year of Project certification, the Proponent shall revise the number of proposed height-of-land and road-side survey points to provide sufficient line-of-sight coverage to detect caribou within 4 km of the Project (including haul road and pit) with greatest coverage at known road crossing points (as determined from IQ, collar data and other observations, and reviewed by the TAG). Thereafter, further revisions may be made annually within the TEMP, taking into account ongoing project monitoring. The revisions shall adhere to advice provided by the TAG, as per the terms of reference.	Government of Nunavut (September 21, 2017)	■ Within 1 year of project certification ■ Annually thereafter	■ Section 3.5.2.6 – HOL and ideal observation locations to be further refined
7	Monitoring for CPM – Caribou GST	Within 1 year of Project certification, the Proponent shall revise caribou group-size thresholds for adaptive management, taking into account the frequency of monitoring effort, spatial coverage of monitoring and likelihood of detecting groups of caribou, in order to ensure a majority (75%) of caribou are subject to enhanced mitigation (i.e. levels 1 through 3 of mitigation and monitoring as illustrated in figures 6 through 9 of the Terrestrial Ecosystem Monitoring Plan (TEMP), v4.0). Thereafter, further revisions may be made annually within the TEMP, taking into account ongoing project monitoring. The revisions shall adhere to advice provided by the TAG, as per the terms of reference.	Government of Nunavut (September 21, 2017)	■ Within 1 year of project certification ■ Annually thereafter	■ Section 3.5.2.2 ■ Table 16
8	Monitoring for CPM – alternatives research	The Proponent shall actively engage in research to develop alternative monitoring methods that may revise monitoring range, spatial coverage, frequency and detection probabilities.	Government of Nunavut (September 21, 2017)	■ All phases	■ Ongoing – to be included in General monitoring section
9	Caribou Monitor – Level 2	The Project's TEMP shall be revised to clarify that the definition of "non-essential vehicles and heavy equipment", as referenced in caribou mitigation procedures, includes vehicles and equipment used to continue mining operations or hauling of ore. "Essential vehicles" includes vehicles operated for the purpose of maintaining the safety of personnel, Emergency Response Team (ERT), security and wildlife monitoring.	Government of Nunavut (September 21, 2017)	■ All phases	■ Section 3.5.2 ■ Figure 6, 7 8 Footnote
10	Caribou Monitor – Level 2	Within 1 year of Project certification, the Project's TEMP shall be revised to reduce reliance on the use of discretionary mitigation measures at level 2 of caribou adaptive management and shall include the addition of specific automatic measures intended to prepare for an operational shutdown if caribou move closer to mine operations or roads. Thereafter, further revisions may be made annually within the	Government of Nunavut (September 21, 2017)	■ Within 1 year of project certification ■ Annually thereafter	■ Figures 6, 7, 8 updated based on operational implementation

No.	Subject	Commitment	Issue Raised by (Date of Commitment)	Project Phase/Timing	Location in TEMP
		TEMP, taking into account ongoing project monitoring. The revisions shall be consistent with advice provided by the TAG, as per the terms of reference.			
11	Caribou Monitor – suspension of vehicles, Heavy Equip.	With respect to monitoring and mitigation of caribou in proximity to mine operations, the Project's TEMP shall be revised such that the provision for suspension of non-essential vehicles and heavy equipment operation (Level 3 in Figure 6, TEMP, v.4.0), when seasonal caribou group size thresholds are exceeded within a 500 m radius of the vehicle, is applied year-round and increased to 1 km during the calving and post-calving periods. This distance buffer may be revised periodically throughout the life of the Project whenever relevant information becomes available. The revisions shall be consistent with advice provided by the TAG, as per the terms of reference.	Government of Nunavut (September 21, 2017)	▪ All phases ▪ Year-round	▪ Figure 6
12	Caribou Monitor – non essential vehicle	The Project's TEMP shall be revised to clarify that the definition of "non-essential vehicles and heavy equipment", as referenced in caribou mitigation procedures, includes vehicles and equipment used to continue mining operations or hauling of ore. "Essential vehicles" includes vehicles operated for the purpose of maintaining the safety of personnel, Emergency Response Team (ERT), security and wildlife monitoring.	Government of Nunavut (September 21, 2017)	▪ All phases	▪ Section 3.5.2 ▪ Figure 6, 7 8 Footnote
13	Caribou Monitor – Level 2	Within 1 year of Project certification (and again thereafter whenever relevant information becomes available), the Project's TEMP shall be revised to reduce reliance on the use of discretionary mitigation measures at level 2 of caribou adaptive management and shall include the addition of specific automatic measures intended to prepare for an operational shutdown if caribou move closer to mine operations or roads. Thereafter, further revisions may be made annually within the TEMP, taking into account ongoing project monitoring. The revisions shall be consistent with advice provided by the TAG, as per the terms of reference.	Government of Nunavut (September 21, 2017)	▪ Within 1 year of project certification ▪ Annually thereafter	▪ Refine decision trees based on implementation
14	Caribou Monitor – Level 3	Within 1 year of Project certification, the Project's TEMP shall be revised to further specify the provision for limitation of non- essential vehicles on the Whale tail haul and Meadowbank all- weather access roads when caribou are in proximity to these roads (i.e. level 3 responses, Figs. 7 & 8, TEMP v4.0) outside sensitive seasons. Thereafter, further revisions may be made annually within the TEMP, taking into account ongoing project monitoring. The revisions shall be consistent with advice provided by the TAG, as per the terms of reference.	Government of Nunavut (September 21, 2017)	▪ Within 1 year of project certification ▪ Annually thereafter	▪ Figure 7 ▪ Figure 8

No.	Subject	Commitment	Issue Raised by (Date of Commitment)	Project Phase/Timing	Location in TEMP
15	4km and 5km Buffer	The TEMP shall be revised such that blasting activities at the Whale Tail site are suspended when caribou above the specified seasonal group size threshold are present within 4 km of the blast site. This provision shall apply year-round except during calving season when the buffer shall be increased to 5 km when cows with calves are present. These buffer thresholds are preliminary pending the results of further studies. These no-blasting buffers may be reviewed periodically throughout the life of the Project whenever relevant information becomes available taking into account ongoing project monitoring. Any revisions shall adhere to advice provided by the TAG, as per the terms of reference.	Government of Nunavut (September 21, 2017)	▪ All Phases	▪ Section 3.5.2.4
16	Blasting - Study	A noise, vibration and visual cues study shall be conducted that: (1) will validate blasting noise and vibration predictions in the Project's EIS; (2) will document the scale and range of visual cues generated by blasting activities (i.e. the distance and duration over which dust plumes can be observed by the naked eye); and (3) may be used to revise the Project's no-blasting buffers for caribou. Notwithstanding the no blasting buffers, Agnico Eagle may conduct studies on caribou within the buffer distance for the purposes of determining whether the buffer distance can be modified. The design and conduct of the study shall be consistent with advice provided by the TAG, as per the terms of reference.	Government of Nunavut (September 21, 2017)	▪ No timeline provided	▪ Section 3.5.2.4
17	Blasting – Surveys	Prior to each blast, surveys shall be conducted to detect caribou and other wildlife within the no-blasting buffers specified in the Terrestrial Ecosystem Monitoring Plan (TEMP).	Government of Nunavut (September 21, 2017)	▪ All Phases	▪ Section 3.5.2.4
18	Helicopter – Distance buffers for caribou	The Proponent shall apply mandatory, minimum distance buffers of 300m vertically and 1000m horizontally for the operation of all helicopters and fixed winged aircraft in proximity to caribou, subject to exception for safety considerations or the fulfillment of regulatory compliance activities only.	Government of Nunavut (September 21, 2017)	▪ All Phases	▪ Table 7, + general monitoring section
19	Helicopter – Distance buffers for landing and take-offs	The Proponent shall apply the mandatory, minimum distance buffers to landings and take-offs of helicopters, such that engine starts and takeoffs are suspended when caribou are observed within the buffer distance.	Government of Nunavut (September 21, 2017)	▪ All Phases	▪ To be addressed to in General monitoring section
20	Helicopter –Monitor traffic	The Proponent shall revise the Project's TEMP to include a program to monitor and report helicopter traffic associated with the Whale Tail project (including existing Meadowbank infrastructure) and all associated exploration activities so that the spatial scale and intensity of this activity can be documented. This should include the collection and analysis of GPS track logs for all helicopter flights contracted by the Proponent.	Government of Nunavut (September 21, 2017)	▪ All Phases	▪ To be addressed to in General monitoring section
21	Traffic Monitoring – Program through TAG	Prior to Project commencement, the Proponent shall develop a traffic-monitoring program. This program shall be designed to collect data on vehicle type, time, date, location (i.e. specific road segment utilized), point of origin and destination for all vehicles (Proponent-owned or contracted) using the Project's roads including the Whale Tail haul road and Meadowbank all-weather-access road. The design of this	Government of Nunavut (September 21, 2017)	▪ Prior to Project Commencement	▪ To be developed – will be included in General monitoring section

No.	Subject	Commitment	Issue Raised by (Date of Commitment)	Project Phase/Timing	Location in TEMP
		program shall be consistent with advice provided by the TAG, as per the terms of reference.			
22	Traffic Monitoring – Traffic Data Accuracy	The Proponent shall verify annually traffic data to ensure its accuracy and shall summarize traffic data for each road segment including the Whale Tail haul road and Meadowbank all-weather- access road. In addition to daily rates, any seasonal or monthly variation in traffic shall be reported. The observed rates and composition of traffic shall be compared to predictions in the EIS.	Government of Nunavut (September 21, 2017)	▪ Annually	▪ Traffic/road monitoring plan to be included in general monitoring section or as Appendix
23	Traffic Monitoring Exceed traffic predictions	Where traffic rates or composition exceed predictions in the EIS, based on a 3-year average, the Proponent shall produce a revised assessment to examine the potential impacts of this excess traffic on wildlife. This revised assessment shall be submitted to NIRB for consideration.	Government of Nunavut (September 21, 2017)	▪ All phases	▪ Traffic/road monitoring plan to be included in general monitoring section or as Appendix
24	Traffic Monitoring – Recording use	The Proponent shall expand monitoring efforts for recording public use of roads to include the collection of data by staff conducting wildlife road surveys.	Government of Nunavut (September 21, 2017)	▪ All phases	▪ Traffic/road monitoring plan to be included in general monitoring section or as Appendix
25	Project tolerant animals - definition	Within 1 year of Project certification, the Project's TEMP shall be revised to further define 'Project tolerant' animals as applied to wildlife mitigation and monitoring activities. Thereafter, further revisions may be made annually within the TEMP, taking into account ongoing project monitoring. The revisions shall be consistent with advice provided by the TAG, as per the terms of reference	Government of Nunavut (September 21, 2017)	▪ Within 1 year of Project certification ▪ Annually thereafter	▪ Section 3.5.2.1
26	Project tolerant animals – consulting	Where mitigation measures are to be relaxed for project tolerant animals, the Proponent shall consult with the TAG prior to reducing/removing mitigation.	Government of Nunavut (September 21, 2017)	▪ All phases	▪ Section 3.5.2.1
27	Project tolerant animals - reporting	The Proponent shall document all cases where mitigation measures are relaxed for project tolerant animals and shall report these cases in the annual project monitoring report.	Government of Nunavut (September 21, 2017)	▪ All phases	▪ Figures 6 and 7 (definition included 3.5.2)
28	Muskox - Group size thresholds	Within 1 year of Project certification, the Project's TEMP shall be revised to specify and justify the group-size threshold for triggering adaptive management for muskox. Justification of the group-size threshold should be based on available muskox group size data. Thereafter, further revisions may be made annually within the TEMP, taking into account ongoing project monitoring. The revisions shall be consistent with advice provided by the TAG, as per the terms of reference.	Government of Nunavut (September 21, 2017)	▪ Within 1 year of Project certification ▪ Annually thereafter	▪ To be developed
29	Muskox - Blasting Suspension	The Project's TEMP shall be revised to include a provision for mandatory suspension of blasting when groups of muskox above the specified group size threshold are observed within 1km of blasting activities. The suspension of blasting shall be maintained until the animals have moved away. The no-blasting buffer may be reviewed periodically throughout the life of the Project whenever relevant information becomes available. The revisions shall be completed annually within the	Government of Nunavut (September 21, 2017)	▪ Annually	▪ Section 3.5.2.4

No.	Subject	Commitment	Issue Raised by (Date of Commitment)	Project Phase/Timing	Location in TEMP
		TEMP, taking into account ongoing project monitoring, and will be consistent with advice provided by the TAG, as per the term of reference.			
30	Muskox - Roads, vehicle speeds	The Project's TEMP shall be revised to include a requirement for vehicles to slow to 30 km/hr when passing within 500m of a group of muskox above a specified group size threshold. This mitigation measure may be reviewed periodically throughout the life of the Project taking into account ongoing project monitoring. The revisions shall be consistent with advice provided by the TAG, as per the terms of reference.	Government of Nunavut (September 21, 2017)	▪ All phases	▪ Section 3.5
31	Muskox- Aircraft Buffers	The Project's TEMP shall be revised to include a mandatory requirement for aircraft to maintain a distance of at least 300 m vertically and 1000 m horizontally from groups of muskox; subject to exception for flight safety purposes. This mitigation measure may be reviewed periodically throughout the life of the Project taking into account ongoing project monitoring. The revisions shall be consistent with advice provided by the TAG, as per the terms of reference.	Government of Nunavut (September 21, 2017)	▪ All phases	▪ Table 7
32	Raptor Nests – Buffers	The proponent shall establish automatic minimum no-disturbance buffers around all raptor nests located in proximity to the Project. Project activities, including the operation of vehicles, heavy equipment, aircraft and blasting, shall be prohibited within these buffers unless an exception is specified within a nest-specific management plan that has been reviewed and approved by the GN, subject matter experts and other relevant parties. The size of minimum, no-disturbance buffers shall be based on the BC Guidelines for Raptor Conservation or similar guidelines as recommended by the Project's TAG.	Government of Nunavut (September 21, 2017)	▪ All phases	▪ Section 3.7.2.1
33	Uncertainty in caribou responses to Whale Tail haul road	Within 1 year of Project certification, Proponent shall: a. Complete movement analyses for collared caribou to measure behavioral responses to the All Weather Access Road including the annual rate of deflections to north of Meadowbank. The analyses should use all available information including harvesting patterns along the All Weather Access Road and annual variation in weather; b. Integrate caribou collar movements with Height of Land and All Weather Access Road survey monitoring data to describe the current representation of the collared caribou relative to the herds; and c. Revise thresholds using the results of the analyses of caribou speed, turning rates and direction of travel from the movement analyses for mitigation along the Whale Tail haul road in the TEMP.	Kivalliq Inuit Association (Sept. 21, 2017)	▪ Within 1 year of project certification	▪ Section 3.5.2
34	Terrestrial Ecosystem Management Plan	Within 1 year of Project certification, the Proponent shall revise the TEMP to include details on: a. Thresholds for when to implement convoying and duration of the gaps in traffic for all three project segments (mine operations, haul road and All Weather Access Road); b. How convoying will be tested for effectiveness (e.g., cameras, track surveys); and	Kivalliq Inuit Association Sept. 21, 2017	▪ Within 1 year of project certification	▪ Convoying included as part of decision trees (Figures, and Table 7) ▪ Update section 3.5.2-3.5.3 linking field observations to

No.	Subject	Commitment	Issue Raised by (Date of Commitment)	Project Phase/Timing	Location in TEMP
		c. Information on the effectiveness of convoying as mitigation shall be presented in annual reporting with the TAG.			convoy effectiveness
37	Uncertainty in effects of Whale Tail pit and haul road activities on caribou disturbance	Within 1 year of Project certification, the Proponent shall complete a review of statistical design, statistical power and sample size for caribou collaring applicable for environmental assessment and adaptive monitoring.	Kivalliq Inuit Association Sept. 21, 2017	▪ Within 1 year of project certification	▪ ongoing

APPENDIX C

Wildlife Protection and Response Plan: Meadowbank Division

1. SECTION 1 – INTRODUCTION

As part of this Terrestrial Ecosystem Management Plan (TEMP; 2017), mitigation measures and monitoring initiatives have been proposed to lessen the likelihood that wildlife will become habituated to the Meadowbank Mine, which includes Vault Pit, the All-Weather Access Road, Whale Tail Pit, and the Whale Tail Haul Road, and all associated infrastructure. The TEMP identified measures to deter wildlife from obtaining food rewards, finding shelter around the Project site, gaining access to harmful substances present on the site, being injured as a result of vehicle collisions, and damaging mine property.

Despite these mitigation measures, personnel may occasionally come into contact with wildlife that inhabits the Project area. To manage these incidents, a specific Wildlife Protection and Response Plan has been developed. Incidents must be managed to keep both humans and wildlife safe, using only humane control methods.

Furthermore, all staff must be familiar with the standard operating procedures and best practices aimed at ensuring human-wildlife conflicts are minimized during the life of the Project. All personnel, including contractors, on site have a role to play in ensuring human safety, conservation of wildlife and documenting wildlife activities in the Project area.

The following Wildlife Protection and Response Plan provides information on general human-wildlife conflicts policies and regulations, species-specific response plans for Ungulates and Predatory Mammals, and wildlife awareness.

2. SECTION 2 – HUMAN-WILDLIFE CONFLICTS

2.1 OVERVIEW

Wildlife encounters can take many forms. A conflict occurs when either human or wildlife health, and/or safety are put at risk. Human health and safety can be affected by contact or conflict with wildlife in several ways, including direct or indirect physical injury, and exposure to animal diseases that can infect humans (i.e., known as zoonotic diseases).

The most common conflict faced by wildlife is the increased risk of mortality from human encounters, which most often occurs when wildlife become habituated to human activity and lose their natural fear of people. The most serious form of habituation is directly correlated to the animal obtaining food, which is known as food conditioning. Food-conditioned animals become dependent on humans as sources of food. Because these human-induced habits become engrained in the animal, attempts to deter the habituated behavior generally fail with the end result usually the death of the animal. Loss of habitat effectiveness (how the animal uses its available habitat), and effects to wildlife movement (how the animal travels through its available habitat) can also result from wildlife in conflict with human development. Ultimately, this will affect both the health and safety of the wildlife species involved. While it is impossible to remove all risk to human and wildlife health and safety, approaches to minimize the risk do exist. Reactive measures do have their place in stopping the conflicts when they occur, but proactive strategies are the most effective means of preventing potential conflicts.

2.2 MINE POLICIES AND REGULATIONS

The following summarizes the general rules regarding wildlife on the site and will form the basis of the Wildlife Awareness Orientation and Courses (see below).

Employees and contractors are advised to report all incidents of unauthorized activities on or in the vicinity of the mine site to the Environment Department.

2.2.1 General Restrictions for Wildlife Protection

The following are general restrictions for Project workers and contractors, intended to minimize the potential for negative Project-related effects (e.g., increased mortality risk) on wildlife in and around the site.

- Wildlife shall have the right-of-way except where it is judged to be unsafe to do so. All species of wildlife (i.e., from small mammals to large carnivores, songbirds to raptors) when encountered by personnel on foot or in vehicles will be given the right-of way.
- Non-mine-registered firearms are not permitted on site (i.e., carrying of firearms in private vehicles to and from the project site on workdays).
- Feeding wildlife is prohibited at all times on or in the vicinity of the Project, including during travel to and from the site.

- Harassment (defined as to kill, injure, seize, capture or trap, pursue and includes to stalk, track, search for, lie in wait for, or shoot at - for any of those purposes not authorized by the Environment Department) of wildlife is prohibited at all times on or in the vicinity of the Project, including during travel to and from the site.
- The deliberate destruction or disruption of wildlife nests, eggs, dens, burrows, and the like, is prohibited at all times on or in the vicinity of the Project, including during travel to and from the site.
- Hunting and fishing is prohibited at all times on or in the vicinity of the Project, including during travel to and from the site on workdays.
- Pets are prohibited at all times on or in the vicinity of the Project, including during travel to and from the site on workdays.
- Maximum speed limit on all access roads is 50 km/h (30 mph).
- Traffic (including ATVs and snowmobiles) is restricted to designated access roads and trails.

The mine site refers to any mine facility present during the operations phase of the Project, including but not limited to, outbuildings (e.g., machine shop, offices), pits, parking areas, tailings storage facilities, and waste piles.

2.2.2 Wildlife Attractants

A list of potential wildlife attractants is provided below. The list is intended as a general summary of attractants but may not be comprehensive of all potential attractants.

- Food wastes and garbage.
- Chemicals (e.g., road salt) and their refuse (e.g., empty fuel containers).
- Wildlife carcasses (e.g., road kills, hunter kills).
- Movement and human activity (e.g., movement of people and equipment outdoors).
- Roads, which may create preferential travel corridors for wildlife, can lead to vehicle collisions and increased exposure to wildlife encounters at the Project site.

General recommendations directed at minimizing wildlife concerns related to food wastes and garbage is presented under **Section 2.2.3** (Garbage Management).

Protocols for dealing with chemical storage, disposal, and spills are presented in Meadowbank's Hazardous Materials Management Plan and Spill Contingency Plan. These protocols will minimize the potential for adverse wildlife effects, and are referenced under **Section 2.2.3** (Garbage Management) and **Section 2.2.4** (Wildlife Health).

Requirements related to the reporting and removal of wildlife carcasses are presented under **Section 2.2.7** (Reporting Wildlife Observations and Incidents).

2.2.3 Garbage Management

General recommendations directed at minimizing wildlife concerns related to food wastes and garbage are provided below.

- Littering is prohibited on and in the vicinity of the Project site, which includes all access roads. All garbage (e.g., lunch bags) must be returned to temporary storage containers. Note: organic wastes (e.g., orange peels, apple cores) are included.
- Food-related waste (including packaging) will be incinerated on a daily basis and general waste will be sent to the landfill and then buried.
- Wastes associated with mechanical maintenance and repairs (e.g., motor oil and antifreeze) will be disposed of as per the Hazardous Materials Management Plan.
- All temporary (small) storage containers for food waste garbage (yellow bin) will be wildlife protective (i.e., have bear proof lids).
- No open top buckets or anything similar will be tolerated outside buildings.
- Feeding wildlife is prohibited at all times on or in the vicinity of the Project, including during travel to and from the site on workdays.
- Wildlife incidents related to garbage or human food attractants will be reported as soon as possible. See **Section 2.2.7** (Reporting Wildlife Observations and Incidents) for more information.
- Improperly disposed of garbage, particularly food wastes will be reported as soon as possible.

See **Section 2.2.7** (Reporting Wildlife Observations and Incidents) for more information.

While Arctic Fox tend to be the greatest concern with respect to access to garbage, other animals (e.g., Wolverines, Wolves and Grizzly Bears) may be attracted to uncontained garbage sources. Problem wildlife data at the Meadowbank Mine to date indicate that Arctic Fox and Wolves are the most likely species to be attracted to the site.

2.2.4 Wildlife Health

The following recommendations are intended to reduce potential Project-related effects on wildlife health (including non-vehicle related accidents and consumption of toxic substances).

- Feeding wildlife is prohibited at all times on or in the vicinity of the Project, including during travel to and from the site. If caught feeding wildlife, an employee can be suspended and/or dismissed.
- Company procedures on the safe and prompt clean-up of any chemical spills will be followed. See Spill Contingency Plan for a more detailed protocol.
- Any observations of wildlife in and around potential sources of contaminants (e.g., fuelling sites) will be reported. See **Section 2.2.7** (Reporting Wildlife Observations and Incidents) for details.

2.2.5 Wildlife and Vehicles

The following recommendations are intended to reduce the incidence of wildlife-vehicle collisions and near misses.

- Wildlife has the right-of-way except where it is judged to be unsafe to do so.
- Obey all traffics signs.
- Maximum speed limit on all access roads is 50 km/h (30 mph).
- Verbally report wildlife carcasses observed on and in the vicinity of the Project, including along all access roads, as soon as possible. See **Section 2.2.7** (Reporting Wildlife Observations and Incidents) for more information.
- Restrict traffic (including ATVs and snowmobiles) to designated access roads and trails.
- Push and spread out the snow with a dozer when clearing the road to avoid build-up snow banks on the side of the road.
- Report all wildlife-vehicle collisions that results in the death or injury of wildlife as soon as possible. See **Section 2.2.7** (Reporting Wildlife Observations and Incidents) for details.
- A near miss between a vehicle and an animal should be reported as a wildlife 'incident'. See **Section 2.2.7** (Reporting Wildlife Observations and Incidents) for details.

2.2.6 Wildlife and Buildings

The following recommendations are intended to reduce the risk of close encountering situations between wildlife and people.

- Skirting will be added around the building to avoid having wildlife under the buildings.
- Under building access ways must be closed at all time.
- Keep c-can doors close at all time to avoid wildlife using them as shelter.
- Open top bins and containers for food waste will not be permitted outside buildings. If needs be, a bear-resistant container shall be used.

2.2.7 Reporting Wildlife Observations and Incidents

2.2.7.1 Reporting Requirements of Project Workers and Contractors

Project workers and contractors are required to verbally notify the Environment Department of the following wildlife observations or incidents as soon as possible.

- Signs of animal presence (e.g., tracks, scat, nests, burrows) in close proximity (visible to the eye from within the mine site footprint) to site facilities, vehicles, equipment, or areas frequented by workers.
- Sightings of animals in close proximity (visible to the eye from within the mine site

footprint) to site facilities, vehicles, equipment, or areas frequented by workers.

- Aggressive or unusual wildlife behavior in and around Project facilities.
- Instances of workers feeding wildlife.
- Instances of improper disposal of garbage or other waste materials.
- Observed maintenance issues (e.g., improper placement or maintenance of garbage containers).
- Instances of workers not following vehicle use guidelines (e.g., speed limits).
- Vehicle collisions with wildlife or near misses.
- Observations and locations of dead (e.g., road kill) or injured animals.

Following the verbal report of a wildlife incident or observation, completion of a Wildlife Incident Report Form may be requested at the discretion of the Environmental Coordinator or designate (s).

2.2.7.2 Reporting Requirements of Wildlife Occurrences

Wildlife Incident Reports (found in Appendix B to the TEMP) provide essential information that may identify: 1) potentially dangerous situations requiring intervention (e.g., problem wildlife); 2) situations that require notification of the Department of Environment; 3) weaknesses in garbage-handling and problem wildlife prevention measures; and 4) areas that may require warning signs (e.g., poor visibility road corners). The Environmental Coordinator or designate(s) should ensure that records of wildlife observations and incidents are thoroughly documented. Reports should attempt to include the following information wherever possible.

- Identification and number of wildlife observed.
- Specific timing and location of the observation(s).
- Details regarding the animal behavior, including direction of approach and departure, what it was doing, any aggressive behavior, etc.
- Assessment of local attractants, such as garbage, odors, movement of people, other wildlife, etc.
- If local attractants are identified as a factor, determination of what steps were or will be taken to address/remove potential attractants.
- Identification of any potential mitigation measures available to deter wildlife or limit access and how they will be implemented (refer to **Section 2.2.7** for additional information on dealing with problem wildlife).
- If an animal is destroyed, a description of the lethal measures deployed (e.g., rifle), statement of the rationale for use of lethal measures (e.g., proximity to workers, repeated incidents, observed condition of the animal, etc.), and indication of what previous non-lethal measures were employed (e.g., deterrents, hazing, trapping, and relocating [with permission from GN] etc.).

2.2.8 Protocols for Dealing with Problem Wildlife

A problem wildlife situation may arise where animal acts in an aggressive manner and/or is a repetitive nuisance or threat to worker safety. The following protocols should be used to deal with problem wildlife.

- Immediately notify the Environmental Coordinator or designate(s) of any problem wildlife issue. Reporting wildlife incidents as they occur will ensure that proactive rather than reactive measures can be taken to prevent a serious outcome (e.g., human injury, destruction of the problem animal). See **Section 2.2.7** (Reporting Wildlife Observations and Incidents) for details.
- If deemed necessary by the Environmental Coordinator, notify the Conservation Officer in the Hamlet of Baker Lake or other designated Government of Nunavut representative, inform them of the problem wildlife encountered on site, discuss appropriate aversive and mitigation actions, and determine timing when lethal methods should be implemented, if necessary.
- The Environmental Coordinator or designate(s) will initiate the appropriate actions in response to a problem wildlife issue, Recommended actions include:
    - Assess potential local attractants and address or remove all those identified, where practical;
    - Utilize non-lethal deterrents (e.g., aversive conditioning, hazing, trapping and relocating), projectiles (e.g., rubber bullets) or consider trapping and relocation of animals (e.g., Arctic Fox), where it is considered appropriate and safe to do so (refer to **Sections 3 and 4** for species-specific deterrents); and
    - Use lethal measures. Lethal measures should only be considered as a last resort in the event of aggressive animal behavior and/or repeated nuisance animals that pose a threat to worker safety and/or site facilities.
- Only authorized personnel (Environment Department) are permitted to use lethal and non-lethal projectiles (e.g., rubber bullets) or deploy traps for problem wildlife interventions.
- Do not attempt to deal with a problem wildlife issue on your own. Problem wildlife can be dangerous.
- Conform to recommendations regarding predator safety. All staff should have received a predatory mammal (i.e., Grizzly Bear, Wolverine, Wolf, and Arctic Fox) awareness training orientation. See **Section 5**.

3. SECTION 3 – SPECIES-SPECIFIC RESPONSE PLANS

3.1 PURPOSE

Response plans specific to species groups (i.e., ungulates and predatory mammals) are required to ensure that all personnel working for the Project are provided guidance on how to respond in a manner that is safe to both humans and wildlife should they encounter wildlife on or around the Project site.

3.2 SPECIES GROUPS ADDRESSED

Ungulates (Caribou and Muskoxen) and predatory mammals (Grizzly Bear, Wolverine, Wolf, and Arctic Fox) have the highest potential for interactions with humans during the life of the Project, and thus require specific response plans. If other wildlife are encountered, adaptive management strategies will be implemented if mitigation techniques and the policies and regulations mentioned in this document are not effective for these species. The proposed wildlife monitoring program will be the preferred measure of identifying potential areas in need of new mitigation strategies, or changes in policies or regulations.

For each of the species groups described below, the seasonal activity in the Project area is discussed, as well as the protocol in the event of an encounter.

3.2.1 Ungulates (Caribou and Muskoxen)

3.2.1.1 Seasonal Activity in the Project Area

Results from baseline surveys indicate that Caribou and Muskoxen are present in the Project area in all four seasons, but are observed in greatest abundance in the fall (e.g., October) when thousands of animals may be present in the vicinity of the Project, and in lowest abundance in the summer (see the baseline reports for Meadowbank [Cumberland Resources 2005a] and Whale Tail [Dougan and Nunavut Environmental 2015], and annual Wildlife Monitoring Reports for more details). Calving or post-calving aggregations or movements of Caribou have not been observed within the Project study areas since baseline studies were initiated in 1999.

3.2.1.2 Response to Encounters

Humans rarely have physical altercations with Caribou. Caribou do rut in the fall when they are at relatively high numbers on the Project site and the levels of aggression displayed, particularly by males, increases substantially. There is some anecdotal information suggesting that a bull Caribou may attack a person or vehicle during the rut; therefore, a close encounter with Caribou (during the fall) could be dangerous. Although considered rare, Muskoxen will charge humans if they are threatened (especially lone bulls). Being a sedentary species, Muskoxen will have the tendency to stand their ground when threatened, defending their territory or their young.

If you encounter a single or herds of Caribou or Muskoxen, the following actions should be taken.

- Back away slowly.
- Ensure animal(s) have an escape route.
- Do not make sudden movements.
- Do not make loud noises or attempt to scare the animal(s).
- Use radio/satellite phone to report presence of the animal(s) to the Environment Department.
- Stay in radio/phone contact until the animal(s) moves away or you have returned to a safe area (e.g., inside vehicle or building).
- Wait for the animal(s) to pass before continuing work in the area.

3.2.2 Predatory Mammals

3.2.2.1 Seasonal Activity in the Project Area

Grizzly Bear

Baseline surveys indicated limited use of the Project area by Grizzly Bears, which is consistent with what would be expected for Grizzly Bears in the north, given their wide-ranging habits and low densities. In the fall, when Caribou (a prey item) are more abundant, the Project area may have higher value for Grizzly Bears (see annual Wildlife Monitoring Reports, and Meadowbank and Whale Tail baseline reports for more details). Furthermore, increasing hunting and food caches along the Meadowbank access road in all seasons may also attract Grizzly Bears to the area.

Wolverine

Wolverines occur in the Project area on a year-round basis. Records of Wolverine sightings or their sign were infrequent in the Project area during baseline and monitoring studies beginning in 1999. Similar to Grizzly Bears, the limited evidence for Wolverine in the area is not surprising given their wide-ranging movements and characteristically low population densities (see annual Wildlife Monitoring Reports, and Meadowbank and Whale Tail baseline reports for more details). Only two occurrences (i.e., in 2011 and 2014) of a habituated Wolverine has reported at the Project site since baseline studies began in 1999.

Wolf

Although they do occur year-round in the Project area, Wolves were observed infrequently during all survey sessions, but were most common in the fall, perhaps in response to the increased Caribou abundance at that time of the year (see annual Wildlife Monitoring Reports, and Meadowbank and Whale Tail baseline reports for more details). Wolves have been one of the most frequent problem wildlife species encountered since the Meadowbank Mine became operational in 2009. Most problem Wolves were single and emaciated.

Arctic Fox

Camp personnel have regularly observed Arctic Foxes close to camp and in and around camp buildings during most months of operation, including winter (see annual Wildlife Monitoring

Reports, and Meadowbank and Whale Tail baseline reports for more details). Arctic Foxes are the most common predatory mammal species to be encountered at the Project site.

3.2.2.2 Responses to Different Levels of Encounters

Predatory mammals (such as Wolves, Wolverine, Arctic Fox, and Grizzly Bears) rarely attack people; however, they are extremely strong and vicious, and should be given respect. Members of the dog family (such as wolves and foxes) are more at risk of carrying rabies, and other zoonotic diseases, and therefore should be avoided. Arctic Fox in particular is easily tamed, quickly losing their fear of humans, and often approaching very close. Sick or injured animals may no longer be able to feed themselves and could be in a state of starvation. Often they show few physical signs that something may be wrong, but typically act more aggressively or even 'friendly' towards humans; therefore, a close encounter with a predatory mammal could be dangerous. All bites and scratches from wildlife should be reported immediately to Health & Safety department since animals can be vectors for rabies.

If you encounter a predatory mammal, your response will depend on the situation at hand. There are different levels of sightings and predatory wildlife alerts that will affect the immediate decisions you make in the field (i.e. General Sighting, or a Green, Yellow, and Red Wildlife Alert). This system allows for workers to quickly determine if predatory wildlife on or near the Project footprint/personnel needs to be left alone to pass through the size, or moved away from hazards or if the animal presents a risk to humans.

General Wildlife Sighting

Definition: When a bear or other predatory mammal is sighted >1000 m away from human activity and/or Project footprint.

Action:

- Immediately inform the Environment Department of situation using a radio/phone. A general notice will be broadcasted by the Environment Coordinator via radio to all other departments;
- Workers on the ground or helicopters in the vicinity will monitor the wildlife's trajectory non-invasively;
- Follow up notifications will be issued if the sighting changes to an Alert status, which will be dependent on the worker's location and exposure; and
- Stay in radio/phone contact until the animal(s) moves away or you have returned to a safe area (e.g., inside vehicle or building).

Green Wildlife Alert

Definition: When a bear or other predatory mammal is sighted <1000 m away from human activity and/or Project footprint.

Action:

- Immediately inform the Environment Department of situation using a radio/phone. A Green Wildlife Alert will be broadcasted by the Environment Coordinator via radio to all other departments;

- Workers on the ground or helicopters in the vicinity will monitor the wildlife's trajectory non-invasively and report the animals location regularly so that a trajectory of movement can be estimated;
- Follow up notifications will be issued if the sighting changes to a higher Alert status, which will be dependent on the worker's location and exposure;
- Workers in the affected area should be ready in case the situation escalates to a Yellow Alert Status by having a safe area (e.g., inside a building or vehicle) in the immediate vicinity that they can access quickly; and
- Stay in radio/phone contact until the animal(s) moves away or you have returned to a safe area (e.g., inside vehicle or building).

Yellow Wildlife Alert

Definition: When a bear or other predatory mammal is sighted <500 m away from human activity or Project footprint where an encounter, near miss, incident, or injury to a person or animal may be possible. If the wildlife's trajectory is aimed at human activity and/or Project footprint, or if the wildlife demonstrates abnormal behavior (such as interest or fixation), the following actions must be taken.

Action:

- Avoidance and distancing measures between workers and the animal should take place first by moving all workers away from the predicted trajectory of the animal, which may lead to a temporary closure of activities in that area. Preparation of personal deterrents should take place. Actively move personnel away from the work area, cease activities in the area and the predicted trajectory of the animal and go to a safe place (e.g., inside a building or vehicle);
- Immediately inform the Environment Department of the situation using a radio/phone. A Yellow Wildlife Alert will be broadcasted by the Environment Coordinator via radio to all other departments;
- Should avoidance and distancing measures not be possible for wildlife deterrence, possible mobilization of helicopters and the Environment Department Response Team may occur; and
- Stay in radio/phone contact until the animal(s) moves away or you have returned to a safe area (e.g., inside vehicle or building).

Red Wildlife Alert

Definition: When a bear or other predatory mammal is sighted <250 m away from human activity and/or Project footprint where an encounter, near miss, incident, or injury to a person or animal may be imminent if the animal does not change their trajectory. Wildlife deterrence must be placed into action immediately by trained wildlife responders and the following actions must be taken.

Action:

- Sound air horn with two long blasts. This will help deter the bear/predatory animal and inform all other workers of dangerous wildlife in close proximity;

- Avoidance and distancing measures between workers and the animal should take place first by moving all workers away from the predicted trajectory of the animal, which will lead to a temporary closure of activities in that area. Preparation of personal deterrents should take place. Actively move personnel away from the work area and cease activities in the immediate area of the animal and the predicted trajectory of the animal and go to a safe place (e.g., inside a building or vehicle);
- Immediately inform the Environment Department of the situation using a radio/phone. A Red Wildlife Alert will be broadcasted by the Environment Coordinator via radio to all other departments;
- ***If the predatory mammal does not back away, or shows interest in you:***
    - Continue to back away slowly and ensure a 10 m distance between yourself and the animal;
    - Make sure the animal has a safe route of escape;
    - Make noise to alert the animal of your presence or to scare it off;
    - Avoid provoking it;
    - Return to a safe area as soon as possible (e.g., inside a building or vehicle);
    - Keep the Environment Department informed of situation using the radio/phone;
- Immediate mobilization of helicopters (if available) and the Environment Department Response Team will occur to remove personnel from the area and/or deter the animal; and
- Stay in radio/phone contact until the animal(s) moves away or you have returned to a safe area (e.g., inside vehicle or building).

Table A-1 Summary of Predatory Wildlife Sightings and Alerts

General Wildlife Sighting **If wildlife is more than 1 km away:** 1. Inform Environment Department of location, distance, and number of animals. 2. Continue to monitor the bear and notify is sighting changes to Alert status. 3. Stay in radio/phone contact 4. Helicopters and Environment Department Team prepared to remove personnel or deter bear if needed.
Green Wildlife Alert **If wildlife is less than 1 km away:** 1. Inform Environment Department of location, distance, and number of animals. 2. Continue to monitor the bear and notify if Alert status changes. 3. Stay in radio/phone contact. 4. Workers are ready to go to safe area if needed. 5. Helicopters and Environment Department Response Team prepared to remove personnel or deter bear if needed.
Yellow Wildlife Alert **If wildlife if less than 500 m away:** 1. Inform Environment Department of location, distance, and number of animals. 2. Temporary work area closures for areas in vicinity of the animal and along its trajectory. Workers to prepare their personal deterrents and to go to a safe area immediately. 3. Stay in radio/phone contact. 4. Helicopter and Environment Department Response Team may be deployed to remove personnel or deter bear. 5. All personnel to stay in safe area until an all clear is given.
Red Wildlife Alert **If wildlife is less than 250 m away:** 1. Sound air horn with two long blasts. 2. Temporary work area closures for areas in vicinity of the animal and along its trajectory. Workers to immediately go to a safe area and use personal deterrents if needed. 3. Inform Environment Department of location, distance, and number of animals. 4. Stay in radio/phone contact. 5. Helicopter and armed Environment Department Response Team are deployed immediately to remove personnel or deter bear. 6. All personnel to stay in safe area until an all clear is given.

The Environment Department is to treat all predatory mammals that are threatening or aggressive as they would treat a Grizzly Bear, which is perceived to be the most dangerous. All predatory mammals that are showing interest in a person or Project facilities must be aggressively deterred to prevent habituation to the Project site. Detailed response recommendations are provided in **Section 3.2.2.3** below. If an animal is not of an immediate safety concern, the Wildlife Response team should discuss options to deter or remove the animal with Government of Nunavut Department of Environment (DOE) conservation personnel.

3.2.2.3 Environment Department Protocols for Managing Problem Predatory Mammals

As part of the detailed response plan, the Environment Department will follow the procedures included here when responding to predatory mammal sightings and encounters. It is assumed that the reporting person(s) has followed procedures for predatory mammal incidents, and has requested the Environment Department Response Team to be dispatched due to the failure of human presence to deter the predatory mammal. If an animal is not of an immediate safety concern, the Environment Department should discuss options to deter or remove the animal with Government of Nunavut DOE conservation personnel. All wildlife problems are to be recorded in the wildlife database.

In case of a General Wildlife Sighting or a Green Wildlife Alert, the Environment Department will:

- Conduct on-going monitoring and radio communication will continue in case the situation escalates and Alert status increases.

In the case of a Yellow Wildlife Alert:

- Environmental Coordinator or delegate will respond to the initial radio/call to confirm they have received the Alert message and that action is being taken;
- Environmental Coordinator or delegate will commence temporary area closures and collect all deterrent equipment and give a briefing to the Environment Department Response Team on location and circumstance of the call;
- The Environmental Coordinator will contact the helicopter dispatch and request immediate deployment (if required). Helicopter will prepare for deployment of Environment Department Response Team in to the field for emergency pick-up of field crews or a bear deterrence using the helicopter; and
- The Environmental Coordinator (or designate) should proceed to the security office to provision a firearm if needed and the site Medic should be on alert and monitor Alert updates.

In the case of a Red Wildlife Alert:

- The Environmental Coordinator or delegate will respond to the initial radio/call to confirm they have received the Alert message and that action is being taken;
- Environmental Coordinator or delegate will commence temporary area closures and collect all deterrent equipment and give a briefing to the Environment Department Response Team on location and circumstance of the call;
- The Environmental Coordinator will contact the helicopter dispatch and request immediate deployment (if required). Helicopter will prepare for deployment of Environment Department Response Team in to the field for emergency pick-up of field crews, or a bear deterrence using the helicopter;
- The Environmental Coordinator (or designate) should proceed to the security office to provision a firearm if needed and the site Medic and ERT should be on standby in the

unlikely event of a wildlife attack; and

- Updates on the situation will be broadcast if the situation or affected areas change, the Alert status changes, or when the hazard no longer exists and work may resume.

Once the Environment Department Response Team is deployed in the field:

- Prior to implementing any deterrence measures ensure the bear has a clear avenue of escape, and all workers have vacated the area;
- Depending on location, slowly drive or walk towards the animal staying a safe distance from the animal (minimum of 10 m);
- No firearms or deterrents should be discharged in a work area until all personnel are removed or are safely inside structures;
- When firearms are to be used there will always be two individuals, one person with a firearm (12 gauge) for deterrent use, the other as back up with lethal force. No lethal force will be taken without consent from the Environmental Superintendent / Coordinator in conjunction with the consultation of the Government of Nunavut DOE Wildlife Officer unless the situation is deemed to be life threatening;
- The appropriate less than lethal deterrent will be chosen and used in an effort to scare the predatory mammal away; and
- If the deterrent is successful, the incident will be recorded in the wildlife database and will detail the type and level of deterrent used, information on the predatory mammal involved, and all information on the circumstances leading up to the incident.

If the deterrent is not effective and the predatory mammal continues to approach or doesn't move away from the area of human activity or Project footprint.

- Increase deterrent efforts to less than lethal projectile (rubber bullet) if not already being employed;
- Ensure the animal has an open escape route; and
- Continue aggressive use of less than lethal projectile deterrents to try and chase the animal away.

All but the most aggressive animals should have been deterred at this point. The situation is now extremely dangerous and the Environment Department must be ready to use lethal force.

The risk to human life or property is imminent since the predatory mammal has not* responded *to non-lethal deterrent options and the safety of the team or mine property is now compromised.

- Shoot with the intention of stopping the threat, using the buckshot or 1-ounce lead slugs, as appropriate, to kill the animal;
- Shots should be aimed at the chest area, not the head or hind quarters;
- If lethal force has been used, the Environment Department must complete a full report

detailing the event immediately;

- The Government of Nunavut DOE conservation officers will be notified by phone. Direction will then be given to properly dispose of the carcass; and
- Any wildlife showing signs of rabies will be killed (never shot in the head) and reported.

Helicopter Deterrence:

- This method of deterrence is to be considered as a last resort depending on the circumstances (i.e., location of work);
- At least one member of the Environment Department must be onboard the helicopter to monitor the deterrence. The helicopter pilot is in charge of the safety of the aircraft and the passengers. The pilot will have the final say regarding where and how the aircraft is flown with regards to safety;
- To reduce stress on the animal, the helicopter must stay at least 100 m back and 30 m up from the animal during a helicopter deterrence;
- Animals cannot be pushed for more than ten minutes or 3 km (2.2 miles);
- The Environment Department passenger will notify the helicopter pilot once they are satisfied that the animal has been pushed a sufficient distance and that it is moving away from the site. They will then instruct the pilot to go up in altitude to continue monitoring the location of the animal and ensure that it is not returning;
- In the event that a firearm will need to be transported to a site via helicopter for deterrence (e.g., remote drill site), the firearm must be placed in a secure gun case and be unloaded; and
- A detailed record of all bear/wildlife activities and deterrence actions must be presented to the Environment Coordinator in a timely manner. This forms part of the reporting requirements for Wildlife Incident Tracking for regulatory authorities.

4. SECTION 4 – WILDLIFE AWARENESS INFORMATION AND ENCOUNTER STRATEGIES

This section deals with general predatory mammal (i.e., Wolves, Wolverines, and Grizzly Bears) awareness information and encounter strategies. It does not replace the need for all personnel to take a recognized wildlife awareness course.

4.1 FACTORS THAT INFLUENCE A PREDATORY MAMMAL'S REACTION

Wolverines, Wolves, and Grizzly Bears will react differently to chance encounters with humans, depending upon many factors, including each animal's past experience with humans. Their reaction is difficult to predict because of the variability of factors with each encounter.

- Female mammals may aggressively defend her young ones (for example: Female bears with cubs are more likely to attack than to flee).
- Wolverines or bears may defend a food cache (for example: a bear's main objective is to eat from the time it leaves its den to the time it returns to a winter den. Hunting bears will cache food after eating part of it by covering the food with dirt, branches or leaves. They will often establish a daybed nearby and return later for another meal). Animals will aggressively defend their food cache.
- Individual Space: All predatory mammals have a minimum distance surrounding them within which any intrusion is considered a threat. A cornered or surprised predatory mammal may be dangerous. If there is no cover to retreat to, their usual response to danger is to attack or to stand its ground.
- Old, wounded or predatory mammals with teeth malformations can be dangerous because they are very hungry or starving (e.g., Wolves observed on-site in 2009).
- Wolverines, Wolves, Arctic Fox, and Grizzly Bears are easily attracted to human food sources and may become aggressive to obtain it. Predatory mammals that have obtained food from humans become "human food habituated`. These mammals are accustomed to humans and link people as sources for obtaining food.
- Young animals which are inexperienced hunters and/or recently weaned are also at a greater risk to take advantage of human food source opportunities.

4.2 ANIMAL ENCOUNTERS

Most of animal safety is prevention – avoiding an encounter is the best way to stay safe while working in the home ranges of Wolverines, Wolves, Arctic Fox, and Grizzly Bears.

4.3. HOW TO REACT TO ANIMAL ENCOUNTERS

Your reaction should depend on circumstances and the behavior of the mammal.

- Stop and assess the situation before you act.

- Does the predatory mammal know you are there?
- How is the animal reacting to the nearby activity?
- Remain calm.
- Do not turn your back on the animal.

DO NOT RUN – You will trigger the animal's natural response to chase you. Wolverines, Wolves and Grizzly Bears are extremely fast and you cannot outrun them.

Some Simple Rules

- Respect them – they can kill you.
- Be alert at all times.
- Watch for sign.
- Make noise – don't surprise animals.
- Travel in groups when possible.
- Be cautious in noisy areas (streams).
- Know the types of areas animals use during the year.
- Do not approach them.
- Never feed them.
- Get trained and carry deterrents.
- Remember carcass equals danger – look for ravens, strong odours.
- Mentally rehearse encounters.

4.3.1 Specific Situations: Animal Encounters

Wolverine, wolf, or bear is not aware of you.

- Leave the area quietly in the same direction that you came from.
- Move while the predatory mammal is not aware of you and stop moving when the mammal lifts its head to check its surroundings.
- Stay downwind so the predatory mammal will not pick up your scent.
- When you have moved a safe distance away and preferably to your truck or shop where you can watch and wait until the predatory mammal leaves.
- Report event to Environment Department immediately.

If the wolverine, wolf or bear is unaware of you and approaching.

- Allow the mammal the right-of-way. Make sure there is a safe escape route and that you

are not in the way.

- Return to vehicle or building when available or allow animal a wide birth.
- Report event to Environment Department immediately.

If you cannot leave undetected

- Move upwind so animal can pick up your scent; this will help them identify you as human.
- If it is possible, try to keep the predatory mammal in your sight.
- Watch to see if the predatory mammal leaves when it smells that a person is nearby.
- Report event to Environment Department immediately.

If the wolverine, wolf or bear is aware of you but in the distance.

- Continue walking at the same general pace and towards a safe area (vehicle or building).
- DO NOT RUN.

The wolverine, wolf or bear is aware of you and close.

- A predatory mammal will feel threatened in a close confrontation. Generally their natural tendency will be to reduce or to remove the threat. Assist the animal by acting as non-threatening as possible.
- Do not make direct eye contact.
- Do not make any sudden moves.
- DO NOT RUN.
- In the case of a bear, they need to identify you as a person, so talk in low tones and slowly wave your arms over your head.
- Attempt to give the predatory mammal an opportunity to leave. Be sure they have an open escape route.
- Try to back away slowly.
    - If the predatory mammal begins to follow you, drop your jacket, or pack or some other article (not food) to distract it. This may distract the animal long enough for you to escape.
    - Report to Environment Department immediately.

The wolverine, wolf or bear is close and threatening.

- If you have a deterrent such as a bear banger or bear spray, be prepared to use it depending on how close the predatory mammal is.

- If you do not have a deterrent, or if using the deterrent is not successful, act as non-threatening as possible.
- Talk to the predatory mammal in a calm authoritative tone of voice.
- Do not startle or provoke the predatory mammal by making sudden moves.
- Back slowly away from the animal and drop a pack, jacket, or some other article in order to distract it momentarily.
- Remember that the predatory mammals may be defending their cubs that you have not yet seen or they may have a food cache nearby. Attempt to look as non-threatening as possible.
- Report to Environment Department immediately.

The wolverine, wolf or bear is very close and approaching.

A distance of less than 50 m in an open area is considered very close.

- If the predatory mammal continues to approach, use your deterrent when in range.
- If the predatory mammal does not respond to the deterrent you must now STAND YOUR GROUND!
- Report to Environment Department immediately.

The wolverine, wolf or bear charges.

In this case you have done something that has provoked the Wolverine, Wolf or Grizzly Bear into showing signs of aggression towards you. It is often not clear to the person what they have done to provoke the mammal until after the attack. It is important that you act passively, humble your posture, and do not look directly at the animal. Always keep the animal in sight. Never yell or throw things as these are obvious signs of aggression

When faced with a charging wolverine, wolf or bear.

- First use your deterrent, either a banger or pepper spray. If authorized (only Environment Department representatives or local security personnel) to carry a firearm, shoot the predatory mammal.
- **DO NOT PLAY DEAD IF THE PREDATORY MAMMAL CONSIDERS YOU FOOD.**
- You must defend yourself with whatever means are available, act aggressively towards the bear.
- Stand up on something high and try to make yourself look bigger. Try to appear dominant. Try to frighten it. Yell, scream, shout, and wave your arms. Jump up and down and fight back.
- Hold your jacket or backpack over your head to make yourself look bigger.
- If being aggressively attacked in a predatory attack, fight back. Concentrate your efforts on the face, eyes, and nose of the bear. Use whatever means you have, rocks, sticks,

tools, hardhat, or simply kick and punch with all the strength you can muster.

- Report to Environment Department immediately.

4.3.2 Types of Bear Attacks

Provoked Attacks

- You have done something that has provoked the bear into showing signs of aggression towards you. It is often not clear to the person what they have done to provoke the bear until after the attack.
- It is important that you act passively, humble your posture and do not look directly at the bear. Always keep the bear in sight.
- Lie down on the ground in the prone position (i.e., play dead as this is a sign of submission to the bear and shows the bear that you are no longer a threat to them).
- Never yell at the bear or throw things at the bear, these are obvious signs of aggression towards the bear.
- Report to Environment Department immediately.

Predatory Attacks

- The bear is hunting or stalking you! You are being treated as potential food. DO NOT PLAY DEAD IF THE BEAR CONSIDERS YOU FOOD.
- You must defend yourself with whatever means are available, act aggressively towards the bear. Stand up on something high and try to make yourself look bigger.
- Try to appear dominant. Try to frighten the bear. Yell, scream, shout and wave your arms. Jump up and down and fight back. Hold your jacket or backpack over your head to make yourself look bigger.
- Use your deterrent; either a banger or pepper spray. If authorized to carry a firearm, shoot the bear.
- Report to Environment Department immediately.

4.4 WILDLIFE DETERRENTS

4.4.1 Noise

- Pencil Flare Guns are highly portable but many people have received injuries from this type of deterrent as the pen explodes while they are holding it. This deterrent is still sold and is not recommended. Canadian Conservation Officers no longer using pencil flares.
- Pyrotechnics, including bangers, screamers, whistlers, and flares. Requires a magazine launcher. These launchers look like a small handgun. There are different types available, some carry only a single shot, and some will carry multiple cartridges. The bangers, screamers and whistlers are charges that will explode and emit a variety of different noises. The name of the device indicates the noise it will make.

4.4.2 Wildlife Chemical Deterrents

Bear Sprays are highly effective but they must be used correctly to be effective. As with all deterrents they have their good points and their bad points.

- The main ingredient in bear spray is Capsicum an extract from hot peppers.
- Capsicum needs to strike the eyes, nose or mouth of the mammal, (open membranes) to be effective.
- These sprays can only be used at very close range, 3 to 8 m or 10 to 25 ft.
- You cannot discharge the bear spray too early – or it will be completely ineffective.
- If the predatory mammal comes within the range of the bear spray – aim directly into their face and spray.
- You must be aware of the wind direction. If you the wind is blowing towards you, the spray will be carried by the wind into your face.
- Bear spray may not be effective in sub-zero weather (Spray cans do not fire well in very cold temperatures.) In colder weather, you need to keep the can of bear spray warm in order for it to fire effectively.
- Bear spray will not be effective in the rain. When you fire a can of bear spray, the spray will create a billowing cloud of capsicum and propellant. Rain can/will wash the spray right out of the air before it strikes the bear in the face.
- If you have used your can of bear spray to deter a mammal, wash the nozzle off with soap and water to remove the scent. Replace your can of spray as soon as possible. You do not want to have another bear encounter with a half a can of spray left.
- Bear sprays have a shelf life. Always replace your bear spray when you are nearing the end of the shelf life. The Capsicum does not deteriorate over time; it is the canister seals that deteriorate over time.
- Do not test your can of spray before going out into the field. You need to take a full can of spray into the field, not a partially used one.
- Wildlife chemical deterrents are only to be used for the purpose they are intended for. Misuse of wildlife deterrents such as chemical sprays, bangers, and pyrotechnics is considered a criminal offence.

5. SECTION 5 – TRAINING PROTOCOL

5.1 SCOPE

The Wildlife Training Protocol outlines recommended levels of training that specific groups of people at the Project site should receive. It is important that human activity at the site does not result in wildlife encounters that put people or wildlife at risk. All personnel on site have a role to play in ensuring human safety, conservation of wildlife, and documenting wildlife activities in the Project area.

5.2 ASSUMPTIONS AND KEY CONSIDERATIONS

Agnico Eagle, Meadowbank Division must assign overall accountability, recording and reporting responsibility to the Environmental Coordinator or designate(s) if the various wildlife response plans and training initiatives are to be effective.

The Environmental Coordinator or designates(s) will be responsible for ensuring that all employees, contractors, and visitors at the Project site receive wildlife training appropriate to their roles and responsibilities.

The Environment Department will be responsible for all deterrent action whenever it is necessary to deter wildlife from mine infrastructure or personnel. All members of the Environment Department will receive specialized training in various levels of deterrent use. Security personnel and the Environment Department will be the only onsite personnel to have access to a firearm.

5.3 TRAINING

Mandatory wildlife awareness orientation for all staff will include the following components.

5.3.1 Wildlife-Human Conflict

- General restrictions for wildlife protection.
- Wildlife Attractants.
- Garbage Management.
- Wildlife Health.
- Wildlife and Vehicles.
- Preventing Problem Wildlife.
- Dealing with Problem Wildlife.
- Reporting Wildlife Observations and Incidents.

5.3.2 Wildlife Awareness

The Wildlife Awareness and Working in the Wild brochure has been developed to provide Agnico Eagle staff and contractors with awareness of potential wildlife encounters that may occur at the Project site. This brochure discusses the following:

- Wildlife that commonly occur near the Project site;
- Behavior of wildlife that may be encountered near the Project site;
- Wildlife encounters; and
- Wildlife Deterrents.

5.3.3 Environment Department

In addition to the required Project site orientation, the Environment Department may require additional training. The following training is recommended, especially for those without experience in situations where wildlife occurrences are common.

Bear Safety Training

Provided by qualified contractor or territorial, provincial or federal Wildlife Officer, this course will provide:

- Instruction on the use of lethal and non-lethal deterrents for emergency response to bear incidents;
- Techniques for euthanizing bears during an emergency response;
- Other types of deterrent options available in non-emergency situations;
- In depth aversive conditioning techniques;
- Live trapping techniques and protocols;
- Necropsy techniques, and biological sampling; and
- Practicum.

Carnivore Safety Training

Provided by qualified contractor or territorial, provincial or federal Wildlife Officer to include:

- Biology, ecology, and behavior of Wolverine, Wolf, Arctic Fox, and Grizzly Bear;
- Rabies and other zoonotic diseases;
- Detailed deterrent and aversive conditioning techniques;
- Live trapping techniques;
- Instruction on the use of lethal and non-lethal deterrents for emergency response to incidents involving large carnivores;
- Necropsy techniques and biological sampling; and
- Practicum.

APPENDIX D

Field Data Forms and UTM Coordinates for Monitoring Programs

MEADOWBANK WILDLIFE INCIDENT PROCEDURES

Wildlife incidents refer to a range of possible occurrences at the Mine, including:

- human-wildlife interactions that present a risk to either people or animals
- wildlife-caused damage to property or delay in operations
- wildlife deterrent actions
- wildlife injury or mortality

The objective of wildlife incident reporting is to document and mitigate impacts to wildlife, reduce risks to people, and identify new mitigation.

Natural processes should be left alone, unless intervention is required to reduce risk to either wildlife or staff from Project activities. Each incident requires unique responses, but each incident should be assessed to reduce or eliminate the chance that it will recur.

GN should be contacted in the case of problem wildlife, and prior to disturbing nests. Detailed wildlife incident reporting is critical for implementing adaptive management. As part of the TEMP, all wildlife incidents are reported and reviewed to determine patterns in incident occurrences and to develop management procedures.

All wildlife incidents should be documented by Meadowbank Environment Department staff using the attached form, and reported immediately to the Environmental Superintendent. The report should include photographs and conversations with the individuals involved. Please attached additional pages or information that may be useful to understand what occurred and what can be learnt from the incident.

Wildlife Incident Report Form

Date:		**Time:**	
Individuals involved:			
Species:			
Number, gender, age:			
Location (description):			
Location (UTM):			
Digital photo numbers:			
Describe the incident or accident that occurred. Was there a threat to wildlife or human safety? What was the situation that caused it?			
Describe any use of wildlife deterrents: Describe any wildlife mortality:			
Describe any communication with GN-DOE:			
What immediate measures were taken to reduce risk or harm?			
What measures are recommended to prevent future occurrences?			
Report prepared by:		**Reviewed by:**	

UTM Coordinates (NAD 83) of PRISM plots Used for Long-term Monitoring At Meadowbank and Whale Tail Study Areas

MEADOWBANK STUDY SITE				
	UTM Coordinates of PRISM Plot Corners			
#	Southwest	Northwest	Northeast	Southeast
2	14W 0637020 7216090	14W 0637020 7216490	14W 0637420 7216490	14W 0637420 7216090
3	14W 0637800 7216700	14W 0637800 7217100	14W 0638200 7217100	14W 0638200 7216700
6	15W 0359400 7212500	15W 0359400 7212900	15W 0359800 7212900	15W 0359800 7212500
8	14W 0637700 7214200	14W 0637700 7214600	14W 0638100 7214600	14W 0638100 7214200
9	14W 0637300 7214800	14W 0637300 7215200	14W 0637700 7215200	14W 0637700 7214800
11	14W 0639000 7215800	14W 0639000 7216200	14W 0639400 7216200	14W 0639400 7215800
12	14W 0639700 7215600	14W 0639700 7216000	14W 0640100 7216000	14W 0640100 7215600
14	14W 0639000 7216900	14W 0639000 7217300	14W 0639400 7217300	14W 0639400 7216900
15	14W 0639000 7217800	14W 0639000 7218200	14W 0639400 7218200	14W 0639400 7217800
19	14W 0635500 7217300	14W 0635500 7217700	14W 0635900 7217700	14W 0635900 7217300
20	14W 0636000 7216600	14W 0636000 7217000	14W 0636400 7217000	14W 0636400 7216600
22	14W 0636800 7217400	14W 0636800 7217800	14W 0637200 7217800	14W 0637200 7217400
24	14W 0636300 7218000	14W 0636300 7218400	14W 0636700 7218400	14W 0636700 7218000
28	14W 0640200 7221000	14W 0640200 7221400	14W 0640600 7221400	14W 0640600 7221000
29	14W 0641100 7220000	14W 0640100 7220400	14W 0640500 7220400	14W 0640500 7220000
31	14W 0636600 7208000	14W 0636600 7208400	14W 0637000 7208400	14W 0637000 7208000
32	14W 0636000 7208500	14W 0636000 7208900	14W 0636400 7208900	14W 0636400 7208500
33	14W 0636700 7209800	14W 0636700 7210200	14W 0637100 7210200	14W 0637100 7209800
34	14W 0640000 7218800	14W 0640000 7219200	14W 0640400 7219200	14W 0640400 7218800
36	14W 0633300 7212100	14W 0633300 7212500	14W 0633700 7212500	14W 0633700 7212100
37	14W 0634000 7212700	14W 0634000 7213100	14W 0634400 7213100	14W 0634400 7212700
38	14W 0632700 7212800	14W 0632700 7213200	14W 0633100 7213200	14W 0633100 7212800
42	15W 0359400 7219000	15W 0359400 7219400	15W 0359800 7219400	15W 0359800 7219000
43	15W 0359200 7218300	15W 0359200 7218700	15W 0359600 7218700	15W 0359600 7218300
45	14W 0640600 7210400	14W 0640600 7210800	14W 0641000 7210800	14W 0641000 7210400
WHALE TAIL STUDY SITE				
	UTM Coordinates of PRISM Plot Corners			
#	Southwest	Northwest	Northeast	Southeast
1	14N 0605500 7251900	14N 0605500 7272300	14N 0605900 7252300	14N 0605900 7241900
2	14N 0606300 7252300	14N 0606300 7252700	14N 0606700 7252700	14N 0606700 7252300
3	14N 0607900 7252300	14N 0607900 7252700	14N 0608300 7252700	14N 0608300 7252300
4	14N 0605500 7253100	14N 0605500 7253500	14N 0605900 7253500	14N 0605900 7253100
5	14N 0607500 7253100	14N 0607500 7253500	14N 0607900 7253500	14N 0607900 7253100
6	14N 0608700 7252300	14N 0608700 7252700	14N 0609100 7252700	14N 0609100 7252300
7	14N 0611500 7253100	14N 0611500 7253500	14N 0611900 7253500	14N 0611900 7253100
8	14N 0609100 7253500	14N 0609100 7253900	14N 0609500 7253900	14N 0609500 7253500
9	14N 0609100 7254300	14N 0609100 7254700	14N 0609500 7254700	14N 0609500 7254300
10	14N 0610700 7251500	14N 0610700 7251900	14N 0611100 7251900	14N 0611100 7251500
11	14N 0609900 7254700	14N 0609900 7255100	14N 0610300 7255100	14N 0610300 7254700
12	14N 0603900 7255500	14N 0603900 7255900	14N 0604300 7255900	14N 0604300 7255500
13	14N 0609500 7255900	14N 0609500 7256300	14N 0609900 7256300	14N 0609900 7255900
14	14N 0603500 7256300	14N 0603500 7256700	14N 0603900 7256700	14N 0603900 7256300
15	14N 0610300 7256300	14N 0610300 7256700	14N 0610700 7256700	14N 0610700 7256300
16	14N 0611500 7256300	14N 0611500 7256700	14N 0611900 7256700	14N 0611900 7256300
17	14N 0611900 7251500	14N 0611900 7251900	14N 0612300 7251900	14N 0612300 7251500
18	14N 0605500 7257100	14N 0605500 7257500	14N 0605900 7257500	14N 0605900 7257100
19	14N 0606700 7257900	14N 0606700 7258300	14N 0607100 7258300	14N 0607100 7257900
20	14N 0605500 7258300	14N 0605500 7258700	14n 0605900 7258700	14N 0605900 7258300

CONTROL OR REFERENCE SITE				
	UTM Coordinates of PRISM Plot Corners			
#	Southwest	Northwest	Northeast	Southeast
1	14W 0623000 7218000	14W 0623000 7218400	14W 0623400 7218400	14W 0623400 7218000
2	14W 0623600 7217600	14W 0623600 7218000	14W 0624000 7218000	14W 0624000 7217600
3	14W 0622600 7217000	14W 0622600 7217400	14W 0623000 7217400	14W 0623000 7217000
4	14W 0624600 7217000	14W 0624600 7217400	14W 0625000 7217400	14W 0625000 7217000
5	14W 0625000 7217600	14W 0625000 7218000	14W 0625400 7218000	14W 0625400 7217600
6	14W 0623600 7216000	14W 0623600 7216400	14W 0624000 7216400	14W 0624000 7216000
7	14W 0624600 7216400	14W 0624600 7216800	14W 0625000 7216800	14W 0625000 7216400
8	14W 0624600 7215600	14W 0624600 7216000	14W 0625000 7216000	14W 0625000 7215600
9	14W 0625600 7215000	14W 0625600 7215400	14W 0626000 7215400	14W 0626000 7215000
10	14W 0626200 7215000	14W 0626200 7215400	14W 0626600 7215400	14W 0626600 7215000
11	14W 0624500 7214000	14W 0624500 7214400	14W 0624900 7214400	14W 0624900 7214000
12	14W 0625000 7214000	14W 0625000 7214400	14W 0625400 7214400	14W 0625400 7214000
13	14W 0626200 7214400	14W 0626200 7214800	14W 0626600 7214800	14W 0626600 7214400
14	14W 0624600 7213300	14W 0624600 7213700	14W 0625000 7213700	14W 0625000 7213300
15	14W 0625200 7213000	14W 0625200 7213400	14W 0625600 7213400	14W 0625600 7213000
16	14W 0626100 7213000	14W 0626100 7213400	14W 0626500 7213400	14W 0626500 7213000
17	14W 0627000 7213600	14W 0627000 7214000	14W 0627400 7214000	14W 0627400 7213600
18	14W 0624600 7212800	14W 0624600 7213200	14W 0625000 7213200	14W 0625000 7212800
19	14W 0625600 7212600	14W 0625600 7213000	14W 0626000 7213000	14W 0626000 7212600
20	14W 0626000 7212000	14W 0626000 7212400	14W 0626400 7212400	14W 0626400 7212000

UTM Coordinates of Breeding Bird Transects along the Meadowbank AWAR and Whale Tail Haul Road

Meadowbank AWAR				
Transect	NAD	Start Coordinate	End Coordinate	Coordinate on AWAR
1	27	14W 0644200 7138000	14W 0647200 7138000	14W 0645524 7138000
2	27	14W 0639450 7152000	14W 0642450 7152000	14W 0640226 7152000
3	27	14W 0634800 7158000	14W 0637800 7158000	14W 0636319 7158000
4	27	14W 0631900 7163000	14W 0634900 7163000	14W 0633968 7163000
5	27	14W 0629000 7167000	14W 0632000 7167000	14W 0630098 7167000
6	27	14W 0624500 7178000	14W 0627500 7178000	14W 0625081 7178000
7	27	14W 0624000 7182000	14W 0627000 7182000	14W 0625872 7182000
8	27	14W 0625500 7189000	14W 0628500 7189000	14W 0626421 7189000
9	27	14W 0626500 7193000	14W 0629500 7193000	14W 0627284 7193000
10	27	14W 0626200 7203000	14W 0629200 7203000	14W 0627472 7203000
11	27	14W 0630000 7209000	14W 0633000 7209000	14W 0631031 7209000
12	27	14W 0633000 7217000	14W 0636000 7217000	14W 0634284 7217000
Whale Tail Haul Road				
Transect	**NAD**	**Start Coordinate**	**End Coordinate**	**Coordinate on Proposed Haul Road**
1	83	14N 0635400 7223500	14N 0638400 7223500	14N 0636853 7223500
2	83	14N 0633000 7229100	14N 0636000 7229100	14N 0634445 7229100
3	83	14N 0622300 7234600	14N 0622300 7237600	14N 0622300 7236106
4	83	14N 0616600 7238600	14N 0619600 7238600	14N 0618155 7238600
5	83	14N 0619100 7242800	14N 0622100 7242800	14N 0620588 7242800
6	83	14N 0610000 7250600	14N 0613000 7250600	14N 0611531 7250600

APPENDIX E

Peregrine Falcon Management and Protection Plan

Peregrine Falcon Management

and Protection Plan on the Meadowbank Gold Project Site

Version 2 - Updated June 18, 2012

Background and Purpose:

Since 2009, peregrine falcons have been observed along the All Weather Access Road occurring in three to five quarries. In June 2012, for the first time, falcon activity was observed in the Portage Pit. Subsequently a falcon nest site was observed in the South Portage Pit. In response a general mine site peregrine falcon management and protection plan was developed in accordance with the Terrestrial Ecosystem Management Plan (TEMP).

The purpose of this plan is to protect peregrine falcons from mine activities by firstly preventing them from nesting within the perimeter of active mining Pits (Portage, Goose, or Vault pits) during operation. If falcons nest in the mine pits, operations will be adapted according to the management plan and monitoring will increase to ensure protection of the falcons and their nest(s). The peregrine falcon is listed as "may be at risk" by the Canadian Endangered Species Conservation Council (2001) and the Nunavut Government (Government of Nunavut, 2001). *Falco peregrinus tundrius*, the subspecies that breeds north of the treeline, is listed as being of special concern in Canada (COSEWIC, 2002). Therefore we must ensure all activities protect these species.

Throughout the year Meadowbank environment department staffs routinely monitor the pit and other areas on site for birds to ensure their protection and that the management plan is being implemented. The following document outlines specific management and mitigative measures to protect peregrine falcons in accordance with the Meadowbank TEMP.

Deterrence and Protection Plan Prior to Nesting in Portage, Goose and Vault Pit:

Level 1) Prior to and during nesting season (May 25 – July 1) an inspection of the pit walls will be conducted daily. These inspections will include a visual assessment from the bottom of the pit looking up at the wall faces, and also from the top looking down the wall faces. Records shall be kept of the dates, times, and which individual(s) carried out the inspection.

Level 2) If falcons are reported to have been seen in the vicinity of the pit or are observed by environment department staff, inspections will increase to 3 times daily; once in early morning, once at mid-day, and once again in the later evening. All sightings shall be documented as to the date, time, location, and individual(s) spotting the falcons. Owl decoys will be erected in the

area where the falcons have been seen to attempt to deter the falcons from nesting in the pit areas. Noise cannons may also be utilized.

Level 3) If sightings become regular, inspections will increase to every 3 hours including incorporating a night shift to perform inspections.

Level 4) If perching is observed or if nests are being created within the pit, the following management measures will be under taken.

A. Shoot off a pistol banger (non-pyro technique) to ease them away from their location of perching. At no time will a banger be shot in the direction of the falcon, all bangers will be shot from a safe distance away to avoid any physical harm to the bird, i.e. hearing impairment.
B. When the bird flies away it will be observed. The reason for this is that Agnico-Eagle does not want any falcon to leave one active pit, ie., South Portage and move to North Portage or from either Portage pit to Bay Goose Pit. We must ensure the falcon is deterred from the active pit areas. If the falcon re-lands within one of the pit perimeters repeat step A.
C. If a nest is being constructed, each nest will be treated on a case by case basis depending on its location. One option at this level would be to roll or place wire mesh fencing over the nesting area to prevent the return of the falcon to the nesting area.

With protective measures in place, our goal is to never have to get beyond *Level 4:A*.

Portage, Goose and Vault Pit Nest Monitoring and Protection Plan

If a nest is established and/or eggs are observed blasts will be minimized within a protective zone of the nest. It is likely that the nest will occur near the top of the pit wall. Blast vibration and noise has not appeared to have deterred the falcons from nesting near pits at this time; therefore the greatest risk to the eggs and young would be from blast fly rock. To prevent falcon disruption, the frequency of blasts will be reduced, vehicle traffic and most importantly human traffic will be reduced within a radius of ~150m from the nest. Fly rock will be monitored by video to ensure no impacts. Through controlled blasts and video monitoring of fly rock in June and July AEM will ensure that fly rock is kept to a minimum height that does not exceed the height of the nests.

In accordance with the TEMP, daily monitoring by environmental staff will be conducted with binoculars or a scope from the west side of the pit and recorded. After all blasts, environmental staff will check on the nests and record observations. Portable motion sensor automatic cameras may also be installed to record movements in the nest on regular intervals.

Based on past monitoring results of the nests along the All Weather Road (2009-2011), there is no pattern that has indicated that some young have survived while others have not due to road or quarry operations. The activities in the pit need to continue to be protective of the nests and the environmental staff will continue to monitor the activity and nests daily between June and September if a nest is observed.

Portage, Goose and Vault Pit Mine Operation Mitigation

Blasting

As a protective measure, blasting in the south pit east wall will become less frequent with smaller controlled blasts. Over the past 6 months, blasting has been optimized to reduce dilution and control fly rock by modifying blast material density, timing and patterns.

Blasts should occur less frequently and should be minimized within 150m of the nest in June and July, operations will prevent blast fly rock from disturbing the nests and video record all blasts within a 150m radius. The blast vibration and noise does not appear to have deterred the falcons from nesting nearby. Through controlled blasts and video monitoring, fly rock will be monitored to ensure it has not flown towards the nests. If blasts occur within the radius, fly rock will not exceed 60m or the height of the nest in June and July.

Mine Operations and Reduced Vehicle Traffic

Traffic should be reduced within 150m radius of the nest to protect it from dust; if traffic cannot be reduced, dust suppressant should be used.

If all above mentioned measures have failed and AEM environment are not able to conform to the TEMP, the Government of Nunavut Department of Environment will be contacted by the Environment Superintendent, Environment Biologist, or Environment Coordinator.

APPENDIX F

Migratory Bird Mitigation Plan

TECHNICAL MEMORANDUM

DATE June 2018 **PROJECT No.** 1658927.3100_Rev2

TO Ryan Vanengen
Agnico Eagle Mines Limited

CC Lasha Young, Jen Range, Dionne Filiatrault

FROM Corey De La Mare, Damian Panayi **EMAIL** corey_delamare@golder.com

MIGRATORY BIRDS PROTECTION PLAN

1.0 INTRODUCTION

Agnico Eagle has planned two water diversions as part of water management activities for the proposed Whale Tail Project (the Project) and the proposed Whale Tail Expansion Project (Expansion Project). The purpose of this Plan is to present the anticipated flooding area and schedule during the Whale Tail Lake (South Basin) and Northeast diversions and present appropriate mitigation measures to reduce impacts to nesting migratory birds.

The Whale Tail Lake (South Basin) diversion consists of construction of the Whale Tail Dike, from June 2018 to February 2019, to divert Whale Tail Lake (South Basin) and tributary lakes through Lake A45, just south of Lake A16 (Mammoth Lake). Flooded tributary lakes (light blue shading in Figure 1) include Lake A18, Lake A19, Lake A20, Lake A21, Lake A22, Lake A55, Lake A62, Lake A63, Lake A65, Pond A-P1, and Pond A-P53 (Figure 1). Active flooding from elevation 152.5 to 156.00 masl of the area will occur from 2019 until 2020 causing approximately 157 ha of flooding; this will active require migratory bird mitigation. The flooded area will remain at elevation 156.00 masl from July 2020 until 2023, during operations.

The Northeast diversion consists of construction of the Northeast dike, from February to March 2019, to divert Lake A46 and tributary lakes through Lake C44 in the Lake C38 (Nemo Lake) watershed. Flooded tributary lakes (light blue shading in Figure 2) include Lake A47, Lake A48, Lake A113, Pond A-P38, and Pond A-P68 (Figure 2). Flooding of this area will occur between February 2019 to July 2020, and during operations (July 2020 to 2023).

The flooding has the potential for incidental disturbance and destruction of migratory birds and their nests. As per Nunavut Impact Review Board (NIRB) Project Certificate No.008 Condition 34, this Migratory Bird Nest Mitigation Plan (the Plan) describes how these impacts will be mitigated; the mitigation will be focused between 2018 to July 2020, or until water levels reach their maximum flood plain.

The *Migratory Birds Convention Act* (1994) (*MBCA*) prohibits the harm of migratory birds and the disturbance or destruction of nests and eggs. The original aim of this legislation in the early 1900s was to conserve migratory bird populations from overharvest (CWS 2007). Inadvertent disturbance or destruction of migratory birds has been termed “Incidental Take” and Environment and Climate Change Canada (ECCC) currently lacks legal mechanisms to regulate Incidental Take (CWS 2007).

This Plan describes the likely effects pathways that may harm migratory birds (based on the Whale Tail FEIS, Agnico Eagle 2016), the mitigation options to reduce these impacts, and Agnico Eagle’s preferred option for proceeding.

Golder Associates Ltd.
16820 107 Avenue, Edmonton, Alberta, Canada T5P 4C3

Tel: +1 (780) 483 3499 Fax: +1 (780) 483 1574 www.golder.com

Golder Associates: Operations in Africa, Asia, Australasia, Europe, North America and South America

Golder, Golder Associates and the GA globe design are trademarks of Golder Associates Corporation.

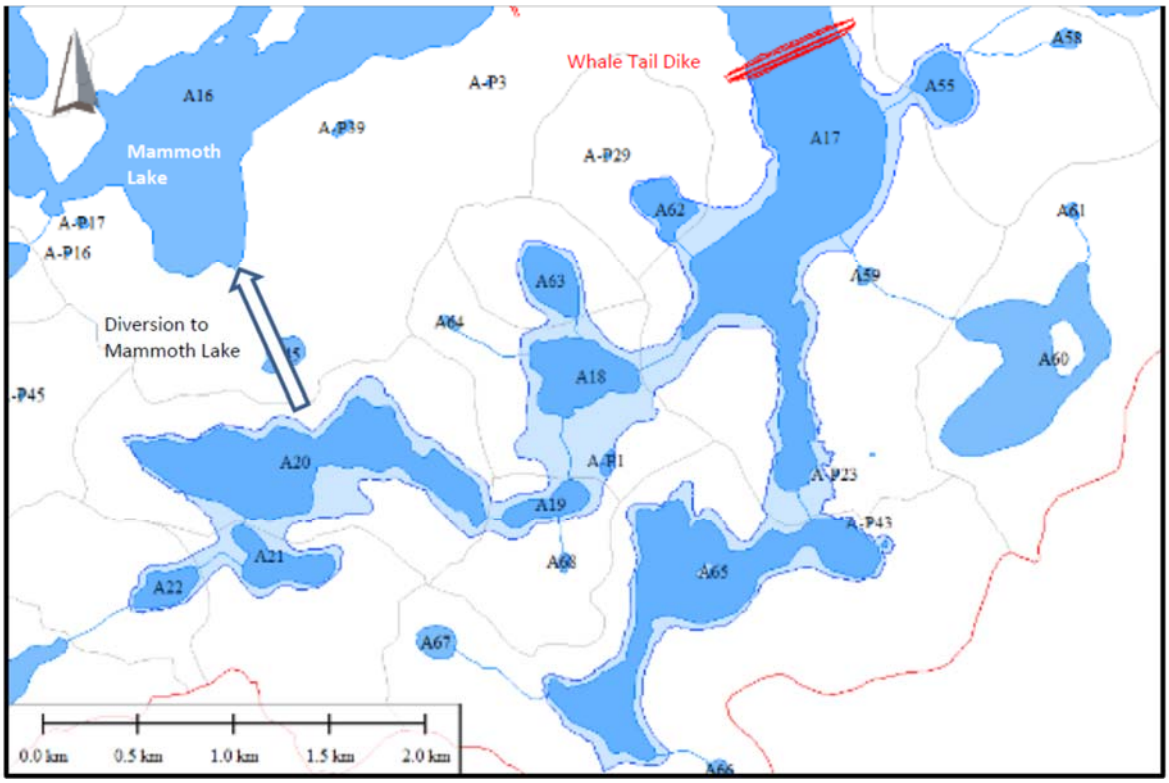

Figure 1: Whale Tail Lake (South Basin) Diversion Flooding occurring between February 2019 to July 2020, and during operation (July 2020 to 2023)

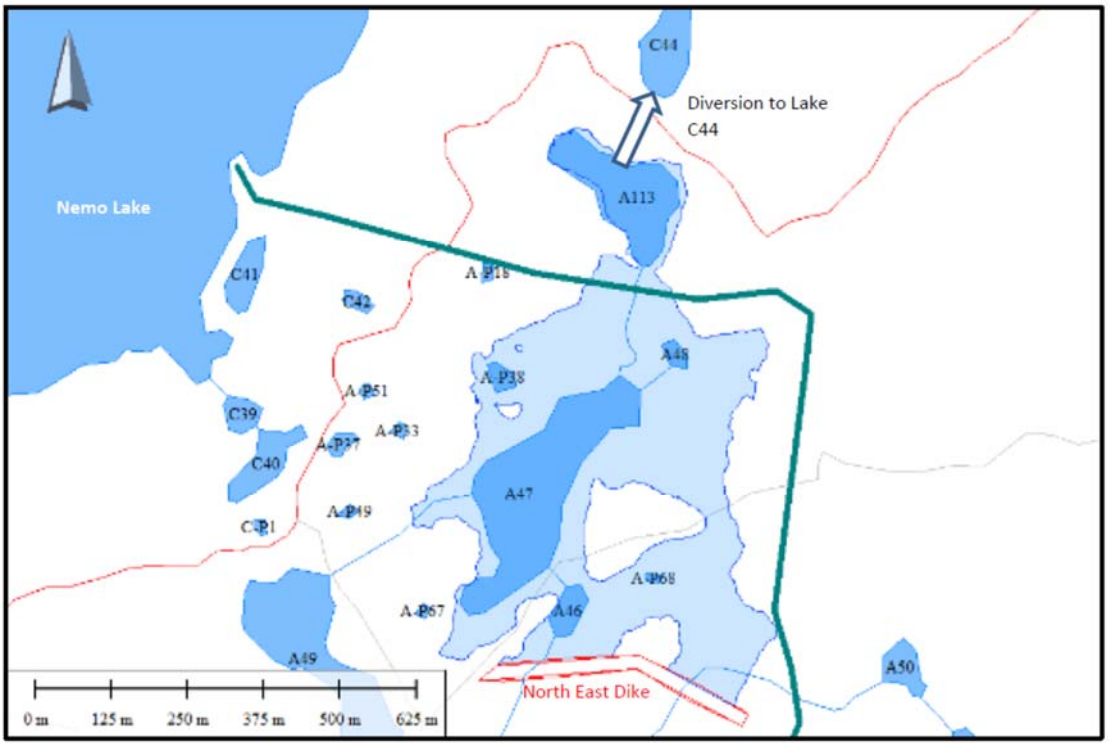

Figure 2: Northeast Diversion Flooding occurring between June 2019 to July 2020, and during operation (July 2020 to 2023)

2.0 EFFECTS PATHWAYS AND MITIGATION

The flooding resulting from the Whale Tail Project and proposed Whale Tail Expansion Project water diversions will lead to incidental disturbance and destruction of migratory birds and their nests.

2.1 Effects Pathway

Flooding at the Project and proposed Expansion Project site is anticipated due to the construction of new dikes in Whale Tail Lake (South Basin) and downstream of Lake A46 and Lake A50. Some of the flooding will occur during the nesting season and may lead to the loss of nests near the shoreline of the lake.

Shoreline surveys during the Project baseline field work examined 62.8 km of shoreline along lakes and streams (Agnico Eagle 2016, Volume 5, Appendix 5-C). In total, 24 species of birds and eight nests were observed including three semipalmated sandpiper nests, two semipalmated plover nests, one dunlin nest, one herring gull nest, and one cackling goose nest. Assuming that observers recorded nests that were observed within a 20 m swath surveyed by two people, the nest density for the Project is 0.06 nests per ha. Given the area of flooding expected to occur at the Project and proposed Expansion Project, and assuming densities are the same as that observed during baseline studies, approximately seven nests in 2019 and three nests in 2020 of the shorebirds, gulls and waterfowl groups may be displaced by flooding if no mitigation is undertaken (Table 1).

Upland birds have been surveyed at Meadowbank from 2003 to 2015 using PRISM protocols. PRISM surveys found 3.8 pairs of breeding birds per plot during 2015. As PRISM plots are 16 ha in size this indicates a density of 0.24 pairs per ha. The average nests observed per PRISM plot was 0.6 nests, or 0.04 nests per ha. It is assumed that not all the nests or breeding pairs were detected during the 2015 baseline studies so a nest density of 0.5 nests per ha was used to calculate the number of nests displaced due to flooding. It is predicted that approximately 61 upland bird nests will be displaced in 2019 and approximately 27 nests in 2020 if no mitigation is undertaken at the Project and proposed Expansion Project (Table 1).

Table 1: Predicted Number of Bird Nests Displaced from Flooding

Nesting Period Year[a]	Whale Tail Lake (South Basin) Diversion			Northeast Diversion		
	Change in Flooded Terrestrial Area (ha)	Predicted Number of Nests Displaced		Change in Flooded Terrestrial Area (ha)	Predicted Number of Nests Displaced	
		Shoreline Survey	PRISM Survey		Shoreline Survey	PRISM Survey
2018	0.21	0.01	0.10	0	0	0
2019	115.96	6.96	57.98	6.58	0.42	3.29
2020	41.38	2.48	20.69	11.86	0.75	5.93
2021	0	0	0	0	0	0
2022	-64.94[b]	0	0	-18.45[b]	0	0

[a] The nesting period used included the months of May, June, July, and August.

[b] Between May and August 2020 the total flooded habitat area and the flooded terrestrial area is expected to decrease in size.

PRISM = Program for Regional and International Shorebird Monitoring; ha = hectare.

2.2 Mitigation

The following options have been considered to reduce the risk that flooding poses to migratory birds. The options fall under the general categories of deterrents, and habitat modification or exclusion.

- Deploying visual and audio bird deterrents

- Reducing habitat quality
- Covering key nesting habitat within the flood zones of tributary lakes
- Disturbing the soil and vegetation

Each of these mitigation options is discuss in greater detail below. Field studies planned for the summer of 2017 will provide information on the species and densities found in the flooded area to further develop and refine the mitigation proposed below. Results will be reported in the annual Terrestrial Ecosystem Monitoring Report, and evaluation of mitigation options will be completed in consultation with ECCC in early 2018.

2.2.1 Bird Deterrents

Agnico Eagle would consider hiring additional local staff from May to August 2019 and 2020 to actively deter by use of walking, rope drags, ATVs or boats in nesting areas.

Additionally, will investigate commercially available visual deterrents and noise makers, deployed parallel to and facing the shoreline of tributary lakes prior to nesting season and remain operational during the nesting season. A variety of predator type calls could be broadcast to prevent habituation for a variety of upland bird species. Noise makers can be equipped with a solar panel to provide power for continuous operation. Visual deterrents may include scare balloons, human, and predator effigies and other visual deterrents. Scare balloons have large predator eye designs that look threatening to the birds and reflective flash tape rustles in the breeze, preventing habituation in the area. Snow melt, ice melt and arrival of migratory birds will be documented in 2017 and 2018, prior to the flooding activities, to inform mitigation. The location and distribution of visual deterrents will be rearranged occasionally to maintain their effectiveness, and will be deployed prior to migratory bird nesting period (i.e., the beginning of May, or prior to 50% snow melt).

A list of possible deterrents and their effectiveness relevant to marine oil spills is under development by ECCC, to be considered prior to final selection of bird deterrents. In addition to deterrents, Agnico Eagle staff should regularly survey the flooding area to provide further disturbance and to maintain and relocate the deterrents.

Surveys to investigate the effectiveness of fox effigies used at the Gahcho Kué Project (De Beers 2016) where inconclusive. Transects terminating in a fox effigy were surveyed for bird activity in May 2015. The surveys indicated Sparrows were more commonly observed in the control transects (11 individuals on control transects versus 3 on deterrent transects). Statistical analysis could not be conducted due to study design and low sample size.

2.2.2 Reducing Habitat Quality

Efforts could be made to reduce habitat quality, either through standing vegetation removal or a controlled burn during construction in 2018 and 2019 to remove disturbed vegetation and reduce the quality of nesting habitat in specific areas scheduled for flooding. The areas subject to flooding are primarily tundra and exposed rock, with little standing vegetation. However, standing vegetation (including a few willows) provide preferred nesting habitat for migratory birds, and can be cleared by ground crews using hand tools. Additionally, low lying vegetation could also be removed through a controlled burn along the shores of tributary lakes could be undertaken prior to flooding in high priority nesting areas identified in 2016 and 2017. A controlled burn would be carried out by fire experts under specified weather conditions with appropriate permits and regulations. Although the existing tundra is not particularly flammable this could be considered a suitable option, as burns could be controlled in designated areas.

2.2.3 Covering

If vegetation removal and/or burning of potential nesting areas were unsuccessful in 2018, key habitats with high potential for nesting birds within the flood zones could be covered with tarps or other material to reduce access by birds in 2019. Although this will be logistically challenging as the total area of predicted flooding in 2019 is over 120 ha, and most of this area is without access for vehicles or heavy equipment to deploy the cover material. If cover material could be deployed by hand, Agnico Eagle will prioritize areas identified in 2017 as high nesting suitable areas to be candidate target sites for covering. This mitigation technique will require frequent maintenance to prevent the cover from blowing away and continual adjustments will be required as water levels rise.

2.2.4 Disturbing Vegetation and Soil

Disturbing vegetation and soil (grubbing) could be conducted to reduce the attractiveness of the area to ground nesting birds in the areas adjacent to the tributary lakes. This option is not considered to be feasible due to a lack of access for the required earth moving equipment. The area will not have the required road access for heavy equipment and support vehicles (e.g., fuel and lubricant trucks). Winter grubbing is not feasible as the ground would be too frozen to disturb. Further, grubbing would lead to soil erosion when flooding begins, likely triggering the *Fisheries Act* for the deposition of deleterious substances.

3.0 PREFERRED OPTIONS

The following section describes Agnico Eagle's preferred mitigation for the two pathways described.

3.1 Preferred Mitigation for Loss of Migratory Bird Nests during Flooding

Upon review of the available mitigation options, Agnico Eagle has selected the following list of mitigation options for implementation, contingent upon field investigations in 2017.

- Deploying visual and audio bird deterrents
- Regular sweeps by Agnico Eagle staff to discourage nesting through human activity, and to move the visual and audio deterrents

Furthermore, the feasibility of the following option will be considered in consultation with ECCC and academic institutions, and completion of a thorough literature review, field tests of the deterrents, and monitoring the effectiveness of mitigation measures. If deemed appropriate Agnico Eagle will also implement the following options:

- Habitat modification or exclusion the habitat in the flood zone, which may include vegetation removal, controlled burn, or covering key nesting habitat

As per Project Certificate No.008 Condition 34, Agnico Eagle will report the results of the Migratory Birds Protection Plan to NIRB on an annual basis.

4.0 REFERENCES

Agnico Eagle (Agnico Eagle Mines Limited). 2016. Whale Tail Pit Final Environmental Impact Statement. Submitted to Nunavut Impact Review Board and Nunavut Water Board. June 2016.

CWS (Canadian Wildlife Service). 2007. Environment Canada Background Document on the Management of Incidental Take of Migratory Birds: Towards and updated Regulatory Approach. Available at: https://www.ec.gc.ca/. Accessed May 2017.

De Beers. 2016. Gahcho Kué Mine 2015 Annual Wildlife Report. March 2016.

Environment Canada. 2013. Planning ahead to Reduce the Risk of detrimental effects to migratory Birds, and their nests and eggs. Available at: http://www.ec.gc.ca/paom-itmb/. Accessed May 2015.

Environment Canada. 2014. General Nesting Periods of Migratory Birds in Canada. Available at: https://www.ec.gc.ca/. Accessed May 2015.

Environment and Climate Change Canada (ECCC). Unpublished. Guidelines for deterrence and bird dispersal techniques used during pollution and non-pollution incidents in Canada. Appendix 1. Technical Overview of Recommended Hazing Devices.

APPENDIX G

Viewshed Analysis

MEMORANDUM

TO Ryan Vanengen, Agnico Eagle Mines Ltd. **DATE** July 14, 2017

CC Dionne Filiatrault, Jen Range, Damian Panayi

FROM Corey De La Mare, P.Biol. **PROJECT No.** Doc 110-1658927.3200_Rev1

WHALE TAIL VIEWSHED ANALYSIS

Introduction

During the development and revisions of the Terrestrial Ecosystem Management Plan (TEMP) for the Whale Tail Project (the Project), which is an expansion of the existing Meadowbank Mine, several discussions revolved around caribou detection within and around the mine site, along the All Weather Access Road (AWAR) and the associated triggering mitigation actions. It became apparent that although caribou are regularly observed from roadside surveys along the existing Meadowbank AWAR, the sightability limit (i.e., maximum distance at which caribou could be observed based on topography) is largely unknown. This sightability distance is required to understand how much time Agnico Eagle Mines Limited (Agnico Eagle) may have to respond to caribou encountering the Project based on receiving GPS collar data and the lag time between receiving that data and caribou approaching the Project. The notion is that a greater distance of visible detection will allow for better caribou mitigation preparedness by Agnico Eagle.

The proposed Whale Tail Haul Road is a 65 km all weather haul road between the existing Meadowbank Operations (i.e., Vault Pit) and Whale Tail Pit. As part of the caribou monitoring component for this haul road, five height of land (HOL) survey locations are proposed in areas where caribou have been observed based on collar data, presence of caribou trails, caribou sign, and where topographic relief is greatest. The main methods for collecting caribou observation data are through roadside surveys along the existing Meadowbank AWAR and the proposed Whale Tail Haul Road, and at the five HOL survey locations.

To determine the extent of visibility from these locations, a viewshed analysis was completed within a GIS platform. The results of this memo are intended to validate the distance of visible detection using road surveys and HOLs will provide adequate caribou mitigation preparedness by Agnico Eagle.

Methods

The viewshed analysis shows the area where there is a line of sight based evaluation from elevations within the landscape, the observer height and the height of the target, in this case caribou. Visual aids, such as binoculars and spotting scopes, aid the observer to see at the extreme ends of the lines of sight so that caribou can be detected but the line of sight is not changed based on visual aids. The following assumptions were included in this viewshed analysis:

- An observer height of 2.0 m was added to each of the HOL locations, it is recognized that observers may not actually be 2.0 m but this is a standard observer measurement for viewshed analysis.
- A surface offset to simulate the height of caribou was added at 1.5 m.
- The observer height is set as: 2 m for the points and 1 m (default value) for the road; however, for the Whale Tail Haul Road the proposed road elevations based on the CAD profile was used.

The viewshed was required for the Regional Study Area; however, the availability of datasets was not consistent for the entire Regional Study Area in terms of data format and data resolution. Consequently, the datasets used and methods for harmonization are as follows:

- Road centerlines: Whale Tail Haul Road centerline and elevations (profile) provided by CAD, all weather road centerline generated semi-automatically using its footprint and linking its northern extremity to the Whale Tail Haul Road.
- 2016 HOL survey locations are only general and may have a high error range in their location precision, more specific coordinates will be acquired in 2017.
- Digital Elevation Model (DEM) for the haul road and the HOL survey points used a high resolution DEM (1 m). The DEM was down-sampled to 3 m resolution and merged with CDEM that has a 20 m resolution and then re-sampled back to 3 m resolution, but this is only to keep the 3 m precision where it exists and id does not make the CDEM more precise. Using a merging process avoiding edge effects and creates a smooth transition from one DEM source to the other.
- The high resolution DEM only covers the haul road (approximatively 500 m on each side) and a large portion of the Whale Tail Pit and development area.
- For the AWAR, no high resolution DEM coverage exists, consequently we only used the CDEM (20 m resolution) for this.

The viewshed analysis was run on an ESRI ArcGIS 10.4.1 platform using the 3D analyst tool – Viewshed. The visibility analysis does not take into account any potential vegetation or any other obstructions (natural/human) that are not part of the bare ground. A viewshed was developed for the existing Meadowbank AWAR, the proposed Whale Tail Haul Road, and the five HOL survey locations.

Results

The results of the viewshed analysis can be found in Figures 1 to 3, which each show the viewshed from the five HOL survey locations (Figure 1), the proposed Whale Tail Haul Road (Figure 2), and the existing Meadowbank AWAR (Figure 3). All three figures illustrate that with the naked eye, the sightlines from all three sources (HOL, Whale Tail Haul Road, AWAR) range from less than 1 km to greater than 8 km with a range of 3 to 5 km in several different directions from each location. When HOL locations are combined with the Whale Tail Haul Road as a point of observation, the visibility in general for all locations is around 5 km, with several vantage points of greater than 5 km.

A summary of field confirmation details regarding the viewscape analysis at HOL locations includes the following (M. Young, Dougan Associates, 2017, pers. comm.):

HOL Survey Point	Average Maximum Observable Distance	Comments
1	9.2 km	This site was slightly relocated to improve the visibility of the road. Small blind spots (50 to 100 m wide) facing S and NW
2	7.2 km	Small blind spots facing S, SW, and W
3	9.1 km	Small blind spots facing S, SE, NW, and E
4	8.9 km	Lars Qaqqaq identified this location as a movement corridor for Barren Ground Caribou Small blind spots facing SE, W
5	5.5 km	Road at this section is not currently built. Small blind spots facing SW, NW, NE. SW, and NE blinds spots to be opened up when eskers removed for road construction.

The viewshed analysis is an important component of the overall monitoring program as it provides direction for monitoring locations that best capture caribou movements through the Project area during the spring and fall migration periods. Consequently, the survey locations chosen based on the results of the viewshed analysis will be continually reviewed and updated with the Terrestrial Advisory Group. Additional tasks remaining prior to construction of the Whale Tail Pit and Haul Road include the following:

- Field crews are identifying ideal HOL survey locations and maximum line of sight distances during the summer of 2017, some of this information is incorporated in the table above and some will be compiled into this document at the end of the field season.
- Additional HOL survey location to be added on the west side of the Whale Tail Pit to capture areas not currently covered by survey locations as revealed in the viewshed analysis.
- Selected points along the road may fill in monitoring gaps in the viewshed, these sites have not yet been selected.
- Determine the amount of the landscape covered by height of land survey locations and roadside surveys within an area that buffers the height of land locations by 4 km and the road by 1.5 km to determine if there is sufficient monitoring coverage from the existing surveys.

Closure

We trust this meets your needs, if you have any questions or concerns, feel free to contact the undersigned.

Regards,

GOLDER ASSOCIATES LTD.



Corey De La Mare, P.Biol.
Principal, Senior Wildlife Ecologist

Citation

Young, M.Y. 2017. Landscape Architect, Ecologist. Dougan & Associates – Ecological Consulting & Design, Guelph, ON. E-mail with R. Vanengen (Agnico Eagle). July 2017.

https://capws.golder.com/sites/1658927RegulatoryAffairs/p3100_TEMP_and_Workshops/TEMP/02_Appendices/Appendix H_Viewshed/Appendix H_Viewshed_Analysis_June5.docx

635000 640000 645000

7225000

7220000

N

Pipedream Lake

Vault Pit

1 2

LEGEND

- 2016 HEIGHT OF LAND SURVEY POINT (D&A, JULY 2016)

BARREN-GROUND CARIBOU[2]

- SIGN
- OBSERVATION
- CARIBOU TRAIL

PROJECT DATA AND INFRASTRUCTURE

- HAUL ROAD
- ALL WEATHER ROAD
- WHALE TAIL PIT
- MEADOWBANK OPERATION AND INFRASTRUCTURE
- VISIBILITY ANALYSIS AREA (4 km)
- AREA VISIBLE FROM PROPOSED HAUL ROAD

BASE DATA

- 10 m CONTOUR
- 100 m CONTOUR
- WATERCOURSE
- WATERBODY

INDEX MAP

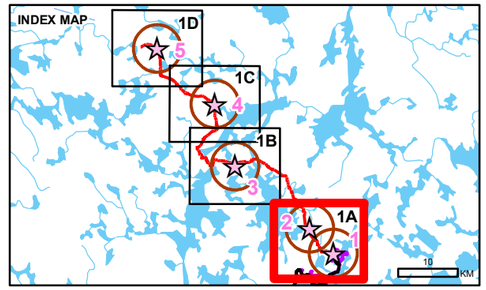

KEY MAP



REFERENCE

1. HAUL ROAD OBTAINED FROM AGNICO EAGLE MINES LIMITED. 2015-10-14 FROM 6103-117-230-200_R0.dwg
2. 2015/16 BARREN-GROUND CARIBOU OBSERVATIONS FROM THE GROUND RECONNAISSANCE SURVEYS, WATERBIRD NEST SURVEYS, BREEDING BIRD ROAD TRANSECT SURVEYS & HEIGHT-OF-LAND SURVEYS.
3. CONTOURS, WATERCOURSE AND WATERBODY DATA OBTAINED FROM CANVEC © DEPARTMENT OF NATURAL RESOURCES CANADA. ALL RIGHTS RESERVED.
4. KEY MAP DATA OBTAINED FROM ESRI.

DATUM: NAD 83 CSRS PROJECTION: UTM ZONE 14

1.5 0 1.5

KILOMETRES

PROJECT

AGNICO EAGLE

AGNICO EAGLE MINES LIMITED:
MEADOWBANK DIVISION
WHALE TAIL PIT PROJECT

TITLE

VIEWSHED FROM HAUL ROAD

Golder Associates

PROJECT		1658927	FILE No.	
DESIGN	CDM	3 May 2017	SCALE AS SHOWN	0
GIS	SB	12 May 2017		
CHECK	JR	14 Jul. 2017		
REVIEW	CDM	14 Jul. 2017		

FIGURE 1A

Y:\burnaby\CAD-GIS\Client\Agnico_Eagle_Mines_Ltd\Whale_Tail\99_PROJECTS\16658927_RegulatorySupport\02_PRODUCTION\3100\MXD\Report\1658927_FIG_1_Viewshed_land_survey_points_20181214.mxd

620000
625000
630000
7240000
7235000
7230000
N
3

LEGEND

- 2016 HEIGHT OF LAND SURVEY POINT (D&A, JULY 2016)

BARREN-GROUND CARIBOU[2]

- SIGN
- CARIBOU TRAIL

PROJECT DATA AND INFRASTRUCTURE

- HAUL ROAD
- WHALE TAIL PIT
- VISIBILITY ANALYSIS AREA (4 km)
- AREA VISIBLE FROM PROPOSED HAUL ROAD

BASE DATA

- 10 m CONTOUR
- 100 m CONTOUR
- WATERCOURSE
- WATERBODY

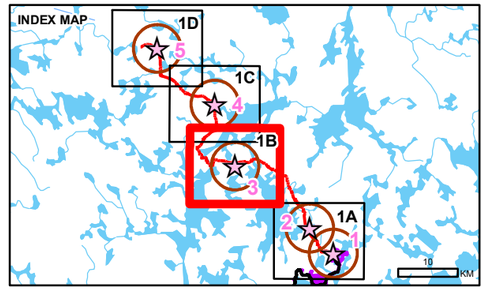



REFERENCE

1. HAUL ROAD OBTAINED FROM AGNICO EAGLE MINES LIMITED. 2015-10-14 FROM 6103-117-230-200_R0.dwg
2. 2015/16 BARREN-GROUND CARIBOU OBSERVATIONS FROM THE GROUND RECONNAISSANCE SURVEYS, WATERBIRD NEST SURVEYS, BREEDING BIRD ROAD TRANSECT SURVEYS & HEIGHT-OF-LAND SURVEYS.
3. CONTOURS, WATERCOURSE AND WATERBODY DATA OBTAINED FROM CANVEC © DEPARTMENT OF NATURAL RESOURCES CANADA. ALL RIGHTS RESERVED.
4. KEY MAP DATA OBTAINED FROM ESRI.

DATUM: NAD 83 CSRS PROJECTION: UTM ZONE 14

1.5 0 1.5
KILOMETRES

PROJECT
AGNICO EAGLE

AGNICO EAGLE MINES LIMITED:
MEADOWBANK DIVISION
WHALE TAIL PIT PROJECT

TITLE

VIEWSHED FROM HAUL ROAD

Golder Associates

PROJECT		1658927	FILE No.	
DESIGN	CDM	3 May 2017	SCALE AS SHOWN	0
GIS	SB	12 May 2017		
CHECK	JR	14 Jul. 2017		
REVIEW	CDM	14 Jul. 2017		

FIGURE 1B

Y:\burnaby\CAD-GIS\Client\Agnico_Eagle_Mines_Ltd\Whale_Tail\99_PROJECTS\1658927_RegulatorySupport\02_PRODUCTION\3100\MXD\Report\1658927_FIG_1_Viewshed_land_survey_points_20181214.mxd

615000
620000
625000
7250000
7245000
7240000
N
4
5
1D
1C
1B
1A
1
2
3
10 KM
INDEX MAP
KEY MAP
STUDY AREA
CANADA
U.S.A
1,000 KM

LEGEND

- 2016 HEIGHT OF LAND SURVEY POINT (D&A, JULY 2016)

BARREN-GROUND CARIBOU[2]

- OBSERVATION
- CARIBOU TRAIL

PROJECT DATA AND INFRASTRUCTURE

- HAUL ROAD
- WHALE TAIL PIT
- VISIBILITY ANALYSIS AREA (4 km)
- AREA VISIBLE FROM PROPOSED HAUL ROAD

BASE DATA

- 10 m CONTOUR
- 100 m CONTOUR
- WATERCOURSE
- WATERBODY

REFERENCE

1. HAUL ROAD OBTAINED FROM AGNICO EAGLE MINES LIMITED. 2015-10-14 FROM 6103-117-230-200_R0.dwg
2. 2015/16 BARREN-GROUND CARIBOU OBSERVATIONS FROM THE GROUND RECONNAISSANCE SURVEYS, WATERBIRD NEST SURVEYS, BREEDING BIRD ROAD TRANSECT SURVEYS & HEIGHT-OF-LAND SURVEYS.
3. CONTOURS, WATERCOURSE AND WATERBODY DATA OBTAINED FROM CANVEC © DEPARTMENT OF NATURAL RESOURCES CANADA. ALL RIGHTS RESERVED.
4. KEY MAP DATA OBTAINED FROM ESRI.

DATUM: NAD 83 CSRS PROJECTION: UTM ZONE 14

1.5 0 1.5
KILOMETRES

PROJECT
AGNICO EAGLE

AGNICO EAGLE MINES LIMITED:
MEADOWBANK DIVISION
WHALE TAIL PIT PROJECT

TITLE

VIEWSHED FROM HAUL ROAD

Golder Associates

PROJECT		1658927	FILE No.
DESIGN	CDM	3 May 2017	SCALE AS SHOWN 0
GIS	SB	12 May 2017	
CHECK	JR	14 Jul. 2017	FIGURE 1C
REVIEW	CDM	14 Jul. 2017	

Y:\burnaby\CAD-GIS\Client\Agnico_Eagle_Mines_Ltd\Whale_Tail\99_PROJECTS\1658927_Regulatory\Support\02_PRODUCTION\3100\MXD\Report\1658927_FIG_1_Viewshed_land_survey_points_20181214.mxd

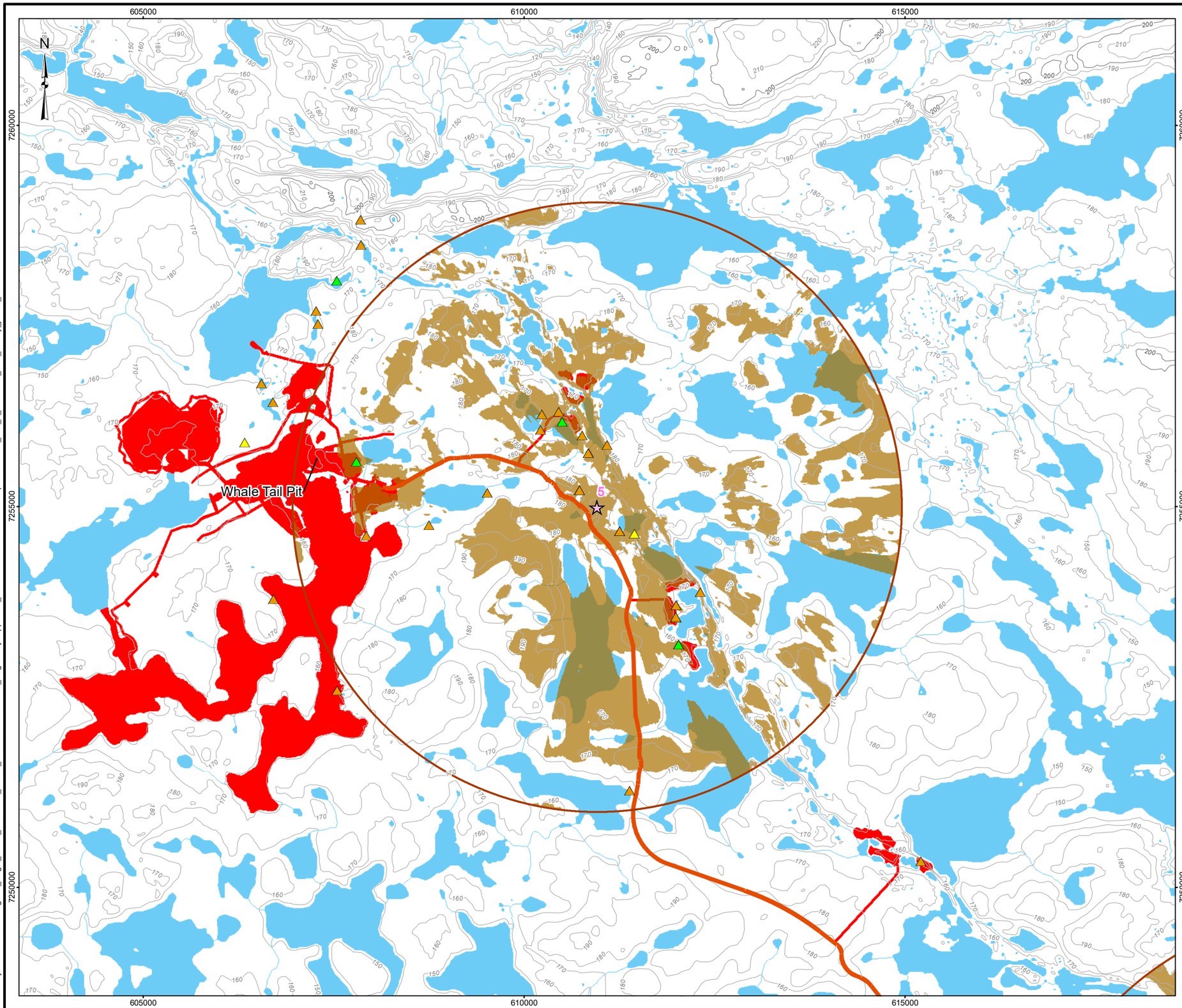

LEGEND

- 2016 HEIGHT OF LAND SURVEY POINT (D&A, JULY 2016)

BARREN-GROUND CARIBOU[2]

- SIGN
- OBSERVATION
- CARIBOU TRAIL

PROJECT DATA AND INFRASTRUCTURE

- HAUL ROAD
- WHALE TAIL PIT
- VISIBILITY ANALYSIS AREA (4 km)
- AREA VISIBLE FROM PROPOSED HAUL ROAD

BASE DATA

- 10 m CONTOUR
- 100 m CONTOUR
- WATERCOURSE
- WATERBODY

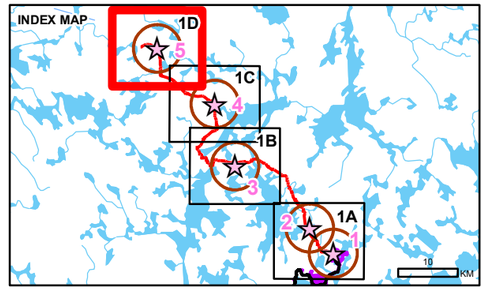



REFERENCE

1. HAUL ROAD OBTAINED FROM AGNICO EAGLE MINES LIMITED. 2015-10-14 FROM 6103-117-230-200_R0.dwg
2. 2015/16 BARREN-GROUND CARIBOU OBSERVATIONS FROM THE GROUND RECONNAISSANCE SURVEYS, WATERBIRD NEST SURVEYS, BREEDING BIRD ROAD TRANSECT SURVEYS & HEIGHT-OF-LAND SURVEYS.
3. CONTOURS, WATERCOURSE AND WATERBODY DATA OBTAINED FROM CANVEC © DEPARTMENT OF NATURAL RESOURCES CANADA. ALL RIGHTS RESERVED.
4. KEY MAP DATA OBTAINED FROM ESRI.

DATUM: NAD 83 CSRS PROJECTION: UTM ZONE 14

1.5 0 1.5
KILOMETRES

PROJECT
AGNICO EAGLE

AGNICO EAGLE MINES LIMITED:
MEADOWBANK DIVISION
WHALE TAIL PIT PROJECT

TITLE

VIEWSHED FROM HAUL ROAD

Golder Associates

PROJECT		1658927	FILE No.		
DESIGN	CDM	3 May 2017	SCALE AS SHOWN	0	
GIS	SB	12 May 2017	FIGURE 1D		
CHECK	JR	14 Jul. 2017			
REVIEW	CDM	14 Jul. 2017			

Y:\burnaby\CAD-GIS\Client\Agnico_Eagle_Mines_Ltd\Whale_Tail\99_PROJECTS\1658927_RegulatorySupport\02_PRODUCTION\3100\MXD\Report\1658927_FIG_1_Viewshed_land_survey_points_20181214.mxd

630000
635000
640000
7230000
7225000
7220000
N
Pipedream Lake
2
1
Vault Pit

LEGEND

- 2016 HEIGHT OF LAND SURVEY POINT (D&A, JULY 2016)

BARREN-GROUND CARIBOU[2]

- SIGN
- OBSERVATION
- CARIBOU TRAIL

PROJECT DATA AND INFRASTRUCTURE

- HAUL ROAD
- ALL WEATHER ROAD
- WHALE TAIL PIT
- MEADOWBANK OPERATION AND INFRASTRUCTURE
- VISIBILITY ANALYSIS AREA (1 km)
- AREA VISIBLE FROM PROPOSED HAUL ROAD

BASE DATA

- 10 m CONTOUR
- 100 m CONTOUR
- WATERCOURSE
- WATERBODY

INDEX MAP

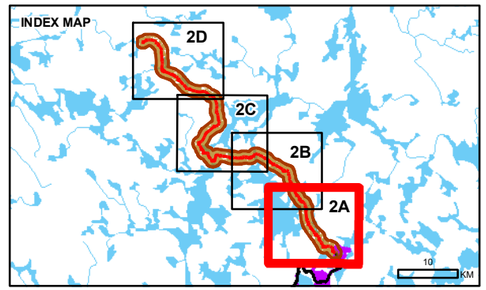

KEY MAP



REFERENCE

1. HAUL ROAD OBTAINED FROM AGNICO EAGLE MINES LIMITED. 2015-10-14 FROM 6103-117-230-200_R0.dwg
2. 2015/16 BARREN-GROUND CARIBOU OBSERVATIONS FROM THE GROUND RECONNAISSANCE SURVEYS, WATERBIRD NEST SURVEYS, BREEDING BIRD ROAD TRANSECT SURVEYS & HEIGHT-OF-LAND SURVEYS.
3. CONTOURS, WATERCOURSE AND WATERBODY DATA OBTAINED FROM CANVEC © DEPARTMENT OF NATURAL RESOURCES CANADA. ALL RIGHTS RESERVED.
4. KEY MAP DATA OBTAINED FROM ESRI.

DATUM: NAD 83 CSRS PROJECTION: UTM ZONE 14

1.5 0 1.5
KILOMETRES

PROJECT
AGNICO EAGLE

AGNICO EAGLE MINES LIMITED:
MEADOWBANK DIVISION
WHALE TAIL PIT PROJECT

TITLE

VIEWSHED FROM HAUL ROAD

Golder Associates

PROJECT		1658927	FILE No.	
DESIGN	CDM	3 May 2017	SCALE AS SHOWN	REV. 0
GIS	SB	12 May 2017		
CHECK	JR	14 Jul. 2017		
REVIEW	CDM	14 Jul. 2017		

FIGURE 2A

Y:\burnaby\CAD-GIS\Client\Agnico_Eagle_Mines_Ltd\Whale_Tail\99_PROJECTS\1658927_RegulatorySupport\02_PRODUCTION\3100\MXD\Report\1658927_FIG_2_Viewshed_proposed_haul_road_20181214.mxd

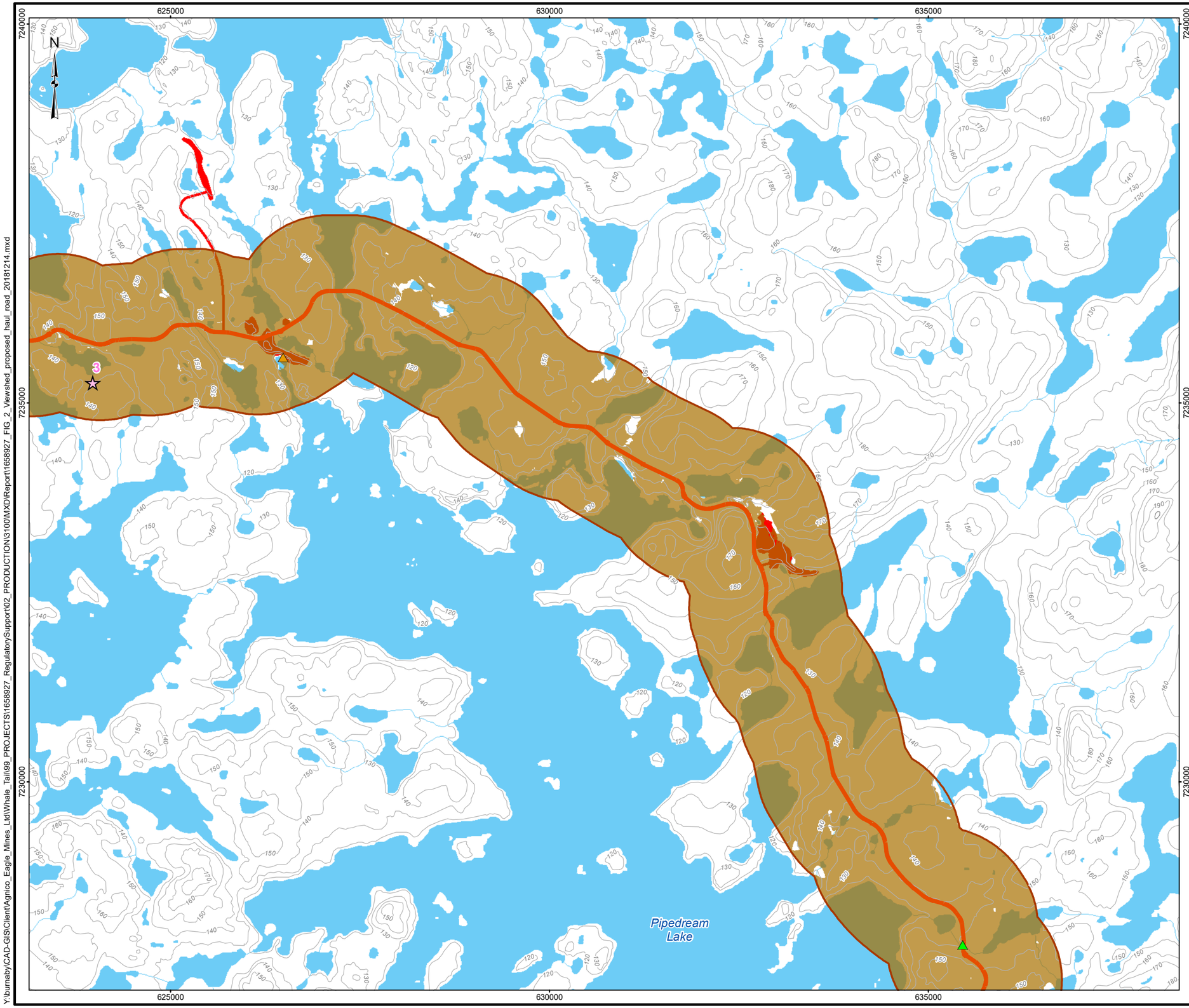

LEGEND

- 2016 HEIGHT OF LAND SURVEY POINT (D&A, JULY 2016)

BARREN-GROUND CARIBOU[2]

- OBSERVATION
- CARIBOU TRAIL

PROJECT DATA AND INFRASTRUCTURE

- HAUL ROAD
- WHALE TAIL PIT
- VISIBILITY ANALYSIS AREA (1 km)
- AREA VISIBLE FROM PROPOSED HAUL ROAD

BASE DATA

- 10 m CONTOUR
- 100 m CONTOUR
- WATERCOURSE
- WATERBODY

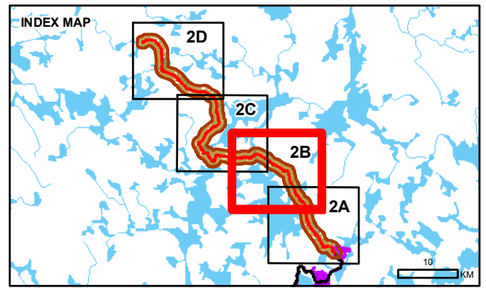



REFERENCE

1. HAUL ROAD OBTAINED FROM AGNICO EAGLE MINES LIMITED. 2015-10-14 FROM 6103-117-230-200_R0.dwg
2. 2015/16 BARREN-GROUND CARIBOU OBSERVATIONS FROM THE GROUND RECONNAISSANCE SURVEYS, WATERBIRD NEST SURVEYS, BREEDING BIRD ROAD TRANSECT SURVEYS & HEIGHT-OF-LAND SURVEYS.
3. CONTOURS, WATERCOURSE AND WATERBODY DATA OBTAINED FROM CANVEC © DEPARTMENT OF NATURAL RESOURCES CANADA. ALL RIGHTS RESERVED.
4. KEY MAP DATA OBTAINED FROM ESRI.

DATUM: NAD 83 CSRS PROJECTION: UTM ZONE 14

1.5 0 1.5
KILOMETRES

PROJECT
AGNICO EAGLE

AGNICO EAGLE MINES LIMITED:
MEADOWBANK DIVISION
WHALE TAIL PIT PROJECT

TITLE

VIEWSHED FROM HAUL ROAD

Golder Associates

PROJECT		1658927	FILE No.	
DESIGN	CDM	3 May 2017	SCALE AS SHOWN	REV. 0
GIS	SB	12 May 2017		
CHECK	JR	14 Jul. 2017		
REVIEW	CDM	14 Jul. 2017		

FIGURE 2B

Y:\burnaby\CAD-GIS\Client\Agnico_Eagle_Mines_Ltd\Whale_Tail\99_PROJECTS\1658927_RegulatorySupport\02_PRODUCTION\3100\MXD\Report\1658927_FIG_2_Viewshed_proposed_haul_road_20181214.mxd

615000 620000 625000

7245000 7240000 7235000

N

4

3

LEGEND

- 2016 HEIGHT OF LAND SURVEY POINT (D&A, JULY 2016)

BARREN-GROUND CARIBOU[2]

- SIGN
- OBSERVATION
- CARIBOU TRAIL

PROJECT DATA AND INFRASTRUCTURE

- HAUL ROAD
- WHALE TAIL PIT
- VISIBILITY ANALYSIS AREA (1 km)
- AREA VISIBLE FROM PROPOSED HAUL ROAD

BASE DATA

- 10 m CONTOUR
- 100 m CONTOUR
- WATERCOURSE
- WATERBODY

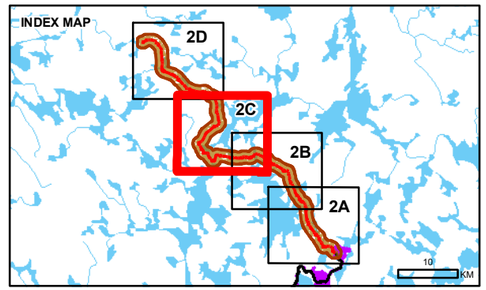



REFERENCE

1. HAUL ROAD OBTAINED FROM AGNICO EAGLE MINES LIMITED. 2015-10-14 FROM 6103-117-230-200_R0.dwg
2. 2015/16 BARREN-GROUND CARIBOU OBSERVATIONS FROM THE GROUND RECONNAISSANCE SURVEYS, WATERBIRD NEST SURVEYS, BREEDING BIRD ROAD TRANSECT SURVEYS & HEIGHT-OF-LAND SURVEYS.
3. CONTOURS, WATERCOURSE AND WATERBODY DATA OBTAINED FROM CANVEC © DEPARTMENT OF NATURAL RESOURCES CANADA. ALL RIGHTS RESERVED.
4. KEY MAP DATA OBTAINED FROM ESRI.

DATUM: NAD 83 CSRS PROJECTION: UTM ZONE 14

1.5 0 1.5

KILOMETRES

PROJECT

AGNICO EAGLE

AGNICO EAGLE MINES LIMITED:
MEADOWBANK DIVISION
WHALE TAIL PIT PROJECT

TITLE

VIEWSHED FROM HAUL ROAD

Golder Associates

PROJECT		1658927	FILE No.		
DESIGN	CDM	3 May 2017	SCALE AS SHOWN	REV.	0
GIS	SB	12 May 2017			
CHECK	JR	14 Jul. 2017			
REVIEW	CDM	14 Jul. 2017			

FIGURE 2C

Y:\burnaby\CAD-GIS\Client\Agnico_Eagle_Mines_Ltd\Whale_Tail\99_PROJECTS\1658927_RegulatorySupport\02_PRODUCTION\3100\MXD\Report\1658927_FIG_2_Viewshed_proposed_haul_road_20181214.mxd

610000
615000
620000
7255000
7250000
N
Whale Tail Pit
5

LEGEND

- 2016 HEIGHT OF LAND SURVEY POINT (D&A, JULY 2016)

BARREN-GROUND CARIBOU[2]

- SIGN
- OBSERVATION
- CARIBOU TRAIL

PROJECT DATA AND INFRASTRUCTURE

- HAUL ROAD
- WHALE TAIL PIT
- VISIBILITY ANALYSIS AREA (1 km)
- AREA VISIBLE FROM PROPOSED HAUL ROAD

BASE DATA

- 10 m CONTOUR
- 100 m CONTOUR
- WATERCOURSE
- WATERBODY

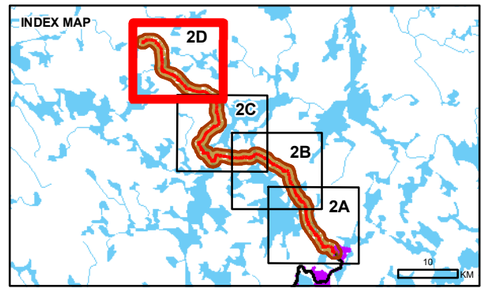



REFERENCE

1. HAUL ROAD OBTAINED FROM AGNICO EAGLE MINES LIMITED. 2015-10-14 FROM 6103-117-230-200_R0.dwg
2. 2015/16 BARREN-GROUND CARIBOU OBSERVATIONS FROM THE GROUND RECONNAISSANCE SURVEYS, WATERBIRD NEST SURVEYS, BREEDING BIRD ROAD TRANSECT SURVEYS & HEIGHT-OF-LAND SURVEYS.
3. CONTOURS, WATERCOURSE AND WATERBODY DATA OBTAINED FROM CANVEC © DEPARTMENT OF NATURAL RESOURCES CANADA. ALL RIGHTS RESERVED.
4. KEY MAP DATA OBTAINED FROM ESRI.

DATUM: NAD 83 CSRS PROJECTION: UTM ZONE 14

1.5 0 1.5
KILOMETRES

PROJECT
AGNICO EAGLE

AGNICO EAGLE MINES LIMITED:
MEADOWBANK DIVISION
WHALE TAIL PIT PROJECT

TITLE

VIEWSHED FROM HAUL ROAD

Golder Associates

PROJECT		1658927	FILE No.	
DESIGN	CDM	3 May 2017	SCALE AS SHOWN	REV. 0
GIS	SB	12 May 2017		
CHECK	JR	14 Jul. 2017		
REVIEW	CDM	14 Jul. 2017		

FIGURE 2D

Y:\burnaby\CAD-GIS\Client\Agnico_Eagle_Mines_Ltd\Whale_Tail\99_PROJECTS\1658927_RegulatorySupport\02_PRODUCTION\3100\MXD\Report\1658927_FIG_2_Viewshed_proposed_haul_road_20181214.mxd

\\golder.gds\gal\burnaby\CAD-GIS\Client\Agnico_Eagle_Mines_Ltd\Whale_Tail\99_PROJECTS\1658927_RegulatorySupport\02_PRODUCTION\3100\MXD\Report\1658927_FIG_3_Viewshed_all_weather_road.mxd

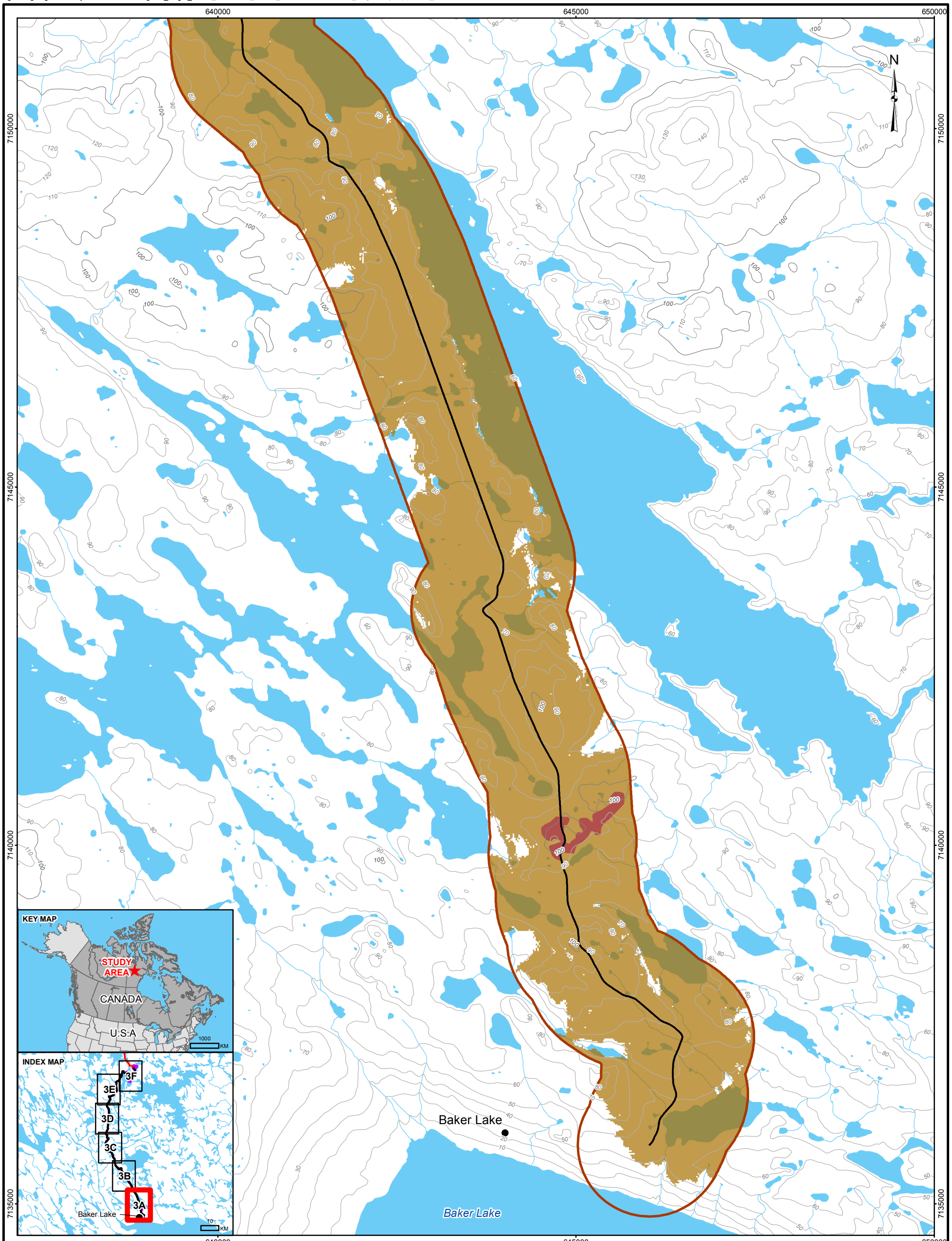

LEGEND

PROJECT DATA AND INFRASTRUCTURE

- ALL WEATHER ROAD
- MEADOWBANK OPERATION AND INFRASTRUCTURE
- VISIBILITY ANALYSIS AREA
- AREA VISIBLE FROM ALL WEATHER ROAD

BASE DATA

- 10 m CONTOUR
- 100 m CONTOUR
- WATERCOURSE
- WATERBODY

1.5 0 1.5
KILOMETRES

PROJECT
AGNICO EAGLE

AGNICO EAGLE MINES LIMITED:
MEADOWBANK DIVISION
WHALE TAIL PIT PROJECT

TITLE

VIEWSHED FROM ALL WEATHER ROAD

REFERENCE

1. HAUL ROAD OBTAINED FROM AGNICO EAGLE MINES LIMITED. 2015-10-14 FROM 6103-117-230-200_R0.dwg
2. 2015/16 BARREN-GROUND CARIBOU OBSERVATIONS FROM THE GROUND RECONNAISSANCE SURVEYS, WATERBIRD NEST SURVEYS, BREEDING BIRD ROAD TRANSECT SURVEYS & HEIGHT-OF-LAND SURVEYS.
3. CONTOUR, WATERCOURSE AND WATERBODY DATA OBTAINED FROM CANVEC © DEPARTMENT OF NATURAL RESOURCES CANADA. ALL RIGHTS RESERVED.
4. INSET MAP DATA OBTAINED FROM ESRI.

DATUM: NAD 83 CSRS PROJECTION: UTM ZONE 14

Golder Associates

PROJECT		1658927	FILE No.	
DESIGN	CDM	3 May 2017	SCALE AS SHOWN	REV. 0
GIS	SB	12 May 2017		
CHECK	JR	14 Jul. 2017		
REVIEW	CDM	14 Jul. 2017		

FIGURE 3A

\\golder.gds\gal\burnaby\CAD-GIS\Client\Agnico_Eagle_Mines_Ltd\Whale_Tail\99_PROJECTS\1658927_RegulatorySupport\02_PRODUCTION\3100\MXD\Report\1658927_FIG_3_Viewshed_all_weather_road.mxd

630000 635000 640000

7165000 7160000 7155000

N

KEY MAP



INDEX MAP

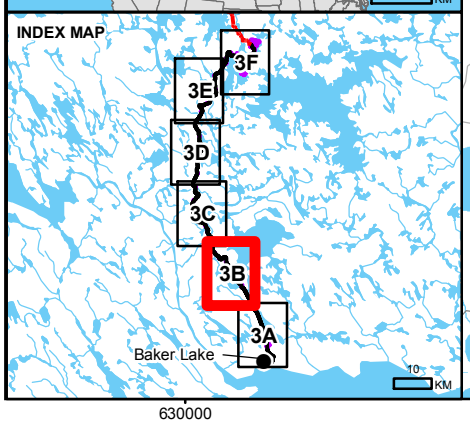

LEGEND

PROJECT DATA AND INFRASTRUCTURE

- ALL WEATHER ROAD
- MEADOWBANK OPERATION AND INFRASTRUCTURE
- VISIBILITY ANALYSIS AREA
- AREA VISIBLE FROM ALL WEATHER ROAD

BASE DATA

- 10 m CONTOUR
- 100 m CONTOUR
- WATERCOURSE
- WATERBODY

1.5 0 1.5
KILOMETRES

PROJECT
AGNICO EAGLE

AGNICO EAGLE MINES LIMITED:
MEADOWBANK DIVISION
WHALE TAIL PIT PROJECT

TITLE

VIEWSHED FROM ALL WEATHER ROAD

REFERENCE

1. HAUL ROAD OBTAINED FROM AGNICO EAGLE MINES LIMITED. 2015-10-14 FROM 6103-117-230-200_R0.dwg
2. 2015/16 BARREN-GROUND CARIBOU OBSERVATIONS FROM THE GROUND RECONNAISSANCE SURVEYS, WATERBIRD NEST SURVEYS, BREEDING BIRD ROAD TRANSECT SURVEYS & HEIGHT-OF-LAND SURVEYS.
3. CONTOUR, WATERCOURSE AND WATERBODY DATA OBTAINED FROM CANVEC © DEPARTMENT OF NATURAL RESOURCES CANADA. ALL RIGHTS RESERVED.
4. INSET MAP DATA OBTAINED FROM ESRI.

DATUM: NAD 83 CSRS PROJECTION: UTM ZONE 14

Golder Associates

PROJECT		1658927	FILE No.	
DESIGN	CDM	3 May 2017	SCALE AS SHOWN	REV. 0
GIS	SB	12 May 2017		
CHECK	JR	14 Jul. 2017		
REVIEW	CDM	14 Jul. 2017		

FIGURE 3B

\\golder.gds\gal\burnaby\CAD-GIS\Client\Agnico_Eagle_Mines_Ltd\Whale_Tail\99_PROJECTS\1658927_RegulatorySupport\02_PRODUCTION\3100\MXD\Report\1658927_FIG_3_Viewshed_all_weather_road.mxd

625000 630000

7180000 7175000 7170000

N

KEY MAP

STUDY AREA

CANADA

U.S.A

1000 KM

INDEX MAP

3F 3E 3D 3C 3B 3A

Baker Lake

10 KM

LEGEND

PROJECT DATA AND INFRASTRUCTURE

- ALL WEATHER ROAD
- MEADOWBANK OPERATION AND INFRASTRUCTURE
- VISIBILITY ANALYSIS AREA
- AREA VISIBLE FROM ALL WEATHER ROAD

BASE DATA

- 10 m CONTOUR
- 100 m CONTOUR
- WATERCOURSE
- WATERBODY

1.5 0 1.5

KILOMETRES

REFERENCE

1. HAUL ROAD OBTAINED FROM AGNICO EAGLE MINES LIMITED. 2015-10-14 FROM 6103-117-230-200_R0.dwg
2. 2015/16 BARREN-GROUND CARIBOU OBSERVATIONS FROM THE GROUND RECONNAISSANCE SURVEYS, WATERBIRD NEST SURVEYS, BREEDING BIRD ROAD TRANSECT SURVEYS & HEIGHT-OF-LAND SURVEYS.
3. CONTOUR, WATERCOURSE AND WATERBODY DATA OBTAINED FROM CANVEC © DEPARTMENT OF NATURAL RESOURCES CANADA. ALL RIGHTS RESERVED.
4. INSET MAP DATA OBTAINED FROM ESRI.

DATUM: NAD 83 CSRS PROJECTION: UTM ZONE 14

PROJECT

AGNICO EAGLE

AGNICO EAGLE MINES LIMITED:
MEADOWBANK DIVISION
WHALE TAIL PIT PROJECT

TITLE

VIEWSHED FROM ALL WEATHER ROAD

Golder Associates

PROJECT		1658927	FILE No.	
DESIGN	CDM	3 May 2017	SCALE AS SHOWN	REV. 0
GIS	SB	12 May 2017		
CHECK	JR	14 Jul. 2017		
REVIEW	CDM	14 Jul. 2017		

FIGURE 3C

\\golder.gds\gal\burnaby\CAD-GIS\Client\Agnico_Eagle_Mines_Ltd\Whale_Tail\99_PROJECTS\1658927_RegulatorySupport\02_PRODUCTION\3100\MXD\Report\1658927_FIG_3_Viewshed_all_weather_road.mxd

620000 625000 630000

7195000

7190000

7185000

N

KEY MAP



INDEX MAP

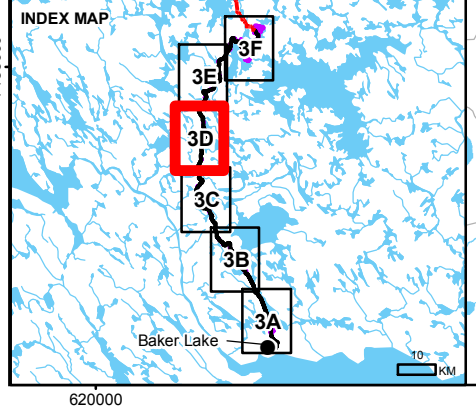

LEGEND

PROJECT DATA AND INFRASTRUCTURE

- ALL WEATHER ROAD
- MEADOWBANK OPERATION AND INFRASTRUCTURE
- VISIBILITY ANALYSIS AREA
- AREA VISIBLE FROM ALL WEATHER ROAD

BASE DATA

- 10 m CONTOUR
- 100 m CONTOUR
- WATERCOURSE
- WATERBODY

1.5 0 1.5
KILOMETRES

PROJECT
AGNICO EAGLE

AGNICO EAGLE MINES LIMITED:
MEADOWBANK DIVISION
WHALE TAIL PIT PROJECT

TITLE

VIEWSHED FROM ALL WEATHER ROAD

REFERENCE

1. HAUL ROAD OBTAINED FROM AGNICO EAGLE MINES LIMITED. 2015-10-14 FROM 6103-117-230-200_R0.dwg
2. 2015/16 BARREN-GROUND CARIBOU OBSERVATIONS FROM THE GROUND RECONNAISSANCE SURVEYS, WATERBIRD NEST SURVEYS, BREEDING BIRD ROAD TRANSECT SURVEYS & HEIGHT-OF-LAND SURVEYS.
3. CONTOUR, WATERCOURSE AND WATERBODY DATA OBTAINED FROM CANVEC © DEPARTMENT OF NATURAL RESOURCES CANADA. ALL RIGHTS RESERVED.
4. INSET MAP DATA OBTAINED FROM ESRI.

DATUM: NAD 83 CSRS PROJECTION: UTM ZONE 14

Golder Associates

PROJECT		1658927	FILE No.	
DESIGN	CDM	3 May 2017	SCALE AS SHOWN	REV. 0
GIS	SB	12 May 2017	FIGURE 3D	
CHECK	JR	14 Jul. 2017		
REVIEW	CDM	14 Jul. 2017		

\\golder.gds\gal\burnaby\CAD-GIS\Client\Agnico_Eagle_Mines_Ltd\Whale_Tail\99_PROJECTS\1658927_RegulatorySupport\02_PRODUCTION\3100\MXD\Report\1658927_FIG_3_Viewshed_all_weather_road.mxd

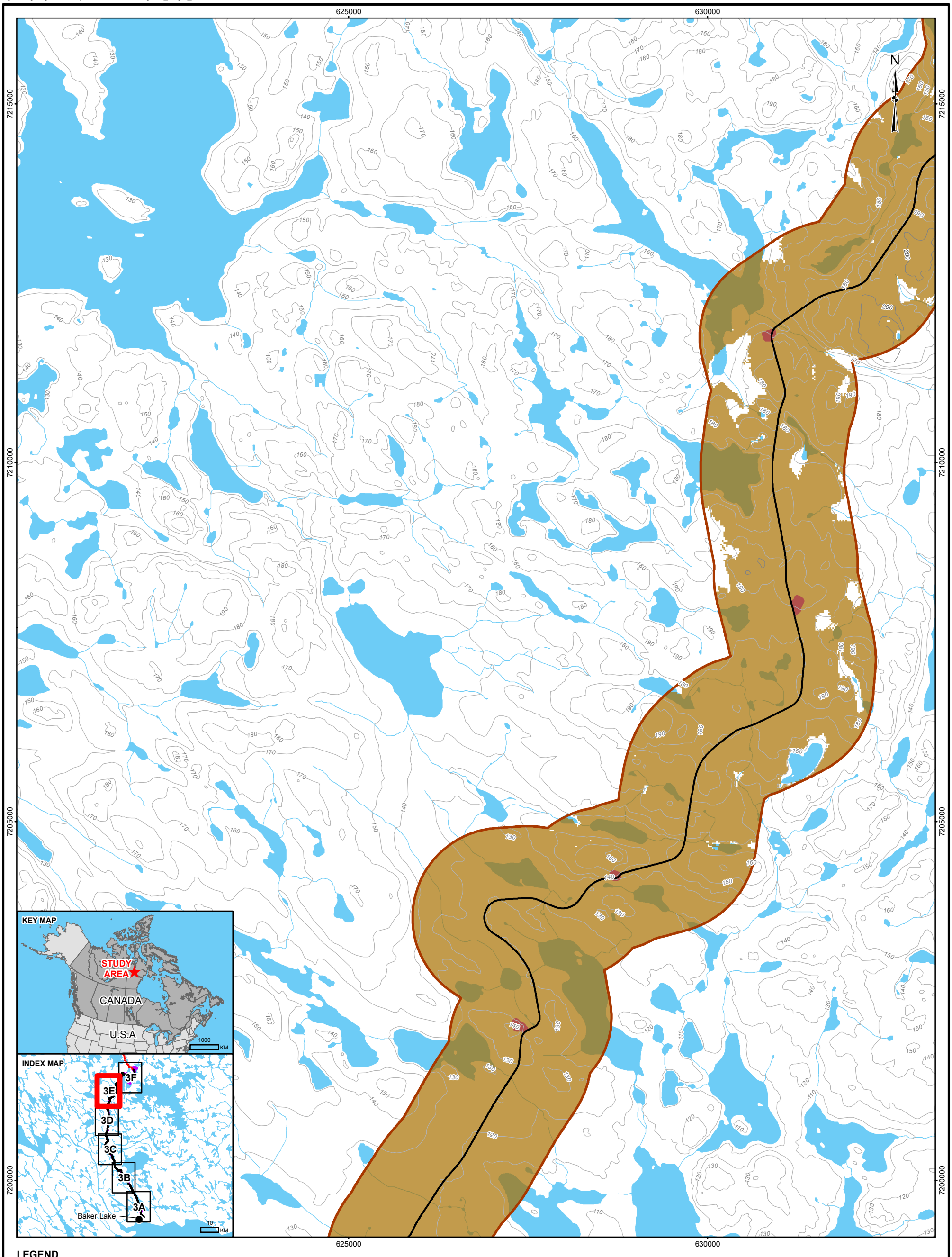

LEGEND

PROJECT DATA AND INFRASTRUCTURE

- ALL WEATHER ROAD
- MEADOWBANK OPERATION AND INFRASTRUCTURE
- VISIBILITY ANALYSIS AREA
- AREA VISIBLE FROM ALL WEATHER ROAD

BASE DATA

- 10 m CONTOUR
- 100 m CONTOUR
- WATERCOURSE
- WATERBODY

1.5 0 1.5
KILOMETRES

REFERENCE

1. HAUL ROAD OBTAINED FROM AGNICO EAGLE MINES LIMITED. 2015-10-14 FROM 6103-117-230-200_R0.dwg
2. 2015/16 BARREN-GROUND CARIBOU OBSERVATIONS FROM THE GROUND RECONNAISSANCE SURVEYS, WATERBIRD NEST SURVEYS, BREEDING BIRD ROAD TRANSECT SURVEYS & HEIGHT-OF-LAND SURVEYS.
3. CONTOUR, WATERCOURSE AND WATERBODY DATA OBTAINED FROM CANVEC © DEPARTMENT OF NATURAL RESOURCES CANADA. ALL RIGHTS RESERVED.
4. INSET MAP DATA OBTAINED FROM ESRI.

DATUM: NAD 83 CSRS PROJECTION: UTM ZONE 14

PROJECT
AGNICO EAGLE

AGNICO EAGLE MINES LIMITED:
MEADOWBANK DIVISION
WHALE TAIL PIT PROJECT

TITLE

VIEWSHED FROM ALL WEATHER ROAD

Golder Associates

PROJECT		1658927	FILE No.	
DESIGN	CDM	3 May 2017	SCALE AS SHOWN	REV. 0
GIS	SB	12 May 2017		
CHECK	JR	14 Jul. 2017		
REVIEW	CDM	14 Jul. 2017		

FIGURE 3E

\\golder.gds\gal\burnaby\CAD-GIS\Client\Agnico_Eagle_Mines_Ltd\Whale_Tail\99_PROJECTS\1658927_RegulatorySupport\02_PRODUCTION\3100\MXD\Report\1658927_FIG_3_Viewshed_all_weather_road.mxd

635000 640000 645000

7220000 7215000 7210000

Pipedream Lake

Vault Pit

1

Tehek Lake

N

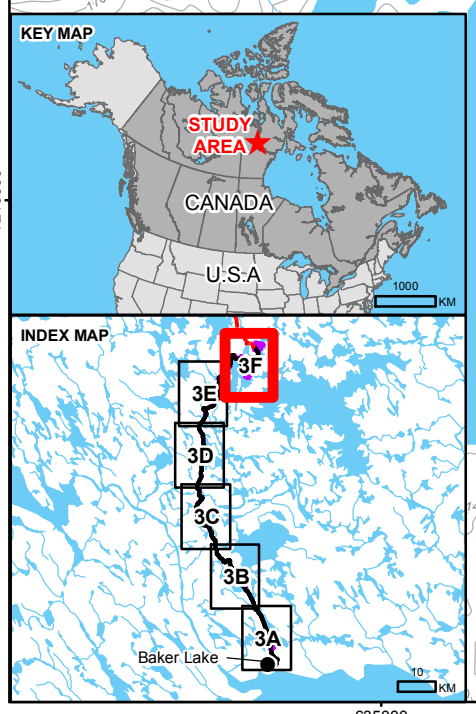

LEGEND

- 2016 HEIGHT OF LAND SURVEY POINT (D&A, JULY 2016)

BARREN-GROUND CARIBOU[2]

- SIGN
- CARIBOU TRAIL

PROJECT DATA AND INFRASTRUCTURE

- ALL WEATHER ROAD
- PROPOSED HAUL ROAD
- MEADOWBANK OPERATION AND INFRASTRUCTURE
- VISIBILITY ANALYSIS AREA
- AREA VISIBLE FROM ALL WEATHER ROAD

BASE DATA

- 10 m CONTOUR
- 100 m CONTOUR
- WATERCOURSE
- WATERBODY

1.5 0 1.5
KILOMETRES

REFERENCE

1. HAUL ROAD OBTAINED FROM AGNICO EAGLE MINES LIMITED. 2015-10-14 FROM 6103-117-230-200_R0.dwg
2. 2015/16 BARREN-GROUND CARIBOU OBSERVATIONS FROM THE GROUND RECONNAISSANCE SURVEYS, WATERBIRD NEST SURVEYS, BREEDING BIRD ROAD TRANSECT SURVEYS & HEIGHT-OF-LAND SURVEYS.
3. CONTOUR, WATERCOURSE AND WATERBODY DATA OBTAINED FROM CANVEC © DEPARTMENT OF NATURAL RESOURCES CANADA. ALL RIGHTS RESERVED.
4. INSET MAP DATA OBTAINED FROM ESRI.

DATUM: NAD 83 CSRS PROJECTION: UTM ZONE 14

PROJECT
AGNICO EAGLE

AGNICO EAGLE MINES LIMITED:
MEADOWBANK DIVISION
WHALE TAIL PIT PROJECT

TITLE

VIEWSHED FROM ALL WEATHER ROAD

Golder Associates

PROJECT		1658927	FILE No.	
DESIGN	CDM	3 May 2017	SCALE AS SHOWN	REV. 0
GIS	SB	12 May 2017		
CHECK	JR	14 Jul. 2017		
REVIEW	CDM	14 Jul. 2017		

FIGURE 3F

APPENDIX H

Representative Figure from Baseline Characterization Report

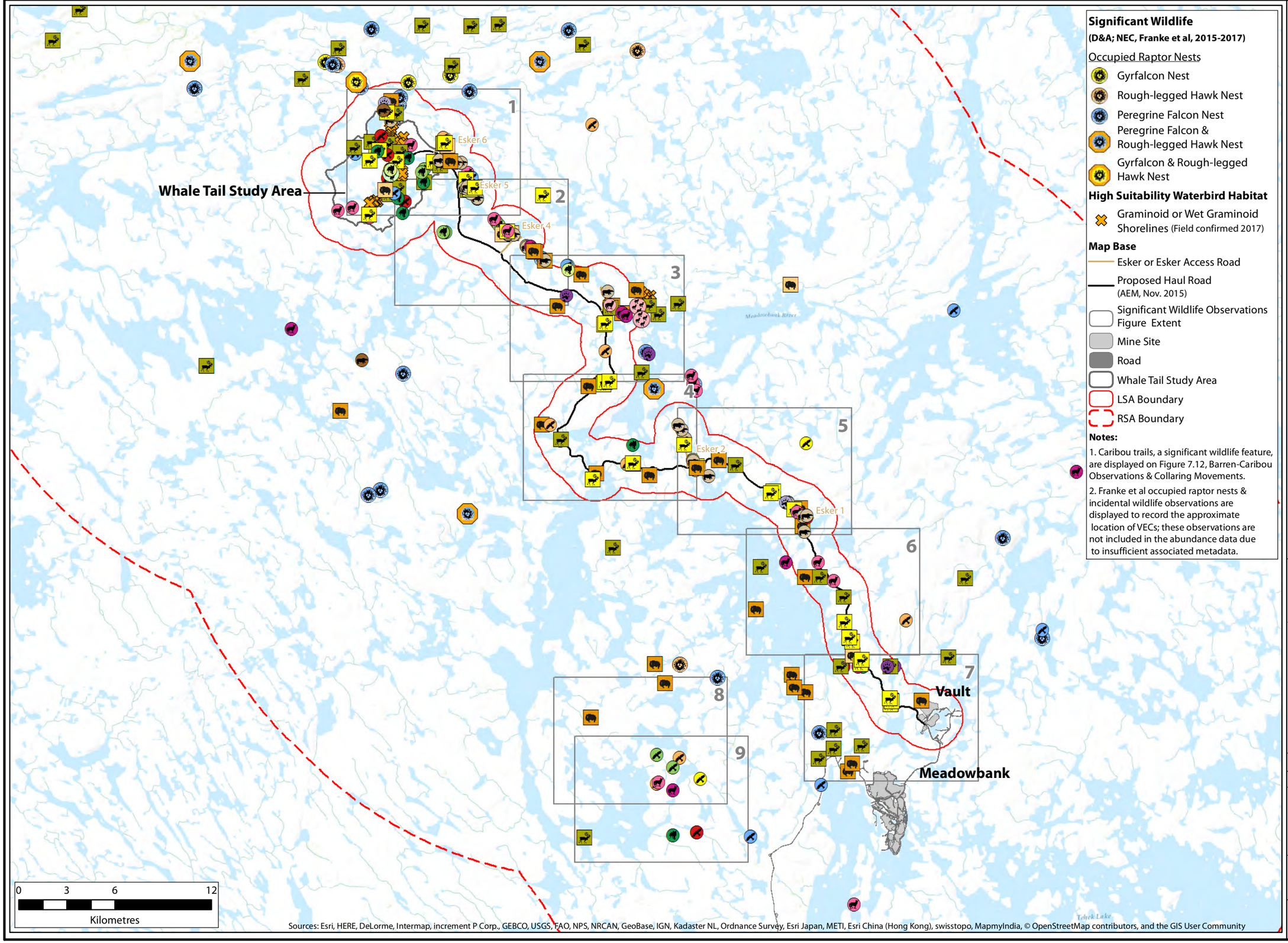

Sources: Esri, HERE, DeLorme, Intermap, increment P Corp., GEBCO, USGS, FAO, NPS, NRCAN, GeoBase, IGN, Kadaster NL, Ordnance Survey, Esri Japan, METI, Esri China (Hong Kong), swisstopo, MapmyIndia, © OpenStreetMap contributors, and the GIS User Community

Significant Wildlife
(D&A; NEC, Franke et al, 2015-2017)

Occupied Raptor Nests
- Gyrfalcon Nest
- Rough-legged Hawk Nest
- Peregrine Falcon Nest
- Peregrine Falcon & Rough-legged Hawk Nest
- Gyrfalcon & Rough-legged Hawk Nest

High Suitability Waterbird Habitat
- Graminoid or Wet Graminoid Shorelines (Field confirmed 2017)

Map Base
- Esker or Esker Access Road
- Proposed Haul Road (AEM, Nov. 2015)
- Significant Wildlife Observations Figure Extent
- Mine Site
- Road
- Whale Tail Study Area
- LSA Boundary
- RSA Boundary

Notes:

1. Caribou trails, a significant wildlife feature, are displayed on Figure 7.12, Barren-Caribou Observations & Collaring Movements.
2. Franke et al occupied raptor nests & incidental wildlife observations are displayed to record the approximate location of VECs; these observations are not included in the abundance data due to insufficient associated metadata.

Significant Wildlife
(D&A; NEC, Franke et al, 2015-2017)

Predatory Mammals
- Arctic Fox Pups
- Arctic Fox Den
- Arctic Fox Sign
- Arctic Fox Observation
- Arctic Wolf Nursery
- Arctic Wolf Den
- Arctic Wolf Sign
- Arctic Wolf Observation
- Wolverine Sign
- Wolverine Observation
- Barren-ground Grizzly Bear Den
- Barren-ground Grizzly Bear Sign
- Barren-ground Grizzly Bear Observation

Ungulates
- Barren-ground Caribou Sign
- Barren-ground Caribou Observation
- Muskox Sign
- Muskox Observation

Raptors
- Bald Eagle Observation
- Gyrfalcon Observation
- Peregrine Falcon Observation
- Rough-legged Hawk Observation
- Short-eared Owl Observation

Whale Tail Pit & Whale Tail Haul Road
Comprehensive Terrestrial Baseline Characterization Report

Signficant Wildlife Observations

DOUGAN & ASSOCIATES
ECOLOGICAL CONSULTING & DESIGN
77 Wyndham Street South • Guelph ON N1E 5R7
T 519.822.1609 • F 519.822.5389 • www.dougan.ca

Nunavut ENVIRONMENTAL CONSULTING LTD

PROJECT: Whale Tail Pit & Haul Road

CLIENT: Agnico Eagle Mines Limited

N W E S
UTM Zone 14 NAD83

DATE: NOVEMBER 21, 2017
SCALE: 1:220,000
DRAWN BY: Lindsey Carter
CHECKED BY: Mary Anne Young

Figure:

9 - Key Map

The information displayed on this map has been compiled from various sources. While every effort has been made to accurately depict the information, this map should not be relied on as being a precise indicator of locations, features, or roads, nor as a guide to navigation.

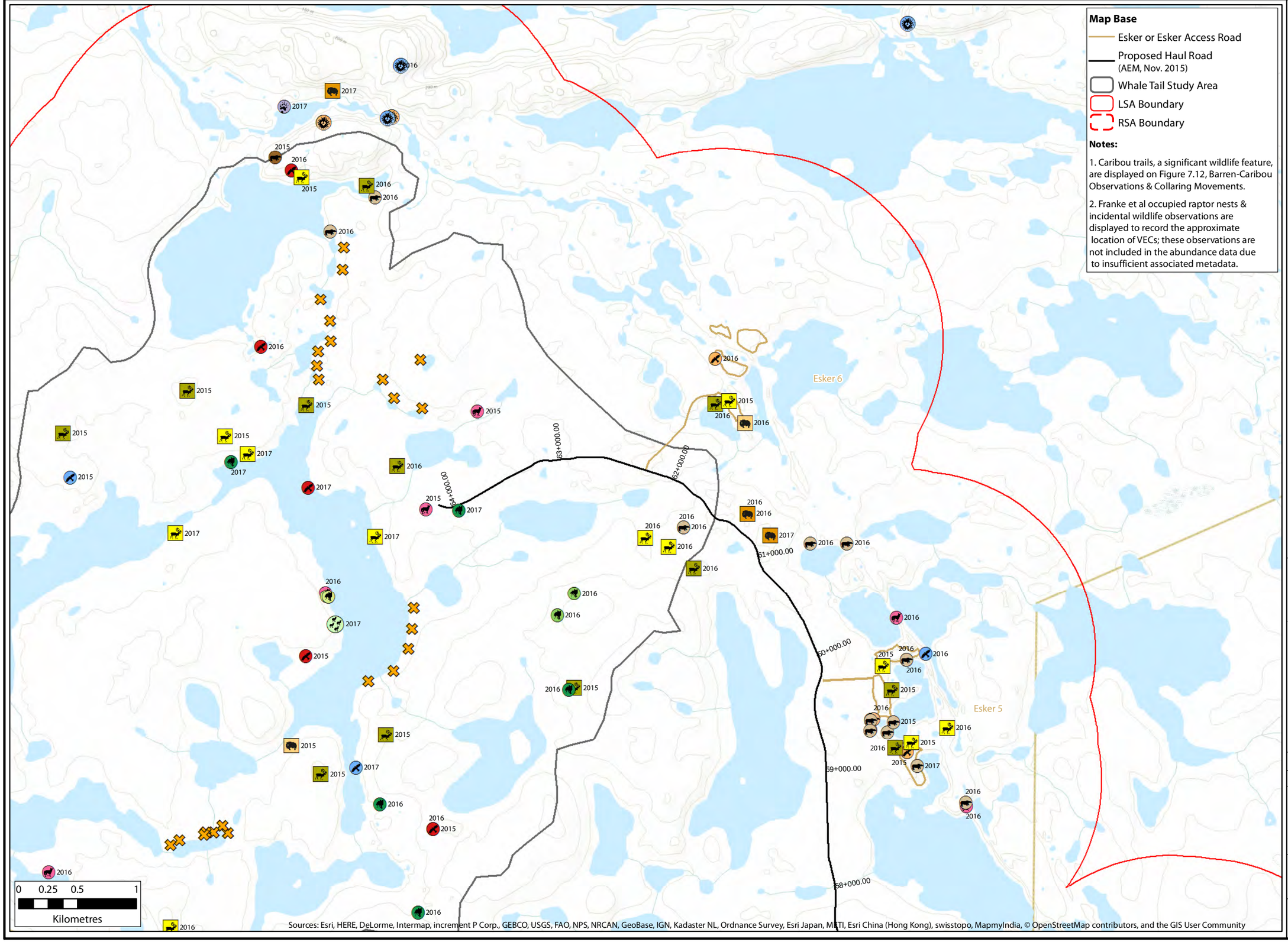

Map Base

- Esker or Esker Access Road
- Proposed Haul Road (AEM, Nov. 2015)
- Whale Tail Study Area
- LSA Boundary
- RSA Boundary

Notes:

1. Caribou trails, a significant wildlife feature, are displayed on Figure 7.12, Barren-Caribou Observations & Collaring Movements.
2. Franke et al occupied raptor nests & incidental wildlife observations are displayed to record the approximate location of VECs; these observations are not included in the abundance data due to insufficient associated metadata.

Significant Wildlife
(D&A; NEC, Franke et al, 2015-2017)

Predatory Mammals
- Arctic Fox Pups
- Arctic Fox Den
- Arctic Fox Sign
- Arctic Fox Observation
- Arctic Wolf Sign
- Wolverine Sign
- Barren-ground Grizzly Bear Den
- Barren-ground Grizzly Bear Sign
- Barren-ground Grizzly Bear Observation

Ungulates
- Barren-ground Caribou Sign
- Barren-ground Caribou Observation
- Muskox Sign
- Muskox Observation

Raptors
- Bald Eagle Observation
- Peregrine Falcon Observation
- Rough-legged Hawk Observation

Occupied Raptor Nests
- Rough-legged Hawk Nest
- Peregrine Falcon Nest

High Suitability Waterbird Habitat
- Graminoid or Wet Graminoid Shorelines (Field confirmed 2017)

Whale Tail Pit & Whale Tail Haul Road
Comprehensive Terrestrial Baseline Characterization Report

Signficant Wildlife Observations

DOUGAN & ASSOCIATES
ECOLOGICAL CONSULTING & DESIGN
77 Wyndham Street South • Guelph ON N1E 5R1
T 519.822.1609 • F 519.822.5389 • www.dougan.ca

Nunavut ENVIRONMENTAL CONSULTING LTD

PROJECT: Whale Tail Pit & Haul Road

CLIENT: Agnico Eagle Mines Limited

N W E S
UTM Zone 14 NAD83

DATE: NOVEMBER 21, 2017
SCALE: 1:30,000
DRAWN BY: Lindsey Carter
CHECKED BY: Mary Anne Young

Figure:

9 - 1

The information displayed on this map has been compiled from various sources. While every effort has been made to accurately depict the information, this map should not be relied on as being a precise indicator of locations, features, or roads, nor as a guide to navigation.

Sources: Esri, HERE, DeLorme, Intermap, increment P Corp., GEBCO, USGS, FAO, NPS, NRCAN, GeoBase, IGN, Kadaster NL, Ordnance Survey, Esri Japan, METI, Esri China (Hong Kong), swisstopo, MapmyIndia, © OpenStreetMap contributors, and the GIS User Community

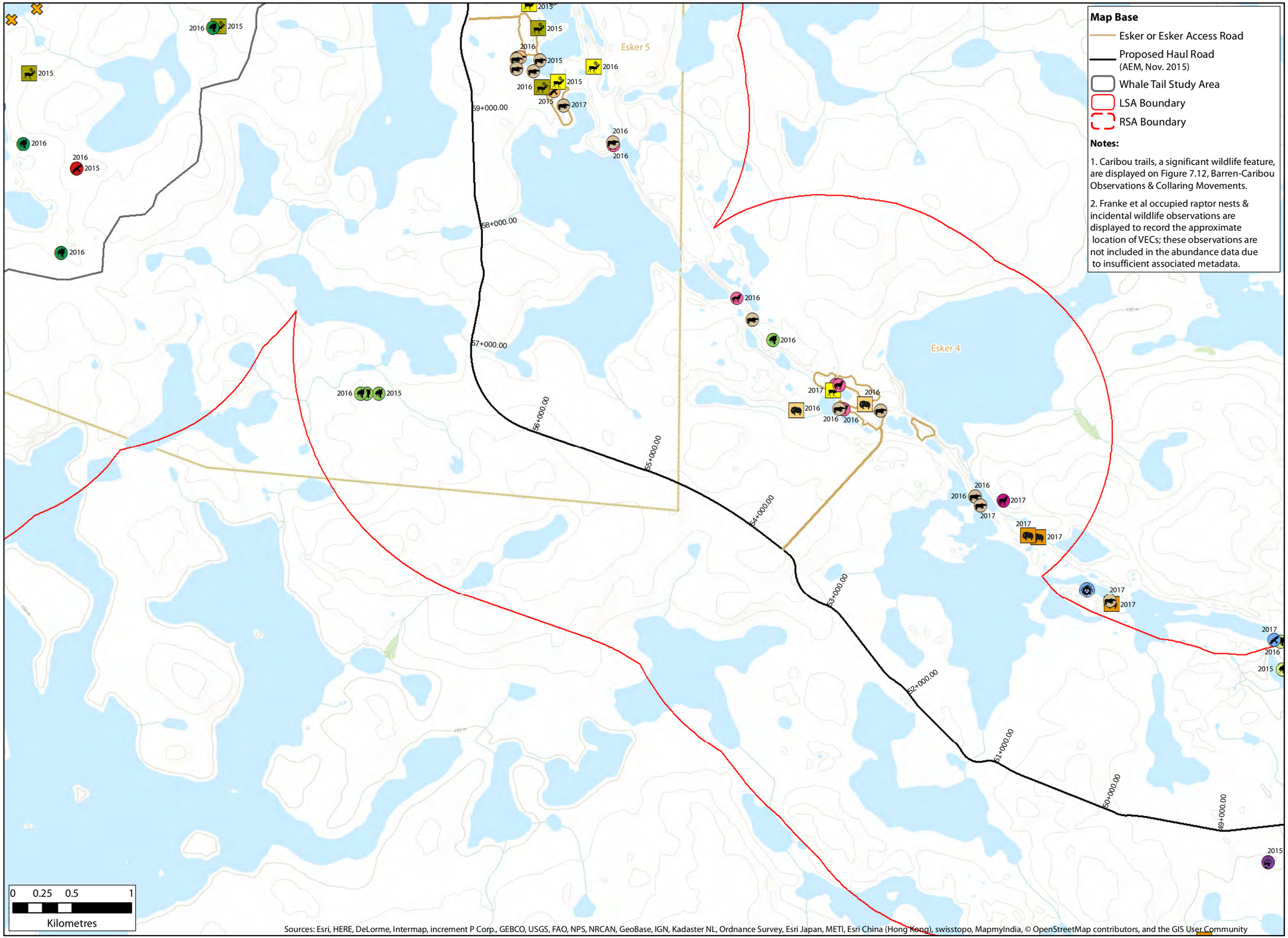

Map Base

- Esker or Esker Access Road
- Proposed Haul Road (AEM, Nov. 2015)
- Whale Tail Study Area
- LSA Boundary
- RSA Boundary

Notes:

1. Caribou trails, a significant wildlife feature, are displayed on Figure 7.12, Barren-Caribou Observations & Collaring Movements.
2. Franke et al occupied raptor nests & incidental wildlife observations are displayed to record the approximate location of VECs; these observations are not included in the abundance data due to insufficient associated metadata.

Significant Wildlife
(D&A; NEC, Franke et al, 2015-2017)

Predatory Mammals
- Arctic Fox Den
- Arctic Fox Sign
- Arctic Fox Observation
- Arctic Wolf Sign
- Arctic Wolf Observation
- Wolverine Observation
- Barren-ground Grizzly Bear Den
- Barren-ground Grizzly Bear Sign

Ungulates
- Barren-ground Caribou Sign
- Barren-ground Caribou Observation
- Muskox Sign
- Muskox Observation

Raptors
- Bald Eagle Observation
- Peregrine Falcon Observation
- Rough-legged Hawk Observation

Occupied Raptor Nests
- Peregrine Falcon Nest

High Suitability Waterbird Habitat
- Graminoid or Wet Graminoid Shorelines (Field confirmed 2017)

Whale Tail Pit & Whale Tail Haul Road
Comprehensive Terrestrial Baseline Characterization Report

Signficant Wildlife Observations

DOUGAN & ASSOCIATES
ECOLOGICAL CONSULTING & DESIGN
77 Wyndham Street South • Guelph ON N1E 5R1
T 519.822.1609 • F 519.822.5389 • www.dougan.ca

Nunavut ENVIRONMENTAL CONSULTING LTD

PROJECT: Whale Tail Pit & Haul Road

CLIENT: Agnico Eagle Mines Limited

N / W / E / S
UTM Zone 14 NAD83

DATE: NOVEMBER 21, 2017
SCALE: 1:30,000
DRAWN BY: Lindsey Carter
CHECKED BY: Mary Anne Young

Figure:

9 - 2

The information displayed on this map has been compiled from various sources. While every effort has been made to accurately depict the information, this map should not be relied on as being a precise indicator of locations, features, or roads, nor as a guide to navigation.

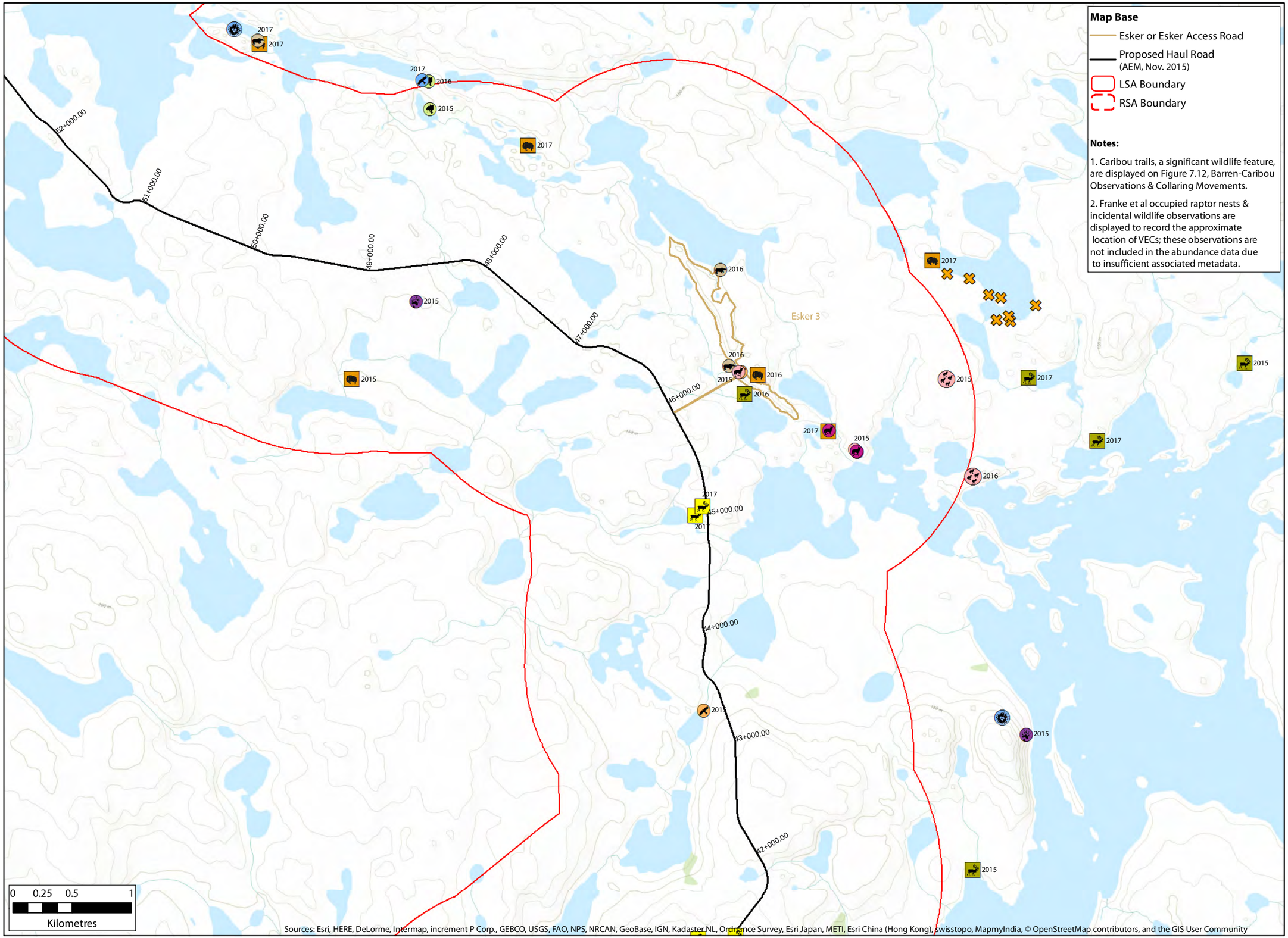

Map Base

- Esker or Esker Access Road
- Proposed Haul Road (AEM, Nov. 2015)
- LSA Boundary
- RSA Boundary

Notes:

1. Caribou trails, a significant wildlife feature, are displayed on Figure 7.12, Barren-Caribou Observations & Collaring Movements.
2. Franke et al occupied raptor nests & incidental wildlife observations are displayed to record the approximate location of VECs; these observations are not included in the abundance data due to insufficient associated metadata.

Significant Wildlife
(D&A; NEC, Franke et al, 2015-2017)

Predatory Mammals
- Arctic Fox Den
- Arctic Wolf Nursery
- Arctic Wolf Den
- Arctic Wolf Observation
- Wolverine Observation
- Barren-ground Grizzly Bear Sign

Ungulates
- Barren-ground Caribou Sign
- Barren-ground Caribou Observation
- Muskox Observation

Raptors
- Peregrine Falcon Observation
- Rough-legged Hawk Observation

Occupied Raptor Nests
- Peregrine Falcon Nest

High Suitability Waterbird Habitat
- Graminoid or Wet Graminoid Shorelines (Field confirmed 2017)

Whale Tail Pit & Whale Tail Haul Road
Comprehensive Terrestrial Baseline Characterization Report
Signficant Wildlife Observations

DOUGAN & ASSOCIATES
ECOLOGICAL CONSULTING & DESIGN
77 Wyndham Street South • Guelph ON N1E 5R1
T 519.822.1609 • F 519.822.5389 • www.dougan.ca
Nunavut ENVIRONMENTAL CONSULTING LTD

PROJECT: Whale Tail Pit & Haul Road

CLIENT: Agnico Eagle Mines Limited

N W E S
UTM Zone 14 NAD83

DATE: NOVEMBER 21, 2017
SCALE: 1:30,000
DRAWN BY: Lindsey Carter
CHECKED BY: Mary Anne Young

Figure:

9 - 3

Sources: Esri, HERE, DeLorme, Intermap, increment P Corp., GEBCO, USGS, FAO, NPS, NRCAN, GeoBase, IGN, Kadaster NL, Ordnance Survey, Esri Japan, METI, Esri China (Hong Kong), swisstopo, MapmyIndia, © OpenStreetMap contributors, and the GIS User Community

The information displayed on this map has been compiled from various sources. While every effort has been made to accurately depict the information, this map should not be relied on as being a precise indicator of locations, features, or roads, nor as a guide to navigation.

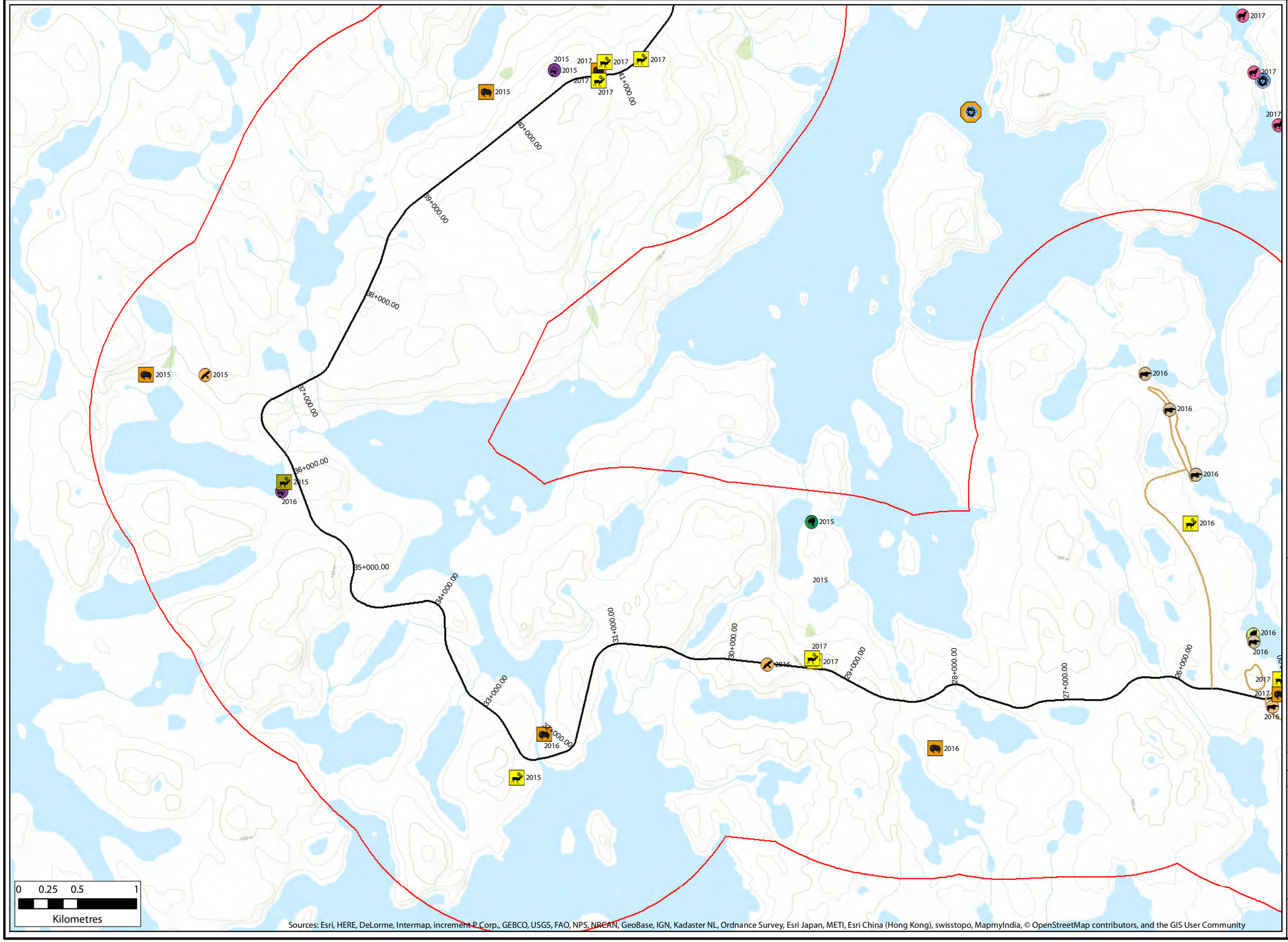

Significant Wildlife
(D&A; NEC, Franke et al, 2015-2017)

Predatory Mammals
- Arctic Fox Den
- Arctic Fox Observation
- Arctic Wolf Sign
- Wolverine Observation
- Barren-ground Grizzly Bear Den
- Barren-ground Grizzly Bear Sign

Ungulates
- Barren-ground Caribou Sign
- Barren-ground Caribou Observation
- Muskox Observation

Raptors
- Rough-legged Hawk Observation

Occupied Raptor Nests
- Peregrine Falcon Nest
- Peregrine Falcon & Rough-legged Hawk Nest

Map Base
- Esker or Esker Access Road
- Proposed Haul Road (AEM, Nov. 2015)
- LSA Boundary
- RSA Boundary

Notes:

1. Caribou trails, a significant wildlife feature, are displayed on Figure 7.12, Barren-Caribou Observations & Collaring Movements.
2. Franke et al occupied raptor nests & incidental wildlife observations are displayed to record the approximate location of VECs; these observations are not included in the abundance data due to insufficient associated metadata.

Whale Tail Pit & Whale Tail Haul Road
Comprehensive Terrestrial Baseline Characterization Report

Signficant Wildlife Observations

DOUGAN & ASSOCIATES
ECOLOGICAL CONSULTING & DESIGN
77 Wyndham Street South • Guelph ON N1E 5R1
T 519.822.1609 • F 519.822.5389 • www.dougan.ca

Nunavut ENVIRONMENTAL CONSULTING LTD

PROJECT: Whale Tail Pit & Haul Road

CLIENT: Agnico Eagle Mines Limited

N W E S
UTM Zone 14 NAD83

DATE: NOVEMBER 21, 2017
SCALE: 1:30,000
DRAWN BY: Lindsey Carter
CHECKED BY: Mary Anne Young

Figure:

9 - 4

The information displayed on this map has been compiled from various sources. While every effort has been made to accurately depict the information, this map should not be relied on as being a precise indicator of locations, features, or roads, nor as a guide to navigation.

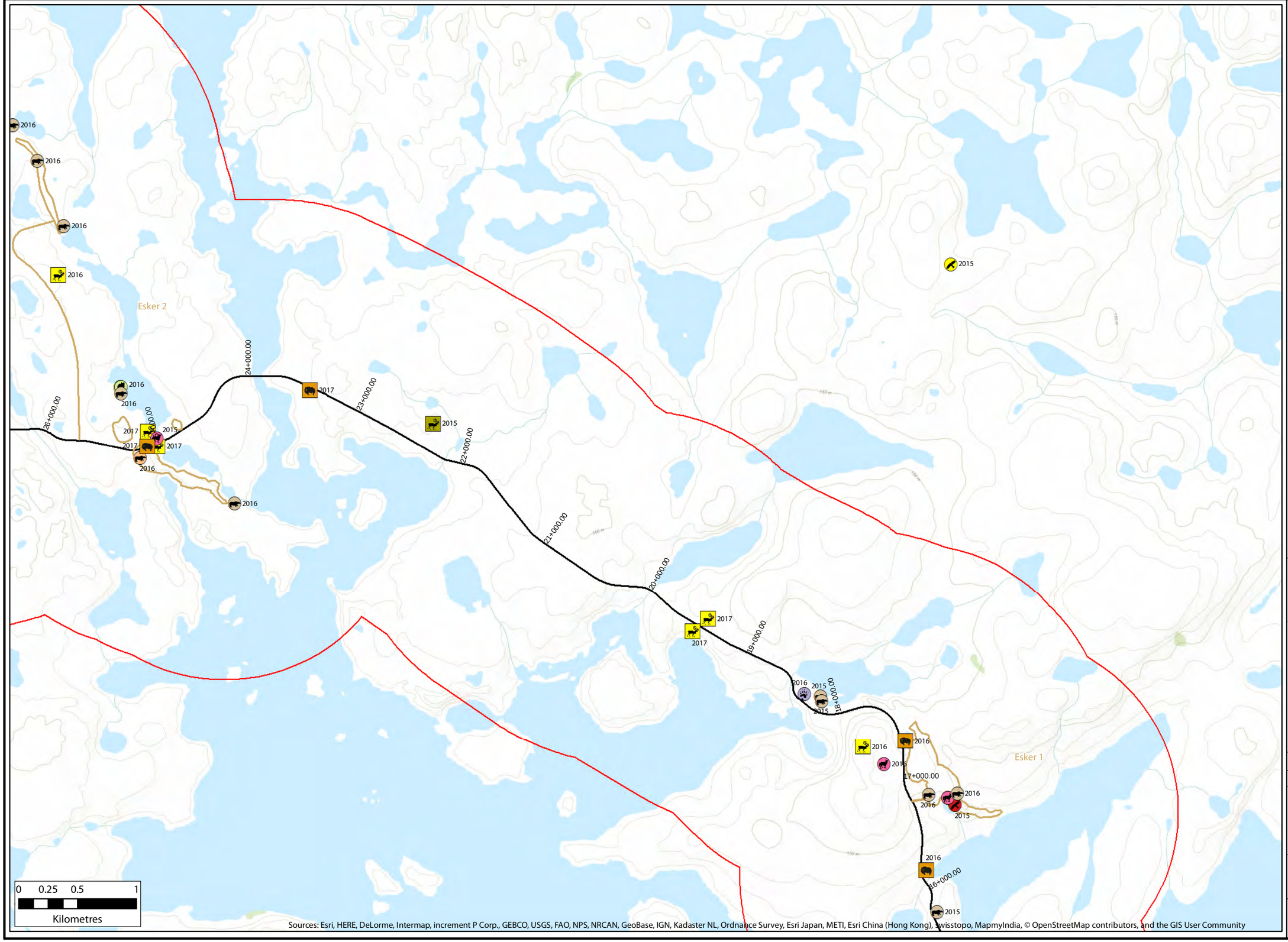

Significant Wildlife
(D&A; NEC, Franke et al, 2015-2017)

Predatory Mammals
- Arctic Fox Den
- Arctic Wolf Sign
- Wolverine Sign
- Barren-ground Grizzly Bear Den
- Barren-ground Grizzly Bear Sign

Ungulates
- Barren-ground Caribou Sign
- Barren-ground Caribou Observation
- Muskox Observation

Raptors
- Bald Eagle Observation
- Gyrfalcon Observation

Map Base
- Esker or Esker Access Road
- Proposed Haul Road (AEM, Nov. 2015)
- LSA Boundary
- RSA Boundary

Notes:

1. Caribou trails, a significant wildlife feature, are displayed on Figure 7.12, Barren-Caribou Observations & Collaring Movements.
2. Franke et al occupied raptor nests & incidental wildlife observations are displayed to record the approximate location of VECs; these observations are not included in the abundance data due to insufficient associated metadata.

Whale Tail Pit & Whale Tail Haul Road
Comprehensive Terrestrial Baseline Characterization Report

Signficant Wildlife Observations

DOUGAN & ASSOCIATES
ECOLOGICAL CONSULTING & DESIGN
77 Wyndham Street South • Guelph ON N1E 5R1
T 519.822.1609 • F 519.822.5389 • www.dougan.ca

Nunavut ENVIRONMENTAL CONSULTING LTD

PROJECT: Whale Tail Pit & Haul Road

CLIENT: Agnico Eagle Mines Limited

N W E S
UTM Zone 14 NAD83

DATE: NOVEMBER 21, 2017
SCALE: 1:30,000
DRAWN BY: Lindsey Carter
CHECKED BY: Mary Anne Young

Figure:

9 - 5

The information displayed on this map has been compiled from various sources. While every effort has been made to accurately depict the information, this map should not be relied on as being a precise indicator of locations, features, or roads, nor as a guide to navigation.

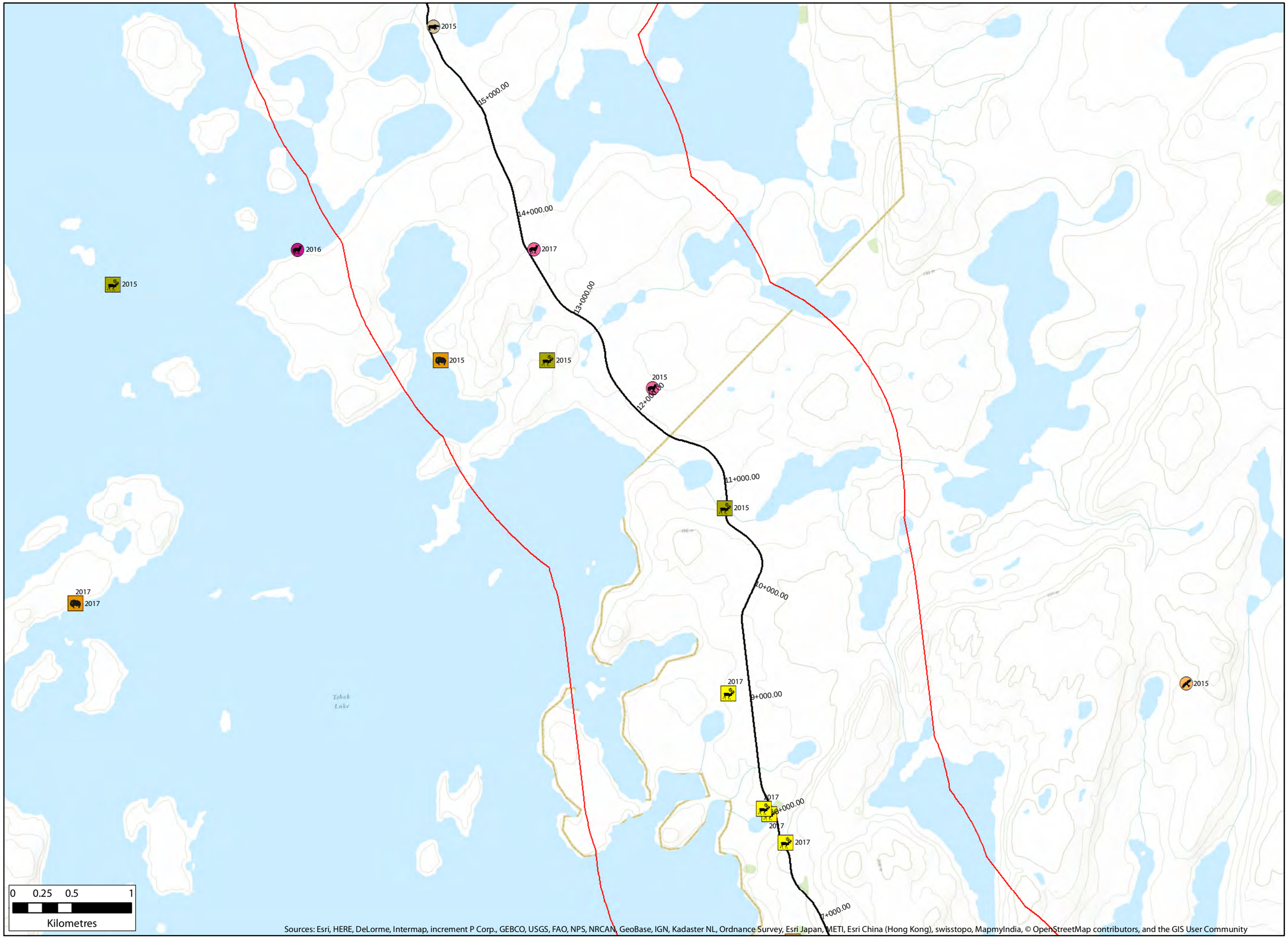

Significant Wildlife
(D&A; NEC, Franke et al, 2015-2017)

Predatory Mammals
- Arctic Wolf Sign
- Arctic Wolf Observation
- Barren-ground Grizzly Bear Sign

Ungulates
- Barren-ground Caribou Sign
- Barren-ground Caribou Observation
- Muskox Sign
- Muskox Observation

Raptors
- Rough-legged Hawk Observation

Map Base
- Proposed Haul Road (AEM, Nov. 2015)
- LSA Boundary
- RSA Boundary

Notes:

1. Caribou trails, a significant wildlife feature, are displayed on Figure 7.12, Barren-Caribou Observations & Collaring Movements.
2. Franke et al occupied raptor nests & incidental wildlife observations are displayed to record the approximate location of VECs; these observations are not included in the abundance data due to insufficient associated metadata.

Whale Tail Pit & Whale Tail Haul Road
Comprehensive Terrestrial Baseline Characterization Report

Signficant Wildlife Observations

DOUGAN & ASSOCIATES
ECOLOGICAL CONSULTING & DESIGN
77 Wyndham Street South • Guelph ON N1E 5R9
T 519.822.1609 • F 519.822.5389 • www.dougan.ca
Nunavut ENVIRONMENTAL CONSULTING LTD

PROJECT: Whale Tail Pit & Haul Road

CLIENT: Agnico Eagle Mines Limited

N W E S UTM Zone 14 NAD83

DATE: NOVEMBER 21, 2017

SCALE: 1:30,000

DRAWN BY: Lindsey Carter

CHECKED BY: Mary Anne Young

Figure:

9 - 6

The information displayed on this map has been compiled from various sources. While every effort has been made to accurately depict the information, this map should not be relied on as being a precise indicator of locations, features, or roads, nor as a guide to navigation.

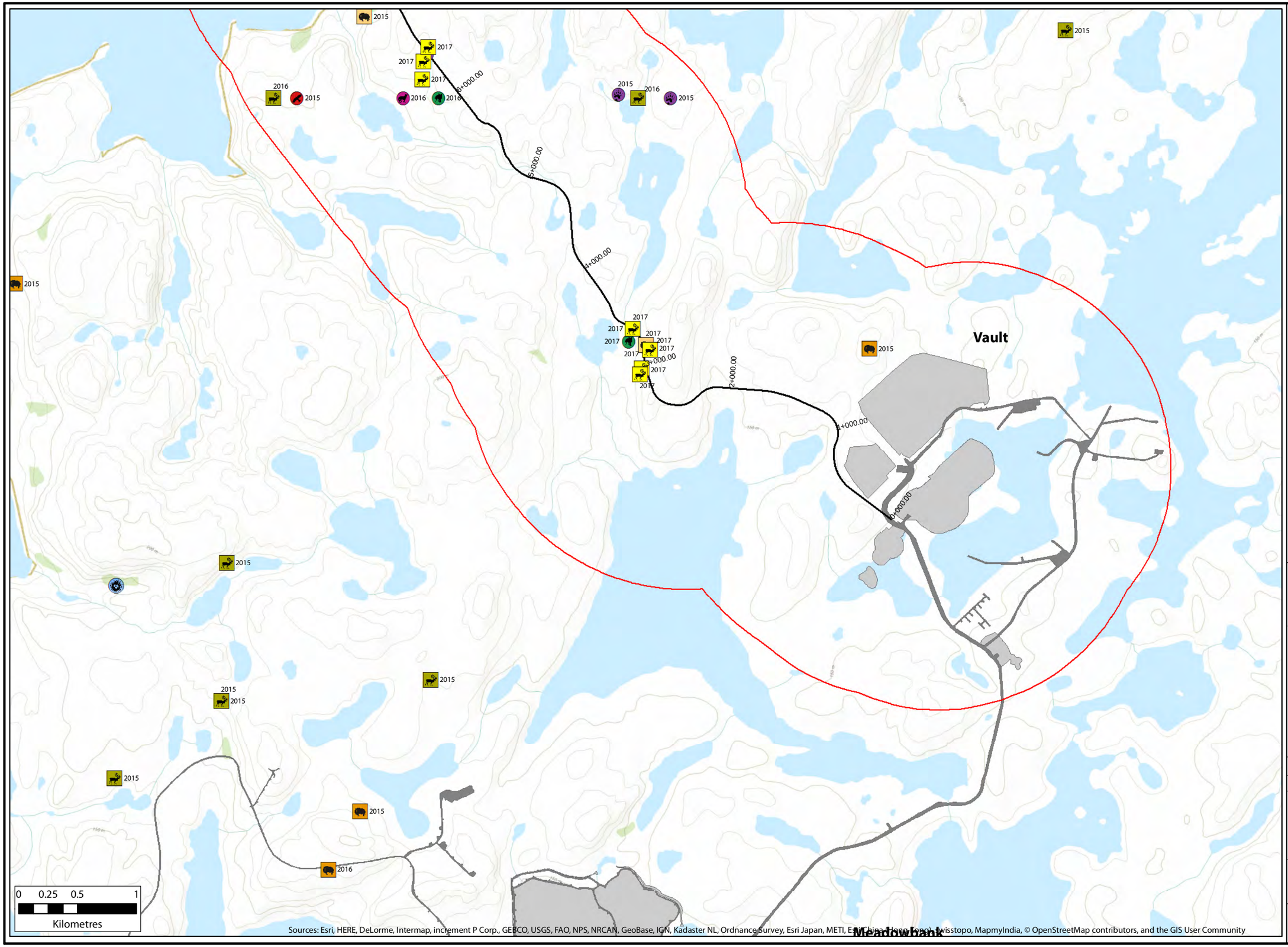

Significant Wildlife
(D&A; NEC, Franke et al, 2015-2017)

Predatory Mammals
- Arctic Fox Observation
- Arctic Wolf Observation
- Wolverine Observation

Ungulates
- Barren-ground Caribou Sign
- Barren-ground Caribou Observation
- Muskox Sign
- Muskox Observation

Raptors
- Bald Eagle Observation

Occupied Raptor Nests
- Peregrine Falcon Nest

Map Base
- Proposed Haul Road (AEM, Nov. 2015)
- Mine Site
- Road
- LSA Boundary
- RSA Boundary

Notes:

1. Caribou trails, a significant wildlife feature, are displayed on Figure 7.12, Barren-Caribou Observations & Collaring Movements.
2. Franke et al occupied raptor nests & incidental wildlife observations are displayed to record the approximate location of VECs; these observations are not included in the abundance data due to insufficient associated metadata.

Whale Tail Pit & Whale Tail Haul Road
Comprehensive Terrestrial Baseline Characterization Report

Signficant Wildlife Observations

DOUGAN & ASSOCIATES
ECOLOGICAL CONSULTING & DESIGN
77 Wyndham Street South • Guelph ON N1E 5R7
T 519.822.1609 • F 519.822.5389 • www.dougan.ca

Nunavut ENVIRONMENTAL CONSULTING LTD

PROJECT: Whale Tail Pit & Haul Road

CLIENT: Agnico Eagle Mines Limited

N W E S
UTM Zone 14 NAD83

DATE: NOVEMBER 21, 2017
SCALE: 1:30,000
DRAWN BY: Lindsey Carter
CHECKED BY: Mary Anne Young

Figure:

9 - 7

The information displayed on this map has been compiled from various sources. While every effort has been made to accurately depict the information, this map should not be relied on as being a precise indicator of locations, features, or roads, nor as a guide to navigation.



Sources: Esri, HERE, DeLorme, Intermap, increment P Corp., GEBCO, USGS, FAO, NPS, NRCAN, GeoBase, IGN, Kadaster NL, Ordnance Survey, Esri Japan, METI, Esri China (Hong Kong), swisstopo, MapmyIndia, © OpenStreetMap contributors, and the GIS User Community

Significant Wildlife
(D&A; NEC, Franke et al, 2015-2017)

Predatory Mammals
- Arctic Wolf Sign
- Arctic Wolf Observation

Ungulates
- Muskox Observation

Raptors
- Gyrfalcon Observation
- Rough-legged Hawk Observation
- Short-eared Owl Observation

Occupied Raptor Nests
- Peregrine Falcon Nest

Map Base
- RSA Boundary

Notes:

1. Caribou trails, a significant wildlife feature, are displayed on Figure 7.12, Barren-Caribou Observations & Collaring Movements.
2. Franke et al occupied raptor nests & incidental wildlife observations are displayed to record the approximate location of VECs; these observations are not included in the abundance data due to insufficient associated metadata.

Whale Tail Pit & Whale Tail Haul Road
Comprehensive Terrestrial Baseline Characterization Report

Signficant Wildlife Observations

DOUGAN & ASSOCIATES
ECOLOGICAL CONSULTING & DESIGN
77 Wyndham Street South • Guelph ON N1E 5R9
T 519.822.1609 • F 519.822.5389 • www.dougan.ca

Nunavut ENVIRONMENTAL CONSULTING LTD

PROJECT: Whale Tail Pit & Haul Road

CLIENT: Agnico Eagle Mines Limited

N W E S
UTM Zone 14 NAD83

DATE: NOVEMBER 21, 2017
SCALE: 1:30,000
DRAWN BY: Lindsey Carter
CHECKED BY: Mary Anne Young

Figure:

9 - 8

The information displayed on this map has been compiled from various sources. While every effort has been made to accurately depict the information, this map should not be relied on as being a precise indicator of locations, features, or roads, nor as a guide to navigation.

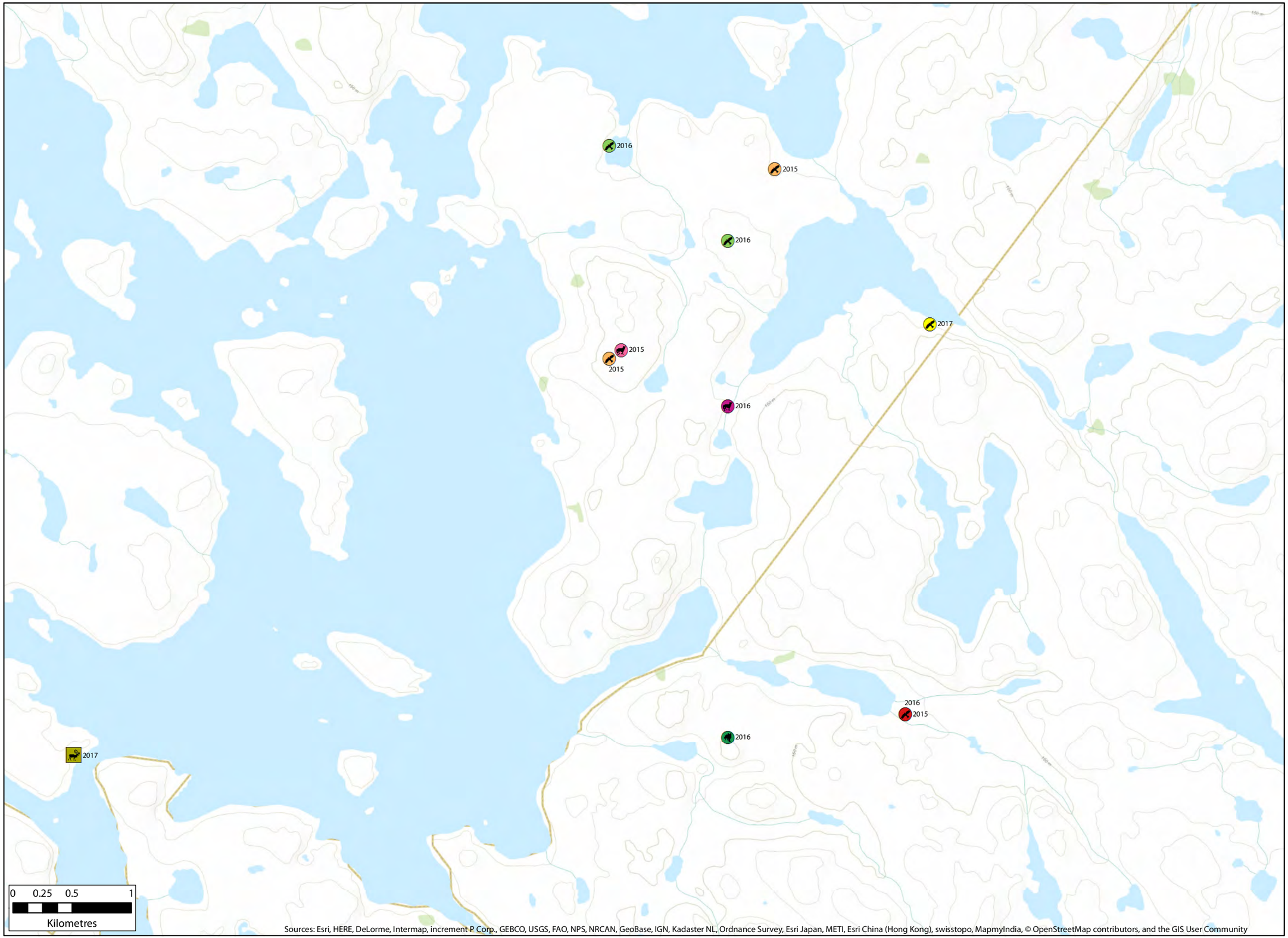

Sources: Esri, HERE, DeLorme, Intermap, increment P Corp., GEBCO, USGS, FAO, NPS, NRCAN, GeoBase, IGN, Kadaster NL, Ordnance Survey, Esri Japan, METI, Esri China (Hong Kong), swisstopo, MapmyIndia, © OpenStreetMap contributors, and the GIS User Community

Significant Wildlife
(D&A; NEC, Franke et al, 2015-2017)

Predatory Mammals
- Arctic Fox Observation
- Arctic Wolf Sign
- Arctic Wolf Observation

Ungulates
- Barren-ground Caribou Observation

Raptors
- Bald Eagle Observation
- Gyrfalcon Observation
- Peregrine Falcon Observation
- Rough-legged Hawk Observation
- Short-eared Owl Observation

Map Base
- RSA Boundary

Notes:

1. Caribou trails, a significant wildlife feature, are displayed on Figure 7.12, Barren-Caribou Observations & Collaring Movements.

2. Franke et al occupied raptor nests & incidental wildlife observations are displayed to record the approximate location of VECs; these observations are not included in the abundance data due to insufficient associated metadata.

Whale Tail Pit & Whale Tail Haul Road
Comprehensive Terrestrial Baseline Characterization Report

Signficant Wildlife Observations

DOUGAN & ASSOCIATES
ECOLOGICAL CONSULTING & DESIGN
77 Wyndham Street South • Guelph ON N1E 5R7
T 519.822.1609 • F 519.822.5389 • www.dougan.ca

Nunavut ENVIRONMENTAL CONSULTING LTD

PROJECT: Whale Tail Pit & Haul Road

CLIENT: Agnico Eagle Mines Limited

N W E S
UTM Zone 14 NAD83

DATE: NOVEMBER 21, 2017
SCALE: 1:30,000
DRAWN BY: Lindsey Carter
CHECKED BY: Mary Anne Young

Figure:

9 - 9

The information displayed on this map has been compiled from various sources. While every effort has been made to accurately depict the information, this map should not be relied on as being a precise indicator of locations, features, or roads, nor as a guide to navigation.

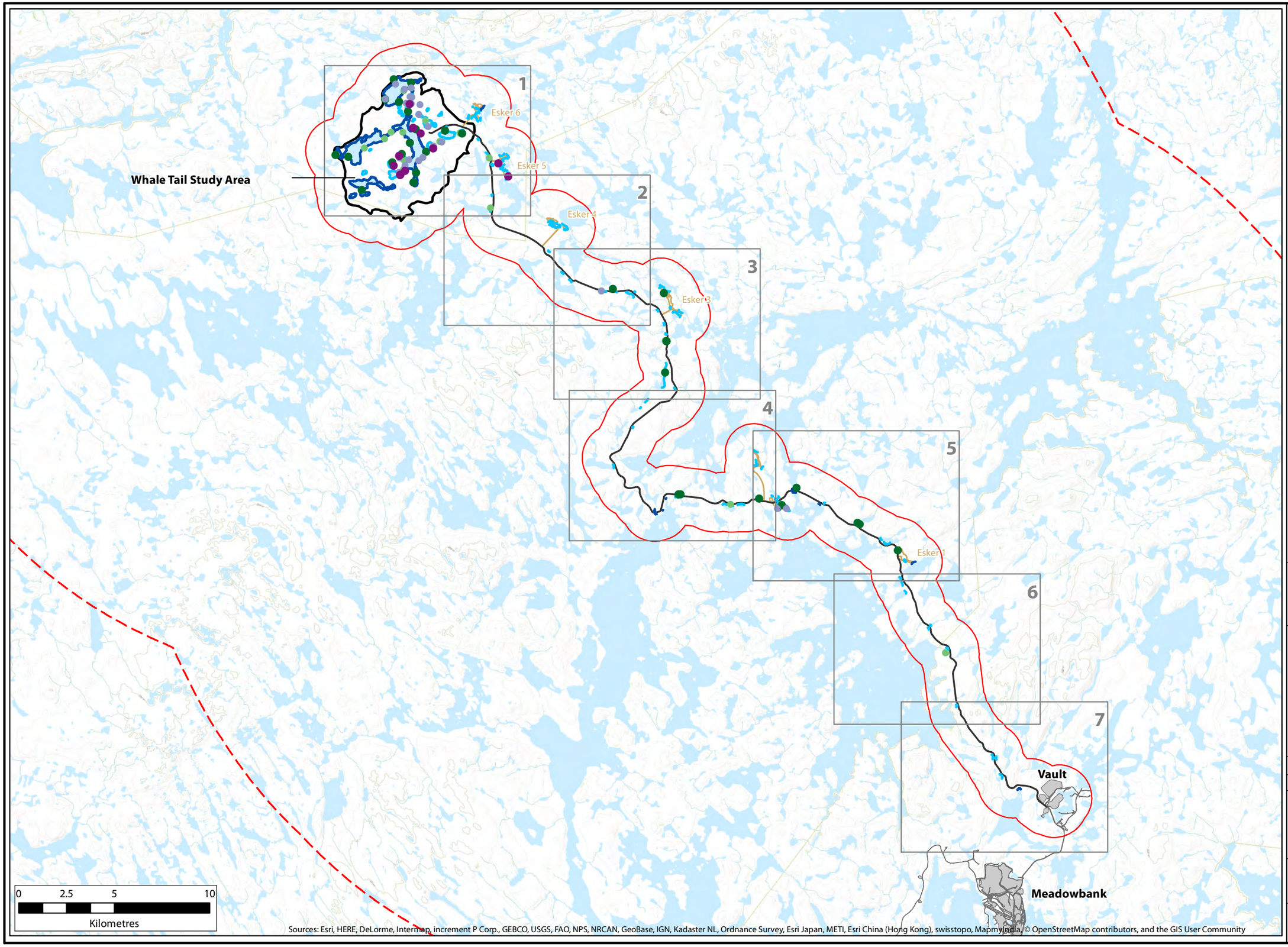

Legend

Confirmed Breeding [1] (2015-2017)

Waterbirds
- Confirmed Nest
- Additional Confirmed Breeding

Upland Birds
- Confirmed Nest
- Additional Confirmed Breeding

Waterbird Survey Transect
(D&A, 2016)
- Lake
- Pond

Map Base
- Esker or Esker Access Road
- Proposed Haul Road (AEM, Nov. 2015)
- 2015 - 2017 Shoreline Surveys Figure Extent
- Mine Site
- Road
- LSA Boundary
- RSA Boundary
- Whale Tail Study Area

Whale Tail Pit & Whale Tail Haul Road
Comprehensive Terrestrial Baseline Characterization Report
2015-2017 Shoreline Surveys

DOUGAN & ASSOCIATES
ECOLOGICAL CONSULTING & DESIGN
77 Wyndham Street South • Guelph ON N1E 5R1
T 519.822.1609 • F 519.822.5389 • www.dougan.ca

Nunavut ENVIRONMENTAL CONSULTING LTD

PROJECT: Whale Tail Pit & Haul Road

CLIENT: Agnico Eagle Mines Limited

N W E S
UTM Zone 14 NAD83

DATE: NOVEMBER 21, 2017

SCALE: 1:185,000

DRAWN BY: Lindsey Carter

CHECKED BY: Mary Anne Young

Figure:

11 - Key Map

The information displayed on this map has been compiled from various sources. While every effort has been made to accurately depict the information, this map should not be relied on as being a precise indicator of locations, features, or roads, nor as a guide to navigation.

Observed Waterbirds

Species Code - (# in 2015, 2016, 2017)

AGPL - American Golden-Plover (2,1,4)
CACG - Cackling Goose (15,3,1)
CANG - Canada Goose (4,127,67)
COLO - Common Loon (3,8,0)
COME - Common Merganser (.0.0.2)
DUNL - Dunlin (1,2,1)
GLGU - Glaucous Gull (2,0,0)
GRWF - Greater White-fronted Goose (1,6,0)
HERG - Herring Gull (7,21,9)
LESA - Least Sandpiper (1,4,2)
LTDU - Long-tailed Duck (21,23,7)
PALO - Pacific Loon (0,1,0)
PESA - Pectoral Sandpiper (0,3,0)
PEEP - Sandpiper species (0,0,1)
RBME - Red-breasted Merganser (4,7,0)
RNPH - Red-necked Phalarope (0,0,2)
RTLO - Red-throated Loon (1,4,2)
SACR - Sandhill Crane (0,5,0)
SEPL - Semipalmated Plover (8,26,2)
SESA - Semipalmated Sandpiper (38,53,26)
SNGO - Snow Goose (1,0,0)
YBLO - Yellow-billed Loon (0,5,0)

Confirmed Nests

Species Code - (# in 2015, 2016, 2017)

AGPL - American Golden-Plover (0,0,1)
AMPI - American Pipit (2,4,0)
CACG - Cackling Goose (1,0,0)
CANG - Canada Goose (0,2,0)
DUNL - Dunlin (1,1,0)
HERG - Herring Gull (0,1,1)
HOLA - Horned Lark (0,1,0)
HORE - Hoary Redpoll (1,1,1)
LALO - Lapland Longspur (11,14,6)
LESA - Least Sandpiper (0,1,0)
LTDU - Long-tailed Duck (0,0,1)
REDP - Redpoll Species (0,2,0)
ROPT - Rock Ptarmigan (0,1,0)
RTLO - Red-throated Loon (0,1,0)
SAVS - Savannah Sparrow (2,4,0)
SEPL - Semipalmated Plover (2,3,1)
SESA - Semipalmated Sandpiper (8,10,2)

*** Notes:**

1. Shoreline Surveys were carried out on all waterbodies within the Whale Tail Pit Study Area & within 100 m of the alignments of the Proposed Haul Road, Esker Borrow Areas, & Esker Access Roads at the time of the Shoreline Survey (June 2016). The Proposed Haul Road alignment changed between the 2015 & 2016 surveys.
2. Only the Whale Tail Study area surveyed in 2017. Shoreline surveys were not conducted along the Haul Road in 2017.
3. Lakes 200-203 were added to the 2017 shoreline surveys due to proposed flooding.
4. For Upland bird obersvations by Shoreline Survey Transect see Appendix F: Shoreline Survey Results 2015, 2016, 2017
5. Refer to Appendix G: D&A to AEM Lake Names for the conversation between D&A Shoreline Survey Transects & AEM Lake Names

P71
CACG - 2,2
LTDU - 0,2
SEPL - 0,3
SESA - 2,0

P75
CANG - 0,0,2

P74
CANG - 0,2,4
SESA - 0,2,0

L09
CACG - 0,1,0
CANG - 2,14,0
COLO - 1,0,0
HERG - 1,1,0
RBME - 2,4,0
SACR - 0,3,0
SEPL - 3,5,0
SESA - 0,2,0

P68
LESA - 0,1,0
SESA - 1,0,1

P73
SESA - 0,1,0

P63
DUNL - 0,1,0

P57
COLO - 0,1,x
RMBE - 1,0,x

L12
SEPL - 0,1,x

P76
COME - 0,0,2
LESA - 0,0,2
SESA - 0,0,2

P77
CANG - 0,4,0

P72
SESA - 0,1,0

P70
SEPL - 2,0,0

P69
CANG - 0,2,0
RTLO - 0,2,0
SESA - 1,0,0

P79
PEEP - 0,0,1

P64
RBME - 0,2
SESA - 1,2

P61
GRWF - 0,4,x
SESA - 2,2,x

P39
AGPL - 0,1,x

P81
LTDU - 0,1,1
SESA - 1,3,0

P82
AGPL - 1,0,1
HERG - 0,1,0
SESA - 1,0,1

P62
DUNL - 0,1,x
CACG - 2,0,x
LTDU - 5,0,x
SESA - 4,0,x

P38
CACG - 11,0,x
CANG - 1,0,x
RBME - 0,1,x

P85
YBLO - 0,1,0

P83
HERG - 2,2,4
LTDU - 0,5,0
RTLO - 0,0,1
SESA - 0,2,2

L10
CANG - 1,2,x
COLO - 2,2,x
HERG - 0,3,1
RBME - 1,0,x
SESA - 2,0,x
SNGO - 1,0,x
YBLO - 0,4,x

L202
CANG - x,x,6
HERG - x,x,1

L08
AGPL - 0,0,3
CACK - 0,1,1
CANG - 0,17,20
COLO - 0,1,0
GLGU - 1,0,0
HERG 0,1,0
LESA - 0,2,0
LTDU - 0,1,0
RTLO - 0,1,0
SEPL - 0,3,2
SESA - 4,13,6

P49
DUNL - 1,1,x
HERG - 0,1,x
SESA - 1,2,x

P37
LTDU - 2,0,x
SESA - 1,0,x

P53
HERG - 0,1,x

P54
COLO - 0,1,x
RTLO - 0,1,x

P109
SEPL - 0,1,x

P110
SEPL - 0,2,x

P105
SEPL - 0,1,x

P36
SESA - 1,1,x

L200
SESA - x,x,5

L201
SESA - x,x,1

Whale Tail Study Area
Nemo Lake
Mammoth Lake
Whale Tail Lake
Esker 6
Esker 5
P114
P112
P55
P56
P53
P54
P59
P58
P60
P65
P66
P67
P84
P85
P81
P82
P83
P63
P57
P39
P38
P49
P37
P109
P110
P105
P36
P50
P51
P52
P107
A18
A19
A20
A21
A22
A45
A46
A47
A49
A53
A55
A59
A62
A63
A65
61+000.00
60+000.00
59+000.00
58+000.00
63+000.00
62+000.00
64+000.00

HORE (2015)
AMPI (2015)
SEPL (2016)
SEPL (2015)
LALO (2015)
CANG (2016)
AMPI (2016)
SESA (2016)
SAVS (2016)
SESA (2015)
LESA (2016)
CALG (2015)
SESA (2017)
REDP (2016)
RTLO (2016)
SEPL (2017)
LALO (2016)
LTDU (2017)
HORE (2017)
AGPL (2017)
HERG (2016/17)
DUNL (2016)
DUNL (2015)

0 0.5 1 2
Kilometres

Sources: Esri, HERE, DeLorme, Intermap, increment P Corp., GEBCO, USGS, FAO, NPS, NRCAN, GeoBase, IGN, Kadaster NL, Ordnance Survey, Esri Japan, METI, Esri China (Hong Kong), swisstopo, MapmyIndia, © OpenStreetMap contributors, and the GIS User Community

Legend

Confirmed Breeding [1] (2015-2017)

Waterbirds
- Confirmed Nest
- Additional Confirmed Breeding

Upland Birds
- Confirmed Nest
- Additional Confirmed Breeding

Waterbird Survey Transect
(D&A, 2015 - 2017)
- Lake
- Pond

Map Base
- Esker or Esker Access Road
- Proposed Haul Road (AEM, Nov. 2015)
- Shoreline Survey Area *
- Whale Tail Study Area
- LSA Boundary
- RSA Boundary

Whale Tail Pit & Whale Tail Haul Road
Comprehensive Terrestrial Basleline Characterization Report
2015-2017 Shoreline Surveys

DOUGAN & ASSOCIATES
ECOLOGICAL CONSULTING & DESIGN
77 Wyndham Street South • Guelph ON N1E 5R7
T 519.822.1609 • F 519.822.5389 • www.dougan.ca

Nunavut ENVIRONMENTAL CONSULTING LTD

PROJECT: Whale Tail Pit & Haul Road
CLIENT: Agnico Eagle Mines Limited
DATE: NOVEMBER 21, 2017
SCALE: 1:30,000
DRAWN BY: Lindsey Carter
CHECKED BY: Mary Anne Young
N W E S
UTM Zone 14 NAD83

Figure:
11 - 1

The information displayed on this map has been compiled from various sources. While every effort has been made to accurately depict the information, this map should not be relied on as being a precise indicator of locations, features, or roads, nor as a guide to navigation.

Observed Waterbirds

Species Code - (# in 2015, 2016, 2017)

AGPL - American Golden-Plover (2,1,4)
CACG - Cackling Goose (15,3,1)
CANG - Canada Goose (4,127,67)
COLO - Common Loon (3,8,0)
COME - Common Merganser (.0.0.2)
DUNL - Dunlin (1,2,1)
GLGU - Glaucous Gull (2,0,0)
GRWF - Greater White-fronted Goose (1,6,0)
HERG - Herring Gull (7,21,9)
LESA - Least Sandpiper (1,4,2)
LTDU - Long-tailed Duck (21,23,7)
PALO - Pacific Loon (0,1,0)
PESA - Pectoral Sandpiper (0,3,0)
PEEP - Sandpiper species (0,0,1)
RBME - Red-breasted Merganser (4,7,0)
RNPH - Red-necked Phalarope (0,0,2)
RTLO - Red-throated Loon (1,4,2)
SACR - Sandhill Crane (0,5,0)
SEPL - Semipalmated Plover (8,26,2)
SESA - Semipalmated Sandpiper (38,53,26)
SNGO - Snow Goose (1,0,0)
YBLO - Yellow-billed Loon (0,5,0)

Confirmed Nests

Species Code - (# in 2015, 2016, 2017)

AGPL - American Golden-Plover (0,0,1)
AMPI - American Pipit (2,4,0)
CACG - Cackling Goose (1,0,0)
CANG - Canada Goose (0,2,0)
DUNL - Dunlin (1,1,0)
HERG - Herring Gull (0,1,1)
HOLA - Horned Lark (0,1,0)
HORE - Hoary Redpoll (1,1,1)
LALO - Lapland Longspur (11,14,6)
LESA - Least Sandpiper (0,1,0)
LTDU - Long-tailed Duck (0,0,1)
REDP - Redpoll Species (0,2,0)
ROPT - Rock Ptarmigan (0,1,0)
RTLO - Red-throated Loon (0,1,0)
SAVS - Savannah Sparrow (2,4,0)
SEPL - Semipalmated Plover (2,3,1)
SESA - Semipalmated Sandpiper (8,10,2)

*** Notes:**

1. Shoreline Surveys were carried out on all waterbodies within the Whale Tail Pit Study Area & within 100 m of the alignments of the Proposed Haul Road, Esker Borrow Areas, & Esker Access Roads at the time of the Shoreline Survey (June 2016). The Proposed Haul Road alignment changed between the 2015 & 2016 surveys.
2. Only the Whale Tail Study area surveyed in 2017. Shoreline surveys were not conducted along the Haul Road in 2017.
3. Lakes 200-203 were added to the 2017 shoreline surveys due to proposed flooding.
4. For Upland bird obersvations by Shoreline Survey Transect see Appendix F: Shoreline Survey Results 2015, 2016, 2017
5. Refer to Appendix G: D&A to AEM Lake Names for the conversation between D&A Shoreline Survey Transects & AEM Lake Names

SEPL (2016)
P105 SEPL - 0,1,x
P36 SESA - 1,1,x
LALO (2016)
P35 CANG - 0,16,x
59+000.00
58+000.00
57+000.00
56+000.00
55+000.00
54+000.00
53+000.00
52+000.00
51+000.00
50+000.00
49+000.00
48+000.00
47+000.00
P48 RTLO - 1,0,,x
Esker 4
P47 SEPL - 0,1,x
P103 SEPL - 0,1,x
P46
P45
P101
P44 SEPL - 0,1,x SESA - 1,0,x
P34
P33 COLO - 0,1,x
SESA (2016)
LALO (2016)
LALO (2016)
P99
P118 SESA - 0,1,x
P32 HERG - 1,0,x LTDU - 1,0,x

Legend

Confirmed Breeding [1] (2015-2017)

Waterbirds
- Confirmed Nest
- Additional Confirmed Breeding

Upland Birds
- Confirmed Nest
- Additional Confirmed Breeding

Waterbird Survey Transect
(D&A, 2015 - 2017)
- Pond

Map Base
- Esker or Esker Access Road
- Proposed Haul Road (AEM, Nov. 2015)
- Shoreline Survey Area *
- Whale Tail Study Area
- LSA Boundary
- RSA Boundary

0 0.5 1 2
Kilometres

Sources: Esri, HERE, DeLorme, Intermap, increment P Corp., GEBCO, USGS, FAO, NPS, NRCAN, GeoBase, IGN, Kadaster NL, Ordnance Survey, Esri Japan, METI, Esri China (Hong Kong), swisstopo, MapmyIndia, © OpenStreetMap contributors, and the GIS User Community

Whale Tail Pit & Whale Tail Haul Road
Comprehensive Terrestrial Basleline Characterization Report
2015-2017 Shoreline Surveys

DOUGAN & ASSOCIATES
ECOLOGICAL CONSULTING & DESIGN
77 Wyndham Street South • Guelph ON N1E 5R1
T 519.822.1609 • F 519.822.5389 • www.dougan.ca
Nunavut ENVIRONMENTAL CONSULTING LTD

PROJECT: Whale Tail Pit & Haul Road
CLIENT: Agnico Eagle Mines Limited
N W E S UTM Zone 14 NAD83
DATE: NOVEMBER 21, 2017
SCALE: 1:30,000
DRAWN BY: Lindsey Carter
CHECKED BY: Mary Anne Young

Figure:
11 - 2

The information displayed on this map has been compiled from various sources. While every effort has been made to accurately depict the information, this map should not be relied on as being a precise indicator of locations, features, or roads, nor as a guide to navigation.

Observed Waterbirds

Species Code - (# in 2015, 2016, 2017)

AGPL - American Golden-Plover (2,1,4)
CACG - Cackling Goose (15,3,1)
CANG - Canada Goose (4,127,67)
COLO - Common Loon (3,8,0)
COME - Common Merganser (.0.0.2)
DUNL - Dunlin (1,2,1)
GLGU - Glaucous Gull (2,0,0)
GRWF - Greater White-fronted Goose (1,6,0)
HERG - Herring Gull (7,21,9)
LESA - Least Sandpiper (1,4,2)
LTDU - Long-tailed Duck (21,23,7)
PALO - Pacific Loon (0,1,0)
PESA - Pectoral Sandpiper (0,3,0)
PEEP - Sandpiper species (0,0,1)
RBME - Red-breasted Merganser (4,7,0)
RNPH - Red-necked Phalarope (0,0,2)
RTLO - Red-throated Loon (1,4,2)
SACR - Sandhill Crane (0,5,0)
SEPL - Semipalmated Plover (8,26,2)
SESA - Semipalmated Sandpiper (38,53,26)
SNGO - Snow Goose (1,0,0)
YBLO - Yellow-billed Loon (0,5,0)

Confirmed Nests

Species Code - (# in 2015, 2016, 2017)

AGPL - American Golden-Plover (0,0,1)
AMPI - American Pipit (2,4,0)
CACG - Cackling Goose (1,0,0)
CANG - Canada Goose (0,2,0)
DUNL - Dunlin (1,1,0)
HERG - Herring Gull (0,1,1)
HOLA - Horned Lark (0,1,0)
HORE - Hoary Redpoll (1,1,1)
LALO - Lapland Longspur (11,14,6)
LESA - Least Sandpiper (0,1,0)
LTDU - Long-tailed Duck (0,0,1)
REDP - Redpoll Species (0,2,0)
ROPT - Rock Ptarmigan (0,1,0)
RTLO - Red-throated Loon (0,1,0)
SAVS - Savannah Sparrow (2,4,0)
SEPL - Semipalmated Plover (2,3,1)
SESA - Semipalmated Sandpiper (8,10,2)

P97
CANG - 0,37,x
SEPL - 0,1,x

P118
SESA - 0,1,x

P32
HERG - 1,0,x
LTDU - 1,0,x

P42
SEPL - 0,1,x

P96
LESA - 0,1,x
SEPL - 0,1,x

P43
LTDU - 2,2,x
SEPL - 1,2,x

P29
HERG - 1,1,x
LTDU - 0,1,x
SESA - 0,2,x

P25
LTDU - 2,0,x

SESA (2016)
LALO (2016)
LALO (2016)
AMPI (2016)
HOLA (2016)
SAVS (2016)
LALO (2016)
SAVS (2015)

P99
P31
P30
P28
P27
P26

Esker 3

50+000.00
49+000.00
48+000.00
47+000.00
46+000.00
45+000.00
44+000.00
43+000.00
42+000.00

*** Notes:**

1. Shoreline Surveys were carried out on all waterbodies within the Whale Tail Pit Study Area & within 100 m of the alignments of the Proposed Haul Road, Esker Borrow Areas, & Esker Access Roads at the time of the Shoreline Survey (June 2016). The Proposed Haul Road alignment changed between the 2015 & 2016 surveys.
2. Only the Whale Tail Study area surveyed in 2017. Shoreline surveys were not conducted along the Haul Road in 2017.
3. Lakes 200-203 were added to the 2017 shoreline surveys due to proposed flooding.
4. For Upland bird obersvations by Shoreline Survey Transect see Appendix F: Shoreline Survey Results 2015, 2016, 2017
5. Refer to Appendix G: D&A to AEM Lake Names for the conversation between D&A Shoreline Survey Transects & AEM Lake Names

Legend

Confirmed Breeding [1] (2015-2017)

Waterbirds
- Additional Confirmed Breeding

Upland Birds
- Confirmed Nest
- Additional Confirmed Breeding

Waterbird Survey Transect
(D&A, 2015 - 2017)
- Pond

Map Base
- Esker or Esker Access Road
- Proposed Haul Road (AEM, Nov. 2015)
- Shoreline Survey Area *
- LSA Boundary
- RSA Boundary

0 0.5 1 2
Kilometres

Sources: Esri, HERE, DeLorme, Intermap, increment P Corp., GEBCO, USGS, FAO, NPS, NRCAN, GeoBase, IGN, Kadaster NL, Ordnance Survey, Esri Japan, METI, Esri China (Hong Kong), swisstopo, MapmyIndia, © OpenStreetMap contributors, and the GIS User Community

Whale Tail Pit & Whale Tail Haul Road
Comprehensive Terrestrial Basleline Characterization Report
2015-2017 Shoreline Surveys

DOUGAN & ASSOCIATES
ECOLOGICAL CONSULTING & DESIGN
77 Wyndham Street South • Guelph ON N1E 5R7
T 519.822.1609 • F 519.822.5389 • www.dougan.ca

Nunavut ENVIRONMENTAL CONSULTING LTD

PROJECT: Whale Tail Pit & Haul Road
CLIENT: Agnico Eagle Mines Limited
N W E S
UTM Zone 14 NAD83
DATE: NOVEMBER 21, 2017
SCALE: 1:30,000
DRAWN BY: Lindsey Carter
CHECKED BY: Mary Anne Young

Figure:
11 - 3

The information displayed on this map has been compiled from various sources. While every effort has been made to accurately depict the information, this map should not be relied on as being a precise indicator of locations, features, or roads, nor as a guide to navigation.

Observed Waterbirds
Species Code - (# in 2015, 2016, 2017)
AGPL - American Golden-Plover (2,1,4)
CACG - Cackling Goose (15,3,1)
CANG - Canada Goose (4,127,67)
COLO - Common Loon (3,8,0)
COME - Common Merganser (.0.0.2)
DUNL - Dunlin (1,2,1)
GLGU - Glaucous Gull (2,0,0)
GRWF - Greater White-fronted Goose (1,6,0)
HERG - Herring Gull (7,21,9)
LESA - Least Sandpiper (1,4,2)
LTDU - Long-tailed Duck (21,23,7)
PALO - Pacific Loon (0,1,0)
PESA - Pectoral Sandpiper (0,3,0)
PEEP - Sandpiper species (0,0,1)
RBME - Red-breasted Merganser (4,7,0)
RNPH - Red-necked Phalarope (0,0,2)
RTLO - Red-throated Loon (1,4,2)
SACR - Sandhill Crane (0,5,0)
SEPL - Semipalmated Plover (8,26,2)
SESA - Semipalmated Sandpiper (38,53,26)
SNGO - Snow Goose (1,0,0)
YBLO - Yellow-billed Loon (0,5,0)

Confirmed Nests
Species Code - (# in 2015, 2016, 2017)
AGPL - American Golden-Plover (0,0,1)
AMPI - American Pipit (2,4,0)
CACG - Cackling Goose (1,0,0)
CANG - Canada Goose (0,2,0)
DUNL - Dunlin (1,1,0)
HERG - Herring Gull (0,1,1)
HOLA - Horned Lark (0,1,0)
HORE - Hoary Redpoll (1,1,1)
LALO - Lapland Longspur (11,14,6)
LESA - Least Sandpiper (0,1,0)
LTDU - Long-tailed Duck (0,0,1)
REDP - Redpoll Species (0,2,0)
ROPT - Rock Ptarmigan (0,1,0)
RTLO - Red-throated Loon (0,1,0)
SAVS - Savannah Sparrow (2,4,0)
SEPL - Semipalmated Plover (2,3,1)
SESA - Semipalmated Sandpiper (8,10,2)

*** Notes:**
1. Shoreline Surveys were carried out on all waterbodies within the Whale Tail Pit Study Area & within 100 m of the alignments of the Proposed Haul Road, Esker Borrow Areas, & Esker Access Roads at the time of the Shoreline Survey (June 2016). The Proposed Haul Road alignment changed between the 2015 & 2016 surveys.
2. Only the Whale Tail Study area surveyed in 2017. Shoreline surveys were not conducted along the Haul Road in 2017.
3. Lakes 200-203 were added to the 2017 shoreline surveys due to proposed flooding.
4. For Upland bird obersvations by Shoreline Survey Transect see Appendix F: Shoreline Survey Results 2015, 2016, 2017
5. Refer to Appendix G: D&A to AEM Lake Names for the conversation between D&A Shoreline Survey Transects & AEM Lake Names

P25
LTDU - 2,0,x

P94
HERG - 0,3,x

P93
LTDU - 0,1,x
SACR - 0,2,x
SEPL - 0,1,x

P92
CANG - 0,10,x

P22
CANG - 0,18,x
HERG - 0,3,x
SESA - 0,1,x

P17
LTDU - 1,0,x

P24 P23 P21 P20 P19 P18 L04 L05 L06

ROPT (2016) LALO (2016) AMPI (2016) REDP (2016) SESA (2015

41+000.00 40+000.00 39+000.00 38+000.00 37+000.00 36+000.00 35+000.00 34+000.00 33+000.00 32+000.00 31+000.00 30+000.00 29+000.00 28+000.00 27+000.00 26+000.00

0 0.5 1 2
Kilometres

Sources: Esri, HERE, DeLorme, Intermap, increment P Corp., GEBCO, USGS, FAO, NPS, NRCAN, GeoBase, IGN, Kadaster NL, Ordnance Survey, Esri Japan, METI, Esri China (Hong Kong), swisstopo, MapmyIndia, © OpenStreetMap contributors, and the GIS User Community

Legend

Confirmed Breeding [1] (2015-2017)
Upland Birds
- Confirmed Nest
- Additional Confirmed Breeding

Waterbird Survey Transect
(D&A, 2015 - 2017)
- Lake
- Pond

Map Base
- Esker or Esker Access Road
- Proposed Haul Road (AEM, Nov. 2015)
- Shoreline Survey Area *
- LSA Boundary
- RSA Boundary

Whale Tail Pit & Whale Tail Haul Road
Comprehensive Terrestrial Basleline Characterization Report
2015-2017 Shoreline Surveys

DOUGAN & ASSOCIATES
ECOLOGICAL CONSULTING & DESIGN
27 Wyndham Street South • Guelph ON N1E 5R7
T 519.822.1609 • F 519.822.5389 • www.dougan.ca
Nunavut ENVIRONMENTAL CONSULTING LTD

PROJECT: Whale Tail Pit & Haul Road
CLIENT: Agnico Eagle Mines Limited

N W E S
UTM Zone 14 NAD83

DATE: NOVEMBER 21, 2017
SCALE: 1:30,000
DRAWN BY: Lindsey Carter
CHECKED BY: Mary Anne Young

Figure:
11 - 4

The information displayed on this map has been compiled from various sources. While every effort has been made to accurately depict the information, this map should not be relied on as being a precise indicator of locations, features, or roads, nor as a guide to navigation.

P93
LTDU - 0,1,x
SACR - 0,2,x
SEPL - 0,1,x

P92
CANG - 0,10,x

P16
GRWF - 1,2,x
LTDU - 0,1,x
SESA - 0,3,x

Esker 2

L03
LESA - 1,0,x
SESA - 1,1,x

SAVS (2015)

24+000.00

P90
PESA - 0,3,x
SESA - 0,1,x

23+000.00

22+000.00

LALO (2016)

SESA (2015)

SEPL (2015)

P15
LTDU - 5,6,x
SESA - 3,4,x

P41
LTDU - 1,0,x
SEPL - 1,0,x
SESA - 0,1,x

L02
HERG - 1,0,x

P17
LTDU - 1,0,x

L07
SESA - 1,0,x

21+000.00

P89
HERG - 0,1,x

SAVS (2016)

20+000.00

LALO (2016)

P14
COLO - 0,1,x

19+000.00

18+000.00

P40
HERG - 0,1,x
PALO - 0,1,x

HORE (2016)

P87
P88
P12

P13
SESA 1,0,x

Esker 1

17+000.00

16+000.00

0 0.5 1 2
Kilometres

Sources: Esri, HERE, DeLorme, Intermap, increment P Corp., GEBCO, USGS, FAO, NPS, NRCAN, GeoBase, IGN, Kadaster NL, Ordnance Survey, Esri Japan, METI, Esri China (Hong Kong), swisstopo, MapmyIndia, © OpenStreetMap contributors, and the GIS User Community

*** Notes:**

1. Shoreline Surveys were carried out on all waterbodies within the Whale Tail Pit Study Area & within 100 m of the alignments of the Proposed Haul Road, Esker Borrow Areas, & Esker Access Roads at the time of the Shoreline Survey (June 2016). The Proposed Haul Road alignment changed between the 2015 & 2016 surveys.
2. Only the Whale Tail Study area surveyed in 2017. Shoreline surveys were not conducted along the Haul Road in 2017.
3. Lakes 200-203 were added to the 2017 shoreline surveys due to proposed flooding.
4. For Upland bird obersvations by Shoreline Survey Transect see Appendix F: Shoreline Survey Results 2015, 2016, 2017
5. Refer to Appendix G: D&A to AEM Lake Names for the conversation between D&A Shoreline Survey Transects & AEM Lake Names

Observed Waterbirds
Species Code - (# in 2015, 2016, 2017)
AGPL - American Golden-Plover (2,1,4)
CACG - Cackling Goose (15,3,1)
CANG - Canada Goose (4,127,67)
COLO - Common Loon (3,8,0)
COME - Common Merganser (.0.0.2)
DUNL - Dunlin (1,2,1)
GLGU - Glaucous Gull (2,0,0)
GRWF - Greater White-fronted Goose (1,6,0)
HERG - Herring Gull (7,21,9)
LESA - Least Sandpiper (1,4,2)
LTDU - Long-tailed Duck (21,23,7)
PALO - Pacific Loon (0,1,0)
PESA - Pectoral Sandpiper (0,3,0)
PEEP - Sandpiper species (0,0,1)
RBME - Red-breasted Merganser (4,7,0)
RNPH - Red-necked Phalarope (0,0,2)
RTLO - Red-throated Loon (1,4,2)
SACR - Sandhill Crane (0,5,0)
SEPL - Semipalmated Plover (8,26,2)
SESA - Semipalmated Sandpiper (38,53,26)
SNGO - Snow Goose (1,0,0)
YBLO - Yellow-billed Loon (0,5,0)

Confirmed Nests
Species Code - (# in 2015, 2016, 2017)
AGPL - American Golden-Plover (0,0,1)
AMPI - American Pipit (2,4,0)
CACG - Cackling Goose (1,0,0)
CANG - Canada Goose (0,2,0)
DUNL - Dunlin (1,1,0)
HERG - Herring Gull (0,1,1)
HOLA - Horned Lark (0,1,0)
HORE - Hoary Redpoll (1,1,1)
LALO - Lapland Longspur (11,14,6)
LESA - Least Sandpiper (0,1,0)
LTDU - Long-tailed Duck (0,0,1)
REDP - Redpoll Species (0,2,0)
ROPT - Rock Ptarmigan (0,1,0)
RTLO - Red-throated Loon (0,1,0)
SAVS - Savannah Sparrow (2,4,0)
SEPL - Semipalmated Plover (2,3,1)
SESA - Semipalmated Sandpiper (8,10,2)

Legend

Confirmed Breeding [1] (2015-2017)

Waterbirds
- Additional Confirmed Breeding

Upland Birds
- Confirmed Nest

Waterbird Survey Transect
(D&A, 2015 - 2017)
- Lake
- Pond

Map Base
- Esker or Esker Access Road
- Proposed Haul Road (AEM, Nov. 2015)
- Shoreline Survey Area *
- LSA Boundary
- RSA Boundary

Whale Tail Pit & Whale Tail Haul Road
Comprehensive Terrestrial Basleline Characterization Report
2015-2017 Shoreline Surveys

DOUGAN & ASSOCIATES
ECOLOGICAL CONSULTING & DESIGN
77 Wyndham Street South • Guelph ON N1E 5R7
T 519.822.1609 • F 519.822.5389 • www.dougan.ca

Nunavut ENVIRONMENTAL CONSULTING LTD

PROJECT: Whale Tail Pit & Haul Road
CLIENT: Agnico Eagle Mines Limited
N W E S
UTM Zone 14 NAD83
DATE: NOVEMBER 21, 2017
SCALE: 1:30,000
DRAWN BY: Lindsey Carter
CHECKED BY: Mary Anne Young

Figure:
11 - 5

The information displayed on this map has been compiled from various sources. While every effort has been made to accurately depict the information, this map should not be relied on as being a precise indicator of locations, features, or roads, nor as a guide to navigation.

Observed Waterbirds

Species Code - (# in 2015, 2016, 2017)

AGPL - American Golden-Plover (2,1,4)
CACG - Cackling Goose (15,3,1)
CANG - Canada Goose (4,127,67)
COLO - Common Loon (3,8,0)
COME - Common Merganser (.0.0.2)
DUNL - Dunlin (1,2,1)
GLGU - Glaucous Gull (2,0,0)
GRWF - Greater White-fronted Goose (1,6,0)
HERG - Herring Gull (7,21,9)
LESA - Least Sandpiper (1,4,2)
LTDU - Long-tailed Duck (21,23,7)
PALO - Pacific Loon (0,1,0)
PESA - Pectoral Sandpiper (0,3,0)
PEEP - Sandpiper species (0,0,1)
RBME - Red-breasted Merganser (4,7,0)
RNPH - Red-necked Phalarope (0,0,2)
RTLO - Red-throated Loon (1,4,2)
SACR - Sandhill Crane (0,5,0)
SEPL - Semipalmated Plover (8,26,2)
SESA - Semipalmated Sandpiper (38,53,26)
SNGO - Snow Goose (1,0,0)
YBLO - Yellow-billed Loon (0,5,0)

Confirmed Nests

Species Code - (# in 2015, 2016, 2017)

AGPL - American Golden-Plover (0,0,1)
AMPI - American Pipit (2,4,0)
CACG - Cackling Goose (1,0,0)
CANG - Canada Goose (0,2,0)
DUNL - Dunlin (1,1,0)
HERG - Herring Gull (0,1,1)
HOLA - Horned Lark (0,1,0)
HORE - Hoary Redpoll (1,1,1)
LALO - Lapland Longspur (11,14,6)
LESA - Least Sandpiper (0,1,0)
LTDU - Long-tailed Duck (0,0,1)
REDP - Redpoll Species (0,2,0)
ROPT - Rock Ptarmigan (0,1,0)
RTLO - Red-throated Loon (0,1,0)
SAVS - Savannah Sparrow (2,4,0)
SEPL - Semipalmated Plover (2,3,1)
SESA - Semipalmated Sandpiper (8,10,2)

P11
SEPL - 0,1,x

P08
SESA - 3,1,x

P07
SESA - 0,3,x

P06
SESA - 1,1,x

P10
P09
P05
LALO (2016)

15+000.00
14+000.00
13+000.00
12+000.00
11+000.00
10+000.00
9+000.00
8+000.00
7+000.00

Tehek Lake

*** Notes:**

1. Shoreline Surveys were carried out on all waterbodies within the Whale Tail Pit Study Area & within 100 m of the alignments of the Proposed Haul Road, Esker Borrow Areas, & Esker Access Roads at the time of the Shoreline Survey (June 2016). The Proposed Haul Road alignment changed between the 2015 & 2016 surveys.
2. Only the Whale Tail Study area surveyed in 2017. Shoreline surveys were not conducted along the Haul Road in 2017.
3. Lakes 200-203 were added to the 2017 shoreline surveys due to proposed flooding.
4. For Upland bird obersvations by Shoreline Survey Transect see Appendix F: Shoreline Survey Results 2015, 2016, 2017
5. Refer to Appendix G: D&A to AEM Lake Names for the conversation between D&A Shoreline Survey Transects & AEM Lake Names

0 0.5 1 2
Kilometres

Sources: Esri, HERE, DeLorme, Intermap, increment P Corp., GEBCO, USGS, FAO, NPS, NRCAN, GeoBase, IGN, Kadaster NL, Ordnance Survey, Esri Japan, METI, Esri China (Hong Kong), swisstopo, MapmyIndia, © OpenStreetMap contributors, and the GIS User Community

Legend

Confirmed Breeding [1] (2015-2017)

Upland Birds

- Additional Confirmed Breeding

Waterbird Survey Transect

(D&A, 2015 - 2017)

- Pond

Map Base

- Proposed Haul Road (AEM, Nov. 2015)
- Shoreline Survey Area *
- LSA Boundary
- RSA Boundary

Whale Tail Pit & Whale Tail Haul Road
Comprehensive Terrestrial Basleline Characterization Report

2015-2017 Shoreline Surveys

DOUGAN & ASSOCIATES
ECOLOGICAL CONSULTING & DESIGN
77 Wyndham Street South • Guelph, ON N1E 5R1
T 519.822.1609 • F 519.822.5389 • www.dougan.ca

Nunavut ENVIRONMENTAL CONSULTING LTD

PROJECT: Whale Tail Pit & Haul Road

CLIENT: Agnico Eagle Mines Limited

N W E S
UTM Zone 14 NAD83

DATE: NOVEMBER 21, 2017
SCALE: 1:30,000
DRAWN BY: Lindsey Carter
CHECKED BY: Mary Anne Young

Figure:

11 - 6

The information displayed on this map has been compiled from various sources. While every effort has been made to accurately depict the information, this map should not be relied on as being a precise indicator of locations, features, or roads, nor as a guide to navigation.

Observed Waterbirds

Species Code - (# in 2015, 2016, 2017)

AGPL - American Golden-Plover (2,1,4)
CACG - Cackling Goose (15,3,1)
CANG - Canada Goose (4,127,67)
COLO - Common Loon (3,8,0)
COME - Common Merganser (.0.0.2)
DUNL - Dunlin (1,2,1)
GLGU - Glaucous Gull (2,0,0)
GRWF - Greater White-fronted Goose (1,6,0)
HERG - Herring Gull (7,21,9)
LESA - Least Sandpiper (1,4,2)
LTDU - Long-tailed Duck (21,23,7)
PALO - Pacific Loon (0,1,0)
PESA - Pectoral Sandpiper (0,3,0)
PEEP - Sandpiper species (0,0,1)
RBME - Red-breasted Merganser (4,7,0)
RNPH - Red-necked Phalarope (0,0,2)
RTLO - Red-throated Loon (1,4,2)
SACR - Sandhill Crane (0,5,0)
SEPL - Semipalmated Plover (8,26,2)
SESA - Semipalmated Sandpiper (38,53,26)
SNGO - Snow Goose (1,0,0)
YBLO - Yellow-billed Loon (0,5,0)

Confirmed Nests

Species Code - (# in 2015, 2016, 2017)

AGPL - American Golden-Plover (0,0,1)
AMPI - American Pipit (2,4,0)
CACG - Cackling Goose (1,0,0)
CANG - Canada Goose (0,2,0)
DUNL - Dunlin (1,1,0)
HERG - Herring Gull (0,1,1)
HOLA - Horned Lark (0,1,0)
HORE - Hoary Redpoll (1,1,1)
LALO - Lapland Longspur (11,14,6)
LESA - Least Sandpiper (0,1,0)
LTDU - Long-tailed Duck (0,0,1)
REDP - Redpoll Species (0,2,0)
ROPT - Rock Ptarmigan (0,1,0)
RTLO - Red-throated Loon (0,1,0)
SAVS - Savannah Sparrow (2,4,0)
SEPL - Semipalmated Plover (2,3,1)
SESA - Semipalmated Sandpiper (8,10,2)

*** Notes:**

1. Shoreline Surveys were carried out on all waterbodies within the Whale Tail Pit Study Area & within 100 m of the alignments of the Proposed Haul Road, Esker Borrow Areas, & Esker Access Roads at the time of the Shoreline Survey (June 2016). The Proposed Haul Road alignment changed between the 2015 & 2016 surveys.
2. Only the Whale Tail Study area surveyed in 2017. Shoreline surveys were not conducted along the Haul Road in 2017.
3. Lakes 200-203 were added to the 2017 shoreline surveys due to proposed flooding.
4. For Upland bird obersvations by Shoreline Survey Transect see Appendix F: Shoreline Survey Results 2015, 2016, 2017
5. Refer to Appendix G: D&A to AEM Lake Names for the conversation between D&A Shoreline Survey Transects & AEM Lake Names

P05
8+000.00
7+000.00
6+000.00
5+000.00
P04
LTDU - 1,0,x
P03
P02
SESA - 0,1,x
4+000.00
P01
3+000.00
2+000.00
L01
HERG - 1,0,x
1+000.00
0+000.00
Vault

0 0.5 1 2
Kilometres

Sources: Esri, HERE, DeLorme, Intermap, increment P Corp., GEBCO, USGS, FAO, NPS, NRCAN, GeoBase, IGN, Kadaster NL, Ordnance Survey, Esri Japan, METI, Esri China (Hong Kong), swisstopo, MapmyIndia, © OpenStreetMap contributors, and the GIS User Community

Legend

Waterbird Survey Transect
(D&A, 2015 - 2017)
Pond

Map Base
Proposed Haul Road
(AEM, Nov. 2015)
Mine Site
Road
Shoreline Survey Area *
LSA Boundary
RSA Boundary

Whale Tail Pit & Whale Tail Haul Road
Comprehensive Terrestrial Basleline Characterization Report
2015-2017 Shoreline Surveys

DOUGAN & ASSOCIATES
ECOLOGICAL CONSULTING & DESIGN
77 Wyndham Street South • Guelph ON N1E 5R7
T 519.822.1609 • F 519.822.5389 • www.dougan.ca
Nunavut ENVIRONMENTAL CONSULTING LTD

PROJECT: Whale Tail Pit & Haul Road
CLIENT: Agnico Eagle Mines Limited

N W E S
UTM Zone 14 NAD83

DATE: NOVEMBER 21, 2017
SCALE: 1:30,000
DRAWN BY: Lindsey Carter
CHECKED BY: Mary Anne Young

Figure:
11 - 7

The information displayed on this map has been compiled from various sources. While every effort has been made to accurately depict the information, this map should not be relied on as being a precise indicator of locations, features, or roads, nor as a guide to navigation.

APPENDIX I

Seasonal Group Size Thresholds

a)

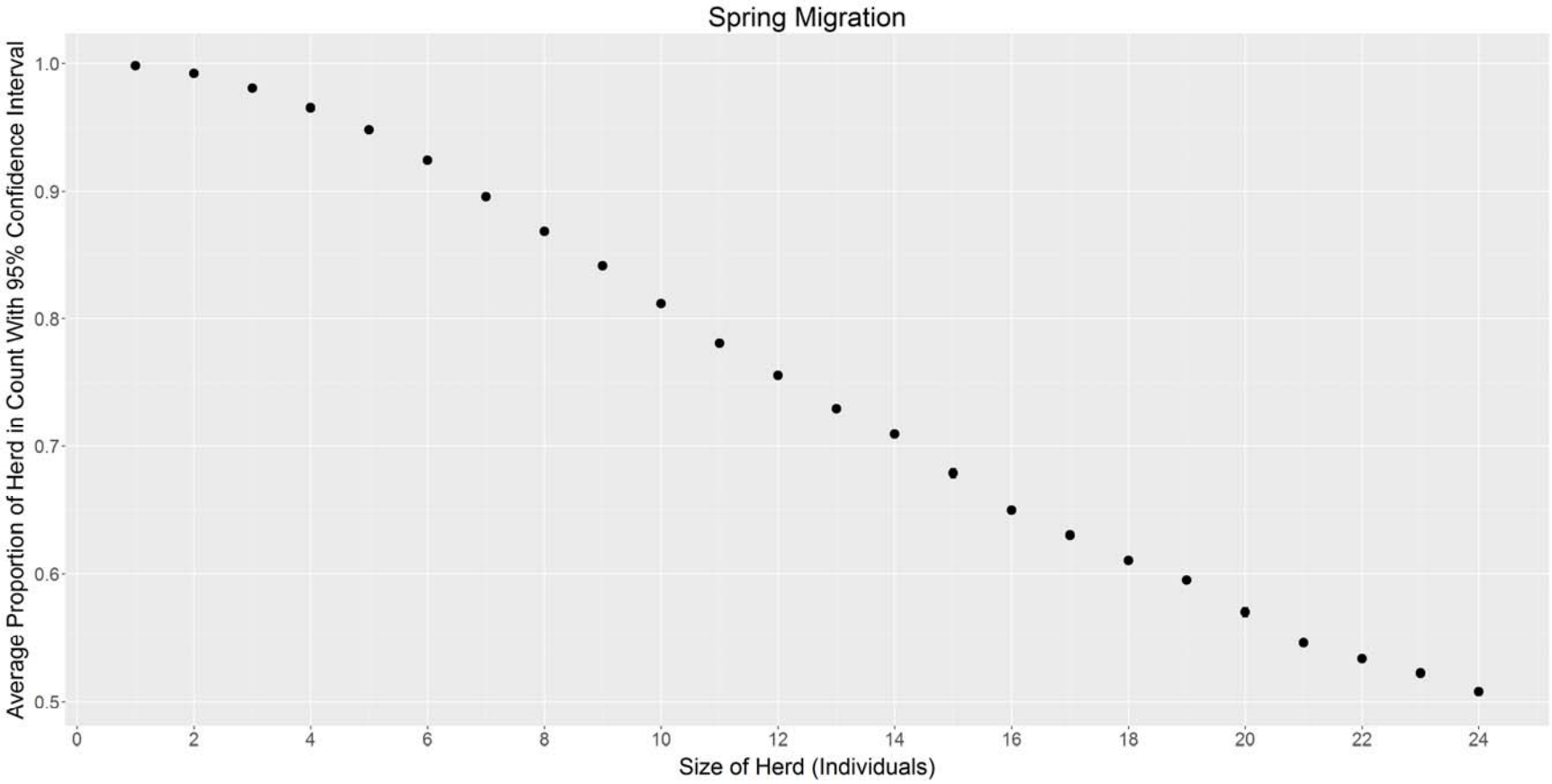
Spring Migration
Average Proportion of Herd in Count With 95% Confidence Interval
1.0
0.9
0.8
0.7
0.6
0.5
0
2
4
6
8
10
12
14
16
18
20
22
24
Size of Herd (Individuals)

b)

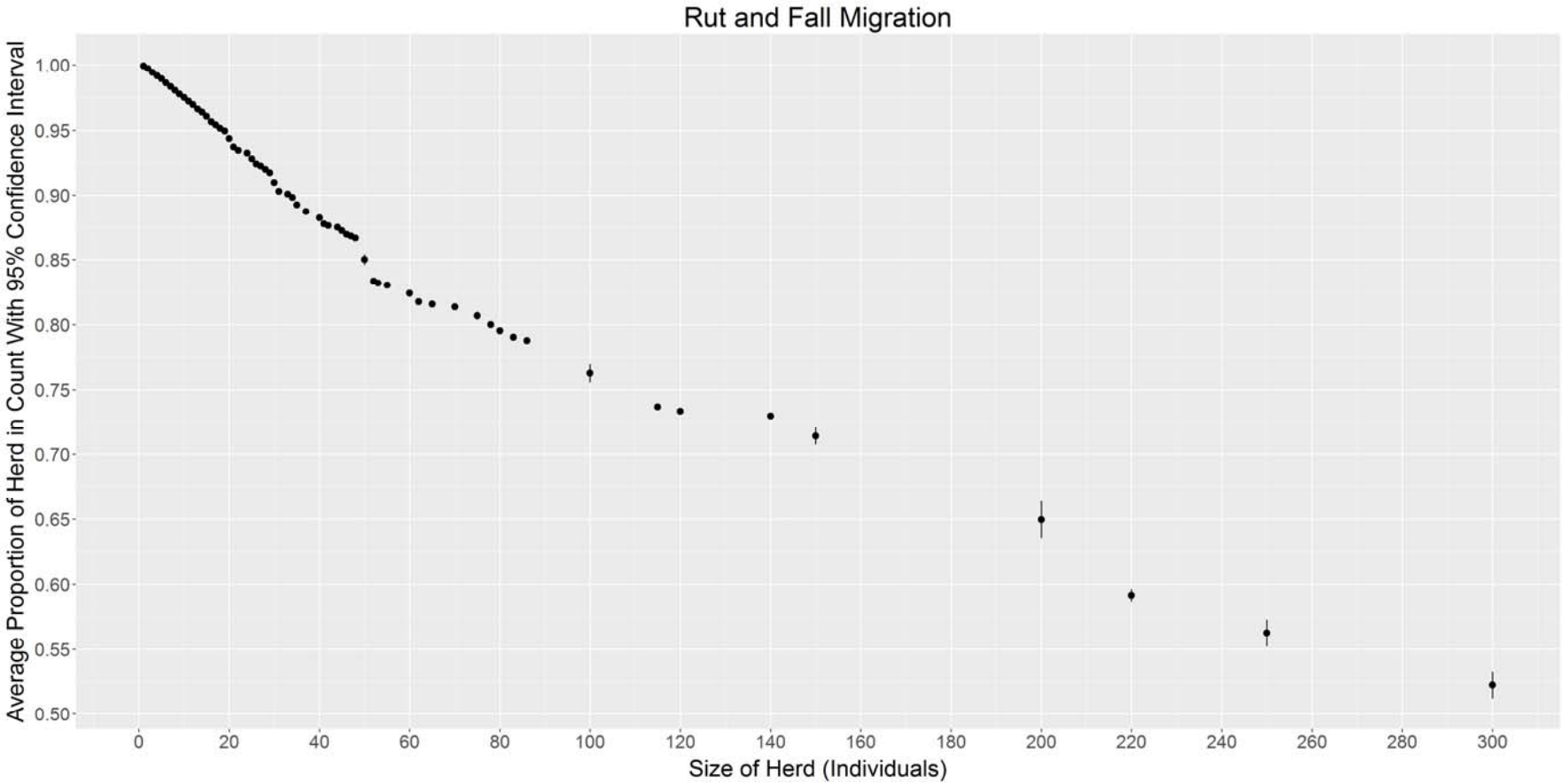
Rut and Fall Migration
Average Proportion of Herd in Count With 95% Confidence Interval
1.00
0.95
0.90
0.85
0.80
0.75
0.70
0.65
0.60
0.55
0.50
0
20
40
60
80
100
120
140
160
180
200
220
240
260
280
300
Size of Herd (Individuals)

c)

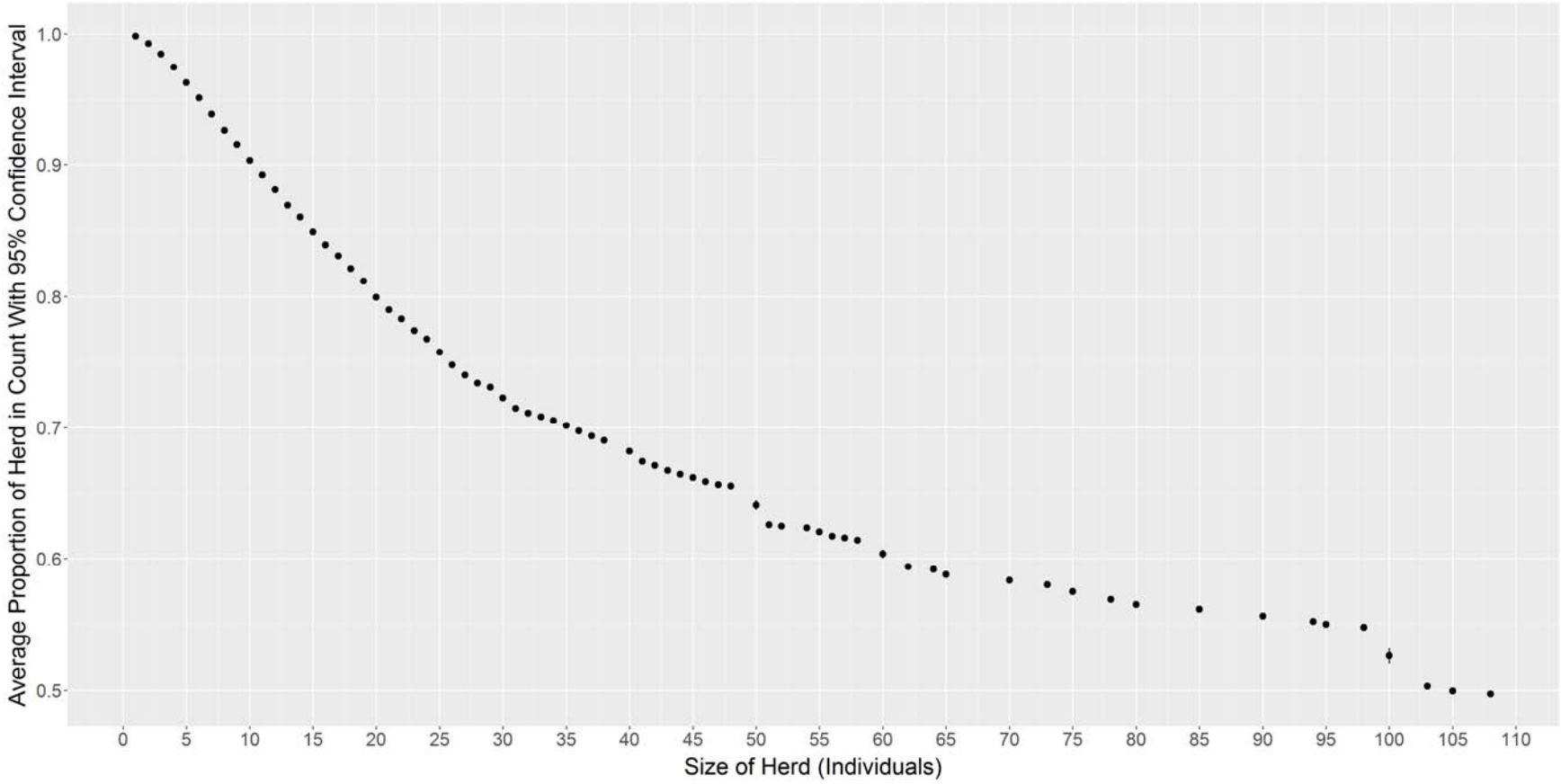

Figure J-1: Proportion of Caribou Observations by Season Presented by Group Size with 95% Confidence Intervals as follows: a) Spring Migration; b) Fall Rut/Fall Migration; and c) Early and Late Winter

APPENDIX J

Predatory Mammal Den Management and Protection Plan

BACKGROUND AND PURPOSE

Predatory mammals represent a valued ecosystem component (VEC), which occur and are known to den in the vicinity of the Meadowbank and Whale Tail Project facilities. Sensory disturbances near to active dens such as blasting, vehicles and, most significantly, ground personnel, may negatively impact denning success by inducing stress responses in the adult mammals, which can result in den abandonment.

This plan is applicable to four species:

- Arctic wolf (*Canis lupus*) natal dens
- Grizzly bear (*Ursus arctos*) natal/overwintering dens
- Arctic fox (*Vulpes lagopus*) natal dens
- Wolverine (*Gulo gulo*) natal dens

The purpose of this plan is to provide a framework for identification, characterization, and monitoring of predatory mammal dens in order to protect any detected dens from disturbance throughout exploration and operation activities in the vicinity of all Meadowbank and Whale Tail Project facilities. The plan will include consultation with the Government of Nunavut (GN) with respect to obligations under the *Wildlife Act*, SNU 2003, c. 26.

MANAGEMENT AND PROTECTION PLAN PROTOCOL

Overview

All observation visits to any active predatory den site must be undertaken with utmost care to avoid disturbing the den. Observations will take place from the greatest possible distance that allows for accurate observation and will employ binoculars and spotting scopes.

Stage 1 – Detection

Detection of predatory mammal dens will be completed using a combination of targeted surveys prior to new construction and ongoing wildlife monitoring during operation.

OPTION A – DURING OPERATION	OPTION B – PRIOR TO CONSTRUCTION
During project facilities operation; Predatory mammal observations, including any indication of denning, will be recorded at any point during operation of project facilities. This detection will be supported by ongoing monitoring activities: road surveys and height-of-land surveys in conjunction with incidental observations by AEM personnel.	**Prior to construction of any new project facilities;** High-suitability denning habitat (i.e. eskers) within 1 km of the project footprint will be investigated for active predatory mammal dens.

If active predatory mammal dens are detected during Option A or Option B of Stage 1 (listed above) then proceed to Stage 2 of the protocol. If no active dens are detected then continue with Stage 1: Option A is ongoing and Option B is to be utilized as needed.

Stage 2 – Identification and Characterization

If an active predatory mammal den has been detected, Stage 2 of the protocol will be undertaken. In the table below, a list of the identification questions and examples of characterization answers are provided. This process will involve the completion of the following questions as well as dates, timing, identification information about the observer(s), and any additional comments. A blank version of this table, which can be used as a field data collection sheet, is provided at the end of this Appendix.

	Identification Questions to be Answered	**Characterization Answer Examples**
1	Unique ID?	e.g Wolf Den 01
2	What predatory mammal species is occupying the active den?	e.g. Arctic wolf; Grizzly bear; Arctic fox; Wolverine
3	Coordinates of the active den?	UTM Coordinates of den
4	Site description?	e.g. Arctic fox denning under trailer near Whale Tail helipad e.g. Arctic wolf den located approximately 800 meters from Whale Tail haul road on the south facing side of an ~8m tall esker.
5	Juveniles Observed?	e.g. Yes; 3 fox pups observed in the entering the den. e.g. No; wolf pups have not been observed directly. However, the behaviour of the adult wolves, the repeated observations of wolves at the site, the sandy ridge location of the site and the observations of wolf burrows at the site indicate that an active den with juveniles is highly probable.
6	Disturbance and impact considerations?	e.g. The wolf den occurs within 800 m of the Whale Tail haul road. As such vehicle noise, including helicopters, is frequently present within 1 km of the den site.
7	Adaptive management considerations?	e.g. Ground personnel access will be restricted within 1km of the den and, as much as possible, vehicles will not stop on the roadway at km 35. Helicopter routing will be advised and flybys of the esker at this location will be minimized.
8	Recommended monitoring program?	e.g. Weekly checks by the den monitoring survey team will be undertaken to monitor the progress of den development (i.e. age of pups), investigate for signs of adult stress responses and inform any additional adaptive management requirements. Checks will be undertaken from a height-of-land at (coordinates), approximately 300 m NW of the suspected den location.

Stage 3 – Monitoring

Monitoring visits will be undertaken at the frequency, distance and location recommended by the identification and characterization stage (Stage 2). In addition to the information in the table below, dates, timing, identification information about the observer(s), and any additional comments will be recorded. A blank version of this table is provided at the end of this appendix.

	Monitoring Questions to be Answered	Monitoring Characterization Answer Examples
1	Unique ID?	Wolf Den 01
2	Changes to disturbance and impact considerations?	e.g. frequency of helicopter flybys within 1 km have increased in conjunction with construction activities at the Whale Tail site.
3	Development stage of den?	e.g. Pups are now more active outside of the den.
4	Changes to site location?	e.g. Adult wolves still display territorial behaviours, but the specific den has likely been relocated ~200m to the NE.
5	Recommended changes to monitoring program?	e.g. Weekly monitoring is considered sufficient. e.g. Recommendation to reduce monitoring to bi-weekly visits: wolf den establishment appears stable, so reduction of personnel presence in the area is advisable
6	Recommended adaptive management considerations?	e.g. Continue restricting access to ground personnel within 1 km of the den. e.g. Develop new flight path instructions with helicopter teams. Avoid flybys over the den by at least 1 km.

Monitoring (Stage 3) continues at the rate recommended by Stage 2 assessment and all subsequent monitoring visits. Monitoring of an active den will be discontinued once the pups have left the den, the den has been relocated to a distance greater than 1 km from operating facilities, or the potential impacts to the den are considered negligible.

ADAPTIVE MANAGEMENT

Based on findings from Stage 3 monitoring, new adaptive management solutions may be required to prevent negative impacts to the active predatory mammal den. This may include the restriction of movements or activities by certain vehicles or work teams to minimize disturbances. It may also include alterations to monitoring activities to reduce disturbances or increase the amount of information available to inform management decisions. See Chart 3 in 2016 TEMP for adaptive management timing and work flow.

Data Sheet for Stage 2 – Identification and Characterization

Date: **Observer:**

	Identification Questions to be Answered	**Characterization Data**
1	Unique ID?	
2	What is the predatory mammal species is occupying the active den?	
3	Coordinates of the active den?	
4	Site description?	
5	Juveniles Observed?	
6	Disturbance and impact considerations?	
7	Adaptive management considerations?	
8	Recommended monitoring program?	

Data Sheet for Stage 3 – Monitoring

Date: **Observer:**

	Monitoring Questions to be Answered	**Monitoring Data**
1	Unique ID?	
2	Changes to disturbance and impact considerations?	
3	Development stage of den?	
4	Changes to site location?	
5	Recommended changes to monitoring program?	
6	Recommended adaptive management considerations?	

APPENDIX K

Haul Road Design Drawing

NO. DESSIN
DRAWING NO. 61-117-230-350_RA

FORMAT ARCHD

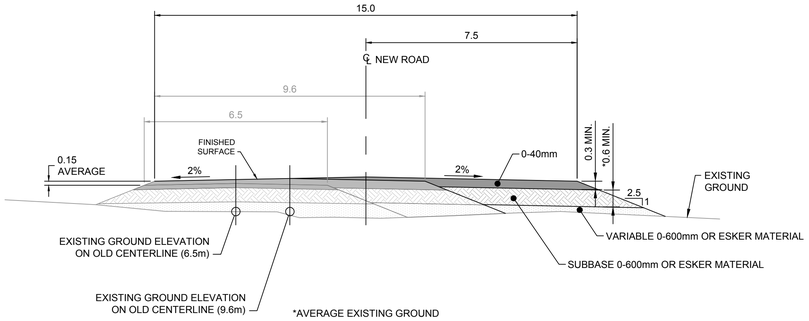

TYPICAL SECTION TYPE 1
ROC SOIL
(SEE NOTE 3)

HOR. 1:100
VERT. 1:100

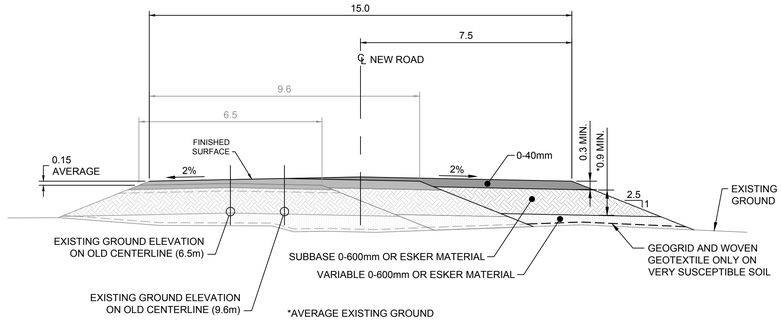

TYPICAL SECTION TYPE 2
TUNDRA SOIL
(SEE NOTE 2)

HOR. 1:100
VERT. 1:100

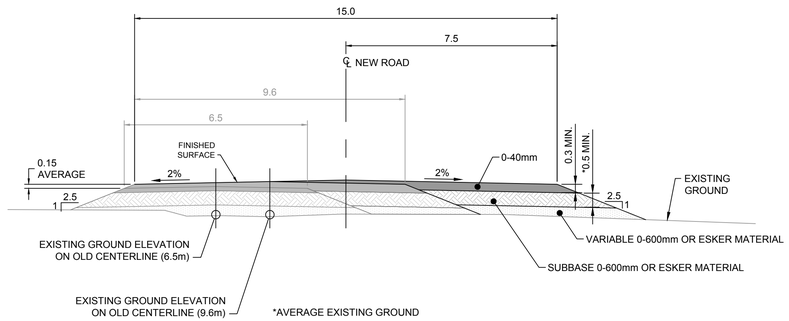

TYPICAL SECTION TYPE 3
ROC SOIL
(SEE NOTE 3)

HOR. 1:100
VERT. 1:100

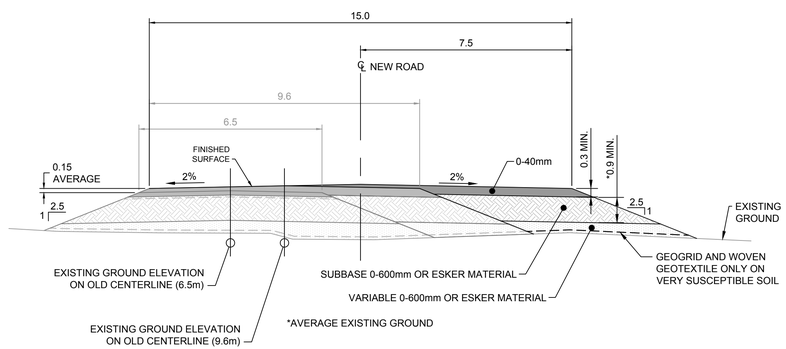

TYPICAL SECTION TYPE 4
TUNDRA SOIL
(SEE NOTE 2)

HOR. 1:100
VERT. 1:100

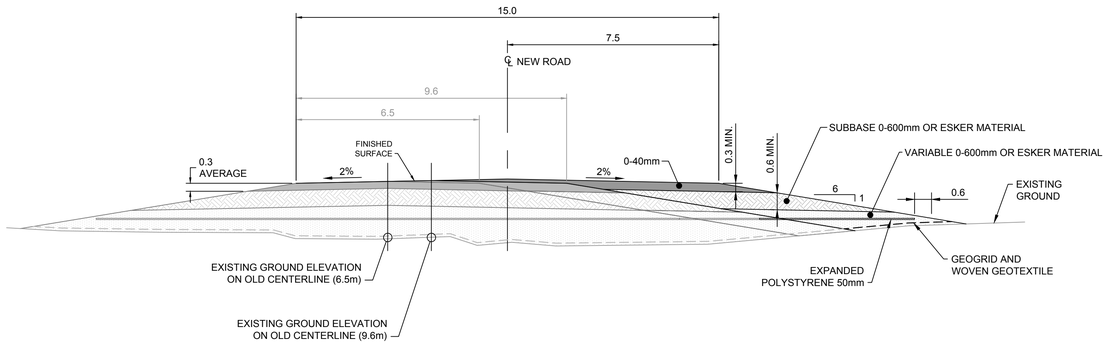

TYPICAL SECTION 5
ICE WEGDE AND VERY THAW SUSCEPTIBLE SOIL
(SEE NOTE 1)

HOR. 1:100
VERT. 1:100

NOTES:

1. SOILS VERY SUSCEPTIBLE TO FREEZE AND THAW INDUCED SETTLEMENT WHERE THAWING OF THE NEAR-SURFACE SUB-GRADE IS EXPECTED TO RESULT IN SIGNIFICANT STRENGTH LOSS AND EXCESSIVE SETTLEMENTS.
2. SOILS RELATIVELY SUSCEPTIBLE TO FREEZE AND THAW INDUCED SETTLEMENT WHERE THAWING OF THE NEAR-SURFACE SUB-GRADE IS EXPECTED TO RESULT IN SIGNIFICANT STRENGTH LOSS AND EXCESSIVE SETTLEMENTS.
3. SOILS RELATIVELY UNSUSCEPTABLE TO FREEZE AND THAW SETTLEMENT WHERE THAWING OF THE NEAR-SURFACE SUB-GRADE IS EXPECTED TO RESULT IN MINIMAL STRENGTH LOSS AND TOLERABLE SETTLEMENTS.
4. ALL DIMENSIONS IN METERS, UNLESS NOTED OTHERWISE.

PLAN CLÉ
KEY PLAN

NOTE GÉNÉRALE / GENERAL NOTE

NE PAS UTILISER POUR CONSTRUCTION
NOT FOR CONSTRUCTION
AGNICO EAGLE
DATE : 2018-03-21

wsp
#171-17523-00

L'INFORMATION CI-CONTENUE EST LA PROPRIÉTÉ DE AGNICO EAGLE LTÉE ET DOIT ÊTRE RETOURNÉE SUR DEMANDE, SANS AUTORISATION ÉCRITE PRÉALABLE, TOUTE TRANSMISSION DE COPIE(S) À AUTRUI ET TOUTE UTILISATION AUTRE QUE CELLE POUR LAQUELLE L'INFORMATION EST PRÊTÉE SONT INTERDITES. (C) AGNICO EAGLE LTÉE.

THE INFORMATION HERE ON IS THE PROPERTY OF AGNICO EAGLE LTD. AND MUST BE RETURNED UPON REQUEST. WITHOUT WRITTEN PERMISSION, ANY COPYING TRANSMITTAL TO OTHERS AND ANY USE EXCEPT THAT FOR WHICH IT IS LOANED ARE PROHIBITED. (C) AGNICO EAGLE LTD.

DESSINS EN RÉFÉRENCE / REFERENCE DRAWINGS

TITRE / TITLE	# DWG

AGNICO EAGLE

REV.	DATE	DESCRIPTION	PAR/BY	APP.	CLIENT
A	2018-03-21	ISSUE FOR PERMITTING	S.D.	S.D.	J.B.

REVISIONS

TITRE / TITLE
AGNICO-EAGLE - MEADOWBANK DIVISION
117-ROAD, YARDS, FENCES AND OTHER
230-GENERAL EARTH WORK
TYPICAL SECTION & ROAD WIDENING

DESSINÉ PAR / DRAWN BY	SYLVIE DUFOUR / JASMINE BIBEAU	DATE 2018/03/21
VÉRIFIÉ PAR / CHECKED BY	JULIE BÉLANGER, P.Eng. M. Sc.A	2018/03/21
APPROUVÉ PAR / APPROVED BY	STEPHAN DUPUIS, P.Eng.	2018/03/21
ÉCHELLE / SCALE	INDICATED	DATE 2018/03/21
NO. DESSIN / DRAWING NO.	61-117-230-350	
NO. PROJET / PROJECT NO.	61	REVISION A / FEUILLE / SHT 1 / 1

AE-CART-ARCH D

FILE NO. 61-117-230-350_RA.dwg